PORT OF TACOMA

PARCEL 86 BANK STABILIZATION PROJECT
PROJECT NO. 101493.01
CONTRACT NO. 071513

PORT COMMISSIONERS:

RICHARD P. MARZANO
DON MEYER
JOHN MCCARTHY
KRISTIN ANG
DEANNA KELLER

PORT STAFF:

JOHN WOLFE
NWSA Chief Executive Officer

ERIC JOHNSON
Port of Tacoma Executive Director

THAIS HOWARD, P.E.
Director of Engineering

Hughes Wike, P.E.
Project Manager

VICINITY MAP NO SCALE PORT OF TACOMA

DRAWING LIST			
SHEET DESIGNATION	SHEET #	SHEET TITLE	REVISION
G1.0	1	COVER PAGE	0
C1.0	2	PROJECT LAYOUT AND ACCESS	0
C2.0	3	EXISTING CONDITIONS AND SHEET PILE WALL LOCATION	0
C3.0	4	GRADING AND RESTORATION	0
C4.0	5	SHEET PILE WALL PLAN AND PROFILE	0
C5.0	6	SHEET PILE WALL SECTIONS	0
C6.0	7	DETAILS	0

CONSULTANT:
ANCHOR QEA
1119 Pacific Avenue - Suite 1600 Tacoma, WA 98402
253-572-0927

Port of Tacoma
P.O. BOX 1837 TACOMA, WA 98401 (253)383-5841

ANCHOR QEA
1119 Pacific Avenue - Suite 1600 Tacoma, WA 98402
253-572-0927

MARK:	REVISION:	BY:	APPR:	DATE:

FREDERIC J. MASSABKI, STATE OF WASHINGTON, 40105798, REGISTERED PROFESSIONAL ENGINEER

CHECKED BY DATE

APPROVED:
DIRECTOR ENG. DATE
PROJ. ENGR DATE

PARCEL 86 BANK STABILIZATION PROJECT
PIERCE COUNTY, WASHINGTON
COVER PAGE

6662
G1.0
SH 1 OF 7

CONT/CONS: 071513	TOWNSHIP:	RANGE:	SECTION:
M. ID: 101493.01	DAT-HRZ: WA83-SF	VERT: MLLW 19.39' @ Tide 22 1933	PRINTED BY: jbigsby Aug 17, 2021
PHASE: BID SET	PARCEL:	DRAWING SCALE: AS NOTED	PORT ADDRESS: ONE SITCUM PLAZA TACOMA, WA 98401-1837

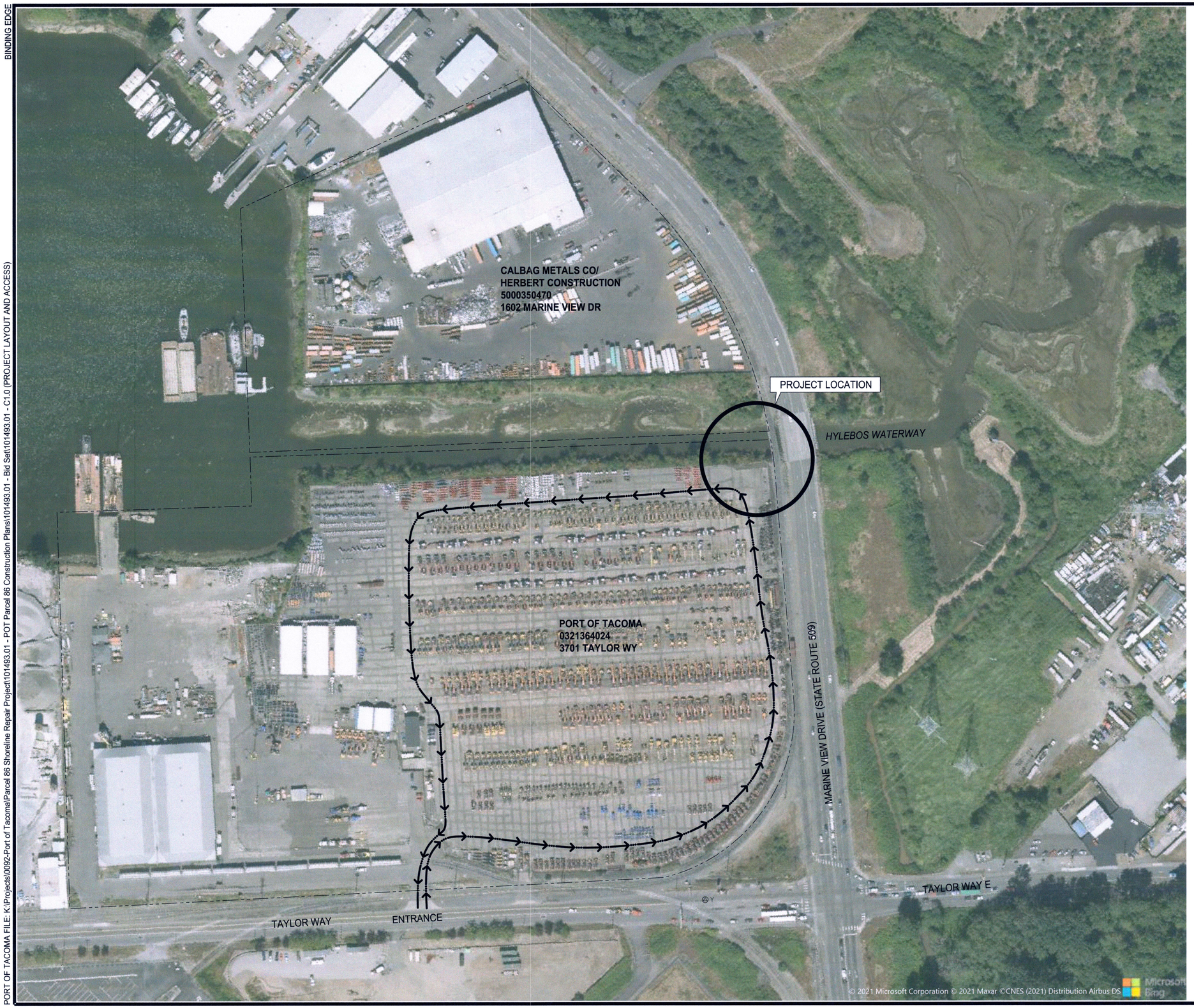

LEGEND

PROJECT ACCESS ROUTE

PROPERTY BOUNDARY

HORIZONTAL DATUM

WASHINGTON STATE PLANE COORDINATE SYSTEM, SOUTH ZONE, NAD 83/2011
(PER PORT OF TACOMA SURVEY CONTROL MAP - 2016)

PORT OF TACOMA MONUMENT DESIGNATIONS "Y" & "GG"
"Y": SURFACE BRASS DISK WITH "X"
N: 707135.5575
E: 1178450.5565

"GG": 2"SURFACE BRASS DISK WITH "PUNCH" (NOT SHOWN)
N: 708849.5633
E: 1176475.8392

HORIZONTAL SCALE: 1"=100'
100 0 100 200

Port of Tacoma
P.O. BOX 1837 TACOMA, WA 98401 (253)383-5841

ANCHOR QEA
1119 Pacific Avenue - Suite 1600 Tacoma, WA 98402
253-572-0927

MARK: REVISION: BY: APPR: DATE:

FREDERIC J. MASSABKI
STATE OF WASHINGTON
20105786
REGISTERED PROFESSIONAL ENGINEER

APPROVED:
DIRECTOR ENG. DATE

CHECKED BY DATE
PROJ. ENGR DATE
Bigsby Aug 17, 2021
PRINTED BY:
PORT ADDRESS: ONE SITCUM PLAZA
TACOMA, WA 98401-1837

PARCEL 86 BANK STABILIZATION PROJECT
PIERCE COUNTY, WASHINGTON
PROJECT LAYOUT AND ACCESS

6662
C1.0
SH 2 OF 7

CONT/CONS: 071513
M. ID: 101493.01
PHASE: BID SET

TOWNSHIP:
DAT-HRZ: WA83-SF
PARCEL:

RANGE:
VERT: MLLW 19.39' @ Tide 22.1933
DRAWING SCALE: AS NOTED

SECTION:

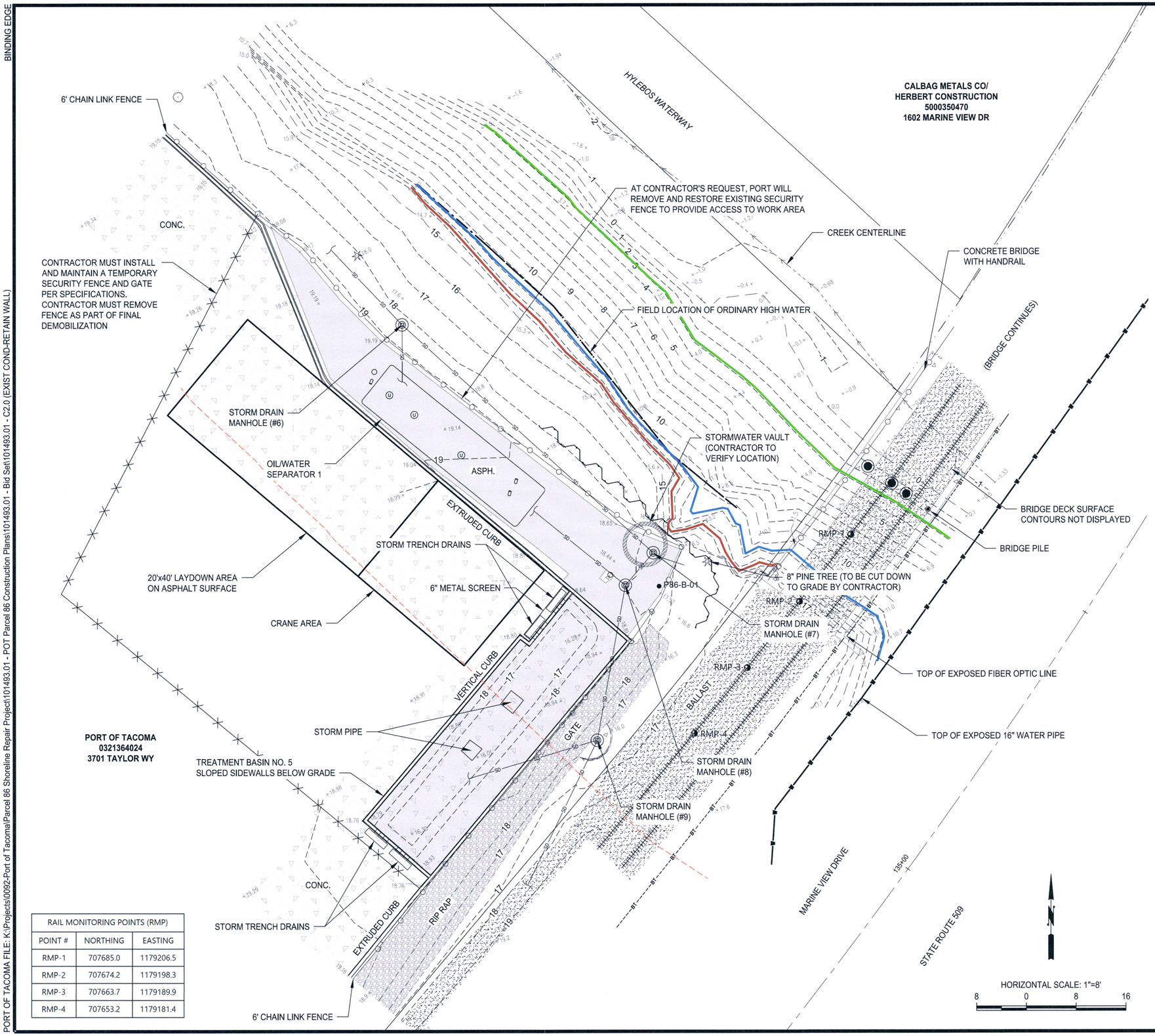

RAIL MONITORING POINTS (RMP)		
POINT #	NORTHING	EASTING
RMP-1	707685.0	1179206.5
RMP-2	707674.2	1179198.3
RMP-3	707663.7	1179189.9
RMP-4	707653.2	1179181.4

SURVEY LEGEND

- STORM DRAIN MANHOLE
- UTILITY CLEAN OUT
- UTILITY MANHOLE
- BRIDGE PILE
- CONIFER TREE
- DECIDUOUS TREE
- GATE POST
- PVC VENT
- BOUNDARY LINE
- STORM DRAIN LINE
- ORDINARY HIGH WATER LINE (OHW)
- WATER LINE
- TELECOM LINE
- EXISTING CONTOURS (1 & 5' INTERVALS)
- RAILROAD TRACKS
- 6" CURB
- NO LOAD AREA
- ASPHALT SURFACE
- GRAVEL SURFACE
- RIP RAP SURFACE

GENERAL LEGEND

- P86-B-01 EXISTING GEOTECHNICAL BORING LOCATION
- RMP-1 RAIL MONITORING POINT
- PARCEL 86 PROPERTY BOUNDARY
- MEAN HIGHER-HIGH WATER LINE (MHHW), +11.78'
- MEAN LOW WATER LINE (MLW), +2.84'
- HIGH TIDE LINE (HTL), +13.5'
- 50-FOOT FISH AND WILDLIFE HABITAT CONSERVATION AREAS (FWHCA) MARINE BUFFER
- TEMPORARY SECURITY FENCE

SURVEY NOTES

1. SURVEY AND NOTES PROVIDED BY SITTS & HILL ENGINEERS, INC., DATED 6/24/2020 AND 4/14/2021.
2. EQUIPMENT USED: TOPCON QS ROBOTIC TOTAL STATION OR CARLSON GEOMAX CR2 ROBOTIC TOTAL STATION OR TOPCON GR3 GPS UNIT.
3. UTILITIES AS SHOWN HEREON ARE BASED ON FIELD SURVEY OBSERVATION OF UTILITY LOCATE SERVICES PERFORMED BY MT. VIEW LOCATING SERVICES LLC. IN JUNE, 2020 FOR THIS SURVEY. UTILITIES OTHER THAN SHOWN MAY EXIST ON THE SITE. THE SURVEYOR DOES NOT WARRANT THAT THE UNDERGROUND UTILITIES SHOWN ARE IN THE EXACT LOCATION INDICATED. THE SURVEYOR DOES CERTIFY THAT THEY ARE SHOWN AS ACCURATELY AS POSSIBLE FROM FIELD SURVEY AND PAINTED UTILITY LOCATE LINES. COLLECTION AND DEPICTION OF EXISTING SUBSURFACE UTILITY DATA IS CONSISTENT WITH QUALITY LEVEL (B) OF THE ASCE STANDARD GUIDELINES 38-02.

HORIZONTAL DATUM

WASHINGTON STATE PLANE COORDINATE SYSTEM, SOUTH ZONE, NAD 83/2011 (PER PORT OF TACOMA SURVEY CONTROL MAP - 2016)

PORT OF TACOMA MONUMENT DESIGNATIONS "Y" & "GG"
"Y": SURFACE BRASS DISK WITH "X"
N: 707135.5575
E: 1178450.5565

"GG": 2"SURFACE BRASS DISK WITH "PUNCH"
N: 708849.5633
E: 1176475.8392

VERTICAL DATUM

MLLW (PER PORT OF TACOMA 2016 MONUMENT CONTROL MAP)

CONTROL POINT "Y"; MONUMENT ON TAYLOR WAY, NEAR ITS INTERSECTION WITH SR 509. MLLW ELEV = 16.37

Port of Tacoma
P.O. BOX 1837 TACOMA, WA 98401 (253)383-5841
APPR: DATE:
ANCHOR QEA
1119 Pacific Avenue - Suite 1600 Tacoma, WA 98402
253-572-0927
MARK: REVISION: BY:
FREDERIC J. MASSABKI
STATE OF WASHINGTON
20105796
REGISTERED PROFESSIONAL ENGINEER

APPROVED: DIRECTOR ENG. DATE 8/18/21

CHECKED BY DATE
PROJ. ENGR DATE
PRINTED BY: jbigsby Aug 17, 2021
PORT ADDRESS: ONE SITCUM PLAZA TACOMA, WA 98401-1837

PARCEL 86 BANK STABILIZATION PROJECT
PIERCE COUNTY, WASHINGTON
EXISTING CONDITIONS AND SHEET PILE WALL LOCATION

TOWNSHIP: RANGE: SECTION:
DAT-HRZ: WA83-SF VERT: MLLW 19.39' @ Tide 22 1933
PARCEL: DRAWING SCALE: AS NOTED

6662
C2.0
SH 3 OF 7

CONT/CONS: 071513
M. ID: 101493.01
PHASE: BID SET

CONTROL POINTS (CP)		
POINT #	NORTHING	EASTING
CP-1	707702.3	1179156.4
CP-2	707678.2	1179184.2
CP-3	707669.6	1179181.0

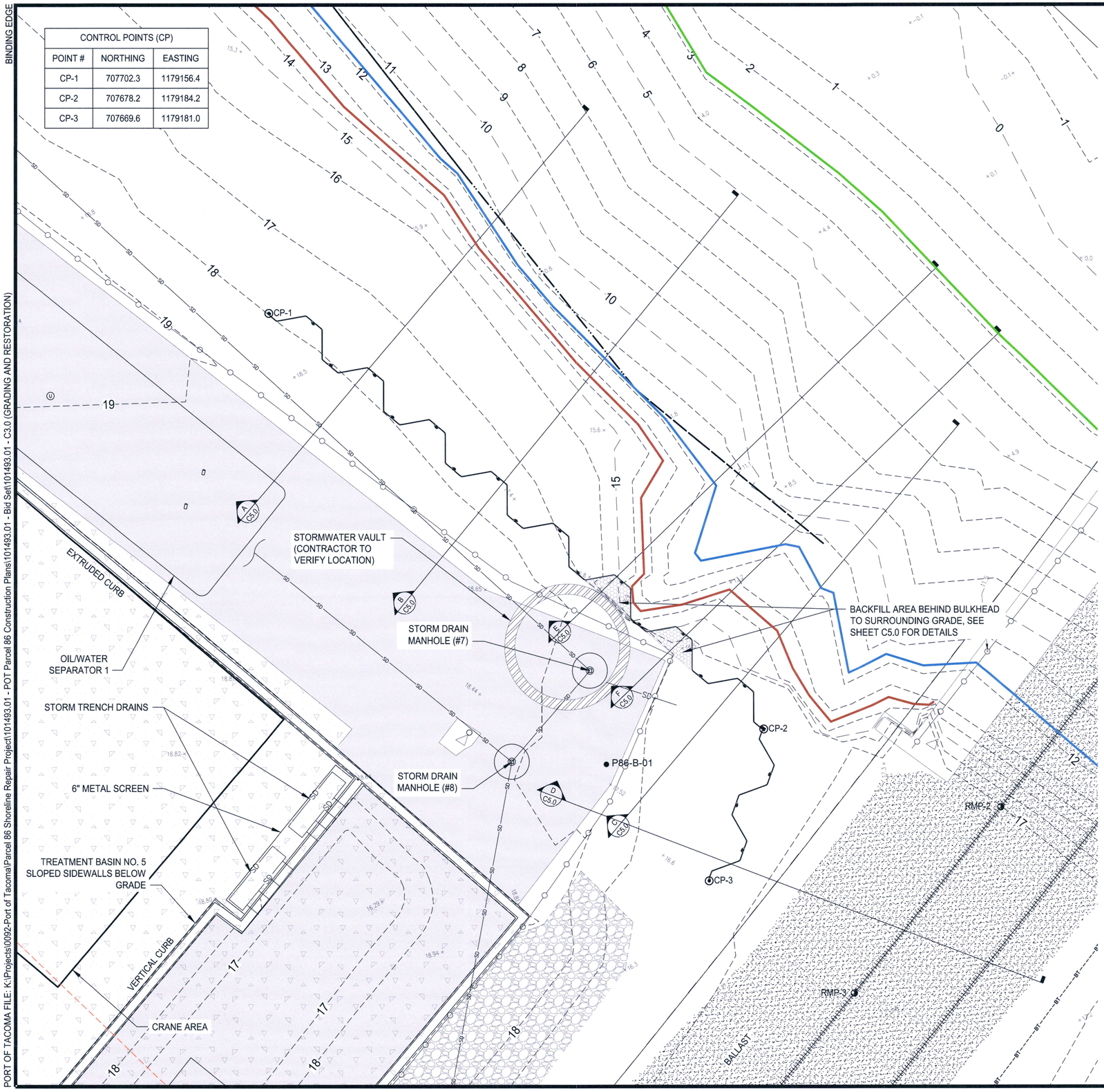

SURVEY LEGEND

- STORM DRAIN MANHOLE
- UTILITY CLEAN OUT
- UTILITY MANHOLE
- BRIDGE PILE
- GATE POST
- PVC VENT
- BOUNDARY LINE
- STORM DRAIN LINE
- ORDINARY HIGH WATER LINE (OHW)
- WATER LINE
- TELECOM LINE
- EXISTING CONTOURS (1 & 5' INTERVALS)
- RAILROAD TRACKS
- 6" CURB
- NO LOAD AREA
- ASPHALT SURFACE
- GRAVEL SURFACE
- RIP RAP SURFACE

GENERAL LEGEND

- P86-B-01 EXISTING GEOTECHNICAL BORING LOCATION
- RMP-2 RAIL MONITORING POINT
- PARCEL 86 PROPERTY BOUNDARY
- MEAN HIGHER-HIGH WATER LINE (MHHW), +11.78'
- MEAN LOW WATER LINE (MLW), +2.84'
- HIGH TIDE LINE (HTL), +13.5'
- 50-FOOT FISH AND WILDLIFE HABITAT CONSERVATION AREAS (FWHCA) MARINE BUFFER

NOTES

1. AS REQUIRED, CONTRACTOR MUST CLEAR AND GRUB VEGETATION WITHIN SHEET PILE WALL ALIGNMENT.
2. CONTRACTOR MUST PROTECT ANY VEGETATION FLAGGED BY THE ENGINEER FOR PROTECTION.
3. CONTRACTOR MUST RESTORE AND SEED DISTURBED AREAS, INCLUDING THE BACKFILL AREA, PER THE SPECIFICATIONS.

HORIZONTAL DATUM

WASHINGTON STATE PLANE COORDINATE SYSTEM, SOUTH ZONE, NAD 83/2011

VERTICAL DATUM

MLLW (ELEVATION = 16.37')

HORIZONTAL SCALE: 1"=3'

3 0 3 6

Port of Tacoma
P.O. BOX 1837 TACOMA, WA 98401 (253)383-5841

ANCHOR QEA
1119 Pacific Avenue - Suite 1600 Tacoma, WA 98402
253-572-0927

MARK:	REVISION:	BY:	APPR:	DATE:

FREDERIC J. MASSABKI, STATE OF WASHINGTON, 20105-1509, REGISTERED PROFESSIONAL ENGINEER

APPROVED:
DIRECTOR ENG. DATE

CHECKED BY DATE
PROJ. ENGR DATE
PRINTED BY: jbigsby Aug 17, 2021
PORT ADDRESS: ONE SITCUM PLAZA TACOMA, WA 98401-1837

PARCEL 86 BANK STABILIZATION PROJECT
PIERCE COUNTY, WASHINGTON
GRADING AND RESTORATION

6662
C3.0
SH 7 OF 7

CONT/CONS: 071513	TOWNSHIP:	RANGE:	SECTION:
M. ID: 101493.01	DAT–HRZ: WA83–SF	VERT: MLLW 19.39' @ Tide 22 1933	
PHASE: BID SET	PARCEL:	DRAWING SCALE: AS NOTED	

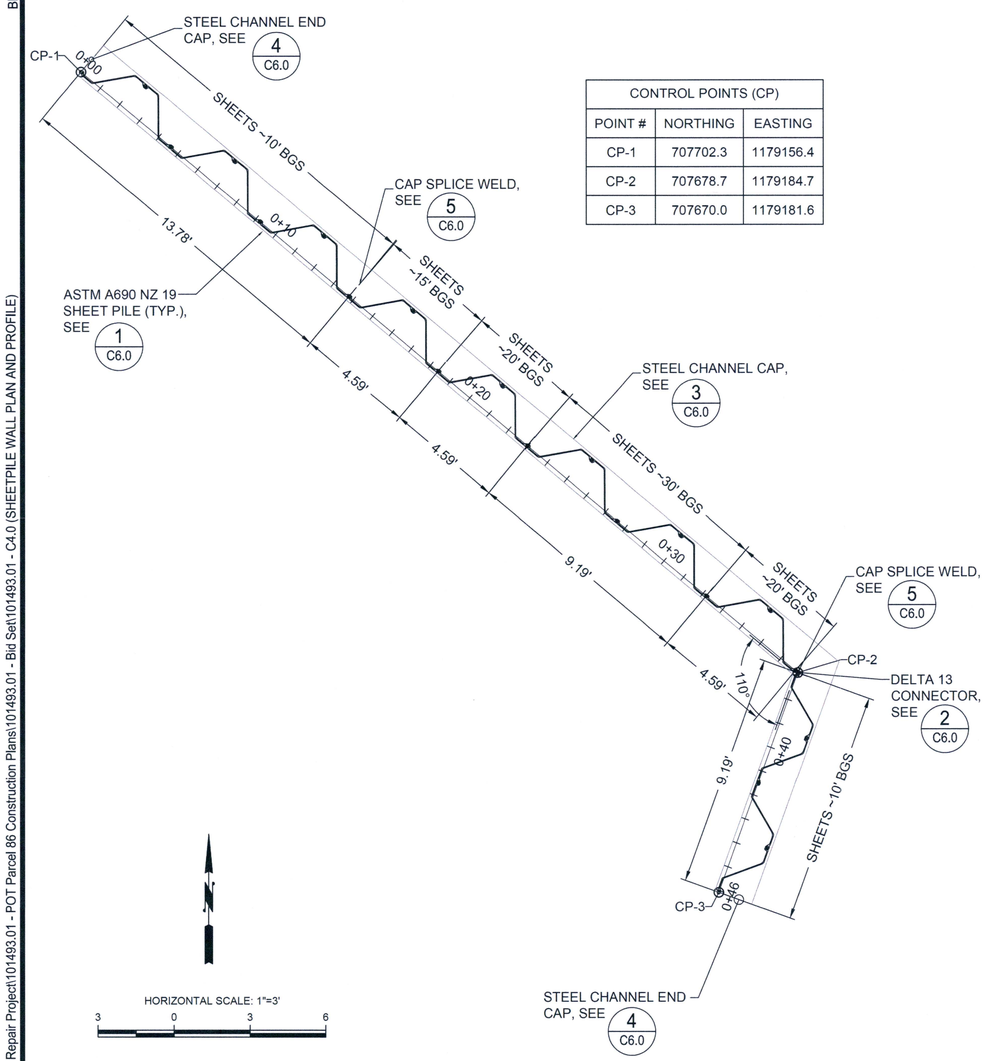

CONTROL POINTS (CP)		
POINT #	NORTHING	EASTING
CP-1	707702.3	1179156.4
CP-2	707678.7	1179184.7
CP-3	707670.0	1179181.6

1 - SHEET PILE WALL PLAN VIEW
SCALE: 1" = 3'

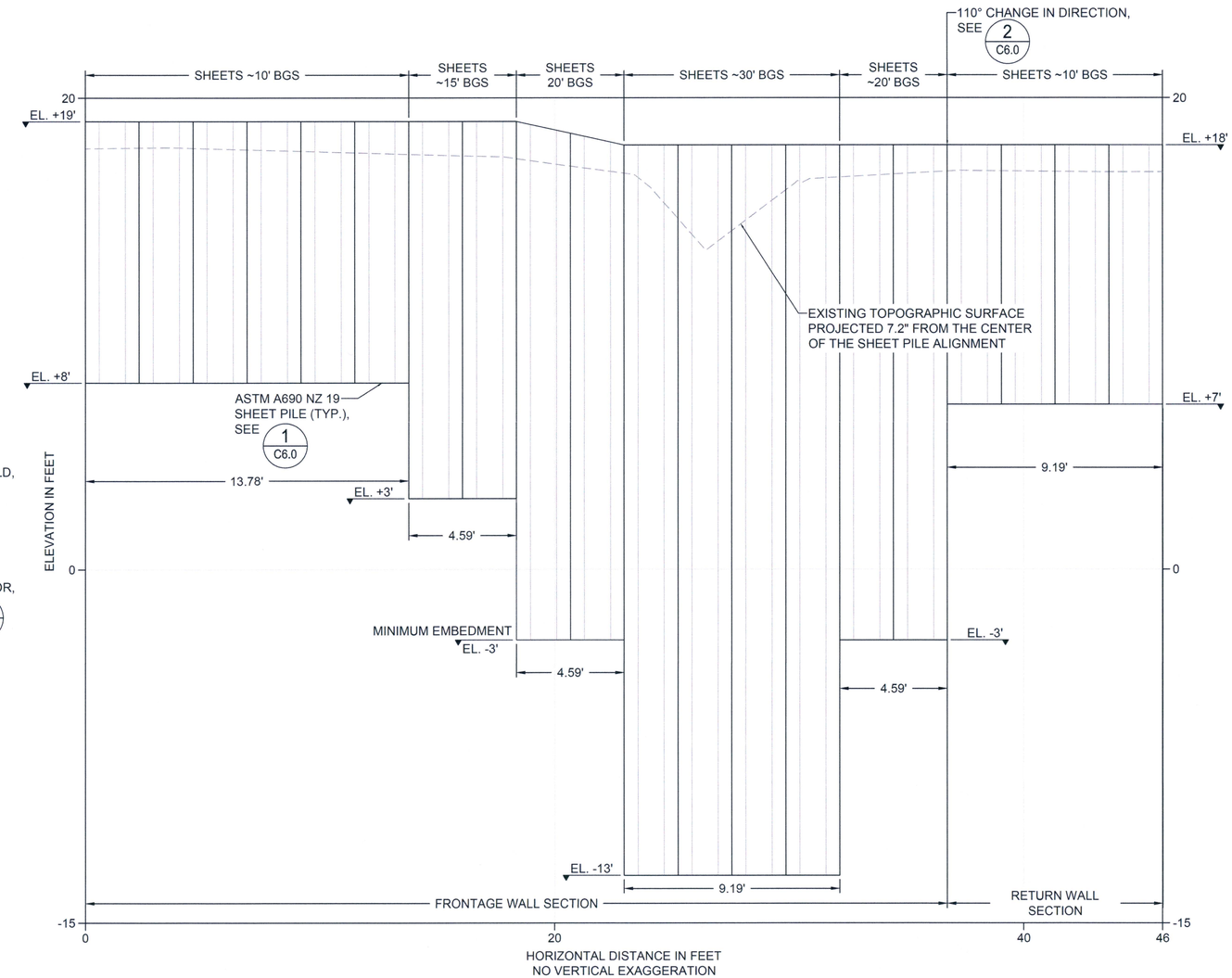

2 - PROFILE VIEW
SCALE: 1" = 3'

HORIZONTAL DATUM

WASHINGTON STATE PLANE COORDINATE SYSTEM, SOUTH ZONE, NAD 83/2011

VERTICAL DATUM

MLLW (ELEVATION = 16.37')

LEGEND

BGS BELOW GROUND SURFACE

NOTE: DO NOT COAT OR GALVANIZE STEEL SHEET PILES.

Port of Tacoma
P.O. BOX 1837 TACOMA, WA 98401 (253)383-5841

ANCHOR QEA
1119 Pacific Avenue - Suite 1600 Tacoma, WA 98402
253-572-0927

MARK:	REVISION:	BY:	APPR:	DATE:

FREDERIC J. MASSABKI, STATE OF WASHINGTON, REGISTERED PROFESSIONAL ENGINEER, 20110577095

APPROVED: DIRECTOR ENG. DATE

CHECKED BY DATE

PROJ. ENGR DATE

PRINTED BY: jbigsby Aug 17, 2021

PORT ADDRESS: ONE SITCUM PLAZA TACOMA, WA 98401-1837

PARCEL 86 BANK STABILIZATION PROJECT
PIERCE COUNTY, WASHINGTON
SHEET PILE WALL PLAN AND PROFILE

TOWNSHIP: | RANGE: | SECTION:
DAT-HRZ: WA83-SF | VERT: MLLW 19.39' @ Tide 22 1933
PARCEL: | DRAWING SCALE: AS NOTED

6662
C4.0
SH 4 OF 7

CONT/CONS: 071513
M. ID: 101493.01
PHASE: BID SET

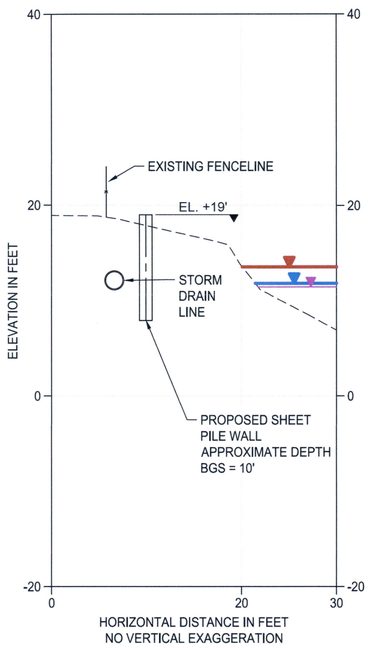

A C3.0 SHEET PILE SECTION A
SCALE: 1" = 8'

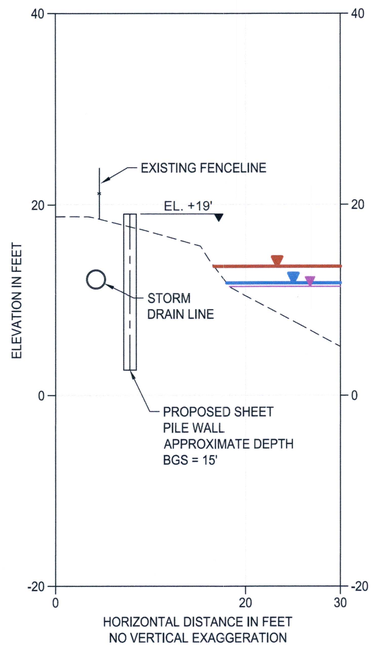

B C3.0 SHEET PILE SECTION B
SCALE: 1" = 8'

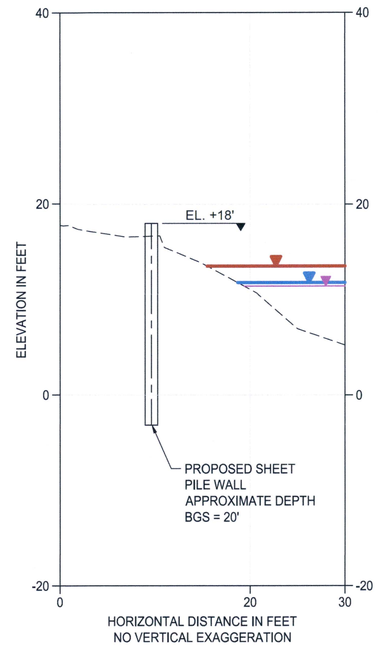

C C3.0 SHEET PILE SECTION C
SCALE: 1" = 8'

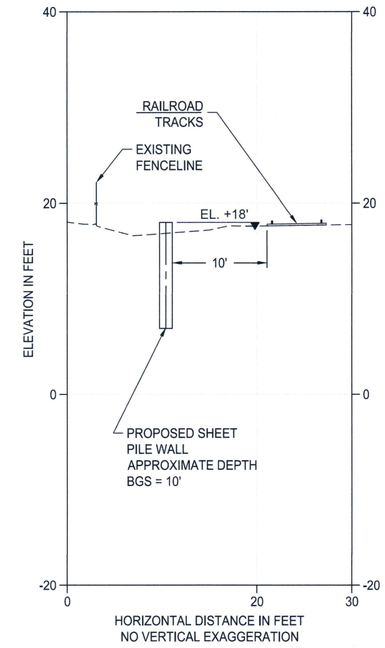

D C3.0 SHEET PILE SECTION D
SCALE: 1" = 8'

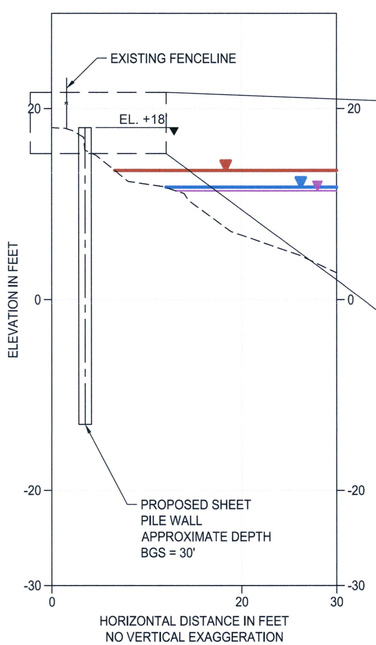

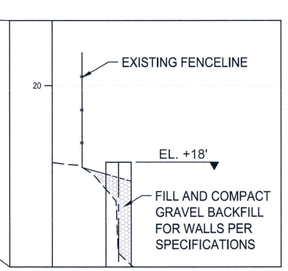

SECTION E DETAIL
SCALE: 1" = 4'
(2X VERTICAL EXAGGERATION)

E C3.0 SHEET PILE SECTION E
SCALE: 1" = 8'

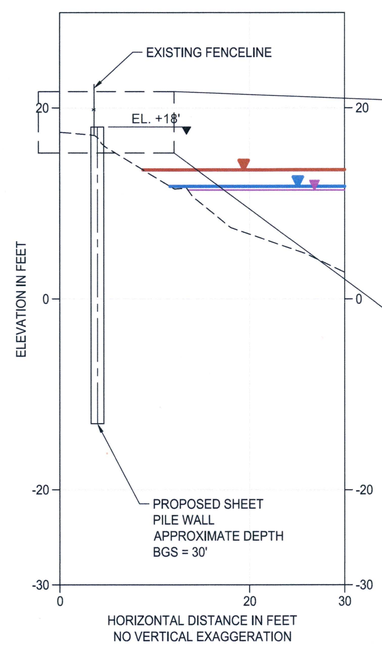

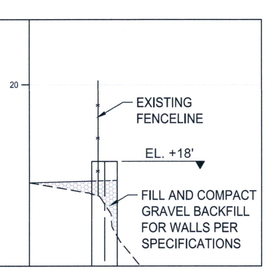

SECTION F DETAIL
SCALE: 1" = 4'
(2X VERTICAL EXAGGERATION)

F C3.0 SHEET PILE SECTION F
SCALE: 1" = 8'

LEGEND:
- EXISTING GROUND SURFACE
- ORDINARY HIGH WATER (OHW, SEE NOTE 1)
- MEAN HIGHER-HIGH WATER (MHHW), +11.78'
- HIGH TIDE LINE, +13.5'

SOURCE: SURVEY BY SITTS & HILL, DATED JUNE 2020.
VERTICAL DATUM: MEAN LOWER LOW WATER (MLLW)
NOTES:
1. LOCATION OF OHW MARK SHOWN IN SECTION E-E' WAS APPROXIMATED BASED ON OBSERVATIONS ALONG ADJACENT NON-ERODED SHORELINE AREAS.
2. BGS: BELOW GROUND SURFACE

Port of Tacoma
P.O. BOX 1837 TACOMA, WA 98401 (253)383-5841

ANCHOR QEA
1119 Pacific Avenue - Suite 1600 Tacoma, WA 98402
253-572-0927

MARK: | REVISION: | BY: | APPR: | DATE:

FREDERIC J. MASSABKI, STATE OF WASHINGTON, 20110596, REGISTERED PROFESSIONAL ENGINEER

APPROVED: DIRECTOR ENG. DATE 8/19/21 | CHECKED BY DATE | PROJ. ENGR DATE

PRINTED BY: bigsby Aug 17, 2021
PORT ADDRESS: ONE SITCUM PLAZA, TACOMA, WA 98401-1837

PARCEL 86 BANK STABILIZATION PROJECT
PIERCE COUNTY, WASHINGTON
SHEET PILE WALL SECTIONS

6662
C5.0
SH 5 OF 7

CONT/CONS: 071513	TOWNSHIP:	RANGE:	SECTION:
M. ID: 101493.01	DAT-HRZ: WA83-SF	VERT: MLLW 19.39' @ Tide 22 1933	
PHASE: BID SET	PARCEL:	DRAWING SCALE: AS NOTED	

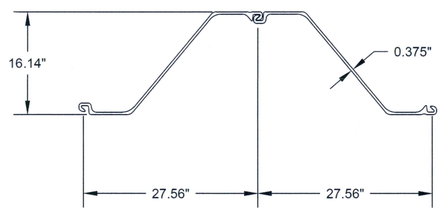

1 C4.0 NZ 19 SHEET PILE
SCALE: 1" = 1'-0"

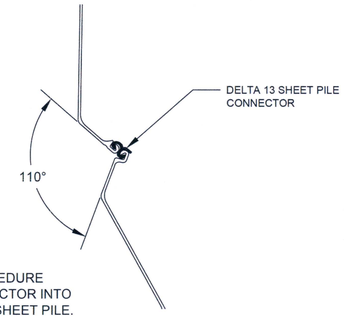

ATTACHMENT PROCEDURE
1. THREAD CONNECTOR INTO INTERLOCK OF SHEET PILE.
2. TACK WELD CONNECTOR TO PILE

2 C4.0 DELTA 13 SHEET PILE CONNECTOR
SCALE: 1" = 1'-0"

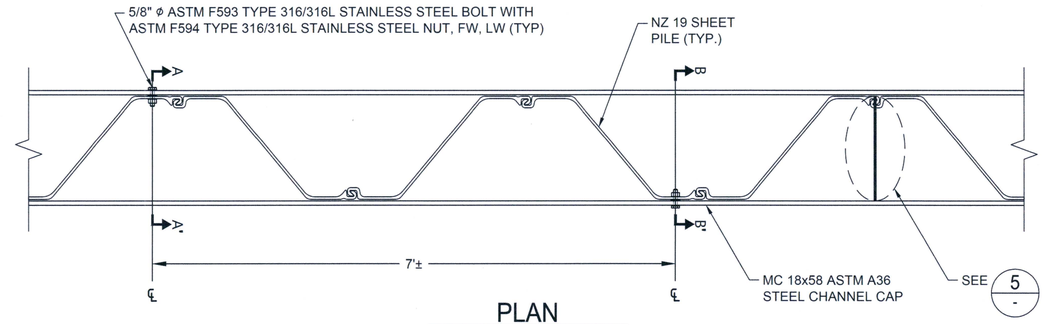

PLAN
SCALE: 1" = 1'-0"

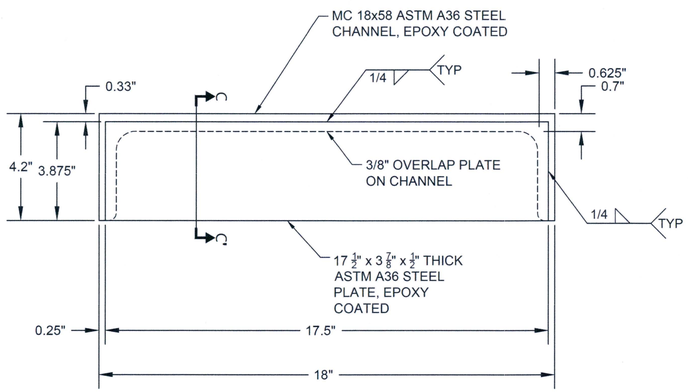

END CAP ELEVATION
SCALE: 1/4" = 1'-0"

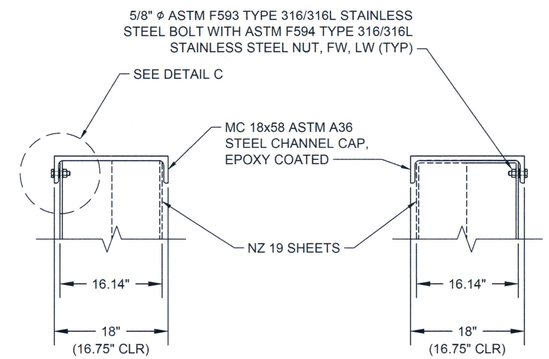

SECTION A-A'
SCALE: 1" = 1'-0"

SECTION B-B'
SCALE: 1" = 1'-0"

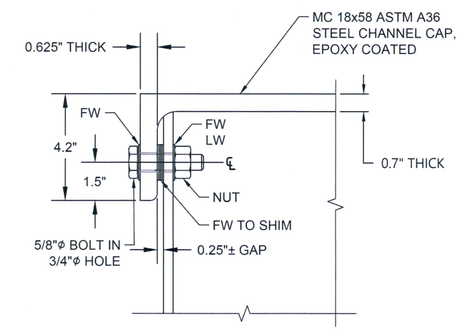

DETAIL C
SCALE: 1/4" = 1'-0"

3 C4.0 CAP CONSTRUCTION
SCALE: 1" = 1'-0"

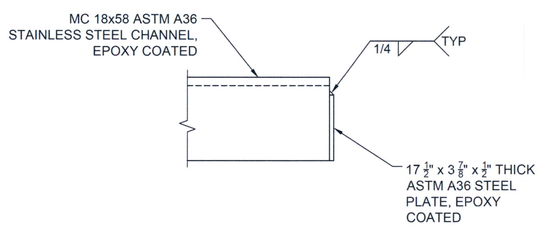

SECTION C-C'
SCALE: 1/4" = 1'-0"

4 C4.0 CHANNEL END CAPS
SCALE: 1/4" = 1'-0"

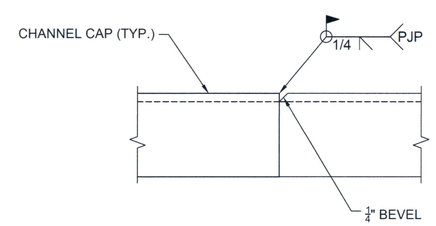

5 C4.0, C6.0 BEVEL WELD AT ADJOINING CAPS
SCALE: 1/4" = 1'-0"

NOTES:

1. EPOXY COAT CARBON STEEL SHEETS, CHANNEL, CAPS, AND OTHER SHAPES WITH TWO COATS IN ACCORDANCE WITH THE SPECIFICATIONS. STAINLESS STEEL OR A690 GRADE STEEL SHALL NOT BE COATED.
2. DRILL HOLES FOR BOLTS PRIOR TO COATING.
3. PROVIDE 3" HOLD BACK OF EPOXY COATING AT WELD TOES ON CARBON STEEL SHAPES TO BE FIELD WELDED. COAT WELDS AFTER FIELD WELDING IN ACCORDANCE WITH THE SPECIFICATION. DO NOT COAT STEEL TYPES LISTED IN NOTE 1.

Port of Tacoma
P.O. BOX 1837 TACOMA, WA 98401 (253)383-5841

ANCHOR QEA
1119 Pacific Avenue - Suite 1600 Tacoma, WA 98402
253-572-0927

MARK:	REVISION:	BY:	APPR:	DATE:

FREDERICK J. MASSASKI, STATE OF WASHINGTON, REGISTERED PROFESSIONAL ENGINEER

APPROVED: 8/18/21
DIRECTOR ENG. DATE

CHECKED BY	DATE
PROJ. ENGR	DATE
jbigsby	Aug 17, 2021

PARCEL 86 BANK STABILIZATION PROJECT
PIERCE COUNTY, WASHINGTON
DETAILS

PRINTED BY: jbigsby Aug 17, 2021
PORT ADDRESS: ONE SITCUM PLAZA TACOMA, WA 98401-1837

6662
C6.0
SH 6 OF 7

CONT/CONS: 071513	TOWNSHIP:	RANGE:	SECTION:
M. ID: 101493.01	DAT-HRZ: WA83-SF	VERT: MLLW 19.39 @ Tide 22 1933	
PHASE: BID SET	PARCEL:	DRAWING SCALE: AS NOTED	