Appendix I
Potentially Contaminated Soils Excavation Technical Memorandum

TECHNICAL MEMORANDUM

Date: February 8, 2023

To: Ron Borrevik and Dan Swope, King County Solid Waste Division

From: BHC Consultants, prepared by Herrera Environmental Consultants, Inc.

Subject: Contaminated Soils Removal and Sampling Analysis

INTRODUCTION

This work by Herrera Environmental Consultants (Herrera) was initiated under Engineering Services for Cedar Hills Regional Landfill (CHRL) Area 7 Closure Project, Contract E00227E11. This Technical Memorandum (Memo) provides a description of field activities, analytical results, conclusions, and documentation of soils removal and confirmation sampling work. Field activities took place in June, September, and October 2021 near the southwest and southeast corners of Area 7. Additional field work occurred in September 2022 around the condensate leachate manhole near the southwest corner of Area 7, as part of the CHRL Area 7/8 Liner Tie-In construction activities.

Background

On March 6, 2019, Scarsella Brothers reported a spill incident to Ecology (ERTS number 687696). Water potentially impacted by leachate was detected in anchor trenches, pipe trenches, and some structures outside of the Area 7 footprint. Temporary collection sumps, pumps, and generators were installed to convey the impacted water to the leachate and contaminated surface water (CSW) facilities adjacent to the potentially affected area. Ecology determined this release is subject to the Model Toxics Control Act (MTCA) and can be closed out during this initial investigation phase with a Release Investigation and Removal Report documenting that the impacted soils have been removed. Activities to address this release were coordinated with construction work planned for summer of 2021.

The work performed in late September and early October 2021 was initiated after landfill gas (LFG) conveyance pipes at the southeast corner of the Area 7/8 liner tie-in released what appeared to be leachate. The suspected release occurred as a result of pipe connection failures during the LFG interior header connection construction activities. The release was reported to Ecology on September 20th, 2021. The 2021 Area 7 southeast work was assigned ERTS number 709420.

The work performed in September 2022 was initiated after a condensate pipe was hit by an excavator during construction activities near the newly installed condensate leachate manhole located near the southwest corner of Area 7. The release was discovered and reported to

Ecology on September 19th, 2022. The 2022 manhole area work was assigned ERTS number 717730.

Objective

Submittal of this Memo is required in accordance with compliance task number 18 of the CHRL 2022 Addendum to Municipal Solid Waste Landfill Permit. The excavation and sampling work was performed in accordance with the Contaminated Soils Removal and Sampling Workplan (Workplan) dated June 2021, attached as Appendix A. The Workplan, including the contaminants of concern (COCs) and associated cleanup levels (CULs), were submitted to, and approved by the Ecology and Public Health – Seattle & King County (Public Health).

The object of this Memo is to demonstrate that soils impacted by the releases described above have been addressed and satisfy Ecology's requirements for a Release Investigation and Removal Report. Since ecological exposure pathways are no longer present, these leachate release issues can be closed by Ecology.

Contents

The Memo is organized by location and date of contaminated soils removal and sampling activities. The Memo first discusses the details of work performed in 2021 near the southwest corner of Area 7 and near the southeast corner of Area 7 and finishes with the 2022 work around the condensate leachate manhole near the southwest corner of Area 7. For each work location, the Memo follows the general outline of documentation presented:

1. Background information as to why the sampling and soil investigation was performed.
2. On-site field activities that occurred as part of the approved excavation and soil investigation.
3. Soil sample collection and testing methods.
4. Results and analysis of soil sample laboratory reports.

The Memo then concludes with Conclusion and Recommendations sections that encompass the three soils investigations. Appendices listed below are attached to assist with the information discussed, provide additional details, and are referenced throughout the Memo:

A. Contaminated Soils Removal and Sampling Workplan
B. Daily Field Reports
C. Soil Sample Locations
D. Laboratory Results
E. Data Summary Tables

2021 Southwest Area 7 Sample Collection

This section summarizes sampling activities and associated results for work completed during construction activities in 2021 near the southwest corner of Area 7.

Approach

A three-phased approach was implemented to address Area 7 leachate weeps and subsurface cleanup. This three-phased approach is included as compliance task number 11 of the CHRL 2020 and 2021 Addendum to Municipal Solid Waste Landfill Permit number PR0015736. This approach also was included as compliance task number 18 CHRL 2022 Addendum to Municipal Solid Waste Landfill Permit number PR0015736. The three-phases are as follows:

- The leachate release locations were identified and contained during Phase I.
- The breach that led to the release was repaired as part of Phase II.
- The subsurface investigation and removal of accessible impacted soil activities discussed in this Memo is Phase III.

This Memo represents a soil removal report that documents compliance with the soil CULs and recommended next step actions for any residual soil contamination. The report documents the activities conducted in accordance with the Workplan dated June 2021. The Workplan, including the COCs analyzed for and associated CULs, were submitted to, and approved by Ecology and Public Health. To comply with CULs, soil sampling analysis was performed as discussed in this Memo to determine the extent of contamination and necessary impacted soil removal.

Field Activities

As the Environmental Representative (ER), Herrera oversaw soil excavation activities around the southwest corner of Area 7 and collected soil samples of the final excavation floor and sidewalls to determine the presence or absence of suspect COCs. Sampling activities were conducted June 8th through June 21st, 2021, and then again on September 10th, 2021. Herrera collected soil samples per the details on sheet BC-16 of the Cedar Hills Regional Landfill (CHRL) Area 7 Stage 5 Closure and Area 7/8 Liner Tie-In Contract Drawings (Drawings). Additional information regarding this area of work was presented on BC-17 and BC-18. Appendix A, the June 2021 Workplan, includes Drawings BC-16, BC-17 and BC-18. Herrera performed field screening of samples and potentially impacted areas using a photoionization detector (PID) to determine the presence of volatile organic compounds (VOCs). The PID was calibrated before use on-site each day.

Construction site observations and sampling work performed were detailed in Herrera's daily field reports. The field reports for the southwest Area 7 work are included in Appendix B and include photographic documentation of each day's activities.

June 8th through June 21st, 2021 Activities

Drawing BC-16 indicates the location of and anticipated extent of ditch and soil removal. Drawing BC-18 provides details and notes for removal of the asphalt ditch and underlying soil as well as reconstruction instructions. Excavation of the asphalt ditch on the west side of the West Perimeter Road took place on June 8th. Goodfellow Brothers, Inc. (GBI) excavated the ditch line to an approximate depth of 3-feet below the asphalt-lined ditch per the Drawings. Four (4) confirmation soil samples were collected across the excavation.

Drawing BC-17 provides sections, details, and information regarding construction of specific sections of the area of excavation shown on Drawing BC-16. Excavation of the main trench commenced on June 8th and continued through June 21st. GBI carefully excavated the area around pipes adjacent to and under the West Perimeter Road. The excavation continued east and across the West Perimeter Road, and past the eastern asphalt edge. The effort involved excavation of soil around the existing 42-inch outlet from the Area 7 stormwater ditch and 24-inch stormwater pipe to the existing 84-inch stormwater manhole as called out on Drawing BC-17. Excavation of soil around the 84-inch stormwater manhole also occurred. After it was determined that the existing structure was not suitable for reuse, the manhole was removed during excavation and a trench box was installed for installation of a new manhole. The depth of excavation on the west side of the manhole was approximately 14 feet below ground surface (bgs). Excavation continued east of the manhole at a shallower depth of 8-feet to 8.5-feet bgs and narrowed until excavation ended near the condensate manhole. Fifteen (15) confirmation samples were collected along the trench as well as two (2) duplicate samples for quality assurance purposes.

Excavation for the first part of the southwest Area 7 area terminated at the west side of the condensate manhole called out on BC-16. The remaining soils east of the manhole and on top of the repaired Area 7 liner were excavated and disposed of with the pipe bedding material during removal of the 22-inch LFG header later in 2021. The June 2021 sampling and excavation work concluded with Sample 19, refer to Appendix C for figures, taken just west of the condensate manhole. There was approximately 2,000 cubic-yards (cy) of material hauled to Area 8 for disposal during the June contaminated soil removal activities.

September 9th and 10th, 2021 Activities

Herrera returned on September 9th and 10th, 2021 once construction for the tie-in and removal of the LFG header reached the eastern end of the excavation area detailed on Drawing BC-16.

The area of excavation and sampling took place where the work in June terminated, at the condensate manhole. Profile A on Drawing BC-17 provides cross sectional profile details of the trench.

The excavation depth on the east side of the condensate manhole was approximately 3-feet bgs. Four (4) confirmation samples were collected along the trench as well as one (1) duplicate sample for quality assurance purposes on September 10th.

Excavation and sampling in this area terminated once the eastern end of the planned excavation area was reached as discussed in the Workplan. The extents of excavation and locations of samples collected near the southwest corner of Area 7 are included in Appendix C. Southwest Area 7 samples concluded with Sample 23 taken just east of the condensate manhole. There was approximately 25 cy of material hauled to Area 8 for disposal during the southwest Area 7 September contaminated soil removal activities.

Sample Collection Activities

Representative soil sampling was conducted by Herrera on the soil beneath the pipe trench and stormwater ditch as shown on Drawings BC-17 and BC-18, respectively. Samples were collected to meet requirements of the Workplan and Drawings. Sample locations mostly followed intervals of the excavated linear features, as detailed in Drawings included in the Workplan. The actual number of samples collected for laboratory analysis depended on the completed size of the excavation and results of visual observations and field screening. Original drawing sample quantity compared to actual sample quantity are as follows:

- Drawing BC-17 indicates soil samples at six (6) locations spaced at approximately 40-foot intervals in the excavation bottom. Nineteen (19) samples were collected at ten (10) locations within the excavation. One (1) of these locations had a sample collected at the bottom and both side walls; seven (7) had a sample collected at the bottom and a side; and two (2) were collected only at the bottom. Fifteen (15) of the samples were collected throughout June and the other four (4) were collected in early September.

- Drawing BC-18 indicates soil samples at three (3) locations based on the length of the asphalt ditch and are shown spaced at approximately 35-foot intervals. Instead, four (4) samples were collected at four (4) discrete locations across the excavation bottom.

Approximately 2,100 cubic yards were removed to collect a total of 23 samples. Excavated material was placed in a 40-ton truck and was hauled directly to Area 8 where it was disposed. Drawings anticipated nine (9) different sampling locations for the excavation based on the lengths of the ditch and trench with samples collected approximately every 40 feet. Herrera performed field screening for VOCs using a PID on each sample collected and to evaluate potentially impacted areas. Initial screening results from the PID were used to assist with determination of distance between samples. To conduct the VOC headspace screening from the PID, the sample was placed in a 16-ounce (oz) jar and covered with aluminum foil. The covered sample was shaken for 10 to 15 seconds and then the PID sensor tip was put through the aluminum foil and the maximum value was read and recorded. Excess samples were taken and multiple samples from certain locations were collected for adequate characterization of soils. As discussed in the Workplan, additional soil samples were taken in areas based on visual observations that indicated potential contamination. Herrera determined certain locations did not require additional samples to be collected based on initial appearance of the soil and supported by the PID field screening result of low or no VOC concentration within the soil sample.

Soil samples were collected using a pre-cleaned, laboratory certified 16-ounce (oz), clear wide mouth jar and three 40 milliliter glass vials (VOAs) per sample. These were analyzed according to Washington Administrative Code (WAC) 173-351 Appendix III analyte list which is applicable for this leachate release. Additionally, duplicate samples were collected at a rate approximately equal to ten (10) percent (%) of grab samples. Duplicate samples were collected using the same methods and equipment as for regular samples and were collected for samples DA7SWCS8210615, DA7SWCS17210621 DA7SWCS22210910 or Samples 8, 17 and 22 on the sample location figure in Appendix C. Trip blanks were also included for VOCs analysis and quality assurance. The trip blanks were handled and treated by Herrera in the same manner as the soil samples collected for VOCs analysis. One set of trip blank samples was submitted per sample cooler which amounted to seven (7) trip blank sets included in the southwest Area 7 samples analysis. After collection, samples were placed in a cooler with ice until drop off at the laboratory. The laboratory maintained the samples at a temperature of 2 degrees Celsius (°C) to 6°C. The samples were submitted to OnSite Environmental Inc. (OnSite) located in Redmond, Washington under chain of custody for analysis of the following:

- VOCs by United States Environmental Protection Agency (EPA) Method 8260D
- Semi-Volatile Organic Compounds (SVOCs) by EPA Method 8270E/SIM (with low-level PAHs)
- Polychlorinated Biphenyls (PCBs) by EPA Method 8082A
- Organochlorine Pesticides by EPA Method 8081B
- Total Resource Conservation and Recovery Act (RCRA) Metals by EPA Method 6010B/7471A

Results

Appendix D includes the OnSite laboratory analytical data reports for the samples submitted. Table 1 in Appendix E provides a summary of the OnSite laboratory results for the southwest Area 7 samples that correspond to the sample numbers and locations on the map in Appendix C. The summary includes characteristics of each sample noted during Herrera's collection including location, depth, PID reading, and if there was any visual staining or odor at time of sample collection. Initial on-site sample screening indicated higher PID reads of VOC concentrations in Samples 7, 12, and 15 of 272.1, 97.1, and 30.7 parts per million (ppm), respectively. Laboratory reported results indicate that some analytes were detected for all samples with Samples 7, 10, 11, and 12 having the most detected analytes. Constituents that were above detection limits in more than one sample from the southwest corner of Area 7 for metals are barium, chromium, lead and selenium; for VOCs are acetone, 2-butanone and p-isopropyltoluene; for SVOCs are benzyl alcohol, 2-methylphenol (o-cresol), (3+4)-methylphenol (m,p-cresol), naphthalene and phenanthrene; and for organochlorine pesticides are alpha-chlordane, 4,4'-DDT and endrin ketone. No PCBs were detected in any samples. Low concentrations of carcinogenic polycyclic aromatic hydrocarbons (cPAHs) were calculated for

each sample using the toxicity equivalency factors for the individual cPAH compounds to estimate human health toxicity, as required by WAC 173-340-708(8)(e) and MTCA Table 708-2. The cPAHs included in the total toxic equivalent concentration (TEQ) calculation for each sample were benzo[a]anthracene, benzo[b]fluoranthene, benzo[k]fluoranthene, benzo[a]pyrene, chrysene, dibenz[a,h]anthracene and indeno[1,2,3-c,d]pyrene].

Soil analytical results were first compared to MTCA Method B Cleanup Levels for unrestricted land use to evaluate contaminant levels of potentially dangerous material and determine the type and extent of the material. The Workplan included in Appendix A provides a summary of the Method B Cleanup Levels provided and approved by Ecology for the COCs that were most likely to be detected during the CHRL Area 7/8 Liner Tie-In construction activities. These approved Method B Unrestricted Preliminary Cleanup Levels (PCULs) for soil are the most stringent cleanup levels determined for unrestricted land use and consider background concentrations, as well as the direct contact, groundwater, and ecological exposure pathways. The third column of Workplan Appendix B provides the basis for each PCUL's specific protection. Additionally, Workplan Appendix B provides alternate Method B PCULs for soil that considers the protection of groundwater and assumes the direct contact and ecological exposure pathways will be protected by the Area 7/8 liner tie-in portions of the excavation area. COCs detected in samples have been compared to MTCA Cleanup Levels in Appendix E, if available.

Most samples collected in the southwest work area had reported chemical analyte concentrations below the cleanup levels that are protective of all exposure pathways. Seven (7) of the twenty-three (23) samples exceeded the selenium PCUL of 0.30 milligrams per kilogram (mg/kg) and two (2) of the twenty-three (23) samples exceeded the mercury PCUL of 0.10 mg/kg. For these constituents, the PCULs for groundwater were approved for use based on knowledge that the samples were collected below the Terrestrial Ecological Evaluation (TEE) exposure depth of 6-feet which signifies TEE as an incomplete exposure pathway. For Samples 21 and 23 that exceeded the PCULs for unrestricted land use for selenium and mercury, respectively, and were collected above the TEE exposure depth of 6-feet, the PCULs for potable groundwater were approved for use based on knowledge that the areas would be covered with a permanent physical barrier in the form of geomembrane liner that prevents direct contact or ecological exposure pathways. The extents of the liner and location of samples in relation to the liner are shown in Appendix C. Blue points represent soil sample locations that exist beneath the liner; red points represent sample locations beyond the liner but beneath asphalt paving; and green points represent sample location beyond both liner and pavement. This information is also included in the data summary Table 1 of Appendix E. The samples that exceeded the PCULs for selenium and mercury based on unrestricted land use did not exceed the PCULs based on potable groundwater of 5.2 mg/kg and 2.1 mg/kg, respectively, indicating protection for the only receptor of concern.

Appendix E includes the available MTCA PCULs for unrestricted land use and potable groundwater and their comparison to laboratory reported concentrations in mg/kg. The MTCA Method B Cleanup Levels and Risk Calculation (CLARC) values were used for PCULs not listed in the table provided by Ecology. COCs detected in any sample were below previously discussed

and approved CULs indicating potentially contaminated soils were removed from the area and what soils were not excavated are acceptable to remain in place.

2021 Southeast Area 7 Sample Collection

This section summarizes sampling activities and associated results for work completed near the southeast corner of Area 7 during fall 2021.

Background

On September 20th, 2021 during Area 7 Liner Tie-In construction, multiple LFG conveyance laterals near the northeast corner of Area 8 and interior header connection released what appeared to be leachate as a result of a boot failure and flexible hose break. GBI removed the soils that were directly impacted by the leachate release and stopped when the remaining soils did not smell or appear contaminated. Herrera was requested to sample the area to determine that remaining soils were below CULs. Soil sampling and analysis were performed to close out the release with Ecology.

Because this release took place during summer 2021 construction and was unexpected, a unique, separate Workplan was not prepared. The soil removal and sampling work near the southeast corner of Area 7 was performed per methods presented in the Workplan. The Workplan, including the COCs analyzed for and associated CULs, were submitted to, and approved by Ecology and Public Health. The release associated with the southeast work was reported to Ecology on September 20, 2021 and assigned to the ERTS number of 709420.

Field Activities

Herrera oversaw soil excavation activities and collected additional samples on the potentially impacted soil around the interior header connection near the southeast corner of Area 7 on September 24th and October 1st, 2021. After the release, GBI removed the soils visibly impacted by leachate. GBI removed soils until Herrera determined the remaining soils were visually free of contamination and no longer had an acrid odor indicative of leachate contamination. Excavated soils were hauled to Area 8 for disposal. Herrera then collected soil samples of the remaining native material to test for the presence of suspect COCs according to the Workplan approved by Ecology and Public Health. Additionally, Herrera performed field screening of samples and potentially impacted areas using a PID to determine the presence of VOCs. The PID was calibrated before use on-site each day.

Construction site observations and sampling work performed was detailed in Herrera's daily field reports. The field reports for the southeast Area 7 work are included in Appendix B and include photographic documentation of each day's activities.

September 24th, 2021

On September 24th, GBI excavated two separate areas, one around each spill under the direction of Herrera and Anchor QEA. GBI removed soils in an excavation approximately 20-feet long, 2-feet deep and 3-feet wide around the laterals closest to and just west of the header tie-in. Herrera collected one (1) bottom sample, Sample 24, at the western end of this excavation. Two (2) additional bottom samples (Samples 25 and 26) were collected from the excavated area near the next set of three (3) LFG laterals to the west of Sample 24 after GBI removed soils where the ground surface appeared stained. The excavation around the three (3) laterals was approximately 20-feet long, 1-foot deep, and 3-feet wide. GBI could only remove potentially impacted soils to a depth of one (1) to two (2) feet because of the proximity to the Area 7 anchor trench liner below but visually and olfactorily, the potential impact did not appear to reach the depth of the anchor trench liner.

October 1st, 2021

Herrera returned to site on October 1st to collect additional samples under the decommissioned header pipe located below the Area 6/7 South Berm Road and around the interior header connection at the southeast corner of Area 7. After the header pipe was removed by GBI, Herrera collected Samples 27 and 28 at a depth of 2-feet below the base of the pipe at the eastern end of the Area 6/7 South Berm Road. Herrera collected the final sample, Sample 29, from the excavation around the connection and booted lateral penetration about 2-feet below and 2-feet north of the header after GBI made the interior header connection and ProVac cleaned out the area around the connection.

Sample Collection Activities

Representative soil sampling was conducted around leachate releases out of the laterals near the interior header connection in the southeast corner of Area 7 after noticeably contaminated soils were removed and disposed of in Area 8.

The number of samples collected for laboratory analysis depended on where the releases occurred and results of visual observations and field screening. Samples were collected throughout the spilled areas and southeast corner of Area 7 to determine if the leachate impacted soils had been removed. Six (6) samples at six (6) locations in the excavation bottom were collected and are shown in Appendix C. Drawings BC-17 and BC-18 for the southwest corner detailed sample collection approximately every 35 to 40 feet. Due to the urgency of the situation and wanting a thorough investigation before returning to construction, samples were collected more frequently, approximately every 15 to 25 feet, and expedited laboratory results were requested. As discussed in the Workplan, additional soil samples were taken in areas of the excavation that showed evidence of potential contamination and that warranted supplemental soil characterization. In addition to collecting samples, Herrera performed field screening of samples and potentially impacted areas using a PID to measure VOC concentration.

Soil sample collection by Herrera used the same standard operating procedure (SOP) as described in the Workplan, included in this Memo as Appendix A. Samples near the southeast corner were collected using a pre-cleaned, laboratory certified 16-oz, clear wide mouth jar and three 40 mL VOAs per sample. The samples were analyzed according to WAC 173-351 Appendix III analyte list which is applicable to this leachate release. No duplicate samples were collected from the southeast excavation area. Trip blanks were also included for VOCs analysis and quality assurance. The trip blanks were handled and treated by Herrera in the same manner as the soil samples collected for VOCs analysis. One set of trip blank samples was submitted per sample cooler which amounted to two (2) trip blank sets included in the southeast Area 7 samples analysis. After collection, samples were placed in a cooler with ice until drop off at the laboratory. The laboratory maintained the samples at a temperature of 2°C to 6°C. The samples were submitted to OnSite of Redmond, Washington under chain of custody for analysis of the following:

- VOCs by EPA Method 8260D
- SVOCs by EPA Method 8270E/SIM (with low-level PAHs)
- PCBs by EPA Method 8082A
- Organochlorine Pesticides by EPA Method 8081B
- RCRA Metals by EPA Method 6010B/7471A

Results

Appendix D includes OnSite laboratory analytical data reports for all samples. Table 2 in Appendix E provides a summary of the OnSite laboratory results for the southeast Area 7 samples that correspond to sample numbers and locations on the figure in Appendix C. The Appendix E summary includes characteristics of each sample noted during Herrera's collection including location, depth, PID reading, and if there was any visual staining or odor at time of sample collection. Initial field screening with the PID indicated low or no PID detections of VOC concentrations within southeast Area 7 samples. Laboratory results indicate that some analytes were detected samples collected in this area. Constituents that were detected in more than one sample from the southeast corner of Area 7 for metals are barium, chromium, and selenium; and for VOCs are acetone, 2-butanone, and p-isopropyltoluene. The southeast samples did not have any detected SVOCs, PCBs, or organochlorine pesticides and had low TEQs of cPAHs (less than 0.1% of the PCUL for all samples). Sample 29 had the most detected analytes. Soil analytical results followed the same analysis as the southwest samples and were compared to MTCA Method B Cleanup Levels for unrestricted land use unless PCULs were not listed in the table provided by Ecology and CLARC values were used instead. All samples with field screening readings had contaminant values below approved CULs that are protective of ecological exposure pathways. The results of sampling indicate potentially contaminated soils were removed from the area and what soils were not excavated are acceptable to remain in place.

2022 Southwest Area 7 Condensate Leachate Manhole Sample Collection

This section summarizes sampling activities and associated results for work completed around the condensate leachate manhole near the southwest corner of Area 7 during fall 2022.

Background

On the morning of September 19th, 2022, during Area 7/8 Liner Tie-In construction, a 6-inch condensate pipe connected to the newly installed condensate leachate manhole was accidently hit by an excavator. This resulted in a release of leachate. As it flowed around the west side of the manhole, GBI routed the leachate back into the manhole on its south end and avoided contact with the eastern side of the manhole. GBI spent the afternoon of September 19th removing the soils that were directly impacted by the spill and stopped when the remaining soils did not smell or appear contaminated. Herrera was requested to sample the area to establish that any COCs in the remaining soils were below CULs.

Late in the day on September 20th, 2022, leachate was discovered in the bottom of the same condensate leachate manhole. The leachate release on September 19th is believed to have seeped around the sides of the manhole out of sight of GBI crew members and seeped into the manhole before the recently applied epoxy, Ravens coating, had cured. On September 20th GBI removed soils that were directly impacted and stopped when equipment could not reach down the sides of the manhole any further. A vactor truck was on-site on September 22nd and removed soils around the entire manhole perimeter and down to its base. Herrera was on-site on September 22nd to sample the remaining soils in this area to establish that any COCs in the remaining soils were below CULs.

Because this spill took place during summer 2022 construction that was part of the Area 7/8 liner tie-in work and was unexpected, a unique, separate Workplan was not prepared. The soil removal and sampling work was performed in accordance with the previously approved Workplan, included in this Memo as Appendix A. The release associated with the southwest manhole work was reported to Ecology on September 19, 2022 and assigned to the ERTS number of 717730.

Field Activities

Herrera oversaw soil excavation activities and collected samples of the potentially impacted soil around the condensate leachate manhole on September 19th and September 22nd, 2022. After each leachate spillage, GBI removed the soils visibly and olfactory impacted by leachate. GBI removed soils until Herrera determined the remaining soils were visually free of contamination and no longer had an acrid odor indicative of leachate contamination. Removed soils were hauled to Area 8 for disposal. Herrera then collected soil samples for laboratory testing according to the Workplan for the presence of suspect COCs. Additionally, Herrera performed

field screening of samples and potentially impacted areas using a PID or SEM5000 unit to evaluate for VOCs. The field screening unit was calibrated before use on-site each day.

Construction observations and sampling work performed was detailed in Herrera's daily field reports. The field reports near the southwest Area 7 work around the condensate leachate manhole are included in Appendix B and include photographic documentation of both day's activities.

September 19th, 2022

On September 19th, GBI excavated around the leachate pipe break and around the manhole where the leachate had flowed. GBI removed soils around the manhole to about 7-feet bgs to a perimeter of about 6-feet beyond the edge of the manhole until the soils remaining looked and smelled leachate free. Herrera collected two (2) bottom samples, Samples 30 and 31, west and south of the manhole respectively. Three (3) additional side samples (Samples 32, 33, and 34) were collected from varying depths around the west and south sides of the excavation. A duplicate sample was taken of Sample 31.

September 22nd, 2022

GBI began removing soils on September 21st and required a vactor truck to reach and remove the soils located around the bottom of the manhole. The impacted soils removal was completed and confirmational sampling took place on September 22nd when the vactor truck was on-site.

GBI removed soils around the manhole to about 11-feet bgs to reach the manhole base and approximately 3-feet beyond the manhole edge. Soils were removed until the soils remaining looked and smelled leachate free. Herrera collected three (3) samples at four (4) quadrants of the manhole for a total of twelve (12) samples. At each quadrant, a sample was collected from the excavation bottom (at manhole base elevation), 4-feet up from bottom, and 6 to 7-feet up from bottom, as follows:

- Samples 35, 36, and 37 at the southwest walls of the excavation
- Samples 38, 39, and 40 at the southeast walls of the excavation
- Samples 41, 42, and 43 at the northwest walls of the excavation
- Samples 44, 45, and 46 at the northeast walls of the excavation

Additional samples were collected in this area, as follows:

- Samples 35, 38, 41, and 44 were collected from the excavation bottom
- Samples 36, 39, 42, and 45 were collected 4-feet up from bottom
- Samples 37 and 40 were collected 6-feet up from bottom

- Samples 43 and 46 were collected from 7-feet up from bottom
- A duplicate sample was taken of Sample 39.

Sample Collection Activities

Representative soil sampling was conducted on the soil around the condensate leachate manhole near the southwest corner of Area 7 after noticeably and suspected contaminated soils were removed.

The number of samples collected for laboratory analysis depended on extents of excavation and results of visual observations and field screening. Samples were collected throughout the excavation area around the manhole to determine if the leachate impacted soils had been removed. Five (5) samples were collected on September 19th from the initial excavated area around the manhole after it appeared contamination was limited to the upper portion of the manhole. Twelve (12) additional samples were collected on September 22nd from a larger excavated area. Drawings BC-17 and BC-18 from the Workplan detailed sample collection approximately every 35 to 40 feet. Due to the urgency of the situation and wanting a thorough investigation before returning to construction, samples were collected more frequently, approximately every 4 feet, and expedited laboratory results were requested. In addition to collecting samples, Herrera performed field screening of samples and potentially impacted areas using a PID on September 19th and a SEM5000 unit was used around the excavation area on September 22nd.

Soil sample collection used the same SOP as in the Workplan. Samples near the manhole were collected using a pre-cleaned, laboratory certified 16-oz, clear wide mouth jar and three 40 mL VOAs per sample and were analyzed according to WAC 173-351 Appendix III analyte list which is applicable to this leachate release. Two duplicate samples were collected from the manhole excavation area, one on September 19th and one on September 22nd. Trip blanks were also included for VOCs analysis and quality assurance. The trip blanks were handled and treated by Herrera in the same manner as the soil samples collected for VOCs analysis. One set of trip blank samples was submitted per sample cooler which amounted to two (2) trip blank sets. After collection on both days, samples were placed in a cooler with ice until drop off at the laboratory. The laboratory maintained the samples at a temperature of 2°C to 6°C. The samples were submitted to OnSite of Redmond, Washington under chain of custody for analysis of the following:

- VOCs by EPA Method 8260D
- SVOCs by EPA Method 8270E/SIM (with low-level PAHs)
- PCBs by EPA Method 8082A
- Organochlorine Pesticides by EPA Method 8081B
- RCRA Metals by EPA Method 6010B/7471A

Results

Appendix D includes the OnSite laboratory analytical data reports. Table 3 in Appendix E provides a summary of the OnSite laboratory results for samples collected on September 19th and Table 4 provides a summary for the samples collected on September 22nd. The summary includes characteristics of each sample noted during Herrera's collection including location, depth, field screen reading, and if there was any visual staining or odor at time of sample collection. The table includes the laboratory sample number and the shortened numbers that correspond to the sample numbers and locations shown on the figure in Appendix C. Initial on-site sample screening indicated no VOC present within the samples or excavation area.

Laboratory reported results from samples collected on September 19th indicate that some analytes were detected in all samples. Constituents detected in the area around the manhole for metals are barium, chromium, and selenium; for VOCs are acetone, 2-butanone, and p-isopropyltoluene; and for SVOCs are 2-methylphenol, (3+4)-methylphenol, and phenol. The samples did not have any detected PCBs, or organochlorine pesticides and had low TEQs of cPAHs (less than 0.1% of the PCUL for all samples). Samples 30 and 32 had the most detected analytes. Soil analytical results followed the same analysis as the samples collected in 2021 and were compared to MTCA Method B Cleanup Levels for unrestricted land use unless PCULs were not listed in the table provided by Ecology and CLARC values were used instead.

Two (2) of the five (5) samples collected on September 19th met or exceeded the selenium PCUL of 0.30 milligrams per kilogram (mg/kg). For Sample 30, the PCUL for potable groundwater was approved for use based on sample collection below the TEE exposure depth of 6-feet which signifies TEE as an incomplete exposure pathway. Sample 32 exceeded the PCUL for unrestricted land use for selenium due to its collection above the TEE exposure depth of 6-feet. However, the PCUL for potable groundwater was approved for use based on knowledge that the sample area would be covered with a physical cap in the form of asphalt pavement that prevents direct contact or ecological exposure pathways. The samples that exceeded the PCUL for selenium based on unrestricted land use did not exceed the PCUL based on potable groundwater of 5.2 mg/kg indicating protection for the only receptor of concern. Additionally, when leachate was discovered at the base of the manhole late in the day on September 20th, these original remaining soils sampled on September 19th were likely removed as part of the supplemental excavation work that occurred on September 21st and 22nd.

Laboratory analytical results from samples collected on September 22nd indicate that some analytes were detected for all samples with most samples having similar detections. Constituents that were detected in the area around the manhole for metals are barium and chromium; for VOCs are acetone and 2-butanone; and for SVOCs are (3+4)-methylphenol and phenol. The samples did not have any detected PCBs, or organochlorine pesticides and had low TEQs of cPAHs (less than 0.1% of the PCUL for all samples).

Appendix E includes the available MTCA PCULs for unrestricted land use and potable groundwater and their comparison to laboratory reported concentrations in mg/kg. The MTCA Method B Cleanup Levels and CLARC values were used for PCULs not listed in the table

provided by Ecology. All samples collected on September 22nd had COCs below previously discussed and approved CULs that are protective of ecological exposure pathways indicating potentially contaminated soils were removed from the area and what soils were not excavated are acceptable to remain in place. These soil samples are more representative of the remaining soils than the soil samples collected on September 19th as additional excavation and soils removal occurred since the September 19th samples were collected.

CONCLUSIONS

PCULs compared to analytical laboratory results varied based on specific protection required at the sampling location, as follows:

- The most stringent CULs are for unrestricted land use and consider background concentrations, as well as the direct contact, groundwater, and ecological exposure pathways.
- Alternate Method B PCULs for soil that considers the protection of groundwater and protection from direct contact and ecological exposure pathways by a barrier, such a geomembrane liner or asphalt pavement or soil is at a elevation below the TEE exposure depth of 6-feet bgs.

Two of the analytical parameters were found in samples at detectable levels and some parameters were found in samples at concentrations above the PCULs for unrestricted land use, the most stringent and protective of all exposure pathways, as follows:

- Samples 7, 8, 10, 12, 15, 19, 21, 30, and 32 that exceeded the selenium PCUL for unrestricted land use of 0.30 mg/kg
- Samples 19 and 23 that exceeded the mercury PCUL for unrestricted land use of 0.10 mg/kg

No concentrations of any constituents were found above the PCULs for potable groundwater. PCULs for selenium and mercury for potable groundwater are 5.2 mg/kg and 2.1 mg/kg, respectively. Protection of groundwater is applicable to Samples 7, 8, 10, 12, 15, 19, and 30 because they were collected at elevations below the TEE exposure depth of 6-feet bgs. Samples 21 and 23 were collected from locations that exist below the CHRL liner system that prevents direct contact or ecological exposure pathways. Sample 32 was collected above the TEE exposure depth of 6-feet bgs but from a location that exists below asphalt paving that prevents direct contact or ecological exposure pathways.

The soil removal and excavation areas are believed to be the extents of potential contamination from releases assigned to ERTS numbers of 687696 for the southwest area, 709420 for the southeast area, and 709420 for the manhole area. Potentially impacted soils that came as a result of construction activities taking place as part of the CHRL Area 7/8 Liner Tie-In, have been removed and disposed in Area 8. Soil that remains in pace at the southwest and southeast Area

7 excavation areas meets approved and applicable MTCA Method B Cleanup Levels based on laboratory analytical results.

Soil samples collected represent the extent of excavation and soil removal. Analytical results determined that soils that remain in place are below applicable PCULs and therefore remaining soil may stay in place . The laboratory results included in Appendix D and summarized in Appendix E are believed to represent remaining soil locations with the highest possible COCs as they are closest in proximity to the releases and contamination. Analytical results indicate concentrations in all samples are below previously discussed and approved CULs.

RECOMMENDATIONS

Based on laboratory analytical results no further actions are required and the leachate releases can be closed by Ecology. Potentially impacted soils above applicable CULs have been removed and disposed of in Area 8 or are located below a geomembrane liner or asphalt pavement. Soil that remains in the work areas meets approved and applicable MTCA Method B Cleanup Levels according to laboratory analytical results. These results indicate that the remaining soils in the work areas do not have COCs that exceed approved and applicable PCULs. Soils that were labeled potentially impacted have been removed, are confirmed not impacted, or have a permanent barrier that prevents direct contact and ecological exposure pathways.

APPENDIX A

Contaminated Soils Removal and Sampling Workplan

TECHNICAL MEMORANDUM

Date: June 18, 2021

To: Ron Borrevik and Dan Swope, King County Solid Waste Division

From: BHC Consultants, prepared by Herrera Environmental Consultants, Inc.

Subject: Contaminated Soils Removal and Sampling Workplan

INTRODUCTION

This work by Herrera Environmental Consultants (Herrera) was initiated under Engineering Services for Cedar Hills Regional Landfill (CHRL) Area 7 Closure Project, Contract E00227E11. This memorandum is a workplan developed for contaminated soil screening, testing, and disposal to be implemented as part of the CHRL Area 7/8 Liner Tie-In construction activities scheduled for summer of 2021.

BACKGROUND

In 2017 King County Solid Waste Division (KCSWD) hired Scarsella Brothers, a general contractor, to perform the Area 7 Stages 3 and 4 Closures and the Area 8 Development. Excavation of Area 8 was done during summer of 2017 and then generally put on hold for the wet season starting October 1st.

A memorandum dated January 5, 2018 summarizes seep observations made by Udaloy Environmental Consulting between late October and December 2017. The memorandum provides information on areas of potential seepage or wet soils within the Area 8 excavation. The memorandum describes two seeps near the area of the CHRL Area 7/8 Liner Tie-In construction activities. The potential sources of the two seeps in the northwestern corner of the Area 8 excavation were identified as the following:

- Perched groundwater that is hydraulically continuous with groundwater encountered in boring A8B-4 in May 2014 at the contact between fill soils and underlying undisturbed soils (approximate elevation of 538-feet).
- Water stored in and draining from backfill or pipe bedding surrounding the contaminated surface water (CSW) manhole (MH) 10 (CSW-MH-10) and associated backfill, piping, and pipe bedding.
- A combination of both of the above sources.

CSW-MH-10, associated piping, and surrounding soils were excavated and removed as part of Area 8 Development in summer 2018 which may have eliminated seepage from the backfill,

piping, and pipe bedding. The area is now covered with the bottom liner system and refuse and is not accessible.

During the winter of 2018/2019, leachate impacted water was detected in anchor trenches, pipe trenches, and some structures outside of Area 7. After detection of the issue, temporary collection sumps, pumps, and generators, were installed to convey the impacted water to the leachate and CSW facilities. On March 6, 2019, Scarsella Brothers reported the incident to Washington State Department of Ecology (Ecology). The Statewide Environmental Incident Report Form number is 687696. Ecology determined this release is subject to the Model Toxics Control Act (MTCA) and can be closed out during this initial investigation phase with a Release Investigation and Removal Report documenting that the impacted soils have been removed.

A three-phased approach has been implemented to address Area 7 leachate weeps. This three-phased approach is included as compliance task number 11 of the CHRL 2021 Addendum to Municipal Solid Waste Landfill Permit number PR0015736; this approach also was included as compliance task number 11 of the CHRL 2020 permit Addendum.

Phase I involved the initial containment of the leachate release, identification of the specific release location, and correction of the defects that led to the release and was completed in August 2019. Also, potentially leachate impacted water was detected in the stormwater ditch on the west side of the West Perimeter Road downstream from the weep area. As part of the Phase I response actions, a stormwater bypass pipe system was installed upstream to direct clean stormwater past the identified impacts and a pump and generator were installed to direct the potentially impacted water to the CSW system. Anchor QEA, the Construction Manager, has daily field reports documenting activities completed in August 2019.

Phase II of the corrective action consisted of repair and reconstruction of the stormwater collection system in the Area 7 weep area. In the Summer of 2019, KCSWD hired a general contractor to execute Phase II. Work in 2019 included exposing the Area 7 interim cover system connection to the Area 7 bottom liner, identifying what may have led to the release of leachate impacted water, and repairing the connection. The work occurred between July 15 and August 8 of 2019. Approximately 200 linear feet of the cover/bottom liner connection was exposed. A breach in the cover/liner seam approximately 3 feet long was identified and repaired. The cover system and stormwater control berm and geomembrane flap were then reconstructed. Potentially impacted soil in the immediate vicinity around utility structures and pipes was not removed during the 2019 work and will be addressed as part of the Phase III work.

Phase III of the corrective action consists of a subsurface investigation and removal of accessible impacted soil. Phase III work will be performed as a component of the Area 7/8 tie-in project during the Summer of 2021. Along with the soil removal activities described herein, a soil removal report documenting compliance with the soil cleanup levels and engineering controls for any residual soil contamination shall be prepared once site work has been completed.

PROJECT ROLES

Multiple organizations have roles in the execution of the work described by this Workplan, as described below:

- Owner - KCSWD is responsible for project management and contract management of firms listed below.
- Design Engineers - BHC Consultants and HDR Engineering, Inc. are the Owner's Technical Representative responsible for development of the Contract Documents. Herrera is a subconsultant to the Design Engineers.
- Construction Manager – Anchor QEA is the Owner's Technical Representative responsible for monitoring and observing construction activities to verify that the Contractor's work conforms to the requirements of the Contract Documents. Anchor QEA will also manage laboratory services.
- Contractor – Goodfellow Bros. is responsible for completing the work described by the Contract Documents.
- Environmental Representative (ER) – Herrera will be the ER and will observe excavation activities for the presence of suspect contaminants of concern (COCs) and will be responsible for collection of samples for testing at a laboratory.

WORKPLAN INTENT

The intent of this workplan is to provide information regarding the following plans and strategies for sample collection and flow determination:

- Identify the anticipated maximum area to excavate before deferring to contingency plan.
- Identify the COCs in the area to be remediated.
- Define the site cleanup levels for COCs
- Describe methods for material separation along with Material Classification Procedures for clean soil, impacted soil, recyclable material, and suspected Dangerous Waste
- Determine how, where, and when to take confirmation soil samples (including a sampling decision tree)
    - Outline testing methods for clean soil verification
    - Testing methods for impacted soil
- Contingency Response Plan

- Contact Information for Responsible Parties
- Responsibilities and Notifications for Suspected Dangerous Waste
- Procedures for segregation and management of Dangerous Waste
- Procedures for stormwater management within the excavation area(s)
- Documentation and Recordkeeping procedures including draft/final report of results for regulators
- Health and safety considerations.

WORKPLAN NARRATIVE

Following are subsections for each of the items listed in Workplan Intent.

Maximum Area of Excavation

The maximum area of excavation has been identified in the Area 7 Stage 5 Closure Drawings on sheets BC-16 with additional information presented on BC-18 and BC-17, included in Appendix A.

The area of excavation includes the southwest corner of Area 7 where construction was performed on infrastructure potentially causing leachate impacted water. A silt fence will be installed prior to work in this area. Sheet BC-16 outlines the area of work and calls out the approximate location for soil removal and impacted soil areas.

Sheet BC-17 provides profile details and construction instructions for specific sections of the area of excavation called out in BC-16. The effort will involve excavation of soil around the existing 42-inch outlet from the stormwater ditch and 24-inch stormwater pipe to the existing 84-inch stormwater manhole as called out in sheet BC-17. Excavation of soil around the existing 84-inch stormwater manhole is also included. As a part of the entire phased effort some existing structures will be relocated, maintained, adjusted, or removed after work is completed as called out and specified on the drawing.

Sheet BC-18 provides profile details and construction instructions for specific sections of the area of excavation called out in BC-16 in an existing stormwater ditch. The existing asphalt ditch will be replaced by a ditch lined with quarry spalls following removal of impacted soils.

Contaminants of Concern

Washington Administrative Code (WAC) 173-351 Appendix III analyte list is applicable for this leachate release. Primary contaminants of concern in impacted soils include arsenic, chloride, and vinyl chloride and other hazardous chemicals associated with leachate.

Pre-cleaned, certified containers appropriate for the required analysis will be used for sampling. Sample container quality protocols will be enforced and assured by OnSite Environmental, Inc. (OnSite). Containers supplied by OnSite will be kept sealed until used. Required sample containers, preservation, and holding time requirements for contaminants of concern are described in Table 1.

Table 1. Analytical Methods

Analysis	Analytical Method	Container	Hold Time	Preservation
Volatile Organic Compounds (VOCs)	EPA Method 8260B	3 40-mL GV; sealed with zero headspace	14 Days if preserved with $NaHSO_4$ 2 Days if unpreserved	Cool, 0 -6 °C Optional $NaHSO_4$
Semi-Volatile Organic Compounds including Carcinogenic Polycyclic Aromatic Hydrocarbons	EPA Method 8270D / SIM	8 oz WMG	14 days	Cool, 0 -6 °C
Total metals	EPA method 6010B/7471A	4 oz WMG	6 Months	Cool, 0 -6 °C
Organochlorine pesticides	EPA method 8081B	8 oz WMG	14 Days	Cool, 0 -6 °C
Polychlorinated biphenyls	EPA method 8082	8 oz WMG	14 Days	Cool, 0 -6 °C

EPA = United States Environmental Protection Agency

mL = milliliters

GV = glass vial

°C = degrees Celsius

oz = ounce(s)

WMG – wide mouth glass jar

Site Cleanup Levels

Soil analytical results will be compared to MTCA Method B cleanup levels for unrestricted land use. Chapter 173-340 WAC provides guidance for using chemical-specific or site-specific information to calculate cleanup levels. Method B cleanup levels are provided for most chemicals, and some chemicals have no established cleanup levels under MTCA. Appendix B provides a summary of the Method B cleanup levels provided by Ecology for the chemicals most likely to be detected during the CHRL Area 7/8 Liner Tie-In construction activities. The Method B unrestricted preliminary cleanup levels (PCULs) for soil consider background concentrations, and direct contact, protection of groundwater, and ecological exposure pathways. Additionally, Appendix B provides alternate Method B PCULs for soil that consider background concentrations and protection of groundwater and assumes the direct contact and ecological exposure pathways will be protected by the Area 7/8 liner tie-in portions of the excavation area. All chemicals detected in samples, including those summarized in Table 1 will be compared to MTCA cleanup levels if detected.

Methods for Material Separation and Classification

The ER and Construction Manager will observe the excavation activities and screen soils as they are being excavated to separate clean soils versus impacted soils to be designated as follows:

- **Clean Soil** – soil material that may be stockpiled onsite for other use at CHRL and meets MTCA Method B Cleanup Levels.
- **Impacted Soil** - soil material which will be stockpiled in Area 8 for use as daily cover and which is not determined to be Clean Soil by testing.

The ER and Construction Manager will screen soils using the following methods:

- Soils that exhibit unusual discoloration or staining, sheen, olfactory signs of contamination, or have VOCs detected >5 parts per million (ppm) by headspace analysis with a photoionization detector will be placed in an impacted contaminated soils stockpile.
    - While the 2016 Revised Guidance for Remediation of Petroleum Contaminated Sites describes two techniques for headspace analysis, the plastic bag and jar approaches, only the jar headspace protocol will be utilized. As described in the 2016 Revised Guidance for Remediation of Petroleum Contaminated Sites, the jar headspace protocol is provided in the State of Massachusetts Underground Storage Tank Manual, available at http://www.mass.gov/eea/docs/dep/water/drinking/alpha/i-thru-z/uicjar.doc, and included as Appendix C.
- Soils tested by headspace analysis with less then 5 ppm VOCs detected will be assumed to be potentially clean soils and indicate the excavation limits. Soil samples will be collected for laboratory analysis at the excavation limits.
- Potentially clean soils that do not exhibit indications of contamination will be placed in a clean soils stockpile, sampled, and held until laboratory analytical results are received to confirm that chemical concentrations are below MTCA Method B preliminary cleanup levels.

If leachate is encountered, it will be contained in a tank or lined structure and pumped or hauled for disposal in the Leachate Lagoons upon approval of the King County Project Representative (KCPR). No sampling of the leachate is anticipated.

If suspected impacted soil is left in place due to physical impediments (e.g., existing structures or pipes), the Area 7 or Area 8 bottom liner systems, or project time constraints, a visible marker (e.g., orange project fencing or high visibility flagging) will be placed in the excavation by the Contractor prior to backfilling. The Contractor or Construction Manager will also survey the excavation limits and the area of suspected remaining impacted soil. The visible marker will be used to delineate where residual impacted soils removal may be required during future construction activities. If contaminated soil is suspected under the bottom liner systems of Area 7 or Area 8, the suspect contaminated soil would remain in place since refuse has already been placed in these areas. Other contaminated soils if left in place may be removed during future construction activities.

Confirmational Sampling and Testing

Representative soil sampling will be conducted by the ER on the soil beneath the pipe trench and stormwater ditch as shown on sheets BC-17 and BC-18, respectively. The Contractor or

Construction Manager will survey the northing, easting, and elevation of each sample location. Sample locations will be at intervals of the excavated linear features, as shown in sheets included as Appendix A, as follows:

- Sheet BC-17 indicates soil samples at 6 locations in the excavation bottom based on the length of the trench and are shown spaced at approximately 40-foot intervals. Samples will be collected from the bottom and each side wall of the excavation at these approximate locations.

- Sheet BC-18 indicates soil samples at 3 locations are anticipated based on the length of the asphalt ditch and are shown spaced at approximately 35-foot intervals. Samples will also be collected from the bottom and each side wall of the excavation at these approximate locations.

The actual number of samples collected for laboratory analysis may vary depending on the final size of the excavation and results of visual observations and field screening. Approximately 3,800 cubic yards is anticipated to be excavated, based on sheets BC-17 and BC-18. More soil may be excavated to remove accessible impacted soil, if present. For adequate characterization of soils, samples will be collected from the bottom and each side wall of the excavation. To account for sampling on the excavation sides as well as an excavation of impacted soils more than the area indicated on sheet BC-16, sample containers for up to 20 sample locations will be available onsite. This number of containers allows for duplicate samples to be collected at a rate of 10% of grab samples analyzed as well as spare containers.

In addition to duplicate samples, other quality assurance and control analyses will be required. Trip blanks will be required collected for VOC analysis. The trip blanks will be handled and treated by ER in the same manner as the soil samples collected for VOC analysis. These samples will be clearly identified on sample labels and Chain-Of-Custody Records as trip blanks. At least one set of trip blank samples will be submitted per sample cooler. Equipment rinsate blanks are not anticipated since disposable equipment will be used for sample collection.

Field forms or field logbook will also contain the following information for samples collected, as follows:

- Sample identification, to be labeled using the format “A7S5C-MMDDYY”;

- Sample date;

- Sample time;

- Sample location;

- Anticipated analyses;

- Field observations; and

- Issues encountered during sampling activities and corrective actions taken, if applicable

Samples will be packaged to avoid breakage or cross-contamination, properly preserved, and driven to OnSite at 14648 NE 95th Street, Redmond, WA under chain of custody. Each sample container will be labeled and placed in a cooler with ice. Coolers will be filled with ice at the beginning of each day, prior to sampling.

Material designated as Impacted Soil may be stockpiled within Area 8 for use as Daily Cover. The stockpile location should be in a location that has surface water routed to the CSW Pond or material will be covered with a suitable material such as plastic sheeting.

Contingency Response Plan

The Contractor will prepare and submit site-specific Contingency Response Plan and Spill Prevention and Cleanup Report to establish and maintain quality control for environmental protection procedures. These submittals have been reviewed for consistency with Contract Documents and onsite project requirements by BHC Consultants or its subconsultants, Construction Manager, and KCSWD prior to the Contractor beginning work. Minimum requirements for these submittals are listed in specification Section 02 31 40 - Removal of Hazardous Materials and Dangerous Waste and generally include the following elements:

- General sequence of response and notification procedures in the event of an unplanned release of hazardous materials or dangerous waste or other emergency (see Table 2 for general notification procedures and follow-up actions).
- Emergency contact information including a designated 24-hour emergency response contact knowledgeable of the excavation and hazardous materials at the property, and who has comprehensive emergency response and incident mitigation information for such material or has immediate access to a person who possesses such knowledge and information (see Table 3).
- Identification of an emergency coordinator in compliance with WAC 173-303-350, if dangerous waste materials, though unexpected, are encountered.
- Identification of temporary storage areas for suspect and confirmed dangerous waste.
- Identification of refueling and vehicle maintenance areas.
- A contamination prevention section with best management practices (BMPs) and other procedures to prevent introduction of contaminants to surface water, air, soil, roadways, or groundwater.
- A list of hazardous materials and chemicals to be stored or used on the project property including but not limited to products for fueling, equipment maintenance, and vehicle servicing.

Information in these submittals will emphasize spill response protocols and appropriate containment and cleanup procedures to minimize the effect of spills and releases. Spills will be cleaned up to the satisfaction of the Construction Manager. Response actions must comply with

applicable regulations and agency notifications. Additional details regarding reporting procedures, contingency actions for handling, and temporarily storing dangerous waste, and minimum requirements for response equipment and supplies are listed in the specification Section 02 31 40 - Removal of Hazardous Materials and Dangerous Waste.

Notifications and Actions by Responsible Parties

Contaminated soil screening, testing, and disposal actions must comply with applicable regulations and agency notifications. Table 2 outlines who out of the responsible parties is required for specific actions in the event of an unplanned release of hazardous materials or dangerous waste or another emergency. Table 3 provides contract information for the responsible parties. Additional details regarding contingency actions for handling, and temporarily storing dangerous waste, and minimum requirements for response equipment and supplies are listed in the Technical Specifications.

Table 2. Notification and Follow-Up Actions

Action	Responsible Parties
1. Field screen suspect materials indicative of potential contaminants using photoionization detector for VOCs.	ER (during excavation activities shown on BC-16 in Appendix A)
2. Maintain contingency spill, containment, and Suspected Dangerous Waste handling materials.	Contractor
3. Implement Health and Safety Plan (HASP) procedures applicable to dangerous waste and provide qualified personnel.	Contractor
4. Initiate notification sequence: notify Construction Manager and KCPR.	Contractor or Any Person Who Discovers Potential Environmental Issue
5. Segregate, contain, and manage suspect materials for observation and sampling (or otherwise isolate area of concern).	Contractor
5A. Number/label containers with Suspected Dangerous Waste materials and collect characterization samples, as determined necessary by Construction Manager and KCPR for lab testing. Notify KCPR if dangerous waste is confirmed.	ER
5B. Maintain containers with Suspected Dangerous Waste in protected manner until transported for disposal. Maintain identification number.	Contractor
6. Collect and analyze verification samples to determine quality of soils remaining in excavation area where suspect materials were removed.	ER

Action	Responsible Parties
7. Sign dangerous waste Disposal Manifests (if needed) or Solid and Liquid Waste Disposal Characterization Certifications.	KCPR
8. Select the appropriate disposal facilities.	Municipal Solid Waste – CHRL Asbestos – CHRL Dangerous Waste – Contractor will select, KCPR will approve Demolition Waste – CHRL or off-site facility approved by KCPR
9. Coordinate shipment of regulated materials for off-site disposal (including interim off-site storage facility, if necessary).	Contractor or Construction Manager
9A. Provide truck trip tickets to Construction Manager with copies to ER and KCPR.	Contractor
9B. Prepare letter to disposal facility with compiled laboratory testing results and prepare agency notifications for KCSWD signature.	ER and KCPR

Table 3. Contact Information for Responsible Parties

Party	Contact	Address	Contact Information
KCPR	KCSWD: Primary: Ron Borrevik Secondary: Dan Swope	201 S. Jackson St, Suite 701 Seattle, WA 98104	(206) 263-3386 rborrevik@kingcounty.gov (206) 477-4623 Dan.Swope@kingcounty.gov
Construction Manager	Resident Engineer: Mike Roberts Anchor QEA, LLC Lead Field Inspector: John Stein Peak GeoSolutions	Anchor QEA, LLC: 1201 3rd Ave #2600 Seattle, Wa 98101 Peak GeoSolutions: 316 W Birch St. Glenrock, WY 82637	(206) 971-2685 mroberts@acnchorgea.com (541) 231-0779 jstein@peakgeo.com
Design Team (includes ER)	Primary: Bard Horton, P.E. BHC Consultants Secondary: Tyson Wright, P.E. Herrera	BHC: 1601 5th Ave #500 Seattle, WA 98101 Herrera: 999 3rd Ave #2200 Seattle, WA 98104	(206) 357-9912 Bard.horton@bhcconsultants.com (206) 787-8219 twright@herrerainc.com

Party	Contact	Address	Contact Information
Landfill Operations Representative	KCSWD: Primary: Scott Barden Secondary: Nigel White	201 S. Jackson St, Suite 701 Seattle, WA 98104	(206) 263-8863 scott.barden@kingcounty.gov (206) 263-1078 nigel.white@kingcounty.gov
Contractor	Goodfellow Bros. Kyle Williams, Project Engineer	22035 SE Wax Road Suite 14 Maple Valley, WA 98038	(253) 293-4993 kylew@goodfellowbros.com
Health and Safety/Emergency Response Officer	KCSWD Ryan Bowering	16645 228th Ave SE Maple Valley, WA 98038	(206) 477-2580 rbowering@kingcounty.gov
Site Health and Safety Officer	Goodfellow Bros. Billy VanBerkom	22035 SE Wax Road Suite 14 Maple Valley, WA 98038	(808) 798-1375
Emergency Coordinator	Goodfellow Bros. Kyle Williams	22035 SE Wax Road Suite 14 Maple Valley, WA 98038	(253) 293-4993 kylew@goodfellowbros.com
24-Hour Emergency Response Contact	Goodfellow Bros. Kyle Williams	22035 SE Wax Road Suite 14 Maple Valley, WA 98038	(253) 293-4993 kylew@goodfellowbros.com

Responsibilities and Notifications for Suspected Dangerous Waste

Although not anticipated during excavation activities, the range of suspected dangerous and regulated waste covered by this Workplan includes solid materials, liquids, and possibly affected excavation seepage water. Activities for potential dangerous and regulated waste handling and temporary storage will be conducted in accordance with the Contractor's Contingency Response Plan.

The Contractor is responsible for excavation, handling, and transport of soil and other excavation materials. The Contractor and others handling soil material are responsible for providing personnel with proper training and implementing necessary health and safety procedures. Minimum Contractor health and safety requirements are presented in Technical specification Section 01 35 00 – Health and Safety. The ER will observe soil excavation and handling activities and document the visual and physical characteristics of these materials.

The ER will also evaluate the potential for the presence of dangerous waste and other materials that differ from the expected soil and fill types previously observed. If suspected dangerous or regulated waste is identified by the ER or others, the Contractor will take additional actions to segregate this material for further characterization by the ER. Table 2 describes the general responsibilities for notification, field procedures for suspected dangerous or regulated waste, and coordination of off-site disposal efforts for confirmed dangerous or regulated waste.

The ER and Construction Manager will be notified immediately if material suspected of being dangerous or regulated waste is discovered. The Construction Manager will then promptly notify the KCPR. Table 3 provides contact information for various parties working at the site or responsible for disposal of excavation materials and potential dangerous or regulated waste. This contact list will be used for notification of the responsible parties and will be updated as necessary. A notification form is included in Appendix D to record the incident information and to document the notification process.

Segregation and Management for Suspected Dangerous Waste

The ER will observe the Suspected Dangerous Waste materials and affected areas to determine the type and extent of the material. The ER will also determine appropriate handling and sampling methods for the materials. The Contractor will handle, temporarily store, and transport suspected materials in a manner to protect workers and the environment. Worker protection during excavation and handling is the responsibility of the site Contractor(s). Handling, temporary storage, and transport of dangerous and regulated waste will be completed in accordance with requirements of WAC 173-303, WAC 296-65, and Puget Sound Clean Air Agency (PSCAA), Regulation III.

The Contractor will comply with Contract Documents, including the following:

- Appropriate measures to mitigate dust emissions, runoff, fumes, etc., to control the migration of dangerous waste materials into other areas (cross contamination);
- Appropriate protective safety equipment, and/or other engineered systems needed for worker safety; and
- The need for and extent of any containment or other special construction measures based on information provided by the ER regarding the type and amount of suspected dangerous and regulated waste materials encountered, and the expected or known concentrations of these substances.

The ER will confer with the Construction Manager, KCPR, and appropriate Contractor(s) regarding the recommended approach for controlling contaminant releases or minimizing the potential for migration. The ER will also determine whether onsite monitoring may be needed to evaluate the presence of volatile constituents associated with suspected or confirmed dangerous waste materials.

Segregation and Temporary Storage

Prior to commencing excavation, the Contractor will identify specific areas for temporary storage of suspected or confirmed dangerous and regulated waste materials. Suspect materials will be excavated and separated from other excavation materials by the Contractor, and temporarily stored in containers suitable for the materials. The ER will mark or identify the storage area/container using a unique numbering system to reference the point of origin of the material on the property. The Contractor will see that the identification numbers are maintained until the materials are trucked off-site. Storage of these materials will be controlled to prevent their release or mixing with other materials.

Unless approved in writing by the Construction Manager or KCPR, suspected dangerous and regulated waste material will not be removed from the property until the ER completes characterization testing, as necessary, to chemically identify constituent types and concentrations for disposal designation. The Contractor will then notify the Construction Manager in writing as to the schedule for off-site transport of suspected or confirmed dangerous waste. The Contractor must provide the waste disposal facility's appropriate waste profile forms and/or hazardous waste manifest to the KCPR for signature before any confirmed dangerous or regulated waste material is shipped to temporary or permanent storage or disposal sites. The KCPR will approve such shipments prior to transport.

Incompatible Materials

The ER will assist the Contractor in segregating suspected or confirmed dangerous or regulated waste materials based on their compatibility with other suspect materials and based on their physical and chemical properties. Potentially incompatible categories of suspected dangerous or regulated waste materials (as determined by the ER) will not be stored or mixed together until the type and extent of constituents, and the nature and degree of risk associated with contact of the separate materials, has been determined by the ER.

Equipment and Personnel Decontamination

Equipment and vehicle components that come into contact with dangerous or regulated waste will be cleaned before such equipment or vehicles are relocated to other work locations. The Construction Manager will observe equipment and personnel decontamination activities to verify that the Contractor's work conforms to the requirements of the Contract Documents.

Decontamination will consist of thoroughly pressure washing or steam cleaning all equipment components contacting excavation materials and hazardous materials (including suspected dangerous or regulated waste). Alternative decontamination methods, if proposed by the Contractor must be approved by the Construction Manager and KCPR. Wastewater from equipment decontamination will be disposed of in the CHRL Leachate Lagoons or other appropriate off-site disposal facility approved by the Construction Manager and KCPR.

Other Best Management Practices

The Contractor will implement other BMPs to control odors during excavation, provide daily cover for exposed landfill areas, abate potential pest vectors, and mitigate noise impacts. BMPs for these items are described in specification Section 01 50 00 -Temporary Facilities and Utilities and Section 31 25 00 – Erosion and Sediment Control Additional discussion of measures for stormwater management, mitigation of potential landfill gas (LFG) emissions, and protection of groundwater resources during construction are described below.

Stormwater Management

Stormwater that contacts refuse will be handled as CSW and will be disposed of in the CHRL CSW lagoon or leachate lagoons as directed by the KCPR.

Prior to starting this work, stormwater flows from Area 7 South Toe of the slope ditch will be diverted to the west perimeter ditch downstream of the ditch improvements or as directed by the Construction Manager. BMPs and related procedures for stormwater management are outlined in specification Section 31 25 00 – Erosion and Sediment Control and in the Contract Drawings. Stormwater treatment is expected to reduce turbidity and silt content prior to discharge.

Groundwater Protection Measures

Relative to current hydrogeologic conditions and chemical quality, no adverse impacts to groundwater are expected from, or following, construction activities. Construction activities are anticipated to remove impacted soil as a potential source of contamination, thus improving the overall condition.

Perched groundwater, if encountered, will be assumed to be contaminated and will be handled and disposed of per Goodfellow Bros site-specific Contingency Response Plan and Spill Prevention and Cleanup Report submitted in May 2021.

Documentation and Record Keeping

The ER will keep records to track and document discovery and temporary storage of suspected and confirmed dangerous or regulated waste. The tracking forms will include the following information:

- Date and time of discovery of suspect material;
- Person or party discovering material;
- Equipment used to detect or characterize suspect material, recorded measurements (as applicable), and record of calibration readings and time;
- Suspected or confirmed types and concentration of constituents, and other pertinent information; physical description and extent;

- Record of background sample results, as applicable;
- Person or party making notification;
- Date and time of discovery or notification of ER;
- Manner of handling and method of storage;
- Temporary onsite container identification numbers;
- Waste profile form or hazardous waste manifest information;
- Disposal decision;
- Disposal facility; and
- Date and time of removal from CHRL.

The appropriate Contractor(s), transporters, and disposal facilities will provide the necessary information to the ER to complete these records. Recordkeeping will also include field observations, results of chemical analyses, correspondence with landfills and other off-site disposal facilities, and report(s) generated from the work. The ER will provide these records in weekly reports that may include other transmittals to the Construction Manager and KCPR. If an incident occurs, the report should be submitted to the Construction Manager and KCPR on the day that the incident occurs. Records will also include handling and disposal documentation for wastewater from equipment decontamination and contaminated stormwater contacting refuse.

Health and Safety Considerations

A HASP specific to Herrera's work during the Area 7 Closure is available under separate cover. Herrera's HASP Includes a contagion safety guide to augment the HASP in response to the COVID-19 virus outbreak.

The Construction Manager and Contractor will perform their work under their own HASPs and their activities are not covered by Herrera's HASP.

Worker Health and Safety Measures

The Contractor's HASP shall be prepared under the supervision of an industrial hygienist certified by the American Board of Industrial Hygiene per requirements in Technical Specification Section 01 35 00 – Health and Safety, including determination of the need for personal protective equipment in performing hazardous waste removal work.

Contract workers must by 40-hour trained in Hazardous Waste Operations, as specified in WAC 296-843, with current 8-hour refresher training, as appropriate. In addition, the Contractor will have at least one Hazardous Waste Operations Supervisor associated with the project. Workers will be medically cleared to work on a hazardous waste site and approved for respirator use before commencing work on the site.

As part of the Contractor's health and safety program, workers will be informed as to the potential for LFG to be present. All workers will comply with regulatory requirements limiting access to enclosed spaces. Smoking is prohibited on the property at all times during construction.

Field screening (air monitoring) shall be performed by Contractor and shall provide all field notes and results associated with screening potentially contaminated materials for COCs, odor, and dust to the ER on a weekly basis. The Contractor will be required to submit a respiratory protection plan that conforms to WAC 296-841 and ANSI Z88.2-69 and includes current respiratory fit tests for employees involved if COCs are encountered. An authorization signed by the Contractor's Health and Safety Officer that employees are fit for use of respiratory protection equipment will be required.

The Contractor's Health and Safety Officer will provide oversight of issues during site work in accordance with the HASP. Each day, the Health and Safety Officer will conduct the following:

- Pre-construction safety meeting prior to the start of work to discuss current work activities including review of all planned work activities and job task analysis (JTA) for hazards associate with all planned work.
- Complete a site safety inspection checklist.
- JTA forms will be generated for field activities associated with the excavation. The appropriate physical, biological, and chemical hazards will be identified with each activity as will mitigation measures to reduce the risk.
- Personal air monitoring in the worker breathing zone will be conducted for those workers directly in or near the excavation with the greatest risk for exposure to the COCS. Personal air monitoring will be performed in the breathing zone by the health and safety officer by collecting air samples using the appropriate media.

Air Quality Monitoring

Soil and waste excavation activities may generate dust and airborne COCs. Onsite air monitoring will provide "real time" data to evaluate worker health and safety and potential dust or contaminants leaving the site. This includes odor, vapor, LFG, and dust monitoring. The Contractor's HASP must include an air monitoring plan to address in advance how each of the COCs will be evaluated with air monitoring if they are encountered. The air monitoring plan must include the COCs, proposed methods for measurement, evaluation criteria, and an action plan based on the results. The air monitoring plan must also include data quality objectives and quality control measures.

Air monitoring will be performed by the Contractor or designee with appropriate equipment such as photoionization detectors or flame ionization detectors for VOCs, dust monitors, combustible gas indicators (methane/LFG), and hydrogen sulfide detectors. Worksite operations will be conducted and work practices modified to comply with PSCAA qualitative standard of "no visible dust" at the property boundary (PSCAA Regulation I, Section 9.15).

APPENDIX A

Soil Excavation Drawings

This page intentionally left blank.

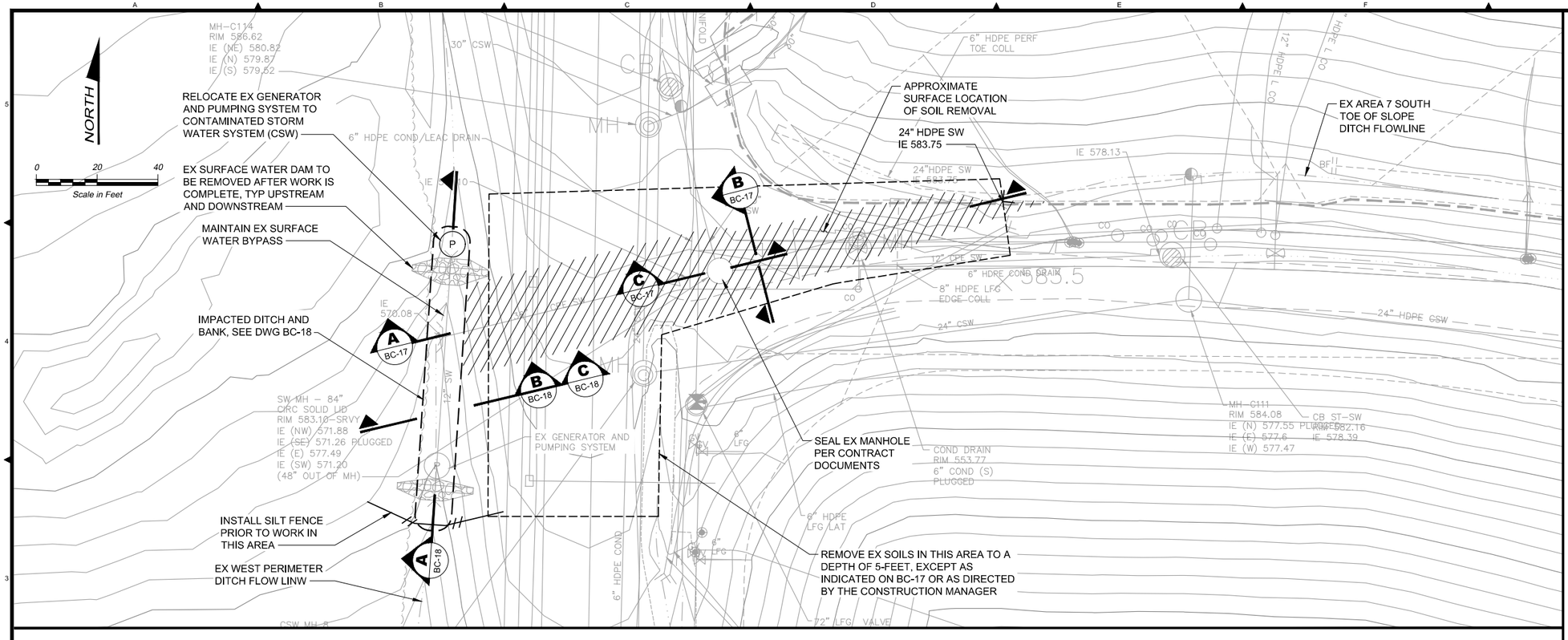

NOTES:

1. LOCATION OF EXISTING UTILITIES SHOWN HEREON HAVE BEEN ESTABLISHED FROM AVAILABLE RECORDS AND GROUND SURVEY AND SHOULD BE CONSIDERED APPROXIMATE AND NOT NECESSARILY COMPLETE. IT IS THE RESPONSIBILITY OF THE CONTRACTOR TO INDEPENDENTLY VERIFY THE LOCATION OF ALL UTILITIES AND FEATURES WHICH MAY BE AFFECTED BY THE WORK PRIOR TO THE IMPLEMENTATION OF THE WORK. THE CONTRACTOR SHALL IMMEDIATELY NOTIFY THE CONSTRUCTION MANAGER IF A UTILITY CONFLICT OR DISCREPANCY IS DISCOVERED.
2. THE CONTRACTOR SHALL PROTECT ALL UTILITIES AND FEATURES, INCLUDING THOSE MARKED AS PREVIOUSLY ABANDONED, THAT ARE WITHIN THE WORK LIMITS, UNLESS SPECIFICALLY NOTED OTHERWISE.
3. PRIOR TO STARTING THIS WORK, DIVERT STORMWATER FLOWS TO CSW MANHOLE FROM AREA 7 SOUTH TOE OF SLOPE DITCH TO WEST PERIMETER DITCH DOWNSTREAM OF DITCH IMPROVEMENTS.
4. PROPOSED FEATURES IN THIS AREA ARE NOT SHOWN FOR CLARITY.

Issued for Construction

02-2021

ONE INCH
AT FULL SIZE, IF NOT ONE INCH SCALE ACCORDINGLY

No.	REVISION	BY	APP'D	DATE
	ADDENDUM 3	-	-	02/26/21

HDR

BHC CONSULTANTS

BARD B. HORTON, STATE OF WASHINGTON, 29665, REGISTERED PROFESSIONAL ENGINEER
2/26/2021

DESIGNED: B. HORTON, P.E.
DRAWN: P. SIMON
RECOMMENDED: B. HORTON, P.E.
APPROVED: R. ASMAN, P.E.
CHECKED: B. HORTON, P.E.
SCALE: AS SHOWN
CONTRACT NO:

King County DNRP

SOLID WASTE DIVISION
CHRL AREA 7/8 LINER TIE-IN (SCHEDULE B)

POTENTIALLY IMPACTED SOIL REMOVAL PLAN

DATE: FEBRUARY 2021
FILE NAME: A7S5-A8D_BC-16
DRAWING NO: BC-16
SHEET NO: 70 OF 86

REUSE OF DOCUMENTS: THIS DOCUMENT IS THE PROPERTY OF KING COUNTY AND MAY BE USED BY THE COUNTY AT ITS SOLE RISK. USE BY OTHERS IS PERMITTED ONLY WITH THE PERMISSION AND AT THE DISCRETION OF THE COUNTY.

Path: S:\Cad\King County\18-10272 A7S5-A8D\Design\d Filename: A7S5-A8D_BC-16 Plot date: Feb 25, 2021-11:42:01pm CAD User: GCastillo.

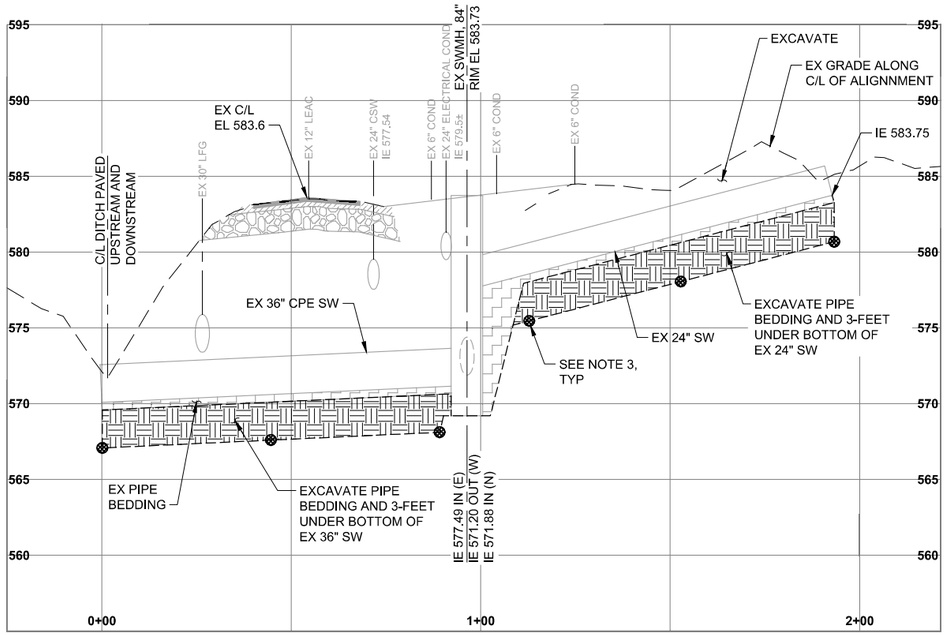

PROFILE **A**

SCALE: HORIZ 1" = 20'-0"
VERT 1" = 5'-0"

BC-16

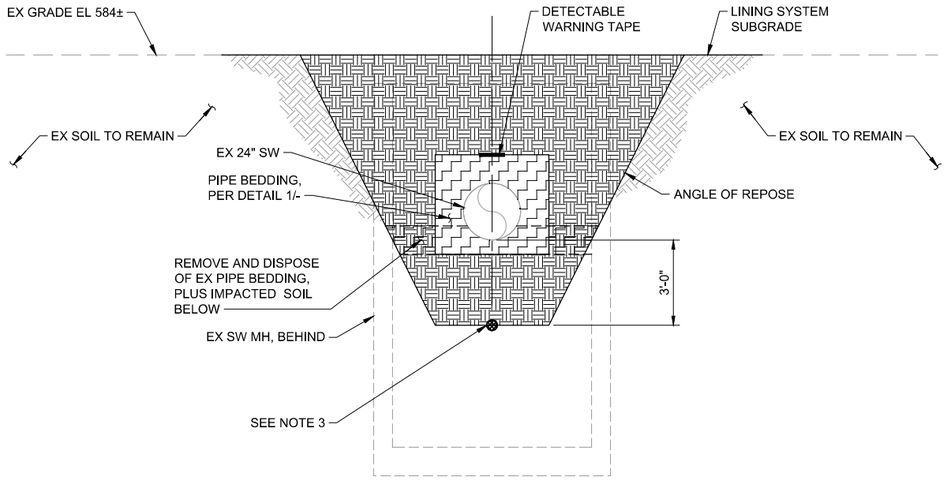

PIPE TRENCH

SECTION **B**

SCALE: 3/8" = 1'-0"

BC-16

NOTES:

1. DEPTH TO PIPE VARIES (SURFACE TO 6.5 FT DEEP).
2. REMOVE IMPACTED EARTH MATERIALS AROUND ADJACENT UTILITIES AS DIRECTED BY COUNTY.
3. PROVIDE ACCESS FOR CONSTRUCTION MANAGER TO TAKE SOIL SAMPLES FOR CONFIRMATION TESTING AT SIX LOCATIONS IN BOTTOM OF TRENCH.

Issued for Construction

02-2021

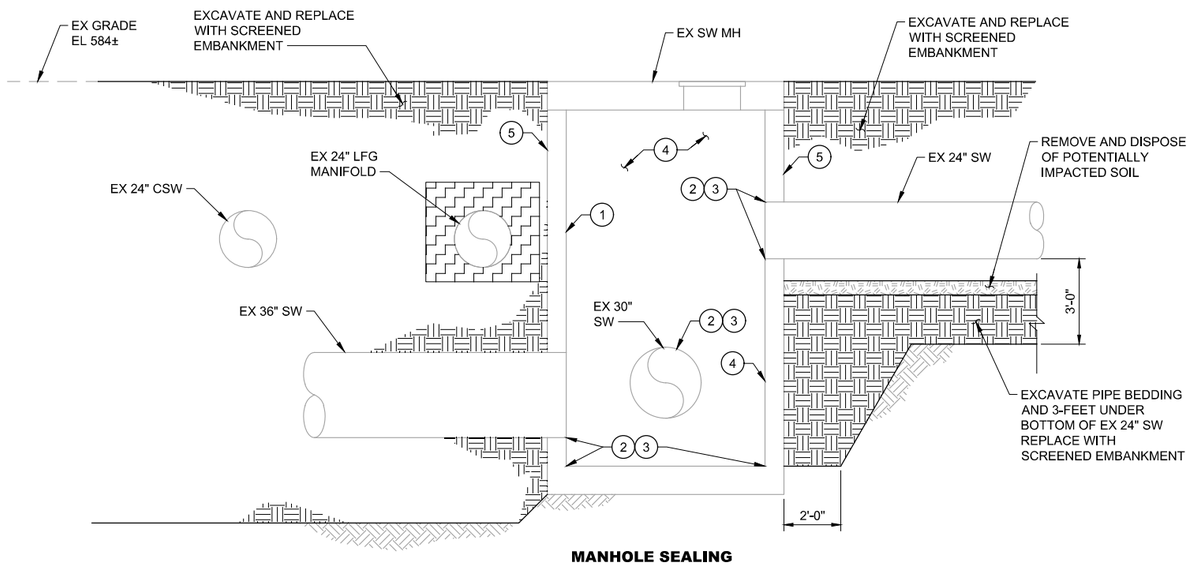

MANHOLE SEALING

SECTION **C**

SCALE: 3/8" = 1'-0"

BC-16

CONSTRUCTION NOTES:

1. CLEAN EXPOSED INTERIOR OF 84" STRUCTURE.
2. REMOVE CHIPPED CRACKED JOINT MATERIAL.
3. REPAIR AND RE-GROUT PIPES, JOINTS, AND CRACKS.
4. EPOXY SEAL INTERIOR OF STRUCTURE (BASE & WALLS).
5. SEAL EXTERIOR OF 84" MANHOLE, PER CONTRACT DOCUMENTS

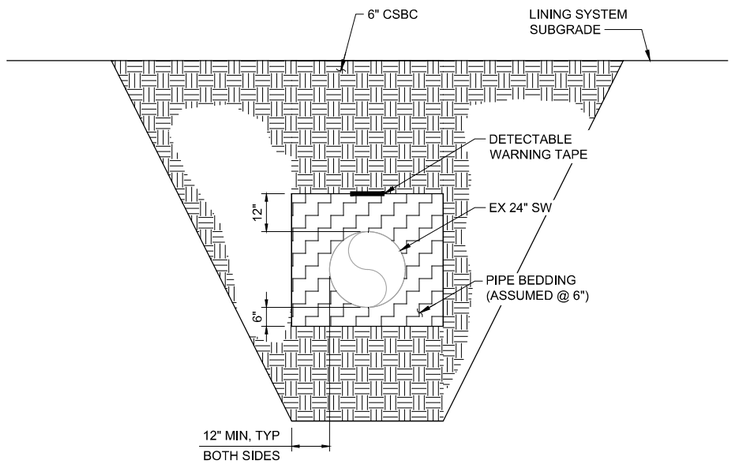

PIPE BEDDING

DETAIL **1**

SCALE: 1/2" = 1'-0"

-

ONE INCH
AT FULL SIZE, IF NOT ONE INCH SCALE ACCORDINGLY

No.	REVISION	BY	APP'D	DATE

HDR | BHC CONSULTANTS

BARD B. HORTON — STATE OF WASHINGTON — 29665 — REGISTERED PROFESSIONAL ENGINEER — 2/26/2021

DESIGNED: P. NEWTON, P.E.	CHECKED: B. HORTON, P.E.
DRAWN: G. CASTILLO	SCALE: AS SHOWN
RECOMMENDED: B. HORTON, P.E.	CONTRACT NO:
APPROVED: R. ASMAN, P.E.	

King County DNRP

SOLID WASTE DIVISION
CHRL AREA 7/8 LINER TIE-IN (SCHEDULE B)

POTENTIALLY IMPACTED SOIL REMOVAL PROFILES, SECTIONS, AND DETAILS

DATE: FEBRUARY 2021
FILE NAME: A7S5-A8D_BC-17
DRAWING NO: BC-17
SHEET NO: 71 OF 86

REUSE OF DOCUMENTS: THIS DOCUMENT IS THE PROPERTY OF KING COUNTY AND MAY BE USED BY THE COUNTY AT ITS SOLE RISK. USE BY OTHERS IS PERMITTED ONLY WITH THE PERMISSION AND AT THE DISCRETION OF THE COUNTY.

Path: S:\Cad\King County\18-10272 A7S5-A8D\Design\d Filename: A7S5-A8D_BC-17 Plot date: Feb 25, 2021-11:46:01pm CAD User: GCastillo.

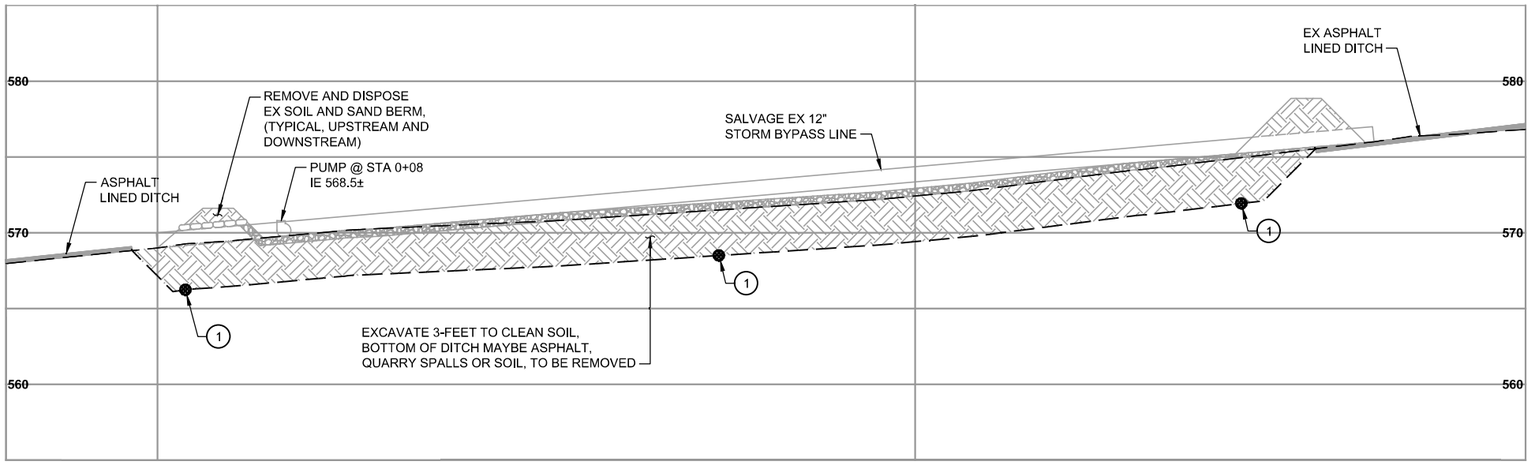

EX IMPACTED DITCH

SECTION A

SCALE: 1" = 5'-0" BC-16

NOTES:

(1) PROVIDE ACCESS FOR CONSTRUCTION MANAGER TO TAKE SOIL SAMPLES FOR CONFIRMATION TESTING AT THREE LOCATIONS IN BOTTOM OF DITCH/TRENCH.

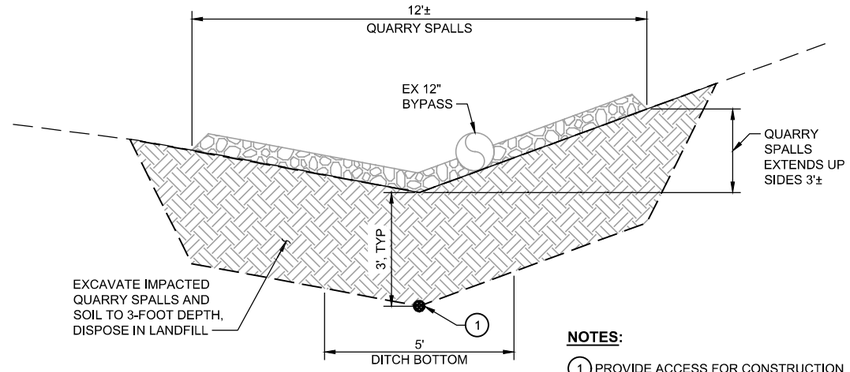

NOTES:

(1) PROVIDE ACCESS FOR CONSTRUCTION MANAGER TO TAKE SOIL SAMPLES FOR CONFIRMATION TESTING AT THREE LOCATIONS IN BOTTOM OF DITCH.

EXCAVATION PLAN
EXISTING DITCH LOOKING NORTH

SECTION B

SCALE: 1" = 2'-0" BC-16

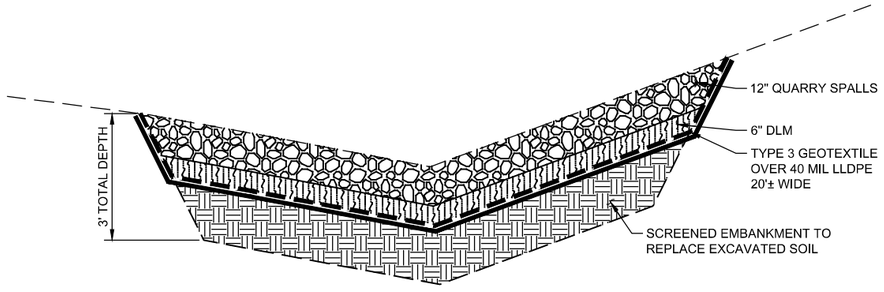

NOTES:

1. PLACE AND COMPACT SCREENED EMBANKMENT IN EXCAVATED DITCH.
2. PLACE 40 MIL LLDPE GEOMEMBRANE ON SCREENED EMBANKMENT, ANCHOR AT UPSTREAM AND DOWNSTREAM OF DITCH.
3. PLACE GEOTEXTILE, TYPE 3 OVER GEOMEMBRANE.
4. PLACE 6" DLM OVER LLDPE. GRADE SMOOTHLY WITHOUT USING TRACKED OR WHEELED EQUIPMENT.
5. PLACE 12" QUARRY SPALLS OVER DLM.

REBUILT DITCH

SECTION C

SCALE: 1" = 2'-0" BC-16

Issued for Construction

02-2021

ONE INCH
AT FULL SIZE, IF NOT ONE INCH SCALE ACCORDINGLY

No.	REVISION	BY	APP'D	DATE

HDR | BHC CONSULTANTS

BAND B. HORTON — STATE OF WASHINGTON — REGISTERED PROFESSIONAL ENGINEER — 7/26/2021

DESIGNED: P. NEWTON, P.E.	CHECKED: B. HORTON, P.E.
DRAWN: P. SIMON	SCALE: AS SHOWN
RECOMMENDED: B. HORTON, P.E.	CONTRACT NO:
APPROVED: R. ASMAN, P.E.	

King County DNRP

SOLID WASTE DIVISION
CHRL AREA 7/8 LINER TIE-IN (SCHEDULE B)

POTENTIALLY IMPACTED SOIL REMOVAL SECTIONS AND DETAILS

DATE: FEBRUARY 2021
FILE NAME: A7S5-A8D_BC-18
DRAWING NO: BC-18
SHEET NO: 72 OF 86

REUSE OF DOCUMENTS: THIS DOCUMENT IS THE PROPERTY OF KING COUNTY AND MAY BE USED BY THE COUNTY AT ITS SOLE RISK. USE BY OTHERS IS PERMITTED ONLY WITH THE PERMISSION AND AT THE DISCRETION OF THE COUNTY.

Path: S:\Cad\King County\18-10272 A7S5-A8D\Design\d Filename: A7S5-A8D_BC-18 Plot date: Feb 25, 2021-11:57:32pm CAD User: GCastillo.

This page intentionally left blank.

APPENDIX B

MTCA Method B Cleanup Levels

This page intentionally left blank.

Chemical (all concentrations are in mg/kg)	Method B PCUL	PCUL based on…	Method B PCUL - potable GW only
Metals			
Antimony	5.0E+00	TEE	5.4E+00
Arsenic	7.3E+00	background/potable GW	7.3E+00
Barium	1.0E+02	TEE	1.6E+03
Beryllium	1.0E+01	TEE	6.3E+01
Cadmium	7.7E-01	background/potable GW	7.7E-01
Chromium (III/total)	4.8E+01	background/TEE	4.8E+05
Cobalt	4.3E+00	potable GW	4.3E+00
Copper	5.0E+01	TEE	2.8E+02
Lead	5.0E+01	TEE	3.0E+03
Mercury, inorganic	1.0E-01	TEE	2.1E+00
Nickel	3.8E+01	background/TEE	1.3E+02
Selenium	3.0E-01	TEE	5.2E+00
Silver	2.0E+00	TEE	1.4E+01
Thallium	2.3E-01	potable GW	2.3E-01
Tin	5.0E+01	TEE	4.8E+04
Vanadium	2.0E+00	TEE	2.9E+03
Zinc	8.6E+01	TEE	6.0E+03
PAHs			
Acenaphthene	2.0E+01	TEE	9.8E+01
Anthracene	2.3E+03	potable GW	2.3E+03
cPAH TEQ	1.9E-01	direct contact	3.9E+00
Dibenzofuran	8.0E+01	direct contact	*
Fluoranthene	6.3E+02	potable GW	6.3E+02
Fluorene	3.0E+01	TEE	1.0E+02
2-Methylnaphthalene	3.2E+02	direct contact	*
Naphthalene	4.5E+00	potable GW	4.5E+00
Pyrene	6.5E+02	potable GW	6.5E+02

Chemical (all concentrations are in mg/kg)	Method B PCUL	PCUL based on…	Method B PCUL - potable GW only
Other SVOCs			
Benzyl alcohol	3.0E+03	direct contact	*
Bis(2-chloroethyl)ether	2.2E-04	potable GW	2.2E-04
Bis(2-chloro-1-methylethyl)ether	3.2E+03	direct contact	*
Bis(2-ethylhexyl) phthalate	1.3E+01	potable GW	1.3E+01
Butyl benzyl phthalate	1.3E+01	potable GW	1.3E+01
4-Chloroaniline	1.2E-03	potable GW	1.2E-03
2-Chloronaphthalene	3.4E+03	direct contact	*
2-Chlorophenol	4.7E-01	potable GW	4.7E-01
Dibutyl phthalate	5.7E+01	potable GW	5.7E+01
1,2-Dichlorobenzene	7.0E+00	potable GW	7.0E+00
1,4-Dichlorobenzene	1.2E+00	potable GW	1.2E+00
3,3'-Dichlorobenzidine	3.6E-03	potable GW	3.6E-03
2,4-Dichlorophenol	1.7E-01	potable GW	1.7E-01
Diethyl phthalate	7.2E+01	potable GW	7.2E+01
Dimethyl phthalate	2.0E+02	TEE	*
2,4-Dimethylphenol	1.3E+00	potable GW	1.3E+00
1,3-Dinitrobenzene	8.0E+00	direct contact	*
2,4-Dinitrophenol	1.3E-01	potable GW	1.3E-01
2,4-Dinitrotoluene	1.7E-03	potable GW	1.7E-03
2,6-Dinitrotoluene	3.1E-04	potable GW	3.1E-04
Di-n-octyl phthalate	8.0E+02	direct contact	2.7E+05
Hexachlorobenzene	6.3E-01	direct contact	8.8E-01
Hexachlorobutadiene	6.0E-01	potable GW	6.0E-01
Hexachlorocyclopentadiene	1.0E+01	TEE	1.9E+02
Hexachloroethane	4.3E-02	potable GW	4.3E-02
Isophorone	2.3E-01	potable GW	2.3E-01
2-Methylphenol (o-cresol)	2.3E+00	potable GW	2.3E+00
3-Methylphenol (m-cresol)	4.0E+03	direct contact	*
4-Methylphenol (p-cresol)	8.0E+03	direct contact	*
2-Nitroaniline	8.0E+02	direct contact	*
4-Nitroaniline	5.0E+01	direct contact	*
Nitrobenzene	1.0E-01	potable GW	1.0E-01
4-Nitrophenol	7.0E+00	TEE	*
n-Nitrosodimethylamine	2.0E-02	direct contact	*
n-Nitrosodiphenylamine	5.3E-01	potable GW	5.3E-01
n-Nitrosodi-n-propylamine	5.6E-05	potable GW	5.6E-05
Pentachlorophenol	1.6E-02	potable GW	1.6E-02
Phenol	1.1E+01	potable GW	1.1E+01
2,3,4,6-Tetrachlorophenol	2.4E+03	direct contact	*
1,2,4-Trichlorobenzene	5.6E-01	potable GW	5.6E-01
2,4,5-Trichlorophenol	4.0E+00	TEE	2.9E+01
2,4,6-Trichlorophenol	4.6E-02	potable GW	4.6E-02

Chemical (all concentrations are in mg/kg)	Method B PCUL	PCUL based on…	Method B PCUL - potable GW only
VOCs			
Acetone	2.9E+01	potable GW	2.9E+01
Acrylonitrile	1.9E+00	direct contact	*
Benzene	2.7E-02	potable GW	2.7E-02
Bromoform	3.6E-01	potable GW	3.6E-01
Bromomethane	5.0E-02	potable GW	5.0E-02
Carbon disulfide	5.0E+00	potable GW	5.0E+00
Carbon tetrachloride	4.2E-02	potable GW	4.2E-02
Chlorobenzene	8.6E-01	potable GW	8.6E-01
Chloroform	7.4E-02	potable GW	7.4E-02
Dibromochloromethane	2.8E-02	potable GW	2.8E-02
1,2-Dibromo-3-chloropropane	1.3E+00	direct contact	*
Dibromomethane	8.0E+02	direct contact	*
Dichlorobromomethane	3.6E-02	potable GW	3.6E-02
Dichlorodifluoromethane	1.6E+04	direct contact	*
1,1-Dichloroethane	4.1E-02	potable GW	4.1E-02
1,2-Dichloroethane	2.3E-02	potable GW	2.3E-02
1,1-Dichloroethylene	4.4E-02	potable GW	4.4E-02
cis-1,2-Dichloroethylene	7.8E-02	potable GW	7.8E-02
trans-1,2-Dichloroethylene	5.2E-01	potable GW	5.2E-01
1,2-Dichloropropane	2.5E-02	potable GW	2.5E-02
cis-1,3-Dichloropropene	2.3E-03	potable GW	2.3E-03
trans-1,3-Dichloropropene	2.3E-03	potable GW	2.3E-03
Ethylbenzene	5.9E+00	potable GW	5.9E+00
Ethylene dibromide	2.7E-04	potable GW	2.7E-04
2-Hexanone	4.0E+02	direct contact	*
Methyl ethyl ketone (2-butanone)	4.8E+04	direct contact	*
Methyl isobutyl ketone	6.4E+03	direct contact	*
Methylene chloride	2.1E-02	potable GW	2.1E-02
Styrene	2.2E+00	potable GW	2.2E+00
1,1,1,2-Tetrachloroethane	3.8E+01	direct contact	*
1,1,2,2-Tetrachloroethane	1.2E-03	potable GW	1.2E-03
Tetrachloroethylene	5.0E-02	potable GW	5.0E-02
Toluene	4.5E+00	potable GW	4.5E+00
1,1,1-Trichloroethane	1.5E+00	potable GW	1.5E+00
1,1,2-Trichloroethane	1.7E-02	potable GW	1.7E-02
Trichloroethylene	2.5E-02	potable GW	2.5E-02
Trichlorofluoromethane	2.4E+04	direct contact	*
1,2,3-Trichloropropane	6.3E-03	direct contact	*
Vinyl acetate	3.3E+01	potable GW	3.3E+01
Vinyl chloride	1.7E-03	potable GW	1.7E-03
Total xylenes	1.4E+01	potable GW	1.4E+01

Chemical (all concentrations are in mg/kg)	Method B PCUL	PCUL based on…	Method B PCUL - potable GW only
Pesticides			
Aldrin	2.5E-03	potable GW	2.5E-03
alpha-BHC	5.4E-04	potable GW	5.4E-04
beta-BHC	2.3E-03	potable GW	2.3E-03
delta-BHC	6.0E+00	TEE	*
gamma-BHC	3.2E-03	potable GW	3.2E-03
Chlordane	1.0E+00	TEE	2.1E+00
4,4'-DDD	3.4E-01	potable GW	3.4E-01
4,4'-DDE	4.5E-01	potable GW	4.5E-01
4,4'-DDT	3.5E+00	potable GW	3.5E+00
Dieldrin	2.8E-03	potable GW	2.8E-03
Endosulfan I	4.3E+00	potable GW	4.3E+00
Endosulfan II	4.3E+00	potable GW	4.3E+00
Endosulfan sulfate	4.8E+02	direct contact	*
Endrin	2.0E-01	TEE	4.4E-01
Heptachlor	3.8E-02	potable GW	3.8E-02
Heptachlor epoxide	8.0E-02	potable GW	8.0E-02
Methoxychlor	6.4E+01	potable GW	6.4E+01
Toxaphene	9.1E-01	direct contact	1.5E+00
Herbicides			
2,4-D	8.0E+02	direct contact	*
2,4,5-TP	6.4E+02	direct contact	*
2,4,5-T	8.0E+02	direct contact	*
Dinoseb	8.0E+01	direct contact	*
Other			
Cyanide, free	5.0E+01	direct contact	*
Dioxin/furan TEQ	1.3E-05	direct contact	*
PCB TEQ	7.7E-06	direct contact	4.2E-05

NOTES:

Table includes only WAC 173-351 Appendix III chemicals for which CLARC data is available.

Cleanup levels considered when selecting PCUL were those based on direct contact with soil, leaching to potable groundwater ("potable GW"), and ecologoically protective values from MTCA Table 749-3 ("TEE"). PCULs were adjusted up to natural background ("background") when those values were available and applicable.

The second set of PCULs eliminates the direct contact by humans or wildlife pathways, and are just based on leaching to potable groundwater. An "*" in that column indicates that a default value is missing for a chemical parameter needed to determine a leaching-based PCUL.

APPENDIX C

Jar Headspace Analytical Screening Procedure

This page intentionally left blank.

UIC Closure Guidance, Appendix II - Jar Headspace Analytical Screening Procedure

The following is the recommended procedure for conducting analytical screening of contaminated soil or groundwater utilizing a portable Photoionization Detector (PID) or Flame Ionization Detector (FID):

1. Half-fill two clean glass jars with the sample to be analyzed. Quickly cover each open top with one or two sheets of clean aluminum foil and subsequently apply screw caps to tightly seal the jars. Sixteen ounce (16 oz.; approximately 500 ml) soil or "mason" type jars are preferred; jars less than 8 oz. total capacity (approximately 250 ml), should not be used.

2. Allow headspace development for at least 10 minutes. Vigorously shake jars for 15 seconds both at the beginning and end of the headspace development period. Where ambient temperatures are below 32 F (0 C), headspace development should be within a heated vehicle or building.

3. Subsequent to headspace development, remove screw lid/expose foil seal. Quickly puncture foil seal with instrument sampling probe, to a point about one-half of the headspace depth. Exercise care to avoid uptake of water droplets or soil particulate.

   As an alternative, syringe withdrawal of a headspace sample with subsequent injection to instrument probe or septum-fitted inlet is acceptable contingent upon verification of methodology accuracy using a test gas standard.

4. Following probe insertion through foil seal and/or sample injection to the probe, record highest meter response as the jar headspace concentration. Using foil seal/probe insertion method, maximum response should occur between 2 and 5 seconds. Erratic meter response may occur at high organic vapor concentrations or conditions of elevated headspace moisture, in which case headspace data should be discounted.

5. The headspace screening data from both jar samples should be recorded and compared; generally, replicate values should be consistent to plus or minus 20%.

6. PID and FID field instruments should be operated and calibrated to yield "total organic vapors" in ppm (v/v) as benzene. PID instruments must be operated with a 10.0 +/- eV lamp source. Operation, maintenance, and calibration should be performed in accordance with the manufacturer's specifications. For jar headspace analysis, instrument calibration should be checked/adjusted no less than once every 10 analyses, or daily, whichever is greater.

7. Instrumentation with digital (LED/LCD) displays may not be able to discern maximum headspace response unless equipped with a "maximum hold" feature or strip-chart recorder. Deviations, departures and/or additions to the above procedures should be consistent with 310 CMR 40.0017. In such cases, compelling technical justification must be presented and documented by the methodology proponent.

This page intentionally left blank.

APPENDIX D

Notification Form

This page intentionally left blank.

NOTIFICATION FORM

This record serves to document information, actions, and notifications regarding the discovery of and response to the presence of suspected hazardous materials.

1.0 Date / Time of Event or Incident:

2.0 Person Filling Out Form

Name: _____

Phone Number: _____

3.0 Description of Condition

_____

_____

_____

4.0 Person Discovering Condition

Name: _____

Phone Number: _____

5.0 Action Taken

_____

_____

_____

6.0 Notifications

6.1

6.2

6.3

7.0 Stockpile / Container Information

ID Number	Sample Description	Approximate Volume	Tests	Disposition

8.0 Monitoring Equipment and Calibration

_____

_____

_____

9.0 Field Screening Monitoring Results

_____

_____

_____

APPENDIX B

Daily Field Reports

Construction Site Observations

Date:	June 8, 2021	Inspector:	B. Blaud, G. Iftner
Project Name:	Cedar Hills Regional Land Fill Area 7 Soil Contamination		
Arrival/Departure Time:	7:00/16:00	Project No.:	11-05150-003
Weather:	Partly cloudy, 50s/60s	Contract No.:	E00227E11

Site Activities:

Herrera checked in with Mike Roberts and Randy Brown of Anchor QEA and observed contaminated soil excavation activities. Goodfellow Brothers, Inc. (GBI) excavated down to pipes/utilities on west side of the West Perimeter Road, excavated soils per the plans to bottom of pipe invert, and excavated ditch line per plans to approximate depth of 3 feet below the asphalt-lined ditch. Herrera screened soils visually and with a photoionization detector (PID) and collected five confirmation soil samples – three along the ditch bottom, as well as one bottom and one side sample from main excavation. At the end of the day, Herrera staff hand delivered the 5 soil samples including trip blank to OnSite Environmental, Inc. of Redmond, WA for the suite of analyses specified in the Work Plan.

Labor (Prime and Subcontractor):	Equipment (Prime and Subcontractor):	Materials Received and Conditions:
Goodfellow Brothers, Inc.	360 Excavator	NA
Goodfellow Brothers, Inc.	(2) 740B dump trucks	NA

Site Inspection Observations:

Excavated soils consisted of brown to gray sandy gravel with silt. No visual observations of potential soil contamination. PID readings from soil varied from 0.3 to 1.9 ppm (within the range of ambient background readings). Contractor hauled 14 loads of excavated soil (approximately 25 cubic yards per 40-ton haul truck), for an estimated total of 350 cubic yards of soil excavated.

Action Items/Follow Up:

None

Signature

Brianna Blaud

Print Name

Excavated area at west end of main excavation area within ditch.

Completed excavation along ditch.

Sample locations marked with spray paint, to be surveyed.

Construction Site Observations

Date:	June 9, 2021	Inspector:	B. Blaud, G. Iftner
Project Name:	Cedar Hills Regional Land Fill Area 7 Soil Contamination		
Arrival/Departure Time:	7:00/16:30	Project No.:	11-05150-003
Weather:	Sunny, 50s/60s	Contract No.:	E00227E11

Site Activities:

Herrera checked in with Randy Brown of Anchor QEA who stopped by the site today. Goodfellow Brothers, Inc. excavated around pipes adjacent to and under the west side of the West Perimeter Road. Progress was slower as there was delicate navigation around the pipes. No confirmation soil samples were collected for laboratory analysis. Rob Young with KCSWD visited the site with Briana Blaud who updated him on the site activities and observations made so far.

Labor (Prime and Subcontractor):	Equipment (Prime and Subcontractor):	Materials Received and Conditions:
Goodfellow Brothers, Inc.	360 Excavator	NA
Goodfellow Brothers, Inc.	740B dump trucks	NA
Goodfellow Brothers, Inc.	50G mini excavator	NA

Site Inspection Observations:

Herrera observed is a lightweight dark brown/black silty sand with gravel that contains wood and roots approximately 4 feet below ground surface. Dan Swope of KCSWD questioned in a phone call with George Iftner if this band could be related to a smaller leachate pipe release that occurred under the roadway approximately 3 years ago, separate from the leachate spill at SW corner of Area 7. PID readings varied from 4.1 to 12.6 ppm in soil screening samples collected from the dark brown/black silty sand. This band of soil resembles topsoil that may have been covered with fill material during development of the roadway. No soil confirmation samples were collected for laboratory analysis, but the soil will be monitored as the area is further excavated. Approximately 225 cubic yards of soil was hauled from the site to Area 8 for disposal, for a cumulative total of 575 cubic yards excavated on 6/8 and 6/9. George Iftner confirmed with Mary Shanks (Herrera) and OnSite Environmental that the list of 'total metals' includes the RCRA 8 metals.

Action Items/Follow Up:

None

Signature

Brianna Blaud

Print Name

Dark brown/black band of silty sand with gravel, wood, and roots is being monitored.

Excavation extents at end of day, 6/9/2021, have cleared pipes and extended into roadway.

Construction Site Observations

Date:	June 10, 2021	Inspector:	B. Blaud, C. Steiner
Project Name:	Cedar Hills Regional Land Fill Area 7 Soil Contamination		
Arrival/Departure Time:	7:00/14:30	Project No.:	11-05150-003
Weather:	Sunny, 50s/60s	Contract No.:	E00227E11

Site Activities:

Goodfellow Brothers, Inc. (GBI) offloaded supplies in Area 7. Herrera met with survey crew from Parametrix to indicate and name sampled locations. Herrera met with Dan Swope of KCSWD to go over area of previous leachate spill (3 years ago), which may be shown in the dark soil band approximately 4 feet below the ground surface (bgs). Once excavated to the bottom, that area will be sampled to confirm contamination levels.

Labor (Prime and Subcontractor):	Equipment (Prime and Subcontractor):	Materials Received and Conditions:

Site Inspection Observations:

No excavation was conducted. When it became apparent that they would be offloading supplies and would not excavate, GBI cleaned up the site and prepared erosion control measures for potential rain tomorrow and over the weekend.

Action Items/Follow Up:

None

Signature

Brianna Blaud

Print Name

Construction Site Observations

Date:	June 11, 2021	Inspector:	B. Blaud, C. Steiner
Project Name:	Cedar Hills Regional Land Fill Area 7 Soil Contamination		
Arrival/Departure Time:	7:00/15:45	Project No.:	11-05150-003
Weather:	Raining, 50s	Contract No.:	E00227E11

Site Activities:

Goodfellow Brothers, Inc. (GBI) set up erosion control yesterday in anticipation of the rain that included sand bags along the upslope roadway to prevent runoff from entering the site and a sediment curtain (silt fence anchored with quarry spalls) across the unexcavated portion of the asphalt stormwater ditch. Herrera checked in with Randy Brown of Anchor QEA and observed contaminated soil excavation activities. GBI excavated to the opposite side of the roadway, exposing the first utility pipes on the east side of the road. Herrera screened soils visually and with a photoionization detector (PID) and collected 2 confirmation samples – one bottom and one north sidewall sample from the main excavation. Herrera staff hand delivered the 2 soil samples including trip blank to OnSite Environmental, Inc. of Redmond, WA before 3:30pm for the suite of analyses specified in the Work Plan.

Labor (Prime and Subcontractor):	Equipment (Prime and Subcontractor):	Materials Received and Conditions:
Goodfellow Brothers, Inc.	360 Excavator	NA
Goodfellow Brothers, Inc.	740B dump trucks	NA
Goodfellow Brothers, Inc.	50G mini excavator	NA

Site Inspection Observations:

Excavated soils along the bottom of the main excavation area consisted of gray with brown gravelly sand with silt and had no visual observations of potential soil contamination (the PID reading was 0.1 ppm - within the range of ambient background readings). Soil excavated from the north sidewall was black/dark brown sandy silt with gravel and was selected for sampling as a potential contaminated site from a previous (2018) release of leachate. The PID reading of 272.1 ppm confirmed potential contamination. GBI hauled approximately 20 loads of excavated soil to Area 8 for disposal, for a cumulative total of approximately 1,075 cubic yards excavated since 6/8.

Action Items/Follow Up:

None

Signature

Brianna Blaud

Print Name

Erosion control features installed prior to rain on 6/11 and over weekend.

Dark soil staining confirmed as contaminated by PID.

Final excavation extents on 6/11 showing exposed utility pipes on east end of roadway.

Construction Site Observations

Date:	June 14, 2021	Inspector:	B. Blaud, C. Steiner
Project Name:	Cedar Hills Regional Land Fill Area 7 Soil Contamination		
Arrival/Departure Time:	7:00/12:15	Project No.:	11-05150-003
Weather:	Cloudy/intermittent rain, 50s F	Contract No.:	E00227E11

Site Activities:

Herrera checked in with Randy Brown of Anchor QEA and observed exploratory excavation using a vactor truck to locate the leachate pipe. Goodfellow Brothers, Inc. (GBI) set up a submersible pump to drain water that accumulated in the excavated area over the weekend. An issue with the well drilling at the top of Area 7 required the use of vactor truck at 10:00 am, so the GBI crew left the site, and excavation work was on standby. After a check-in a 12pm, GBI indicated that they would not resume excavation activities at the site, so Herrera left for the day.

Labor (Prime and Subcontractor):	Equipment (Prime and Subcontractor):	Materials Received and Conditions:
Goodfellow Brothers, Inc.	Vactor truck	NA

Site Inspection Observations:

Potholing for utilities was performed but no excavation activities were conducted. After using the vactor truck to assist with the wells at the top of Area 7, GBI and the vactor truck returned and worked until 8pm to located the leachate pipe. No soil samples were collected today.

Action Items/Follow Up:

None

Signature

Brianna Blaud

Print Name

GBI pumped standing water from excavated area through a sediment fence into the perimeter stormwater ditch with check dams.

GBI used a vactor truck to cautiously excavate while searching for leachate pipe.

Construction Site Observations

Date:	June 15, 2021	Inspector:	B. Blaud, C. Steiner
Project Name:	Cedar Hills Regional Land Fill Area 7 Soil Contamination		
Arrival/Departure Time:	9:00/17:00	Project No.:	11-05150-003
Weather:	Partly cloudy, 50s/60s	Contract No.:	E00227E11

Site Activities:

Herrera checked in with Randy Brown of Anchor QEA and observed contaminated soil excavation activities. GBI used a vactor truck to cautiously investigate and expose leachate pipes yesterday and was excavating around the pipes on the east end of the road near the CB/manhole when Herrera arrived on site. Herrera screened soils visually and with a photoionization detector (PID) and collected 2 confirmation samples – one bottom and one north sidewall sample from the main excavation. Herrera staff hand delivered the 2 soil samples including trip blank to OnSite Environmental, Inc. of Redmond, WA before 3:30pm for the suite of analyses specified in the Work Plan. During excavation, another patch of dark/black soil was excavated and after conferring with Dan Swope (KCSWD), a sample from the excavated material was collected and preserved on ice to be delivered to the lab on 6/16/12.

Labor (Prime and Subcontractor):	Equipment (Prime and Subcontractor):	Materials Received and Conditions:
Goodfellow Brothers, Inc.	360 Excavator	NA
Goodfellow Brothers, Inc.	740B dump truck	NA

Site Inspection Observations:

Soil sampled along the north side wall of the main excavation area contained a mix of brown gravelly sand with silt and gray sandy silt with gravel (DA7SWCS8210615I and duplicate sample DA7SWCS8210615D). The dark brown soil was selected for sampling as a potential contaminated site from a previous (2018) release of leachate but did not show field indicators of soil contamination (the PID reading was 2.9 ppm, within the range of ambient background readings). A second sample (DA7SWCS9210615I) was collected from beneath stormwater drainage pipe in the center of the main excavation area (the PID reading was 0.6 ppm, within the range of ambient background readings). A third sample (DA7SWCS10210615I) was collected from excavated material that appeared contaminated. The PID results were just outside the ambient background readings (PID = 5.5 ppm). The third sample was preserved on ice to be held overnight and delivered to the lab the following day (6/16). GBI hauled approximately 20 loads of excavated soil to Area 8 for disposal, for a cumulative total of approximately 1,575 cubic yards excavated since 6/8.

Action Items/Follow Up:

None

Signature

Brianna Blaud

Print Name

Leachate pipe exposed in excavation area.

Water from 6/14 rain was pumped from excavation area.

Dark patch of potentially contaminated soil, sampled before excavated; PID screening of sample was 5.5 ppm, slightly above ambient background levels.

Construction Site Observations

Date:	June 16, 2021	Inspector:	G. Iftner
Project Name:	Cedar Hills Regional Land Fill Area 7 Soil Contamination		
Arrival/Departure Time:	08:00/17:00	Project No.:	11-05150-003
Weather:	Sunny, dry, high 60s	Contract No.:	E00227E11

Site Activities:

Herrera checked in with Randy Brown of Anchor QEA and observed contaminated soil excavation activities. Goodfellow Brothers, Inc. (GBI) excavated around the manhole structure. GBI met with Anchor QEA and County staff to suggest that the manhole be entirely replaced due to cracks and general poor structural integrity. County agreed that GBI should submit an RFI for County review for the proposed replacement. Herrera prepared a draft data table summary of soil analytical results, and a draft figure showing the approximate locations. 15:10 Herrera met with Dan Swope and observed the excavation progress. Herrera collected soil samples and hand delivered them along with a trip blank to OnSite Environmental, Inc. of Redmond, WA at 6:00 pm.

Labor (Prime and Subcontractor):	Equipment (Prime and Subcontractor):	Materials Received and Conditions:
Goodfellow Brothers, Inc.	360 Excavator	NA
Goodfellow Brothers, Inc.	740B dump truck	NA

Site Inspection Observations:

Dan Swope and George Iftner noted that the pea gravel pipe bedding on east side of the manhole at approximately 6 feet bgs appears to be stained – Herrera will field screen this material as the excavation progresses. We observed the 4" diameter condensate pipe, north side of excavation, in shallow zone about 2.5 feet bgs and possible contamination along the geotextile layer beneath the pipe and road base course material.

Sample #12 DA7SWCS12210616I was collected on the north sidewall at a depth of approximately 9 feet bgs in dark brown/black silty sand, trace gravel (resembles native topsoil). PID reading was 97.1 ppm (0.2 ppm background reading) and soils exhibited slight acrid odor and possible staining.

Sample #13 DA7SWCS13210616I was collected on north sidewall beneath the end of the 4" diameter condensate pipe at a depth of approximately 2.5 feet bgs, from brown sandy GRAVEL with silt. PID reading was 0.7 ppm (0.3 ppm background reading) and soil exhibited slight sour/acrid odor, but no staining.

Sample #14 DA7SWCS14210616I was collected on the south sidewall of the ditch excavation at a depth of approximately 1.5 feet bgs in gray/brown sandy GRAVEL, trace silt (sample requested by Dan Swope to provide confirmation that contamination doesn't extend further south along the ditch line). Sample was collected in gray/brown sandy GRAVEL with silt. PID reading was 0.3 ppm (0.3 ppm background), no odors or staining.

GBI hauled approximately 20 loads of excavated soil to Area 8 for disposal.

Action Items/Follow Up:

None

George C. Iftner

Signature

George Iftner

Print Name

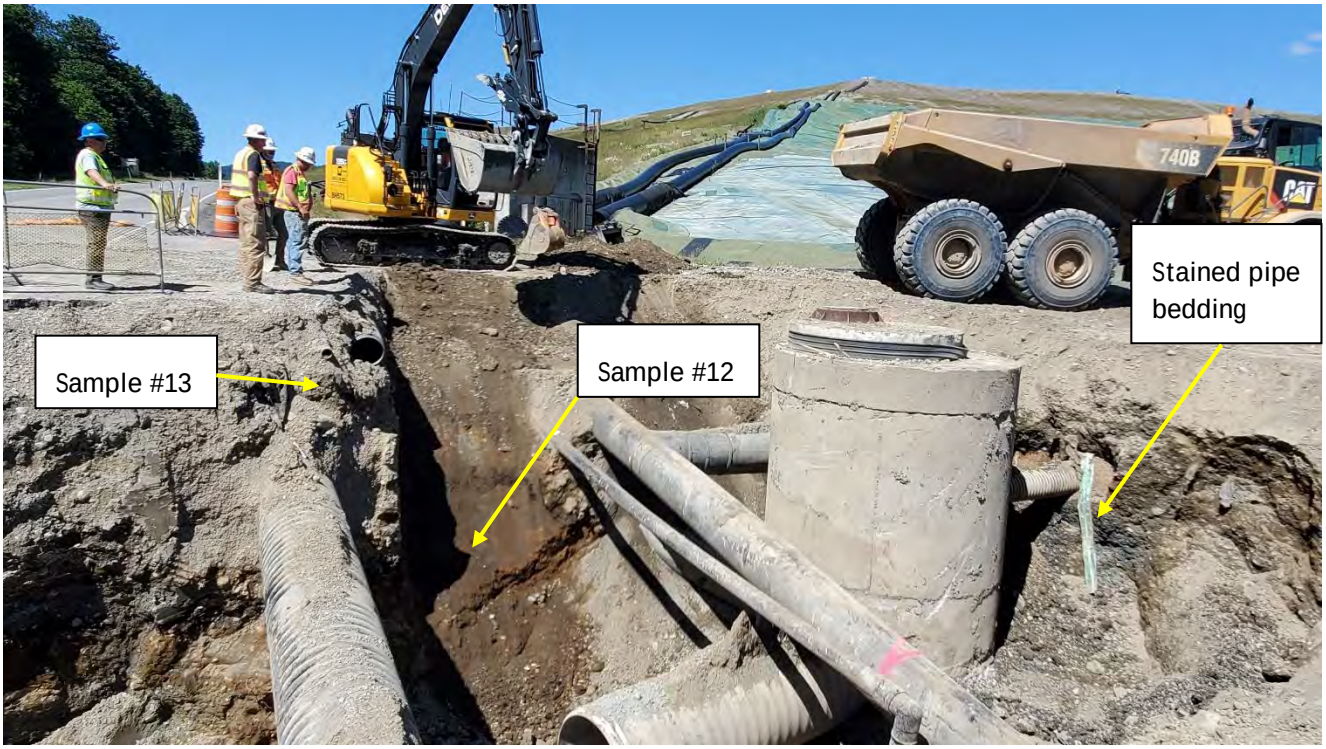

Excavation around manhole and soil samples on 6/16/21

Soil sample locations #12 and #13.

Sample location #14, south sidewall of ditch excavation.

Construction Site Observations

Date:	June 17, 2021	Inspector:	G. Iftner, C. Steiner
Project Name:	Cedar Hills Regional Land Fill Area 7 Soil Contamination		
Arrival/Departure Time:	08:00/16:00	Project No.:	11-05150-003
Weather:	Sunny, high 70s F	Contract No.:	E00227E11

Site Activities:

Herrera checked in with Randy Brown of Anchor QEA, then observed contaminated soil excavation activities by Goodfellow Brothers, Inc. (GBI). Herrera screened soil samples for field indicators of contamination, visually and with a photoionization detector (PID) and collected 2 confirmation samples from the south sidewall at different depths (7 feet and 9 feet bgs). Herrera stored the samples in a cooler on ice overnight and hand delivered them on 6/18/2021 to OnSite Environmental, Inc. of Redmond, WA for the suite of analyses specified in the Work Plan. After collecting samples in the morning, work was paused while awaiting approval to remove the manhole structure.

Labor (Prime and Subcontractor):	Equipment (Prime and Subcontractor):	Materials Received and Conditions:
Goodfellow Brothers, Inc.	360 Excavator	NA
Goodfellow Brothers, Inc.	740B dump truck	NA

Site Inspection Observations:

Two soil samples were collected from the south sidewall to compare potential soil contamination at different depths and inform whether additional excavation is needed in the future along the south sidewall. Sample #15 (DA7SWCS15210617I) was collected at approximate depth of 7 feet bgs from gray/brown sandy GRAVEL, trace silt that exhibited a sour/acrid odor and elevated PID reading of 30.7 ppm (0.4 ppm ambient air reading). Another sample, #11 (DA7SWCS11210617I) was planned to be collected the day before, but collected today instead, at a depth of 9 feet bgs (below #15). Sample #11 was collected from brown/black silty SAND with gravel that resembles native topsoil (with small charcoal fragments); no odors or apparent staining, and PID reading of 0.7 ppm (0.4 ppm ambient air).

Action Items/Follow Up:

Herrera will review the laboratory analytical results and prepare a draft data summary table to share with the County, and incorporate into the technical memorandum documenting the soil excavation and sampling activities.

George C. Iftner

Signature

George Iftner

Print Name

South sidewall where samples #11 and #15 were collected.

Soil resembling native topsoil at approx. 9 feet bgs where sample #11 was collected.

Construction Site Observations

Date:	June 18, 2021	Inspector:	G. Iftner, C. Steiner
Project Name:	Cedar Hills Regional Land Fill Area 7 Soil Contamination		
Arrival/Departure Time:	10:00/14:45	Project No.:	11-05150-003
Weather:	Sunny, high 70s F	Contract No.:	E00227E11

Site Activities:

Herrera checked in with Randy Brown of Anchor QEA, then observed Goodfellow Brothers, Inc. (GBI) removing manhole structure. GBI broke up the concrete manhole structure into pieces and loaded it into trucks for onsite disposal. GBI excavated small quantity of soils around the footprint of the former manhole and put steel trench box in place. GBI plans to continue and complete excavation work further east on Monday 6/21/21. Herrera screened soils at the bottom of the excavation for field indicators of contamination, visually and with a photoionization detector (PID). Herrera collected one confirmation sample from the excavation bottom, just east of the concrete slab that the manhole structure was sitting on. Herrera stored the sample in a cooler on ice overnight and hand delivered the sample on 6/18/2021 to OnSite Environmental, Inc. of Redmond, WA along with the two samples collected on 6/17/21. The soil samples were analyzed for the suite of analyses specified in the Work Plan.

Labor (Prime and Subcontractor):	Equipment (Prime and Subcontractor):	Materials Received and Conditions:
Goodfellow Brothers, Inc.	360 Excavator	NA
Goodfellow Brothers, Inc.	740B dump truck	NA
Goodfellow Brothers, Inc.	Small excavator	NA
Goodfellow Brothers, Inc.	Front loader	NA

Site Inspection Observations:

One soil sample #16 (DA7SWCS16210618I) was collected on the excavation bottom, just east of the concrete slab, from gray sandy GRAVEL with silt (no odors or staining); PID reading was 0.5 ppm (ambient air 0.3 ppm). No visual indications of contamination observed in any areas along the bottom or lower sidewalls of the excavation. Pipe bedding material beneath the 12" and 22" pipes east of the manhole structure, at approximately 7.5 feet elevation appears to be stained brown and have slight acrid odor.

Action Items/Follow Up:

Herrera will review the laboratory analytical results and prepare a draft data summary table to share with the County, and incorporate into the technical memorandum documenting the soil excavation and sampling activities.

George C. Iftner

Signature

George Iftner

Print Name

Excavation bottom and east sidewall. Soil sample #16 was collected just east of concrete slab that manhole rested on.

Trench box placed where manhole was removed. Suspect contaminated pipe bedding material beneath 12" and 22" pipes in right side of photo to be removed.

Construction Site Observations

Date:	June 21, 2021	Inspector:	G. Iftner, C. Steiner
Project Name:	Cedar Hills Regional Land Fill Area 7 Soil Contamination		
Arrival/Departure Time:	10:00/14:45	Project No.:	11-05150-003
Weather:	Sunny, high 70s F	Contract No.:	E00227E11

Site Activities:

Herrera checked in with Randy Brown of Anchor QEA, then Tim Barnes with Goodfellow Brothers, Inc. (GBI). GBI removed 12" and 22" diameter pipes east of the manhole structure that was removed over to the second shallowere manhole with valves to the east. GBI excavated contaminated soils from the stepped up shallower excavation east; the excavation is approximately 8.5 feet to 8 feet deep bgs and narrows as it ends at the second manhole with valves. All soils were loaded into 40-ton haul truck and disposed at Area 8. Herrera screened soils and pipe bedding materials that were removed for field indicators of contamination, visually and with a photoionization detector (PID). Herrera collected two bottom samples #17 and #19 from the shallower stepped up excavation, a duplicate sample, and one south sidewall sample #18 for laboratory analysis. Herrera stored the samples in a cooler on ice and hand delivered the samples to OnSite Environmental, Inc. of Redmond, WA for the suite of analyses specified in the Work Plan.

Labor (Prime and Subcontractor):	Equipment (Prime and Subcontractor):	Materials Received and Conditions:
Goodfellow Brothers, Inc.	360 Excavator	NA
Goodfellow Brothers, Inc.	740B dump truck	NA

Site Inspection Observations:

Sample #17 (DA7SWCS17210621I) was collected on the shallow excavation bottom, at a depth of about 8.5 feet from dark gray-brown sandy GRAVEL with silt. No odors or stains were noted and the PID reading was 1.4 ppm (ambient air was 0.3 ppm). Sample #18 was collected at a depth of approximately 7.5 feet bgs from gray sandy GRAVEL with silt. No odors or stains were noted and the PID reading was 0.6 ppm (ambient air was 0.3 ppm). Sample #19 was collected from the excavation bottom approximately three feet west of the second manhole with valves from dark gray-brown sandy GRAVEL with silt. No odors or stains were noted and the PID reading was 0.4 ppm (ambient air was 0.3 ppm).

Pipe bedding material beneath the 12" and 22" pipes east of the manhole structure, at approximately 7.5 feet elevation appears to be stained brown and have slight acrid odor.

Per discussion with George Iftner (Herrera), Randy Brown (Anchor QEA) and Tim Barnes (GBI), the 22" landfill gas header pipe resting along the north side of the shallow stepped up excavation will be removed in August. The black fine to medium sand bedding material did not yield elevated PID reading (reading was 0.7 ppm) but did exhibit a slight sour / acrid odor. We discussed that the remaining soils along the north side of the excavation and on top of the repaired Area 7 liner will be excavated and disposed along with the pipe bedding material when the 22" LFG header is removed. For this reason, Herrera did not collect a sample from the north sidewall of the excavation.

Randy, Tim, and George also discussed that additional soil excavation will take place to the east of the second manhole with valves when the LFG header pipe is removed. Additional soil sampling should be performed as needed at that time.

Action Items/Follow Up:

Herrera will review the laboratory analytical results and prepare a draft data summary table to share with the County, and incorporate into the technical memorandum documenting the soil excavation and sampling activities.

George C. Iftner

Signature

George Iftner

Print Name

Excavation on 6/21/21. Suspected contaminated pipe bedding pea gravel below 12" and 22" pipes was excavated for disposal. 22" landfill gas header pipe on lower left will be excavated and removed later (possibly August 2021).

Suspected contaminated black fine to medium sand pipe bedding material beneath 22" landfill gas header pipe to be removed later.

East end of final excavation on Monday 6/21/2021. Pink dots showing two bottom samples (#17 and #19), and one sidewall sample on south wall (#18 on right side of photo).

Construction Site Observations

Date:	September 9, 2021	Inspector:	C. Steiner
Project Name:	Cedar Hills Regional Land Fill Area 7 Soil Contamination		
Arrival/Departure Time:	8:45/11:15	Project No.:	11-05150-003
Weather:	Sunny, mid 60s F	Contract No.:	E00227E11

Site Activities:

Herrera borrowed a photoionization detector (PID) from Jeff Dye of KCSWD at the North Flare Station and got it calibrated. Herrera checked in with Tim Barnes with Goodfellow Brothers, Inc. (GBI). GBI had not yet reached sampling zone when Herrera arrived, and Tim noted it would be a while before they would be ready for sampling to take place. Tim called Herrera around 11:05 am to confirm that sampling would not be possible today and that Herrera should come back tomorrow morning (9/10/21) to grab samples.

Labor (Prime and Subcontractor):	Equipment (Prime and Subcontractor):	Materials Received and Conditions:
Goodfellow Brothers, Inc.	360 Excavator	NA
Goodfellow Brothers, Inc.	40-ton haul truck	NA

Site Inspection Observations:

No sampling was conducted. GBI was in the process of removing the 24" LFG header pipe north of the shallow stepped up excavation when Herrera left site.

Action Items/Follow Up:

Herrera will be back on-site tomorrow, 9/10/21, to begin the second phase of sampling.

Camryn Steiner

Signature

Camryn Steiner

Print Name

Current exposed manholes and other utilities.

24” LFG Header pipe located north of the excavation zone that was removed on the day.

Construction Site Observations

Date:	September 10, 2021	Inspector:	C. Steiner
Project Name:	Cedar Hills Regional Land Fill Area 7 Soil Contamination		
Arrival/Departure Time:	8:05/12:20	Project No.:	11-05150-003
Weather:	Overcast w/some mist, low 60s F	Contract No.:	E00227E11

Site Activities:

Herrera borrowed a photoionization detector (PID) from Jeff Dye of KCSWD at the North Flare Station and got it calibrated. Herrera checked in with Tim Barnes with Goodfellow Brothers, Inc. (GBI). GBI reached the Phase 2 excavation area and excavated contaminated soils from east of the second manhole with valves; the excavation area is approximately 40 feet long, 3 feet deep bgs, and narrows from about 9 feet wide just east of the second manhole with valves to about 4 feet on the farthest east end of the excavation zone. All soils were loaded into 40-ton haul truck and disposed at Area 8. Herrera screened soils and pipe bedding materials according to Work Plan criteria that were removed for field indicators of contamination, visually and with a PID. Herrera collected two bottom samples #20 and #22, a duplicate sample, and two south sidewall samples #21 and #23 for laboratory analysis. No north wall samples were grabbed as the excavation ran right up to the anchor trench on the north side and no soil was left. Per discussion with Camryn Steiner (Herrera) and Randy Brown (Anchor QEA) GBI was approved to backfill the area that was just excavated and sampled in order to open up the road again. This decision was made based on prior sampling results and lack of contamination found so far in the area. If Lab results show contamination concern, the area will be excavated again and soil will be disposed according to Work Plan. Herrera coordinated with Randy Brown and Tim Barnes to indicate and name sampled locations for the surveying that was performed. Herrera stored the samples in a cooler on ice and hand delivered the samples to OnSite Environmental, Inc. of Redmond, WA for the suite of analyses specified in the Work Plan.

Labor (Prime and Subcontractor):	Equipment (Prime and Subcontractor):	Materials Received and Conditions:
Goodfellow Brothers, Inc.	360 Excavator	NA
Goodfellow Brothers, Inc.	ViO50 Mini Excavator	NA
Goodfellow Brothers, Inc.	40-ton haul truck	NA

Site Inspection Observations:

Sample #20 (DA7SWCS20210910I) was collected at 9:45 am on the shallow excavation bottom at a depth of about 3 feet bgs and at a distance about 35 feet east of the second manhole with valves. The sample was taken from dark gray-brown clay GRAVEL with sand. Soil had a sour odor but no stains were noted.

Sample #21 was collected at 10:00 am about 7 feet southwest of Sample #20 at a depth of approximately 2 feet bgs on the south excavation wall from gray-brown sandy GRAVEL with silt. No odors or stains were noted.

Sample #22 was collected at 10:35 am from the excavation bottom approximately 3 feet east of the second manhole with valves from dark gray-brown sandy GRAVEL with silt. Soil had a slight sour odor but no stains were noted. A duplicate sample for #22 was taken.

Sample #23 was collected at 10:40 am about 8 feet southeast of Sample #22 at a depth of approximately 2.5 feet bgs on the south excavation wall from hard gray-brown silty GRAVEL with sand. No odors or stains were noted.

*PID may not have been working correctly for the four samples because all ambient and sample readings were -0.8 to -0.9 ppm.

Action Items/Follow Up:

The Area 7 Soil Contamination Sampling should be finished with the excavation performed and samples grabbed today.

Herrera will review the laboratory analytical results and add to the draft data summary table to share with the County, and finish the technical memorandum documenting the soil excavation and sampling activities.

Camryn Steiner

Signature

Camryn Steiner

Print Name

Location of Samples #20 (left) and #21 (right) taken at the farthest east point of the soil excavation.

Location of Samples #22 (right) and #23 (left) taken on the west side of the Phase 2 excavation – just east of the second manhole with the valves.

Anchor trench wall that bordered the north side of the phase 2 excavation zone.

Excavation taking place on 9/10/21 to reach sampling zone. Crew was working on getting the cover out of the way.

Construction Site Observations

Date:	September 24, 2021	Inspector:	C. Steiner
Project Name:	Cedar Hills Regional Land Fill Area 7 Soil Contamination		
Arrival/Departure Time:	8:05/10:45	Project No.:	11-05150-003
Weather:	Foggy then sunny, mid to high 50s F	Contract No.:	E00227E11

Site Activities:

Herrera borrowed a photoionization detector (PID) from Jeff Dye of KCSWD at the North Flare Station and got it calibrated. Herrera checked in with Randy Brown (Anchor QEA) to discuss suspect areas and prior work done to remove suspect soils after leachate contamination from the laterals along the east side of the Area 6/7 South Berm Road. Prior to Herrera arriving onsite, GBI had removed soils from the 4 LFG laterals in the northeast corner of area 8 to about 20 feet west once the soils no longer looked contaminated. No direct bottom or side samples were possible for the area next to the eastern most laterals because the bottom had exposed the Area 6 anchor trench liner, the south slope would be excavated with removal of the header, and the north side had barely any soil left. Herrera screened soils around the area with a PID and did not get any hits. Sample #24 was grabbed at the west end where GBI had ended their excavation about 6 feet deep of original South Berm Road level, 9.5 feet from anchor trench wall, and 20 feet from laterals. The sample depths were based off the ground surface elevation at the time of sample collection. Soils on the South Berm Road had been excavated and leveled for the Area 7/8 liner tie-in work at about 4 feet below the original road elevation. Two more bottom samples were taken west of sample #24 near where leachate had spilled from the next set of 3 LFG laterals. GBI cleared the suspect soils and Herrera collected two bottom samples #25 and #26 to confirm surrounding soils were clean as they appeared to be. Sample #25 was collected about 8 feet west of the laterals and 8 feet south of the anchor wall under where the leachate had spilled and pooled. GBI removed about 1 foot of suspect and wet soils before Herrera took the sample. Sample #25 had no PID hits and the sample area no longer looked stained after the 1 foot of soil was removed from the immediate area. Additionally, an area southeast of the laterals where the header pipe had been appeared stained, so Herrera had GBI excavate about a foot down. Herrera field screened and collected sample #26 approximately 17 feet from the laterals and anchor trench wall to ensure the leachate had not seeped in that direction. The sample location was underneath where the header pipe had been and a layer of sand for the pipe bedding was reached with excavation. The bedding sand appeared dark but GBI crewmembers said the sand is naturally that color. Herrera had GBI dig beneath the pipe sand bed to the soil below making sure to be careful around the anchor trench liner. Sample #26 contained the soil below the sand layer as well as some of the pipe bed sand that got mixed in. There was not a PID hit for sample #26. Herrera coordinated with Randy Brown and GBI to survey the sample locations. Herrera stored the samples in a cooler on ice and hand delivered the samples to OnSite Environmental, Inc. of Redmond, WA for the suite of analyses specified in the Work Plan.

Labor (Prime and Subcontractor):	Equipment (Prime and Subcontractor):	Materials Received and Conditions:
Goodfellow Brothers, Inc.	360 Excavator	NA

Site Inspection Observations:

Sample #24 (DA7SWCS24210924I) was collected at 9:00 am on the shallow excavation bottom at a depth of about 2 feet bgs and at a distance about 20 feet west of the LFG laterals in the southeast corner of Area 8 and 9.5 from the anchor trench wall. The sample was taken from gray-brown silt GRAVEL with sand. No odors or stains were noted and sample area did not have a PID hit.

Sample #25 was collected at 9:35 am about 8 feet west of the nearby laterals and anchor trench wall. The sample was taken after GBI removed about 1 foot of soils. The sample was taken from brown sandy GRAVEL with silt. No odors or stains were noted and sample area did not have a PID hit.

Sample #26 was collected at 9:50 am approximately 17 feet southeast of the nearby laterals and anchor trench wall. The sample was taken after GBI removed about 1.5 feet of soils and header pipe sand. The sample was taken from gray-brown sandy GRAVEL with silt mixed with dark brown sand originally placed for header bed. No odors or stains were noted and sample area did not have a PID hit.

Action Items/Follow Up:

Herrera will be back onside next week for sampling in the northeast corner of Area 8 near the interior header connection. The interior header connection and excavation to reach sampling area is scheduled to take place Thursday, 9/30. Herrera is expected to be on site 10/1 or potentially in the afternoon of 9/30.
Herrera will review the laboratory analytical results and add to the draft data summary table to share with the County, and continue working on the technical memorandum documenting the soil excavation and sampling activities.

Camryn Steiner

Signature

Camryn Steiner

Location of Sample #24 taken at west end of excavation about 20 feet from laterals.

Location of Sample #25 taken about 8 feet west of the laterals.

Location of Sample #26 taken 17 feet southeast of laterals, beneath where removed header pipe had been.

Dark, suspect looking soils around the lateral spill where Samples #25 and #26 were collected. These suspect soils were removed and disposed of prior to sample collection. The area post-excavation can be seen in the next photo.

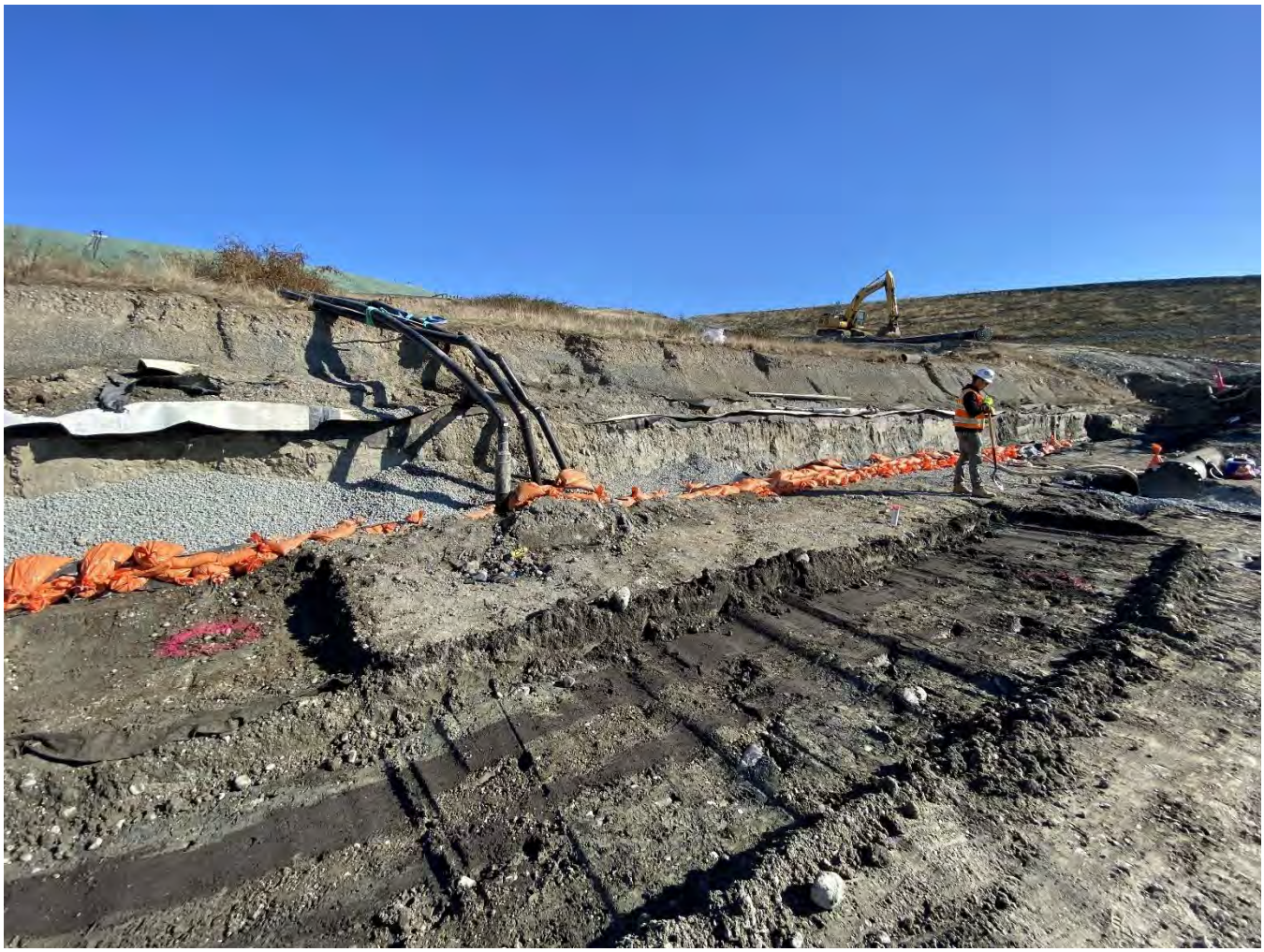

Soil removal and cleanup that took place 9/24 after leachate spilled from laterals. Samples #25 (left) and #26 (right) are shown. The dark soil shown is the sand bedding that was placed for the old header pipe.

Construction Site Observations

Date:	October 1, 2021	Inspector:	C. Steiner
Project Name:	Cedar Hills Regional Landfill Area 7 Soil Contamination		
Arrival/Departure Time:	10:15/2:00	Project No.:	11-05150-003
Weather:	Sunny, high 50s F to low 60s F	Contract No.:	E00227E11

Site Activities:

Herrera borrowed a photoionization detector (PID) from Jeff Dye of KCSWD at the North Flare Station and got it calibrated. Herrera checked in with Dan Swope (KCSWD) and Mike Roberts (Anchor QEA) to discuss suspect areas and prior work done to remove suspect soils after leachate contamination from the laterals along the east side of the Area 6/7 South Berm Road and around the interior header connection at the northeast corner of Area 8. Prior to the interior header connection work, GBI had removed suspect soils from area to hopefully remove all contamination. To confirm adequate cleanup, 3 samples were grabbed between where Sample #24 was grabbed on 9/24/21 (west end of 10/1 sample area) and the interior header connection location around the booted lateral penetration (east end of 10/1 sample area). Herrera screened soils around the area with a PID and did not get any hits. The decommissioned header pipe that ran west to east on the South Berm Road was moved so Herrera could grab two samples from beneath it. Sample #27 was grabbed from beneath the old header pipe in an area with seemingly dark pipe bedding sand around it. GBI dug 2 feet below where the base of the pipe was, and the sample grabbed was to ensure the dark color was natural of the placed sand and not due to contamination. Sample #28 was taken about 10 feet east of Sample #27 also about 2 feet underneath of the removed header pipe. Sample #29 was collected from the excavation pit around the interior header connection and the booted lateral penetration. The sample was grabbed about 2 feet below and 2 feet north of the header. None of the samples or sample areas had any PID hits and no soils left after initial excavation and cleanup looked stained of leachate. GBI surveyed the sample locations as Herrera collected the samples. Herrera stored the samples in a cooler on ice and hand delivered the samples to OnSite Environmental, Inc. of Redmond, WA for the suite of analyses specified in the Work Plan.

Labor (Prime and Subcontractor):	Equipment (Prime and Subcontractor):	Materials Received and Conditions:
Goodfellow Brothers, Inc.	360 Excavator	NA
Pro-Vac	Vactor Truck	NA

Site Inspection Observations:

Sample #27 (DA7SWCS27211001I) was collected at 12:40 pm on the shallow excavation bottom at a depth of about 2 feet below the base of the decommissioned header pipe that ran beneath the South Berm Road. The sample was taken at a distance about 20 feet west of the header pipe in the southeast corner of Area 8. The sample was taken from gray silt GRAVEL with clay. No odors or stains were noted and sample area did not have a PID hit.

Sample #28 was collected at 12:50 pm about 2 feet below the base of the decommissioned header pipe that ran beneath the South Berm Road. The sample was taken at a distance about 10 feet west of the new connected header pipe. The sample was taken from gray-brown sandy GRAVEL with silt. No odors or stains were noted and sample area did not have a PID hit.

Sample #29 was collected at 1:05 pm approximately 2 feet underneath and 2 feet north of the header pipe in the excavation bottom near the booted lateral penetration. The sample was taken from gray-brown silt GRAVEL with clay. No odors or stains were noted and sample area did not have a PID hit.

Action Items/Follow Up:

The Area 7 Soil Contamination Sampling should be finished with the excavation performed and samples grabbed today.

Herrera will review the laboratory analytical results and add to the draft data summary table to share with the County, and finish the technical memorandum documenting the soil excavation and sampling activities.

Camryn Steiner

Signature

Camryn Steiner

Print Name

Decommissioned header pipe that ran east-west along the South Berm Road. This header was moved so Samples #27 and #28 could be collected from beneath it.

Location of Sample #27 taken about 20 feet west of the new header connection and 2 feet below where removed header pipe had been. Dark sand around sample area is showcased.

Location of Sample #28 taken approximately 10 feet west of the header connection and 2 feet below where removed header pipe had been.

Location of Sample #29 taken in the excavation pit around the booted lateral penetration. Sample was collected 2 feet north and 2 feet below base of header pipe.

Area 6/7 to Area 8 interior header connection that took place in the northeast corner of Area 8 while Herrera was onsite.

Construction Site Observations

Date:	September 19, 2022	Inspector:	C. Steiner
Project Name:	Cedar Hills Regional Landfill Area 7 Soil Contamination		
Arrival/Departure Time:	15:10/17:00	Project No.:	11-05150-003
Weather:	Sunny, high 70s F	Contract No.:	E00227E11

Site Activities:

Herrera checked in with Barnaby Hoit (Anchor QEA) and GBI workers to discuss the spill, work done to remove contaminated soils, and remaining seemingly clean soils after a leachate line leaked during construction near the condensate/leachate manhole in the southwest corner of Area 7 during the morning of September 19th, 2022. Prior to sampling, GBI had removed suspect soils from area to remove contamination up to visual standards. To confirm adequate cleanup, 5 samples were grabbed around the manhole where leachate had flowed. Herrera borrowed a photoionization detector (PID) from those onsite. The sample areas were selected after discussion with Anchor QEA and GBI on their observation of the path of leachate flow and containment and therefore which areas around the manhole would have potential contamination. Herrera screened soils around the area with a PID and did not get any hits. Samples #30 and #31 were grabbed from the bottom of the excavation area at approximately 7 feet bg. Samples #32, #33, and #34 were grabbed from the side wall of the excavation at varying depths (excavation area was approximately circular in shape) that those there for spill indicated was the side of the manhole that leachate flowed around. Crew indicated leachate break occurred on 6" pipe located at ~north end of manhole and flowed around west side of manhole and was contained on south end, not coming in contact with the east side. Therefore, sampling was focused on the north, west and south ends of manhole excavation area. The eastern area was still field screened with the PID to check area, and no hits were found and no odors or stains were noted. None of the samples or sample areas had any PID hits and no soils left after initial excavation and cleanup looked stained of leachate. GBI spray painted sample locations for future survey as Herrera collected the samples. Herrera stored the samples in a cooler on ice with trip blanks and hand delivered the samples to OnSite Environmental, Inc. (OnSite) of Redmond, WA at 5:50 pm for the suite of analyses specified in the Work Plan.

Labor (Prime and Subcontractor):	Equipment (Prime and Subcontractor):	Materials Received and Conditions:
Goodfellow Brothers, Inc. (GBI)	360 Excavator	NA

Site Inspection Observations:

Sample #30 (DA7SWCS30220919I) was collected at 3:45 pm on the excavation bottom at a depth of about 7 feet below grade. The sample was taken from brown sandy GRAVEL with silt. Sample area had a slight sour odor but no visible staining was noted and sample area did not have a PID hit.

Sample #31 (DA7SWCS31220919I and DA7SWCS31220919D) was collected at 3:55 pm on the excavation bottom at a depth of about 7 feet below grade. The sample was taken from brown sandy GRAVEL with silt. Sample area had a slight sour odor but no visible staining was noted and sample area did not have a PID hit.

Sample #32 (DA7SWCS32220919I) was collected at 4:05 pm on the excavation sidewall at a depth of about 4 feet below grade. The sample was taken from brown sandy GRAVEL with silt. No odors or stains were noted and sample area did not have a PID hit.

Sample #33 (DA7SWCS33220919I) was collected at 4:10 pm on the excavation sidewall at a depth of about 1.5 feet below grade. The sample was taken from brown sandy GRAVEL with silt. No odors or stains were noted and sample area did not have a PID hit.

Sample #34 (DA7SWCS34220919I) was collected at 4:15 pm on the excavation sidewall at a depth of about 2 feet below grade. The sample was taken from brown sandy GRAVEL with silt. No odors or stains were noted and sample area did not have a PID hit.

Action Items/Follow Up:

Herrera will review the laboratory analytical results and add it to a data summary table to share with the County. This filed report will be added as an Appendix to the Area 7 Contaminated Soils Technical Memorandum to document the soil excavation and sampling activities from today, which was added to the work performed June to October of 2021.

Camryn Steiner

Signature

Camryn Steiner

Print Name

Samples collected on the day spray painted pink and called out. Samples #30 and #31 were taken from excavation bottom. Samples #32, #33, and #34 were taken from excavation sidewall. Red arrow shows the route of leachate flow into the manhole for containment as explained by Anchor and GBI who were present for spill.

Samples collected on the day spray painted pink and called out. Samples #30 and #31 were taken from excavation bottom. Samples #32, #33, and #34 were taken from excavation sidewall. Red arrow shows the route of leachate flow into the manhole for containment as explained by Anchor and GBI who were present for spill.

Construction Site Observations

Date:	**September 22, 2022**	**Inspector:**	**C. Steiner**
Project Name:	Cedar Hills Regional Landfill Area 7 Soil Contamination		
Arrival/Departure Time:	14:00/18:00	Project No.:	11-05150-003
Weather:	Sunny, mid 60s F	Contract No.:	E00227E11

Site Activities:

Herrera checked in with Barnaby Hoit and Kyle Pothier (Anchor QEA), Dan Swope (KCSWD), and Kyle Williams (GBI) to discuss the spill, work done to remove contaminated soils, and remaining seemingly clean soils after leachate was discovered leaking into the condensate/leachate manhole in the southwest corner of Area 7 on the morning of September 21, 2022. This release is suspected to be a continuation from damage that occurred to the 6" condensate HDPE pipe on 9/19/22. Prior to sampling on September 22, 2022, GBI had excavated around the manhole and removed suspect soils from area to remove contamination up to visual standards. A vactor truck was used to pull the last bit of soils and rock away to reach the base of the manhole. KCSWD employees walked around the excavation area with their SEM 5000 unit to determine if there were any hits from the remaining soil. To confirm that all potentially contaminated soils were removed and stockpiled in Area 8, samples were grabbed from the perimeter of the excavation. 3 samples were grabbed from each of the 4 quadrants of the excavation area for a total of 12 samples. At each quadrant, a sample was grabbed from the excavation bottom (at manhole floor elevation), 4-feet up from bottom, and 6-7 feet up from bottom. Kyle Williams collected a shovel full of soil at each sample location for Herrera to fill the sample jars by using an extended shovel to reach down manhole excavation sides. Samples #35, #36, and #37 were grabbed from SW walls of the excavation; samples #38, #39, and #40 were grabbed from the SE walls of the excavation; samples #41, #42, and #43 were grabbed from the NW walls of the excavation; and samples #44, #45, and #46 were grabbed from the NE walls of the excavation. Samples #35, #38, #41, and #44 were collected from the excavation/manhole bottom; samples #36, #39, #42, and #45 were collected 4-feet up from bottom; samples #37 and #40 were collected 6-feet up from bottom; and samples #43 and #46 were collected from 7-feet up from bottom. A duplicate sample was taken of #39. None of the samples or sample areas had any SEM 5000 hits and no soils left after initial excavation and cleanup looked stained of leachate. The samples collected from the excavation had a musty smell and the samples that came from the bottom had a slightly more acrid smell than those collected further up in the excavation. GBI spray painted on manhole where each set of 3 samples were collected, noting the depth of each sample location for future survey (Note: how GBI labels/names points on survey may not match with sample names given by Herrera but all samples will be accounted for). Herrera stored the samples in a cooler on ice with trip blanks and hand delivered the samples to OnSite Environmental, Inc. (OnSite) of Redmond, WA at approximately 6:45 pm for the suite of analyses specified in the Work Plan. OnSite had closed prior to Herrera arrival so the samples in the cooler were left in their locked trailer and same day analysis was selected for quick turnaround.

Labor (Prime and Subcontractor):	Equipment (Prime and Subcontractor):	Materials Received and Conditions:
Goodfellow Brothers, Inc. (GBI)	360 Excavator	NA
Pro-Vac	Vactor Truck	NA

Site Inspection Observations:

Southwest Samples:

Sample #35 (DA7SWCS35220922I) was collected at 3:15 pm on the excavation bottom at the base of the manhole. The sample was taken from gray brown sandy GRAVEL with clay. Sample area had a slight acrid odor but no visible staining was noted.

Sample #36 (DA7SWCS36220922I) was collected at 3:20 pm on the excavation sidewall 4 feet up from base of manhole. The sample was taken from gray brown sandy GRAVEL with clay. No notable odors or stains were observed.

Sample #37 (DA7SWCS37220922I) was collected at 3:20 pm on the excavation sidewall 6 feet up from base of manhole. The sample was taken from gray brown sandy GRAVEL with silt. No notable odors or stains were observed.

Southeast Samples:

Sample #38 (DA7SWCS38220922I) was collected at 3:30 pm on the excavation bottom at the base of the manhole. The sample was taken from gray brown sandy GRAVEL with silt. No notable odors or stains were observed.

Sample #39 (DA7SWCS39220922I and DA7SWCS39220922D) was collected at 3:40 pm on the excavation sidewall 4 feet up from base of manhole. The sample was taken from gray brown sandy GRAVEL with silt. No notable odors or stains were observed.

Sample #40 (DA7SWCS40220922I) was collected at 3:50 pm on the excavation sidewall 6 feet up from base of manhole. The sample was taken from gray brown sandy GRAVEL with silt. No notable odors or stains were observed.

Northwest Samples:

Sample #41 (DA7SWCS41220922I) was collected at 4:10 pm on the excavation bottom at the base of the manhole. The sample was taken from gray brown sandy GRAVEL with clay. Sample area had a slight acrid odor but no visible staining was noted.

Sample #42 (DA7SWCS42220922I) was collected at 4:15 pm on the excavation sidewall 4 feet up from base of manhole. The sample was taken from gray brown sandy GRAVEL with clay. No odors or stains were noted.

Sample #43 (DA7SWCS43220922I) was collected at 4:20 pm on the excavation sidewall 7 feet up from base of manhole. The sample was taken from gray brown sandy GRAVEL with clay. No notable odors or stains were observed.

Northeast Samples:

Sample #44 (DA7SWCS44220922I) was collected at 4:35 pm on the excavation bottom at the base of the manhole. The sample was taken from gray brown sandy GRAVEL with silt. Sample area had a slight acrid odor but no visible staining was noted.

Sample #45 (DA7SWCS45220922I) was collected at 4:40 pm on the excavation sidewall 4 feet up from base of manhole. The sample was taken from gray brown sandy GRAVEL with clay. No notable odors or stains were observed.

Sample #46 (DA7SWCS46220922I) was collected at 4:45 pm on the excavation sidewall 7 feet up from base of manhole. The sample was taken from gray brown sandy GRAVEL with silt. No notable odors or stains were observed.

Action Items/Follow Up:

Herrera will review the laboratory analytical results and add it to a data summary table to share with the County. This field report will be added to the Area 7 Contaminated Soils Technical Memorandum to document the soil excavation and sampling activities from today, which was added to the work performed June to October of 2021.

Camryn Steiner

Signature

Camryn Steiner

Print Name

Kyle Williams collecting sample from NE quadrant of excavation area around manhole, with sample numbers labeled (facing south).

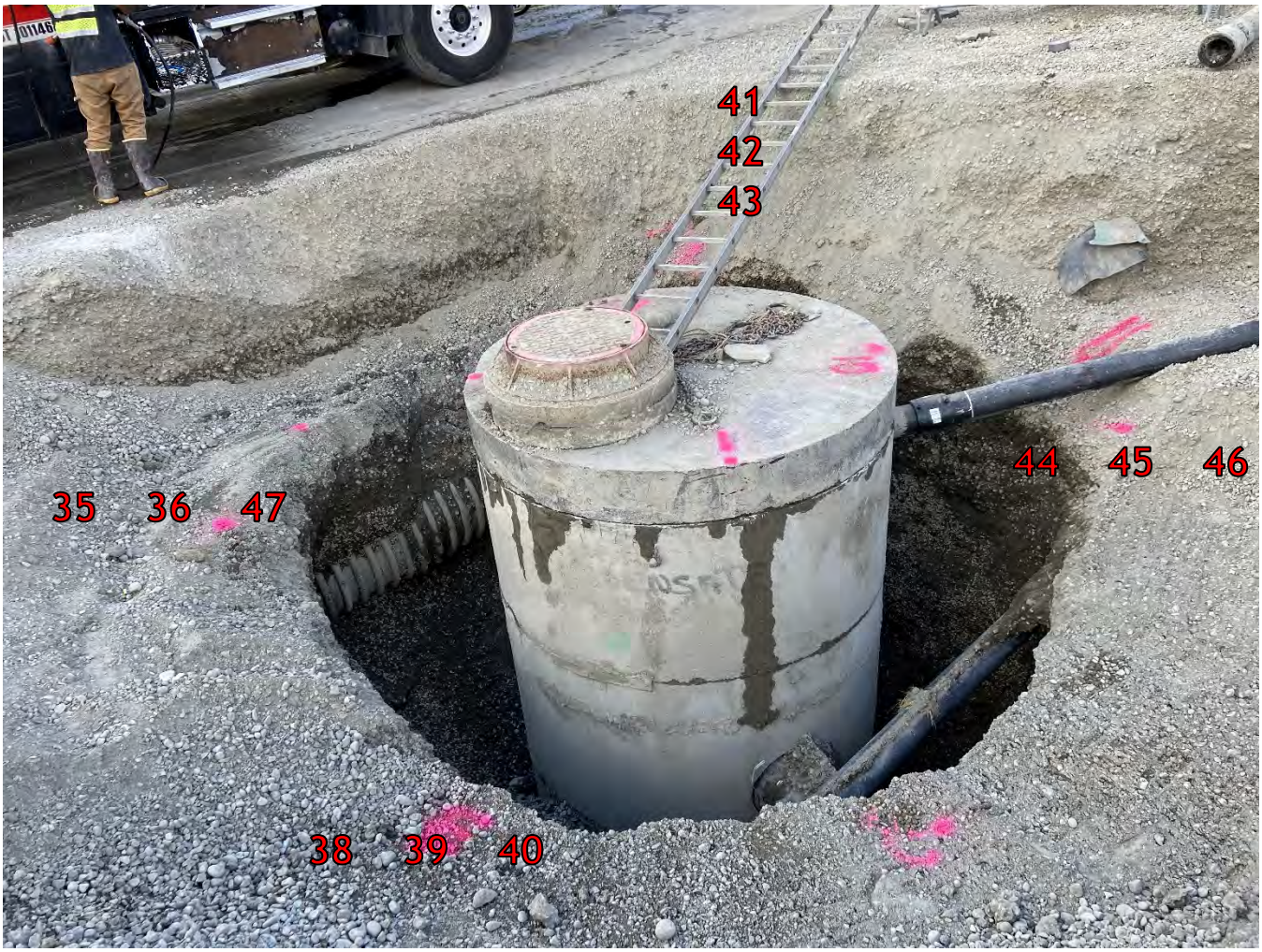

Excavation area after complete soils removal and sampling, with sample numbers labeled (facing northwest).

Excavation area after complete soils removal and sampling, with sample numbers labeled (facing southeast).

Pro-Vac removing soil to reach base of manhole/excavation (facing north).

APPENDIX C

Soil Sample Locations

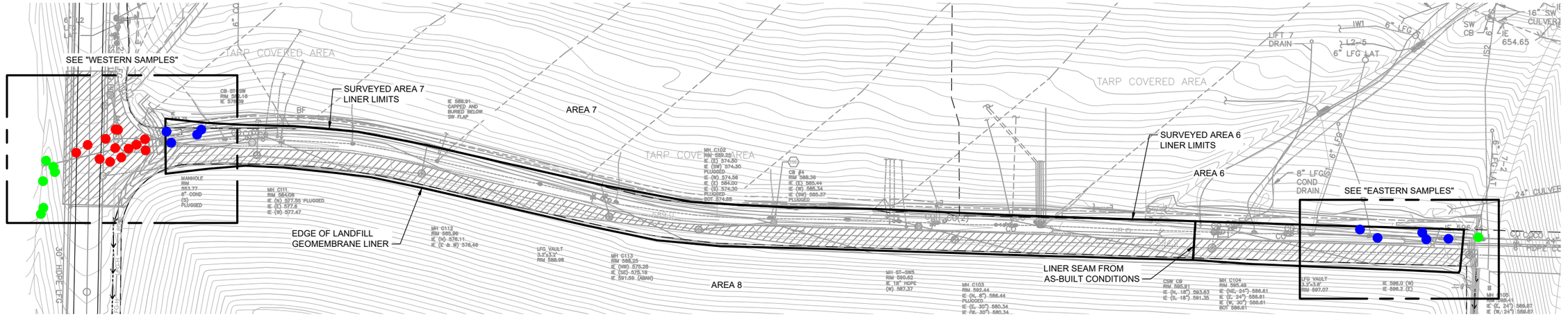

AREA 8 - BC-16 STORMWATER DITCH

SCALE: 1"=60'

60 0 60 120

Scale in Feet

LEGEND

- BENEATH LINING SYSTEM
- BEYOND LINING SYSTEM, BENEATH ASPHALT PAVING
- BEYOND LINER SYSTEM

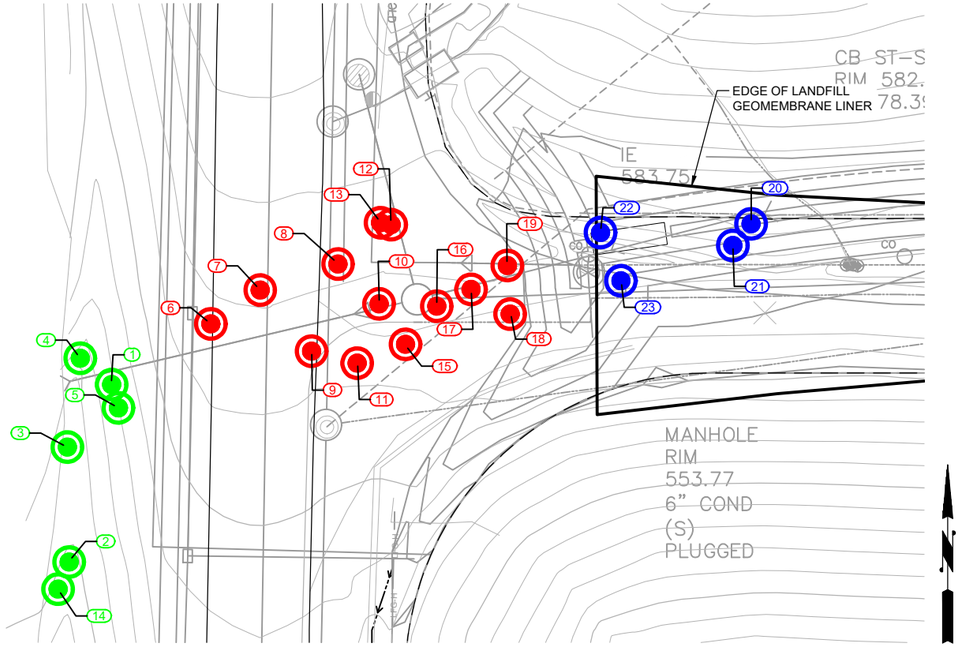

WESTERN SAMPLES

SCALE: 1"=20'

20 0 20 40

1"=20'

ADDITIONAL DETAILS FOR THE WESTERN SAMPLES CAN BE FOUND IN TABLE 1 OF APPENDIX E - DATA SUMMARY TABLES.

SOIL SAMPLE COORDINATE TABLE		
POINT NO.	NORTHING	EASTING
1	169543.08	1698226.19
2	169495.26	1698214.71
3	169526.17	1698214.30
4	169550.16	1698217.78
5	169536.80	1698227.98
6	169559.43	1698253.00
7	169568.53	1698266.38
8	169575.72	1698287.30
9	169552.10	1698280.25
10	169564.86	1698298.49
11	169548.96	1698292.64
12	169586.41	1698301.67
13	169586.71	1698298.93
14	169487.80	1698211.82
15	169553.81	1698305.46
16	169564.21	1698314.04
17	169568.64	1698323.31
18	169562.33	1698333.99
19	169575.27	1698332.98
20	169586.51	1698398.89
21	169580.62	1698393.96
22	169584.22	1698358.27
23	169570.95	1698363.83
24	169466.29	1699822.15
25	169459.97	1699770.03
26	169469.77	1699749.56
27	169458.27	1699826.87
28	169458.93	1699852.64
29	169460.73	1699887.74

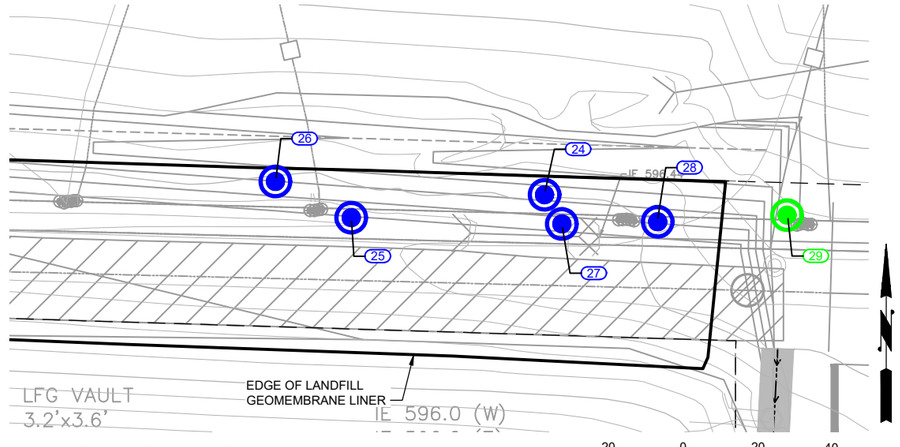

EASTERN SAMPLES

SCALE: 1"=20'

20 0 20 40

1"=20'

ADDITIONAL DETAILS FOR THE EASTERN SAMPLES CAN BE FOUND IN TABLE 2 OF APPENDIX E - DATA SUMMARY TABLES.

Internal Review - NOT FOR CONSTRUCTION

10-2022

BHC CONSULTANTS

HDR

HERRERA

CHRL AREA 7 CONTAMINATED SOILS

2021 SOIL SAMPLE LOCATIONS

DATE: OCT 2022

DRAWING: 2021 Soil sampling.dwg

SHEET: 1 OF 1

© 2021 Herrera Environmental Consultants, Inc. All rights reserved.

O:\proj\Y2011\11-005\5-003\CADD\wip\Soil sampling\2021 Soil sampling.dwg | 10/26/2022 3:27 PM | Chuck Marston

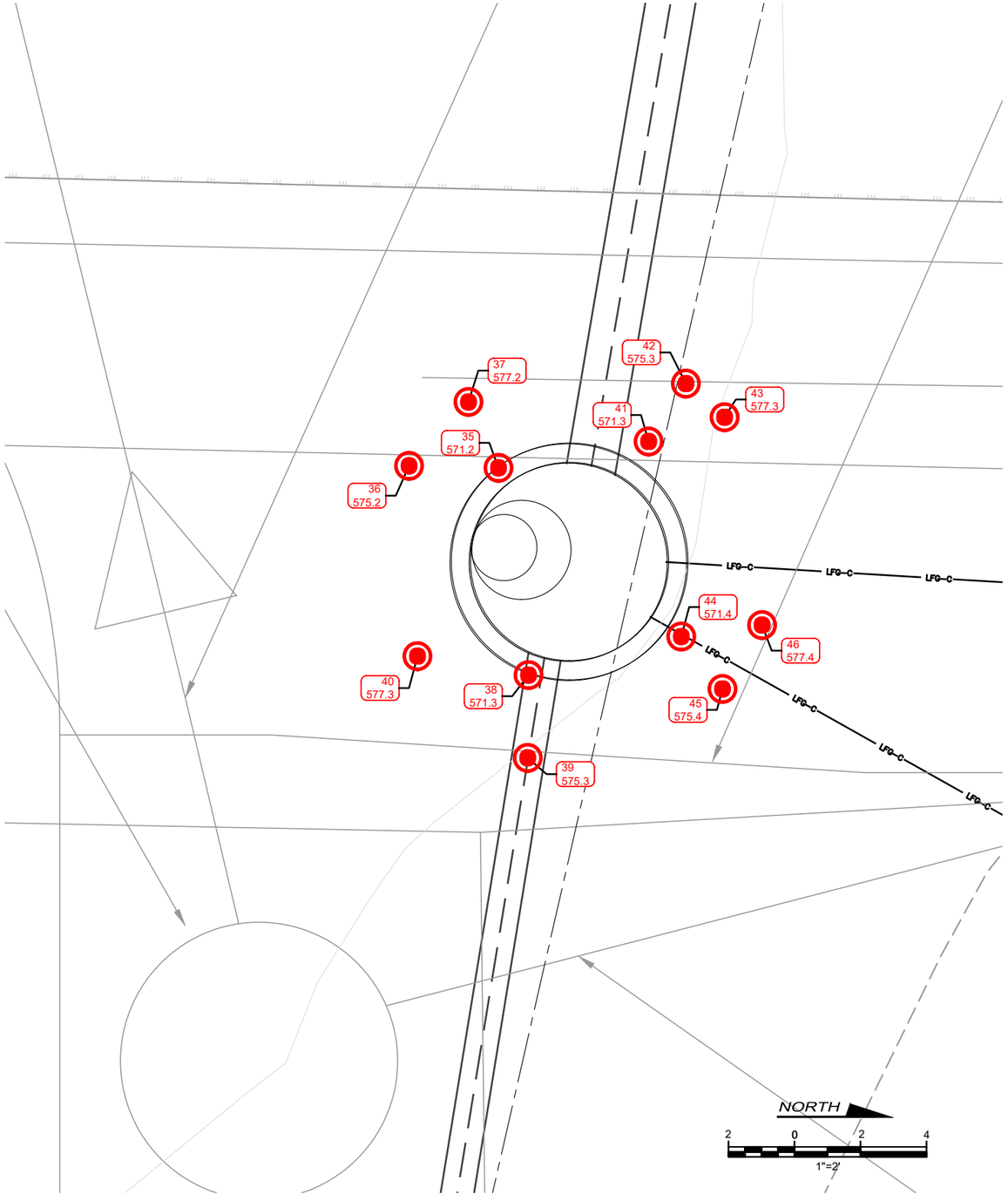

ADDITIONAL DETAILS FOR THE SAMPLES CAN BE FOUND IN TABLE 4 OF APPENDIX E - DATA SUMMARY TABLES.

SOIL SAMPLE COORDINATE TABLE		
POINT NO.	NORTHING	EASTING
35	169573.15	1698291.56
36	169570.44	1698291.50
37	169572.24	1698289.57
38	169574.06	1698297.84
39	169574.03	1698300.34
40	169570.69	1698297.26
41	169577.70	1698290.76
42	169578.83	1698289.01
43	169580.00	1698290.03
44	169578.69	1698296.67
45	169579.94	1698298.26
46	169581.13	1698296.32

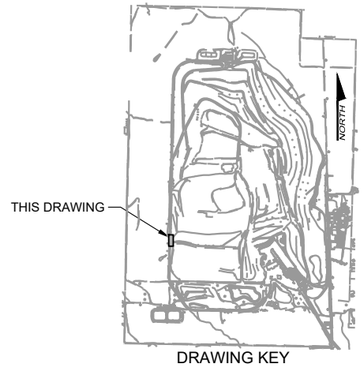

DRAWING KEY

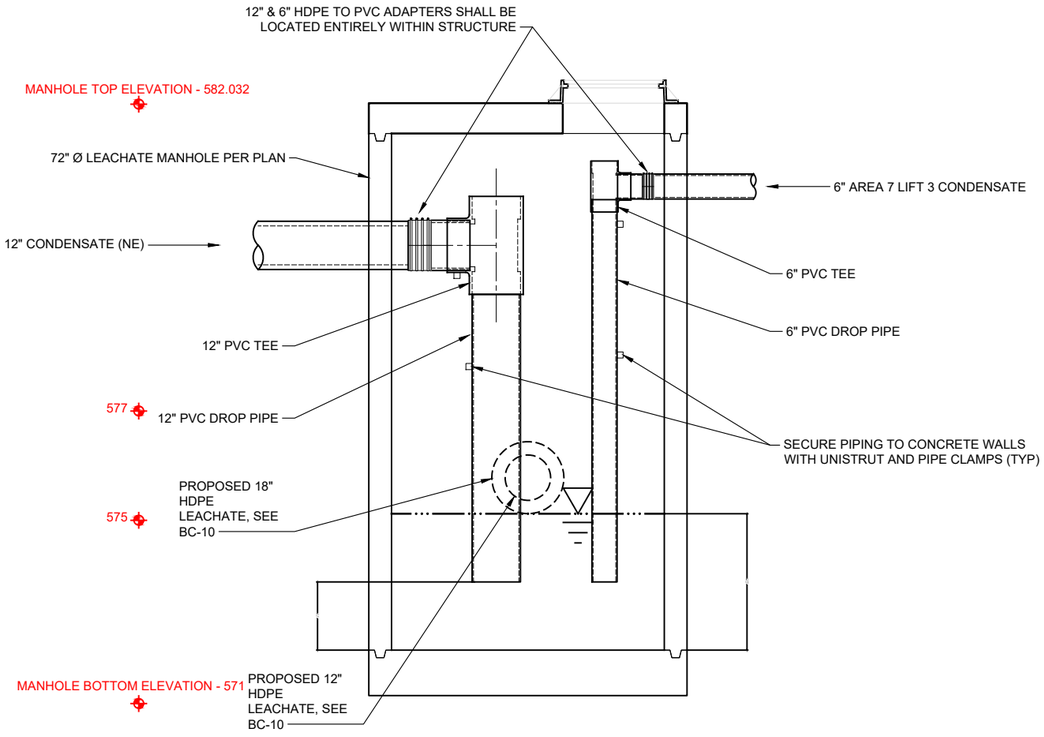

LEGEND

BEYOND LINING SYSTEM, BENEATH ASPHALT PAVING

XX
XXX.X — POINT NUMBER, ELEVATION

Internal Review - NOT FOR CONSTRUCTION

10-2022

BHC CONSULTANTS

HDR

HERRERA

CHRL AREA 7 CONTAMINATED SOILS

SEPT 2022 SOIL SAMPLE LOCATIONS

DATE: OCT 2022

DRAWING: 2022 Soil sampling.dwg

SHEET: 1 OF 1

© 2021 Herrera Environmental Consultants, Inc. All rights reserved.

O:\pnts\Y2011\11-05150-003\CAD\Dwg\Soil sampling\2022 Soil sampling.dwg | 10/26/2022 3:17 PM | Chuck Marston

APPENDIX D

Laboratory Results

OnSite Environmental Inc.
14648 NE 95th Street, Redmond, WA 98052 • (425) 883-3881

June 11, 2021

Randy Brown
Anchor QEA
1201 3rd Avenue, Suite 2600
Seattle, WA 98101

Re: Analytical Data for Project 11-05150-003
Laboratory Reference No. 2106-062

Dear Randy:

Enclosed are the analytical results and associated quality control data for samples submitted on June 8, 2021.

The standard policy of OnSite Environmental, Inc. is to store your samples for 30 days from the date of receipt. If you require longer storage, please contact the laboratory.

We appreciate the opportunity to be of service to you on this project. If you have any questions concerning the data, or need additional information, please feel free to call me.

Sincerely,

David Baumeister
Project Manager

Enclosures

This report pertains to the samples analyzed in accordance with the chain of custody, and is intended only for the use of the individual or company to whom it is addressed.

Date of Report: June 11, 2021
Samples Submitted: June 8, 2021
Laboratory Reference: 2106-062
Project: 11-05150-003

Case Narrative

Samples were collected on June 8, 2021 and received by the laboratory on June 8, 2021. They were maintained at the laboratory at a temperature of 2°C to 6°C.

Please note that any and all soil sample results are reported on a dry-weight basis, unless otherwise noted below.

General QA/QC issues associated with the analytical data enclosed in this laboratory report will be indicated with a reference to a comment or explanation on the Data Qualifier page. More complex and involved QA/QC issues will be discussed in detail below.

This report pertains to the samples analyzed in accordance with the chain of custody,
and is intended only for the use of the individual or company to whom it is addressed.

Date of Report: June 11, 2021
Samples Submitted: June 8, 2021
Laboratory Reference: 2106-062
Project: 11-05150-003

VOLATILE ORGANICS EPA 8260D/SIM
page 1 of 2

Matrix: Soil
Units: mg/kg

Analyte	Result	PQL	Method	Date Prepared	Date Analyzed	Flags
Client ID:	**DA7SWCS1210608I**					
Laboratory ID:	06-062-01					
Dichlorodifluoromethane	ND	0.00083	EPA 8260D	6-9-21	6-9-21	
Chloromethane	ND	0.0042	EPA 8260D	6-9-21	6-9-21	
Vinyl Chloride	ND	0.00083	EPA 8260D	6-9-21	6-9-21	
Bromomethane	ND	0.0056	EPA 8260D	6-9-21	6-9-21	
Chloroethane	ND	0.0042	EPA 8260D	6-9-21	6-9-21	
Trichlorofluoromethane	ND	0.00083	EPA 8260D	6-9-21	6-9-21	
1,1-Dichloroethene	ND	0.00083	EPA 8260D	6-9-21	6-9-21	
Acetone	0.031	0.0083	EPA 8260D	6-9-21	6-9-21	
Iodomethane	ND	0.0070	EPA 8260D	6-9-21	6-9-21	
Carbon Disulfide	ND	0.0011	EPA 8260D	6-9-21	6-9-21	
Methylene Chloride	ND	0.0042	EPA 8260D	6-9-21	6-9-21	
(trans) 1,2-Dichloroethene	ND	0.00083	EPA 8260D	6-9-21	6-9-21	
Methyl t-Butyl Ether	ND	0.00083	EPA 8260D	6-9-21	6-9-21	
1,1-Dichloroethane	ND	0.00083	EPA 8260D	6-9-21	6-9-21	
Vinyl Acetate	ND	0.0042	EPA 8260D	6-9-21	6-9-21	
2,2-Dichloropropane	ND	0.00083	EPA 8260D	6-9-21	6-9-21	
(cis) 1,2-Dichloroethene	ND	0.00083	EPA 8260D	6-9-21	6-9-21	
2-Butanone	ND	0.0042	EPA 8260D	6-9-21	6-9-21	
Bromochloromethane	ND	0.00083	EPA 8260D	6-9-21	6-9-21	
Chloroform	ND	0.00083	EPA 8260D	6-9-21	6-9-21	
1,1,1-Trichloroethane	ND	0.00083	EPA 8260D	6-9-21	6-9-21	
Carbon Tetrachloride	ND	0.00083	EPA 8260D	6-9-21	6-9-21	
1,1-Dichloropropene	ND	0.00083	EPA 8260D	6-9-21	6-9-21	
Benzene	ND	0.00083	EPA 8260D	6-9-21	6-9-21	
1,2-Dichloroethane	ND	0.00083	EPA 8260D	6-9-21	6-9-21	
Trichloroethene	ND	0.00083	EPA 8260D	6-9-21	6-9-21	
1,2-Dichloropropane	ND	0.00083	EPA 8260D	6-9-21	6-9-21	
Dibromomethane	ND	0.00083	EPA 8260D	6-9-21	6-9-21	
Bromodichloromethane	ND	0.00083	EPA 8260D	6-9-21	6-9-21	
2-Chloroethyl Vinyl Ether	ND	0.0042	EPA 8260D	6-9-21	6-9-21	
(cis) 1,3-Dichloropropene	ND	0.00083	EPA 8260D	6-9-21	6-9-21	
Methyl Isobutyl Ketone	ND	0.0042	EPA 8260D	6-9-21	6-9-21	
Toluene	ND	0.0042	EPA 8260D	6-9-21	6-9-21	
(trans) 1,3-Dichloropropene	ND	0.00083	EPA 8260D	6-9-21	6-9-21	

This report pertains to the samples analyzed in accordance with the chain of custody, and is intended only for the use of the individual or company to whom it is addressed.

Date of Report: June 11, 2021
Samples Submitted: June 8, 2021
Laboratory Reference: 2106-062
Project: 11-05150-003

VOLATILE ORGANICS EPA 8260D/SIM
page 2 of 2

Analyte	Result	PQL	Method	Date Prepared	Date Analyzed	Flags
Client ID:	**DA7SWCS1210608I**					
Laboratory ID:	06-062-01					
1,1,2-Trichloroethane	ND	0.00083	EPA 8260D	6-9-21	6-9-21	
Tetrachloroethene	ND	0.00083	EPA 8260D	6-9-21	6-9-21	
1,3-Dichloropropane	ND	0.00083	EPA 8260D	6-9-21	6-9-21	
2-Hexanone	ND	0.0042	EPA 8260D	6-9-21	6-9-21	
Dibromochloromethane	ND	0.00083	EPA 8260D	6-9-21	6-9-21	
1,2-Dibromoethane	ND	0.000042	EPA 8260D/SIM	6-9-21	6-9-21	
Chlorobenzene	ND	0.00083	EPA 8260D	6-9-21	6-9-21	
1,1,1,2-Tetrachloroethane	ND	0.00083	EPA 8260D	6-9-21	6-9-21	
Ethylbenzene	ND	0.00083	EPA 8260D	6-9-21	6-9-21	
m,p-Xylene	ND	0.0017	EPA 8260D	6-9-21	6-9-21	
o-Xylene	ND	0.00083	EPA 8260D	6-9-21	6-9-21	
Styrene	ND	0.00083	EPA 8260D	6-9-21	6-9-21	
Bromoform	ND	0.0042	EPA 8260D	6-9-21	6-9-21	
Isopropylbenzene	ND	0.00083	EPA 8260D	6-9-21	6-9-21	
Bromobenzene	ND	0.00083	EPA 8260D	6-9-21	6-9-21	
1,1,2,2-Tetrachloroethane	ND	0.00083	EPA 8260D	6-9-21	6-9-21	
1,2,3-Trichloropropane	ND	0.00083	EPA 8260D	6-9-21	6-9-21	
n-Propylbenzene	ND	0.00083	EPA 8260D	6-9-21	6-9-21	
2-Chlorotoluene	ND	0.00083	EPA 8260D	6-9-21	6-9-21	
4-Chlorotoluene	ND	0.00083	EPA 8260D	6-9-21	6-9-21	
1,3,5-Trimethylbenzene	ND	0.00083	EPA 8260D	6-9-21	6-9-21	
tert-Butylbenzene	ND	0.00083	EPA 8260D	6-9-21	6-9-21	
1,2,4-Trimethylbenzene	ND	0.00083	EPA 8260D	6-9-21	6-9-21	
sec-Butylbenzene	ND	0.00083	EPA 8260D	6-9-21	6-9-21	
1,3-Dichlorobenzene	ND	0.00083	EPA 8260D	6-9-21	6-9-21	
p-Isopropyltoluene	ND	0.00083	EPA 8260D	6-9-21	6-9-21	
1,4-Dichlorobenzene	ND	0.00083	EPA 8260D	6-9-21	6-9-21	
1,2-Dichlorobenzene	ND	0.00083	EPA 8260D	6-9-21	6-9-21	
n-Butylbenzene	ND	0.00083	EPA 8260D	6-9-21	6-9-21	
1,2-Dibromo-3-chloropropane	ND	0.0042	EPA 8260D	6-9-21	6-9-21	
1,2,4-Trichlorobenzene	ND	0.00083	EPA 8260D	6-9-21	6-9-21	
Hexachlorobutadiene	ND	0.0042	EPA 8260D	6-9-21	6-9-21	
Naphthalene	ND	0.0042	EPA 8260D	6-9-21	6-9-21	
1,2,3-Trichlorobenzene	ND	0.00083	EPA 8260D	6-9-21	6-9-21	
Surrogate:	*Percent Recovery*	*Control Limits*				
Dibromofluoromethane	*94*	*74-131*				
Toluene-d8	*98*	*78-128*				
4-Bromofluorobenzene	*103*	*71-130*				

This report pertains to the samples analyzed in accordance with the chain of custody, and is intended only for the use of the individual or company to whom it is addressed.

Date of Report: June 11, 2021
Samples Submitted: June 8, 2021
Laboratory Reference: 2106-062
Project: 11-05150-003

VOLATILE ORGANICS EPA 8260D/SIM
page 1 of 2

Matrix: Soil
Units: mg/kg

Analyte	Result	PQL	Method	Date Prepared	Date Analyzed	Flags
Client ID:	**DA7SWCS2210608I**					
Laboratory ID:	06-062-02					
Dichlorodifluoromethane	ND	0.00085	EPA 8260D	6-9-21	6-9-21	
Chloromethane	ND	0.0042	EPA 8260D	6-9-21	6-9-21	
Vinyl Chloride	ND	0.00085	EPA 8260D	6-9-21	6-9-21	
Bromomethane	ND	0.0058	EPA 8260D	6-9-21	6-9-21	
Chloroethane	ND	0.0042	EPA 8260D	6-9-21	6-9-21	
Trichlorofluoromethane	ND	0.00085	EPA 8260D	6-9-21	6-9-21	
1,1-Dichloroethene	ND	0.00085	EPA 8260D	6-9-21	6-9-21	
Acetone	ND	0.0085	EPA 8260D	6-9-21	6-9-21	
Iodomethane	ND	0.0071	EPA 8260D	6-9-21	6-9-21	
Carbon Disulfide	ND	0.0011	EPA 8260D	6-9-21	6-9-21	
Methylene Chloride	ND	0.0042	EPA 8260D	6-9-21	6-9-21	
(trans) 1,2-Dichloroethene	ND	0.00085	EPA 8260D	6-9-21	6-9-21	
Methyl t-Butyl Ether	ND	0.00085	EPA 8260D	6-9-21	6-9-21	
1,1-Dichloroethane	ND	0.00085	EPA 8260D	6-9-21	6-9-21	
Vinyl Acetate	ND	0.0042	EPA 8260D	6-9-21	6-9-21	
2,2-Dichloropropane	ND	0.00085	EPA 8260D	6-9-21	6-9-21	
(cis) 1,2-Dichloroethene	ND	0.00085	EPA 8260D	6-9-21	6-9-21	
2-Butanone	ND	0.0042	EPA 8260D	6-9-21	6-9-21	
Bromochloromethane	ND	0.00085	EPA 8260D	6-9-21	6-9-21	
Chloroform	ND	0.00085	EPA 8260D	6-9-21	6-9-21	
1,1,1-Trichloroethane	ND	0.00085	EPA 8260D	6-9-21	6-9-21	
Carbon Tetrachloride	ND	0.00085	EPA 8260D	6-9-21	6-9-21	
1,1-Dichloropropene	ND	0.00085	EPA 8260D	6-9-21	6-9-21	
Benzene	ND	0.00085	EPA 8260D	6-9-21	6-9-21	
1,2-Dichloroethane	ND	0.00085	EPA 8260D	6-9-21	6-9-21	
Trichloroethene	ND	0.00085	EPA 8260D	6-9-21	6-9-21	
1,2-Dichloropropane	ND	0.00085	EPA 8260D	6-9-21	6-9-21	
Dibromomethane	ND	0.00085	EPA 8260D	6-9-21	6-9-21	
Bromodichloromethane	ND	0.00085	EPA 8260D	6-9-21	6-9-21	
2-Chloroethyl Vinyl Ether	ND	0.0042	EPA 8260D	6-9-21	6-9-21	
(cis) 1,3-Dichloropropene	ND	0.00085	EPA 8260D	6-9-21	6-9-21	
Methyl Isobutyl Ketone	ND	0.0042	EPA 8260D	6-9-21	6-9-21	
Toluene	ND	0.0042	EPA 8260D	6-9-21	6-9-21	
(trans) 1,3-Dichloropropene	ND	0.00085	EPA 8260D	6-9-21	6-9-21	

This report pertains to the samples analyzed in accordance with the chain of custody,
and is intended only for the use of the individual or company to whom it is addressed.

Date of Report: June 11, 2021
Samples Submitted: June 8, 2021
Laboratory Reference: 2106-062
Project: 11-05150-003

VOLATILE ORGANICS EPA 8260D/SIM
page 2 of 2

Analyte	Result	PQL	Method	Date Prepared	Date Analyzed	Flags
Client ID:	**DA7SWCS2210608I**					
Laboratory ID:	06-062-02					
1,1,2-Trichloroethane	ND	0.00085	EPA 8260D	6-9-21	6-9-21	
Tetrachloroethene	ND	0.00085	EPA 8260D	6-9-21	6-9-21	
1,3-Dichloropropane	ND	0.00085	EPA 8260D	6-9-21	6-9-21	
2-Hexanone	ND	0.0042	EPA 8260D	6-9-21	6-9-21	
Dibromochloromethane	ND	0.00085	EPA 8260D	6-9-21	6-9-21	
1,2-Dibromoethane	ND	0.000042	EPA 8260D/SIM	6-9-21	6-9-21	
Chlorobenzene	ND	0.00085	EPA 8260D	6-9-21	6-9-21	
1,1,1,2-Tetrachloroethane	ND	0.00085	EPA 8260D	6-9-21	6-9-21	
Ethylbenzene	ND	0.00085	EPA 8260D	6-9-21	6-9-21	
m,p-Xylene	ND	0.0017	EPA 8260D	6-9-21	6-9-21	
o-Xylene	ND	0.00085	EPA 8260D	6-9-21	6-9-21	
Styrene	ND	0.00085	EPA 8260D	6-9-21	6-9-21	
Bromoform	ND	0.0042	EPA 8260D	6-9-21	6-9-21	
Isopropylbenzene	ND	0.00085	EPA 8260D	6-9-21	6-9-21	
Bromobenzene	ND	0.00085	EPA 8260D	6-9-21	6-9-21	
1,1,2,2-Tetrachloroethane	ND	0.00085	EPA 8260D	6-9-21	6-9-21	
1,2,3-Trichloropropane	ND	0.00085	EPA 8260D	6-9-21	6-9-21	
n-Propylbenzene	ND	0.00085	EPA 8260D	6-9-21	6-9-21	
2-Chlorotoluene	ND	0.00085	EPA 8260D	6-9-21	6-9-21	
4-Chlorotoluene	ND	0.00085	EPA 8260D	6-9-21	6-9-21	
1,3,5-Trimethylbenzene	ND	0.00085	EPA 8260D	6-9-21	6-9-21	
tert-Butylbenzene	ND	0.00085	EPA 8260D	6-9-21	6-9-21	
1,2,4-Trimethylbenzene	ND	0.00085	EPA 8260D	6-9-21	6-9-21	
sec-Butylbenzene	ND	0.00085	EPA 8260D	6-9-21	6-9-21	
1,3-Dichlorobenzene	ND	0.00085	EPA 8260D	6-9-21	6-9-21	
p-Isopropyltoluene	ND	0.00085	EPA 8260D	6-9-21	6-9-21	
1,4-Dichlorobenzene	ND	0.00085	EPA 8260D	6-9-21	6-9-21	
1,2-Dichlorobenzene	ND	0.00085	EPA 8260D	6-9-21	6-9-21	
n-Butylbenzene	ND	0.00085	EPA 8260D	6-9-21	6-9-21	
1,2-Dibromo-3-chloropropane	ND	0.0042	EPA 8260D	6-9-21	6-9-21	
1,2,4-Trichlorobenzene	ND	0.00085	EPA 8260D	6-9-21	6-9-21	
Hexachlorobutadiene	ND	0.0042	EPA 8260D	6-9-21	6-9-21	
Naphthalene	ND	0.0042	EPA 8260D	6-9-21	6-9-21	
1,2,3-Trichlorobenzene	ND	0.00085	EPA 8260D	6-9-21	6-9-21	
Surrogate:	*Percent Recovery*	*Control Limits*				
Dibromofluoromethane	*94*	*74-131*				
Toluene-d8	*97*	*78-128*				
4-Bromofluorobenzene	*102*	*71-130*				

This report pertains to the samples analyzed in accordance with the chain of custody, and is intended only for the use of the individual or company to whom it is addressed.

Date of Report: June 11, 2021
Samples Submitted: June 8, 2021
Laboratory Reference: 2106-062
Project: 11-05150-003

VOLATILE ORGANICS EPA 8260D/SIM
page 1 of 2

Matrix: Soil
Units: mg/kg

Analyte	Result	PQL	Method	Date Prepared	Date Analyzed	Flags
Client ID:	**DA7SWCS3210608I**					
Laboratory ID:	06-062-03					
Dichlorodifluoromethane	ND	0.00091	EPA 8260D	6-9-21	6-9-21	
Chloromethane	ND	0.0045	EPA 8260D	6-9-21	6-9-21	
Vinyl Chloride	ND	0.00091	EPA 8260D	6-9-21	6-9-21	
Bromomethane	ND	0.0062	EPA 8260D	6-9-21	6-9-21	
Chloroethane	ND	0.0045	EPA 8260D	6-9-21	6-9-21	
Trichlorofluoromethane	ND	0.00091	EPA 8260D	6-9-21	6-9-21	
1,1-Dichloroethene	ND	0.00091	EPA 8260D	6-9-21	6-9-21	
Acetone	0.028	0.0091	EPA 8260D	6-9-21	6-9-21	
Iodomethane	ND	0.0076	EPA 8260D	6-9-21	6-9-21	
Carbon Disulfide	ND	0.0012	EPA 8260D	6-9-21	6-9-21	
Methylene Chloride	ND	0.0045	EPA 8260D	6-9-21	6-9-21	
(trans) 1,2-Dichloroethene	ND	0.00091	EPA 8260D	6-9-21	6-9-21	
Methyl t-Butyl Ether	ND	0.00091	EPA 8260D	6-9-21	6-9-21	
1,1-Dichloroethane	ND	0.00091	EPA 8260D	6-9-21	6-9-21	
Vinyl Acetate	ND	0.0045	EPA 8260D	6-9-21	6-9-21	
2,2-Dichloropropane	ND	0.00091	EPA 8260D	6-9-21	6-9-21	
(cis) 1,2-Dichloroethene	ND	0.00091	EPA 8260D	6-9-21	6-9-21	
2-Butanone	ND	0.0045	EPA 8260D	6-9-21	6-9-21	
Bromochloromethane	ND	0.00091	EPA 8260D	6-9-21	6-9-21	
Chloroform	ND	0.00091	EPA 8260D	6-9-21	6-9-21	
1,1,1-Trichloroethane	ND	0.00091	EPA 8260D	6-9-21	6-9-21	
Carbon Tetrachloride	ND	0.00091	EPA 8260D	6-9-21	6-9-21	
1,1-Dichloropropene	ND	0.00091	EPA 8260D	6-9-21	6-9-21	
Benzene	ND	0.00091	EPA 8260D	6-9-21	6-9-21	
1,2-Dichloroethane	ND	0.00091	EPA 8260D	6-9-21	6-9-21	
Trichloroethene	ND	0.00091	EPA 8260D	6-9-21	6-9-21	
1,2-Dichloropropane	ND	0.00091	EPA 8260D	6-9-21	6-9-21	
Dibromomethane	ND	0.00091	EPA 8260D	6-9-21	6-9-21	
Bromodichloromethane	ND	0.00091	EPA 8260D	6-9-21	6-9-21	
2-Chloroethyl Vinyl Ether	ND	0.0045	EPA 8260D	6-9-21	6-9-21	
(cis) 1,3-Dichloropropene	ND	0.00091	EPA 8260D	6-9-21	6-9-21	
Methyl Isobutyl Ketone	ND	0.0045	EPA 8260D	6-9-21	6-9-21	
Toluene	ND	0.0045	EPA 8260D	6-9-21	6-9-21	
(trans) 1,3-Dichloropropene	ND	0.00091	EPA 8260D	6-9-21	6-9-21	

This report pertains to the samples analyzed in accordance with the chain of custody, and is intended only for the use of the individual or company to whom it is addressed.

Date of Report: June 11, 2021
Samples Submitted: June 8, 2021
Laboratory Reference: 2106-062
Project: 11-05150-003

VOLATILE ORGANICS EPA 8260D/SIM
page 2 of 2

Analyte	Result	PQL	Method	Date Prepared	Date Analyzed	Flags
Client ID:	**DA7SWCS3210608I**					
Laboratory ID:	06-062-03					
1,1,2-Trichloroethane	ND	0.00091	EPA 8260D	6-9-21	6-9-21	
Tetrachloroethene	ND	0.00091	EPA 8260D	6-9-21	6-9-21	
1,3-Dichloropropane	ND	0.00091	EPA 8260D	6-9-21	6-9-21	
2-Hexanone	ND	0.0045	EPA 8260D	6-9-21	6-9-21	
Dibromochloromethane	ND	0.00091	EPA 8260D	6-9-21	6-9-21	
1,2-Dibromoethane	ND	0.000045	EPA 8260D/SIM	6-9-21	6-9-21	
Chlorobenzene	ND	0.00091	EPA 8260D	6-9-21	6-9-21	
1,1,1,2-Tetrachloroethane	ND	0.00091	EPA 8260D	6-9-21	6-9-21	
Ethylbenzene	ND	0.00091	EPA 8260D	6-9-21	6-9-21	
m,p-Xylene	ND	0.0018	EPA 8260D	6-9-21	6-9-21	
o-Xylene	ND	0.00091	EPA 8260D	6-9-21	6-9-21	
Styrene	ND	0.00091	EPA 8260D	6-9-21	6-9-21	
Bromoform	ND	0.0045	EPA 8260D	6-9-21	6-9-21	
Isopropylbenzene	ND	0.00091	EPA 8260D	6-9-21	6-9-21	
Bromobenzene	ND	0.00091	EPA 8260D	6-9-21	6-9-21	
1,1,2,2-Tetrachloroethane	ND	0.00091	EPA 8260D	6-9-21	6-9-21	
1,2,3-Trichloropropane	ND	0.00091	EPA 8260D	6-9-21	6-9-21	
n-Propylbenzene	ND	0.00091	EPA 8260D	6-9-21	6-9-21	
2-Chlorotoluene	ND	0.00091	EPA 8260D	6-9-21	6-9-21	
4-Chlorotoluene	ND	0.00091	EPA 8260D	6-9-21	6-9-21	
1,3,5-Trimethylbenzene	ND	0.00091	EPA 8260D	6-9-21	6-9-21	
tert-Butylbenzene	ND	0.00091	EPA 8260D	6-9-21	6-9-21	
1,2,4-Trimethylbenzene	ND	0.00091	EPA 8260D	6-9-21	6-9-21	
sec-Butylbenzene	ND	0.00091	EPA 8260D	6-9-21	6-9-21	
1,3-Dichlorobenzene	ND	0.00091	EPA 8260D	6-9-21	6-9-21	
p-Isopropyltoluene	ND	0.00091	EPA 8260D	6-9-21	6-9-21	
1,4-Dichlorobenzene	ND	0.00091	EPA 8260D	6-9-21	6-9-21	
1,2-Dichlorobenzene	ND	0.00091	EPA 8260D	6-9-21	6-9-21	
n-Butylbenzene	ND	0.00091	EPA 8260D	6-9-21	6-9-21	
1,2-Dibromo-3-chloropropane	ND	0.0045	EPA 8260D	6-9-21	6-9-21	
1,2,4-Trichlorobenzene	ND	0.00091	EPA 8260D	6-9-21	6-9-21	
Hexachlorobutadiene	ND	0.0045	EPA 8260D	6-9-21	6-9-21	
Naphthalene	ND	0.0045	EPA 8260D	6-9-21	6-9-21	
1,2,3-Trichlorobenzene	ND	0.00091	EPA 8260D	6-9-21	6-9-21	
Surrogate:	*Percent Recovery*	*Control Limits*				
Dibromofluoromethane	*95*	*74-131*				
Toluene-d8	*98*	*78-128*				
4-Bromofluorobenzene	*106*	*71-130*				

This report pertains to the samples analyzed in accordance with the chain of custody, and is intended only for the use of the individual or company to whom it is addressed.

Date of Report: June 11, 2021
Samples Submitted: June 8, 2021
Laboratory Reference: 2106-062
Project: 11-05150-003

VOLATILE ORGANICS EPA 8260D/SIM
page 1 of 2

Matrix: Soil
Units: mg/kg

Analyte	Result	PQL	Method	Date Prepared	Date Analyzed	Flags
Client ID:	**DA7SWCS4210608I**					
Laboratory ID:	06-062-04					
Dichlorodifluoromethane	ND	0.00088	EPA 8260D	6-9-21	6-9-21	
Chloromethane	ND	0.0044	EPA 8260D	6-9-21	6-9-21	
Vinyl Chloride	ND	0.00088	EPA 8260D	6-9-21	6-9-21	
Bromomethane	ND	0.0060	EPA 8260D	6-9-21	6-9-21	
Chloroethane	ND	0.0044	EPA 8260D	6-9-21	6-9-21	
Trichlorofluoromethane	ND	0.00088	EPA 8260D	6-9-21	6-9-21	
1,1-Dichloroethene	ND	0.00088	EPA 8260D	6-9-21	6-9-21	
Acetone	0.017	0.0088	EPA 8260D	6-9-21	6-9-21	
Iodomethane	ND	0.0074	EPA 8260D	6-9-21	6-9-21	
Carbon Disulfide	ND	0.0011	EPA 8260D	6-9-21	6-9-21	
Methylene Chloride	ND	0.0044	EPA 8260D	6-9-21	6-9-21	
(trans) 1,2-Dichloroethene	ND	0.00088	EPA 8260D	6-9-21	6-9-21	
Methyl t-Butyl Ether	ND	0.00088	EPA 8260D	6-9-21	6-9-21	
1,1-Dichloroethane	ND	0.00088	EPA 8260D	6-9-21	6-9-21	
Vinyl Acetate	ND	0.0044	EPA 8260D	6-9-21	6-9-21	
2,2-Dichloropropane	ND	0.00088	EPA 8260D	6-9-21	6-9-21	
(cis) 1,2-Dichloroethene	ND	0.00088	EPA 8260D	6-9-21	6-9-21	
2-Butanone	ND	0.0044	EPA 8260D	6-9-21	6-9-21	
Bromochloromethane	ND	0.00088	EPA 8260D	6-9-21	6-9-21	
Chloroform	ND	0.00088	EPA 8260D	6-9-21	6-9-21	
1,1,1-Trichloroethane	ND	0.00088	EPA 8260D	6-9-21	6-9-21	
Carbon Tetrachloride	ND	0.00088	EPA 8260D	6-9-21	6-9-21	
1,1-Dichloropropene	ND	0.00088	EPA 8260D	6-9-21	6-9-21	
Benzene	ND	0.00088	EPA 8260D	6-9-21	6-9-21	
1,2-Dichloroethane	ND	0.00088	EPA 8260D	6-9-21	6-9-21	
Trichloroethene	ND	0.00088	EPA 8260D	6-9-21	6-9-21	
1,2-Dichloropropane	ND	0.00088	EPA 8260D	6-9-21	6-9-21	
Dibromomethane	ND	0.00088	EPA 8260D	6-9-21	6-9-21	
Bromodichloromethane	ND	0.00088	EPA 8260D	6-9-21	6-9-21	
2-Chloroethyl Vinyl Ether	ND	0.0044	EPA 8260D	6-9-21	6-9-21	
(cis) 1,3-Dichloropropene	ND	0.00088	EPA 8260D	6-9-21	6-9-21	
Methyl Isobutyl Ketone	ND	0.0044	EPA 8260D	6-9-21	6-9-21	
Toluene	ND	0.0044	EPA 8260D	6-9-21	6-9-21	
(trans) 1,3-Dichloropropene	ND	0.00088	EPA 8260D	6-9-21	6-9-21	

This report pertains to the samples analyzed in accordance with the chain of custody,
and is intended only for the use of the individual or company to whom it is addressed.

Date of Report: June 11, 2021
Samples Submitted: June 8, 2021
Laboratory Reference: 2106-062
Project: 11-05150-003

VOLATILE ORGANICS EPA 8260D/SIM
page 2 of 2

Analyte	Result	PQL	Method	Date Prepared	Date Analyzed	Flags
Client ID:	**DA7SWCS4210608I**					
Laboratory ID:	06-062-04					
1,1,2-Trichloroethane	ND	0.00088	EPA 8260D	6-9-21	6-9-21	
Tetrachloroethene	ND	0.00088	EPA 8260D	6-9-21	6-9-21	
1,3-Dichloropropane	ND	0.00088	EPA 8260D	6-9-21	6-9-21	
2-Hexanone	ND	0.0044	EPA 8260D	6-9-21	6-9-21	
Dibromochloromethane	ND	0.00088	EPA 8260D	6-9-21	6-9-21	
1,2-Dibromoethane	ND	0.000044	EPA 8260D/SIM	6-9-21	6-9-21	
Chlorobenzene	ND	0.00088	EPA 8260D	6-9-21	6-9-21	
1,1,1,2-Tetrachloroethane	ND	0.00088	EPA 8260D	6-9-21	6-9-21	
Ethylbenzene	ND	0.00088	EPA 8260D	6-9-21	6-9-21	
m,p-Xylene	ND	0.0018	EPA 8260D	6-9-21	6-9-21	
o-Xylene	ND	0.00088	EPA 8260D	6-9-21	6-9-21	
Styrene	ND	0.00088	EPA 8260D	6-9-21	6-9-21	
Bromoform	ND	0.0044	EPA 8260D	6-9-21	6-9-21	
Isopropylbenzene	ND	0.00088	EPA 8260D	6-9-21	6-9-21	
Bromobenzene	ND	0.00088	EPA 8260D	6-9-21	6-9-21	
1,1,2,2-Tetrachloroethane	ND	0.00088	EPA 8260D	6-9-21	6-9-21	
1,2,3-Trichloropropane	ND	0.00088	EPA 8260D	6-9-21	6-9-21	
n-Propylbenzene	ND	0.00088	EPA 8260D	6-9-21	6-9-21	
2-Chlorotoluene	ND	0.00088	EPA 8260D	6-9-21	6-9-21	
4-Chlorotoluene	ND	0.00088	EPA 8260D	6-9-21	6-9-21	
1,3,5-Trimethylbenzene	ND	0.00088	EPA 8260D	6-9-21	6-9-21	
tert-Butylbenzene	ND	0.00088	EPA 8260D	6-9-21	6-9-21	
1,2,4-Trimethylbenzene	ND	0.00088	EPA 8260D	6-9-21	6-9-21	
sec-Butylbenzene	ND	0.00088	EPA 8260D	6-9-21	6-9-21	
1,3-Dichlorobenzene	ND	0.00088	EPA 8260D	6-9-21	6-9-21	
p-Isopropyltoluene	ND	0.00088	EPA 8260D	6-9-21	6-9-21	
1,4-Dichlorobenzene	ND	0.00088	EPA 8260D	6-9-21	6-9-21	
1,2-Dichlorobenzene	ND	0.00088	EPA 8260D	6-9-21	6-9-21	
n-Butylbenzene	ND	0.00088	EPA 8260D	6-9-21	6-9-21	
1,2-Dibromo-3-chloropropane	ND	0.0044	EPA 8260D	6-9-21	6-9-21	
1,2,4-Trichlorobenzene	ND	0.00088	EPA 8260D	6-9-21	6-9-21	
Hexachlorobutadiene	ND	0.0044	EPA 8260D	6-9-21	6-9-21	
Naphthalene	ND	0.0044	EPA 8260D	6-9-21	6-9-21	
1,2,3-Trichlorobenzene	ND	0.00088	EPA 8260D	6-9-21	6-9-21	
Surrogate:	*Percent Recovery*	*Control Limits*				
Dibromofluoromethane	*96*	*74-131*				
Toluene-d8	*98*	*78-128*				
4-Bromofluorobenzene	*103*	*71-130*				

This report pertains to the samples analyzed in accordance with the chain of custody, and is intended only for the use of the individual or company to whom it is addressed.

Date of Report: June 11, 2021
Samples Submitted: June 8, 2021
Laboratory Reference: 2106-062
Project: 11-05150-003

VOLATILE ORGANICS EPA 8260D/SIM
page 1 of 2

Matrix: Soil
Units: mg/kg

Analyte	Result	PQL	Method	Date Prepared	Date Analyzed	Flags
Client ID:	**DA7SWCS5210608I**					
Laboratory ID:	06-062-05					
Dichlorodifluoromethane	ND	0.00093	EPA 8260D	6-9-21	6-9-21	
Chloromethane	ND	0.0046	EPA 8260D	6-9-21	6-9-21	
Vinyl Chloride	ND	0.00093	EPA 8260D	6-9-21	6-9-21	
Bromomethane	ND	0.0063	EPA 8260D	6-9-21	6-9-21	
Chloroethane	ND	0.0046	EPA 8260D	6-9-21	6-9-21	
Trichlorofluoromethane	ND	0.00093	EPA 8260D	6-9-21	6-9-21	
1,1-Dichloroethene	ND	0.00093	EPA 8260D	6-9-21	6-9-21	
Acetone	ND	0.0093	EPA 8260D	6-9-21	6-9-21	
Iodomethane	ND	0.0078	EPA 8260D	6-9-21	6-9-21	
Carbon Disulfide	ND	0.0012	EPA 8260D	6-9-21	6-9-21	
Methylene Chloride	ND	0.0046	EPA 8260D	6-9-21	6-9-21	
(trans) 1,2-Dichloroethene	ND	0.00093	EPA 8260D	6-9-21	6-9-21	
Methyl t-Butyl Ether	ND	0.00093	EPA 8260D	6-9-21	6-9-21	
1,1-Dichloroethane	ND	0.00093	EPA 8260D	6-9-21	6-9-21	
Vinyl Acetate	ND	0.0046	EPA 8260D	6-9-21	6-9-21	
2,2-Dichloropropane	ND	0.00093	EPA 8260D	6-9-21	6-9-21	
(cis) 1,2-Dichloroethene	ND	0.00093	EPA 8260D	6-9-21	6-9-21	
2-Butanone	ND	0.0046	EPA 8260D	6-9-21	6-9-21	
Bromochloromethane	ND	0.00093	EPA 8260D	6-9-21	6-9-21	
Chloroform	ND	0.00093	EPA 8260D	6-9-21	6-9-21	
1,1,1-Trichloroethane	ND	0.00093	EPA 8260D	6-9-21	6-9-21	
Carbon Tetrachloride	ND	0.00093	EPA 8260D	6-9-21	6-9-21	
1,1-Dichloropropene	ND	0.00093	EPA 8260D	6-9-21	6-9-21	
Benzene	ND	0.00093	EPA 8260D	6-9-21	6-9-21	
1,2-Dichloroethane	ND	0.00093	EPA 8260D	6-9-21	6-9-21	
Trichloroethene	ND	0.00093	EPA 8260D	6-9-21	6-9-21	
1,2-Dichloropropane	ND	0.00093	EPA 8260D	6-9-21	6-9-21	
Dibromomethane	ND	0.00093	EPA 8260D	6-9-21	6-9-21	
Bromodichloromethane	ND	0.00093	EPA 8260D	6-9-21	6-9-21	
2-Chloroethyl Vinyl Ether	ND	0.0046	EPA 8260D	6-9-21	6-9-21	
(cis) 1,3-Dichloropropene	ND	0.00093	EPA 8260D	6-9-21	6-9-21	
Methyl Isobutyl Ketone	ND	0.0046	EPA 8260D	6-9-21	6-9-21	
Toluene	ND	0.0046	EPA 8260D	6-9-21	6-9-21	
(trans) 1,3-Dichloropropene	ND	0.00093	EPA 8260D	6-9-21	6-9-21	

This report pertains to the samples analyzed in accordance with the chain of custody,
and is intended only for the use of the individual or company to whom it is addressed.

Date of Report: June 11, 2021
Samples Submitted: June 8, 2021
Laboratory Reference: 2106-062
Project: 11-05150-003

VOLATILE ORGANICS EPA 8260D/SIM
page 2 of 2

Analyte	Result	PQL	Method	Date Prepared	Date Analyzed	Flags
Client ID:	**DA7SWCS5210608I**					
Laboratory ID:	06-062-05					
1,1,2-Trichloroethane	ND	0.00093	EPA 8260D	6-9-21	6-9-21	
Tetrachloroethene	ND	0.00093	EPA 8260D	6-9-21	6-9-21	
1,3-Dichloropropane	ND	0.00093	EPA 8260D	6-9-21	6-9-21	
2-Hexanone	ND	0.0046	EPA 8260D	6-9-21	6-9-21	
Dibromochloromethane	ND	0.00093	EPA 8260D	6-9-21	6-9-21	
1,2-Dibromoethane	ND	0.000046	EPA 8260D/SIM	6-9-21	6-9-21	
Chlorobenzene	ND	0.00093	EPA 8260D	6-9-21	6-9-21	
1,1,1,2-Tetrachloroethane	ND	0.00093	EPA 8260D	6-9-21	6-9-21	
Ethylbenzene	ND	0.00093	EPA 8260D	6-9-21	6-9-21	
m,p-Xylene	ND	0.0019	EPA 8260D	6-9-21	6-9-21	
o-Xylene	ND	0.00093	EPA 8260D	6-9-21	6-9-21	
Styrene	ND	0.00093	EPA 8260D	6-9-21	6-9-21	
Bromoform	ND	0.0046	EPA 8260D	6-9-21	6-9-21	
Isopropylbenzene	ND	0.00093	EPA 8260D	6-9-21	6-9-21	
Bromobenzene	ND	0.00093	EPA 8260D	6-9-21	6-9-21	
1,1,2,2-Tetrachloroethane	ND	0.00093	EPA 8260D	6-9-21	6-9-21	
1,2,3-Trichloropropane	ND	0.00093	EPA 8260D	6-9-21	6-9-21	
n-Propylbenzene	ND	0.00093	EPA 8260D	6-9-21	6-9-21	
2-Chlorotoluene	ND	0.00093	EPA 8260D	6-9-21	6-9-21	
4-Chlorotoluene	ND	0.00093	EPA 8260D	6-9-21	6-9-21	
1,3,5-Trimethylbenzene	ND	0.00093	EPA 8260D	6-9-21	6-9-21	
tert-Butylbenzene	ND	0.00093	EPA 8260D	6-9-21	6-9-21	
1,2,4-Trimethylbenzene	ND	0.00093	EPA 8260D	6-9-21	6-9-21	
sec-Butylbenzene	ND	0.00093	EPA 8260D	6-9-21	6-9-21	
1,3-Dichlorobenzene	ND	0.00093	EPA 8260D	6-9-21	6-9-21	
p-Isopropyltoluene	ND	0.00093	EPA 8260D	6-9-21	6-9-21	
1,4-Dichlorobenzene	ND	0.00093	EPA 8260D	6-9-21	6-9-21	
1,2-Dichlorobenzene	ND	0.00093	EPA 8260D	6-9-21	6-9-21	
n-Butylbenzene	ND	0.00093	EPA 8260D	6-9-21	6-9-21	
1,2-Dibromo-3-chloropropane	ND	0.0046	EPA 8260D	6-9-21	6-9-21	
1,2,4-Trichlorobenzene	ND	0.00093	EPA 8260D	6-9-21	6-9-21	
Hexachlorobutadiene	ND	0.0046	EPA 8260D	6-9-21	6-9-21	
Naphthalene	ND	0.0046	EPA 8260D	6-9-21	6-9-21	
1,2,3-Trichlorobenzene	ND	0.00093	EPA 8260D	6-9-21	6-9-21	
Surrogate:	*Percent Recovery*	*Control Limits*				
Dibromofluoromethane	*95*	*74-131*				
Toluene-d8	*97*	*78-128*				
4-Bromofluorobenzene	*101*	*71-130*				

This report pertains to the samples analyzed in accordance with the chain of custody, and is intended only for the use of the individual or company to whom it is addressed.

Date of Report: June 11, 2021
Samples Submitted: June 8, 2021
Laboratory Reference: 2106-062
Project: 11-05150-003

VOLATILE ORGANICS EPA 8260D/SIM
QUALITY CONTROL
page 1 of 2

Matrix: Soil
Units: mg/kg

Analyte	Result	PQL	Method	Date Prepared	Date Analyzed	Flags
METHOD BLANK						
Laboratory ID:	MB0609S1					
Dichlorodifluoromethane	ND	0.0010	EPA 8260D	6-9-21	6-9-21	
Chloromethane	ND	0.0050	EPA 8260D	6-9-21	6-9-21	
Vinyl Chloride	ND	0.0010	EPA 8260D	6-9-21	6-9-21	
Bromomethane	ND	0.0068	EPA 8260D	6-9-21	6-9-21	
Chloroethane	ND	0.0050	EPA 8260D	6-9-21	6-9-21	
Trichlorofluoromethane	ND	0.0010	EPA 8260D	6-9-21	6-9-21	
1,1-Dichloroethene	ND	0.0010	EPA 8260D	6-9-21	6-9-21	
Acetone	ND	0.010	EPA 8260D	6-9-21	6-9-21	
Iodomethane	ND	0.0084	EPA 8260D	6-9-21	6-9-21	
Carbon Disulfide	ND	0.0013	EPA 8260D	6-9-21	6-9-21	
Methylene Chloride	ND	0.0050	EPA 8260D	6-9-21	6-9-21	
(trans) 1,2-Dichloroethene	ND	0.0010	EPA 8260D	6-9-21	6-9-21	
Methyl t-Butyl Ether	ND	0.0010	EPA 8260D	6-9-21	6-9-21	
1,1-Dichloroethane	ND	0.0010	EPA 8260D	6-9-21	6-9-21	
Vinyl Acetate	ND	0.0050	EPA 8260D	6-9-21	6-9-21	
2,2-Dichloropropane	ND	0.0010	EPA 8260D	6-9-21	6-9-21	
(cis) 1,2-Dichloroethene	ND	0.0010	EPA 8260D	6-9-21	6-9-21	
2-Butanone	ND	0.0050	EPA 8260D	6-9-21	6-9-21	
Bromochloromethane	ND	0.0010	EPA 8260D	6-9-21	6-9-21	
Chloroform	ND	0.0010	EPA 8260D	6-9-21	6-9-21	
1,1,1-Trichloroethane	ND	0.0010	EPA 8260D	6-9-21	6-9-21	
Carbon Tetrachloride	ND	0.0010	EPA 8260D	6-9-21	6-9-21	
1,1-Dichloropropene	ND	0.0010	EPA 8260D	6-9-21	6-9-21	
Benzene	ND	0.0010	EPA 8260D	6-9-21	6-9-21	
1,2-Dichloroethane	ND	0.0010	EPA 8260D	6-9-21	6-9-21	
Trichloroethene	ND	0.0010	EPA 8260D	6-9-21	6-9-21	
1,2-Dichloropropane	ND	0.0010	EPA 8260D	6-9-21	6-9-21	
Dibromomethane	ND	0.0010	EPA 8260D	6-9-21	6-9-21	
Bromodichloromethane	ND	0.0010	EPA 8260D	6-9-21	6-9-21	
2-Chloroethyl Vinyl Ether	ND	0.0050	EPA 8260D	6-9-21	6-9-21	
(cis) 1,3-Dichloropropene	ND	0.0010	EPA 8260D	6-9-21	6-9-21	
Methyl Isobutyl Ketone	ND	0.0050	EPA 8260D	6-9-21	6-9-21	
Toluene	ND	0.0050	EPA 8260D	6-9-21	6-9-21	
(trans) 1,3-Dichloropropene	ND	0.0010	EPA 8260D	6-9-21	6-9-21	

This report pertains to the samples analyzed in accordance with the chain of custody, and is intended only for the use of the individual or company to whom it is addressed.

Date of Report: June 11, 2021
Samples Submitted: June 8, 2021
Laboratory Reference: 2106-062
Project: 11-05150-003

VOLATILE ORGANICS EPA 8260D/SIM
QUALITY CONTROL
page 2 of 2

Analyte	Result	PQL	Method	Date Prepared	Date Analyzed	Flags
METHOD BLANK						
Laboratory ID:	MB0609S1					
1,1,2-Trichloroethane	ND	0.0010	EPA 8260D	6-9-21	6-9-21	
Tetrachloroethene	ND	0.0010	EPA 8260D	6-9-21	6-9-21	
1,3-Dichloropropane	ND	0.0010	EPA 8260D	6-9-21	6-9-21	
2-Hexanone	ND	0.0050	EPA 8260D	6-9-21	6-9-21	
Dibromochloromethane	ND	0.0010	EPA 8260D	6-9-21	6-9-21	
1,2-Dibromoethane	ND	0.000050	EPA 8260D/SIM	6-9-21	6-9-21	
Chlorobenzene	ND	0.0010	EPA 8260D	6-9-21	6-9-21	
1,1,1,2-Tetrachloroethane	ND	0.0010	EPA 8260D	6-9-21	6-9-21	
Ethylbenzene	ND	0.0010	EPA 8260D	6-9-21	6-9-21	
m,p-Xylene	ND	0.0020	EPA 8260D	6-9-21	6-9-21	
o-Xylene	ND	0.0010	EPA 8260D	6-9-21	6-9-21	
Styrene	ND	0.0010	EPA 8260D	6-9-21	6-9-21	
Bromoform	ND	0.0050	EPA 8260D	6-9-21	6-9-21	
Isopropylbenzene	ND	0.0010	EPA 8260D	6-9-21	6-9-21	
Bromobenzene	ND	0.0010	EPA 8260D	6-9-21	6-9-21	
1,1,2,2-Tetrachloroethane	ND	0.0010	EPA 8260D	6-9-21	6-9-21	
1,2,3-Trichloropropane	ND	0.0010	EPA 8260D	6-9-21	6-9-21	
n-Propylbenzene	ND	0.0010	EPA 8260D	6-9-21	6-9-21	
2-Chlorotoluene	ND	0.0010	EPA 8260D	6-9-21	6-9-21	
4-Chlorotoluene	ND	0.0010	EPA 8260D	6-9-21	6-9-21	
1,3,5-Trimethylbenzene	ND	0.0010	EPA 8260D	6-9-21	6-9-21	
tert-Butylbenzene	ND	0.0010	EPA 8260D	6-9-21	6-9-21	
1,2,4-Trimethylbenzene	ND	0.0010	EPA 8260D	6-9-21	6-9-21	
sec-Butylbenzene	ND	0.0010	EPA 8260D	6-9-21	6-9-21	
1,3-Dichlorobenzene	ND	0.0010	EPA 8260D	6-9-21	6-9-21	
p-Isopropyltoluene	ND	0.0010	EPA 8260D	6-9-21	6-9-21	
1,4-Dichlorobenzene	ND	0.0010	EPA 8260D	6-9-21	6-9-21	
1,2-Dichlorobenzene	ND	0.0010	EPA 8260D	6-9-21	6-9-21	
n-Butylbenzene	ND	0.0010	EPA 8260D	6-9-21	6-9-21	
1,2-Dibromo-3-chloropropane	ND	0.0050	EPA 8260D	6-9-21	6-9-21	
1,2,4-Trichlorobenzene	ND	0.0010	EPA 8260D	6-9-21	6-9-21	
Hexachlorobutadiene	ND	0.0050	EPA 8260D	6-9-21	6-9-21	
Naphthalene	ND	0.0050	EPA 8260D	6-9-21	6-9-21	
1,2,3-Trichlorobenzene	ND	0.0010	EPA 8260D	6-9-21	6-9-21	
Surrogate:	*Percent Recovery*	*Control Limits*				
Dibromofluoromethane	*93*	*74-131*				
Toluene-d8	*96*	*78-128*				
4-Bromofluorobenzene	*99*	*71-130*				

This report pertains to the samples analyzed in accordance with the chain of custody, and is intended only for the use of the individual or company to whom it is addressed.

Date of Report: June 11, 2021
Samples Submitted: June 8, 2021
Laboratory Reference: 2106-062
Project: 11-05150-003

VOLATILE ORGANICS EPA 8260D/SIM
QUALITY CONTROL

Matrix: Soil
Units: mg/kg

Analyte	Result		Spike Level		Percent Recovery		Recovery Limits	RPD	RPD Limit	Flags
SPIKE BLANKS										
Laboratory ID:	SB0609S1									
	SB	SBD	SB	SBD	SB	SBD				
1,1-Dichloroethene	**0.0541**	**0.0539**	0.0500	0.0500	108	108	71-131	0	19	
Benzene	**0.0482**	**0.0477**	0.0500	0.0500	96	95	73-124	1	18	
Trichloroethene	**0.0529**	**0.0517**	0.0500	0.0500	106	103	79-130	2	18	
Toluene	**0.0498**	**0.0494**	0.0500	0.0500	100	99	76-123	1	18	
Chlorobenzene	**0.0514**	**0.0499**	0.0500	0.0500	103	100	78-122	3	18	
Surrogate:										
Dibromofluoromethane					*93*	*91*	*74-131*			
Toluene-d8					*97*	*97*	*78-128*			
4-Bromofluorobenzene					*107*	*101*	*71-130*			

This report pertains to the samples analyzed in accordance with the chain of custody, and is intended only for the use of the individual or company to whom it is addressed.

Date of Report: June 11, 2021
Samples Submitted: June 8, 2021
Laboratory Reference: 2106-062
Project: 11-05150-003

VOLATILE ORGANICS EPA 8260D/SIM
page 1 of 2

Matrix: Water
Units: ug/L

Analyte	Result	PQL	Method	Date Prepared	Date Analyzed	Flags
Client ID:	**VTRP210608I - trip blank**					
Laboratory ID:	06-062-06					
Dichlorodifluoromethane	ND	0.20	EPA 8260D	6-10-21	6-10-21	
Chloromethane	ND	1.0	EPA 8260D	6-10-21	6-10-21	
Vinyl Chloride	ND	0.20	EPA 8260D	6-10-21	6-10-21	
Bromomethane	ND	0.64	EPA 8260D	6-10-21	6-10-21	
Chloroethane	ND	1.0	EPA 8260D	6-10-21	6-10-21	
Trichlorofluoromethane	ND	0.20	EPA 8260D	6-10-21	6-10-21	
1,1-Dichloroethene	ND	0.20	EPA 8260D	6-10-21	6-10-21	
Acetone	ND	5.0	EPA 8260D	6-10-21	6-10-21	
Iodomethane	ND	1.8	EPA 8260D	6-10-21	6-10-21	
Carbon Disulfide	ND	0.20	EPA 8260D	6-10-21	6-10-21	
Methylene Chloride	ND	1.0	EPA 8260D	6-10-21	6-10-21	
(trans) 1,2-Dichloroethene	ND	0.20	EPA 8260D	6-10-21	6-10-21	
Methyl t-Butyl Ether	ND	0.20	EPA 8260D	6-10-21	6-10-21	
1,1-Dichloroethane	ND	0.20	EPA 8260D	6-10-21	6-10-21	
Vinyl Acetate	ND	1.0	EPA 8260D	6-10-21	6-10-21	
2,2-Dichloropropane	ND	0.20	EPA 8260D	6-10-21	6-10-21	
(cis) 1,2-Dichloroethene	ND	0.20	EPA 8260D	6-10-21	6-10-21	
2-Butanone	ND	5.0	EPA 8260D	6-10-21	6-10-21	
Bromochloromethane	ND	0.20	EPA 8260D	6-10-21	6-10-21	
Chloroform	ND	0.20	EPA 8260D	6-10-21	6-10-21	
1,1,1-Trichloroethane	ND	0.20	EPA 8260D	6-10-21	6-10-21	
Carbon Tetrachloride	ND	0.20	EPA 8260D	6-10-21	6-10-21	
1,1-Dichloropropene	ND	0.20	EPA 8260D	6-10-21	6-10-21	
Benzene	ND	0.20	EPA 8260D	6-10-21	6-10-21	
1,2-Dichloroethane	ND	0.20	EPA 8260D	6-10-21	6-10-21	
Trichloroethene	ND	0.20	EPA 8260D	6-10-21	6-10-21	
1,2-Dichloropropane	ND	0.20	EPA 8260D	6-10-21	6-10-21	
Dibromomethane	ND	0.20	EPA 8260D	6-10-21	6-10-21	
Bromodichloromethane	ND	0.20	EPA 8260D	6-10-21	6-10-21	
2-Chloroethyl Vinyl Ether	ND	6.3	EPA 8260D	6-10-21	6-10-21	
(cis) 1,3-Dichloropropene	ND	0.20	EPA 8260D	6-10-21	6-10-21	
Methyl Isobutyl Ketone	ND	2.0	EPA 8260D	6-10-21	6-10-21	
Toluene	ND	1.0	EPA 8260D	6-10-21	6-10-21	
(trans) 1,3-Dichloropropene	ND	0.20	EPA 8260D	6-10-21	6-10-21	

This report pertains to the samples analyzed in accordance with the chain of custody,
and is intended only for the use of the individual or company to whom it is addressed.

Date of Report: June 11, 2021
Samples Submitted: June 8, 2021
Laboratory Reference: 2106-062
Project: 11-05150-003

VOLATILE ORGANICS EPA 8260D/SIM
page 2 of 2

Analyte	Result	PQL	Method	Date Prepared	Date Analyzed	Flags
Client ID:	**VTRP210608I - trip blank**					
Laboratory ID:	06-062-06					
1,1,2-Trichloroethane	ND	0.20	EPA 8260D	6-10-21	6-10-21	
Tetrachloroethene	ND	0.20	EPA 8260D	6-10-21	6-10-21	
1,3-Dichloropropane	ND	0.20	EPA 8260D	6-10-21	6-10-21	
2-Hexanone	ND	2.0	EPA 8260D	6-10-21	6-10-21	
Dibromochloromethane	ND	0.20	EPA 8260D	6-10-21	6-10-21	
1,2-Dibromoethane	ND	0.20	EPA 8260D	6-10-21	6-10-21	
Chlorobenzene	ND	0.20	EPA 8260D	6-10-21	6-10-21	
1,1,1,2-Tetrachloroethane	ND	0.20	EPA 8260D	6-10-21	6-10-21	
Ethylbenzene	ND	0.20	EPA 8260D	6-10-21	6-10-21	
m,p-Xylene	ND	0.40	EPA 8260D	6-10-21	6-10-21	
o-Xylene	ND	0.20	EPA 8260D	6-10-21	6-10-21	
Styrene	ND	0.20	EPA 8260D	6-10-21	6-10-21	
Bromoform	ND	1.0	EPA 8260D	6-10-21	6-10-21	
Isopropylbenzene	ND	0.20	EPA 8260D	6-10-21	6-10-21	
Bromobenzene	ND	0.20	EPA 8260D	6-10-21	6-10-21	
1,1,2,2-Tetrachloroethane	ND	0.20	EPA 8260D	6-10-21	6-10-21	
1,2,3-Trichloropropane	ND	0.20	EPA 8260D	6-10-21	6-10-21	
n-Propylbenzene	ND	0.20	EPA 8260D	6-10-21	6-10-21	
2-Chlorotoluene	ND	0.20	EPA 8260D	6-10-21	6-10-21	
4-Chlorotoluene	ND	0.20	EPA 8260D	6-10-21	6-10-21	
1,3,5-Trimethylbenzene	ND	0.20	EPA 8260D	6-10-21	6-10-21	
tert-Butylbenzene	ND	0.20	EPA 8260D	6-10-21	6-10-21	
1,2,4-Trimethylbenzene	ND	0.20	EPA 8260D	6-10-21	6-10-21	
sec-Butylbenzene	ND	0.20	EPA 8260D	6-10-21	6-10-21	
1,3-Dichlorobenzene	ND	0.20	EPA 8260D	6-10-21	6-10-21	
p-Isopropyltoluene	ND	0.20	EPA 8260D	6-10-21	6-10-21	
1,4-Dichlorobenzene	ND	0.20	EPA 8260D	6-10-21	6-10-21	
1,2-Dichlorobenzene	ND	0.20	EPA 8260D	6-10-21	6-10-21	
n-Butylbenzene	ND	0.20	EPA 8260D	6-10-21	6-10-21	
1,2-Dibromo-3-chloropropane	ND	1.0	EPA 8260D	6-10-21	6-10-21	
1,2,4-Trichlorobenzene	ND	0.20	EPA 8260D	6-10-21	6-10-21	
Hexachlorobutadiene	ND	1.0	EPA 8260D	6-10-21	6-10-21	
Naphthalene	ND	1.0	EPA 8260D	6-10-21	6-10-21	
1,2,3-Trichlorobenzene	ND	0.20	EPA 8260D	6-10-21	6-10-21	
Surrogate:	*Percent Recovery*	*Control Limits*				
Dibromofluoromethane	*94*	*75-127*				
Toluene-d8	*97*	*80-127*				
4-Bromofluorobenzene	*94*	*78-125*				

This report pertains to the samples analyzed in accordance with the chain of custody, and is intended only for the use of the individual or company to whom it is addressed.

Date of Report: June 11, 2021
Samples Submitted: June 8, 2021
Laboratory Reference: 2106-062
Project: 11-05150-003

VOLATILE ORGANICS EPA 8260D/SIM
QUALITY CONTROL
page 1 of 2

Matrix: Water
Units: ug/L

Analyte	Result	PQL	Method	Date Prepared	Date Analyzed	Flags
METHOD BLANK						
Laboratory ID:	MB0610W1					
Dichlorodifluoromethane	ND	0.20	EPA 8260D	6-10-21	6-10-21	
Chloromethane	ND	1.0	EPA 8260D	6-10-21	6-10-21	
Vinyl Chloride	ND	0.20	EPA 8260D	6-10-21	6-10-21	
Bromomethane	ND	0.64	EPA 8260D	6-10-21	6-10-21	
Chloroethane	ND	1.0	EPA 8260D	6-10-21	6-10-21	
Trichlorofluoromethane	ND	0.20	EPA 8260D	6-10-21	6-10-21	
1,1-Dichloroethene	ND	0.20	EPA 8260D	6-10-21	6-10-21	
Acetone	ND	5.0	EPA 8260D	6-10-21	6-10-21	
Iodomethane	ND	1.8	EPA 8260D	6-10-21	6-10-21	
Carbon Disulfide	ND	0.20	EPA 8260D	6-10-21	6-10-21	
Methylene Chloride	ND	1.0	EPA 8260D	6-10-21	6-10-21	
(trans) 1,2-Dichloroethene	ND	0.20	EPA 8260D	6-10-21	6-10-21	
Methyl t-Butyl Ether	ND	0.20	EPA 8260D	6-10-21	6-10-21	
1,1-Dichloroethane	ND	0.20	EPA 8260D	6-10-21	6-10-21	
Vinyl Acetate	ND	1.0	EPA 8260D	6-10-21	6-10-21	
2,2-Dichloropropane	ND	0.20	EPA 8260D	6-10-21	6-10-21	
(cis) 1,2-Dichloroethene	ND	0.20	EPA 8260D	6-10-21	6-10-21	
2-Butanone	ND	5.0	EPA 8260D	6-10-21	6-10-21	
Bromochloromethane	ND	0.20	EPA 8260D	6-10-21	6-10-21	
Chloroform	ND	0.20	EPA 8260D	6-10-21	6-10-21	
1,1,1-Trichloroethane	ND	0.20	EPA 8260D	6-10-21	6-10-21	
Carbon Tetrachloride	ND	0.20	EPA 8260D	6-10-21	6-10-21	
1,1-Dichloropropene	ND	0.20	EPA 8260D	6-10-21	6-10-21	
Benzene	ND	0.20	EPA 8260D	6-10-21	6-10-21	
1,2-Dichloroethane	ND	0.20	EPA 8260D	6-10-21	6-10-21	
Trichloroethene	ND	0.20	EPA 8260D	6-10-21	6-10-21	
1,2-Dichloropropane	ND	0.20	EPA 8260D	6-10-21	6-10-21	
Dibromomethane	ND	0.20	EPA 8260D	6-10-21	6-10-21	
Bromodichloromethane	ND	0.20	EPA 8260D	6-10-21	6-10-21	
2-Chloroethyl Vinyl Ether	ND	6.3	EPA 8260D	6-10-21	6-10-21	
(cis) 1,3-Dichloropropene	ND	0.20	EPA 8260D	6-10-21	6-10-21	
Methyl Isobutyl Ketone	ND	2.0	EPA 8260D	6-10-21	6-10-21	
Toluene	ND	1.0	EPA 8260D	6-10-21	6-10-21	
(trans) 1,3-Dichloropropene	ND	0.20	EPA 8260D	6-10-21	6-10-21	

This report pertains to the samples analyzed in accordance with the chain of custody,
and is intended only for the use of the individual or company to whom it is addressed.

Date of Report: June 11, 2021
Samples Submitted: June 8, 2021
Laboratory Reference: 2106-062
Project: 11-05150-003

VOLATILE ORGANICS EPA 8260D/SIM
QUALITY CONTROL
page 2 of 2

Analyte	Result	PQL	Method	Date Prepared	Date Analyzed	Flags
METHOD BLANK						
Laboratory ID:	MB0610W1					
1,1,2-Trichloroethane	ND	0.20	EPA 8260D	6-10-21	6-10-21	
Tetrachloroethene	ND	0.20	EPA 8260D	6-10-21	6-10-21	
1,3-Dichloropropane	ND	0.20	EPA 8260D	6-10-21	6-10-21	
2-Hexanone	ND	2.0	EPA 8260D	6-10-21	6-10-21	
Dibromochloromethane	ND	0.20	EPA 8260D	6-10-21	6-10-21	
1,2-Dibromoethane	ND	0.20	EPA 8260D	6-10-21	6-10-21	
Chlorobenzene	ND	0.20	EPA 8260D	6-10-21	6-10-21	
1,1,1,2-Tetrachloroethane	ND	0.20	EPA 8260D	6-10-21	6-10-21	
Ethylbenzene	ND	0.20	EPA 8260D	6-10-21	6-10-21	
m,p-Xylene	ND	0.40	EPA 8260D	6-10-21	6-10-21	
o-Xylene	ND	0.20	EPA 8260D	6-10-21	6-10-21	
Styrene	ND	0.20	EPA 8260D	6-10-21	6-10-21	
Bromoform	ND	1.0	EPA 8260D	6-10-21	6-10-21	
Isopropylbenzene	ND	0.20	EPA 8260D	6-10-21	6-10-21	
Bromobenzene	ND	0.20	EPA 8260D	6-10-21	6-10-21	
1,1,2,2-Tetrachloroethane	ND	0.20	EPA 8260D	6-10-21	6-10-21	
1,2,3-Trichloropropane	ND	0.20	EPA 8260D	6-10-21	6-10-21	
n-Propylbenzene	ND	0.20	EPA 8260D	6-10-21	6-10-21	
2-Chlorotoluene	ND	0.20	EPA 8260D	6-10-21	6-10-21	
4-Chlorotoluene	ND	0.20	EPA 8260D	6-10-21	6-10-21	
1,3,5-Trimethylbenzene	ND	0.20	EPA 8260D	6-10-21	6-10-21	
tert-Butylbenzene	ND	0.20	EPA 8260D	6-10-21	6-10-21	
1,2,4-Trimethylbenzene	ND	0.20	EPA 8260D	6-10-21	6-10-21	
sec-Butylbenzene	ND	0.20	EPA 8260D	6-10-21	6-10-21	
1,3-Dichlorobenzene	ND	0.20	EPA 8260D	6-10-21	6-10-21	
p-Isopropyltoluene	ND	0.20	EPA 8260D	6-10-21	6-10-21	
1,4-Dichlorobenzene	ND	0.20	EPA 8260D	6-10-21	6-10-21	
1,2-Dichlorobenzene	ND	0.20	EPA 8260D	6-10-21	6-10-21	
n-Butylbenzene	ND	0.20	EPA 8260D	6-10-21	6-10-21	
1,2-Dibromo-3-chloropropane	ND	1.0	EPA 8260D	6-10-21	6-10-21	
1,2,4-Trichlorobenzene	ND	0.20	EPA 8260D	6-10-21	6-10-21	
Hexachlorobutadiene	ND	1.0	EPA 8260D	6-10-21	6-10-21	
Naphthalene	ND	1.0	EPA 8260D	6-10-21	6-10-21	
1,2,3-Trichlorobenzene	ND	0.20	EPA 8260D	6-10-21	6-10-21	
Surrogate:	*Percent Recovery*	*Control Limits*				
Dibromofluoromethane	*93*	*75-127*				
Toluene-d8	*98*	*80-127*				
4-Bromofluorobenzene	*95*	*78-125*				

This report pertains to the samples analyzed in accordance with the chain of custody, and is intended only for the use of the individual or company to whom it is addressed.

Date of Report: June 11, 2021
Samples Submitted: June 8, 2021
Laboratory Reference: 2106-062
Project: 11-05150-003

VOLATILE ORGANICS EPA 8260D/SIM
QUALITY CONTROL

Matrix: Water
Units: ug/L

Analyte	Result		Spike Level		Percent Recovery		Recovery Limits	RPD	RPD Limit	Flags
SPIKE BLANKS										
Laboratory ID:	SB0610W1									
	SB	SBD	SB	SBD	SB	SBD				
1,1-Dichloroethene	**9.06**	**9.08**	10.0	10.0	91	91	78-124	0	19	
Benzene	**8.69**	**8.69**	10.0	10.0	87	87	80-119	0	16	
Trichloroethene	**9.54**	**9.52**	10.0	10.0	95	95	80-121	0	18	
Toluene	**9.22**	**9.17**	10.0	10.0	92	92	80-117	1	18	
Chlorobenzene	**9.38**	**9.49**	10.0	10.0	94	95	80-117	1	17	
Surrogate:										
Dibromofluoromethane					*93*	*91*	*75-127*			
Toluene-d8					*100*	*97*	*80-127*			
4-Bromofluorobenzene					*104*	*100*	*78-125*			

This report pertains to the samples analyzed in accordance with the chain of custody, and is intended only for the use of the individual or company to whom it is addressed.

Date of Report: June 11, 2021
Samples Submitted: June 8, 2021
Laboratory Reference: 2106-062
Project: 11-05150-003

SEMIVOLATILE ORGANICS EPA 8270E/SIM
page 1 of 2

Matrix: Soil
Units: mg/Kg

Analyte	Result	PQL	Method	Date Prepared	Date Analyzed	Flags
Client ID:	**DA7SWCS1210608I**					
Laboratory ID:	06-062-01					
n-Nitrosodimethylamine	**ND**	0.011	EPA 8270E	6-9-21	6-9-21	
Pyridine	**ND**	0.23	EPA 8270E	6-9-21	6-9-21	
Phenol	**ND**	0.023	EPA 8270E	6-9-21	6-9-21	
Aniline	**ND**	0.11	EPA 8270E	6-9-21	6-9-21	
bis(2-Chloroethyl)ether	**ND**	0.011	EPA 8270E	6-9-21	6-9-21	
2-Chlorophenol	**ND**	0.023	EPA 8270E	6-9-21	6-9-21	
1,3-Dichlorobenzene	**ND**	0.023	EPA 8270E	6-9-21	6-9-21	
1,4-Dichlorobenzene	**ND**	0.023	EPA 8270E	6-9-21	6-9-21	
Benzyl alcohol	**ND**	0.023	EPA 8270E	6-9-21	6-9-21	
1,2-Dichlorobenzene	**ND**	0.023	EPA 8270E	6-9-21	6-9-21	
2-Methylphenol (o-Cresol)	**ND**	0.023	EPA 8270E	6-9-21	6-9-21	
bis(2-Chloroisopropyl)ether	**ND**	0.023	EPA 8270E	6-9-21	6-9-21	
(3+4)-Methylphenol (m,p-Cresol)	**ND**	0.023	EPA 8270E	6-9-21	6-9-21	
n-Nitroso-di-n-propylamine	**ND**	0.011	EPA 8270E	6-9-21	6-9-21	
Hexachloroethane	**ND**	0.023	EPA 8270E	6-9-21	6-9-21	
Nitrobenzene	**ND**	0.023	EPA 8270E	6-9-21	6-9-21	
Isophorone	**ND**	0.023	EPA 8270E	6-9-21	6-9-21	
2-Nitrophenol	**ND**	0.023	EPA 8270E	6-9-21	6-9-21	
2,4-Dimethylphenol	**ND**	0.023	EPA 8270E	6-9-21	6-9-21	
bis(2-Chloroethoxy)methane	**ND**	0.023	EPA 8270E	6-9-21	6-9-21	
2,4-Dichlorophenol	**ND**	0.023	EPA 8270E	6-9-21	6-9-21	
1,2,4-Trichlorobenzene	**ND**	0.023	EPA 8270E	6-9-21	6-9-21	
Naphthalene	**ND**	0.0046	EPA 8270E/SIM	6-9-21	6-9-21	
4-Chloroaniline	**ND**	0.011	EPA 8270E	6-9-21	6-9-21	
Hexachlorobutadiene	**ND**	0.023	EPA 8270E	6-9-21	6-9-21	
4-Chloro-3-methylphenol	**ND**	0.023	EPA 8270E	6-9-21	6-9-21	
2-Methylnaphthalene	**ND**	0.0046	EPA 8270E/SIM	6-9-21	6-9-21	
1-Methylnaphthalene	**ND**	0.0046	EPA 8270E/SIM	6-9-21	6-9-21	
Hexachlorocyclopentadiene	**ND**	0.023	EPA 8270E	6-9-21	6-9-21	
2,4,6-Trichlorophenol	**ND**	0.023	EPA 8270E	6-9-21	6-9-21	
2,3-Dichloroaniline	**ND**	0.023	EPA 8270E	6-9-21	6-9-21	
2,4,5-Trichlorophenol	**ND**	0.023	EPA 8270E	6-9-21	6-9-21	
2-Chloronaphthalene	**ND**	0.023	EPA 8270E	6-9-21	6-9-21	
2-Nitroaniline	**ND**	0.023	EPA 8270E	6-9-21	6-9-21	
1,4-Dinitrobenzene	**ND**	0.023	EPA 8270E	6-9-21	6-9-21	
Dimethylphthalate	**ND**	0.023	EPA 8270E	6-9-21	6-9-21	
1,3-Dinitrobenzene	**ND**	0.023	EPA 8270E	6-9-21	6-9-21	
2,6-Dinitrotoluene	**ND**	0.011	EPA 8270E	6-9-21	6-9-21	
1,2-Dinitrobenzene	**ND**	0.023	EPA 8270E	6-9-21	6-9-21	
Acenaphthylene	**ND**	0.0046	EPA 8270E/SIM	6-9-21	6-9-21	
3-Nitroaniline	**ND**	0.023	EPA 8270E	6-9-21	6-9-21	

This report pertains to the samples analyzed in accordance with the chain of custody, and is intended only for the use of the individual or company to whom it is addressed.

Date of Report: June 11, 2021
Samples Submitted: June 8, 2021
Laboratory Reference: 2106-062
Project: 11-05150-003

SEMIVOLATILE ORGANICS EPA 8270E/SIM
page 2 of 2

Analyte	Result	PQL	Method	Date Prepared	Date Analyzed	Flags
Client ID:	**DA7SWCS1210608I**					
Laboratory ID:	06-062-01					
2,4-Dinitrophenol	**ND**	0.11	EPA 8270E	6-9-21	6-9-21	
Acenaphthene	**ND**	0.0046	EPA 8270E/SIM	6-9-21	6-9-21	
4-Nitrophenol	**ND**	0.023	EPA 8270E	6-9-21	6-9-21	
2,4-Dinitrotoluene	**ND**	0.011	EPA 8270E	6-9-21	6-9-21	
Dibenzofuran	**ND**	0.023	EPA 8270E	6-9-21	6-9-21	
2,3,5,6-Tetrachlorophenol	**ND**	0.023	EPA 8270E	6-9-21	6-9-21	
2,3,4,6-Tetrachlorophenol	**ND**	0.023	EPA 8270E	6-9-21	6-9-21	
Diethylphthalate	**ND**	0.11	EPA 8270E	6-9-21	6-9-21	
4-Chlorophenyl-phenylether	**ND**	0.023	EPA 8270E	6-9-21	6-9-21	
4-Nitroaniline	**ND**	0.023	EPA 8270E	6-9-21	6-9-21	
Fluorene	**ND**	0.0046	EPA 8270E/SIM	6-9-21	6-9-21	
4,6-Dinitro-2-methylphenol	**ND**	0.11	EPA 8270E	6-9-21	6-9-21	
n-Nitrosodiphenylamine	**ND**	0.023	EPA 8270E	6-9-21	6-9-21	
1,2-Diphenylhydrazine	**ND**	0.023	EPA 8270E	6-9-21	6-9-21	
4-Bromophenyl-phenylether	**ND**	0.023	EPA 8270E	6-9-21	6-9-21	
Hexachlorobenzene	**ND**	0.023	EPA 8270E	6-9-21	6-9-21	
Pentachlorophenol	**ND**	0.046	EPA 8270E	6-9-21	6-9-21	
Phenanthrene	**ND**	0.0046	EPA 8270E/SIM	6-9-21	6-9-21	
Anthracene	**ND**	0.0046	EPA 8270E/SIM	6-9-21	6-9-21	
Carbazole	**ND**	0.023	EPA 8270E	6-9-21	6-9-21	
Di-n-butylphthalate	**ND**	0.11	EPA 8270E	6-9-21	6-9-21	
Fluoranthene	**ND**	0.0046	EPA 8270E/SIM	6-9-21	6-9-21	
Pyrene	**ND**	0.0046	EPA 8270E/SIM	6-9-21	6-9-21	
Butylbenzylphthalate	**ND**	0.11	EPA 8270E	6-9-21	6-9-21	
bis-2-Ethylhexyladipate	**ND**	0.11	EPA 8270E	6-9-21	6-9-21	
3,3'-Dichlorobenzidine	**ND**	0.011	EPA 8270E	6-9-21	6-9-21	
Benzo[a]anthracene	**ND**	0.0046	EPA 8270E/SIM	6-9-21	6-9-21	
Chrysene	**ND**	0.0046	EPA 8270E/SIM	6-9-21	6-9-21	
bis(2-Ethylhexyl)phthalate	**ND**	0.11	EPA 8270E	6-9-21	6-9-21	
Di-n-octylphthalate	**ND**	0.11	EPA 8270E	6-9-21	6-9-21	
Benzo[b]fluoranthene	**ND**	0.0046	EPA 8270E/SIM	6-9-21	6-9-21	
Benzo(j,k)fluoranthene	**ND**	0.0046	EPA 8270E/SIM	6-9-21	6-9-21	
Benzo[a]pyrene	**ND**	0.0046	EPA 8270E/SIM	6-9-21	6-9-21	
Indeno[1,2,3-cd]pyrene	**ND**	0.0046	EPA 8270E/SIM	6-9-21	6-9-21	
Dibenz[a,h]anthracene	**ND**	0.0046	EPA 8270E/SIM	6-9-21	6-9-21	
Benzo[g,h,i]perylene	**ND**	0.0046	EPA 8270E/SIM	6-9-21	6-9-21	
Surrogate:	*Percent Recovery*	*Control Limits*				
2-Fluorophenol	*84*	*26 - 109*				
Phenol-d6	*89*	*33 - 113*				
Nitrobenzene-d5	*88*	*31 - 110*				
2-Fluorobiphenyl	*89*	*42 - 107*				
2,4,6-Tribromophenol	*97*	*42 - 123*				
Terphenyl-d14	*90*	*41 - 115*				

This report pertains to the samples analyzed in accordance with the chain of custody, and is intended only for the use of the individual or company to whom it is addressed.

Date of Report: June 11, 2021
Samples Submitted: June 8, 2021
Laboratory Reference: 2106-062
Project: 11-05150-003

SEMIVOLATILE ORGANICS EPA 8270E/SIM
page 1 of 2

Matrix: Soil
Units: mg/Kg

Analyte	Result	PQL	Method	Date Prepared	Date Analyzed	Flags
Client ID:	**DA7SWCS2210608I**					
Laboratory ID:	06-062-02					
n-Nitrosodimethylamine	**ND**	0.011	EPA 8270E	6-9-21	6-9-21	
Pyridine	**ND**	0.22	EPA 8270E	6-9-21	6-9-21	
Phenol	**ND**	0.022	EPA 8270E	6-9-21	6-9-21	
Aniline	**ND**	0.11	EPA 8270E	6-9-21	6-9-21	
bis(2-Chloroethyl)ether	**ND**	0.011	EPA 8270E	6-9-21	6-9-21	
2-Chlorophenol	**ND**	0.022	EPA 8270E	6-9-21	6-9-21	
1,3-Dichlorobenzene	**ND**	0.022	EPA 8270E	6-9-21	6-9-21	
1,4-Dichlorobenzene	**ND**	0.022	EPA 8270E	6-9-21	6-9-21	
Benzyl alcohol	**ND**	0.022	EPA 8270E	6-9-21	6-9-21	
1,2-Dichlorobenzene	**ND**	0.022	EPA 8270E	6-9-21	6-9-21	
2-Methylphenol (o-Cresol)	**ND**	0.022	EPA 8270E	6-9-21	6-9-21	
bis(2-Chloroisopropyl)ether	**ND**	0.022	EPA 8270E	6-9-21	6-9-21	
(3+4)-Methylphenol (m,p-Cresol)	**ND**	0.022	EPA 8270E	6-9-21	6-9-21	
n-Nitroso-di-n-propylamine	**ND**	0.011	EPA 8270E	6-9-21	6-9-21	
Hexachloroethane	**ND**	0.022	EPA 8270E	6-9-21	6-9-21	
Nitrobenzene	**ND**	0.022	EPA 8270E	6-9-21	6-9-21	
Isophorone	**ND**	0.022	EPA 8270E	6-9-21	6-9-21	
2-Nitrophenol	**ND**	0.022	EPA 8270E	6-9-21	6-9-21	
2,4-Dimethylphenol	**ND**	0.022	EPA 8270E	6-9-21	6-9-21	
bis(2-Chloroethoxy)methane	**ND**	0.022	EPA 8270E	6-9-21	6-9-21	
2,4-Dichlorophenol	**ND**	0.022	EPA 8270E	6-9-21	6-9-21	
1,2,4-Trichlorobenzene	**ND**	0.022	EPA 8270E	6-9-21	6-9-21	
Naphthalene	**ND**	0.0045	EPA 8270E/SIM	6-9-21	6-9-21	
4-Chloroaniline	**ND**	0.011	EPA 8270E	6-9-21	6-9-21	
Hexachlorobutadiene	**ND**	0.022	EPA 8270E	6-9-21	6-9-21	
4-Chloro-3-methylphenol	**ND**	0.022	EPA 8270E	6-9-21	6-9-21	
2-Methylnaphthalene	**ND**	0.0045	EPA 8270E/SIM	6-9-21	6-9-21	
1-Methylnaphthalene	**ND**	0.0045	EPA 8270E/SIM	6-9-21	6-9-21	
Hexachlorocyclopentadiene	**ND**	0.022	EPA 8270E	6-9-21	6-9-21	
2,4,6-Trichlorophenol	**ND**	0.022	EPA 8270E	6-9-21	6-9-21	
2,3-Dichloroaniline	**ND**	0.022	EPA 8270E	6-9-21	6-9-21	
2,4,5-Trichlorophenol	**ND**	0.022	EPA 8270E	6-9-21	6-9-21	
2-Chloronaphthalene	**ND**	0.022	EPA 8270E	6-9-21	6-9-21	
2-Nitroaniline	**ND**	0.022	EPA 8270E	6-9-21	6-9-21	
1,4-Dinitrobenzene	**ND**	0.022	EPA 8270E	6-9-21	6-9-21	
Dimethylphthalate	**ND**	0.022	EPA 8270E	6-9-21	6-9-21	
1,3-Dinitrobenzene	**ND**	0.022	EPA 8270E	6-9-21	6-9-21	
2,6-Dinitrotoluene	**ND**	0.011	EPA 8270E	6-9-21	6-9-21	
1,2-Dinitrobenzene	**ND**	0.022	EPA 8270E	6-9-21	6-9-21	
Acenaphthylene	**ND**	0.0045	EPA 8270E/SIM	6-9-21	6-9-21	
3-Nitroaniline	**ND**	0.022	EPA 8270E	6-9-21	6-9-21	

This report pertains to the samples analyzed in accordance with the chain of custody, and is intended only for the use of the individual or company to whom it is addressed.

Date of Report: June 11, 2021
Samples Submitted: June 8, 2021
Laboratory Reference: 2106-062
Project: 11-05150-003

SEMIVOLATILE ORGANICS EPA 8270E/SIM
page 2 of 2

Analyte	Result	PQL	Method	Date Prepared	Date Analyzed	Flags
Client ID:	**DA7SWCS2210608I**					
Laboratory ID:	06-062-02					
2,4-Dinitrophenol	**ND**	0.11	EPA 8270E	6-9-21	6-9-21	
Acenaphthene	**ND**	0.0045	EPA 8270E/SIM	6-9-21	6-9-21	
4-Nitrophenol	**ND**	0.022	EPA 8270E	6-9-21	6-9-21	
2,4-Dinitrotoluene	**ND**	0.011	EPA 8270E	6-9-21	6-9-21	
Dibenzofuran	**ND**	0.022	EPA 8270E	6-9-21	6-9-21	
2,3,5,6-Tetrachlorophenol	**ND**	0.022	EPA 8270E	6-9-21	6-9-21	
2,3,4,6-Tetrachlorophenol	**ND**	0.022	EPA 8270E	6-9-21	6-9-21	
Diethylphthalate	**ND**	0.11	EPA 8270E	6-9-21	6-9-21	
4-Chlorophenyl-phenylether	**ND**	0.022	EPA 8270E	6-9-21	6-9-21	
4-Nitroaniline	**ND**	0.022	EPA 8270E	6-9-21	6-9-21	
Fluorene	**ND**	0.0045	EPA 8270E/SIM	6-9-21	6-9-21	
4,6-Dinitro-2-methylphenol	**ND**	0.11	EPA 8270E	6-9-21	6-9-21	
n-Nitrosodiphenylamine	**ND**	0.022	EPA 8270E	6-9-21	6-9-21	
1,2-Diphenylhydrazine	**ND**	0.022	EPA 8270E	6-9-21	6-9-21	
4-Bromophenyl-phenylether	**ND**	0.022	EPA 8270E	6-9-21	6-9-21	
Hexachlorobenzene	**ND**	0.022	EPA 8270E	6-9-21	6-9-21	
Pentachlorophenol	**ND**	0.045	EPA 8270E	6-9-21	6-9-21	
Phenanthrene	**ND**	0.0045	EPA 8270E/SIM	6-9-21	6-9-21	
Anthracene	**ND**	0.0045	EPA 8270E/SIM	6-9-21	6-9-21	
Carbazole	**ND**	0.022	EPA 8270E	6-9-21	6-9-21	
Di-n-butylphthalate	**ND**	0.11	EPA 8270E	6-9-21	6-9-21	
Fluoranthene	**ND**	0.0045	EPA 8270E/SIM	6-9-21	6-9-21	
Pyrene	**ND**	0.0045	EPA 8270E/SIM	6-9-21	6-9-21	
Butylbenzylphthalate	**ND**	0.11	EPA 8270E	6-9-21	6-9-21	
bis-2-Ethylhexyladipate	**ND**	0.11	EPA 8270E	6-9-21	6-9-21	
3,3'-Dichlorobenzidine	**ND**	0.011	EPA 8270E	6-9-21	6-9-21	
Benzo[a]anthracene	**ND**	0.0045	EPA 8270E/SIM	6-9-21	6-9-21	
Chrysene	**ND**	0.0045	EPA 8270E/SIM	6-9-21	6-9-21	
bis(2-Ethylhexyl)phthalate	**ND**	0.11	EPA 8270E	6-9-21	6-9-21	
Di-n-octylphthalate	**ND**	0.11	EPA 8270E	6-9-21	6-9-21	
Benzo[b]fluoranthene	**ND**	0.0045	EPA 8270E/SIM	6-9-21	6-9-21	
Benzo(j,k)fluoranthene	**ND**	0.0045	EPA 8270E/SIM	6-9-21	6-9-21	
Benzo[a]pyrene	**ND**	0.0045	EPA 8270E/SIM	6-9-21	6-9-21	
Indeno[1,2,3-cd]pyrene	**ND**	0.0045	EPA 8270E/SIM	6-9-21	6-9-21	
Dibenz[a,h]anthracene	**ND**	0.0045	EPA 8270E/SIM	6-9-21	6-9-21	
Benzo[g,h,i]perylene	**ND**	0.0045	EPA 8270E/SIM	6-9-21	6-9-21	
Surrogate:	*Percent Recovery*	*Control Limits*				
2-Fluorophenol	*78*	*26 - 109*				
Phenol-d6	*84*	*33 - 113*				
Nitrobenzene-d5	*85*	*31 - 110*				
2-Fluorobiphenyl	*89*	*42 - 107*				
2,4,6-Tribromophenol	*98*	*42 - 123*				
Terphenyl-d14	*90*	*41 - 115*				

This report pertains to the samples analyzed in accordance with the chain of custody, and is intended only for the use of the individual or company to whom it is addressed.

Date of Report: June 11, 2021
Samples Submitted: June 8, 2021
Laboratory Reference: 2106-062
Project: 11-05150-003

SEMIVOLATILE ORGANICS EPA 8270E/SIM
page 1 of 2

Matrix: Soil
Units: mg/Kg

Analyte	Result	PQL	Method	Date Prepared	Date Analyzed	Flags
Client ID:	**DA7SWCS3210608I**					
Laboratory ID:	06-062-03					
n-Nitrosodimethylamine	**ND**	0.011	EPA 8270E	6-9-21	6-10-21	
Pyridine	**ND**	0.22	EPA 8270E	6-9-21	6-10-21	
Phenol	**ND**	0.022	EPA 8270E	6-9-21	6-10-21	
Aniline	**ND**	0.11	EPA 8270E	6-9-21	6-10-21	
bis(2-Chloroethyl)ether	**ND**	0.011	EPA 8270E	6-9-21	6-10-21	
2-Chlorophenol	**ND**	0.022	EPA 8270E	6-9-21	6-10-21	
1,3-Dichlorobenzene	**ND**	0.022	EPA 8270E	6-9-21	6-10-21	
1,4-Dichlorobenzene	**ND**	0.022	EPA 8270E	6-9-21	6-10-21	
Benzyl alcohol	**ND**	0.022	EPA 8270E	6-9-21	6-10-21	
1,2-Dichlorobenzene	**ND**	0.022	EPA 8270E	6-9-21	6-10-21	
2-Methylphenol (o-Cresol)	**ND**	0.022	EPA 8270E	6-9-21	6-10-21	
bis(2-Chloroisopropyl)ether	**ND**	0.022	EPA 8270E	6-9-21	6-10-21	
(3+4)-Methylphenol (m,p-Cresol)	**ND**	0.022	EPA 8270E	6-9-21	6-10-21	
n-Nitroso-di-n-propylamine	**ND**	0.011	EPA 8270E	6-9-21	6-10-21	
Hexachloroethane	**ND**	0.022	EPA 8270E	6-9-21	6-10-21	
Nitrobenzene	**ND**	0.022	EPA 8270E	6-9-21	6-10-21	
Isophorone	**ND**	0.022	EPA 8270E	6-9-21	6-10-21	
2-Nitrophenol	**ND**	0.022	EPA 8270E	6-9-21	6-10-21	
2,4-Dimethylphenol	**ND**	0.022	EPA 8270E	6-9-21	6-10-21	
bis(2-Chloroethoxy)methane	**ND**	0.022	EPA 8270E	6-9-21	6-10-21	
2,4-Dichlorophenol	**ND**	0.022	EPA 8270E	6-9-21	6-10-21	
1,2,4-Trichlorobenzene	**ND**	0.022	EPA 8270E	6-9-21	6-10-21	
Naphthalene	**ND**	0.0044	EPA 8270E/SIM	6-9-21	6-9-21	
4-Chloroaniline	**ND**	0.011	EPA 8270E	6-9-21	6-10-21	
Hexachlorobutadiene	**ND**	0.022	EPA 8270E	6-9-21	6-10-21	
4-Chloro-3-methylphenol	**ND**	0.022	EPA 8270E	6-9-21	6-10-21	
2-Methylnaphthalene	**ND**	0.0044	EPA 8270E/SIM	6-9-21	6-9-21	
1-Methylnaphthalene	**ND**	0.0044	EPA 8270E/SIM	6-9-21	6-9-21	
Hexachlorocyclopentadiene	**ND**	0.022	EPA 8270E	6-9-21	6-10-21	
2,4,6-Trichlorophenol	**ND**	0.022	EPA 8270E	6-9-21	6-10-21	
2,3-Dichloroaniline	**ND**	0.022	EPA 8270E	6-9-21	6-10-21	
2,4,5-Trichlorophenol	**ND**	0.022	EPA 8270E	6-9-21	6-10-21	
2-Chloronaphthalene	**ND**	0.022	EPA 8270E	6-9-21	6-10-21	
2-Nitroaniline	**ND**	0.022	EPA 8270E	6-9-21	6-10-21	
1,4-Dinitrobenzene	**ND**	0.022	EPA 8270E	6-9-21	6-10-21	
Dimethylphthalate	**ND**	0.022	EPA 8270E	6-9-21	6-10-21	
1,3-Dinitrobenzene	**ND**	0.022	EPA 8270E	6-9-21	6-10-21	
2,6-Dinitrotoluene	**ND**	0.011	EPA 8270E	6-9-21	6-10-21	
1,2-Dinitrobenzene	**ND**	0.022	EPA 8270E	6-9-21	6-10-21	
Acenaphthylene	**ND**	0.0044	EPA 8270E/SIM	6-9-21	6-9-21	
3-Nitroaniline	**ND**	0.022	EPA 8270E	6-9-21	6-10-21	

This report pertains to the samples analyzed in accordance with the chain of custody, and is intended only for the use of the individual or company to whom it is addressed.

Date of Report: June 11, 2021
Samples Submitted: June 8, 2021
Laboratory Reference: 2106-062
Project: 11-05150-003

SEMIVOLATILE ORGANICS EPA 8270E/SIM
page 2 of 2

Analyte	Result	PQL	Method	Date Prepared	Date Analyzed	Flags
Client ID:	**DA7SWCS3210608I**					
Laboratory ID:	06-062-03					
2,4-Dinitrophenol	**ND**	0.11	EPA 8270E	6-9-21	6-10-21	
Acenaphthene	**ND**	0.0044	EPA 8270E/SIM	6-9-21	6-9-21	
4-Nitrophenol	**ND**	0.022	EPA 8270E	6-9-21	6-10-21	
2,4-Dinitrotoluene	**ND**	0.011	EPA 8270E	6-9-21	6-10-21	
Dibenzofuran	**ND**	0.022	EPA 8270E	6-9-21	6-10-21	
2,3,5,6-Tetrachlorophenol	**ND**	0.022	EPA 8270E	6-9-21	6-10-21	
2,3,4,6-Tetrachlorophenol	**ND**	0.022	EPA 8270E	6-9-21	6-10-21	
Diethylphthalate	**ND**	0.11	EPA 8270E	6-9-21	6-10-21	
4-Chlorophenyl-phenylether	**ND**	0.022	EPA 8270E	6-9-21	6-10-21	
4-Nitroaniline	**ND**	0.022	EPA 8270E	6-9-21	6-10-21	
Fluorene	**ND**	0.0044	EPA 8270E/SIM	6-9-21	6-9-21	
4,6-Dinitro-2-methylphenol	**ND**	0.11	EPA 8270E	6-9-21	6-10-21	
n-Nitrosodiphenylamine	**ND**	0.022	EPA 8270E	6-9-21	6-10-21	
1,2-Diphenylhydrazine	**ND**	0.022	EPA 8270E	6-9-21	6-10-21	
4-Bromophenyl-phenylether	**ND**	0.022	EPA 8270E	6-9-21	6-10-21	
Hexachlorobenzene	**ND**	0.022	EPA 8270E	6-9-21	6-10-21	
Pentachlorophenol	**ND**	0.044	EPA 8270E	6-9-21	6-10-21	
Phenanthrene	**ND**	0.0044	EPA 8270E/SIM	6-9-21	6-9-21	
Anthracene	**ND**	0.0044	EPA 8270E/SIM	6-9-21	6-9-21	
Carbazole	**ND**	0.022	EPA 8270E	6-9-21	6-10-21	
Di-n-butylphthalate	**ND**	0.11	EPA 8270E	6-9-21	6-10-21	
Fluoranthene	**ND**	0.0044	EPA 8270E/SIM	6-9-21	6-9-21	
Pyrene	**ND**	0.0044	EPA 8270E/SIM	6-9-21	6-9-21	
Butylbenzylphthalate	**ND**	0.11	EPA 8270E	6-9-21	6-10-21	
bis-2-Ethylhexyladipate	**ND**	0.11	EPA 8270E	6-9-21	6-10-21	
3,3'-Dichlorobenzidine	**ND**	0.011	EPA 8270E	6-9-21	6-10-21	
Benzo[a]anthracene	**ND**	0.0044	EPA 8270E/SIM	6-9-21	6-9-21	
Chrysene	**ND**	0.0044	EPA 8270E/SIM	6-9-21	6-9-21	
bis(2-Ethylhexyl)phthalate	**ND**	0.11	EPA 8270E	6-9-21	6-10-21	
Di-n-octylphthalate	**ND**	0.11	EPA 8270E	6-9-21	6-10-21	
Benzo[b]fluoranthene	**ND**	0.0044	EPA 8270E/SIM	6-9-21	6-9-21	
Benzo(j,k)fluoranthene	**ND**	0.0044	EPA 8270E/SIM	6-9-21	6-9-21	
Benzo[a]pyrene	**ND**	0.0044	EPA 8270E/SIM	6-9-21	6-9-21	
Indeno[1,2,3-cd]pyrene	**ND**	0.0044	EPA 8270E/SIM	6-9-21	6-9-21	
Dibenz[a,h]anthracene	**ND**	0.0044	EPA 8270E/SIM	6-9-21	6-9-21	
Benzo[g,h,i]perylene	**ND**	0.0044	EPA 8270E/SIM	6-9-21	6-9-21	
Surrogate:	*Percent Recovery*	*Control Limits*				
2-Fluorophenol	*98*	*26 - 109*				
Phenol-d6	*102*	*33 - 113*				
Nitrobenzene-d5	*100*	*31 - 110*				
2-Fluorobiphenyl	*101*	*42 - 107*				
2,4,6-Tribromophenol	*111*	*42 - 123*				
Terphenyl-d14	*101*	*41 - 115*				

This report pertains to the samples analyzed in accordance with the chain of custody, and is intended only for the use of the individual or company to whom it is addressed.

Date of Report: June 11, 2021
Samples Submitted: June 8, 2021
Laboratory Reference: 2106-062
Project: 11-05150-003

SEMIVOLATILE ORGANICS EPA 8270E/SIM
page 1 of 2

Matrix: Soil
Units: mg/Kg

Analyte	Result	PQL	Method	Date Prepared	Date Analyzed	Flags
Client ID:	**DA7SWCS4210608I**					
Laboratory ID:	06-062-04					
n-Nitrosodimethylamine	**ND**	0.011	EPA 8270E	6-9-21	6-10-21	
Pyridine	**ND**	0.23	EPA 8270E	6-9-21	6-10-21	
Phenol	**ND**	0.023	EPA 8270E	6-9-21	6-10-21	
Aniline	**ND**	0.11	EPA 8270E	6-9-21	6-10-21	
bis(2-Chloroethyl)ether	**ND**	0.011	EPA 8270E	6-9-21	6-10-21	
2-Chlorophenol	**ND**	0.023	EPA 8270E	6-9-21	6-10-21	
1,3-Dichlorobenzene	**ND**	0.023	EPA 8270E	6-9-21	6-10-21	
1,4-Dichlorobenzene	**ND**	0.023	EPA 8270E	6-9-21	6-10-21	
Benzyl alcohol	**ND**	0.023	EPA 8270E	6-9-21	6-10-21	
1,2-Dichlorobenzene	**ND**	0.023	EPA 8270E	6-9-21	6-10-21	
2-Methylphenol (o-Cresol)	**ND**	0.023	EPA 8270E	6-9-21	6-10-21	
bis(2-Chloroisopropyl)ether	**ND**	0.023	EPA 8270E	6-9-21	6-10-21	
(3+4)-Methylphenol (m,p-Cresol)	**ND**	0.023	EPA 8270E	6-9-21	6-10-21	
n-Nitroso-di-n-propylamine	**ND**	0.011	EPA 8270E	6-9-21	6-10-21	
Hexachloroethane	**ND**	0.023	EPA 8270E	6-9-21	6-10-21	
Nitrobenzene	**ND**	0.023	EPA 8270E	6-9-21	6-10-21	
Isophorone	**ND**	0.023	EPA 8270E	6-9-21	6-10-21	
2-Nitrophenol	**ND**	0.023	EPA 8270E	6-9-21	6-10-21	
2,4-Dimethylphenol	**ND**	0.023	EPA 8270E	6-9-21	6-10-21	
bis(2-Chloroethoxy)methane	**ND**	0.023	EPA 8270E	6-9-21	6-10-21	
2,4-Dichlorophenol	**ND**	0.023	EPA 8270E	6-9-21	6-10-21	
1,2,4-Trichlorobenzene	**ND**	0.023	EPA 8270E	6-9-21	6-10-21	
Naphthalene	**ND**	0.0045	EPA 8270E/SIM	6-9-21	6-9-21	
4-Chloroaniline	**ND**	0.011	EPA 8270E	6-9-21	6-10-21	
Hexachlorobutadiene	**ND**	0.023	EPA 8270E	6-9-21	6-10-21	
4-Chloro-3-methylphenol	**ND**	0.023	EPA 8270E	6-9-21	6-10-21	
2-Methylnaphthalene	**ND**	0.0045	EPA 8270E/SIM	6-9-21	6-9-21	
1-Methylnaphthalene	**ND**	0.0045	EPA 8270E/SIM	6-9-21	6-9-21	
Hexachlorocyclopentadiene	**ND**	0.023	EPA 8270E	6-9-21	6-10-21	
2,4,6-Trichlorophenol	**ND**	0.023	EPA 8270E	6-9-21	6-10-21	
2,3-Dichloroaniline	**ND**	0.023	EPA 8270E	6-9-21	6-10-21	
2,4,5-Trichlorophenol	**ND**	0.023	EPA 8270E	6-9-21	6-10-21	
2-Chloronaphthalene	**ND**	0.023	EPA 8270E	6-9-21	6-10-21	
2-Nitroaniline	**ND**	0.023	EPA 8270E	6-9-21	6-10-21	
1,4-Dinitrobenzene	**ND**	0.023	EPA 8270E	6-9-21	6-10-21	
Dimethylphthalate	**ND**	0.023	EPA 8270E	6-9-21	6-10-21	
1,3-Dinitrobenzene	**ND**	0.023	EPA 8270E	6-9-21	6-10-21	
2,6-Dinitrotoluene	**ND**	0.011	EPA 8270E	6-9-21	6-10-21	
1,2-Dinitrobenzene	**ND**	0.023	EPA 8270E	6-9-21	6-10-21	
Acenaphthylene	**ND**	0.0045	EPA 8270E/SIM	6-9-21	6-9-21	
3-Nitroaniline	**ND**	0.023	EPA 8270E	6-9-21	6-10-21	

This report pertains to the samples analyzed in accordance with the chain of custody, and is intended only for the use of the individual or company to whom it is addressed.

Date of Report: June 11, 2021
Samples Submitted: June 8, 2021
Laboratory Reference: 2106-062
Project: 11-05150-003

SEMIVOLATILE ORGANICS EPA 8270E/SIM
page 2 of 2

Analyte	Result	PQL	Method	Date Prepared	Date Analyzed	Flags
Client ID:	**DA7SWCS4210608I**					
Laboratory ID:	06-062-04					
2,4-Dinitrophenol	**ND**	0.11	EPA 8270E	6-9-21	6-10-21	
Acenaphthene	**ND**	0.0045	EPA 8270E/SIM	6-9-21	6-9-21	
4-Nitrophenol	**ND**	0.023	EPA 8270E	6-9-21	6-10-21	
2,4-Dinitrotoluene	**ND**	0.011	EPA 8270E	6-9-21	6-10-21	
Dibenzofuran	**ND**	0.023	EPA 8270E	6-9-21	6-10-21	
2,3,5,6-Tetrachlorophenol	**ND**	0.023	EPA 8270E	6-9-21	6-10-21	
2,3,4,6-Tetrachlorophenol	**ND**	0.023	EPA 8270E	6-9-21	6-10-21	
Diethylphthalate	**ND**	0.11	EPA 8270E	6-9-21	6-10-21	
4-Chlorophenyl-phenylether	**ND**	0.023	EPA 8270E	6-9-21	6-10-21	
4-Nitroaniline	**ND**	0.023	EPA 8270E	6-9-21	6-10-21	
Fluorene	**ND**	0.0045	EPA 8270E/SIM	6-9-21	6-9-21	
4,6-Dinitro-2-methylphenol	**ND**	0.11	EPA 8270E	6-9-21	6-10-21	
n-Nitrosodiphenylamine	**ND**	0.023	EPA 8270E	6-9-21	6-10-21	
1,2-Diphenylhydrazine	**ND**	0.023	EPA 8270E	6-9-21	6-10-21	
4-Bromophenyl-phenylether	**ND**	0.023	EPA 8270E	6-9-21	6-10-21	
Hexachlorobenzene	**ND**	0.023	EPA 8270E	6-9-21	6-10-21	
Pentachlorophenol	**ND**	0.045	EPA 8270E	6-9-21	6-10-21	
Phenanthrene	**ND**	0.0045	EPA 8270E/SIM	6-9-21	6-9-21	
Anthracene	**ND**	0.0045	EPA 8270E/SIM	6-9-21	6-9-21	
Carbazole	**ND**	0.023	EPA 8270E	6-9-21	6-10-21	
Di-n-butylphthalate	**ND**	0.11	EPA 8270E	6-9-21	6-10-21	
Fluoranthene	**ND**	0.0045	EPA 8270E/SIM	6-9-21	6-9-21	
Pyrene	**ND**	0.0045	EPA 8270E/SIM	6-9-21	6-9-21	
Butylbenzylphthalate	**ND**	0.11	EPA 8270E	6-9-21	6-10-21	
bis-2-Ethylhexyladipate	**ND**	0.11	EPA 8270E	6-9-21	6-10-21	
3,3'-Dichlorobenzidine	**ND**	0.011	EPA 8270E	6-9-21	6-10-21	
Benzo[a]anthracene	**ND**	0.0045	EPA 8270E/SIM	6-9-21	6-9-21	
Chrysene	**ND**	0.0045	EPA 8270E/SIM	6-9-21	6-9-21	
bis(2-Ethylhexyl)phthalate	**ND**	0.11	EPA 8270E	6-9-21	6-10-21	
Di-n-octylphthalate	**ND**	0.11	EPA 8270E	6-9-21	6-10-21	
Benzo[b]fluoranthene	**ND**	0.0045	EPA 8270E/SIM	6-9-21	6-9-21	
Benzo(j,k)fluoranthene	**ND**	0.0045	EPA 8270E/SIM	6-9-21	6-9-21	
Benzo[a]pyrene	**ND**	0.0045	EPA 8270E/SIM	6-9-21	6-9-21	
Indeno[1,2,3-cd]pyrene	**ND**	0.0045	EPA 8270E/SIM	6-9-21	6-9-21	
Dibenz[a,h]anthracene	**ND**	0.0045	EPA 8270E/SIM	6-9-21	6-9-21	
Benzo[g,h,i]perylene	**ND**	0.0045	EPA 8270E/SIM	6-9-21	6-9-21	
Surrogate:	*Percent Recovery*	*Control Limits*				
2-Fluorophenol	*76*	*26 - 109*				
Phenol-d6	*81*	*33 - 113*				
Nitrobenzene-d5	*80*	*31 - 110*				
2-Fluorobiphenyl	*76*	*42 - 107*				
2,4,6-Tribromophenol	*90*	*42 - 123*				
Terphenyl-d14	*79*	*41 - 115*				

This report pertains to the samples analyzed in accordance with the chain of custody, and is intended only for the use of the individual or company to whom it is addressed.

Date of Report: June 11, 2021
Samples Submitted: June 8, 2021
Laboratory Reference: 2106-062
Project: 11-05150-003

SEMIVOLATILE ORGANICS EPA 8270E/SIM
page 1 of 2

Matrix: Soil
Units: mg/Kg

Analyte	Result	PQL	Method	Date Prepared	Date Analyzed	Flags
Client ID:	**DA7SWCS5210608I**					
Laboratory ID:	06-062-05					
n-Nitrosodimethylamine	**ND**	0.011	EPA 8270E	6-9-21	6-10-21	
Pyridine	**ND**	0.22	EPA 8270E	6-9-21	6-10-21	
Phenol	**ND**	0.022	EPA 8270E	6-9-21	6-10-21	
Aniline	**ND**	0.11	EPA 8270E	6-9-21	6-10-21	
bis(2-Chloroethyl)ether	**ND**	0.011	EPA 8270E	6-9-21	6-10-21	
2-Chlorophenol	**ND**	0.022	EPA 8270E	6-9-21	6-10-21	
1,3-Dichlorobenzene	**ND**	0.022	EPA 8270E	6-9-21	6-10-21	
1,4-Dichlorobenzene	**ND**	0.022	EPA 8270E	6-9-21	6-10-21	
Benzyl alcohol	**ND**	0.022	EPA 8270E	6-9-21	6-10-21	
1,2-Dichlorobenzene	**ND**	0.022	EPA 8270E	6-9-21	6-10-21	
2-Methylphenol (o-Cresol)	**ND**	0.022	EPA 8270E	6-9-21	6-10-21	
bis(2-Chloroisopropyl)ether	**ND**	0.022	EPA 8270E	6-9-21	6-10-21	
(3+4)-Methylphenol (m,p-Cresol)	**ND**	0.022	EPA 8270E	6-9-21	6-10-21	
n-Nitroso-di-n-propylamine	**ND**	0.011	EPA 8270E	6-9-21	6-10-21	
Hexachloroethane	**ND**	0.022	EPA 8270E	6-9-21	6-10-21	
Nitrobenzene	**ND**	0.022	EPA 8270E	6-9-21	6-10-21	
Isophorone	**ND**	0.022	EPA 8270E	6-9-21	6-10-21	
2-Nitrophenol	**ND**	0.022	EPA 8270E	6-9-21	6-10-21	
2,4-Dimethylphenol	**ND**	0.022	EPA 8270E	6-9-21	6-10-21	
bis(2-Chloroethoxy)methane	**ND**	0.022	EPA 8270E	6-9-21	6-10-21	
2,4-Dichlorophenol	**ND**	0.022	EPA 8270E	6-9-21	6-10-21	
1,2,4-Trichlorobenzene	**ND**	0.022	EPA 8270E	6-9-21	6-10-21	
Naphthalene	**ND**	0.0044	EPA 8270E/SIM	6-9-21	6-9-21	
4-Chloroaniline	**ND**	0.011	EPA 8270E	6-9-21	6-10-21	
Hexachlorobutadiene	**ND**	0.022	EPA 8270E	6-9-21	6-10-21	
4-Chloro-3-methylphenol	**ND**	0.022	EPA 8270E	6-9-21	6-10-21	
2-Methylnaphthalene	**ND**	0.0044	EPA 8270E/SIM	6-9-21	6-9-21	
1-Methylnaphthalene	**ND**	0.0044	EPA 8270E/SIM	6-9-21	6-9-21	
Hexachlorocyclopentadiene	**ND**	0.022	EPA 8270E	6-9-21	6-10-21	
2,4,6-Trichlorophenol	**ND**	0.022	EPA 8270E	6-9-21	6-10-21	
2,3-Dichloroaniline	**ND**	0.022	EPA 8270E	6-9-21	6-10-21	
2,4,5-Trichlorophenol	**ND**	0.022	EPA 8270E	6-9-21	6-10-21	
2-Chloronaphthalene	**ND**	0.022	EPA 8270E	6-9-21	6-10-21	
2-Nitroaniline	**ND**	0.022	EPA 8270E	6-9-21	6-10-21	
1,4-Dinitrobenzene	**ND**	0.022	EPA 8270E	6-9-21	6-10-21	
Dimethylphthalate	**ND**	0.022	EPA 8270E	6-9-21	6-10-21	
1,3-Dinitrobenzene	**ND**	0.022	EPA 8270E	6-9-21	6-10-21	
2,6-Dinitrotoluene	**ND**	0.011	EPA 8270E	6-9-21	6-10-21	
1,2-Dinitrobenzene	**ND**	0.022	EPA 8270E	6-9-21	6-10-21	
Acenaphthylene	**ND**	0.0044	EPA 8270E/SIM	6-9-21	6-9-21	
3-Nitroaniline	**ND**	0.022	EPA 8270E	6-9-21	6-10-21	

This report pertains to the samples analyzed in accordance with the chain of custody,
and is intended only for the use of the individual or company to whom it is addressed.

Date of Report: June 11, 2021
Samples Submitted: June 8, 2021
Laboratory Reference: 2106-062
Project: 11-05150-003

SEMIVOLATILE ORGANICS EPA 8270E/SIM
page 2 of 2

Analyte	Result	PQL	Method	Date Prepared	Date Analyzed	Flags
Client ID:	**DA7SWCS5210608I**					
Laboratory ID:	06-062-05					
2,4-Dinitrophenol	**ND**	0.11	EPA 8270E	6-9-21	6-10-21	
Acenaphthene	**ND**	0.0044	EPA 8270E/SIM	6-9-21	6-9-21	
4-Nitrophenol	**ND**	0.022	EPA 8270E	6-9-21	6-10-21	
2,4-Dinitrotoluene	**ND**	0.011	EPA 8270E	6-9-21	6-10-21	
Dibenzofuran	**ND**	0.022	EPA 8270E	6-9-21	6-10-21	
2,3,5,6-Tetrachlorophenol	**ND**	0.022	EPA 8270E	6-9-21	6-10-21	
2,3,4,6-Tetrachlorophenol	**ND**	0.022	EPA 8270E	6-9-21	6-10-21	
Diethylphthalate	**ND**	0.11	EPA 8270E	6-9-21	6-10-21	
4-Chlorophenyl-phenylether	**ND**	0.022	EPA 8270E	6-9-21	6-10-21	
4-Nitroaniline	**ND**	0.022	EPA 8270E	6-9-21	6-10-21	
Fluorene	**ND**	0.0044	EPA 8270E/SIM	6-9-21	6-9-21	
4,6-Dinitro-2-methylphenol	**ND**	0.11	EPA 8270E	6-9-21	6-10-21	
n-Nitrosodiphenylamine	**ND**	0.022	EPA 8270E	6-9-21	6-10-21	
1,2-Diphenylhydrazine	**ND**	0.022	EPA 8270E	6-9-21	6-10-21	
4-Bromophenyl-phenylether	**ND**	0.022	EPA 8270E	6-9-21	6-10-21	
Hexachlorobenzene	**ND**	0.022	EPA 8270E	6-9-21	6-10-21	
Pentachlorophenol	**ND**	0.044	EPA 8270E	6-9-21	6-10-21	
Phenanthrene	**ND**	0.0044	EPA 8270E/SIM	6-9-21	6-9-21	
Anthracene	**ND**	0.0044	EPA 8270E/SIM	6-9-21	6-9-21	
Carbazole	**ND**	0.022	EPA 8270E	6-9-21	6-10-21	
Di-n-butylphthalate	**ND**	0.11	EPA 8270E	6-9-21	6-10-21	
Fluoranthene	**ND**	0.0044	EPA 8270E/SIM	6-9-21	6-9-21	
Pyrene	**ND**	0.0044	EPA 8270E/SIM	6-9-21	6-9-21	
Butylbenzylphthalate	**ND**	0.11	EPA 8270E	6-9-21	6-10-21	
bis-2-Ethylhexyladipate	**ND**	0.11	EPA 8270E	6-9-21	6-10-21	
3,3'-Dichlorobenzidine	**ND**	0.011	EPA 8270E	6-9-21	6-10-21	
Benzo[a]anthracene	**ND**	0.0044	EPA 8270E/SIM	6-9-21	6-9-21	
Chrysene	**ND**	0.0044	EPA 8270E/SIM	6-9-21	6-9-21	
bis(2-Ethylhexyl)phthalate	**ND**	0.11	EPA 8270E	6-9-21	6-10-21	
Di-n-octylphthalate	**ND**	0.11	EPA 8270E	6-9-21	6-10-21	
Benzo[b]fluoranthene	**ND**	0.0044	EPA 8270E/SIM	6-9-21	6-9-21	
Benzo(j,k)fluoranthene	**ND**	0.0044	EPA 8270E/SIM	6-9-21	6-9-21	
Benzo[a]pyrene	**ND**	0.0044	EPA 8270E/SIM	6-9-21	6-9-21	
Indeno[1,2,3-cd]pyrene	**ND**	0.0044	EPA 8270E/SIM	6-9-21	6-9-21	
Dibenz[a,h]anthracene	**ND**	0.0044	EPA 8270E/SIM	6-9-21	6-9-21	
Benzo[g,h,i]perylene	**ND**	0.0044	EPA 8270E/SIM	6-9-21	6-9-21	
Surrogate:	*Percent Recovery*	*Control Limits*				
2-Fluorophenol	*89*	*26 - 109*				
Phenol-d6	*96*	*33 - 113*				
Nitrobenzene-d5	*95*	*31 - 110*				
2-Fluorobiphenyl	*99*	*42 - 107*				
2,4,6-Tribromophenol	*108*	*42 - 123*				
Terphenyl-d14	*96*	*41 - 115*				

This report pertains to the samples analyzed in accordance with the chain of custody, and is intended only for the use of the individual or company to whom it is addressed.

Date of Report: June 11, 2021
Samples Submitted: June 8, 2021
Laboratory Reference: 2106-062
Project: 11-05150-003

SEMIVOLATILE ORGANICS EPA 8270E/SIM
QUALITY CONTROL
page 1 of 2

Matrix: Soil
Units: mg/Kg

Analyte	Result	PQL	Method	Date Prepared	Date Analyzed	Flags
METHOD BLANK						
Laboratory ID:	MB0609S1					
n-Nitrosodimethylamine	**ND**	0.010	EPA 8270E	6-9-21	6-9-21	
Pyridine	**ND**	0.20	EPA 8270E	6-9-21	6-9-21	
Phenol	**ND**	0.020	EPA 8270E	6-9-21	6-9-21	
Aniline	**ND**	0.10	EPA 8270E	6-9-21	6-9-21	
bis(2-Chloroethyl)ether	**ND**	0.010	EPA 8270E	6-9-21	6-9-21	
2-Chlorophenol	**ND**	0.020	EPA 8270E	6-9-21	6-9-21	
1,3-Dichlorobenzene	**ND**	0.020	EPA 8270E	6-9-21	6-9-21	
1,4-Dichlorobenzene	**ND**	0.020	EPA 8270E	6-9-21	6-9-21	
Benzyl alcohol	**ND**	0.020	EPA 8270E	6-9-21	6-9-21	
1,2-Dichlorobenzene	**ND**	0.020	EPA 8270E	6-9-21	6-9-21	
2-Methylphenol (o-Cresol)	**ND**	0.020	EPA 8270E	6-9-21	6-9-21	
bis(2-Chloroisopropyl)ether	**ND**	0.020	EPA 8270E	6-9-21	6-9-21	
(3+4)-Methylphenol (m,p-Cresol)	**ND**	0.020	EPA 8270E	6-9-21	6-9-21	
n-Nitroso-di-n-propylamine	**ND**	0.010	EPA 8270E	6-9-21	6-9-21	
Hexachloroethane	**ND**	0.020	EPA 8270E	6-9-21	6-9-21	
Nitrobenzene	**ND**	0.020	EPA 8270E	6-9-21	6-9-21	
Isophorone	**ND**	0.020	EPA 8270E	6-9-21	6-9-21	
2-Nitrophenol	**ND**	0.020	EPA 8270E	6-9-21	6-9-21	
2,4-Dimethylphenol	**ND**	0.020	EPA 8270E	6-9-21	6-9-21	
bis(2-Chloroethoxy)methane	**ND**	0.020	EPA 8270E	6-9-21	6-9-21	
2,4-Dichlorophenol	**ND**	0.020	EPA 8270E	6-9-21	6-9-21	
1,2,4-Trichlorobenzene	**ND**	0.020	EPA 8270E	6-9-21	6-9-21	
Naphthalene	**ND**	0.0040	EPA 8270E/SIM	6-9-21	6-9-21	
4-Chloroaniline	**ND**	0.010	EPA 8270E	6-9-21	6-9-21	
Hexachlorobutadiene	**ND**	0.020	EPA 8270E	6-9-21	6-9-21	
4-Chloro-3-methylphenol	**ND**	0.020	EPA 8270E	6-9-21	6-9-21	
2-Methylnaphthalene	**ND**	0.0040	EPA 8270E/SIM	6-9-21	6-9-21	
1-Methylnaphthalene	**ND**	0.0040	EPA 8270E/SIM	6-9-21	6-9-21	
Hexachlorocyclopentadiene	**ND**	0.020	EPA 8270E	6-9-21	6-9-21	
2,4,6-Trichlorophenol	**ND**	0.020	EPA 8270E	6-9-21	6-9-21	
2,3-Dichloroaniline	**ND**	0.020	EPA 8270E	6-9-21	6-9-21	
2,4,5-Trichlorophenol	**ND**	0.020	EPA 8270E	6-9-21	6-9-21	
2-Chloronaphthalene	**ND**	0.020	EPA 8270E	6-9-21	6-9-21	
2-Nitroaniline	**ND**	0.020	EPA 8270E	6-9-21	6-9-21	
1,4-Dinitrobenzene	**ND**	0.020	EPA 8270E	6-9-21	6-9-21	
Dimethylphthalate	**ND**	0.020	EPA 8270E	6-9-21	6-9-21	
1,3-Dinitrobenzene	**ND**	0.020	EPA 8270E	6-9-21	6-9-21	
2,6-Dinitrotoluene	**ND**	0.010	EPA 8270E	6-9-21	6-9-21	
1,2-Dinitrobenzene	**ND**	0.020	EPA 8270E	6-9-21	6-9-21	
Acenaphthylene	**ND**	0.0040	EPA 8270E/SIM	6-9-21	6-9-21	
3-Nitroaniline	**ND**	0.020	EPA 8270E	6-9-21	6-9-21	

This report pertains to the samples analyzed in accordance with the chain of custody,
and is intended only for the use of the individual or company to whom it is addressed.

Date of Report: June 11, 2021
Samples Submitted: June 8, 2021
Laboratory Reference: 2106-062
Project: 11-05150-003

SEMIVOLATILE ORGANICS EPA 8270E/SIM
QUALITY CONTROL
page 2 of 2

Analyte	Result	PQL	Method	Date Prepared	Date Analyzed	Flags
METHOD BLANK						
Laboratory ID:	MB0609S1					
2,4-Dinitrophenol	**ND**	0.10	EPA 8270E	6-9-21	6-9-21	
Acenaphthene	**ND**	0.0040	EPA 8270E/SIM	6-9-21	6-9-21	
4-Nitrophenol	**ND**	0.020	EPA 8270E	6-9-21	6-9-21	
2,4-Dinitrotoluene	**ND**	0.010	EPA 8270E	6-9-21	6-9-21	
Dibenzofuran	**ND**	0.020	EPA 8270E	6-9-21	6-9-21	
2,3,5,6-Tetrachlorophenol	**ND**	0.020	EPA 8270E	6-9-21	6-9-21	
2,3,4,6-Tetrachlorophenol	**ND**	0.020	EPA 8270E	6-9-21	6-9-21	
Diethylphthalate	**ND**	0.10	EPA 8270E	6-9-21	6-9-21	
4-Chlorophenyl-phenylether	**ND**	0.020	EPA 8270E	6-9-21	6-9-21	
4-Nitroaniline	**ND**	0.020	EPA 8270E	6-9-21	6-9-21	
Fluorene	**ND**	0.0040	EPA 8270E/SIM	6-9-21	6-9-21	
4,6-Dinitro-2-methylphenol	**ND**	0.10	EPA 8270E	6-9-21	6-9-21	
n-Nitrosodiphenylamine	**ND**	0.020	EPA 8270E	6-9-21	6-9-21	
1,2-Diphenylhydrazine	**ND**	0.020	EPA 8270E	6-9-21	6-9-21	
4-Bromophenyl-phenylether	**ND**	0.020	EPA 8270E	6-9-21	6-9-21	
Hexachlorobenzene	**ND**	0.020	EPA 8270E	6-9-21	6-9-21	
Pentachlorophenol	**ND**	0.040	EPA 8270E	6-9-21	6-9-21	
Phenanthrene	**ND**	0.0040	EPA 8270E/SIM	6-9-21	6-9-21	
Anthracene	**ND**	0.0040	EPA 8270E/SIM	6-9-21	6-9-21	
Carbazole	**ND**	0.020	EPA 8270E	6-9-21	6-9-21	
Di-n-butylphthalate	**ND**	0.10	EPA 8270E	6-9-21	6-9-21	
Fluoranthene	**ND**	0.0040	EPA 8270E/SIM	6-9-21	6-9-21	
Pyrene	**ND**	0.0040	EPA 8270E/SIM	6-9-21	6-9-21	
Butylbenzylphthalate	**ND**	0.10	EPA 8270E	6-9-21	6-9-21	
bis-2-Ethylhexyladipate	**ND**	0.10	EPA 8270E	6-9-21	6-9-21	
3,3'-Dichlorobenzidine	**ND**	0.010	EPA 8270E	6-9-21	6-9-21	
Benzo[a]anthracene	**ND**	0.0040	EPA 8270E/SIM	6-9-21	6-9-21	
Chrysene	**ND**	0.0040	EPA 8270E/SIM	6-9-21	6-9-21	
bis(2-Ethylhexyl)phthalate	**ND**	0.10	EPA 8270E	6-9-21	6-9-21	
Di-n-octylphthalate	**ND**	0.10	EPA 8270E	6-9-21	6-9-21	
Benzo[b]fluoranthene	**ND**	0.0040	EPA 8270E/SIM	6-9-21	6-9-21	
Benzo(j,k)fluoranthene	**ND**	0.0040	EPA 8270E/SIM	6-9-21	6-9-21	
Benzo[a]pyrene	**ND**	0.0040	EPA 8270E/SIM	6-9-21	6-9-21	
Indeno[1,2,3-cd]pyrene	**ND**	0.0040	EPA 8270E/SIM	6-9-21	6-9-21	
Dibenz[a,h]anthracene	**ND**	0.0040	EPA 8270E/SIM	6-9-21	6-9-21	
Benzo[g,h,i]perylene	**ND**	0.0040	EPA 8270E/SIM	6-9-21	6-9-21	
Surrogate:	*Percent Recovery*	*Control Limits*				
2-Fluorophenol	*81*	*26 - 109*				
Phenol-d6	*91*	*33 - 113*				
Nitrobenzene-d5	*85*	*31 - 110*				
2-Fluorobiphenyl	*98*	*42 - 107*				
2,4,6-Tribromophenol	*117*	*42 - 123*				
Terphenyl-d14	*104*	*41 - 115*				

This report pertains to the samples analyzed in accordance with the chain of custody, and is intended only for the use of the individual or company to whom it is addressed.

Date of Report: June 11, 2021
Samples Submitted: June 8, 2021
Laboratory Reference: 2106-062
Project: 11-05150-003

SEMIVOLATILE ORGANICS EPA 8270E/SIM
QUALITY CONTROL

Matrix: Soil
Units: mg/Kg

Analyte	Result		Spike Level		Source Result	Percent Recovery		Recovery Limits	RPD	RPD Limit	Flags
MATRIX SPIKES											
Laboratory ID:	06-061-03										
	MS	MSD	MS	MSD		MS	MSD				
Phenol	**0.927**	**0.962**	1.33	1.33	ND	70	72	33 - 105	4	36	
2-Chlorophenol	**1.00**	**1.03**	1.33	1.33	ND	75	77	36 - 105	3	38	
1,4-Dichlorobenzene	**0.502**	**0.495**	0.667	0.667	ND	75	74	27 - 106	1	40	
n-Nitroso-di-n-propylamine	**0.481**	**0.495**	0.667	0.667	ND	72	74	28 - 111	3	35	
1,2,4-Trichlorobenzene	**0.541**	**0.538**	0.667	0.667	ND	81	81	37 - 104	1	41	
4-Chloro-3-methylphenol	**1.12**	**1.09**	1.33	1.33	ND	84	82	42 - 113	3	25	
Acenaphthene	**0.520**	**0.540**	0.667	0.667	ND	78	81	36 - 104	4	23	
4-Nitrophenol	**1.26**	**1.30**	1.33	1.33	ND	95	98	22 - 135	3	24	
2,4-Dinitrotoluene	**0.524**	**0.539**	0.667	0.667	ND	79	81	25 - 114	3	26	
Pentachlorophenol	**1.26**	**1.30**	1.33	1.33	ND	95	98	28 - 135	3	28	
Pyrene	**0.567**	**0.564**	0.667	0.667	ND	85	85	29 - 127	1	20	
Surrogate:											
2-Fluorophenol						*79*	*81*	*26 - 109*			
Phenol-d6						*82*	*85*	*33 - 113*			
Nitrobenzene-d5						*85*	*84*	*31 - 110*			
2-Fluorobiphenyl						*83*	*87*	*42 - 107*			
2,4,6-Tribromophenol						*98*	*99*	*42 - 123*			
Terphenyl-d14						*87*	*87*	*41 - 115*			

This report pertains to the samples analyzed in accordance with the chain of custody,
and is intended only for the use of the individual or company to whom it is addressed.

Date of Report: June 11, 2021
Samples Submitted: June 8, 2021
Laboratory Reference: 2106-062
Project: 11-05150-003

PCBs EPA 8082A

Matrix: Soil
Units: mg/Kg (ppm)

Analyte	Result	PQL	Method	Date Prepared	Date Analyzed	Flags
Client ID:	**DA7SWCS1210608I**					
Laboratory ID:	06-062-01					
Aroclor 1016	**ND**	0.023	EPA 8082A	6-9-21	6-10-21	
Aroclor 1221	**ND**	0.023	EPA 8082A	6-9-21	6-10-21	
Aroclor 1232	**ND**	0.023	EPA 8082A	6-9-21	6-10-21	
Aroclor 1242	**ND**	0.023	EPA 8082A	6-9-21	6-10-21	
Aroclor 1248	**ND**	0.023	EPA 8082A	6-9-21	6-10-21	
Aroclor 1254	**ND**	0.023	EPA 8082A	6-9-21	6-10-21	
Aroclor 1260	**ND**	0.023	EPA 8082A	6-9-21	6-10-21	
Surrogate:	*Percent Recovery*	*Control Limits*				
DCB	*83*	*54-135*				
Client ID:	**DA7SWCS2210608I**					
Laboratory ID:	06-062-02					
Aroclor 1016	**ND**	0.022	EPA 8082A	6-9-21	6-10-21	
Aroclor 1221	**ND**	0.022	EPA 8082A	6-9-21	6-10-21	
Aroclor 1232	**ND**	0.022	EPA 8082A	6-9-21	6-10-21	
Aroclor 1242	**ND**	0.022	EPA 8082A	6-9-21	6-10-21	
Aroclor 1248	**ND**	0.022	EPA 8082A	6-9-21	6-10-21	
Aroclor 1254	**ND**	0.022	EPA 8082A	6-9-21	6-10-21	
Aroclor 1260	**ND**	0.022	EPA 8082A	6-9-21	6-10-21	
Surrogate:	*Percent Recovery*	*Control Limits*				
DCB	*79*	*54-135*				
Client ID:	**DA7SWCS3210608I**					
Laboratory ID:	06-062-03					
Aroclor 1016	**ND**	0.022	EPA 8082A	6-9-21	6-10-21	
Aroclor 1221	**ND**	0.022	EPA 8082A	6-9-21	6-10-21	
Aroclor 1232	**ND**	0.022	EPA 8082A	6-9-21	6-10-21	
Aroclor 1242	**ND**	0.022	EPA 8082A	6-9-21	6-10-21	
Aroclor 1248	**ND**	0.022	EPA 8082A	6-9-21	6-10-21	
Aroclor 1254	**ND**	0.022	EPA 8082A	6-9-21	6-10-21	
Aroclor 1260	**ND**	0.022	EPA 8082A	6-9-21	6-10-21	
Surrogate:	*Percent Recovery*	*Control Limits*				
DCB	*82*	*54-135*				

This report pertains to the samples analyzed in accordance with the chain of custody,
and is intended only for the use of the individual or company to whom it is addressed.

Date of Report: June 11, 2021
Samples Submitted: June 8, 2021
Laboratory Reference: 2106-062
Project: 11-05150-003

PCBs EPA 8082A

Matrix: Soil
Units: mg/Kg (ppm)

Analyte	Result	PQL	Method	Date Prepared	Date Analyzed	Flags
Client ID:	**DA7SWCS4210608I**					
Laboratory ID:	06-062-04					
Aroclor 1016	**ND**	0.023	EPA 8082A	6-9-21	6-10-21	
Aroclor 1221	**ND**	0.023	EPA 8082A	6-9-21	6-10-21	
Aroclor 1232	**ND**	0.023	EPA 8082A	6-9-21	6-10-21	
Aroclor 1242	**ND**	0.023	EPA 8082A	6-9-21	6-10-21	
Aroclor 1248	**ND**	0.023	EPA 8082A	6-9-21	6-10-21	
Aroclor 1254	**ND**	0.023	EPA 8082A	6-9-21	6-10-21	
Aroclor 1260	**ND**	0.023	EPA 8082A	6-9-21	6-10-21	
Surrogate:	*Percent Recovery*	*Control Limits*				
DCB	*83*	*54-135*				
Client ID:	**DA7SWCS5210608I**					
Laboratory ID:	06-062-05					
Aroclor 1016	**ND**	0.022	EPA 8082A	6-9-21	6-10-21	
Aroclor 1221	**ND**	0.022	EPA 8082A	6-9-21	6-10-21	
Aroclor 1232	**ND**	0.022	EPA 8082A	6-9-21	6-10-21	
Aroclor 1242	**ND**	0.022	EPA 8082A	6-9-21	6-10-21	
Aroclor 1248	**ND**	0.022	EPA 8082A	6-9-21	6-10-21	
Aroclor 1254	**ND**	0.022	EPA 8082A	6-9-21	6-10-21	
Aroclor 1260	**ND**	0.022	EPA 8082A	6-9-21	6-10-21	
Surrogate:	*Percent Recovery*	*Control Limits*				
DCB	*80*	*54-135*				

This report pertains to the samples analyzed in accordance with the chain of custody,
and is intended only for the use of the individual or company to whom it is addressed.

Date of Report: June 11, 2021
Samples Submitted: June 8, 2021
Laboratory Reference: 2106-062
Project: 11-05150-003

PCBs EPA 8082A
QUALITY CONTROL

Matrix: Soil
Units: mg/Kg (ppm)

Analyte	Result	PQL	Method	Date Prepared	Date Analyzed	Flags
METHOD BLANK						
Laboratory ID:	MB0609S2					
Aroclor 1016	**ND**	0.020	EPA 8082A	6-9-21	6-9-21	
Aroclor 1221	**ND**	0.020	EPA 8082A	6-9-21	6-9-21	
Aroclor 1232	**ND**	0.020	EPA 8082A	6-9-21	6-9-21	
Aroclor 1242	**ND**	0.020	EPA 8082A	6-9-21	6-9-21	
Aroclor 1248	**ND**	0.020	EPA 8082A	6-9-21	6-9-21	
Aroclor 1254	**ND**	0.020	EPA 8082A	6-9-21	6-9-21	
Aroclor 1260	**ND**	0.020	EPA 8082A	6-9-21	6-9-21	
Surrogate:	*Percent Recovery*	*Control Limits*				
DCB	*84*	*54-135*				

Analyte	Result		Spike Level		Source Result	Percent Recovery		Recovery Limits	RPD	RPD Limit	Flags
MATRIX SPIKES											
Laboratory ID:	06-061-02										
	MS	MSD	MS	MSD		MS	MSD				
Aroclor 1260	**0.437**	**0.401**	0.500	0.500	ND	**87**	**80**	62-129	9	15	
Surrogate:											
DCB						*84*	*76*	*54-135*			

This report pertains to the samples analyzed in accordance with the chain of custody, and is intended only for the use of the individual or company to whom it is addressed.

Date of Report: June 11, 2021
Samples Submitted: June 8, 2021
Laboratory Reference: 2106-062
Project: 11-05150-003

ORGANOCHLORINE PESTICIDES EPA 8081B

Matrix: Soil
Units: ug/Kg (ppb)

Analyte	Result	PQL	Method	Date Prepared	Date Analyzed	Flags
Client ID:	**DA7SWCS1210608I**					
Laboratory ID:	06-062-01					
alpha-BHC	**ND**	0.57	EPA 8081B	6-10-21	6-10-21	
gamma-BHC (Lindane)	**ND**	0.57	EPA 8081B	6-10-21	6-10-21	
beta-BHC	**ND**	0.57	EPA 8081B	6-10-21	6-10-21	
delta-BHC	**ND**	0.57	EPA 8081B	6-10-21	6-10-21	
Heptachlor	**ND**	0.57	EPA 8081B	6-10-21	6-10-21	
Aldrin	**ND**	0.57	EPA 8081B	6-10-21	6-10-21	
Heptachlor Epoxide	**ND**	0.57	EPA 8081B	6-10-21	6-10-21	
gamma-Chlordane	**ND**	1.1	EPA 8081B	6-10-21	6-10-21	
alpha-Chlordane	**ND**	1.1	EPA 8081B	6-10-21	6-10-21	
4,4'-DDE	**ND**	1.1	EPA 8081B	6-10-21	6-10-21	
Endosulfan I	**ND**	0.57	EPA 8081B	6-10-21	6-10-21	
Dieldrin	**ND**	1.1	EPA 8081B	6-10-21	6-10-21	
Endrin	**ND**	1.1	EPA 8081B	6-10-21	6-10-21	
4,4'-DDD	**ND**	1.1	EPA 8081B	6-10-21	6-10-21	
Endosulfan II	**ND**	1.1	EPA 8081B	6-10-21	6-10-21	
4,4'-DDT	**ND**	1.1	EPA 8081B	6-10-21	6-10-21	
Endrin Aldehyde	**ND**	1.1	EPA 8081B	6-10-21	6-10-21	
Methoxychlor	**ND**	1.1	EPA 8081B	6-10-21	6-10-21	
Endosulfan Sulfate	**ND**	1.1	EPA 8081B	6-10-21	6-10-21	
Endrin Ketone	**ND**	1.1	EPA 8081B	6-10-21	6-10-21	
Toxaphene	**ND**	5.7	EPA 8081B	6-10-21	6-10-21	
Surrogate:	*Percent Recovery*	*Control Limits*				
TCMX	*75*	*30-110*				
DCB	*105*	*40-117*				

This report pertains to the samples analyzed in accordance with the chain of custody, and is intended only for the use of the individual or company to whom it is addressed.

Date of Report: June 11, 2021
Samples Submitted: June 8, 2021
Laboratory Reference: 2106-062
Project: 11-05150-003

ORGANOCHLORINE PESTICIDES EPA 8081B

Matrix: Soil
Units: ug/Kg (ppb)

Analyte	Result	PQL	Method	Date Prepared	Date Analyzed	Flags
Client ID:	**DA7SWCS2210608I**					
Laboratory ID:	06-062-02					
alpha-BHC	**ND**	0.56	EPA 8081B	6-10-21	6-10-21	
gamma-BHC (Lindane)	**ND**	0.56	EPA 8081B	6-10-21	6-10-21	
beta-BHC	**ND**	0.56	EPA 8081B	6-10-21	6-10-21	
delta-BHC	**ND**	0.56	EPA 8081B	6-10-21	6-10-21	
Heptachlor	**ND**	0.56	EPA 8081B	6-10-21	6-10-21	
Aldrin	**ND**	0.56	EPA 8081B	6-10-21	6-10-21	
Heptachlor Epoxide	**ND**	0.56	EPA 8081B	6-10-21	6-10-21	
gamma-Chlordane	**ND**	1.1	EPA 8081B	6-10-21	6-10-21	
alpha-Chlordane	**ND**	1.1	EPA 8081B	6-10-21	6-10-21	
4,4'-DDE	**ND**	1.1	EPA 8081B	6-10-21	6-10-21	
Endosulfan I	**ND**	0.56	EPA 8081B	6-10-21	6-10-21	
Dieldrin	**ND**	1.1	EPA 8081B	6-10-21	6-10-21	
Endrin	**ND**	1.1	EPA 8081B	6-10-21	6-10-21	
4,4'-DDD	**ND**	1.1	EPA 8081B	6-10-21	6-10-21	
Endosulfan II	**ND**	1.1	EPA 8081B	6-10-21	6-10-21	
4,4'-DDT	**ND**	1.1	EPA 8081B	6-10-21	6-10-21	
Endrin Aldehyde	**ND**	1.1	EPA 8081B	6-10-21	6-10-21	
Methoxychlor	**ND**	1.1	EPA 8081B	6-10-21	6-10-21	
Endosulfan Sulfate	**ND**	1.1	EPA 8081B	6-10-21	6-10-21	
Endrin Ketone	**ND**	1.1	EPA 8081B	6-10-21	6-10-21	
Toxaphene	**ND**	5.6	EPA 8081B	6-10-21	6-10-21	
Surrogate:	*Percent Recovery*	*Control Limits*				
TCMX	*64*	*30-110*				
DCB	*99*	*40-117*				

This report pertains to the samples analyzed in accordance with the chain of custody, and is intended only for the use of the individual or company to whom it is addressed.

Date of Report: June 11, 2021
Samples Submitted: June 8, 2021
Laboratory Reference: 2106-062
Project: 11-05150-003

ORGANOCHLORINE PESTICIDES EPA 8081B

Matrix: Soil
Units: ug/Kg (ppb)

Analyte	Result	PQL	Method	Date Prepared	Date Analyzed	Flags
Client ID:	**DA7SWCS3210608I**					
Laboratory ID:	06-062-03					
alpha-BHC	**ND**	0.55	EPA 8081B	6-10-21	6-10-21	
gamma-BHC (Lindane)	**ND**	0.55	EPA 8081B	6-10-21	6-10-21	
beta-BHC	**ND**	0.55	EPA 8081B	6-10-21	6-10-21	
delta-BHC	**ND**	0.55	EPA 8081B	6-10-21	6-10-21	
Heptachlor	**ND**	0.55	EPA 8081B	6-10-21	6-10-21	
Aldrin	**ND**	0.55	EPA 8081B	6-10-21	6-10-21	
Heptachlor Epoxide	**ND**	0.55	EPA 8081B	6-10-21	6-10-21	
gamma-Chlordane	**ND**	1.1	EPA 8081B	6-10-21	6-10-21	
alpha-Chlordane	**ND**	1.1	EPA 8081B	6-10-21	6-10-21	
4,4'-DDE	**ND**	1.1	EPA 8081B	6-10-21	6-10-21	
Endosulfan I	**ND**	0.55	EPA 8081B	6-10-21	6-10-21	
Dieldrin	**ND**	1.1	EPA 8081B	6-10-21	6-10-21	
Endrin	**ND**	1.1	EPA 8081B	6-10-21	6-10-21	
4,4'-DDD	**ND**	1.1	EPA 8081B	6-10-21	6-10-21	
Endosulfan II	**ND**	1.1	EPA 8081B	6-10-21	6-10-21	
4,4'-DDT	**ND**	1.1	EPA 8081B	6-10-21	6-10-21	
Endrin Aldehyde	**ND**	1.1	EPA 8081B	6-10-21	6-10-21	
Methoxychlor	**ND**	1.1	EPA 8081B	6-10-21	6-10-21	
Endosulfan Sulfate	**ND**	1.1	EPA 8081B	6-10-21	6-10-21	
Endrin Ketone	**ND**	1.1	EPA 8081B	6-10-21	6-10-21	
Toxaphene	**ND**	5.5	EPA 8081B	6-10-21	6-10-21	
Surrogate:	*Percent Recovery*	*Control Limits*				
TCMX	*72*	*30-110*				
DCB	*106*	*40-117*				

This report pertains to the samples analyzed in accordance with the chain of custody, and is intended only for the use of the individual or company to whom it is addressed.

Date of Report: June 11, 2021
Samples Submitted: June 8, 2021
Laboratory Reference: 2106-062
Project: 11-05150-003

ORGANOCHLORINE PESTICIDES EPA 8081B

Matrix: Soil
Units: ug/Kg (ppb)

Analyte	Result	PQL	Method	Date Prepared	Date Analyzed	Flags
Client ID:	**DA7SWCS4210608I**					
Laboratory ID:	06-062-04					
alpha-BHC	**ND**	0.57	EPA 8081B	6-10-21	6-10-21	
gamma-BHC (Lindane)	**ND**	0.57	EPA 8081B	6-10-21	6-10-21	
beta-BHC	**ND**	0.57	EPA 8081B	6-10-21	6-10-21	
delta-BHC	**ND**	0.57	EPA 8081B	6-10-21	6-10-21	
Heptachlor	**ND**	0.57	EPA 8081B	6-10-21	6-10-21	
Aldrin	**ND**	0.57	EPA 8081B	6-10-21	6-10-21	
Heptachlor Epoxide	**ND**	0.57	EPA 8081B	6-10-21	6-10-21	
gamma-Chlordane	**ND**	1.1	EPA 8081B	6-10-21	6-10-21	
alpha-Chlordane	**ND**	1.1	EPA 8081B	6-10-21	6-10-21	
4,4'-DDE	**ND**	1.1	EPA 8081B	6-10-21	6-10-21	
Endosulfan I	**ND**	0.57	EPA 8081B	6-10-21	6-10-21	
Dieldrin	**ND**	1.1	EPA 8081B	6-10-21	6-10-21	
Endrin	**ND**	1.1	EPA 8081B	6-10-21	6-10-21	
4,4'-DDD	**ND**	1.1	EPA 8081B	6-10-21	6-10-21	
Endosulfan II	**ND**	1.1	EPA 8081B	6-10-21	6-10-21	
4,4'-DDT	**ND**	1.1	EPA 8081B	6-10-21	6-10-21	
Endrin Aldehyde	**ND**	1.1	EPA 8081B	6-10-21	6-10-21	
Methoxychlor	**ND**	1.1	EPA 8081B	6-10-21	6-10-21	
Endosulfan Sulfate	**ND**	1.1	EPA 8081B	6-10-21	6-10-21	
Endrin Ketone	**ND**	1.1	EPA 8081B	6-10-21	6-10-21	
Toxaphene	**ND**	5.7	EPA 8081B	6-10-21	6-10-21	
Surrogate:	*Percent Recovery*	*Control Limits*				
TCMX	*69*	*30-110*				
DCB	*111*	*40-117*				

This report pertains to the samples analyzed in accordance with the chain of custody, and is intended only for the use of the individual or company to whom it is addressed.

Date of Report: June 11, 2021
Samples Submitted: June 8, 2021
Laboratory Reference: 2106-062
Project: 11-05150-003

ORGANOCHLORINE PESTICIDES EPA 8081B

Matrix: Soil
Units: ug/Kg (ppb)

Analyte	Result	PQL	Method	Date Prepared	Date Analyzed	Flags
Client ID:	**DA7SWCS5210608I**					
Laboratory ID:	06-062-05					
alpha-BHC	**ND**	0.56	EPA 8081B	6-10-21	6-10-21	
gamma-BHC (Lindane)	**ND**	0.56	EPA 8081B	6-10-21	6-10-21	
beta-BHC	**ND**	0.56	EPA 8081B	6-10-21	6-10-21	
delta-BHC	**ND**	0.56	EPA 8081B	6-10-21	6-10-21	
Heptachlor	**ND**	0.56	EPA 8081B	6-10-21	6-10-21	
Aldrin	**ND**	0.56	EPA 8081B	6-10-21	6-10-21	
Heptachlor Epoxide	**ND**	0.56	EPA 8081B	6-10-21	6-10-21	
gamma-Chlordane	**ND**	1.1	EPA 8081B	6-10-21	6-10-21	
alpha-Chlordane	**ND**	1.1	EPA 8081B	6-10-21	6-10-21	
4,4'-DDE	**ND**	1.1	EPA 8081B	6-10-21	6-10-21	
Endosulfan I	**ND**	0.56	EPA 8081B	6-10-21	6-10-21	
Dieldrin	**ND**	1.1	EPA 8081B	6-10-21	6-10-21	
Endrin	**ND**	1.1	EPA 8081B	6-10-21	6-10-21	
4,4'-DDD	**ND**	1.1	EPA 8081B	6-10-21	6-10-21	
Endosulfan II	**ND**	1.1	EPA 8081B	6-10-21	6-10-21	
4,4'-DDT	**ND**	1.1	EPA 8081B	6-10-21	6-10-21	
Endrin Aldehyde	**ND**	1.1	EPA 8081B	6-10-21	6-10-21	
Methoxychlor	**ND**	1.1	EPA 8081B	6-10-21	6-10-21	
Endosulfan Sulfate	**ND**	1.1	EPA 8081B	6-10-21	6-10-21	
Endrin Ketone	**ND**	1.1	EPA 8081B	6-10-21	6-10-21	
Toxaphene	**ND**	5.6	EPA 8081B	6-10-21	6-10-21	
Surrogate:	*Percent Recovery*	*Control Limits*				
TCMX	*58*	*30-110*				
DCB	*91*	*40-117*				

This report pertains to the samples analyzed in accordance with the chain of custody, and is intended only for the use of the individual or company to whom it is addressed.

Date of Report: June 11, 2021
Samples Submitted: June 8, 2021
Laboratory Reference: 2106-062
Project: 11-05150-003

ORGANOCHLORINE PESTICIDES EPA 8081B QUALITY CONTROL

Matrix: Soil
Units: ug/Kg (ppb)

Analyte	Result	PQL	Method	Date Prepared	Date Analyzed	Flags
METHOD BLANK						
Laboratory ID:	MB0610S1					
alpha-BHC	**ND**	0.50	EPA 8081B	6-10-21	6-10-21	
gamma-BHC (Lindane)	**ND**	0.50	EPA 8081B	6-10-21	6-10-21	
beta-BHC	**ND**	0.50	EPA 8081B	6-10-21	6-10-21	
delta-BHC	**ND**	0.50	EPA 8081B	6-10-21	6-10-21	
Heptachlor	**ND**	0.50	EPA 8081B	6-10-21	6-10-21	
Aldrin	**ND**	0.50	EPA 8081B	6-10-21	6-10-21	
Heptachlor Epoxide	**ND**	0.50	EPA 8081B	6-10-21	6-10-21	
gamma-Chlordane	**ND**	1.0	EPA 8081B	6-10-21	6-10-21	
alpha-Chlordane	**ND**	1.0	EPA 8081B	6-10-21	6-10-21	
4,4'-DDE	**ND**	1.0	EPA 8081B	6-10-21	6-10-21	
Endosulfan I	**ND**	0.50	EPA 8081B	6-10-21	6-10-21	
Dieldrin	**ND**	1.0	EPA 8081B	6-10-21	6-10-21	
Endrin	**ND**	1.0	EPA 8081B	6-10-21	6-10-21	
4,4'-DDD	**ND**	1.0	EPA 8081B	6-10-21	6-10-21	
Endosulfan II	**ND**	1.0	EPA 8081B	6-10-21	6-10-21	
4,4'-DDT	**ND**	1.0	EPA 8081B	6-10-21	6-10-21	
Endrin Aldehyde	**ND**	1.0	EPA 8081B	6-10-21	6-10-21	
Methoxychlor	**ND**	1.0	EPA 8081B	6-10-21	6-10-21	
Endosulfan Sulfate	**ND**	1.0	EPA 8081B	6-10-21	6-10-21	
Endrin Ketone	**ND**	1.0	EPA 8081B	6-10-21	6-10-21	
Toxaphene	**ND**	5.0	EPA 8081B	6-10-21	6-10-21	
Surrogate:	*Percent Recovery*	*Control Limits*				
TCMX	*85*	*30-110*				
DCB	*114*	*40-117*				

This report pertains to the samples analyzed in accordance with the chain of custody, and is intended only for the use of the individual or company to whom it is addressed.

Date of Report: June 11, 2021
Samples Submitted: June 8, 2021
Laboratory Reference: 2106-062
Project: 11-05150-003

ORGANOCHLORINE PESTICIDES EPA 8081B QUALITY CONTROL

Matrix: Soil
Units: ug/Kg (ppb)

Analyte	Result		Spike Level		Source Result	Percent Recovery		Recovery Limits	RPD	RPD Limit	Flags
SPIKE BLANKS											
Laboratory ID:	SB0610S1										
	SB	SBD	SB	SBD		SB	SBD				
alpha-BHC	**7.65**	**7.50**	10.0	10.0	N/A	**77**	**75**	65-115	2	15	
gamma-BHC (Lindane)	**7.65**	**7.46**	10.0	10.0	N/A	**76**	**75**	69-116	3	15	
beta-BHC	**7.04**	**6.73**	10.0	10.0	N/A	**70**	**67**	63-116	5	15	
delta-BHC	**7.78**	**7.57**	10.0	10.0	N/A	**78**	**76**	66-116	3	15	
Heptachlor	**9.27**	**9.03**	10.0	10.0	N/A	**93**	**90**	63-119	3	15	
Aldrin	**9.66**	**9.44**	10.0	10.0	N/A	**97**	**94**	60-116	2	15	
Heptachlor Epoxide	**9.86**	**9.76**	10.0	10.0	N/A	**99**	**98**	65-116	1	15	
gamma-Chlordane	**9.18**	**9.02**	10.0	10.0	N/A	**92**	**90**	64-116	2	15	
alpha-Chlordane	**9.01**	**8.73**	10.0	10.0	N/A	**90**	**87**	62-119	3	15	
4,4'-DDE	**7.78**	**7.61**	10.0	10.0	N/A	**78**	**76**	69-120	2	15	
Endosulfan I	**7.81**	**7.89**	10.0	10.0	N/A	**78**	**79**	60-121	1	15	
Dieldrin	**9.67**	**9.61**	10.0	10.0	N/A	**97**	**96**	64-115	1	15	
Endrin	**10.1**	**9.87**	10.0	10.0	N/A	**101**	**99**	62-118	2	15	
4,4'-DDD	**8.00**	**7.70**	10.0	10.0	N/A	**80**	**77**	64-124	4	15	
Endosulfan II	**10.2**	**9.82**	10.0	10.0	N/A	**102**	**98**	64-115	4	15	
4,4'-DDT	**10.5**	**10.3**	10.0	10.0	N/A	**105**	**103**	57-130	2	15	
Endrin Aldehyde	**9.65**	**9.62**	10.0	10.0	N/A	**96**	**96**	57-114	0	15	
Methoxychlor	**9.47**	**9.44**	10.0	10.0	N/A	**95**	**94**	49-129	0	15	
Endosulfan Sulfate	**9.67**	**9.57**	10.0	10.0	N/A	**97**	**96**	61-115	1	15	
Endrin Ketone	**9.41**	**9.32**	10.0	10.0	N/A	**94**	**93**	64-116	1	15	
Surrogate:											
TCMX						*90*	*89*	*30-110*			
DCB						*110*	*108*	*40-117*			

This report pertains to the samples analyzed in accordance with the chain of custody, and is intended only for the use of the individual or company to whom it is addressed.

Date of Report: June 11, 2021
Samples Submitted: June 8, 2021
Laboratory Reference: 2106-062
Project: 11-05150-003

TOTAL METALS
EPA 6010D/6020B/7471B

Matrix: Soil
Units: mg/Kg (ppm)

Analyte	Result	PQL	Method	Date Prepared	Date Analyzed	Flags
Client ID:	**DA7SWCS1210608I**					
Laboratory ID:	06-062-01					
Arsenic	**ND**	5.7	EPA 6010D	6-10-21	6-10-21	
Barium	**56**	2.9	EPA 6010D	6-10-21	6-10-21	
Cadmium	**ND**	0.57	EPA 6010D	6-10-21	6-10-21	
Chromium	**18**	0.57	EPA 6010D	6-10-21	6-10-21	
Lead	**ND**	5.7	EPA 6010D	6-10-21	6-10-21	
Mercury	**ND**	0.057	EPA 7471B	6-10-21	6-10-21	
Selenium	**ND**	0.14	EPA 6020B	6-10-21	6-10-21	
Silver	**ND**	1.1	EPA 6010D	6-10-21	6-10-21	
Client ID:	**DA7SWCS2210608I**					
Laboratory ID:	06-062-02					
Arsenic	**ND**	5.6	EPA 6010D	6-10-21	6-10-21	
Barium	**43**	2.8	EPA 6010D	6-10-21	6-10-21	
Cadmium	**ND**	0.56	EPA 6010D	6-10-21	6-10-21	
Chromium	**16**	0.56	EPA 6010D	6-10-21	6-10-21	
Lead	**ND**	5.6	EPA 6010D	6-10-21	6-10-21	
Mercury	**ND**	0.056	EPA 7471B	6-10-21	6-10-21	
Selenium	**ND**	0.14	EPA 6020B	6-10-21	6-10-21	
Silver	**ND**	1.1	EPA 6010D	6-10-21	6-10-21	
Client ID:	**DA7SWCS3210608I**					
Laboratory ID:	06-062-03					
Arsenic	**ND**	5.5	EPA 6010D	6-10-21	6-10-21	
Barium	**41**	2.8	EPA 6010D	6-10-21	6-10-21	
Cadmium	**ND**	0.55	EPA 6010D	6-10-21	6-10-21	
Chromium	**15**	0.55	EPA 6010D	6-10-21	6-10-21	
Lead	**ND**	5.5	EPA 6010D	6-10-21	6-10-21	
Mercury	**ND**	0.055	EPA 7471B	6-10-21	6-10-21	
Selenium	**ND**	0.14	EPA 6020B	6-10-21	6-10-21	
Silver	**ND**	1.1	EPA 6010D	6-10-21	6-10-21	

This report pertains to the samples analyzed in accordance with the chain of custody, and is intended only for the use of the individual or company to whom it is addressed.

Date of Report: June 11, 2021
Samples Submitted: June 8, 2021
Laboratory Reference: 2106-062
Project: 11-05150-003

TOTAL METALS
EPA 6010D/6020B/7471B

Matrix: Soil
Units: mg/Kg (ppm)

Analyte	Result	PQL	Method	Date Prepared	Date Analyzed	Flags
Client ID:	**DA7SWCS4210608I**					
Laboratory ID:	06-062-04					
Arsenic	**ND**	5.7	EPA 6010D	6-10-21	6-10-21	
Barium	**52**	2.8	EPA 6010D	6-10-21	6-10-21	
Cadmium	**ND**	0.57	EPA 6010D	6-10-21	6-10-21	
Chromium	**17**	0.57	EPA 6010D	6-10-21	6-10-21	
Lead	**ND**	5.7	EPA 6010D	6-10-21	6-10-21	
Mercury	**ND**	0.057	EPA 7471B	6-10-21	6-10-21	
Selenium	**ND**	0.14	EPA 6020B	6-10-21	6-10-21	
Silver	**ND**	1.1	EPA 6010D	6-10-21	6-10-21	
Client ID:	**DA7SWCS5210608I**					
Laboratory ID:	06-062-05					
Arsenic	**ND**	5.6	EPA 6010D	6-10-21	6-10-21	
Barium	**30**	2.8	EPA 6010D	6-10-21	6-10-21	
Cadmium	**ND**	0.56	EPA 6010D	6-10-21	6-10-21	
Chromium	**14**	0.56	EPA 6010D	6-10-21	6-10-21	
Lead	**ND**	5.6	EPA 6010D	6-10-21	6-10-21	
Mercury	**ND**	0.056	EPA 7471B	6-10-21	6-10-21	
Selenium	**ND**	0.14	EPA 6020B	6-10-21	6-10-21	
Silver	**ND**	1.1	EPA 6010D	6-10-21	6-10-21	

This report pertains to the samples analyzed in accordance with the chain of custody, and is intended only for the use of the individual or company to whom it is addressed.

Date of Report: June 11, 2021
Samples Submitted: June 8, 2021
Laboratory Reference: 2106-062
Project: 11-05150-003

TOTAL METALS
EPA 6010D/6020B/7471B
QUALITY CONTROL

Matrix: Soil
Units: mg/Kg (ppm)

Analyte	Result	PQL	Method	Date Prepared	Date Analyzed	Flags
METHOD BLANK						
Laboratory ID:	MB0610SM1					
Arsenic	**ND**	5.0	EPA 6010D	6-10-21	6-10-21	
Barium	**ND**	2.5	EPA 6010D	6-10-21	6-10-21	
Cadmium	**ND**	0.50	EPA 6010D	6-10-21	6-10-21	
Chromium	**ND**	0.50	EPA 6010D	6-10-21	6-10-21	
Lead	**ND**	5.0	EPA 6010D	6-10-21	6-10-21	
Silver	**ND**	1.0	EPA 6010D	6-10-21	6-10-21	
Laboratory ID:	MB0610SM2					
Selenium	**ND**	0.13	EPA 6020B	6-10-21	6-10-21	
Laboratory ID:	MB0610S1					
Mercury	**ND**	0.050	EPA 7471B	6-10-21	6-10-21	

This report pertains to the samples analyzed in accordance with the chain of custody,
and is intended only for the use of the individual or company to whom it is addressed.

Date of Report: June 11, 2021
Samples Submitted: June 8, 2021
Laboratory Reference: 2106-062
Project: 11-05150-003

TOTAL METALS
EPA 6010D/6020B/7471B
QUALITY CONTROL

Matrix: Soil
Units: mg/Kg (ppm)

Analyte	Result		Spike Level		Source Result	Percent Recovery		Recovery Limits	RPD	RPD Limit	Flags
DUPLICATE											
Laboratory ID:	06-061-03										
	ORIG	DUP									
Arsenic	**ND**	**ND**	NA	NA		NA		NA	NA	20	
Barium	**32.4**	**29.6**	NA	NA		NA		NA	9	20	
Cadmium	**ND**	**ND**	NA	NA		NA		NA	NA	20	
Chromium	**22.7**	**22.7**	NA	NA		NA		NA	0	20	
Lead	**ND**	**ND**	NA	NA		NA		NA	NA	20	
Silver	**ND**	**ND**	NA	NA		NA		NA	NA	20	
Laboratory ID:	06-061-03										
Selenium	**ND**	**ND**	NA	NA		NA		NA	NA	20	
Laboratory ID:	06-061-03										
Mercury	**ND**	**ND**	NA	NA		NA		NA	NA	20	
MATRIX SPIKES											
Laboratory ID:	06-061-03										
	MS	MSD	MS	MSD		MS	MSD				
Arsenic	**92.3**	**87.3**	100	100	ND	**92**	**87**	75-125	6	20	
Barium	**123**	**116**	100	100	32.4	**90**	**84**	75-125	5	20	
Cadmium	**46.8**	**44.9**	50.0	50.0	ND	**94**	**90**	75-125	4	20	
Chromium	**116**	**111**	100	100	22.7	**93**	**88**	75-125	4	20	
Lead	**225**	**215**	250	250	ND	**90**	**86**	75-125	4	20	
Silver	**23.1**	**22.3**	25.0	25.0	ND	**92**	**89**	75-125	4	20	
Laboratory ID:	06-061-03										
Selenium	**87.8**	**91.0**	100	100	ND	**88**	**91**	75-125	4	20	
Laboratory ID:	06-061-03										
Mercury	**0.603**	**0.570**	0.500	0.500	0.0167	**117**	**111**	80-120	6	20	

This report pertains to the samples analyzed in accordance with the chain of custody,
and is intended only for the use of the individual or company to whom it is addressed.

Date of Report: June 11, 2021
Samples Submitted: June 8, 2021
Laboratory Reference: 2106-062
Project: 11-05150-003

% MOISTURE

Client ID	Lab ID	% Moisture	Date Analyzed
DA7SWCS1210608I	06-062-01	**12**	6-8-21
DA7SWCS2210608I	06-062-02	**11**	6-8-21
DA7SWCS3210608I	06-062-03	**9**	6-8-21
DA7SWCS4210608I	06-062-04	**12**	6-8-21
DA7SWCS5210608I	06-062-05	**10**	6-8-21

This report pertains to the samples analyzed in accordance with the chain of custody,
and is intended only for the use of the individual or company to whom it is addressed.

OnSite Environmental Inc.

Data Qualifiers and Abbreviations

A - Due to a high sample concentration, the amount spiked is insufficient for meaningful MS/MSD recovery data.

B - The analyte indicated was also found in the blank sample.

C - The duplicate RPD is outside control limits due to high result variability when analyte concentrations are within five times the quantitation limit.

E - The value reported exceeds the quantitation range and is an estimate.

F - Surrogate recovery data is not available due to the high concentration of coeluting target compounds.

H - The analyte indicated is a common laboratory solvent and may have been introduced during sample preparation, and be impacting the sample result.

I - Compound recovery is outside of the control limits.

J - The value reported was below the practical quantitation limit. The value is an estimate.

K - Sample duplicate RPD is outside control limits due to sample inhomogeneity. The sample was re-extracted and re-analyzed with similar results.

L - The RPD is outside of the control limits.

M - Hydrocarbons in the gasoline range are impacting the diesel range result.

M1 - Hydrocarbons in the gasoline range (toluene-naphthalene) are present in the sample.

N - Hydrocarbons in the lube oil range are impacting the diesel range result.

N1 - Hydrocarbons in diesel range are impacting lube oil range results.

O - Hydrocarbons indicative of heavier fuels are present in the sample and are impacting the gasoline result.

P - The RPD of the detected concentrations between the two columns is greater than 40.

Q - Surrogate recovery is outside of the control limits.

S - Surrogate recovery data is not available due to the necessary dilution of the sample.

T - The sample chromatogram is not similar to a typical _____.

U - The analyte was analyzed for, but was not detected above the reported sample quantitation limit.

U1 - The practical quantitation limit is elevated due to interferences present in the sample.

V - Matrix Spike/Matrix Spike Duplicate recoveries are outside control limits due to matrix effects.

W - Matrix Spike/Matrix Spike Duplicate RPD are outside control limits due to matrix effects.

X - Sample extract treated with a mercury cleanup procedure.

X1- Sample extract treated with a sulfuric acid/silica gel cleanup procedure.

Y - The calibration verification for this analyte exceeded the 20% drift specified in methods 8260 & 8270, and therefore the reported result should be considered an estimate. The overall performance of the calibration verification standard met the acceptance criteria of the method.

Y1 - Negative effects of the matrix from this sample on the instrument caused values for this analyte in the bracketing continuing calibration verification standard (CCVs) to be outside of 20% acceptance criteria. Because of this, quantitation limits and sample concentrations should be considered estimates.

Z -

ND - Not Detected at PQL
PQL - Practical Quantitation Limit
RPD - Relative Percent Difference

This report pertains to the samples analyzed in accordance with the chain of custody, and is intended only for the use of the individual or company to whom it is addressed.

Chain of Custody

Page 1 of 1

OnSite Environmental Inc.
Analytical Laboratory Testing Services
14648 NE 95th Street • Redmond, WA 98052
Phone: (425) 883-3881 • www.onsite-env.com

Company: ~~Herrera Env. Cons.~~ Anchor QEA
Project Number: 11-05150-003
Project Name: CHRL
Project Manager: ~~Mary Shanks~~ Randy Brown
Sampled by: Brianna Bland

Turnaround Request (in working days)
(Check One)
~~X~~ Same Day ☐ 1 Day
☒ 2 Days ☐ 3 Days
☐ Standard (7 Days)
☐ _____ (other)

Laboratory Number: 06-062

Lab ID	Sample Identification	Date Sampled	Time Sampled	Matrix	Number of Containers	NWTPH-HCID	NWTPH-Gx/BTEX	NWTPH-Gx	NWTPH-Dx (☐ Acid / SG Clean-up)	Volatiles ~~8260B~~ 8260B	Halogenated Volatiles 8260D	EDB EPA 8011 (Waters Only)	Semivolatiles ~~8270E/SIM~~ 8270D/SIM (with low-level PAHs)	PAHs 8270E/SIM (low-level)	PCBs 8082A	Organochlorine Pesticides 8081B	Organophosphorus Pesticides 8270E/SIM	Chlorinated Acid Herbicides 8151A	Total ~~RCRA~~ Metals 6010B/7471A	Total MTCA Metals	TCLP Metals	HEM (oil and grease) 1664A					% Moisture
1	DA7SWCS1210608I	6.8.21	945	soil	4					X			X		X	X			X								10
2	DA7SWCS2210608I		1115							X			X		X	X			X								
3	DA7SWCS3210608I		1130							X			X		X	X			X								
4	DA7SWCS4210608I		1155							X			X		X	X			X								
5	DA7SWCS5210608I		1300							X			X		X	X			X								
6	VTRP210608I - trip blank		—		3					X																	

	Signature	Company	Date	Time
Relinquished	[signature]	Herrera	6.8.21	1635
Received	[signature]	OSE	6/8/21	1635
Relinquished				
Received				
Relinquished				
Received				
Reviewed/Date		Reviewed/Date		

Comments/Special Instructions

Data Package: Standard ☐ Level III ☐ Level IV ☐

Chromatograms with final report ☐ Electronic Data Deliverables (EDDs) ☐

OnSite Environmental Inc.
14648 NE 95th Street, Redmond, WA 98052 • (425) 883-3881

June 15, 2021

Randy Brown
Anchor QEA
1201 3rd Avenue, Suite 2600
Seattle, WA 98101

Re: Analytical Data for Project 11-05150-003
Laboratory Reference No. 2106-107

Dear Randy:

Enclosed are the analytical results and associated quality control data for samples submitted on June 11, 2021.

The standard policy of OnSite Environmental, Inc. is to store your samples for 30 days from the date of receipt. If you require longer storage, please contact the laboratory.

We appreciate the opportunity to be of service to you on this project. If you have any questions concerning the data, or need additional information, please feel free to call me.

Sincerely,

David Baumeister
Project Manager

Enclosures

This report pertains to the samples analyzed in accordance with the chain of custody, and is intended only for the use of the individual or company to whom it is addressed.

Date of Report: June 15, 2021
Samples Submitted: June 11, 2021
Laboratory Reference: 2106-107
Project: 11-05150-003

Case Narrative

Samples were collected on June 11, 2021 and received by the laboratory on June 11, 2021. They were maintained at the laboratory at a temperature of 2°C to 6°C.

Please note that any and all soil sample results are reported on a dry-weight basis, unless otherwise noted below.

General QA/QC issues associated with the analytical data enclosed in this laboratory report will be indicated with a reference to a comment or explanation on the Data Qualifier page. More complex and involved QA/QC issues will be discussed in detail below.

Volatiles EPA 8260D Analysis

The compound 2-Chloroethyl Vinyl Ether did not meet method specified calibration criteria due to instrument reactivity. The analysis for this compound should be considered a screen with estimated potential values.

Any other QA/QC issues associated with this extraction and analysis will be indicated with a footnote reference and discussed in detail on the Data Qualifier page.

This report pertains to the samples analyzed in accordance with the chain of custody,
and is intended only for the use of the individual or company to whom it is addressed.

Date of Report: June 15, 2021
Samples Submitted: June 11, 2021
Laboratory Reference: 2106-107
Project: 11-05150-003

VOLATILE ORGANICS EPA 8260D
page 1 of 2

Matrix: Soil
Units: mg/kg

Analyte	Result	PQL	Method	Date Prepared	Date Analyzed	Flags
Client ID:	**DA7SWCS6210611I**					
Laboratory ID:	06-107-01					
Dichlorodifluoromethane	ND	0.0013	EPA 8260D	6-14-21	6-14-21	
Chloromethane	ND	0.0060	EPA 8260D	6-14-21	6-14-21	
Vinyl Chloride	ND	0.00087	EPA 8260D	6-14-21	6-14-21	
Bromomethane	ND	0.0044	EPA 8260D	6-14-21	6-14-21	
Chloroethane	ND	0.0044	EPA 8260D	6-14-21	6-14-21	
Trichlorofluoromethane	ND	0.00087	EPA 8260D	6-14-21	6-14-21	
1,1-Dichloroethene	ND	0.00087	EPA 8260D	6-14-21	6-14-21	
Acetone	0.019	0.0087	EPA 8260D	6-14-21	6-14-21	
Iodomethane	ND	0.0044	EPA 8260D	6-14-21	6-14-21	
Carbon Disulfide	ND	0.00087	EPA 8260D	6-14-21	6-14-21	
Methylene Chloride	ND	0.0044	EPA 8260D	6-14-21	6-14-21	
(trans) 1,2-Dichloroethene	ND	0.00087	EPA 8260D	6-14-21	6-14-21	
Methyl t-Butyl Ether	ND	0.00087	EPA 8260D	6-14-21	6-14-21	
1,1-Dichloroethane	ND	0.00087	EPA 8260D	6-14-21	6-14-21	
Vinyl Acetate	ND	0.0044	EPA 8260D	6-14-21	6-14-21	
2,2-Dichloropropane	ND	0.00087	EPA 8260D	6-14-21	6-14-21	
(cis) 1,2-Dichloroethene	ND	0.00087	EPA 8260D	6-14-21	6-14-21	
2-Butanone	ND	0.0044	EPA 8260D	6-14-21	6-14-21	
Bromochloromethane	ND	0.00087	EPA 8260D	6-14-21	6-14-21	
Chloroform	ND	0.00087	EPA 8260D	6-14-21	6-14-21	
1,1,1-Trichloroethane	ND	0.00087	EPA 8260D	6-14-21	6-14-21	
Carbon Tetrachloride	ND	0.00087	EPA 8260D	6-14-21	6-14-21	
1,1-Dichloropropene	ND	0.00087	EPA 8260D	6-14-21	6-14-21	
Benzene	ND	0.00087	EPA 8260D	6-14-21	6-14-21	
1,2-Dichloroethane	ND	0.00087	EPA 8260D	6-14-21	6-14-21	
Trichloroethene	ND	0.00087	EPA 8260D	6-14-21	6-14-21	
1,2-Dichloropropane	ND	0.00087	EPA 8260D	6-14-21	6-14-21	
Dibromomethane	ND	0.00087	EPA 8260D	6-14-21	6-14-21	
Bromodichloromethane	ND	0.00087	EPA 8260D	6-14-21	6-14-21	
2-Chloroethyl Vinyl Ether	ND	0.0044	EPA 8260D	6-14-21	6-14-21	
(cis) 1,3-Dichloropropene	ND	0.00087	EPA 8260D	6-14-21	6-14-21	
Methyl Isobutyl Ketone	ND	0.0044	EPA 8260D	6-14-21	6-14-21	
Toluene	ND	0.0044	EPA 8260D	6-14-21	6-14-21	
(trans) 1,3-Dichloropropene	ND	0.00087	EPA 8260D	6-14-21	6-14-21	

This report pertains to the samples analyzed in accordance with the chain of custody, and is intended only for the use of the individual or company to whom it is addressed.

Date of Report: June 15, 2021
Samples Submitted: June 11, 2021
Laboratory Reference: 2106-107
Project: 11-05150-003

VOLATILE ORGANICS EPA 8260D
page 2 of 2

Analyte	Result	PQL	Method	Date Prepared	Date Analyzed	Flags
Client ID:	**DA7SWCS6210611I**					
Laboratory ID:	06-107-01					
1,1,2-Trichloroethane	ND	0.00087	EPA 8260D	6-14-21	6-14-21	
Tetrachloroethene	ND	0.00087	EPA 8260D	6-14-21	6-14-21	
1,3-Dichloropropane	ND	0.00087	EPA 8260D	6-14-21	6-14-21	
2-Hexanone	ND	0.0044	EPA 8260D	6-14-21	6-14-21	
Dibromochloromethane	ND	0.00087	EPA 8260D	6-14-21	6-14-21	
1,2-Dibromoethane	ND	0.000044	EPA 8260D/SIM	6-14-21	6-14-21	
Chlorobenzene	ND	0.00087	EPA 8260D	6-14-21	6-14-21	
1,1,1,2-Tetrachloroethane	ND	0.00087	EPA 8260D	6-14-21	6-14-21	
Ethylbenzene	ND	0.00087	EPA 8260D	6-14-21	6-14-21	
m,p-Xylene	ND	0.0017	EPA 8260D	6-14-21	6-14-21	
o-Xylene	ND	0.00087	EPA 8260D	6-14-21	6-14-21	
Styrene	ND	0.00087	EPA 8260D	6-14-21	6-14-21	
Bromoform	ND	0.0044	EPA 8260D	6-14-21	6-14-21	
Isopropylbenzene	ND	0.00087	EPA 8260D	6-14-21	6-14-21	
Bromobenzene	ND	0.00087	EPA 8260D	6-14-21	6-14-21	
1,1,2,2-Tetrachloroethane	ND	0.00087	EPA 8260D	6-14-21	6-14-21	
1,2,3-Trichloropropane	ND	0.00087	EPA 8260D	6-14-21	6-14-21	
n-Propylbenzene	ND	0.00087	EPA 8260D	6-14-21	6-14-21	
2-Chlorotoluene	ND	0.00087	EPA 8260D	6-14-21	6-14-21	
4-Chlorotoluene	ND	0.00087	EPA 8260D	6-14-21	6-14-21	
1,3,5-Trimethylbenzene	ND	0.00087	EPA 8260D	6-14-21	6-14-21	
tert-Butylbenzene	ND	0.00087	EPA 8260D	6-14-21	6-14-21	
1,2,4-Trimethylbenzene	ND	0.00087	EPA 8260D	6-14-21	6-14-21	
sec-Butylbenzene	ND	0.00087	EPA 8260D	6-14-21	6-14-21	
1,3-Dichlorobenzene	ND	0.00087	EPA 8260D	6-14-21	6-14-21	
p-Isopropyltoluene	ND	0.00087	EPA 8260D	6-14-21	6-14-21	
1,4-Dichlorobenzene	ND	0.00087	EPA 8260D	6-14-21	6-14-21	
1,2-Dichlorobenzene	ND	0.00087	EPA 8260D	6-14-21	6-14-21	
n-Butylbenzene	ND	0.00087	EPA 8260D	6-14-21	6-14-21	
1,2-Dibromo-3-chloropropane	ND	0.0044	EPA 8260D	6-14-21	6-14-21	
1,2,4-Trichlorobenzene	ND	0.00087	EPA 8260D	6-14-21	6-14-21	
Hexachlorobutadiene	ND	0.0044	EPA 8260D	6-14-21	6-14-21	
Naphthalene	ND	0.0044	EPA 8260D	6-14-21	6-14-21	
1,2,3-Trichlorobenzene	ND	0.00087	EPA 8260D	6-14-21	6-14-21	
Surrogate:	*Percent Recovery*	*Control Limits*				
Dibromofluoromethane	*100*	*74-131*				
Toluene-d8	*100*	*78-128*				
4-Bromofluorobenzene	*101*	*71-130*				

This report pertains to the samples analyzed in accordance with the chain of custody, and is intended only for the use of the individual or company to whom it is addressed.

Date of Report: June 15, 2021
Samples Submitted: June 11, 2021
Laboratory Reference: 2106-107
Project: 11-05150-003

VOLATILE ORGANICS EPA 8260D
page 1 of 2

Matrix: Soil
Units: mg/kg

Analyte	Result	PQL	Method	Date Prepared	Date Analyzed	Flags
Client ID:	**DA7SWCS7210611I**					
Laboratory ID:	06-107-02					
Dichlorodifluoromethane	ND	0.0019	EPA 8260D	6-14-21	6-14-21	
Chloromethane	ND	0.0085	EPA 8260D	6-14-21	6-14-21	
Vinyl Chloride	ND	0.0012	EPA 8260D	6-14-21	6-14-21	
Bromomethane	ND	0.0062	EPA 8260D	6-14-21	6-14-21	
Chloroethane	ND	0.0062	EPA 8260D	6-14-21	6-14-21	
Trichlorofluoromethane	ND	0.0012	EPA 8260D	6-14-21	6-14-21	
1,1-Dichloroethene	ND	0.0012	EPA 8260D	6-14-21	6-14-21	
Acetone	0.34	0.012	EPA 8260D	6-14-21	6-14-21	
Iodomethane	ND	0.0062	EPA 8260D	6-14-21	6-14-21	
Carbon Disulfide	ND	0.0012	EPA 8260D	6-14-21	6-14-21	
Methylene Chloride	ND	0.0062	EPA 8260D	6-14-21	6-14-21	
(trans) 1,2-Dichloroethene	ND	0.0012	EPA 8260D	6-14-21	6-14-21	
Methyl t-Butyl Ether	ND	0.0012	EPA 8260D	6-14-21	6-14-21	
1,1-Dichloroethane	ND	0.0012	EPA 8260D	6-14-21	6-14-21	
Vinyl Acetate	ND	0.0062	EPA 8260D	6-14-21	6-14-21	
2,2-Dichloropropane	ND	0.0012	EPA 8260D	6-14-21	6-14-21	
(cis) 1,2-Dichloroethene	ND	0.0012	EPA 8260D	6-14-21	6-14-21	
2-Butanone	0.060	0.0062	EPA 8260D	6-14-21	6-14-21	
Bromochloromethane	ND	0.0012	EPA 8260D	6-14-21	6-14-21	
Chloroform	ND	0.0012	EPA 8260D	6-14-21	6-14-21	
1,1,1-Trichloroethane	ND	0.0012	EPA 8260D	6-14-21	6-14-21	
Carbon Tetrachloride	ND	0.0012	EPA 8260D	6-14-21	6-14-21	
1,1-Dichloropropene	ND	0.0012	EPA 8260D	6-14-21	6-14-21	
Benzene	ND	0.0012	EPA 8260D	6-14-21	6-14-21	
1,2-Dichloroethane	ND	0.0012	EPA 8260D	6-14-21	6-14-21	
Trichloroethene	ND	0.0012	EPA 8260D	6-14-21	6-14-21	
1,2-Dichloropropane	ND	0.0012	EPA 8260D	6-14-21	6-14-21	
Dibromomethane	ND	0.0012	EPA 8260D	6-14-21	6-14-21	
Bromodichloromethane	ND	0.0012	EPA 8260D	6-14-21	6-14-21	
2-Chloroethyl Vinyl Ether	ND	0.0062	EPA 8260D	6-14-21	6-14-21	
(cis) 1,3-Dichloropropene	ND	0.0012	EPA 8260D	6-14-21	6-14-21	
Methyl Isobutyl Ketone	ND	0.0062	EPA 8260D	6-14-21	6-14-21	
Toluene	ND	0.0062	EPA 8260D	6-14-21	6-14-21	
(trans) 1,3-Dichloropropene	ND	0.0012	EPA 8260D	6-14-21	6-14-21	

This report pertains to the samples analyzed in accordance with the chain of custody,
and is intended only for the use of the individual or company to whom it is addressed.

Date of Report: June 15, 2021
Samples Submitted: June 11, 2021
Laboratory Reference: 2106-107
Project: 11-05150-003

VOLATILE ORGANICS EPA 8260D
page 2 of 2

Analyte	Result	PQL	Method	Date Prepared	Date Analyzed	Flags
Client ID:	**DA7SWCS7210611I**					
Laboratory ID:	06-107-02					
1,1,2-Trichloroethane	ND	0.0012	EPA 8260D	6-14-21	6-14-21	
Tetrachloroethene	ND	0.0012	EPA 8260D	6-14-21	6-14-21	
1,3-Dichloropropane	ND	0.0012	EPA 8260D	6-14-21	6-14-21	
2-Hexanone	ND	0.0062	EPA 8260D	6-14-21	6-14-21	
Dibromochloromethane	ND	0.0012	EPA 8260D	6-14-21	6-14-21	
1,2-Dibromoethane	ND	0.000062	EPA 8260D/SIM	6-14-21	6-14-21	
Chlorobenzene	ND	0.0012	EPA 8260D	6-14-21	6-14-21	
1,1,1,2-Tetrachloroethane	ND	0.0012	EPA 8260D	6-14-21	6-14-21	
Ethylbenzene	ND	0.0012	EPA 8260D	6-14-21	6-14-21	
m,p-Xylene	ND	0.0025	EPA 8260D	6-14-21	6-14-21	
o-Xylene	ND	0.0012	EPA 8260D	6-14-21	6-14-21	
Styrene	ND	0.0012	EPA 8260D	6-14-21	6-14-21	
Bromoform	ND	0.0062	EPA 8260D	6-14-21	6-14-21	
Isopropylbenzene	ND	0.0012	EPA 8260D	6-14-21	6-14-21	
Bromobenzene	ND	0.0012	EPA 8260D	6-14-21	6-14-21	
1,1,2,2-Tetrachloroethane	ND	0.0012	EPA 8260D	6-14-21	6-14-21	
1,2,3-Trichloropropane	ND	0.0012	EPA 8260D	6-14-21	6-14-21	
n-Propylbenzene	ND	0.0012	EPA 8260D	6-14-21	6-14-21	
2-Chlorotoluene	ND	0.0012	EPA 8260D	6-14-21	6-14-21	
4-Chlorotoluene	ND	0.0012	EPA 8260D	6-14-21	6-14-21	
1,3,5-Trimethylbenzene	ND	0.0012	EPA 8260D	6-14-21	6-14-21	
tert-Butylbenzene	ND	0.0012	EPA 8260D	6-14-21	6-14-21	
1,2,4-Trimethylbenzene	ND	0.0012	EPA 8260D	6-14-21	6-14-21	
sec-Butylbenzene	ND	0.0012	EPA 8260D	6-14-21	6-14-21	
1,3-Dichlorobenzene	ND	0.0012	EPA 8260D	6-14-21	6-14-21	
p-Isopropyltoluene	0.022	0.0012	EPA 8260D	6-14-21	6-14-21	
1,4-Dichlorobenzene	ND	0.0012	EPA 8260D	6-14-21	6-14-21	
1,2-Dichlorobenzene	ND	0.0012	EPA 8260D	6-14-21	6-14-21	
n-Butylbenzene	ND	0.0012	EPA 8260D	6-14-21	6-14-21	
1,2-Dibromo-3-chloropropane	ND	0.0062	EPA 8260D	6-14-21	6-14-21	
1,2,4-Trichlorobenzene	ND	0.0012	EPA 8260D	6-14-21	6-14-21	
Hexachlorobutadiene	ND	0.0062	EPA 8260D	6-14-21	6-14-21	
Naphthalene	ND	0.0062	EPA 8260D	6-14-21	6-14-21	
1,2,3-Trichlorobenzene	ND	0.0012	EPA 8260D	6-14-21	6-14-21	
Surrogate:	*Percent Recovery*	*Control Limits*				
Dibromofluoromethane	*97*	*74-131*				
Toluene-d8	*96*	*78-128*				
4-Bromofluorobenzene	*97*	*71-130*				

This report pertains to the samples analyzed in accordance with the chain of custody, and is intended only for the use of the individual or company to whom it is addressed.

Date of Report: June 15, 2021
Samples Submitted: June 11, 2021
Laboratory Reference: 2106-107
Project: 11-05150-003

VOLATILE ORGANICS EPA 8260D
QUALITY CONTROL
page 1 of 2

Matrix: Soil
Units: mg/kg

Analyte	Result	PQL	Method	Date Prepared	Date Analyzed	Flags
METHOD BLANK						
Laboratory ID:	MB0614S1					
Dichlorodifluoromethane	ND	0.0015	EPA 8260D	6-14-21	6-14-21	
Chloromethane	ND	0.0069	EPA 8260D	6-14-21	6-14-21	
Vinyl Chloride	ND	0.0010	EPA 8260D	6-14-21	6-14-21	
Bromomethane	ND	0.0050	EPA 8260D	6-14-21	6-14-21	
Chloroethane	ND	0.0050	EPA 8260D	6-14-21	6-14-21	
Trichlorofluoromethane	ND	0.0010	EPA 8260D	6-14-21	6-14-21	
1,1-Dichloroethene	ND	0.0010	EPA 8260D	6-14-21	6-14-21	
Acetone	ND	0.010	EPA 8260D	6-14-21	6-14-21	
Iodomethane	ND	0.0050	EPA 8260D	6-14-21	6-14-21	
Carbon Disulfide	ND	0.0010	EPA 8260D	6-14-21	6-14-21	
Methylene Chloride	ND	0.0050	EPA 8260D	6-14-21	6-14-21	
(trans) 1,2-Dichloroethene	ND	0.0010	EPA 8260D	6-14-21	6-14-21	
Methyl t-Butyl Ether	ND	0.0010	EPA 8260D	6-14-21	6-14-21	
1,1-Dichloroethane	ND	0.0010	EPA 8260D	6-14-21	6-14-21	
Vinyl Acetate	ND	0.0050	EPA 8260D	6-14-21	6-14-21	
2,2-Dichloropropane	ND	0.0010	EPA 8260D	6-14-21	6-14-21	
(cis) 1,2-Dichloroethene	ND	0.0010	EPA 8260D	6-14-21	6-14-21	
2-Butanone	ND	0.0050	EPA 8260D	6-14-21	6-14-21	
Bromochloromethane	ND	0.0010	EPA 8260D	6-14-21	6-14-21	
Chloroform	ND	0.0010	EPA 8260D	6-14-21	6-14-21	
1,1,1-Trichloroethane	ND	0.0010	EPA 8260D	6-14-21	6-14-21	
Carbon Tetrachloride	ND	0.0010	EPA 8260D	6-14-21	6-14-21	
1,1-Dichloropropene	ND	0.0010	EPA 8260D	6-14-21	6-14-21	
Benzene	ND	0.0010	EPA 8260D	6-14-21	6-14-21	
1,2-Dichloroethane	ND	0.0010	EPA 8260D	6-14-21	6-14-21	
Trichloroethene	ND	0.0010	EPA 8260D	6-14-21	6-14-21	
1,2-Dichloropropane	ND	0.0010	EPA 8260D	6-14-21	6-14-21	
Dibromomethane	ND	0.0010	EPA 8260D	6-14-21	6-14-21	
Bromodichloromethane	ND	0.0010	EPA 8260D	6-14-21	6-14-21	
2-Chloroethyl Vinyl Ether	ND	0.0050	EPA 8260D	6-14-21	6-14-21	
(cis) 1,3-Dichloropropene	ND	0.0010	EPA 8260D	6-14-21	6-14-21	
Methyl Isobutyl Ketone	ND	0.0050	EPA 8260D	6-14-21	6-14-21	
Toluene	ND	0.0050	EPA 8260D	6-14-21	6-14-21	
(trans) 1,3-Dichloropropene	ND	0.0010	EPA 8260D	6-14-21	6-14-21	

This report pertains to the samples analyzed in accordance with the chain of custody,
and is intended only for the use of the individual or company to whom it is addressed.

Date of Report: June 15, 2021
Samples Submitted: June 11, 2021
Laboratory Reference: 2106-107
Project: 11-05150-003

VOLATILE ORGANICS EPA 8260D
QUALITY CONTROL
page 2 of 2

Analyte	Result	PQL	Method	Date Prepared	Date Analyzed	Flags
METHOD BLANK						
Laboratory ID:	MB0614S1					
1,1,2-Trichloroethane	ND	0.0010	EPA 8260D	6-14-21	6-14-21	
Tetrachloroethene	ND	0.0010	EPA 8260D	6-14-21	6-14-21	
1,3-Dichloropropane	ND	0.0010	EPA 8260D	6-14-21	6-14-21	
2-Hexanone	ND	0.0050	EPA 8260D	6-14-21	6-14-21	
Dibromochloromethane	ND	0.0010	EPA 8260D	6-14-21	6-14-21	
1,2-Dibromoethane	ND	0.000050	EPA 8260D/SIM	6-14-21	6-14-21	
Chlorobenzene	ND	0.0010	EPA 8260D	6-14-21	6-14-21	
1,1,1,2-Tetrachloroethane	ND	0.0010	EPA 8260D	6-14-21	6-14-21	
Ethylbenzene	ND	0.0010	EPA 8260D	6-14-21	6-14-21	
m,p-Xylene	ND	0.0020	EPA 8260D	6-14-21	6-14-21	
o-Xylene	ND	0.0010	EPA 8260D	6-14-21	6-14-21	
Styrene	ND	0.0010	EPA 8260D	6-14-21	6-14-21	
Bromoform	ND	0.0050	EPA 8260D	6-14-21	6-14-21	
Isopropylbenzene	ND	0.0010	EPA 8260D	6-14-21	6-14-21	
Bromobenzene	ND	0.0010	EPA 8260D	6-14-21	6-14-21	
1,1,2,2-Tetrachloroethane	ND	0.0010	EPA 8260D	6-14-21	6-14-21	
1,2,3-Trichloropropane	ND	0.0010	EPA 8260D	6-14-21	6-14-21	
n-Propylbenzene	ND	0.0010	EPA 8260D	6-14-21	6-14-21	
2-Chlorotoluene	ND	0.0010	EPA 8260D	6-14-21	6-14-21	
4-Chlorotoluene	ND	0.0010	EPA 8260D	6-14-21	6-14-21	
1,3,5-Trimethylbenzene	ND	0.0010	EPA 8260D	6-14-21	6-14-21	
tert-Butylbenzene	ND	0.0010	EPA 8260D	6-14-21	6-14-21	
1,2,4-Trimethylbenzene	ND	0.0010	EPA 8260D	6-14-21	6-14-21	
sec-Butylbenzene	ND	0.0010	EPA 8260D	6-14-21	6-14-21	
1,3-Dichlorobenzene	ND	0.0010	EPA 8260D	6-14-21	6-14-21	
p-Isopropyltoluene	ND	0.0010	EPA 8260D	6-14-21	6-14-21	
1,4-Dichlorobenzene	ND	0.0010	EPA 8260D	6-14-21	6-14-21	
1,2-Dichlorobenzene	ND	0.0010	EPA 8260D	6-14-21	6-14-21	
n-Butylbenzene	ND	0.0010	EPA 8260D	6-14-21	6-14-21	
1,2-Dibromo-3-chloropropane	ND	0.0050	EPA 8260D	6-14-21	6-14-21	
1,2,4-Trichlorobenzene	ND	0.0010	EPA 8260D	6-14-21	6-14-21	
Hexachlorobutadiene	ND	0.0050	EPA 8260D	6-14-21	6-14-21	
Naphthalene	ND	0.0050	EPA 8260D	6-14-21	6-14-21	
1,2,3-Trichlorobenzene	ND	0.0010	EPA 8260D	6-14-21	6-14-21	
Surrogate:	*Percent Recovery*	*Control Limits*				
Dibromofluoromethane	*98*	*74-131*				
Toluene-d8	*98*	*78-128*				
4-Bromofluorobenzene	*99*	*71-130*				

This report pertains to the samples analyzed in accordance with the chain of custody, and is intended only for the use of the individual or company to whom it is addressed.

Date of Report: June 15, 2021
Samples Submitted: June 11, 2021
Laboratory Reference: 2106-107
Project: 11-05150-003

VOLATILE ORGANICS EPA 8260D
QUALITY CONTROL

Matrix: Soil
Units: mg/kg

Analyte	Result		Spike Level		Percent Recovery		Recovery Limits	RPD	RPD Limit	Flags
SPIKE BLANKS										
Laboratory ID:	SB0614S1									
	SB	SBD	SB	SBD	SB	SBD				
1,1-Dichloroethene	**0.0465**	**0.0481**	0.0500	0.0500	93	96	71-131	3	19	
Benzene	**0.0432**	**0.0439**	0.0500	0.0500	86	88	73-124	2	18	
Trichloroethene	**0.0476**	**0.0493**	0.0500	0.0500	95	99	79-130	4	18	
Toluene	**0.0459**	**0.0470**	0.0500	0.0500	92	94	76-123	2	18	
Chlorobenzene	**0.0471**	**0.0480**	0.0500	0.0500	94	96	78-122	2	18	
Surrogate:										
Dibromofluoromethane					*95*	*96*	*74-131*			
Toluene-d8					*98*	*98*	*78-128*			
4-Bromofluorobenzene					*110*	*110*	*71-130*			

This report pertains to the samples analyzed in accordance with the chain of custody, and is intended only for the use of the individual or company to whom it is addressed.

Date of Report: June 15, 2021
Samples Submitted: June 11, 2021
Laboratory Reference: 2106-107
Project: 11-05150-003

VOLATILE ORGANICS EPA 8260D
page 1 of 2

Matrix: Water
Units: ug/L

Analyte	Result	PQL	Method	Date Prepared	Date Analyzed	Flags
Client ID:	**VTRP210611I - trip blank**					
Laboratory ID:	06-107-03					
Dichlorodifluoromethane	ND	0.20	EPA 8260D	6-14-21	6-14-21	
Chloromethane	ND	2.3	EPA 8260D	6-14-21	6-14-21	
Vinyl Chloride	ND	0.20	EPA 8260D	6-14-21	6-14-21	
Bromomethane	ND	0.51	EPA 8260D	6-14-21	6-14-21	
Chloroethane	ND	1.0	EPA 8260D	6-14-21	6-14-21	
Trichlorofluoromethane	ND	0.20	EPA 8260D	6-14-21	6-14-21	
1,1-Dichloroethene	ND	0.20	EPA 8260D	6-14-21	6-14-21	
Acetone	ND	5.0	EPA 8260D	6-14-21	6-14-21	
Iodomethane	ND	1.4	EPA 8260D	6-14-21	6-14-21	
Carbon Disulfide	ND	0.20	EPA 8260D	6-14-21	6-14-21	
Methylene Chloride	ND	1.0	EPA 8260D	6-14-21	6-14-21	
(trans) 1,2-Dichloroethene	ND	0.20	EPA 8260D	6-14-21	6-14-21	
Methyl t-Butyl Ether	ND	0.20	EPA 8260D	6-14-21	6-14-21	
1,1-Dichloroethane	ND	0.20	EPA 8260D	6-14-21	6-14-21	
Vinyl Acetate	ND	1.0	EPA 8260D	6-14-21	6-14-21	
2,2-Dichloropropane	ND	0.20	EPA 8260D	6-14-21	6-14-21	
(cis) 1,2-Dichloroethene	ND	0.20	EPA 8260D	6-14-21	6-14-21	
2-Butanone	ND	5.0	EPA 8260D	6-14-21	6-14-21	
Bromochloromethane	ND	0.20	EPA 8260D	6-14-21	6-14-21	
Chloroform	ND	0.20	EPA 8260D	6-14-21	6-14-21	
1,1,1-Trichloroethane	ND	0.20	EPA 8260D	6-14-21	6-14-21	
Carbon Tetrachloride	ND	0.20	EPA 8260D	6-14-21	6-14-21	
1,1-Dichloropropene	ND	0.20	EPA 8260D	6-14-21	6-14-21	
Benzene	ND	0.20	EPA 8260D	6-14-21	6-14-21	
1,2-Dichloroethane	ND	0.20	EPA 8260D	6-14-21	6-14-21	
Trichloroethene	ND	0.20	EPA 8260D	6-14-21	6-14-21	
1,2-Dichloropropane	ND	0.20	EPA 8260D	6-14-21	6-14-21	
Dibromomethane	ND	0.20	EPA 8260D	6-14-21	6-14-21	
Bromodichloromethane	ND	0.20	EPA 8260D	6-14-21	6-14-21	
2-Chloroethyl Vinyl Ether	ND	47	EPA 8260D	6-14-21	6-14-21	
(cis) 1,3-Dichloropropene	ND	0.20	EPA 8260D	6-14-21	6-14-21	
Methyl Isobutyl Ketone	ND	2.0	EPA 8260D	6-14-21	6-14-21	
Toluene	ND	1.0	EPA 8260D	6-14-21	6-14-21	
(trans) 1,3-Dichloropropene	ND	0.20	EPA 8260D	6-14-21	6-14-21	

This report pertains to the samples analyzed in accordance with the chain of custody, and is intended only for the use of the individual or company to whom it is addressed.

Date of Report: June 15, 2021
Samples Submitted: June 11, 2021
Laboratory Reference: 2106-107
Project: 11-05150-003

VOLATILE ORGANICS EPA 8260D
page 2 of 2

Analyte	Result	PQL	Method	Date Prepared	Date Analyzed	Flags
Client ID:	**VTRP210611I - trip blank**					
Laboratory ID:	06-107-03					
1,1,2-Trichloroethane	ND	0.20	EPA 8260D	6-14-21	6-14-21	
Tetrachloroethene	ND	0.20	EPA 8260D	6-14-21	6-14-21	
1,3-Dichloropropane	ND	0.20	EPA 8260D	6-14-21	6-14-21	
2-Hexanone	ND	2.0	EPA 8260D	6-14-21	6-14-21	
Dibromochloromethane	ND	0.20	EPA 8260D	6-14-21	6-14-21	
1,2-Dibromoethane	ND	0.20	EPA 8260D	6-14-21	6-14-21	
Chlorobenzene	ND	0.20	EPA 8260D	6-14-21	6-14-21	
1,1,1,2-Tetrachloroethane	ND	0.20	EPA 8260D	6-14-21	6-14-21	
Ethylbenzene	ND	0.20	EPA 8260D	6-14-21	6-14-21	
m,p-Xylene	ND	0.40	EPA 8260D	6-14-21	6-14-21	
o-Xylene	ND	0.20	EPA 8260D	6-14-21	6-14-21	
Styrene	ND	0.20	EPA 8260D	6-14-21	6-14-21	
Bromoform	ND	1.0	EPA 8260D	6-14-21	6-14-21	
Isopropylbenzene	ND	0.20	EPA 8260D	6-14-21	6-14-21	
Bromobenzene	ND	0.20	EPA 8260D	6-14-21	6-14-21	
1,1,2,2-Tetrachloroethane	ND	0.20	EPA 8260D	6-14-21	6-14-21	
1,2,3-Trichloropropane	ND	0.20	EPA 8260D	6-14-21	6-14-21	
n-Propylbenzene	ND	0.20	EPA 8260D	6-14-21	6-14-21	
2-Chlorotoluene	ND	0.20	EPA 8260D	6-14-21	6-14-21	
4-Chlorotoluene	ND	0.20	EPA 8260D	6-14-21	6-14-21	
1,3,5-Trimethylbenzene	ND	0.20	EPA 8260D	6-14-21	6-14-21	
tert-Butylbenzene	ND	0.20	EPA 8260D	6-14-21	6-14-21	
1,2,4-Trimethylbenzene	ND	0.20	EPA 8260D	6-14-21	6-14-21	
sec-Butylbenzene	ND	0.20	EPA 8260D	6-14-21	6-14-21	
1,3-Dichlorobenzene	ND	0.20	EPA 8260D	6-14-21	6-14-21	
p-Isopropyltoluene	ND	0.20	EPA 8260D	6-14-21	6-14-21	
1,4-Dichlorobenzene	ND	0.20	EPA 8260D	6-14-21	6-14-21	
1,2-Dichlorobenzene	ND	0.20	EPA 8260D	6-14-21	6-14-21	
n-Butylbenzene	ND	0.20	EPA 8260D	6-14-21	6-14-21	
1,2-Dibromo-3-chloropropane	ND	1.0	EPA 8260D	6-14-21	6-14-21	
1,2,4-Trichlorobenzene	ND	0.20	EPA 8260D	6-14-21	6-14-21	
Hexachlorobutadiene	ND	1.0	EPA 8260D	6-14-21	6-14-21	
Naphthalene	ND	1.0	EPA 8260D	6-14-21	6-14-21	
1,2,3-Trichlorobenzene	ND	0.20	EPA 8260D	6-14-21	6-14-21	
Surrogate:	*Percent Recovery*	*Control Limits*				
Dibromofluoromethane	*93*	*75-127*				
Toluene-d8	*96*	*80-127*				
4-Bromofluorobenzene	*94*	*78-125*				

This report pertains to the samples analyzed in accordance with the chain of custody, and is intended only for the use of the individual or company to whom it is addressed.

Date of Report: June 15, 2021
Samples Submitted: June 11, 2021
Laboratory Reference: 2106-107
Project: 11-05150-003

VOLATILE ORGANICS EPA 8260D
QUALITY CONTROL
page 1 of 2

Matrix: Water
Units: ug/L

Analyte	Result	PQL	Method	Date Prepared	Date Analyzed	Flags
METHOD BLANK						
Laboratory ID:	MB0614W1					
Dichlorodifluoromethane	ND	0.20	EPA 8260D	6-14-21	6-14-21	
Chloromethane	ND	2.3	EPA 8260D	6-14-21	6-14-21	
Vinyl Chloride	ND	0.20	EPA 8260D	6-14-21	6-14-21	
Bromomethane	ND	0.51	EPA 8260D	6-14-21	6-14-21	
Chloroethane	ND	1.0	EPA 8260D	6-14-21	6-14-21	
Trichlorofluoromethane	ND	0.20	EPA 8260D	6-14-21	6-14-21	
1,1-Dichloroethene	ND	0.20	EPA 8260D	6-14-21	6-14-21	
Acetone	ND	5.0	EPA 8260D	6-14-21	6-14-21	
Iodomethane	ND	1.4	EPA 8260D	6-14-21	6-14-21	
Carbon Disulfide	ND	0.20	EPA 8260D	6-14-21	6-14-21	
Methylene Chloride	ND	1.0	EPA 8260D	6-14-21	6-14-21	
(trans) 1,2-Dichloroethene	ND	0.20	EPA 8260D	6-14-21	6-14-21	
Methyl t-Butyl Ether	ND	0.20	EPA 8260D	6-14-21	6-14-21	
1,1-Dichloroethane	ND	0.20	EPA 8260D	6-14-21	6-14-21	
Vinyl Acetate	ND	1.0	EPA 8260D	6-14-21	6-14-21	
2,2-Dichloropropane	ND	0.20	EPA 8260D	6-14-21	6-14-21	
(cis) 1,2-Dichloroethene	ND	0.20	EPA 8260D	6-14-21	6-14-21	
2-Butanone	ND	5.0	EPA 8260D	6-14-21	6-14-21	
Bromochloromethane	ND	0.20	EPA 8260D	6-14-21	6-14-21	
Chloroform	ND	0.20	EPA 8260D	6-14-21	6-14-21	
1,1,1-Trichloroethane	ND	0.20	EPA 8260D	6-14-21	6-14-21	
Carbon Tetrachloride	ND	0.20	EPA 8260D	6-14-21	6-14-21	
1,1-Dichloropropene	ND	0.20	EPA 8260D	6-14-21	6-14-21	
Benzene	ND	0.20	EPA 8260D	6-14-21	6-14-21	
1,2-Dichloroethane	ND	0.20	EPA 8260D	6-14-21	6-14-21	
Trichloroethene	ND	0.20	EPA 8260D	6-14-21	6-14-21	
1,2-Dichloropropane	ND	0.20	EPA 8260D	6-14-21	6-14-21	
Dibromomethane	ND	0.20	EPA 8260D	6-14-21	6-14-21	
Bromodichloromethane	ND	0.20	EPA 8260D	6-14-21	6-14-21	
2-Chloroethyl Vinyl Ether	ND	47	EPA 8260D	6-14-21	6-14-21	
(cis) 1,3-Dichloropropene	ND	0.20	EPA 8260D	6-14-21	6-14-21	
Methyl Isobutyl Ketone	ND	2.0	EPA 8260D	6-14-21	6-14-21	
Toluene	ND	1.0	EPA 8260D	6-14-21	6-14-21	
(trans) 1,3-Dichloropropene	ND	0.20	EPA 8260D	6-14-21	6-14-21	

This report pertains to the samples analyzed in accordance with the chain of custody,
and is intended only for the use of the individual or company to whom it is addressed.

Date of Report: June 15, 2021
Samples Submitted: June 11, 2021
Laboratory Reference: 2106-107
Project: 11-05150-003

VOLATILE ORGANICS EPA 8260D
QUALITY CONTROL
page 2 of 2

Analyte	Result	PQL	Method	Date Prepared	Date Analyzed	Flags
METHOD BLANK						
Laboratory ID:	MB0614W1					
1,1,2-Trichloroethane	ND	0.20	EPA 8260D	6-14-21	6-14-21	
Tetrachloroethene	ND	0.20	EPA 8260D	6-14-21	6-14-21	
1,3-Dichloropropane	ND	0.20	EPA 8260D	6-14-21	6-14-21	
2-Hexanone	ND	2.0	EPA 8260D	6-14-21	6-14-21	
Dibromochloromethane	ND	0.20	EPA 8260D	6-14-21	6-14-21	
1,2-Dibromoethane	ND	0.20	EPA 8260D	6-14-21	6-14-21	
Chlorobenzene	ND	0.20	EPA 8260D	6-14-21	6-14-21	
1,1,1,2-Tetrachloroethane	ND	0.20	EPA 8260D	6-14-21	6-14-21	
Ethylbenzene	ND	0.20	EPA 8260D	6-14-21	6-14-21	
m,p-Xylene	ND	0.40	EPA 8260D	6-14-21	6-14-21	
o-Xylene	ND	0.20	EPA 8260D	6-14-21	6-14-21	
Styrene	ND	0.20	EPA 8260D	6-14-21	6-14-21	
Bromoform	ND	1.0	EPA 8260D	6-14-21	6-14-21	
Isopropylbenzene	ND	0.20	EPA 8260D	6-14-21	6-14-21	
Bromobenzene	ND	0.20	EPA 8260D	6-14-21	6-14-21	
1,1,2,2-Tetrachloroethane	ND	0.20	EPA 8260D	6-14-21	6-14-21	
1,2,3-Trichloropropane	ND	0.20	EPA 8260D	6-14-21	6-14-21	
n-Propylbenzene	ND	0.20	EPA 8260D	6-14-21	6-14-21	
2-Chlorotoluene	ND	0.20	EPA 8260D	6-14-21	6-14-21	
4-Chlorotoluene	ND	0.20	EPA 8260D	6-14-21	6-14-21	
1,3,5-Trimethylbenzene	ND	0.20	EPA 8260D	6-14-21	6-14-21	
tert-Butylbenzene	ND	0.20	EPA 8260D	6-14-21	6-14-21	
1,2,4-Trimethylbenzene	ND	0.20	EPA 8260D	6-14-21	6-14-21	
sec-Butylbenzene	ND	0.20	EPA 8260D	6-14-21	6-14-21	
1,3-Dichlorobenzene	ND	0.20	EPA 8260D	6-14-21	6-14-21	
p-Isopropyltoluene	ND	0.20	EPA 8260D	6-14-21	6-14-21	
1,4-Dichlorobenzene	ND	0.20	EPA 8260D	6-14-21	6-14-21	
1,2-Dichlorobenzene	ND	0.20	EPA 8260D	6-14-21	6-14-21	
n-Butylbenzene	ND	0.20	EPA 8260D	6-14-21	6-14-21	
1,2-Dibromo-3-chloropropane	ND	1.0	EPA 8260D	6-14-21	6-14-21	
1,2,4-Trichlorobenzene	ND	0.20	EPA 8260D	6-14-21	6-14-21	
Hexachlorobutadiene	ND	1.0	EPA 8260D	6-14-21	6-14-21	
Naphthalene	ND	1.0	EPA 8260D	6-14-21	6-14-21	
1,2,3-Trichlorobenzene	ND	0.20	EPA 8260D	6-14-21	6-14-21	
Surrogate:	*Percent Recovery*	*Control Limits*				
Dibromofluoromethane	*93*	*75-127*				
Toluene-d8	*96*	*80-127*				
4-Bromofluorobenzene	*93*	*78-125*				

This report pertains to the samples analyzed in accordance with the chain of custody, and is intended only for the use of the individual or company to whom it is addressed.

Date of Report: June 15, 2021
Samples Submitted: June 11, 2021
Laboratory Reference: 2106-107
Project: 11-05150-003

VOLATILE ORGANICS EPA 8260D
QUALITY CONTROL

Matrix: Water
Units: ug/L

Analyte	Result		Spike Level		Percent Recovery		Recovery Limits	RPD	RPD Limit	Flags
SPIKE BLANKS										
Laboratory ID:	SB0614W1									
	SB	SBD	SB	SBD	SB	SBD				
1,1-Dichloroethene	**9.74**	**9.88**	10.0	10.0	97	99	78-124	1	19	
Benzene	**8.91**	**8.98**	10.0	10.0	89	90	80-119	1	16	
Trichloroethene	**10.2**	**10.1**	10.0	10.0	102	101	80-121	1	18	
Toluene	**9.63**	**9.65**	10.0	10.0	96	97	80-117	0	18	
Chlorobenzene	**9.92**	**9.93**	10.0	10.0	99	99	80-117	0	17	
Surrogate:										
Dibromofluoromethane					*91*	*90*	*75-127*			
Toluene-d8					*98*	*97*	*80-127*			
4-Bromofluorobenzene					*99*	*100*	*78-125*			

This report pertains to the samples analyzed in accordance with the chain of custody, and is intended only for the use of the individual or company to whom it is addressed.

Date of Report: June 15, 2021
Samples Submitted: June 11, 2021
Laboratory Reference: 2106-107
Project: 11-05150-003

SEMIVOLATILE ORGANICS EPA 8270E/SIM
page 1 of 2

Matrix: Soil
Units: mg/Kg

Analyte	Result	PQL	Method	Date Prepared	Date Analyzed	Flags
Client ID:	**DA7SWCS6210611I**					
Laboratory ID:	06-107-01					
n-Nitrosodimethylamine	**ND**	0.011	EPA 8270E	6-14-21	6-14-21	
Pyridine	**ND**	0.22	EPA 8270E	6-14-21	6-14-21	
Phenol	**ND**	0.022	EPA 8270E	6-14-21	6-14-21	
Aniline	**ND**	0.11	EPA 8270E	6-14-21	6-14-21	
bis(2-Chloroethyl)ether	**ND**	0.011	EPA 8270E	6-14-21	6-14-21	
2-Chlorophenol	**ND**	0.022	EPA 8270E	6-14-21	6-14-21	
1,3-Dichlorobenzene	**ND**	0.022	EPA 8270E	6-14-21	6-14-21	
1,4-Dichlorobenzene	**ND**	0.022	EPA 8270E	6-14-21	6-14-21	
Benzyl alcohol	**ND**	0.022	EPA 8270E	6-14-21	6-14-21	
1,2-Dichlorobenzene	**ND**	0.022	EPA 8270E	6-14-21	6-14-21	
2-Methylphenol (o-Cresol)	**ND**	0.022	EPA 8270E	6-14-21	6-14-21	
bis(2-Chloroisopropyl)ether	**ND**	0.022	EPA 8270E	6-14-21	6-14-21	
(3+4)-Methylphenol (m,p-Cresol)	**ND**	0.022	EPA 8270E	6-14-21	6-14-21	
n-Nitroso-di-n-propylamine	**ND**	0.011	EPA 8270E	6-14-21	6-14-21	
Hexachloroethane	**ND**	0.022	EPA 8270E	6-14-21	6-14-21	
Nitrobenzene	**ND**	0.022	EPA 8270E	6-14-21	6-14-21	
Isophorone	**ND**	0.022	EPA 8270E	6-14-21	6-14-21	
2-Nitrophenol	**ND**	0.022	EPA 8270E	6-14-21	6-14-21	
2,4-Dimethylphenol	**ND**	0.022	EPA 8270E	6-14-21	6-14-21	
bis(2-Chloroethoxy)methane	**ND**	0.022	EPA 8270E	6-14-21	6-14-21	
2,4-Dichlorophenol	**ND**	0.022	EPA 8270E	6-14-21	6-14-21	
1,2,4-Trichlorobenzene	**ND**	0.022	EPA 8270E	6-14-21	6-14-21	
Naphthalene	**ND**	0.0044	EPA 8270E/SIM	6-14-21	6-14-21	
4-Chloroaniline	**ND**	0.011	EPA 8270E	6-14-21	6-14-21	
Hexachlorobutadiene	**ND**	0.022	EPA 8270E	6-14-21	6-14-21	
4-Chloro-3-methylphenol	**ND**	0.022	EPA 8270E	6-14-21	6-14-21	
2-Methylnaphthalene	**ND**	0.0044	EPA 8270E/SIM	6-14-21	6-14-21	
1-Methylnaphthalene	**ND**	0.0044	EPA 8270E/SIM	6-14-21	6-14-21	
Hexachlorocyclopentadiene	**ND**	0.022	EPA 8270E	6-14-21	6-14-21	
2,4,6-Trichlorophenol	**ND**	0.022	EPA 8270E	6-14-21	6-14-21	
2,3-Dichloroaniline	**ND**	0.022	EPA 8270E	6-14-21	6-14-21	
2,4,5-Trichlorophenol	**ND**	0.022	EPA 8270E	6-14-21	6-14-21	
2-Chloronaphthalene	**ND**	0.022	EPA 8270E	6-14-21	6-14-21	
2-Nitroaniline	**ND**	0.022	EPA 8270E	6-14-21	6-14-21	
1,4-Dinitrobenzene	**ND**	0.022	EPA 8270E	6-14-21	6-14-21	
Dimethylphthalate	**ND**	0.022	EPA 8270E	6-14-21	6-14-21	
1,3-Dinitrobenzene	**ND**	0.022	EPA 8270E	6-14-21	6-14-21	
2,6-Dinitrotoluene	**ND**	0.011	EPA 8270E	6-14-21	6-14-21	
1,2-Dinitrobenzene	**ND**	0.022	EPA 8270E	6-14-21	6-14-21	
Acenaphthylene	**ND**	0.0044	EPA 8270E/SIM	6-14-21	6-14-21	
3-Nitroaniline	**ND**	0.022	EPA 8270E	6-14-21	6-14-21	

This report pertains to the samples analyzed in accordance with the chain of custody, and is intended only for the use of the individual or company to whom it is addressed.

Date of Report: June 15, 2021
Samples Submitted: June 11, 2021
Laboratory Reference: 2106-107
Project: 11-05150-003

SEMIVOLATILE ORGANICS EPA 8270E/SIM
page 2 of 2

Analyte	Result	PQL	Method	Date Prepared	Date Analyzed	Flags
Client ID:	**DA7SWCS6210611I**					
Laboratory ID:	06-107-01					
2,4-Dinitrophenol	**ND**	0.11	EPA 8270E	6-14-21	6-14-21	
Acenaphthene	**ND**	0.0044	EPA 8270E/SIM	6-14-21	6-14-21	
4-Nitrophenol	**ND**	0.022	EPA 8270E	6-14-21	6-14-21	
2,4-Dinitrotoluene	**ND**	0.011	EPA 8270E	6-14-21	6-14-21	
Dibenzofuran	**ND**	0.022	EPA 8270E	6-14-21	6-14-21	
2,3,5,6-Tetrachlorophenol	**ND**	0.022	EPA 8270E	6-14-21	6-14-21	
2,3,4,6-Tetrachlorophenol	**ND**	0.022	EPA 8270E	6-14-21	6-14-21	
Diethylphthalate	**ND**	0.11	EPA 8270E	6-14-21	6-14-21	
4-Chlorophenyl-phenylether	**ND**	0.022	EPA 8270E	6-14-21	6-14-21	
4-Nitroaniline	**ND**	0.022	EPA 8270E	6-14-21	6-14-21	
Fluorene	**ND**	0.0044	EPA 8270E/SIM	6-14-21	6-14-21	
4,6-Dinitro-2-methylphenol	**ND**	0.11	EPA 8270E	6-14-21	6-14-21	
n-Nitrosodiphenylamine	**ND**	0.022	EPA 8270E	6-14-21	6-14-21	
1,2-Diphenylhydrazine	**ND**	0.022	EPA 8270E	6-14-21	6-14-21	
4-Bromophenyl-phenylether	**ND**	0.022	EPA 8270E	6-14-21	6-14-21	
Hexachlorobenzene	**ND**	0.022	EPA 8270E	6-14-21	6-14-21	
Pentachlorophenol	**ND**	0.044	EPA 8270E	6-14-21	6-14-21	
Phenanthrene	**ND**	0.0044	EPA 8270E/SIM	6-14-21	6-14-21	
Anthracene	**ND**	0.0044	EPA 8270E/SIM	6-14-21	6-14-21	
Carbazole	**ND**	0.022	EPA 8270E	6-14-21	6-14-21	
Di-n-butylphthalate	**ND**	0.11	EPA 8270E	6-14-21	6-14-21	
Fluoranthene	**ND**	0.0044	EPA 8270E/SIM	6-14-21	6-14-21	
Pyrene	**ND**	0.0044	EPA 8270E/SIM	6-14-21	6-14-21	
Butylbenzylphthalate	**ND**	0.11	EPA 8270E	6-14-21	6-14-21	
bis-2-Ethylhexyladipate	**ND**	0.11	EPA 8270E	6-14-21	6-14-21	
3,3'-Dichlorobenzidine	**ND**	0.011	EPA 8270E	6-14-21	6-14-21	
Benzo[a]anthracene	**ND**	0.0044	EPA 8270E/SIM	6-14-21	6-14-21	
Chrysene	**ND**	0.0044	EPA 8270E/SIM	6-14-21	6-14-21	
bis(2-Ethylhexyl)phthalate	**ND**	0.11	EPA 8270E	6-14-21	6-14-21	
Di-n-octylphthalate	**ND**	0.11	EPA 8270E	6-14-21	6-14-21	
Benzo[b]fluoranthene	**ND**	0.0044	EPA 8270E/SIM	6-14-21	6-14-21	
Benzo(j,k)fluoranthene	**ND**	0.0044	EPA 8270E/SIM	6-14-21	6-14-21	
Benzo[a]pyrene	**ND**	0.0044	EPA 8270E/SIM	6-14-21	6-14-21	
Indeno[1,2,3-cd]pyrene	**ND**	0.0044	EPA 8270E/SIM	6-14-21	6-14-21	
Dibenz[a,h]anthracene	**ND**	0.0044	EPA 8270E/SIM	6-14-21	6-14-21	
Benzo[g,h,i]perylene	**ND**	0.0044	EPA 8270E/SIM	6-14-21	6-14-21	
Surrogate:	*Percent Recovery*	*Control Limits*				
2-Fluorophenol	*77*	*26 - 109*				
Phenol-d6	*84*	*33 - 113*				
Nitrobenzene-d5	*83*	*31 - 110*				
2-Fluorobiphenyl	*79*	*42 - 107*				
2,4,6-Tribromophenol	*111*	*42 - 123*				
Terphenyl-d14	*86*	*41 - 115*				

This report pertains to the samples analyzed in accordance with the chain of custody, and is intended only for the use of the individual or company to whom it is addressed.

Date of Report: June 15, 2021
Samples Submitted: June 11, 2021
Laboratory Reference: 2106-107
Project: 11-05150-003

SEMIVOLATILE ORGANICS EPA 8270E/SIM
page 1 of 2

Matrix: Soil
Units: mg/Kg

Analyte	Result	PQL	Method	Date Prepared	Date Analyzed	Flags
Client ID:	**DA7SWCS7210611I**					
Laboratory ID:	06-107-02					
n-Nitrosodimethylamine	**ND**	0.012	EPA 8270E	6-14-21	6-14-21	
Pyridine	**ND**	0.25	EPA 8270E	6-14-21	6-14-21	
Phenol	**ND**	0.025	EPA 8270E	6-14-21	6-14-21	
Aniline	**ND**	0.12	EPA 8270E	6-14-21	6-14-21	
bis(2-Chloroethyl)ether	**ND**	0.012	EPA 8270E	6-14-21	6-14-21	
2-Chlorophenol	**ND**	0.025	EPA 8270E	6-14-21	6-14-21	
1,3-Dichlorobenzene	**ND**	0.025	EPA 8270E	6-14-21	6-14-21	
1,4-Dichlorobenzene	**ND**	0.025	EPA 8270E	6-14-21	6-14-21	
Benzyl alcohol	**ND**	0.025	EPA 8270E	6-14-21	6-14-21	
1,2-Dichlorobenzene	**ND**	0.025	EPA 8270E	6-14-21	6-14-21	
2-Methylphenol (o-Cresol)	**0.062**	0.025	EPA 8270E	6-14-21	6-14-21	
bis(2-Chloroisopropyl)ether	**ND**	0.025	EPA 8270E	6-14-21	6-14-21	
(3+4)-Methylphenol (m,p-Cresol)	**0.036**	0.025	EPA 8270E	6-14-21	6-14-21	
n-Nitroso-di-n-propylamine	**ND**	0.012	EPA 8270E	6-14-21	6-14-21	
Hexachloroethane	**ND**	0.025	EPA 8270E	6-14-21	6-14-21	
Nitrobenzene	**ND**	0.025	EPA 8270E	6-14-21	6-14-21	
Isophorone	**ND**	0.025	EPA 8270E	6-14-21	6-14-21	
2-Nitrophenol	**ND**	0.025	EPA 8270E	6-14-21	6-14-21	
2,4-Dimethylphenol	**ND**	0.025	EPA 8270E	6-14-21	6-14-21	
bis(2-Chloroethoxy)methane	**ND**	0.025	EPA 8270E	6-14-21	6-14-21	
2,4-Dichlorophenol	**ND**	0.025	EPA 8270E	6-14-21	6-14-21	
1,2,4-Trichlorobenzene	**ND**	0.025	EPA 8270E	6-14-21	6-14-21	
Naphthalene	**0.0056**	0.0050	EPA 8270E/SIM	6-14-21	6-14-21	
4-Chloroaniline	**ND**	0.012	EPA 8270E	6-14-21	6-14-21	
Hexachlorobutadiene	**ND**	0.025	EPA 8270E	6-14-21	6-14-21	
4-Chloro-3-methylphenol	**ND**	0.025	EPA 8270E	6-14-21	6-14-21	
2-Methylnaphthalene	**ND**	0.0050	EPA 8270E/SIM	6-14-21	6-14-21	
1-Methylnaphthalene	**ND**	0.0050	EPA 8270E/SIM	6-14-21	6-14-21	
Hexachlorocyclopentadiene	**ND**	0.025	EPA 8270E	6-14-21	6-14-21	
2,4,6-Trichlorophenol	**ND**	0.025	EPA 8270E	6-14-21	6-14-21	
2,3-Dichloroaniline	**ND**	0.025	EPA 8270E	6-14-21	6-14-21	
2,4,5-Trichlorophenol	**ND**	0.025	EPA 8270E	6-14-21	6-14-21	
2-Chloronaphthalene	**ND**	0.025	EPA 8270E	6-14-21	6-14-21	
2-Nitroaniline	**ND**	0.025	EPA 8270E	6-14-21	6-14-21	
1,4-Dinitrobenzene	**ND**	0.025	EPA 8270E	6-14-21	6-14-21	
Dimethylphthalate	**ND**	0.025	EPA 8270E	6-14-21	6-14-21	
1,3-Dinitrobenzene	**ND**	0.025	EPA 8270E	6-14-21	6-14-21	
2,6-Dinitrotoluene	**ND**	0.012	EPA 8270E	6-14-21	6-14-21	
1,2-Dinitrobenzene	**ND**	0.025	EPA 8270E	6-14-21	6-14-21	
Acenaphthylene	**ND**	0.0050	EPA 8270E/SIM	6-14-21	6-14-21	
3-Nitroaniline	**ND**	0.025	EPA 8270E	6-14-21	6-14-21	

This report pertains to the samples analyzed in accordance with the chain of custody, and is intended only for the use of the individual or company to whom it is addressed.

Date of Report: June 15, 2021
Samples Submitted: June 11, 2021
Laboratory Reference: 2106-107
Project: 11-05150-003

SEMIVOLATILE ORGANICS EPA 8270E/SIM
page 2 of 2

Analyte	Result	PQL	Method	Date Prepared	Date Analyzed	Flags
Client ID:	**DA7SWCS7210611I**					
Laboratory ID:	06-107-02					
2,4-Dinitrophenol	**ND**	0.12	EPA 8270E	6-14-21	6-14-21	
Acenaphthene	**ND**	0.0050	EPA 8270E/SIM	6-14-21	6-14-21	
4-Nitrophenol	**ND**	0.025	EPA 8270E	6-14-21	6-14-21	
2,4-Dinitrotoluene	**ND**	0.012	EPA 8270E	6-14-21	6-14-21	
Dibenzofuran	**ND**	0.025	EPA 8270E	6-14-21	6-14-21	
2,3,5,6-Tetrachlorophenol	**ND**	0.025	EPA 8270E	6-14-21	6-14-21	
2,3,4,6-Tetrachlorophenol	**ND**	0.025	EPA 8270E	6-14-21	6-14-21	
Diethylphthalate	**ND**	0.12	EPA 8270E	6-14-21	6-14-21	
4-Chlorophenyl-phenylether	**ND**	0.025	EPA 8270E	6-14-21	6-14-21	
4-Nitroaniline	**ND**	0.025	EPA 8270E	6-14-21	6-14-21	
Fluorene	**ND**	0.0050	EPA 8270E/SIM	6-14-21	6-14-21	
4,6-Dinitro-2-methylphenol	**ND**	0.12	EPA 8270E	6-14-21	6-14-21	
n-Nitrosodiphenylamine	**ND**	0.025	EPA 8270E	6-14-21	6-14-21	
1,2-Diphenylhydrazine	**ND**	0.025	EPA 8270E	6-14-21	6-14-21	
4-Bromophenyl-phenylether	**ND**	0.025	EPA 8270E	6-14-21	6-14-21	
Hexachlorobenzene	**ND**	0.025	EPA 8270E	6-14-21	6-14-21	
Pentachlorophenol	**ND**	0.050	EPA 8270E	6-14-21	6-14-21	
Phenanthrene	**ND**	0.0050	EPA 8270E/SIM	6-14-21	6-14-21	
Anthracene	**ND**	0.0050	EPA 8270E/SIM	6-14-21	6-14-21	
Carbazole	**ND**	0.025	EPA 8270E	6-14-21	6-14-21	
Di-n-butylphthalate	**ND**	0.12	EPA 8270E	6-14-21	6-14-21	
Fluoranthene	**ND**	0.0050	EPA 8270E/SIM	6-14-21	6-14-21	
Pyrene	**ND**	0.0050	EPA 8270E/SIM	6-14-21	6-14-21	
Butylbenzylphthalate	**ND**	0.12	EPA 8270E	6-14-21	6-14-21	
bis-2-Ethylhexyladipate	**ND**	0.12	EPA 8270E	6-14-21	6-14-21	
3,3'-Dichlorobenzidine	**ND**	0.012	EPA 8270E	6-14-21	6-14-21	
Benzo[a]anthracene	**ND**	0.0050	EPA 8270E/SIM	6-14-21	6-14-21	
Chrysene	**ND**	0.0050	EPA 8270E/SIM	6-14-21	6-14-21	
bis(2-Ethylhexyl)phthalate	**ND**	0.12	EPA 8270E	6-14-21	6-14-21	
Di-n-octylphthalate	**ND**	0.12	EPA 8270E	6-14-21	6-14-21	
Benzo[b]fluoranthene	**ND**	0.0050	EPA 8270E/SIM	6-14-21	6-14-21	
Benzo(j,k)fluoranthene	**ND**	0.0050	EPA 8270E/SIM	6-14-21	6-14-21	
Benzo[a]pyrene	**ND**	0.0050	EPA 8270E/SIM	6-14-21	6-14-21	
Indeno[1,2,3-cd]pyrene	**ND**	0.0050	EPA 8270E/SIM	6-14-21	6-14-21	
Dibenz[a,h]anthracene	**ND**	0.0050	EPA 8270E/SIM	6-14-21	6-14-21	
Benzo[g,h,i]perylene	**ND**	0.0050	EPA 8270E/SIM	6-14-21	6-14-21	
Surrogate:	*Percent Recovery*	*Control Limits*				
2-Fluorophenol	*74*	*26 - 109*				
Phenol-d6	*78*	*33 - 113*				
Nitrobenzene-d5	*86*	*31 - 110*				
2-Fluorobiphenyl	*84*	*42 - 107*				
2,4,6-Tribromophenol	*103*	*42 - 123*				
Terphenyl-d14	*98*	*41 - 115*				

This report pertains to the samples analyzed in accordance with the chain of custody, and is intended only for the use of the individual or company to whom it is addressed.

Date of Report: June 15, 2021
Samples Submitted: June 11, 2021
Laboratory Reference: 2106-107
Project: 11-05150-003

SEMIVOLATILE ORGANICS EPA 8270E/SIM
QUALITY CONTROL
page 1 of 2

Matrix: Soil
Units: mg/Kg

Analyte	Result	PQL	Method	Date Prepared	Date Analyzed	Flags
METHOD BLANK						
Laboratory ID:	MB0614S1					
n-Nitrosodimethylamine	**ND**	0.010	EPA 8270E	6-14-21	6-14-21	
Pyridine	**ND**	0.20	EPA 8270E	6-14-21	6-14-21	
Phenol	**ND**	0.020	EPA 8270E	6-14-21	6-14-21	
Aniline	**ND**	0.10	EPA 8270E	6-14-21	6-14-21	
bis(2-Chloroethyl)ether	**ND**	0.010	EPA 8270E	6-14-21	6-14-21	
2-Chlorophenol	**ND**	0.020	EPA 8270E	6-14-21	6-14-21	
1,3-Dichlorobenzene	**ND**	0.020	EPA 8270E	6-14-21	6-14-21	
1,4-Dichlorobenzene	**ND**	0.020	EPA 8270E	6-14-21	6-14-21	
Benzyl alcohol	**ND**	0.020	EPA 8270E	6-14-21	6-14-21	
1,2-Dichlorobenzene	**ND**	0.020	EPA 8270E	6-14-21	6-14-21	
2-Methylphenol (o-Cresol)	**ND**	0.020	EPA 8270E	6-14-21	6-14-21	
bis(2-Chloroisopropyl)ether	**ND**	0.020	EPA 8270E	6-14-21	6-14-21	
(3+4)-Methylphenol (m,p-Cresol)	**ND**	0.020	EPA 8270E	6-14-21	6-14-21	
n-Nitroso-di-n-propylamine	**ND**	0.010	EPA 8270E	6-14-21	6-14-21	
Hexachloroethane	**ND**	0.020	EPA 8270E	6-14-21	6-14-21	
Nitrobenzene	**ND**	0.020	EPA 8270E	6-14-21	6-14-21	
Isophorone	**ND**	0.020	EPA 8270E	6-14-21	6-14-21	
2-Nitrophenol	**ND**	0.020	EPA 8270E	6-14-21	6-14-21	
2,4-Dimethylphenol	**ND**	0.020	EPA 8270E	6-14-21	6-14-21	
bis(2-Chloroethoxy)methane	**ND**	0.020	EPA 8270E	6-14-21	6-14-21	
2,4-Dichlorophenol	**ND**	0.020	EPA 8270E	6-14-21	6-14-21	
1,2,4-Trichlorobenzene	**ND**	0.020	EPA 8270E	6-14-21	6-14-21	
Naphthalene	**ND**	0.0040	EPA 8270E/SIM	6-14-21	6-14-21	
4-Chloroaniline	**ND**	0.010	EPA 8270E	6-14-21	6-14-21	
Hexachlorobutadiene	**ND**	0.020	EPA 8270E	6-14-21	6-14-21	
4-Chloro-3-methylphenol	**ND**	0.020	EPA 8270E	6-14-21	6-14-21	
2-Methylnaphthalene	**ND**	0.0040	EPA 8270E/SIM	6-14-21	6-14-21	
1-Methylnaphthalene	**ND**	0.0040	EPA 8270E/SIM	6-14-21	6-14-21	
Hexachlorocyclopentadiene	**ND**	0.020	EPA 8270E	6-14-21	6-14-21	
2,4,6-Trichlorophenol	**ND**	0.020	EPA 8270E	6-14-21	6-14-21	
2,3-Dichloroaniline	**ND**	0.020	EPA 8270E	6-14-21	6-14-21	
2,4,5-Trichlorophenol	**ND**	0.020	EPA 8270E	6-14-21	6-14-21	
2-Chloronaphthalene	**ND**	0.020	EPA 8270E	6-14-21	6-14-21	
2-Nitroaniline	**ND**	0.020	EPA 8270E	6-14-21	6-14-21	
1,4-Dinitrobenzene	**ND**	0.020	EPA 8270E	6-14-21	6-14-21	
Dimethylphthalate	**ND**	0.020	EPA 8270E	6-14-21	6-14-21	
1,3-Dinitrobenzene	**ND**	0.020	EPA 8270E	6-14-21	6-14-21	
2,6-Dinitrotoluene	**ND**	0.010	EPA 8270E	6-14-21	6-14-21	
1,2-Dinitrobenzene	**ND**	0.020	EPA 8270E	6-14-21	6-14-21	
Acenaphthylene	**ND**	0.0040	EPA 8270E/SIM	6-14-21	6-14-21	
3-Nitroaniline	**ND**	0.020	EPA 8270E	6-14-21	6-14-21	

This report pertains to the samples analyzed in accordance with the chain of custody, and is intended only for the use of the individual or company to whom it is addressed.

Date of Report: June 15, 2021
Samples Submitted: June 11, 2021
Laboratory Reference: 2106-107
Project: 11-05150-003

SEMIVOLATILE ORGANICS EPA 8270E/SIM
QUALITY CONTROL
page 2 of 2

Analyte	Result	PQL	Method	Date Prepared	Date Analyzed	Flags
METHOD BLANK						
Laboratory ID:	MB0614S1					
2,4-Dinitrophenol	**ND**	0.10	EPA 8270E	6-14-21	6-14-21	
Acenaphthene	**ND**	0.0040	EPA 8270E/SIM	6-14-21	6-14-21	
4-Nitrophenol	**ND**	0.020	EPA 8270E	6-14-21	6-14-21	
2,4-Dinitrotoluene	**ND**	0.010	EPA 8270E	6-14-21	6-14-21	
Dibenzofuran	**ND**	0.020	EPA 8270E	6-14-21	6-14-21	
2,3,5,6-Tetrachlorophenol	**ND**	0.020	EPA 8270E	6-14-21	6-14-21	
2,3,4,6-Tetrachlorophenol	**ND**	0.020	EPA 8270E	6-14-21	6-14-21	
Diethylphthalate	**ND**	0.10	EPA 8270E	6-14-21	6-14-21	
4-Chlorophenyl-phenylether	**ND**	0.020	EPA 8270E	6-14-21	6-14-21	
4-Nitroaniline	**ND**	0.020	EPA 8270E	6-14-21	6-14-21	
Fluorene	**ND**	0.0040	EPA 8270E/SIM	6-14-21	6-14-21	
4,6-Dinitro-2-methylphenol	**ND**	0.10	EPA 8270E	6-14-21	6-14-21	
n-Nitrosodiphenylamine	**ND**	0.020	EPA 8270E	6-14-21	6-14-21	
1,2-Diphenylhydrazine	**ND**	0.020	EPA 8270E	6-14-21	6-14-21	
4-Bromophenyl-phenylether	**ND**	0.020	EPA 8270E	6-14-21	6-14-21	
Hexachlorobenzene	**ND**	0.020	EPA 8270E	6-14-21	6-14-21	
Pentachlorophenol	**ND**	0.040	EPA 8270E	6-14-21	6-14-21	
Phenanthrene	**ND**	0.0040	EPA 8270E/SIM	6-14-21	6-14-21	
Anthracene	**ND**	0.0040	EPA 8270E/SIM	6-14-21	6-14-21	
Carbazole	**ND**	0.020	EPA 8270E	6-14-21	6-14-21	
Di-n-butylphthalate	**ND**	0.10	EPA 8270E	6-14-21	6-14-21	
Fluoranthene	**ND**	0.0040	EPA 8270E/SIM	6-14-21	6-14-21	
Pyrene	**ND**	0.0040	EPA 8270E/SIM	6-14-21	6-14-21	
Butylbenzylphthalate	**ND**	0.10	EPA 8270E	6-14-21	6-14-21	
bis-2-Ethylhexyladipate	**ND**	0.10	EPA 8270E	6-14-21	6-14-21	
3,3'-Dichlorobenzidine	**ND**	0.010	EPA 8270E	6-14-21	6-14-21	
Benzo[a]anthracene	**ND**	0.0040	EPA 8270E/SIM	6-14-21	6-14-21	
Chrysene	**ND**	0.0040	EPA 8270E/SIM	6-14-21	6-14-21	
bis(2-Ethylhexyl)phthalate	**ND**	0.10	EPA 8270E	6-14-21	6-14-21	
Di-n-octylphthalate	**ND**	0.10	EPA 8270E	6-14-21	6-14-21	
Benzo[b]fluoranthene	**ND**	0.0040	EPA 8270E/SIM	6-14-21	6-14-21	
Benzo(j,k)fluoranthene	**ND**	0.0040	EPA 8270E/SIM	6-14-21	6-14-21	
Benzo[a]pyrene	**ND**	0.0040	EPA 8270E/SIM	6-14-21	6-14-21	
Indeno[1,2,3-cd]pyrene	**ND**	0.0040	EPA 8270E/SIM	6-14-21	6-14-21	
Dibenz[a,h]anthracene	**ND**	0.0040	EPA 8270E/SIM	6-14-21	6-14-21	
Benzo[g,h,i]perylene	**ND**	0.0040	EPA 8270E/SIM	6-14-21	6-14-21	
Surrogate:	*Percent Recovery*	*Control Limits*				
2-Fluorophenol	*73*	*26 - 109*				
Phenol-d6	*84*	*33 - 113*				
Nitrobenzene-d5	*79*	*31 - 110*				
2-Fluorobiphenyl	*82*	*42 - 107*				
2,4,6-Tribromophenol	*121*	*42 - 123*				
Terphenyl-d14	*93*	*41 - 115*				

This report pertains to the samples analyzed in accordance with the chain of custody, and is intended only for the use of the individual or company to whom it is addressed.

Date of Report: June 15, 2021
Samples Submitted: June 11, 2021
Laboratory Reference: 2106-107
Project: 11-05150-003

SEMIVOLATILE ORGANICS EPA 8270E/SIM
QUALITY CONTROL

Matrix: Soil
Units: mg/Kg

Analyte	Result		Spike Level		Source Result	Percent Recovery		Recovery Limits	RPD	RPD Limit	Flags
MATRIX SPIKES											
Laboratory ID:	06-113-01										
	MS	MSD	MS	MSD		MS	MSD				
Phenol	**0.967**	**0.890**	1.33	1.33	ND	73	67	33 - 105	8	36	
2-Chlorophenol	**0.975**	**0.902**	1.33	1.33	ND	73	68	36 - 105	8	38	
1,4-Dichlorobenzene	**0.444**	**0.455**	0.667	0.667	ND	67	68	27 - 106	2	40	
n-Nitroso-di-n-propylamine	**0.521**	**0.490**	0.667	0.667	ND	78	73	28 - 111	6	35	
1,2,4-Trichlorobenzene	**0.512**	**0.493**	0.667	0.667	ND	77	74	37 - 104	4	41	
4-Chloro-3-methylphenol	**1.06**	**0.992**	1.33	1.33	ND	80	75	42 - 113	7	25	
Acenaphthene	**0.517**	**0.469**	0.667	0.667	ND	78	70	36 - 104	10	23	
4-Nitrophenol	**1.21**	**1.13**	1.33	1.33	ND	91	85	22 - 135	7	24	
2,4-Dinitrotoluene	**0.526**	**0.489**	0.667	0.667	ND	79	73	25 - 114	7	26	
Pentachlorophenol	**1.37**	**1.27**	1.33	1.33	ND	103	95	28 - 135	8	28	
Pyrene	**0.524**	**0.463**	0.667	0.667	ND	79	69	29 - 127	12	20	
Surrogate:											
2-Fluorophenol						*80*	*75*	*26 - 109*			
Phenol-d6						*87*	*78*	*33 - 113*			
Nitrobenzene-d5						*86*	*81*	*31 - 110*			
2-Fluorobiphenyl						*85*	*78*	*42 - 107*			
2,4,6-Tribromophenol						*109*	*95*	*42 - 123*			
Terphenyl-d14						*85*	*74*	*41 - 115*			

This report pertains to the samples analyzed in accordance with the chain of custody, and is intended only for the use of the individual or company to whom it is addressed.

Date of Report: June 15, 2021
Samples Submitted: June 11, 2021
Laboratory Reference: 2106-107
Project: 11-05150-003

PCBs EPA 8082A

Matrix: Soil
Units: mg/Kg (ppm)

Analyte	Result	PQL	Method	Date Prepared	Date Analyzed	Flags
Client ID:	**DA7SWCS6210611I**					
Laboratory ID:	06-107-01					
Aroclor 1016	**ND**	0.022	EPA 8082A	6-14-21	6-15-21	
Aroclor 1221	**ND**	0.022	EPA 8082A	6-14-21	6-15-21	
Aroclor 1232	**ND**	0.022	EPA 8082A	6-14-21	6-15-21	
Aroclor 1242	**ND**	0.022	EPA 8082A	6-14-21	6-15-21	
Aroclor 1248	**ND**	0.022	EPA 8082A	6-14-21	6-15-21	
Aroclor 1254	**ND**	0.022	EPA 8082A	6-14-21	6-15-21	
Aroclor 1260	**ND**	0.022	EPA 8082A	6-14-21	6-15-21	
Surrogate:	*Percent Recovery*	*Control Limits*				
DCB	*80*	*54-135*				
Client ID:	**DA7SWCS7210611I**					
Laboratory ID:	06-107-02					
Aroclor 1016	**ND**	0.025	EPA 8082A	6-14-21	6-15-21	
Aroclor 1221	**ND**	0.025	EPA 8082A	6-14-21	6-15-21	
Aroclor 1232	**ND**	0.025	EPA 8082A	6-14-21	6-15-21	
Aroclor 1242	**ND**	0.025	EPA 8082A	6-14-21	6-15-21	
Aroclor 1248	**ND**	0.025	EPA 8082A	6-14-21	6-15-21	
Aroclor 1254	**ND**	0.025	EPA 8082A	6-14-21	6-15-21	
Aroclor 1260	**ND**	0.025	EPA 8082A	6-14-21	6-15-21	
Surrogate:	*Percent Recovery*	*Control Limits*				
DCB	*81*	*54-135*				

This report pertains to the samples analyzed in accordance with the chain of custody, and is intended only for the use of the individual or company to whom it is addressed.

Date of Report: June 15, 2021
Samples Submitted: June 11, 2021
Laboratory Reference: 2106-107
Project: 11-05150-003

PCBs EPA 8082A
QUALITY CONTROL

Matrix: Soil
Units: mg/Kg (ppm)

Analyte	Result	PQL	Method	Date Prepared	Date Analyzed	Flags
METHOD BLANK						
Laboratory ID:	MB0614S2					
Aroclor 1016	**ND**	0.020	EPA 8082A	6-14-21	6-15-21	
Aroclor 1221	**ND**	0.020	EPA 8082A	6-14-21	6-15-21	
Aroclor 1232	**ND**	0.020	EPA 8082A	6-14-21	6-15-21	
Aroclor 1242	**ND**	0.020	EPA 8082A	6-14-21	6-15-21	
Aroclor 1248	**ND**	0.020	EPA 8082A	6-14-21	6-15-21	
Aroclor 1254	**ND**	0.020	EPA 8082A	6-14-21	6-15-21	
Aroclor 1260	**ND**	0.020	EPA 8082A	6-14-21	6-15-21	
Surrogate:	*Percent Recovery*	*Control Limits*				
DCB	*89*	*54-135*				

Analyte	Result		Spike Level		Source Result	Percent Recovery		Recovery Limits	RPD	RPD Limit	Flags
MATRIX SPIKES											
Laboratory ID:	06-113-01										
	MS	MSD	MS	MSD		MS	MSD				
Aroclor 1260	**0.397**	**0.442**	0.500	0.500	ND	**79**	**88**	62-129	11	15	
Surrogate:											
DCB						*85*	*88*	*54-135*			

This report pertains to the samples analyzed in accordance with the chain of custody, and is intended only for the use of the individual or company to whom it is addressed.

Date of Report: June 15, 2021
Samples Submitted: June 11, 2021
Laboratory Reference: 2106-107
Project: 11-05150-003

ORGANOCHLORINE PESTICIDES EPA 8081B

Matrix: Soil
Units: ug/Kg (ppb)

Analyte	Result	PQL	Method	Date Prepared	Date Analyzed	Flags
Client ID:	**DA7SWCS6210611I**					
Laboratory ID:	06-107-01					
alpha-BHC	**ND**	0.56	EPA 8081B	6-14-21	6-14-21	
gamma-BHC (Lindane)	**ND**	0.56	EPA 8081B	6-14-21	6-14-21	
beta-BHC	**ND**	0.56	EPA 8081B	6-14-21	6-14-21	
delta-BHC	**ND**	0.56	EPA 8081B	6-14-21	6-14-21	
Heptachlor	**ND**	0.56	EPA 8081B	6-14-21	6-14-21	
Aldrin	**ND**	0.56	EPA 8081B	6-14-21	6-14-21	
Heptachlor Epoxide	**ND**	0.56	EPA 8081B	6-14-21	6-14-21	
gamma-Chlordane	**ND**	1.1	EPA 8081B	6-14-21	6-14-21	
alpha-Chlordane	**ND**	1.1	EPA 8081B	6-14-21	6-14-21	
4,4'-DDE	**ND**	1.1	EPA 8081B	6-14-21	6-14-21	
Endosulfan I	**ND**	0.56	EPA 8081B	6-14-21	6-14-21	
Dieldrin	**ND**	1.1	EPA 8081B	6-14-21	6-14-21	
Endrin	**ND**	1.1	EPA 8081B	6-14-21	6-14-21	
4,4'-DDD	**ND**	1.1	EPA 8081B	6-14-21	6-14-21	
Endosulfan II	**ND**	1.1	EPA 8081B	6-14-21	6-14-21	
4,4'-DDT	**ND**	1.1	EPA 8081B	6-14-21	6-14-21	
Endrin Aldehyde	**ND**	1.1	EPA 8081B	6-14-21	6-14-21	
Methoxychlor	**ND**	1.1	EPA 8081B	6-14-21	6-14-21	
Endosulfan Sulfate	**ND**	1.1	EPA 8081B	6-14-21	6-14-21	
Endrin Ketone	**ND**	1.1	EPA 8081B	6-14-21	6-14-21	
Toxaphene	**ND**	5.6	EPA 8081B	6-14-21	6-14-21	
Surrogate:	*Percent Recovery*	*Control Limits*				
TCMX	*95*	*30-110*				
DCB	*100*	*40-117*				

This report pertains to the samples analyzed in accordance with the chain of custody, and is intended only for the use of the individual or company to whom it is addressed.

Date of Report: June 15, 2021
Samples Submitted: June 11, 2021
Laboratory Reference: 2106-107
Project: 11-05150-003

ORGANOCHLORINE PESTICIDES EPA 8081B

Matrix: Soil
Units: ug/Kg (ppb)

Analyte	Result	PQL	Method	Date Prepared	Date Analyzed	Flags
Client ID:	**DA7SWCS7210611I**					
Laboratory ID:	06-107-02					
alpha-BHC	**ND**	0.62	EPA 8081B	6-14-21	6-14-21	
gamma-BHC (Lindane)	**ND**	0.62	EPA 8081B	6-14-21	6-14-21	
beta-BHC	**ND**	0.62	EPA 8081B	6-14-21	6-14-21	
delta-BHC	**ND**	0.62	EPA 8081B	6-14-21	6-14-21	
Heptachlor	**ND**	0.62	EPA 8081B	6-14-21	6-14-21	
Aldrin	**ND**	0.62	EPA 8081B	6-14-21	6-14-21	
Heptachlor Epoxide	**ND**	0.62	EPA 8081B	6-14-21	6-14-21	
gamma-Chlordane	**ND**	1.2	EPA 8081B	6-14-21	6-14-21	
alpha-Chlordane	**ND**	1.2	EPA 8081B	6-14-21	6-14-21	
4,4'-DDE	**ND**	1.2	EPA 8081B	6-14-21	6-14-21	
Endosulfan I	**ND**	0.62	EPA 8081B	6-14-21	6-14-21	
Dieldrin	**ND**	1.2	EPA 8081B	6-14-21	6-14-21	
Endrin	**ND**	1.2	EPA 8081B	6-14-21	6-14-21	
4,4'-DDD	**ND**	1.2	EPA 8081B	6-14-21	6-14-21	
Endosulfan II	**ND**	1.2	EPA 8081B	6-14-21	6-14-21	
4,4'-DDT	**ND**	1.2	EPA 8081B	6-14-21	6-14-21	
Endrin Aldehyde	**ND**	1.2	EPA 8081B	6-14-21	6-14-21	
Methoxychlor	**ND**	1.2	EPA 8081B	6-14-21	6-14-21	
Endosulfan Sulfate	**ND**	1.2	EPA 8081B	6-14-21	6-14-21	
Endrin Ketone	**ND**	1.2	EPA 8081B	6-14-21	6-14-21	
Toxaphene	**ND**	6.2	EPA 8081B	6-14-21	6-14-21	
Surrogate:	*Percent Recovery*	*Control Limits*				
TCMX	*84*	*30-110*				
DCB	*82*	*40-117*				

This report pertains to the samples analyzed in accordance with the chain of custody, and is intended only for the use of the individual or company to whom it is addressed.

Date of Report: June 15, 2021
Samples Submitted: June 11, 2021
Laboratory Reference: 2106-107
Project: 11-05150-003

ORGANOCHLORINE PESTICIDES EPA 8081B QUALITY CONTROL

Matrix: Soil
Units: ug/Kg (ppb)

Analyte	Result	PQL	Method	Date Prepared	Date Analyzed	Flags
METHOD BLANK						
Laboratory ID:	MB0614S1					
alpha-BHC	**ND**	0.50	EPA 8081B	6-14-21	6-14-21	
gamma-BHC (Lindane)	**ND**	0.50	EPA 8081B	6-14-21	6-14-21	
beta-BHC	**ND**	0.50	EPA 8081B	6-14-21	6-14-21	
delta-BHC	**ND**	0.50	EPA 8081B	6-14-21	6-14-21	
Heptachlor	**ND**	0.50	EPA 8081B	6-14-21	6-14-21	
Aldrin	**ND**	0.50	EPA 8081B	6-14-21	6-14-21	
Heptachlor Epoxide	**ND**	0.50	EPA 8081B	6-14-21	6-14-21	
gamma-Chlordane	**ND**	1.0	EPA 8081B	6-14-21	6-14-21	
alpha-Chlordane	**ND**	1.0	EPA 8081B	6-14-21	6-14-21	
4,4'-DDE	**ND**	1.0	EPA 8081B	6-14-21	6-14-21	
Endosulfan I	**ND**	0.50	EPA 8081B	6-14-21	6-14-21	
Dieldrin	**ND**	1.0	EPA 8081B	6-14-21	6-14-21	
Endrin	**ND**	1.0	EPA 8081B	6-14-21	6-14-21	
4,4'-DDD	**ND**	1.0	EPA 8081B	6-14-21	6-14-21	
Endosulfan II	**ND**	1.0	EPA 8081B	6-14-21	6-14-21	
4,4'-DDT	**ND**	1.0	EPA 8081B	6-14-21	6-14-21	
Endrin Aldehyde	**ND**	1.0	EPA 8081B	6-14-21	6-14-21	
Methoxychlor	**ND**	1.0	EPA 8081B	6-14-21	6-14-21	
Endosulfan Sulfate	**ND**	1.0	EPA 8081B	6-14-21	6-14-21	
Endrin Ketone	**ND**	1.0	EPA 8081B	6-14-21	6-14-21	
Toxaphene	**ND**	5.0	EPA 8081B	6-14-21	6-14-21	
Surrogate:	*Percent Recovery*	*Control Limits*				
TCMX	*90*	*30-110*				
DCB	*82*	*40-117*				

This report pertains to the samples analyzed in accordance with the chain of custody, and is intended only for the use of the individual or company to whom it is addressed.

Date of Report: June 15, 2021
Samples Submitted: June 11, 2021
Laboratory Reference: 2106-107
Project: 11-05150-003

ORGANOCHLORINE PESTICIDES EPA 8081B QUALITY CONTROL

Matrix: Soil
Units: ug/Kg (ppb)

Analyte	Result		Spike Level		Source Result	Percent Recovery		Recovery Limits	RPD	RPD Limit	Flags
SPIKE BLANKS											
Laboratory ID:	SB0614S1										
	SB	SBD	SB	SBD		SB	SBD				
alpha-BHC	**7.36**	**6.90**	10.0	10.0	N/A	**74**	**69**	65-115	6	15	
gamma-BHC (Lindane)	**7.52**	**7.65**	10.0	10.0	N/A	**75**	**76**	69-116	2	15	
beta-BHC	**6.87**	**6.74**	10.0	10.0	N/A	**69**	**67**	63-116	2	15	
delta-BHC	**7.56**	**7.41**	10.0	10.0	N/A	**76**	**74**	66-116	2	15	
Heptachlor	**9.02**	**8.89**	10.0	10.0	N/A	**90**	**89**	63-119	1	15	
Aldrin	**7.63**	**7.54**	10.0	10.0	N/A	**76**	**75**	60-116	1	15	
Heptachlor Epoxide	**8.83**	**8.70**	10.0	10.0	N/A	**88**	**87**	65-116	1	15	
gamma-Chlordane	**8.03**	**7.96**	10.0	10.0	N/A	**80**	**80**	64-116	1	15	
alpha-Chlordane	**8.18**	**8.03**	10.0	10.0	N/A	**82**	**80**	62-119	2	15	
4,4'-DDE	**7.95**	**7.73**	10.0	10.0	N/A	**79**	**77**	69-120	3	15	
Endosulfan I	**7.80**	**7.66**	10.0	10.0	N/A	**78**	**77**	60-121	2	15	
Dieldrin	**9.53**	**9.39**	10.0	10.0	N/A	**95**	**94**	64-115	1	15	
Endrin	**9.16**	**9.09**	10.0	10.0	N/A	**92**	**91**	62-118	1	15	
4,4'-DDD	**7.65**	**7.62**	10.0	10.0	N/A	**76**	**76**	64-124	0	15	
Endosulfan II	**8.50**	**8.18**	10.0	10.0	N/A	**85**	**82**	64-115	4	15	
4,4'-DDT	**9.58**	**9.45**	10.0	10.0	N/A	**96**	**94**	57-130	1	15	
Endrin Aldehyde	**8.62**	**8.35**	10.0	10.0	N/A	**86**	**84**	57-114	3	15	
Methoxychlor	**8.94**	**8.83**	10.0	10.0	N/A	**89**	**88**	49-129	1	15	
Endosulfan Sulfate	**8.42**	**8.07**	10.0	10.0	N/A	**84**	**81**	61-115	4	15	
Endrin Ketone	**8.26**	**8.04**	10.0	10.0	N/A	**83**	**80**	64-116	3	15	
Surrogate:											
TCMX						*91*	*90*	*30-110*			
DCB						*83*	*82*	*40-117*			

This report pertains to the samples analyzed in accordance with the chain of custody, and is intended only for the use of the individual or company to whom it is addressed.

Date of Report: June 15, 2021
Samples Submitted: June 11, 2021
Laboratory Reference: 2106-107
Project: 11-05150-003

TOTAL METALS
EPA 6010D/6020B/7471B

Matrix: Soil
Units: mg/Kg (ppm)

Analyte	Result	PQL	Method	Date Prepared	Date Analyzed	Flags
Client ID:	**DA7SWCS6210611I**					
Laboratory ID:	06-107-01					
Arsenic	**ND**	5.6	EPA 6010D	6-14-21	6-14-21	
Barium	**40**	2.8	EPA 6010D	6-14-21	6-14-21	
Cadmium	**ND**	0.56	EPA 6010D	6-14-21	6-14-21	
Chromium	**20**	0.56	EPA 6010D	6-14-21	6-14-21	
Lead	**ND**	5.6	EPA 6010D	6-14-21	6-14-21	
Mercury	**ND**	0.056	EPA 7471B	6-14-21	6-14-21	
Selenium	**ND**	0.14	EPA 6020B	6-15-21	6-15-21	
Silver	**ND**	1.1	EPA 6010D	6-14-21	6-14-21	
Client ID:	**DA7SWCS7210611I**					
Laboratory ID:	06-107-02					
Arsenic	**ND**	6.2	EPA 6010D	6-14-21	6-14-21	
Barium	**92**	3.1	EPA 6010D	6-14-21	6-14-21	
Cadmium	**ND**	0.62	EPA 6010D	6-14-21	6-14-21	
Chromium	**26**	0.62	EPA 6010D	6-14-21	6-14-21	
Lead	**ND**	6.2	EPA 6010D	6-14-21	6-14-21	
Mercury	**ND**	0.062	EPA 7471B	6-14-21	6-14-21	
Selenium	**0.37**	0.16	EPA 6020B	6-15-21	6-15-21	
Silver	**ND**	1.2	EPA 6010D	6-14-21	6-14-21	

This report pertains to the samples analyzed in accordance with the chain of custody, and is intended only for the use of the individual or company to whom it is addressed.

Date of Report: June 15, 2021
Samples Submitted: June 11, 2021
Laboratory Reference: 2106-107
Project: 11-05150-003

TOTAL METALS
EPA 6010D/6020B/7471B
QUALITY CONTROL

Matrix: Soil
Units: mg/Kg (ppm)

Analyte	Result	PQL	Method	Date Prepared	Date Analyzed	Flags
METHOD BLANK						
Laboratory ID:	MB0614SM2					
Arsenic	**ND**	5.0	EPA 6010D	6-14-21	6-14-21	
Barium	**ND**	2.5	EPA 6010D	6-14-21	6-14-21	
Cadmium	**ND**	0.50	EPA 6010D	6-14-21	6-14-21	
Chromium	**ND**	0.50	EPA 6010D	6-14-21	6-14-21	
Lead	**ND**	5.0	EPA 6010D	6-14-21	6-14-21	
Silver	**ND**	1.0	EPA 6010D	6-14-21	6-14-21	
Laboratory ID:	MB0615SM1					
Selenium	**ND**	0.13	EPA 6020B	6-15-21	6-15-21	
Laboratory ID:	MB0614S1					
Mercury	**ND**	0.050	EPA 7471B	6-14-21	6-14-21	

This report pertains to the samples analyzed in accordance with the chain of custody,
and is intended only for the use of the individual or company to whom it is addressed.

Date of Report: June 15, 2021
Samples Submitted: June 11, 2021
Laboratory Reference: 2106-107
Project: 11-05150-003

TOTAL METALS
EPA 6010D/6020B/7471B
QUALITY CONTROL

Analyte	Result		Spike Level		Source Result	Percent Recovery		Recovery Limits	RPD	RPD Limit	Flags
DUPLICATE											
Laboratory ID:	06-081-01										
	ORIG	DUP									
Arsenic	**ND**	**ND**	NA	NA		NA		NA	NA	20	
Barium	**50.0**	**50.5**	NA	NA		NA		NA	1	20	
Cadmium	**ND**	**ND**	NA	NA		NA		NA	NA	20	
Chromium	**8.30**	**7.45**	NA	NA		NA		NA	11	20	
Lead	**ND**	**ND**	NA	NA		NA		NA	NA	20	
Silver	**ND**	**ND**	NA	NA		NA		NA	NA	20	
Laboratory ID:	06-113-01										
Selenium	**0.128**	**0.185**	NA	NA		NA		NA	36	20	C
Laboratory ID:	06-107-01										
Mercury	**ND**	**ND**	NA	NA		NA		NA	NA	20	
MATRIX SPIKES											
Laboratory ID:	06-081-01										
	MS	MSD	MS	MSD		MS	MSD				
Arsenic	**92.4**	**91.3**	100	100	ND	**92**	**91**	75-125	1	20	
Barium	**145**	**142**	100	100	50.0	**95**	**92**	75-125	2	20	
Cadmium	**45.4**	**45.8**	50.0	50.0	ND	**91**	**92**	75-125	1	20	
Chromium	**96.2**	**97.0**	100	100	8.30	**88**	**89**	75-125	1	20	
Lead	**228**	**229**	250	250	ND	**91**	**92**	75-125	1	20	
Silver	**22.1**	**22.2**	25.0	25.0	ND	**88**	**89**	75-125	1	20	
Laboratory ID:	06-113-01										
Selenium	**46.6**	**48.1**	50.0	50.0	0.128	**93**	**96**	75-125	3	20	
Laboratory ID:	06-107-01										
Mercury	**0.499**	**0.573**	0.500	0.500	0.0252	**95**	**110**	80-120	14	20	

This report pertains to the samples analyzed in accordance with the chain of custody, and is intended only for the use of the individual or company to whom it is addressed.

Date of Report: June 15, 2021
Samples Submitted: June 11, 2021
Laboratory Reference: 2106-107
Project: 11-05150-003

% MOISTURE

Client ID	Lab ID	% Moisture	Date Analyzed
DA7SWCS6210611I	06-107-01	**10**	6-14-21
DA7SWCS7210611I	06-107-02	**20**	6-14-21

This report pertains to the samples analyzed in accordance with the chain of custody,
and is intended only for the use of the individual or company to whom it is addressed.

OnSite Environmental Inc.

Data Qualifiers and Abbreviations

A - Due to a high sample concentration, the amount spiked is insufficient for meaningful MS/MSD recovery data.

B - The analyte indicated was also found in the blank sample.

C - The duplicate RPD is outside control limits due to high result variability when analyte concentrations are within five times the quantitation limit.

E - The value reported exceeds the quantitation range and is an estimate.

F - Surrogate recovery data is not available due to the high concentration of coeluting target compounds.

H - The analyte indicated is a common laboratory solvent and may have been introduced during sample preparation, and be impacting the sample result.

I - Compound recovery is outside of the control limits.

J - The value reported was below the practical quantitation limit. The value is an estimate.

K - Sample duplicate RPD is outside control limits due to sample inhomogeneity. The sample was re-extracted and re-analyzed with similar results.

L - The RPD is outside of the control limits.

M - Hydrocarbons in the gasoline range are impacting the diesel range result.

M1 - Hydrocarbons in the gasoline range (toluene-naphthalene) are present in the sample.

N - Hydrocarbons in the lube oil range are impacting the diesel range result.

N1 - Hydrocarbons in diesel range are impacting lube oil range results.

O - Hydrocarbons indicative of heavier fuels are present in the sample and are impacting the gasoline result.

P - The RPD of the detected concentrations between the two columns is greater than 40.

Q - Surrogate recovery is outside of the control limits.

S - Surrogate recovery data is not available due to the necessary dilution of the sample.

T - The sample chromatogram is not similar to a typical _____.

U - The analyte was analyzed for, but was not detected above the reported sample quantitation limit.

U1 - The practical quantitation limit is elevated due to interferences present in the sample.

V - Matrix Spike/Matrix Spike Duplicate recoveries are outside control limits due to matrix effects.

W - Matrix Spike/Matrix Spike Duplicate RPD are outside control limits due to matrix effects.

X - Sample extract treated with a mercury cleanup procedure.

X1- Sample extract treated with a sulfuric acid/silica gel cleanup procedure.

Y - The calibration verification for this analyte exceeded the 20% drift specified in methods 8260 & 8270, and therefore the reported result should be considered an estimate. The overall performance of the calibration verification standard met the acceptance criteria of the method.

Y1 - Negative effects of the matrix from this sample on the instrument caused values for this analyte in the bracketing continuing calibration verification standard (CCVs) to be outside of 20% acceptance criteria. Because of this, quantitation limits and sample concentrations should be considered estimates.

Z -

ND - Not Detected at PQL
PQL - Practical Quantitation Limit
RPD - Relative Percent Difference

This report pertains to the samples analyzed in accordance with the chain of custody, and is intended only for the use of the individual or company to whom it is addressed.

OnSite Environmental Inc.
Analytical Laboratory Testing Services
14648 NE 95th Street • Redmond, WA 98052
Phone: (425) 883-3881 • www.onsite-env.com

Chain of Custody

Laboratory Number: 06-107

Company: Anchor QEA / Herrera
Project Number: 11-05150-003
Project Name: Cedar Hills Regional Landfill
Project Manager: Randy Brown
Sampled by: Brianna Blaud

Turnaround Request (in working days)
(Check One)
☐ Same Day ☐ 1 Day
☒ 2 Days ☐ 3 Days
☐ Standard (7 Days)
☐ _____ (other)

Lab ID	Sample Identification	Date Sampled	Time Sampled	Matrix	Number of Containers	NWTPH-HCID	NWTPH-Gx/BTEX	NWTPH-Gx	NWTPH-Dx (☐ Acid / SG Clean-up)	Volatiles ~~8260D~~ 8260B	Halogenated Volatiles 8260D	EDB EPA 8011 (Waters Only)	Semivolatiles ~~8270E~~/SIM 8270D/SIM (with low-level PAHs)	PAHs 8270E/SIM (low-level)	PCBs 8082A	Organochlorine Pesticides 8081B	Organophosphorus Pesticides 8270E/SIM	Chlorinated Acid Herbicides 8151A	Total RCRA Metals 6010B/7471A	Total MTCA Metals	TCLP Metals	HEM (oil and grease) 1664A					% Moisture
1	DA7SWCS6210611I	6.11.21	1110	soil	4					X			X		X	X			X								↓
2	DA7SWCS7210611I	↓	1210	↓	4					X			X		X	X			X								↓
3	VTRP210611I - trip blank	↓	—	—	3					X																	

	Signature	Company	Date	Time
Relinquished	[signature]	Herrera	6/11/21	3:21
Received	[signature]	OSE	6/11/21	1521
Relinquished				
Received				
Relinquished				
Received				
Reviewed/Date		Reviewed/Date		

Comments/Special Instructions

Data Package: Standard ☐ Level III ☐ Level IV ☐

Chromatograms with final report ☐ Electronic Data Deliverables (EDDs) ☐

OnSite Environmental Inc.
14648 NE 95th Street, Redmond, WA 98052 • (425) 883-3881

June 17, 2021

Randy Brown
Anchor QEA
1201 3rd Ave, Suite 2600
Seattle, WA 98101

Re: Analytical Data for Project 11-05150-003
Laboratory Reference No. 2106-135

Dear Randy:

Enclosed are the analytical results and associated quality control data for samples submitted on June 15, 2021.

The standard policy of OnSite Environmental, Inc. is to store your samples for 30 days from the date of receipt. If you require longer storage, please contact the laboratory.

We appreciate the opportunity to be of service to you on this project. If you have any questions concerning the data, or need additional information, please feel free to call me.

Sincerely,

David Baumeister
Project Manager

Enclosures

This report pertains to the samples analyzed in accordance with the chain of custody, and is intended only for the use of the individual or company to whom it is addressed.

Date of Report: June 17, 2021
Samples Submitted: June 15, 2021
Laboratory Reference: 2106-135
Project: 11-05150-003

Case Narrative

Samples were collected on June 15, 2021 and received by the laboratory on June 15, 2021. They were maintained at the laboratory at a temperature of 2°C to 6°C.

Please note that any and all soil sample results are reported on a dry-weight basis, unless otherwise noted below.

General QA/QC issues associated with the analytical data enclosed in this laboratory report will be indicated with a reference to a comment or explanation on the Data Qualifier page. More complex and involved QA/QC issues will be discussed in detail below.

This report pertains to the samples analyzed in accordance with the chain of custody, and is intended only for the use of the individual or company to whom it is addressed.

Date of Report: June 17, 2021
Samples Submitted: June 15, 2021
Laboratory Reference: 2106-135
Project: 11-05150-003

VOLATILE ORGANICS EPA 8260D
page 1 of 2

Matrix: Soil
Units: mg/kg

Analyte	Result	PQL	Method	Date Prepared	Date Analyzed	Flags
Client ID:	**DA7SWCS8210615I**					
Laboratory ID:	06-135-01					
Dichlorodifluoromethane	ND	0.00095	EPA 8260D	6-16-21	6-16-21	
Chloromethane	ND	0.0048	EPA 8260D	6-16-21	6-16-21	
Vinyl Chloride	ND	0.00095	EPA 8260D	6-16-21	6-16-21	
Bromomethane	ND	0.0048	EPA 8260D	6-16-21	6-16-21	
Chloroethane	ND	0.0048	EPA 8260D	6-16-21	6-16-21	
Trichlorofluoromethane	ND	0.00095	EPA 8260D	6-16-21	6-16-21	
1,1-Dichloroethene	ND	0.00095	EPA 8260D	6-16-21	6-16-21	
Acetone	0.12	0.0095	EPA 8260D	6-16-21	6-16-21	Y
Iodomethane	ND	0.0048	EPA 8260D	6-16-21	6-16-21	
Carbon Disulfide	ND	0.00095	EPA 8260D	6-16-21	6-16-21	
Methylene Chloride	ND	0.0048	EPA 8260D	6-16-21	6-16-21	
(trans) 1,2-Dichloroethene	ND	0.00095	EPA 8260D	6-16-21	6-16-21	
Methyl t-Butyl Ether	ND	0.00095	EPA 8260D	6-16-21	6-16-21	
1,1-Dichloroethane	ND	0.00095	EPA 8260D	6-16-21	6-16-21	
Vinyl Acetate	ND	0.0048	EPA 8260D	6-16-21	6-16-21	
2,2-Dichloropropane	ND	0.00095	EPA 8260D	6-16-21	6-16-21	
(cis) 1,2-Dichloroethene	ND	0.00095	EPA 8260D	6-16-21	6-16-21	
2-Butanone	0.013	0.0048	EPA 8260D	6-16-21	6-16-21	
Bromochloromethane	ND	0.00095	EPA 8260D	6-16-21	6-16-21	
Chloroform	ND	0.00095	EPA 8260D	6-16-21	6-16-21	
1,1,1-Trichloroethane	ND	0.00095	EPA 8260D	6-16-21	6-16-21	
Carbon Tetrachloride	ND	0.00095	EPA 8260D	6-16-21	6-16-21	
1,1-Dichloropropene	ND	0.00095	EPA 8260D	6-16-21	6-16-21	
Benzene	ND	0.00095	EPA 8260D	6-16-21	6-16-21	
1,2-Dichloroethane	ND	0.00095	EPA 8260D	6-16-21	6-16-21	
Trichloroethene	ND	0.00095	EPA 8260D	6-16-21	6-16-21	
1,2-Dichloropropane	ND	0.00095	EPA 8260D	6-16-21	6-16-21	
Dibromomethane	ND	0.00095	EPA 8260D	6-16-21	6-16-21	
Bromodichloromethane	ND	0.00095	EPA 8260D	6-16-21	6-16-21	
2-Chloroethyl Vinyl Ether	ND	0.0048	EPA 8260D	6-16-21	6-16-21	
(cis) 1,3-Dichloropropene	ND	0.00095	EPA 8260D	6-16-21	6-16-21	
Methyl Isobutyl Ketone	ND	0.0048	EPA 8260D	6-16-21	6-16-21	
Toluene	ND	0.0048	EPA 8260D	6-16-21	6-16-21	
(trans) 1,3-Dichloropropene	ND	0.00095	EPA 8260D	6-16-21	6-16-21	

This report pertains to the samples analyzed in accordance with the chain of custody, and is intended only for the use of the individual or company to whom it is addressed.

Date of Report: June 17, 2021
Samples Submitted: June 15, 2021
Laboratory Reference: 2106-135
Project: 11-05150-003

VOLATILE ORGANICS EPA 8260D
page 2 of 2

Analyte	Result	PQL	Method	Date Prepared	Date Analyzed	Flags
Client ID:	**DA7SWCS8210615I**					
Laboratory ID:	06-135-01					
1,1,2-Trichloroethane	ND	0.00095	EPA 8260D	6-16-21	6-16-21	
Tetrachloroethene	ND	0.00095	EPA 8260D	6-16-21	6-16-21	
1,3-Dichloropropane	ND	0.00095	EPA 8260D	6-16-21	6-16-21	
2-Hexanone	ND	0.0048	EPA 8260D	6-16-21	6-16-21	
Dibromochloromethane	ND	0.00095	EPA 8260D	6-16-21	6-16-21	
1,2-Dibromoethane	ND	0.000048	EPA 8260D/SIM	6-16-21	6-16-21	
Chlorobenzene	ND	0.00095	EPA 8260D	6-16-21	6-16-21	
1,1,1,2-Tetrachloroethane	ND	0.00095	EPA 8260D	6-16-21	6-16-21	
Ethylbenzene	ND	0.00095	EPA 8260D	6-16-21	6-16-21	
m,p-Xylene	ND	0.0019	EPA 8260D	6-16-21	6-16-21	
o-Xylene	ND	0.00095	EPA 8260D	6-16-21	6-16-21	
Styrene	ND	0.00095	EPA 8260D	6-16-21	6-16-21	
Bromoform	ND	0.0048	EPA 8260D	6-16-21	6-16-21	
Isopropylbenzene	ND	0.00095	EPA 8260D	6-16-21	6-16-21	
Bromobenzene	ND	0.00095	EPA 8260D	6-16-21	6-16-21	
1,1,2,2-Tetrachloroethane	ND	0.00095	EPA 8260D	6-16-21	6-16-21	
1,2,3-Trichloropropane	ND	0.00095	EPA 8260D	6-16-21	6-16-21	
n-Propylbenzene	ND	0.00095	EPA 8260D	6-16-21	6-16-21	
2-Chlorotoluene	ND	0.00095	EPA 8260D	6-16-21	6-16-21	
4-Chlorotoluene	ND	0.00095	EPA 8260D	6-16-21	6-16-21	
1,3,5-Trimethylbenzene	ND	0.00095	EPA 8260D	6-16-21	6-16-21	
tert-Butylbenzene	ND	0.00095	EPA 8260D	6-16-21	6-16-21	
1,2,4-Trimethylbenzene	ND	0.00095	EPA 8260D	6-16-21	6-16-21	
sec-Butylbenzene	ND	0.00095	EPA 8260D	6-16-21	6-16-21	
1,3-Dichlorobenzene	ND	0.00095	EPA 8260D	6-16-21	6-16-21	
p-Isopropyltoluene	ND	0.00095	EPA 8260D	6-16-21	6-16-21	
1,4-Dichlorobenzene	ND	0.00095	EPA 8260D	6-16-21	6-16-21	
1,2-Dichlorobenzene	ND	0.00095	EPA 8260D	6-16-21	6-16-21	
n-Butylbenzene	ND	0.00095	EPA 8260D	6-16-21	6-16-21	
1,2-Dibromo-3-chloropropane	ND	0.0048	EPA 8260D	6-16-21	6-16-21	
1,2,4-Trichlorobenzene	ND	0.00095	EPA 8260D	6-16-21	6-16-21	
Hexachlorobutadiene	ND	0.0048	EPA 8260D	6-16-21	6-16-21	
Naphthalene	ND	0.0048	EPA 8260D	6-16-21	6-16-21	
1,2,3-Trichlorobenzene	ND	0.00095	EPA 8260D	6-16-21	6-16-21	
Surrogate:	*Percent Recovery*	*Control Limits*				
Dibromofluoromethane	*93*	*74-131*				
Toluene-d8	*97*	*78-128*				
4-Bromofluorobenzene	*102*	*71-130*				

This report pertains to the samples analyzed in accordance with the chain of custody, and is intended only for the use of the individual or company to whom it is addressed.

Date of Report: June 17, 2021
Samples Submitted: June 15, 2021
Laboratory Reference: 2106-135
Project: 11-05150-003

VOLATILE ORGANICS EPA 8260D
page 1 of 2

Matrix: Soil
Units: mg/kg

Analyte	Result	PQL	Method	Date Prepared	Date Analyzed	Flags
Client ID:	**DA7SWCS8210615D**					
Laboratory ID:	06-135-02					
Dichlorodifluoromethane	ND	0.0010	EPA 8260D	6-16-21	6-16-21	
Chloromethane	ND	0.0050	EPA 8260D	6-16-21	6-16-21	
Vinyl Chloride	ND	0.0010	EPA 8260D	6-16-21	6-16-21	
Bromomethane	ND	0.0050	EPA 8260D	6-16-21	6-16-21	
Chloroethane	ND	0.0050	EPA 8260D	6-16-21	6-16-21	
Trichlorofluoromethane	ND	0.0010	EPA 8260D	6-16-21	6-16-21	
1,1-Dichloroethene	ND	0.0010	EPA 8260D	6-16-21	6-16-21	
Acetone	0.11	0.010	EPA 8260D	6-16-21	6-16-21	Y
Iodomethane	ND	0.0050	EPA 8260D	6-16-21	6-16-21	
Carbon Disulfide	ND	0.0010	EPA 8260D	6-16-21	6-16-21	
Methylene Chloride	ND	0.0050	EPA 8260D	6-16-21	6-16-21	
(trans) 1,2-Dichloroethene	ND	0.0010	EPA 8260D	6-16-21	6-16-21	
Methyl t-Butyl Ether	ND	0.0010	EPA 8260D	6-16-21	6-16-21	
1,1-Dichloroethane	ND	0.0010	EPA 8260D	6-16-21	6-16-21	
Vinyl Acetate	ND	0.0050	EPA 8260D	6-16-21	6-16-21	
2,2-Dichloropropane	ND	0.0010	EPA 8260D	6-16-21	6-16-21	
(cis) 1,2-Dichloroethene	ND	0.0010	EPA 8260D	6-16-21	6-16-21	
2-Butanone	0.014	0.0050	EPA 8260D	6-16-21	6-16-21	
Bromochloromethane	ND	0.0010	EPA 8260D	6-16-21	6-16-21	
Chloroform	ND	0.0010	EPA 8260D	6-16-21	6-16-21	
1,1,1-Trichloroethane	ND	0.0010	EPA 8260D	6-16-21	6-16-21	
Carbon Tetrachloride	ND	0.0010	EPA 8260D	6-16-21	6-16-21	
1,1-Dichloropropene	ND	0.0010	EPA 8260D	6-16-21	6-16-21	
Benzene	ND	0.0010	EPA 8260D	6-16-21	6-16-21	
1,2-Dichloroethane	ND	0.0010	EPA 8260D	6-16-21	6-16-21	
Trichloroethene	ND	0.0010	EPA 8260D	6-16-21	6-16-21	
1,2-Dichloropropane	ND	0.0010	EPA 8260D	6-16-21	6-16-21	
Dibromomethane	ND	0.0010	EPA 8260D	6-16-21	6-16-21	
Bromodichloromethane	ND	0.0010	EPA 8260D	6-16-21	6-16-21	
2-Chloroethyl Vinyl Ether	ND	0.0050	EPA 8260D	6-16-21	6-16-21	
(cis) 1,3-Dichloropropene	ND	0.0010	EPA 8260D	6-16-21	6-16-21	
Methyl Isobutyl Ketone	ND	0.0050	EPA 8260D	6-16-21	6-16-21	
Toluene	ND	0.0050	EPA 8260D	6-16-21	6-16-21	
(trans) 1,3-Dichloropropene	ND	0.0010	EPA 8260D	6-16-21	6-16-21	

This report pertains to the samples analyzed in accordance with the chain of custody,
and is intended only for the use of the individual or company to whom it is addressed.

Date of Report: June 17, 2021
Samples Submitted: June 15, 2021
Laboratory Reference: 2106-135
Project: 11-05150-003

VOLATILE ORGANICS EPA 8260D
page 2 of 2

Analyte	Result	PQL	Method	Date Prepared	Date Analyzed	Flags
Client ID:	**DA7SWCS8210615D**					
Laboratory ID:	06-135-02					
1,1,2-Trichloroethane	ND	0.0010	EPA 8260D	6-16-21	6-16-21	
Tetrachloroethene	ND	0.0010	EPA 8260D	6-16-21	6-16-21	
1,3-Dichloropropane	ND	0.0010	EPA 8260D	6-16-21	6-16-21	
2-Hexanone	ND	0.0050	EPA 8260D	6-16-21	6-16-21	
Dibromochloromethane	ND	0.0010	EPA 8260D	6-16-21	6-16-21	
1,2-Dibromoethane	ND	0.000050	EPA 8260D/SIM	6-16-21	6-16-21	
Chlorobenzene	ND	0.0010	EPA 8260D	6-16-21	6-16-21	
1,1,1,2-Tetrachloroethane	ND	0.0010	EPA 8260D	6-16-21	6-16-21	
Ethylbenzene	ND	0.0010	EPA 8260D	6-16-21	6-16-21	
m,p-Xylene	ND	0.0020	EPA 8260D	6-16-21	6-16-21	
o-Xylene	ND	0.0010	EPA 8260D	6-16-21	6-16-21	
Styrene	ND	0.0010	EPA 8260D	6-16-21	6-16-21	
Bromoform	ND	0.0050	EPA 8260D	6-16-21	6-16-21	
Isopropylbenzene	ND	0.0010	EPA 8260D	6-16-21	6-16-21	
Bromobenzene	ND	0.0010	EPA 8260D	6-16-21	6-16-21	
1,1,2,2-Tetrachloroethane	ND	0.0010	EPA 8260D	6-16-21	6-16-21	
1,2,3-Trichloropropane	ND	0.0010	EPA 8260D	6-16-21	6-16-21	
n-Propylbenzene	ND	0.0010	EPA 8260D	6-16-21	6-16-21	
2-Chlorotoluene	ND	0.0010	EPA 8260D	6-16-21	6-16-21	
4-Chlorotoluene	ND	0.0010	EPA 8260D	6-16-21	6-16-21	
1,3,5-Trimethylbenzene	ND	0.0010	EPA 8260D	6-16-21	6-16-21	
tert-Butylbenzene	ND	0.0010	EPA 8260D	6-16-21	6-16-21	
1,2,4-Trimethylbenzene	ND	0.0010	EPA 8260D	6-16-21	6-16-21	
sec-Butylbenzene	ND	0.0010	EPA 8260D	6-16-21	6-16-21	
1,3-Dichlorobenzene	ND	0.0010	EPA 8260D	6-16-21	6-16-21	
p-Isopropyltoluene	ND	0.0010	EPA 8260D	6-16-21	6-16-21	
1,4-Dichlorobenzene	ND	0.0010	EPA 8260D	6-16-21	6-16-21	
1,2-Dichlorobenzene	ND	0.0010	EPA 8260D	6-16-21	6-16-21	
n-Butylbenzene	ND	0.0010	EPA 8260D	6-16-21	6-16-21	
1,2-Dibromo-3-chloropropane	ND	0.0050	EPA 8260D	6-16-21	6-16-21	
1,2,4-Trichlorobenzene	ND	0.0010	EPA 8260D	6-16-21	6-16-21	
Hexachlorobutadiene	ND	0.0050	EPA 8260D	6-16-21	6-16-21	
Naphthalene	ND	0.0050	EPA 8260D	6-16-21	6-16-21	
1,2,3-Trichlorobenzene	ND	0.0010	EPA 8260D	6-16-21	6-16-21	
Surrogate:	*Percent Recovery*	*Control Limits*				
Dibromofluoromethane	*94*	*74-131*				
Toluene-d8	*97*	*78-128*				
4-Bromofluorobenzene	*101*	*71-130*				

This report pertains to the samples analyzed in accordance with the chain of custody, and is intended only for the use of the individual or company to whom it is addressed.

Date of Report: June 17, 2021
Samples Submitted: June 15, 2021
Laboratory Reference: 2106-135
Project: 11-05150-003

VOLATILE ORGANICS EPA 8260D
page 1 of 2

Matrix: Soil
Units: mg/kg

Analyte	Result	PQL	Method	Date Prepared	Date Analyzed	Flags
Client ID:	**DA7SWCS9210615I**					
Laboratory ID:	06-135-03					
Dichlorodifluoromethane	ND	0.00088	EPA 8260D	6-16-21	6-16-21	
Chloromethane	ND	0.0044	EPA 8260D	6-16-21	6-16-21	
Vinyl Chloride	ND	0.00088	EPA 8260D	6-16-21	6-16-21	
Bromomethane	ND	0.0044	EPA 8260D	6-16-21	6-16-21	
Chloroethane	ND	0.0044	EPA 8260D	6-16-21	6-16-21	
Trichlorofluoromethane	ND	0.00088	EPA 8260D	6-16-21	6-16-21	
1,1-Dichloroethene	ND	0.00088	EPA 8260D	6-16-21	6-16-21	
Acetone	ND	0.0088	EPA 8260D	6-16-21	6-16-21	
Iodomethane	ND	0.0044	EPA 8260D	6-16-21	6-16-21	
Carbon Disulfide	ND	0.00088	EPA 8260D	6-16-21	6-16-21	
Methylene Chloride	ND	0.0044	EPA 8260D	6-16-21	6-16-21	
(trans) 1,2-Dichloroethene	ND	0.00088	EPA 8260D	6-16-21	6-16-21	
Methyl t-Butyl Ether	ND	0.00088	EPA 8260D	6-16-21	6-16-21	
1,1-Dichloroethane	ND	0.00088	EPA 8260D	6-16-21	6-16-21	
Vinyl Acetate	ND	0.0044	EPA 8260D	6-16-21	6-16-21	
2,2-Dichloropropane	ND	0.00088	EPA 8260D	6-16-21	6-16-21	
(cis) 1,2-Dichloroethene	ND	0.00088	EPA 8260D	6-16-21	6-16-21	
2-Butanone	ND	0.0044	EPA 8260D	6-16-21	6-16-21	
Bromochloromethane	ND	0.00088	EPA 8260D	6-16-21	6-16-21	
Chloroform	ND	0.00088	EPA 8260D	6-16-21	6-16-21	
1,1,1-Trichloroethane	ND	0.00088	EPA 8260D	6-16-21	6-16-21	
Carbon Tetrachloride	ND	0.00088	EPA 8260D	6-16-21	6-16-21	
1,1-Dichloropropene	ND	0.00088	EPA 8260D	6-16-21	6-16-21	
Benzene	ND	0.00088	EPA 8260D	6-16-21	6-16-21	
1,2-Dichloroethane	ND	0.00088	EPA 8260D	6-16-21	6-16-21	
Trichloroethene	ND	0.00088	EPA 8260D	6-16-21	6-16-21	
1,2-Dichloropropane	ND	0.00088	EPA 8260D	6-16-21	6-16-21	
Dibromomethane	ND	0.00088	EPA 8260D	6-16-21	6-16-21	
Bromodichloromethane	ND	0.00088	EPA 8260D	6-16-21	6-16-21	
2-Chloroethyl Vinyl Ether	ND	0.0044	EPA 8260D	6-16-21	6-16-21	
(cis) 1,3-Dichloropropene	ND	0.00088	EPA 8260D	6-16-21	6-16-21	
Methyl Isobutyl Ketone	ND	0.0044	EPA 8260D	6-16-21	6-16-21	
Toluene	ND	0.0044	EPA 8260D	6-16-21	6-16-21	
(trans) 1,3-Dichloropropene	ND	0.00088	EPA 8260D	6-16-21	6-16-21	

This report pertains to the samples analyzed in accordance with the chain of custody, and is intended only for the use of the individual or company to whom it is addressed.

Date of Report: June 17, 2021
Samples Submitted: June 15, 2021
Laboratory Reference: 2106-135
Project: 11-05150-003

VOLATILE ORGANICS EPA 8260D
page 2 of 2

Analyte	Result	PQL	Method	Date Prepared	Date Analyzed	Flags
Client ID:	**DA7SWCS9210615I**					
Laboratory ID:	06-135-03					
1,1,2-Trichloroethane	ND	0.00088	EPA 8260D	6-16-21	6-16-21	
Tetrachloroethene	ND	0.00088	EPA 8260D	6-16-21	6-16-21	
1,3-Dichloropropane	ND	0.00088	EPA 8260D	6-16-21	6-16-21	
2-Hexanone	ND	0.0044	EPA 8260D	6-16-21	6-16-21	
Dibromochloromethane	ND	0.00088	EPA 8260D	6-16-21	6-16-21	
1,2-Dibromoethane	ND	0.000044	EPA 8260D/SIM	6-16-21	6-16-21	
Chlorobenzene	ND	0.00088	EPA 8260D	6-16-21	6-16-21	
1,1,1,2-Tetrachloroethane	ND	0.00088	EPA 8260D	6-16-21	6-16-21	
Ethylbenzene	ND	0.00088	EPA 8260D	6-16-21	6-16-21	
m,p-Xylene	ND	0.0018	EPA 8260D	6-16-21	6-16-21	
o-Xylene	ND	0.00088	EPA 8260D	6-16-21	6-16-21	
Styrene	ND	0.00088	EPA 8260D	6-16-21	6-16-21	
Bromoform	ND	0.0044	EPA 8260D	6-16-21	6-16-21	
Isopropylbenzene	ND	0.00088	EPA 8260D	6-16-21	6-16-21	
Bromobenzene	ND	0.00088	EPA 8260D	6-16-21	6-16-21	
1,1,2,2-Tetrachloroethane	ND	0.00088	EPA 8260D	6-16-21	6-16-21	
1,2,3-Trichloropropane	ND	0.00088	EPA 8260D	6-16-21	6-16-21	
n-Propylbenzene	ND	0.00088	EPA 8260D	6-16-21	6-16-21	
2-Chlorotoluene	ND	0.00088	EPA 8260D	6-16-21	6-16-21	
4-Chlorotoluene	ND	0.00088	EPA 8260D	6-16-21	6-16-21	
1,3,5-Trimethylbenzene	ND	0.00088	EPA 8260D	6-16-21	6-16-21	
tert-Butylbenzene	ND	0.00088	EPA 8260D	6-16-21	6-16-21	
1,2,4-Trimethylbenzene	ND	0.00088	EPA 8260D	6-16-21	6-16-21	
sec-Butylbenzene	ND	0.00088	EPA 8260D	6-16-21	6-16-21	
1,3-Dichlorobenzene	ND	0.00088	EPA 8260D	6-16-21	6-16-21	
p-Isopropyltoluene	ND	0.00088	EPA 8260D	6-16-21	6-16-21	
1,4-Dichlorobenzene	ND	0.00088	EPA 8260D	6-16-21	6-16-21	
1,2-Dichlorobenzene	ND	0.00088	EPA 8260D	6-16-21	6-16-21	
n-Butylbenzene	ND	0.00088	EPA 8260D	6-16-21	6-16-21	
1,2-Dibromo-3-chloropropane	ND	0.0044	EPA 8260D	6-16-21	6-16-21	
1,2,4-Trichlorobenzene	ND	0.00088	EPA 8260D	6-16-21	6-16-21	
Hexachlorobutadiene	ND	0.0044	EPA 8260D	6-16-21	6-16-21	
Naphthalene	ND	0.0044	EPA 8260D	6-16-21	6-16-21	
1,2,3-Trichlorobenzene	ND	0.00088	EPA 8260D	6-16-21	6-16-21	
Surrogate:	*Percent Recovery*	*Control Limits*				
Dibromofluoromethane	*93*	*74-131*				
Toluene-d8	*96*	*78-128*				
4-Bromofluorobenzene	*104*	*71-130*				

This report pertains to the samples analyzed in accordance with the chain of custody, and is intended only for the use of the individual or company to whom it is addressed.

Date of Report: June 17, 2021
Samples Submitted: June 15, 2021
Laboratory Reference: 2106-135
Project: 11-05150-003

VOLATILE ORGANICS EPA 8260D
QUALITY CONTROL
page 1 of 2

Matrix: Soil
Units: mg/kg

Analyte	Result	PQL	Method	Date Prepared	Date Analyzed	Flags
METHOD BLANK						
Laboratory ID:	MB0616S1					
Dichlorodifluoromethane	ND	0.0010	EPA 8260D	6-16-21	6-16-21	
Chloromethane	ND	0.0050	EPA 8260D	6-16-21	6-16-21	
Vinyl Chloride	ND	0.0010	EPA 8260D	6-16-21	6-16-21	
Bromomethane	ND	0.0050	EPA 8260D	6-16-21	6-16-21	
Chloroethane	ND	0.0050	EPA 8260D	6-16-21	6-16-21	
Trichlorofluoromethane	ND	0.0010	EPA 8260D	6-16-21	6-16-21	
1,1-Dichloroethene	ND	0.0010	EPA 8260D	6-16-21	6-16-21	
Acetone	ND	0.010	EPA 8260D	6-16-21	6-16-21	
Iodomethane	ND	0.0050	EPA 8260D	6-16-21	6-16-21	
Carbon Disulfide	ND	0.0010	EPA 8260D	6-16-21	6-16-21	
Methylene Chloride	ND	0.0050	EPA 8260D	6-16-21	6-16-21	
(trans) 1,2-Dichloroethene	ND	0.0010	EPA 8260D	6-16-21	6-16-21	
Methyl t-Butyl Ether	ND	0.0010	EPA 8260D	6-16-21	6-16-21	
1,1-Dichloroethane	ND	0.0010	EPA 8260D	6-16-21	6-16-21	
Vinyl Acetate	ND	0.0050	EPA 8260D	6-16-21	6-16-21	
2,2-Dichloropropane	ND	0.0010	EPA 8260D	6-16-21	6-16-21	
(cis) 1,2-Dichloroethene	ND	0.0010	EPA 8260D	6-16-21	6-16-21	
2-Butanone	ND	0.0050	EPA 8260D	6-16-21	6-16-21	
Bromochloromethane	ND	0.0010	EPA 8260D	6-16-21	6-16-21	
Chloroform	ND	0.0010	EPA 8260D	6-16-21	6-16-21	
1,1,1-Trichloroethane	ND	0.0010	EPA 8260D	6-16-21	6-16-21	
Carbon Tetrachloride	ND	0.0010	EPA 8260D	6-16-21	6-16-21	
1,1-Dichloropropene	ND	0.0010	EPA 8260D	6-16-21	6-16-21	
Benzene	ND	0.0010	EPA 8260D	6-16-21	6-16-21	
1,2-Dichloroethane	ND	0.0010	EPA 8260D	6-16-21	6-16-21	
Trichloroethene	ND	0.0010	EPA 8260D	6-16-21	6-16-21	
1,2-Dichloropropane	ND	0.0010	EPA 8260D	6-16-21	6-16-21	
Dibromomethane	ND	0.0010	EPA 8260D	6-16-21	6-16-21	
Bromodichloromethane	ND	0.0010	EPA 8260D	6-16-21	6-16-21	
2-Chloroethyl Vinyl Ether	ND	0.0050	EPA 8260D	6-16-21	6-16-21	
(cis) 1,3-Dichloropropene	ND	0.0010	EPA 8260D	6-16-21	6-16-21	
Methyl Isobutyl Ketone	ND	0.0050	EPA 8260D	6-16-21	6-16-21	
Toluene	ND	0.0050	EPA 8260D	6-16-21	6-16-21	
(trans) 1,3-Dichloropropene	ND	0.0010	EPA 8260D	6-16-21	6-16-21	

This report pertains to the samples analyzed in accordance with the chain of custody,
and is intended only for the use of the individual or company to whom it is addressed.

Date of Report: June 17, 2021
Samples Submitted: June 15, 2021
Laboratory Reference: 2106-135
Project: 11-05150-003

VOLATILE ORGANICS EPA 8260D
QUALITY CONTROL
page 2 of 2

Analyte	Result	PQL	Method	Date Prepared	Date Analyzed	Flags
METHOD BLANK						
Laboratory ID:	MB0616S1					
1,1,2-Trichloroethane	ND	0.0010	EPA 8260D	6-16-21	6-16-21	
Tetrachloroethene	ND	0.0010	EPA 8260D	6-16-21	6-16-21	
1,3-Dichloropropane	ND	0.0010	EPA 8260D	6-16-21	6-16-21	
2-Hexanone	ND	0.0050	EPA 8260D	6-16-21	6-16-21	
Dibromochloromethane	ND	0.0010	EPA 8260D	6-16-21	6-16-21	
1,2-Dibromoethane	ND	0.000050	EPA 8260D/SIM	6-16-21	6-16-21	
Chlorobenzene	ND	0.0010	EPA 8260D	6-16-21	6-16-21	
1,1,1,2-Tetrachloroethane	ND	0.0010	EPA 8260D	6-16-21	6-16-21	
Ethylbenzene	ND	0.0010	EPA 8260D	6-16-21	6-16-21	
m,p-Xylene	ND	0.0020	EPA 8260D	6-16-21	6-16-21	
o-Xylene	ND	0.0010	EPA 8260D	6-16-21	6-16-21	
Styrene	ND	0.0010	EPA 8260D	6-16-21	6-16-21	
Bromoform	ND	0.0050	EPA 8260D	6-16-21	6-16-21	
Isopropylbenzene	ND	0.0010	EPA 8260D	6-16-21	6-16-21	
Bromobenzene	ND	0.0010	EPA 8260D	6-16-21	6-16-21	
1,1,2,2-Tetrachloroethane	ND	0.0010	EPA 8260D	6-16-21	6-16-21	
1,2,3-Trichloropropane	ND	0.0010	EPA 8260D	6-16-21	6-16-21	
n-Propylbenzene	ND	0.0010	EPA 8260D	6-16-21	6-16-21	
2-Chlorotoluene	ND	0.0010	EPA 8260D	6-16-21	6-16-21	
4-Chlorotoluene	ND	0.0010	EPA 8260D	6-16-21	6-16-21	
1,3,5-Trimethylbenzene	ND	0.0010	EPA 8260D	6-16-21	6-16-21	
tert-Butylbenzene	ND	0.0010	EPA 8260D	6-16-21	6-16-21	
1,2,4-Trimethylbenzene	ND	0.0010	EPA 8260D	6-16-21	6-16-21	
sec-Butylbenzene	ND	0.0010	EPA 8260D	6-16-21	6-16-21	
1,3-Dichlorobenzene	ND	0.0010	EPA 8260D	6-16-21	6-16-21	
p-Isopropyltoluene	ND	0.0010	EPA 8260D	6-16-21	6-16-21	
1,4-Dichlorobenzene	ND	0.0010	EPA 8260D	6-16-21	6-16-21	
1,2-Dichlorobenzene	ND	0.0010	EPA 8260D	6-16-21	6-16-21	
n-Butylbenzene	ND	0.0010	EPA 8260D	6-16-21	6-16-21	
1,2-Dibromo-3-chloropropane	ND	0.0050	EPA 8260D	6-16-21	6-16-21	
1,2,4-Trichlorobenzene	ND	0.0010	EPA 8260D	6-16-21	6-16-21	
Hexachlorobutadiene	ND	0.0050	EPA 8260D	6-16-21	6-16-21	
Naphthalene	ND	0.0050	EPA 8260D	6-16-21	6-16-21	
1,2,3-Trichlorobenzene	ND	0.0010	EPA 8260D	6-16-21	6-16-21	
Surrogate:	*Percent Recovery*	*Control Limits*				
Dibromofluoromethane	*93*	*74-131*				
Toluene-d8	*97*	*78-128*				
4-Bromofluorobenzene	*104*	*71-130*				

This report pertains to the samples analyzed in accordance with the chain of custody, and is intended only for the use of the individual or company to whom it is addressed.

Date of Report: June 17, 2021
Samples Submitted: June 15, 2021
Laboratory Reference: 2106-135
Project: 11-05150-003

VOLATILE ORGANICS EPA 8260D
QUALITY CONTROL

Matrix: Soil
Units: mg/kg

Analyte	Result		Spike Level		Percent Recovery		Recovery Limits	RPD	RPD Limit	Flags
SPIKE BLANKS										
Laboratory ID:	SB0616S1									
	SB	SBD	SB	SBD	SB	SBD				
1,1-Dichloroethene	**0.0550**	**0.0535**	0.0500	0.0500	110	107	71-131	3	19	
Benzene	**0.0489**	**0.0482**	0.0500	0.0500	98	96	73-124	1	18	
Trichloroethene	**0.0514**	**0.0502**	0.0500	0.0500	103	100	79-130	2	18	
Toluene	**0.0492**	**0.0478**	0.0500	0.0500	98	96	76-123	3	18	
Chlorobenzene	**0.0493**	**0.0485**	0.0500	0.0500	99	97	78-122	2	18	
Surrogate:										
Dibromofluoromethane					*96*	*93*	*74-131*			
Toluene-d8					*97*	*97*	*78-128*			
4-Bromofluorobenzene					*104*	*112*	*71-130*			

This report pertains to the samples analyzed in accordance with the chain of custody, and is intended only for the use of the individual or company to whom it is addressed.

Date of Report: June 17, 2021
Samples Submitted: June 15, 2021
Laboratory Reference: 2106-135
Project: 11-05150-003

VOLATILE ORGANICS EPA 8260D
page 1 of 2

Matrix: Water
Units: ug/L

Analyte	Result	PQL	Method	Date Prepared	Date Analyzed	Flags
Client ID:	**VTRP210615I - trip blank**					
Laboratory ID:	06-135-04					
Dichlorodifluoromethane	ND	0.20	EPA 8260D	6-17-21	6-17-21	
Chloromethane	ND	1.0	EPA 8260D	6-17-21	6-17-21	
Vinyl Chloride	ND	0.20	EPA 8260D	6-17-21	6-17-21	
Bromomethane	ND	2.0	EPA 8260D	6-17-21	6-17-21	
Chloroethane	ND	1.0	EPA 8260D	6-17-21	6-17-21	
Trichlorofluoromethane	ND	0.20	EPA 8260D	6-17-21	6-17-21	
1,1-Dichloroethene	ND	0.20	EPA 8260D	6-17-21	6-17-21	
Acetone	ND	5.0	EPA 8260D	6-17-21	6-17-21	
Iodomethane	ND	1.0	EPA 8260D	6-17-21	6-17-21	
Carbon Disulfide	ND	0.20	EPA 8260D	6-17-21	6-17-21	
Methylene Chloride	ND	1.0	EPA 8260D	6-17-21	6-17-21	
(trans) 1,2-Dichloroethene	ND	0.20	EPA 8260D	6-17-21	6-17-21	
Methyl t-Butyl Ether	ND	0.20	EPA 8260D	6-17-21	6-17-21	
1,1-Dichloroethane	ND	0.20	EPA 8260D	6-17-21	6-17-21	
Vinyl Acetate	ND	1.0	EPA 8260D	6-17-21	6-17-21	
2,2-Dichloropropane	ND	0.20	EPA 8260D	6-17-21	6-17-21	
(cis) 1,2-Dichloroethene	ND	0.20	EPA 8260D	6-17-21	6-17-21	
2-Butanone	ND	5.0	EPA 8260D	6-17-21	6-17-21	
Bromochloromethane	ND	0.20	EPA 8260D	6-17-21	6-17-21	
Chloroform	ND	0.20	EPA 8260D	6-17-21	6-17-21	
1,1,1-Trichloroethane	ND	0.20	EPA 8260D	6-17-21	6-17-21	
Carbon Tetrachloride	ND	0.20	EPA 8260D	6-17-21	6-17-21	
1,1-Dichloropropene	ND	0.20	EPA 8260D	6-17-21	6-17-21	
Benzene	ND	0.20	EPA 8260D	6-17-21	6-17-21	
1,2-Dichloroethane	ND	0.20	EPA 8260D	6-17-21	6-17-21	
Trichloroethene	ND	0.20	EPA 8260D	6-17-21	6-17-21	
1,2-Dichloropropane	ND	0.20	EPA 8260D	6-17-21	6-17-21	
Dibromomethane	ND	0.20	EPA 8260D	6-17-21	6-17-21	
Bromodichloromethane	ND	0.20	EPA 8260D	6-17-21	6-17-21	
2-Chloroethyl Vinyl Ether	ND	1.0	EPA 8260D	6-17-21	6-17-21	
(cis) 1,3-Dichloropropene	ND	0.20	EPA 8260D	6-17-21	6-17-21	
Methyl Isobutyl Ketone	ND	2.0	EPA 8260D	6-17-21	6-17-21	
Toluene	ND	1.0	EPA 8260D	6-17-21	6-17-21	
(trans) 1,3-Dichloropropene	ND	0.20	EPA 8260D	6-17-21	6-17-21	

This report pertains to the samples analyzed in accordance with the chain of custody, and is intended only for the use of the individual or company to whom it is addressed.

Date of Report: June 17, 2021
Samples Submitted: June 15, 2021
Laboratory Reference: 2106-135
Project: 11-05150-003

VOLATILE ORGANICS EPA 8260D
page 2 of 2

Analyte	Result	PQL	Method	Date Prepared	Date Analyzed	Flags
Client ID:	**VTRP210615l - trip blank**					
Laboratory ID:	06-135-04					
1,1,2-Trichloroethane	ND	0.20	EPA 8260D	6-17-21	6-17-21	
Tetrachloroethene	ND	0.20	EPA 8260D	6-17-21	6-17-21	
1,3-Dichloropropane	ND	0.20	EPA 8260D	6-17-21	6-17-21	
2-Hexanone	ND	2.0	EPA 8260D	6-17-21	6-17-21	
Dibromochloromethane	ND	0.20	EPA 8260D	6-17-21	6-17-21	
1,2-Dibromoethane	ND	0.20	EPA 8260D	6-17-21	6-17-21	
Chlorobenzene	ND	0.20	EPA 8260D	6-17-21	6-17-21	
1,1,1,2-Tetrachloroethane	ND	0.20	EPA 8260D	6-17-21	6-17-21	
Ethylbenzene	ND	0.20	EPA 8260D	6-17-21	6-17-21	
m,p-Xylene	ND	0.40	EPA 8260D	6-17-21	6-17-21	
o-Xylene	ND	0.20	EPA 8260D	6-17-21	6-17-21	
Styrene	ND	0.20	EPA 8260D	6-17-21	6-17-21	
Bromoform	ND	1.0	EPA 8260D	6-17-21	6-17-21	
Isopropylbenzene	ND	0.20	EPA 8260D	6-17-21	6-17-21	
Bromobenzene	ND	0.20	EPA 8260D	6-17-21	6-17-21	
1,1,2,2-Tetrachloroethane	ND	0.20	EPA 8260D	6-17-21	6-17-21	
1,2,3-Trichloropropane	ND	0.20	EPA 8260D	6-17-21	6-17-21	
n-Propylbenzene	ND	0.20	EPA 8260D	6-17-21	6-17-21	
2-Chlorotoluene	ND	0.20	EPA 8260D	6-17-21	6-17-21	
4-Chlorotoluene	ND	0.20	EPA 8260D	6-17-21	6-17-21	
1,3,5-Trimethylbenzene	ND	0.20	EPA 8260D	6-17-21	6-17-21	
tert-Butylbenzene	ND	0.20	EPA 8260D	6-17-21	6-17-21	
1,2,4-Trimethylbenzene	ND	0.20	EPA 8260D	6-17-21	6-17-21	
sec-Butylbenzene	ND	0.20	EPA 8260D	6-17-21	6-17-21	
1,3-Dichlorobenzene	ND	0.20	EPA 8260D	6-17-21	6-17-21	
p-Isopropyltoluene	ND	0.20	EPA 8260D	6-17-21	6-17-21	
1,4-Dichlorobenzene	ND	0.20	EPA 8260D	6-17-21	6-17-21	
1,2-Dichlorobenzene	ND	0.20	EPA 8260D	6-17-21	6-17-21	
n-Butylbenzene	ND	0.20	EPA 8260D	6-17-21	6-17-21	
1,2-Dibromo-3-chloropropane	ND	1.0	EPA 8260D	6-17-21	6-17-21	
1,2,4-Trichlorobenzene	ND	0.20	EPA 8260D	6-17-21	6-17-21	
Hexachlorobutadiene	ND	1.0	EPA 8260D	6-17-21	6-17-21	
Naphthalene	ND	1.0	EPA 8260D	6-17-21	6-17-21	
1,2,3-Trichlorobenzene	ND	0.20	EPA 8260D	6-17-21	6-17-21	
Surrogate:	*Percent Recovery*	*Control Limits*				
Dibromofluoromethane	*101*	*75-127*				
Toluene-d8	*99*	*80-127*				
4-Bromofluorobenzene	*99*	*78-125*				

This report pertains to the samples analyzed in accordance with the chain of custody, and is intended only for the use of the individual or company to whom it is addressed.

Date of Report: June 17, 2021
Samples Submitted: June 15, 2021
Laboratory Reference: 2106-135
Project: 11-05150-003

VOLATILE ORGANICS EPA 8260D
QUALITY CONTROL
page 1 of 2

Matrix: Water
Units: ug/L

Analyte	Result	PQL	Method	Date Prepared	Date Analyzed	Flags
METHOD BLANK						
Laboratory ID:	MB0617W1					
Dichlorodifluoromethane	ND	0.20	EPA 8260D	6-17-21	6-17-21	
Chloromethane	ND	1.0	EPA 8260D	6-17-21	6-17-21	
Vinyl Chloride	ND	0.20	EPA 8260D	6-17-21	6-17-21	
Bromomethane	ND	2.0	EPA 8260D	6-17-21	6-17-21	
Chloroethane	ND	1.0	EPA 8260D	6-17-21	6-17-21	
Trichlorofluoromethane	ND	0.20	EPA 8260D	6-17-21	6-17-21	
1,1-Dichloroethene	ND	0.20	EPA 8260D	6-17-21	6-17-21	
Acetone	ND	5.0	EPA 8260D	6-17-21	6-17-21	
Iodomethane	ND	1.0	EPA 8260D	6-17-21	6-17-21	
Carbon Disulfide	ND	0.20	EPA 8260D	6-17-21	6-17-21	
Methylene Chloride	ND	1.0	EPA 8260D	6-17-21	6-17-21	
(trans) 1,2-Dichloroethene	ND	0.20	EPA 8260D	6-17-21	6-17-21	
Methyl t-Butyl Ether	ND	0.20	EPA 8260D	6-17-21	6-17-21	
1,1-Dichloroethane	ND	0.20	EPA 8260D	6-17-21	6-17-21	
Vinyl Acetate	ND	1.0	EPA 8260D	6-17-21	6-17-21	
2,2-Dichloropropane	ND	0.20	EPA 8260D	6-17-21	6-17-21	
(cis) 1,2-Dichloroethene	ND	0.20	EPA 8260D	6-17-21	6-17-21	
2-Butanone	ND	5.0	EPA 8260D	6-17-21	6-17-21	
Bromochloromethane	ND	0.20	EPA 8260D	6-17-21	6-17-21	
Chloroform	ND	0.20	EPA 8260D	6-17-21	6-17-21	
1,1,1-Trichloroethane	ND	0.20	EPA 8260D	6-17-21	6-17-21	
Carbon Tetrachloride	ND	0.20	EPA 8260D	6-17-21	6-17-21	
1,1-Dichloropropene	ND	0.20	EPA 8260D	6-17-21	6-17-21	
Benzene	ND	0.20	EPA 8260D	6-17-21	6-17-21	
1,2-Dichloroethane	ND	0.20	EPA 8260D	6-17-21	6-17-21	
Trichloroethene	ND	0.20	EPA 8260D	6-17-21	6-17-21	
1,2-Dichloropropane	ND	0.20	EPA 8260D	6-17-21	6-17-21	
Dibromomethane	ND	0.20	EPA 8260D	6-17-21	6-17-21	
Bromodichloromethane	ND	0.20	EPA 8260D	6-17-21	6-17-21	
2-Chloroethyl Vinyl Ether	ND	1.0	EPA 8260D	6-17-21	6-17-21	
(cis) 1,3-Dichloropropene	ND	0.20	EPA 8260D	6-17-21	6-17-21	
Methyl Isobutyl Ketone	ND	2.0	EPA 8260D	6-17-21	6-17-21	
Toluene	ND	1.0	EPA 8260D	6-17-21	6-17-21	
(trans) 1,3-Dichloropropene	ND	0.20	EPA 8260D	6-17-21	6-17-21	

This report pertains to the samples analyzed in accordance with the chain of custody, and is intended only for the use of the individual or company to whom it is addressed.

Date of Report: June 17, 2021
Samples Submitted: June 15, 2021
Laboratory Reference: 2106-135
Project: 11-05150-003

VOLATILE ORGANICS EPA 8260D
QUALITY CONTROL
page 2 of 2

Analyte	Result	PQL	Method	Date Prepared	Date Analyzed	Flags
METHOD BLANK						
Laboratory ID:	MB0617W1					
1,1,2-Trichloroethane	ND	0.20	EPA 8260D	6-17-21	6-17-21	
Tetrachloroethene	ND	0.20	EPA 8260D	6-17-21	6-17-21	
1,3-Dichloropropane	ND	0.20	EPA 8260D	6-17-21	6-17-21	
2-Hexanone	ND	2.0	EPA 8260D	6-17-21	6-17-21	
Dibromochloromethane	ND	0.20	EPA 8260D	6-17-21	6-17-21	
1,2-Dibromoethane	ND	0.20	EPA 8260D	6-17-21	6-17-21	
Chlorobenzene	ND	0.20	EPA 8260D	6-17-21	6-17-21	
1,1,1,2-Tetrachloroethane	ND	0.20	EPA 8260D	6-17-21	6-17-21	
Ethylbenzene	ND	0.20	EPA 8260D	6-17-21	6-17-21	
m,p-Xylene	ND	0.40	EPA 8260D	6-17-21	6-17-21	
o-Xylene	ND	0.20	EPA 8260D	6-17-21	6-17-21	
Styrene	ND	0.20	EPA 8260D	6-17-21	6-17-21	
Bromoform	ND	1.0	EPA 8260D	6-17-21	6-17-21	
Isopropylbenzene	ND	0.20	EPA 8260D	6-17-21	6-17-21	
Bromobenzene	ND	0.20	EPA 8260D	6-17-21	6-17-21	
1,1,2,2-Tetrachloroethane	ND	0.20	EPA 8260D	6-17-21	6-17-21	
1,2,3-Trichloropropane	ND	0.20	EPA 8260D	6-17-21	6-17-21	
n-Propylbenzene	ND	0.20	EPA 8260D	6-17-21	6-17-21	
2-Chlorotoluene	ND	0.20	EPA 8260D	6-17-21	6-17-21	
4-Chlorotoluene	ND	0.20	EPA 8260D	6-17-21	6-17-21	
1,3,5-Trimethylbenzene	ND	0.20	EPA 8260D	6-17-21	6-17-21	
tert-Butylbenzene	ND	0.20	EPA 8260D	6-17-21	6-17-21	
1,2,4-Trimethylbenzene	ND	0.20	EPA 8260D	6-17-21	6-17-21	
sec-Butylbenzene	ND	0.20	EPA 8260D	6-17-21	6-17-21	
1,3-Dichlorobenzene	ND	0.20	EPA 8260D	6-17-21	6-17-21	
p-Isopropyltoluene	ND	0.20	EPA 8260D	6-17-21	6-17-21	
1,4-Dichlorobenzene	ND	0.20	EPA 8260D	6-17-21	6-17-21	
1,2-Dichlorobenzene	ND	0.20	EPA 8260D	6-17-21	6-17-21	
n-Butylbenzene	ND	0.20	EPA 8260D	6-17-21	6-17-21	
1,2-Dibromo-3-chloropropane	ND	1.0	EPA 8260D	6-17-21	6-17-21	
1,2,4-Trichlorobenzene	ND	0.20	EPA 8260D	6-17-21	6-17-21	
Hexachlorobutadiene	ND	1.0	EPA 8260D	6-17-21	6-17-21	
Naphthalene	ND	1.0	EPA 8260D	6-17-21	6-17-21	
1,2,3-Trichlorobenzene	ND	0.20	EPA 8260D	6-17-21	6-17-21	
Surrogate:	*Percent Recovery*	*Control Limits*				
Dibromofluoromethane	*102*	*75-127*				
Toluene-d8	*100*	*80-127*				
4-Bromofluorobenzene	*100*	*78-125*				

This report pertains to the samples analyzed in accordance with the chain of custody, and is intended only for the use of the individual or company to whom it is addressed.

Date of Report: June 17, 2021
Samples Submitted: June 15, 2021
Laboratory Reference: 2106-135
Project: 11-05150-003

VOLATILE ORGANICS EPA 8260D
QUALITY CONTROL

Matrix: Water
Units: ug/L

Analyte	Result		Spike Level		Percent Recovery		Recovery Limits	RPD	RPD Limit	Flags
SPIKE BLANKS										
Laboratory ID:	SB0617W1									
	SB	SBD	SB	SBD	SB	SBD				
1,1-Dichloroethene	**10.1**	**9.84**	10.0	10.0	101	98	78-124	3	19	
Benzene	**10.1**	**9.94**	10.0	10.0	101	99	80-119	2	16	
Trichloroethene	**10.2**	**10.3**	10.0	10.0	102	103	80-121	1	18	
Toluene	**9.72**	**9.75**	10.0	10.0	97	98	80-117	0	18	
Chlorobenzene	**10.2**	**10.2**	10.0	10.0	102	102	80-117	0	17	
Surrogate:										
Dibromofluoromethane					*100*	*99*	*75-127*			
Toluene-d8					*99*	*99*	*80-127*			
4-Bromofluorobenzene					*100*	*99*	*78-125*			

This report pertains to the samples analyzed in accordance with the chain of custody, and is intended only for the use of the individual or company to whom it is addressed.

Date of Report: June 17, 2021
Samples Submitted: June 15, 2021
Laboratory Reference: 2106-135
Project: 11-05150-003

SEMIVOLATILE ORGANICS EPA 8270E/SIM
page 1 of 2

Matrix: Soil
Units: mg/Kg

Analyte	Result	PQL	Method	Date Prepared	Date Analyzed	Flags
Client ID:	**DA7SWCS8210615I**					
Laboratory ID:	06-135-01					
n-Nitrosodimethylamine	**ND**	0.012	EPA 8270E	6-16-21	6-16-21	
Pyridine	**ND**	0.24	EPA 8270E	6-16-21	6-16-21	
Phenol	**ND**	0.024	EPA 8270E	6-16-21	6-16-21	
Aniline	**ND**	0.12	EPA 8270E	6-16-21	6-16-21	
bis(2-Chloroethyl)ether	**ND**	0.012	EPA 8270E	6-16-21	6-16-21	
2-Chlorophenol	**ND**	0.024	EPA 8270E	6-16-21	6-16-21	
1,3-Dichlorobenzene	**ND**	0.024	EPA 8270E	6-16-21	6-16-21	
1,4-Dichlorobenzene	**ND**	0.024	EPA 8270E	6-16-21	6-16-21	
Benzyl alcohol	**ND**	0.024	EPA 8270E	6-16-21	6-16-21	
1,2-Dichlorobenzene	**ND**	0.024	EPA 8270E	6-16-21	6-16-21	
2-Methylphenol (o-Cresol)	**ND**	0.024	EPA 8270E	6-16-21	6-16-21	
bis(2-Chloroisopropyl)ether	**ND**	0.024	EPA 8270E	6-16-21	6-16-21	
(3+4)-Methylphenol (m,p-Cresol)	**ND**	0.024	EPA 8270E	6-16-21	6-16-21	
n-Nitroso-di-n-propylamine	**ND**	0.012	EPA 8270E	6-16-21	6-16-21	
Hexachloroethane	**ND**	0.024	EPA 8270E	6-16-21	6-16-21	
Nitrobenzene	**ND**	0.024	EPA 8270E	6-16-21	6-16-21	
Isophorone	**ND**	0.024	EPA 8270E	6-16-21	6-16-21	
2-Nitrophenol	**ND**	0.024	EPA 8270E	6-16-21	6-16-21	
2,4-Dimethylphenol	**ND**	0.024	EPA 8270E	6-16-21	6-16-21	
bis(2-Chloroethoxy)methane	**ND**	0.024	EPA 8270E	6-16-21	6-16-21	
2,4-Dichlorophenol	**ND**	0.024	EPA 8270E	6-16-21	6-16-21	
1,2,4-Trichlorobenzene	**ND**	0.024	EPA 8270E	6-16-21	6-16-21	
Naphthalene	**ND**	0.0048	EPA 8270E/SIM	6-16-21	6-16-21	
4-Chloroaniline	**ND**	0.012	EPA 8270E	6-16-21	6-16-21	
Hexachlorobutadiene	**ND**	0.024	EPA 8270E	6-16-21	6-16-21	
4-Chloro-3-methylphenol	**ND**	0.024	EPA 8270E	6-16-21	6-16-21	
2-Methylnaphthalene	**ND**	0.0048	EPA 8270E/SIM	6-16-21	6-16-21	
1-Methylnaphthalene	**ND**	0.0048	EPA 8270E/SIM	6-16-21	6-16-21	
Hexachlorocyclopentadiene	**ND**	0.024	EPA 8270E	6-16-21	6-16-21	
2,4,6-Trichlorophenol	**ND**	0.024	EPA 8270E	6-16-21	6-16-21	
2,3-Dichloroaniline	**ND**	0.024	EPA 8270E	6-16-21	6-16-21	
2,4,5-Trichlorophenol	**ND**	0.024	EPA 8270E	6-16-21	6-16-21	
2-Chloronaphthalene	**ND**	0.024	EPA 8270E	6-16-21	6-16-21	
2-Nitroaniline	**ND**	0.024	EPA 8270E	6-16-21	6-16-21	
1,4-Dinitrobenzene	**ND**	0.024	EPA 8270E	6-16-21	6-16-21	
Dimethylphthalate	**ND**	0.024	EPA 8270E	6-16-21	6-16-21	
1,3-Dinitrobenzene	**ND**	0.024	EPA 8270E	6-16-21	6-16-21	
2,6-Dinitrotoluene	**ND**	0.012	EPA 8270E	6-16-21	6-16-21	
1,2-Dinitrobenzene	**ND**	0.024	EPA 8270E	6-16-21	6-16-21	
Acenaphthylene	**ND**	0.0048	EPA 8270E/SIM	6-16-21	6-16-21	
3-Nitroaniline	**ND**	0.024	EPA 8270E	6-16-21	6-16-21	

This report pertains to the samples analyzed in accordance with the chain of custody, and is intended only for the use of the individual or company to whom it is addressed.

Date of Report: June 17, 2021
Samples Submitted: June 15, 2021
Laboratory Reference: 2106-135
Project: 11-05150-003

SEMIVOLATILE ORGANICS EPA 8270E/SIM
page 2 of 2

Analyte	Result	PQL	Method	Date Prepared	Date Analyzed	Flags
Client ID:	**DA7SWCS8210615I**					
Laboratory ID:	06-135-01					
2,4-Dinitrophenol	**ND**	0.12	EPA 8270E	6-16-21	6-16-21	
Acenaphthene	**ND**	0.0048	EPA 8270E/SIM	6-16-21	6-16-21	
4-Nitrophenol	**ND**	0.048	EPA 8270E	6-16-21	6-16-21	
2,4-Dinitrotoluene	**ND**	0.012	EPA 8270E	6-16-21	6-16-21	
Dibenzofuran	**ND**	0.024	EPA 8270E	6-16-21	6-16-21	
2,3,5,6-Tetrachlorophenol	**ND**	0.024	EPA 8270E	6-16-21	6-16-21	
2,3,4,6-Tetrachlorophenol	**ND**	0.024	EPA 8270E	6-16-21	6-16-21	
Diethylphthalate	**ND**	0.12	EPA 8270E	6-16-21	6-16-21	
4-Chlorophenyl-phenylether	**ND**	0.024	EPA 8270E	6-16-21	6-16-21	
4-Nitroaniline	**ND**	0.024	EPA 8270E	6-16-21	6-16-21	
Fluorene	**ND**	0.0048	EPA 8270E/SIM	6-16-21	6-16-21	
4,6-Dinitro-2-methylphenol	**ND**	0.12	EPA 8270E	6-16-21	6-16-21	
n-Nitrosodiphenylamine	**ND**	0.024	EPA 8270E	6-16-21	6-16-21	
1,2-Diphenylhydrazine	**ND**	0.024	EPA 8270E	6-16-21	6-16-21	
4-Bromophenyl-phenylether	**ND**	0.024	EPA 8270E	6-16-21	6-16-21	
Hexachlorobenzene	**ND**	0.024	EPA 8270E	6-16-21	6-16-21	
Pentachlorophenol	**ND**	0.096	EPA 8270E	6-16-21	6-16-21	
Phenanthrene	**ND**	0.0048	EPA 8270E/SIM	6-16-21	6-16-21	
Anthracene	**ND**	0.0048	EPA 8270E/SIM	6-16-21	6-16-21	
Carbazole	**ND**	0.024	EPA 8270E	6-16-21	6-16-21	
Di-n-butylphthalate	**ND**	0.12	EPA 8270E	6-16-21	6-16-21	
Fluoranthene	**ND**	0.0048	EPA 8270E/SIM	6-16-21	6-16-21	
Pyrene	**ND**	0.0048	EPA 8270E/SIM	6-16-21	6-16-21	
Butylbenzylphthalate	**ND**	0.12	EPA 8270E	6-16-21	6-16-21	
bis-2-Ethylhexyladipate	**ND**	0.12	EPA 8270E	6-16-21	6-16-21	
3,3'-Dichlorobenzidine	**ND**	0.012	EPA 8270E	6-16-21	6-16-21	
Benzo[a]anthracene	**ND**	0.0048	EPA 8270E/SIM	6-16-21	6-16-21	
Chrysene	**ND**	0.0048	EPA 8270E/SIM	6-16-21	6-16-21	
bis(2-Ethylhexyl)phthalate	**ND**	0.12	EPA 8270E	6-16-21	6-16-21	
Di-n-octylphthalate	**ND**	0.12	EPA 8270E	6-16-21	6-16-21	
Benzo[b]fluoranthene	**ND**	0.0048	EPA 8270E/SIM	6-16-21	6-16-21	
Benzo(j,k)fluoranthene	**ND**	0.0048	EPA 8270E/SIM	6-16-21	6-16-21	
Benzo[a]pyrene	**ND**	0.0048	EPA 8270E/SIM	6-16-21	6-16-21	
Indeno[1,2,3-cd]pyrene	**ND**	0.0048	EPA 8270E/SIM	6-16-21	6-16-21	
Dibenz[a,h]anthracene	**ND**	0.0048	EPA 8270E/SIM	6-16-21	6-16-21	
Benzo[g,h,i]perylene	**ND**	0.0048	EPA 8270E/SIM	6-16-21	6-16-21	
Surrogate:	*Percent Recovery*	*Control Limits*				
2-Fluorophenol	*91*	*26 - 109*				
Phenol-d6	*93*	*33 - 113*				
Nitrobenzene-d5	*92*	*31 - 110*				
2-Fluorobiphenyl	*96*	*42 - 107*				
2,4,6-Tribromophenol	*103*	*42 - 123*				
Terphenyl-d14	*99*	*41 - 115*				

This report pertains to the samples analyzed in accordance with the chain of custody, and is intended only for the use of the individual or company to whom it is addressed.

Date of Report: June 17, 2021
Samples Submitted: June 15, 2021
Laboratory Reference: 2106-135
Project: 11-05150-003

SEMIVOLATILE ORGANICS EPA 8270E/SIM
page 1 of 2

Matrix: Soil
Units: mg/Kg

Analyte	Result	PQL	Method	Date Prepared	Date Analyzed	Flags
Client ID:	**DA7SWCS8210615D**					
Laboratory ID:	06-135-02					
n-Nitrosodimethylamine	**ND**	0.012	EPA 8270E	6-16-21	6-16-21	
Pyridine	**ND**	0.23	EPA 8270E	6-16-21	6-16-21	
Phenol	**ND**	0.023	EPA 8270E	6-16-21	6-16-21	
Aniline	**ND**	0.12	EPA 8270E	6-16-21	6-16-21	
bis(2-Chloroethyl)ether	**ND**	0.012	EPA 8270E	6-16-21	6-16-21	
2-Chlorophenol	**ND**	0.023	EPA 8270E	6-16-21	6-16-21	
1,3-Dichlorobenzene	**ND**	0.023	EPA 8270E	6-16-21	6-16-21	
1,4-Dichlorobenzene	**ND**	0.023	EPA 8270E	6-16-21	6-16-21	
Benzyl alcohol	**ND**	0.023	EPA 8270E	6-16-21	6-16-21	
1,2-Dichlorobenzene	**ND**	0.023	EPA 8270E	6-16-21	6-16-21	
2-Methylphenol (o-Cresol)	**ND**	0.023	EPA 8270E	6-16-21	6-16-21	
bis(2-Chloroisopropyl)ether	**ND**	0.023	EPA 8270E	6-16-21	6-16-21	
(3+4)-Methylphenol (m,p-Cresol)	**ND**	0.023	EPA 8270E	6-16-21	6-16-21	
n-Nitroso-di-n-propylamine	**ND**	0.012	EPA 8270E	6-16-21	6-16-21	
Hexachloroethane	**ND**	0.023	EPA 8270E	6-16-21	6-16-21	
Nitrobenzene	**ND**	0.023	EPA 8270E	6-16-21	6-16-21	
Isophorone	**ND**	0.023	EPA 8270E	6-16-21	6-16-21	
2-Nitrophenol	**ND**	0.023	EPA 8270E	6-16-21	6-16-21	
2,4-Dimethylphenol	**ND**	0.023	EPA 8270E	6-16-21	6-16-21	
bis(2-Chloroethoxy)methane	**ND**	0.023	EPA 8270E	6-16-21	6-16-21	
2,4-Dichlorophenol	**ND**	0.023	EPA 8270E	6-16-21	6-16-21	
1,2,4-Trichlorobenzene	**ND**	0.023	EPA 8270E	6-16-21	6-16-21	
Naphthalene	**ND**	0.0046	EPA 8270E/SIM	6-16-21	6-16-21	
4-Chloroaniline	**ND**	0.012	EPA 8270E	6-16-21	6-16-21	
Hexachlorobutadiene	**ND**	0.023	EPA 8270E	6-16-21	6-16-21	
4-Chloro-3-methylphenol	**ND**	0.023	EPA 8270E	6-16-21	6-16-21	
2-Methylnaphthalene	**ND**	0.0046	EPA 8270E/SIM	6-16-21	6-16-21	
1-Methylnaphthalene	**ND**	0.0046	EPA 8270E/SIM	6-16-21	6-16-21	
Hexachlorocyclopentadiene	**ND**	0.023	EPA 8270E	6-16-21	6-16-21	
2,4,6-Trichlorophenol	**ND**	0.023	EPA 8270E	6-16-21	6-16-21	
2,3-Dichloroaniline	**ND**	0.023	EPA 8270E	6-16-21	6-16-21	
2,4,5-Trichlorophenol	**ND**	0.023	EPA 8270E	6-16-21	6-16-21	
2-Chloronaphthalene	**ND**	0.023	EPA 8270E	6-16-21	6-16-21	
2-Nitroaniline	**ND**	0.023	EPA 8270E	6-16-21	6-16-21	
1,4-Dinitrobenzene	**ND**	0.023	EPA 8270E	6-16-21	6-16-21	
Dimethylphthalate	**ND**	0.023	EPA 8270E	6-16-21	6-16-21	
1,3-Dinitrobenzene	**ND**	0.023	EPA 8270E	6-16-21	6-16-21	
2,6-Dinitrotoluene	**ND**	0.012	EPA 8270E	6-16-21	6-16-21	
1,2-Dinitrobenzene	**ND**	0.023	EPA 8270E	6-16-21	6-16-21	
Acenaphthylene	**ND**	0.0046	EPA 8270E/SIM	6-16-21	6-16-21	
3-Nitroaniline	**ND**	0.023	EPA 8270E	6-16-21	6-16-21	

This report pertains to the samples analyzed in accordance with the chain of custody, and is intended only for the use of the individual or company to whom it is addressed.

Date of Report: June 17, 2021
Samples Submitted: June 15, 2021
Laboratory Reference: 2106-135
Project: 11-05150-003

SEMIVOLATILE ORGANICS EPA 8270E/SIM
page 2 of 2

Analyte	Result	PQL	Method	Date Prepared	Date Analyzed	Flags
Client ID:	**DA7SWCS8210615D**					
Laboratory ID:	06-135-02					
2,4-Dinitrophenol	**ND**	0.12	EPA 8270E	6-16-21	6-16-21	
Acenaphthene	**ND**	0.0046	EPA 8270E/SIM	6-16-21	6-16-21	
4-Nitrophenol	**ND**	0.046	EPA 8270E	6-16-21	6-16-21	
2,4-Dinitrotoluene	**ND**	0.012	EPA 8270E	6-16-21	6-16-21	
Dibenzofuran	**ND**	0.023	EPA 8270E	6-16-21	6-16-21	
2,3,5,6-Tetrachlorophenol	**ND**	0.023	EPA 8270E	6-16-21	6-16-21	
2,3,4,6-Tetrachlorophenol	**ND**	0.023	EPA 8270E	6-16-21	6-16-21	
Diethylphthalate	**ND**	0.12	EPA 8270E	6-16-21	6-16-21	
4-Chlorophenyl-phenylether	**ND**	0.023	EPA 8270E	6-16-21	6-16-21	
4-Nitroaniline	**ND**	0.023	EPA 8270E	6-16-21	6-16-21	
Fluorene	**ND**	0.0046	EPA 8270E/SIM	6-16-21	6-16-21	
4,6-Dinitro-2-methylphenol	**ND**	0.12	EPA 8270E	6-16-21	6-16-21	
n-Nitrosodiphenylamine	**ND**	0.023	EPA 8270E	6-16-21	6-16-21	
1,2-Diphenylhydrazine	**ND**	0.023	EPA 8270E	6-16-21	6-16-21	
4-Bromophenyl-phenylether	**ND**	0.023	EPA 8270E	6-16-21	6-16-21	
Hexachlorobenzene	**ND**	0.023	EPA 8270E	6-16-21	6-16-21	
Pentachlorophenol	**ND**	0.046	EPA 8270E	6-16-21	6-16-21	
Phenanthrene	**ND**	0.0046	EPA 8270E/SIM	6-16-21	6-16-21	
Anthracene	**ND**	0.0046	EPA 8270E/SIM	6-16-21	6-16-21	
Carbazole	**ND**	0.023	EPA 8270E	6-16-21	6-16-21	
Di-n-butylphthalate	**ND**	0.12	EPA 8270E	6-16-21	6-16-21	
Fluoranthene	**ND**	0.0046	EPA 8270E/SIM	6-16-21	6-16-21	
Pyrene	**0.0070**	0.0046	EPA 8270E/SIM	6-16-21	6-16-21	
Butylbenzylphthalate	**ND**	0.12	EPA 8270E	6-16-21	6-16-21	
bis-2-Ethylhexyladipate	**ND**	0.12	EPA 8270E	6-16-21	6-16-21	
3,3'-Dichlorobenzidine	**ND**	0.012	EPA 8270E	6-16-21	6-16-21	
Benzo[a]anthracene	**ND**	0.0046	EPA 8270E/SIM	6-16-21	6-16-21	
Chrysene	**ND**	0.0046	EPA 8270E/SIM	6-16-21	6-16-21	
bis(2-Ethylhexyl)phthalate	**ND**	0.12	EPA 8270E	6-16-21	6-16-21	
Di-n-octylphthalate	**ND**	0.12	EPA 8270E	6-16-21	6-16-21	
Benzo[b]fluoranthene	**ND**	0.0046	EPA 8270E/SIM	6-16-21	6-16-21	
Benzo(j,k)fluoranthene	**ND**	0.0046	EPA 8270E/SIM	6-16-21	6-16-21	
Benzo[a]pyrene	**ND**	0.0046	EPA 8270E/SIM	6-16-21	6-16-21	
Indeno[1,2,3-cd]pyrene	**ND**	0.0046	EPA 8270E/SIM	6-16-21	6-16-21	
Dibenz[a,h]anthracene	**ND**	0.0046	EPA 8270E/SIM	6-16-21	6-16-21	
Benzo[g,h,i]perylene	**ND**	0.0046	EPA 8270E/SIM	6-16-21	6-16-21	
Surrogate:	*Percent Recovery*	*Control Limits*				
2-Fluorophenol	*89*	*26 - 109*				
Phenol-d6	*95*	*33 - 113*				
Nitrobenzene-d5	*94*	*31 - 110*				
2-Fluorobiphenyl	*94*	*42 - 107*				
2,4,6-Tribromophenol	*99*	*42 - 123*				
Terphenyl-d14	*95*	*41 - 115*				

This report pertains to the samples analyzed in accordance with the chain of custody, and is intended only for the use of the individual or company to whom it is addressed.

Date of Report: June 17, 2021
Samples Submitted: June 15, 2021
Laboratory Reference: 2106-135
Project: 11-05150-003

SEMIVOLATILE ORGANICS EPA 8270E/SIM
page 1 of 2

Matrix: Soil
Units: mg/Kg

Analyte	Result	PQL	Method	Date Prepared	Date Analyzed	Flags
Client ID:	**DA7SWCS9210615I**					
Laboratory ID:	06-135-03					
n-Nitrosodimethylamine	**ND**	0.011	EPA 8270E	6-16-21	6-16-21	
Pyridine	**ND**	0.22	EPA 8270E	6-16-21	6-16-21	
Phenol	**ND**	0.022	EPA 8270E	6-16-21	6-16-21	
Aniline	**ND**	0.11	EPA 8270E	6-16-21	6-16-21	
bis(2-Chloroethyl)ether	**ND**	0.011	EPA 8270E	6-16-21	6-16-21	
2-Chlorophenol	**ND**	0.022	EPA 8270E	6-16-21	6-16-21	
1,3-Dichlorobenzene	**ND**	0.022	EPA 8270E	6-16-21	6-16-21	
1,4-Dichlorobenzene	**ND**	0.022	EPA 8270E	6-16-21	6-16-21	
Benzyl alcohol	**ND**	0.022	EPA 8270E	6-16-21	6-16-21	
1,2-Dichlorobenzene	**ND**	0.022	EPA 8270E	6-16-21	6-16-21	
2-Methylphenol (o-Cresol)	**ND**	0.022	EPA 8270E	6-16-21	6-16-21	
bis(2-Chloroisopropyl)ether	**ND**	0.022	EPA 8270E	6-16-21	6-16-21	
(3+4)-Methylphenol (m,p-Cresol)	**ND**	0.022	EPA 8270E	6-16-21	6-16-21	
n-Nitroso-di-n-propylamine	**ND**	0.011	EPA 8270E	6-16-21	6-16-21	
Hexachloroethane	**ND**	0.022	EPA 8270E	6-16-21	6-16-21	
Nitrobenzene	**ND**	0.022	EPA 8270E	6-16-21	6-16-21	
Isophorone	**ND**	0.022	EPA 8270E	6-16-21	6-16-21	
2-Nitrophenol	**ND**	0.022	EPA 8270E	6-16-21	6-16-21	
2,4-Dimethylphenol	**ND**	0.022	EPA 8270E	6-16-21	6-16-21	
bis(2-Chloroethoxy)methane	**ND**	0.022	EPA 8270E	6-16-21	6-16-21	
2,4-Dichlorophenol	**ND**	0.022	EPA 8270E	6-16-21	6-16-21	
1,2,4-Trichlorobenzene	**ND**	0.022	EPA 8270E	6-16-21	6-16-21	
Naphthalene	**ND**	0.0045	EPA 8270E/SIM	6-16-21	6-16-21	
4-Chloroaniline	**ND**	0.011	EPA 8270E	6-16-21	6-16-21	
Hexachlorobutadiene	**ND**	0.022	EPA 8270E	6-16-21	6-16-21	
4-Chloro-3-methylphenol	**ND**	0.022	EPA 8270E	6-16-21	6-16-21	
2-Methylnaphthalene	**ND**	0.0045	EPA 8270E/SIM	6-16-21	6-16-21	
1-Methylnaphthalene	**ND**	0.0045	EPA 8270E/SIM	6-16-21	6-16-21	
Hexachlorocyclopentadiene	**ND**	0.022	EPA 8270E	6-16-21	6-16-21	
2,4,6-Trichlorophenol	**ND**	0.022	EPA 8270E	6-16-21	6-16-21	
2,3-Dichloroaniline	**ND**	0.022	EPA 8270E	6-16-21	6-16-21	
2,4,5-Trichlorophenol	**ND**	0.022	EPA 8270E	6-16-21	6-16-21	
2-Chloronaphthalene	**ND**	0.022	EPA 8270E	6-16-21	6-16-21	
2-Nitroaniline	**ND**	0.022	EPA 8270E	6-16-21	6-16-21	
1,4-Dinitrobenzene	**ND**	0.022	EPA 8270E	6-16-21	6-16-21	
Dimethylphthalate	**ND**	0.022	EPA 8270E	6-16-21	6-16-21	
1,3-Dinitrobenzene	**ND**	0.022	EPA 8270E	6-16-21	6-16-21	
2,6-Dinitrotoluene	**ND**	0.011	EPA 8270E	6-16-21	6-16-21	
1,2-Dinitrobenzene	**ND**	0.022	EPA 8270E	6-16-21	6-16-21	
Acenaphthylene	**ND**	0.0045	EPA 8270E/SIM	6-16-21	6-16-21	
3-Nitroaniline	**ND**	0.022	EPA 8270E	6-16-21	6-16-21	

This report pertains to the samples analyzed in accordance with the chain of custody, and is intended only for the use of the individual or company to whom it is addressed.

Date of Report: June 17, 2021
Samples Submitted: June 15, 2021
Laboratory Reference: 2106-135
Project: 11-05150-003

SEMIVOLATILE ORGANICS EPA 8270E/SIM
page 2 of 2

Analyte	Result	PQL	Method	Date Prepared	Date Analyzed	Flags
Client ID:	**DA7SWCS9210615I**					
Laboratory ID:	06-135-03					
2,4-Dinitrophenol	**ND**	0.11	EPA 8270E	6-16-21	6-16-21	
Acenaphthene	**ND**	0.0045	EPA 8270E/SIM	6-16-21	6-16-21	
4-Nitrophenol	**ND**	0.045	EPA 8270E	6-16-21	6-16-21	
2,4-Dinitrotoluene	**ND**	0.011	EPA 8270E	6-16-21	6-16-21	
Dibenzofuran	**ND**	0.022	EPA 8270E	6-16-21	6-16-21	
2,3,5,6-Tetrachlorophenol	**ND**	0.022	EPA 8270E	6-16-21	6-16-21	
2,3,4,6-Tetrachlorophenol	**ND**	0.022	EPA 8270E	6-16-21	6-16-21	
Diethylphthalate	**ND**	0.11	EPA 8270E	6-16-21	6-16-21	
4-Chlorophenyl-phenylether	**ND**	0.022	EPA 8270E	6-16-21	6-16-21	
4-Nitroaniline	**ND**	0.022	EPA 8270E	6-16-21	6-16-21	
Fluorene	**ND**	0.0045	EPA 8270E/SIM	6-16-21	6-16-21	
4,6-Dinitro-2-methylphenol	**ND**	0.11	EPA 8270E	6-16-21	6-16-21	
n-Nitrosodiphenylamine	**ND**	0.022	EPA 8270E	6-16-21	6-16-21	
1,2-Diphenylhydrazine	**ND**	0.022	EPA 8270E	6-16-21	6-16-21	
4-Bromophenyl-phenylether	**ND**	0.022	EPA 8270E	6-16-21	6-16-21	
Hexachlorobenzene	**ND**	0.022	EPA 8270E	6-16-21	6-16-21	
Pentachlorophenol	**ND**	0.045	EPA 8270E	6-16-21	6-16-21	
Phenanthrene	**ND**	0.0045	EPA 8270E/SIM	6-16-21	6-16-21	
Anthracene	**ND**	0.0045	EPA 8270E/SIM	6-16-21	6-16-21	
Carbazole	**ND**	0.022	EPA 8270E	6-16-21	6-16-21	
Di-n-butylphthalate	**ND**	0.11	EPA 8270E	6-16-21	6-16-21	
Fluoranthene	**ND**	0.0045	EPA 8270E/SIM	6-16-21	6-16-21	
Pyrene	**ND**	0.0045	EPA 8270E/SIM	6-16-21	6-16-21	
Butylbenzylphthalate	**ND**	0.11	EPA 8270E	6-16-21	6-16-21	
bis-2-Ethylhexyladipate	**ND**	0.11	EPA 8270E	6-16-21	6-16-21	
3,3'-Dichlorobenzidine	**ND**	0.011	EPA 8270E	6-16-21	6-16-21	
Benzo[a]anthracene	**ND**	0.0045	EPA 8270E/SIM	6-16-21	6-16-21	
Chrysene	**ND**	0.0045	EPA 8270E/SIM	6-16-21	6-16-21	
bis(2-Ethylhexyl)phthalate	**ND**	0.11	EPA 8270E	6-16-21	6-16-21	
Di-n-octylphthalate	**ND**	0.11	EPA 8270E	6-16-21	6-16-21	
Benzo[b]fluoranthene	**ND**	0.0045	EPA 8270E/SIM	6-16-21	6-16-21	
Benzo(j,k)fluoranthene	**ND**	0.0045	EPA 8270E/SIM	6-16-21	6-16-21	
Benzo[a]pyrene	**ND**	0.0045	EPA 8270E/SIM	6-16-21	6-16-21	
Indeno[1,2,3-cd]pyrene	**ND**	0.0045	EPA 8270E/SIM	6-16-21	6-16-21	
Dibenz[a,h]anthracene	**ND**	0.0045	EPA 8270E/SIM	6-16-21	6-16-21	
Benzo[g,h,i]perylene	**ND**	0.0045	EPA 8270E/SIM	6-16-21	6-16-21	
Surrogate:	*Percent Recovery*	*Control Limits*				
2-Fluorophenol	*68*	*26 - 109*				
Phenol-d6	*78*	*33 - 113*				
Nitrobenzene-d5	*73*	*31 - 110*				
2-Fluorobiphenyl	*75*	*42 - 107*				
2,4,6-Tribromophenol	*97*	*42 - 123*				
Terphenyl-d14	*93*	*41 - 115*				

This report pertains to the samples analyzed in accordance with the chain of custody, and is intended only for the use of the individual or company to whom it is addressed.

Date of Report: June 17, 2021
Samples Submitted: June 15, 2021
Laboratory Reference: 2106-135
Project: 11-05150-003

SEMIVOLATILE ORGANICS EPA 8270E/SIM
QUALITY CONTROL
page 1 of 2

Matrix: Soil
Units: mg/Kg

Analyte	Result	PQL	Method	Date Prepared	Date Analyzed	Flags
METHOD BLANK						
Laboratory ID:	MB0616S1					
n-Nitrosodimethylamine	**ND**	0.010	EPA 8270E	6-16-21	6-16-21	
Pyridine	**ND**	0.20	EPA 8270E	6-16-21	6-16-21	
Phenol	**ND**	0.020	EPA 8270E	6-16-21	6-16-21	
Aniline	**ND**	0.10	EPA 8270E	6-16-21	6-16-21	
bis(2-Chloroethyl)ether	**ND**	0.010	EPA 8270E	6-16-21	6-16-21	
2-Chlorophenol	**ND**	0.020	EPA 8270E	6-16-21	6-16-21	
1,3-Dichlorobenzene	**ND**	0.020	EPA 8270E	6-16-21	6-16-21	
1,4-Dichlorobenzene	**ND**	0.020	EPA 8270E	6-16-21	6-16-21	
Benzyl alcohol	**ND**	0.020	EPA 8270E	6-16-21	6-16-21	
1,2-Dichlorobenzene	**ND**	0.020	EPA 8270E	6-16-21	6-16-21	
2-Methylphenol (o-Cresol)	**ND**	0.020	EPA 8270E	6-16-21	6-16-21	
bis(2-Chloroisopropyl)ether	**ND**	0.020	EPA 8270E	6-16-21	6-16-21	
(3+4)-Methylphenol (m,p-Cresol)	**ND**	0.020	EPA 8270E	6-16-21	6-16-21	
n-Nitroso-di-n-propylamine	**ND**	0.010	EPA 8270E	6-16-21	6-16-21	
Hexachloroethane	**ND**	0.020	EPA 8270E	6-16-21	6-16-21	
Nitrobenzene	**ND**	0.020	EPA 8270E	6-16-21	6-16-21	
Isophorone	**ND**	0.020	EPA 8270E	6-16-21	6-16-21	
2-Nitrophenol	**ND**	0.020	EPA 8270E	6-16-21	6-16-21	
2,4-Dimethylphenol	**ND**	0.020	EPA 8270E	6-16-21	6-16-21	
bis(2-Chloroethoxy)methane	**ND**	0.020	EPA 8270E	6-16-21	6-16-21	
2,4-Dichlorophenol	**ND**	0.020	EPA 8270E	6-16-21	6-16-21	
1,2,4-Trichlorobenzene	**ND**	0.020	EPA 8270E	6-16-21	6-16-21	
Naphthalene	**ND**	0.0040	EPA 8270E/SIM	6-16-21	6-16-21	
4-Chloroaniline	**ND**	0.010	EPA 8270E	6-16-21	6-16-21	
Hexachlorobutadiene	**ND**	0.020	EPA 8270E	6-16-21	6-16-21	
4-Chloro-3-methylphenol	**ND**	0.020	EPA 8270E	6-16-21	6-16-21	
2-Methylnaphthalene	**ND**	0.0040	EPA 8270E/SIM	6-16-21	6-16-21	
1-Methylnaphthalene	**ND**	0.0040	EPA 8270E/SIM	6-16-21	6-16-21	
Hexachlorocyclopentadiene	**ND**	0.020	EPA 8270E	6-16-21	6-16-21	
2,4,6-Trichlorophenol	**ND**	0.020	EPA 8270E	6-16-21	6-16-21	
2,3-Dichloroaniline	**ND**	0.020	EPA 8270E	6-16-21	6-16-21	
2,4,5-Trichlorophenol	**ND**	0.020	EPA 8270E	6-16-21	6-16-21	
2-Chloronaphthalene	**ND**	0.020	EPA 8270E	6-16-21	6-16-21	
2-Nitroaniline	**ND**	0.020	EPA 8270E	6-16-21	6-16-21	
1,4-Dinitrobenzene	**ND**	0.020	EPA 8270E	6-16-21	6-16-21	
Dimethylphthalate	**ND**	0.020	EPA 8270E	6-16-21	6-16-21	
1,3-Dinitrobenzene	**ND**	0.020	EPA 8270E	6-16-21	6-16-21	
2,6-Dinitrotoluene	**ND**	0.010	EPA 8270E	6-16-21	6-16-21	
1,2-Dinitrobenzene	**ND**	0.020	EPA 8270E	6-16-21	6-16-21	
Acenaphthylene	**ND**	0.0040	EPA 8270E/SIM	6-16-21	6-16-21	
3-Nitroaniline	**ND**	0.020	EPA 8270E	6-16-21	6-16-21	

This report pertains to the samples analyzed in accordance with the chain of custody, and is intended only for the use of the individual or company to whom it is addressed.

Date of Report: June 17, 2021
Samples Submitted: June 15, 2021
Laboratory Reference: 2106-135
Project: 11-05150-003

SEMIVOLATILE ORGANICS EPA 8270E/SIM
QUALITY CONTROL
page 2 of 2

Analyte	Result	PQL	Method	Date Prepared	Date Analyzed	Flags
METHOD BLANK						
Laboratory ID:	MB0616S1					
2,4-Dinitrophenol	**ND**	0.10	EPA 8270E	6-16-21	6-16-21	
Acenaphthene	**ND**	0.0040	EPA 8270E/SIM	6-16-21	6-16-21	
4-Nitrophenol	**ND**	0.040	EPA 8270E	6-16-21	6-16-21	
2,4-Dinitrotoluene	**ND**	0.010	EPA 8270E	6-16-21	6-16-21	
Dibenzofuran	**ND**	0.020	EPA 8270E	6-16-21	6-16-21	
2,3,5,6-Tetrachlorophenol	**ND**	0.020	EPA 8270E	6-16-21	6-16-21	
2,3,4,6-Tetrachlorophenol	**ND**	0.020	EPA 8270E	6-16-21	6-16-21	
Diethylphthalate	**ND**	0.10	EPA 8270E	6-16-21	6-16-21	
4-Chlorophenyl-phenylether	**ND**	0.020	EPA 8270E	6-16-21	6-16-21	
4-Nitroaniline	**ND**	0.020	EPA 8270E	6-16-21	6-16-21	
Fluorene	**ND**	0.0040	EPA 8270E/SIM	6-16-21	6-16-21	
4,6-Dinitro-2-methylphenol	**ND**	0.10	EPA 8270E	6-16-21	6-16-21	
n-Nitrosodiphenylamine	**ND**	0.020	EPA 8270E	6-16-21	6-16-21	
1,2-Diphenylhydrazine	**ND**	0.020	EPA 8270E	6-16-21	6-16-21	
4-Bromophenyl-phenylether	**ND**	0.020	EPA 8270E	6-16-21	6-16-21	
Hexachlorobenzene	**ND**	0.020	EPA 8270E	6-16-21	6-16-21	
Pentachlorophenol	**ND**	0.040	EPA 8270E	6-16-21	6-16-21	
Phenanthrene	**ND**	0.0040	EPA 8270E/SIM	6-16-21	6-16-21	
Anthracene	**ND**	0.0040	EPA 8270E/SIM	6-16-21	6-16-21	
Carbazole	**ND**	0.020	EPA 8270E	6-16-21	6-16-21	
Di-n-butylphthalate	**ND**	0.10	EPA 8270E	6-16-21	6-16-21	
Fluoranthene	**ND**	0.0040	EPA 8270E/SIM	6-16-21	6-16-21	
Pyrene	**ND**	0.0040	EPA 8270E/SIM	6-16-21	6-16-21	
Butylbenzylphthalate	**ND**	0.10	EPA 8270E	6-16-21	6-16-21	
bis-2-Ethylhexyladipate	**ND**	0.10	EPA 8270E	6-16-21	6-16-21	
3,3'-Dichlorobenzidine	**ND**	0.010	EPA 8270E	6-16-21	6-16-21	
Benzo[a]anthracene	**ND**	0.0040	EPA 8270E/SIM	6-16-21	6-16-21	
Chrysene	**ND**	0.0040	EPA 8270E/SIM	6-16-21	6-16-21	
bis(2-Ethylhexyl)phthalate	**ND**	0.10	EPA 8270E	6-16-21	6-16-21	
Di-n-octylphthalate	**ND**	0.10	EPA 8270E	6-16-21	6-16-21	
Benzo[b]fluoranthene	**ND**	0.0040	EPA 8270E/SIM	6-16-21	6-16-21	
Benzo(j,k)fluoranthene	**ND**	0.0040	EPA 8270E/SIM	6-16-21	6-16-21	
Benzo[a]pyrene	**ND**	0.0040	EPA 8270E/SIM	6-16-21	6-16-21	
Indeno[1,2,3-cd]pyrene	**ND**	0.0040	EPA 8270E/SIM	6-16-21	6-16-21	
Dibenz[a,h]anthracene	**ND**	0.0040	EPA 8270E/SIM	6-16-21	6-16-21	
Benzo[g,h,i]perylene	**ND**	0.0040	EPA 8270E/SIM	6-16-21	6-16-21	
Surrogate:	*Percent Recovery*	*Control Limits*				
2-Fluorophenol	*93*	*26 - 109*				
Phenol-d6	*100*	*33 - 113*				
Nitrobenzene-d5	*96*	*31 - 110*				
2-Fluorobiphenyl	*95*	*42 - 107*				
2,4,6-Tribromophenol	*105*	*42 - 123*				
Terphenyl-d14	*104*	*41 - 115*				

This report pertains to the samples analyzed in accordance with the chain of custody, and is intended only for the use of the individual or company to whom it is addressed.

Date of Report: June 17, 2021
Samples Submitted: June 15, 2021
Laboratory Reference: 2106-135
Project: 11-05150-003

SEMIVOLATILE ORGANICS EPA 8270E/SIM
QUALITY CONTROL

Matrix: Soil
Units: mg/Kg

Analyte	Result		Spike Level		Percent Recovery		Recovery Limits	RPD	RPD Limit	Flags
SPIKE BLANKS										
Laboratory ID:	SB0616S1									
	SB	SBD	SB	SBD	SB	SBD				
Phenol	**1.11**	**1.10**	1.33	1.33	83	83	47 - 106	1	30	
2-Chlorophenol	**1.14**	**1.12**	1.33	1.33	86	84	51 - 105	2	31	
1,4-Dichlorobenzene	**0.560**	**0.551**	0.667	0.667	84	83	49 - 101	2	33	
n-Nitroso-di-n-propylamine	**0.574**	**0.557**	0.667	0.667	86	84	50 - 105	3	26	
1,2,4-Trichlorobenzene	**0.584**	**0.585**	0.667	0.667	88	88	50 - 107	0	31	
4-Chloro-3-methylphenol	**1.26**	**1.22**	1.33	1.33	95	92	58 - 114	3	22	
Acenaphthene	**0.603**	**0.559**	0.667	0.667	90	84	52 - 102	8	22	
4-Nitrophenol	**1.52**	**1.44**	1.33	1.33	114	108	51 - 126	5	20	
2,4-Dinitrotoluene	**0.621**	**0.566**	0.667	0.667	93	85	54 - 108	9	19	
Pentachlorophenol	**1.30**	**1.25**	1.33	1.33	98	94	20 - 148	4	30	
Pyrene	**0.651**	**0.613**	0.667	0.667	98	92	55 - 112	6	19	
Surrogate:										
2-Fluorophenol					*93*	*89*	*26 - 109*			
Phenol-d6					*97*	*97*	*33 - 113*			
Nitrobenzene-d5					*95*	*96*	*31 - 110*			
2-Fluorobiphenyl					*94*	*92*	*42 - 107*			
2,4,6-Tribromophenol					*108*	*102*	*42 - 123*			
Terphenyl-d14					*100*	*95*	*41 - 115*			

This report pertains to the samples analyzed in accordance with the chain of custody, and is intended only for the use of the individual or company to whom it is addressed.

Date of Report: June 17, 2021
Samples Submitted: June 15, 2021
Laboratory Reference: 2106-135
Project: 11-05150-003

PCBs EPA 8082A

Matrix: Soil
Units: mg/Kg (ppm)

Analyte	Result	PQL	Method	Date Prepared	Date Analyzed	Flags
Client ID:	**DA7SWCS8210615I**					
Laboratory ID:	06-135-01					
Aroclor 1016	**ND**	0.024	EPA 8082A	6-16-21	6-16-21	
Aroclor 1221	**ND**	0.024	EPA 8082A	6-16-21	6-16-21	
Aroclor 1232	**ND**	0.024	EPA 8082A	6-16-21	6-16-21	
Aroclor 1242	**ND**	0.024	EPA 8082A	6-16-21	6-16-21	
Aroclor 1248	**ND**	0.024	EPA 8082A	6-16-21	6-16-21	
Aroclor 1254	**ND**	0.024	EPA 8082A	6-16-21	6-16-21	
Aroclor 1260	**ND**	0.024	EPA 8082A	6-16-21	6-16-21	
Surrogate:	*Percent Recovery*	*Control Limits*				
DCB	*76*	*54-135*				
Client ID:	**DA7SWCS8210615D**					
Laboratory ID:	06-135-02					
Aroclor 1016	**ND**	0.023	EPA 8082A	6-16-21	6-16-21	
Aroclor 1221	**ND**	0.023	EPA 8082A	6-16-21	6-16-21	
Aroclor 1232	**ND**	0.023	EPA 8082A	6-16-21	6-16-21	
Aroclor 1242	**ND**	0.023	EPA 8082A	6-16-21	6-16-21	
Aroclor 1248	**ND**	0.023	EPA 8082A	6-16-21	6-16-21	
Aroclor 1254	**ND**	0.023	EPA 8082A	6-16-21	6-16-21	
Aroclor 1260	**ND**	0.023	EPA 8082A	6-16-21	6-16-21	
Surrogate:	*Percent Recovery*	*Control Limits*				
DCB	*79*	*54-135*				
Client ID:	**DA7SWCS9210615I**					
Laboratory ID:	06-135-03					
Aroclor 1016	**ND**	0.022	EPA 8082A	6-16-21	6-16-21	
Aroclor 1221	**ND**	0.022	EPA 8082A	6-16-21	6-16-21	
Aroclor 1232	**ND**	0.022	EPA 8082A	6-16-21	6-16-21	
Aroclor 1242	**ND**	0.022	EPA 8082A	6-16-21	6-16-21	
Aroclor 1248	**ND**	0.022	EPA 8082A	6-16-21	6-16-21	
Aroclor 1254	**ND**	0.022	EPA 8082A	6-16-21	6-16-21	
Aroclor 1260	**ND**	0.022	EPA 8082A	6-16-21	6-16-21	
Surrogate:	*Percent Recovery*	*Control Limits*				
DCB	*80*	*54-135*				

This report pertains to the samples analyzed in accordance with the chain of custody, and is intended only for the use of the individual or company to whom it is addressed.

Date of Report: June 17, 2021
Samples Submitted: June 15, 2021
Laboratory Reference: 2106-135
Project: 11-05150-003

PCBs EPA 8082A
QUALITY CONTROL

Matrix: Soil
Units: mg/Kg (ppm)

Analyte	Result	PQL	Method	Date Prepared	Date Analyzed	Flags
METHOD BLANK						
Laboratory ID:	MB0616S2					
Aroclor 1016	**ND**	0.020	EPA 8082A	6-16-21	6-16-21	
Aroclor 1221	**ND**	0.020	EPA 8082A	6-16-21	6-16-21	
Aroclor 1232	**ND**	0.020	EPA 8082A	6-16-21	6-16-21	
Aroclor 1242	**ND**	0.020	EPA 8082A	6-16-21	6-16-21	
Aroclor 1248	**ND**	0.020	EPA 8082A	6-16-21	6-16-21	
Aroclor 1254	**ND**	0.020	EPA 8082A	6-16-21	6-16-21	
Aroclor 1260	**ND**	0.020	EPA 8082A	6-16-21	6-16-21	
Surrogate:	*Percent Recovery*	*Control Limits*				
DCB	*85*	*54-135*				

Analyte	Result		Spike Level		Source Result	Percent Recovery		Recovery Limits	RPD	RPD Limit	Flags
MATRIX SPIKES											
Laboratory ID:	06-135-01										
	MS	MSD	MS	MSD		MS	MSD				
Aroclor 1260	**0.442**	**0.387**	0.500	0.500	ND	**88**	**77**	62-129	13	15	
Surrogate:											
DCB						*86*	*77*	*54-135*			

This report pertains to the samples analyzed in accordance with the chain of custody, and is intended only for the use of the individual or company to whom it is addressed.

Date of Report: June 17, 2021
Samples Submitted: June 15, 2021
Laboratory Reference: 2106-135
Project: 11-05150-003

ORGANOCHLORINE PESTICIDES EPA 8081B

Matrix: Soil
Units: ug/Kg (ppb)

Analyte	Result	PQL	Method	Date Prepared	Date Analyzed	Flags
Client ID:	**DA7SWCS8210615I**					
Laboratory ID:	06-135-01					
alpha-BHC	**ND**	0.60	EPA 8081B	6-16-21	6-16-21	
gamma-BHC (Lindane)	**ND**	0.60	EPA 8081B	6-16-21	6-16-21	
beta-BHC	**ND**	0.60	EPA 8081B	6-16-21	6-16-21	
delta-BHC	**ND**	0.60	EPA 8081B	6-16-21	6-16-21	
Heptachlor	**ND**	0.60	EPA 8081B	6-16-21	6-16-21	
Aldrin	**ND**	0.60	EPA 8081B	6-16-21	6-16-21	
Heptachlor Epoxide	**ND**	0.60	EPA 8081B	6-16-21	6-16-21	
gamma-Chlordane	**ND**	1.2	EPA 8081B	6-16-21	6-16-21	
alpha-Chlordane	**ND**	1.2	EPA 8081B	6-16-21	6-16-21	
4,4'-DDE	**ND**	1.2	EPA 8081B	6-16-21	6-16-21	
Endosulfan I	**ND**	0.60	EPA 8081B	6-16-21	6-16-21	
Dieldrin	**ND**	1.2	EPA 8081B	6-16-21	6-16-21	
Endrin	**ND**	1.2	EPA 8081B	6-16-21	6-16-21	
4,4'-DDD	**ND**	1.2	EPA 8081B	6-16-21	6-16-21	
Endosulfan II	**ND**	1.2	EPA 8081B	6-16-21	6-16-21	
4,4'-DDT	**ND**	1.2	EPA 8081B	6-16-21	6-16-21	
Endrin Aldehyde	**ND**	1.2	EPA 8081B	6-16-21	6-16-21	
Methoxychlor	**ND**	1.2	EPA 8081B	6-16-21	6-16-21	
Endosulfan Sulfate	**ND**	1.2	EPA 8081B	6-16-21	6-16-21	
Endrin Ketone	**ND**	1.2	EPA 8081B	6-16-21	6-16-21	
Toxaphene	**ND**	6.0	EPA 8081B	6-16-21	6-16-21	
Surrogate:	*Percent Recovery*	*Control Limits*				
TCMX	*64*	*30-110*				
DCB	*75*	*40-117*				

This report pertains to the samples analyzed in accordance with the chain of custody, and is intended only for the use of the individual or company to whom it is addressed.

Date of Report: June 17, 2021
Samples Submitted: June 15, 2021
Laboratory Reference: 2106-135
Project: 11-05150-003

ORGANOCHLORINE PESTICIDES EPA 8081B

Matrix: Soil
Units: ug/Kg (ppb)

Analyte	Result	PQL	Method	Date Prepared	Date Analyzed	Flags
Client ID:	**DA7SWCS8210615D**					
Laboratory ID:	06-135-02					
alpha-BHC	**ND**	0.58	EPA 8081B	6-16-21	6-16-21	
gamma-BHC (Lindane)	**ND**	0.58	EPA 8081B	6-16-21	6-16-21	
beta-BHC	**ND**	0.58	EPA 8081B	6-16-21	6-16-21	
delta-BHC	**ND**	0.58	EPA 8081B	6-16-21	6-16-21	
Heptachlor	**ND**	0.58	EPA 8081B	6-16-21	6-16-21	
Aldrin	**ND**	0.58	EPA 8081B	6-16-21	6-16-21	
Heptachlor Epoxide	**ND**	0.58	EPA 8081B	6-16-21	6-16-21	
gamma-Chlordane	**ND**	1.2	EPA 8081B	6-16-21	6-16-21	
alpha-Chlordane	**ND**	1.2	EPA 8081B	6-16-21	6-16-21	
4,4'-DDE	**ND**	1.2	EPA 8081B	6-16-21	6-16-21	
Endosulfan I	**ND**	0.58	EPA 8081B	6-16-21	6-16-21	
Dieldrin	**ND**	1.2	EPA 8081B	6-16-21	6-16-21	
Endrin	**ND**	1.2	EPA 8081B	6-16-21	6-16-21	
4,4'-DDD	**ND**	1.2	EPA 8081B	6-16-21	6-16-21	
Endosulfan II	**ND**	1.2	EPA 8081B	6-16-21	6-16-21	
4,4'-DDT	**ND**	1.2	EPA 8081B	6-16-21	6-16-21	
Endrin Aldehyde	**ND**	1.2	EPA 8081B	6-16-21	6-16-21	
Methoxychlor	**ND**	1.2	EPA 8081B	6-16-21	6-16-21	
Endosulfan Sulfate	**ND**	1.2	EPA 8081B	6-16-21	6-16-21	
Endrin Ketone	**ND**	1.2	EPA 8081B	6-16-21	6-16-21	
Toxaphene	**ND**	5.8	EPA 8081B	6-16-21	6-16-21	
Surrogate:	*Percent Recovery*	*Control Limits*				
TCMX	*74*	*30-110*				
DCB	*80*	*40-117*				

This report pertains to the samples analyzed in accordance with the chain of custody, and is intended only for the use of the individual or company to whom it is addressed.

Date of Report: June 17, 2021
Samples Submitted: June 15, 2021
Laboratory Reference: 2106-135
Project: 11-05150-003

ORGANOCHLORINE PESTICIDES EPA 8081B

Matrix: Soil
Units: ug/Kg (ppb)

Analyte	Result	PQL	Method	Date Prepared	Date Analyzed	Flags
Client ID:	**DA7SWCS9210615I**					
Laboratory ID:	06-135-03					
alpha-BHC	**ND**	0.56	EPA 8081B	6-16-21	6-16-21	
gamma-BHC (Lindane)	**ND**	0.56	EPA 8081B	6-16-21	6-16-21	
beta-BHC	**ND**	0.56	EPA 8081B	6-16-21	6-16-21	
delta-BHC	**ND**	0.56	EPA 8081B	6-16-21	6-16-21	
Heptachlor	**ND**	0.56	EPA 8081B	6-16-21	6-16-21	
Aldrin	**ND**	0.56	EPA 8081B	6-16-21	6-16-21	
Heptachlor Epoxide	**ND**	0.56	EPA 8081B	6-16-21	6-16-21	
gamma-Chlordane	**ND**	1.1	EPA 8081B	6-16-21	6-16-21	
alpha-Chlordane	**ND**	1.1	EPA 8081B	6-16-21	6-16-21	
4,4'-DDE	**ND**	1.1	EPA 8081B	6-16-21	6-16-21	
Endosulfan I	**ND**	0.56	EPA 8081B	6-16-21	6-16-21	
Dieldrin	**ND**	1.1	EPA 8081B	6-16-21	6-16-21	
Endrin	**ND**	1.1	EPA 8081B	6-16-21	6-16-21	
4,4'-DDD	**ND**	1.1	EPA 8081B	6-16-21	6-16-21	
Endosulfan II	**ND**	1.1	EPA 8081B	6-16-21	6-16-21	
4,4'-DDT	**ND**	1.1	EPA 8081B	6-16-21	6-16-21	
Endrin Aldehyde	**ND**	1.1	EPA 8081B	6-16-21	6-16-21	
Methoxychlor	**ND**	1.1	EPA 8081B	6-16-21	6-16-21	
Endosulfan Sulfate	**ND**	1.1	EPA 8081B	6-16-21	6-16-21	
Endrin Ketone	**ND**	1.1	EPA 8081B	6-16-21	6-16-21	
Toxaphene	**ND**	5.6	EPA 8081B	6-16-21	6-16-21	
Surrogate:	*Percent Recovery*	*Control Limits*				
TCMX	*74*	*30-110*				
DCB	*85*	*40-117*				

This report pertains to the samples analyzed in accordance with the chain of custody, and is intended only for the use of the individual or company to whom it is addressed.

Date of Report: June 17, 2021
Samples Submitted: June 15, 2021
Laboratory Reference: 2106-135
Project: 11-05150-003

ORGANOCHLORINE PESTICIDES EPA 8081B QUALITY CONTROL

Matrix: Soil
Units: ug/Kg (ppb)

Analyte	Result	PQL	Method	Date Prepared	Date Analyzed	Flags
METHOD BLANK						
Laboratory ID:	MB0616S1					
alpha-BHC	**ND**	0.50	EPA 8081B	6-16-21	6-16-21	
gamma-BHC (Lindane)	**ND**	0.50	EPA 8081B	6-16-21	6-16-21	
beta-BHC	**ND**	0.50	EPA 8081B	6-16-21	6-16-21	
delta-BHC	**ND**	0.50	EPA 8081B	6-16-21	6-16-21	
Heptachlor	**ND**	0.50	EPA 8081B	6-16-21	6-16-21	
Aldrin	**ND**	0.50	EPA 8081B	6-16-21	6-16-21	
Heptachlor Epoxide	**ND**	0.50	EPA 8081B	6-16-21	6-16-21	
gamma-Chlordane	**ND**	1.0	EPA 8081B	6-16-21	6-16-21	
alpha-Chlordane	**ND**	1.0	EPA 8081B	6-16-21	6-16-21	
4,4'-DDE	**ND**	1.0	EPA 8081B	6-16-21	6-16-21	
Endosulfan I	**ND**	0.50	EPA 8081B	6-16-21	6-16-21	
Dieldrin	**ND**	1.0	EPA 8081B	6-16-21	6-16-21	
Endrin	**ND**	1.0	EPA 8081B	6-16-21	6-16-21	
4,4'-DDD	**ND**	1.0	EPA 8081B	6-16-21	6-16-21	
Endosulfan II	**ND**	1.0	EPA 8081B	6-16-21	6-16-21	
4,4'-DDT	**ND**	1.0	EPA 8081B	6-16-21	6-16-21	
Endrin Aldehyde	**ND**	1.0	EPA 8081B	6-16-21	6-16-21	
Methoxychlor	**ND**	1.0	EPA 8081B	6-16-21	6-16-21	
Endosulfan Sulfate	**ND**	1.0	EPA 8081B	6-16-21	6-16-21	
Endrin Ketone	**ND**	1.0	EPA 8081B	6-16-21	6-16-21	
Toxaphene	**ND**	5.0	EPA 8081B	6-16-21	6-16-21	
Surrogate:	*Percent Recovery*	*Control Limits*				
TCMX	*87*	*30-110*				
DCB	*83*	*40-117*				

This report pertains to the samples analyzed in accordance with the chain of custody, and is intended only for the use of the individual or company to whom it is addressed.

Date of Report: June 17, 2021
Samples Submitted: June 15, 2021
Laboratory Reference: 2106-135
Project: 11-05150-003

ORGANOCHLORINE PESTICIDES EPA 8081B QUALITY CONTROL

Matrix: Soil
Units: ug/Kg (ppb)

Analyte	Result		Spike Level		Source Result	Percent Recovery		Recovery Limits	RPD	RPD Limit	Flags
SPIKE BLANKS											
Laboratory ID:	SB0616S1										
	SB	SBD	SB	SBD		SB	SBD				
alpha-BHC	**7.57**	**8.18**	10.0	10.0	N/A	**76**	**82**	65-115	8	15	
gamma-BHC (Lindane)	**7.68**	**8.09**	10.0	10.0	N/A	**77**	**81**	69-116	5	15	
beta-BHC	**8.87**	**9.63**	10.0	10.0	N/A	**89**	**96**	63-116	8	15	
delta-BHC	**7.63**	**7.87**	10.0	10.0	N/A	**76**	**79**	66-116	3	15	
Heptachlor	**8.89**	**9.59**	10.0	10.0	N/A	**89**	**96**	63-119	8	15	
Aldrin	**8.74**	**9.44**	10.0	10.0	N/A	**87**	**94**	60-116	8	15	
Heptachlor Epoxide	**9.17**	**9.83**	10.0	10.0	N/A	**92**	**98**	65-116	7	15	
gamma-Chlordane	**8.29**	**8.91**	10.0	10.0	N/A	**83**	**89**	64-116	7	15	
alpha-Chlordane	**8.36**	**8.92**	10.0	10.0	N/A	**84**	**89**	62-119	6	15	
4,4'-DDE	**7.80**	**8.44**	10.0	10.0	N/A	**78**	**84**	69-120	8	15	
Endosulfan I	**9.25**	**9.83**	10.0	10.0	N/A	**93**	**98**	60-121	6	15	
Dieldrin	**9.86**	**10.6**	10.0	10.0	N/A	**99**	**106**	64-115	7	15	
Endrin	**9.68**	**10.4**	10.0	10.0	N/A	**97**	**104**	62-118	7	15	
4,4'-DDD	**7.64**	**8.37**	10.0	10.0	N/A	**76**	**84**	64-124	9	15	
Endosulfan II	**8.79**	**9.20**	10.0	10.0	N/A	**88**	**92**	64-115	5	15	
4,4'-DDT	**10.3**	**10.9**	10.0	10.0	N/A	**103**	**109**	57-130	6	15	
Endrin Aldehyde	**8.92**	**9.57**	10.0	10.0	N/A	**89**	**96**	57-114	7	15	
Methoxychlor	**9.62**	**10.2**	10.0	10.0	N/A	**96**	**102**	49-129	6	15	
Endosulfan Sulfate	**8.33**	**9.09**	10.0	10.0	N/A	**83**	**91**	61-115	9	15	
Endrin Ketone	**8.63**	**9.17**	10.0	10.0	N/A	**86**	**92**	64-116	6	15	
Surrogate:											
TCMX						*87*	*97*	*30-110*			
DCB						*82*	*87*	*40-117*			

This report pertains to the samples analyzed in accordance with the chain of custody, and is intended only for the use of the individual or company to whom it is addressed.

Date of Report: June 17, 2021
Samples Submitted: June 15, 2021
Laboratory Reference: 2106-135
Project: 11-05150-003

TOTAL METALS
EPA 6010D/6020B/7471B

Matrix: Soil
Units: mg/Kg (ppm)

Analyte	Result	PQL	Method	Date Prepared	Date Analyzed	Flags
Client ID:	**DA7SWCS8210615I**					
Laboratory ID:	06-135-01					
Arsenic	**ND**	6.0	EPA 6010D	6-16-21	6-16-21	
Barium	**82**	3.0	EPA 6010D	6-16-21	6-16-21	
Cadmium	**ND**	0.60	EPA 6010D	6-16-21	6-16-21	
Chromium	**31**	0.60	EPA 6010D	6-16-21	6-16-21	
Lead	**ND**	6.0	EPA 6010D	6-16-21	6-16-21	
Mercury	**ND**	0.060	EPA 7471B	6-17-21	6-17-21	
Selenium	**0.31**	0.30	EPA 6020B	6-16-21	6-16-21	
Silver	**ND**	1.2	EPA 6010D	6-16-21	6-16-21	
Client ID:	**DA7SWCS8210615D**					
Laboratory ID:	06-135-02					
Arsenic	**ND**	5.8	EPA 6010D	6-16-21	6-16-21	
Barium	**93**	2.9	EPA 6010D	6-16-21	6-16-21	
Cadmium	**ND**	0.58	EPA 6010D	6-16-21	6-16-21	
Chromium	**42**	0.58	EPA 6010D	6-16-21	6-16-21	
Lead	**ND**	5.8	EPA 6010D	6-16-21	6-16-21	
Mercury	**0.058**	0.058	EPA 7471B	6-17-21	6-17-21	
Selenium	**ND**	0.29	EPA 6020B	6-16-21	6-16-21	
Silver	**ND**	1.2	EPA 6010D	6-16-21	6-16-21	
Client ID:	**DA7SWCS9210615I**					
Laboratory ID:	06-135-03					
Arsenic	**ND**	5.6	EPA 6010D	6-16-21	6-16-21	
Barium	**45**	2.8	EPA 6010D	6-16-21	6-16-21	
Cadmium	**ND**	0.56	EPA 6010D	6-16-21	6-16-21	
Chromium	**18**	0.56	EPA 6010D	6-16-21	6-16-21	
Lead	**ND**	5.6	EPA 6010D	6-16-21	6-16-21	
Mercury	**ND**	0.056	EPA 7471B	6-17-21	6-17-21	
Selenium	**ND**	0.28	EPA 6020B	6-16-21	6-16-21	
Silver	**ND**	1.1	EPA 6010D	6-16-21	6-16-21	

This report pertains to the samples analyzed in accordance with the chain of custody, and is intended only for the use of the individual or company to whom it is addressed.

Date of Report: June 17, 2021
Samples Submitted: June 15, 2021
Laboratory Reference: 2106-135
Project: 11-05150-003

TOTAL METALS
EPA 6010D/6020B/7471B
QUALITY CONTROL

Matrix: Soil
Units: mg/Kg (ppm)

Analyte	Result	PQL	Method	Date Prepared	Date Analyzed	Flags
METHOD BLANK						
Laboratory ID:	MB0616SM1					
Arsenic	**ND**	5.0	EPA 6010D	6-17-21	6-17-21	
Barium	**ND**	2.5	EPA 6010D	6-17-21	6-17-21	
Cadmium	**ND**	0.50	EPA 6010D	6-17-21	6-17-21	
Chromium	**ND**	0.50	EPA 6010D	6-17-21	6-17-21	
Lead	**ND**	5.0	EPA 6010D	6-17-21	6-17-21	
Silver	**ND**	1.0	EPA 6010D	6-17-21	6-17-21	
Laboratory ID:	MB0616SM2					
Selenium	**ND**	0.13	EPA 6020B	6-17-21	6-17-21	
Laboratory ID:	MB0617S1					
Mercury	**ND**	0.050	EPA 7471B	6-17-21	6-17-21	

This report pertains to the samples analyzed in accordance with the chain of custody, and is intended only for the use of the individual or company to whom it is addressed.

Date of Report: June 17, 2021
Samples Submitted: June 15, 2021
Laboratory Reference: 2106-135
Project: 11-05150-003

TOTAL METALS
EPA 6010D/6020B/7471B
QUALITY CONTROL

Matrix: Soil
Units: mg/Kg (ppm)

Analyte	Result		Spike Level		Source Result	Percent Recovery		Recovery Limits	RPD	RPD Limit	Flags
DUPLICATE											
Laboratory ID:	06-135-01										
	ORIG	DUP									
Arsenic	**ND**	**ND**	NA	NA		NA		NA	NA	20	
Barium	**68.5**	**67.7**	NA	NA		NA		NA	1	20	
Cadmium	**ND**	**ND**	NA	NA		NA		NA	NA	20	
Chromium	**26.2**	**25.1**	NA	NA		NA		NA	4	20	
Lead	**ND**	**ND**	NA	NA		NA		NA	NA	20	
Silver	**ND**	**ND**	NA	NA		NA		NA	NA	20	
Laboratory ID:	06-135-01										
Selenium	**0.263**	**0.239**	NA	NA		NA		NA	10	20	
Laboratory ID:	06-135-01										
Mercury	**ND**	**ND**	NA	NA		NA		NA	NA	20	
MATRIX SPIKES											
Laboratory ID:	06-135-01										
	MS	MSD	MS	MSD		MS	MSD				
Arsenic	**95.2**	**92.6**	100	100	ND	**95**	**93**	75-125	3	20	
Barium	**155**	**157**	100	100	68.5	**87**	**88**	75-125	1	20	
Cadmium	**46.4**	**45.9**	50.0	50.0	ND	**93**	**92**	75-125	1	20	
Chromium	**114**	**115**	100	100	26.2	**87**	**89**	75-125	1	20	
Lead	**239**	**235**	250	250	ND	**96**	**94**	75-125	1	20	
Silver	**24.1**	**23.5**	25.0	25.0	ND	**96**	**94**	75-125	3	20	
Laboratory ID:	06-135-01										
Selenium	**97.5**	**98.8**	100	100	0.263	**97**	**99**	75-125	1	20	
Laboratory ID:	06-135-01										
Mercury	**0.569**	**0.586**	0.500	0.500	0.0418	**105**	**109**	80-120	3	20	

This report pertains to the samples analyzed in accordance with the chain of custody,
and is intended only for the use of the individual or company to whom it is addressed.

Date of Report: June 17, 2021
Samples Submitted: June 15, 2021
Laboratory Reference: 2106-135
Project: 11-05150-003

% MOISTURE

Client ID	Lab ID	% Moisture	Date Analyzed
DA7SWCS8210615I	06-135-01	**16**	6-16-21
DA7SWCS8210615D	06-135-02	**13**	6-16-21
DA7SWCS9210615I	06-135-03	**10**	6-16-21

This report pertains to the samples analyzed in accordance with the chain of custody,
and is intended only for the use of the individual or company to whom it is addressed.

OnSite Environmental Inc.

Data Qualifiers and Abbreviations

A - Due to a high sample concentration, the amount spiked is insufficient for meaningful MS/MSD recovery data.

B - The analyte indicated was also found in the blank sample.

C - The duplicate RPD is outside control limits due to high result variability when analyte concentrations are within five times the quantitation limit.

E - The value reported exceeds the quantitation range and is an estimate.

F - Surrogate recovery data is not available due to the high concentration of coeluting target compounds.

H - The analyte indicated is a common laboratory solvent and may have been introduced during sample preparation, and be impacting the sample result.

I - Compound recovery is outside of the control limits.

J - The value reported was below the practical quantitation limit. The value is an estimate.

K - Sample duplicate RPD is outside control limits due to sample inhomogeneity. The sample was re-extracted and re-analyzed with similar results.

L - The RPD is outside of the control limits.

M - Hydrocarbons in the gasoline range are impacting the diesel range result.

M1 - Hydrocarbons in the gasoline range (toluene-naphthalene) are present in the sample.

N - Hydrocarbons in the lube oil range are impacting the diesel range result.

N1 - Hydrocarbons in diesel range are impacting lube oil range results.

O - Hydrocarbons indicative of heavier fuels are present in the sample and are impacting the gasoline result.

P - The RPD of the detected concentrations between the two columns is greater than 40.

Q - Surrogate recovery is outside of the control limits.

S - Surrogate recovery data is not available due to the necessary dilution of the sample.

T - The sample chromatogram is not similar to a typical _____.

U - The analyte was analyzed for, but was not detected above the reported sample quantitation limit.

U1 - The practical quantitation limit is elevated due to interferences present in the sample.

V - Matrix Spike/Matrix Spike Duplicate recoveries are outside control limits due to matrix effects.

W - Matrix Spike/Matrix Spike Duplicate RPD are outside control limits due to matrix effects.

X - Sample extract treated with a mercury cleanup procedure.

X1- Sample extract treated with a sulfuric acid/silica gel cleanup procedure.

Y - The calibration verification for this analyte exceeded the 20% drift specified in methods 8260 & 8270, and therefore the reported result should be considered an estimate. The overall performance of the calibration verification standard met the acceptance criteria of the method.

Y1 - Negative effects of the matrix from this sample on the instrument caused values for this analyte in the bracketing continuing calibration verification standard (CCVs) to be outside of 20% acceptance criteria. Because of this, quantitation limits and sample concentrations should be considered estimates.

Z -

ND - Not Detected at PQL
PQL - Practical Quantitation Limit
RPD - Relative Percent Difference

This report pertains to the samples analyzed in accordance with the chain of custody, and is intended only for the use of the individual or company to whom it is addressed.

Chain of Custody

Page 1 of 1

OnSite Environmental Inc.
Analytical Laboratory Testing Services
14648 NE 95th Street • Redmond, WA 98052
Phone: (425) 883-3881 • www.onsite-env.com

Company: Anchor QEA/Herrera
Project Number: 11-05150-003
Project Name: Cedar Hills Regional Landfill
Project Manager: Randy Brown
Sampled by: Brianna Bland

Turnaround Request (in working days)
(Check One)
☐ Same Day ☐ 1 Day
☒ 2 Days ☐ 3 Days
☐ Standard (7 Days)
☐ _____ (other)

Laboratory Number: 06-135

Lab ID	Sample Identification	Date Sampled	Time Sampled	Matrix	Number of Containers	NWTPH-HCID	NWTPH-Gx/BTEX	NWTPH-Gx	NWTPH-Dx (☐ Acid / SG Clean-up)	Volatiles ~~8260C~~ 8260B	Halogenated Volatiles 8260D	EDB EPA 8011 (Waters Only)	Semivolatiles ~~8270C~~/SIM 8270D(SIM) (with low-level PAHs)	PAHs 8270E/SIM (low-level)	PCBs 8082A	Organochlorine Pesticides 8081B	Organophosphorus Pesticides 8270E/SIM	Chlorinated Acid Herbicides 8151A	Total RCRA Metals 6010B/7471A	Total MTCA Metals	TCLP Metals	HEM (oil and grease) 1664A					% Moisture
1	DA7SWCS82106151	6-15-21	915	soil	4					X			X		X	X			X								X
2	DA7SWCS82106151D	↓	915	↓	↓					X			X		X	X			X								X
3	DA7SWCS92106151	↓	1350	↓	↓					X			X		X	X			X								X
4	VTRP21061SI - trip blank	↓	—	—	3					X																	

	Signature	Company	Date	Time
Relinquished		Herrera	6/15/21	3:00pm
Received		OSE	6/15/21	1500
Relinquished				
Received				
Relinquished				
Received				
Reviewed/Date		Reviewed/Date		

Comments/Special Instructions

Data Package: Standard ☐ Level III ☐ Level IV ☐

Chromatograms with final report ☐ Electronic Data Deliverables (EDDs) ☐

OnSite Environmental Inc.
14648 NE 95th Street, Redmond, WA 98052 • (425) 883-3881

June 21, 2021

Randy Brown
Anchor QEA
1201 3rd Avenue, Suite 2600
Seattle, WA 98101

Re: Analytical Data for Project 11-05150-003
Laboratory Reference No. 2106-156

Dear Randy:

Enclosed are the analytical results and associated quality control data for samples submitted on June 16, 2021.

The standard policy of OnSite Environmental, Inc. is to store your samples for 30 days from the date of receipt. If you require longer storage, please contact the laboratory.

We appreciate the opportunity to be of service to you on this project. If you have any questions concerning the data, or need additional information, please feel free to call me.

Sincerely,

David Baumeister
Project Manager

Enclosures

This report pertains to the samples analyzed in accordance with the chain of custody, and is intended only for the use of the individual or company to whom it is addressed.

Date of Report: June 21, 2021
Samples Submitted: June 16, 2021
Laboratory Reference: 2106-156
Project: 11-05150-003

Case Narrative

Samples were collected on June 15 and 16, 2021 and received by the laboratory on June 16, 2021. They were maintained at the laboratory at a temperature of 2°C to 6°C.

Please note that any and all soil sample results are reported on a dry-weight basis, unless otherwise noted below.

General QA/QC issues associated with the analytical data enclosed in this laboratory report will be indicated with a reference to a comment or explanation on the Data Qualifier page. More complex and involved QA/QC issues will be discussed in detail below.

Volatiles EPA 8260D Analysis - Soil

All four internal standards did not meet acceptance criteria for sample DA7SWCS10210615I due to sample matrix effects. Low-level analysis was repeated with similar results. The sample was therefore extracted in methanol and analyzed at the lowest possible dilution allowed by Method 5035A. Consequently, some MTCA Method A cleanup levels and client-requested PQLs are not achievable.

Organochlorine Pesticides by EPA 8081B Analysis

The percent recovery for the compound delta-BHC (65%) was below the control limit of 66-116% in the spike blank. All other quality control values were within control limits and no further action was performed.

Please note that any other QA/QC issues associated with these extractions and analyses will be indicated with a footnote reference and discussed in detail on the Data Qualifier page.

This report pertains to the samples analyzed in accordance with the chain of custody, and is intended only for the use of the individual or company to whom it is addressed.

Date of Report: June 21, 2021
Samples Submitted: June 16, 2021
Laboratory Reference: 2106-156
Project: 11-05150-003

VOLATILE ORGANICS EPA 8260D
page 1 of 2

Matrix: Soil
Units: mg/kg

Analyte	Result	PQL	Method	Date Prepared	Date Analyzed	Flags
Client ID:	**DA7SWCS10210615I**					
Laboratory ID:	06-156-01					
Dichlorodifluoromethane	ND	0.090	EPA 8260D	6-17-21	6-17-21	
Chloromethane	ND	0.45	EPA 8260D	6-17-21	6-17-21	
Vinyl Chloride	ND	0.090	EPA 8260D	6-17-21	6-17-21	
Bromomethane	ND	0.45	EPA 8260D	6-17-21	6-17-21	
Chloroethane	ND	0.45	EPA 8260D	6-17-21	6-17-21	
Trichlorofluoromethane	ND	0.090	EPA 8260D	6-17-21	6-17-21	
1,1-Dichloroethene	ND	0.090	EPA 8260D	6-17-21	6-17-21	
Acetone	ND	0.90	EPA 8260D	6-17-21	6-17-21	
Iodomethane	ND	0.45	EPA 8260D	6-17-21	6-17-21	
Carbon Disulfide	ND	0.090	EPA 8260D	6-17-21	6-17-21	
Methylene Chloride	ND	0.45	EPA 8260D	6-17-21	6-17-21	
(trans) 1,2-Dichloroethene	ND	0.090	EPA 8260D	6-17-21	6-17-21	
Methyl t-Butyl Ether	ND	0.090	EPA 8260D	6-17-21	6-17-21	
1,1-Dichloroethane	ND	0.090	EPA 8260D	6-17-21	6-17-21	
Vinyl Acetate	ND	0.45	EPA 8260D	6-17-21	6-17-21	
2,2-Dichloropropane	ND	0.090	EPA 8260D	6-17-21	6-17-21	
(cis) 1,2-Dichloroethene	ND	0.090	EPA 8260D	6-17-21	6-17-21	
2-Butanone	ND	0.45	EPA 8260D	6-17-21	6-17-21	
Bromochloromethane	ND	0.090	EPA 8260D	6-17-21	6-17-21	
Chloroform	ND	0.090	EPA 8260D	6-17-21	6-17-21	
1,1,1-Trichloroethane	ND	0.090	EPA 8260D	6-17-21	6-17-21	
Carbon Tetrachloride	ND	0.090	EPA 8260D	6-17-21	6-17-21	
1,1-Dichloropropene	ND	0.090	EPA 8260D	6-17-21	6-17-21	
Benzene	ND	0.090	EPA 8260D	6-17-21	6-17-21	
1,2-Dichloroethane	ND	0.090	EPA 8260D	6-17-21	6-17-21	
Trichloroethene	ND	0.090	EPA 8260D	6-17-21	6-17-21	
1,2-Dichloropropane	ND	0.090	EPA 8260D	6-17-21	6-17-21	
Dibromomethane	ND	0.090	EPA 8260D	6-17-21	6-17-21	
Bromodichloromethane	ND	0.090	EPA 8260D	6-17-21	6-17-21	
2-Chloroethyl Vinyl Ether	ND	0.45	EPA 8260D	6-17-21	6-17-21	
(cis) 1,3-Dichloropropene	ND	0.090	EPA 8260D	6-17-21	6-17-21	
Methyl Isobutyl Ketone	ND	0.45	EPA 8260D	6-17-21	6-17-21	
Toluene	ND	0.45	EPA 8260D	6-17-21	6-17-21	
(trans) 1,3-Dichloropropene	ND	0.090	EPA 8260D	6-17-21	6-17-21	

This report pertains to the samples analyzed in accordance with the chain of custody, and is intended only for the use of the individual or company to whom it is addressed.

Date of Report: June 21, 2021
Samples Submitted: June 16, 2021
Laboratory Reference: 2106-156
Project: 11-05150-003

VOLATILE ORGANICS EPA 8260D
page 2 of 2

Analyte	Result	PQL	Method	Date Prepared	Date Analyzed	Flags
Client ID:	**DA7SWCS10210615I**					
Laboratory ID:	06-156-01					
1,1,2-Trichloroethane	ND	0.090	EPA 8260D	6-17-21	6-17-21	
Tetrachloroethene	ND	0.090	EPA 8260D	6-17-21	6-17-21	
1,3-Dichloropropane	ND	0.090	EPA 8260D	6-17-21	6-17-21	
2-Hexanone	ND	0.45	EPA 8260D	6-17-21	6-17-21	
Dibromochloromethane	ND	0.090	EPA 8260D	6-17-21	6-17-21	
1,2-Dibromoethane	ND	0.0045	EPA 8260D/SIM	6-17-21	6-17-21	
Chlorobenzene	ND	0.090	EPA 8260D	6-17-21	6-17-21	
1,1,1,2-Tetrachloroethane	ND	0.090	EPA 8260D	6-17-21	6-17-21	
Ethylbenzene	ND	0.090	EPA 8260D	6-17-21	6-17-21	
m,p-Xylene	ND	0.18	EPA 8260D	6-17-21	6-17-21	
o-Xylene	ND	0.090	EPA 8260D	6-17-21	6-17-21	
Styrene	ND	0.090	EPA 8260D	6-17-21	6-17-21	
Bromoform	ND	0.45	EPA 8260D	6-17-21	6-17-21	
Isopropylbenzene	ND	0.090	EPA 8260D	6-17-21	6-17-21	
Bromobenzene	ND	0.090	EPA 8260D	6-17-21	6-17-21	
1,1,2,2-Tetrachloroethane	ND	0.090	EPA 8260D	6-17-21	6-17-21	
1,2,3-Trichloropropane	ND	0.090	EPA 8260D	6-17-21	6-17-21	
n-Propylbenzene	ND	0.090	EPA 8260D	6-17-21	6-17-21	
2-Chlorotoluene	ND	0.090	EPA 8260D	6-17-21	6-17-21	
4-Chlorotoluene	ND	0.090	EPA 8260D	6-17-21	6-17-21	
1,3,5-Trimethylbenzene	ND	0.090	EPA 8260D	6-17-21	6-17-21	
tert-Butylbenzene	ND	0.090	EPA 8260D	6-17-21	6-17-21	
1,2,4-Trimethylbenzene	ND	0.090	EPA 8260D	6-17-21	6-17-21	
sec-Butylbenzene	ND	0.090	EPA 8260D	6-17-21	6-17-21	
1,3-Dichlorobenzene	ND	0.090	EPA 8260D	6-17-21	6-17-21	
p-Isopropyltoluene	ND	0.090	EPA 8260D	6-17-21	6-17-21	
1,4-Dichlorobenzene	ND	0.090	EPA 8260D	6-17-21	6-17-21	
1,2-Dichlorobenzene	ND	0.090	EPA 8260D	6-17-21	6-17-21	
n-Butylbenzene	ND	0.090	EPA 8260D	6-17-21	6-17-21	
1,2-Dibromo-3-chloropropane	ND	0.45	EPA 8260D	6-17-21	6-17-21	
1,2,4-Trichlorobenzene	ND	0.090	EPA 8260D	6-17-21	6-17-21	
Hexachlorobutadiene	ND	0.45	EPA 8260D	6-17-21	6-17-21	
Naphthalene	ND	0.45	EPA 8260D	6-17-21	6-17-21	
1,2,3-Trichlorobenzene	ND	0.090	EPA 8260D	6-17-21	6-17-21	
Surrogate:	*Percent Recovery*	*Control Limits*				
Dibromofluoromethane	*89*	*74-131*				
Toluene-d8	*96*	*78-128*				
4-Bromofluorobenzene	*110*	*71-130*				

This report pertains to the samples analyzed in accordance with the chain of custody, and is intended only for the use of the individual or company to whom it is addressed.

Date of Report: June 21, 2021
Samples Submitted: June 16, 2021
Laboratory Reference: 2106-156
Project: 11-05150-003

VOLATILE ORGANICS EPA 8260D
page 1 of 2

Matrix: Soil
Units: mg/kg

Analyte	Result	PQL	Method	Date Prepared	Date Analyzed	Flags
Client ID:	**DA7SWCS12210616I**					
Laboratory ID:	06-156-02					
Dichlorodifluoromethane	ND	0.0013	EPA 8260D	6-17-21	6-17-21	
Chloromethane	ND	0.0064	EPA 8260D	6-17-21	6-17-21	
Vinyl Chloride	ND	0.0013	EPA 8260D	6-17-21	6-17-21	
Bromomethane	ND	0.0064	EPA 8260D	6-17-21	6-17-21	
Chloroethane	ND	0.0064	EPA 8260D	6-17-21	6-17-21	
Trichlorofluoromethane	ND	0.0013	EPA 8260D	6-17-21	6-17-21	
1,1-Dichloroethene	ND	0.0013	EPA 8260D	6-17-21	6-17-21	
Acetone	0.41	0.013	EPA 8260D	6-17-21	6-17-21	Y
Iodomethane	ND	0.0064	EPA 8260D	6-17-21	6-17-21	
Carbon Disulfide	0.0013	0.0013	EPA 8260D	6-17-21	6-17-21	
Methylene Chloride	ND	0.0064	EPA 8260D	6-17-21	6-17-21	
(trans) 1,2-Dichloroethene	ND	0.0013	EPA 8260D	6-17-21	6-17-21	
Methyl t-Butyl Ether	ND	0.0013	EPA 8260D	6-17-21	6-17-21	
1,1-Dichloroethane	ND	0.0013	EPA 8260D	6-17-21	6-17-21	
Vinyl Acetate	ND	0.0064	EPA 8260D	6-17-21	6-17-21	
2,2-Dichloropropane	ND	0.0013	EPA 8260D	6-17-21	6-17-21	
(cis) 1,2-Dichloroethene	ND	0.0013	EPA 8260D	6-17-21	6-17-21	
2-Butanone	0.076	0.0064	EPA 8260D	6-17-21	6-17-21	
Bromochloromethane	ND	0.0013	EPA 8260D	6-17-21	6-17-21	
Chloroform	ND	0.0013	EPA 8260D	6-17-21	6-17-21	
1,1,1-Trichloroethane	ND	0.0013	EPA 8260D	6-17-21	6-17-21	
Carbon Tetrachloride	ND	0.0013	EPA 8260D	6-17-21	6-17-21	
1,1-Dichloropropene	ND	0.0013	EPA 8260D	6-17-21	6-17-21	
Benzene	ND	0.0013	EPA 8260D	6-17-21	6-17-21	
1,2-Dichloroethane	ND	0.0013	EPA 8260D	6-17-21	6-17-21	
Trichloroethene	ND	0.0013	EPA 8260D	6-17-21	6-17-21	
1,2-Dichloropropane	ND	0.0013	EPA 8260D	6-17-21	6-17-21	
Dibromomethane	ND	0.0013	EPA 8260D	6-17-21	6-17-21	
Bromodichloromethane	ND	0.0013	EPA 8260D	6-17-21	6-17-21	
2-Chloroethyl Vinyl Ether	ND	0.0064	EPA 8260D	6-17-21	6-17-21	
(cis) 1,3-Dichloropropene	ND	0.0013	EPA 8260D	6-17-21	6-17-21	
Methyl Isobutyl Ketone	ND	0.0064	EPA 8260D	6-17-21	6-17-21	
Toluene	ND	0.0064	EPA 8260D	6-17-21	6-17-21	
(trans) 1,3-Dichloropropene	ND	0.0013	EPA 8260D	6-17-21	6-17-21	

This report pertains to the samples analyzed in accordance with the chain of custody, and is intended only for the use of the individual or company to whom it is addressed.

Date of Report: June 21, 2021
Samples Submitted: June 16, 2021
Laboratory Reference: 2106-156
Project: 11-05150-003

VOLATILE ORGANICS EPA 8260D
page 2 of 2

Analyte	Result	PQL	Method	Date Prepared	Date Analyzed	Flags
Client ID:	**DA7SWCS12210616I**					
Laboratory ID:	06-156-02					
1,1,2-Trichloroethane	ND	0.0013	EPA 8260D	6-17-21	6-17-21	
Tetrachloroethene	ND	0.0013	EPA 8260D	6-17-21	6-17-21	
1,3-Dichloropropane	ND	0.0013	EPA 8260D	6-17-21	6-17-21	
2-Hexanone	ND	0.0064	EPA 8260D	6-17-21	6-17-21	
Dibromochloromethane	ND	0.0013	EPA 8260D	6-17-21	6-17-21	
1,2-Dibromoethane	ND	0.000064	EPA 8260D/SIM	6-17-21	6-17-21	
Chlorobenzene	ND	0.0013	EPA 8260D	6-17-21	6-17-21	
1,1,1,2-Tetrachloroethane	ND	0.0013	EPA 8260D	6-17-21	6-17-21	
Ethylbenzene	ND	0.0013	EPA 8260D	6-17-21	6-17-21	
m,p-Xylene	ND	0.0026	EPA 8260D	6-17-21	6-17-21	
o-Xylene	ND	0.0013	EPA 8260D	6-17-21	6-17-21	
Styrene	ND	0.0013	EPA 8260D	6-17-21	6-17-21	
Bromoform	ND	0.0064	EPA 8260D	6-17-21	6-17-21	
Isopropylbenzene	ND	0.0013	EPA 8260D	6-17-21	6-17-21	
Bromobenzene	ND	0.0013	EPA 8260D	6-17-21	6-17-21	
1,1,2,2-Tetrachloroethane	ND	0.0013	EPA 8260D	6-17-21	6-17-21	
1,2,3-Trichloropropane	ND	0.0013	EPA 8260D	6-17-21	6-17-21	
n-Propylbenzene	ND	0.0013	EPA 8260D	6-17-21	6-17-21	
2-Chlorotoluene	ND	0.0013	EPA 8260D	6-17-21	6-17-21	
4-Chlorotoluene	ND	0.0013	EPA 8260D	6-17-21	6-17-21	
1,3,5-Trimethylbenzene	ND	0.0013	EPA 8260D	6-17-21	6-17-21	
tert-Butylbenzene	ND	0.0013	EPA 8260D	6-17-21	6-17-21	
1,2,4-Trimethylbenzene	ND	0.0013	EPA 8260D	6-17-21	6-17-21	
sec-Butylbenzene	ND	0.0013	EPA 8260D	6-17-21	6-17-21	
1,3-Dichlorobenzene	ND	0.0013	EPA 8260D	6-17-21	6-17-21	
p-Isopropyltoluene	0.0014	0.0013	EPA 8260D	6-17-21	6-17-21	
1,4-Dichlorobenzene	ND	0.0013	EPA 8260D	6-17-21	6-17-21	
1,2-Dichlorobenzene	ND	0.0013	EPA 8260D	6-17-21	6-17-21	
n-Butylbenzene	ND	0.0013	EPA 8260D	6-17-21	6-17-21	
1,2-Dibromo-3-chloropropane	ND	0.0064	EPA 8260D	6-17-21	6-17-21	
1,2,4-Trichlorobenzene	ND	0.0013	EPA 8260D	6-17-21	6-17-21	
Hexachlorobutadiene	ND	0.0064	EPA 8260D	6-17-21	6-17-21	
Naphthalene	ND	0.0064	EPA 8260D	6-17-21	6-17-21	
1,2,3-Trichlorobenzene	ND	0.0013	EPA 8260D	6-17-21	6-17-21	
Surrogate:	*Percent Recovery*	*Control Limits*				
Dibromofluoromethane	*93*	*74-131*				
Toluene-d8	*95*	*78-128*				
4-Bromofluorobenzene	*91*	*71-130*				

This report pertains to the samples analyzed in accordance with the chain of custody, and is intended only for the use of the individual or company to whom it is addressed.

Date of Report: June 21, 2021
Samples Submitted: June 16, 2021
Laboratory Reference: 2106-156
Project: 11-05150-003

VOLATILE ORGANICS EPA 8260D
page 1 of 2

Matrix: Soil
Units: mg/kg

Analyte	Result	PQL	Method	Date Prepared	Date Analyzed	Flags
Client ID:	**DA7SWCS13210616I**					
Laboratory ID:	06-156-03					
Dichlorodifluoromethane	ND	0.0010	EPA 8260D	6-17-21	6-17-21	
Chloromethane	ND	0.0051	EPA 8260D	6-17-21	6-17-21	
Vinyl Chloride	ND	0.0010	EPA 8260D	6-17-21	6-17-21	
Bromomethane	ND	0.0051	EPA 8260D	6-17-21	6-17-21	
Chloroethane	ND	0.0051	EPA 8260D	6-17-21	6-17-21	
Trichlorofluoromethane	ND	0.0010	EPA 8260D	6-17-21	6-17-21	
1,1-Dichloroethene	ND	0.0010	EPA 8260D	6-17-21	6-17-21	
Acetone	ND	0.010	EPA 8260D	6-17-21	6-17-21	
Iodomethane	ND	0.0051	EPA 8260D	6-17-21	6-17-21	
Carbon Disulfide	ND	0.0010	EPA 8260D	6-17-21	6-17-21	
Methylene Chloride	ND	0.0051	EPA 8260D	6-17-21	6-17-21	
(trans) 1,2-Dichloroethene	ND	0.0010	EPA 8260D	6-17-21	6-17-21	
Methyl t-Butyl Ether	ND	0.0010	EPA 8260D	6-17-21	6-17-21	
1,1-Dichloroethane	ND	0.0010	EPA 8260D	6-17-21	6-17-21	
Vinyl Acetate	ND	0.0051	EPA 8260D	6-17-21	6-17-21	
2,2-Dichloropropane	ND	0.0010	EPA 8260D	6-17-21	6-17-21	
(cis) 1,2-Dichloroethene	ND	0.0010	EPA 8260D	6-17-21	6-17-21	
2-Butanone	ND	0.0051	EPA 8260D	6-17-21	6-17-21	
Bromochloromethane	ND	0.0010	EPA 8260D	6-17-21	6-17-21	
Chloroform	ND	0.0010	EPA 8260D	6-17-21	6-17-21	
1,1,1-Trichloroethane	ND	0.0010	EPA 8260D	6-17-21	6-17-21	
Carbon Tetrachloride	ND	0.0010	EPA 8260D	6-17-21	6-17-21	
1,1-Dichloropropene	ND	0.0010	EPA 8260D	6-17-21	6-17-21	
Benzene	ND	0.0010	EPA 8260D	6-17-21	6-17-21	
1,2-Dichloroethane	ND	0.0010	EPA 8260D	6-17-21	6-17-21	
Trichloroethene	ND	0.0010	EPA 8260D	6-17-21	6-17-21	
1,2-Dichloropropane	ND	0.0010	EPA 8260D	6-17-21	6-17-21	
Dibromomethane	ND	0.0010	EPA 8260D	6-17-21	6-17-21	
Bromodichloromethane	ND	0.0010	EPA 8260D	6-17-21	6-17-21	
2-Chloroethyl Vinyl Ether	ND	0.0051	EPA 8260D	6-17-21	6-17-21	
(cis) 1,3-Dichloropropene	ND	0.0010	EPA 8260D	6-17-21	6-17-21	
Methyl Isobutyl Ketone	ND	0.0051	EPA 8260D	6-17-21	6-17-21	
Toluene	ND	0.0051	EPA 8260D	6-17-21	6-17-21	
(trans) 1,3-Dichloropropene	ND	0.0010	EPA 8260D	6-17-21	6-17-21	

This report pertains to the samples analyzed in accordance with the chain of custody,
and is intended only for the use of the individual or company to whom it is addressed.

Date of Report: June 21, 2021
Samples Submitted: June 16, 2021
Laboratory Reference: 2106-156
Project: 11-05150-003

VOLATILE ORGANICS EPA 8260D
page 2 of 2

Analyte	Result	PQL	Method	Date Prepared	Date Analyzed	Flags
Client ID:	**DA7SWCS13210616I**					
Laboratory ID:	06-156-03					
1,1,2-Trichloroethane	ND	0.0010	EPA 8260D	6-17-21	6-17-21	
Tetrachloroethene	ND	0.0010	EPA 8260D	6-17-21	6-17-21	
1,3-Dichloropropane	ND	0.0010	EPA 8260D	6-17-21	6-17-21	
2-Hexanone	ND	0.0051	EPA 8260D	6-17-21	6-17-21	
Dibromochloromethane	ND	0.0010	EPA 8260D	6-17-21	6-17-21	
1,2-Dibromoethane	ND	0.000051	EPA 8260D/SIM	6-17-21	6-17-21	
Chlorobenzene	ND	0.0010	EPA 8260D	6-17-21	6-17-21	
1,1,1,2-Tetrachloroethane	ND	0.0010	EPA 8260D	6-17-21	6-17-21	
Ethylbenzene	ND	0.0010	EPA 8260D	6-17-21	6-17-21	
m,p-Xylene	ND	0.0020	EPA 8260D	6-17-21	6-17-21	
o-Xylene	ND	0.0010	EPA 8260D	6-17-21	6-17-21	
Styrene	ND	0.0010	EPA 8260D	6-17-21	6-17-21	
Bromoform	ND	0.0051	EPA 8260D	6-17-21	6-17-21	
Isopropylbenzene	ND	0.0010	EPA 8260D	6-17-21	6-17-21	
Bromobenzene	ND	0.0010	EPA 8260D	6-17-21	6-17-21	
1,1,2,2-Tetrachloroethane	ND	0.0010	EPA 8260D	6-17-21	6-17-21	
1,2,3-Trichloropropane	ND	0.0010	EPA 8260D	6-17-21	6-17-21	
n-Propylbenzene	ND	0.0010	EPA 8260D	6-17-21	6-17-21	
2-Chlorotoluene	ND	0.0010	EPA 8260D	6-17-21	6-17-21	
4-Chlorotoluene	ND	0.0010	EPA 8260D	6-17-21	6-17-21	
1,3,5-Trimethylbenzene	ND	0.0010	EPA 8260D	6-17-21	6-17-21	
tert-Butylbenzene	ND	0.0010	EPA 8260D	6-17-21	6-17-21	
1,2,4-Trimethylbenzene	ND	0.0010	EPA 8260D	6-17-21	6-17-21	
sec-Butylbenzene	ND	0.0010	EPA 8260D	6-17-21	6-17-21	
1,3-Dichlorobenzene	ND	0.0010	EPA 8260D	6-17-21	6-17-21	
p-Isopropyltoluene	ND	0.0010	EPA 8260D	6-17-21	6-17-21	
1,4-Dichlorobenzene	ND	0.0010	EPA 8260D	6-17-21	6-17-21	
1,2-Dichlorobenzene	ND	0.0010	EPA 8260D	6-17-21	6-17-21	
n-Butylbenzene	ND	0.0010	EPA 8260D	6-17-21	6-17-21	
1,2-Dibromo-3-chloropropane	ND	0.0051	EPA 8260D	6-17-21	6-17-21	
1,2,4-Trichlorobenzene	ND	0.0010	EPA 8260D	6-17-21	6-17-21	
Hexachlorobutadiene	ND	0.0051	EPA 8260D	6-17-21	6-17-21	
Naphthalene	ND	0.0051	EPA 8260D	6-17-21	6-17-21	
1,2,3-Trichlorobenzene	ND	0.0010	EPA 8260D	6-17-21	6-17-21	
Surrogate:	*Percent Recovery*	*Control Limits*				
Dibromofluoromethane	*93*	*74-131*				
Toluene-d8	*96*	*78-128*				
4-Bromofluorobenzene	*105*	*71-130*				

This report pertains to the samples analyzed in accordance with the chain of custody, and is intended only for the use of the individual or company to whom it is addressed.

Date of Report: June 21, 2021
Samples Submitted: June 16, 2021
Laboratory Reference: 2106-156
Project: 11-05150-003

VOLATILE ORGANICS EPA 8260D
page 1 of 2

Matrix: Soil
Units: mg/kg

Analyte	Result	PQL	Method	Date Prepared	Date Analyzed	Flags
Client ID:	**DA7SWCS14210616I**					
Laboratory ID:	06-156-04					
Dichlorodifluoromethane	ND	0.00090	EPA 8260D	6-17-21	6-17-21	
Chloromethane	ND	0.0045	EPA 8260D	6-17-21	6-17-21	
Vinyl Chloride	ND	0.00090	EPA 8260D	6-17-21	6-17-21	
Bromomethane	ND	0.0045	EPA 8260D	6-17-21	6-17-21	
Chloroethane	ND	0.0045	EPA 8260D	6-17-21	6-17-21	
Trichlorofluoromethane	ND	0.00090	EPA 8260D	6-17-21	6-17-21	
1,1-Dichloroethene	ND	0.00090	EPA 8260D	6-17-21	6-17-21	
Acetone	ND	0.0090	EPA 8260D	6-17-21	6-17-21	
Iodomethane	ND	0.0045	EPA 8260D	6-17-21	6-17-21	
Carbon Disulfide	ND	0.00090	EPA 8260D	6-17-21	6-17-21	
Methylene Chloride	ND	0.0045	EPA 8260D	6-17-21	6-17-21	
(trans) 1,2-Dichloroethene	ND	0.00090	EPA 8260D	6-17-21	6-17-21	
Methyl t-Butyl Ether	ND	0.00090	EPA 8260D	6-17-21	6-17-21	
1,1-Dichloroethane	ND	0.00090	EPA 8260D	6-17-21	6-17-21	
Vinyl Acetate	ND	0.0045	EPA 8260D	6-17-21	6-17-21	
2,2-Dichloropropane	ND	0.00090	EPA 8260D	6-17-21	6-17-21	
(cis) 1,2-Dichloroethene	ND	0.00090	EPA 8260D	6-17-21	6-17-21	
2-Butanone	ND	0.0045	EPA 8260D	6-17-21	6-17-21	
Bromochloromethane	ND	0.00090	EPA 8260D	6-17-21	6-17-21	
Chloroform	ND	0.00090	EPA 8260D	6-17-21	6-17-21	
1,1,1-Trichloroethane	ND	0.00090	EPA 8260D	6-17-21	6-17-21	
Carbon Tetrachloride	ND	0.00090	EPA 8260D	6-17-21	6-17-21	
1,1-Dichloropropene	ND	0.00090	EPA 8260D	6-17-21	6-17-21	
Benzene	ND	0.00090	EPA 8260D	6-17-21	6-17-21	
1,2-Dichloroethane	ND	0.00090	EPA 8260D	6-17-21	6-17-21	
Trichloroethene	ND	0.00090	EPA 8260D	6-17-21	6-17-21	
1,2-Dichloropropane	ND	0.00090	EPA 8260D	6-17-21	6-17-21	
Dibromomethane	ND	0.00090	EPA 8260D	6-17-21	6-17-21	
Bromodichloromethane	ND	0.00090	EPA 8260D	6-17-21	6-17-21	
2-Chloroethyl Vinyl Ether	ND	0.0045	EPA 8260D	6-17-21	6-17-21	
(cis) 1,3-Dichloropropene	ND	0.00090	EPA 8260D	6-17-21	6-17-21	
Methyl Isobutyl Ketone	ND	0.0045	EPA 8260D	6-17-21	6-17-21	
Toluene	ND	0.0045	EPA 8260D	6-17-21	6-17-21	
(trans) 1,3-Dichloropropene	ND	0.00090	EPA 8260D	6-17-21	6-17-21	

This report pertains to the samples analyzed in accordance with the chain of custody,
and is intended only for the use of the individual or company to whom it is addressed.

Date of Report: June 21, 2021
Samples Submitted: June 16, 2021
Laboratory Reference: 2106-156
Project: 11-05150-003

VOLATILE ORGANICS EPA 8260D
page 2 of 2

Analyte	Result	PQL	Method	Date Prepared	Date Analyzed	Flags
Client ID:	**DA7SWCS14210616I**					
Laboratory ID:	06-156-04					
1,1,2-Trichloroethane	ND	0.00090	EPA 8260D	6-17-21	6-17-21	
Tetrachloroethene	ND	0.00090	EPA 8260D	6-17-21	6-17-21	
1,3-Dichloropropane	ND	0.00090	EPA 8260D	6-17-21	6-17-21	
2-Hexanone	ND	0.0045	EPA 8260D	6-17-21	6-17-21	
Dibromochloromethane	ND	0.00090	EPA 8260D	6-17-21	6-17-21	
1,2-Dibromoethane	ND	0.000045	EPA 8260D/SIM	6-17-21	6-17-21	
Chlorobenzene	ND	0.00090	EPA 8260D	6-17-21	6-17-21	
1,1,1,2-Tetrachloroethane	ND	0.00090	EPA 8260D	6-17-21	6-17-21	
Ethylbenzene	ND	0.00090	EPA 8260D	6-17-21	6-17-21	
m,p-Xylene	ND	0.0018	EPA 8260D	6-17-21	6-17-21	
o-Xylene	ND	0.00090	EPA 8260D	6-17-21	6-17-21	
Styrene	ND	0.00090	EPA 8260D	6-17-21	6-17-21	
Bromoform	ND	0.0045	EPA 8260D	6-17-21	6-17-21	
Isopropylbenzene	ND	0.00090	EPA 8260D	6-17-21	6-17-21	
Bromobenzene	ND	0.00090	EPA 8260D	6-17-21	6-17-21	
1,1,2,2-Tetrachloroethane	ND	0.00090	EPA 8260D	6-17-21	6-17-21	
1,2,3-Trichloropropane	ND	0.00090	EPA 8260D	6-17-21	6-17-21	
n-Propylbenzene	ND	0.00090	EPA 8260D	6-17-21	6-17-21	
2-Chlorotoluene	ND	0.00090	EPA 8260D	6-17-21	6-17-21	
4-Chlorotoluene	ND	0.00090	EPA 8260D	6-17-21	6-17-21	
1,3,5-Trimethylbenzene	ND	0.00090	EPA 8260D	6-17-21	6-17-21	
tert-Butylbenzene	ND	0.00090	EPA 8260D	6-17-21	6-17-21	
1,2,4-Trimethylbenzene	ND	0.00090	EPA 8260D	6-17-21	6-17-21	
sec-Butylbenzene	ND	0.00090	EPA 8260D	6-17-21	6-17-21	
1,3-Dichlorobenzene	ND	0.00090	EPA 8260D	6-17-21	6-17-21	
p-Isopropyltoluene	ND	0.00090	EPA 8260D	6-17-21	6-17-21	
1,4-Dichlorobenzene	ND	0.00090	EPA 8260D	6-17-21	6-17-21	
1,2-Dichlorobenzene	ND	0.00090	EPA 8260D	6-17-21	6-17-21	
n-Butylbenzene	ND	0.00090	EPA 8260D	6-17-21	6-17-21	
1,2-Dibromo-3-chloropropane	ND	0.0045	EPA 8260D	6-17-21	6-17-21	
1,2,4-Trichlorobenzene	ND	0.00090	EPA 8260D	6-17-21	6-17-21	
Hexachlorobutadiene	ND	0.0045	EPA 8260D	6-17-21	6-17-21	
Naphthalene	ND	0.0045	EPA 8260D	6-17-21	6-17-21	
1,2,3-Trichlorobenzene	ND	0.00090	EPA 8260D	6-17-21	6-17-21	
Surrogate:	*Percent Recovery*	*Control Limits*				
Dibromofluoromethane	*92*	*74-131*				
Toluene-d8	*96*	*78-128*				
4-Bromofluorobenzene	*108*	*71-130*				

This report pertains to the samples analyzed in accordance with the chain of custody, and is intended only for the use of the individual or company to whom it is addressed.

Date of Report: June 21, 2021
Samples Submitted: June 16, 2021
Laboratory Reference: 2106-156
Project: 11-05150-003

VOLATILE ORGANICS EPA 8260D
QUALITY CONTROL
page 1 of 2

Matrix: Soil
Units: mg/kg

Analyte	Result	PQL	Method	Date Prepared	Date Analyzed	Flags
METHOD BLANK						
Laboratory ID:	MB0617S1					
Dichlorodifluoromethane	ND	0.0010	EPA 8260D	6-17-21	6-17-21	
Chloromethane	ND	0.0050	EPA 8260D	6-17-21	6-17-21	
Vinyl Chloride	ND	0.0010	EPA 8260D	6-17-21	6-17-21	
Bromomethane	ND	0.0050	EPA 8260D	6-17-21	6-17-21	
Chloroethane	ND	0.0050	EPA 8260D	6-17-21	6-17-21	
Trichlorofluoromethane	ND	0.0010	EPA 8260D	6-17-21	6-17-21	
1,1-Dichloroethene	ND	0.0010	EPA 8260D	6-17-21	6-17-21	
Acetone	ND	0.010	EPA 8260D	6-17-21	6-17-21	
Iodomethane	ND	0.0050	EPA 8260D	6-17-21	6-17-21	
Carbon Disulfide	ND	0.0010	EPA 8260D	6-17-21	6-17-21	
Methylene Chloride	ND	0.0050	EPA 8260D	6-17-21	6-17-21	
(trans) 1,2-Dichloroethene	ND	0.0010	EPA 8260D	6-17-21	6-17-21	
Methyl t-Butyl Ether	ND	0.0010	EPA 8260D	6-17-21	6-17-21	
1,1-Dichloroethane	ND	0.0010	EPA 8260D	6-17-21	6-17-21	
Vinyl Acetate	ND	0.0050	EPA 8260D	6-17-21	6-17-21	
2,2-Dichloropropane	ND	0.0010	EPA 8260D	6-17-21	6-17-21	
(cis) 1,2-Dichloroethene	ND	0.0010	EPA 8260D	6-17-21	6-17-21	
2-Butanone	ND	0.0050	EPA 8260D	6-17-21	6-17-21	
Bromochloromethane	ND	0.0010	EPA 8260D	6-17-21	6-17-21	
Chloroform	ND	0.0010	EPA 8260D	6-17-21	6-17-21	
1,1,1-Trichloroethane	ND	0.0010	EPA 8260D	6-17-21	6-17-21	
Carbon Tetrachloride	ND	0.0010	EPA 8260D	6-17-21	6-17-21	
1,1-Dichloropropene	ND	0.0010	EPA 8260D	6-17-21	6-17-21	
Benzene	ND	0.0010	EPA 8260D	6-17-21	6-17-21	
1,2-Dichloroethane	ND	0.0010	EPA 8260D	6-17-21	6-17-21	
Trichloroethene	ND	0.0010	EPA 8260D	6-17-21	6-17-21	
1,2-Dichloropropane	ND	0.0010	EPA 8260D	6-17-21	6-17-21	
Dibromomethane	ND	0.0010	EPA 8260D	6-17-21	6-17-21	
Bromodichloromethane	ND	0.0010	EPA 8260D	6-17-21	6-17-21	
2-Chloroethyl Vinyl Ether	ND	0.0050	EPA 8260D	6-17-21	6-17-21	
(cis) 1,3-Dichloropropene	ND	0.0010	EPA 8260D	6-17-21	6-17-21	
Methyl Isobutyl Ketone	ND	0.0050	EPA 8260D	6-17-21	6-17-21	
Toluene	ND	0.0050	EPA 8260D	6-17-21	6-17-21	
(trans) 1,3-Dichloropropene	ND	0.0010	EPA 8260D	6-17-21	6-17-21	

This report pertains to the samples analyzed in accordance with the chain of custody, and is intended only for the use of the individual or company to whom it is addressed.

Date of Report: June 21, 2021
Samples Submitted: June 16, 2021
Laboratory Reference: 2106-156
Project: 11-05150-003

VOLATILE ORGANICS EPA 8260D
QUALITY CONTROL
page 2 of 2

Analyte	Result	PQL	Method	Date Prepared	Date Analyzed	Flags
METHOD BLANK						
Laboratory ID:	MB0617S1					
1,1,2-Trichloroethane	ND	0.0010	EPA 8260D	6-17-21	6-17-21	
Tetrachloroethene	ND	0.0010	EPA 8260D	6-17-21	6-17-21	
1,3-Dichloropropane	ND	0.0010	EPA 8260D	6-17-21	6-17-21	
2-Hexanone	ND	0.0050	EPA 8260D	6-17-21	6-17-21	
Dibromochloromethane	ND	0.0010	EPA 8260D	6-17-21	6-17-21	
1,2-Dibromoethane	ND	0.000050	EPA 8260D/SIM	6-17-21	6-17-21	
Chlorobenzene	ND	0.0010	EPA 8260D	6-17-21	6-17-21	
1,1,1,2-Tetrachloroethane	ND	0.0010	EPA 8260D	6-17-21	6-17-21	
Ethylbenzene	ND	0.0010	EPA 8260D	6-17-21	6-17-21	
m,p-Xylene	ND	0.0020	EPA 8260D	6-17-21	6-17-21	
o-Xylene	ND	0.0010	EPA 8260D	6-17-21	6-17-21	
Styrene	ND	0.0010	EPA 8260D	6-17-21	6-17-21	
Bromoform	ND	0.0050	EPA 8260D	6-17-21	6-17-21	
Isopropylbenzene	ND	0.0010	EPA 8260D	6-17-21	6-17-21	
Bromobenzene	ND	0.0010	EPA 8260D	6-17-21	6-17-21	
1,1,2,2-Tetrachloroethane	ND	0.0010	EPA 8260D	6-17-21	6-17-21	
1,2,3-Trichloropropane	ND	0.0010	EPA 8260D	6-17-21	6-17-21	
n-Propylbenzene	ND	0.0010	EPA 8260D	6-17-21	6-17-21	
2-Chlorotoluene	ND	0.0010	EPA 8260D	6-17-21	6-17-21	
4-Chlorotoluene	ND	0.0010	EPA 8260D	6-17-21	6-17-21	
1,3,5-Trimethylbenzene	ND	0.0010	EPA 8260D	6-17-21	6-17-21	
tert-Butylbenzene	ND	0.0010	EPA 8260D	6-17-21	6-17-21	
1,2,4-Trimethylbenzene	ND	0.0010	EPA 8260D	6-17-21	6-17-21	
sec-Butylbenzene	ND	0.0010	EPA 8260D	6-17-21	6-17-21	
1,3-Dichlorobenzene	ND	0.0010	EPA 8260D	6-17-21	6-17-21	
p-Isopropyltoluene	ND	0.0010	EPA 8260D	6-17-21	6-17-21	
1,4-Dichlorobenzene	ND	0.0010	EPA 8260D	6-17-21	6-17-21	
1,2-Dichlorobenzene	ND	0.0010	EPA 8260D	6-17-21	6-17-21	
n-Butylbenzene	ND	0.0010	EPA 8260D	6-17-21	6-17-21	
1,2-Dibromo-3-chloropropane	ND	0.0050	EPA 8260D	6-17-21	6-17-21	
1,2,4-Trichlorobenzene	ND	0.0010	EPA 8260D	6-17-21	6-17-21	
Hexachlorobutadiene	ND	0.0050	EPA 8260D	6-17-21	6-17-21	
Naphthalene	ND	0.0050	EPA 8260D	6-17-21	6-17-21	
1,2,3-Trichlorobenzene	ND	0.0010	EPA 8260D	6-17-21	6-17-21	
Surrogate:	*Percent Recovery*	*Control Limits*				
Dibromofluoromethane	*93*	*74-131*				
Toluene-d8	*96*	*78-128*				
4-Bromofluorobenzene	*102*	*71-130*				

This report pertains to the samples analyzed in accordance with the chain of custody, and is intended only for the use of the individual or company to whom it is addressed.

Date of Report: June 21, 2021
Samples Submitted: June 16, 2021
Laboratory Reference: 2106-156
Project: 11-05150-003

VOLATILE ORGANICS EPA 8260D
QUALITY CONTROL

Matrix: Soil
Units: mg/kg

Analyte	Result		Spike Level		Percent Recovery		Recovery Limits	RPD	RPD Limit	Flags
SPIKE BLANKS										
Laboratory ID:	SB0617S1									
	SB	SBD	SB	SBD	SB	SBD				
1,1-Dichloroethene	**0.0551**	**0.0510**	0.0500	0.0500	110	102	71-131	8	19	
Benzene	**0.0490**	**0.0487**	0.0500	0.0500	98	97	73-124	1	18	
Trichloroethene	**0.0527**	**0.0505**	0.0500	0.0500	105	101	79-130	4	18	
Toluene	**0.0493**	**0.0490**	0.0500	0.0500	99	98	76-123	1	18	
Chlorobenzene	**0.0497**	**0.0483**	0.0500	0.0500	99	97	78-122	3	18	
Surrogate:										
Dibromofluoromethane					*92*	*94*	*74-131*			
Toluene-d8					*96*	*96*	*78-128*			
4-Bromofluorobenzene					*110*	*112*	*71-130*			

This report pertains to the samples analyzed in accordance with the chain of custody, and is intended only for the use of the individual or company to whom it is addressed.

Date of Report: June 21, 2021
Samples Submitted: June 16, 2021
Laboratory Reference: 2106-156
Project: 11-05150-003

VOLATILE ORGANICS EPA 8260D
page 1 of 2

Matrix: Water
Units: ug/L

Analyte	Result	PQL	Method	Date Prepared	Date Analyzed	Flags
Client ID:	**VTRP210616I - Trip Blank**					
Laboratory ID:	06-156-05					
Dichlorodifluoromethane	ND	0.20	EPA 8260D	6-17-21	6-17-21	
Chloromethane	ND	1.0	EPA 8260D	6-17-21	6-17-21	
Vinyl Chloride	ND	0.20	EPA 8260D	6-17-21	6-17-21	
Bromomethane	ND	2.0	EPA 8260D	6-17-21	6-17-21	
Chloroethane	ND	1.0	EPA 8260D	6-17-21	6-17-21	
Trichlorofluoromethane	ND	0.20	EPA 8260D	6-17-21	6-17-21	
1,1-Dichloroethene	ND	0.20	EPA 8260D	6-17-21	6-17-21	
Acetone	ND	5.0	EPA 8260D	6-17-21	6-17-21	
Iodomethane	ND	1.0	EPA 8260D	6-17-21	6-17-21	
Carbon Disulfide	ND	0.20	EPA 8260D	6-17-21	6-17-21	
Methylene Chloride	ND	1.0	EPA 8260D	6-17-21	6-17-21	
(trans) 1,2-Dichloroethene	ND	0.20	EPA 8260D	6-17-21	6-17-21	
Methyl t-Butyl Ether	ND	0.20	EPA 8260D	6-17-21	6-17-21	
1,1-Dichloroethane	ND	0.20	EPA 8260D	6-17-21	6-17-21	
Vinyl Acetate	ND	1.0	EPA 8260D	6-17-21	6-17-21	
2,2-Dichloropropane	ND	0.20	EPA 8260D	6-17-21	6-17-21	
(cis) 1,2-Dichloroethene	ND	0.20	EPA 8260D	6-17-21	6-17-21	
2-Butanone	ND	5.0	EPA 8260D	6-17-21	6-17-21	
Bromochloromethane	ND	0.20	EPA 8260D	6-17-21	6-17-21	
Chloroform	ND	0.20	EPA 8260D	6-17-21	6-17-21	
1,1,1-Trichloroethane	ND	0.20	EPA 8260D	6-17-21	6-17-21	
Carbon Tetrachloride	ND	0.20	EPA 8260D	6-17-21	6-17-21	
1,1-Dichloropropene	ND	0.20	EPA 8260D	6-17-21	6-17-21	
Benzene	ND	0.20	EPA 8260D	6-17-21	6-17-21	
1,2-Dichloroethane	ND	0.20	EPA 8260D	6-17-21	6-17-21	
Trichloroethene	ND	0.20	EPA 8260D	6-17-21	6-17-21	
1,2-Dichloropropane	ND	0.20	EPA 8260D	6-17-21	6-17-21	
Dibromomethane	ND	0.20	EPA 8260D	6-17-21	6-17-21	
Bromodichloromethane	ND	0.20	EPA 8260D	6-17-21	6-17-21	
2-Chloroethyl Vinyl Ether	ND	1.0	EPA 8260D	6-17-21	6-17-21	
(cis) 1,3-Dichloropropene	ND	0.20	EPA 8260D	6-17-21	6-17-21	
Methyl Isobutyl Ketone	ND	2.0	EPA 8260D	6-17-21	6-17-21	
Toluene	ND	1.0	EPA 8260D	6-17-21	6-17-21	
(trans) 1,3-Dichloropropene	ND	0.20	EPA 8260D	6-17-21	6-17-21	

This report pertains to the samples analyzed in accordance with the chain of custody,
and is intended only for the use of the individual or company to whom it is addressed.

Date of Report: June 21, 2021
Samples Submitted: June 16, 2021
Laboratory Reference: 2106-156
Project: 11-05150-003

VOLATILE ORGANICS EPA 8260D
page 2 of 2

Analyte	Result	PQL	Method	Date Prepared	Date Analyzed	Flags
Client ID:	**VTRP210616I - Trip Blank**					
Laboratory ID:	06-156-05					
1,1,2-Trichloroethane	ND	0.20	EPA 8260D	6-17-21	6-17-21	
Tetrachloroethene	ND	0.20	EPA 8260D	6-17-21	6-17-21	
1,3-Dichloropropane	ND	0.20	EPA 8260D	6-17-21	6-17-21	
2-Hexanone	ND	2.0	EPA 8260D	6-17-21	6-17-21	
Dibromochloromethane	ND	0.20	EPA 8260D	6-17-21	6-17-21	
1,2-Dibromoethane	ND	0.20	EPA 8260D	6-17-21	6-17-21	
Chlorobenzene	ND	0.20	EPA 8260D	6-17-21	6-17-21	
1,1,1,2-Tetrachloroethane	ND	0.20	EPA 8260D	6-17-21	6-17-21	
Ethylbenzene	ND	0.20	EPA 8260D	6-17-21	6-17-21	
m,p-Xylene	ND	0.40	EPA 8260D	6-17-21	6-17-21	
o-Xylene	ND	0.20	EPA 8260D	6-17-21	6-17-21	
Styrene	ND	0.20	EPA 8260D	6-17-21	6-17-21	
Bromoform	ND	1.0	EPA 8260D	6-17-21	6-17-21	
Isopropylbenzene	ND	0.20	EPA 8260D	6-17-21	6-17-21	
Bromobenzene	ND	0.20	EPA 8260D	6-17-21	6-17-21	
1,1,2,2-Tetrachloroethane	ND	0.20	EPA 8260D	6-17-21	6-17-21	
1,2,3-Trichloropropane	ND	0.20	EPA 8260D	6-17-21	6-17-21	
n-Propylbenzene	ND	0.20	EPA 8260D	6-17-21	6-17-21	
2-Chlorotoluene	ND	0.20	EPA 8260D	6-17-21	6-17-21	
4-Chlorotoluene	ND	0.20	EPA 8260D	6-17-21	6-17-21	
1,3,5-Trimethylbenzene	ND	0.20	EPA 8260D	6-17-21	6-17-21	
tert-Butylbenzene	ND	0.20	EPA 8260D	6-17-21	6-17-21	
1,2,4-Trimethylbenzene	ND	0.20	EPA 8260D	6-17-21	6-17-21	
sec-Butylbenzene	ND	0.20	EPA 8260D	6-17-21	6-17-21	
1,3-Dichlorobenzene	ND	0.20	EPA 8260D	6-17-21	6-17-21	
p-Isopropyltoluene	ND	0.20	EPA 8260D	6-17-21	6-17-21	
1,4-Dichlorobenzene	ND	0.20	EPA 8260D	6-17-21	6-17-21	
1,2-Dichlorobenzene	ND	0.20	EPA 8260D	6-17-21	6-17-21	
n-Butylbenzene	ND	0.20	EPA 8260D	6-17-21	6-17-21	
1,2-Dibromo-3-chloropropane	ND	1.0	EPA 8260D	6-17-21	6-17-21	
1,2,4-Trichlorobenzene	ND	0.20	EPA 8260D	6-17-21	6-17-21	
Hexachlorobutadiene	ND	1.0	EPA 8260D	6-17-21	6-17-21	
Naphthalene	ND	1.0	EPA 8260D	6-17-21	6-17-21	
1,2,3-Trichlorobenzene	ND	0.20	EPA 8260D	6-17-21	6-17-21	
Surrogate:	*Percent Recovery*	*Control Limits*				
Dibromofluoromethane	*100*	*75-127*				
Toluene-d8	*99*	*80-127*				
4-Bromofluorobenzene	*98*	*78-125*				

This report pertains to the samples analyzed in accordance with the chain of custody, and is intended only for the use of the individual or company to whom it is addressed.

Date of Report: June 21, 2021
Samples Submitted: June 16, 2021
Laboratory Reference: 2106-156
Project: 11-05150-003

VOLATILE ORGANICS EPA 8260D
QUALITY CONTROL
page 1 of 2

Matrix: Water
Units: ug/L

Analyte	Result	PQL	Method	Date Prepared	Date Analyzed	Flags
METHOD BLANK						
Laboratory ID:	MB0617W1					
Dichlorodifluoromethane	ND	0.20	EPA 8260D	6-17-21	6-17-21	
Chloromethane	ND	1.0	EPA 8260D	6-17-21	6-17-21	
Vinyl Chloride	ND	0.20	EPA 8260D	6-17-21	6-17-21	
Bromomethane	ND	2.0	EPA 8260D	6-17-21	6-17-21	
Chloroethane	ND	1.0	EPA 8260D	6-17-21	6-17-21	
Trichlorofluoromethane	ND	0.20	EPA 8260D	6-17-21	6-17-21	
1,1-Dichloroethene	ND	0.20	EPA 8260D	6-17-21	6-17-21	
Acetone	ND	5.0	EPA 8260D	6-17-21	6-17-21	
Iodomethane	ND	1.0	EPA 8260D	6-17-21	6-17-21	
Carbon Disulfide	ND	0.20	EPA 8260D	6-17-21	6-17-21	
Methylene Chloride	ND	1.0	EPA 8260D	6-17-21	6-17-21	
(trans) 1,2-Dichloroethene	ND	0.20	EPA 8260D	6-17-21	6-17-21	
Methyl t-Butyl Ether	ND	0.20	EPA 8260D	6-17-21	6-17-21	
1,1-Dichloroethane	ND	0.20	EPA 8260D	6-17-21	6-17-21	
Vinyl Acetate	ND	1.0	EPA 8260D	6-17-21	6-17-21	
2,2-Dichloropropane	ND	0.20	EPA 8260D	6-17-21	6-17-21	
(cis) 1,2-Dichloroethene	ND	0.20	EPA 8260D	6-17-21	6-17-21	
2-Butanone	ND	5.0	EPA 8260D	6-17-21	6-17-21	
Bromochloromethane	ND	0.20	EPA 8260D	6-17-21	6-17-21	
Chloroform	ND	0.20	EPA 8260D	6-17-21	6-17-21	
1,1,1-Trichloroethane	ND	0.20	EPA 8260D	6-17-21	6-17-21	
Carbon Tetrachloride	ND	0.20	EPA 8260D	6-17-21	6-17-21	
1,1-Dichloropropene	ND	0.20	EPA 8260D	6-17-21	6-17-21	
Benzene	ND	0.20	EPA 8260D	6-17-21	6-17-21	
1,2-Dichloroethane	ND	0.20	EPA 8260D	6-17-21	6-17-21	
Trichloroethene	ND	0.20	EPA 8260D	6-17-21	6-17-21	
1,2-Dichloropropane	ND	0.20	EPA 8260D	6-17-21	6-17-21	
Dibromomethane	ND	0.20	EPA 8260D	6-17-21	6-17-21	
Bromodichloromethane	ND	0.20	EPA 8260D	6-17-21	6-17-21	
2-Chloroethyl Vinyl Ether	ND	1.0	EPA 8260D	6-17-21	6-17-21	
(cis) 1,3-Dichloropropene	ND	0.20	EPA 8260D	6-17-21	6-17-21	
Methyl Isobutyl Ketone	ND	2.0	EPA 8260D	6-17-21	6-17-21	
Toluene	ND	1.0	EPA 8260D	6-17-21	6-17-21	
(trans) 1,3-Dichloropropene	ND	0.20	EPA 8260D	6-17-21	6-17-21	

This report pertains to the samples analyzed in accordance with the chain of custody, and is intended only for the use of the individual or company to whom it is addressed.

Date of Report: June 21, 2021
Samples Submitted: June 16, 2021
Laboratory Reference: 2106-156
Project: 11-05150-003

VOLATILE ORGANICS EPA 8260D
QUALITY CONTROL
page 2 of 2

Analyte	Result	PQL	Method	Date Prepared	Date Analyzed	Flags
METHOD BLANK						
Laboratory ID:	MB0617W1					
1,1,2-Trichloroethane	ND	0.20	EPA 8260D	6-17-21	6-17-21	
Tetrachloroethene	ND	0.20	EPA 8260D	6-17-21	6-17-21	
1,3-Dichloropropane	ND	0.20	EPA 8260D	6-17-21	6-17-21	
2-Hexanone	ND	2.0	EPA 8260D	6-17-21	6-17-21	
Dibromochloromethane	ND	0.20	EPA 8260D	6-17-21	6-17-21	
1,2-Dibromoethane	ND	0.20	EPA 8260D	6-17-21	6-17-21	
Chlorobenzene	ND	0.20	EPA 8260D	6-17-21	6-17-21	
1,1,1,2-Tetrachloroethane	ND	0.20	EPA 8260D	6-17-21	6-17-21	
Ethylbenzene	ND	0.20	EPA 8260D	6-17-21	6-17-21	
m,p-Xylene	ND	0.40	EPA 8260D	6-17-21	6-17-21	
o-Xylene	ND	0.20	EPA 8260D	6-17-21	6-17-21	
Styrene	ND	0.20	EPA 8260D	6-17-21	6-17-21	
Bromoform	ND	1.0	EPA 8260D	6-17-21	6-17-21	
Isopropylbenzene	ND	0.20	EPA 8260D	6-17-21	6-17-21	
Bromobenzene	ND	0.20	EPA 8260D	6-17-21	6-17-21	
1,1,2,2-Tetrachloroethane	ND	0.20	EPA 8260D	6-17-21	6-17-21	
1,2,3-Trichloropropane	ND	0.20	EPA 8260D	6-17-21	6-17-21	
n-Propylbenzene	ND	0.20	EPA 8260D	6-17-21	6-17-21	
2-Chlorotoluene	ND	0.20	EPA 8260D	6-17-21	6-17-21	
4-Chlorotoluene	ND	0.20	EPA 8260D	6-17-21	6-17-21	
1,3,5-Trimethylbenzene	ND	0.20	EPA 8260D	6-17-21	6-17-21	
tert-Butylbenzene	ND	0.20	EPA 8260D	6-17-21	6-17-21	
1,2,4-Trimethylbenzene	ND	0.20	EPA 8260D	6-17-21	6-17-21	
sec-Butylbenzene	ND	0.20	EPA 8260D	6-17-21	6-17-21	
1,3-Dichlorobenzene	ND	0.20	EPA 8260D	6-17-21	6-17-21	
p-Isopropyltoluene	ND	0.20	EPA 8260D	6-17-21	6-17-21	
1,4-Dichlorobenzene	ND	0.20	EPA 8260D	6-17-21	6-17-21	
1,2-Dichlorobenzene	ND	0.20	EPA 8260D	6-17-21	6-17-21	
n-Butylbenzene	ND	0.20	EPA 8260D	6-17-21	6-17-21	
1,2-Dibromo-3-chloropropane	ND	1.0	EPA 8260D	6-17-21	6-17-21	
1,2,4-Trichlorobenzene	ND	0.20	EPA 8260D	6-17-21	6-17-21	
Hexachlorobutadiene	ND	1.0	EPA 8260D	6-17-21	6-17-21	
Naphthalene	ND	1.0	EPA 8260D	6-17-21	6-17-21	
1,2,3-Trichlorobenzene	ND	0.20	EPA 8260D	6-17-21	6-17-21	
Surrogate:	*Percent Recovery*	*Control Limits*				
Dibromofluoromethane	*102*	*75-127*				
Toluene-d8	*100*	*80-127*				
4-Bromofluorobenzene	*100*	*78-125*				

This report pertains to the samples analyzed in accordance with the chain of custody, and is intended only for the use of the individual or company to whom it is addressed.

Date of Report: June 21, 2021
Samples Submitted: June 16, 2021
Laboratory Reference: 2106-156
Project: 11-05150-003

VOLATILE ORGANICS EPA 8260D
QUALITY CONTROL

Matrix: Water
Units: ug/L

Analyte	Result		Spike Level		Percent Recovery		Recovery Limits	RPD	RPD Limit	Flags
SPIKE BLANKS										
Laboratory ID:	SB0617W1									
	SB	SBD	SB	SBD	SB	SBD				
1,1-Dichloroethene	**10.1**	**9.84**	10.0	10.0	101	98	78-124	3	19	
Benzene	**10.1**	**9.94**	10.0	10.0	101	99	80-119	2	16	
Trichloroethene	**10.2**	**10.3**	10.0	10.0	102	103	80-121	1	18	
Toluene	**9.72**	**9.75**	10.0	10.0	97	98	80-117	0	18	
Chlorobenzene	**10.2**	**10.2**	10.0	10.0	102	102	80-117	0	17	
Surrogate:										
Dibromofluoromethane					*100*	*99*	*75-127*			
Toluene-d8					*99*	*99*	*80-127*			
4-Bromofluorobenzene					*100*	*99*	*78-125*			

This report pertains to the samples analyzed in accordance with the chain of custody, and is intended only for the use of the individual or company to whom it is addressed.

Date of Report: June 21, 2021
Samples Submitted: June 16, 2021
Laboratory Reference: 2106-156
Project: 11-05150-003

SEMIVOLATILE ORGANICS EPA 8270E/SIM
page 1 of 2

Matrix: Soil
Units: mg/Kg

Analyte	Result	PQL	Method	Date Prepared	Date Analyzed	Flags
Client ID:	**DA7SWCS10210615I**					
Laboratory ID:	06-156-01					
n-Nitrosodimethylamine	**ND**	0.014	EPA 8270E	6-17-21	6-17-21	
Pyridine	**ND**	0.28	EPA 8270E	6-17-21	6-17-21	
Phenol	**ND**	0.10	EPA 8270E	6-17-21	6-17-21	U1
Aniline	**ND**	0.14	EPA 8270E	6-17-21	6-17-21	
bis(2-Chloroethyl)ether	**ND**	0.014	EPA 8270E	6-17-21	6-17-21	
2-Chlorophenol	**ND**	0.028	EPA 8270E	6-17-21	6-17-21	
1,3-Dichlorobenzene	**ND**	0.028	EPA 8270E	6-17-21	6-17-21	
1,4-Dichlorobenzene	**ND**	0.028	EPA 8270E	6-17-21	6-17-21	
Benzyl alcohol	**ND**	0.028	EPA 8270E	6-17-21	6-17-21	
1,2-Dichlorobenzene	**ND**	0.028	EPA 8270E	6-17-21	6-17-21	
2-Methylphenol (o-Cresol)	**0.10**	0.028	EPA 8270E	6-17-21	6-17-21	
bis(2-Chloroisopropyl)ether	**ND**	0.028	EPA 8270E	6-17-21	6-17-21	
(3+4)-Methylphenol (m,p-Cresol)	**0.27**	0.028	EPA 8270E	6-17-21	6-17-21	
n-Nitroso-di-n-propylamine	**ND**	0.014	EPA 8270E	6-17-21	6-17-21	
Hexachloroethane	**ND**	0.028	EPA 8270E	6-17-21	6-17-21	
Nitrobenzene	**ND**	0.028	EPA 8270E	6-17-21	6-17-21	
Isophorone	**ND**	0.028	EPA 8270E	6-17-21	6-17-21	
2-Nitrophenol	**ND**	0.028	EPA 8270E	6-17-21	6-17-21	
2,4-Dimethylphenol	**ND**	0.043	EPA 8270E	6-17-21	6-17-21	U1
bis(2-Chloroethoxy)methane	**ND**	0.028	EPA 8270E	6-17-21	6-17-21	
2,4-Dichlorophenol	**ND**	0.028	EPA 8270E	6-17-21	6-17-21	
1,2,4-Trichlorobenzene	**ND**	0.028	EPA 8270E	6-17-21	6-17-21	
Naphthalene	**0.14**	0.028	EPA 8270E	6-17-21	6-17-21	
4-Chloroaniline	**ND**	0.014	EPA 8270E	6-17-21	6-17-21	
Hexachlorobutadiene	**ND**	0.028	EPA 8270E	6-17-21	6-17-21	
4-Chloro-3-methylphenol	**ND**	0.028	EPA 8270E	6-17-21	6-17-21	
2-Methylnaphthalene	**0.039**	0.028	EPA 8270E	6-17-21	6-17-21	
1-Methylnaphthalene	**0.030**	0.028	EPA 8270E	6-17-21	6-17-21	
Hexachlorocyclopentadiene	**ND**	0.039	EPA 8270E	6-17-21	6-17-21	
2,4,6-Trichlorophenol	**ND**	0.028	EPA 8270E	6-17-21	6-17-21	
2,3-Dichloroaniline	**ND**	0.028	EPA 8270E	6-17-21	6-17-21	
2,4,5-Trichlorophenol	**ND**	0.028	EPA 8270E	6-17-21	6-17-21	
2-Chloronaphthalene	**ND**	0.028	EPA 8270E	6-17-21	6-17-21	
2-Nitroaniline	**ND**	0.028	EPA 8270E	6-17-21	6-17-21	
1,4-Dinitrobenzene	**ND**	0.028	EPA 8270E	6-17-21	6-17-21	
Dimethylphthalate	**ND**	0.028	EPA 8270E	6-17-21	6-17-21	
1,3-Dinitrobenzene	**ND**	0.028	EPA 8270E	6-17-21	6-17-21	
2,6-Dinitrotoluene	**ND**	0.014	EPA 8270E	6-17-21	6-17-21	
1,2-Dinitrobenzene	**ND**	0.028	EPA 8270E	6-17-21	6-17-21	
Acenaphthylene	**ND**	0.0056	EPA 8270E/SIM	6-17-21	6-17-21	
3-Nitroaniline	**ND**	0.028	EPA 8270E	6-17-21	6-17-21	

This report pertains to the samples analyzed in accordance with the chain of custody, and is intended only for the use of the individual or company to whom it is addressed.

Date of Report: June 21, 2021
Samples Submitted: June 16, 2021
Laboratory Reference: 2106-156
Project: 11-05150-003

SEMIVOLATILE ORGANICS EPA 8270E/SIM
page 2 of 2

Analyte	Result	PQL	Method	Date Prepared	Date Analyzed	Flags
Client ID:	**DA7SWCS10210615I**					
Laboratory ID:	06-156-01					
2,4-Dinitrophenol	**ND**	0.14	EPA 8270E	6-17-21	6-17-21	
Acenaphthene	**ND**	0.0056	EPA 8270E/SIM	6-17-21	6-17-21	
4-Nitrophenol	**ND**	0.028	EPA 8270E	6-17-21	6-17-21	
2,4-Dinitrotoluene	**ND**	0.014	EPA 8270E	6-17-21	6-17-21	
Dibenzofuran	**ND**	0.028	EPA 8270E	6-17-21	6-17-21	
2,3,5,6-Tetrachlorophenol	**ND**	0.028	EPA 8270E	6-17-21	6-17-21	
2,3,4,6-Tetrachlorophenol	**ND**	0.028	EPA 8270E	6-17-21	6-17-21	
Diethylphthalate	**ND**	0.14	EPA 8270E	6-17-21	6-17-21	
4-Chlorophenyl-phenylether	**ND**	0.028	EPA 8270E	6-17-21	6-17-21	
4-Nitroaniline	**ND**	0.028	EPA 8270E	6-17-21	6-17-21	
Fluorene	**0.0056**	0.0056	EPA 8270E/SIM	6-17-21	6-17-21	
4,6-Dinitro-2-methylphenol	**ND**	0.14	EPA 8270E	6-17-21	6-17-21	
n-Nitrosodiphenylamine	**ND**	0.028	EPA 8270E	6-17-21	6-17-21	
1,2-Diphenylhydrazine	**ND**	0.028	EPA 8270E	6-17-21	6-17-21	
4-Bromophenyl-phenylether	**ND**	0.028	EPA 8270E	6-17-21	6-17-21	
Hexachlorobenzene	**ND**	0.028	EPA 8270E	6-17-21	6-17-21	
Pentachlorophenol	**ND**	0.056	EPA 8270E	6-17-21	6-17-21	
Phenanthrene	**0.031**	0.028	EPA 8270E	6-17-21	6-17-21	
Anthracene	**ND**	0.0056	EPA 8270E/SIM	6-17-21	6-17-21	
Carbazole	**ND**	0.028	EPA 8270E	6-17-21	6-17-21	
Di-n-butylphthalate	**ND**	0.14	EPA 8270E	6-17-21	6-17-21	
Fluoranthene	**0.0068**	0.0056	EPA 8270E/SIM	6-17-21	6-17-21	
Pyrene	**ND**	0.0056	EPA 8270E/SIM	6-17-21	6-17-21	
Butylbenzylphthalate	**ND**	0.14	EPA 8270E	6-17-21	6-17-21	
bis-2-Ethylhexyladipate	**ND**	0.14	EPA 8270E	6-17-21	6-17-21	
3,3'-Dichlorobenzidine	**ND**	0.014	EPA 8270E	6-17-21	6-17-21	
Benzo[a]anthracene	**ND**	0.0056	EPA 8270E/SIM	6-17-21	6-17-21	
Chrysene	**ND**	0.0056	EPA 8270E/SIM	6-17-21	6-17-21	
bis(2-Ethylhexyl)phthalate	**ND**	0.14	EPA 8270E	6-17-21	6-17-21	
Di-n-octylphthalate	**ND**	0.14	EPA 8270E	6-17-21	6-17-21	
Benzo[b]fluoranthene	**ND**	0.0056	EPA 8270E/SIM	6-17-21	6-17-21	
Benzo(j,k)fluoranthene	**ND**	0.0056	EPA 8270E/SIM	6-17-21	6-17-21	
Benzo[a]pyrene	**ND**	0.0056	EPA 8270E/SIM	6-17-21	6-17-21	
Indeno[1,2,3-cd]pyrene	**ND**	0.0056	EPA 8270E/SIM	6-17-21	6-17-21	
Dibenz[a,h]anthracene	**ND**	0.0056	EPA 8270E/SIM	6-17-21	6-17-21	
Benzo[g,h,i]perylene	**ND**	0.0056	EPA 8270E/SIM	6-17-21	6-17-21	
Surrogate:	*Percent Recovery*	*Control Limits*				
2-Fluorophenol	*35*	*26 - 109*				
Phenol-d6	*40*	*33 - 113*				
Nitrobenzene-d5	*53*	*31 - 110*				
2-Fluorobiphenyl	*62*	*42 - 107*				
2,4,6-Tribromophenol	*44*	*42 - 123*				
Terphenyl-d14	*47*	*41 - 115*				

This report pertains to the samples analyzed in accordance with the chain of custody, and is intended only for the use of the individual or company to whom it is addressed.

Date of Report: June 21, 2021
Samples Submitted: June 16, 2021
Laboratory Reference: 2106-156
Project: 11-05150-003

SEMIVOLATILE ORGANICS EPA 8270E/SIM
page 1 of 2

Matrix: Soil
Units: mg/Kg

Analyte	Result	PQL	Method	Date Prepared	Date Analyzed	Flags
Client ID:	**DA7SWCS12210616I**					
Laboratory ID:	06-156-02					
n-Nitrosodimethylamine	**ND**	0.013	EPA 8270E	6-17-21	6-17-21	
Pyridine	**ND**	0.26	EPA 8270E	6-17-21	6-17-21	
Phenol	**0.13**	0.026	EPA 8270E	6-17-21	6-17-21	
Aniline	**ND**	0.13	EPA 8270E	6-17-21	6-17-21	
bis(2-Chloroethyl)ether	**ND**	0.013	EPA 8270E	6-17-21	6-17-21	
2-Chlorophenol	**ND**	0.026	EPA 8270E	6-17-21	6-17-21	
1,3-Dichlorobenzene	**ND**	0.026	EPA 8270E	6-17-21	6-17-21	
1,4-Dichlorobenzene	**ND**	0.026	EPA 8270E	6-17-21	6-17-21	
Benzyl alcohol	**0.22**	0.026	EPA 8270E	6-17-21	6-17-21	
1,2-Dichlorobenzene	**ND**	0.026	EPA 8270E	6-17-21	6-17-21	
2-Methylphenol (o-Cresol)	**0.072**	0.026	EPA 8270E	6-17-21	6-17-21	
bis(2-Chloroisopropyl)ether	**ND**	0.026	EPA 8270E	6-17-21	6-17-21	
(3+4)-Methylphenol (m,p-Cresol)	**0.13**	0.026	EPA 8270E	6-17-21	6-17-21	
n-Nitroso-di-n-propylamine	**ND**	0.013	EPA 8270E	6-17-21	6-17-21	
Hexachloroethane	**ND**	0.026	EPA 8270E	6-17-21	6-17-21	
Nitrobenzene	**ND**	0.026	EPA 8270E	6-17-21	6-17-21	
Isophorone	**ND**	0.026	EPA 8270E	6-17-21	6-17-21	
2-Nitrophenol	**ND**	0.026	EPA 8270E	6-17-21	6-17-21	
2,4-Dimethylphenol	**ND**	0.026	EPA 8270E	6-17-21	6-17-21	
bis(2-Chloroethoxy)methane	**ND**	0.026	EPA 8270E	6-17-21	6-17-21	
2,4-Dichlorophenol	**ND**	0.026	EPA 8270E	6-17-21	6-17-21	
1,2,4-Trichlorobenzene	**ND**	0.026	EPA 8270E	6-17-21	6-17-21	
Naphthalene	**0.0071**	0.0052	EPA 8270E/SIM	6-17-21	6-17-21	
4-Chloroaniline	**ND**	0.013	EPA 8270E	6-17-21	6-17-21	
Hexachlorobutadiene	**ND**	0.026	EPA 8270E	6-17-21	6-17-21	
4-Chloro-3-methylphenol	**ND**	0.026	EPA 8270E	6-17-21	6-17-21	
2-Methylnaphthalene	**ND**	0.0052	EPA 8270E/SIM	6-17-21	6-17-21	
1-Methylnaphthalene	**ND**	0.0052	EPA 8270E/SIM	6-17-21	6-17-21	
Hexachlorocyclopentadiene	**ND**	0.036	EPA 8270E	6-17-21	6-17-21	
2,4,6-Trichlorophenol	**ND**	0.026	EPA 8270E	6-17-21	6-17-21	
2,3-Dichloroaniline	**ND**	0.026	EPA 8270E	6-17-21	6-17-21	
2,4,5-Trichlorophenol	**ND**	0.026	EPA 8270E	6-17-21	6-17-21	
2-Chloronaphthalene	**ND**	0.026	EPA 8270E	6-17-21	6-17-21	
2-Nitroaniline	**ND**	0.026	EPA 8270E	6-17-21	6-17-21	
1,4-Dinitrobenzene	**ND**	0.026	EPA 8270E	6-17-21	6-17-21	
Dimethylphthalate	**ND**	0.026	EPA 8270E	6-17-21	6-17-21	
1,3-Dinitrobenzene	**ND**	0.026	EPA 8270E	6-17-21	6-17-21	
2,6-Dinitrotoluene	**ND**	0.013	EPA 8270E	6-17-21	6-17-21	
1,2-Dinitrobenzene	**ND**	0.026	EPA 8270E	6-17-21	6-17-21	
Acenaphthylene	**ND**	0.0052	EPA 8270E/SIM	6-17-21	6-17-21	
3-Nitroaniline	**ND**	0.026	EPA 8270E	6-17-21	6-17-21	

This report pertains to the samples analyzed in accordance with the chain of custody, and is intended only for the use of the individual or company to whom it is addressed.

Date of Report: June 21, 2021
Samples Submitted: June 16, 2021
Laboratory Reference: 2106-156
Project: 11-05150-003

SEMIVOLATILE ORGANICS EPA 8270E/SIM
page 2 of 2

Analyte	Result	PQL	Method	Date Prepared	Date Analyzed	Flags
Client ID:	**DA7SWCS12210616I**					
Laboratory ID:	06-156-02					
2,4-Dinitrophenol	**ND**	0.13	EPA 8270E	6-17-21	6-17-21	
Acenaphthene	**ND**	0.0052	EPA 8270E/SIM	6-17-21	6-17-21	
4-Nitrophenol	**ND**	0.026	EPA 8270E	6-17-21	6-17-21	
2,4-Dinitrotoluene	**ND**	0.013	EPA 8270E	6-17-21	6-17-21	
Dibenzofuran	**ND**	0.026	EPA 8270E	6-17-21	6-17-21	
2,3,5,6-Tetrachlorophenol	**ND**	0.026	EPA 8270E	6-17-21	6-17-21	
2,3,4,6-Tetrachlorophenol	**ND**	0.026	EPA 8270E	6-17-21	6-17-21	
Diethylphthalate	**ND**	0.13	EPA 8270E	6-17-21	6-17-21	
4-Chlorophenyl-phenylether	**ND**	0.026	EPA 8270E	6-17-21	6-17-21	
4-Nitroaniline	**ND**	0.026	EPA 8270E	6-17-21	6-17-21	
Fluorene	**ND**	0.0052	EPA 8270E/SIM	6-17-21	6-17-21	
4,6-Dinitro-2-methylphenol	**ND**	0.13	EPA 8270E	6-17-21	6-17-21	
n-Nitrosodiphenylamine	**ND**	0.026	EPA 8270E	6-17-21	6-17-21	
1,2-Diphenylhydrazine	**ND**	0.026	EPA 8270E	6-17-21	6-17-21	
4-Bromophenyl-phenylether	**ND**	0.026	EPA 8270E	6-17-21	6-17-21	
Hexachlorobenzene	**ND**	0.026	EPA 8270E	6-17-21	6-17-21	
Pentachlorophenol	**ND**	0.052	EPA 8270E	6-17-21	6-17-21	
Phenanthrene	**0.0052**	0.0052	EPA 8270E/SIM	6-17-21	6-17-21	
Anthracene	**ND**	0.0052	EPA 8270E/SIM	6-17-21	6-17-21	
Carbazole	**ND**	0.026	EPA 8270E	6-17-21	6-17-21	
Di-n-butylphthalate	**ND**	0.13	EPA 8270E	6-17-21	6-17-21	
Fluoranthene	**ND**	0.0052	EPA 8270E/SIM	6-17-21	6-17-21	
Pyrene	**ND**	0.0052	EPA 8270E/SIM	6-17-21	6-17-21	
Butylbenzylphthalate	**ND**	0.13	EPA 8270E	6-17-21	6-17-21	
bis-2-Ethylhexyladipate	**ND**	0.13	EPA 8270E	6-17-21	6-17-21	
3,3'-Dichlorobenzidine	**ND**	0.013	EPA 8270E	6-17-21	6-17-21	
Benzo[a]anthracene	**ND**	0.0052	EPA 8270E/SIM	6-17-21	6-17-21	
Chrysene	**ND**	0.0052	EPA 8270E/SIM	6-17-21	6-17-21	
bis(2-Ethylhexyl)phthalate	**ND**	0.13	EPA 8270E	6-17-21	6-17-21	
Di-n-octylphthalate	**ND**	0.13	EPA 8270E	6-17-21	6-17-21	
Benzo[b]fluoranthene	**ND**	0.0052	EPA 8270E/SIM	6-17-21	6-17-21	
Benzo(j,k)fluoranthene	**ND**	0.0052	EPA 8270E/SIM	6-17-21	6-17-21	
Benzo[a]pyrene	**ND**	0.0052	EPA 8270E/SIM	6-17-21	6-17-21	
Indeno[1,2,3-cd]pyrene	**ND**	0.0052	EPA 8270E/SIM	6-17-21	6-17-21	
Dibenz[a,h]anthracene	**ND**	0.0052	EPA 8270E/SIM	6-17-21	6-17-21	
Benzo[g,h,i]perylene	**ND**	0.0052	EPA 8270E/SIM	6-17-21	6-17-21	
Surrogate:	*Percent Recovery*	*Control Limits*				
2-Fluorophenol	*59*	*26 - 109*				
Phenol-d6	*67*	*33 - 113*				
Nitrobenzene-d5	*71*	*31 - 110*				
2-Fluorobiphenyl	*72*	*42 - 107*				
2,4,6-Tribromophenol	*74*	*42 - 123*				
Terphenyl-d14	*80*	*41 - 115*				

This report pertains to the samples analyzed in accordance with the chain of custody, and is intended only for the use of the individual or company to whom it is addressed.

Date of Report: June 21, 2021
Samples Submitted: June 16, 2021
Laboratory Reference: 2106-156
Project: 11-05150-003

SEMIVOLATILE ORGANICS EPA 8270E/SIM
page 1 of 2

Matrix: Soil
Units: mg/Kg

Analyte	Result	PQL	Method	Date Prepared	Date Analyzed	Flags
Client ID:	**DA7SWCS13210616I**					
Laboratory ID:	06-156-03					
n-Nitrosodimethylamine	**ND**	0.012	EPA 8270E	6-17-21	6-18-21	
Pyridine	**ND**	0.24	EPA 8270E	6-17-21	6-18-21	
Phenol	**ND**	0.024	EPA 8270E	6-17-21	6-18-21	
Aniline	**ND**	0.12	EPA 8270E	6-17-21	6-18-21	
bis(2-Chloroethyl)ether	**ND**	0.012	EPA 8270E	6-17-21	6-18-21	
2-Chlorophenol	**ND**	0.024	EPA 8270E	6-17-21	6-18-21	
1,3-Dichlorobenzene	**ND**	0.024	EPA 8270E	6-17-21	6-18-21	
1,4-Dichlorobenzene	**ND**	0.024	EPA 8270E	6-17-21	6-18-21	
Benzyl alcohol	**ND**	0.024	EPA 8270E	6-17-21	6-18-21	
1,2-Dichlorobenzene	**ND**	0.024	EPA 8270E	6-17-21	6-18-21	
2-Methylphenol (o-Cresol)	**ND**	0.024	EPA 8270E	6-17-21	6-18-21	
bis(2-Chloroisopropyl)ether	**ND**	0.024	EPA 8270E	6-17-21	6-18-21	
(3+4)-Methylphenol (m,p-Cresol)	**ND**	0.024	EPA 8270E	6-17-21	6-18-21	
n-Nitroso-di-n-propylamine	**ND**	0.012	EPA 8270E	6-17-21	6-18-21	
Hexachloroethane	**ND**	0.024	EPA 8270E	6-17-21	6-18-21	
Nitrobenzene	**ND**	0.024	EPA 8270E	6-17-21	6-18-21	
Isophorone	**ND**	0.024	EPA 8270E	6-17-21	6-18-21	
2-Nitrophenol	**ND**	0.024	EPA 8270E	6-17-21	6-18-21	
2,4-Dimethylphenol	**ND**	0.024	EPA 8270E	6-17-21	6-18-21	
bis(2-Chloroethoxy)methane	**ND**	0.024	EPA 8270E	6-17-21	6-18-21	
2,4-Dichlorophenol	**ND**	0.024	EPA 8270E	6-17-21	6-18-21	
1,2,4-Trichlorobenzene	**ND**	0.024	EPA 8270E	6-17-21	6-18-21	
Naphthalene	**ND**	0.0047	EPA 8270E/SIM	6-17-21	6-18-21	
4-Chloroaniline	**ND**	0.012	EPA 8270E	6-17-21	6-18-21	
Hexachlorobutadiene	**ND**	0.024	EPA 8270E	6-17-21	6-18-21	
4-Chloro-3-methylphenol	**ND**	0.024	EPA 8270E	6-17-21	6-18-21	
2-Methylnaphthalene	**ND**	0.0047	EPA 8270E/SIM	6-17-21	6-18-21	
1-Methylnaphthalene	**ND**	0.0047	EPA 8270E/SIM	6-17-21	6-18-21	
Hexachlorocyclopentadiene	**ND**	0.024	EPA 8270E	6-17-21	6-18-21	
2,4,6-Trichlorophenol	**ND**	0.024	EPA 8270E	6-17-21	6-18-21	
2,3-Dichloroaniline	**ND**	0.024	EPA 8270E	6-17-21	6-18-21	
2,4,5-Trichlorophenol	**ND**	0.024	EPA 8270E	6-17-21	6-18-21	
2-Chloronaphthalene	**ND**	0.024	EPA 8270E	6-17-21	6-18-21	
2-Nitroaniline	**ND**	0.024	EPA 8270E	6-17-21	6-18-21	
1,4-Dinitrobenzene	**ND**	0.024	EPA 8270E	6-17-21	6-18-21	
Dimethylphthalate	**ND**	0.024	EPA 8270E	6-17-21	6-18-21	
1,3-Dinitrobenzene	**ND**	0.024	EPA 8270E	6-17-21	6-18-21	
2,6-Dinitrotoluene	**ND**	0.012	EPA 8270E	6-17-21	6-18-21	
1,2-Dinitrobenzene	**ND**	0.024	EPA 8270E	6-17-21	6-18-21	
Acenaphthylene	**ND**	0.0047	EPA 8270E/SIM	6-17-21	6-18-21	
3-Nitroaniline	**ND**	0.024	EPA 8270E	6-17-21	6-18-21	

This report pertains to the samples analyzed in accordance with the chain of custody, and is intended only for the use of the individual or company to whom it is addressed.

Date of Report: June 21, 2021
Samples Submitted: June 16, 2021
Laboratory Reference: 2106-156
Project: 11-05150-003

SEMIVOLATILE ORGANICS EPA 8270E/SIM
page 2 of 2

Analyte	Result	PQL	Method	Date Prepared	Date Analyzed	Flags
Client ID:	**DA7SWCS13210616I**					
Laboratory ID:	06-156-03					
2,4-Dinitrophenol	**ND**	0.12	EPA 8270E	6-17-21	6-18-21	
Acenaphthene	**ND**	0.0047	EPA 8270E/SIM	6-17-21	6-18-21	
4-Nitrophenol	**ND**	0.024	EPA 8270E	6-17-21	6-18-21	
2,4-Dinitrotoluene	**ND**	0.012	EPA 8270E	6-17-21	6-18-21	
Dibenzofuran	**ND**	0.024	EPA 8270E	6-17-21	6-18-21	
2,3,5,6-Tetrachlorophenol	**ND**	0.024	EPA 8270E	6-17-21	6-18-21	
2,3,4,6-Tetrachlorophenol	**ND**	0.024	EPA 8270E	6-17-21	6-18-21	
Diethylphthalate	**ND**	0.12	EPA 8270E	6-17-21	6-18-21	
4-Chlorophenyl-phenylether	**ND**	0.024	EPA 8270E	6-17-21	6-18-21	
4-Nitroaniline	**ND**	0.024	EPA 8270E	6-17-21	6-18-21	
Fluorene	**ND**	0.0047	EPA 8270E/SIM	6-17-21	6-18-21	
4,6-Dinitro-2-methylphenol	**ND**	0.12	EPA 8270E	6-17-21	6-18-21	
n-Nitrosodiphenylamine	**ND**	0.024	EPA 8270E	6-17-21	6-18-21	
1,2-Diphenylhydrazine	**ND**	0.024	EPA 8270E	6-17-21	6-18-21	
4-Bromophenyl-phenylether	**ND**	0.024	EPA 8270E	6-17-21	6-18-21	
Hexachlorobenzene	**ND**	0.024	EPA 8270E	6-17-21	6-18-21	
Pentachlorophenol	**ND**	0.047	EPA 8270E	6-17-21	6-18-21	
Phenanthrene	**ND**	0.0047	EPA 8270E/SIM	6-17-21	6-18-21	
Anthracene	**ND**	0.0047	EPA 8270E/SIM	6-17-21	6-18-21	
Carbazole	**ND**	0.024	EPA 8270E	6-17-21	6-18-21	
Di-n-butylphthalate	**ND**	0.12	EPA 8270E	6-17-21	6-18-21	
Fluoranthene	**0.0053**	0.0047	EPA 8270E/SIM	6-17-21	6-18-21	
Pyrene	**0.0049**	0.0047	EPA 8270E/SIM	6-17-21	6-18-21	
Butylbenzylphthalate	**ND**	0.12	EPA 8270E	6-17-21	6-18-21	
bis-2-Ethylhexyladipate	**ND**	0.12	EPA 8270E	6-17-21	6-18-21	
3,3'-Dichlorobenzidine	**ND**	0.012	EPA 8270E	6-17-21	6-18-21	
Benzo[a]anthracene	**ND**	0.0047	EPA 8270E/SIM	6-17-21	6-18-21	
Chrysene	**ND**	0.0047	EPA 8270E/SIM	6-17-21	6-18-21	
bis(2-Ethylhexyl)phthalate	**ND**	0.12	EPA 8270E	6-17-21	6-18-21	
Di-n-octylphthalate	**ND**	0.12	EPA 8270E	6-17-21	6-18-21	
Benzo[b]fluoranthene	**0.0051**	0.0047	EPA 8270E/SIM	6-17-21	6-18-21	
Benzo(j,k)fluoranthene	**ND**	0.0047	EPA 8270E/SIM	6-17-21	6-18-21	
Benzo[a]pyrene	**ND**	0.0047	EPA 8270E/SIM	6-17-21	6-18-21	
Indeno[1,2,3-cd]pyrene	**ND**	0.0047	EPA 8270E/SIM	6-17-21	6-18-21	
Dibenz[a,h]anthracene	**ND**	0.0047	EPA 8270E/SIM	6-17-21	6-18-21	
Benzo[g,h,i]perylene	**ND**	0.0047	EPA 8270E/SIM	6-17-21	6-18-21	
Surrogate:	*Percent Recovery*	*Control Limits*				
2-Fluorophenol	*78*	*26 - 109*				
Phenol-d6	*87*	*33 - 113*				
Nitrobenzene-d5	*91*	*31 - 110*				
2-Fluorobiphenyl	*86*	*42 - 107*				
2,4,6-Tribromophenol	*85*	*42 - 123*				
Terphenyl-d14	*85*	*41 - 115*				

This report pertains to the samples analyzed in accordance with the chain of custody, and is intended only for the use of the individual or company to whom it is addressed.

Date of Report: June 21, 2021
Samples Submitted: June 16, 2021
Laboratory Reference: 2106-156
Project: 11-05150-003

SEMIVOLATILE ORGANICS EPA 8270E/SIM
page 1 of 2

Matrix: Soil
Units: mg/Kg

Analyte	Result	PQL	Method	Date Prepared	Date Analyzed	Flags
Client ID:	**DA7SWCS14210616I**					
Laboratory ID:	06-156-04					
n-Nitrosodimethylamine	**ND**	0.012	EPA 8270E	6-17-21	6-18-21	
Pyridine	**ND**	0.25	EPA 8270E	6-17-21	6-18-21	
Phenol	**ND**	0.025	EPA 8270E	6-17-21	6-18-21	
Aniline	**ND**	0.12	EPA 8270E	6-17-21	6-18-21	
bis(2-Chloroethyl)ether	**ND**	0.012	EPA 8270E	6-17-21	6-18-21	
2-Chlorophenol	**ND**	0.025	EPA 8270E	6-17-21	6-18-21	
1,3-Dichlorobenzene	**ND**	0.025	EPA 8270E	6-17-21	6-18-21	
1,4-Dichlorobenzene	**ND**	0.025	EPA 8270E	6-17-21	6-18-21	
Benzyl alcohol	**0.038**	0.025	EPA 8270E	6-17-21	6-18-21	
1,2-Dichlorobenzene	**ND**	0.025	EPA 8270E	6-17-21	6-18-21	
2-Methylphenol (o-Cresol)	**ND**	0.025	EPA 8270E	6-17-21	6-18-21	
bis(2-Chloroisopropyl)ether	**ND**	0.025	EPA 8270E	6-17-21	6-18-21	
(3+4)-Methylphenol (m,p-Cresol)	**ND**	0.025	EPA 8270E	6-17-21	6-18-21	
n-Nitroso-di-n-propylamine	**ND**	0.012	EPA 8270E	6-17-21	6-18-21	
Hexachloroethane	**ND**	0.025	EPA 8270E	6-17-21	6-18-21	
Nitrobenzene	**ND**	0.025	EPA 8270E	6-17-21	6-18-21	
Isophorone	**ND**	0.025	EPA 8270E	6-17-21	6-18-21	
2-Nitrophenol	**ND**	0.025	EPA 8270E	6-17-21	6-18-21	
2,4-Dimethylphenol	**ND**	0.025	EPA 8270E	6-17-21	6-18-21	
bis(2-Chloroethoxy)methane	**ND**	0.025	EPA 8270E	6-17-21	6-18-21	
2,4-Dichlorophenol	**ND**	0.025	EPA 8270E	6-17-21	6-18-21	
1,2,4-Trichlorobenzene	**ND**	0.025	EPA 8270E	6-17-21	6-18-21	
Naphthalene	**ND**	0.0049	EPA 8270E/SIM	6-17-21	6-18-21	
4-Chloroaniline	**ND**	0.012	EPA 8270E	6-17-21	6-18-21	
Hexachlorobutadiene	**ND**	0.025	EPA 8270E	6-17-21	6-18-21	
4-Chloro-3-methylphenol	**ND**	0.025	EPA 8270E	6-17-21	6-18-21	
2-Methylnaphthalene	**ND**	0.0049	EPA 8270E/SIM	6-17-21	6-18-21	
1-Methylnaphthalene	**ND**	0.0049	EPA 8270E/SIM	6-17-21	6-18-21	
Hexachlorocyclopentadiene	**ND**	0.025	EPA 8270E	6-17-21	6-18-21	
2,4,6-Trichlorophenol	**ND**	0.025	EPA 8270E	6-17-21	6-18-21	
2,3-Dichloroaniline	**ND**	0.025	EPA 8270E	6-17-21	6-18-21	
2,4,5-Trichlorophenol	**ND**	0.025	EPA 8270E	6-17-21	6-18-21	
2-Chloronaphthalene	**ND**	0.025	EPA 8270E	6-17-21	6-18-21	
2-Nitroaniline	**ND**	0.025	EPA 8270E	6-17-21	6-18-21	
1,4-Dinitrobenzene	**ND**	0.025	EPA 8270E	6-17-21	6-18-21	
Dimethylphthalate	**ND**	0.025	EPA 8270E	6-17-21	6-18-21	
1,3-Dinitrobenzene	**ND**	0.025	EPA 8270E	6-17-21	6-18-21	
2,6-Dinitrotoluene	**ND**	0.012	EPA 8270E	6-17-21	6-18-21	
1,2-Dinitrobenzene	**ND**	0.025	EPA 8270E	6-17-21	6-18-21	
Acenaphthylene	**ND**	0.0049	EPA 8270E/SIM	6-17-21	6-18-21	
3-Nitroaniline	**ND**	0.025	EPA 8270E	6-17-21	6-18-21	

This report pertains to the samples analyzed in accordance with the chain of custody, and is intended only for the use of the individual or company to whom it is addressed.

Date of Report: June 21, 2021
Samples Submitted: June 16, 2021
Laboratory Reference: 2106-156
Project: 11-05150-003

SEMIVOLATILE ORGANICS EPA 8270E/SIM
page 2 of 2

Analyte	Result	PQL	Method	Date Prepared	Date Analyzed	Flags
Client ID:	**DA7SWCS14210616I**					
Laboratory ID:	06-156-04					
2,4-Dinitrophenol	**ND**	0.12	EPA 8270E	6-17-21	6-18-21	
Acenaphthene	**ND**	0.0049	EPA 8270E/SIM	6-17-21	6-18-21	
4-Nitrophenol	**ND**	0.025	EPA 8270E	6-17-21	6-18-21	
2,4-Dinitrotoluene	**ND**	0.012	EPA 8270E	6-17-21	6-18-21	
Dibenzofuran	**ND**	0.025	EPA 8270E	6-17-21	6-18-21	
2,3,5,6-Tetrachlorophenol	**ND**	0.025	EPA 8270E	6-17-21	6-18-21	
2,3,4,6-Tetrachlorophenol	**ND**	0.025	EPA 8270E	6-17-21	6-18-21	
Diethylphthalate	**ND**	0.12	EPA 8270E	6-17-21	6-18-21	
4-Chlorophenyl-phenylether	**ND**	0.025	EPA 8270E	6-17-21	6-18-21	
4-Nitroaniline	**ND**	0.025	EPA 8270E	6-17-21	6-18-21	
Fluorene	**ND**	0.0049	EPA 8270E/SIM	6-17-21	6-18-21	
4,6-Dinitro-2-methylphenol	**ND**	0.12	EPA 8270E	6-17-21	6-18-21	
n-Nitrosodiphenylamine	**ND**	0.025	EPA 8270E	6-17-21	6-18-21	
1,2-Diphenylhydrazine	**ND**	0.025	EPA 8270E	6-17-21	6-18-21	
4-Bromophenyl-phenylether	**ND**	0.025	EPA 8270E	6-17-21	6-18-21	
Hexachlorobenzene	**ND**	0.025	EPA 8270E	6-17-21	6-18-21	
Pentachlorophenol	**ND**	0.049	EPA 8270E	6-17-21	6-18-21	
Phenanthrene	**ND**	0.0049	EPA 8270E/SIM	6-17-21	6-18-21	
Anthracene	**ND**	0.0049	EPA 8270E/SIM	6-17-21	6-18-21	
Carbazole	**ND**	0.025	EPA 8270E	6-17-21	6-18-21	
Di-n-butylphthalate	**ND**	0.12	EPA 8270E	6-17-21	6-18-21	
Fluoranthene	**ND**	0.0049	EPA 8270E/SIM	6-17-21	6-18-21	
Pyrene	**ND**	0.0049	EPA 8270E/SIM	6-17-21	6-18-21	
Butylbenzylphthalate	**ND**	0.12	EPA 8270E	6-17-21	6-18-21	
bis-2-Ethylhexyladipate	**ND**	0.12	EPA 8270E	6-17-21	6-18-21	
3,3'-Dichlorobenzidine	**ND**	0.012	EPA 8270E	6-17-21	6-18-21	
Benzo[a]anthracene	**ND**	0.0049	EPA 8270E/SIM	6-17-21	6-18-21	
Chrysene	**ND**	0.0049	EPA 8270E/SIM	6-17-21	6-18-21	
bis(2-Ethylhexyl)phthalate	**ND**	0.12	EPA 8270E	6-17-21	6-18-21	
Di-n-octylphthalate	**ND**	0.12	EPA 8270E	6-17-21	6-18-21	
Benzo[b]fluoranthene	**ND**	0.0049	EPA 8270E/SIM	6-17-21	6-18-21	
Benzo(j,k)fluoranthene	**ND**	0.0049	EPA 8270E/SIM	6-17-21	6-18-21	
Benzo[a]pyrene	**ND**	0.0049	EPA 8270E/SIM	6-17-21	6-18-21	
Indeno[1,2,3-cd]pyrene	**ND**	0.0049	EPA 8270E/SIM	6-17-21	6-18-21	
Dibenz[a,h]anthracene	**ND**	0.0049	EPA 8270E/SIM	6-17-21	6-18-21	
Benzo[g,h,i]perylene	**ND**	0.0049	EPA 8270E/SIM	6-17-21	6-18-21	
Surrogate:	*Percent Recovery*	*Control Limits*				
2-Fluorophenol	*54*	*26 - 109*				
Phenol-d6	*64*	*33 - 113*				
Nitrobenzene-d5	*59*	*31 - 110*				
2-Fluorobiphenyl	*63*	*42 - 107*				
2,4,6-Tribromophenol	*65*	*42 - 123*				
Terphenyl-d14	*70*	*41 - 115*				

This report pertains to the samples analyzed in accordance with the chain of custody, and is intended only for the use of the individual or company to whom it is addressed.

Date of Report: June 21, 2021
Samples Submitted: June 16, 2021
Laboratory Reference: 2106-156
Project: 11-05150-003

SEMIVOLATILE ORGANICS EPA 8270E/SIM
QUALITY CONTROL
page 1 of 2

Matrix: Soil
Units: mg/Kg

Analyte	Result	PQL	Method	Date Prepared	Date Analyzed	Flags
METHOD BLANK						
Laboratory ID:	MB0617S1					
n-Nitrosodimethylamine	**ND**	0.010	EPA 8270E	6-17-21	6-17-21	
Pyridine	**ND**	0.20	EPA 8270E	6-17-21	6-17-21	
Phenol	**ND**	0.020	EPA 8270E	6-17-21	6-17-21	
Aniline	**ND**	0.10	EPA 8270E	6-17-21	6-17-21	
bis(2-Chloroethyl)ether	**ND**	0.010	EPA 8270E	6-17-21	6-17-21	
2-Chlorophenol	**ND**	0.020	EPA 8270E	6-17-21	6-17-21	
1,3-Dichlorobenzene	**ND**	0.020	EPA 8270E	6-17-21	6-17-21	
1,4-Dichlorobenzene	**ND**	0.020	EPA 8270E	6-17-21	6-17-21	
Benzyl alcohol	**ND**	0.020	EPA 8270E	6-17-21	6-17-21	
1,2-Dichlorobenzene	**ND**	0.020	EPA 8270E	6-17-21	6-17-21	
2-Methylphenol (o-Cresol)	**ND**	0.020	EPA 8270E	6-17-21	6-17-21	
bis(2-Chloroisopropyl)ether	**ND**	0.020	EPA 8270E	6-17-21	6-17-21	
(3+4)-Methylphenol (m,p-Cresol)	**ND**	0.020	EPA 8270E	6-17-21	6-17-21	
n-Nitroso-di-n-propylamine	**ND**	0.010	EPA 8270E	6-17-21	6-17-21	
Hexachloroethane	**ND**	0.020	EPA 8270E	6-17-21	6-17-21	
Nitrobenzene	**ND**	0.020	EPA 8270E	6-17-21	6-17-21	
Isophorone	**ND**	0.020	EPA 8270E	6-17-21	6-17-21	
2-Nitrophenol	**ND**	0.020	EPA 8270E	6-17-21	6-17-21	
2,4-Dimethylphenol	**ND**	0.020	EPA 8270E	6-17-21	6-17-21	
bis(2-Chloroethoxy)methane	**ND**	0.020	EPA 8270E	6-17-21	6-17-21	
2,4-Dichlorophenol	**ND**	0.020	EPA 8270E	6-17-21	6-17-21	
1,2,4-Trichlorobenzene	**ND**	0.020	EPA 8270E	6-17-21	6-17-21	
Naphthalene	**ND**	0.0040	EPA 8270E/SIM	6-17-21	6-17-21	
4-Chloroaniline	**ND**	0.010	EPA 8270E	6-17-21	6-17-21	
Hexachlorobutadiene	**ND**	0.020	EPA 8270E	6-17-21	6-17-21	
4-Chloro-3-methylphenol	**ND**	0.020	EPA 8270E	6-17-21	6-17-21	
2-Methylnaphthalene	**ND**	0.0040	EPA 8270E/SIM	6-17-21	6-17-21	
1-Methylnaphthalene	**ND**	0.0040	EPA 8270E/SIM	6-17-21	6-17-21	
Hexachlorocyclopentadiene	**ND**	0.028	EPA 8270E	6-17-21	6-17-21	
2,4,6-Trichlorophenol	**ND**	0.020	EPA 8270E	6-17-21	6-17-21	
2,3-Dichloroaniline	**ND**	0.020	EPA 8270E	6-17-21	6-17-21	
2,4,5-Trichlorophenol	**ND**	0.020	EPA 8270E	6-17-21	6-17-21	
2-Chloronaphthalene	**ND**	0.020	EPA 8270E	6-17-21	6-17-21	
2-Nitroaniline	**ND**	0.020	EPA 8270E	6-17-21	6-17-21	
1,4-Dinitrobenzene	**ND**	0.020	EPA 8270E	6-17-21	6-17-21	
Dimethylphthalate	**ND**	0.020	EPA 8270E	6-17-21	6-17-21	
1,3-Dinitrobenzene	**ND**	0.020	EPA 8270E	6-17-21	6-17-21	
2,6-Dinitrotoluene	**ND**	0.010	EPA 8270E	6-17-21	6-17-21	
1,2-Dinitrobenzene	**ND**	0.020	EPA 8270E	6-17-21	6-17-21	
Acenaphthylene	**ND**	0.0040	EPA 8270E/SIM	6-17-21	6-17-21	
3-Nitroaniline	**ND**	0.020	EPA 8270E	6-17-21	6-17-21	

This report pertains to the samples analyzed in accordance with the chain of custody, and is intended only for the use of the individual or company to whom it is addressed.

Date of Report: June 21, 2021
Samples Submitted: June 16, 2021
Laboratory Reference: 2106-156
Project: 11-05150-003

SEMIVOLATILE ORGANICS EPA 8270E/SIM
QUALITY CONTROL
page 2 of 2

Analyte	Result	PQL	Method	Date Prepared	Date Analyzed	Flags
METHOD BLANK						
Laboratory ID:	MB0617S1					
2,4-Dinitrophenol	**ND**	0.10	EPA 8270E	6-17-21	6-17-21	
Acenaphthene	**ND**	0.0040	EPA 8270E/SIM	6-17-21	6-17-21	
4-Nitrophenol	**ND**	0.020	EPA 8270E	6-17-21	6-17-21	
2,4-Dinitrotoluene	**ND**	0.010	EPA 8270E	6-17-21	6-17-21	
Dibenzofuran	**ND**	0.020	EPA 8270E	6-17-21	6-17-21	
2,3,5,6-Tetrachlorophenol	**ND**	0.020	EPA 8270E	6-17-21	6-17-21	
2,3,4,6-Tetrachlorophenol	**ND**	0.020	EPA 8270E	6-17-21	6-17-21	
Diethylphthalate	**ND**	0.10	EPA 8270E	6-17-21	6-17-21	
4-Chlorophenyl-phenylether	**ND**	0.020	EPA 8270E	6-17-21	6-17-21	
4-Nitroaniline	**ND**	0.020	EPA 8270E	6-17-21	6-17-21	
Fluorene	**ND**	0.0040	EPA 8270E/SIM	6-17-21	6-17-21	
4,6-Dinitro-2-methylphenol	**ND**	0.10	EPA 8270E	6-17-21	6-17-21	
n-Nitrosodiphenylamine	**ND**	0.020	EPA 8270E	6-17-21	6-17-21	
1,2-Diphenylhydrazine	**ND**	0.020	EPA 8270E	6-17-21	6-17-21	
4-Bromophenyl-phenylether	**ND**	0.020	EPA 8270E	6-17-21	6-17-21	
Hexachlorobenzene	**ND**	0.020	EPA 8270E	6-17-21	6-17-21	
Pentachlorophenol	**ND**	0.040	EPA 8270E	6-17-21	6-17-21	
Phenanthrene	**ND**	0.0040	EPA 8270E/SIM	6-17-21	6-17-21	
Anthracene	**ND**	0.0040	EPA 8270E/SIM	6-17-21	6-17-21	
Carbazole	**ND**	0.020	EPA 8270E	6-17-21	6-17-21	
Di-n-butylphthalate	**ND**	0.10	EPA 8270E	6-17-21	6-17-21	
Fluoranthene	**ND**	0.0040	EPA 8270E/SIM	6-17-21	6-17-21	
Pyrene	**ND**	0.0040	EPA 8270E/SIM	6-17-21	6-17-21	
Butylbenzylphthalate	**ND**	0.10	EPA 8270E	6-17-21	6-17-21	
bis-2-Ethylhexyladipate	**ND**	0.10	EPA 8270E	6-17-21	6-17-21	
3,3'-Dichlorobenzidine	**ND**	0.010	EPA 8270E	6-17-21	6-17-21	
Benzo[a]anthracene	**ND**	0.0040	EPA 8270E/SIM	6-17-21	6-17-21	
Chrysene	**ND**	0.0040	EPA 8270E/SIM	6-17-21	6-17-21	
bis(2-Ethylhexyl)phthalate	**ND**	0.10	EPA 8270E	6-17-21	6-17-21	
Di-n-octylphthalate	**ND**	0.10	EPA 8270E	6-17-21	6-17-21	
Benzo[b]fluoranthene	**ND**	0.0040	EPA 8270E/SIM	6-17-21	6-17-21	
Benzo(j,k)fluoranthene	**ND**	0.0040	EPA 8270E/SIM	6-17-21	6-17-21	
Benzo[a]pyrene	**ND**	0.0040	EPA 8270E/SIM	6-17-21	6-17-21	
Indeno[1,2,3-cd]pyrene	**ND**	0.0040	EPA 8270E/SIM	6-17-21	6-17-21	
Dibenz[a,h]anthracene	**ND**	0.0040	EPA 8270E/SIM	6-17-21	6-17-21	
Benzo[g,h,i]perylene	**ND**	0.0040	EPA 8270E/SIM	6-17-21	6-17-21	
Surrogate:	*Percent Recovery*	*Control Limits*				
2-Fluorophenol	*72*	*26 - 109*				
Phenol-d6	*76*	*33 - 113*				
Nitrobenzene-d5	*75*	*31 - 110*				
2-Fluorobiphenyl	*72*	*42 - 107*				
2,4,6-Tribromophenol	*82*	*42 - 123*				
Terphenyl-d14	*82*	*41 - 115*				

This report pertains to the samples analyzed in accordance with the chain of custody, and is intended only for the use of the individual or company to whom it is addressed.

Date of Report: June 21, 2021
Samples Submitted: June 16, 2021
Laboratory Reference: 2106-156
Project: 11-05150-003

SEMIVOLATILE ORGANICS EPA 8270E/SIM
QUALITY CONTROL

Matrix: Soil
Units: mg/Kg

Analyte	Result		Spike Level		Percent Recovery		Recovery Limits	RPD	RPD Limit	Flags
SPIKE BLANKS										
Laboratory ID:	SB0617S1									
	SB	SBD	SB	SBD	SB	SBD				
Phenol	**1.10**	**1.06**	1.33	1.33	83	80	47 - 106	4	30	
2-Chlorophenol	**1.11**	**1.05**	1.33	1.33	83	79	51 - 105	6	31	
1,4-Dichlorobenzene	**0.556**	**0.524**	0.667	0.667	83	79	49 - 101	6	33	
n-Nitroso-di-n-propylamine	**0.588**	**0.554**	0.667	0.667	88	83	50 - 105	6	26	
1,2,4-Trichlorobenzene	**0.576**	**0.541**	0.667	0.667	86	81	50 - 107	6	31	
4-Chloro-3-methylphenol	**1.21**	**1.20**	1.33	1.33	91	90	58 - 114	1	22	
Acenaphthene	**0.548**	**0.552**	0.667	0.667	82	83	52 - 102	1	22	
4-Nitrophenol	**1.49**	**1.53**	1.33	1.33	112	115	51 - 126	3	20	
2,4-Dinitrotoluene	**0.576**	**0.565**	0.667	0.667	86	85	54 - 108	2	19	
Pentachlorophenol	**1.30**	**1.29**	1.33	1.33	98	97	20 - 148	1	30	
Pyrene	**0.602**	**0.613**	0.667	0.667	90	92	55 - 112	2	19	
Surrogate:										
2-Fluorophenol					*88*	*84*	*26 - 109*			
Phenol-d6					*95*	*92*	*33 - 113*			
Nitrobenzene-d5					*90*	*90*	*31 - 110*			
2-Fluorobiphenyl					*86*	*86*	*42 - 107*			
2,4,6-Tribromophenol					*100*	*98*	*42 - 123*			
Terphenyl-d14					*89*	*93*	*41 - 115*			

This report pertains to the samples analyzed in accordance with the chain of custody, and is intended only for the use of the individual or company to whom it is addressed.

Date of Report: June 21, 2021
Samples Submitted: June 16, 2021
Laboratory Reference: 2106-156
Project: 11-05150-003

PCBs EPA 8082A

Matrix: Soil
Units: mg/Kg (ppm)

Analyte	Result	PQL	Method	Date Prepared	Date Analyzed	Flags
Client ID:	**DA7SWCS10210615l**					
Laboratory ID:	06-156-01					
Aroclor 1016	**ND**	0.028	EPA 8082A	6-18-21	6-18-21	
Aroclor 1221	**ND**	0.028	EPA 8082A	6-18-21	6-18-21	
Aroclor 1232	**ND**	0.028	EPA 8082A	6-18-21	6-18-21	
Aroclor 1242	**ND**	0.028	EPA 8082A	6-18-21	6-18-21	
Aroclor 1248	**ND**	0.028	EPA 8082A	6-18-21	6-18-21	
Aroclor 1254	**ND**	0.028	EPA 8082A	6-18-21	6-18-21	
Aroclor 1260	**ND**	0.028	EPA 8082A	6-18-21	6-18-21	
Surrogate:	*Percent Recovery*	*Control Limits*				
DCB	*82*	*54-135*				
Client ID:	**DA7SWCS12210616l**					
Laboratory ID:	06-156-02					
Aroclor 1016	**ND**	0.026	EPA 8082A	6-18-21	6-18-21	
Aroclor 1221	**ND**	0.026	EPA 8082A	6-18-21	6-18-21	
Aroclor 1232	**ND**	0.026	EPA 8082A	6-18-21	6-18-21	
Aroclor 1242	**ND**	0.026	EPA 8082A	6-18-21	6-18-21	
Aroclor 1248	**ND**	0.026	EPA 8082A	6-18-21	6-18-21	
Aroclor 1254	**ND**	0.026	EPA 8082A	6-18-21	6-18-21	
Aroclor 1260	**ND**	0.026	EPA 8082A	6-18-21	6-18-21	
Surrogate:	*Percent Recovery*	*Control Limits*				
DCB	*97*	*54-135*				
Client ID:	**DA7SWCS13210616l**					
Laboratory ID:	06-156-03					
Aroclor 1016	**ND**	0.024	EPA 8082A	6-18-21	6-18-21	
Aroclor 1221	**ND**	0.024	EPA 8082A	6-18-21	6-18-21	
Aroclor 1232	**ND**	0.024	EPA 8082A	6-18-21	6-18-21	
Aroclor 1242	**ND**	0.024	EPA 8082A	6-18-21	6-18-21	
Aroclor 1248	**ND**	0.024	EPA 8082A	6-18-21	6-18-21	
Aroclor 1254	**ND**	0.024	EPA 8082A	6-18-21	6-18-21	
Aroclor 1260	**ND**	0.024	EPA 8082A	6-18-21	6-18-21	
Surrogate:	*Percent Recovery*	*Control Limits*				
DCB	*89*	*54-135*				

This report pertains to the samples analyzed in accordance with the chain of custody, and is intended only for the use of the individual or company to whom it is addressed.

Date of Report: June 21, 2021
Samples Submitted: June 16, 2021
Laboratory Reference: 2106-156
Project: 11-05150-003

PCBs EPA 8082A

Matrix: Soil
Units: mg/Kg (ppm)

Analyte	Result	PQL	Method	Date Prepared	Date Analyzed	Flags
Client ID:	**DA7SWCS14210616I**					
Laboratory ID:	06-156-04					
Aroclor 1016	**ND**	0.025	EPA 8082A	6-18-21	6-18-21	
Aroclor 1221	**ND**	0.025	EPA 8082A	6-18-21	6-18-21	
Aroclor 1232	**ND**	0.025	EPA 8082A	6-18-21	6-18-21	
Aroclor 1242	**ND**	0.025	EPA 8082A	6-18-21	6-18-21	
Aroclor 1248	**ND**	0.025	EPA 8082A	6-18-21	6-18-21	
Aroclor 1254	**ND**	0.025	EPA 8082A	6-18-21	6-18-21	
Aroclor 1260	**ND**	0.025	EPA 8082A	6-18-21	6-18-21	
Surrogate:	*Percent Recovery*	*Control Limits*				
DCB	*92*	*54-135*				

This report pertains to the samples analyzed in accordance with the chain of custody,
and is intended only for the use of the individual or company to whom it is addressed.

Date of Report: June 21, 2021
Samples Submitted: June 16, 2021
Laboratory Reference: 2106-156
Project: 11-05150-003

PCBs EPA 8082A
QUALITY CONTROL

Matrix: Soil
Units: mg/Kg (ppm)

Analyte	Result	PQL	Method	Date Prepared	Date Analyzed	Flags
METHOD BLANK						
Laboratory ID:	MB0618S1					
Aroclor 1016	**ND**	0.020	EPA 8082A	6-18-21	6-18-21	
Aroclor 1221	**ND**	0.020	EPA 8082A	6-18-21	6-18-21	
Aroclor 1232	**ND**	0.020	EPA 8082A	6-18-21	6-18-21	
Aroclor 1242	**ND**	0.020	EPA 8082A	6-18-21	6-18-21	
Aroclor 1248	**ND**	0.020	EPA 8082A	6-18-21	6-18-21	
Aroclor 1254	**ND**	0.020	EPA 8082A	6-18-21	6-18-21	
Aroclor 1260	**ND**	0.020	EPA 8082A	6-18-21	6-18-21	
Surrogate:	*Percent Recovery*	*Control Limits*				
DCB	*98*	*54-135*				

Analyte	Result		Spike Level		Source Result	Percent Recovery		Recovery Limits	RPD	RPD Limit	Flags
MATRIX SPIKES											
Laboratory ID:	06-172-03										
	MS	MSD	MS	MSD		MS	MSD				
Aroclor 1260	**0.549**	**0.524**	0.500	0.500	ND	**110**	**105**	62-129	5	15	
Surrogate:											
DCB						*97*	*93*	*54-135*			

This report pertains to the samples analyzed in accordance with the chain of custody, and is intended only for the use of the individual or company to whom it is addressed.

Date of Report: June 21, 2021
Samples Submitted: June 16, 2021
Laboratory Reference: 2106-156
Project: 11-05150-003

ORGANOCHLORINE PESTICIDES EPA 8081B

Matrix: Soil
Units: ug/Kg (ppb)

Analyte	Result	PQL	Method	Date Prepared	Date Analyzed	Flags
Client ID:	**DA7SWCS10210615I**					
Laboratory ID:	06-156-01					
alpha-BHC	**ND**	0.28	EPA 8081B	6-17-21	6-21-21	
gamma-BHC (Lindane)	**ND**	0.28	EPA 8081B	6-17-21	6-21-21	
beta-BHC	**ND**	0.28	EPA 8081B	6-17-21	6-21-21	
delta-BHC	**ND**	0.28	EPA 8081B	6-17-21	6-21-21	
Heptachlor	**ND**	0.28	EPA 8081B	6-17-21	6-21-21	
Aldrin	**ND**	0.28	EPA 8081B	6-17-21	6-21-21	
Heptachlor Epoxide	**ND**	0.28	EPA 8081B	6-17-21	6-21-21	
gamma-Chlordane	**ND**	0.28	EPA 8081B	6-17-21	6-21-21	
alpha-Chlordane	**ND**	0.28	EPA 8081B	6-17-21	6-21-21	
4,4'-DDE	**ND**	0.28	EPA 8081B	6-17-21	6-21-21	
Endosulfan I	**ND**	0.28	EPA 8081B	6-17-21	6-21-21	
Dieldrin	**ND**	0.28	EPA 8081B	6-17-21	6-21-21	
Endrin	**ND**	0.28	EPA 8081B	6-17-21	6-21-21	
4,4'-DDD	**ND**	0.28	EPA 8081B	6-17-21	6-21-21	
Endosulfan II	**ND**	0.28	EPA 8081B	6-17-21	6-21-21	
4,4'-DDT	**ND**	0.28	EPA 8081B	6-17-21	6-21-21	Y1
Endrin Aldehyde	**ND**	0.70	EPA 8081B	6-17-21	6-21-21	
Methoxychlor	**ND**	1.4	EPA 8081B	6-17-21	6-21-21	Y1
Endosulfan Sulfate	**ND**	0.70	EPA 8081B	6-17-21	6-21-21	
Endrin Ketone	**ND**	0.28	EPA 8081B	6-17-21	6-21-21	Y1
Toxaphene	**ND**	2.8	EPA 8081B	6-17-21	6-21-21	
Surrogate:	*Percent Recovery*	*Control Limits*				
TCMX	*36*	*30-110*				
DCB	*56*	*40-117*				

This report pertains to the samples analyzed in accordance with the chain of custody, and is intended only for the use of the individual or company to whom it is addressed.

Date of Report: June 21, 2021
Samples Submitted: June 16, 2021
Laboratory Reference: 2106-156
Project: 11-05150-003

ORGANOCHLORINE PESTICIDES EPA 8081B

Matrix: Soil
Units: ug/Kg (ppb)

Analyte	Result	PQL	Method	Date Prepared	Date Analyzed	Flags
Client ID:	**DA7SWCS12210616I**					
Laboratory ID:	06-156-02					
alpha-BHC	**ND**	0.26	EPA 8081B	6-17-21	6-21-21	
gamma-BHC (Lindane)	**ND**	0.26	EPA 8081B	6-17-21	6-21-21	
beta-BHC	**ND**	0.26	EPA 8081B	6-17-21	6-21-21	
delta-BHC	**ND**	0.26	EPA 8081B	6-17-21	6-21-21	
Heptachlor	**10**	0.26	EPA 8081B	6-17-21	6-21-21	
Aldrin	**ND**	0.26	EPA 8081B	6-17-21	6-21-21	
Heptachlor Epoxide	**ND**	0.26	EPA 8081B	6-17-21	6-21-21	
gamma-Chlordane	**ND**	0.26	EPA 8081B	6-17-21	6-21-21	
alpha-Chlordane	**0.85**	0.26	EPA 8081B	6-17-21	6-21-21	
4,4'-DDE	**ND**	0.26	EPA 8081B	6-17-21	6-21-21	
Endosulfan I	**ND**	0.26	EPA 8081B	6-17-21	6-21-21	
Dieldrin	**ND**	0.26	EPA 8081B	6-17-21	6-21-21	
Endrin	**ND**	0.26	EPA 8081B	6-17-21	6-21-21	
4,4'-DDD	**ND**	0.26	EPA 8081B	6-17-21	6-21-21	
Endosulfan II	**ND**	0.26	EPA 8081B	6-17-21	6-21-21	
4,4'-DDT	**0.43**	0.26	EPA 8081B	6-17-21	6-21-21	P, Y1
Endrin Aldehyde	**ND**	0.65	EPA 8081B	6-17-21	6-21-21	
Methoxychlor	**ND**	1.3	EPA 8081B	6-17-21	6-21-21	Y1
Endosulfan Sulfate	**ND**	0.65	EPA 8081B	6-17-21	6-21-21	
Endrin Ketone	**0.55**	0.26	EPA 8081B	6-17-21	6-21-21	P, Y1
Toxaphene	**ND**	2.6	EPA 8081B	6-17-21	6-21-21	
Surrogate:	*Percent Recovery*	*Control Limits*				
TCMX	*68*	*30-110*				
DCB	*68*	*40-117*				

This report pertains to the samples analyzed in accordance with the chain of custody, and is intended only for the use of the individual or company to whom it is addressed.

Date of Report: June 21, 2021
Samples Submitted: June 16, 2021
Laboratory Reference: 2106-156
Project: 11-05150-003

ORGANOCHLORINE PESTICIDES EPA 8081B

Matrix: Soil
Units: ug/Kg (ppb)

Analyte	Result	PQL	Method	Date Prepared	Date Analyzed	Flags
Client ID:	**DA7SWCS13210616I**					
Laboratory ID:	06-156-03					
alpha-BHC	**ND**	0.24	EPA 8081B	6-17-21	6-21-21	
gamma-BHC (Lindane)	**ND**	0.24	EPA 8081B	6-17-21	6-21-21	
beta-BHC	**ND**	0.24	EPA 8081B	6-17-21	6-21-21	
delta-BHC	**ND**	0.24	EPA 8081B	6-17-21	6-21-21	
Heptachlor	**ND**	0.24	EPA 8081B	6-17-21	6-21-21	
Aldrin	**ND**	0.24	EPA 8081B	6-17-21	6-21-21	
Heptachlor Epoxide	**ND**	0.24	EPA 8081B	6-17-21	6-21-21	
gamma-Chlordane	**ND**	0.24	EPA 8081B	6-17-21	6-21-21	
alpha-Chlordane	**ND**	0.24	EPA 8081B	6-17-21	6-21-21	
4,4'-DDE	**ND**	0.24	EPA 8081B	6-17-21	6-21-21	
Endosulfan I	**ND**	0.24	EPA 8081B	6-17-21	6-21-21	
Dieldrin	**ND**	0.24	EPA 8081B	6-17-21	6-21-21	
Endrin	**ND**	0.24	EPA 8081B	6-17-21	6-21-21	
4,4'-DDD	**ND**	0.24	EPA 8081B	6-17-21	6-21-21	
Endosulfan II	**ND**	0.24	EPA 8081B	6-17-21	6-21-21	
4,4'-DDT	**ND**	0.24	EPA 8081B	6-17-21	6-21-21	Y1
Endrin Aldehyde	**ND**	0.59	EPA 8081B	6-17-21	6-21-21	
Methoxychlor	**ND**	1.2	EPA 8081B	6-17-21	6-21-21	Y1
Endosulfan Sulfate	**ND**	0.59	EPA 8081B	6-17-21	6-21-21	
Endrin Ketone	**ND**	0.24	EPA 8081B	6-17-21	6-21-21	Y1
Toxaphene	**ND**	2.4	EPA 8081B	6-17-21	6-21-21	
Surrogate:	*Percent Recovery*	*Control Limits*				
TCMX	*51*	*30-110*				
DCB	*68*	*40-117*				

This report pertains to the samples analyzed in accordance with the chain of custody, and is intended only for the use of the individual or company to whom it is addressed.

Date of Report: June 21, 2021
Samples Submitted: June 16, 2021
Laboratory Reference: 2106-156
Project: 11-05150-003

ORGANOCHLORINE PESTICIDES EPA 8081B

Matrix: Soil
Units: ug/Kg (ppb)

Analyte	Result	PQL	Method	Date Prepared	Date Analyzed	Flags
Client ID:	**DA7SWCS14210616I**					
Laboratory ID:	06-156-04					
alpha-BHC	**ND**	0.25	EPA 8081B	6-17-21	6-21-21	
gamma-BHC (Lindane)	**ND**	0.25	EPA 8081B	6-17-21	6-21-21	
beta-BHC	**ND**	0.25	EPA 8081B	6-17-21	6-21-21	
delta-BHC	**ND**	0.25	EPA 8081B	6-17-21	6-21-21	
Heptachlor	**ND**	0.25	EPA 8081B	6-17-21	6-21-21	
Aldrin	**ND**	0.25	EPA 8081B	6-17-21	6-21-21	
Heptachlor Epoxide	**ND**	0.25	EPA 8081B	6-17-21	6-21-21	
gamma-Chlordane	**ND**	0.25	EPA 8081B	6-17-21	6-21-21	
alpha-Chlordane	**ND**	0.25	EPA 8081B	6-17-21	6-21-21	
4,4'-DDE	**ND**	0.25	EPA 8081B	6-17-21	6-21-21	
Endosulfan I	**ND**	0.25	EPA 8081B	6-17-21	6-21-21	
Dieldrin	**ND**	0.25	EPA 8081B	6-17-21	6-21-21	
Endrin	**ND**	0.25	EPA 8081B	6-17-21	6-21-21	
4,4'-DDD	**ND**	0.25	EPA 8081B	6-17-21	6-21-21	
Endosulfan II	**ND**	0.25	EPA 8081B	6-17-21	6-21-21	
4,4'-DDT	**ND**	0.25	EPA 8081B	6-17-21	6-21-21	Y1
Endrin Aldehyde	**ND**	0.61	EPA 8081B	6-17-21	6-21-21	
Methoxychlor	**ND**	1.2	EPA 8081B	6-17-21	6-21-21	Y1
Endosulfan Sulfate	**ND**	0.61	EPA 8081B	6-17-21	6-21-21	
Endrin Ketone	**ND**	0.25	EPA 8081B	6-17-21	6-21-21	Y1
Toxaphene	**ND**	2.5	EPA 8081B	6-17-21	6-21-21	
Surrogate:	*Percent Recovery*	*Control Limits*				
TCMX	*43*	*30-110*				
DCB	*82*	*40-117*				

This report pertains to the samples analyzed in accordance with the chain of custody, and is intended only for the use of the individual or company to whom it is addressed.

Date of Report: June 21, 2021
Samples Submitted: June 16, 2021
Laboratory Reference: 2106-156
Project: 11-05150-003

ORGANOCHLORINE PESTICIDES EPA 8081B QUALITY CONTROL

Matrix: Soil
Units: ug/Kg (ppb)

Analyte	Result	PQL	Method	Date Prepared	Date Analyzed	Flags
METHOD BLANK						
Laboratory ID:	MB0617S3					
alpha-BHC	**ND**	0.20	EPA 8081B	6-17-21	6-18-21	
gamma-BHC (Lindane)	**ND**	0.20	EPA 8081B	6-17-21	6-18-21	
beta-BHC	**ND**	0.20	EPA 8081B	6-17-21	6-18-21	
delta-BHC	**ND**	0.20	EPA 8081B	6-17-21	6-18-21	
Heptachlor	**ND**	0.20	EPA 8081B	6-17-21	6-18-21	
Aldrin	**ND**	0.20	EPA 8081B	6-17-21	6-18-21	
Heptachlor Epoxide	**ND**	0.20	EPA 8081B	6-17-21	6-18-21	
gamma-Chlordane	**ND**	0.20	EPA 8081B	6-17-21	6-18-21	
alpha-Chlordane	**ND**	0.20	EPA 8081B	6-17-21	6-18-21	
4,4'-DDE	**ND**	0.20	EPA 8081B	6-17-21	6-18-21	
Endosulfan I	**ND**	0.20	EPA 8081B	6-17-21	6-18-21	
Dieldrin	**ND**	0.20	EPA 8081B	6-17-21	6-18-21	
Endrin	**ND**	0.20	EPA 8081B	6-17-21	6-18-21	
4,4'-DDD	**ND**	0.20	EPA 8081B	6-17-21	6-18-21	
Endosulfan II	**ND**	0.20	EPA 8081B	6-17-21	6-18-21	
4,4'-DDT	**ND**	0.20	EPA 8081B	6-17-21	6-18-21	
Endrin Aldehyde	**ND**	0.50	EPA 8081B	6-17-21	6-18-21	
Methoxychlor	**ND**	1.0	EPA 8081B	6-17-21	6-18-21	
Endosulfan Sulfate	**ND**	0.50	EPA 8081B	6-17-21	6-18-21	
Endrin Ketone	**ND**	0.20	EPA 8081B	6-17-21	6-18-21	
Toxaphene	**ND**	2.0	EPA 8081B	6-17-21	6-18-21	
Surrogate:	*Percent Recovery*	*Control Limits*				
TCMX	*63*	*30-110*				
DCB	*87*	*40-117*				

This report pertains to the samples analyzed in accordance with the chain of custody, and is intended only for the use of the individual or company to whom it is addressed.

Date of Report: June 21, 2021
Samples Submitted: June 16, 2021
Laboratory Reference: 2106-156
Project: 11-05150-003

ORGANOCHLORINE PESTICIDES EPA 8081B QUALITY CONTROL

Matrix: Soil
Units: ug/Kg (ppb)

Analyte	Result		Spike Level		Source Result	Percent Recovery		Recovery Limits	RPD	RPD Limit	Flags
SPIKE BLANKS											
Laboratory ID:	SB0617S4										
	SB	SBD	SB	SBD		SB	SBD				
alpha-BHC	**8.78**	**9.00**	10.0	10.0	N/A	**88**	**90**	65-115	2	15	
gamma-BHC (Lindane)	**8.74**	**9.13**	10.0	10.0	N/A	**87**	**91**	69-116	4	15	
beta-BHC	**8.52**	**8.81**	10.0	10.0	N/A	**85**	**88**	63-116	3	15	
delta-BHC	**6.48**	**6.85**	10.0	10.0	N/A	**65**	**69**	66-116	6	15	I
Heptachlor	**8.13**	**8.42**	10.0	10.0	N/A	**81**	**84**	63-119	4	15	
Aldrin	**8.09**	**8.23**	10.0	10.0	N/A	**81**	**82**	60-116	2	15	
Heptachlor Epoxide	**8.61**	**8.82**	10.0	10.0	N/A	**86**	**88**	65-116	2	15	
gamma-Chlordane	**7.79**	**7.92**	10.0	10.0	N/A	**78**	**79**	64-116	2	15	
alpha-Chlordane	**7.78**	**7.92**	10.0	10.0	N/A	**78**	**79**	62-119	2	15	
4,4'-DDE	**9.57**	**9.76**	10.0	10.0	N/A	**96**	**98**	69-120	2	15	
Endosulfan I	**8.69**	**8.96**	10.0	10.0	N/A	**87**	**90**	60-121	3	15	
Dieldrin	**9.23**	**9.51**	10.0	10.0	N/A	**92**	**95**	64-115	3	15	
Endrin	**8.99**	**9.36**	10.0	10.0	N/A	**90**	**94**	62-118	4	15	
4,4'-DDD	**6.92**	**7.30**	10.0	10.0	N/A	**69**	**73**	64-124	5	15	
Endosulfan II	**8.92**	**9.30**	10.0	10.0	N/A	**89**	**93**	64-115	4	15	
4,4'-DDT	**8.79**	**9.40**	10.0	10.0	N/A	**88**	**94**	57-130	7	15	
Endrin Aldehyde	**8.03**	**8.26**	10.0	10.0	N/A	**80**	**83**	57-114	3	15	
Methoxychlor	**8.17**	**8.59**	10.0	10.0	N/A	**82**	**86**	49-129	5	15	
Endosulfan Sulfate	**7.94**	**8.45**	10.0	10.0	N/A	**79**	**84**	61-115	6	15	
Endrin Ketone	**8.05**	**8.39**	10.0	10.0	N/A	**80**	**84**	64-116	4	15	
Surrogate:											
TCMX						*62*	*61*	*30-110*			
DCB						*85*	*84*	*40-117*			

This report pertains to the samples analyzed in accordance with the chain of custody, and is intended only for the use of the individual or company to whom it is addressed.

Date of Report: June 21, 2021
Samples Submitted: June 16, 2021
Laboratory Reference: 2106-156
Project: 11-05150-003

TOTAL METALS
EPA 6010D/6020B/7471B

Matrix: Soil
Units: mg/Kg (ppm)

Analyte	Result	PQL	Method	Date Prepared	Date Analyzed	Flags
Client ID:	**DA7SWCS10210615I**					
Laboratory ID:	06-156-01					
Arsenic	**ND**	7.0	EPA 6010D	6-17-21	6-17-21	
Barium	**86**	3.5	EPA 6010D	6-17-21	6-17-21	
Cadmium	**ND**	0.70	EPA 6010D	6-17-21	6-17-21	
Chromium	**21**	0.70	EPA 6010D	6-17-21	6-17-21	
Lead	**9.1**	7.0	EPA 6010D	6-17-21	6-17-21	
Mercury	**ND**	0.070	EPA 7471B	6-17-21	6-17-21	
Selenium	**0.40**	0.17	EPA 6020B	6-17-21	6-17-21	
Silver	**ND**	1.4	EPA 6010D	6-17-21	6-17-21	
Client ID:	**DA7SWCS12210616I**					
Laboratory ID:	06-156-02					
Arsenic	**ND**	6.5	EPA 6010D	6-17-21	6-17-21	
Barium	**70**	3.2	EPA 6010D	6-17-21	6-17-21	
Cadmium	**ND**	0.65	EPA 6010D	6-17-21	6-17-21	
Chromium	**19**	0.65	EPA 6010D	6-17-21	6-17-21	
Lead	**ND**	6.5	EPA 6010D	6-17-21	6-17-21	
Mercury	**ND**	0.065	EPA 7471B	6-17-21	6-17-21	
Selenium	**0.36**	0.16	EPA 6020B	6-17-21	6-17-21	
Silver	**ND**	1.3	EPA 6010D	6-17-21	6-17-21	
Client ID:	**DA7SWCS13210616I**					
Laboratory ID:	06-156-03					
Arsenic	**ND**	5.9	EPA 6010D	6-17-21	6-17-21	
Barium	**56**	2.9	EPA 6010D	6-17-21	6-17-21	
Cadmium	**ND**	0.59	EPA 6010D	6-17-21	6-17-21	
Chromium	**26**	0.59	EPA 6010D	6-17-21	6-17-21	
Lead	**7.9**	5.9	EPA 6010D	6-17-21	6-17-21	
Mercury	**ND**	0.059	EPA 7471B	6-17-21	6-17-21	
Selenium	**0.25**	0.15	EPA 6020B	6-17-21	6-17-21	
Silver	**ND**	1.2	EPA 6010D	6-17-21	6-17-21	

This report pertains to the samples analyzed in accordance with the chain of custody, and is intended only for the use of the individual or company to whom it is addressed.

Date of Report: June 21, 2021
Samples Submitted: June 16, 2021
Laboratory Reference: 2106-156
Project: 11-05150-003

TOTAL METALS
EPA 6010D/6020B/7471B

Matrix: Soil
Units: mg/Kg (ppm)

Analyte	Result	PQL	Method	Date Prepared	Date Analyzed	Flags
Client ID:	**DA7SWCS14210616I**					
Laboratory ID:	06-156-04					
Arsenic	**ND**	6.1	EPA 6010D	6-17-21	6-17-21	
Barium	**66**	3.1	EPA 6010D	6-17-21	6-17-21	
Cadmium	**ND**	0.61	EPA 6010D	6-17-21	6-17-21	
Chromium	**23**	0.61	EPA 6010D	6-17-21	6-17-21	
Lead	**ND**	6.1	EPA 6010D	6-17-21	6-17-21	
Mercury	**ND**	0.061	EPA 7471B	6-17-21	6-17-21	
Selenium	**0.16**	0.15	EPA 6020B	6-17-21	6-17-21	
Silver	**ND**	1.2	EPA 6010D	6-17-21	6-17-21	

This report pertains to the samples analyzed in accordance with the chain of custody,
and is intended only for the use of the individual or company to whom it is addressed.

Date of Report: June 21, 2021
Samples Submitted: June 16, 2021
Laboratory Reference: 2106-156
Project: 11-05150-003

TOTAL METALS
EPA 6010D/6020B/7471B
QUALITY CONTROL

Matrix: Soil
Units: mg/Kg (ppm)

Analyte	Result	PQL	Method	Date Prepared	Date Analyzed	Flags
METHOD BLANK						
Laboratory ID:	MB0617SM1					
Arsenic	**ND**	5.0	EPA 6010D	6-17-21	6-17-21	
Barium	**ND**	2.5	EPA 6010D	6-17-21	6-17-21	
Cadmium	**ND**	0.50	EPA 6010D	6-17-21	6-17-21	
Chromium	**ND**	0.50	EPA 6010D	6-17-21	6-17-21	
Lead	**ND**	5.0	EPA 6010D	6-17-21	6-17-21	
Silver	**ND**	1.0	EPA 6010D	6-17-21	6-17-21	
Laboratory ID:	MB0617SM2					
Selenium	**ND**	0.13	EPA 6020B	6-17-21	6-17-21	
Laboratory ID:	MB0617S1					
Mercury	**ND**	0.050	EPA 7471B	6-17-21	6-17-21	

This report pertains to the samples analyzed in accordance with the chain of custody, and is intended only for the use of the individual or company to whom it is addressed.

Date of Report: June 21, 2021
Samples Submitted: June 16, 2021
Laboratory Reference: 2106-156
Project: 11-05150-003

TOTAL METALS
EPA 6010D/6020B/7471B
QUALITY CONTROL

Matrix: Soil
Units: mg/Kg (ppm)

Analyte	Result		Spike Level		Source Result	Percent Recovery		Recovery Limits	RPD	RPD Limit	Flags
DUPLICATE											
Laboratory ID:	06-152-01										
	ORIG	DUP									
Arsenic	**ND**	**ND**	NA	NA		NA		NA	NA	20	
Barium	**29.3**	**24.8**	NA	NA		NA		NA	16	20	
Cadmium	**ND**	**ND**	NA	NA		NA		NA	NA	20	
Chromium	**28.6**	**25.3**	NA	NA		NA		NA	12	20	
Lead	**ND**	**ND**	NA	NA		NA		NA	NA	20	
Silver	**ND**	**ND**	NA	NA		NA		NA	NA	20	
Laboratory ID:	06-152-01										
Selenium	**ND**	**0.142**	NA	NA		NA		NA	NA	20	
Laboratory ID:	06-135-01										
Mercury	**ND**	**ND**	NA	NA		NA		NA	NA	20	
MATRIX SPIKES											
Laboratory ID:	06-152-01										
	MS	MSD	MS	MSD		MS	MSD				
Arsenic	**90.0**	**94.8**	100	100	ND	**90**	**95**	75-125	5	20	
Barium	**116**	**122**	100	100	29.3	**87**	**92**	75-125	5	20	
Cadmium	**45.0**	**47.3**	50.0	50.0	ND	**90**	**95**	75-125	5	20	
Chromium	**115**	**121**	100	100	28.6	**87**	**92**	75-125	5	20	
Lead	**224**	**236**	250	250	ND	**90**	**94**	75-125	5	20	
Silver	**23.3**	**24.9**	25.0	25.0	ND	**93**	**100**	75-125	7	20	
Laboratory ID:	06-152-01										
Selenium	**91.8**	**94.0**	100	100	ND	**92**	**94**	75-125	2	20	
Laboratory ID:	06-135-01										
Mercury	**0.569**	**0.586**	0.500	0.500	0.0418	**105**	**109**	80-120	3	20	

This report pertains to the samples analyzed in accordance with the chain of custody,
and is intended only for the use of the individual or company to whom it is addressed.

Date of Report: June 21, 2021
Samples Submitted: June 16, 2021
Laboratory Reference: 2106-156
Project: 11-05150-003

% MOISTURE

Client ID	Lab ID	% Moisture	Date Analyzed
DA7SWCS10210615I	06-156-01	**28**	6-17-21
DA7SWCS12210616I	06-156-02	**23**	6-17-21
DA7SWCS13210616I	06-156-03	**15**	6-17-21
DA7SWCS14210616I	06-156-04	**18**	6-17-21

This report pertains to the samples analyzed in accordance with the chain of custody,
and is intended only for the use of the individual or company to whom it is addressed.

OnSite Environmental Inc.

Data Qualifiers and Abbreviations

A - Due to a high sample concentration, the amount spiked is insufficient for meaningful MS/MSD recovery data.

B - The analyte indicated was also found in the blank sample.

C - The duplicate RPD is outside control limits due to high result variability when analyte concentrations are within five times the quantitation limit.

E - The value reported exceeds the quantitation range and is an estimate.

F - Surrogate recovery data is not available due to the high concentration of coeluting target compounds.

H - The analyte indicated is a common laboratory solvent and may have been introduced during sample preparation, and be impacting the sample result.

I - Compound recovery is outside of the control limits.

J - The value reported was below the practical quantitation limit. The value is an estimate.

K - Sample duplicate RPD is outside control limits due to sample inhomogeneity. The sample was re-extracted and re-analyzed with similar results.

L - The RPD is outside of the control limits.

M - Hydrocarbons in the gasoline range are impacting the diesel range result.

M1 - Hydrocarbons in the gasoline range (toluene-naphthalene) are present in the sample.

N - Hydrocarbons in the lube oil range are impacting the diesel range result.

N1 - Hydrocarbons in diesel range are impacting lube oil range results.

O - Hydrocarbons indicative of heavier fuels are present in the sample and are impacting the gasoline result.

P - The RPD of the detected concentrations between the two columns is greater than 40.

Q - Surrogate recovery is outside of the control limits.

S - Surrogate recovery data is not available due to the necessary dilution of the sample.

T - The sample chromatogram is not similar to a typical _____.

U - The analyte was analyzed for, but was not detected above the reported sample quantitation limit.

U1 - The practical quantitation limit is elevated due to interferences present in the sample.

V - Matrix Spike/Matrix Spike Duplicate recoveries are outside control limits due to matrix effects.

W - Matrix Spike/Matrix Spike Duplicate RPD are outside control limits due to matrix effects.

X - Sample extract treated with a mercury cleanup procedure.

X1- Sample extract treated with a sulfuric acid/silica gel cleanup procedure.

Y - The calibration verification for this analyte exceeded the 20% drift specified in methods 8260 & 8270, and therefore the reported result should be considered an estimate. The overall performance of the calibration verification standard met the acceptance criteria of the method.

Y1 - Negative effects of the matrix from this sample on the instrument caused values for this analyte in the bracketing continuing calibration verification standard (CCVs) to be outside of 20% acceptance criteria. Because of this, quantitation limits and sample concentrations should be considered estimates.

Z -

ND - Not Detected at PQL
PQL - Practical Quantitation Limit
RPD - Relative Percent Difference

This report pertains to the samples analyzed in accordance with the chain of custody, and is intended only for the use of the individual or company to whom it is addressed.

Chain of Custody

Page 1 of 1

OnSite Environmental Inc.
Analytical Laboratory Testing Services
14648 NE 95th Street • Redmond, WA 98052
Phone: (425) 883-3881 • www.onsite-env.com

Company: ANCHOR QEA (HERRERA)
Project Number: 11-05150-003
Project Name: CEDAR HILLS REG. LF
Project Manager: RANDY BROWN
Sampled by: GEORGE IFFTNER

Turnaround Request (in working days)
(Check One)
☐ Same Day ☐ 1 Day
☑ 2 Days ☐ 3 Days
☐ Standard (7 Days)
☐ _____ (other)

Laboratory Number: 06-156

Lab ID	Sample Identification	Date Sampled	Time Sampled	Matrix	Number of Containers	NWTPH-HCID	NWTPH-Gx/BTEX	NWTPH-Gx	NWTPH-Dx (☐ Acid / SG Clean-up)	Volatiles 8260D	Halogenated Volatiles 8260D	EDB EPA 8011 (Waters Only)	Semivolatiles 8270D/SIM (with low-level PAHs)	PAHs 8270E/SIM (low-level)	PCBs 8082A	Organochlorine Pesticides 8081B	Organophosphorus Pesticides 8270E/SIM	Chlorinated Acid Herbicides 8151A	Total RCRA Metals 6010B/7471A	Total MTCA Metals	TCLP Metals	HEM (oil and grease) 1664A					% Moisture
1	DA7SWCS102106151	6/15/21	14:40	Soil	4					✓			✓		✓	✓			✓								✓
2	DA7SWCS122106161	6/16/21	16:30		4					✓			✓		✓	✓			✓								✓
3	DA7SWCS132106161		16:40		4					✓			✓		✓	✓			✓								✓
4	DA7SWCS142106161		16:50		4					✓			✓		✓	✓			✓								✓
5	VTRP210616I-Trip Blank		—	—	3					✓																	

	Signature	Company	Date	Time
Relinquished	George Ifftner	Herrera Env. Cons.	6/16/21	18:05
Received		Onsite Env Inc	6-16-21	18:05
Relinquished				
Received				
Relinquished				
Received				
Reviewed/Date		Reviewed/Date		

Comments/Special Instructions
Email to Randy Brown
CC: Herrera ...

Data Package: Standard ☐ Level III ☐ Level IV ☐

Chromatograms with final report ☐ Electronic Data Deliverables (EDDs) ☐

OnSite Environmental Inc.
14648 NE 95th Street, Redmond, WA 98052 • (425) 883-3881

June 22, 2021

Randy Brown
Anchor QEA
1201 3rd Avenue, Suite 2600
Seattle, WA 98101

Re: Analytical Data for Project 11-05150-003
Laboratory Reference No. 2106-181

Dear Randy:

Enclosed are the analytical results and associated quality control data for samples submitted on June 18, 2021.

The standard policy of OnSite Environmental, Inc. is to store your samples for 30 days from the date of receipt. If you require longer storage, please contact the laboratory.

We appreciate the opportunity to be of service to you on this project. If you have any questions concerning the data, or need additional information, please feel free to call me.

Sincerely,

David Baumeister
Project Manager

Enclosures

This report pertains to the samples analyzed in accordance with the chain of custody, and is intended only for the use of the individual or company to whom it is addressed.

Date of Report: June 22, 2021
Samples Submitted: June 18, 2021
Laboratory Reference: 2106-181
Project: 11-05150-003

Case Narrative

Samples were collected on June 17 and 18, 2021 and received by the laboratory on June 18, 2021. They were maintained at the laboratory at a temperature of 2°C to 6°C.

Please note that any and all soil sample results are reported on a dry-weight basis, unless otherwise noted below.

General QA/QC issues associated with the analytical data enclosed in this laboratory report will be indicated with a reference to a comment or explanation on the Data Qualifier page. More complex and involved QA/QC issues will be discussed in detail below.

Semivolatiles EPA 8270E/SIM Analysis

The method blank detected a recovery for Pentachlorophenol. The samples had no detectable recoveries for that compound. No further action was taken.

Organochlorine Pesticides by EPA 8081B Analysis

The percent recovery for the compound gamma-BHC (Lindane) (67%) was below the control limit of 69-116% in the spike blank duplicate. All other quality control values were within control limits and no further action was performed.

Please note that any other QA/QC issues associated with these extractions and analyses will be indicated with a footnote reference and discussed in detail on the Data Qualifier page.

This report pertains to the samples analyzed in accordance with the chain of custody, and is intended only for the use of the individual or company to whom it is addressed.

Date of Report: June 22, 2021
Samples Submitted: June 18, 2021
Laboratory Reference: 2106-181
Project: 11-05150-003

VOLATILE ORGANICS EPA 8260D/SIM
page 1 of 2

Matrix: Soil
Units: mg/kg

Analyte	Result	PQL	Method	Date Prepared	Date Analyzed	Flags
Client ID:	**DA7SWCS11210617I**					
Laboratory ID:	06-181-01					
Dichlorodifluoromethane	ND	0.0012	EPA 8260D	6-21-21	6-21-21	
Chloromethane	ND	0.0061	EPA 8260D	6-21-21	6-21-21	
Vinyl Chloride	ND	0.0012	EPA 8260D	6-21-21	6-21-21	
Bromomethane	ND	0.0061	EPA 8260D	6-21-21	6-21-21	
Chloroethane	ND	0.0061	EPA 8260D	6-21-21	6-21-21	
Trichlorofluoromethane	ND	0.0012	EPA 8260D	6-21-21	6-21-21	
1,1-Dichloroethene	ND	0.0012	EPA 8260D	6-21-21	6-21-21	
Acetone	0.28	0.012	EPA 8260D	6-21-21	6-21-21	Y
Iodomethane	ND	0.0061	EPA 8260D	6-21-21	6-21-21	
Carbon Disulfide	ND	0.0012	EPA 8260D	6-21-21	6-21-21	
Methylene Chloride	ND	0.0061	EPA 8260D	6-21-21	6-21-21	
(trans) 1,2-Dichloroethene	ND	0.0012	EPA 8260D	6-21-21	6-21-21	
Methyl t-Butyl Ether	ND	0.0012	EPA 8260D	6-21-21	6-21-21	
1,1-Dichloroethane	ND	0.0012	EPA 8260D	6-21-21	6-21-21	
Vinyl Acetate	ND	0.0061	EPA 8260D	6-21-21	6-21-21	
2,2-Dichloropropane	ND	0.0012	EPA 8260D	6-21-21	6-21-21	
(cis) 1,2-Dichloroethene	ND	0.0012	EPA 8260D	6-21-21	6-21-21	
2-Butanone	0.030	0.0061	EPA 8260D	6-21-21	6-21-21	Y
Bromochloromethane	ND	0.0012	EPA 8260D	6-21-21	6-21-21	
Chloroform	ND	0.0012	EPA 8260D	6-21-21	6-21-21	
1,1,1-Trichloroethane	ND	0.0012	EPA 8260D	6-21-21	6-21-21	
Carbon Tetrachloride	ND	0.0012	EPA 8260D	6-21-21	6-21-21	
1,1-Dichloropropene	ND	0.0012	EPA 8260D	6-21-21	6-21-21	
Benzene	ND	0.0012	EPA 8260D	6-21-21	6-21-21	
1,2-Dichloroethane	ND	0.0012	EPA 8260D	6-21-21	6-21-21	
Trichloroethene	ND	0.0012	EPA 8260D	6-21-21	6-21-21	
1,2-Dichloropropane	ND	0.0012	EPA 8260D	6-21-21	6-21-21	
Dibromomethane	ND	0.0012	EPA 8260D	6-21-21	6-21-21	
Bromodichloromethane	ND	0.0012	EPA 8260D	6-21-21	6-21-21	
2-Chloroethyl Vinyl Ether	ND	0.0061	EPA 8260D	6-21-21	6-21-21	
(cis) 1,3-Dichloropropene	ND	0.0012	EPA 8260D	6-21-21	6-21-21	
Methyl Isobutyl Ketone	ND	0.0061	EPA 8260D	6-21-21	6-21-21	
Toluene	ND	0.0061	EPA 8260D	6-21-21	6-21-21	
(trans) 1,3-Dichloropropene	ND	0.0012	EPA 8260D	6-21-21	6-21-21	

This report pertains to the samples analyzed in accordance with the chain of custody,
and is intended only for the use of the individual or company to whom it is addressed.

Date of Report: June 22, 2021
Samples Submitted: June 18, 2021
Laboratory Reference: 2106-181
Project: 11-05150-003

VOLATILE ORGANICS EPA 8260D/SIM
page 2 of 2

Analyte	Result	PQL	Method	Date Prepared	Date Analyzed	Flags
Client ID:	**DA7SWCS11210617I**					
Laboratory ID:	06-181-01					
1,1,2-Trichloroethane	ND	0.0012	EPA 8260D	6-21-21	6-21-21	
Tetrachloroethene	ND	0.0012	EPA 8260D	6-21-21	6-21-21	
1,3-Dichloropropane	ND	0.0012	EPA 8260D	6-21-21	6-21-21	
2-Hexanone	ND	0.0061	EPA 8260D	6-21-21	6-21-21	
Dibromochloromethane	ND	0.0012	EPA 8260D	6-21-21	6-21-21	
1,2-Dibromoethane	ND	0.000061	EPA 8260D/SIM	6-21-21	6-21-21	
Chlorobenzene	ND	0.0012	EPA 8260D	6-21-21	6-21-21	
1,1,1,2-Tetrachloroethane	ND	0.0012	EPA 8260D	6-21-21	6-21-21	
Ethylbenzene	ND	0.0012	EPA 8260D	6-21-21	6-21-21	
m,p-Xylene	ND	0.0024	EPA 8260D	6-21-21	6-21-21	
o-Xylene	ND	0.0012	EPA 8260D	6-21-21	6-21-21	
Styrene	ND	0.0012	EPA 8260D	6-21-21	6-21-21	
Bromoform	ND	0.0061	EPA 8260D	6-21-21	6-21-21	
Isopropylbenzene	ND	0.0012	EPA 8260D	6-21-21	6-21-21	
Bromobenzene	ND	0.070	EPA 8260D	6-21-21	6-21-21	
1,1,2,2-Tetrachloroethane	ND	0.070	EPA 8260D	6-21-21	6-21-21	
1,2,3-Trichloropropane	ND	0.070	EPA 8260D	6-21-21	6-21-21	
n-Propylbenzene	ND	0.070	EPA 8260D	6-21-21	6-21-21	
2-Chlorotoluene	ND	0.070	EPA 8260D	6-21-21	6-21-21	
4-Chlorotoluene	ND	0.070	EPA 8260D	6-21-21	6-21-21	
1,3,5-Trimethylbenzene	ND	0.070	EPA 8260D	6-21-21	6-21-21	
tert-Butylbenzene	ND	0.070	EPA 8260D	6-21-21	6-21-21	
1,2,4-Trimethylbenzene	ND	0.070	EPA 8260D	6-21-21	6-21-21	
sec-Butylbenzene	ND	0.070	EPA 8260D	6-21-21	6-21-21	
1,3-Dichlorobenzene	ND	0.070	EPA 8260D	6-21-21	6-21-21	
p-Isopropyltoluene	ND	0.070	EPA 8260D	6-21-21	6-21-21	
1,4-Dichlorobenzene	ND	0.070	EPA 8260D	6-21-21	6-21-21	
1,2-Dichlorobenzene	ND	0.070	EPA 8260D	6-21-21	6-21-21	
n-Butylbenzene	ND	0.070	EPA 8260D	6-21-21	6-21-21	
1,2-Dibromo-3-chloropropane	ND	0.35	EPA 8260D	6-21-21	6-21-21	
1,2,4-Trichlorobenzene	ND	0.070	EPA 8260D	6-21-21	6-21-21	
Hexachlorobutadiene	ND	0.35	EPA 8260D	6-21-21	6-21-21	
Naphthalene	ND	0.35	EPA 8260D	6-21-21	6-21-21	
1,2,3-Trichlorobenzene	ND	0.070	EPA 8260D	6-21-21	6-21-21	
Surrogate:	*Percent Recovery*	*Control Limits*				
Dibromofluoromethane	*95*	*74-131*				
Toluene-d8	*94*	*78-128*				
4-Bromofluorobenzene	*94*	*71-130*				

This report pertains to the samples analyzed in accordance with the chain of custody, and is intended only for the use of the individual or company to whom it is addressed.

Date of Report: June 22, 2021
Samples Submitted: June 18, 2021
Laboratory Reference: 2106-181
Project: 11-05150-003

VOLATILE ORGANICS EPA 8260D/SIM
page 1 of 2

Matrix: Soil
Units: mg/kg

Analyte	Result	PQL	Method	Date Prepared	Date Analyzed	Flags
Client ID:	**DA7SWCS15210617I**					
Laboratory ID:	06-181-02					
Dichlorodifluoromethane	ND	0.00096	EPA 8260D	6-21-21	6-21-21	
Chloromethane	ND	0.0048	EPA 8260D	6-21-21	6-21-21	
Vinyl Chloride	ND	0.00096	EPA 8260D	6-21-21	6-21-21	
Bromomethane	ND	0.0048	EPA 8260D	6-21-21	6-21-21	
Chloroethane	ND	0.0048	EPA 8260D	6-21-21	6-21-21	
Trichlorofluoromethane	ND	0.00096	EPA 8260D	6-21-21	6-21-21	
1,1-Dichloroethene	ND	0.00096	EPA 8260D	6-21-21	6-21-21	
Acetone	0.21	0.0096	EPA 8260D	6-21-21	6-21-21	Y
Iodomethane	ND	0.0048	EPA 8260D	6-21-21	6-21-21	
Carbon Disulfide	ND	0.00096	EPA 8260D	6-21-21	6-21-21	
Methylene Chloride	ND	0.0048	EPA 8260D	6-21-21	6-21-21	
(trans) 1,2-Dichloroethene	ND	0.00096	EPA 8260D	6-21-21	6-21-21	
Methyl t-Butyl Ether	ND	0.00096	EPA 8260D	6-21-21	6-21-21	
1,1-Dichloroethane	ND	0.00096	EPA 8260D	6-21-21	6-21-21	
Vinyl Acetate	ND	0.0048	EPA 8260D	6-21-21	6-21-21	
2,2-Dichloropropane	ND	0.00096	EPA 8260D	6-21-21	6-21-21	
(cis) 1,2-Dichloroethene	ND	0.00096	EPA 8260D	6-21-21	6-21-21	
2-Butanone	0.023	0.0048	EPA 8260D	6-21-21	6-21-21	Y
Bromochloromethane	ND	0.00096	EPA 8260D	6-21-21	6-21-21	
Chloroform	ND	0.00096	EPA 8260D	6-21-21	6-21-21	
1,1,1-Trichloroethane	ND	0.00096	EPA 8260D	6-21-21	6-21-21	
Carbon Tetrachloride	ND	0.00096	EPA 8260D	6-21-21	6-21-21	
1,1-Dichloropropene	ND	0.00096	EPA 8260D	6-21-21	6-21-21	
Benzene	ND	0.00096	EPA 8260D	6-21-21	6-21-21	
1,2-Dichloroethane	ND	0.00096	EPA 8260D	6-21-21	6-21-21	
Trichloroethene	ND	0.00096	EPA 8260D	6-21-21	6-21-21	
1,2-Dichloropropane	ND	0.00096	EPA 8260D	6-21-21	6-21-21	
Dibromomethane	ND	0.00096	EPA 8260D	6-21-21	6-21-21	
Bromodichloromethane	ND	0.00096	EPA 8260D	6-21-21	6-21-21	
2-Chloroethyl Vinyl Ether	ND	0.0048	EPA 8260D	6-21-21	6-21-21	
(cis) 1,3-Dichloropropene	ND	0.00096	EPA 8260D	6-21-21	6-21-21	
Methyl Isobutyl Ketone	ND	0.0048	EPA 8260D	6-21-21	6-21-21	
Toluene	ND	0.0048	EPA 8260D	6-21-21	6-21-21	
(trans) 1,3-Dichloropropene	ND	0.00096	EPA 8260D	6-21-21	6-21-21	

This report pertains to the samples analyzed in accordance with the chain of custody, and is intended only for the use of the individual or company to whom it is addressed.

Date of Report: June 22, 2021
Samples Submitted: June 18, 2021
Laboratory Reference: 2106-181
Project: 11-05150-003

VOLATILE ORGANICS EPA 8260D/SIM
page 2 of 2

Analyte	Result	PQL	Method	Date Prepared	Date Analyzed	Flags
Client ID:	**DA7SWCS15210617I**					
Laboratory ID:	06-181-02					
1,1,2-Trichloroethane	ND	0.00096	EPA 8260D	6-21-21	6-21-21	
Tetrachloroethene	ND	0.00096	EPA 8260D	6-21-21	6-21-21	
1,3-Dichloropropane	ND	0.00096	EPA 8260D	6-21-21	6-21-21	
2-Hexanone	ND	0.0048	EPA 8260D	6-21-21	6-21-21	
Dibromochloromethane	ND	0.00096	EPA 8260D	6-21-21	6-21-21	
1,2-Dibromoethane	ND	0.000048	EPA 8260D/SIM	6-21-21	6-21-21	
Chlorobenzene	ND	0.00096	EPA 8260D	6-21-21	6-21-21	
1,1,1,2-Tetrachloroethane	ND	0.00096	EPA 8260D	6-21-21	6-21-21	
Ethylbenzene	ND	0.00096	EPA 8260D	6-21-21	6-21-21	
m,p-Xylene	ND	0.0019	EPA 8260D	6-21-21	6-21-21	
o-Xylene	ND	0.00096	EPA 8260D	6-21-21	6-21-21	
Styrene	ND	0.00096	EPA 8260D	6-21-21	6-21-21	
Bromoform	ND	0.0048	EPA 8260D	6-21-21	6-21-21	
Isopropylbenzene	ND	0.00096	EPA 8260D	6-21-21	6-21-21	
Bromobenzene	ND	0.00096	EPA 8260D	6-21-21	6-21-21	
1,1,2,2-Tetrachloroethane	ND	0.00096	EPA 8260D	6-21-21	6-21-21	
1,2,3-Trichloropropane	ND	0.00096	EPA 8260D	6-21-21	6-21-21	
n-Propylbenzene	ND	0.00096	EPA 8260D	6-21-21	6-21-21	
2-Chlorotoluene	ND	0.00096	EPA 8260D	6-21-21	6-21-21	
4-Chlorotoluene	ND	0.00096	EPA 8260D	6-21-21	6-21-21	
1,3,5-Trimethylbenzene	ND	0.00096	EPA 8260D	6-21-21	6-21-21	
tert-Butylbenzene	ND	0.00096	EPA 8260D	6-21-21	6-21-21	
1,2,4-Trimethylbenzene	ND	0.00096	EPA 8260D	6-21-21	6-21-21	
sec-Butylbenzene	ND	0.00096	EPA 8260D	6-21-21	6-21-21	
1,3-Dichlorobenzene	ND	0.00096	EPA 8260D	6-21-21	6-21-21	
p-Isopropyltoluene	0.0077	0.00096	EPA 8260D	6-21-21	6-21-21	
1,4-Dichlorobenzene	ND	0.00096	EPA 8260D	6-21-21	6-21-21	
1,2-Dichlorobenzene	ND	0.00096	EPA 8260D	6-21-21	6-21-21	
n-Butylbenzene	ND	0.00096	EPA 8260D	6-21-21	6-21-21	
1,2-Dibromo-3-chloropropane	ND	0.0048	EPA 8260D	6-21-21	6-21-21	
1,2,4-Trichlorobenzene	ND	0.00096	EPA 8260D	6-21-21	6-21-21	
Hexachlorobutadiene	ND	0.0048	EPA 8260D	6-21-21	6-21-21	
Naphthalene	ND	0.0048	EPA 8260D	6-21-21	6-21-21	
1,2,3-Trichlorobenzene	ND	0.00096	EPA 8260D	6-21-21	6-21-21	
Surrogate:	*Percent Recovery*	*Control Limits*				
Dibromofluoromethane	*95*	*74-131*				
Toluene-d8	*96*	*78-128*				
4-Bromofluorobenzene	*95*	*71-130*				

This report pertains to the samples analyzed in accordance with the chain of custody, and is intended only for the use of the individual or company to whom it is addressed.

Date of Report: June 22, 2021
Samples Submitted: June 18, 2021
Laboratory Reference: 2106-181
Project: 11-05150-003

VOLATILE ORGANICS EPA 8260D/SIM
page 1 of 2

Matrix: Soil
Units: mg/kg

Analyte	Result	PQL	Method	Date Prepared	Date Analyzed	Flags
Client ID:	**DA7SWCS16210618I**					
Laboratory ID:	06-181-03					
Dichlorodifluoromethane	ND	0.00080	EPA 8260D	6-21-21	6-21-21	
Chloromethane	ND	0.0040	EPA 8260D	6-21-21	6-21-21	
Vinyl Chloride	ND	0.00080	EPA 8260D	6-21-21	6-21-21	
Bromomethane	ND	0.0040	EPA 8260D	6-21-21	6-21-21	
Chloroethane	ND	0.0040	EPA 8260D	6-21-21	6-21-21	
Trichlorofluoromethane	ND	0.00080	EPA 8260D	6-21-21	6-21-21	
1,1-Dichloroethene	ND	0.00080	EPA 8260D	6-21-21	6-21-21	
Acetone	ND	0.0080	EPA 8260D	6-21-21	6-21-21	
Iodomethane	ND	0.0040	EPA 8260D	6-21-21	6-21-21	
Carbon Disulfide	ND	0.00080	EPA 8260D	6-21-21	6-21-21	
Methylene Chloride	ND	0.0040	EPA 8260D	6-21-21	6-21-21	
(trans) 1,2-Dichloroethene	ND	0.00080	EPA 8260D	6-21-21	6-21-21	
Methyl t-Butyl Ether	ND	0.00080	EPA 8260D	6-21-21	6-21-21	
1,1-Dichloroethane	ND	0.00080	EPA 8260D	6-21-21	6-21-21	
Vinyl Acetate	ND	0.0040	EPA 8260D	6-21-21	6-21-21	
2,2-Dichloropropane	ND	0.00080	EPA 8260D	6-21-21	6-21-21	
(cis) 1,2-Dichloroethene	ND	0.00080	EPA 8260D	6-21-21	6-21-21	
2-Butanone	ND	0.0040	EPA 8260D	6-21-21	6-21-21	
Bromochloromethane	ND	0.00080	EPA 8260D	6-21-21	6-21-21	
Chloroform	ND	0.00080	EPA 8260D	6-21-21	6-21-21	
1,1,1-Trichloroethane	ND	0.00080	EPA 8260D	6-21-21	6-21-21	
Carbon Tetrachloride	ND	0.00080	EPA 8260D	6-21-21	6-21-21	
1,1-Dichloropropene	ND	0.00080	EPA 8260D	6-21-21	6-21-21	
Benzene	ND	0.00080	EPA 8260D	6-21-21	6-21-21	
1,2-Dichloroethane	ND	0.00080	EPA 8260D	6-21-21	6-21-21	
Trichloroethene	ND	0.00080	EPA 8260D	6-21-21	6-21-21	
1,2-Dichloropropane	ND	0.00080	EPA 8260D	6-21-21	6-21-21	
Dibromomethane	ND	0.00080	EPA 8260D	6-21-21	6-21-21	
Bromodichloromethane	ND	0.00080	EPA 8260D	6-21-21	6-21-21	
2-Chloroethyl Vinyl Ether	ND	0.0040	EPA 8260D	6-21-21	6-21-21	
(cis) 1,3-Dichloropropene	ND	0.00080	EPA 8260D	6-21-21	6-21-21	
Methyl Isobutyl Ketone	ND	0.0040	EPA 8260D	6-21-21	6-21-21	
Toluene	ND	0.0040	EPA 8260D	6-21-21	6-21-21	
(trans) 1,3-Dichloropropene	ND	0.00080	EPA 8260D	6-21-21	6-21-21	

This report pertains to the samples analyzed in accordance with the chain of custody,
and is intended only for the use of the individual or company to whom it is addressed.

Date of Report: June 22, 2021
Samples Submitted: June 18, 2021
Laboratory Reference: 2106-181
Project: 11-05150-003

VOLATILE ORGANICS EPA 8260D/SIM
page 2 of 2

Analyte	Result	PQL	Method	Date Prepared	Date Analyzed	Flags
Client ID:	**DA7SWCS16210618I**					
Laboratory ID:	06-181-03					
1,1,2-Trichloroethane	ND	0.00080	EPA 8260D	6-21-21	6-21-21	
Tetrachloroethene	ND	0.00080	EPA 8260D	6-21-21	6-21-21	
1,3-Dichloropropane	ND	0.00080	EPA 8260D	6-21-21	6-21-21	
2-Hexanone	ND	0.0040	EPA 8260D	6-21-21	6-21-21	
Dibromochloromethane	ND	0.00080	EPA 8260D	6-21-21	6-21-21	
1,2-Dibromoethane	ND	0.000040	EPA 8260D/SIM	6-21-21	6-21-21	
Chlorobenzene	ND	0.00080	EPA 8260D	6-21-21	6-21-21	
1,1,1,2-Tetrachloroethane	ND	0.00080	EPA 8260D	6-21-21	6-21-21	
Ethylbenzene	ND	0.00080	EPA 8260D	6-21-21	6-21-21	
m,p-Xylene	ND	0.0016	EPA 8260D	6-21-21	6-21-21	
o-Xylene	ND	0.00080	EPA 8260D	6-21-21	6-21-21	
Styrene	ND	0.00080	EPA 8260D	6-21-21	6-21-21	
Bromoform	ND	0.0040	EPA 8260D	6-21-21	6-21-21	
Isopropylbenzene	ND	0.00080	EPA 8260D	6-21-21	6-21-21	
Bromobenzene	ND	0.00080	EPA 8260D	6-21-21	6-21-21	
1,1,2,2-Tetrachloroethane	ND	0.00080	EPA 8260D	6-21-21	6-21-21	
1,2,3-Trichloropropane	ND	0.00080	EPA 8260D	6-21-21	6-21-21	
n-Propylbenzene	ND	0.00080	EPA 8260D	6-21-21	6-21-21	
2-Chlorotoluene	ND	0.00080	EPA 8260D	6-21-21	6-21-21	
4-Chlorotoluene	ND	0.00080	EPA 8260D	6-21-21	6-21-21	
1,3,5-Trimethylbenzene	ND	0.00080	EPA 8260D	6-21-21	6-21-21	
tert-Butylbenzene	ND	0.00080	EPA 8260D	6-21-21	6-21-21	
1,2,4-Trimethylbenzene	ND	0.00080	EPA 8260D	6-21-21	6-21-21	
sec-Butylbenzene	ND	0.00080	EPA 8260D	6-21-21	6-21-21	
1,3-Dichlorobenzene	ND	0.00080	EPA 8260D	6-21-21	6-21-21	
p-Isopropyltoluene	ND	0.00080	EPA 8260D	6-21-21	6-21-21	
1,4-Dichlorobenzene	ND	0.00080	EPA 8260D	6-21-21	6-21-21	
1,2-Dichlorobenzene	ND	0.00080	EPA 8260D	6-21-21	6-21-21	
n-Butylbenzene	ND	0.00080	EPA 8260D	6-21-21	6-21-21	
1,2-Dibromo-3-chloropropane	ND	0.0040	EPA 8260D	6-21-21	6-21-21	
1,2,4-Trichlorobenzene	ND	0.00080	EPA 8260D	6-21-21	6-21-21	
Hexachlorobutadiene	ND	0.0040	EPA 8260D	6-21-21	6-21-21	
Naphthalene	ND	0.0040	EPA 8260D	6-21-21	6-21-21	
1,2,3-Trichlorobenzene	ND	0.00080	EPA 8260D	6-21-21	6-21-21	
Surrogate:	*Percent Recovery*	*Control Limits*				
Dibromofluoromethane	*94*	*74-131*				
Toluene-d8	*95*	*78-128*				
4-Bromofluorobenzene	*102*	*71-130*				

This report pertains to the samples analyzed in accordance with the chain of custody, and is intended only for the use of the individual or company to whom it is addressed.

Date of Report: June 22, 2021
Samples Submitted: June 18, 2021
Laboratory Reference: 2106-181
Project: 11-05150-003

VOLATILE ORGANICS EPA 8260D/SIM
QUALITY CONTROL
page 1 of 2

Matrix: Soil
Units: mg/kg

Analyte	Result	PQL	Method	Date Prepared	Date Analyzed	Flags
METHOD BLANK						
Laboratory ID:	MB0621S1					
Dichlorodifluoromethane	ND	0.0010	EPA 8260D	6-21-21	6-21-21	
Chloromethane	ND	0.0050	EPA 8260D	6-21-21	6-21-21	
Vinyl Chloride	ND	0.0010	EPA 8260D	6-21-21	6-21-21	
Bromomethane	ND	0.0050	EPA 8260D	6-21-21	6-21-21	
Chloroethane	ND	0.0050	EPA 8260D	6-21-21	6-21-21	
Trichlorofluoromethane	ND	0.0010	EPA 8260D	6-21-21	6-21-21	
1,1-Dichloroethene	ND	0.0010	EPA 8260D	6-21-21	6-21-21	
Acetone	ND	0.010	EPA 8260D	6-21-21	6-21-21	
Iodomethane	ND	0.0050	EPA 8260D	6-21-21	6-21-21	
Carbon Disulfide	ND	0.0010	EPA 8260D	6-21-21	6-21-21	
Methylene Chloride	ND	0.0050	EPA 8260D	6-21-21	6-21-21	
(trans) 1,2-Dichloroethene	ND	0.0010	EPA 8260D	6-21-21	6-21-21	
Methyl t-Butyl Ether	ND	0.0010	EPA 8260D	6-21-21	6-21-21	
1,1-Dichloroethane	ND	0.0010	EPA 8260D	6-21-21	6-21-21	
Vinyl Acetate	ND	0.0050	EPA 8260D	6-21-21	6-21-21	
2,2-Dichloropropane	ND	0.0010	EPA 8260D	6-21-21	6-21-21	
(cis) 1,2-Dichloroethene	ND	0.0010	EPA 8260D	6-21-21	6-21-21	
2-Butanone	ND	0.0050	EPA 8260D	6-21-21	6-21-21	
Bromochloromethane	ND	0.0010	EPA 8260D	6-21-21	6-21-21	
Chloroform	ND	0.0010	EPA 8260D	6-21-21	6-21-21	
1,1,1-Trichloroethane	ND	0.0010	EPA 8260D	6-21-21	6-21-21	
Carbon Tetrachloride	ND	0.0010	EPA 8260D	6-21-21	6-21-21	
1,1-Dichloropropene	ND	0.0010	EPA 8260D	6-21-21	6-21-21	
Benzene	ND	0.0010	EPA 8260D	6-21-21	6-21-21	
1,2-Dichloroethane	ND	0.0010	EPA 8260D	6-21-21	6-21-21	
Trichloroethene	ND	0.0010	EPA 8260D	6-21-21	6-21-21	
1,2-Dichloropropane	ND	0.0010	EPA 8260D	6-21-21	6-21-21	
Dibromomethane	ND	0.0010	EPA 8260D	6-21-21	6-21-21	
Bromodichloromethane	ND	0.0010	EPA 8260D	6-21-21	6-21-21	
2-Chloroethyl Vinyl Ether	ND	0.0050	EPA 8260D	6-21-21	6-21-21	
(cis) 1,3-Dichloropropene	ND	0.0010	EPA 8260D	6-21-21	6-21-21	
Methyl Isobutyl Ketone	ND	0.0050	EPA 8260D	6-21-21	6-21-21	
Toluene	ND	0.0050	EPA 8260D	6-21-21	6-21-21	
(trans) 1,3-Dichloropropene	ND	0.0010	EPA 8260D	6-21-21	6-21-21	

This report pertains to the samples analyzed in accordance with the chain of custody,
and is intended only for the use of the individual or company to whom it is addressed.

Date of Report: June 22, 2021
Samples Submitted: June 18, 2021
Laboratory Reference: 2106-181
Project: 11-05150-003

VOLATILE ORGANICS EPA 8260D/SIM
QUALITY CONTROL
page 2 of 2

Analyte	Result	PQL	Method	Date Prepared	Date Analyzed	Flags
METHOD BLANK						
Laboratory ID:	MB0621S1					
1,1,2-Trichloroethane	ND	0.0010	EPA 8260D	6-21-21	6-21-21	
Tetrachloroethene	ND	0.0010	EPA 8260D	6-21-21	6-21-21	
1,3-Dichloropropane	ND	0.0010	EPA 8260D	6-21-21	6-21-21	
2-Hexanone	ND	0.0050	EPA 8260D	6-21-21	6-21-21	
Dibromochloromethane	ND	0.0010	EPA 8260D	6-21-21	6-21-21	
1,2-Dibromoethane	ND	0.000050	EPA 8260D/SIM	6-21-21	6-21-21	
Chlorobenzene	ND	0.0010	EPA 8260D	6-21-21	6-21-21	
1,1,1,2-Tetrachloroethane	ND	0.0010	EPA 8260D	6-21-21	6-21-21	
Ethylbenzene	ND	0.0010	EPA 8260D	6-21-21	6-21-21	
m,p-Xylene	ND	0.0020	EPA 8260D	6-21-21	6-21-21	
o-Xylene	ND	0.0010	EPA 8260D	6-21-21	6-21-21	
Styrene	ND	0.0010	EPA 8260D	6-21-21	6-21-21	
Bromoform	ND	0.0050	EPA 8260D	6-21-21	6-21-21	
Isopropylbenzene	ND	0.0010	EPA 8260D	6-21-21	6-21-21	
Bromobenzene	ND	0.0010	EPA 8260D	6-21-21	6-21-21	
1,1,2,2-Tetrachloroethane	ND	0.0010	EPA 8260D	6-21-21	6-21-21	
1,2,3-Trichloropropane	ND	0.0010	EPA 8260D	6-21-21	6-21-21	
n-Propylbenzene	ND	0.0010	EPA 8260D	6-21-21	6-21-21	
2-Chlorotoluene	ND	0.0010	EPA 8260D	6-21-21	6-21-21	
4-Chlorotoluene	ND	0.0010	EPA 8260D	6-21-21	6-21-21	
1,3,5-Trimethylbenzene	ND	0.0010	EPA 8260D	6-21-21	6-21-21	
tert-Butylbenzene	ND	0.0010	EPA 8260D	6-21-21	6-21-21	
1,2,4-Trimethylbenzene	ND	0.0010	EPA 8260D	6-21-21	6-21-21	
sec-Butylbenzene	ND	0.0010	EPA 8260D	6-21-21	6-21-21	
1,3-Dichlorobenzene	ND	0.0010	EPA 8260D	6-21-21	6-21-21	
p-Isopropyltoluene	ND	0.0010	EPA 8260D	6-21-21	6-21-21	
1,4-Dichlorobenzene	ND	0.0010	EPA 8260D	6-21-21	6-21-21	
1,2-Dichlorobenzene	ND	0.0010	EPA 8260D	6-21-21	6-21-21	
n-Butylbenzene	ND	0.0010	EPA 8260D	6-21-21	6-21-21	
1,2-Dibromo-3-chloropropane	ND	0.0050	EPA 8260D	6-21-21	6-21-21	
1,2,4-Trichlorobenzene	ND	0.0010	EPA 8260D	6-21-21	6-21-21	
Hexachlorobutadiene	ND	0.0050	EPA 8260D	6-21-21	6-21-21	
Naphthalene	ND	0.0050	EPA 8260D	6-21-21	6-21-21	
1,2,3-Trichlorobenzene	ND	0.0010	EPA 8260D	6-21-21	6-21-21	
Surrogate:	*Percent Recovery*	*Control Limits*				
Dibromofluoromethane	*94*	*74-131*				
Toluene-d8	*96*	*78-128*				
4-Bromofluorobenzene	*104*	*71-130*				

This report pertains to the samples analyzed in accordance with the chain of custody, and is intended only for the use of the individual or company to whom it is addressed.

Date of Report: June 22, 2021
Samples Submitted: June 18, 2021
Laboratory Reference: 2106-181
Project: 11-05150-003

VOLATILE ORGANICS EPA 8260D/SIM
QUALITY CONTROL

Matrix: Soil
Units: mg/kg

Analyte	Result		Spike Level		Percent Recovery		Recovery Limits	RPD	RPD Limit	Flags
SPIKE BLANKS										
Laboratory ID:	SB0621S1									
	SB	SBD	SB	SBD	SB	SBD				
1,1-Dichloroethene	**0.0626**	**0.0652**	0.0500	0.0500	125	130	71-131	4	19	
Benzene	**0.0495**	**0.0510**	0.0500	0.0500	99	102	73-124	3	18	
Trichloroethene	**0.0522**	**0.0529**	0.0500	0.0500	104	106	79-130	1	18	
Toluene	**0.0505**	**0.0509**	0.0500	0.0500	101	102	76-123	1	18	
Chlorobenzene	**0.0493**	**0.0495**	0.0500	0.0500	99	99	78-122	0	18	
Surrogate:										
Dibromofluoromethane					*92*	*93*	*74-131*			
Toluene-d8					*95*	*95*	*78-128*			
4-Bromofluorobenzene					*116*	*106*	*71-130*			

This report pertains to the samples analyzed in accordance with the chain of custody, and is intended only for the use of the individual or company to whom it is addressed.

Date of Report: June 22, 2021
Samples Submitted: June 18, 2021
Laboratory Reference: 2106-181
Project: 11-05150-003

VOLATILE ORGANICS EPA 8260D
page 1 of 2

Matrix: Water
Units: ug/L

Analyte	Result	PQL	Method	Date Prepared	Date Analyzed	Flags
Client ID:	**VTRP210618I - Trip Blank**					
Laboratory ID:	06-181-04					
Dichlorodifluoromethane	ND	0.20	EPA 8260D	6-21-21	6-21-21	
Chloromethane	ND	1.0	EPA 8260D	6-21-21	6-21-21	
Vinyl Chloride	ND	0.20	EPA 8260D	6-21-21	6-21-21	
Bromomethane	ND	0.25	EPA 8260D	6-21-21	6-21-21	
Chloroethane	ND	1.0	EPA 8260D	6-21-21	6-21-21	
Trichlorofluoromethane	ND	0.20	EPA 8260D	6-21-21	6-21-21	
1,1-Dichloroethene	ND	0.20	EPA 8260D	6-21-21	6-21-21	
Acetone	ND	5.0	EPA 8260D	6-21-21	6-21-21	
Iodomethane	ND	2.7	EPA 8260D	6-21-21	6-21-21	
Carbon Disulfide	ND	0.20	EPA 8260D	6-21-21	6-21-21	
Methylene Chloride	ND	1.0	EPA 8260D	6-21-21	6-21-21	
(trans) 1,2-Dichloroethene	ND	0.20	EPA 8260D	6-21-21	6-21-21	
Methyl t-Butyl Ether	ND	0.20	EPA 8260D	6-21-21	6-21-21	
1,1-Dichloroethane	ND	0.20	EPA 8260D	6-21-21	6-21-21	
Vinyl Acetate	ND	1.0	EPA 8260D	6-21-21	6-21-21	
2,2-Dichloropropane	ND	0.20	EPA 8260D	6-21-21	6-21-21	
(cis) 1,2-Dichloroethene	ND	0.20	EPA 8260D	6-21-21	6-21-21	
2-Butanone	ND	5.0	EPA 8260D	6-21-21	6-21-21	
Bromochloromethane	ND	0.20	EPA 8260D	6-21-21	6-21-21	
Chloroform	ND	0.20	EPA 8260D	6-21-21	6-21-21	
1,1,1-Trichloroethane	ND	0.20	EPA 8260D	6-21-21	6-21-21	
Carbon Tetrachloride	ND	0.20	EPA 8260D	6-21-21	6-21-21	
1,1-Dichloropropene	ND	0.20	EPA 8260D	6-21-21	6-21-21	
Benzene	ND	0.20	EPA 8260D	6-21-21	6-21-21	
1,2-Dichloroethane	ND	0.20	EPA 8260D	6-21-21	6-21-21	
Trichloroethene	ND	0.20	EPA 8260D	6-21-21	6-21-21	
1,2-Dichloropropane	ND	0.20	EPA 8260D	6-21-21	6-21-21	
Dibromomethane	ND	0.20	EPA 8260D	6-21-21	6-21-21	
Bromodichloromethane	ND	0.20	EPA 8260D	6-21-21	6-21-21	
2-Chloroethyl Vinyl Ether	ND	1.4	EPA 8260D	6-21-21	6-21-21	
(cis) 1,3-Dichloropropene	ND	0.20	EPA 8260D	6-21-21	6-21-21	
Methyl Isobutyl Ketone	ND	2.0	EPA 8260D	6-21-21	6-21-21	
Toluene	ND	1.0	EPA 8260D	6-21-21	6-21-21	
(trans) 1,3-Dichloropropene	ND	0.20	EPA 8260D	6-21-21	6-21-21	

This report pertains to the samples analyzed in accordance with the chain of custody,
and is intended only for the use of the individual or company to whom it is addressed.

Date of Report: June 22, 2021
Samples Submitted: June 18, 2021
Laboratory Reference: 2106-181
Project: 11-05150-003

VOLATILE ORGANICS EPA 8260D
page 2 of 2

Analyte	Result	PQL	Method	Date Prepared	Date Analyzed	Flags
Client ID:	**VTRP210618I - Trip Blank**					
Laboratory ID:	06-181-04					
1,1,2-Trichloroethane	ND	0.20	EPA 8260D	6-21-21	6-21-21	
Tetrachloroethene	ND	0.20	EPA 8260D	6-21-21	6-21-21	
1,3-Dichloropropane	ND	0.20	EPA 8260D	6-21-21	6-21-21	
2-Hexanone	ND	2.0	EPA 8260D	6-21-21	6-21-21	
Dibromochloromethane	ND	0.20	EPA 8260D	6-21-21	6-21-21	
1,2-Dibromoethane	ND	0.20	EPA 8260D	6-21-21	6-21-21	
Chlorobenzene	ND	0.20	EPA 8260D	6-21-21	6-21-21	
1,1,1,2-Tetrachloroethane	ND	0.20	EPA 8260D	6-21-21	6-21-21	
Ethylbenzene	ND	0.20	EPA 8260D	6-21-21	6-21-21	
m,p-Xylene	ND	0.40	EPA 8260D	6-21-21	6-21-21	
o-Xylene	ND	0.20	EPA 8260D	6-21-21	6-21-21	
Styrene	ND	0.20	EPA 8260D	6-21-21	6-21-21	
Bromoform	ND	1.0	EPA 8260D	6-21-21	6-21-21	
Isopropylbenzene	ND	0.20	EPA 8260D	6-21-21	6-21-21	
Bromobenzene	ND	0.20	EPA 8260D	6-21-21	6-21-21	
1,1,2,2-Tetrachloroethane	ND	0.20	EPA 8260D	6-21-21	6-21-21	
1,2,3-Trichloropropane	ND	0.20	EPA 8260D	6-21-21	6-21-21	
n-Propylbenzene	ND	0.20	EPA 8260D	6-21-21	6-21-21	
2-Chlorotoluene	ND	0.20	EPA 8260D	6-21-21	6-21-21	
4-Chlorotoluene	ND	0.20	EPA 8260D	6-21-21	6-21-21	
1,3,5-Trimethylbenzene	ND	0.20	EPA 8260D	6-21-21	6-21-21	
tert-Butylbenzene	ND	0.20	EPA 8260D	6-21-21	6-21-21	
1,2,4-Trimethylbenzene	ND	0.20	EPA 8260D	6-21-21	6-21-21	
sec-Butylbenzene	ND	0.20	EPA 8260D	6-21-21	6-21-21	
1,3-Dichlorobenzene	ND	0.20	EPA 8260D	6-21-21	6-21-21	
p-Isopropyltoluene	ND	0.20	EPA 8260D	6-21-21	6-21-21	
1,4-Dichlorobenzene	ND	0.20	EPA 8260D	6-21-21	6-21-21	
1,2-Dichlorobenzene	ND	0.20	EPA 8260D	6-21-21	6-21-21	
n-Butylbenzene	ND	0.20	EPA 8260D	6-21-21	6-21-21	
1,2-Dibromo-3-chloropropane	ND	1.0	EPA 8260D	6-21-21	6-21-21	
1,2,4-Trichlorobenzene	ND	0.20	EPA 8260D	6-21-21	6-21-21	
Hexachlorobutadiene	ND	1.0	EPA 8260D	6-21-21	6-21-21	
Naphthalene	ND	1.0	EPA 8260D	6-21-21	6-21-21	
1,2,3-Trichlorobenzene	ND	0.20	EPA 8260D	6-21-21	6-21-21	
Surrogate:	*Percent Recovery*	*Control Limits*				
Dibromofluoromethane	*103*	*75-127*				
Toluene-d8	*99*	*80-127*				
4-Bromofluorobenzene	*99*	*78-125*				

This report pertains to the samples analyzed in accordance with the chain of custody, and is intended only for the use of the individual or company to whom it is addressed.

Date of Report: June 22, 2021
Samples Submitted: June 18, 2021
Laboratory Reference: 2106-181
Project: 11-05150-003

VOLATILE ORGANICS EPA 8260D
QUALITY CONTROL
page 1 of 2

Matrix: Water
Units: ug/L

Analyte	Result	PQL	Method	Date Prepared	Date Analyzed	Flags
METHOD BLANK						
Laboratory ID:	MB0621W1					
Dichlorodifluoromethane	ND	0.20	EPA 8260D	6-21-21	6-21-21	
Chloromethane	ND	1.0	EPA 8260D	6-21-21	6-21-21	
Vinyl Chloride	ND	0.20	EPA 8260D	6-21-21	6-21-21	
Bromomethane	ND	0.25	EPA 8260D	6-21-21	6-21-21	
Chloroethane	ND	1.0	EPA 8260D	6-21-21	6-21-21	
Trichlorofluoromethane	ND	0.20	EPA 8260D	6-21-21	6-21-21	
1,1-Dichloroethene	ND	0.20	EPA 8260D	6-21-21	6-21-21	
Acetone	ND	5.0	EPA 8260D	6-21-21	6-21-21	
Iodomethane	ND	2.7	EPA 8260D	6-21-21	6-21-21	
Carbon Disulfide	ND	0.20	EPA 8260D	6-21-21	6-21-21	
Methylene Chloride	ND	1.0	EPA 8260D	6-21-21	6-21-21	
(trans) 1,2-Dichloroethene	ND	0.20	EPA 8260D	6-21-21	6-21-21	
Methyl t-Butyl Ether	ND	0.20	EPA 8260D	6-21-21	6-21-21	
1,1-Dichloroethane	ND	0.20	EPA 8260D	6-21-21	6-21-21	
Vinyl Acetate	ND	1.0	EPA 8260D	6-21-21	6-21-21	
2,2-Dichloropropane	ND	0.20	EPA 8260D	6-21-21	6-21-21	
(cis) 1,2-Dichloroethene	ND	0.20	EPA 8260D	6-21-21	6-21-21	
2-Butanone	ND	5.0	EPA 8260D	6-21-21	6-21-21	
Bromochloromethane	ND	0.20	EPA 8260D	6-21-21	6-21-21	
Chloroform	ND	0.20	EPA 8260D	6-21-21	6-21-21	
1,1,1-Trichloroethane	ND	0.20	EPA 8260D	6-21-21	6-21-21	
Carbon Tetrachloride	ND	0.20	EPA 8260D	6-21-21	6-21-21	
1,1-Dichloropropene	ND	0.20	EPA 8260D	6-21-21	6-21-21	
Benzene	ND	0.20	EPA 8260D	6-21-21	6-21-21	
1,2-Dichloroethane	ND	0.20	EPA 8260D	6-21-21	6-21-21	
Trichloroethene	ND	0.20	EPA 8260D	6-21-21	6-21-21	
1,2-Dichloropropane	ND	0.20	EPA 8260D	6-21-21	6-21-21	
Dibromomethane	ND	0.20	EPA 8260D	6-21-21	6-21-21	
Bromodichloromethane	ND	0.20	EPA 8260D	6-21-21	6-21-21	
2-Chloroethyl Vinyl Ether	ND	1.4	EPA 8260D	6-21-21	6-21-21	
(cis) 1,3-Dichloropropene	ND	0.20	EPA 8260D	6-21-21	6-21-21	
Methyl Isobutyl Ketone	ND	2.0	EPA 8260D	6-21-21	6-21-21	
Toluene	ND	1.0	EPA 8260D	6-21-21	6-21-21	
(trans) 1,3-Dichloropropene	ND	0.20	EPA 8260D	6-21-21	6-21-21	

This report pertains to the samples analyzed in accordance with the chain of custody,
and is intended only for the use of the individual or company to whom it is addressed.

Date of Report: June 22, 2021
Samples Submitted: June 18, 2021
Laboratory Reference: 2106-181
Project: 11-05150-003

VOLATILE ORGANICS EPA 8260D
QUALITY CONTROL
page 2 of 2

Analyte	Result	PQL	Method	Date Prepared	Date Analyzed	Flags
METHOD BLANK						
Laboratory ID:	MB0621W1					
1,1,2-Trichloroethane	ND	0.20	EPA 8260D	6-21-21	6-21-21	
Tetrachloroethene	ND	0.20	EPA 8260D	6-21-21	6-21-21	
1,3-Dichloropropane	ND	0.20	EPA 8260D	6-21-21	6-21-21	
2-Hexanone	ND	2.0	EPA 8260D	6-21-21	6-21-21	
Dibromochloromethane	ND	0.20	EPA 8260D	6-21-21	6-21-21	
1,2-Dibromoethane	ND	0.20	EPA 8260D	6-21-21	6-21-21	
Chlorobenzene	ND	0.20	EPA 8260D	6-21-21	6-21-21	
1,1,1,2-Tetrachloroethane	ND	0.20	EPA 8260D	6-21-21	6-21-21	
Ethylbenzene	ND	0.20	EPA 8260D	6-21-21	6-21-21	
m,p-Xylene	ND	0.40	EPA 8260D	6-21-21	6-21-21	
o-Xylene	ND	0.20	EPA 8260D	6-21-21	6-21-21	
Styrene	ND	0.20	EPA 8260D	6-21-21	6-21-21	
Bromoform	ND	1.0	EPA 8260D	6-21-21	6-21-21	
Isopropylbenzene	ND	0.20	EPA 8260D	6-21-21	6-21-21	
Bromobenzene	ND	0.20	EPA 8260D	6-21-21	6-21-21	
1,1,2,2-Tetrachloroethane	ND	0.20	EPA 8260D	6-21-21	6-21-21	
1,2,3-Trichloropropane	ND	0.20	EPA 8260D	6-21-21	6-21-21	
n-Propylbenzene	ND	0.20	EPA 8260D	6-21-21	6-21-21	
2-Chlorotoluene	ND	0.20	EPA 8260D	6-21-21	6-21-21	
4-Chlorotoluene	ND	0.20	EPA 8260D	6-21-21	6-21-21	
1,3,5-Trimethylbenzene	ND	0.20	EPA 8260D	6-21-21	6-21-21	
tert-Butylbenzene	ND	0.20	EPA 8260D	6-21-21	6-21-21	
1,2,4-Trimethylbenzene	ND	0.20	EPA 8260D	6-21-21	6-21-21	
sec-Butylbenzene	ND	0.20	EPA 8260D	6-21-21	6-21-21	
1,3-Dichlorobenzene	ND	0.20	EPA 8260D	6-21-21	6-21-21	
p-Isopropyltoluene	ND	0.20	EPA 8260D	6-21-21	6-21-21	
1,4-Dichlorobenzene	ND	0.20	EPA 8260D	6-21-21	6-21-21	
1,2-Dichlorobenzene	ND	0.20	EPA 8260D	6-21-21	6-21-21	
n-Butylbenzene	ND	0.20	EPA 8260D	6-21-21	6-21-21	
1,2-Dibromo-3-chloropropane	ND	1.0	EPA 8260D	6-21-21	6-21-21	
1,2,4-Trichlorobenzene	ND	0.20	EPA 8260D	6-21-21	6-21-21	
Hexachlorobutadiene	ND	1.0	EPA 8260D	6-21-21	6-21-21	
Naphthalene	ND	1.0	EPA 8260D	6-21-21	6-21-21	
1,2,3-Trichlorobenzene	ND	0.20	EPA 8260D	6-21-21	6-21-21	
Surrogate:	*Percent Recovery*	*Control Limits*				
Dibromofluoromethane	*103*	*75-127*				
Toluene-d8	*98*	*80-127*				
4-Bromofluorobenzene	*97*	*78-125*				

This report pertains to the samples analyzed in accordance with the chain of custody, and is intended only for the use of the individual or company to whom it is addressed.

Date of Report: June 22, 2021
Samples Submitted: June 18, 2021
Laboratory Reference: 2106-181
Project: 11-05150-003

VOLATILE ORGANICS EPA 8260D
QUALITY CONTROL

Matrix: Water
Units: ug/L

Analyte	Result		Spike Level		Percent Recovery		Recovery Limits	RPD	RPD Limit	Flags
SPIKE BLANKS										
Laboratory ID:	SB0621W1									
	SB	SBD	SB	SBD	SB	SBD				
1,1-Dichloroethene	**9.77**	**9.41**	10.0	10.0	98	94	78-124	4	19	
Benzene	**10.2**	**9.93**	10.0	10.0	102	99	80-119	3	16	
Trichloroethene	**10.3**	**10.3**	10.0	10.0	103	103	80-121	0	18	
Toluene	**9.87**	**9.74**	10.0	10.0	99	97	80-117	1	18	
Chlorobenzene	**10.4**	**10.4**	10.0	10.0	104	104	80-117	0	17	
Surrogate:										
Dibromofluoromethane					*100*	*99*	*75-127*			
Toluene-d8					*99*	*100*	*80-127*			
4-Bromofluorobenzene					*101*	*99*	*78-125*			

This report pertains to the samples analyzed in accordance with the chain of custody, and is intended only for the use of the individual or company to whom it is addressed.

Date of Report: June 22, 2021
Samples Submitted: June 18, 2021
Laboratory Reference: 2106-181
Project: 11-05150-003

PCBs by EPA 8082A

Matrix: Soil
Units: mg/Kg (ppm)

Analyte	Result	PQL	Method	Date Prepared	Date Analyzed	Flags
Client ID:	**DA7SWCS11210617I**					
Laboratory ID:	06-181-01					
Aroclor 1016	**ND**	0.025	EPA 8082A	6-21-21	6-21-21	
Aroclor 1221	**ND**	0.025	EPA 8082A	6-21-21	6-21-21	
Aroclor 1232	**ND**	0.025	EPA 8082A	6-21-21	6-21-21	
Aroclor 1242	**ND**	0.025	EPA 8082A	6-21-21	6-21-21	
Aroclor 1248	**ND**	0.025	EPA 8082A	6-21-21	6-21-21	
Aroclor 1254	**ND**	0.025	EPA 8082A	6-21-21	6-21-21	
Aroclor 1260	**ND**	0.025	EPA 8082A	6-21-21	6-21-21	
Surrogate:	*Percent Recovery*	*Control Limits*				
DCB	*89*	*54-135*				
Client ID:	**DA7SWCS15210617I**					
Laboratory ID:	06-181-02					
Aroclor 1016	**ND**	0.022	EPA 8082A	6-21-21	6-21-21	
Aroclor 1221	**ND**	0.022	EPA 8082A	6-21-21	6-21-21	
Aroclor 1232	**ND**	0.022	EPA 8082A	6-21-21	6-21-21	
Aroclor 1242	**ND**	0.022	EPA 8082A	6-21-21	6-21-21	
Aroclor 1248	**ND**	0.022	EPA 8082A	6-21-21	6-21-21	
Aroclor 1254	**ND**	0.022	EPA 8082A	6-21-21	6-21-21	
Aroclor 1260	**ND**	0.022	EPA 8082A	6-21-21	6-21-21	
Surrogate:	*Percent Recovery*	*Control Limits*				
DCB	*103*	*54-135*				
Client ID:	**DA7SWCS16210618I**					
Laboratory ID:	06-181-03					
Aroclor 1016	**ND**	0.022	EPA 8082A	6-21-21	6-21-21	
Aroclor 1221	**ND**	0.022	EPA 8082A	6-21-21	6-21-21	
Aroclor 1232	**ND**	0.022	EPA 8082A	6-21-21	6-21-21	
Aroclor 1242	**ND**	0.022	EPA 8082A	6-21-21	6-21-21	
Aroclor 1248	**ND**	0.022	EPA 8082A	6-21-21	6-21-21	
Aroclor 1254	**ND**	0.022	EPA 8082A	6-21-21	6-21-21	
Aroclor 1260	**ND**	0.022	EPA 8082A	6-21-21	6-21-21	
Surrogate:	*Percent Recovery*	*Control Limits*				
DCB	*109*	*54-135*				

This report pertains to the samples analyzed in accordance with the chain of custody, and is intended only for the use of the individual or company to whom it is addressed.

Date of Report: June 22, 2021
Samples Submitted: June 18, 2021
Laboratory Reference: 2106-181
Project: 11-05150-003

PCBs by EPA 8082
QUALITY CONTROL

Matrix: Soil
Units: mg/Kg (ppm)

Analyte	Result	PQL	Method	Date Prepared	Date Analyzed	Flags
METHOD BLANK						
Laboratory ID:	MB0621S2					
Aroclor 1016	**ND**	0.020	EPA 8082A	6-21-21	6-21-21	
Aroclor 1221	**ND**	0.020	EPA 8082A	6-21-21	6-21-21	
Aroclor 1232	**ND**	0.020	EPA 8082A	6-21-21	6-21-21	
Aroclor 1242	**ND**	0.020	EPA 8082A	6-21-21	6-21-21	
Aroclor 1248	**ND**	0.020	EPA 8082A	6-21-21	6-21-21	
Aroclor 1254	**ND**	0.020	EPA 8082A	6-21-21	6-21-21	
Aroclor 1260	**ND**	0.020	EPA 8082A	6-21-21	6-21-21	
Surrogate:	*Percent Recovery*	*Control Limits*				
DCB	*104*	*54-135*				

Analyte	Result		Spike Level		Source Result	Percent Recovery		Recovery Limits	RPD	RPD Limit	Flags
MATRIX SPIKES											
Laboratory ID:	06-181-02										
	MS	MSD	MS	MSD		MS	MSD				
Aroclor 1260	**0.560**	**0.558**	0.500	0.500	ND	**112**	**112**	62-129	0	15	
Surrogate:											
DCB						*105*	*109*	*54-135*			

This report pertains to the samples analyzed in accordance with the chain of custody, and is intended only for the use of the individual or company to whom it is addressed.

Date of Report: June 22, 2021
Samples Submitted: June 18, 2021
Laboratory Reference: 2106-181
Project: 11-05150-003

SEMIVOLATILE ORGANICS EPA 8270E/SIM
page 1 of 2

Matrix: Soil
Units: mg/Kg

Analyte	Result	PQL	Method	Date Prepared	Date Analyzed	Flags
Client ID:	**DA7SWCS11210617I**					
Laboratory ID:	06-181-01					
n-Nitrosodimethylamine	**ND**	0.012	EPA 8270E	6-21-21	6-22-21	
Pyridine	**ND**	0.25	EPA 8270E	6-21-21	6-22-21	
Phenol	**ND**	0.025	EPA 8270E	6-21-21	6-22-21	
Aniline	**ND**	0.12	EPA 8270E	6-21-21	6-22-21	
bis(2-Chloroethyl)ether	**ND**	0.012	EPA 8270E	6-21-21	6-22-21	
2-Chlorophenol	**ND**	0.025	EPA 8270E	6-21-21	6-22-21	
1,3-Dichlorobenzene	**ND**	0.025	EPA 8270E	6-21-21	6-22-21	
1,4-Dichlorobenzene	**ND**	0.025	EPA 8270E	6-21-21	6-22-21	
Benzyl alcohol	**ND**	0.025	EPA 8270E	6-21-21	6-22-21	
1,2-Dichlorobenzene	**ND**	0.025	EPA 8270E	6-21-21	6-22-21	
2-Methylphenol (o-Cresol)	**0.027**	0.025	EPA 8270E	6-21-21	6-22-21	
bis(2-Chloroisopropyl)ether	**ND**	0.025	EPA 8270E	6-21-21	6-22-21	
(3+4)-Methylphenol (m,p-Cresol)	**0.063**	0.025	EPA 8270E	6-21-21	6-22-21	
n-Nitroso-di-n-propylamine	**ND**	0.012	EPA 8270E	6-21-21	6-22-21	
Hexachloroethane	**ND**	0.025	EPA 8270E	6-21-21	6-22-21	
Nitrobenzene	**ND**	0.025	EPA 8270E	6-21-21	6-22-21	
Isophorone	**ND**	0.025	EPA 8270E	6-21-21	6-22-21	
2-Nitrophenol	**ND**	0.025	EPA 8270E	6-21-21	6-22-21	
2,4-Dimethylphenol	**ND**	0.025	EPA 8270E	6-21-21	6-22-21	
bis(2-Chloroethoxy)methane	**ND**	0.025	EPA 8270E	6-21-21	6-22-21	
2,4-Dichlorophenol	**ND**	0.025	EPA 8270E	6-21-21	6-22-21	
1,2,4-Trichlorobenzene	**ND**	0.025	EPA 8270E	6-21-21	6-22-21	
Naphthalene	**0.0052**	0.0049	EPA 8270E/SIM	6-21-21	6-21-21	
4-Chloroaniline	**ND**	0.012	EPA 8270E	6-21-21	6-22-21	
Hexachlorobutadiene	**ND**	0.025	EPA 8270E	6-21-21	6-22-21	
4-Chloro-3-methylphenol	**ND**	0.025	EPA 8270E	6-21-21	6-22-21	
2-Methylnaphthalene	**ND**	0.0049	EPA 8270E/SIM	6-21-21	6-21-21	
1-Methylnaphthalene	**ND**	0.0049	EPA 8270E/SIM	6-21-21	6-21-21	
Hexachlorocyclopentadiene	**ND**	0.025	EPA 8270E	6-21-21	6-22-21	
2,4,6-Trichlorophenol	**ND**	0.025	EPA 8270E	6-21-21	6-22-21	
2,3-Dichloroaniline	**ND**	0.025	EPA 8270E	6-21-21	6-22-21	
2,4,5-Trichlorophenol	**ND**	0.025	EPA 8270E	6-21-21	6-22-21	
2-Chloronaphthalene	**ND**	0.025	EPA 8270E	6-21-21	6-22-21	
2-Nitroaniline	**ND**	0.025	EPA 8270E	6-21-21	6-22-21	
1,4-Dinitrobenzene	**ND**	0.025	EPA 8270E	6-21-21	6-22-21	
Dimethylphthalate	**ND**	0.025	EPA 8270E	6-21-21	6-22-21	
1,3-Dinitrobenzene	**ND**	0.025	EPA 8270E	6-21-21	6-22-21	
2,6-Dinitrotoluene	**ND**	0.012	EPA 8270E	6-21-21	6-22-21	
1,2-Dinitrobenzene	**ND**	0.025	EPA 8270E	6-21-21	6-22-21	
Acenaphthylene	**ND**	0.0049	EPA 8270E/SIM	6-21-21	6-21-21	
3-Nitroaniline	**ND**	0.025	EPA 8270E	6-21-21	6-22-21	

This report pertains to the samples analyzed in accordance with the chain of custody, and is intended only for the use of the individual or company to whom it is addressed.

Date of Report: June 22, 2021
Samples Submitted: June 18, 2021
Laboratory Reference: 2106-181
Project: 11-05150-003

SEMIVOLATILE ORGANICS EPA 8270E/SIM
page 2 of 2

Analyte	Result	PQL	Method	Date Prepared	Date Analyzed	Flags
Client ID:	**DA7SWCS11210617I**					
Laboratory ID:	06-181-01					
2,4-Dinitrophenol	**ND**	0.12	EPA 8270E	6-21-21	6-22-21	
Acenaphthene	**ND**	0.0049	EPA 8270E/SIM	6-21-21	6-21-21	
4-Nitrophenol	**ND**	0.025	EPA 8270E	6-21-21	6-22-21	
2,4-Dinitrotoluene	**ND**	0.012	EPA 8270E	6-21-21	6-22-21	
Dibenzofuran	**ND**	0.025	EPA 8270E	6-21-21	6-22-21	
2,3,5,6-Tetrachlorophenol	**ND**	0.025	EPA 8270E	6-21-21	6-22-21	
2,3,4,6-Tetrachlorophenol	**ND**	0.025	EPA 8270E	6-21-21	6-22-21	
Diethylphthalate	**ND**	0.12	EPA 8270E	6-21-21	6-22-21	
4-Chlorophenyl-phenylether	**ND**	0.025	EPA 8270E	6-21-21	6-22-21	
4-Nitroaniline	**ND**	0.025	EPA 8270E	6-21-21	6-22-21	
Fluorene	**ND**	0.0049	EPA 8270E/SIM	6-21-21	6-21-21	
4,6-Dinitro-2-methylphenol	**ND**	0.12	EPA 8270E	6-21-21	6-22-21	
n-Nitrosodiphenylamine	**ND**	0.025	EPA 8270E	6-21-21	6-22-21	
1,2-Diphenylhydrazine	**ND**	0.025	EPA 8270E	6-21-21	6-22-21	
4-Bromophenyl-phenylether	**ND**	0.025	EPA 8270E	6-21-21	6-22-21	
Hexachlorobenzene	**ND**	0.025	EPA 8270E	6-21-21	6-22-21	
Pentachlorophenol	**ND**	0.049	EPA 8270E	6-21-21	6-22-21	
Phenanthrene	**0.0058**	0.0049	EPA 8270E/SIM	6-21-21	6-21-21	
Anthracene	**ND**	0.0049	EPA 8270E/SIM	6-21-21	6-21-21	
Carbazole	**ND**	0.025	EPA 8270E	6-21-21	6-22-21	
Di-n-butylphthalate	**ND**	0.12	EPA 8270E	6-21-21	6-22-21	
Fluoranthene	**ND**	0.0049	EPA 8270E/SIM	6-21-21	6-21-21	
Pyrene	**ND**	0.0049	EPA 8270E/SIM	6-21-21	6-21-21	
Butylbenzylphthalate	**ND**	0.12	EPA 8270E	6-21-21	6-22-21	
bis-2-Ethylhexyladipate	**ND**	0.12	EPA 8270E	6-21-21	6-22-21	
3,3'-Dichlorobenzidine	**ND**	0.012	EPA 8270E	6-21-21	6-22-21	
Benzo[a]anthracene	**ND**	0.0049	EPA 8270E/SIM	6-21-21	6-21-21	
Chrysene	**ND**	0.0049	EPA 8270E/SIM	6-21-21	6-21-21	
bis(2-Ethylhexyl)phthalate	**ND**	0.12	EPA 8270E	6-21-21	6-22-21	
Di-n-octylphthalate	**ND**	0.12	EPA 8270E	6-21-21	6-22-21	
Benzo[b]fluoranthene	**ND**	0.0049	EPA 8270E/SIM	6-21-21	6-21-21	
Benzo(j,k)fluoranthene	**ND**	0.0049	EPA 8270E/SIM	6-21-21	6-21-21	
Benzo[a]pyrene	**ND**	0.0049	EPA 8270E/SIM	6-21-21	6-21-21	
Indeno[1,2,3-cd]pyrene	**ND**	0.0049	EPA 8270E/SIM	6-21-21	6-21-21	
Dibenz[a,h]anthracene	**ND**	0.0049	EPA 8270E/SIM	6-21-21	6-21-21	
Benzo[g,h,i]perylene	**ND**	0.0049	EPA 8270E/SIM	6-21-21	6-21-21	
Surrogate:	*Percent Recovery*	*Control Limits*				
2-Fluorophenol	*59*	*26 - 109*				
Phenol-d6	*81*	*33 - 113*				
Nitrobenzene-d5	*69*	*31 - 110*				
2-Fluorobiphenyl	*80*	*42 - 107*				
2,4,6-Tribromophenol	*94*	*42 - 123*				
Terphenyl-d14	*90*	*41 - 115*				

This report pertains to the samples analyzed in accordance with the chain of custody, and is intended only for the use of the individual or company to whom it is addressed.

Date of Report: June 22, 2021
Samples Submitted: June 18, 2021
Laboratory Reference: 2106-181
Project: 11-05150-003

SEMIVOLATILE ORGANICS EPA 8270E/SIM
page 1 of 2

Matrix: Soil
Units: mg/Kg

Analyte	Result	PQL	Method	Date Prepared	Date Analyzed	Flags
Client ID:	**DA7SWCS15210617I**					
Laboratory ID:	06-181-02					
n-Nitrosodimethylamine	**ND**	0.011	EPA 8270E	6-21-21	6-22-21	
Pyridine	**ND**	0.22	EPA 8270E	6-21-21	6-22-21	
Phenol	**ND**	0.022	EPA 8270E	6-21-21	6-22-21	
Aniline	**ND**	0.11	EPA 8270E	6-21-21	6-22-21	
bis(2-Chloroethyl)ether	**ND**	0.011	EPA 8270E	6-21-21	6-22-21	
2-Chlorophenol	**ND**	0.022	EPA 8270E	6-21-21	6-22-21	
1,3-Dichlorobenzene	**ND**	0.022	EPA 8270E	6-21-21	6-22-21	
1,4-Dichlorobenzene	**ND**	0.022	EPA 8270E	6-21-21	6-22-21	
Benzyl alcohol	**ND**	0.022	EPA 8270E	6-21-21	6-22-21	
1,2-Dichlorobenzene	**ND**	0.022	EPA 8270E	6-21-21	6-22-21	
2-Methylphenol (o-Cresol)	**ND**	0.022	EPA 8270E	6-21-21	6-22-21	
bis(2-Chloroisopropyl)ether	**ND**	0.022	EPA 8270E	6-21-21	6-22-21	
(3+4)-Methylphenol (m,p-Cresol)	**ND**	0.022	EPA 8270E	6-21-21	6-22-21	
n-Nitroso-di-n-propylamine	**ND**	0.011	EPA 8270E	6-21-21	6-22-21	
Hexachloroethane	**ND**	0.022	EPA 8270E	6-21-21	6-22-21	
Nitrobenzene	**ND**	0.022	EPA 8270E	6-21-21	6-22-21	
Isophorone	**ND**	0.022	EPA 8270E	6-21-21	6-22-21	
2-Nitrophenol	**ND**	0.022	EPA 8270E	6-21-21	6-22-21	
2,4-Dimethylphenol	**ND**	0.022	EPA 8270E	6-21-21	6-22-21	
bis(2-Chloroethoxy)methane	**ND**	0.022	EPA 8270E	6-21-21	6-22-21	
2,4-Dichlorophenol	**ND**	0.022	EPA 8270E	6-21-21	6-22-21	
1,2,4-Trichlorobenzene	**ND**	0.022	EPA 8270E	6-21-21	6-22-21	
Naphthalene	**ND**	0.0044	EPA 8270E/SIM	6-21-21	6-21-21	
4-Chloroaniline	**ND**	0.011	EPA 8270E	6-21-21	6-22-21	
Hexachlorobutadiene	**ND**	0.022	EPA 8270E	6-21-21	6-22-21	
4-Chloro-3-methylphenol	**ND**	0.022	EPA 8270E	6-21-21	6-22-21	
2-Methylnaphthalene	**ND**	0.0044	EPA 8270E/SIM	6-21-21	6-21-21	
1-Methylnaphthalene	**ND**	0.0044	EPA 8270E/SIM	6-21-21	6-21-21	
Hexachlorocyclopentadiene	**ND**	0.022	EPA 8270E	6-21-21	6-22-21	
2,4,6-Trichlorophenol	**ND**	0.022	EPA 8270E	6-21-21	6-22-21	
2,3-Dichloroaniline	**ND**	0.022	EPA 8270E	6-21-21	6-22-21	
2,4,5-Trichlorophenol	**ND**	0.022	EPA 8270E	6-21-21	6-22-21	
2-Chloronaphthalene	**ND**	0.022	EPA 8270E	6-21-21	6-22-21	
2-Nitroaniline	**ND**	0.022	EPA 8270E	6-21-21	6-22-21	
1,4-Dinitrobenzene	**ND**	0.022	EPA 8270E	6-21-21	6-22-21	
Dimethylphthalate	**ND**	0.022	EPA 8270E	6-21-21	6-22-21	
1,3-Dinitrobenzene	**ND**	0.022	EPA 8270E	6-21-21	6-22-21	
2,6-Dinitrotoluene	**ND**	0.011	EPA 8270E	6-21-21	6-22-21	
1,2-Dinitrobenzene	**ND**	0.022	EPA 8270E	6-21-21	6-22-21	
Acenaphthylene	**ND**	0.0044	EPA 8270E/SIM	6-21-21	6-21-21	
3-Nitroaniline	**ND**	0.022	EPA 8270E	6-21-21	6-22-21	

This report pertains to the samples analyzed in accordance with the chain of custody, and is intended only for the use of the individual or company to whom it is addressed.

Date of Report: June 22, 2021
Samples Submitted: June 18, 2021
Laboratory Reference: 2106-181
Project: 11-05150-003

SEMIVOLATILE ORGANICS EPA 8270E/SIM
page 2 of 2

Analyte	Result	PQL	Method	Date Prepared	Date Analyzed	Flags
Client ID:	**DA7SWCS15210617I**					
Laboratory ID:	06-181-02					
2,4-Dinitrophenol	**ND**	0.11	EPA 8270E	6-21-21	6-22-21	
Acenaphthene	**ND**	0.0044	EPA 8270E/SIM	6-21-21	6-21-21	
4-Nitrophenol	**ND**	0.022	EPA 8270E	6-21-21	6-22-21	
2,4-Dinitrotoluene	**ND**	0.011	EPA 8270E	6-21-21	6-22-21	
Dibenzofuran	**ND**	0.022	EPA 8270E	6-21-21	6-22-21	
2,3,5,6-Tetrachlorophenol	**ND**	0.022	EPA 8270E	6-21-21	6-22-21	
2,3,4,6-Tetrachlorophenol	**ND**	0.022	EPA 8270E	6-21-21	6-22-21	
Diethylphthalate	**ND**	0.11	EPA 8270E	6-21-21	6-22-21	
4-Chlorophenyl-phenylether	**ND**	0.022	EPA 8270E	6-21-21	6-22-21	
4-Nitroaniline	**ND**	0.022	EPA 8270E	6-21-21	6-22-21	
Fluorene	**ND**	0.0044	EPA 8270E/SIM	6-21-21	6-21-21	
4,6-Dinitro-2-methylphenol	**ND**	0.11	EPA 8270E	6-21-21	6-22-21	
n-Nitrosodiphenylamine	**ND**	0.022	EPA 8270E	6-21-21	6-22-21	
1,2-Diphenylhydrazine	**ND**	0.022	EPA 8270E	6-21-21	6-22-21	
4-Bromophenyl-phenylether	**ND**	0.022	EPA 8270E	6-21-21	6-22-21	
Hexachlorobenzene	**ND**	0.022	EPA 8270E	6-21-21	6-22-21	
Pentachlorophenol	**ND**	0.044	EPA 8270E	6-21-21	6-22-21	
Phenanthrene	**ND**	0.0044	EPA 8270E/SIM	6-21-21	6-21-21	
Anthracene	**ND**	0.0044	EPA 8270E/SIM	6-21-21	6-21-21	
Carbazole	**ND**	0.022	EPA 8270E	6-21-21	6-22-21	
Di-n-butylphthalate	**ND**	0.11	EPA 8270E	6-21-21	6-22-21	
Fluoranthene	**ND**	0.0044	EPA 8270E/SIM	6-21-21	6-21-21	
Pyrene	**ND**	0.0044	EPA 8270E/SIM	6-21-21	6-21-21	
Butylbenzylphthalate	**ND**	0.11	EPA 8270E	6-21-21	6-22-21	
bis-2-Ethylhexyladipate	**ND**	0.11	EPA 8270E	6-21-21	6-22-21	
3,3'-Dichlorobenzidine	**ND**	0.011	EPA 8270E	6-21-21	6-22-21	
Benzo[a]anthracene	**ND**	0.0044	EPA 8270E/SIM	6-21-21	6-21-21	
Chrysene	**ND**	0.0044	EPA 8270E/SIM	6-21-21	6-21-21	
bis(2-Ethylhexyl)phthalate	**ND**	0.11	EPA 8270E	6-21-21	6-22-21	
Di-n-octylphthalate	**ND**	0.11	EPA 8270E	6-21-21	6-22-21	
Benzo[b]fluoranthene	**ND**	0.0044	EPA 8270E/SIM	6-21-21	6-21-21	
Benzo(j,k)fluoranthene	**ND**	0.0044	EPA 8270E/SIM	6-21-21	6-21-21	
Benzo[a]pyrene	**ND**	0.0044	EPA 8270E/SIM	6-21-21	6-21-21	
Indeno[1,2,3-cd]pyrene	**ND**	0.0044	EPA 8270E/SIM	6-21-21	6-21-21	
Dibenz[a,h]anthracene	**ND**	0.0044	EPA 8270E/SIM	6-21-21	6-21-21	
Benzo[g,h,i]perylene	**ND**	0.0044	EPA 8270E/SIM	6-21-21	6-21-21	
Surrogate:	*Percent Recovery*	*Control Limits*				
2-Fluorophenol	*67*	*26 - 109*				
Phenol-d6	*81*	*33 - 113*				
Nitrobenzene-d5	*73*	*31 - 110*				
2-Fluorobiphenyl	*83*	*42 - 107*				
2,4,6-Tribromophenol	*97*	*42 - 123*				
Terphenyl-d14	*87*	*41 - 115*				

This report pertains to the samples analyzed in accordance with the chain of custody,
and is intended only for the use of the individual or company to whom it is addressed.

Date of Report: June 22, 2021
Samples Submitted: June 18, 2021
Laboratory Reference: 2106-181
Project: 11-05150-003

SEMIVOLATILE ORGANICS EPA 8270E/SIM
page 1 of 2

Matrix: Soil
Units: mg/Kg

Analyte	Result	PQL	Method	Date Prepared	Date Analyzed	Flags
Client ID:	**DA7SWCS16210618I**					
Laboratory ID:	06-181-03					
n-Nitrosodimethylamine	**ND**	0.011	EPA 8270E	6-21-21	6-22-21	
Pyridine	**ND**	0.22	EPA 8270E	6-21-21	6-22-21	
Phenol	**ND**	0.022	EPA 8270E	6-21-21	6-22-21	
Aniline	**ND**	0.11	EPA 8270E	6-21-21	6-22-21	
bis(2-Chloroethyl)ether	**ND**	0.011	EPA 8270E	6-21-21	6-22-21	
2-Chlorophenol	**ND**	0.022	EPA 8270E	6-21-21	6-22-21	
1,3-Dichlorobenzene	**ND**	0.022	EPA 8270E	6-21-21	6-22-21	
1,4-Dichlorobenzene	**ND**	0.022	EPA 8270E	6-21-21	6-22-21	
Benzyl alcohol	**ND**	0.022	EPA 8270E	6-21-21	6-22-21	
1,2-Dichlorobenzene	**ND**	0.022	EPA 8270E	6-21-21	6-22-21	
2-Methylphenol (o-Cresol)	**ND**	0.022	EPA 8270E	6-21-21	6-22-21	
bis(2-Chloroisopropyl)ether	**ND**	0.022	EPA 8270E	6-21-21	6-22-21	
(3+4)-Methylphenol (m,p-Cresol)	**ND**	0.022	EPA 8270E	6-21-21	6-22-21	
n-Nitroso-di-n-propylamine	**ND**	0.011	EPA 8270E	6-21-21	6-22-21	
Hexachloroethane	**ND**	0.022	EPA 8270E	6-21-21	6-22-21	
Nitrobenzene	**ND**	0.022	EPA 8270E	6-21-21	6-22-21	
Isophorone	**ND**	0.022	EPA 8270E	6-21-21	6-22-21	
2-Nitrophenol	**ND**	0.022	EPA 8270E	6-21-21	6-22-21	
2,4-Dimethylphenol	**ND**	0.022	EPA 8270E	6-21-21	6-22-21	
bis(2-Chloroethoxy)methane	**ND**	0.022	EPA 8270E	6-21-21	6-22-21	
2,4-Dichlorophenol	**ND**	0.022	EPA 8270E	6-21-21	6-22-21	
1,2,4-Trichlorobenzene	**ND**	0.022	EPA 8270E	6-21-21	6-22-21	
Naphthalene	**ND**	0.0045	EPA 8270E/SIM	6-21-21	6-21-21	
4-Chloroaniline	**ND**	0.011	EPA 8270E	6-21-21	6-22-21	
Hexachlorobutadiene	**ND**	0.022	EPA 8270E	6-21-21	6-22-21	
4-Chloro-3-methylphenol	**ND**	0.022	EPA 8270E	6-21-21	6-22-21	
2-Methylnaphthalene	**ND**	0.0045	EPA 8270E/SIM	6-21-21	6-21-21	
1-Methylnaphthalene	**ND**	0.0045	EPA 8270E/SIM	6-21-21	6-21-21	
Hexachlorocyclopentadiene	**ND**	0.022	EPA 8270E	6-21-21	6-22-21	
2,4,6-Trichlorophenol	**ND**	0.022	EPA 8270E	6-21-21	6-22-21	
2,3-Dichloroaniline	**ND**	0.022	EPA 8270E	6-21-21	6-22-21	
2,4,5-Trichlorophenol	**ND**	0.022	EPA 8270E	6-21-21	6-22-21	
2-Chloronaphthalene	**ND**	0.022	EPA 8270E	6-21-21	6-22-21	
2-Nitroaniline	**ND**	0.022	EPA 8270E	6-21-21	6-22-21	
1,4-Dinitrobenzene	**ND**	0.022	EPA 8270E	6-21-21	6-22-21	
Dimethylphthalate	**ND**	0.022	EPA 8270E	6-21-21	6-22-21	
1,3-Dinitrobenzene	**ND**	0.022	EPA 8270E	6-21-21	6-22-21	
2,6-Dinitrotoluene	**ND**	0.011	EPA 8270E	6-21-21	6-22-21	
1,2-Dinitrobenzene	**ND**	0.022	EPA 8270E	6-21-21	6-22-21	
Acenaphthylene	**ND**	0.0045	EPA 8270E/SIM	6-21-21	6-21-21	
3-Nitroaniline	**ND**	0.022	EPA 8270E	6-21-21	6-22-21	

This report pertains to the samples analyzed in accordance with the chain of custody, and is intended only for the use of the individual or company to whom it is addressed.

Date of Report: June 22, 2021
Samples Submitted: June 18, 2021
Laboratory Reference: 2106-181
Project: 11-05150-003

SEMIVOLATILE ORGANICS EPA 8270E/SIM
page 2 of 2

Analyte	Result	PQL	Method	Date Prepared	Date Analyzed	Flags
Client ID:	**DA7SWCS16210618I**					
Laboratory ID:	06-181-03					
2,4-Dinitrophenol	**ND**	0.11	EPA 8270E	6-21-21	6-22-21	
Acenaphthene	**ND**	0.0045	EPA 8270E/SIM	6-21-21	6-21-21	
4-Nitrophenol	**ND**	0.022	EPA 8270E	6-21-21	6-22-21	
2,4-Dinitrotoluene	**ND**	0.011	EPA 8270E	6-21-21	6-22-21	
Dibenzofuran	**ND**	0.022	EPA 8270E	6-21-21	6-22-21	
2,3,5,6-Tetrachlorophenol	**ND**	0.022	EPA 8270E	6-21-21	6-22-21	
2,3,4,6-Tetrachlorophenol	**ND**	0.022	EPA 8270E	6-21-21	6-22-21	
Diethylphthalate	**ND**	0.11	EPA 8270E	6-21-21	6-22-21	
4-Chlorophenyl-phenylether	**ND**	0.022	EPA 8270E	6-21-21	6-22-21	
4-Nitroaniline	**ND**	0.022	EPA 8270E	6-21-21	6-22-21	
Fluorene	**ND**	0.0045	EPA 8270E/SIM	6-21-21	6-21-21	
4,6-Dinitro-2-methylphenol	**ND**	0.11	EPA 8270E	6-21-21	6-22-21	
n-Nitrosodiphenylamine	**ND**	0.022	EPA 8270E	6-21-21	6-22-21	
1,2-Diphenylhydrazine	**ND**	0.022	EPA 8270E	6-21-21	6-22-21	
4-Bromophenyl-phenylether	**ND**	0.022	EPA 8270E	6-21-21	6-22-21	
Hexachlorobenzene	**ND**	0.022	EPA 8270E	6-21-21	6-22-21	
Pentachlorophenol	**ND**	0.045	EPA 8270E	6-21-21	6-22-21	
Phenanthrene	**ND**	0.0045	EPA 8270E/SIM	6-21-21	6-21-21	
Anthracene	**ND**	0.0045	EPA 8270E/SIM	6-21-21	6-21-21	
Carbazole	**ND**	0.022	EPA 8270E	6-21-21	6-22-21	
Di-n-butylphthalate	**ND**	0.11	EPA 8270E	6-21-21	6-22-21	
Fluoranthene	**ND**	0.0045	EPA 8270E/SIM	6-21-21	6-21-21	
Pyrene	**ND**	0.0045	EPA 8270E/SIM	6-21-21	6-21-21	
Butylbenzylphthalate	**ND**	0.11	EPA 8270E	6-21-21	6-22-21	
bis-2-Ethylhexyladipate	**ND**	0.11	EPA 8270E	6-21-21	6-22-21	
3,3'-Dichlorobenzidine	**ND**	0.011	EPA 8270E	6-21-21	6-22-21	
Benzo[a]anthracene	**ND**	0.0045	EPA 8270E/SIM	6-21-21	6-21-21	
Chrysene	**ND**	0.0045	EPA 8270E/SIM	6-21-21	6-21-21	
bis(2-Ethylhexyl)phthalate	**ND**	0.11	EPA 8270E	6-21-21	6-22-21	
Di-n-octylphthalate	**ND**	0.11	EPA 8270E	6-21-21	6-22-21	
Benzo[b]fluoranthene	**ND**	0.0045	EPA 8270E/SIM	6-21-21	6-21-21	
Benzo(j,k)fluoranthene	**ND**	0.0045	EPA 8270E/SIM	6-21-21	6-21-21	
Benzo[a]pyrene	**ND**	0.0045	EPA 8270E/SIM	6-21-21	6-21-21	
Indeno[1,2,3-cd]pyrene	**ND**	0.0045	EPA 8270E/SIM	6-21-21	6-21-21	
Dibenz[a,h]anthracene	**ND**	0.0045	EPA 8270E/SIM	6-21-21	6-21-21	
Benzo[g,h,i]perylene	**ND**	0.0045	EPA 8270E/SIM	6-21-21	6-21-21	
Surrogate:	*Percent Recovery*	*Control Limits*				
2-Fluorophenol	*30*	*26 - 109*				
Phenol-d6	*47*	*33 - 113*				
Nitrobenzene-d5	*33*	*31 - 110*				
2-Fluorobiphenyl	*46*	*42 - 107*				
2,4,6-Tribromophenol	*72*	*42 - 123*				
Terphenyl-d14	*61*	*41 - 115*				

This report pertains to the samples analyzed in accordance with the chain of custody, and is intended only for the use of the individual or company to whom it is addressed.

Date of Report: June 22, 2021
Samples Submitted: June 18, 2021
Laboratory Reference: 2106-181
Project: 11-05150-003

SEMIVOLATILE ORGANICS EPA 8270E/SIM
QUALITY CONTROL
page 1 of 2

Matrix: Soil
Units: mg/Kg

Analyte	Result	PQL	Method	Date Prepared	Date Analyzed	Flags
METHOD BLANK						
Laboratory ID:	MB0621S1					
n-Nitrosodimethylamine	**ND**	0.010	EPA 8270E	6-21-21	6-21-21	
Pyridine	**ND**	0.20	EPA 8270E	6-21-21	6-21-21	
Phenol	**ND**	0.020	EPA 8270E	6-21-21	6-21-21	
Aniline	**ND**	0.10	EPA 8270E	6-21-21	6-21-21	
bis(2-Chloroethyl)ether	**ND**	0.010	EPA 8270E	6-21-21	6-21-21	
2-Chlorophenol	**ND**	0.020	EPA 8270E	6-21-21	6-21-21	
1,3-Dichlorobenzene	**ND**	0.020	EPA 8270E	6-21-21	6-21-21	
1,4-Dichlorobenzene	**ND**	0.020	EPA 8270E	6-21-21	6-21-21	
Benzyl alcohol	**ND**	0.020	EPA 8270E	6-21-21	6-21-21	
1,2-Dichlorobenzene	**ND**	0.020	EPA 8270E	6-21-21	6-21-21	
2-Methylphenol (o-Cresol)	**ND**	0.020	EPA 8270E	6-21-21	6-21-21	
bis(2-Chloroisopropyl)ether	**ND**	0.020	EPA 8270E	6-21-21	6-21-21	
(3+4)-Methylphenol (m,p-Cresol)	**ND**	0.020	EPA 8270E	6-21-21	6-21-21	
n-Nitroso-di-n-propylamine	**ND**	0.010	EPA 8270E	6-21-21	6-21-21	
Hexachloroethane	**ND**	0.020	EPA 8270E	6-21-21	6-21-21	
Nitrobenzene	**ND**	0.020	EPA 8270E	6-21-21	6-21-21	
Isophorone	**ND**	0.020	EPA 8270E	6-21-21	6-21-21	
2-Nitrophenol	**ND**	0.020	EPA 8270E	6-21-21	6-21-21	
2,4-Dimethylphenol	**ND**	0.020	EPA 8270E	6-21-21	6-21-21	
bis(2-Chloroethoxy)methane	**ND**	0.020	EPA 8270E	6-21-21	6-21-21	
2,4-Dichlorophenol	**ND**	0.020	EPA 8270E	6-21-21	6-21-21	
1,2,4-Trichlorobenzene	**ND**	0.020	EPA 8270E	6-21-21	6-21-21	
Naphthalene	**ND**	0.0040	EPA 8270E/SIM	6-21-21	6-21-21	
4-Chloroaniline	**ND**	0.010	EPA 8270E	6-21-21	6-21-21	
Hexachlorobutadiene	**ND**	0.020	EPA 8270E	6-21-21	6-21-21	
4-Chloro-3-methylphenol	**ND**	0.020	EPA 8270E	6-21-21	6-21-21	
2-Methylnaphthalene	**ND**	0.0040	EPA 8270E/SIM	6-21-21	6-21-21	
1-Methylnaphthalene	**ND**	0.0040	EPA 8270E/SIM	6-21-21	6-21-21	
Hexachlorocyclopentadiene	**ND**	0.020	EPA 8270E	6-21-21	6-21-21	
2,4,6-Trichlorophenol	**ND**	0.020	EPA 8270E	6-21-21	6-21-21	
2,3-Dichloroaniline	**ND**	0.020	EPA 8270E	6-21-21	6-21-21	
2,4,5-Trichlorophenol	**ND**	0.020	EPA 8270E	6-21-21	6-21-21	
2-Chloronaphthalene	**ND**	0.020	EPA 8270E	6-21-21	6-21-21	
2-Nitroaniline	**ND**	0.020	EPA 8270E	6-21-21	6-21-21	
1,4-Dinitrobenzene	**ND**	0.020	EPA 8270E	6-21-21	6-21-21	
Dimethylphthalate	**ND**	0.020	EPA 8270E	6-21-21	6-21-21	
1,3-Dinitrobenzene	**ND**	0.020	EPA 8270E	6-21-21	6-21-21	
2,6-Dinitrotoluene	**ND**	0.010	EPA 8270E	6-21-21	6-21-21	
1,2-Dinitrobenzene	**ND**	0.020	EPA 8270E	6-21-21	6-21-21	
Acenaphthylene	**ND**	0.0040	EPA 8270E/SIM	6-21-21	6-21-21	
3-Nitroaniline	**ND**	0.020	EPA 8270E	6-21-21	6-21-21	

This report pertains to the samples analyzed in accordance with the chain of custody, and is intended only for the use of the individual or company to whom it is addressed.

Date of Report: June 22, 2021
Samples Submitted: June 18, 2021
Laboratory Reference: 2106-181
Project: 11-05150-003

SEMIVOLATILE ORGANICS EPA 8270E/SIM
QUALITY CONTROL
page 2 of 2

Analyte	Result	PQL	Method	Date Prepared	Date Analyzed	Flags
METHOD BLANK						
Laboratory ID:	MB0621S1					
2,4-Dinitrophenol	**ND**	0.10	EPA 8270E	6-21-21	6-21-21	
Acenaphthene	**ND**	0.0040	EPA 8270E/SIM	6-21-21	6-21-21	
4-Nitrophenol	**ND**	0.020	EPA 8270E	6-21-21	6-21-21	
2,4-Dinitrotoluene	**ND**	0.010	EPA 8270E	6-21-21	6-21-21	
Dibenzofuran	**ND**	0.020	EPA 8270E	6-21-21	6-21-21	
2,3,5,6-Tetrachlorophenol	**ND**	0.020	EPA 8270E	6-21-21	6-21-21	
2,3,4,6-Tetrachlorophenol	**ND**	0.020	EPA 8270E	6-21-21	6-21-21	
Diethylphthalate	**ND**	0.10	EPA 8270E	6-21-21	6-21-21	
4-Chlorophenyl-phenylether	**ND**	0.020	EPA 8270E	6-21-21	6-21-21	
4-Nitroaniline	**ND**	0.020	EPA 8270E	6-21-21	6-21-21	
Fluorene	**ND**	0.0040	EPA 8270E/SIM	6-21-21	6-21-21	
4,6-Dinitro-2-methylphenol	**ND**	0.10	EPA 8270E	6-21-21	6-21-21	
n-Nitrosodiphenylamine	**ND**	0.020	EPA 8270E	6-21-21	6-21-21	
1,2-Diphenylhydrazine	**ND**	0.020	EPA 8270E	6-21-21	6-21-21	
4-Bromophenyl-phenylether	**ND**	0.020	EPA 8270E	6-21-21	6-21-21	
Hexachlorobenzene	**ND**	0.020	EPA 8270E	6-21-21	6-21-21	
Pentachlorophenol	**0.067**	0.040	EPA 8270E	6-21-21	6-21-21	
Phenanthrene	**ND**	0.0040	EPA 8270E/SIM	6-21-21	6-21-21	
Anthracene	**ND**	0.0040	EPA 8270E/SIM	6-21-21	6-21-21	
Carbazole	**ND**	0.020	EPA 8270E	6-21-21	6-21-21	
Di-n-butylphthalate	**ND**	0.10	EPA 8270E	6-21-21	6-21-21	
Fluoranthene	**ND**	0.0040	EPA 8270E/SIM	6-21-21	6-21-21	
Pyrene	**ND**	0.0040	EPA 8270E/SIM	6-21-21	6-21-21	
Butylbenzylphthalate	**ND**	0.10	EPA 8270E	6-21-21	6-21-21	
bis-2-Ethylhexyladipate	**ND**	0.10	EPA 8270E	6-21-21	6-21-21	
3,3'-Dichlorobenzidine	**ND**	0.010	EPA 8270E	6-21-21	6-21-21	
Benzo[a]anthracene	**ND**	0.0040	EPA 8270E/SIM	6-21-21	6-21-21	
Chrysene	**ND**	0.0040	EPA 8270E/SIM	6-21-21	6-21-21	
bis(2-Ethylhexyl)phthalate	**ND**	0.10	EPA 8270E	6-21-21	6-21-21	
Di-n-octylphthalate	**ND**	0.10	EPA 8270E	6-21-21	6-21-21	
Benzo[b]fluoranthene	**ND**	0.0040	EPA 8270E/SIM	6-21-21	6-21-21	
Benzo(j,k)fluoranthene	**ND**	0.0040	EPA 8270E/SIM	6-21-21	6-21-21	
Benzo[a]pyrene	**ND**	0.0040	EPA 8270E/SIM	6-21-21	6-21-21	
Indeno[1,2,3-cd]pyrene	**ND**	0.0040	EPA 8270E/SIM	6-21-21	6-21-21	
Dibenz[a,h]anthracene	**ND**	0.0040	EPA 8270E/SIM	6-21-21	6-21-21	
Benzo[g,h,i]perylene	**ND**	0.0040	EPA 8270E/SIM	6-21-21	6-21-21	
Surrogate:	*Percent Recovery*	*Control Limits*				
2-Fluorophenol	*61*	*26 - 109*				
Phenol-d6	*73*	*33 - 113*				
Nitrobenzene-d5	*70*	*31 - 110*				
2-Fluorobiphenyl	*73*	*42 - 107*				
2,4,6-Tribromophenol	*101*	*42 - 123*				
Terphenyl-d14	*88*	*41 - 115*				

This report pertains to the samples analyzed in accordance with the chain of custody, and is intended only for the use of the individual or company to whom it is addressed.

Date of Report: June 22, 2021
Samples Submitted: June 18, 2021
Laboratory Reference: 2106-181
Project: 11-05150-003

SEMIVOLATILE ORGANICS EPA 8270E/SIM
QUALITY CONTROL

Matrix: Soil
Units: mg/Kg

Analyte	Result		Spike Level		Percent Recovery		Recovery Limits	RPD	RPD Limit	Flags
SPIKE BLANKS										
Laboratory ID:	SB0621S1									
	SB	SBD	SB	SBD	SB	SBD				
Phenol	**0.771**	**0.884**	1.33	1.33	58	66	47 - 106	14	30	
2-Chlorophenol	**0.806**	**0.910**	1.33	1.33	61	68	51 - 105	12	31	
1,4-Dichlorobenzene	**0.382**	**0.426**	0.667	0.667	57	64	49 - 101	11	33	
n-Nitroso-di-n-propylamine	**0.430**	**0.482**	0.667	0.667	64	72	50 - 105	11	26	
1,2,4-Trichlorobenzene	**0.421**	**0.477**	0.667	0.667	63	72	50 - 107	12	31	
4-Chloro-3-methylphenol	**1.14**	**1.22**	1.33	1.33	86	92	58 - 114	7	22	
Acenaphthene	**0.517**	**0.551**	0.667	0.667	78	83	52 - 102	6	22	
4-Nitrophenol	**1.52**	**1.64**	1.33	1.33	114	123	51 - 126	8	20	
2,4-Dinitrotoluene	**0.623**	**0.664**	0.667	0.667	93	100	54 - 108	6	19	
Pentachlorophenol	**1.41**	**1.54**	1.33	1.33	106	116	20 - 148	9	30	
Pyrene	**0.587**	**0.616**	0.667	0.667	88	92	55 - 112	5	19	
Surrogate:										
2-Fluorophenol					*58*	*65*	*26 - 109*			
Phenol-d6					*70*	*77*	*33 - 113*			
Nitrobenzene-d5					*64*	*72*	*31 - 110*			
2-Fluorobiphenyl					*73*	*81*	*42 - 107*			
2,4,6-Tribromophenol					*102*	*107*	*42 - 123*			
Terphenyl-d14					*87*	*92*	*41 - 115*			

This report pertains to the samples analyzed in accordance with the chain of custody, and is intended only for the use of the individual or company to whom it is addressed.

Date of Report: June 22, 2021
Samples Submitted: June 18, 2021
Laboratory Reference: 2106-181
Project: 11-05150-003

ORGANOCHLORINE PESTICIDES EPA 8081B

Matrix: Soil
Units: ug/Kg (ppb)

Analyte	Result	PQL	Method	Date Prepared	Date Analyzed	Flags
Client ID:	**DA7SWCS11210617I**					
Laboratory ID:	06-181-01					
alpha-BHC	**ND**	0.25	EPA 8081B	6-21-21	6-21-21	
gamma-BHC (Lindane)	**ND**	0.25	EPA 8081B	6-21-21	6-21-21	
beta-BHC	**ND**	0.25	EPA 8081B	6-21-21	6-21-21	
delta-BHC	**ND**	0.25	EPA 8081B	6-21-21	6-21-21	
Heptachlor	**3.7**	0.25	EPA 8081B	6-21-21	6-21-21	P
Aldrin	**ND**	0.25	EPA 8081B	6-21-21	6-21-21	
Heptachlor Epoxide	**ND**	0.25	EPA 8081B	6-21-21	6-21-21	
gamma-Chlordane	**ND**	0.25	EPA 8081B	6-21-21	6-21-21	
alpha-Chlordane	**0.61**	0.25	EPA 8081B	6-21-21	6-21-21	
4,4'-DDE	**0.35**	0.25	EPA 8081B	6-21-21	6-21-21	P
Endosulfan I	**ND**	0.25	EPA 8081B	6-21-21	6-21-21	
Dieldrin	**ND**	0.25	EPA 8081B	6-21-21	6-21-21	
Endrin	**ND**	0.25	EPA 8081B	6-21-21	6-21-21	
4,4'-DDD	**ND**	0.25	EPA 8081B	6-21-21	6-21-21	
Endosulfan II	**ND**	0.25	EPA 8081B	6-21-21	6-21-21	
4,4'-DDT	**0.55**	0.25	EPA 8081B	6-21-21	6-21-21	P
Endrin Aldehyde	**ND**	0.61	EPA 8081B	6-21-21	6-21-21	
Methoxychlor	**ND**	1.2	EPA 8081B	6-21-21	6-21-21	
Endosulfan Sulfate	**ND**	0.61	EPA 8081B	6-21-21	6-21-21	
Endrin Ketone	**0.42**	0.25	EPA 8081B	6-21-21	6-21-21	P
Toxaphene	**ND**	2.5	EPA 8081B	6-21-21	6-21-21	
Surrogate:	*Percent Recovery*	*Control Limits*				
TCMX	*52*	*30-110*				
DCB	*79*	*40-117*				

This report pertains to the samples analyzed in accordance with the chain of custody, and is intended only for the use of the individual or company to whom it is addressed.

Date of Report: June 22, 2021
Samples Submitted: June 18, 2021
Laboratory Reference: 2106-181
Project: 11-05150-003

ORGANOCHLORINE PESTICIDES EPA 8081B

Matrix: Soil
Units: ug/Kg (ppb)

Analyte	Result	PQL	Method	Date Prepared	Date Analyzed	Flags
Client ID:	**DA7SWCS15210617I**					
Laboratory ID:	06-181-02					
alpha-BHC	**ND**	0.22	EPA 8081B	6-21-21	6-21-21	
gamma-BHC (Lindane)	**ND**	0.22	EPA 8081B	6-21-21	6-21-21	
beta-BHC	**ND**	0.22	EPA 8081B	6-21-21	6-21-21	
delta-BHC	**ND**	0.22	EPA 8081B	6-21-21	6-21-21	
Heptachlor	**ND**	0.22	EPA 8081B	6-21-21	6-21-21	
Aldrin	**ND**	0.22	EPA 8081B	6-21-21	6-21-21	
Heptachlor Epoxide	**ND**	0.22	EPA 8081B	6-21-21	6-21-21	
gamma-Chlordane	**ND**	0.22	EPA 8081B	6-21-21	6-21-21	
alpha-Chlordane	**ND**	0.22	EPA 8081B	6-21-21	6-21-21	
4,4'-DDE	**ND**	0.22	EPA 8081B	6-21-21	6-21-21	
Endosulfan I	**ND**	0.22	EPA 8081B	6-21-21	6-21-21	
Dieldrin	**ND**	0.22	EPA 8081B	6-21-21	6-21-21	
Endrin	**ND**	0.22	EPA 8081B	6-21-21	6-21-21	
4,4'-DDD	**ND**	0.22	EPA 8081B	6-21-21	6-21-21	
Endosulfan II	**ND**	0.22	EPA 8081B	6-21-21	6-21-21	
4,4'-DDT	**ND**	0.22	EPA 8081B	6-21-21	6-21-21	
Endrin Aldehyde	**ND**	0.54	EPA 8081B	6-21-21	6-21-21	
Methoxychlor	**ND**	1.1	EPA 8081B	6-21-21	6-21-21	
Endosulfan Sulfate	**ND**	0.54	EPA 8081B	6-21-21	6-21-21	
Endrin Ketone	**ND**	0.22	EPA 8081B	6-21-21	6-21-21	
Toxaphene	**ND**	2.2	EPA 8081B	6-21-21	6-21-21	
Surrogate:	*Percent Recovery*	*Control Limits*				
TCMX	*54*	*30-110*				
DCB	*78*	*40-117*				

This report pertains to the samples analyzed in accordance with the chain of custody, and is intended only for the use of the individual or company to whom it is addressed.

Date of Report: June 22, 2021
Samples Submitted: June 18, 2021
Laboratory Reference: 2106-181
Project: 11-05150-003

ORGANOCHLORINE PESTICIDES EPA 8081B

Matrix: Soil
Units: ug/Kg (ppb)

Analyte	Result	PQL	Method	Date Prepared	Date Analyzed	Flags
Client ID:	**DA7SWCS16210618I**					
Laboratory ID:	06-181-03					
alpha-BHC	**ND**	0.22	EPA 8081B	6-21-21	6-21-21	
gamma-BHC (Lindane)	**ND**	0.22	EPA 8081B	6-21-21	6-21-21	
beta-BHC	**ND**	0.22	EPA 8081B	6-21-21	6-21-21	
delta-BHC	**ND**	0.22	EPA 8081B	6-21-21	6-21-21	
Heptachlor	**ND**	0.22	EPA 8081B	6-21-21	6-21-21	
Aldrin	**ND**	0.22	EPA 8081B	6-21-21	6-21-21	
Heptachlor Epoxide	**ND**	0.22	EPA 8081B	6-21-21	6-21-21	
gamma-Chlordane	**ND**	0.22	EPA 8081B	6-21-21	6-21-21	
alpha-Chlordane	**ND**	0.22	EPA 8081B	6-21-21	6-21-21	
4,4'-DDE	**ND**	0.22	EPA 8081B	6-21-21	6-21-21	
Endosulfan I	**ND**	0.22	EPA 8081B	6-21-21	6-21-21	
Dieldrin	**ND**	0.22	EPA 8081B	6-21-21	6-21-21	
Endrin	**ND**	0.22	EPA 8081B	6-21-21	6-21-21	
4,4'-DDD	**ND**	0.22	EPA 8081B	6-21-21	6-21-21	
Endosulfan II	**ND**	0.22	EPA 8081B	6-21-21	6-21-21	
4,4'-DDT	**ND**	0.22	EPA 8081B	6-21-21	6-21-21	
Endrin Aldehyde	**ND**	0.56	EPA 8081B	6-21-21	6-21-21	
Methoxychlor	**ND**	1.1	EPA 8081B	6-21-21	6-21-21	
Endosulfan Sulfate	**ND**	0.56	EPA 8081B	6-21-21	6-21-21	
Endrin Ketone	**ND**	0.22	EPA 8081B	6-21-21	6-21-21	
Toxaphene	**ND**	2.2	EPA 8081B	6-21-21	6-21-21	
Surrogate:	*Percent Recovery*	*Control Limits*				
TCMX	*40*	*30-110*				
DCB	*69*	*40-117*				

This report pertains to the samples analyzed in accordance with the chain of custody, and is intended only for the use of the individual or company to whom it is addressed.

Date of Report: June 22, 2021
Samples Submitted: June 18, 2021
Laboratory Reference: 2106-181
Project: 11-05150-003

ORGANOCHLORINE PESTICIDES EPA 8081B QUALITY CONTROL

Matrix: Soil
Units: ug/Kg (ppb)

Analyte	Result	PQL	Method	Date Prepared	Date Analyzed	Flags
METHOD BLANK						
Laboratory ID:	MB0621S3					
alpha-BHC	**ND**	0.20	EPA 8081B	6-21-21	6-21-21	
gamma-BHC (Lindane)	**ND**	0.20	EPA 8081B	6-21-21	6-21-21	
beta-BHC	**ND**	0.20	EPA 8081B	6-21-21	6-21-21	
delta-BHC	**ND**	0.20	EPA 8081B	6-21-21	6-21-21	
Heptachlor	**ND**	0.20	EPA 8081B	6-21-21	6-21-21	
Aldrin	**ND**	0.20	EPA 8081B	6-21-21	6-21-21	
Heptachlor Epoxide	**ND**	0.20	EPA 8081B	6-21-21	6-21-21	
gamma-Chlordane	**ND**	0.20	EPA 8081B	6-21-21	6-21-21	
alpha-Chlordane	**ND**	0.20	EPA 8081B	6-21-21	6-21-21	
4,4'-DDE	**ND**	0.20	EPA 8081B	6-21-21	6-21-21	
Endosulfan I	**ND**	0.20	EPA 8081B	6-21-21	6-21-21	
Dieldrin	**ND**	0.20	EPA 8081B	6-21-21	6-21-21	
Endrin	**ND**	0.20	EPA 8081B	6-21-21	6-21-21	
4,4'-DDD	**ND**	0.20	EPA 8081B	6-21-21	6-21-21	
Endosulfan II	**ND**	0.20	EPA 8081B	6-21-21	6-21-21	
4,4'-DDT	**ND**	0.20	EPA 8081B	6-21-21	6-21-21	
Endrin Aldehyde	**ND**	0.50	EPA 8081B	6-21-21	6-21-21	
Methoxychlor	**ND**	1.0	EPA 8081B	6-21-21	6-21-21	
Endosulfan Sulfate	**ND**	0.50	EPA 8081B	6-21-21	6-21-21	
Endrin Ketone	**ND**	0.20	EPA 8081B	6-21-21	6-21-21	
Toxaphene	**ND**	2.0	EPA 8081B	6-21-21	6-21-21	
Surrogate:	*Percent Recovery*	*Control Limits*				
TCMX	*61*	*30-110*				
DCB	*65*	*40-117*				

This report pertains to the samples analyzed in accordance with the chain of custody, and is intended only for the use of the individual or company to whom it is addressed.

Date of Report: June 22, 2021
Samples Submitted: June 18, 2021
Laboratory Reference: 2106-181
Project: 11-05150-003

ORGANOCHLORINE PESTICIDES EPA 8081B QUALITY CONTROL

Matrix: Soil
Units: ug/Kg (ppb)

Analyte	Result		Spike Level		Source Result	Percent Recovery		Recovery Limits	RPD	RPD Limit	Flags
SPIKE BLANKS											
Laboratory ID:	SB0621S3										
	SB	SBD	SB	SBD		SB	SBD				
alpha-BHC	**7.07**	**6.58**	10.0	10.0	N/A	**71**	**66**	65-115	7	15	
gamma-BHC (Lindane)	**7.17**	**6.75**	10.0	10.0	N/A	**72**	**67**	69-116	6	15	I
beta-BHC	**8.84**	**8.58**	10.0	10.0	N/A	**88**	**86**	63-116	3	15	
delta-BHC	**6.94**	**6.64**	10.0	10.0	N/A	**69**	**66**	66-116	4	15	
Heptachlor	**9.05**	**8.61**	10.0	10.0	N/A	**91**	**86**	63-119	5	15	
Aldrin	**8.49**	**8.04**	10.0	10.0	N/A	**85**	**80**	60-116	5	15	
Heptachlor Epoxide	**9.27**	**8.73**	10.0	10.0	N/A	**93**	**87**	65-116	6	15	
gamma-Chlordane	**8.09**	**7.77**	10.0	10.0	N/A	**81**	**78**	64-116	4	15	
alpha-Chlordane	**8.01**	**7.73**	10.0	10.0	N/A	**80**	**77**	62-119	4	15	
4,4'-DDE	**9.93**	**9.62**	10.0	10.0	N/A	**99**	**96**	69-120	3	15	
Endosulfan I	**9.05**	**8.73**	10.0	10.0	N/A	**91**	**87**	60-121	4	15	
Dieldrin	**9.41**	**9.04**	10.0	10.0	N/A	**94**	**90**	64-115	4	15	
Endrin	**9.80**	**9.42**	10.0	10.0	N/A	**98**	**94**	62-118	4	15	
4,4'-DDD	**7.33**	**7.22**	10.0	10.0	N/A	**73**	**72**	64-124	2	15	
Endosulfan II	**9.37**	**9.10**	10.0	10.0	N/A	**94**	**91**	64-115	3	15	
4,4'-DDT	**7.45**	**7.22**	10.0	10.0	N/A	**75**	**72**	57-130	3	15	
Endrin Aldehyde	**8.64**	**8.36**	10.0	10.0	N/A	**86**	**84**	57-114	3	15	
Methoxychlor	**10.0**	**9.94**	10.0	10.0	N/A	**100**	**99**	49-129	1	15	
Endosulfan Sulfate	**8.14**	**8.01**	10.0	10.0	N/A	**81**	**80**	61-115	2	15	
Endrin Ketone	**8.63**	**8.40**	10.0	10.0	N/A	**86**	**84**	64-116	3	15	
Surrogate:											
TCMX						*63*	*59*	*30-110*			
DCB						*63*	*61*	*40-117*			

This report pertains to the samples analyzed in accordance with the chain of custody, and is intended only for the use of the individual or company to whom it is addressed.

Date of Report: June 22, 2021
Samples Submitted: June 18, 2021
Laboratory Reference: 2106-181
Project: 11-05150-003

TOTAL METALS
EPA 6010D/6020B/7471B

Matrix: Soil
Units: mg/Kg (ppm)

Analyte	Result	PQL	Method	Date Prepared	Date Analyzed	Flags
Client ID:	**DA7SWCS11210617I**					
Laboratory ID:	06-181-01					
Arsenic	**ND**	6.1	EPA 6010D	6-21-21	6-21-21	
Barium	**72**	3.1	EPA 6010D	6-21-21	6-21-21	
Cadmium	**ND**	0.61	EPA 6010D	6-21-21	6-21-21	
Chromium	**19**	0.61	EPA 6010D	6-21-21	6-21-21	
Lead	**6.7**	6.1	EPA 6010D	6-21-21	6-21-21	
Mercury	**ND**	0.061	EPA 7471B	6-21-21	6-21-21	
Selenium	**0.22**	0.15	EPA 6020B	6-21-21	6-21-21	
Silver	**ND**	1.2	EPA 6010D	6-21-21	6-21-21	
Client ID:	**DA7SWCS15210617I**					
Laboratory ID:	06-181-02					
Arsenic	**ND**	5.4	EPA 6010D	6-21-21	6-21-21	
Barium	**54**	2.7	EPA 6010D	6-21-21	6-21-21	
Cadmium	**ND**	0.54	EPA 6010D	6-21-21	6-21-21	
Chromium	**18**	0.54	EPA 6010D	6-21-21	6-21-21	
Lead	**ND**	5.4	EPA 6010D	6-21-21	6-21-21	
Mercury	**ND**	0.054	EPA 7471B	6-21-21	6-21-21	
Selenium	**0.30**	0.14	EPA 6020B	6-21-21	6-21-21	
Silver	**ND**	1.1	EPA 6010D	6-21-21	6-21-21	
Client ID:	**DA7SWCS16210618I**					
Laboratory ID:	06-181-03					
Arsenic	**ND**	5.6	EPA 6010D	6-21-21	6-21-21	
Barium	**39**	2.8	EPA 6010D	6-21-21	6-21-21	
Cadmium	**ND**	0.56	EPA 6010D	6-21-21	6-21-21	
Chromium	**19**	0.56	EPA 6010D	6-21-21	6-21-21	
Lead	**ND**	5.6	EPA 6010D	6-21-21	6-21-21	
Mercury	**ND**	0.056	EPA 7471B	6-21-21	6-21-21	
Selenium	**ND**	0.14	EPA 6020B	6-21-21	6-21-21	
Silver	**ND**	1.1	EPA 6010D	6-21-21	6-21-21	

This report pertains to the samples analyzed in accordance with the chain of custody, and is intended only for the use of the individual or company to whom it is addressed.

Date of Report: June 22, 2021
Samples Submitted: June 18, 2021
Laboratory Reference: 2106-181
Project: 11-05150-003

TOTAL METALS
EPA 6010D/6020B/7471B
QUALITY CONTROL

Matrix: Soil
Units: mg/Kg (ppm)

Analyte	Result	PQL	Method	Date Prepared	Date Analyzed	Flags
METHOD BLANK						
Laboratory ID:	MB0621SM2					
Arsenic	**ND**	5.0	EPA 6010D	6-21-21	6-21-21	
Barium	**ND**	2.5	EPA 6010D	6-21-21	6-21-21	
Cadmium	**ND**	0.50	EPA 6010D	6-21-21	6-21-21	
Chromium	**ND**	0.50	EPA 6010D	6-21-21	6-21-21	
Lead	**ND**	5.0	EPA 6010D	6-21-21	6-21-21	
Silver	**ND**	1.0	EPA 6010D	6-21-21	6-21-21	
Laboratory ID:	MB0621SM1					
Selenium	**0.25**	0.13	EPA 6020B	6-21-21	6-21-21	
Laboratory ID:	MB0621S1					
Mercury	**ND**	0.050	EPA 7471B	6-21-21	6-21-21	

This report pertains to the samples analyzed in accordance with the chain of custody,
and is intended only for the use of the individual or company to whom it is addressed.

Date of Report: June 22, 2021
Samples Submitted: June 18, 2021
Laboratory Reference: 2106-181
Project: 11-05150-003

TOTAL METALS
EPA 6010D/6020B/7471B
QUALITY CONTROL

Matrix: Soil
Units: mg/Kg (ppm)

Analyte	Result		Spike Level		Source Result	Percent Recovery		Recovery Limits	RPD	RPD Limit	Flags
DUPLICATE											
Laboratory ID:	06-183-01										
	ORIG	DUP									
Arsenic	**ND**	**5.20**	NA	NA		NA		NA	NA	20	
Barium	**36.8**	**35.5**	NA	NA		NA		NA	4	20	
Cadmium	**ND**	**ND**	NA	NA		NA		NA	NA	20	
Chromium	**32.4**	**33.3**	NA	NA		NA		NA	3	20	
Lead	**ND**	**ND**	NA	NA		NA		NA	NA	20	
Silver	**ND**	**ND**	NA	NA		NA		NA	NA	20	
Laboratory ID:	06-183-01										
Selenium	**ND**	**0.138**	NA	NA		NA		NA	NA	20	
Laboratory ID:	06-183-01										
Mercury	**ND**	**ND**	NA	NA		NA		NA	NA	20	
MATRIX SPIKES											
Laboratory ID:	06-183-01										
	MS	MSD	MS	MSD		MS	MSD				
Arsenic	**93.3**	**93.9**	100	100	ND	**93**	**94**	75-125	1	20	
Barium	**127**	**136**	100	100	36.8	**90**	**99**	75-125	7	20	
Cadmium	**46.1**	**47.2**	50.0	50.0	ND	**92**	**94**	75-125	2	20	
Chromium	**124**	**125**	100	100	32.4	**92**	**92**	75-125	0	20	
Lead	**226**	**230**	250	250	ND	**90**	**92**	75-125	2	20	
Silver	**23.9**	**23.6**	25.0	25.0	ND	**96**	**94**	75-125	1	20	
Laboratory ID:	06-183-01										
Selenium	**94.0**	**99.5**	100	100	ND	**94**	**100**	75-125	6	20	
Laboratory ID:	06-183-01										
Mercury	**0.510**	**0.532**	0.500	0.500	0.00750	**101**	**105**	80-120	4	20	

This report pertains to the samples analyzed in accordance with the chain of custody,
and is intended only for the use of the individual or company to whom it is addressed.

Date of Report: June 22, 2021
Samples Submitted: June 18, 2021
Laboratory Reference: 2106-181
Project: 11-05150-003

% MOISTURE

Client ID	Lab ID	% Moisture	Date Analyzed
DA7SWCS11210617I	06-181-01	**18**	6-22-21
DA7SWCS15210617I	06-181-02	**8**	6-22-21
DA7SWCS16210618I	06-181-03	**10**	6-22-21

This report pertains to the samples analyzed in accordance with the chain of custody,
and is intended only for the use of the individual or company to whom it is addressed.

OnSite Environmental Inc.

Data Qualifiers and Abbreviations

A - Due to a high sample concentration, the amount spiked is insufficient for meaningful MS/MSD recovery data.

B - The analyte indicated was also found in the blank sample.

C - The duplicate RPD is outside control limits due to high result variability when analyte concentrations are within five times the quantitation limit.

E - The value reported exceeds the quantitation range and is an estimate.

F - Surrogate recovery data is not available due to the high concentration of coeluting target compounds.

H - The analyte indicated is a common laboratory solvent and may have been introduced during sample preparation, and be impacting the sample result.

I - Compound recovery is outside of the control limits.

J - The value reported was below the practical quantitation limit. The value is an estimate.

K - Sample duplicate RPD is outside control limits due to sample inhomogeneity. The sample was re-extracted and re-analyzed with similar results.

L - The RPD is outside of the control limits.

M - Hydrocarbons in the gasoline range are impacting the diesel range result.

M1 - Hydrocarbons in the gasoline range (toluene-naphthalene) are present in the sample.

N - Hydrocarbons in the lube oil range are impacting the diesel range result.

N1 - Hydrocarbons in diesel range are impacting lube oil range results.

O - Hydrocarbons indicative of heavier fuels are present in the sample and are impacting the gasoline result.

P - The RPD of the detected concentrations between the two columns is greater than 40.

Q - Surrogate recovery is outside of the control limits.

S - Surrogate recovery data is not available due to the necessary dilution of the sample.

T - The sample chromatogram is not similar to a typical _____.

U - The analyte was analyzed for, but was not detected above the reported sample quantitation limit.

U1 - The practical quantitation limit is elevated due to interferences present in the sample.

V - Matrix Spike/Matrix Spike Duplicate recoveries are outside control limits due to matrix effects.

W - Matrix Spike/Matrix Spike Duplicate RPD are outside control limits due to matrix effects.

X - Sample extract treated with a mercury cleanup procedure.

X1- Sample extract treated with a sulfuric acid/silica gel cleanup procedure.

Y - The calibration verification for this analyte exceeded the 20% drift specified in methods 8260 & 8270, and therefore the reported result should be considered an estimate. The overall performance of the calibration verification standard met the acceptance criteria of the method.

Y1 - Negative effects of the matrix from this sample on the instrument caused values for this analyte in the bracketing continuing calibration verification standard (CCVs) to be outside of 20% acceptance criteria. Because of this, quantitation limits and sample concentrations should be considered estimates.

Z -

ND - Not Detected at PQL
PQL - Practical Quantitation Limit
RPD - Relative Percent Difference

This report pertains to the samples analyzed in accordance with the chain of custody, and is intended only for the use of the individual or company to whom it is addressed.

OnSite Environmental Inc.
Analytical Laboratory Testing Services
14648 NE 95th Street • Redmond, WA 98052
Phone: (425) 883-3881 • www.onsite-env.com

Chain of Custody

Laboratory Number: 06-181

Company: ANCHOR QEA (HERRERA)
Project Number: 11-05150-003
Project Name: CEDAR HILLS REG. LF
Project Manager: RANDY BROWN
Sampled by: GEORGE IFTNER, C. STEINER

Turnaround Request (in working days)
(Check One)
- [ ] Same Day
- [ ] 1 Day
- [x] 2 Days
- [ ] 3 Days
- [ ] Standard (7 Days)
- [ ] _____ (other)

Lab ID	Sample Identification	Date Sampled	Time Sampled	Matrix	Number of Containers	NWTPH-HCID	NWTPH-Gx/BTEX	NWTPH-Gx	NWTPH-Dx (☐ Acid / SG Clean-up)	Volatiles 8260D	Halogenated Volatiles 8260D	EDB EPA 8011 (Waters Only)	Semivolatiles 8270E/SIM (with low-level PAHs)	PAHs 8270E/SIM (low-level)	PCBs 8082A	Organochlorine Pesticides 8081B	Organophosphorus Pesticides 8270E/SIM	Chlorinated Acid Herbicides 8151A	Total RCRA Metals 6010B/7471A	Total MTCA Metals	TCLP Metals	HEM (oil and grease) 1664A					% Moisture
1	DA7SWCS11210617I	6/17/21	08:15	Soil	4					✓			✓		✓	✓			✓								✓
2	DA7SWCS15210617I	↓	08:30	Soil	4					✓			✓		✓	✓			✓								
3	DA7SWCS16210618I	6/18/21	11:55	Soil	4					✓			✓		✓	✓			✓								
4	VTRP210618I - Trip Blank	6/18/21	—	—	3					✓																	

	Signature	Company	Date	Time
Relinquished	Conoyer [signature]	Herrera	6/18/21	3:12
Received	Nicole [signature]	OSE	6/18/21	1512
Relinquished				
Received				
Relinquished				
Received				
Reviewed/Date		Reviewed/Date		

Comments/Special Instructions

Email to Randy Brown.
CC: Herrera

Data Package: Standard ☐ Level III ☐ Level IV ☐

Chromatograms with final report ☐ Electronic Data Deliverables (EDDs) ☐

OnSite Environmental Inc.
14648 NE 95th Street, Redmond, WA 98052 • (425) 883-3881

June 23, 2021

Randy Brown
Anchor QEA
1201 3rd Avenue, Suite 2600
Seattle, WA 98101

Re: Analytical Data for Project 11-05150-003
Laboratory Reference No. 2106-190

Dear Randy:

Enclosed are the analytical results and associated quality control data for samples submitted on June 21, 2021.

The standard policy of OnSite Environmental, Inc. is to store your samples for 30 days from the date of receipt. If you require longer storage, please contact the laboratory.

We appreciate the opportunity to be of service to you on this project. If you have any questions concerning the data, or need additional information, please feel free to call me.

Sincerely,

David Baumeister
Project Manager

Enclosures

This report pertains to the samples analyzed in accordance with the chain of custody,
and is intended only for the use of the individual or company to whom it is addressed.

Date of Report: June 23, 2021
Samples Submitted: June 21, 2021
Laboratory Reference: 2106-190
Project: 11-05150-003

Case Narrative

Samples were collected on June 21, 2021 and received by the laboratory on June 21, 2021. They were maintained at the laboratory at a temperature of 2°C to 6°C.

Please note that any and all soil sample results are reported on a dry-weight basis, unless otherwise noted below.

General QA/QC issues associated with the analytical data enclosed in this laboratory report will be indicated with a reference to a comment or explanation on the Data Qualifier page. More complex and involved QA/QC issues will be discussed in detail below.

Total Metals EPA 6010D/7471B Analysis

The duplicate RPD for Chromuim is outside control limits due to sample inhomogeneity. The sample was re-extracted and re-analyzed with similar results.

Any other QA/QC issues associated with this extraction and analysis will be indicated with a footnote reference and discussed in detail on the Data Qualifier page.

This report pertains to the samples analyzed in accordance with the chain of custody,
and is intended only for the use of the individual or company to whom it is addressed.

Date of Report: June 23, 2021
Samples Submitted: June 21, 2021
Laboratory Reference: 2106-190
Project: 11-05150-003

VOLATILE ORGANICS EPA 8260D/SIM
page 1 of 2

Matrix: Soil
Units: mg/kg

Analyte	Result	PQL	Method	Date Prepared	Date Analyzed	Flags
Client ID:	**DA7SWCS17210621I**					
Laboratory ID:	06-190-01					
Dichlorodifluoromethane	ND	0.00094	EPA 8260D	6-21-21	6-21-21	
Chloromethane	ND	0.0047	EPA 8260D	6-21-21	6-21-21	
Vinyl Chloride	ND	0.00094	EPA 8260D	6-21-21	6-21-21	
Bromomethane	ND	0.0047	EPA 8260D	6-21-21	6-21-21	
Chloroethane	ND	0.0047	EPA 8260D	6-21-21	6-21-21	
Trichlorofluoromethane	ND	0.00094	EPA 8260D	6-21-21	6-21-21	
1,1-Dichloroethene	ND	0.00094	EPA 8260D	6-21-21	6-21-21	
Acetone	0.019	0.0094	EPA 8260D	6-21-21	6-21-21	
Iodomethane	ND	0.0047	EPA 8260D	6-21-21	6-21-21	
Carbon Disulfide	ND	0.00094	EPA 8260D	6-21-21	6-21-21	
Methylene Chloride	ND	0.0047	EPA 8260D	6-21-21	6-21-21	
(trans) 1,2-Dichloroethene	ND	0.00094	EPA 8260D	6-21-21	6-21-21	
Methyl t-Butyl Ether	ND	0.00094	EPA 8260D	6-21-21	6-21-21	
1,1-Dichloroethane	ND	0.00094	EPA 8260D	6-21-21	6-21-21	
Vinyl Acetate	ND	0.0047	EPA 8260D	6-21-21	6-21-21	
2,2-Dichloropropane	ND	0.00094	EPA 8260D	6-21-21	6-21-21	
(cis) 1,2-Dichloroethene	ND	0.00094	EPA 8260D	6-21-21	6-21-21	
2-Butanone	ND	0.0047	EPA 8260D	6-21-21	6-21-21	
Bromochloromethane	ND	0.00094	EPA 8260D	6-21-21	6-21-21	
Chloroform	ND	0.00094	EPA 8260D	6-21-21	6-21-21	
1,1,1-Trichloroethane	ND	0.00094	EPA 8260D	6-21-21	6-21-21	
Carbon Tetrachloride	ND	0.00094	EPA 8260D	6-21-21	6-21-21	
1,1-Dichloropropene	ND	0.00094	EPA 8260D	6-21-21	6-21-21	
Benzene	ND	0.00094	EPA 8260D	6-21-21	6-21-21	
1,2-Dichloroethane	ND	0.00094	EPA 8260D	6-21-21	6-21-21	
Trichloroethene	ND	0.00094	EPA 8260D	6-21-21	6-21-21	
1,2-Dichloropropane	ND	0.00094	EPA 8260D	6-21-21	6-21-21	
Dibromomethane	ND	0.00094	EPA 8260D	6-21-21	6-21-21	
Bromodichloromethane	ND	0.00094	EPA 8260D	6-21-21	6-21-21	
2-Chloroethyl Vinyl Ether	ND	0.0047	EPA 8260D	6-21-21	6-21-21	
(cis) 1,3-Dichloropropene	ND	0.00094	EPA 8260D	6-21-21	6-21-21	
Methyl Isobutyl Ketone	ND	0.0047	EPA 8260D	6-21-21	6-21-21	
Toluene	ND	0.0047	EPA 8260D	6-21-21	6-21-21	
(trans) 1,3-Dichloropropene	ND	0.00094	EPA 8260D	6-21-21	6-21-21	

This report pertains to the samples analyzed in accordance with the chain of custody,
and is intended only for the use of the individual or company to whom it is addressed.

Date of Report: June 23, 2021
Samples Submitted: June 21, 2021
Laboratory Reference: 2106-190
Project: 11-05150-003

VOLATILE ORGANICS EPA 8260D/SIM
page 2 of 2

Analyte	Result	PQL	Method	Date Prepared	Date Analyzed	Flags
Client ID:	**DA7SWCS17210621I**					
Laboratory ID:	06-190-01					
1,1,2-Trichloroethane	ND	0.00094	EPA 8260D	6-21-21	6-21-21	
Tetrachloroethene	ND	0.00094	EPA 8260D	6-21-21	6-21-21	
1,3-Dichloropropane	ND	0.00094	EPA 8260D	6-21-21	6-21-21	
2-Hexanone	ND	0.0047	EPA 8260D	6-21-21	6-21-21	
Dibromochloromethane	ND	0.00094	EPA 8260D	6-21-21	6-21-21	
1,2-Dibromoethane	ND	0.000047	EPA 8260D/SIM	6-21-21	6-21-21	
Chlorobenzene	ND	0.00094	EPA 8260D	6-21-21	6-21-21	
1,1,1,2-Tetrachloroethane	ND	0.00094	EPA 8260D	6-21-21	6-21-21	
Ethylbenzene	ND	0.00094	EPA 8260D	6-21-21	6-21-21	
m,p-Xylene	ND	0.0019	EPA 8260D	6-21-21	6-21-21	
o-Xylene	ND	0.00094	EPA 8260D	6-21-21	6-21-21	
Styrene	ND	0.00094	EPA 8260D	6-21-21	6-21-21	
Bromoform	ND	0.0047	EPA 8260D	6-21-21	6-21-21	
Isopropylbenzene	ND	0.00094	EPA 8260D	6-21-21	6-21-21	
Bromobenzene	ND	0.00094	EPA 8260D	6-21-21	6-21-21	
1,1,2,2-Tetrachloroethane	ND	0.00094	EPA 8260D	6-21-21	6-21-21	
1,2,3-Trichloropropane	ND	0.00094	EPA 8260D	6-21-21	6-21-21	
n-Propylbenzene	ND	0.00094	EPA 8260D	6-21-21	6-21-21	
2-Chlorotoluene	ND	0.00094	EPA 8260D	6-21-21	6-21-21	
4-Chlorotoluene	ND	0.00094	EPA 8260D	6-21-21	6-21-21	
1,3,5-Trimethylbenzene	ND	0.00094	EPA 8260D	6-21-21	6-21-21	
tert-Butylbenzene	ND	0.00094	EPA 8260D	6-21-21	6-21-21	
1,2,4-Trimethylbenzene	ND	0.00094	EPA 8260D	6-21-21	6-21-21	
sec-Butylbenzene	ND	0.00094	EPA 8260D	6-21-21	6-21-21	
1,3-Dichlorobenzene	ND	0.00094	EPA 8260D	6-21-21	6-21-21	
p-Isopropyltoluene	ND	0.00094	EPA 8260D	6-21-21	6-21-21	
1,4-Dichlorobenzene	ND	0.00094	EPA 8260D	6-21-21	6-21-21	
1,2-Dichlorobenzene	ND	0.00094	EPA 8260D	6-21-21	6-21-21	
n-Butylbenzene	ND	0.00094	EPA 8260D	6-21-21	6-21-21	
1,2-Dibromo-3-chloropropane	ND	0.0047	EPA 8260D	6-21-21	6-21-21	
1,2,4-Trichlorobenzene	ND	0.00094	EPA 8260D	6-21-21	6-21-21	
Hexachlorobutadiene	ND	0.0047	EPA 8260D	6-21-21	6-21-21	
Naphthalene	ND	0.0047	EPA 8260D	6-21-21	6-21-21	
1,2,3-Trichlorobenzene	ND	0.00094	EPA 8260D	6-21-21	6-21-21	
Surrogate:	*Percent Recovery*	*Control Limits*				
Dibromofluoromethane	*89*	*74-131*				
Toluene-d8	*94*	*78-128*				
4-Bromofluorobenzene	*110*	*71-130*				

This report pertains to the samples analyzed in accordance with the chain of custody, and is intended only for the use of the individual or company to whom it is addressed.

Date of Report: June 23, 2021
Samples Submitted: June 21, 2021
Laboratory Reference: 2106-190
Project: 11-05150-003

VOLATILE ORGANICS EPA 8260D/SIM
page 1 of 2

Matrix: Soil
Units: mg/kg

Analyte	Result	PQL	Method	Date Prepared	Date Analyzed	Flags
Client ID:	**DA7SWCS17210621D**					
Laboratory ID:	06-190-02					
Dichlorodifluoromethane	ND	0.00088	EPA 8260D	6-21-21	6-21-21	
Chloromethane	ND	0.0044	EPA 8260D	6-21-21	6-21-21	
Vinyl Chloride	ND	0.00088	EPA 8260D	6-21-21	6-21-21	
Bromomethane	ND	0.0044	EPA 8260D	6-21-21	6-21-21	
Chloroethane	ND	0.0044	EPA 8260D	6-21-21	6-21-21	
Trichlorofluoromethane	ND	0.00088	EPA 8260D	6-21-21	6-21-21	
1,1-Dichloroethene	ND	0.00088	EPA 8260D	6-21-21	6-21-21	
Acetone	0.016	0.0088	EPA 8260D	6-21-21	6-21-21	Y
Iodomethane	ND	0.0044	EPA 8260D	6-21-21	6-21-21	
Carbon Disulfide	ND	0.00088	EPA 8260D	6-21-21	6-21-21	
Methylene Chloride	ND	0.0044	EPA 8260D	6-21-21	6-21-21	
(trans) 1,2-Dichloroethene	ND	0.00088	EPA 8260D	6-21-21	6-21-21	
Methyl t-Butyl Ether	ND	0.00088	EPA 8260D	6-21-21	6-21-21	
1,1-Dichloroethane	ND	0.00088	EPA 8260D	6-21-21	6-21-21	
Vinyl Acetate	ND	0.0044	EPA 8260D	6-21-21	6-21-21	
2,2-Dichloropropane	ND	0.00088	EPA 8260D	6-21-21	6-21-21	
(cis) 1,2-Dichloroethene	ND	0.00088	EPA 8260D	6-21-21	6-21-21	
2-Butanone	ND	0.0044	EPA 8260D	6-21-21	6-21-21	
Bromochloromethane	ND	0.00088	EPA 8260D	6-21-21	6-21-21	
Chloroform	ND	0.00088	EPA 8260D	6-21-21	6-21-21	
1,1,1-Trichloroethane	ND	0.00088	EPA 8260D	6-21-21	6-21-21	
Carbon Tetrachloride	ND	0.00088	EPA 8260D	6-21-21	6-21-21	
1,1-Dichloropropene	ND	0.00088	EPA 8260D	6-21-21	6-21-21	
Benzene	ND	0.00088	EPA 8260D	6-21-21	6-21-21	
1,2-Dichloroethane	ND	0.00088	EPA 8260D	6-21-21	6-21-21	
Trichloroethene	ND	0.00088	EPA 8260D	6-21-21	6-21-21	
1,2-Dichloropropane	ND	0.00088	EPA 8260D	6-21-21	6-21-21	
Dibromomethane	ND	0.00088	EPA 8260D	6-21-21	6-21-21	
Bromodichloromethane	ND	0.00088	EPA 8260D	6-21-21	6-21-21	
2-Chloroethyl Vinyl Ether	ND	0.0044	EPA 8260D	6-21-21	6-21-21	
(cis) 1,3-Dichloropropene	ND	0.00088	EPA 8260D	6-21-21	6-21-21	
Methyl Isobutyl Ketone	ND	0.0044	EPA 8260D	6-21-21	6-21-21	
Toluene	ND	0.0044	EPA 8260D	6-21-21	6-21-21	
(trans) 1,3-Dichloropropene	ND	0.00088	EPA 8260D	6-21-21	6-21-21	

This report pertains to the samples analyzed in accordance with the chain of custody, and is intended only for the use of the individual or company to whom it is addressed.

Date of Report: June 23, 2021
Samples Submitted: June 21, 2021
Laboratory Reference: 2106-190
Project: 11-05150-003

VOLATILE ORGANICS EPA 8260D/SIM
page 2 of 2

Analyte	Result	PQL	Method	Date Prepared	Date Analyzed	Flags
Client ID:	**DA7SWCS17210621D**					
Laboratory ID:	06-190-02					
1,1,2-Trichloroethane	ND	0.00088	EPA 8260D	6-21-21	6-21-21	
Tetrachloroethene	ND	0.00088	EPA 8260D	6-21-21	6-21-21	
1,3-Dichloropropane	ND	0.00088	EPA 8260D	6-21-21	6-21-21	
2-Hexanone	ND	0.0044	EPA 8260D	6-21-21	6-21-21	
Dibromochloromethane	ND	0.00088	EPA 8260D	6-21-21	6-21-21	
1,2-Dibromoethane	ND	0.000044	EPA 8260D/SIM	6-21-21	6-21-21	
Chlorobenzene	ND	0.00088	EPA 8260D	6-21-21	6-21-21	
1,1,1,2-Tetrachloroethane	ND	0.00088	EPA 8260D	6-21-21	6-21-21	
Ethylbenzene	ND	0.00088	EPA 8260D	6-21-21	6-21-21	
m,p-Xylene	ND	0.0018	EPA 8260D	6-21-21	6-21-21	
o-Xylene	ND	0.00088	EPA 8260D	6-21-21	6-21-21	
Styrene	ND	0.00088	EPA 8260D	6-21-21	6-21-21	
Bromoform	ND	0.0044	EPA 8260D	6-21-21	6-21-21	
Isopropylbenzene	ND	0.00088	EPA 8260D	6-21-21	6-21-21	
Bromobenzene	ND	0.00088	EPA 8260D	6-21-21	6-21-21	
1,1,2,2-Tetrachloroethane	ND	0.00088	EPA 8260D	6-21-21	6-21-21	
1,2,3-Trichloropropane	ND	0.00088	EPA 8260D	6-21-21	6-21-21	
n-Propylbenzene	ND	0.00088	EPA 8260D	6-21-21	6-21-21	
2-Chlorotoluene	ND	0.00088	EPA 8260D	6-21-21	6-21-21	
4-Chlorotoluene	ND	0.00088	EPA 8260D	6-21-21	6-21-21	
1,3,5-Trimethylbenzene	ND	0.00088	EPA 8260D	6-21-21	6-21-21	
tert-Butylbenzene	ND	0.00088	EPA 8260D	6-21-21	6-21-21	
1,2,4-Trimethylbenzene	ND	0.00088	EPA 8260D	6-21-21	6-21-21	
sec-Butylbenzene	ND	0.00088	EPA 8260D	6-21-21	6-21-21	
1,3-Dichlorobenzene	ND	0.00088	EPA 8260D	6-21-21	6-21-21	
p-Isopropyltoluene	ND	0.00088	EPA 8260D	6-21-21	6-21-21	
1,4-Dichlorobenzene	ND	0.00088	EPA 8260D	6-21-21	6-21-21	
1,2-Dichlorobenzene	ND	0.00088	EPA 8260D	6-21-21	6-21-21	
n-Butylbenzene	ND	0.00088	EPA 8260D	6-21-21	6-21-21	
1,2-Dibromo-3-chloropropane	ND	0.0044	EPA 8260D	6-21-21	6-21-21	
1,2,4-Trichlorobenzene	ND	0.00088	EPA 8260D	6-21-21	6-21-21	
Hexachlorobutadiene	ND	0.0044	EPA 8260D	6-21-21	6-21-21	
Naphthalene	ND	0.0044	EPA 8260D	6-21-21	6-21-21	
1,2,3-Trichlorobenzene	ND	0.00088	EPA 8260D	6-21-21	6-21-21	
Surrogate:	*Percent Recovery*	*Control Limits*				
Dibromofluoromethane	*90*	*74-131*				
Toluene-d8	*94*	*78-128*				
4-Bromofluorobenzene	*100*	*71-130*				

This report pertains to the samples analyzed in accordance with the chain of custody, and is intended only for the use of the individual or company to whom it is addressed.

Date of Report: June 23, 2021
Samples Submitted: June 21, 2021
Laboratory Reference: 2106-190
Project: 11-05150-003

VOLATILE ORGANICS EPA 8260D/SIM
page 1 of 2

Matrix: Soil
Units: mg/kg

Analyte	Result	PQL	Method	Date Prepared	Date Analyzed	Flags
Client ID:	**DA7SWCS18210621I**					
Laboratory ID:	06-190-03					
Dichlorodifluoromethane	ND	0.00082	EPA 8260D	6-21-21	6-21-21	
Chloromethane	ND	0.0041	EPA 8260D	6-21-21	6-21-21	
Vinyl Chloride	ND	0.00082	EPA 8260D	6-21-21	6-21-21	
Bromomethane	ND	0.0041	EPA 8260D	6-21-21	6-21-21	
Chloroethane	ND	0.0041	EPA 8260D	6-21-21	6-21-21	
Trichlorofluoromethane	ND	0.00082	EPA 8260D	6-21-21	6-21-21	
1,1-Dichloroethene	ND	0.00082	EPA 8260D	6-21-21	6-21-21	
Acetone	ND	0.0082	EPA 8260D	6-21-21	6-21-21	
Iodomethane	ND	0.0041	EPA 8260D	6-21-21	6-21-21	
Carbon Disulfide	ND	0.00082	EPA 8260D	6-21-21	6-21-21	
Methylene Chloride	ND	0.0041	EPA 8260D	6-21-21	6-21-21	
(trans) 1,2-Dichloroethene	ND	0.00082	EPA 8260D	6-21-21	6-21-21	
Methyl t-Butyl Ether	ND	0.00082	EPA 8260D	6-21-21	6-21-21	
1,1-Dichloroethane	ND	0.00082	EPA 8260D	6-21-21	6-21-21	
Vinyl Acetate	ND	0.0041	EPA 8260D	6-21-21	6-21-21	
2,2-Dichloropropane	ND	0.00082	EPA 8260D	6-21-21	6-21-21	
(cis) 1,2-Dichloroethene	ND	0.00082	EPA 8260D	6-21-21	6-21-21	
2-Butanone	ND	0.0041	EPA 8260D	6-21-21	6-21-21	
Bromochloromethane	ND	0.00082	EPA 8260D	6-21-21	6-21-21	
Chloroform	ND	0.00082	EPA 8260D	6-21-21	6-21-21	
1,1,1-Trichloroethane	ND	0.00082	EPA 8260D	6-21-21	6-21-21	
Carbon Tetrachloride	ND	0.00082	EPA 8260D	6-21-21	6-21-21	
1,1-Dichloropropene	ND	0.00082	EPA 8260D	6-21-21	6-21-21	
Benzene	ND	0.00082	EPA 8260D	6-21-21	6-21-21	
1,2-Dichloroethane	ND	0.00082	EPA 8260D	6-21-21	6-21-21	
Trichloroethene	ND	0.00082	EPA 8260D	6-21-21	6-21-21	
1,2-Dichloropropane	ND	0.00082	EPA 8260D	6-21-21	6-21-21	
Dibromomethane	ND	0.00082	EPA 8260D	6-21-21	6-21-21	
Bromodichloromethane	ND	0.00082	EPA 8260D	6-21-21	6-21-21	
2-Chloroethyl Vinyl Ether	ND	0.0041	EPA 8260D	6-21-21	6-21-21	
(cis) 1,3-Dichloropropene	ND	0.00082	EPA 8260D	6-21-21	6-21-21	
Methyl Isobutyl Ketone	ND	0.0041	EPA 8260D	6-21-21	6-21-21	
Toluene	ND	0.0041	EPA 8260D	6-21-21	6-21-21	
(trans) 1,3-Dichloropropene	ND	0.00082	EPA 8260D	6-21-21	6-21-21	

This report pertains to the samples analyzed in accordance with the chain of custody,
and is intended only for the use of the individual or company to whom it is addressed.

Date of Report: June 23, 2021
Samples Submitted: June 21, 2021
Laboratory Reference: 2106-190
Project: 11-05150-003

VOLATILE ORGANICS EPA 8260D/SIM
page 2 of 2

Analyte	Result	PQL	Method	Date Prepared	Date Analyzed	Flags
Client ID:	**DA7SWCS18210621I**					
Laboratory ID:	06-190-03					
1,1,2-Trichloroethane	ND	0.00082	EPA 8260D	6-21-21	6-21-21	
Tetrachloroethene	ND	0.00082	EPA 8260D	6-21-21	6-21-21	
1,3-Dichloropropane	ND	0.00082	EPA 8260D	6-21-21	6-21-21	
2-Hexanone	ND	0.0041	EPA 8260D	6-21-21	6-21-21	
Dibromochloromethane	ND	0.00082	EPA 8260D	6-21-21	6-21-21	
1,2-Dibromoethane	ND	0.000041	EPA 8260D/SIM	6-21-21	6-21-21	
Chlorobenzene	ND	0.00082	EPA 8260D	6-21-21	6-21-21	
1,1,1,2-Tetrachloroethane	ND	0.00082	EPA 8260D	6-21-21	6-21-21	
Ethylbenzene	ND	0.00082	EPA 8260D	6-21-21	6-21-21	
m,p-Xylene	ND	0.0016	EPA 8260D	6-21-21	6-21-21	
o-Xylene	ND	0.00082	EPA 8260D	6-21-21	6-21-21	
Styrene	ND	0.00082	EPA 8260D	6-21-21	6-21-21	
Bromoform	ND	0.0041	EPA 8260D	6-21-21	6-21-21	
Isopropylbenzene	ND	0.00082	EPA 8260D	6-21-21	6-21-21	
Bromobenzene	ND	0.00082	EPA 8260D	6-21-21	6-21-21	
1,1,2,2-Tetrachloroethane	ND	0.00082	EPA 8260D	6-21-21	6-21-21	
1,2,3-Trichloropropane	ND	0.00082	EPA 8260D	6-21-21	6-21-21	
n-Propylbenzene	ND	0.00082	EPA 8260D	6-21-21	6-21-21	
2-Chlorotoluene	ND	0.00082	EPA 8260D	6-21-21	6-21-21	
4-Chlorotoluene	ND	0.00082	EPA 8260D	6-21-21	6-21-21	
1,3,5-Trimethylbenzene	ND	0.00082	EPA 8260D	6-21-21	6-21-21	
tert-Butylbenzene	ND	0.00082	EPA 8260D	6-21-21	6-21-21	
1,2,4-Trimethylbenzene	ND	0.00082	EPA 8260D	6-21-21	6-21-21	
sec-Butylbenzene	ND	0.00082	EPA 8260D	6-21-21	6-21-21	
1,3-Dichlorobenzene	ND	0.00082	EPA 8260D	6-21-21	6-21-21	
p-Isopropyltoluene	ND	0.00082	EPA 8260D	6-21-21	6-21-21	
1,4-Dichlorobenzene	ND	0.00082	EPA 8260D	6-21-21	6-21-21	
1,2-Dichlorobenzene	ND	0.00082	EPA 8260D	6-21-21	6-21-21	
n-Butylbenzene	ND	0.00082	EPA 8260D	6-21-21	6-21-21	
1,2-Dibromo-3-chloropropane	ND	0.0041	EPA 8260D	6-21-21	6-21-21	
1,2,4-Trichlorobenzene	ND	0.00082	EPA 8260D	6-21-21	6-21-21	
Hexachlorobutadiene	ND	0.0041	EPA 8260D	6-21-21	6-21-21	
Naphthalene	ND	0.0041	EPA 8260D	6-21-21	6-21-21	
1,2,3-Trichlorobenzene	ND	0.00082	EPA 8260D	6-21-21	6-21-21	
Surrogate:	*Percent Recovery*	*Control Limits*				
Dibromofluoromethane	*89*	*74-131*				
Toluene-d8	*94*	*78-128*				
4-Bromofluorobenzene	*112*	*71-130*				

This report pertains to the samples analyzed in accordance with the chain of custody, and is intended only for the use of the individual or company to whom it is addressed.

Date of Report: June 23, 2021
Samples Submitted: June 21, 2021
Laboratory Reference: 2106-190
Project: 11-05150-003

VOLATILE ORGANICS EPA 8260D/SIM
page 1 of 2

Matrix: Soil
Units: mg/kg

Analyte	Result	PQL	Method	Date Prepared	Date Analyzed	Flags
Client ID:	**DA7SWCS19210621I**					
Laboratory ID:	06-190-04					
Dichlorodifluoromethane	ND	0.00093	EPA 8260D	6-21-21	6-21-21	
Chloromethane	ND	0.0047	EPA 8260D	6-21-21	6-21-21	
Vinyl Chloride	ND	0.00093	EPA 8260D	6-21-21	6-21-21	
Bromomethane	ND	0.0047	EPA 8260D	6-21-21	6-21-21	
Chloroethane	ND	0.0047	EPA 8260D	6-21-21	6-21-21	
Trichlorofluoromethane	ND	0.00093	EPA 8260D	6-21-21	6-21-21	
1,1-Dichloroethene	ND	0.00093	EPA 8260D	6-21-21	6-21-21	
Acetone	0.025	0.0093	EPA 8260D	6-21-21	6-21-21	Y
Iodomethane	ND	0.0047	EPA 8260D	6-21-21	6-21-21	
Carbon Disulfide	ND	0.00093	EPA 8260D	6-21-21	6-21-21	
Methylene Chloride	ND	0.0047	EPA 8260D	6-21-21	6-21-21	
(trans) 1,2-Dichloroethene	ND	0.00093	EPA 8260D	6-21-21	6-21-21	
Methyl t-Butyl Ether	ND	0.00093	EPA 8260D	6-21-21	6-21-21	
1,1-Dichloroethane	ND	0.00093	EPA 8260D	6-21-21	6-21-21	
Vinyl Acetate	ND	0.0047	EPA 8260D	6-21-21	6-21-21	
2,2-Dichloropropane	ND	0.00093	EPA 8260D	6-21-21	6-21-21	
(cis) 1,2-Dichloroethene	ND	0.00093	EPA 8260D	6-21-21	6-21-21	
2-Butanone	ND	0.0047	EPA 8260D	6-21-21	6-21-21	
Bromochloromethane	ND	0.00093	EPA 8260D	6-21-21	6-21-21	
Chloroform	ND	0.00093	EPA 8260D	6-21-21	6-21-21	
1,1,1-Trichloroethane	ND	0.00093	EPA 8260D	6-21-21	6-21-21	
Carbon Tetrachloride	ND	0.00093	EPA 8260D	6-21-21	6-21-21	
1,1-Dichloropropene	ND	0.00093	EPA 8260D	6-21-21	6-21-21	
Benzene	ND	0.00093	EPA 8260D	6-21-21	6-21-21	
1,2-Dichloroethane	ND	0.00093	EPA 8260D	6-21-21	6-21-21	
Trichloroethene	ND	0.00093	EPA 8260D	6-21-21	6-21-21	
1,2-Dichloropropane	ND	0.00093	EPA 8260D	6-21-21	6-21-21	
Dibromomethane	ND	0.00093	EPA 8260D	6-21-21	6-21-21	
Bromodichloromethane	ND	0.00093	EPA 8260D	6-21-21	6-21-21	
2-Chloroethyl Vinyl Ether	ND	0.0047	EPA 8260D	6-21-21	6-21-21	
(cis) 1,3-Dichloropropene	ND	0.00093	EPA 8260D	6-21-21	6-21-21	
Methyl Isobutyl Ketone	ND	0.0047	EPA 8260D	6-21-21	6-21-21	
Toluene	ND	0.0047	EPA 8260D	6-21-21	6-21-21	
(trans) 1,3-Dichloropropene	ND	0.00093	EPA 8260D	6-21-21	6-21-21	

This report pertains to the samples analyzed in accordance with the chain of custody,
and is intended only for the use of the individual or company to whom it is addressed.

Date of Report: June 23, 2021
Samples Submitted: June 21, 2021
Laboratory Reference: 2106-190
Project: 11-05150-003

VOLATILE ORGANICS EPA 8260D/SIM
page 2 of 2

Analyte	Result	PQL	Method	Date Prepared	Date Analyzed	Flags
Client ID:	**DA7SWCS19210621I**					
Laboratory ID:	06-190-04					
1,1,2-Trichloroethane	ND	0.00093	EPA 8260D	6-21-21	6-21-21	
Tetrachloroethene	ND	0.00093	EPA 8260D	6-21-21	6-21-21	
1,3-Dichloropropane	ND	0.00093	EPA 8260D	6-21-21	6-21-21	
2-Hexanone	ND	0.0047	EPA 8260D	6-21-21	6-21-21	
Dibromochloromethane	ND	0.00093	EPA 8260D	6-21-21	6-21-21	
1,2-Dibromoethane	ND	0.000047	EPA 8260D/SIM	6-21-21	6-21-21	
Chlorobenzene	ND	0.00093	EPA 8260D	6-21-21	6-21-21	
1,1,1,2-Tetrachloroethane	ND	0.00093	EPA 8260D	6-21-21	6-21-21	
Ethylbenzene	ND	0.00093	EPA 8260D	6-21-21	6-21-21	
m,p-Xylene	ND	0.0019	EPA 8260D	6-21-21	6-21-21	
o-Xylene	ND	0.00093	EPA 8260D	6-21-21	6-21-21	
Styrene	ND	0.00093	EPA 8260D	6-21-21	6-21-21	
Bromoform	ND	0.0047	EPA 8260D	6-21-21	6-21-21	
Isopropylbenzene	ND	0.00093	EPA 8260D	6-21-21	6-21-21	
Bromobenzene	ND	0.00093	EPA 8260D	6-21-21	6-21-21	
1,1,2,2-Tetrachloroethane	ND	0.00093	EPA 8260D	6-21-21	6-21-21	
1,2,3-Trichloropropane	ND	0.00093	EPA 8260D	6-21-21	6-21-21	
n-Propylbenzene	ND	0.00093	EPA 8260D	6-21-21	6-21-21	
2-Chlorotoluene	ND	0.00093	EPA 8260D	6-21-21	6-21-21	
4-Chlorotoluene	ND	0.00093	EPA 8260D	6-21-21	6-21-21	
1,3,5-Trimethylbenzene	ND	0.00093	EPA 8260D	6-21-21	6-21-21	
tert-Butylbenzene	ND	0.00093	EPA 8260D	6-21-21	6-21-21	
1,2,4-Trimethylbenzene	ND	0.00093	EPA 8260D	6-21-21	6-21-21	
sec-Butylbenzene	ND	0.00093	EPA 8260D	6-21-21	6-21-21	
1,3-Dichlorobenzene	ND	0.00093	EPA 8260D	6-21-21	6-21-21	
p-Isopropyltoluene	ND	0.00093	EPA 8260D	6-21-21	6-21-21	
1,4-Dichlorobenzene	ND	0.00093	EPA 8260D	6-21-21	6-21-21	
1,2-Dichlorobenzene	ND	0.00093	EPA 8260D	6-21-21	6-21-21	
n-Butylbenzene	ND	0.00093	EPA 8260D	6-21-21	6-21-21	
1,2-Dibromo-3-chloropropane	ND	0.0047	EPA 8260D	6-21-21	6-21-21	
1,2,4-Trichlorobenzene	ND	0.00093	EPA 8260D	6-21-21	6-21-21	
Hexachlorobutadiene	ND	0.0047	EPA 8260D	6-21-21	6-21-21	
Naphthalene	ND	0.0047	EPA 8260D	6-21-21	6-21-21	
1,2,3-Trichlorobenzene	ND	0.00093	EPA 8260D	6-21-21	6-21-21	
Surrogate:	*Percent Recovery*	*Control Limits*				
Dibromofluoromethane	*89*	*74-131*				
Toluene-d8	*93*	*78-128*				
4-Bromofluorobenzene	*101*	*71-130*				

This report pertains to the samples analyzed in accordance with the chain of custody, and is intended only for the use of the individual or company to whom it is addressed.

Date of Report: June 23, 2021
Samples Submitted: June 21, 2021
Laboratory Reference: 2106-190
Project: 11-05150-003

VOLATILE ORGANICS EPA 8260D/SIM
QUALITY CONTROL
page 1 of 2

Matrix: Soil
Units: mg/kg

Analyte	Result	PQL	Method	Date Prepared	Date Analyzed	Flags
METHOD BLANK						
Laboratory ID:	MB0621S1					
Dichlorodifluoromethane	ND	0.0010	EPA 8260D	6-21-21	6-21-21	
Chloromethane	ND	0.0050	EPA 8260D	6-21-21	6-21-21	
Vinyl Chloride	ND	0.0010	EPA 8260D	6-21-21	6-21-21	
Bromomethane	ND	0.0050	EPA 8260D	6-21-21	6-21-21	
Chloroethane	ND	0.0050	EPA 8260D	6-21-21	6-21-21	
Trichlorofluoromethane	ND	0.0010	EPA 8260D	6-21-21	6-21-21	
1,1-Dichloroethene	ND	0.0010	EPA 8260D	6-21-21	6-21-21	
Acetone	ND	0.010	EPA 8260D	6-21-21	6-21-21	
Iodomethane	ND	0.0050	EPA 8260D	6-21-21	6-21-21	
Carbon Disulfide	ND	0.0010	EPA 8260D	6-21-21	6-21-21	
Methylene Chloride	ND	0.0050	EPA 8260D	6-21-21	6-21-21	
(trans) 1,2-Dichloroethene	ND	0.0010	EPA 8260D	6-21-21	6-21-21	
Methyl t-Butyl Ether	ND	0.0010	EPA 8260D	6-21-21	6-21-21	
1,1-Dichloroethane	ND	0.0010	EPA 8260D	6-21-21	6-21-21	
Vinyl Acetate	ND	0.0050	EPA 8260D	6-21-21	6-21-21	
2,2-Dichloropropane	ND	0.0010	EPA 8260D	6-21-21	6-21-21	
(cis) 1,2-Dichloroethene	ND	0.0010	EPA 8260D	6-21-21	6-21-21	
2-Butanone	ND	0.0050	EPA 8260D	6-21-21	6-21-21	
Bromochloromethane	ND	0.0010	EPA 8260D	6-21-21	6-21-21	
Chloroform	ND	0.0010	EPA 8260D	6-21-21	6-21-21	
1,1,1-Trichloroethane	ND	0.0010	EPA 8260D	6-21-21	6-21-21	
Carbon Tetrachloride	ND	0.0010	EPA 8260D	6-21-21	6-21-21	
1,1-Dichloropropene	ND	0.0010	EPA 8260D	6-21-21	6-21-21	
Benzene	ND	0.0010	EPA 8260D	6-21-21	6-21-21	
1,2-Dichloroethane	ND	0.0010	EPA 8260D	6-21-21	6-21-21	
Trichloroethene	ND	0.0010	EPA 8260D	6-21-21	6-21-21	
1,2-Dichloropropane	ND	0.0010	EPA 8260D	6-21-21	6-21-21	
Dibromomethane	ND	0.0010	EPA 8260D	6-21-21	6-21-21	
Bromodichloromethane	ND	0.0010	EPA 8260D	6-21-21	6-21-21	
2-Chloroethyl Vinyl Ether	ND	0.0050	EPA 8260D	6-21-21	6-21-21	
(cis) 1,3-Dichloropropene	ND	0.0010	EPA 8260D	6-21-21	6-21-21	
Methyl Isobutyl Ketone	ND	0.0050	EPA 8260D	6-21-21	6-21-21	
Toluene	ND	0.0050	EPA 8260D	6-21-21	6-21-21	
(trans) 1,3-Dichloropropene	ND	0.0010	EPA 8260D	6-21-21	6-21-21	

This report pertains to the samples analyzed in accordance with the chain of custody,
and is intended only for the use of the individual or company to whom it is addressed.

Date of Report: June 23, 2021
Samples Submitted: June 21, 2021
Laboratory Reference: 2106-190
Project: 11-05150-003

VOLATILE ORGANICS EPA 8260D/SIM
QUALITY CONTROL
page 2 of 2

Analyte	Result	PQL	Method	Date Prepared	Date Analyzed	Flags
METHOD BLANK						
Laboratory ID:	MB0621S1					
1,1,2-Trichloroethane	ND	0.0010	EPA 8260D	6-21-21	6-21-21	
Tetrachloroethene	ND	0.0010	EPA 8260D	6-21-21	6-21-21	
1,3-Dichloropropane	ND	0.0010	EPA 8260D	6-21-21	6-21-21	
2-Hexanone	ND	0.0050	EPA 8260D	6-21-21	6-21-21	
Dibromochloromethane	ND	0.0010	EPA 8260D	6-21-21	6-21-21	
1,2-Dibromoethane	ND	0.000050	EPA 8260D/SIM	6-21-21	6-21-21	
Chlorobenzene	ND	0.0010	EPA 8260D	6-21-21	6-21-21	
1,1,1,2-Tetrachloroethane	ND	0.0010	EPA 8260D	6-21-21	6-21-21	
Ethylbenzene	ND	0.0010	EPA 8260D	6-21-21	6-21-21	
m,p-Xylene	ND	0.0020	EPA 8260D	6-21-21	6-21-21	
o-Xylene	ND	0.0010	EPA 8260D	6-21-21	6-21-21	
Styrene	ND	0.0010	EPA 8260D	6-21-21	6-21-21	
Bromoform	ND	0.0050	EPA 8260D	6-21-21	6-21-21	
Isopropylbenzene	ND	0.0010	EPA 8260D	6-21-21	6-21-21	
Bromobenzene	ND	0.0010	EPA 8260D	6-21-21	6-21-21	
1,1,2,2-Tetrachloroethane	ND	0.0010	EPA 8260D	6-21-21	6-21-21	
1,2,3-Trichloropropane	ND	0.0010	EPA 8260D	6-21-21	6-21-21	
n-Propylbenzene	ND	0.0010	EPA 8260D	6-21-21	6-21-21	
2-Chlorotoluene	ND	0.0010	EPA 8260D	6-21-21	6-21-21	
4-Chlorotoluene	ND	0.0010	EPA 8260D	6-21-21	6-21-21	
1,3,5-Trimethylbenzene	ND	0.0010	EPA 8260D	6-21-21	6-21-21	
tert-Butylbenzene	ND	0.0010	EPA 8260D	6-21-21	6-21-21	
1,2,4-Trimethylbenzene	ND	0.0010	EPA 8260D	6-21-21	6-21-21	
sec-Butylbenzene	ND	0.0010	EPA 8260D	6-21-21	6-21-21	
1,3-Dichlorobenzene	ND	0.0010	EPA 8260D	6-21-21	6-21-21	
p-Isopropyltoluene	ND	0.0010	EPA 8260D	6-21-21	6-21-21	
1,4-Dichlorobenzene	ND	0.0010	EPA 8260D	6-21-21	6-21-21	
1,2-Dichlorobenzene	ND	0.0010	EPA 8260D	6-21-21	6-21-21	
n-Butylbenzene	ND	0.0010	EPA 8260D	6-21-21	6-21-21	
1,2-Dibromo-3-chloropropane	ND	0.0050	EPA 8260D	6-21-21	6-21-21	
1,2,4-Trichlorobenzene	ND	0.0010	EPA 8260D	6-21-21	6-21-21	
Hexachlorobutadiene	ND	0.0050	EPA 8260D	6-21-21	6-21-21	
Naphthalene	ND	0.0050	EPA 8260D	6-21-21	6-21-21	
1,2,3-Trichlorobenzene	ND	0.0010	EPA 8260D	6-21-21	6-21-21	
Surrogate:	*Percent Recovery*	*Control Limits*				
Dibromofluoromethane	*94*	*74-131*				
Toluene-d8	*96*	*78-128*				
4-Bromofluorobenzene	*104*	*71-130*				

This report pertains to the samples analyzed in accordance with the chain of custody, and is intended only for the use of the individual or company to whom it is addressed.

Date of Report: June 23, 2021
Samples Submitted: June 21, 2021
Laboratory Reference: 2106-190
Project: 11-05150-003

VOLATILE ORGANICS EPA 8260D/SIM
QUALITY CONTROL

Matrix: Soil
Units: mg/kg

Analyte	Result		Spike Level		Percent Recovery		Recovery Limits	RPD	RPD Limit	Flags
SPIKE BLANKS										
Laboratory ID:	SB0621S1									
	SB	SBD	SB	SBD	SB	SBD				
1,1-Dichloroethene	**0.0626**	**0.0652**	0.0500	0.0500	125	130	71-131	4	19	
Benzene	**0.0495**	**0.0510**	0.0500	0.0500	99	102	73-124	3	18	
Trichloroethene	**0.0522**	**0.0529**	0.0500	0.0500	104	106	79-130	1	18	
Toluene	**0.0505**	**0.0509**	0.0500	0.0500	101	102	76-123	1	18	
Chlorobenzene	**0.0493**	**0.0495**	0.0500	0.0500	99	99	78-122	0	18	
Surrogate:										
Dibromofluoromethane					*92*	*93*	*74-131*			
Toluene-d8					*95*	*95*	*78-128*			
4-Bromofluorobenzene					*116*	*106*	*71-130*			

This report pertains to the samples analyzed in accordance with the chain of custody, and is intended only for the use of the individual or company to whom it is addressed.

Date of Report: June 23, 2021
Samples Submitted: June 21, 2021
Laboratory Reference: 2106-190
Project: 11-05150-003

VOLATILE ORGANICS EPA 8260D
page 1 of 2

Matrix: Water
Units: ug/L

Analyte	Result	PQL	Method	Date Prepared	Date Analyzed	Flags
Client ID:	**VTRP210621I - Trip Blank**					
Laboratory ID:	06-190-05					
Dichlorodifluoromethane	ND	0.20	EPA 8260D	6-21-21	6-21-21	
Chloromethane	ND	1.0	EPA 8260D	6-21-21	6-21-21	
Vinyl Chloride	ND	0.20	EPA 8260D	6-21-21	6-21-21	
Bromomethane	ND	0.25	EPA 8260D	6-21-21	6-21-21	
Chloroethane	ND	1.0	EPA 8260D	6-21-21	6-21-21	
Trichlorofluoromethane	ND	0.20	EPA 8260D	6-21-21	6-21-21	
1,1-Dichloroethene	ND	0.20	EPA 8260D	6-21-21	6-21-21	
Acetone	ND	5.0	EPA 8260D	6-21-21	6-21-21	
Iodomethane	ND	2.7	EPA 8260D	6-21-21	6-21-21	
Carbon Disulfide	ND	0.20	EPA 8260D	6-21-21	6-21-21	
Methylene Chloride	ND	1.0	EPA 8260D	6-21-21	6-21-21	
(trans) 1,2-Dichloroethene	ND	0.20	EPA 8260D	6-21-21	6-21-21	
Methyl t-Butyl Ether	ND	0.20	EPA 8260D	6-21-21	6-21-21	
1,1-Dichloroethane	ND	0.20	EPA 8260D	6-21-21	6-21-21	
Vinyl Acetate	ND	1.0	EPA 8260D	6-21-21	6-21-21	
2,2-Dichloropropane	ND	0.20	EPA 8260D	6-21-21	6-21-21	
(cis) 1,2-Dichloroethene	ND	0.20	EPA 8260D	6-21-21	6-21-21	
2-Butanone	ND	5.0	EPA 8260D	6-21-21	6-21-21	
Bromochloromethane	ND	0.20	EPA 8260D	6-21-21	6-21-21	
Chloroform	ND	0.20	EPA 8260D	6-21-21	6-21-21	
1,1,1-Trichloroethane	ND	0.20	EPA 8260D	6-21-21	6-21-21	
Carbon Tetrachloride	ND	0.20	EPA 8260D	6-21-21	6-21-21	
1,1-Dichloropropene	ND	0.20	EPA 8260D	6-21-21	6-21-21	
Benzene	ND	0.20	EPA 8260D	6-21-21	6-21-21	
1,2-Dichloroethane	ND	0.20	EPA 8260D	6-21-21	6-21-21	
Trichloroethene	ND	0.20	EPA 8260D	6-21-21	6-21-21	
1,2-Dichloropropane	ND	0.20	EPA 8260D	6-21-21	6-21-21	
Dibromomethane	ND	0.20	EPA 8260D	6-21-21	6-21-21	
Bromodichloromethane	ND	0.20	EPA 8260D	6-21-21	6-21-21	
2-Chloroethyl Vinyl Ether	ND	1.4	EPA 8260D	6-21-21	6-21-21	
(cis) 1,3-Dichloropropene	ND	0.20	EPA 8260D	6-21-21	6-21-21	
Methyl Isobutyl Ketone	ND	2.0	EPA 8260D	6-21-21	6-21-21	
Toluene	ND	1.0	EPA 8260D	6-21-21	6-21-21	
(trans) 1,3-Dichloropropene	ND	0.20	EPA 8260D	6-21-21	6-21-21	

This report pertains to the samples analyzed in accordance with the chain of custody,
and is intended only for the use of the individual or company to whom it is addressed.

Date of Report: June 23, 2021
Samples Submitted: June 21, 2021
Laboratory Reference: 2106-190
Project: 11-05150-003

VOLATILE ORGANICS EPA 8260D
page 2 of 2

Analyte	Result	PQL	Method	Date Prepared	Date Analyzed	Flags
Client ID:	**VTRP210621I - Trip Blank**					
Laboratory ID:	06-190-05					
1,1,2-Trichloroethane	ND	0.20	EPA 8260D	6-21-21	6-21-21	
Tetrachloroethene	ND	0.20	EPA 8260D	6-21-21	6-21-21	
1,3-Dichloropropane	ND	0.20	EPA 8260D	6-21-21	6-21-21	
2-Hexanone	ND	2.0	EPA 8260D	6-21-21	6-21-21	
Dibromochloromethane	ND	0.20	EPA 8260D	6-21-21	6-21-21	
1,2-Dibromoethane	ND	0.20	EPA 8260D	6-21-21	6-21-21	
Chlorobenzene	ND	0.20	EPA 8260D	6-21-21	6-21-21	
1,1,1,2-Tetrachloroethane	ND	0.20	EPA 8260D	6-21-21	6-21-21	
Ethylbenzene	ND	0.20	EPA 8260D	6-21-21	6-21-21	
m,p-Xylene	ND	0.40	EPA 8260D	6-21-21	6-21-21	
o-Xylene	ND	0.20	EPA 8260D	6-21-21	6-21-21	
Styrene	ND	0.20	EPA 8260D	6-21-21	6-21-21	
Bromoform	ND	1.0	EPA 8260D	6-21-21	6-21-21	
Isopropylbenzene	ND	0.20	EPA 8260D	6-21-21	6-21-21	
Bromobenzene	ND	0.20	EPA 8260D	6-21-21	6-21-21	
1,1,2,2-Tetrachloroethane	ND	0.20	EPA 8260D	6-21-21	6-21-21	
1,2,3-Trichloropropane	ND	0.20	EPA 8260D	6-21-21	6-21-21	
n-Propylbenzene	ND	0.20	EPA 8260D	6-21-21	6-21-21	
2-Chlorotoluene	ND	0.20	EPA 8260D	6-21-21	6-21-21	
4-Chlorotoluene	ND	0.20	EPA 8260D	6-21-21	6-21-21	
1,3,5-Trimethylbenzene	ND	0.20	EPA 8260D	6-21-21	6-21-21	
tert-Butylbenzene	ND	0.20	EPA 8260D	6-21-21	6-21-21	
1,2,4-Trimethylbenzene	ND	0.20	EPA 8260D	6-21-21	6-21-21	
sec-Butylbenzene	ND	0.20	EPA 8260D	6-21-21	6-21-21	
1,3-Dichlorobenzene	ND	0.20	EPA 8260D	6-21-21	6-21-21	
p-Isopropyltoluene	ND	0.20	EPA 8260D	6-21-21	6-21-21	
1,4-Dichlorobenzene	ND	0.20	EPA 8260D	6-21-21	6-21-21	
1,2-Dichlorobenzene	ND	0.20	EPA 8260D	6-21-21	6-21-21	
n-Butylbenzene	ND	0.20	EPA 8260D	6-21-21	6-21-21	
1,2-Dibromo-3-chloropropane	ND	1.0	EPA 8260D	6-21-21	6-21-21	
1,2,4-Trichlorobenzene	ND	0.20	EPA 8260D	6-21-21	6-21-21	
Hexachlorobutadiene	ND	1.0	EPA 8260D	6-21-21	6-21-21	
Naphthalene	ND	1.0	EPA 8260D	6-21-21	6-21-21	
1,2,3-Trichlorobenzene	ND	0.20	EPA 8260D	6-21-21	6-21-21	
Surrogate:	*Percent Recovery*	*Control Limits*				
Dibromofluoromethane	*104*	*75-127*				
Toluene-d8	*99*	*80-127*				
4-Bromofluorobenzene	*98*	*78-125*				

This report pertains to the samples analyzed in accordance with the chain of custody, and is intended only for the use of the individual or company to whom it is addressed.

Date of Report: June 23, 2021
Samples Submitted: June 21, 2021
Laboratory Reference: 2106-190
Project: 11-05150-003

VOLATILE ORGANICS EPA 8260D
QUALITY CONTROL
page 1 of 2

Matrix: Water
Units: ug/L

Analyte	Result	PQL	Method	Date Prepared	Date Analyzed	Flags
METHOD BLANK						
Laboratory ID:	MB0621W1					
Dichlorodifluoromethane	ND	0.20	EPA 8260D	6-21-21	6-21-21	
Chloromethane	ND	1.0	EPA 8260D	6-21-21	6-21-21	
Vinyl Chloride	ND	0.20	EPA 8260D	6-21-21	6-21-21	
Bromomethane	ND	0.25	EPA 8260D	6-21-21	6-21-21	
Chloroethane	ND	1.0	EPA 8260D	6-21-21	6-21-21	
Trichlorofluoromethane	ND	0.20	EPA 8260D	6-21-21	6-21-21	
1,1-Dichloroethene	ND	0.20	EPA 8260D	6-21-21	6-21-21	
Acetone	ND	5.0	EPA 8260D	6-21-21	6-21-21	
Iodomethane	ND	2.7	EPA 8260D	6-21-21	6-21-21	
Carbon Disulfide	ND	0.20	EPA 8260D	6-21-21	6-21-21	
Methylene Chloride	ND	1.0	EPA 8260D	6-21-21	6-21-21	
(trans) 1,2-Dichloroethene	ND	0.20	EPA 8260D	6-21-21	6-21-21	
Methyl t-Butyl Ether	ND	0.20	EPA 8260D	6-21-21	6-21-21	
1,1-Dichloroethane	ND	0.20	EPA 8260D	6-21-21	6-21-21	
Vinyl Acetate	ND	1.0	EPA 8260D	6-21-21	6-21-21	
2,2-Dichloropropane	ND	0.20	EPA 8260D	6-21-21	6-21-21	
(cis) 1,2-Dichloroethene	ND	0.20	EPA 8260D	6-21-21	6-21-21	
2-Butanone	ND	5.0	EPA 8260D	6-21-21	6-21-21	
Bromochloromethane	ND	0.20	EPA 8260D	6-21-21	6-21-21	
Chloroform	ND	0.20	EPA 8260D	6-21-21	6-21-21	
1,1,1-Trichloroethane	ND	0.20	EPA 8260D	6-21-21	6-21-21	
Carbon Tetrachloride	ND	0.20	EPA 8260D	6-21-21	6-21-21	
1,1-Dichloropropene	ND	0.20	EPA 8260D	6-21-21	6-21-21	
Benzene	ND	0.20	EPA 8260D	6-21-21	6-21-21	
1,2-Dichloroethane	ND	0.20	EPA 8260D	6-21-21	6-21-21	
Trichloroethene	ND	0.20	EPA 8260D	6-21-21	6-21-21	
1,2-Dichloropropane	ND	0.20	EPA 8260D	6-21-21	6-21-21	
Dibromomethane	ND	0.20	EPA 8260D	6-21-21	6-21-21	
Bromodichloromethane	ND	0.20	EPA 8260D	6-21-21	6-21-21	
2-Chloroethyl Vinyl Ether	ND	1.4	EPA 8260D	6-21-21	6-21-21	
(cis) 1,3-Dichloropropene	ND	0.20	EPA 8260D	6-21-21	6-21-21	
Methyl Isobutyl Ketone	ND	2.0	EPA 8260D	6-21-21	6-21-21	
Toluene	ND	1.0	EPA 8260D	6-21-21	6-21-21	
(trans) 1,3-Dichloropropene	ND	0.20	EPA 8260D	6-21-21	6-21-21	

This report pertains to the samples analyzed in accordance with the chain of custody,
and is intended only for the use of the individual or company to whom it is addressed.

Date of Report: June 23, 2021
Samples Submitted: June 21, 2021
Laboratory Reference: 2106-190
Project: 11-05150-003

VOLATILE ORGANICS EPA 8260D
QUALITY CONTROL
page 2 of 2

Analyte	Result	PQL	Method	Date Prepared	Date Analyzed	Flags
METHOD BLANK						
Laboratory ID:	MB0621W1					
1,1,2-Trichloroethane	ND	0.20	EPA 8260D	6-21-21	6-21-21	
Tetrachloroethene	ND	0.20	EPA 8260D	6-21-21	6-21-21	
1,3-Dichloropropane	ND	0.20	EPA 8260D	6-21-21	6-21-21	
2-Hexanone	ND	2.0	EPA 8260D	6-21-21	6-21-21	
Dibromochloromethane	ND	0.20	EPA 8260D	6-21-21	6-21-21	
1,2-Dibromoethane	ND	0.20	EPA 8260D	6-21-21	6-21-21	
Chlorobenzene	ND	0.20	EPA 8260D	6-21-21	6-21-21	
1,1,1,2-Tetrachloroethane	ND	0.20	EPA 8260D	6-21-21	6-21-21	
Ethylbenzene	ND	0.20	EPA 8260D	6-21-21	6-21-21	
m,p-Xylene	ND	0.40	EPA 8260D	6-21-21	6-21-21	
o-Xylene	ND	0.20	EPA 8260D	6-21-21	6-21-21	
Styrene	ND	0.20	EPA 8260D	6-21-21	6-21-21	
Bromoform	ND	1.0	EPA 8260D	6-21-21	6-21-21	
Isopropylbenzene	ND	0.20	EPA 8260D	6-21-21	6-21-21	
Bromobenzene	ND	0.20	EPA 8260D	6-21-21	6-21-21	
1,1,2,2-Tetrachloroethane	ND	0.20	EPA 8260D	6-21-21	6-21-21	
1,2,3-Trichloropropane	ND	0.20	EPA 8260D	6-21-21	6-21-21	
n-Propylbenzene	ND	0.20	EPA 8260D	6-21-21	6-21-21	
2-Chlorotoluene	ND	0.20	EPA 8260D	6-21-21	6-21-21	
4-Chlorotoluene	ND	0.20	EPA 8260D	6-21-21	6-21-21	
1,3,5-Trimethylbenzene	ND	0.20	EPA 8260D	6-21-21	6-21-21	
tert-Butylbenzene	ND	0.20	EPA 8260D	6-21-21	6-21-21	
1,2,4-Trimethylbenzene	ND	0.20	EPA 8260D	6-21-21	6-21-21	
sec-Butylbenzene	ND	0.20	EPA 8260D	6-21-21	6-21-21	
1,3-Dichlorobenzene	ND	0.20	EPA 8260D	6-21-21	6-21-21	
p-Isopropyltoluene	ND	0.20	EPA 8260D	6-21-21	6-21-21	
1,4-Dichlorobenzene	ND	0.20	EPA 8260D	6-21-21	6-21-21	
1,2-Dichlorobenzene	ND	0.20	EPA 8260D	6-21-21	6-21-21	
n-Butylbenzene	ND	0.20	EPA 8260D	6-21-21	6-21-21	
1,2-Dibromo-3-chloropropane	ND	1.0	EPA 8260D	6-21-21	6-21-21	
1,2,4-Trichlorobenzene	ND	0.20	EPA 8260D	6-21-21	6-21-21	
Hexachlorobutadiene	ND	1.0	EPA 8260D	6-21-21	6-21-21	
Naphthalene	ND	1.0	EPA 8260D	6-21-21	6-21-21	
1,2,3-Trichlorobenzene	ND	0.20	EPA 8260D	6-21-21	6-21-21	
Surrogate:	*Percent Recovery*	*Control Limits*				
Dibromofluoromethane	*103*	*75-127*				
Toluene-d8	*98*	*80-127*				
4-Bromofluorobenzene	*97*	*78-125*				

This report pertains to the samples analyzed in accordance with the chain of custody, and is intended only for the use of the individual or company to whom it is addressed.

Date of Report: June 23, 2021
Samples Submitted: June 21, 2021
Laboratory Reference: 2106-190
Project: 11-05150-003

VOLATILE ORGANICS EPA 8260D
QUALITY CONTROL

Matrix: Water
Units: ug/L

Analyte	Result		Spike Level		Percent Recovery		Recovery Limits	RPD	RPD Limit	Flags
SPIKE BLANKS										
Laboratory ID:	SB0621W1									
	SB	SBD	SB	SBD	SB	SBD				
1,1-Dichloroethene	**9.77**	**9.41**	10.0	10.0	98	94	78-124	4	19	
Benzene	**10.2**	**9.93**	10.0	10.0	102	99	80-119	3	16	
Trichloroethene	**10.3**	**10.3**	10.0	10.0	103	103	80-121	0	18	
Toluene	**9.87**	**9.74**	10.0	10.0	99	97	80-117	1	18	
Chlorobenzene	**10.4**	**10.4**	10.0	10.0	104	104	80-117	0	17	
Surrogate:										
Dibromofluoromethane					*100*	*99*	*75-127*			
Toluene-d8					*99*	*100*	*80-127*			
4-Bromofluorobenzene					*101*	*99*	*78-125*			

This report pertains to the samples analyzed in accordance with the chain of custody, and is intended only for the use of the individual or company to whom it is addressed.

Date of Report: June 23, 2021
Samples Submitted: June 21, 2021
Laboratory Reference: 2106-190
Project: 11-05150-003

SEMIVOLATILE ORGANICS EPA 8270E/SIM
page 1 of 2

Matrix: Soil
Units: mg/Kg

Analyte	Result	PQL	Method	Date Prepared	Date Analyzed	Flags
Client ID:	**DA7SWCS17210621I**					
Laboratory ID:	06-190-01					
n-Nitrosodimethylamine	**ND**	0.011	EPA 8270E	6-22-21	6-23-21	
Pyridine	**ND**	0.22	EPA 8270E	6-22-21	6-23-21	
Phenol	**ND**	0.022	EPA 8270E	6-22-21	6-23-21	
Aniline	**ND**	0.11	EPA 8270E	6-22-21	6-23-21	
bis(2-Chloroethyl)ether	**ND**	0.011	EPA 8270E	6-22-21	6-23-21	
2-Chlorophenol	**ND**	0.022	EPA 8270E	6-22-21	6-23-21	
1,3-Dichlorobenzene	**ND**	0.022	EPA 8270E	6-22-21	6-23-21	
1,4-Dichlorobenzene	**ND**	0.022	EPA 8270E	6-22-21	6-23-21	
Benzyl alcohol	**ND**	0.022	EPA 8270E	6-22-21	6-23-21	
1,2-Dichlorobenzene	**ND**	0.022	EPA 8270E	6-22-21	6-23-21	
2-Methylphenol (o-Cresol)	**ND**	0.022	EPA 8270E	6-22-21	6-23-21	
bis(2-Chloroisopropyl)ether	**ND**	0.022	EPA 8270E	6-22-21	6-23-21	
(3+4)-Methylphenol (m,p-Cresol)	**ND**	0.022	EPA 8270E	6-22-21	6-23-21	
n-Nitroso-di-n-propylamine	**ND**	0.011	EPA 8270E	6-22-21	6-23-21	
Hexachloroethane	**ND**	0.022	EPA 8270E	6-22-21	6-23-21	
Nitrobenzene	**ND**	0.022	EPA 8270E	6-22-21	6-23-21	
Isophorone	**ND**	0.022	EPA 8270E	6-22-21	6-23-21	
2-Nitrophenol	**ND**	0.022	EPA 8270E	6-22-21	6-23-21	
2,4-Dimethylphenol	**ND**	0.022	EPA 8270E	6-22-21	6-23-21	
bis(2-Chloroethoxy)methane	**ND**	0.022	EPA 8270E	6-22-21	6-23-21	
2,4-Dichlorophenol	**ND**	0.022	EPA 8270E	6-22-21	6-23-21	
1,2,4-Trichlorobenzene	**ND**	0.022	EPA 8270E	6-22-21	6-23-21	
Naphthalene	**ND**	0.0044	EPA 8270E/SIM	6-22-21	6-22-21	
4-Chloroaniline	**ND**	0.011	EPA 8270E	6-22-21	6-23-21	
Hexachlorobutadiene	**ND**	0.022	EPA 8270E	6-22-21	6-23-21	
4-Chloro-3-methylphenol	**ND**	0.022	EPA 8270E	6-22-21	6-23-21	
2-Methylnaphthalene	**ND**	0.0044	EPA 8270E/SIM	6-22-21	6-22-21	
1-Methylnaphthalene	**ND**	0.0044	EPA 8270E/SIM	6-22-21	6-22-21	
Hexachlorocyclopentadiene	**ND**	0.022	EPA 8270E	6-22-21	6-23-21	
2,4,6-Trichlorophenol	**ND**	0.022	EPA 8270E	6-22-21	6-23-21	
2,3-Dichloroaniline	**ND**	0.022	EPA 8270E	6-22-21	6-23-21	
2,4,5-Trichlorophenol	**ND**	0.022	EPA 8270E	6-22-21	6-23-21	
2-Chloronaphthalene	**ND**	0.022	EPA 8270E	6-22-21	6-23-21	
2-Nitroaniline	**ND**	0.022	EPA 8270E	6-22-21	6-23-21	
1,4-Dinitrobenzene	**ND**	0.022	EPA 8270E	6-22-21	6-23-21	
Dimethylphthalate	**ND**	0.022	EPA 8270E	6-22-21	6-23-21	
1,3-Dinitrobenzene	**ND**	0.022	EPA 8270E	6-22-21	6-23-21	
2,6-Dinitrotoluene	**ND**	0.011	EPA 8270E	6-22-21	6-23-21	
1,2-Dinitrobenzene	**ND**	0.022	EPA 8270E	6-22-21	6-23-21	
Acenaphthylene	**ND**	0.0044	EPA 8270E/SIM	6-22-21	6-22-21	
3-Nitroaniline	**ND**	0.022	EPA 8270E	6-22-21	6-23-21	

This report pertains to the samples analyzed in accordance with the chain of custody, and is intended only for the use of the individual or company to whom it is addressed.

Date of Report: June 23, 2021
Samples Submitted: June 21, 2021
Laboratory Reference: 2106-190
Project: 11-05150-003

SEMIVOLATILE ORGANICS EPA 8270E/SIM
page 2 of 2

Analyte	Result	PQL	Method	Date Prepared	Date Analyzed	Flags
Client ID:	**DA7SWCS17210621I**					
Laboratory ID:	06-190-01					
2,4-Dinitrophenol	**ND**	0.11	EPA 8270E	6-22-21	6-23-21	
Acenaphthene	**ND**	0.0044	EPA 8270E/SIM	6-22-21	6-22-21	
4-Nitrophenol	**ND**	0.044	EPA 8270E	6-22-21	6-23-21	
2,4-Dinitrotoluene	**ND**	0.011	EPA 8270E	6-22-21	6-23-21	
Dibenzofuran	**ND**	0.022	EPA 8270E	6-22-21	6-23-21	
2,3,5,6-Tetrachlorophenol	**ND**	0.022	EPA 8270E	6-22-21	6-23-21	
2,3,4,6-Tetrachlorophenol	**ND**	0.022	EPA 8270E	6-22-21	6-23-21	
Diethylphthalate	**ND**	0.11	EPA 8270E	6-22-21	6-23-21	
4-Chlorophenyl-phenylether	**ND**	0.022	EPA 8270E	6-22-21	6-23-21	
4-Nitroaniline	**ND**	0.022	EPA 8270E	6-22-21	6-23-21	
Fluorene	**ND**	0.0044	EPA 8270E/SIM	6-22-21	6-22-21	
4,6-Dinitro-2-methylphenol	**ND**	0.11	EPA 8270E	6-22-21	6-23-21	
n-Nitrosodiphenylamine	**ND**	0.022	EPA 8270E	6-22-21	6-23-21	
1,2-Diphenylhydrazine	**ND**	0.022	EPA 8270E	6-22-21	6-23-21	
4-Bromophenyl-phenylether	**ND**	0.022	EPA 8270E	6-22-21	6-23-21	
Hexachlorobenzene	**ND**	0.022	EPA 8270E	6-22-21	6-23-21	
Pentachlorophenol	**ND**	0.044	EPA 8270E	6-22-21	6-23-21	
Phenanthrene	**ND**	0.0044	EPA 8270E/SIM	6-22-21	6-22-21	
Anthracene	**ND**	0.0044	EPA 8270E/SIM	6-22-21	6-22-21	
Carbazole	**ND**	0.022	EPA 8270E	6-22-21	6-23-21	
Di-n-butylphthalate	**ND**	0.11	EPA 8270E	6-22-21	6-23-21	
Fluoranthene	**ND**	0.0044	EPA 8270E/SIM	6-22-21	6-22-21	
Pyrene	**ND**	0.0044	EPA 8270E/SIM	6-22-21	6-22-21	
Butylbenzylphthalate	**ND**	0.11	EPA 8270E	6-22-21	6-23-21	
bis-2-Ethylhexyladipate	**ND**	0.11	EPA 8270E	6-22-21	6-23-21	
3,3'-Dichlorobenzidine	**ND**	0.011	EPA 8270E	6-22-21	6-23-21	
Benzo[a]anthracene	**ND**	0.0044	EPA 8270E/SIM	6-22-21	6-22-21	
Chrysene	**ND**	0.0044	EPA 8270E/SIM	6-22-21	6-22-21	
bis(2-Ethylhexyl)phthalate	**ND**	0.11	EPA 8270E	6-22-21	6-23-21	
Di-n-octylphthalate	**ND**	0.11	EPA 8270E	6-22-21	6-23-21	
Benzo[b]fluoranthene	**ND**	0.0044	EPA 8270E/SIM	6-22-21	6-22-21	
Benzo(j,k)fluoranthene	**ND**	0.0044	EPA 8270E/SIM	6-22-21	6-22-21	
Benzo[a]pyrene	**ND**	0.0044	EPA 8270E/SIM	6-22-21	6-22-21	
Indeno[1,2,3-cd]pyrene	**ND**	0.0044	EPA 8270E/SIM	6-22-21	6-22-21	
Dibenz[a,h]anthracene	**ND**	0.0044	EPA 8270E/SIM	6-22-21	6-22-21	
Benzo[g,h,i]perylene	**ND**	0.0044	EPA 8270E/SIM	6-22-21	6-22-21	
Surrogate:	*Percent Recovery*	*Control Limits*				
2-Fluorophenol	*53*	*26 - 109*				
Phenol-d6	*69*	*33 - 113*				
Nitrobenzene-d5	*60*	*31 - 110*				
2-Fluorobiphenyl	*70*	*42 - 107*				
2,4,6-Tribromophenol	*88*	*42 - 123*				
Terphenyl-d14	*58*	*41 - 115*				

This report pertains to the samples analyzed in accordance with the chain of custody, and is intended only for the use of the individual or company to whom it is addressed.

Date of Report: June 23, 2021
Samples Submitted: June 21, 2021
Laboratory Reference: 2106-190
Project: 11-05150-003

SEMIVOLATILE ORGANICS EPA 8270E/SIM
page 1 of 2

Matrix: Soil
Units: mg/Kg

Analyte	Result	PQL	Method	Date Prepared	Date Analyzed	Flags
Client ID:	**DA7SWCS17210621D**					
Laboratory ID:	06-190-02					
n-Nitrosodimethylamine	**ND**	0.011	EPA 8270E	6-22-21	6-23-21	
Pyridine	**ND**	0.21	EPA 8270E	6-22-21	6-23-21	
Phenol	**ND**	0.021	EPA 8270E	6-22-21	6-23-21	
Aniline	**ND**	0.11	EPA 8270E	6-22-21	6-23-21	
bis(2-Chloroethyl)ether	**ND**	0.011	EPA 8270E	6-22-21	6-23-21	
2-Chlorophenol	**ND**	0.021	EPA 8270E	6-22-21	6-23-21	
1,3-Dichlorobenzene	**ND**	0.021	EPA 8270E	6-22-21	6-23-21	
1,4-Dichlorobenzene	**ND**	0.021	EPA 8270E	6-22-21	6-23-21	
Benzyl alcohol	**ND**	0.021	EPA 8270E	6-22-21	6-23-21	
1,2-Dichlorobenzene	**ND**	0.021	EPA 8270E	6-22-21	6-23-21	
2-Methylphenol (o-Cresol)	**ND**	0.021	EPA 8270E	6-22-21	6-23-21	
bis(2-Chloroisopropyl)ether	**ND**	0.021	EPA 8270E	6-22-21	6-23-21	
(3+4)-Methylphenol (m,p-Cresol)	**0.029**	0.021	EPA 8270E	6-22-21	6-23-21	
n-Nitroso-di-n-propylamine	**ND**	0.011	EPA 8270E	6-22-21	6-23-21	
Hexachloroethane	**ND**	0.021	EPA 8270E	6-22-21	6-23-21	
Nitrobenzene	**ND**	0.021	EPA 8270E	6-22-21	6-23-21	
Isophorone	**ND**	0.021	EPA 8270E	6-22-21	6-23-21	
2-Nitrophenol	**ND**	0.021	EPA 8270E	6-22-21	6-23-21	
2,4-Dimethylphenol	**ND**	0.021	EPA 8270E	6-22-21	6-23-21	
bis(2-Chloroethoxy)methane	**ND**	0.021	EPA 8270E	6-22-21	6-23-21	
2,4-Dichlorophenol	**ND**	0.021	EPA 8270E	6-22-21	6-23-21	
1,2,4-Trichlorobenzene	**ND**	0.021	EPA 8270E	6-22-21	6-23-21	
Naphthalene	**ND**	0.0042	EPA 8270E/SIM	6-22-21	6-22-21	
4-Chloroaniline	**ND**	0.011	EPA 8270E	6-22-21	6-23-21	
Hexachlorobutadiene	**ND**	0.021	EPA 8270E	6-22-21	6-23-21	
4-Chloro-3-methylphenol	**ND**	0.021	EPA 8270E	6-22-21	6-23-21	
2-Methylnaphthalene	**ND**	0.0042	EPA 8270E/SIM	6-22-21	6-22-21	
1-Methylnaphthalene	**ND**	0.0042	EPA 8270E/SIM	6-22-21	6-22-21	
Hexachlorocyclopentadiene	**ND**	0.021	EPA 8270E	6-22-21	6-23-21	
2,4,6-Trichlorophenol	**ND**	0.021	EPA 8270E	6-22-21	6-23-21	
2,3-Dichloroaniline	**ND**	0.021	EPA 8270E	6-22-21	6-23-21	
2,4,5-Trichlorophenol	**ND**	0.021	EPA 8270E	6-22-21	6-23-21	
2-Chloronaphthalene	**ND**	0.021	EPA 8270E	6-22-21	6-23-21	
2-Nitroaniline	**ND**	0.021	EPA 8270E	6-22-21	6-23-21	
1,4-Dinitrobenzene	**ND**	0.021	EPA 8270E	6-22-21	6-23-21	
Dimethylphthalate	**ND**	0.021	EPA 8270E	6-22-21	6-23-21	
1,3-Dinitrobenzene	**ND**	0.021	EPA 8270E	6-22-21	6-23-21	
2,6-Dinitrotoluene	**ND**	0.011	EPA 8270E	6-22-21	6-23-21	
1,2-Dinitrobenzene	**ND**	0.021	EPA 8270E	6-22-21	6-23-21	
Acenaphthylene	**ND**	0.0042	EPA 8270E/SIM	6-22-21	6-22-21	
3-Nitroaniline	**ND**	0.021	EPA 8270E	6-22-21	6-23-21	

This report pertains to the samples analyzed in accordance with the chain of custody, and is intended only for the use of the individual or company to whom it is addressed.

Date of Report: June 23, 2021
Samples Submitted: June 21, 2021
Laboratory Reference: 2106-190
Project: 11-05150-003

SEMIVOLATILE ORGANICS EPA 8270E/SIM
page 2 of 2

Analyte	Result	PQL	Method	Date Prepared	Date Analyzed	Flags
Client ID:	**DA7SWCS17210621D**					
Laboratory ID:	06-190-02					
2,4-Dinitrophenol	**ND**	0.11	EPA 8270E	6-22-21	6-23-21	
Acenaphthene	**ND**	0.0042	EPA 8270E/SIM	6-22-21	6-22-21	
4-Nitrophenol	**ND**	0.042	EPA 8270E	6-22-21	6-23-21	
2,4-Dinitrotoluene	**ND**	0.011	EPA 8270E	6-22-21	6-23-21	
Dibenzofuran	**ND**	0.021	EPA 8270E	6-22-21	6-23-21	
2,3,5,6-Tetrachlorophenol	**ND**	0.021	EPA 8270E	6-22-21	6-23-21	
2,3,4,6-Tetrachlorophenol	**ND**	0.021	EPA 8270E	6-22-21	6-23-21	
Diethylphthalate	**ND**	0.11	EPA 8270E	6-22-21	6-23-21	
4-Chlorophenyl-phenylether	**ND**	0.021	EPA 8270E	6-22-21	6-23-21	
4-Nitroaniline	**ND**	0.021	EPA 8270E	6-22-21	6-23-21	
Fluorene	**ND**	0.0042	EPA 8270E/SIM	6-22-21	6-22-21	
4,6-Dinitro-2-methylphenol	**ND**	0.11	EPA 8270E	6-22-21	6-23-21	
n-Nitrosodiphenylamine	**ND**	0.021	EPA 8270E	6-22-21	6-23-21	
1,2-Diphenylhydrazine	**ND**	0.021	EPA 8270E	6-22-21	6-23-21	
4-Bromophenyl-phenylether	**ND**	0.021	EPA 8270E	6-22-21	6-23-21	
Hexachlorobenzene	**ND**	0.021	EPA 8270E	6-22-21	6-23-21	
Pentachlorophenol	**ND**	0.042	EPA 8270E	6-22-21	6-23-21	
Phenanthrene	**ND**	0.0042	EPA 8270E/SIM	6-22-21	6-22-21	
Anthracene	**ND**	0.0042	EPA 8270E/SIM	6-22-21	6-22-21	
Carbazole	**ND**	0.021	EPA 8270E	6-22-21	6-23-21	
Di-n-butylphthalate	**ND**	0.11	EPA 8270E	6-22-21	6-23-21	
Fluoranthene	**ND**	0.0042	EPA 8270E/SIM	6-22-21	6-22-21	
Pyrene	**ND**	0.0042	EPA 8270E/SIM	6-22-21	6-22-21	
Butylbenzylphthalate	**ND**	0.11	EPA 8270E	6-22-21	6-23-21	
bis-2-Ethylhexyladipate	**ND**	0.11	EPA 8270E	6-22-21	6-23-21	
3,3'-Dichlorobenzidine	**ND**	0.011	EPA 8270E	6-22-21	6-23-21	
Benzo[a]anthracene	**ND**	0.0042	EPA 8270E/SIM	6-22-21	6-22-21	
Chrysene	**ND**	0.0042	EPA 8270E/SIM	6-22-21	6-22-21	
bis(2-Ethylhexyl)phthalate	**ND**	0.11	EPA 8270E	6-22-21	6-23-21	
Di-n-octylphthalate	**ND**	0.11	EPA 8270E	6-22-21	6-23-21	
Benzo[b]fluoranthene	**ND**	0.0042	EPA 8270E/SIM	6-22-21	6-22-21	
Benzo(j,k)fluoranthene	**ND**	0.0042	EPA 8270E/SIM	6-22-21	6-22-21	
Benzo[a]pyrene	**ND**	0.0042	EPA 8270E/SIM	6-22-21	6-22-21	
Indeno[1,2,3-cd]pyrene	**ND**	0.0042	EPA 8270E/SIM	6-22-21	6-22-21	
Dibenz[a,h]anthracene	**ND**	0.0042	EPA 8270E/SIM	6-22-21	6-22-21	
Benzo[g,h,i]perylene	**ND**	0.0042	EPA 8270E/SIM	6-22-21	6-22-21	
Surrogate:	*Percent Recovery*	*Control Limits*				
2-Fluorophenol	*72*	*26 - 109*				
Phenol-d6	*85*	*33 - 113*				
Nitrobenzene-d5	*83*	*31 - 110*				
2-Fluorobiphenyl	*90*	*42 - 107*				
2,4,6-Tribromophenol	*105*	*42 - 123*				
Terphenyl-d14	*69*	*41 - 115*				

This report pertains to the samples analyzed in accordance with the chain of custody, and is intended only for the use of the individual or company to whom it is addressed.

Date of Report: June 23, 2021
Samples Submitted: June 21, 2021
Laboratory Reference: 2106-190
Project: 11-05150-003

SEMIVOLATILE ORGANICS EPA 8270E/SIM
page 1 of 2

Matrix: Soil
Units: mg/Kg

Analyte	Result	PQL	Method	Date Prepared	Date Analyzed	Flags
Client ID:	**DA7SWCS18210621I**					
Laboratory ID:	06-190-03					
n-Nitrosodimethylamine	**ND**	0.011	EPA 8270E	6-22-21	6-23-21	
Pyridine	**ND**	0.23	EPA 8270E	6-22-21	6-23-21	
Phenol	**ND**	0.023	EPA 8270E	6-22-21	6-23-21	
Aniline	**ND**	0.11	EPA 8270E	6-22-21	6-23-21	
bis(2-Chloroethyl)ether	**ND**	0.011	EPA 8270E	6-22-21	6-23-21	
2-Chlorophenol	**ND**	0.023	EPA 8270E	6-22-21	6-23-21	
1,3-Dichlorobenzene	**ND**	0.023	EPA 8270E	6-22-21	6-23-21	
1,4-Dichlorobenzene	**ND**	0.023	EPA 8270E	6-22-21	6-23-21	
Benzyl alcohol	**ND**	0.023	EPA 8270E	6-22-21	6-23-21	
1,2-Dichlorobenzene	**ND**	0.023	EPA 8270E	6-22-21	6-23-21	
2-Methylphenol (o-Cresol)	**ND**	0.023	EPA 8270E	6-22-21	6-23-21	
bis(2-Chloroisopropyl)ether	**ND**	0.023	EPA 8270E	6-22-21	6-23-21	
(3+4)-Methylphenol (m,p-Cresol)	**ND**	0.023	EPA 8270E	6-22-21	6-23-21	
n-Nitroso-di-n-propylamine	**ND**	0.011	EPA 8270E	6-22-21	6-23-21	
Hexachloroethane	**ND**	0.023	EPA 8270E	6-22-21	6-23-21	
Nitrobenzene	**ND**	0.023	EPA 8270E	6-22-21	6-23-21	
Isophorone	**ND**	0.023	EPA 8270E	6-22-21	6-23-21	
2-Nitrophenol	**ND**	0.023	EPA 8270E	6-22-21	6-23-21	
2,4-Dimethylphenol	**ND**	0.023	EPA 8270E	6-22-21	6-23-21	
bis(2-Chloroethoxy)methane	**ND**	0.023	EPA 8270E	6-22-21	6-23-21	
2,4-Dichlorophenol	**ND**	0.023	EPA 8270E	6-22-21	6-23-21	
1,2,4-Trichlorobenzene	**ND**	0.023	EPA 8270E	6-22-21	6-23-21	
Naphthalene	**ND**	0.0045	EPA 8270E/SIM	6-22-21	6-22-21	
4-Chloroaniline	**ND**	0.011	EPA 8270E	6-22-21	6-23-21	
Hexachlorobutadiene	**ND**	0.023	EPA 8270E	6-22-21	6-23-21	
4-Chloro-3-methylphenol	**ND**	0.023	EPA 8270E	6-22-21	6-23-21	
2-Methylnaphthalene	**ND**	0.0045	EPA 8270E/SIM	6-22-21	6-22-21	
1-Methylnaphthalene	**ND**	0.0045	EPA 8270E/SIM	6-22-21	6-22-21	
Hexachlorocyclopentadiene	**ND**	0.023	EPA 8270E	6-22-21	6-23-21	
2,4,6-Trichlorophenol	**ND**	0.023	EPA 8270E	6-22-21	6-23-21	
2,3-Dichloroaniline	**ND**	0.023	EPA 8270E	6-22-21	6-23-21	
2,4,5-Trichlorophenol	**ND**	0.023	EPA 8270E	6-22-21	6-23-21	
2-Chloronaphthalene	**ND**	0.023	EPA 8270E	6-22-21	6-23-21	
2-Nitroaniline	**ND**	0.023	EPA 8270E	6-22-21	6-23-21	
1,4-Dinitrobenzene	**ND**	0.023	EPA 8270E	6-22-21	6-23-21	
Dimethylphthalate	**ND**	0.023	EPA 8270E	6-22-21	6-23-21	
1,3-Dinitrobenzene	**ND**	0.023	EPA 8270E	6-22-21	6-23-21	
2,6-Dinitrotoluene	**ND**	0.011	EPA 8270E	6-22-21	6-23-21	
1,2-Dinitrobenzene	**ND**	0.023	EPA 8270E	6-22-21	6-23-21	
Acenaphthylene	**ND**	0.0045	EPA 8270E/SIM	6-22-21	6-22-21	
3-Nitroaniline	**ND**	0.023	EPA 8270E	6-22-21	6-23-21	

This report pertains to the samples analyzed in accordance with the chain of custody, and is intended only for the use of the individual or company to whom it is addressed.

Date of Report: June 23, 2021
Samples Submitted: June 21, 2021
Laboratory Reference: 2106-190
Project: 11-05150-003

SEMIVOLATILE ORGANICS EPA 8270E/SIM
page 2 of 2

Analyte	Result	PQL	Method	Date Prepared	Date Analyzed	Flags
Client ID:	**DA7SWCS18210621I**					
Laboratory ID:	06-190-03					
2,4-Dinitrophenol	**ND**	0.11	EPA 8270E	6-22-21	6-23-21	
Acenaphthene	**ND**	0.0045	EPA 8270E/SIM	6-22-21	6-22-21	
4-Nitrophenol	**ND**	0.045	EPA 8270E	6-22-21	6-23-21	
2,4-Dinitrotoluene	**ND**	0.011	EPA 8270E	6-22-21	6-23-21	
Dibenzofuran	**ND**	0.023	EPA 8270E	6-22-21	6-23-21	
2,3,5,6-Tetrachlorophenol	**ND**	0.023	EPA 8270E	6-22-21	6-23-21	
2,3,4,6-Tetrachlorophenol	**ND**	0.023	EPA 8270E	6-22-21	6-23-21	
Diethylphthalate	**ND**	0.11	EPA 8270E	6-22-21	6-23-21	
4-Chlorophenyl-phenylether	**ND**	0.023	EPA 8270E	6-22-21	6-23-21	
4-Nitroaniline	**ND**	0.023	EPA 8270E	6-22-21	6-23-21	
Fluorene	**ND**	0.0045	EPA 8270E/SIM	6-22-21	6-22-21	
4,6-Dinitro-2-methylphenol	**ND**	0.11	EPA 8270E	6-22-21	6-23-21	
n-Nitrosodiphenylamine	**ND**	0.023	EPA 8270E	6-22-21	6-23-21	
1,2-Diphenylhydrazine	**ND**	0.023	EPA 8270E	6-22-21	6-23-21	
4-Bromophenyl-phenylether	**ND**	0.023	EPA 8270E	6-22-21	6-23-21	
Hexachlorobenzene	**ND**	0.023	EPA 8270E	6-22-21	6-23-21	
Pentachlorophenol	**ND**	0.045	EPA 8270E	6-22-21	6-23-21	
Phenanthrene	**ND**	0.0045	EPA 8270E/SIM	6-22-21	6-22-21	
Anthracene	**ND**	0.0045	EPA 8270E/SIM	6-22-21	6-22-21	
Carbazole	**ND**	0.023	EPA 8270E	6-22-21	6-23-21	
Di-n-butylphthalate	**ND**	0.11	EPA 8270E	6-22-21	6-23-21	
Fluoranthene	**ND**	0.0045	EPA 8270E/SIM	6-22-21	6-22-21	
Pyrene	**ND**	0.0045	EPA 8270E/SIM	6-22-21	6-22-21	
Butylbenzylphthalate	**ND**	0.11	EPA 8270E	6-22-21	6-23-21	
bis-2-Ethylhexyladipate	**ND**	0.11	EPA 8270E	6-22-21	6-23-21	
3,3'-Dichlorobenzidine	**ND**	0.011	EPA 8270E	6-22-21	6-23-21	
Benzo[a]anthracene	**ND**	0.0045	EPA 8270E/SIM	6-22-21	6-22-21	
Chrysene	**ND**	0.0045	EPA 8270E/SIM	6-22-21	6-22-21	
bis(2-Ethylhexyl)phthalate	**ND**	0.11	EPA 8270E	6-22-21	6-23-21	
Di-n-octylphthalate	**ND**	0.11	EPA 8270E	6-22-21	6-23-21	
Benzo[b]fluoranthene	**ND**	0.0045	EPA 8270E/SIM	6-22-21	6-22-21	
Benzo(j,k)fluoranthene	**ND**	0.0045	EPA 8270E/SIM	6-22-21	6-22-21	
Benzo[a]pyrene	**ND**	0.0045	EPA 8270E/SIM	6-22-21	6-22-21	
Indeno[1,2,3-cd]pyrene	**ND**	0.0045	EPA 8270E/SIM	6-22-21	6-22-21	
Dibenz[a,h]anthracene	**ND**	0.0045	EPA 8270E/SIM	6-22-21	6-22-21	
Benzo[g,h,i]perylene	**ND**	0.0045	EPA 8270E/SIM	6-22-21	6-22-21	
Surrogate:	*Percent Recovery*	*Control Limits*				
2-Fluorophenol	*82*	*26 - 109*				
Phenol-d6	*89*	*33 - 113*				
Nitrobenzene-d5	*93*	*31 - 110*				
2-Fluorobiphenyl	*91*	*42 - 107*				
2,4,6-Tribromophenol	*100*	*42 - 123*				
Terphenyl-d14	*69*	*41 - 115*				

This report pertains to the samples analyzed in accordance with the chain of custody, and is intended only for the use of the individual or company to whom it is addressed.

Date of Report: June 23, 2021
Samples Submitted: June 21, 2021
Laboratory Reference: 2106-190
Project: 11-05150-003

SEMIVOLATILE ORGANICS EPA 8270E/SIM
page 1 of 2

Matrix: Soil
Units: mg/Kg

Analyte	Result	PQL	Method	Date Prepared	Date Analyzed	Flags
Client ID:	**DA7SWCS19210621I**					
Laboratory ID:	06-190-04					
n-Nitrosodimethylamine	**ND**	0.011	EPA 8270E	6-22-21	6-23-21	
Pyridine	**ND**	0.23	EPA 8270E	6-22-21	6-23-21	
Phenol	**ND**	0.023	EPA 8270E	6-22-21	6-23-21	
Aniline	**ND**	0.11	EPA 8270E	6-22-21	6-23-21	
bis(2-Chloroethyl)ether	**ND**	0.011	EPA 8270E	6-22-21	6-23-21	
2-Chlorophenol	**ND**	0.023	EPA 8270E	6-22-21	6-23-21	
1,3-Dichlorobenzene	**ND**	0.023	EPA 8270E	6-22-21	6-23-21	
1,4-Dichlorobenzene	**ND**	0.023	EPA 8270E	6-22-21	6-23-21	
Benzyl alcohol	**ND**	0.023	EPA 8270E	6-22-21	6-23-21	
1,2-Dichlorobenzene	**ND**	0.023	EPA 8270E	6-22-21	6-23-21	
2-Methylphenol (o-Cresol)	**ND**	0.023	EPA 8270E	6-22-21	6-23-21	
bis(2-Chloroisopropyl)ether	**ND**	0.023	EPA 8270E	6-22-21	6-23-21	
(3+4)-Methylphenol (m,p-Cresol)	**ND**	0.023	EPA 8270E	6-22-21	6-23-21	
n-Nitroso-di-n-propylamine	**ND**	0.011	EPA 8270E	6-22-21	6-23-21	
Hexachloroethane	**ND**	0.023	EPA 8270E	6-22-21	6-23-21	
Nitrobenzene	**ND**	0.023	EPA 8270E	6-22-21	6-23-21	
Isophorone	**ND**	0.023	EPA 8270E	6-22-21	6-23-21	
2-Nitrophenol	**ND**	0.023	EPA 8270E	6-22-21	6-23-21	
2,4-Dimethylphenol	**ND**	0.023	EPA 8270E	6-22-21	6-23-21	
bis(2-Chloroethoxy)methane	**ND**	0.023	EPA 8270E	6-22-21	6-23-21	
2,4-Dichlorophenol	**ND**	0.023	EPA 8270E	6-22-21	6-23-21	
1,2,4-Trichlorobenzene	**ND**	0.023	EPA 8270E	6-22-21	6-23-21	
Naphthalene	**ND**	0.0045	EPA 8270E/SIM	6-22-21	6-22-21	
4-Chloroaniline	**ND**	0.011	EPA 8270E	6-22-21	6-23-21	
Hexachlorobutadiene	**ND**	0.023	EPA 8270E	6-22-21	6-23-21	
4-Chloro-3-methylphenol	**ND**	0.023	EPA 8270E	6-22-21	6-23-21	
2-Methylnaphthalene	**ND**	0.0045	EPA 8270E/SIM	6-22-21	6-22-21	
1-Methylnaphthalene	**ND**	0.0045	EPA 8270E/SIM	6-22-21	6-22-21	
Hexachlorocyclopentadiene	**ND**	0.023	EPA 8270E	6-22-21	6-23-21	
2,4,6-Trichlorophenol	**ND**	0.023	EPA 8270E	6-22-21	6-23-21	
2,3-Dichloroaniline	**ND**	0.023	EPA 8270E	6-22-21	6-23-21	
2,4,5-Trichlorophenol	**ND**	0.023	EPA 8270E	6-22-21	6-23-21	
2-Chloronaphthalene	**ND**	0.023	EPA 8270E	6-22-21	6-23-21	
2-Nitroaniline	**ND**	0.023	EPA 8270E	6-22-21	6-23-21	
1,4-Dinitrobenzene	**ND**	0.023	EPA 8270E	6-22-21	6-23-21	
Dimethylphthalate	**ND**	0.023	EPA 8270E	6-22-21	6-23-21	
1,3-Dinitrobenzene	**ND**	0.023	EPA 8270E	6-22-21	6-23-21	
2,6-Dinitrotoluene	**ND**	0.011	EPA 8270E	6-22-21	6-23-21	
1,2-Dinitrobenzene	**ND**	0.023	EPA 8270E	6-22-21	6-23-21	
Acenaphthylene	**ND**	0.0045	EPA 8270E/SIM	6-22-21	6-22-21	
3-Nitroaniline	**ND**	0.023	EPA 8270E	6-22-21	6-23-21	

This report pertains to the samples analyzed in accordance with the chain of custody, and is intended only for the use of the individual or company to whom it is addressed.

Date of Report: June 23, 2021
Samples Submitted: June 21, 2021
Laboratory Reference: 2106-190
Project: 11-05150-003

SEMIVOLATILE ORGANICS EPA 8270E/SIM
page 2 of 2

Analyte	Result	PQL	Method	Date Prepared	Date Analyzed	Flags
Client ID:	**DA7SWCS19210621I**					
Laboratory ID:	06-190-04					
2,4-Dinitrophenol	**ND**	0.11	EPA 8270E	6-22-21	6-23-21	
Acenaphthene	**ND**	0.0045	EPA 8270E/SIM	6-22-21	6-22-21	
4-Nitrophenol	**ND**	0.045	EPA 8270E	6-22-21	6-23-21	
2,4-Dinitrotoluene	**ND**	0.011	EPA 8270E	6-22-21	6-23-21	
Dibenzofuran	**ND**	0.023	EPA 8270E	6-22-21	6-23-21	
2,3,5,6-Tetrachlorophenol	**ND**	0.023	EPA 8270E	6-22-21	6-23-21	
2,3,4,6-Tetrachlorophenol	**ND**	0.023	EPA 8270E	6-22-21	6-23-21	
Diethylphthalate	**ND**	0.11	EPA 8270E	6-22-21	6-23-21	
4-Chlorophenyl-phenylether	**ND**	0.023	EPA 8270E	6-22-21	6-23-21	
4-Nitroaniline	**ND**	0.023	EPA 8270E	6-22-21	6-23-21	
Fluorene	**ND**	0.0045	EPA 8270E/SIM	6-22-21	6-22-21	
4,6-Dinitro-2-methylphenol	**ND**	0.11	EPA 8270E	6-22-21	6-23-21	
n-Nitrosodiphenylamine	**ND**	0.023	EPA 8270E	6-22-21	6-23-21	
1,2-Diphenylhydrazine	**ND**	0.023	EPA 8270E	6-22-21	6-23-21	
4-Bromophenyl-phenylether	**ND**	0.023	EPA 8270E	6-22-21	6-23-21	
Hexachlorobenzene	**ND**	0.023	EPA 8270E	6-22-21	6-23-21	
Pentachlorophenol	**ND**	0.045	EPA 8270E	6-22-21	6-23-21	
Phenanthrene	**ND**	0.0045	EPA 8270E/SIM	6-22-21	6-22-21	
Anthracene	**ND**	0.0045	EPA 8270E/SIM	6-22-21	6-22-21	
Carbazole	**ND**	0.023	EPA 8270E	6-22-21	6-23-21	
Di-n-butylphthalate	**ND**	0.11	EPA 8270E	6-22-21	6-23-21	
Fluoranthene	**ND**	0.0045	EPA 8270E/SIM	6-22-21	6-22-21	
Pyrene	**ND**	0.0045	EPA 8270E/SIM	6-22-21	6-22-21	
Butylbenzylphthalate	**ND**	0.11	EPA 8270E	6-22-21	6-23-21	
bis-2-Ethylhexyladipate	**ND**	0.11	EPA 8270E	6-22-21	6-23-21	
3,3'-Dichlorobenzidine	**ND**	0.011	EPA 8270E	6-22-21	6-23-21	
Benzo[a]anthracene	**ND**	0.0045	EPA 8270E/SIM	6-22-21	6-22-21	
Chrysene	**ND**	0.0045	EPA 8270E/SIM	6-22-21	6-22-21	
bis(2-Ethylhexyl)phthalate	**ND**	0.11	EPA 8270E	6-22-21	6-23-21	
Di-n-octylphthalate	**ND**	0.11	EPA 8270E	6-22-21	6-23-21	
Benzo[b]fluoranthene	**ND**	0.0045	EPA 8270E/SIM	6-22-21	6-22-21	
Benzo(j,k)fluoranthene	**ND**	0.0045	EPA 8270E/SIM	6-22-21	6-22-21	
Benzo[a]pyrene	**ND**	0.0045	EPA 8270E/SIM	6-22-21	6-22-21	
Indeno[1,2,3-cd]pyrene	**ND**	0.0045	EPA 8270E/SIM	6-22-21	6-22-21	
Dibenz[a,h]anthracene	**ND**	0.0045	EPA 8270E/SIM	6-22-21	6-22-21	
Benzo[g,h,i]perylene	**ND**	0.0045	EPA 8270E/SIM	6-22-21	6-22-21	
Surrogate:	*Percent Recovery*	*Control Limits*				
2-Fluorophenol	*75*	*26 - 109*				
Phenol-d6	*84*	*33 - 113*				
Nitrobenzene-d5	*86*	*31 - 110*				
2-Fluorobiphenyl	*84*	*42 - 107*				
2,4,6-Tribromophenol	*96*	*42 - 123*				
Terphenyl-d14	*66*	*41 - 115*				

This report pertains to the samples analyzed in accordance with the chain of custody, and is intended only for the use of the individual or company to whom it is addressed.

Date of Report: June 23, 2021
Samples Submitted: June 21, 2021
Laboratory Reference: 2106-190
Project: 11-05150-003

SEMIVOLATILE ORGANICS EPA 8270E/SIM
QUALITY CONTROL
page 1 of 2

Matrix: Soil
Units: mg/Kg

Analyte	Result	PQL	Method	Date Prepared	Date Analyzed	Flags
METHOD BLANK						
Laboratory ID:	MB0622S1					
n-Nitrosodimethylamine	**ND**	0.010	EPA 8270E	6-22-21	6-23-21	
Pyridine	**ND**	0.20	EPA 8270E	6-22-21	6-23-21	
Phenol	**ND**	0.020	EPA 8270E	6-22-21	6-23-21	
Aniline	**ND**	0.10	EPA 8270E	6-22-21	6-23-21	
bis(2-Chloroethyl)ether	**ND**	0.010	EPA 8270E	6-22-21	6-23-21	
2-Chlorophenol	**ND**	0.020	EPA 8270E	6-22-21	6-23-21	
1,3-Dichlorobenzene	**ND**	0.020	EPA 8270E	6-22-21	6-23-21	
1,4-Dichlorobenzene	**ND**	0.020	EPA 8270E	6-22-21	6-23-21	
Benzyl alcohol	**ND**	0.020	EPA 8270E	6-22-21	6-23-21	
1,2-Dichlorobenzene	**ND**	0.020	EPA 8270E	6-22-21	6-23-21	
2-Methylphenol (o-Cresol)	**ND**	0.020	EPA 8270E	6-22-21	6-23-21	
bis(2-Chloroisopropyl)ether	**ND**	0.020	EPA 8270E	6-22-21	6-23-21	
(3+4)-Methylphenol (m,p-Cresol)	**ND**	0.020	EPA 8270E	6-22-21	6-23-21	
n-Nitroso-di-n-propylamine	**ND**	0.010	EPA 8270E	6-22-21	6-23-21	
Hexachloroethane	**ND**	0.020	EPA 8270E	6-22-21	6-23-21	
Nitrobenzene	**ND**	0.020	EPA 8270E	6-22-21	6-23-21	
Isophorone	**ND**	0.020	EPA 8270E	6-22-21	6-23-21	
2-Nitrophenol	**ND**	0.020	EPA 8270E	6-22-21	6-23-21	
2,4-Dimethylphenol	**ND**	0.020	EPA 8270E	6-22-21	6-23-21	
bis(2-Chloroethoxy)methane	**ND**	0.020	EPA 8270E	6-22-21	6-23-21	
2,4-Dichlorophenol	**ND**	0.020	EPA 8270E	6-22-21	6-23-21	
1,2,4-Trichlorobenzene	**ND**	0.020	EPA 8270E	6-22-21	6-23-21	
Naphthalene	**ND**	0.0040	EPA 8270E/SIM	6-22-21	6-22-21	
4-Chloroaniline	**ND**	0.010	EPA 8270E	6-22-21	6-23-21	
Hexachlorobutadiene	**ND**	0.020	EPA 8270E	6-22-21	6-23-21	
4-Chloro-3-methylphenol	**ND**	0.020	EPA 8270E	6-22-21	6-23-21	
2-Methylnaphthalene	**ND**	0.0040	EPA 8270E/SIM	6-22-21	6-22-21	
1-Methylnaphthalene	**ND**	0.0040	EPA 8270E/SIM	6-22-21	6-22-21	
Hexachlorocyclopentadiene	**ND**	0.020	EPA 8270E	6-22-21	6-23-21	
2,4,6-Trichlorophenol	**ND**	0.020	EPA 8270E	6-22-21	6-23-21	
2,3-Dichloroaniline	**ND**	0.020	EPA 8270E	6-22-21	6-23-21	
2,4,5-Trichlorophenol	**ND**	0.020	EPA 8270E	6-22-21	6-23-21	
2-Chloronaphthalene	**ND**	0.020	EPA 8270E	6-22-21	6-23-21	
2-Nitroaniline	**ND**	0.020	EPA 8270E	6-22-21	6-23-21	
1,4-Dinitrobenzene	**ND**	0.020	EPA 8270E	6-22-21	6-23-21	
Dimethylphthalate	**ND**	0.020	EPA 8270E	6-22-21	6-23-21	
1,3-Dinitrobenzene	**ND**	0.020	EPA 8270E	6-22-21	6-23-21	
2,6-Dinitrotoluene	**ND**	0.010	EPA 8270E	6-22-21	6-23-21	
1,2-Dinitrobenzene	**ND**	0.020	EPA 8270E	6-22-21	6-23-21	
Acenaphthylene	**ND**	0.0040	EPA 8270E/SIM	6-22-21	6-22-21	
3-Nitroaniline	**ND**	0.020	EPA 8270E	6-22-21	6-23-21	

This report pertains to the samples analyzed in accordance with the chain of custody, and is intended only for the use of the individual or company to whom it is addressed.

Date of Report: June 23, 2021
Samples Submitted: June 21, 2021
Laboratory Reference: 2106-190
Project: 11-05150-003

SEMIVOLATILE ORGANICS EPA 8270E/SIM
QUALITY CONTROL
page 2 of 2

Analyte	Result	PQL	Method	Date Prepared	Date Analyzed	Flags
METHOD BLANK						
Laboratory ID:	MB0622S1					
2,4-Dinitrophenol	**ND**	0.10	EPA 8270E	6-22-21	6-23-21	
Acenaphthene	**ND**	0.0040	EPA 8270E/SIM	6-22-21	6-22-21	
4-Nitrophenol	**ND**	0.040	EPA 8270E	6-22-21	6-23-21	
2,4-Dinitrotoluene	**ND**	0.010	EPA 8270E	6-22-21	6-23-21	
Dibenzofuran	**ND**	0.020	EPA 8270E	6-22-21	6-23-21	
2,3,5,6-Tetrachlorophenol	**ND**	0.020	EPA 8270E	6-22-21	6-23-21	
2,3,4,6-Tetrachlorophenol	**ND**	0.020	EPA 8270E	6-22-21	6-23-21	
Diethylphthalate	**ND**	0.10	EPA 8270E	6-22-21	6-23-21	
4-Chlorophenyl-phenylether	**ND**	0.020	EPA 8270E	6-22-21	6-23-21	
4-Nitroaniline	**ND**	0.020	EPA 8270E	6-22-21	6-23-21	
Fluorene	**ND**	0.0040	EPA 8270E/SIM	6-22-21	6-22-21	
4,6-Dinitro-2-methylphenol	**ND**	0.10	EPA 8270E	6-22-21	6-23-21	
n-Nitrosodiphenylamine	**ND**	0.020	EPA 8270E	6-22-21	6-23-21	
1,2-Diphenylhydrazine	**ND**	0.020	EPA 8270E	6-22-21	6-23-21	
4-Bromophenyl-phenylether	**ND**	0.020	EPA 8270E	6-22-21	6-23-21	
Hexachlorobenzene	**ND**	0.020	EPA 8270E	6-22-21	6-23-21	
Pentachlorophenol	**ND**	0.040	EPA 8270E	6-22-21	6-23-21	
Phenanthrene	**ND**	0.0040	EPA 8270E/SIM	6-22-21	6-22-21	
Anthracene	**ND**	0.0040	EPA 8270E/SIM	6-22-21	6-22-21	
Carbazole	**ND**	0.020	EPA 8270E	6-22-21	6-23-21	
Di-n-butylphthalate	**ND**	0.10	EPA 8270E	6-22-21	6-23-21	
Fluoranthene	**ND**	0.0040	EPA 8270E/SIM	6-22-21	6-22-21	
Pyrene	**ND**	0.0040	EPA 8270E/SIM	6-22-21	6-22-21	
Butylbenzylphthalate	**ND**	0.10	EPA 8270E	6-22-21	6-23-21	
bis-2-Ethylhexyladipate	**ND**	0.10	EPA 8270E	6-22-21	6-23-21	
3,3'-Dichlorobenzidine	**ND**	0.010	EPA 8270E	6-22-21	6-23-21	
Benzo[a]anthracene	**ND**	0.0040	EPA 8270E/SIM	6-22-21	6-22-21	
Chrysene	**ND**	0.0040	EPA 8270E/SIM	6-22-21	6-22-21	
bis(2-Ethylhexyl)phthalate	**ND**	0.10	EPA 8270E	6-22-21	6-23-21	
Di-n-octylphthalate	**ND**	0.10	EPA 8270E	6-22-21	6-23-21	
Benzo[b]fluoranthene	**ND**	0.0040	EPA 8270E/SIM	6-22-21	6-22-21	
Benzo(j,k)fluoranthene	**ND**	0.0040	EPA 8270E/SIM	6-22-21	6-22-21	
Benzo[a]pyrene	**ND**	0.0040	EPA 8270E/SIM	6-22-21	6-22-21	
Indeno[1,2,3-cd]pyrene	**ND**	0.0040	EPA 8270E/SIM	6-22-21	6-22-21	
Dibenz[a,h]anthracene	**ND**	0.0040	EPA 8270E/SIM	6-22-21	6-22-21	
Benzo[g,h,i]perylene	**ND**	0.0040	EPA 8270E/SIM	6-22-21	6-22-21	
Surrogate:	*Percent Recovery*	*Control Limits*				
2-Fluorophenol	*67*	*26 - 109*				
Phenol-d6	*77*	*33 - 113*				
Nitrobenzene-d5	*76*	*31 - 110*				
2-Fluorobiphenyl	*78*	*42 - 107*				
2,4,6-Tribromophenol	*93*	*42 - 123*				
Terphenyl-d14	*81*	*41 - 115*				

This report pertains to the samples analyzed in accordance with the chain of custody, and is intended only for the use of the individual or company to whom it is addressed.

Date of Report: June 23, 2021
Samples Submitted: June 21, 2021
Laboratory Reference: 2106-190
Project: 11-05150-003

SEMIVOLATILE ORGANICS EPA 8270E/SIM
QUALITY CONTROL

Matrix: Soil
Units: mg/Kg

Analyte	Result		Spike Level		Percent Recovery		Recovery Limits	RPD	RPD Limit	Flags
SPIKE BLANKS										
Laboratory ID:	SB0622S1									
	SB	SBD	SB	SBD	SB	SBD				
Phenol	**0.885**	**0.828**	1.33	1.33	67	62	47 - 106	7	30	
2-Chlorophenol	**0.946**	**0.894**	1.33	1.33	71	67	51 - 105	6	31	
1,4-Dichlorobenzene	**0.445**	**0.420**	0.667	0.667	67	63	49 - 101	6	33	
n-Nitroso-di-n-propylamine	**0.500**	**0.477**	0.667	0.667	75	72	50 - 105	5	26	
1,2,4-Trichlorobenzene	**0.513**	**0.446**	0.667	0.667	77	67	50 - 107	14	31	
4-Chloro-3-methylphenol	**1.15**	**1.14**	1.33	1.33	86	86	58 - 114	1	22	
Acenaphthene	**0.554**	**0.531**	0.667	0.667	83	80	52 - 102	4	22	
4-Nitrophenol	**1.30**	**1.44**	1.33	1.33	98	108	51 - 126	10	20	
2,4-Dinitrotoluene	**0.616**	**0.628**	0.667	0.667	92	94	54 - 108	2	19	
Pentachlorophenol	**1.17**	**1.20**	1.33	1.33	88	90	20 - 148	3	30	
Pyrene	**0.551**	**0.561**	0.667	0.667	83	84	55 - 112	2	19	
Surrogate:										
2-Fluorophenol					*69*	*66*	*26 - 109*			
Phenol-d6					*79*	*73*	*33 - 113*			
Nitrobenzene-d5					*77*	*70*	*31 - 110*			
2-Fluorobiphenyl					*82*	*78*	*42 - 107*			
2,4,6-Tribromophenol					*105*	*101*	*42 - 123*			
Terphenyl-d14					*81*	*84*	*41 - 115*			

This report pertains to the samples analyzed in accordance with the chain of custody, and is intended only for the use of the individual or company to whom it is addressed.

Date of Report: June 23, 2021
Samples Submitted: June 21, 2021
Laboratory Reference: 2106-190
Project: 11-05150-003

PCBs EPA 8082A

Matrix: Soil
Units: mg/Kg (ppm)

Analyte	Result	PQL	Method	Date Prepared	Date Analyzed	Flags
Client ID:	**DA7SWCS17210621I**					
Laboratory ID:	06-190-01					
Aroclor 1016	**ND**	0.022	EPA 8082A	6-22-21	6-23-21	
Aroclor 1221	**ND**	0.022	EPA 8082A	6-22-21	6-23-21	
Aroclor 1232	**ND**	0.022	EPA 8082A	6-22-21	6-23-21	
Aroclor 1242	**ND**	0.022	EPA 8082A	6-22-21	6-23-21	
Aroclor 1248	**ND**	0.022	EPA 8082A	6-22-21	6-23-21	
Aroclor 1254	**ND**	0.022	EPA 8082A	6-22-21	6-23-21	
Aroclor 1260	**ND**	0.022	EPA 8082A	6-22-21	6-23-21	
Surrogate:	*Percent Recovery*	*Control Limits*				
DCB	*81*	*54-135*				
Client ID:	**DA7SWCS17210621D**					
Laboratory ID:	06-190-02					
Aroclor 1016	**ND**	0.021	EPA 8082A	6-22-21	6-23-21	
Aroclor 1221	**ND**	0.021	EPA 8082A	6-22-21	6-23-21	
Aroclor 1232	**ND**	0.021	EPA 8082A	6-22-21	6-23-21	
Aroclor 1242	**ND**	0.021	EPA 8082A	6-22-21	6-23-21	
Aroclor 1248	**ND**	0.021	EPA 8082A	6-22-21	6-23-21	
Aroclor 1254	**ND**	0.021	EPA 8082A	6-22-21	6-23-21	
Aroclor 1260	**ND**	0.021	EPA 8082A	6-22-21	6-23-21	
Surrogate:	*Percent Recovery*	*Control Limits*				
DCB	*89*	*54-135*				
Client ID:	**DA7SWCS18210621I**					
Laboratory ID:	06-190-03					
Aroclor 1016	**ND**	0.023	EPA 8082A	6-22-21	6-23-21	
Aroclor 1221	**ND**	0.023	EPA 8082A	6-22-21	6-23-21	
Aroclor 1232	**ND**	0.023	EPA 8082A	6-22-21	6-23-21	
Aroclor 1242	**ND**	0.023	EPA 8082A	6-22-21	6-23-21	
Aroclor 1248	**ND**	0.023	EPA 8082A	6-22-21	6-23-21	
Aroclor 1254	**ND**	0.023	EPA 8082A	6-22-21	6-23-21	
Aroclor 1260	**ND**	0.023	EPA 8082A	6-22-21	6-23-21	
Surrogate:	*Percent Recovery*	*Control Limits*				
DCB	*89*	*54-135*				

This report pertains to the samples analyzed in accordance with the chain of custody, and is intended only for the use of the individual or company to whom it is addressed.

Date of Report: June 23, 2021
Samples Submitted: June 21, 2021
Laboratory Reference: 2106-190
Project: 11-05150-003

PCBs EPA 8082A

Matrix: Soil
Units: mg/Kg (ppm)

Analyte	Result	PQL	Method	Date Prepared	Date Analyzed	Flags
Client ID:	**DA7SWCS19210621I**					
Laboratory ID:	06-190-04					
Aroclor 1016	**ND**	0.023	EPA 8082A	6-22-21	6-23-21	
Aroclor 1221	**ND**	0.023	EPA 8082A	6-22-21	6-23-21	
Aroclor 1232	**ND**	0.023	EPA 8082A	6-22-21	6-23-21	
Aroclor 1242	**ND**	0.023	EPA 8082A	6-22-21	6-23-21	
Aroclor 1248	**ND**	0.023	EPA 8082A	6-22-21	6-23-21	
Aroclor 1254	**ND**	0.023	EPA 8082A	6-22-21	6-23-21	
Aroclor 1260	**ND**	0.023	EPA 8082A	6-22-21	6-23-21	
Surrogate:	*Percent Recovery*	*Control Limits*				
DCB	*83*	*54-135*				

This report pertains to the samples analyzed in accordance with the chain of custody, and is intended only for the use of the individual or company to whom it is addressed.

Date of Report: June 23, 2021
Samples Submitted: June 21, 2021
Laboratory Reference: 2106-190
Project: 11-05150-003

PCBs EPA 8082A
QUALITY CONTROL

Matrix: Soil
Units: mg/Kg (ppm)

Analyte	Result	PQL	Method	Date Prepared	Date Analyzed	Flags
METHOD BLANK						
Laboratory ID:	MB0622S2					
Aroclor 1016	**ND**	0.020	EPA 8082A	6-22-21	6-23-21	
Aroclor 1221	**ND**	0.020	EPA 8082A	6-22-21	6-23-21	
Aroclor 1232	**ND**	0.020	EPA 8082A	6-22-21	6-23-21	
Aroclor 1242	**ND**	0.020	EPA 8082A	6-22-21	6-23-21	
Aroclor 1248	**ND**	0.020	EPA 8082A	6-22-21	6-23-21	
Aroclor 1254	**ND**	0.020	EPA 8082A	6-22-21	6-23-21	
Aroclor 1260	**ND**	0.020	EPA 8082A	6-22-21	6-23-21	
Surrogate:	*Percent Recovery*	*Control Limits*				
DCB	*85*	*54-135*				

Analyte	Result		Spike Level		Source Result	Percent Recovery		Recovery Limits	RPD	RPD Limit	Flags
MATRIX SPIKES											
Laboratory ID:	06-190-02										
	MS	MSD	MS	MSD		MS	MSD				
Aroclor 1260	**0.430**	**0.450**	0.500	0.500	ND	**86**	**90**	62-129	5	15	
Surrogate:											
DCB						*90*	*90*	*54-135*			

This report pertains to the samples analyzed in accordance with the chain of custody,
and is intended only for the use of the individual or company to whom it is addressed.

Date of Report: June 23, 2021
Samples Submitted: June 21, 2021
Laboratory Reference: 2106-190
Project: 11-05150-003

ORGANOCHLORINE PESTICIDES EPA 8081B

Matrix: Soil
Units: ug/Kg (ppb)

Analyte	Result	PQL	Method	Date Prepared	Date Analyzed	Flags
Client ID:	**DA7SWCS17210621I**					
Laboratory ID:	06-190-01					
alpha-BHC	**ND**	0.22	EPA 8081B	6-22-21	6-23-21	
gamma-BHC (Lindane)	**ND**	0.22	EPA 8081B	6-22-21	6-23-21	
beta-BHC	**ND**	0.22	EPA 8081B	6-22-21	6-23-21	
delta-BHC	**ND**	0.22	EPA 8081B	6-22-21	6-23-21	
Heptachlor	**ND**	0.22	EPA 8081B	6-22-21	6-23-21	
Aldrin	**ND**	0.22	EPA 8081B	6-22-21	6-23-21	
Heptachlor Epoxide	**ND**	0.22	EPA 8081B	6-22-21	6-23-21	
gamma-Chlordane	**ND**	0.22	EPA 8081B	6-22-21	6-23-21	
alpha-Chlordane	**ND**	0.22	EPA 8081B	6-22-21	6-23-21	
4,4'-DDE	**ND**	0.22	EPA 8081B	6-22-21	6-23-21	
Endosulfan I	**ND**	0.22	EPA 8081B	6-22-21	6-23-21	
Dieldrin	**ND**	0.22	EPA 8081B	6-22-21	6-23-21	
Endrin	**ND**	0.22	EPA 8081B	6-22-21	6-23-21	
4,4'-DDD	**ND**	0.22	EPA 8081B	6-22-21	6-23-21	
Endosulfan II	**ND**	0.22	EPA 8081B	6-22-21	6-23-21	
4,4'-DDT	**ND**	0.22	EPA 8081B	6-22-21	6-23-21	
Endrin Aldehyde	**ND**	0.55	EPA 8081B	6-22-21	6-23-21	
Methoxychlor	**ND**	1.1	EPA 8081B	6-22-21	6-23-21	
Endosulfan Sulfate	**ND**	0.55	EPA 8081B	6-22-21	6-23-21	
Endrin Ketone	**ND**	0.22	EPA 8081B	6-22-21	6-23-21	
Toxaphene	**ND**	2.2	EPA 8081B	6-22-21	6-23-21	
Surrogate:	*Percent Recovery*	*Control Limits*				
TCMX	*51*	*30-110*				
DCB	*86*	*40-117*				

This report pertains to the samples analyzed in accordance with the chain of custody, and is intended only for the use of the individual or company to whom it is addressed.

Date of Report: June 23, 2021
Samples Submitted: June 21, 2021
Laboratory Reference: 2106-190
Project: 11-05150-003

ORGANOCHLORINE PESTICIDES EPA 8081B

Matrix: Soil
Units: ug/Kg (ppb)

Analyte	Result	PQL	Method	Date Prepared	Date Analyzed	Flags
Client ID:	**DA7SWCS17210621D**					
Laboratory ID:	06-190-02					
alpha-BHC	**ND**	0.21	EPA 8081B	6-22-21	6-23-21	
gamma-BHC (Lindane)	**ND**	0.21	EPA 8081B	6-22-21	6-23-21	
beta-BHC	**ND**	0.21	EPA 8081B	6-22-21	6-23-21	
delta-BHC	**ND**	0.21	EPA 8081B	6-22-21	6-23-21	
Heptachlor	**ND**	0.21	EPA 8081B	6-22-21	6-23-21	
Aldrin	**ND**	0.21	EPA 8081B	6-22-21	6-23-21	
Heptachlor Epoxide	**ND**	0.21	EPA 8081B	6-22-21	6-23-21	
gamma-Chlordane	**ND**	0.21	EPA 8081B	6-22-21	6-23-21	
alpha-Chlordane	**ND**	0.21	EPA 8081B	6-22-21	6-23-21	
4,4'-DDE	**ND**	0.21	EPA 8081B	6-22-21	6-23-21	
Endosulfan I	**ND**	0.21	EPA 8081B	6-22-21	6-23-21	
Dieldrin	**ND**	0.21	EPA 8081B	6-22-21	6-23-21	
Endrin	**ND**	0.21	EPA 8081B	6-22-21	6-23-21	
4,4'-DDD	**ND**	0.21	EPA 8081B	6-22-21	6-23-21	
Endosulfan II	**ND**	0.21	EPA 8081B	6-22-21	6-23-21	
4,4'-DDT	**ND**	0.21	EPA 8081B	6-22-21	6-23-21	
Endrin Aldehyde	**ND**	0.53	EPA 8081B	6-22-21	6-23-21	
Methoxychlor	**ND**	1.1	EPA 8081B	6-22-21	6-23-21	
Endosulfan Sulfate	**ND**	0.53	EPA 8081B	6-22-21	6-23-21	
Endrin Ketone	**ND**	0.21	EPA 8081B	6-22-21	6-23-21	
Toxaphene	**ND**	2.1	EPA 8081B	6-22-21	6-23-21	
Surrogate:	*Percent Recovery*	*Control Limits*				
TCMX	*44*	*30-110*				
DCB	*82*	*40-117*				

This report pertains to the samples analyzed in accordance with the chain of custody, and is intended only for the use of the individual or company to whom it is addressed.

Date of Report: June 23, 2021
Samples Submitted: June 21, 2021
Laboratory Reference: 2106-190
Project: 11-05150-003

ORGANOCHLORINE PESTICIDES EPA 8081B

Matrix: Soil
Units: ug/Kg (ppb)

Analyte	Result	PQL	Method	Date Prepared	Date Analyzed	Flags
Client ID:	**DA7SWCS18210621I**					
Laboratory ID:	06-190-03					
alpha-BHC	**ND**	0.23	EPA 8081B	6-22-21	6-23-21	
gamma-BHC (Lindane)	**ND**	0.23	EPA 8081B	6-22-21	6-23-21	
beta-BHC	**ND**	0.23	EPA 8081B	6-22-21	6-23-21	
delta-BHC	**ND**	0.23	EPA 8081B	6-22-21	6-23-21	
Heptachlor	**ND**	0.23	EPA 8081B	6-22-21	6-23-21	
Aldrin	**ND**	0.23	EPA 8081B	6-22-21	6-23-21	
Heptachlor Epoxide	**ND**	0.23	EPA 8081B	6-22-21	6-23-21	
gamma-Chlordane	**ND**	0.23	EPA 8081B	6-22-21	6-23-21	
alpha-Chlordane	**ND**	0.23	EPA 8081B	6-22-21	6-23-21	
4,4'-DDE	**ND**	0.23	EPA 8081B	6-22-21	6-23-21	
Endosulfan I	**ND**	0.23	EPA 8081B	6-22-21	6-23-21	
Dieldrin	**ND**	0.23	EPA 8081B	6-22-21	6-23-21	
Endrin	**ND**	0.23	EPA 8081B	6-22-21	6-23-21	
4,4'-DDD	**ND**	0.23	EPA 8081B	6-22-21	6-23-21	
Endosulfan II	**ND**	0.23	EPA 8081B	6-22-21	6-23-21	
4,4'-DDT	**ND**	0.23	EPA 8081B	6-22-21	6-23-21	
Endrin Aldehyde	**ND**	0.57	EPA 8081B	6-22-21	6-23-21	
Methoxychlor	**ND**	1.1	EPA 8081B	6-22-21	6-23-21	
Endosulfan Sulfate	**ND**	0.57	EPA 8081B	6-22-21	6-23-21	
Endrin Ketone	**ND**	0.23	EPA 8081B	6-22-21	6-23-21	
Toxaphene	**ND**	2.3	EPA 8081B	6-22-21	6-23-21	
Surrogate:	*Percent Recovery*	*Control Limits*				
TCMX	*34*	*30-110*				
DCB	*73*	*40-117*				

This report pertains to the samples analyzed in accordance with the chain of custody, and is intended only for the use of the individual or company to whom it is addressed.

Date of Report: June 23, 2021
Samples Submitted: June 21, 2021
Laboratory Reference: 2106-190
Project: 11-05150-003

ORGANOCHLORINE PESTICIDES EPA 8081B

Matrix: Soil
Units: ug/Kg (ppb)

Analyte	Result	PQL	Method	Date Prepared	Date Analyzed	Flags
Client ID:	**DA7SWCS19210621I**					
Laboratory ID:	06-190-04					
alpha-BHC	**ND**	0.23	EPA 8081B	6-22-21	6-23-21	
gamma-BHC (Lindane)	**ND**	0.23	EPA 8081B	6-22-21	6-23-21	
beta-BHC	**ND**	0.23	EPA 8081B	6-22-21	6-23-21	
delta-BHC	**ND**	0.23	EPA 8081B	6-22-21	6-23-21	
Heptachlor	**ND**	0.23	EPA 8081B	6-22-21	6-23-21	
Aldrin	**ND**	0.23	EPA 8081B	6-22-21	6-23-21	
Heptachlor Epoxide	**ND**	0.23	EPA 8081B	6-22-21	6-23-21	
gamma-Chlordane	**ND**	0.23	EPA 8081B	6-22-21	6-23-21	
alpha-Chlordane	**ND**	0.23	EPA 8081B	6-22-21	6-23-21	
4,4'-DDE	**ND**	0.23	EPA 8081B	6-22-21	6-23-21	
Endosulfan I	**ND**	0.23	EPA 8081B	6-22-21	6-23-21	
Dieldrin	**ND**	0.23	EPA 8081B	6-22-21	6-23-21	
Endrin	**ND**	0.23	EPA 8081B	6-22-21	6-23-21	
4,4'-DDD	**ND**	0.23	EPA 8081B	6-22-21	6-23-21	
Endosulfan II	**ND**	0.23	EPA 8081B	6-22-21	6-23-21	
4,4'-DDT	**ND**	0.23	EPA 8081B	6-22-21	6-23-21	
Endrin Aldehyde	**ND**	0.57	EPA 8081B	6-22-21	6-23-21	
Methoxychlor	**ND**	1.1	EPA 8081B	6-22-21	6-23-21	
Endosulfan Sulfate	**ND**	0.57	EPA 8081B	6-22-21	6-23-21	
Endrin Ketone	**ND**	0.23	EPA 8081B	6-22-21	6-23-21	
Toxaphene	**ND**	2.3	EPA 8081B	6-22-21	6-23-21	
Surrogate:	*Percent Recovery*	*Control Limits*				
TCMX	*38*	*30-110*				
DCB	*63*	*40-117*				

This report pertains to the samples analyzed in accordance with the chain of custody, and is intended only for the use of the individual or company to whom it is addressed.

Date of Report: June 23, 2021
Samples Submitted: June 21, 2021
Laboratory Reference: 2106-190
Project: 11-05150-003

ORGANOCHLORINE PESTICIDES EPA 8081B QUALITY CONTROL

Matrix: Soil
Units: ug/Kg (ppb)

Analyte	Result	PQL	Method	Date Prepared	Date Analyzed	Flags
METHOD BLANK						
Laboratory ID:	MB0622S1					
alpha-BHC	**ND**	0.20	EPA 8081B	6-22-21	6-23-21	
gamma-BHC (Lindane)	**ND**	0.20	EPA 8081B	6-22-21	6-23-21	
beta-BHC	**ND**	0.20	EPA 8081B	6-22-21	6-23-21	
delta-BHC	**ND**	0.20	EPA 8081B	6-22-21	6-23-21	
Heptachlor	**ND**	0.20	EPA 8081B	6-22-21	6-23-21	
Aldrin	**ND**	0.20	EPA 8081B	6-22-21	6-23-21	
Heptachlor Epoxide	**ND**	0.20	EPA 8081B	6-22-21	6-23-21	
gamma-Chlordane	**ND**	0.20	EPA 8081B	6-22-21	6-23-21	
alpha-Chlordane	**ND**	0.20	EPA 8081B	6-22-21	6-23-21	
4,4'-DDE	**ND**	0.20	EPA 8081B	6-22-21	6-23-21	
Endosulfan I	**ND**	0.20	EPA 8081B	6-22-21	6-23-21	
Dieldrin	**ND**	0.20	EPA 8081B	6-22-21	6-23-21	
Endrin	**ND**	0.20	EPA 8081B	6-22-21	6-23-21	
4,4'-DDD	**ND**	0.20	EPA 8081B	6-22-21	6-23-21	
Endosulfan II	**ND**	0.20	EPA 8081B	6-22-21	6-23-21	
4,4'-DDT	**ND**	0.20	EPA 8081B	6-22-21	6-23-21	
Endrin Aldehyde	**ND**	0.50	EPA 8081B	6-22-21	6-23-21	
Methoxychlor	**ND**	1.0	EPA 8081B	6-22-21	6-23-21	
Endosulfan Sulfate	**ND**	0.50	EPA 8081B	6-22-21	6-23-21	
Endrin Ketone	**ND**	0.20	EPA 8081B	6-22-21	6-23-21	
Toxaphene	**ND**	2.0	EPA 8081B	6-22-21	6-23-21	
Surrogate:	*Percent Recovery*	*Control Limits*				
TCMX	*63*	*30-110*				
DCB	*95*	*40-117*				

This report pertains to the samples analyzed in accordance with the chain of custody, and is intended only for the use of the individual or company to whom it is addressed.

Date of Report: June 23, 2021
Samples Submitted: June 21, 2021
Laboratory Reference: 2106-190
Project: 11-05150-003

ORGANOCHLORINE PESTICIDES EPA 8081B QUALITY CONTROL

Matrix: Soil
Units: ug/Kg (ppb)

Analyte	Result		Spike Level		Source Result	Percent Recovery		Recovery Limits	RPD	RPD Limit	Flags
SPIKE BLANKS											
Laboratory ID:	SB0622S1										
	SB	SBD	SB	SBD		SB	SBD				
alpha-BHC	**7.04**	**7.23**	10.0	10.0	N/A	**70**	**72**	65-115	3	15	
gamma-BHC (Lindane)	**7.11**	**7.21**	10.0	10.0	N/A	**71**	**72**	69-116	1	15	
beta-BHC	**8.76**	**8.95**	10.0	10.0	N/A	**88**	**89**	63-116	2	15	
delta-BHC	**6.91**	**7.06**	10.0	10.0	N/A	**69**	**71**	66-116	2	15	
Heptachlor	**9.17**	**9.43**	10.0	10.0	N/A	**92**	**94**	63-119	3	15	
Aldrin	**8.19**	**8.48**	10.0	10.0	N/A	**82**	**85**	60-116	3	15	
Heptachlor Epoxide	**9.17**	**9.05**	10.0	10.0	N/A	**92**	**91**	65-116	1	15	
gamma-Chlordane	**7.80**	**8.05**	10.0	10.0	N/A	**78**	**81**	64-116	3	15	
alpha-Chlordane	**7.84**	**7.98**	10.0	10.0	N/A	**78**	**80**	62-119	2	15	
4,4'-DDE	**9.76**	**9.99**	10.0	10.0	N/A	**98**	**100**	69-120	2	15	
Endosulfan I	**8.76**	**9.02**	10.0	10.0	N/A	**88**	**90**	60-121	3	15	
Dieldrin	**9.44**	**9.68**	10.0	10.0	N/A	**94**	**97**	64-115	3	15	
Endrin	**9.80**	**9.90**	10.0	10.0	N/A	**98**	**99**	62-118	1	15	
4,4'-DDD	**7.30**	**7.47**	10.0	10.0	N/A	**73**	**75**	64-124	2	15	
Endosulfan II	**9.29**	**9.53**	10.0	10.0	N/A	**93**	**95**	64-115	3	15	
4,4'-DDT	**10.3**	**10.7**	10.0	10.0	N/A	**103**	**107**	57-130	4	15	
Endrin Aldehyde	**8.42**	**8.60**	10.0	10.0	N/A	**84**	**86**	57-114	2	15	
Methoxychlor	**9.80**	**10.2**	10.0	10.0	N/A	**98**	**102**	49-129	4	15	
Endosulfan Sulfate	**7.85**	**7.90**	10.0	10.0	N/A	**78**	**79**	61-115	1	15	
Endrin Ketone	**8.39**	**8.53**	10.0	10.0	N/A	**84**	**85**	64-116	2	15	
Surrogate:											
TCMX						*66*	*68*	*30-110*			
DCB						*98*	*94*	*40-117*			

This report pertains to the samples analyzed in accordance with the chain of custody, and is intended only for the use of the individual or company to whom it is addressed.

Date of Report: June 23, 2021
Samples Submitted: June 21, 2021
Laboratory Reference: 2106-190
Project: 11-05150-003

TOTAL METALS
EPA 6010D/6020B/7471B

Matrix: Soil
Units: mg/Kg (ppm)

Analyte	Result	PQL	Method	Date Prepared	Date Analyzed	Flags
Client ID:	**DA7SWCS17210621I**					
Laboratory ID:	06-190-01					
Arsenic	**ND**	5.5	EPA 6010D	6-22-21	6-22-21	
Barium	**36**	2.7	EPA 6010D	6-22-21	6-22-21	
Cadmium	**ND**	0.55	EPA 6010D	6-22-21	6-22-21	
Chromium	**18**	0.55	EPA 6010D	6-22-21	6-22-21	
Lead	**ND**	5.5	EPA 6010D	6-22-21	6-22-21	
Mercury	**ND**	0.082	EPA 7471B	6-23-21	6-23-21	
Selenium	**0.23**	0.14	EPA 6020B	6-23-21	6-23-21	
Silver	**ND**	1.1	EPA 6010D	6-22-21	6-22-21	
Client ID:	**DA7SWCS17210621D**					
Laboratory ID:	06-190-02					
Arsenic	**ND**	5.3	EPA 6010D	6-22-21	6-22-21	
Barium	**38**	2.6	EPA 6010D	6-22-21	6-22-21	
Cadmium	**ND**	0.53	EPA 6010D	6-22-21	6-22-21	
Chromium	**19**	0.53	EPA 6010D	6-22-21	6-22-21	
Lead	**ND**	5.3	EPA 6010D	6-22-21	6-22-21	
Mercury	**ND**	0.079	EPA 7471B	6-23-21	6-23-21	
Selenium	**0.26**	0.13	EPA 6020B	6-23-21	6-23-21	
Silver	**ND**	1.1	EPA 6010D	6-22-21	6-22-21	
Client ID:	**DA7SWCS18210621I**					
Laboratory ID:	06-190-03					
Arsenic	**ND**	5.7	EPA 6010D	6-22-21	6-22-21	
Barium	**42**	2.8	EPA 6010D	6-22-21	6-22-21	
Cadmium	**ND**	0.57	EPA 6010D	6-22-21	6-22-21	
Chromium	**19**	0.57	EPA 6010D	6-22-21	6-22-21	
Lead	**ND**	5.7	EPA 6010D	6-22-21	6-22-21	
Mercury	**ND**	0.085	EPA 7471B	6-23-21	6-23-21	
Selenium	**0.15**	0.14	EPA 6020B	6-23-21	6-23-21	
Silver	**ND**	1.1	EPA 6010D	6-22-21	6-22-21	

This report pertains to the samples analyzed in accordance with the chain of custody, and is intended only for the use of the individual or company to whom it is addressed.

Date of Report: June 23, 2021
Samples Submitted: June 21, 2021
Laboratory Reference: 2106-190
Project: 11-05150-003

TOTAL METALS
EPA 6010D/6020B/7471B

Matrix: Soil
Units: mg/Kg (ppm)

Analyte	Result	PQL	Method	Date Prepared	Date Analyzed	Flags
Client ID:	**DA7SWCS19210621I**					
Laboratory ID:	06-190-04					
Arsenic	**ND**	5.7	EPA 6010D	6-22-21	6-22-21	
Barium	**50**	2.8	EPA 6010D	6-22-21	6-22-21	
Cadmium	**ND**	0.57	EPA 6010D	6-22-21	6-22-21	
Chromium	**21**	0.57	EPA 6010D	6-22-21	6-22-21	
Lead	**ND**	5.7	EPA 6010D	6-22-21	6-22-21	
Mercury	**0.11**	0.085	EPA 7471B	6-23-21	6-23-21	
Selenium	**0.46**	0.14	EPA 6020B	6-23-21	6-23-21	
Silver	**ND**	1.1	EPA 6010D	6-22-21	6-22-21	

This report pertains to the samples analyzed in accordance with the chain of custody,
and is intended only for the use of the individual or company to whom it is addressed.

Date of Report: June 23, 2021
Samples Submitted: June 21, 2021
Laboratory Reference: 2106-190
Project: 11-05150-003

TOTAL METALS
EPA 6010D/6020B/7471B
QUALITY CONTROL

Matrix: Soil
Units: mg/Kg (ppm)

Analyte	Result	PQL	Method	Date Prepared	Date Analyzed	Flags
METHOD BLANK						
Laboratory ID:	MB0622SM1					
Arsenic	**ND**	5.0	EPA 6010D	6-22-21	6-22-21	
Barium	**ND**	2.5	EPA 6010D	6-22-21	6-22-21	
Cadmium	**ND**	0.50	EPA 6010D	6-22-21	6-22-21	
Chromium	**ND**	0.50	EPA 6010D	6-22-21	6-22-21	
Lead	**ND**	5.0	EPA 6010D	6-22-21	6-22-21	
Silver	**ND**	1.0	EPA 6010D	6-22-21	6-22-21	
Laboratory ID:	MB0623SM1					
Selenium	**ND**	0.13	EPA 6020B	6-23-21	6-23-21	
Laboratory ID:	MB0623S1					
Mercury	**ND**	0.075	EPA 7471B	6-23-21	6-23-21	

This report pertains to the samples analyzed in accordance with the chain of custody,
and is intended only for the use of the individual or company to whom it is addressed.

Date of Report: June 23, 2021
Samples Submitted: June 21, 2021
Laboratory Reference: 2106-190
Project: 11-05150-003

TOTAL METALS
EPA 6010D/6020B/7471B
QUALITY CONTROL

Matrix: Soil
Units: mg/Kg (ppm)

Analyte	Result		Spike Level		Source Result	Percent Recovery		Recovery Limits	RPD	RPD Limit	Flags
DUPLICATE											
Laboratory ID:	06-190-01										
	ORIG	DUP									
Arsenic	**ND**	**ND**	NA	NA		NA		NA	NA	20	
Barium	**32.9**	**27.4**	NA	NA		NA		NA	18	20	
Cadmium	**ND**	**ND**	NA	NA		NA		NA	NA	20	
Chromium	**16.5**	**13.2**	NA	NA		NA		NA	22	20	C
Lead	**ND**	**ND**	NA	NA		NA		NA	NA	20	
Silver	**ND**	**ND**	NA	NA		NA		NA	NA	20	
Laboratory ID:	06-190-02										
Selenium	**0.246**	**0.246**	NA	NA		NA		NA	0	20	
Laboratory ID:	06-196-01										
Mercury	**0.324**	**0.317**	NA	NA		NA		NA	2	20	
MATRIX SPIKES											
Laboratory ID:	06-190-01										
	MS	MSD	MS	MSD		MS	MSD				
Arsenic	**92.3**	**95.5**	100	100	ND	**92**	**96**	75-125	3	20	
Barium	**129**	**127**	100	100	32.9	**96**	**94**	75-125	1	20	
Cadmium	**48.2**	**48.8**	50.0	50.0	ND	**96**	**98**	75-125	1	20	
Chromium	**110**	**111**	100	100	16.5	**94**	**94**	75-125	0	20	
Lead	**247**	**250**	250	250	ND	**99**	**100**	75-125	1	20	
Silver	**23.6**	**23.9**	25.0	25.0	ND	**94**	**95**	75-125	1	20	
Laboratory ID:	06-190-02										
Selenium	**46.9**	**48.9**	50.0	50.0	0.246	**93**	**97**	75-125	4	20	
Laboratory ID:	06-196-01										
Mercury	**0.746**	**0.743**	0.500	0.500	0.324	**84**	**84**	80-120	0	20	

This report pertains to the samples analyzed in accordance with the chain of custody,
and is intended only for the use of the individual or company to whom it is addressed.

Date of Report: June 23, 2021
Samples Submitted: June 21, 2021
Laboratory Reference: 2106-190
Project: 11-05150-003

% MOISTURE

Client ID	Lab ID	% Moisture	Date Analyzed
DA7SWCS17210621I	06-190-01	**9**	6-22-21
DA7SWCS17210621D	06-190-02	**5**	6-22-21
DA7SWCS18210621I	06-190-03	**12**	6-22-21
DA7SWCS19210621I	06-190-04	**12**	6-22-21

This report pertains to the samples analyzed in accordance with the chain of custody,
and is intended only for the use of the individual or company to whom it is addressed.

OnSite Environmental Inc.

Data Qualifiers and Abbreviations

A - Due to a high sample concentration, the amount spiked is insufficient for meaningful MS/MSD recovery data.

B - The analyte indicated was also found in the blank sample.

C - The duplicate RPD is outside control limits due to high result variability when analyte concentrations are within five times the quantitation limit.

E - The value reported exceeds the quantitation range and is an estimate.

F - Surrogate recovery data is not available due to the high concentration of coeluting target compounds.

H - The analyte indicated is a common laboratory solvent and may have been introduced during sample preparation, and be impacting the sample result.

I - Compound recovery is outside of the control limits.

J - The value reported was below the practical quantitation limit. The value is an estimate.

K - Sample duplicate RPD is outside control limits due to sample inhomogeneity. The sample was re-extracted and re-analyzed with similar results.

L - The RPD is outside of the control limits.

M - Hydrocarbons in the gasoline range are impacting the diesel range result.

M1 - Hydrocarbons in the gasoline range (toluene-naphthalene) are present in the sample.

N - Hydrocarbons in the lube oil range are impacting the diesel range result.

N1 - Hydrocarbons in diesel range are impacting lube oil range results.

O - Hydrocarbons indicative of heavier fuels are present in the sample and are impacting the gasoline result.

P - The RPD of the detected concentrations between the two columns is greater than 40.

Q - Surrogate recovery is outside of the control limits.

S - Surrogate recovery data is not available due to the necessary dilution of the sample.

T - The sample chromatogram is not similar to a typical _____.

U - The analyte was analyzed for, but was not detected above the reported sample quantitation limit.

U1 - The practical quantitation limit is elevated due to interferences present in the sample.

V - Matrix Spike/Matrix Spike Duplicate recoveries are outside control limits due to matrix effects.

W - Matrix Spike/Matrix Spike Duplicate RPD are outside control limits due to matrix effects.

X - Sample extract treated with a mercury cleanup procedure.

X1- Sample extract treated with a sulfuric acid/silica gel cleanup procedure.

Y - The calibration verification for this analyte exceeded the 20% drift specified in methods 8260 & 8270, and therefore the reported result should be considered an estimate. The overall performance of the calibration verification standard met the acceptance criteria of the method.

Y1 - Negative effects of the matrix from this sample on the instrument caused values for this analyte in the bracketing continuing calibration verification standard (CCVs) to be outside of 20% acceptance criteria. Because of this, quantitation limits and sample concentrations should be considered estimates.

Z -

ND - Not Detected at PQL
PQL - Practical Quantitation Limit
RPD - Relative Percent Difference

This report pertains to the samples analyzed in accordance with the chain of custody, and is intended only for the use of the individual or company to whom it is addressed.

Chain of Custody

Page 1 of 1

OnSite Environmental Inc.
Analytical Laboratory Testing Services
14648 NE 95th Street • Redmond, WA 98052
Phone: (425) 883-3881 • www.onsite-env.com

Company: Anchor QEA (Herrera)
Project Number: 11-05150-003
Project Name: CEDAR HILLS REG. LANDFILL
Project Manager: RANDY BROWN
Sampled by: Camryn Steiner

Turnaround Request (in working days)
(Check One)
☐ Same Day ☐ 1 Day
☑ 2 Days ☐ 3 Days
☐ Standard (7 Days)
☐ _____ (other)

Laboratory Number: 06-190

Lab ID	Sample Identification	Date Sampled	Time Sampled	Matrix	Number of Containers	NWTPH-HCID	NWTPH-Gx/BTEX	NWTPH-Gx	NWTPH-Dx (☐ Acid / SG Clean-up)	Volatiles 8260D	Halogenated Volatiles 8260D	EDB EPA 8011 (Waters Only)	Semivolatiles 8270D/SIM (with low-level PAHs)	PAHs 8270E/SIM (low-level)	PCBs 8082A	Organochlorine Pesticides 8081B	Organophosphorus Pesticides 8270E/SIM	Chlorinated Acid Herbicides 8151A	Total RCRA Metals 6010B/7471A	Total MTCA Metals	TCLP Metals	HEM (oil and grease) 1664A					% Moisture
1	DA7SWCS17210621I	6/21/21	10:31	Soil	4					✓			✓		✓	✓			✓								X
2	DA7SWCS17210621D	↓	↓	↓	4					✓			✓		✓	✓			✓								X
3	DA7SWCS18210621D MS/MSD I	6/21/21	12:30	Soil	4					✓			✓		✓	✓			✓								X
4	DA7SWCS19210621D MS/MSD I	6/21/21	12:40	Soil	4					✓			✓		✓	✓			✓								X
5	VTRP21062I-Trip Blank	6/21/21	—	W	3					✓																	

	Signature	Company	Date	Time
Relinquished	Camryn Steiner	Herrera	6/21/21	2:30
Received		OSE	6.21.21	2:30
Relinquished				
Received				
Relinquished				
Received				
Reviewed/Date		Reviewed/Date		

Comments/Special Instructions
Email to Randy Brown
cc: Herrera

Data Package: Standard ☐ Level III ☐ Level IV ☐
Chromatograms with final report ☐ Electronic Data Deliverables (EDDs) ☐

OnSite Environmental Inc.
14648 NE 95th Street, Redmond, WA 98052 • (425) 883-3881

September 14, 2021

Randy Brown
Anchor QEA
1201 3rd Avenue, Suite 2600
Seattle, WA 98101

Re: Analytical Data for Project 11-05150-003
Laboratory Reference No. 2109-095

Dear Randy:

Enclosed are the analytical results and associated quality control data for samples submitted on September 10, 2021.

The standard policy of OnSite Environmental, Inc. is to store your samples for 30 days from the date of receipt. If you require longer storage, please contact the laboratory.

We appreciate the opportunity to be of service to you on this project. If you have any questions concerning the data, or need additional information, please feel free to call me.

Sincerely,

David Baumeister
Project Manager

Enclosures

This report pertains to the samples analyzed in accordance with the chain of custody,
and is intended only for the use of the individual or company to whom it is addressed.

Date of Report: September 14, 2021
Samples Submitted: September 10, 2021
Laboratory Reference: 2109-095
Project: 11-05150-003

Case Narrative

Samples were collected on September 10, 2021 and received by the laboratory on September 10, 2021. They were maintained at the laboratory at a temperature of 2°C to 6°C.

Please note that any and all soil sample results are reported on a dry-weight basis, unless otherwise noted below.

General QA/QC issues associated with the analytical data enclosed in this laboratory report will be indicated with a reference to a comment or explanation on the Data Qualifier page. More complex and involved QA/QC issues will be discussed in detail below.

This report pertains to the samples analyzed in accordance with the chain of custody,
and is intended only for the use of the individual or company to whom it is addressed.

Date of Report: September 14, 2021
Samples Submitted: September 10, 2021
Laboratory Reference: 2109-095
Project: 11-05150-003

VOLATILE ORGANICS EPA 8260D
page 1 of 2

Matrix: Soil
Units: mg/kg

Analyte	Result	PQL	Method	Date Prepared	Date Analyzed	Flags
Client ID:	**DA7SWCS20210910I**					
Laboratory ID:	09-095-01					
Dichlorodifluoromethane	ND	0.0010	EPA 8260D	9-13-21	9-13-21	
Chloromethane	ND	0.0039	EPA 8260D	9-13-21	9-13-21	
Vinyl Chloride	ND	0.00078	EPA 8260D	9-13-21	9-13-21	
Bromomethane	ND	0.0057	EPA 8260D	9-13-21	9-13-21	
Chloroethane	ND	0.0039	EPA 8260D	9-13-21	9-13-21	
Trichlorofluoromethane	ND	0.00078	EPA 8260D	9-13-21	9-13-21	
1,1-Dichloroethene	ND	0.00078	EPA 8260D	9-13-21	9-13-21	
Acetone	ND	0.016	EPA 8260D	9-13-21	9-13-21	
Iodomethane	ND	0.0039	EPA 8260D	9-13-21	9-13-21	
Carbon Disulfide	ND	0.00078	EPA 8260D	9-13-21	9-13-21	
Methylene Chloride	ND	0.0039	EPA 8260D	9-13-21	9-13-21	
(trans) 1,2-Dichloroethene	ND	0.00078	EPA 8260D	9-13-21	9-13-21	
Methyl t-Butyl Ether	ND	0.00078	EPA 8260D	9-13-21	9-13-21	
1,1-Dichloroethane	ND	0.00078	EPA 8260D	9-13-21	9-13-21	
Vinyl Acetate	ND	0.0039	EPA 8260D	9-13-21	9-13-21	
2,2-Dichloropropane	ND	0.00078	EPA 8260D	9-13-21	9-13-21	
(cis) 1,2-Dichloroethene	ND	0.00078	EPA 8260D	9-13-21	9-13-21	
2-Butanone	ND	0.0039	EPA 8260D	9-13-21	9-13-21	
Bromochloromethane	ND	0.00078	EPA 8260D	9-13-21	9-13-21	
Chloroform	ND	0.00078	EPA 8260D	9-13-21	9-13-21	
1,1,1-Trichloroethane	ND	0.00078	EPA 8260D	9-13-21	9-13-21	
Carbon Tetrachloride	ND	0.00078	EPA 8260D	9-13-21	9-13-21	
1,1-Dichloropropene	ND	0.00078	EPA 8260D	9-13-21	9-13-21	
Benzene	ND	0.00078	EPA 8260D	9-13-21	9-13-21	
1,2-Dichloroethane	ND	0.00078	EPA 8260D	9-13-21	9-13-21	
Trichloroethene	ND	0.00078	EPA 8260D	9-13-21	9-13-21	
1,2-Dichloropropane	ND	0.00078	EPA 8260D	9-13-21	9-13-21	
Dibromomethane	ND	0.00078	EPA 8260D	9-13-21	9-13-21	
Bromodichloromethane	ND	0.00078	EPA 8260D	9-13-21	9-13-21	
2-Chloroethyl Vinyl Ether	ND	0.0039	EPA 8260D	9-13-21	9-13-21	
(cis) 1,3-Dichloropropene	ND	0.00078	EPA 8260D	9-13-21	9-13-21	
Methyl Isobutyl Ketone	ND	0.0039	EPA 8260D	9-13-21	9-13-21	
Toluene	ND	0.0039	EPA 8260D	9-13-21	9-13-21	
(trans) 1,3-Dichloropropene	ND	0.00078	EPA 8260D	9-13-21	9-13-21	

This report pertains to the samples analyzed in accordance with the chain of custody, and is intended only for the use of the individual or company to whom it is addressed.

Date of Report: September 14, 2021
Samples Submitted: September 10, 2021
Laboratory Reference: 2109-095
Project: 11-05150-003

VOLATILE ORGANICS EPA 8260D
page 2 of 2

Analyte	Result	PQL	Method	Date Prepared	Date Analyzed	Flags
Client ID:	**DA7SWCS20210910I**					
Laboratory ID:	09-095-01					
1,1,2-Trichloroethane	ND	0.00078	EPA 8260D	9-13-21	9-13-21	
Tetrachloroethene	ND	0.00078	EPA 8260D	9-13-21	9-13-21	
1,3-Dichloropropane	ND	0.00078	EPA 8260D	9-13-21	9-13-21	
2-Hexanone	ND	0.0039	EPA 8260D	9-13-21	9-13-21	
Dibromochloromethane	ND	0.00078	EPA 8260D	9-13-21	9-13-21	
1,2-Dibromoethane	ND	0.000039	EPA 8260D/SIM	9-13-21	9-13-21	
Chlorobenzene	ND	0.00078	EPA 8260D	9-13-21	9-13-21	
1,1,1,2-Tetrachloroethane	ND	0.00078	EPA 8260D	9-13-21	9-13-21	
Ethylbenzene	ND	0.00078	EPA 8260D	9-13-21	9-13-21	
m,p-Xylene	ND	0.0016	EPA 8260D	9-13-21	9-13-21	
o-Xylene	ND	0.00078	EPA 8260D	9-13-21	9-13-21	
Styrene	ND	0.00078	EPA 8260D	9-13-21	9-13-21	
Bromoform	ND	0.0039	EPA 8260D	9-13-21	9-13-21	
Isopropylbenzene	ND	0.00078	EPA 8260D	9-13-21	9-13-21	
Bromobenzene	ND	0.00078	EPA 8260D	9-13-21	9-13-21	
1,1,2,2-Tetrachloroethane	ND	0.00078	EPA 8260D	9-13-21	9-13-21	
1,2,3-Trichloropropane	ND	0.00078	EPA 8260D	9-13-21	9-13-21	
n-Propylbenzene	ND	0.00078	EPA 8260D	9-13-21	9-13-21	
2-Chlorotoluene	ND	0.00078	EPA 8260D	9-13-21	9-13-21	
4-Chlorotoluene	ND	0.00078	EPA 8260D	9-13-21	9-13-21	
1,3,5-Trimethylbenzene	ND	0.00078	EPA 8260D	9-13-21	9-13-21	
tert-Butylbenzene	ND	0.00078	EPA 8260D	9-13-21	9-13-21	
1,2,4-Trimethylbenzene	ND	0.00078	EPA 8260D	9-13-21	9-13-21	
sec-Butylbenzene	ND	0.0012	EPA 8260D	9-13-21	9-13-21	
1,3-Dichlorobenzene	ND	0.00078	EPA 8260D	9-13-21	9-13-21	
p-Isopropyltoluene	ND	0.00078	EPA 8260D	9-13-21	9-13-21	
1,4-Dichlorobenzene	ND	0.00078	EPA 8260D	9-13-21	9-13-21	
1,2-Dichlorobenzene	ND	0.00078	EPA 8260D	9-13-21	9-13-21	
n-Butylbenzene	ND	0.00078	EPA 8260D	9-13-21	9-13-21	
1,2-Dibromo-3-chloropropane	ND	0.0039	EPA 8260D	9-13-21	9-13-21	
1,2,4-Trichlorobenzene	ND	0.00078	EPA 8260D	9-13-21	9-13-21	
Hexachlorobutadiene	ND	0.0039	EPA 8260D	9-13-21	9-13-21	
Naphthalene	ND	0.0039	EPA 8260D	9-13-21	9-13-21	
1,2,3-Trichlorobenzene	ND	0.00078	EPA 8260D	9-13-21	9-13-21	
Surrogate:	*Percent Recovery*	*Control Limits*				
Dibromofluoromethane	*113*	*74-131*				
Toluene-d8	*111*	*78-128*				
4-Bromofluorobenzene	*100*	*71-130*				

This report pertains to the samples analyzed in accordance with the chain of custody, and is intended only for the use of the individual or company to whom it is addressed.

Date of Report: September 14, 2021
Samples Submitted: September 10, 2021
Laboratory Reference: 2109-095
Project: 11-05150-003

VOLATILE ORGANICS EPA 8260D
page 1 of 2

Matrix: Soil
Units: mg/kg

Analyte	Result	PQL	Method	Date Prepared	Date Analyzed	Flags
Client ID:	**DA7SWCS21210910I**					
Laboratory ID:	09-095-02					
Dichlorodifluoromethane	ND	0.0015	EPA 8260D	9-13-21	9-13-21	
Chloromethane	ND	0.0057	EPA 8260D	9-13-21	9-13-21	
Vinyl Chloride	ND	0.0011	EPA 8260D	9-13-21	9-13-21	
Bromomethane	ND	0.0084	EPA 8260D	9-13-21	9-13-21	
Chloroethane	ND	0.0057	EPA 8260D	9-13-21	9-13-21	
Trichlorofluoromethane	ND	0.0011	EPA 8260D	9-13-21	9-13-21	
1,1-Dichloroethene	ND	0.0011	EPA 8260D	9-13-21	9-13-21	
Acetone	0.042	0.023	EPA 8260D	9-13-21	9-13-21	Y
Iodomethane	ND	0.0057	EPA 8260D	9-13-21	9-13-21	
Carbon Disulfide	ND	0.0011	EPA 8260D	9-13-21	9-13-21	
Methylene Chloride	ND	0.0057	EPA 8260D	9-13-21	9-13-21	
(trans) 1,2-Dichloroethene	ND	0.0011	EPA 8260D	9-13-21	9-13-21	
Methyl t-Butyl Ether	ND	0.0011	EPA 8260D	9-13-21	9-13-21	
1,1-Dichloroethane	ND	0.0011	EPA 8260D	9-13-21	9-13-21	
Vinyl Acetate	ND	0.0057	EPA 8260D	9-13-21	9-13-21	
2,2-Dichloropropane	ND	0.0011	EPA 8260D	9-13-21	9-13-21	
(cis) 1,2-Dichloroethene	ND	0.0011	EPA 8260D	9-13-21	9-13-21	
2-Butanone	ND	0.0057	EPA 8260D	9-13-21	9-13-21	
Bromochloromethane	ND	0.0011	EPA 8260D	9-13-21	9-13-21	
Chloroform	ND	0.0011	EPA 8260D	9-13-21	9-13-21	
1,1,1-Trichloroethane	ND	0.0011	EPA 8260D	9-13-21	9-13-21	
Carbon Tetrachloride	ND	0.0011	EPA 8260D	9-13-21	9-13-21	
1,1-Dichloropropene	ND	0.0011	EPA 8260D	9-13-21	9-13-21	
Benzene	ND	0.0011	EPA 8260D	9-13-21	9-13-21	
1,2-Dichloroethane	ND	0.0011	EPA 8260D	9-13-21	9-13-21	
Trichloroethene	ND	0.0011	EPA 8260D	9-13-21	9-13-21	
1,2-Dichloropropane	ND	0.0011	EPA 8260D	9-13-21	9-13-21	
Dibromomethane	ND	0.0011	EPA 8260D	9-13-21	9-13-21	
Bromodichloromethane	ND	0.0011	EPA 8260D	9-13-21	9-13-21	
2-Chloroethyl Vinyl Ether	ND	0.0057	EPA 8260D	9-13-21	9-13-21	
(cis) 1,3-Dichloropropene	ND	0.0011	EPA 8260D	9-13-21	9-13-21	
Methyl Isobutyl Ketone	ND	0.0057	EPA 8260D	9-13-21	9-13-21	
Toluene	ND	0.0057	EPA 8260D	9-13-21	9-13-21	
(trans) 1,3-Dichloropropene	ND	0.0011	EPA 8260D	9-13-21	9-13-21	

This report pertains to the samples analyzed in accordance with the chain of custody, and is intended only for the use of the individual or company to whom it is addressed.

Date of Report: September 14, 2021
Samples Submitted: September 10, 2021
Laboratory Reference: 2109-095
Project: 11-05150-003

VOLATILE ORGANICS EPA 8260D
page 2 of 2

Analyte	Result	PQL	Method	Date Prepared	Date Analyzed	Flags
Client ID:	**DA7SWCS21210910I**					
Laboratory ID:	09-095-02					
1,1,2-Trichloroethane	ND	0.0011	EPA 8260D	9-13-21	9-13-21	
Tetrachloroethene	ND	0.0011	EPA 8260D	9-13-21	9-13-21	
1,3-Dichloropropane	ND	0.0011	EPA 8260D	9-13-21	9-13-21	
2-Hexanone	ND	0.0057	EPA 8260D	9-13-21	9-13-21	
Dibromochloromethane	ND	0.0011	EPA 8260D	9-13-21	9-13-21	
1,2-Dibromoethane	ND	0.000057	EPA 8260D/SIM	9-13-21	9-13-21	
Chlorobenzene	ND	0.0011	EPA 8260D	9-13-21	9-13-21	
1,1,1,2-Tetrachloroethane	ND	0.0011	EPA 8260D	9-13-21	9-13-21	
Ethylbenzene	ND	0.0011	EPA 8260D	9-13-21	9-13-21	
m,p-Xylene	ND	0.0023	EPA 8260D	9-13-21	9-13-21	
o-Xylene	ND	0.0011	EPA 8260D	9-13-21	9-13-21	
Styrene	ND	0.0011	EPA 8260D	9-13-21	9-13-21	
Bromoform	ND	0.0057	EPA 8260D	9-13-21	9-13-21	
Isopropylbenzene	ND	0.0011	EPA 8260D	9-13-21	9-13-21	
Bromobenzene	ND	0.0011	EPA 8260D	9-13-21	9-13-21	
1,1,2,2-Tetrachloroethane	ND	0.0011	EPA 8260D	9-13-21	9-13-21	
1,2,3-Trichloropropane	ND	0.0011	EPA 8260D	9-13-21	9-13-21	
n-Propylbenzene	ND	0.0011	EPA 8260D	9-13-21	9-13-21	
2-Chlorotoluene	ND	0.0011	EPA 8260D	9-13-21	9-13-21	
4-Chlorotoluene	ND	0.0011	EPA 8260D	9-13-21	9-13-21	
1,3,5-Trimethylbenzene	ND	0.0011	EPA 8260D	9-13-21	9-13-21	
tert-Butylbenzene	ND	0.0011	EPA 8260D	9-13-21	9-13-21	
1,2,4-Trimethylbenzene	ND	0.0011	EPA 8260D	9-13-21	9-13-21	
sec-Butylbenzene	ND	0.0017	EPA 8260D	9-13-21	9-13-21	
1,3-Dichlorobenzene	ND	0.0011	EPA 8260D	9-13-21	9-13-21	
p-Isopropyltoluene	ND	0.0011	EPA 8260D	9-13-21	9-13-21	
1,4-Dichlorobenzene	ND	0.0011	EPA 8260D	9-13-21	9-13-21	
1,2-Dichlorobenzene	ND	0.0011	EPA 8260D	9-13-21	9-13-21	
n-Butylbenzene	ND	0.0011	EPA 8260D	9-13-21	9-13-21	
1,2-Dibromo-3-chloropropane	ND	0.0057	EPA 8260D	9-13-21	9-13-21	
1,2,4-Trichlorobenzene	ND	0.0011	EPA 8260D	9-13-21	9-13-21	
Hexachlorobutadiene	ND	0.0057	EPA 8260D	9-13-21	9-13-21	
Naphthalene	ND	0.0057	EPA 8260D	9-13-21	9-13-21	
1,2,3-Trichlorobenzene	ND	0.0011	EPA 8260D	9-13-21	9-13-21	
Surrogate:	*Percent Recovery*	*Control Limits*				
Dibromofluoromethane	*113*	*74-131*				
Toluene-d8	*113*	*78-128*				
4-Bromofluorobenzene	*104*	*71-130*				

This report pertains to the samples analyzed in accordance with the chain of custody, and is intended only for the use of the individual or company to whom it is addressed.

Date of Report: September 14, 2021
Samples Submitted: September 10, 2021
Laboratory Reference: 2109-095
Project: 11-05150-003

VOLATILE ORGANICS EPA 8260D
page 1 of 2

Matrix: Soil
Units: mg/kg

Analyte	Result	PQL	Method	Date Prepared	Date Analyzed	Flags
Client ID:	**DA7SWCS22210910I**					
Laboratory ID:	09-095-03					
Dichlorodifluoromethane	ND	0.0013	EPA 8260D	9-13-21	9-13-21	
Chloromethane	ND	0.0050	EPA 8260D	9-13-21	9-13-21	
Vinyl Chloride	ND	0.00099	EPA 8260D	9-13-21	9-13-21	
Bromomethane	ND	0.0073	EPA 8260D	9-13-21	9-13-21	
Chloroethane	ND	0.0050	EPA 8260D	9-13-21	9-13-21	
Trichlorofluoromethane	ND	0.00099	EPA 8260D	9-13-21	9-13-21	
1,1-Dichloroethene	ND	0.00099	EPA 8260D	9-13-21	9-13-21	
Acetone	0.021	0.020	EPA 8260D	9-13-21	9-13-21	Y
Iodomethane	ND	0.0050	EPA 8260D	9-13-21	9-13-21	
Carbon Disulfide	ND	0.00099	EPA 8260D	9-13-21	9-13-21	
Methylene Chloride	ND	0.0050	EPA 8260D	9-13-21	9-13-21	
(trans) 1,2-Dichloroethene	ND	0.00099	EPA 8260D	9-13-21	9-13-21	
Methyl t-Butyl Ether	ND	0.00099	EPA 8260D	9-13-21	9-13-21	
1,1-Dichloroethane	ND	0.00099	EPA 8260D	9-13-21	9-13-21	
Vinyl Acetate	ND	0.0050	EPA 8260D	9-13-21	9-13-21	
2,2-Dichloropropane	ND	0.00099	EPA 8260D	9-13-21	9-13-21	
(cis) 1,2-Dichloroethene	ND	0.00099	EPA 8260D	9-13-21	9-13-21	
2-Butanone	ND	0.0050	EPA 8260D	9-13-21	9-13-21	
Bromochloromethane	ND	0.00099	EPA 8260D	9-13-21	9-13-21	
Chloroform	ND	0.00099	EPA 8260D	9-13-21	9-13-21	
1,1,1-Trichloroethane	ND	0.00099	EPA 8260D	9-13-21	9-13-21	
Carbon Tetrachloride	ND	0.00099	EPA 8260D	9-13-21	9-13-21	
1,1-Dichloropropene	ND	0.00099	EPA 8260D	9-13-21	9-13-21	
Benzene	ND	0.00099	EPA 8260D	9-13-21	9-13-21	
1,2-Dichloroethane	ND	0.00099	EPA 8260D	9-13-21	9-13-21	
Trichloroethene	ND	0.00099	EPA 8260D	9-13-21	9-13-21	
1,2-Dichloropropane	ND	0.00099	EPA 8260D	9-13-21	9-13-21	
Dibromomethane	ND	0.00099	EPA 8260D	9-13-21	9-13-21	
Bromodichloromethane	ND	0.00099	EPA 8260D	9-13-21	9-13-21	
2-Chloroethyl Vinyl Ether	ND	0.0050	EPA 8260D	9-13-21	9-13-21	
(cis) 1,3-Dichloropropene	ND	0.00099	EPA 8260D	9-13-21	9-13-21	
Methyl Isobutyl Ketone	ND	0.0050	EPA 8260D	9-13-21	9-13-21	
Toluene	ND	0.0050	EPA 8260D	9-13-21	9-13-21	
(trans) 1,3-Dichloropropene	ND	0.00099	EPA 8260D	9-13-21	9-13-21	

This report pertains to the samples analyzed in accordance with the chain of custody, and is intended only for the use of the individual or company to whom it is addressed.

Date of Report: September 14, 2021
Samples Submitted: September 10, 2021
Laboratory Reference: 2109-095
Project: 11-05150-003

VOLATILE ORGANICS EPA 8260D
page 2 of 2

Analyte	Result	PQL	Method	Date Prepared	Date Analyzed	Flags
Client ID:	**DA7SWCS22210910I**					
Laboratory ID:	09-095-03					
1,1,2-Trichloroethane	ND	0.00099	EPA 8260D	9-13-21	9-13-21	
Tetrachloroethene	ND	0.00099	EPA 8260D	9-13-21	9-13-21	
1,3-Dichloropropane	ND	0.00099	EPA 8260D	9-13-21	9-13-21	
2-Hexanone	ND	0.0050	EPA 8260D	9-13-21	9-13-21	
Dibromochloromethane	ND	0.00099	EPA 8260D	9-13-21	9-13-21	
1,2-Dibromoethane	ND	0.000050	EPA 8260D/SIM	9-13-21	9-13-21	
Chlorobenzene	ND	0.00099	EPA 8260D	9-13-21	9-13-21	
1,1,1,2-Tetrachloroethane	ND	0.00099	EPA 8260D	9-13-21	9-13-21	
Ethylbenzene	ND	0.00099	EPA 8260D	9-13-21	9-13-21	
m,p-Xylene	ND	0.0020	EPA 8260D	9-13-21	9-13-21	
o-Xylene	ND	0.00099	EPA 8260D	9-13-21	9-13-21	
Styrene	ND	0.00099	EPA 8260D	9-13-21	9-13-21	
Bromoform	ND	0.0050	EPA 8260D	9-13-21	9-13-21	
Isopropylbenzene	ND	0.00099	EPA 8260D	9-13-21	9-13-21	
Bromobenzene	ND	0.00099	EPA 8260D	9-13-21	9-13-21	
1,1,2,2-Tetrachloroethane	ND	0.00099	EPA 8260D	9-13-21	9-13-21	
1,2,3-Trichloropropane	ND	0.00099	EPA 8260D	9-13-21	9-13-21	
n-Propylbenzene	ND	0.00099	EPA 8260D	9-13-21	9-13-21	
2-Chlorotoluene	ND	0.00099	EPA 8260D	9-13-21	9-13-21	
4-Chlorotoluene	ND	0.00099	EPA 8260D	9-13-21	9-13-21	
1,3,5-Trimethylbenzene	ND	0.00099	EPA 8260D	9-13-21	9-13-21	
tert-Butylbenzene	ND	0.00099	EPA 8260D	9-13-21	9-13-21	
1,2,4-Trimethylbenzene	ND	0.00099	EPA 8260D	9-13-21	9-13-21	
sec-Butylbenzene	ND	0.0015	EPA 8260D	9-13-21	9-13-21	
1,3-Dichlorobenzene	ND	0.00099	EPA 8260D	9-13-21	9-13-21	
p-Isopropyltoluene	ND	0.00099	EPA 8260D	9-13-21	9-13-21	
1,4-Dichlorobenzene	ND	0.00099	EPA 8260D	9-13-21	9-13-21	
1,2-Dichlorobenzene	ND	0.00099	EPA 8260D	9-13-21	9-13-21	
n-Butylbenzene	ND	0.00099	EPA 8260D	9-13-21	9-13-21	
1,2-Dibromo-3-chloropropane	ND	0.0050	EPA 8260D	9-13-21	9-13-21	
1,2,4-Trichlorobenzene	ND	0.00099	EPA 8260D	9-13-21	9-13-21	
Hexachlorobutadiene	ND	0.0050	EPA 8260D	9-13-21	9-13-21	
Naphthalene	ND	0.0050	EPA 8260D	9-13-21	9-13-21	
1,2,3-Trichlorobenzene	ND	0.00099	EPA 8260D	9-13-21	9-13-21	
Surrogate:	*Percent Recovery*	*Control Limits*				
Dibromofluoromethane	*113*	*74-131*				
Toluene-d8	*111*	*78-128*				
4-Bromofluorobenzene	*95*	*71-130*				

This report pertains to the samples analyzed in accordance with the chain of custody, and is intended only for the use of the individual or company to whom it is addressed.

Date of Report: September 14, 2021
Samples Submitted: September 10, 2021
Laboratory Reference: 2109-095
Project: 11-05150-003

VOLATILE ORGANICS EPA 8260D
page 1 of 2

Matrix: Soil
Units: mg/kg

Analyte	Result	PQL	Method	Date Prepared	Date Analyzed	Flags
Client ID:	**DA7SWCS22210910D**					
Laboratory ID:	09-095-04					
Dichlorodifluoromethane	ND	0.0012	EPA 8260D	9-13-21	9-13-21	
Chloromethane	ND	0.0044	EPA 8260D	9-13-21	9-13-21	
Vinyl Chloride	ND	0.00089	EPA 8260D	9-13-21	9-13-21	
Bromomethane	ND	0.0065	EPA 8260D	9-13-21	9-13-21	
Chloroethane	ND	0.0044	EPA 8260D	9-13-21	9-13-21	
Trichlorofluoromethane	ND	0.00089	EPA 8260D	9-13-21	9-13-21	
1,1-Dichloroethene	ND	0.00089	EPA 8260D	9-13-21	9-13-21	
Acetone	0.035	0.018	EPA 8260D	9-13-21	9-13-21	Y
Iodomethane	ND	0.0044	EPA 8260D	9-13-21	9-13-21	
Carbon Disulfide	ND	0.00089	EPA 8260D	9-13-21	9-13-21	
Methylene Chloride	ND	0.0044	EPA 8260D	9-13-21	9-13-21	
(trans) 1,2-Dichloroethene	ND	0.00089	EPA 8260D	9-13-21	9-13-21	
Methyl t-Butyl Ether	ND	0.00089	EPA 8260D	9-13-21	9-13-21	
1,1-Dichloroethane	ND	0.00089	EPA 8260D	9-13-21	9-13-21	
Vinyl Acetate	ND	0.0044	EPA 8260D	9-13-21	9-13-21	
2,2-Dichloropropane	ND	0.00089	EPA 8260D	9-13-21	9-13-21	
(cis) 1,2-Dichloroethene	ND	0.00089	EPA 8260D	9-13-21	9-13-21	
2-Butanone	0.0058	0.0044	EPA 8260D	9-13-21	9-13-21	Y
Bromochloromethane	ND	0.00089	EPA 8260D	9-13-21	9-13-21	
Chloroform	ND	0.00089	EPA 8260D	9-13-21	9-13-21	
1,1,1-Trichloroethane	ND	0.00089	EPA 8260D	9-13-21	9-13-21	
Carbon Tetrachloride	ND	0.00089	EPA 8260D	9-13-21	9-13-21	
1,1-Dichloropropene	ND	0.00089	EPA 8260D	9-13-21	9-13-21	
Benzene	ND	0.00089	EPA 8260D	9-13-21	9-13-21	
1,2-Dichloroethane	ND	0.00089	EPA 8260D	9-13-21	9-13-21	
Trichloroethene	ND	0.00089	EPA 8260D	9-13-21	9-13-21	
1,2-Dichloropropane	ND	0.00089	EPA 8260D	9-13-21	9-13-21	
Dibromomethane	ND	0.00089	EPA 8260D	9-13-21	9-13-21	
Bromodichloromethane	ND	0.00089	EPA 8260D	9-13-21	9-13-21	
2-Chloroethyl Vinyl Ether	ND	0.0044	EPA 8260D	9-13-21	9-13-21	
(cis) 1,3-Dichloropropene	ND	0.00089	EPA 8260D	9-13-21	9-13-21	
Methyl Isobutyl Ketone	ND	0.0044	EPA 8260D	9-13-21	9-13-21	
Toluene	ND	0.0044	EPA 8260D	9-13-21	9-13-21	
(trans) 1,3-Dichloropropene	ND	0.00089	EPA 8260D	9-13-21	9-13-21	

This report pertains to the samples analyzed in accordance with the chain of custody, and is intended only for the use of the individual or company to whom it is addressed.

Date of Report: September 14, 2021
Samples Submitted: September 10, 2021
Laboratory Reference: 2109-095
Project: 11-05150-003

VOLATILE ORGANICS EPA 8260D
page 2 of 2

Analyte	Result	PQL	Method	Date Prepared	Date Analyzed	Flags
Client ID:	**DA7SWCS22210910D**					
Laboratory ID:	09-095-04					
1,1,2-Trichloroethane	ND	0.00089	EPA 8260D	9-13-21	9-13-21	
Tetrachloroethene	ND	0.00089	EPA 8260D	9-13-21	9-13-21	
1,3-Dichloropropane	ND	0.00089	EPA 8260D	9-13-21	9-13-21	
2-Hexanone	ND	0.0044	EPA 8260D	9-13-21	9-13-21	
Dibromochloromethane	ND	0.00089	EPA 8260D	9-13-21	9-13-21	
1,2-Dibromoethane	ND	0.000044	EPA 8260D/SIM	9-13-21	9-13-21	
Chlorobenzene	ND	0.00089	EPA 8260D	9-13-21	9-13-21	
1,1,1,2-Tetrachloroethane	ND	0.00089	EPA 8260D	9-13-21	9-13-21	
Ethylbenzene	ND	0.00089	EPA 8260D	9-13-21	9-13-21	
m,p-Xylene	ND	0.0018	EPA 8260D	9-13-21	9-13-21	
o-Xylene	ND	0.00089	EPA 8260D	9-13-21	9-13-21	
Styrene	ND	0.00089	EPA 8260D	9-13-21	9-13-21	
Bromoform	ND	0.0044	EPA 8260D	9-13-21	9-13-21	
Isopropylbenzene	ND	0.00089	EPA 8260D	9-13-21	9-13-21	
Bromobenzene	ND	0.00089	EPA 8260D	9-13-21	9-13-21	
1,1,2,2-Tetrachloroethane	ND	0.00089	EPA 8260D	9-13-21	9-13-21	
1,2,3-Trichloropropane	ND	0.00089	EPA 8260D	9-13-21	9-13-21	
n-Propylbenzene	ND	0.00089	EPA 8260D	9-13-21	9-13-21	
2-Chlorotoluene	ND	0.00089	EPA 8260D	9-13-21	9-13-21	
4-Chlorotoluene	ND	0.00089	EPA 8260D	9-13-21	9-13-21	
1,3,5-Trimethylbenzene	ND	0.00089	EPA 8260D	9-13-21	9-13-21	
tert-Butylbenzene	ND	0.00089	EPA 8260D	9-13-21	9-13-21	
1,2,4-Trimethylbenzene	ND	0.00089	EPA 8260D	9-13-21	9-13-21	
sec-Butylbenzene	ND	0.0013	EPA 8260D	9-13-21	9-13-21	
1,3-Dichlorobenzene	ND	0.00089	EPA 8260D	9-13-21	9-13-21	
p-Isopropyltoluene	ND	0.00089	EPA 8260D	9-13-21	9-13-21	
1,4-Dichlorobenzene	ND	0.00089	EPA 8260D	9-13-21	9-13-21	
1,2-Dichlorobenzene	ND	0.00089	EPA 8260D	9-13-21	9-13-21	
n-Butylbenzene	ND	0.00089	EPA 8260D	9-13-21	9-13-21	
1,2-Dibromo-3-chloropropane	ND	0.0044	EPA 8260D	9-13-21	9-13-21	
1,2,4-Trichlorobenzene	ND	0.00089	EPA 8260D	9-13-21	9-13-21	
Hexachlorobutadiene	ND	0.0044	EPA 8260D	9-13-21	9-13-21	
Naphthalene	ND	0.0044	EPA 8260D	9-13-21	9-13-21	
1,2,3-Trichlorobenzene	ND	0.00089	EPA 8260D	9-13-21	9-13-21	
Surrogate:	*Percent Recovery*	*Control Limits*				
Dibromofluoromethane	*113*	*74-131*				
Toluene-d8	*112*	*78-128*				
4-Bromofluorobenzene	*92*	*71-130*				

This report pertains to the samples analyzed in accordance with the chain of custody, and is intended only for the use of the individual or company to whom it is addressed.

Date of Report: September 14, 2021
Samples Submitted: September 10, 2021
Laboratory Reference: 2109-095
Project: 11-05150-003

VOLATILE ORGANICS EPA 8260D
page 1 of 2

Matrix: Soil
Units: mg/kg

Analyte	Result	PQL	Method	Date Prepared	Date Analyzed	Flags
Client ID:	**DA7SWCS23210910I**					
Laboratory ID:	09-095-05					
Dichlorodifluoromethane	ND	0.0012	EPA 8260D	9-13-21	9-13-21	
Chloromethane	ND	0.0047	EPA 8260D	9-13-21	9-13-21	
Vinyl Chloride	ND	0.00093	EPA 8260D	9-13-21	9-13-21	
Bromomethane	ND	0.0068	EPA 8260D	9-13-21	9-13-21	
Chloroethane	ND	0.0047	EPA 8260D	9-13-21	9-13-21	
Trichlorofluoromethane	ND	0.00093	EPA 8260D	9-13-21	9-13-21	
1,1-Dichloroethene	ND	0.00093	EPA 8260D	9-13-21	9-13-21	
Acetone	0.059	0.019	EPA 8260D	9-13-21	9-13-21	Y
Iodomethane	ND	0.0047	EPA 8260D	9-13-21	9-13-21	
Carbon Disulfide	ND	0.00093	EPA 8260D	9-13-21	9-13-21	
Methylene Chloride	ND	0.0047	EPA 8260D	9-13-21	9-13-21	
(trans) 1,2-Dichloroethene	ND	0.00093	EPA 8260D	9-13-21	9-13-21	
Methyl t-Butyl Ether	ND	0.00093	EPA 8260D	9-13-21	9-13-21	
1,1-Dichloroethane	ND	0.00093	EPA 8260D	9-13-21	9-13-21	
Vinyl Acetate	ND	0.0047	EPA 8260D	9-13-21	9-13-21	
2,2-Dichloropropane	ND	0.00093	EPA 8260D	9-13-21	9-13-21	
(cis) 1,2-Dichloroethene	ND	0.00093	EPA 8260D	9-13-21	9-13-21	
2-Butanone	0.0048	0.0047	EPA 8260D	9-13-21	9-13-21	Y
Bromochloromethane	ND	0.00093	EPA 8260D	9-13-21	9-13-21	
Chloroform	ND	0.00093	EPA 8260D	9-13-21	9-13-21	
1,1,1-Trichloroethane	ND	0.00093	EPA 8260D	9-13-21	9-13-21	
Carbon Tetrachloride	ND	0.00093	EPA 8260D	9-13-21	9-13-21	
1,1-Dichloropropene	ND	0.00093	EPA 8260D	9-13-21	9-13-21	
Benzene	ND	0.00093	EPA 8260D	9-13-21	9-13-21	
1,2-Dichloroethane	ND	0.00093	EPA 8260D	9-13-21	9-13-21	
Trichloroethene	ND	0.00093	EPA 8260D	9-13-21	9-13-21	
1,2-Dichloropropane	ND	0.00093	EPA 8260D	9-13-21	9-13-21	
Dibromomethane	ND	0.00093	EPA 8260D	9-13-21	9-13-21	
Bromodichloromethane	ND	0.00093	EPA 8260D	9-13-21	9-13-21	
2-Chloroethyl Vinyl Ether	ND	0.0047	EPA 8260D	9-13-21	9-13-21	
(cis) 1,3-Dichloropropene	ND	0.00093	EPA 8260D	9-13-21	9-13-21	
Methyl Isobutyl Ketone	ND	0.0047	EPA 8260D	9-13-21	9-13-21	
Toluene	ND	0.0047	EPA 8260D	9-13-21	9-13-21	
(trans) 1,3-Dichloropropene	ND	0.00093	EPA 8260D	9-13-21	9-13-21	

This report pertains to the samples analyzed in accordance with the chain of custody, and is intended only for the use of the individual or company to whom it is addressed.

Date of Report: September 14, 2021
Samples Submitted: September 10, 2021
Laboratory Reference: 2109-095
Project: 11-05150-003

VOLATILE ORGANICS EPA 8260D
page 2 of 2

Analyte	Result	PQL	Method	Date Prepared	Date Analyzed	Flags
Client ID:	**DA7SWCS23210910I**					
Laboratory ID:	09-095-05					
1,1,2-Trichloroethane	ND	0.00093	EPA 8260D	9-13-21	9-13-21	
Tetrachloroethene	ND	0.00093	EPA 8260D	9-13-21	9-13-21	
1,3-Dichloropropane	ND	0.00093	EPA 8260D	9-13-21	9-13-21	
2-Hexanone	ND	0.0047	EPA 8260D	9-13-21	9-13-21	
Dibromochloromethane	ND	0.00093	EPA 8260D	9-13-21	9-13-21	
1,2-Dibromoethane	ND	0.000047	EPA 8260D/SIM	9-13-21	9-13-21	
Chlorobenzene	ND	0.00093	EPA 8260D	9-13-21	9-13-21	
1,1,1,2-Tetrachloroethane	ND	0.00093	EPA 8260D	9-13-21	9-13-21	
Ethylbenzene	ND	0.00093	EPA 8260D	9-13-21	9-13-21	
m,p-Xylene	ND	0.0019	EPA 8260D	9-13-21	9-13-21	
o-Xylene	ND	0.00093	EPA 8260D	9-13-21	9-13-21	
Styrene	ND	0.00093	EPA 8260D	9-13-21	9-13-21	
Bromoform	ND	0.0047	EPA 8260D	9-13-21	9-13-21	
Isopropylbenzene	ND	0.00093	EPA 8260D	9-13-21	9-13-21	
Bromobenzene	ND	0.00093	EPA 8260D	9-13-21	9-13-21	
1,1,2,2-Tetrachloroethane	ND	0.00093	EPA 8260D	9-13-21	9-13-21	
1,2,3-Trichloropropane	ND	0.00093	EPA 8260D	9-13-21	9-13-21	
n-Propylbenzene	ND	0.00093	EPA 8260D	9-13-21	9-13-21	
2-Chlorotoluene	ND	0.00093	EPA 8260D	9-13-21	9-13-21	
4-Chlorotoluene	ND	0.00093	EPA 8260D	9-13-21	9-13-21	
1,3,5-Trimethylbenzene	ND	0.00093	EPA 8260D	9-13-21	9-13-21	
tert-Butylbenzene	ND	0.00093	EPA 8260D	9-13-21	9-13-21	
1,2,4-Trimethylbenzene	ND	0.00093	EPA 8260D	9-13-21	9-13-21	
sec-Butylbenzene	ND	0.0014	EPA 8260D	9-13-21	9-13-21	
1,3-Dichlorobenzene	ND	0.00093	EPA 8260D	9-13-21	9-13-21	
p-Isopropyltoluene	ND	0.00093	EPA 8260D	9-13-21	9-13-21	
1,4-Dichlorobenzene	ND	0.00093	EPA 8260D	9-13-21	9-13-21	
1,2-Dichlorobenzene	ND	0.00093	EPA 8260D	9-13-21	9-13-21	
n-Butylbenzene	ND	0.00093	EPA 8260D	9-13-21	9-13-21	
1,2-Dibromo-3-chloropropane	ND	0.0047	EPA 8260D	9-13-21	9-13-21	
1,2,4-Trichlorobenzene	ND	0.00093	EPA 8260D	9-13-21	9-13-21	
Hexachlorobutadiene	ND	0.0047	EPA 8260D	9-13-21	9-13-21	
Naphthalene	ND	0.0047	EPA 8260D	9-13-21	9-13-21	
1,2,3-Trichlorobenzene	ND	0.00093	EPA 8260D	9-13-21	9-13-21	
Surrogate:	*Percent Recovery*	*Control Limits*				
Dibromofluoromethane	*115*	*74-131*				
Toluene-d8	*112*	*78-128*				
4-Bromofluorobenzene	*97*	*71-130*				

This report pertains to the samples analyzed in accordance with the chain of custody, and is intended only for the use of the individual or company to whom it is addressed.

Date of Report: September 14, 2021
Samples Submitted: September 10, 2021
Laboratory Reference: 2109-095
Project: 11-05150-003

VOLATILE ORGANICS EPA 8260D
QUALITY CONTROL
page 1 of 2

Matrix: Soil
Units: mg/kg

Analyte	Result	PQL	Method	Date Prepared	Date Analyzed	Flags
METHOD BLANK						
Laboratory ID:	MB0913S1					
Dichlorodifluoromethane	ND	0.0013	EPA 8260D	9-13-21	9-13-21	
Chloromethane	ND	0.0050	EPA 8260D	9-13-21	9-13-21	
Vinyl Chloride	ND	0.0010	EPA 8260D	9-13-21	9-13-21	
Bromomethane	ND	0.0073	EPA 8260D	9-13-21	9-13-21	
Chloroethane	ND	0.0050	EPA 8260D	9-13-21	9-13-21	
Trichlorofluoromethane	ND	0.0010	EPA 8260D	9-13-21	9-13-21	
1,1-Dichloroethene	ND	0.0010	EPA 8260D	9-13-21	9-13-21	
Acetone	ND	0.020	EPA 8260D	9-13-21	9-13-21	
Iodomethane	ND	0.0050	EPA 8260D	9-13-21	9-13-21	
Carbon Disulfide	ND	0.0010	EPA 8260D	9-13-21	9-13-21	
Methylene Chloride	ND	0.0050	EPA 8260D	9-13-21	9-13-21	
(trans) 1,2-Dichloroethene	ND	0.0010	EPA 8260D	9-13-21	9-13-21	
Methyl t-Butyl Ether	ND	0.0010	EPA 8260D	9-13-21	9-13-21	
1,1-Dichloroethane	ND	0.0010	EPA 8260D	9-13-21	9-13-21	
Vinyl Acetate	ND	0.0050	EPA 8260D	9-13-21	9-13-21	
2,2-Dichloropropane	ND	0.0010	EPA 8260D	9-13-21	9-13-21	
(cis) 1,2-Dichloroethene	ND	0.0010	EPA 8260D	9-13-21	9-13-21	
2-Butanone	ND	0.0050	EPA 8260D	9-13-21	9-13-21	
Bromochloromethane	ND	0.0010	EPA 8260D	9-13-21	9-13-21	
Chloroform	ND	0.0010	EPA 8260D	9-13-21	9-13-21	
1,1,1-Trichloroethane	ND	0.0010	EPA 8260D	9-13-21	9-13-21	
Carbon Tetrachloride	ND	0.0010	EPA 8260D	9-13-21	9-13-21	
1,1-Dichloropropene	ND	0.0010	EPA 8260D	9-13-21	9-13-21	
Benzene	ND	0.0010	EPA 8260D	9-13-21	9-13-21	
1,2-Dichloroethane	ND	0.0010	EPA 8260D	9-13-21	9-13-21	
Trichloroethene	ND	0.0010	EPA 8260D	9-13-21	9-13-21	
1,2-Dichloropropane	ND	0.0010	EPA 8260D	9-13-21	9-13-21	
Dibromomethane	ND	0.0010	EPA 8260D	9-13-21	9-13-21	
Bromodichloromethane	ND	0.0010	EPA 8260D	9-13-21	9-13-21	
2-Chloroethyl Vinyl Ether	ND	0.0050	EPA 8260D	9-13-21	9-13-21	
(cis) 1,3-Dichloropropene	ND	0.0010	EPA 8260D	9-13-21	9-13-21	
Methyl Isobutyl Ketone	ND	0.0050	EPA 8260D	9-13-21	9-13-21	
Toluene	ND	0.0050	EPA 8260D	9-13-21	9-13-21	
(trans) 1,3-Dichloropropene	ND	0.0010	EPA 8260D	9-13-21	9-13-21	

This report pertains to the samples analyzed in accordance with the chain of custody, and is intended only for the use of the individual or company to whom it is addressed.

Date of Report: September 14, 2021
Samples Submitted: September 10, 2021
Laboratory Reference: 2109-095
Project: 11-05150-003

VOLATILE ORGANICS EPA 8260D
QUALITY CONTROL
page 2 of 2

Analyte	Result	PQL	Method	Date Prepared	Date Analyzed	Flags
METHOD BLANK						
Laboratory ID:	MB0913S1					
1,1,2-Trichloroethane	ND	0.0010	EPA 8260D	9-13-21	9-13-21	
Tetrachloroethene	ND	0.0010	EPA 8260D	9-13-21	9-13-21	
1,3-Dichloropropane	ND	0.0010	EPA 8260D	9-13-21	9-13-21	
2-Hexanone	ND	0.0050	EPA 8260D	9-13-21	9-13-21	
Dibromochloromethane	ND	0.0010	EPA 8260D	9-13-21	9-13-21	
1,2-Dibromoethane	ND	0.000050	EPA 8260D/SIM	9-13-21	9-13-21	
Chlorobenzene	ND	0.0010	EPA 8260D	9-13-21	9-13-21	
1,1,1,2-Tetrachloroethane	ND	0.0010	EPA 8260D	9-13-21	9-13-21	
Ethylbenzene	ND	0.0010	EPA 8260D	9-13-21	9-13-21	
m,p-Xylene	ND	0.0020	EPA 8260D	9-13-21	9-13-21	
o-Xylene	ND	0.0010	EPA 8260D	9-13-21	9-13-21	
Styrene	ND	0.0010	EPA 8260D	9-13-21	9-13-21	
Bromoform	ND	0.0050	EPA 8260D	9-13-21	9-13-21	
Isopropylbenzene	ND	0.0010	EPA 8260D	9-13-21	9-13-21	
Bromobenzene	ND	0.0010	EPA 8260D	9-13-21	9-13-21	
1,1,2,2-Tetrachloroethane	ND	0.0010	EPA 8260D	9-13-21	9-13-21	
1,2,3-Trichloropropane	ND	0.0010	EPA 8260D	9-13-21	9-13-21	
n-Propylbenzene	ND	0.0010	EPA 8260D	9-13-21	9-13-21	
2-Chlorotoluene	ND	0.0010	EPA 8260D	9-13-21	9-13-21	
4-Chlorotoluene	ND	0.0010	EPA 8260D	9-13-21	9-13-21	
1,3,5-Trimethylbenzene	ND	0.0010	EPA 8260D	9-13-21	9-13-21	
tert-Butylbenzene	ND	0.0010	EPA 8260D	9-13-21	9-13-21	
1,2,4-Trimethylbenzene	ND	0.0010	EPA 8260D	9-13-21	9-13-21	
sec-Butylbenzene	ND	0.0015	EPA 8260D	9-13-21	9-13-21	
1,3-Dichlorobenzene	ND	0.0010	EPA 8260D	9-13-21	9-13-21	
p-Isopropyltoluene	ND	0.0010	EPA 8260D	9-13-21	9-13-21	
1,4-Dichlorobenzene	ND	0.0010	EPA 8260D	9-13-21	9-13-21	
1,2-Dichlorobenzene	ND	0.0010	EPA 8260D	9-13-21	9-13-21	
n-Butylbenzene	ND	0.0010	EPA 8260D	9-13-21	9-13-21	
1,2-Dibromo-3-chloropropane	ND	0.0050	EPA 8260D	9-13-21	9-13-21	
1,2,4-Trichlorobenzene	ND	0.0010	EPA 8260D	9-13-21	9-13-21	
Hexachlorobutadiene	ND	0.0050	EPA 8260D	9-13-21	9-13-21	
Naphthalene	ND	0.0050	EPA 8260D	9-13-21	9-13-21	
1,2,3-Trichlorobenzene	ND	0.0010	EPA 8260D	9-13-21	9-13-21	
Surrogate:	*Percent Recovery*	*Control Limits*				
Dibromofluoromethane	*111*	*74-131*				
Toluene-d8	*112*	*78-128*				
4-Bromofluorobenzene	*102*	*71-130*				

This report pertains to the samples analyzed in accordance with the chain of custody, and is intended only for the use of the individual or company to whom it is addressed.

Date of Report: September 14, 2021
Samples Submitted: September 10, 2021
Laboratory Reference: 2109-095
Project: 11-05150-003

VOLATILE ORGANICS EPA 8260D
QUALITY CONTROL

Matrix: Soil
Units: mg/kg

Analyte	Result		Spike Level		Percent Recovery		Recovery Limits	RPD	RPD Limit	Flags
SPIKE BLANKS										
Laboratory ID:	SB0913S1									
	SB	SBD	SB	SBD	SB	SBD				
1,1-Dichloroethene	**0.0545**	**0.0536**	0.0500	0.0500	109	107	71-131	2	19	
Benzene	**0.0509**	**0.0503**	0.0500	0.0500	102	101	73-124	1	18	
Trichloroethene	**0.0473**	**0.0484**	0.0500	0.0500	95	97	79-130	2	18	
Toluene	**0.0456**	**0.0468**	0.0500	0.0500	91	94	76-123	3	18	
Chlorobenzene	**0.0458**	**0.0473**	0.0500	0.0500	92	95	78-122	3	18	
Surrogate:										
Dibromofluoromethane					*114*	*110*	*74-131*			
Toluene-d8					*112*	*109*	*78-128*			
4-Bromofluorobenzene					*104*	*103*	*71-130*			

This report pertains to the samples analyzed in accordance with the chain of custody, and is intended only for the use of the individual or company to whom it is addressed.

Date of Report: September 14, 2021
Samples Submitted: September 10, 2021
Laboratory Reference: 2109-095
Project: 11-05150-003

VOLATILE ORGANICS EPA 8260D
page 1 of 2

Matrix: Water
Units: ug/L

Analyte	Result	PQL	Method	Date Prepared	Date Analyzed	Flags
Client ID:	**VTRP210910I-Trip Blank**					
Laboratory ID:	09-095-06					
Dichlorodifluoromethane	ND	0.20	EPA 8260D	9-14-21	9-14-21	
Chloromethane	ND	1.0	EPA 8260D	9-14-21	9-14-21	
Vinyl Chloride	ND	0.20	EPA 8260D	9-14-21	9-14-21	
Bromomethane	ND	0.20	EPA 8260D	9-14-21	9-14-21	
Chloroethane	ND	1.0	EPA 8260D	9-14-21	9-14-21	
Trichlorofluoromethane	ND	0.20	EPA 8260D	9-14-21	9-14-21	
1,1-Dichloroethene	ND	0.20	EPA 8260D	9-14-21	9-14-21	
Acetone	ND	5.0	EPA 8260D	9-14-21	9-14-21	
Iodomethane	ND	1.7	EPA 8260D	9-14-21	9-14-21	
Carbon Disulfide	ND	0.28	EPA 8260D	9-14-21	9-14-21	
Methylene Chloride	ND	1.0	EPA 8260D	9-14-21	9-14-21	
(trans) 1,2-Dichloroethene	ND	0.20	EPA 8260D	9-14-21	9-14-21	
Methyl t-Butyl Ether	ND	0.20	EPA 8260D	9-14-21	9-14-21	
1,1-Dichloroethane	ND	0.20	EPA 8260D	9-14-21	9-14-21	
Vinyl Acetate	ND	1.0	EPA 8260D	9-14-21	9-14-21	
2,2-Dichloropropane	ND	0.20	EPA 8260D	9-14-21	9-14-21	
(cis) 1,2-Dichloroethene	ND	0.20	EPA 8260D	9-14-21	9-14-21	
2-Butanone	ND	5.0	EPA 8260D	9-14-21	9-14-21	
Bromochloromethane	ND	0.20	EPA 8260D	9-14-21	9-14-21	
Chloroform	ND	0.20	EPA 8260D	9-14-21	9-14-21	
1,1,1-Trichloroethane	ND	0.20	EPA 8260D	9-14-21	9-14-21	
Carbon Tetrachloride	ND	0.20	EPA 8260D	9-14-21	9-14-21	
1,1-Dichloropropene	ND	0.20	EPA 8260D	9-14-21	9-14-21	
Benzene	ND	0.20	EPA 8260D	9-14-21	9-14-21	
1,2-Dichloroethane	ND	0.20	EPA 8260D	9-14-21	9-14-21	
Trichloroethene	ND	0.20	EPA 8260D	9-14-21	9-14-21	
1,2-Dichloropropane	ND	0.20	EPA 8260D	9-14-21	9-14-21	
Dibromomethane	ND	0.20	EPA 8260D	9-14-21	9-14-21	
Bromodichloromethane	ND	0.20	EPA 8260D	9-14-21	9-14-21	
2-Chloroethyl Vinyl Ether	ND	1.3	EPA 8260D	9-14-21	9-14-21	
(cis) 1,3-Dichloropropene	ND	0.20	EPA 8260D	9-14-21	9-14-21	
Methyl Isobutyl Ketone	ND	2.0	EPA 8260D	9-14-21	9-14-21	
Toluene	ND	1.0	EPA 8260D	9-14-21	9-14-21	
(trans) 1,3-Dichloropropene	ND	0.20	EPA 8260D	9-14-21	9-14-21	

This report pertains to the samples analyzed in accordance with the chain of custody,
and is intended only for the use of the individual or company to whom it is addressed.

Date of Report: September 14, 2021
Samples Submitted: September 10, 2021
Laboratory Reference: 2109-095
Project: 11-05150-003

VOLATILE ORGANICS EPA 8260D
page 2 of 2

Analyte	Result	PQL	Method	Date Prepared	Date Analyzed	Flags
Client ID:	**VTRP210910I-Trip Blank**					
Laboratory ID:	09-095-06					
1,1,2-Trichloroethane	ND	0.20	EPA 8260D	9-14-21	9-14-21	
Tetrachloroethene	ND	0.20	EPA 8260D	9-14-21	9-14-21	
1,3-Dichloropropane	ND	0.20	EPA 8260D	9-14-21	9-14-21	
2-Hexanone	ND	2.0	EPA 8260D	9-14-21	9-14-21	
Dibromochloromethane	ND	0.20	EPA 8260D	9-14-21	9-14-21	
1,2-Dibromoethane	ND	0.20	EPA 8260D	9-14-21	9-14-21	
Chlorobenzene	ND	0.20	EPA 8260D	9-14-21	9-14-21	
1,1,1,2-Tetrachloroethane	ND	0.20	EPA 8260D	9-14-21	9-14-21	
Ethylbenzene	ND	0.20	EPA 8260D	9-14-21	9-14-21	
m,p-Xylene	ND	0.40	EPA 8260D	9-14-21	9-14-21	
o-Xylene	ND	0.20	EPA 8260D	9-14-21	9-14-21	
Styrene	ND	0.20	EPA 8260D	9-14-21	9-14-21	
Bromoform	ND	1.0	EPA 8260D	9-14-21	9-14-21	
Isopropylbenzene	ND	0.20	EPA 8260D	9-14-21	9-14-21	
Bromobenzene	ND	0.20	EPA 8260D	9-14-21	9-14-21	
1,1,2,2-Tetrachloroethane	ND	0.20	EPA 8260D	9-14-21	9-14-21	
1,2,3-Trichloropropane	ND	0.20	EPA 8260D	9-14-21	9-14-21	
n-Propylbenzene	ND	0.20	EPA 8260D	9-14-21	9-14-21	
2-Chlorotoluene	ND	0.20	EPA 8260D	9-14-21	9-14-21	
4-Chlorotoluene	ND	0.20	EPA 8260D	9-14-21	9-14-21	
1,3,5-Trimethylbenzene	ND	0.20	EPA 8260D	9-14-21	9-14-21	
tert-Butylbenzene	ND	0.20	EPA 8260D	9-14-21	9-14-21	
1,2,4-Trimethylbenzene	ND	0.20	EPA 8260D	9-14-21	9-14-21	
sec-Butylbenzene	ND	0.20	EPA 8260D	9-14-21	9-14-21	
1,3-Dichlorobenzene	ND	0.20	EPA 8260D	9-14-21	9-14-21	
p-Isopropyltoluene	ND	0.20	EPA 8260D	9-14-21	9-14-21	
1,4-Dichlorobenzene	ND	0.20	EPA 8260D	9-14-21	9-14-21	
1,2-Dichlorobenzene	ND	0.20	EPA 8260D	9-14-21	9-14-21	
n-Butylbenzene	ND	0.20	EPA 8260D	9-14-21	9-14-21	
1,2-Dibromo-3-chloropropane	ND	1.0	EPA 8260D	9-14-21	9-14-21	
1,2,4-Trichlorobenzene	ND	0.20	EPA 8260D	9-14-21	9-14-21	
Hexachlorobutadiene	ND	1.0	EPA 8260D	9-14-21	9-14-21	
Naphthalene	ND	1.0	EPA 8260D	9-14-21	9-14-21	
1,2,3-Trichlorobenzene	ND	0.20	EPA 8260D	9-14-21	9-14-21	
Surrogate:	*Percent Recovery*	*Control Limits*				
Dibromofluoromethane	*98*	*75-127*				
Toluene-d8	*97*	*80-127*				
4-Bromofluorobenzene	*95*	*78-125*				

This report pertains to the samples analyzed in accordance with the chain of custody, and is intended only for the use of the individual or company to whom it is addressed.

Date of Report: September 14, 2021
Samples Submitted: September 10, 2021
Laboratory Reference: 2109-095
Project: 11-05150-003

VOLATILE ORGANICS EPA 8260D
QUALITY CONTROL
page 1 of 2

Matrix: Water
Units: ug/L

Analyte	Result	PQL	Method	Date Prepared	Date Analyzed	Flags
METHOD BLANK						
Laboratory ID:	MB0914W1					
Dichlorodifluoromethane	ND	0.20	EPA 8260D	9-14-21	9-14-21	
Chloromethane	ND	1.0	EPA 8260D	9-14-21	9-14-21	
Vinyl Chloride	ND	0.20	EPA 8260D	9-14-21	9-14-21	
Bromomethane	ND	0.20	EPA 8260D	9-14-21	9-14-21	
Chloroethane	ND	1.0	EPA 8260D	9-14-21	9-14-21	
Trichlorofluoromethane	ND	0.20	EPA 8260D	9-14-21	9-14-21	
1,1-Dichloroethene	ND	0.20	EPA 8260D	9-14-21	9-14-21	
Acetone	ND	5.0	EPA 8260D	9-14-21	9-14-21	
Iodomethane	ND	1.7	EPA 8260D	9-14-21	9-14-21	
Carbon Disulfide	ND	0.28	EPA 8260D	9-14-21	9-14-21	
Methylene Chloride	ND	1.0	EPA 8260D	9-14-21	9-14-21	
(trans) 1,2-Dichloroethene	ND	0.20	EPA 8260D	9-14-21	9-14-21	
Methyl t-Butyl Ether	ND	0.20	EPA 8260D	9-14-21	9-14-21	
1,1-Dichloroethane	ND	0.20	EPA 8260D	9-14-21	9-14-21	
Vinyl Acetate	ND	1.0	EPA 8260D	9-14-21	9-14-21	
2,2-Dichloropropane	ND	0.20	EPA 8260D	9-14-21	9-14-21	
(cis) 1,2-Dichloroethene	ND	0.20	EPA 8260D	9-14-21	9-14-21	
2-Butanone	ND	5.0	EPA 8260D	9-14-21	9-14-21	
Bromochloromethane	ND	0.20	EPA 8260D	9-14-21	9-14-21	
Chloroform	ND	0.20	EPA 8260D	9-14-21	9-14-21	
1,1,1-Trichloroethane	ND	0.20	EPA 8260D	9-14-21	9-14-21	
Carbon Tetrachloride	ND	0.20	EPA 8260D	9-14-21	9-14-21	
1,1-Dichloropropene	ND	0.20	EPA 8260D	9-14-21	9-14-21	
Benzene	ND	0.20	EPA 8260D	9-14-21	9-14-21	
1,2-Dichloroethane	ND	0.20	EPA 8260D	9-14-21	9-14-21	
Trichloroethene	ND	0.20	EPA 8260D	9-14-21	9-14-21	
1,2-Dichloropropane	ND	0.20	EPA 8260D	9-14-21	9-14-21	
Dibromomethane	ND	0.20	EPA 8260D	9-14-21	9-14-21	
Bromodichloromethane	ND	0.20	EPA 8260D	9-14-21	9-14-21	
2-Chloroethyl Vinyl Ether	ND	1.3	EPA 8260D	9-14-21	9-14-21	
(cis) 1,3-Dichloropropene	ND	0.20	EPA 8260D	9-14-21	9-14-21	
Methyl Isobutyl Ketone	ND	2.0	EPA 8260D	9-14-21	9-14-21	
Toluene	ND	1.0	EPA 8260D	9-14-21	9-14-21	
(trans) 1,3-Dichloropropene	ND	0.20	EPA 8260D	9-14-21	9-14-21	

This report pertains to the samples analyzed in accordance with the chain of custody, and is intended only for the use of the individual or company to whom it is addressed.

Date of Report: September 14, 2021
Samples Submitted: September 10, 2021
Laboratory Reference: 2109-095
Project: 11-05150-003

VOLATILE ORGANICS EPA 8260D
QUALITY CONTROL
page 2 of 2

Analyte	Result	PQL	Method	Date Prepared	Date Analyzed	Flags
METHOD BLANK						
Laboratory ID:	MB0914W1					
1,1,2-Trichloroethane	ND	0.20	EPA 8260D	9-14-21	9-14-21	
Tetrachloroethene	ND	0.20	EPA 8260D	9-14-21	9-14-21	
1,3-Dichloropropane	ND	0.20	EPA 8260D	9-14-21	9-14-21	
2-Hexanone	ND	2.0	EPA 8260D	9-14-21	9-14-21	
Dibromochloromethane	ND	0.20	EPA 8260D	9-14-21	9-14-21	
1,2-Dibromoethane	ND	0.20	EPA 8260D	9-14-21	9-14-21	
Chlorobenzene	ND	0.20	EPA 8260D	9-14-21	9-14-21	
1,1,1,2-Tetrachloroethane	ND	0.20	EPA 8260D	9-14-21	9-14-21	
Ethylbenzene	ND	0.20	EPA 8260D	9-14-21	9-14-21	
m,p-Xylene	ND	0.40	EPA 8260D	9-14-21	9-14-21	
o-Xylene	ND	0.20	EPA 8260D	9-14-21	9-14-21	
Styrene	ND	0.20	EPA 8260D	9-14-21	9-14-21	
Bromoform	ND	1.0	EPA 8260D	9-14-21	9-14-21	
Isopropylbenzene	ND	0.20	EPA 8260D	9-14-21	9-14-21	
Bromobenzene	ND	0.20	EPA 8260D	9-14-21	9-14-21	
1,1,2,2-Tetrachloroethane	ND	0.20	EPA 8260D	9-14-21	9-14-21	
1,2,3-Trichloropropane	ND	0.20	EPA 8260D	9-14-21	9-14-21	
n-Propylbenzene	ND	0.20	EPA 8260D	9-14-21	9-14-21	
2-Chlorotoluene	ND	0.20	EPA 8260D	9-14-21	9-14-21	
4-Chlorotoluene	ND	0.20	EPA 8260D	9-14-21	9-14-21	
1,3,5-Trimethylbenzene	ND	0.20	EPA 8260D	9-14-21	9-14-21	
tert-Butylbenzene	ND	0.20	EPA 8260D	9-14-21	9-14-21	
1,2,4-Trimethylbenzene	ND	0.20	EPA 8260D	9-14-21	9-14-21	
sec-Butylbenzene	ND	0.20	EPA 8260D	9-14-21	9-14-21	
1,3-Dichlorobenzene	ND	0.20	EPA 8260D	9-14-21	9-14-21	
p-Isopropyltoluene	ND	0.20	EPA 8260D	9-14-21	9-14-21	
1,4-Dichlorobenzene	ND	0.20	EPA 8260D	9-14-21	9-14-21	
1,2-Dichlorobenzene	ND	0.20	EPA 8260D	9-14-21	9-14-21	
n-Butylbenzene	ND	0.20	EPA 8260D	9-14-21	9-14-21	
1,2-Dibromo-3-chloropropane	ND	1.0	EPA 8260D	9-14-21	9-14-21	
1,2,4-Trichlorobenzene	ND	0.20	EPA 8260D	9-14-21	9-14-21	
Hexachlorobutadiene	ND	1.0	EPA 8260D	9-14-21	9-14-21	
Naphthalene	ND	1.0	EPA 8260D	9-14-21	9-14-21	
1,2,3-Trichlorobenzene	ND	0.20	EPA 8260D	9-14-21	9-14-21	
Surrogate:	*Percent Recovery*	*Control Limits*				
Dibromofluoromethane	*97*	*75-127*				
Toluene-d8	*97*	*80-127*				
4-Bromofluorobenzene	*94*	*78-125*				

This report pertains to the samples analyzed in accordance with the chain of custody, and is intended only for the use of the individual or company to whom it is addressed.

Date of Report: September 14, 2021
Samples Submitted: September 10, 2021
Laboratory Reference: 2109-095
Project: 11-05150-003

VOLATILE ORGANICS EPA 8260D
QUALITY CONTROL

Matrix: Water
Units: ug/L

Analyte	Result		Spike Level		Percent Recovery		Recovery Limits	RPD	RPD Limit	Flags
SPIKE BLANKS										
Laboratory ID:	SB0914W1									
	SB	SBD	SB	SBD	SB	SBD				
1,1-Dichloroethene	**9.92**	**10.0**	10.0	10.0	99	100	78-124	1	19	
Benzene	**9.56**	**9.77**	10.0	10.0	96	98	80-119	2	16	
Trichloroethene	**10.3**	**10.3**	10.0	10.0	103	103	80-121	0	18	
Toluene	**9.73**	**9.72**	10.0	10.0	97	97	80-117	0	18	
Chlorobenzene	**10.4**	**10.4**	10.0	10.0	104	104	80-117	0	17	
Surrogate:										
Dibromofluoromethane					*97*	*98*	*75-127*			
Toluene-d8					*99*	*97*	*80-127*			
4-Bromofluorobenzene					*103*	*102*	*78-125*			

This report pertains to the samples analyzed in accordance with the chain of custody, and is intended only for the use of the individual or company to whom it is addressed.

Date of Report: September 14, 2021
Samples Submitted: September 10, 2021
Laboratory Reference: 2109-095
Project: 11-05150-003

SEMIVOLATILE ORGANICS EPA 8270E/SIM
page 1 of 2

Matrix: Soil
Units: mg/Kg

Analyte	Result	PQL	Method	Date Prepared	Date Analyzed	Flags
Client ID:	**DA7SWCS20210910I**					
Laboratory ID:	09-095-01					
n-Nitrosodimethylamine	**ND**	0.011	EPA 8270E	9-13-21	9-13-21	
Pyridine	**ND**	0.22	EPA 8270E	9-13-21	9-13-21	
Phenol	**ND**	0.022	EPA 8270E	9-13-21	9-13-21	
Aniline	**ND**	0.11	EPA 8270E	9-13-21	9-13-21	
bis(2-Chloroethyl)ether	**ND**	0.022	EPA 8270E	9-13-21	9-13-21	
2-Chlorophenol	**ND**	0.022	EPA 8270E	9-13-21	9-13-21	
1,3-Dichlorobenzene	**ND**	0.022	EPA 8270E	9-13-21	9-13-21	
1,4-Dichlorobenzene	**ND**	0.022	EPA 8270E	9-13-21	9-13-21	
Benzyl alcohol	**ND**	0.022	EPA 8270E	9-13-21	9-13-21	
1,2-Dichlorobenzene	**ND**	0.022	EPA 8270E	9-13-21	9-13-21	
2-Methylphenol (o-Cresol)	**ND**	0.022	EPA 8270E	9-13-21	9-13-21	
bis(2-Chloroisopropyl)ether	**ND**	0.022	EPA 8270E	9-13-21	9-13-21	
(3+4)-Methylphenol (m,p-Cresol)	**ND**	0.022	EPA 8270E	9-13-21	9-13-21	
n-Nitroso-di-n-propylamine	**ND**	0.011	EPA 8270E	9-13-21	9-13-21	
Hexachloroethane	**ND**	0.022	EPA 8270E	9-13-21	9-13-21	
Nitrobenzene	**ND**	0.022	EPA 8270E	9-13-21	9-13-21	
Isophorone	**ND**	0.022	EPA 8270E	9-13-21	9-13-21	
2-Nitrophenol	**ND**	0.022	EPA 8270E	9-13-21	9-13-21	
2,4-Dimethylphenol	**ND**	0.022	EPA 8270E	9-13-21	9-13-21	
bis(2-Chloroethoxy)methane	**ND**	0.022	EPA 8270E	9-13-21	9-13-21	
2,4-Dichlorophenol	**ND**	0.022	EPA 8270E	9-13-21	9-13-21	
1,2,4-Trichlorobenzene	**ND**	0.022	EPA 8270E	9-13-21	9-13-21	
Naphthalene	**ND**	0.0045	EPA 8270E/SIM	9-13-21	9-13-21	
4-Chloroaniline	**ND**	0.011	EPA 8270E	9-13-21	9-13-21	
Hexachlorobutadiene	**ND**	0.022	EPA 8270E	9-13-21	9-13-21	
4-Chloro-3-methylphenol	**ND**	0.022	EPA 8270E	9-13-21	9-13-21	
2-Methylnaphthalene	**ND**	0.0045	EPA 8270E/SIM	9-13-21	9-13-21	
1-Methylnaphthalene	**ND**	0.0045	EPA 8270E/SIM	9-13-21	9-13-21	
Hexachlorocyclopentadiene	**ND**	0.054	EPA 8270E	9-13-21	9-13-21	
2,4,6-Trichlorophenol	**ND**	0.022	EPA 8270E	9-13-21	9-13-21	
2,3-Dichloroaniline	**ND**	0.022	EPA 8270E	9-13-21	9-13-21	
2,4,5-Trichlorophenol	**ND**	0.022	EPA 8270E	9-13-21	9-13-21	
2-Chloronaphthalene	**ND**	0.022	EPA 8270E	9-13-21	9-13-21	
2-Nitroaniline	**ND**	0.022	EPA 8270E	9-13-21	9-13-21	
1,4-Dinitrobenzene	**ND**	0.022	EPA 8270E	9-13-21	9-13-21	
Dimethylphthalate	**ND**	0.022	EPA 8270E	9-13-21	9-13-21	
1,3-Dinitrobenzene	**ND**	0.022	EPA 8270E	9-13-21	9-13-21	
2,6-Dinitrotoluene	**ND**	0.011	EPA 8270E	9-13-21	9-13-21	
1,2-Dinitrobenzene	**ND**	0.022	EPA 8270E	9-13-21	9-13-21	
Acenaphthylene	**ND**	0.0045	EPA 8270E/SIM	9-13-21	9-13-21	
3-Nitroaniline	**ND**	0.022	EPA 8270E	9-13-21	9-13-21	

This report pertains to the samples analyzed in accordance with the chain of custody, and is intended only for the use of the individual or company to whom it is addressed.

Date of Report: September 14, 2021
Samples Submitted: September 10, 2021
Laboratory Reference: 2109-095
Project: 11-05150-003

SEMIVOLATILE ORGANICS EPA 8270E/SIM
page 2 of 2

Analyte	Result	PQL	Method	Date Prepared	Date Analyzed	Flags
Client ID:	**DA7SWCS20210910I**					
Laboratory ID:	09-095-01					
2,4-Dinitrophenol	**ND**	0.29	EPA 8270E	9-13-21	9-13-21	
Acenaphthene	**ND**	0.0045	EPA 8270E/SIM	9-13-21	9-13-21	
4-Nitrophenol	**ND**	0.022	EPA 8270E	9-13-21	9-13-21	
2,4-Dinitrotoluene	**ND**	0.011	EPA 8270E	9-13-21	9-13-21	
Dibenzofuran	**ND**	0.022	EPA 8270E	9-13-21	9-13-21	
2,3,5,6-Tetrachlorophenol	**ND**	0.022	EPA 8270E	9-13-21	9-13-21	
2,3,4,6-Tetrachlorophenol	**ND**	0.022	EPA 8270E	9-13-21	9-13-21	
Diethylphthalate	**ND**	0.11	EPA 8270E	9-13-21	9-13-21	
4-Chlorophenyl-phenylether	**ND**	0.022	EPA 8270E	9-13-21	9-13-21	
4-Nitroaniline	**ND**	0.022	EPA 8270E	9-13-21	9-13-21	
Fluorene	**ND**	0.0045	EPA 8270E/SIM	9-13-21	9-13-21	
4,6-Dinitro-2-methylphenol	**ND**	0.22	EPA 8270E	9-13-21	9-13-21	
n-Nitrosodiphenylamine	**ND**	0.022	EPA 8270E	9-13-21	9-13-21	
1,2-Diphenylhydrazine	**ND**	0.022	EPA 8270E	9-13-21	9-13-21	
4-Bromophenyl-phenylether	**ND**	0.022	EPA 8270E	9-13-21	9-13-21	
Hexachlorobenzene	**ND**	0.022	EPA 8270E	9-13-21	9-13-21	
Pentachlorophenol	**ND**	0.15	EPA 8270E	9-13-21	9-13-21	
Phenanthrene	**ND**	0.0045	EPA 8270E/SIM	9-13-21	9-13-21	
Anthracene	**ND**	0.0045	EPA 8270E/SIM	9-13-21	9-13-21	
Carbazole	**ND**	0.022	EPA 8270E	9-13-21	9-13-21	
Di-n-butylphthalate	**ND**	0.11	EPA 8270E	9-13-21	9-13-21	
Fluoranthene	**ND**	0.0045	EPA 8270E/SIM	9-13-21	9-13-21	
Pyrene	**ND**	0.0045	EPA 8270E/SIM	9-13-21	9-13-21	
Butylbenzylphthalate	**ND**	0.11	EPA 8270E	9-13-21	9-13-21	
bis-2-Ethylhexyladipate	**ND**	0.11	EPA 8270E	9-13-21	9-13-21	
3,3'-Dichlorobenzidine	**ND**	0.011	EPA 8270E	9-13-21	9-13-21	
Benzo[a]anthracene	**ND**	0.0045	EPA 8270E/SIM	9-13-21	9-13-21	
Chrysene	**ND**	0.0045	EPA 8270E/SIM	9-13-21	9-13-21	
bis(2-Ethylhexyl)phthalate	**ND**	0.11	EPA 8270E	9-13-21	9-13-21	
Di-n-octylphthalate	**ND**	0.11	EPA 8270E	9-13-21	9-13-21	
Benzo[b]fluoranthene	**ND**	0.0045	EPA 8270E/SIM	9-13-21	9-13-21	
Benzo(j,k)fluoranthene	**ND**	0.0045	EPA 8270E/SIM	9-13-21	9-13-21	
Benzo[a]pyrene	**ND**	0.0045	EPA 8270E/SIM	9-13-21	9-13-21	
Indeno[1,2,3-cd]pyrene	**ND**	0.0045	EPA 8270E/SIM	9-13-21	9-13-21	
Dibenz[a,h]anthracene	**ND**	0.0045	EPA 8270E/SIM	9-13-21	9-13-21	
Benzo[g,h,i]perylene	**ND**	0.0045	EPA 8270E/SIM	9-13-21	9-13-21	
Surrogate:	*Percent Recovery*	*Control Limits*				
2-Fluorophenol	*87*	*26 - 109*				
Phenol-d6	*91*	*33 - 113*				
Nitrobenzene-d5	*83*	*31 - 110*				
2-Fluorobiphenyl	*90*	*42 - 107*				
2,4,6-Tribromophenol	*82*	*42 - 123*				
Terphenyl-d14	*99*	*41 - 115*				

This report pertains to the samples analyzed in accordance with the chain of custody, and is intended only for the use of the individual or company to whom it is addressed.

Date of Report: September 14, 2021
Samples Submitted: September 10, 2021
Laboratory Reference: 2109-095
Project: 11-05150-003

SEMIVOLATILE ORGANICS EPA 8270E/SIM
page 1 of 2

Matrix: Soil
Units: mg/Kg

Analyte	Result	PQL	Method	Date Prepared	Date Analyzed	Flags
Client ID:	**DA7SWCS21210910I**					
Laboratory ID:	09-095-02					
n-Nitrosodimethylamine	**ND**	0.011	EPA 8270E	9-13-21	9-13-21	
Pyridine	**ND**	0.21	EPA 8270E	9-13-21	9-13-21	
Phenol	**ND**	0.021	EPA 8270E	9-13-21	9-13-21	
Aniline	**ND**	0.11	EPA 8270E	9-13-21	9-13-21	
bis(2-Chloroethyl)ether	**ND**	0.021	EPA 8270E	9-13-21	9-13-21	
2-Chlorophenol	**ND**	0.021	EPA 8270E	9-13-21	9-13-21	
1,3-Dichlorobenzene	**ND**	0.021	EPA 8270E	9-13-21	9-13-21	
1,4-Dichlorobenzene	**ND**	0.021	EPA 8270E	9-13-21	9-13-21	
Benzyl alcohol	**ND**	0.021	EPA 8270E	9-13-21	9-13-21	
1,2-Dichlorobenzene	**ND**	0.021	EPA 8270E	9-13-21	9-13-21	
2-Methylphenol (o-Cresol)	**ND**	0.021	EPA 8270E	9-13-21	9-13-21	
bis(2-Chloroisopropyl)ether	**ND**	0.021	EPA 8270E	9-13-21	9-13-21	
(3+4)-Methylphenol (m,p-Cresol)	**ND**	0.021	EPA 8270E	9-13-21	9-13-21	
n-Nitroso-di-n-propylamine	**ND**	0.011	EPA 8270E	9-13-21	9-13-21	
Hexachloroethane	**ND**	0.021	EPA 8270E	9-13-21	9-13-21	
Nitrobenzene	**ND**	0.021	EPA 8270E	9-13-21	9-13-21	
Isophorone	**ND**	0.021	EPA 8270E	9-13-21	9-13-21	
2-Nitrophenol	**ND**	0.021	EPA 8270E	9-13-21	9-13-21	
2,4-Dimethylphenol	**ND**	0.021	EPA 8270E	9-13-21	9-13-21	
bis(2-Chloroethoxy)methane	**ND**	0.021	EPA 8270E	9-13-21	9-13-21	
2,4-Dichlorophenol	**ND**	0.021	EPA 8270E	9-13-21	9-13-21	
1,2,4-Trichlorobenzene	**ND**	0.021	EPA 8270E	9-13-21	9-13-21	
Naphthalene	**ND**	0.0043	EPA 8270E/SIM	9-13-21	9-13-21	
4-Chloroaniline	**ND**	0.011	EPA 8270E	9-13-21	9-13-21	
Hexachlorobutadiene	**ND**	0.021	EPA 8270E	9-13-21	9-13-21	
4-Chloro-3-methylphenol	**ND**	0.021	EPA 8270E	9-13-21	9-13-21	
2-Methylnaphthalene	**ND**	0.0043	EPA 8270E/SIM	9-13-21	9-13-21	
1-Methylnaphthalene	**ND**	0.0043	EPA 8270E/SIM	9-13-21	9-13-21	
Hexachlorocyclopentadiene	**ND**	0.052	EPA 8270E	9-13-21	9-13-21	
2,4,6-Trichlorophenol	**ND**	0.021	EPA 8270E	9-13-21	9-13-21	
2,3-Dichloroaniline	**ND**	0.021	EPA 8270E	9-13-21	9-13-21	
2,4,5-Trichlorophenol	**ND**	0.021	EPA 8270E	9-13-21	9-13-21	
2-Chloronaphthalene	**ND**	0.021	EPA 8270E	9-13-21	9-13-21	
2-Nitroaniline	**ND**	0.021	EPA 8270E	9-13-21	9-13-21	
1,4-Dinitrobenzene	**ND**	0.021	EPA 8270E	9-13-21	9-13-21	
Dimethylphthalate	**ND**	0.021	EPA 8270E	9-13-21	9-13-21	
1,3-Dinitrobenzene	**ND**	0.021	EPA 8270E	9-13-21	9-13-21	
2,6-Dinitrotoluene	**ND**	0.011	EPA 8270E	9-13-21	9-13-21	
1,2-Dinitrobenzene	**ND**	0.021	EPA 8270E	9-13-21	9-13-21	
Acenaphthylene	**ND**	0.0043	EPA 8270E/SIM	9-13-21	9-13-21	
3-Nitroaniline	**ND**	0.021	EPA 8270E	9-13-21	9-13-21	

This report pertains to the samples analyzed in accordance with the chain of custody, and is intended only for the use of the individual or company to whom it is addressed.

Date of Report: September 14, 2021
Samples Submitted: September 10, 2021
Laboratory Reference: 2109-095
Project: 11-05150-003

SEMIVOLATILE ORGANICS EPA 8270E/SIM
page 2 of 2

Analyte	Result	PQL	Method	Date Prepared	Date Analyzed	Flags
Client ID:	**DA7SWCS21210910I**					
Laboratory ID:	09-095-02					
2,4-Dinitrophenol	**ND**	0.28	EPA 8270E	9-13-21	9-13-21	
Acenaphthene	**ND**	0.0043	EPA 8270E/SIM	9-13-21	9-13-21	
4-Nitrophenol	**ND**	0.021	EPA 8270E	9-13-21	9-13-21	
2,4-Dinitrotoluene	**ND**	0.011	EPA 8270E	9-13-21	9-13-21	
Dibenzofuran	**ND**	0.021	EPA 8270E	9-13-21	9-13-21	
2,3,5,6-Tetrachlorophenol	**ND**	0.021	EPA 8270E	9-13-21	9-13-21	
2,3,4,6-Tetrachlorophenol	**ND**	0.021	EPA 8270E	9-13-21	9-13-21	
Diethylphthalate	**ND**	0.11	EPA 8270E	9-13-21	9-13-21	
4-Chlorophenyl-phenylether	**ND**	0.021	EPA 8270E	9-13-21	9-13-21	
4-Nitroaniline	**ND**	0.021	EPA 8270E	9-13-21	9-13-21	
Fluorene	**ND**	0.0043	EPA 8270E/SIM	9-13-21	9-13-21	
4,6-Dinitro-2-methylphenol	**ND**	0.21	EPA 8270E	9-13-21	9-13-21	
n-Nitrosodiphenylamine	**ND**	0.021	EPA 8270E	9-13-21	9-13-21	
1,2-Diphenylhydrazine	**ND**	0.021	EPA 8270E	9-13-21	9-13-21	
4-Bromophenyl-phenylether	**ND**	0.021	EPA 8270E	9-13-21	9-13-21	
Hexachlorobenzene	**ND**	0.021	EPA 8270E	9-13-21	9-13-21	
Pentachlorophenol	**ND**	0.14	EPA 8270E	9-13-21	9-13-21	
Phenanthrene	**ND**	0.0043	EPA 8270E/SIM	9-13-21	9-13-21	
Anthracene	**ND**	0.0043	EPA 8270E/SIM	9-13-21	9-13-21	
Carbazole	**ND**	0.021	EPA 8270E	9-13-21	9-13-21	
Di-n-butylphthalate	**ND**	0.11	EPA 8270E	9-13-21	9-13-21	
Fluoranthene	**ND**	0.0043	EPA 8270E/SIM	9-13-21	9-13-21	
Pyrene	**ND**	0.0043	EPA 8270E/SIM	9-13-21	9-13-21	
Butylbenzylphthalate	**ND**	0.11	EPA 8270E	9-13-21	9-13-21	
bis-2-Ethylhexyladipate	**ND**	0.11	EPA 8270E	9-13-21	9-13-21	
3,3'-Dichlorobenzidine	**ND**	0.011	EPA 8270E	9-13-21	9-13-21	
Benzo[a]anthracene	**ND**	0.0043	EPA 8270E/SIM	9-13-21	9-13-21	
Chrysene	**ND**	0.0043	EPA 8270E/SIM	9-13-21	9-13-21	
bis(2-Ethylhexyl)phthalate	**ND**	0.11	EPA 8270E	9-13-21	9-13-21	
Di-n-octylphthalate	**ND**	0.11	EPA 8270E	9-13-21	9-13-21	
Benzo[b]fluoranthene	**ND**	0.0043	EPA 8270E/SIM	9-13-21	9-13-21	
Benzo(j,k)fluoranthene	**ND**	0.0043	EPA 8270E/SIM	9-13-21	9-13-21	
Benzo[a]pyrene	**ND**	0.0043	EPA 8270E/SIM	9-13-21	9-13-21	
Indeno[1,2,3-cd]pyrene	**ND**	0.0043	EPA 8270E/SIM	9-13-21	9-13-21	
Dibenz[a,h]anthracene	**ND**	0.0043	EPA 8270E/SIM	9-13-21	9-13-21	
Benzo[g,h,i]perylene	**ND**	0.0043	EPA 8270E/SIM	9-13-21	9-13-21	
Surrogate:	*Percent Recovery*	*Control Limits*				
2-Fluorophenol	*71*	*26 - 109*				
Phenol-d6	*75*	*33 - 113*				
Nitrobenzene-d5	*70*	*31 - 110*				
2-Fluorobiphenyl	*73*	*42 - 107*				
2,4,6-Tribromophenol	*66*	*42 - 123*				
Terphenyl-d14	*80*	*41 - 115*				

This report pertains to the samples analyzed in accordance with the chain of custody, and is intended only for the use of the individual or company to whom it is addressed.

Date of Report: September 14, 2021
Samples Submitted: September 10, 2021
Laboratory Reference: 2109-095
Project: 11-05150-003

SEMIVOLATILE ORGANICS EPA 8270E/SIM
page 1 of 2

Matrix: Soil
Units: mg/Kg

Analyte	Result	PQL	Method	Date Prepared	Date Analyzed	Flags
Client ID:	**DA7SWCS22210910I**					
Laboratory ID:	09-095-03					
n-Nitrosodimethylamine	**ND**	0.011	EPA 8270E	9-13-21	9-13-21	
Pyridine	**ND**	0.22	EPA 8270E	9-13-21	9-13-21	
Phenol	**ND**	0.022	EPA 8270E	9-13-21	9-13-21	
Aniline	**ND**	0.11	EPA 8270E	9-13-21	9-13-21	
bis(2-Chloroethyl)ether	**ND**	0.022	EPA 8270E	9-13-21	9-13-21	
2-Chlorophenol	**ND**	0.022	EPA 8270E	9-13-21	9-13-21	
1,3-Dichlorobenzene	**ND**	0.022	EPA 8270E	9-13-21	9-13-21	
1,4-Dichlorobenzene	**ND**	0.022	EPA 8270E	9-13-21	9-13-21	
Benzyl alcohol	**ND**	0.022	EPA 8270E	9-13-21	9-13-21	
1,2-Dichlorobenzene	**ND**	0.022	EPA 8270E	9-13-21	9-13-21	
2-Methylphenol (o-Cresol)	**ND**	0.022	EPA 8270E	9-13-21	9-13-21	
bis(2-Chloroisopropyl)ether	**ND**	0.022	EPA 8270E	9-13-21	9-13-21	
(3+4)-Methylphenol (m,p-Cresol)	**0.061**	0.022	EPA 8270E	9-13-21	9-13-21	
n-Nitroso-di-n-propylamine	**ND**	0.011	EPA 8270E	9-13-21	9-13-21	
Hexachloroethane	**ND**	0.022	EPA 8270E	9-13-21	9-13-21	
Nitrobenzene	**ND**	0.022	EPA 8270E	9-13-21	9-13-21	
Isophorone	**ND**	0.022	EPA 8270E	9-13-21	9-13-21	
2-Nitrophenol	**ND**	0.022	EPA 8270E	9-13-21	9-13-21	
2,4-Dimethylphenol	**ND**	0.022	EPA 8270E	9-13-21	9-13-21	
bis(2-Chloroethoxy)methane	**ND**	0.022	EPA 8270E	9-13-21	9-13-21	
2,4-Dichlorophenol	**ND**	0.022	EPA 8270E	9-13-21	9-13-21	
1,2,4-Trichlorobenzene	**ND**	0.022	EPA 8270E	9-13-21	9-13-21	
Naphthalene	**ND**	0.0045	EPA 8270E/SIM	9-13-21	9-13-21	
4-Chloroaniline	**ND**	0.011	EPA 8270E	9-13-21	9-13-21	
Hexachlorobutadiene	**ND**	0.022	EPA 8270E	9-13-21	9-13-21	
4-Chloro-3-methylphenol	**ND**	0.022	EPA 8270E	9-13-21	9-13-21	
2-Methylnaphthalene	**ND**	0.0045	EPA 8270E/SIM	9-13-21	9-13-21	
1-Methylnaphthalene	**ND**	0.0045	EPA 8270E/SIM	9-13-21	9-13-21	
Hexachlorocyclopentadiene	**ND**	0.054	EPA 8270E	9-13-21	9-13-21	
2,4,6-Trichlorophenol	**ND**	0.022	EPA 8270E	9-13-21	9-13-21	
2,3-Dichloroaniline	**ND**	0.022	EPA 8270E	9-13-21	9-13-21	
2,4,5-Trichlorophenol	**ND**	0.022	EPA 8270E	9-13-21	9-13-21	
2-Chloronaphthalene	**ND**	0.022	EPA 8270E	9-13-21	9-13-21	
2-Nitroaniline	**ND**	0.022	EPA 8270E	9-13-21	9-13-21	
1,4-Dinitrobenzene	**ND**	0.022	EPA 8270E	9-13-21	9-13-21	
Dimethylphthalate	**ND**	0.022	EPA 8270E	9-13-21	9-13-21	
1,3-Dinitrobenzene	**ND**	0.022	EPA 8270E	9-13-21	9-13-21	
2,6-Dinitrotoluene	**ND**	0.011	EPA 8270E	9-13-21	9-13-21	
1,2-Dinitrobenzene	**ND**	0.022	EPA 8270E	9-13-21	9-13-21	
Acenaphthylene	**ND**	0.0045	EPA 8270E/SIM	9-13-21	9-13-21	
3-Nitroaniline	**ND**	0.022	EPA 8270E	9-13-21	9-13-21	

This report pertains to the samples analyzed in accordance with the chain of custody, and is intended only for the use of the individual or company to whom it is addressed.

Date of Report: September 14, 2021
Samples Submitted: September 10, 2021
Laboratory Reference: 2109-095
Project: 11-05150-003

SEMIVOLATILE ORGANICS EPA 8270E/SIM
page 2 of 2

Analyte	Result	PQL	Method	Date Prepared	Date Analyzed	Flags
Client ID:	**DA7SWCS22210910I**					
Laboratory ID:	09-095-03					
2,4-Dinitrophenol	**ND**	0.29	EPA 8270E	9-13-21	9-13-21	
Acenaphthene	**ND**	0.0045	EPA 8270E/SIM	9-13-21	9-13-21	
4-Nitrophenol	**ND**	0.022	EPA 8270E	9-13-21	9-13-21	
2,4-Dinitrotoluene	**ND**	0.011	EPA 8270E	9-13-21	9-13-21	
Dibenzofuran	**ND**	0.022	EPA 8270E	9-13-21	9-13-21	
2,3,5,6-Tetrachlorophenol	**ND**	0.022	EPA 8270E	9-13-21	9-13-21	
2,3,4,6-Tetrachlorophenol	**ND**	0.022	EPA 8270E	9-13-21	9-13-21	
Diethylphthalate	**ND**	0.11	EPA 8270E	9-13-21	9-13-21	
4-Chlorophenyl-phenylether	**ND**	0.022	EPA 8270E	9-13-21	9-13-21	
4-Nitroaniline	**ND**	0.022	EPA 8270E	9-13-21	9-13-21	
Fluorene	**ND**	0.0045	EPA 8270E/SIM	9-13-21	9-13-21	
4,6-Dinitro-2-methylphenol	**ND**	0.22	EPA 8270E	9-13-21	9-13-21	
n-Nitrosodiphenylamine	**ND**	0.022	EPA 8270E	9-13-21	9-13-21	
1,2-Diphenylhydrazine	**ND**	0.022	EPA 8270E	9-13-21	9-13-21	
4-Bromophenyl-phenylether	**ND**	0.022	EPA 8270E	9-13-21	9-13-21	
Hexachlorobenzene	**ND**	0.022	EPA 8270E	9-13-21	9-13-21	
Pentachlorophenol	**ND**	0.15	EPA 8270E	9-13-21	9-13-21	
Phenanthrene	**ND**	0.0045	EPA 8270E/SIM	9-13-21	9-13-21	
Anthracene	**ND**	0.0045	EPA 8270E/SIM	9-13-21	9-13-21	
Carbazole	**ND**	0.022	EPA 8270E	9-13-21	9-13-21	
Di-n-butylphthalate	**ND**	0.11	EPA 8270E	9-13-21	9-13-21	
Fluoranthene	**ND**	0.0045	EPA 8270E/SIM	9-13-21	9-13-21	
Pyrene	**ND**	0.0045	EPA 8270E/SIM	9-13-21	9-13-21	
Butylbenzylphthalate	**ND**	0.11	EPA 8270E	9-13-21	9-13-21	
bis-2-Ethylhexyladipate	**ND**	0.11	EPA 8270E	9-13-21	9-13-21	
3,3'-Dichlorobenzidine	**ND**	0.011	EPA 8270E	9-13-21	9-13-21	
Benzo[a]anthracene	**ND**	0.0045	EPA 8270E/SIM	9-13-21	9-13-21	
Chrysene	**ND**	0.0045	EPA 8270E/SIM	9-13-21	9-13-21	
bis(2-Ethylhexyl)phthalate	**ND**	0.11	EPA 8270E	9-13-21	9-13-21	
Di-n-octylphthalate	**ND**	0.11	EPA 8270E	9-13-21	9-13-21	
Benzo[b]fluoranthene	**ND**	0.0045	EPA 8270E/SIM	9-13-21	9-13-21	
Benzo(j,k)fluoranthene	**ND**	0.0045	EPA 8270E/SIM	9-13-21	9-13-21	
Benzo[a]pyrene	**ND**	0.0045	EPA 8270E/SIM	9-13-21	9-13-21	
Indeno[1,2,3-cd]pyrene	**ND**	0.0045	EPA 8270E/SIM	9-13-21	9-13-21	
Dibenz[a,h]anthracene	**ND**	0.0045	EPA 8270E/SIM	9-13-21	9-13-21	
Benzo[g,h,i]perylene	**ND**	0.0045	EPA 8270E/SIM	9-13-21	9-13-21	
Surrogate:	*Percent Recovery*	*Control Limits*				
2-Fluorophenol	*62*	*26 - 109*				
Phenol-d6	*67*	*33 - 113*				
Nitrobenzene-d5	*60*	*31 - 110*				
2-Fluorobiphenyl	*60*	*42 - 107*				
2,4,6-Tribromophenol	*50*	*42 - 123*				
Terphenyl-d14	*65*	*41 - 115*				

This report pertains to the samples analyzed in accordance with the chain of custody, and is intended only for the use of the individual or company to whom it is addressed.

Date of Report: September 14, 2021
Samples Submitted: September 10, 2021
Laboratory Reference: 2109-095
Project: 11-05150-003

SEMIVOLATILE ORGANICS EPA 8270E/SIM
page 1 of 2

Matrix: Soil
Units: mg/Kg

Analyte	Result	PQL	Method	Date Prepared	Date Analyzed	Flags
Client ID:	**DA7SWCS22210910D**					
Laboratory ID:	09-095-04					
n-Nitrosodimethylamine	**ND**	0.011	EPA 8270E	9-13-21	9-13-21	
Pyridine	**ND**	0.22	EPA 8270E	9-13-21	9-13-21	
Phenol	**ND**	0.022	EPA 8270E	9-13-21	9-13-21	
Aniline	**ND**	0.11	EPA 8270E	9-13-21	9-13-21	
bis(2-Chloroethyl)ether	**ND**	0.022	EPA 8270E	9-13-21	9-13-21	
2-Chlorophenol	**ND**	0.022	EPA 8270E	9-13-21	9-13-21	
1,3-Dichlorobenzene	**ND**	0.022	EPA 8270E	9-13-21	9-13-21	
1,4-Dichlorobenzene	**ND**	0.022	EPA 8270E	9-13-21	9-13-21	
Benzyl alcohol	**ND**	0.022	EPA 8270E	9-13-21	9-13-21	
1,2-Dichlorobenzene	**ND**	0.022	EPA 8270E	9-13-21	9-13-21	
2-Methylphenol (o-Cresol)	**ND**	0.022	EPA 8270E	9-13-21	9-13-21	
bis(2-Chloroisopropyl)ether	**ND**	0.022	EPA 8270E	9-13-21	9-13-21	
(3+4)-Methylphenol (m,p-Cresol)	**0.080**	0.022	EPA 8270E	9-13-21	9-13-21	
n-Nitroso-di-n-propylamine	**ND**	0.011	EPA 8270E	9-13-21	9-13-21	
Hexachloroethane	**ND**	0.022	EPA 8270E	9-13-21	9-13-21	
Nitrobenzene	**ND**	0.022	EPA 8270E	9-13-21	9-13-21	
Isophorone	**ND**	0.022	EPA 8270E	9-13-21	9-13-21	
2-Nitrophenol	**ND**	0.022	EPA 8270E	9-13-21	9-13-21	
2,4-Dimethylphenol	**ND**	0.022	EPA 8270E	9-13-21	9-13-21	
bis(2-Chloroethoxy)methane	**ND**	0.022	EPA 8270E	9-13-21	9-13-21	
2,4-Dichlorophenol	**ND**	0.022	EPA 8270E	9-13-21	9-13-21	
1,2,4-Trichlorobenzene	**ND**	0.022	EPA 8270E	9-13-21	9-13-21	
Naphthalene	**ND**	0.0043	EPA 8270E/SIM	9-13-21	9-13-21	
4-Chloroaniline	**ND**	0.011	EPA 8270E	9-13-21	9-13-21	
Hexachlorobutadiene	**ND**	0.022	EPA 8270E	9-13-21	9-13-21	
4-Chloro-3-methylphenol	**ND**	0.022	EPA 8270E	9-13-21	9-13-21	
2-Methylnaphthalene	**ND**	0.0043	EPA 8270E/SIM	9-13-21	9-13-21	
1-Methylnaphthalene	**ND**	0.0043	EPA 8270E/SIM	9-13-21	9-13-21	
Hexachlorocyclopentadiene	**ND**	0.052	EPA 8270E	9-13-21	9-13-21	
2,4,6-Trichlorophenol	**ND**	0.022	EPA 8270E	9-13-21	9-13-21	
2,3-Dichloroaniline	**ND**	0.022	EPA 8270E	9-13-21	9-13-21	
2,4,5-Trichlorophenol	**ND**	0.022	EPA 8270E	9-13-21	9-13-21	
2-Chloronaphthalene	**ND**	0.022	EPA 8270E	9-13-21	9-13-21	
2-Nitroaniline	**ND**	0.022	EPA 8270E	9-13-21	9-13-21	
1,4-Dinitrobenzene	**ND**	0.022	EPA 8270E	9-13-21	9-13-21	
Dimethylphthalate	**ND**	0.022	EPA 8270E	9-13-21	9-13-21	
1,3-Dinitrobenzene	**ND**	0.022	EPA 8270E	9-13-21	9-13-21	
2,6-Dinitrotoluene	**ND**	0.011	EPA 8270E	9-13-21	9-13-21	
1,2-Dinitrobenzene	**ND**	0.022	EPA 8270E	9-13-21	9-13-21	
Acenaphthylene	**ND**	0.0043	EPA 8270E/SIM	9-13-21	9-13-21	
3-Nitroaniline	**ND**	0.022	EPA 8270E	9-13-21	9-13-21	

This report pertains to the samples analyzed in accordance with the chain of custody, and is intended only for the use of the individual or company to whom it is addressed.

Date of Report: September 14, 2021
Samples Submitted: September 10, 2021
Laboratory Reference: 2109-095
Project: 11-05150-003

SEMIVOLATILE ORGANICS EPA 8270E/SIM
page 2 of 2

Analyte	Result	PQL	Method	Date Prepared	Date Analyzed	Flags
Client ID:	**DA7SWCS22210910D**					
Laboratory ID:	09-095-04					
2,4-Dinitrophenol	**ND**	0.28	EPA 8270E	9-13-21	9-13-21	
Acenaphthene	**ND**	0.0043	EPA 8270E/SIM	9-13-21	9-13-21	
4-Nitrophenol	**ND**	0.022	EPA 8270E	9-13-21	9-13-21	
2,4-Dinitrotoluene	**ND**	0.011	EPA 8270E	9-13-21	9-13-21	
Dibenzofuran	**ND**	0.022	EPA 8270E	9-13-21	9-13-21	
2,3,5,6-Tetrachlorophenol	**ND**	0.022	EPA 8270E	9-13-21	9-13-21	
2,3,4,6-Tetrachlorophenol	**ND**	0.022	EPA 8270E	9-13-21	9-13-21	
Diethylphthalate	**ND**	0.11	EPA 8270E	9-13-21	9-13-21	
4-Chlorophenyl-phenylether	**ND**	0.022	EPA 8270E	9-13-21	9-13-21	
4-Nitroaniline	**ND**	0.022	EPA 8270E	9-13-21	9-13-21	
Fluorene	**ND**	0.0043	EPA 8270E/SIM	9-13-21	9-13-21	
4,6-Dinitro-2-methylphenol	**ND**	0.21	EPA 8270E	9-13-21	9-13-21	
n-Nitrosodiphenylamine	**ND**	0.022	EPA 8270E	9-13-21	9-13-21	
1,2-Diphenylhydrazine	**ND**	0.022	EPA 8270E	9-13-21	9-13-21	
4-Bromophenyl-phenylether	**ND**	0.022	EPA 8270E	9-13-21	9-13-21	
Hexachlorobenzene	**ND**	0.022	EPA 8270E	9-13-21	9-13-21	
Pentachlorophenol	**ND**	0.14	EPA 8270E	9-13-21	9-13-21	
Phenanthrene	**ND**	0.0043	EPA 8270E/SIM	9-13-21	9-13-21	
Anthracene	**ND**	0.0043	EPA 8270E/SIM	9-13-21	9-13-21	
Carbazole	**ND**	0.022	EPA 8270E	9-13-21	9-13-21	
Di-n-butylphthalate	**ND**	0.11	EPA 8270E	9-13-21	9-13-21	
Fluoranthene	**0.0044**	0.0043	EPA 8270E/SIM	9-13-21	9-13-21	
Pyrene	**ND**	0.0043	EPA 8270E/SIM	9-13-21	9-13-21	
Butylbenzylphthalate	**ND**	0.11	EPA 8270E	9-13-21	9-13-21	
bis-2-Ethylhexyladipate	**ND**	0.11	EPA 8270E	9-13-21	9-13-21	
3,3'-Dichlorobenzidine	**ND**	0.011	EPA 8270E	9-13-21	9-13-21	
Benzo[a]anthracene	**ND**	0.0043	EPA 8270E/SIM	9-13-21	9-13-21	
Chrysene	**ND**	0.0043	EPA 8270E/SIM	9-13-21	9-13-21	
bis(2-Ethylhexyl)phthalate	**ND**	0.11	EPA 8270E	9-13-21	9-13-21	
Di-n-octylphthalate	**ND**	0.11	EPA 8270E	9-13-21	9-13-21	
Benzo[b]fluoranthene	**ND**	0.0043	EPA 8270E/SIM	9-13-21	9-13-21	
Benzo(j,k)fluoranthene	**ND**	0.0043	EPA 8270E/SIM	9-13-21	9-13-21	
Benzo[a]pyrene	**ND**	0.0043	EPA 8270E/SIM	9-13-21	9-13-21	
Indeno[1,2,3-cd]pyrene	**ND**	0.0043	EPA 8270E/SIM	9-13-21	9-13-21	
Dibenz[a,h]anthracene	**ND**	0.0043	EPA 8270E/SIM	9-13-21	9-13-21	
Benzo[g,h,i]perylene	**ND**	0.0043	EPA 8270E/SIM	9-13-21	9-13-21	
Surrogate:	*Percent Recovery*	*Control Limits*				
2-Fluorophenol	*79*	*26 - 109*				
Phenol-d6	*81*	*33 - 113*				
Nitrobenzene-d5	*78*	*31 - 110*				
2-Fluorobiphenyl	*77*	*42 - 107*				
2,4,6-Tribromophenol	*68*	*42 - 123*				
Terphenyl-d14	*79*	*41 - 115*				

This report pertains to the samples analyzed in accordance with the chain of custody, and is intended only for the use of the individual or company to whom it is addressed.

Date of Report: September 14, 2021
Samples Submitted: September 10, 2021
Laboratory Reference: 2109-095
Project: 11-05150-003

SEMIVOLATILE ORGANICS EPA 8270E/SIM
page 1 of 2

Matrix: Soil
Units: mg/Kg

Analyte	Result	PQL	Method	Date Prepared	Date Analyzed	Flags
Client ID:	**DA7SWCS23210910I**					
Laboratory ID:	09-095-05					
n-Nitrosodimethylamine	**ND**	0.022	EPA 8270E	9-13-21	9-13-21	
Pyridine	**ND**	0.43	EPA 8270E	9-13-21	9-13-21	
Phenol	**ND**	0.043	EPA 8270E	9-13-21	9-13-21	
Aniline	**ND**	0.22	EPA 8270E	9-13-21	9-13-21	
bis(2-Chloroethyl)ether	**ND**	0.043	EPA 8270E	9-13-21	9-13-21	
2-Chlorophenol	**ND**	0.043	EPA 8270E	9-13-21	9-13-21	
1,3-Dichlorobenzene	**ND**	0.043	EPA 8270E	9-13-21	9-13-21	
1,4-Dichlorobenzene	**ND**	0.043	EPA 8270E	9-13-21	9-13-21	
Benzyl alcohol	**ND**	0.043	EPA 8270E	9-13-21	9-13-21	
1,2-Dichlorobenzene	**ND**	0.043	EPA 8270E	9-13-21	9-13-21	
2-Methylphenol (o-Cresol)	**ND**	0.043	EPA 8270E	9-13-21	9-13-21	
bis(2-Chloroisopropyl)ether	**ND**	0.043	EPA 8270E	9-13-21	9-13-21	
(3+4)-Methylphenol (m,p-Cresol)	**ND**	0.043	EPA 8270E	9-13-21	9-13-21	
n-Nitroso-di-n-propylamine	**ND**	0.022	EPA 8270E	9-13-21	9-13-21	
Hexachloroethane	**ND**	0.043	EPA 8270E	9-13-21	9-13-21	
Nitrobenzene	**ND**	0.043	EPA 8270E	9-13-21	9-13-21	
Isophorone	**ND**	0.043	EPA 8270E	9-13-21	9-13-21	
2-Nitrophenol	**ND**	0.043	EPA 8270E	9-13-21	9-13-21	
2,4-Dimethylphenol	**ND**	0.043	EPA 8270E	9-13-21	9-13-21	
bis(2-Chloroethoxy)methane	**ND**	0.043	EPA 8270E	9-13-21	9-13-21	
2,4-Dichlorophenol	**ND**	0.043	EPA 8270E	9-13-21	9-13-21	
1,2,4-Trichlorobenzene	**ND**	0.043	EPA 8270E	9-13-21	9-13-21	
Naphthalene	**ND**	0.0043	EPA 8270E/SIM	9-13-21	9-13-21	
4-Chloroaniline	**ND**	0.022	EPA 8270E	9-13-21	9-13-21	
Hexachlorobutadiene	**ND**	0.043	EPA 8270E	9-13-21	9-13-21	
4-Chloro-3-methylphenol	**ND**	0.043	EPA 8270E	9-13-21	9-13-21	
2-Methylnaphthalene	**ND**	0.0043	EPA 8270E/SIM	9-13-21	9-13-21	
1-Methylnaphthalene	**ND**	0.0043	EPA 8270E/SIM	9-13-21	9-13-21	
Hexachlorocyclopentadiene	**ND**	0.11	EPA 8270E	9-13-21	9-13-21	
2,4,6-Trichlorophenol	**ND**	0.043	EPA 8270E	9-13-21	9-13-21	
2,3-Dichloroaniline	**ND**	0.043	EPA 8270E	9-13-21	9-13-21	
2,4,5-Trichlorophenol	**ND**	0.043	EPA 8270E	9-13-21	9-13-21	
2-Chloronaphthalene	**ND**	0.043	EPA 8270E	9-13-21	9-13-21	
2-Nitroaniline	**ND**	0.043	EPA 8270E	9-13-21	9-13-21	
1,4-Dinitrobenzene	**ND**	0.043	EPA 8270E	9-13-21	9-13-21	
Dimethylphthalate	**ND**	0.043	EPA 8270E	9-13-21	9-13-21	
1,3-Dinitrobenzene	**ND**	0.043	EPA 8270E	9-13-21	9-13-21	
2,6-Dinitrotoluene	**ND**	0.022	EPA 8270E	9-13-21	9-13-21	
1,2-Dinitrobenzene	**ND**	0.043	EPA 8270E	9-13-21	9-13-21	
Acenaphthylene	**ND**	0.0043	EPA 8270E/SIM	9-13-21	9-13-21	
3-Nitroaniline	**ND**	0.043	EPA 8270E	9-13-21	9-13-21	

This report pertains to the samples analyzed in accordance with the chain of custody, and is intended only for the use of the individual or company to whom it is addressed.

Date of Report: September 14, 2021
Samples Submitted: September 10, 2021
Laboratory Reference: 2109-095
Project: 11-05150-003

SEMIVOLATILE ORGANICS EPA 8270E/SIM
page 2 of 2

Analyte	Result	PQL	Method	Date Prepared	Date Analyzed	Flags
Client ID:	**DA7SWCS23210910I**					
Laboratory ID:	09-095-05					
2,4-Dinitrophenol	**ND**	0.56	EPA 8270E	9-13-21	9-13-21	
Acenaphthene	**ND**	0.0043	EPA 8270E/SIM	9-13-21	9-13-21	
4-Nitrophenol	**ND**	0.043	EPA 8270E	9-13-21	9-13-21	
2,4-Dinitrotoluene	**ND**	0.022	EPA 8270E	9-13-21	9-13-21	
Dibenzofuran	**ND**	0.043	EPA 8270E	9-13-21	9-13-21	
2,3,5,6-Tetrachlorophenol	**ND**	0.043	EPA 8270E	9-13-21	9-13-21	
2,3,4,6-Tetrachlorophenol	**ND**	0.043	EPA 8270E	9-13-21	9-13-21	
Diethylphthalate	**ND**	0.22	EPA 8270E	9-13-21	9-13-21	
4-Chlorophenyl-phenylether	**ND**	0.043	EPA 8270E	9-13-21	9-13-21	
4-Nitroaniline	**ND**	0.043	EPA 8270E	9-13-21	9-13-21	
Fluorene	**ND**	0.0043	EPA 8270E/SIM	9-13-21	9-13-21	
4,6-Dinitro-2-methylphenol	**ND**	0.43	EPA 8270E	9-13-21	9-13-21	
n-Nitrosodiphenylamine	**ND**	0.043	EPA 8270E	9-13-21	9-13-21	
1,2-Diphenylhydrazine	**ND**	0.043	EPA 8270E	9-13-21	9-13-21	
4-Bromophenyl-phenylether	**ND**	0.043	EPA 8270E	9-13-21	9-13-21	
Hexachlorobenzene	**ND**	0.043	EPA 8270E	9-13-21	9-13-21	
Pentachlorophenol	**ND**	0.29	EPA 8270E	9-13-21	9-13-21	
Phenanthrene	**ND**	0.0043	EPA 8270E/SIM	9-13-21	9-13-21	
Anthracene	**ND**	0.0043	EPA 8270E/SIM	9-13-21	9-13-21	
Carbazole	**ND**	0.043	EPA 8270E	9-13-21	9-13-21	
Di-n-butylphthalate	**ND**	0.22	EPA 8270E	9-13-21	9-13-21	
Fluoranthene	**ND**	0.0043	EPA 8270E/SIM	9-13-21	9-13-21	
Pyrene	**ND**	0.0043	EPA 8270E/SIM	9-13-21	9-13-21	
Butylbenzylphthalate	**ND**	0.22	EPA 8270E	9-13-21	9-13-21	
bis-2-Ethylhexyladipate	**ND**	0.22	EPA 8270E	9-13-21	9-13-21	
3,3'-Dichlorobenzidine	**ND**	0.022	EPA 8270E	9-13-21	9-13-21	
Benzo[a]anthracene	**ND**	0.0043	EPA 8270E/SIM	9-13-21	9-13-21	
Chrysene	**ND**	0.0043	EPA 8270E/SIM	9-13-21	9-13-21	
bis(2-Ethylhexyl)phthalate	**ND**	0.22	EPA 8270E	9-13-21	9-13-21	
Di-n-octylphthalate	**ND**	0.22	EPA 8270E	9-13-21	9-13-21	
Benzo[b]fluoranthene	**ND**	0.0043	EPA 8270E/SIM	9-13-21	9-13-21	
Benzo(j,k)fluoranthene	**ND**	0.0043	EPA 8270E/SIM	9-13-21	9-13-21	
Benzo[a]pyrene	**ND**	0.0043	EPA 8270E/SIM	9-13-21	9-13-21	
Indeno[1,2,3-cd]pyrene	**ND**	0.0043	EPA 8270E/SIM	9-13-21	9-13-21	
Dibenz[a,h]anthracene	**ND**	0.0043	EPA 8270E/SIM	9-13-21	9-13-21	
Benzo[g,h,i]perylene	**0.013**	0.0043	EPA 8270E/SIM	9-13-21	9-13-21	
Surrogate:	*Percent Recovery*	*Control Limits*				
2-Fluorophenol	*66*	*26 - 109*				
Phenol-d6	*71*	*33 - 113*				
Nitrobenzene-d5	*70*	*31 - 110*				
2-Fluorobiphenyl	*64*	*42 - 107*				
2,4,6-Tribromophenol	*56*	*42 - 123*				
Terphenyl-d14	*75*	*41 - 115*				

This report pertains to the samples analyzed in accordance with the chain of custody, and is intended only for the use of the individual or company to whom it is addressed.

Date of Report: September 14, 2021
Samples Submitted: September 10, 2021
Laboratory Reference: 2109-095
Project: 11-05150-003

SEMIVOLATILE ORGANICS EPA 8270E/SIM
QUALITY CONTROL
page 1 of 2

Matrix: Soil
Units: mg/Kg

Analyte	Result	PQL	Method	Date Prepared	Date Analyzed	Flags
METHOD BLANK						
Laboratory ID:	MB0913S1					
n-Nitrosodimethylamine	**ND**	0.010	EPA 8270E	9-13-21	9-13-21	
Pyridine	**ND**	0.20	EPA 8270E	9-13-21	9-13-21	
Phenol	**ND**	0.020	EPA 8270E	9-13-21	9-13-21	
Aniline	**ND**	0.10	EPA 8270E	9-13-21	9-13-21	
bis(2-Chloroethyl)ether	**ND**	0.020	EPA 8270E	9-13-21	9-13-21	
2-Chlorophenol	**ND**	0.020	EPA 8270E	9-13-21	9-13-21	
1,3-Dichlorobenzene	**ND**	0.020	EPA 8270E	9-13-21	9-13-21	
1,4-Dichlorobenzene	**ND**	0.020	EPA 8270E	9-13-21	9-13-21	
Benzyl alcohol	**ND**	0.020	EPA 8270E	9-13-21	9-13-21	
1,2-Dichlorobenzene	**ND**	0.020	EPA 8270E	9-13-21	9-13-21	
2-Methylphenol (o-Cresol)	**ND**	0.020	EPA 8270E	9-13-21	9-13-21	
bis(2-Chloroisopropyl)ether	**ND**	0.020	EPA 8270E	9-13-21	9-13-21	
(3+4)-Methylphenol (m,p-Cresol)	**ND**	0.020	EPA 8270E	9-13-21	9-13-21	
n-Nitroso-di-n-propylamine	**ND**	0.010	EPA 8270E	9-13-21	9-13-21	
Hexachloroethane	**ND**	0.020	EPA 8270E	9-13-21	9-13-21	
Nitrobenzene	**ND**	0.020	EPA 8270E	9-13-21	9-13-21	
Isophorone	**ND**	0.020	EPA 8270E	9-13-21	9-13-21	
2-Nitrophenol	**ND**	0.020	EPA 8270E	9-13-21	9-13-21	
2,4-Dimethylphenol	**ND**	0.020	EPA 8270E	9-13-21	9-13-21	
bis(2-Chloroethoxy)methane	**ND**	0.020	EPA 8270E	9-13-21	9-13-21	
2,4-Dichlorophenol	**ND**	0.020	EPA 8270E	9-13-21	9-13-21	
1,2,4-Trichlorobenzene	**ND**	0.020	EPA 8270E	9-13-21	9-13-21	
Naphthalene	**ND**	0.0040	EPA 8270E/SIM	9-13-21	9-13-21	
4-Chloroaniline	**ND**	0.010	EPA 8270E	9-13-21	9-13-21	
Hexachlorobutadiene	**ND**	0.020	EPA 8270E	9-13-21	9-13-21	
4-Chloro-3-methylphenol	**ND**	0.020	EPA 8270E	9-13-21	9-13-21	
2-Methylnaphthalene	**ND**	0.0040	EPA 8270E/SIM	9-13-21	9-13-21	
1-Methylnaphthalene	**ND**	0.0040	EPA 8270E/SIM	9-13-21	9-13-21	
Hexachlorocyclopentadiene	**ND**	0.049	EPA 8270E	9-13-21	9-13-21	
2,4,6-Trichlorophenol	**ND**	0.020	EPA 8270E	9-13-21	9-13-21	
2,3-Dichloroaniline	**ND**	0.020	EPA 8270E	9-13-21	9-13-21	
2,4,5-Trichlorophenol	**ND**	0.020	EPA 8270E	9-13-21	9-13-21	
2-Chloronaphthalene	**ND**	0.020	EPA 8270E	9-13-21	9-13-21	
2-Nitroaniline	**ND**	0.020	EPA 8270E	9-13-21	9-13-21	
1,4-Dinitrobenzene	**ND**	0.020	EPA 8270E	9-13-21	9-13-21	
Dimethylphthalate	**ND**	0.020	EPA 8270E	9-13-21	9-13-21	
1,3-Dinitrobenzene	**ND**	0.020	EPA 8270E	9-13-21	9-13-21	
2,6-Dinitrotoluene	**ND**	0.010	EPA 8270E	9-13-21	9-13-21	
1,2-Dinitrobenzene	**ND**	0.020	EPA 8270E	9-13-21	9-13-21	
Acenaphthylene	**ND**	0.0040	EPA 8270E/SIM	9-13-21	9-13-21	
3-Nitroaniline	**ND**	0.020	EPA 8270E	9-13-21	9-13-21	

This report pertains to the samples analyzed in accordance with the chain of custody, and is intended only for the use of the individual or company to whom it is addressed.

Date of Report: September 14, 2021
Samples Submitted: September 10, 2021
Laboratory Reference: 2109-095
Project: 11-05150-003

SEMIVOLATILE ORGANICS EPA 8270E/SIM
QUALITY CONTROL
page 2 of 2

Analyte	Result	PQL	Method	Date Prepared	Date Analyzed	Flags
METHOD BLANK						
Laboratory ID:	MB0913S1					
2,4-Dinitrophenol	**ND**	0.26	EPA 8270E	9-13-21	9-13-21	
Acenaphthene	**ND**	0.0040	EPA 8270E/SIM	9-13-21	9-13-21	
4-Nitrophenol	**ND**	0.020	EPA 8270E	9-13-21	9-13-21	
2,4-Dinitrotoluene	**ND**	0.010	EPA 8270E	9-13-21	9-13-21	
Dibenzofuran	**ND**	0.020	EPA 8270E	9-13-21	9-13-21	
2,3,5,6-Tetrachlorophenol	**ND**	0.020	EPA 8270E	9-13-21	9-13-21	
2,3,4,6-Tetrachlorophenol	**ND**	0.020	EPA 8270E	9-13-21	9-13-21	
Diethylphthalate	**ND**	0.10	EPA 8270E	9-13-21	9-13-21	
4-Chlorophenyl-phenylether	**ND**	0.020	EPA 8270E	9-13-21	9-13-21	
4-Nitroaniline	**ND**	0.020	EPA 8270E	9-13-21	9-13-21	
Fluorene	**ND**	0.0040	EPA 8270E/SIM	9-13-21	9-13-21	
4,6-Dinitro-2-methylphenol	**ND**	0.20	EPA 8270E	9-13-21	9-13-21	
n-Nitrosodiphenylamine	**ND**	0.020	EPA 8270E	9-13-21	9-13-21	
1,2-Diphenylhydrazine	**ND**	0.020	EPA 8270E	9-13-21	9-13-21	
4-Bromophenyl-phenylether	**ND**	0.020	EPA 8270E	9-13-21	9-13-21	
Hexachlorobenzene	**ND**	0.020	EPA 8270E	9-13-21	9-13-21	
Pentachlorophenol	**ND**	0.13	EPA 8270E	9-13-21	9-13-21	
Phenanthrene	**ND**	0.0040	EPA 8270E/SIM	9-13-21	9-13-21	
Anthracene	**ND**	0.0040	EPA 8270E/SIM	9-13-21	9-13-21	
Carbazole	**ND**	0.020	EPA 8270E	9-13-21	9-13-21	
Di-n-butylphthalate	**ND**	0.10	EPA 8270E	9-13-21	9-13-21	
Fluoranthene	**ND**	0.0040	EPA 8270E/SIM	9-13-21	9-13-21	
Pyrene	**ND**	0.0040	EPA 8270E/SIM	9-13-21	9-13-21	
Butylbenzylphthalate	**ND**	0.10	EPA 8270E	9-13-21	9-13-21	
bis-2-Ethylhexyladipate	**ND**	0.10	EPA 8270E	9-13-21	9-13-21	
3,3'-Dichlorobenzidine	**ND**	0.010	EPA 8270E	9-13-21	9-13-21	
Benzo[a]anthracene	**ND**	0.0040	EPA 8270E/SIM	9-13-21	9-13-21	
Chrysene	**ND**	0.0040	EPA 8270E/SIM	9-13-21	9-13-21	
bis(2-Ethylhexyl)phthalate	**ND**	0.10	EPA 8270E	9-13-21	9-13-21	
Di-n-octylphthalate	**ND**	0.10	EPA 8270E	9-13-21	9-13-21	
Benzo[b]fluoranthene	**ND**	0.0040	EPA 8270E/SIM	9-13-21	9-13-21	
Benzo(j,k)fluoranthene	**ND**	0.0040	EPA 8270E/SIM	9-13-21	9-13-21	
Benzo[a]pyrene	**ND**	0.0040	EPA 8270E/SIM	9-13-21	9-13-21	
Indeno[1,2,3-cd]pyrene	**ND**	0.0040	EPA 8270E/SIM	9-13-21	9-13-21	
Dibenz[a,h]anthracene	**ND**	0.0040	EPA 8270E/SIM	9-13-21	9-13-21	
Benzo[g,h,i]perylene	**ND**	0.0040	EPA 8270E/SIM	9-13-21	9-13-21	
Surrogate:	*Percent Recovery*	*Control Limits*				
2-Fluorophenol	*51*	*26 - 109*				
Phenol-d6	*60*	*33 - 113*				
Nitrobenzene-d5	*49*	*31 - 110*				
2-Fluorobiphenyl	*62*	*42 - 107*				
2,4,6-Tribromophenol	*70*	*42 - 123*				
Terphenyl-d14	*91*	*41 - 115*				

This report pertains to the samples analyzed in accordance with the chain of custody, and is intended only for the use of the individual or company to whom it is addressed.

Date of Report: September 14, 2021
Samples Submitted: September 10, 2021
Laboratory Reference: 2109-095
Project: 11-05150-003

SEMIVOLATILE ORGANICS EPA 8270E/SIM
QUALITY CONTROL

Matrix: Soil
Units: mg/Kg

Analyte	Result		Spike Level		Percent Recovery		Recovery Limits	RPD	RPD Limit	Flags
SPIKE BLANKS										
Laboratory ID:	SB0913S1									
	SB	SBD	SB	SBD	SB	SBD				
Phenol	**1.33**	**1.23**	1.33	1.33	100	92	47 - 106	8	30	
2-Chlorophenol	**1.19**	**1.13**	1.33	1.33	89	85	51 - 105	5	31	
1,4-Dichlorobenzene	**0.544**	**0.524**	0.667	0.667	82	79	49 - 101	4	33	
n-Nitroso-di-n-propylamine	**0.650**	**0.609**	0.667	0.667	97	91	50 - 105	7	26	
1,2,4-Trichlorobenzene	**0.544**	**0.538**	0.667	0.667	82	81	50 - 107	1	31	
4-Chloro-3-methylphenol	**1.32**	**1.25**	1.33	1.33	99	94	58 - 114	5	22	
Acenaphthene	**0.591**	**0.556**	0.667	0.667	89	83	52 - 102	6	22	
4-Nitrophenol	**1.46**	**1.36**	1.33	1.33	110	102	51 - 126	7	20	
2,4-Dinitrotoluene	**0.563**	**0.530**	0.667	0.667	84	79	54 - 108	6	19	
Pentachlorophenol	**1.20**	**1.12**	1.33	1.33	90	84	20 - 148	7	30	
Pyrene	**0.630**	**0.612**	0.667	0.667	94	92	55 - 112	3	19	
Surrogate:										
2-Fluorophenol					*94*	*89*	*26 - 109*			
Phenol-d6					*103*	*95*	*33 - 113*			
Nitrobenzene-d5					*87*	*85*	*31 - 110*			
2-Fluorobiphenyl					*97*	*89*	*42 - 107*			
2,4,6-Tribromophenol					*96*	*92*	*42 - 123*			
Terphenyl-d14					*107*	*103*	*41 - 115*			

This report pertains to the samples analyzed in accordance with the chain of custody, and is intended only for the use of the individual or company to whom it is addressed.

Date of Report: September 14, 2021
Samples Submitted: September 10, 2021
Laboratory Reference: 2109-095
Project: 11-05150-003

PCBs EPA 8082A

Matrix: Soil
Units: mg/Kg (ppm)

Analyte	Result	PQL	Method	Date Prepared	Date Analyzed	Flags
Client ID:	**DA7SWCS20210910I**					
Laboratory ID:	09-095-01					
Aroclor 1016	**ND**	0.022	EPA 8082A	9-13-21	9-13-21	
Aroclor 1221	**ND**	0.022	EPA 8082A	9-13-21	9-13-21	
Aroclor 1232	**ND**	0.022	EPA 8082A	9-13-21	9-13-21	
Aroclor 1242	**ND**	0.022	EPA 8082A	9-13-21	9-13-21	
Aroclor 1248	**ND**	0.022	EPA 8082A	9-13-21	9-13-21	
Aroclor 1254	**ND**	0.022	EPA 8082A	9-13-21	9-13-21	
Aroclor 1260	**ND**	0.022	EPA 8082A	9-13-21	9-13-21	
Surrogate:	*Percent Recovery*	*Control Limits*				
DCB	*81*	*54-135*				
Client ID:	**DA7SWCS21210910I**					
Laboratory ID:	09-095-02					
Aroclor 1016	**ND**	0.021	EPA 8082A	9-13-21	9-13-21	
Aroclor 1221	**ND**	0.021	EPA 8082A	9-13-21	9-13-21	
Aroclor 1232	**ND**	0.021	EPA 8082A	9-13-21	9-13-21	
Aroclor 1242	**ND**	0.021	EPA 8082A	9-13-21	9-13-21	
Aroclor 1248	**ND**	0.021	EPA 8082A	9-13-21	9-13-21	
Aroclor 1254	**ND**	0.021	EPA 8082A	9-13-21	9-13-21	
Aroclor 1260	**ND**	0.021	EPA 8082A	9-13-21	9-13-21	
Surrogate:	*Percent Recovery*	*Control Limits*				
DCB	*91*	*54-135*				
Client ID:	**DA7SWCS22210910I**					
Laboratory ID:	09-095-03					
Aroclor 1016	**ND**	0.022	EPA 8082A	9-13-21	9-13-21	
Aroclor 1221	**ND**	0.022	EPA 8082A	9-13-21	9-13-21	
Aroclor 1232	**ND**	0.022	EPA 8082A	9-13-21	9-13-21	
Aroclor 1242	**ND**	0.022	EPA 8082A	9-13-21	9-13-21	
Aroclor 1248	**ND**	0.022	EPA 8082A	9-13-21	9-13-21	
Aroclor 1254	**ND**	0.022	EPA 8082A	9-13-21	9-13-21	
Aroclor 1260	**ND**	0.022	EPA 8082A	9-13-21	9-13-21	
Surrogate:	*Percent Recovery*	*Control Limits*				
DCB	*87*	*54-135*				

This report pertains to the samples analyzed in accordance with the chain of custody,
and is intended only for the use of the individual or company to whom it is addressed.

Date of Report: September 14, 2021
Samples Submitted: September 10, 2021
Laboratory Reference: 2109-095
Project: 11-05150-003

PCBs EPA 8082A

Matrix: Soil
Units: mg/Kg (ppm)

Analyte	Result	PQL	Method	Date Prepared	Date Analyzed	Flags
Client ID:	**DA7SWCS22210910D**					
Laboratory ID:	09-095-04					
Aroclor 1016	**ND**	0.022	EPA 8082A	9-13-21	9-13-21	
Aroclor 1221	**ND**	0.022	EPA 8082A	9-13-21	9-13-21	
Aroclor 1232	**ND**	0.022	EPA 8082A	9-13-21	9-13-21	
Aroclor 1242	**ND**	0.022	EPA 8082A	9-13-21	9-13-21	
Aroclor 1248	**ND**	0.022	EPA 8082A	9-13-21	9-13-21	
Aroclor 1254	**ND**	0.022	EPA 8082A	9-13-21	9-13-21	
Aroclor 1260	**ND**	0.022	EPA 8082A	9-13-21	9-13-21	
Surrogate:	*Percent Recovery*	*Control Limits*				
DCB	*81*	*54-135*				
Client ID:	**DA7SWCS23210910I**					
Laboratory ID:	09-095-05					
Aroclor 1016	**ND**	0.022	EPA 8082A	9-13-21	9-13-21	
Aroclor 1221	**ND**	0.022	EPA 8082A	9-13-21	9-13-21	
Aroclor 1232	**ND**	0.022	EPA 8082A	9-13-21	9-13-21	
Aroclor 1242	**ND**	0.022	EPA 8082A	9-13-21	9-13-21	
Aroclor 1248	**ND**	0.022	EPA 8082A	9-13-21	9-13-21	
Aroclor 1254	**ND**	0.022	EPA 8082A	9-13-21	9-13-21	
Aroclor 1260	**ND**	0.022	EPA 8082A	9-13-21	9-13-21	
Surrogate:	*Percent Recovery*	*Control Limits*				
DCB	*91*	*54-135*				

This report pertains to the samples analyzed in accordance with the chain of custody,
and is intended only for the use of the individual or company to whom it is addressed.

Date of Report: September 14, 2021
Samples Submitted: September 10, 2021
Laboratory Reference: 2109-095
Project: 11-05150-003

PCBs EPA 8082A
QUALITY CONTROL

Matrix: Soil
Units: mg/Kg (ppm)

Analyte	Result	PQL	Method	Date Prepared	Date Analyzed	Flags
METHOD BLANK						
Laboratory ID:	MB0913S1					
Aroclor 1016	**ND**	0.020	EPA 8082A	9-13-21	9-13-21	
Aroclor 1221	**ND**	0.020	EPA 8082A	9-13-21	9-13-21	
Aroclor 1232	**ND**	0.020	EPA 8082A	9-13-21	9-13-21	
Aroclor 1242	**ND**	0.020	EPA 8082A	9-13-21	9-13-21	
Aroclor 1248	**ND**	0.020	EPA 8082A	9-13-21	9-13-21	
Aroclor 1254	**ND**	0.020	EPA 8082A	9-13-21	9-13-21	
Aroclor 1260	**ND**	0.020	EPA 8082A	9-13-21	9-13-21	
Surrogate:	*Percent Recovery*	*Control Limits*				
DCB	*84*	*54-135*				

Analyte	Result		Spike Level		Source Result	Percent Recovery		Recovery Limits	RPD	RPD Limit	Flags
MATRIX SPIKES											
Laboratory ID:	09-095-01										
	MS	MSD	MS	MSD		MS	MSD				
Aroclor 1260	**0.446**	**0.440**	0.500	0.500	ND	**89**	**88**	62-129	1	15	
Surrogate:											
DCB						*85*	*84*	*54-135*			

This report pertains to the samples analyzed in accordance with the chain of custody, and is intended only for the use of the individual or company to whom it is addressed.

Date of Report: September 14, 2021
Samples Submitted: September 10, 2021
Laboratory Reference: 2109-095
Project: 11-05150-003

ORGANOCHLORINE PESTICIDES EPA 8081B

Matrix: Soil
Units: ug/Kg (ppb)

Analyte	Result	PQL	Method	Date Prepared	Date Analyzed	Flags
Client ID:	**DA7SWCS20210910I**					
Laboratory ID:	09-095-01					
alpha-BHC	**ND**	0.45	EPA 8081B	9-13-21	9-14-21	
gamma-BHC (Lindane)	**ND**	0.45	EPA 8081B	9-13-21	9-14-21	
beta-BHC	**ND**	0.45	EPA 8081B	9-13-21	9-14-21	
delta-BHC	**ND**	0.45	EPA 8081B	9-13-21	9-14-21	
Heptachlor	**ND**	0.45	EPA 8081B	9-13-21	9-14-21	
Aldrin	**ND**	0.45	EPA 8081B	9-13-21	9-14-21	
Heptachlor Epoxide	**ND**	0.45	EPA 8081B	9-13-21	9-14-21	
gamma-Chlordane	**ND**	0.45	EPA 8081B	9-13-21	9-14-21	
alpha-Chlordane	**ND**	0.45	EPA 8081B	9-13-21	9-14-21	
4,4'-DDE	**ND**	0.45	EPA 8081B	9-13-21	9-14-21	
Endosulfan I	**ND**	0.45	EPA 8081B	9-13-21	9-14-21	
Dieldrin	**ND**	0.45	EPA 8081B	9-13-21	9-14-21	
Endrin	**ND**	0.45	EPA 8081B	9-13-21	9-14-21	
4,4'-DDD	**ND**	0.45	EPA 8081B	9-13-21	9-14-21	
Endosulfan II	**ND**	0.45	EPA 8081B	9-13-21	9-14-21	
4,4'-DDT	**ND**	0.45	EPA 8081B	9-13-21	9-14-21	
Endrin Aldehyde	**ND**	0.45	EPA 8081B	9-13-21	9-14-21	
Methoxychlor	**ND**	0.45	EPA 8081B	9-13-21	9-14-21	
Endosulfan Sulfate	**ND**	0.45	EPA 8081B	9-13-21	9-14-21	
Endrin Ketone	**ND**	0.45	EPA 8081B	9-13-21	9-14-21	
Toxaphene	**ND**	11	EPA 8081B	9-13-21	9-14-21	
Surrogate:	*Percent Recovery*	*Control Limits*				
TCMX	*71*	*30-110*				
DCB	*83*	*40-117*				

This report pertains to the samples analyzed in accordance with the chain of custody, and is intended only for the use of the individual or company to whom it is addressed.

Date of Report: September 14, 2021
Samples Submitted: September 10, 2021
Laboratory Reference: 2109-095
Project: 11-05150-003

ORGANOCHLORINE PESTICIDES EPA 8081B

Matrix: Soil
Units: ug/Kg (ppb)

Analyte	Result	PQL	Method	Date Prepared	Date Analyzed	Flags
Client ID:	**DA7SWCS21210910I**					
Laboratory ID:	09-095-02					
alpha-BHC	**ND**	0.43	EPA 8081B	9-13-21	9-14-21	
gamma-BHC (Lindane)	**ND**	0.43	EPA 8081B	9-13-21	9-14-21	
beta-BHC	**ND**	0.43	EPA 8081B	9-13-21	9-14-21	
delta-BHC	**ND**	0.43	EPA 8081B	9-13-21	9-14-21	
Heptachlor	**ND**	0.43	EPA 8081B	9-13-21	9-14-21	
Aldrin	**ND**	0.43	EPA 8081B	9-13-21	9-14-21	
Heptachlor Epoxide	**ND**	0.43	EPA 8081B	9-13-21	9-14-21	
gamma-Chlordane	**ND**	0.43	EPA 8081B	9-13-21	9-14-21	
alpha-Chlordane	**ND**	0.43	EPA 8081B	9-13-21	9-14-21	
4,4'-DDE	**ND**	0.43	EPA 8081B	9-13-21	9-14-21	
Endosulfan I	**ND**	0.43	EPA 8081B	9-13-21	9-14-21	
Dieldrin	**ND**	0.43	EPA 8081B	9-13-21	9-14-21	
Endrin	**ND**	0.43	EPA 8081B	9-13-21	9-14-21	
4,4'-DDD	**ND**	0.43	EPA 8081B	9-13-21	9-14-21	
Endosulfan II	**ND**	0.43	EPA 8081B	9-13-21	9-14-21	
4,4'-DDT	**ND**	0.43	EPA 8081B	9-13-21	9-14-21	
Endrin Aldehyde	**ND**	0.43	EPA 8081B	9-13-21	9-14-21	
Methoxychlor	**ND**	0.43	EPA 8081B	9-13-21	9-14-21	
Endosulfan Sulfate	**ND**	0.43	EPA 8081B	9-13-21	9-14-21	
Endrin Ketone	**ND**	0.43	EPA 8081B	9-13-21	9-14-21	
Toxaphene	**ND**	11	EPA 8081B	9-13-21	9-14-21	
Surrogate:	*Percent Recovery*	*Control Limits*				
TCMX	*66*	*30-110*				
DCB	*78*	*40-117*				

This report pertains to the samples analyzed in accordance with the chain of custody, and is intended only for the use of the individual or company to whom it is addressed.

Date of Report: September 14, 2021
Samples Submitted: September 10, 2021
Laboratory Reference: 2109-095
Project: 11-05150-003

ORGANOCHLORINE PESTICIDES EPA 8081B

Matrix: Soil
Units: ug/Kg (ppb)

Analyte	Result	PQL	Method	Date Prepared	Date Analyzed	Flags
Client ID:	**DA7SWCS22210910I**					
Laboratory ID:	09-095-03					
alpha-BHC	**ND**	0.45	EPA 8081B	9-13-21	9-14-21	
gamma-BHC (Lindane)	**ND**	0.45	EPA 8081B	9-13-21	9-14-21	
beta-BHC	**0.57**	0.45	EPA 8081B	9-13-21	9-14-21	P
delta-BHC	**ND**	0.45	EPA 8081B	9-13-21	9-14-21	
Heptachlor	**ND**	0.45	EPA 8081B	9-13-21	9-14-21	
Aldrin	**ND**	0.45	EPA 8081B	9-13-21	9-14-21	
Heptachlor Epoxide	**ND**	0.45	EPA 8081B	9-13-21	9-14-21	
gamma-Chlordane	**ND**	0.45	EPA 8081B	9-13-21	9-14-21	
alpha-Chlordane	**ND**	0.45	EPA 8081B	9-13-21	9-14-21	
4,4'-DDE	**ND**	0.45	EPA 8081B	9-13-21	9-14-21	
Endosulfan I	**9.7**	0.45	EPA 8081B	9-13-21	9-14-21	
Dieldrin	**ND**	0.45	EPA 8081B	9-13-21	9-14-21	
Endrin	**ND**	0.45	EPA 8081B	9-13-21	9-14-21	
4,4'-DDD	**ND**	0.45	EPA 8081B	9-13-21	9-14-21	
Endosulfan II	**ND**	0.45	EPA 8081B	9-13-21	9-14-21	
4,4'-DDT	**ND**	0.45	EPA 8081B	9-13-21	9-14-21	
Endrin Aldehyde	**ND**	0.45	EPA 8081B	9-13-21	9-14-21	
Methoxychlor	**ND**	0.45	EPA 8081B	9-13-21	9-14-21	
Endosulfan Sulfate	**ND**	0.45	EPA 8081B	9-13-21	9-14-21	
Endrin Ketone	**ND**	0.45	EPA 8081B	9-13-21	9-14-21	
Toxaphene	**ND**	11	EPA 8081B	9-13-21	9-14-21	
Surrogate:	*Percent Recovery*	*Control Limits*				
TCMX	*79*	*30-110*				
DCB	*88*	*40-117*				

This report pertains to the samples analyzed in accordance with the chain of custody, and is intended only for the use of the individual or company to whom it is addressed.

Date of Report: September 14, 2021
Samples Submitted: September 10, 2021
Laboratory Reference: 2109-095
Project: 11-05150-003

ORGANOCHLORINE PESTICIDES EPA 8081B

Matrix: Soil
Units: ug/Kg (ppb)

Analyte	Result	PQL	Method	Date Prepared	Date Analyzed	Flags
Client ID:	**DA7SWCS22210910D**					
Laboratory ID:	09-095-04					
alpha-BHC	**ND**	0.43	EPA 8081B	9-13-21	9-14-21	
gamma-BHC (Lindane)	**ND**	0.43	EPA 8081B	9-13-21	9-14-21	
beta-BHC	**ND**	0.43	EPA 8081B	9-13-21	9-14-21	
delta-BHC	**ND**	0.43	EPA 8081B	9-13-21	9-14-21	
Heptachlor	**ND**	0.43	EPA 8081B	9-13-21	9-14-21	
Aldrin	**ND**	0.43	EPA 8081B	9-13-21	9-14-21	
Heptachlor Epoxide	**ND**	0.43	EPA 8081B	9-13-21	9-14-21	
gamma-Chlordane	**ND**	0.43	EPA 8081B	9-13-21	9-14-21	
alpha-Chlordane	**ND**	0.43	EPA 8081B	9-13-21	9-14-21	
4,4'-DDE	**ND**	0.43	EPA 8081B	9-13-21	9-14-21	
Endosulfan I	**ND**	0.43	EPA 8081B	9-13-21	9-14-21	
Dieldrin	**ND**	0.43	EPA 8081B	9-13-21	9-14-21	
Endrin	**ND**	0.43	EPA 8081B	9-13-21	9-14-21	
4,4'-DDD	**ND**	0.43	EPA 8081B	9-13-21	9-14-21	
Endosulfan II	**ND**	0.43	EPA 8081B	9-13-21	9-14-21	
4,4'-DDT	**ND**	0.43	EPA 8081B	9-13-21	9-14-21	
Endrin Aldehyde	**ND**	0.43	EPA 8081B	9-13-21	9-14-21	
Methoxychlor	**ND**	0.43	EPA 8081B	9-13-21	9-14-21	
Endosulfan Sulfate	**ND**	0.43	EPA 8081B	9-13-21	9-14-21	
Endrin Ketone	**ND**	0.43	EPA 8081B	9-13-21	9-14-21	
Toxaphene	**ND**	11	EPA 8081B	9-13-21	9-14-21	
Surrogate:	*Percent Recovery*	*Control Limits*				
TCMX	*72*	*30-110*				
DCB	*84*	*40-117*				

This report pertains to the samples analyzed in accordance with the chain of custody, and is intended only for the use of the individual or company to whom it is addressed.

Date of Report: September 14, 2021
Samples Submitted: September 10, 2021
Laboratory Reference: 2109-095
Project: 11-05150-003

ORGANOCHLORINE PESTICIDES EPA 8081B

Matrix: Soil
Units: ug/Kg (ppb)

Analyte	Result	PQL	Method	Date Prepared	Date Analyzed	Flags
Client ID:	**DA7SWCS23210910I**					
Laboratory ID:	09-095-05					
alpha-BHC	**ND**	0.43	EPA 8081B	9-13-21	9-14-21	
gamma-BHC (Lindane)	**ND**	0.43	EPA 8081B	9-13-21	9-14-21	
beta-BHC	**ND**	0.43	EPA 8081B	9-13-21	9-14-21	
delta-BHC	**ND**	0.43	EPA 8081B	9-13-21	9-14-21	
Heptachlor	**ND**	0.43	EPA 8081B	9-13-21	9-14-21	
Aldrin	**ND**	0.43	EPA 8081B	9-13-21	9-14-21	
Heptachlor Epoxide	**ND**	0.43	EPA 8081B	9-13-21	9-14-21	
gamma-Chlordane	**ND**	0.43	EPA 8081B	9-13-21	9-14-21	
alpha-Chlordane	**ND**	0.43	EPA 8081B	9-13-21	9-14-21	
4,4'-DDE	**ND**	0.43	EPA 8081B	9-13-21	9-14-21	
Endosulfan I	**ND**	0.43	EPA 8081B	9-13-21	9-14-21	
Dieldrin	**ND**	0.43	EPA 8081B	9-13-21	9-14-21	
Endrin	**ND**	0.43	EPA 8081B	9-13-21	9-14-21	
4,4'-DDD	**ND**	0.43	EPA 8081B	9-13-21	9-14-21	
Endosulfan II	**ND**	0.43	EPA 8081B	9-13-21	9-14-21	
4,4'-DDT	**ND**	0.43	EPA 8081B	9-13-21	9-14-21	
Endrin Aldehyde	**ND**	0.43	EPA 8081B	9-13-21	9-14-21	
Methoxychlor	**ND**	0.43	EPA 8081B	9-13-21	9-14-21	
Endosulfan Sulfate	**ND**	0.43	EPA 8081B	9-13-21	9-14-21	
Endrin Ketone	**ND**	0.43	EPA 8081B	9-13-21	9-14-21	
Toxaphene	**ND**	11	EPA 8081B	9-13-21	9-14-21	
Surrogate:	*Percent Recovery*	*Control Limits*				
TCMX	*71*	*30-110*				
DCB	*85*	*40-117*				

This report pertains to the samples analyzed in accordance with the chain of custody, and is intended only for the use of the individual or company to whom it is addressed.

Date of Report: September 14, 2021
Samples Submitted: September 10, 2021
Laboratory Reference: 2109-095
Project: 11-05150-003

ORGANOCHLORINE PESTICIDES EPA 8081B QUALITY CONTROL

Matrix: Soil
Units: ug/Kg (ppb)

Analyte	Result	PQL	Method	Date Prepared	Date Analyzed	Flags
METHOD BLANK						
Laboratory ID:	MB0913S1					
alpha-BHC	**ND**	0.40	EPA 8081B	9-13-21	9-13-21	
gamma-BHC (Lindane)	**ND**	0.40	EPA 8081B	9-13-21	9-13-21	
beta-BHC	**ND**	0.40	EPA 8081B	9-13-21	9-13-21	
delta-BHC	**ND**	0.40	EPA 8081B	9-13-21	9-13-21	
Heptachlor	**ND**	0.40	EPA 8081B	9-13-21	9-13-21	
Aldrin	**ND**	0.40	EPA 8081B	9-13-21	9-13-21	
Heptachlor Epoxide	**ND**	0.40	EPA 8081B	9-13-21	9-13-21	
gamma-Chlordane	**ND**	0.40	EPA 8081B	9-13-21	9-13-21	
alpha-Chlordane	**ND**	0.40	EPA 8081B	9-13-21	9-13-21	
4,4'-DDE	**ND**	0.40	EPA 8081B	9-13-21	9-13-21	
Endosulfan I	**ND**	0.40	EPA 8081B	9-13-21	9-13-21	
Dieldrin	**ND**	0.40	EPA 8081B	9-13-21	9-13-21	
Endrin	**ND**	0.40	EPA 8081B	9-13-21	9-13-21	
4,4'-DDD	**ND**	0.40	EPA 8081B	9-13-21	9-13-21	
Endosulfan II	**ND**	0.40	EPA 8081B	9-13-21	9-13-21	
4,4'-DDT	**ND**	0.40	EPA 8081B	9-13-21	9-13-21	
Endrin Aldehyde	**ND**	0.40	EPA 8081B	9-13-21	9-13-21	
Methoxychlor	**ND**	0.40	EPA 8081B	9-13-21	9-13-21	
Endosulfan Sulfate	**ND**	0.40	EPA 8081B	9-13-21	9-13-21	
Endrin Ketone	**ND**	0.40	EPA 8081B	9-13-21	9-13-21	
Toxaphene	**ND**	10	EPA 8081B	9-13-21	9-13-21	
Surrogate:	*Percent Recovery*	*Control Limits*				
TCMX	*81*	*30-110*				
DCB	*91*	*40-117*				

This report pertains to the samples analyzed in accordance with the chain of custody, and is intended only for the use of the individual or company to whom it is addressed.

Date of Report: September 14, 2021
Samples Submitted: September 10, 2021
Laboratory Reference: 2109-095
Project: 11-05150-003

ORGANOCHLORINE PESTICIDES EPA 8081B QUALITY CONTROL

Matrix: Soil
Units: ug/Kg (ppb)

Analyte	Result		Spike Level		Source Result	Percent Recovery		Recovery Limits	RPD	RPD Limit	Flags
MATRIX SPIKES											
Laboratory ID:	09-095-02										
	MS	MSD	MS	MSD		MS	MSD				
alpha-BHC	**82.5**	**84.4**	100	100	ND	**83**	**84**	36-123	2	21	
gamma-BHC (Lindane)	**84.5**	**87.2**	100	100	ND	**85**	**87**	38-121	3	21	
beta-BHC	**77.1**	**79.7**	100	100	ND	**77**	**80**	31-125	3	21	
delta-BHC	**82.5**	**82.7**	100	100	ND	**82**	**83**	37-118	0	23	
Heptachlor	**80.6**	**82.1**	100	100	ND	**81**	**82**	37-123	2	24	
Aldrin	**81.7**	**85.3**	100	100	ND	**82**	**85**	45-118	4	22	
Heptachlor Epoxide	**79.0**	**80.6**	100	100	ND	**79**	**81**	46-114	2	22	
gamma-Chlordane	**82.9**	**86.0**	100	100	ND	**83**	**86**	41-120	4	23	
alpha-Chlordane	**79.2**	**82.9**	100	100	ND	**79**	**83**	43-118	5	23	
4,4'-DDE	**80.9**	**82.3**	100	100	ND	**81**	**82**	34-139	2	22	
Endosulfan I	**83.8**	**85.4**	100	100	ND	**84**	**85**	43-124	2	25	
Dieldrin	**81.9**	**83.4**	100	100	ND	**82**	**83**	40-128	2	23	
Endrin	**83.4**	**85.1**	100	100	ND	**83**	**85**	44-120	2	28	
4,4'-DDD	**70.3**	**72.4**	100	100	ND	**70**	**72**	42-131	3	21	
Endosulfan II	**77.9**	**79.8**	100	100	ND	**78**	**80**	47-112	2	22	
4,4'-DDT	**85.0**	**90.2**	100	100	ND	**85**	**90**	29-141	6	32	
Endrin Aldehyde	**83.4**	**85.1**	100	100	ND	**83**	**85**	41-114	2	22	
Methoxychlor	**81.0**	**86.0**	100	100	ND	**81**	**86**	31-139	6	23	
Endosulfan Sulfate	**79.7**	**79.5**	100	100	ND	**80**	**79**	48-112	0	21	
Endrin Ketone	**81.1**	**83.6**	100	100	ND	**81**	**84**	46-117	3	22	
Surrogate:											
TCMX						*72*	*79*	*30-110*			
DCB						*76*	*84*	*40-117*			

This report pertains to the samples analyzed in accordance with the chain of custody, and is intended only for the use of the individual or company to whom it is addressed.

Date of Report: September 14, 2021
Samples Submitted: September 10, 2021
Laboratory Reference: 2109-095
Project: 11-05150-003

TOTAL METALS
EPA 6010D/6020B/7471B

Matrix: Soil
Units: mg/Kg (ppm)

Analyte	Result	PQL	Method	Date Prepared	Date Analyzed	Flags
Client ID:	**DA7SWCS20210910I**					
Laboratory ID:	09-095-01					
Arsenic	**ND**	5.6	EPA 6010D	9-13-21	9-13-21	
Barium	**43**	2.8	EPA 6010D	9-13-21	9-13-21	
Cadmium	**ND**	0.56	EPA 6010D	9-13-21	9-13-21	
Chromium	**20**	0.56	EPA 6010D	9-13-21	9-13-21	
Lead	**ND**	5.6	EPA 6010D	9-13-21	9-13-21	
Mercury	**ND**	0.056	EPA 7471B	9-13-21	9-13-21	
Selenium	**ND**	0.28	EPA 6020B	9-13-21	9-13-21	
Silver	**ND**	1.1	EPA 6010D	9-13-21	9-13-21	
Client ID:	**DA7SWCS21210910I**					
Laboratory ID:	09-095-02					
Arsenic	**ND**	5.3	EPA 6010D	9-13-21	9-13-21	
Barium	**52**	2.7	EPA 6010D	9-13-21	9-13-21	
Cadmium	**ND**	0.53	EPA 6010D	9-13-21	9-13-21	
Chromium	**22**	0.53	EPA 6010D	9-13-21	9-13-21	
Lead	**ND**	5.3	EPA 6010D	9-13-21	9-13-21	
Mercury	**ND**	0.053	EPA 7471B	9-13-21	9-13-21	
Selenium	**0.31**	0.27	EPA 6020B	9-13-21	9-13-21	
Silver	**ND**	1.1	EPA 6010D	9-13-21	9-13-21	
Client ID:	**DA7SWCS22210910I**					
Laboratory ID:	09-095-03					
Arsenic	**ND**	5.6	EPA 6010D	9-13-21	9-13-21	
Barium	**45**	2.8	EPA 6010D	9-13-21	9-13-21	
Cadmium	**ND**	0.56	EPA 6010D	9-13-21	9-13-21	
Chromium	**18**	0.56	EPA 6010D	9-13-21	9-13-21	
Lead	**ND**	5.6	EPA 6010D	9-13-21	9-13-21	
Mercury	**ND**	0.056	EPA 7471B	9-13-21	9-13-21	
Selenium	**ND**	0.28	EPA 6020B	9-13-21	9-13-21	
Silver	**ND**	1.1	EPA 6010D	9-13-21	9-13-21	

This report pertains to the samples analyzed in accordance with the chain of custody, and is intended only for the use of the individual or company to whom it is addressed.

Date of Report: September 14, 2021
Samples Submitted: September 10, 2021
Laboratory Reference: 2109-095
Project: 11-05150-003

TOTAL METALS
EPA 6010D/6020B/7471B

Matrix: Soil
Units: mg/Kg (ppm)

Analyte	Result	PQL	Method	Date Prepared	Date Analyzed	Flags
Client ID:	**DA7SWCS22210910D**					
Laboratory ID:	09-095-04					
Arsenic	**ND**	5.4	EPA 6010D	9-13-21	9-13-21	
Barium	**40**	2.7	EPA 6010D	9-13-21	9-13-21	
Cadmium	**ND**	0.54	EPA 6010D	9-13-21	9-13-21	
Chromium	**19**	0.54	EPA 6010D	9-13-21	9-13-21	
Lead	**ND**	5.4	EPA 6010D	9-13-21	9-13-21	
Mercury	**ND**	0.054	EPA 7471B	9-13-21	9-13-21	
Selenium	**ND**	0.27	EPA 6020B	9-13-21	9-13-21	
Silver	**ND**	1.1	EPA 6010D	9-13-21	9-13-21	
Client ID:	**DA7SWCS23210910I**					
Laboratory ID:	09-095-05					
Arsenic	**ND**	5.4	EPA 6010D	9-13-21	9-13-21	
Barium	**47**	2.7	EPA 6010D	9-13-21	9-13-21	
Cadmium	**ND**	0.54	EPA 6010D	9-13-21	9-13-21	
Chromium	**19**	0.54	EPA 6010D	9-13-21	9-13-21	
Lead	**ND**	5.4	EPA 6010D	9-13-21	9-13-21	
Mercury	**0.24**	0.054	EPA 7471B	9-13-21	9-13-21	
Selenium	**0.27**	0.27	EPA 6020B	9-13-21	9-13-21	
Silver	**ND**	1.1	EPA 6010D	9-13-21	9-13-21	

This report pertains to the samples analyzed in accordance with the chain of custody,
and is intended only for the use of the individual or company to whom it is addressed.

Date of Report: September 14, 2021
Samples Submitted: September 10, 2021
Laboratory Reference: 2109-095
Project: 11-05150-003

TOTAL METALS
EPA 6010D/6020B/7471B
QUALITY CONTROL

Matrix: Soil
Units: mg/Kg (ppm)

Analyte	Result	PQL	Method	Date Prepared	Date Analyzed	Flags
METHOD BLANK						
Laboratory ID:	MB0913SM1					
Arsenic	**ND**	5.0	EPA 6010D	9-13-21	9-13-21	
Barium	**ND**	2.5	EPA 6010D	9-13-21	9-13-21	
Cadmium	**ND**	0.50	EPA 6010D	9-13-21	9-13-21	
Chromium	**ND**	0.50	EPA 6010D	9-13-21	9-13-21	
Lead	**ND**	5.0	EPA 6010D	9-13-21	9-13-21	
Silver	**ND**	1.0	EPA 6010D	9-13-21	9-13-21	
Laboratory ID:	MB0913SM2					
Selenium	**ND**	0.25	EPA 6020B	9-13-21	9-13-21	
Laboratory ID:	MB0913S1					
Mercury	**ND**	0.050	EPA 7471B	9-13-21	9-13-21	

This report pertains to the samples analyzed in accordance with the chain of custody,
and is intended only for the use of the individual or company to whom it is addressed.

Date of Report: September 14, 2021
Samples Submitted: September 10, 2021
Laboratory Reference: 2109-095
Project: 11-05150-003

TOTAL METALS
EPA 6010D/6020B/7471B
QUALITY CONTROL

Matrix: Soil
Units: mg/Kg (ppm)

Analyte	Result		Spike Level		Source Result	Percent Recovery		Recovery Limits	RPD	RPD Limit	Flags
DUPLICATE											
Laboratory ID:	09-095-02										
	ORIG	DUP									
Arsenic	**ND**	**ND**	NA	NA		NA		NA	NA	20	
Barium	**48.8**	**44.0**	NA	NA		NA		NA	10	20	
Cadmium	**ND**	**ND**	NA	NA		NA		NA	NA	20	
Chromium	**20.9**	**17.9**	NA	NA		NA		NA	16	20	
Lead	**ND**	**ND**	NA	NA		NA		NA	NA	20	
Silver	**ND**	**ND**	NA	NA		NA		NA	NA	20	
Laboratory ID:	09-095-02										
Selenium	**0.290**	**0.275**	NA	NA		NA		NA	5	20	
Laboratory ID:	09-095-02										
Mercury	**ND**	**ND**	NA	NA		NA		NA	NA	20	
MATRIX SPIKES											
Laboratory ID:	09-095-02										
	MS	MSD	MS	MSD		MS	MSD				
Arsenic	**90.3**	**86.9**	100	100	ND	**90**	**87**	75-125	4	20	
Barium	**141**	**144**	100	100	48.8	**92**	**95**	75-125	2	20	
Cadmium	**46.3**	**45.3**	50.0	50.0	ND	**93**	**91**	75-125	2	20	
Chromium	**111**	**114**	100	100	20.9	**91**	**93**	75-125	2	20	
Lead	**227**	**222**	250	250	ND	**91**	**89**	75-125	2	20	
Silver	**23.9**	**23.2**	25.0	25.0	ND	**95**	**93**	75-125	3	20	
Laboratory ID:	09-095-02										
Selenium	**102**	**103**	100	100	0.290	**101**	**103**	75-125	1	20	
Laboratory ID:	09-095-02										
Mercury	**0.566**	**0.565**	0.500	0.500	0.0320	**107**	**107**	80-120	0	20	

This report pertains to the samples analyzed in accordance with the chain of custody,
and is intended only for the use of the individual or company to whom it is addressed.

Date of Report: September 14, 2021
Samples Submitted: September 10, 2021
Laboratory Reference: 2109-095
Project: 11-05150-003

% MOISTURE

Client ID	Lab ID	% Moisture	Date Analyzed
DA7SWCS20210910I	09-095-01	**11**	9-13-21
DA7SWCS21210910I	09-095-02	**6**	9-13-21
DA7SWCS22210910I	09-095-03	**10**	9-13-21
DA7SWCS22210910D	09-095-04	**7**	9-13-21
DA7SWCS23210910I	09-095-05	**8**	9-13-21

This report pertains to the samples analyzed in accordance with the chain of custody,
and is intended only for the use of the individual or company to whom it is addressed.

OnSite Environmental Inc.

Data Qualifiers and Abbreviations

A - Due to a high sample concentration, the amount spiked is insufficient for meaningful MS/MSD recovery data.

B - The analyte indicated was also found in the blank sample.

C - The duplicate RPD is outside control limits due to high result variability when analyte concentrations are within five times the quantitation limit.

E - The value reported exceeds the quantitation range and is an estimate.

F - Surrogate recovery data is not available due to the high concentration of coeluting target compounds.

H - The analyte indicated is a common laboratory solvent and may have been introduced during sample preparation, and be impacting the sample result.

I - Compound recovery is outside of the control limits.

J - The value reported was below the practical quantitation limit. The value is an estimate.

K - Sample duplicate RPD is outside control limits due to sample inhomogeneity. The sample was re-extracted and re-analyzed with similar results.

L - The RPD is outside of the control limits.

M - Hydrocarbons in the gasoline range are impacting the diesel range result.

M1 - Hydrocarbons in the gasoline range (toluene-naphthalene) are present in the sample.

N - Hydrocarbons in the lube oil range are impacting the diesel range result.

N1 - Hydrocarbons in diesel range are impacting lube oil range results.

O - Hydrocarbons indicative of heavier fuels are present in the sample and are impacting the gasoline result.

P - The RPD of the detected concentrations between the two columns is greater than 40.

Q - Surrogate recovery is outside of the control limits.

S - Surrogate recovery data is not available due to the necessary dilution of the sample.

T - The sample chromatogram is not similar to a typical _____.

U - The analyte was analyzed for, but was not detected above the reported sample quantitation limit.

U1 - The practical quantitation limit is elevated due to interferences present in the sample.

V - Matrix Spike/Matrix Spike Duplicate recoveries are outside control limits due to matrix effects.

W - Matrix Spike/Matrix Spike Duplicate RPD are outside control limits due to matrix effects.

X - Sample extract treated with a mercury cleanup procedure.

X1- Sample extract treated with a sulfuric acid/silica gel cleanup procedure.

Y - The calibration verification for this analyte exceeded the 20% drift specified in methods 8260 & 8270, and therefore the reported result should be considered an estimate. The overall performance of the calibration verification standard met the acceptance criteria of the method.

Y1 - Negative effects of the matrix from this sample on the instrument caused values for this analyte in the bracketing continuing calibration verification standard (CCVs) to be outside of 20% acceptance criteria. Because of this, quantitation limits and sample concentrations should be considered estimates.

Z -

ND - Not Detected at PQL
PQL - Practical Quantitation Limit
RPD - Relative Percent Difference

This report pertains to the samples analyzed in accordance with the chain of custody, and is intended only for the use of the individual or company to whom it is addressed.

Chain of Custody

Page 1 of 1

OnSite Environmental Inc.
Analytical Laboratory Testing Services
14648 NE 95th Street • Redmond, WA 98052
Phone: (425) 883-3881 • www.onsite-env.com

Company: Anchor QEA (Herrera)
Project Number: 11-05150-003
Project Name: Cedar Hills Regional Landfill
Project Manager: Randy Brown
Sampled by: Camryn Stever

Turnaround Request (in working days)
(Check One)
☐ Same Day ☐ 1 Day
☑ 2 Days ☐ 3 Days
☐ Standard (7 Days)
☐ _____ (other)

Laboratory Number: 09-095

Lab ID	Sample Identification	Date Sampled	Time Sampled	Matrix	Number of Containers	NWTPH-HCID	NWTPH-Gx/BTEX	NWTPH-Gx	NWTPH-Dx (☐ Acid / SG Clean-up)	Volatiles 8260D	Halogenated Volatiles 8260D	EDB EPA 8011 (Waters Only)	Semivolatiles 8270E/SIM (with low-level PAHs)	PAHs 8270E/SIM (low-level)	PCBs 8082A	Organochlorine Pesticides 8081B	Organophosphorus Pesticides 8270E/SIM	Chlorinated Acid Herbicides 8151A	Total RCRA Metals 6010D/7471A	Total MTCA Metals	TCLP Metals	HEM (oil and grease) 1664A					% Moisture
1	DA75WCS202109101	9/10/21	9:45	Soil	4					✓			✓		✓	✓			✓								X
2	DA75WCS212109101		10:00							✓			✓		✓	✓			✓								X
3	DA75WCS222109101		10:35							✓			✓		✓	✓			✓								X
4	DA75WCS222109101D		10:35							✓			✓		✓	✓			✓								X
5	DA75WCS232109101		10:40							✓			✓		✓	✓			✓								X
6	VTRP210910I - TRIP BLANK		—	W	3					✓																	

	Signature	Company	Date	Time
Relinquished		Herrera	9/10/21	1705
Received		QAE	9/10/21	1305
Relinquished				
Received				
Relinquished				
Received				
Reviewed/Date		Reviewed/Date		

Comments/Special Instructions
Email to Randy Brown
CC: Herrera

Data Package: Standard ☐ Level III ☐ Level IV ☐

Chromatograms with final report ☐ Electronic Data Deliverables (EDDs) ☐

Sample/Cooler Receipt and Acceptance Checklist

Client: ANC

Client Project Name/Number: 11-05150-003

OnSite Project Number: 09-095

Initiated by: MM

Date Initiated: 9/10/21

1.0 Cooler Verification

1.1 Were there custody seals on the outside of the cooler?	Yes	(No)	N/A	1 2 3 4	
1.2 Were the custody seals intact?	Yes	No	(N/A)	1 2 3 4	
1.3 Were the custody seals signed and dated by last custodian?	Yes	No	(N/A)	1 2 3 4	
1.4 Were the samples delivered on ice or blue ice?	(Yes)	No	N/A	1 2 3 4	
1.5 Were samples received between 0-6 degrees Celsius?	(Yes)	No	N/A	Temperature:	4
1.6 Have shipping bills (if any) been attached to the back of this form?	Yes	(N/A)			
1.7 How were the samples delivered?	(Client)	Courier	UPS/FedEx	OSE Pickup	Other

2.0 Chain of Custody Verification

2.1 Was a Chain of Custody submitted with the samples?	(Yes)	No		1 2 3 4
2.2 Was the COC legible and written in permanent ink?	(Yes)	No		1 2 3 4
2.3 Have samples been relinquished and accepted by each custodian?	(Yes)	No		1 2 3 4
2.4 Did the sample labels (ID, date, time, preservative) agree with COC?	Yes	(No)		1 2 3 4
2.5 Were all of the samples listed on the COC submitted?	(Yes)	No		1 2 3 4
2.6 Were any of the samples submitted omitted from the COC?	Yes	(No)		1 2 3 4

3.0 Sample Verification

3.1 Were any sample containers broken or compromised?	Yes	(No)		1 2 3 4
3.2 Were any sample labels missing or illegible?	Yes	(No)		1 2 3 4
3.3 Have the correct containers been used for each analysis requested?	(Yes)	No		1 2 3 4
3.4 Have the samples been correctly preserved?	(Yes)	No	(N/A)	1 2 3 4
3.5 Are volatiles samples free from headspace and bubbles greater than 6mm?	(Yes)	No	(N/A)	1 2 3 4
3.6 Is there sufficient sample submitted to perform requested analyses?	(Yes)	No		1 2 3 4
3.7 Have any holding times already expired or will expire in 24 hours?	Yes	(No)		1 2 3 4
3.8 Was method 5035A used?	(Yes)	No	N/A	1 2 3 4
3.9 If 5035A was used, which sampling option was used (#1, 2, or 3).	#	1	N/A	1 2 3 4

Explain any discrepancies:

2.4) # 5) no 7 on lvial

1 - Discuss issue in Case Narrative

2 - Process Sample As-is

3 - Client contacted to discuss problem

4 - Sample cannot be analyzed or client does not wish to proceed

OnSite Environmental Inc.
14648 NE 95th Street, Redmond, WA 98052 • (425) 883-3881

September 28, 2021

Randy Brown
Anchor QEA
1201 3rd Avenue, Suite 2600
Seattle, WA 98101

Re: Analytical Data for Project 11-05150-003
Laboratory Reference No. 2109-270

Dear Randy:

Enclosed are the analytical results and associated quality control data for samples submitted on September 24, 2021.

The standard policy of OnSite Environmental, Inc. is to store your samples for 30 days from the date of receipt. If you require longer storage, please contact the laboratory.

We appreciate the opportunity to be of service to you on this project. If you have any questions concerning the data, or need additional information, please feel free to call me.

Sincerely,

David Baumeister
Project Manager

Enclosures

This report pertains to the samples analyzed in accordance with the chain of custody, and is intended only for the use of the individual or company to whom it is addressed.

Date of Report: September 28, 2021
Samples Submitted: September 24, 2021
Laboratory Reference: 2109-270
Project: 11-05150-003

Case Narrative

Samples were collected on September 24, 2021 and received by the laboratory on September 24, 2021. They were maintained at the laboratory at a temperature of 2°C to 6°C.

Please note that any and all soil sample results are reported on a dry-weight basis, unless otherwise noted below.

General QA/QC issues associated with the analytical data enclosed in this laboratory report will be indicated with a reference to a comment or explanation on the Data Qualifier page. More complex and involved QA/QC issues will be discussed in detail below.

Total Metals EPA 200.8/7470A Analysis

The duplicate RPD for Barium is outside control limits due to sample inhomogeneity. The sample was re-extracted and re-analyzed with similar results.

Any other QA/QC issues associated with this extraction and analysis will be indicated with a footnote reference and discussed in detail on the Data Qualifier page.

This report pertains to the samples analyzed in accordance with the chain of custody,
and is intended only for the use of the individual or company to whom it is addressed.

Date of Report: September 28, 2021
Samples Submitted: September 24, 2021
Laboratory Reference: 2109-270
Project: 11-05150-003

VOLATILE ORGANICS EPA 8260D/SIM
page 1 of 2

Matrix: Soil
Units: mg/kg

Analyte	Result	PQL	Method	Date Prepared	Date Analyzed	Flags
Client ID:	**DA7SWCS24210924I**					
Laboratory ID:	09-270-01					
Dichlorodifluoromethane	ND	0.00086	EPA 8260D	9-27-21	9-27-21	
Chloromethane	ND	0.0043	EPA 8260D	9-27-21	9-27-21	
Vinyl Chloride	ND	0.00086	EPA 8260D	9-27-21	9-27-21	
Bromomethane	ND	0.0059	EPA 8260D	9-27-21	9-27-21	
Chloroethane	ND	0.0043	EPA 8260D	9-27-21	9-27-21	
Trichlorofluoromethane	ND	0.00086	EPA 8260D	9-27-21	9-27-21	
1,1-Dichloroethene	ND	0.00086	EPA 8260D	9-27-21	9-27-21	
Acetone	0.015	0.0086	EPA 8260D	9-27-21	9-27-21	
Iodomethane	ND	0.0043	EPA 8260D	9-27-21	9-27-21	
Carbon Disulfide	ND	0.00086	EPA 8260D	9-27-21	9-27-21	
Methylene Chloride	ND	0.0043	EPA 8260D	9-27-21	9-27-21	
(trans) 1,2-Dichloroethene	ND	0.00086	EPA 8260D	9-27-21	9-27-21	
Methyl t-Butyl Ether	ND	0.00086	EPA 8260D	9-27-21	9-27-21	
1,1-Dichloroethane	ND	0.00086	EPA 8260D	9-27-21	9-27-21	
Vinyl Acetate	ND	0.0043	EPA 8260D	9-27-21	9-27-21	
2,2-Dichloropropane	ND	0.00086	EPA 8260D	9-27-21	9-27-21	
(cis) 1,2-Dichloroethene	ND	0.00086	EPA 8260D	9-27-21	9-27-21	
2-Butanone	0.0050	0.0043	EPA 8260D	9-27-21	9-27-21	
Bromochloromethane	ND	0.00086	EPA 8260D	9-27-21	9-27-21	
Chloroform	ND	0.00086	EPA 8260D	9-27-21	9-27-21	
1,1,1-Trichloroethane	ND	0.00086	EPA 8260D	9-27-21	9-27-21	
Carbon Tetrachloride	ND	0.0011	EPA 8260D	9-27-21	9-27-21	
1,1-Dichloropropene	ND	0.00086	EPA 8260D	9-27-21	9-27-21	
Benzene	ND	0.00086	EPA 8260D	9-27-21	9-27-21	
1,2-Dichloroethane	ND	0.00086	EPA 8260D	9-27-21	9-27-21	
Trichloroethene	ND	0.00086	EPA 8260D	9-27-21	9-27-21	
1,2-Dichloropropane	ND	0.00086	EPA 8260D	9-27-21	9-27-21	
Dibromomethane	ND	0.00086	EPA 8260D	9-27-21	9-27-21	
Bromodichloromethane	ND	0.00086	EPA 8260D	9-27-21	9-27-21	
2-Chloroethyl Vinyl Ether	ND	0.0043	EPA 8260D	9-27-21	9-27-21	
(cis) 1,3-Dichloropropene	ND	0.00086	EPA 8260D	9-27-21	9-27-21	
Methyl Isobutyl Ketone	ND	0.0043	EPA 8260D	9-27-21	9-27-21	
Toluene	ND	0.0043	EPA 8260D	9-27-21	9-27-21	
(trans) 1,3-Dichloropropene	ND	0.00086	EPA 8260D	9-27-21	9-27-21	

This report pertains to the samples analyzed in accordance with the chain of custody, and is intended only for the use of the individual or company to whom it is addressed.

Date of Report: September 28, 2021
Samples Submitted: September 24, 2021
Laboratory Reference: 2109-270
Project: 11-05150-003

VOLATILE ORGANICS EPA 8260D/SIM
page 2 of 2

Analyte	Result	PQL	Method	Date Prepared	Date Analyzed	Flags
Client ID:	**DA7SWCS24210924I**					
Laboratory ID:	09-270-01					
1,1,2-Trichloroethane	ND	0.00086	EPA 8260D	9-27-21	9-27-21	
Tetrachloroethene	ND	0.00086	EPA 8260D	9-27-21	9-27-21	
1,3-Dichloropropane	ND	0.00086	EPA 8260D	9-27-21	9-27-21	
2-Hexanone	ND	0.0043	EPA 8260D	9-27-21	9-27-21	
Dibromochloromethane	ND	0.00086	EPA 8260D	9-27-21	9-27-21	
1,2-Dibromoethane	ND	0.000043	EPA 8260D/SIM	9-27-21	9-27-21	
Chlorobenzene	ND	0.00086	EPA 8260D	9-27-21	9-27-21	
1,1,1,2-Tetrachloroethane	ND	0.00086	EPA 8260D	9-27-21	9-27-21	
Ethylbenzene	ND	0.00086	EPA 8260D	9-27-21	9-27-21	
m,p-Xylene	ND	0.0017	EPA 8260D	9-27-21	9-27-21	
o-Xylene	ND	0.00086	EPA 8260D	9-27-21	9-27-21	
Styrene	ND	0.00086	EPA 8260D	9-27-21	9-27-21	
Bromoform	ND	0.0043	EPA 8260D	9-27-21	9-27-21	
Isopropylbenzene	ND	0.00086	EPA 8260D	9-27-21	9-27-21	
Bromobenzene	ND	0.00086	EPA 8260D	9-27-21	9-27-21	
1,1,2,2-Tetrachloroethane	ND	0.00086	EPA 8260D	9-27-21	9-27-21	
1,2,3-Trichloropropane	ND	0.00086	EPA 8260D	9-27-21	9-27-21	
n-Propylbenzene	ND	0.00086	EPA 8260D	9-27-21	9-27-21	
2-Chlorotoluene	ND	0.00086	EPA 8260D	9-27-21	9-27-21	
4-Chlorotoluene	ND	0.00086	EPA 8260D	9-27-21	9-27-21	
1,3,5-Trimethylbenzene	ND	0.00086	EPA 8260D	9-27-21	9-27-21	
tert-Butylbenzene	ND	0.00086	EPA 8260D	9-27-21	9-27-21	
1,2,4-Trimethylbenzene	ND	0.00086	EPA 8260D	9-27-21	9-27-21	
sec-Butylbenzene	ND	0.00086	EPA 8260D	9-27-21	9-27-21	
1,3-Dichlorobenzene	ND	0.00086	EPA 8260D	9-27-21	9-27-21	
p-Isopropyltoluene	ND	0.00086	EPA 8260D	9-27-21	9-27-21	
1,4-Dichlorobenzene	ND	0.00086	EPA 8260D	9-27-21	9-27-21	
1,2-Dichlorobenzene	ND	0.00086	EPA 8260D	9-27-21	9-27-21	
n-Butylbenzene	ND	0.00086	EPA 8260D	9-27-21	9-27-21	
1,2-Dibromo-3-chloropropane	ND	0.0043	EPA 8260D	9-27-21	9-27-21	
1,2,4-Trichlorobenzene	ND	0.00086	EPA 8260D	9-27-21	9-27-21	
Hexachlorobutadiene	ND	0.0043	EPA 8260D	9-27-21	9-27-21	
Naphthalene	ND	0.0043	EPA 8260D	9-27-21	9-27-21	
1,2,3-Trichlorobenzene	ND	0.00086	EPA 8260D	9-27-21	9-27-21	
Surrogate:	*Percent Recovery*	*Control Limits*				
Dibromofluoromethane	*105*	*74-131*				
Toluene-d8	*104*	*78-128*				
4-Bromofluorobenzene	*101*	*71-130*				

This report pertains to the samples analyzed in accordance with the chain of custody, and is intended only for the use of the individual or company to whom it is addressed.

Date of Report: September 28, 2021
Samples Submitted: September 24, 2021
Laboratory Reference: 2109-270
Project: 11-05150-003

VOLATILE ORGANICS EPA 8260D/SIM
page 1 of 2

Matrix: Soil
Units: mg/kg

Analyte	Result	PQL	Method	Date Prepared	Date Analyzed	Flags
Client ID:	**DA7SWCS25210924I**					
Laboratory ID:	09-270-02					
Dichlorodifluoromethane	ND	0.00088	EPA 8260D	9-27-21	9-27-21	
Chloromethane	ND	0.0044	EPA 8260D	9-27-21	9-27-21	
Vinyl Chloride	ND	0.00088	EPA 8260D	9-27-21	9-27-21	
Bromomethane	ND	0.0060	EPA 8260D	9-27-21	9-27-21	
Chloroethane	ND	0.0044	EPA 8260D	9-27-21	9-27-21	
Trichlorofluoromethane	ND	0.00088	EPA 8260D	9-27-21	9-27-21	
1,1-Dichloroethene	ND	0.00088	EPA 8260D	9-27-21	9-27-21	
Acetone	0.090	0.0088	EPA 8260D	9-27-21	9-27-21	
Iodomethane	ND	0.0044	EPA 8260D	9-27-21	9-27-21	
Carbon Disulfide	ND	0.00088	EPA 8260D	9-27-21	9-27-21	
Methylene Chloride	ND	0.0044	EPA 8260D	9-27-21	9-27-21	
(trans) 1,2-Dichloroethene	ND	0.00088	EPA 8260D	9-27-21	9-27-21	
Methyl t-Butyl Ether	ND	0.00088	EPA 8260D	9-27-21	9-27-21	
1,1-Dichloroethane	ND	0.00088	EPA 8260D	9-27-21	9-27-21	
Vinyl Acetate	ND	0.0044	EPA 8260D	9-27-21	9-27-21	
2,2-Dichloropropane	ND	0.00088	EPA 8260D	9-27-21	9-27-21	
(cis) 1,2-Dichloroethene	ND	0.00088	EPA 8260D	9-27-21	9-27-21	
2-Butanone	0.0090	0.0044	EPA 8260D	9-27-21	9-27-21	
Bromochloromethane	ND	0.00088	EPA 8260D	9-27-21	9-27-21	
Chloroform	ND	0.00088	EPA 8260D	9-27-21	9-27-21	
1,1,1-Trichloroethane	ND	0.00088	EPA 8260D	9-27-21	9-27-21	
Carbon Tetrachloride	ND	0.0011	EPA 8260D	9-27-21	9-27-21	
1,1-Dichloropropene	ND	0.00088	EPA 8260D	9-27-21	9-27-21	
Benzene	ND	0.00088	EPA 8260D	9-27-21	9-27-21	
1,2-Dichloroethane	ND	0.00088	EPA 8260D	9-27-21	9-27-21	
Trichloroethene	ND	0.00088	EPA 8260D	9-27-21	9-27-21	
1,2-Dichloropropane	ND	0.00088	EPA 8260D	9-27-21	9-27-21	
Dibromomethane	ND	0.00088	EPA 8260D	9-27-21	9-27-21	
Bromodichloromethane	ND	0.00088	EPA 8260D	9-27-21	9-27-21	
2-Chloroethyl Vinyl Ether	ND	0.0044	EPA 8260D	9-27-21	9-27-21	
(cis) 1,3-Dichloropropene	ND	0.00088	EPA 8260D	9-27-21	9-27-21	
Methyl Isobutyl Ketone	ND	0.0044	EPA 8260D	9-27-21	9-27-21	
Toluene	ND	0.0044	EPA 8260D	9-27-21	9-27-21	
(trans) 1,3-Dichloropropene	ND	0.00088	EPA 8260D	9-27-21	9-27-21	

This report pertains to the samples analyzed in accordance with the chain of custody, and is intended only for the use of the individual or company to whom it is addressed.

Date of Report: September 28, 2021
Samples Submitted: September 24, 2021
Laboratory Reference: 2109-270
Project: 11-05150-003

VOLATILE ORGANICS EPA 8260D/SIM
page 2 of 2

Analyte	Result	PQL	Method	Date Prepared	Date Analyzed	Flags
Client ID:	**DA7SWCS25210924I**					
Laboratory ID:	09-270-02					
1,1,2-Trichloroethane	ND	0.00088	EPA 8260D	9-27-21	9-27-21	
Tetrachloroethene	ND	0.00088	EPA 8260D	9-27-21	9-27-21	
1,3-Dichloropropane	ND	0.00088	EPA 8260D	9-27-21	9-27-21	
2-Hexanone	ND	0.0044	EPA 8260D	9-27-21	9-27-21	
Dibromochloromethane	ND	0.00088	EPA 8260D	9-27-21	9-27-21	
1,2-Dibromoethane	ND	0.000044	EPA 8260D/SIM	9-27-21	9-27-21	
Chlorobenzene	ND	0.00088	EPA 8260D	9-27-21	9-27-21	
1,1,1,2-Tetrachloroethane	ND	0.00088	EPA 8260D	9-27-21	9-27-21	
Ethylbenzene	ND	0.00088	EPA 8260D	9-27-21	9-27-21	
m,p-Xylene	ND	0.0018	EPA 8260D	9-27-21	9-27-21	
o-Xylene	ND	0.00088	EPA 8260D	9-27-21	9-27-21	
Styrene	ND	0.00088	EPA 8260D	9-27-21	9-27-21	
Bromoform	ND	0.0044	EPA 8260D	9-27-21	9-27-21	
Isopropylbenzene	ND	0.00088	EPA 8260D	9-27-21	9-27-21	
Bromobenzene	ND	0.00088	EPA 8260D	9-27-21	9-27-21	
1,1,2,2-Tetrachloroethane	ND	0.00088	EPA 8260D	9-27-21	9-27-21	
1,2,3-Trichloropropane	ND	0.00088	EPA 8260D	9-27-21	9-27-21	
n-Propylbenzene	ND	0.00088	EPA 8260D	9-27-21	9-27-21	
2-Chlorotoluene	ND	0.00088	EPA 8260D	9-27-21	9-27-21	
4-Chlorotoluene	ND	0.00088	EPA 8260D	9-27-21	9-27-21	
1,3,5-Trimethylbenzene	ND	0.00088	EPA 8260D	9-27-21	9-27-21	
tert-Butylbenzene	ND	0.00088	EPA 8260D	9-27-21	9-27-21	
1,2,4-Trimethylbenzene	ND	0.00088	EPA 8260D	9-27-21	9-27-21	
sec-Butylbenzene	ND	0.00088	EPA 8260D	9-27-21	9-27-21	
1,3-Dichlorobenzene	ND	0.00088	EPA 8260D	9-27-21	9-27-21	
p-Isopropyltoluene	ND	0.00088	EPA 8260D	9-27-21	9-27-21	
1,4-Dichlorobenzene	ND	0.00088	EPA 8260D	9-27-21	9-27-21	
1,2-Dichlorobenzene	ND	0.00088	EPA 8260D	9-27-21	9-27-21	
n-Butylbenzene	ND	0.00088	EPA 8260D	9-27-21	9-27-21	
1,2-Dibromo-3-chloropropane	ND	0.0044	EPA 8260D	9-27-21	9-27-21	
1,2,4-Trichlorobenzene	ND	0.00088	EPA 8260D	9-27-21	9-27-21	
Hexachlorobutadiene	ND	0.0044	EPA 8260D	9-27-21	9-27-21	
Naphthalene	ND	0.0044	EPA 8260D	9-27-21	9-27-21	
1,2,3-Trichlorobenzene	ND	0.00088	EPA 8260D	9-27-21	9-27-21	
Surrogate:	*Percent Recovery*	*Control Limits*				
Dibromofluoromethane	*108*	*74-131*				
Toluene-d8	*106*	*78-128*				
4-Bromofluorobenzene	*101*	*71-130*				

This report pertains to the samples analyzed in accordance with the chain of custody, and is intended only for the use of the individual or company to whom it is addressed.

Date of Report: September 28, 2021
Samples Submitted: September 24, 2021
Laboratory Reference: 2109-270
Project: 11-05150-003

VOLATILE ORGANICS EPA 8260D/SIM
page 1 of 2

Matrix: Soil
Units: mg/kg

Analyte	Result	PQL	Method	Date Prepared	Date Analyzed	Flags
Client ID:	**DA7SWCS26210924I**					
Laboratory ID:	09-270-03					
Dichlorodifluoromethane	ND	0.0010	EPA 8260D	9-27-21	9-27-21	
Chloromethane	ND	0.0052	EPA 8260D	9-27-21	9-27-21	
Vinyl Chloride	ND	0.0010	EPA 8260D	9-27-21	9-27-21	
Bromomethane	ND	0.0072	EPA 8260D	9-27-21	9-27-21	
Chloroethane	ND	0.0052	EPA 8260D	9-27-21	9-27-21	
Trichlorofluoromethane	ND	0.0010	EPA 8260D	9-27-21	9-27-21	
1,1-Dichloroethene	ND	0.0010	EPA 8260D	9-27-21	9-27-21	
Acetone	ND	0.010	EPA 8260D	9-27-21	9-27-21	
Iodomethane	ND	0.0052	EPA 8260D	9-27-21	9-27-21	
Carbon Disulfide	ND	0.0010	EPA 8260D	9-27-21	9-27-21	
Methylene Chloride	ND	0.0052	EPA 8260D	9-27-21	9-27-21	
(trans) 1,2-Dichloroethene	ND	0.0010	EPA 8260D	9-27-21	9-27-21	
Methyl t-Butyl Ether	ND	0.0010	EPA 8260D	9-27-21	9-27-21	
1,1-Dichloroethane	ND	0.0010	EPA 8260D	9-27-21	9-27-21	
Vinyl Acetate	ND	0.0052	EPA 8260D	9-27-21	9-27-21	
2,2-Dichloropropane	ND	0.0010	EPA 8260D	9-27-21	9-27-21	
(cis) 1,2-Dichloroethene	ND	0.0010	EPA 8260D	9-27-21	9-27-21	
2-Butanone	ND	0.0052	EPA 8260D	9-27-21	9-27-21	
Bromochloromethane	ND	0.0010	EPA 8260D	9-27-21	9-27-21	
Chloroform	ND	0.0010	EPA 8260D	9-27-21	9-27-21	
1,1,1-Trichloroethane	ND	0.0010	EPA 8260D	9-27-21	9-27-21	
Carbon Tetrachloride	ND	0.0013	EPA 8260D	9-27-21	9-27-21	
1,1-Dichloropropene	ND	0.0010	EPA 8260D	9-27-21	9-27-21	
Benzene	ND	0.0010	EPA 8260D	9-27-21	9-27-21	
1,2-Dichloroethane	ND	0.0010	EPA 8260D	9-27-21	9-27-21	
Trichloroethene	ND	0.0010	EPA 8260D	9-27-21	9-27-21	
1,2-Dichloropropane	ND	0.0010	EPA 8260D	9-27-21	9-27-21	
Dibromomethane	ND	0.0010	EPA 8260D	9-27-21	9-27-21	
Bromodichloromethane	ND	0.0010	EPA 8260D	9-27-21	9-27-21	
2-Chloroethyl Vinyl Ether	ND	0.0052	EPA 8260D	9-27-21	9-27-21	
(cis) 1,3-Dichloropropene	ND	0.0010	EPA 8260D	9-27-21	9-27-21	
Methyl Isobutyl Ketone	ND	0.0052	EPA 8260D	9-27-21	9-27-21	
Toluene	ND	0.0052	EPA 8260D	9-27-21	9-27-21	
(trans) 1,3-Dichloropropene	ND	0.0010	EPA 8260D	9-27-21	9-27-21	

This report pertains to the samples analyzed in accordance with the chain of custody,
and is intended only for the use of the individual or company to whom it is addressed.

Date of Report: September 28, 2021
Samples Submitted: September 24, 2021
Laboratory Reference: 2109-270
Project: 11-05150-003

VOLATILE ORGANICS EPA 8260D/SIM
page 2 of 2

Analyte	Result	PQL	Method	Date Prepared	Date Analyzed	Flags
Client ID:	**DA7SWCS26210924I**					
Laboratory ID:	09-270-03					
1,1,2-Trichloroethane	ND	0.0010	EPA 8260D	9-27-21	9-27-21	
Tetrachloroethene	ND	0.0010	EPA 8260D	9-27-21	9-27-21	
1,3-Dichloropropane	ND	0.0010	EPA 8260D	9-27-21	9-27-21	
2-Hexanone	ND	0.0052	EPA 8260D	9-27-21	9-27-21	
Dibromochloromethane	ND	0.0010	EPA 8260D	9-27-21	9-27-21	
1,2-Dibromoethane	ND	0.000052	EPA 8260D/SIM	9-27-21	9-27-21	
Chlorobenzene	ND	0.0010	EPA 8260D	9-27-21	9-27-21	
1,1,1,2-Tetrachloroethane	ND	0.0010	EPA 8260D	9-27-21	9-27-21	
Ethylbenzene	ND	0.0010	EPA 8260D	9-27-21	9-27-21	
m,p-Xylene	ND	0.0021	EPA 8260D	9-27-21	9-27-21	
o-Xylene	ND	0.0010	EPA 8260D	9-27-21	9-27-21	
Styrene	ND	0.0010	EPA 8260D	9-27-21	9-27-21	
Bromoform	ND	0.0052	EPA 8260D	9-27-21	9-27-21	
Isopropylbenzene	ND	0.0010	EPA 8260D	9-27-21	9-27-21	
Bromobenzene	ND	0.0010	EPA 8260D	9-27-21	9-27-21	
1,1,2,2-Tetrachloroethane	ND	0.0010	EPA 8260D	9-27-21	9-27-21	
1,2,3-Trichloropropane	ND	0.0010	EPA 8260D	9-27-21	9-27-21	
n-Propylbenzene	ND	0.0010	EPA 8260D	9-27-21	9-27-21	
2-Chlorotoluene	ND	0.0010	EPA 8260D	9-27-21	9-27-21	
4-Chlorotoluene	ND	0.0010	EPA 8260D	9-27-21	9-27-21	
1,3,5-Trimethylbenzene	ND	0.0010	EPA 8260D	9-27-21	9-27-21	
tert-Butylbenzene	ND	0.0010	EPA 8260D	9-27-21	9-27-21	
1,2,4-Trimethylbenzene	ND	0.0010	EPA 8260D	9-27-21	9-27-21	
sec-Butylbenzene	ND	0.0010	EPA 8260D	9-27-21	9-27-21	
1,3-Dichlorobenzene	ND	0.0010	EPA 8260D	9-27-21	9-27-21	
p-Isopropyltoluene	ND	0.0010	EPA 8260D	9-27-21	9-27-21	
1,4-Dichlorobenzene	ND	0.0010	EPA 8260D	9-27-21	9-27-21	
1,2-Dichlorobenzene	ND	0.0010	EPA 8260D	9-27-21	9-27-21	
n-Butylbenzene	ND	0.0010	EPA 8260D	9-27-21	9-27-21	
1,2-Dibromo-3-chloropropane	ND	0.0052	EPA 8260D	9-27-21	9-27-21	
1,2,4-Trichlorobenzene	ND	0.0010	EPA 8260D	9-27-21	9-27-21	
Hexachlorobutadiene	ND	0.0052	EPA 8260D	9-27-21	9-27-21	
Naphthalene	ND	0.0052	EPA 8260D	9-27-21	9-27-21	
1,2,3-Trichlorobenzene	ND	0.0010	EPA 8260D	9-27-21	9-27-21	
Surrogate:	*Percent Recovery*	*Control Limits*				
Dibromofluoromethane	*106*	*74-131*				
Toluene-d8	*106*	*78-128*				
4-Bromofluorobenzene	*99*	*71-130*				

This report pertains to the samples analyzed in accordance with the chain of custody, and is intended only for the use of the individual or company to whom it is addressed.

Date of Report: September 28, 2021
Samples Submitted: September 24, 2021
Laboratory Reference: 2109-270
Project: 11-05150-003

VOLATILE ORGANICS EPA 8260D/SIM
QUALITY CONTROL
page 1 of 2

Matrix: Soil
Units: mg/kg

Analyte	Result	PQL	Method	Date Prepared	Date Analyzed	Flags
METHOD BLANK						
Laboratory ID:	MB0927S1					
Dichlorodifluoromethane	ND	0.0010	EPA 8260D	9-27-21	9-27-21	
Chloromethane	ND	0.0050	EPA 8260D	9-27-21	9-27-21	
Vinyl Chloride	ND	0.0010	EPA 8260D	9-27-21	9-27-21	
Bromomethane	ND	0.0069	EPA 8260D	9-27-21	9-27-21	
Chloroethane	ND	0.0050	EPA 8260D	9-27-21	9-27-21	
Trichlorofluoromethane	ND	0.0010	EPA 8260D	9-27-21	9-27-21	
1,1-Dichloroethene	ND	0.0010	EPA 8260D	9-27-21	9-27-21	
Acetone	ND	0.010	EPA 8260D	9-27-21	9-27-21	
Iodomethane	ND	0.0050	EPA 8260D	9-27-21	9-27-21	
Carbon Disulfide	ND	0.0010	EPA 8260D	9-27-21	9-27-21	
Methylene Chloride	ND	0.0050	EPA 8260D	9-27-21	9-27-21	
(trans) 1,2-Dichloroethene	ND	0.0010	EPA 8260D	9-27-21	9-27-21	
Methyl t-Butyl Ether	ND	0.0010	EPA 8260D	9-27-21	9-27-21	
1,1-Dichloroethane	ND	0.0010	EPA 8260D	9-27-21	9-27-21	
Vinyl Acetate	ND	0.0050	EPA 8260D	9-27-21	9-27-21	
2,2-Dichloropropane	ND	0.0010	EPA 8260D	9-27-21	9-27-21	
(cis) 1,2-Dichloroethene	ND	0.0010	EPA 8260D	9-27-21	9-27-21	
2-Butanone	ND	0.0050	EPA 8260D	9-27-21	9-27-21	
Bromochloromethane	ND	0.0010	EPA 8260D	9-27-21	9-27-21	
Chloroform	ND	0.0010	EPA 8260D	9-27-21	9-27-21	
1,1,1-Trichloroethane	ND	0.0010	EPA 8260D	9-27-21	9-27-21	
Carbon Tetrachloride	ND	0.0013	EPA 8260D	9-27-21	9-27-21	
1,1-Dichloropropene	ND	0.0010	EPA 8260D	9-27-21	9-27-21	
Benzene	ND	0.0010	EPA 8260D	9-27-21	9-27-21	
1,2-Dichloroethane	ND	0.0010	EPA 8260D	9-27-21	9-27-21	
Trichloroethene	ND	0.0010	EPA 8260D	9-27-21	9-27-21	
1,2-Dichloropropane	ND	0.0010	EPA 8260D	9-27-21	9-27-21	
Dibromomethane	ND	0.0010	EPA 8260D	9-27-21	9-27-21	
Bromodichloromethane	ND	0.0010	EPA 8260D	9-27-21	9-27-21	
2-Chloroethyl Vinyl Ether	ND	0.0050	EPA 8260D	9-27-21	9-27-21	
(cis) 1,3-Dichloropropene	ND	0.0010	EPA 8260D	9-27-21	9-27-21	
Methyl Isobutyl Ketone	ND	0.0050	EPA 8260D	9-27-21	9-27-21	
Toluene	ND	0.0050	EPA 8260D	9-27-21	9-27-21	
(trans) 1,3-Dichloropropene	ND	0.0010	EPA 8260D	9-27-21	9-27-21	

This report pertains to the samples analyzed in accordance with the chain of custody, and is intended only for the use of the individual or company to whom it is addressed.

Date of Report: September 28, 2021
Samples Submitted: September 24, 2021
Laboratory Reference: 2109-270
Project: 11-05150-003

VOLATILE ORGANICS EPA 8260D/SIM
QUALITY CONTROL
page 2 of 2

Analyte	Result	PQL	Method	Date Prepared	Date Analyzed	Flags
METHOD BLANK						
Laboratory ID:	MB0927S1					
1,1,2-Trichloroethane	ND	0.0010	EPA 8260D	9-27-21	9-27-21	
Tetrachloroethene	ND	0.0010	EPA 8260D	9-27-21	9-27-21	
1,3-Dichloropropane	ND	0.0010	EPA 8260D	9-27-21	9-27-21	
2-Hexanone	ND	0.0050	EPA 8260D	9-27-21	9-27-21	
Dibromochloromethane	ND	0.0010	EPA 8260D	9-27-21	9-27-21	
1,2-Dibromoethane	ND	0.000050	EPA 8260D/SIM	9-27-21	9-27-21	
Chlorobenzene	ND	0.0010	EPA 8260D	9-27-21	9-27-21	
1,1,1,2-Tetrachloroethane	ND	0.0010	EPA 8260D	9-27-21	9-27-21	
Ethylbenzene	ND	0.0010	EPA 8260D	9-27-21	9-27-21	
m,p-Xylene	ND	0.0020	EPA 8260D	9-27-21	9-27-21	
o-Xylene	ND	0.0010	EPA 8260D	9-27-21	9-27-21	
Styrene	ND	0.0010	EPA 8260D	9-27-21	9-27-21	
Bromoform	ND	0.0050	EPA 8260D	9-27-21	9-27-21	
Isopropylbenzene	ND	0.0010	EPA 8260D	9-27-21	9-27-21	
Bromobenzene	ND	0.0010	EPA 8260D	9-27-21	9-27-21	
1,1,2,2-Tetrachloroethane	ND	0.0010	EPA 8260D	9-27-21	9-27-21	
1,2,3-Trichloropropane	ND	0.0010	EPA 8260D	9-27-21	9-27-21	
n-Propylbenzene	ND	0.0010	EPA 8260D	9-27-21	9-27-21	
2-Chlorotoluene	ND	0.0010	EPA 8260D	9-27-21	9-27-21	
4-Chlorotoluene	ND	0.0010	EPA 8260D	9-27-21	9-27-21	
1,3,5-Trimethylbenzene	ND	0.0010	EPA 8260D	9-27-21	9-27-21	
tert-Butylbenzene	ND	0.0010	EPA 8260D	9-27-21	9-27-21	
1,2,4-Trimethylbenzene	ND	0.0010	EPA 8260D	9-27-21	9-27-21	
sec-Butylbenzene	ND	0.0010	EPA 8260D	9-27-21	9-27-21	
1,3-Dichlorobenzene	ND	0.0010	EPA 8260D	9-27-21	9-27-21	
p-Isopropyltoluene	ND	0.0010	EPA 8260D	9-27-21	9-27-21	
1,4-Dichlorobenzene	ND	0.0010	EPA 8260D	9-27-21	9-27-21	
1,2-Dichlorobenzene	ND	0.0010	EPA 8260D	9-27-21	9-27-21	
n-Butylbenzene	ND	0.0010	EPA 8260D	9-27-21	9-27-21	
1,2-Dibromo-3-chloropropane	ND	0.0050	EPA 8260D	9-27-21	9-27-21	
1,2,4-Trichlorobenzene	ND	0.0010	EPA 8260D	9-27-21	9-27-21	
Hexachlorobutadiene	ND	0.0050	EPA 8260D	9-27-21	9-27-21	
Naphthalene	ND	0.0050	EPA 8260D	9-27-21	9-27-21	
1,2,3-Trichlorobenzene	ND	0.0010	EPA 8260D	9-27-21	9-27-21	
Surrogate:	*Percent Recovery*	*Control Limits*				
Dibromofluoromethane	*104*	*74-131*				
Toluene-d8	*105*	*78-128*				
4-Bromofluorobenzene	*102*	*71-130*				

This report pertains to the samples analyzed in accordance with the chain of custody, and is intended only for the use of the individual or company to whom it is addressed.

Date of Report: September 28, 2021
Samples Submitted: September 24, 2021
Laboratory Reference: 2109-270
Project: 11-05150-003

VOLATILE ORGANICS EPA 8260D/SIM
QUALITY CONTROL

Matrix: Soil
Units: mg/kg

Analyte	Result		Spike Level		Percent Recovery		Recovery Limits	RPD	RPD Limit	Flags
SPIKE BLANKS										
Laboratory ID:	SB0927S1									
	SB	SBD	SB	SBD	SB	SBD				
1,1-Dichloroethene	**0.0528**	**0.0537**	0.0500	0.0500	106	107	71-131	2	19	
Benzene	**0.0494**	**0.0506**	0.0500	0.0500	99	101	73-124	2	18	
Trichloroethene	**0.0469**	**0.0490**	0.0500	0.0500	94	98	79-130	4	18	
Toluene	**0.0467**	**0.0473**	0.0500	0.0500	93	95	76-123	1	18	
Chlorobenzene	**0.0492**	**0.0503**	0.0500	0.0500	98	101	78-122	2	18	
Surrogate:										
Dibromofluoromethane					*101*	*102*	*74-131*			
Toluene-d8					*104*	*102*	*78-128*			
4-Bromofluorobenzene					*103*	*102*	*71-130*			

This report pertains to the samples analyzed in accordance with the chain of custody, and is intended only for the use of the individual or company to whom it is addressed.

Date of Report: September 28, 2021
Samples Submitted: September 24, 2021
Laboratory Reference: 2109-270
Project: 11-05150-003

VOLATILE ORGANICS EPA 8260D
page 1 of 2

Matrix: Water
Units: ug/L

Analyte	Result	PQL	Method	Date Prepared	Date Analyzed	Flags
Client ID:	**VTRP210924I-Trip Blank**					
Laboratory ID:	09-270-04					
Dichlorodifluoromethane	ND	0.20	EPA 8260D	9-24-21	9-24-21	
Chloromethane	ND	1.0	EPA 8260D	9-24-21	9-24-21	
Vinyl Chloride	ND	0.20	EPA 8260D	9-24-21	9-24-21	
Bromomethane	ND	0.20	EPA 8260D	9-24-21	9-24-21	
Chloroethane	ND	1.0	EPA 8260D	9-24-21	9-24-21	
Trichlorofluoromethane	ND	0.20	EPA 8260D	9-24-21	9-24-21	
1,1-Dichloroethene	ND	0.20	EPA 8260D	9-24-21	9-24-21	
Acetone	ND	5.0	EPA 8260D	9-24-21	9-24-21	
Iodomethane	ND	1.3	EPA 8260D	9-24-21	9-24-21	
Carbon Disulfide	ND	0.20	EPA 8260D	9-24-21	9-24-21	
Methylene Chloride	ND	1.0	EPA 8260D	9-24-21	9-24-21	
(trans) 1,2-Dichloroethene	ND	0.20	EPA 8260D	9-24-21	9-24-21	
Methyl t-Butyl Ether	ND	0.20	EPA 8260D	9-24-21	9-24-21	
1,1-Dichloroethane	ND	0.20	EPA 8260D	9-24-21	9-24-21	
Vinyl Acetate	ND	1.0	EPA 8260D	9-24-21	9-24-21	
2,2-Dichloropropane	ND	0.20	EPA 8260D	9-24-21	9-24-21	
(cis) 1,2-Dichloroethene	ND	0.20	EPA 8260D	9-24-21	9-24-21	
2-Butanone	ND	5.0	EPA 8260D	9-24-21	9-24-21	
Bromochloromethane	ND	0.20	EPA 8260D	9-24-21	9-24-21	
Chloroform	ND	0.20	EPA 8260D	9-24-21	9-24-21	
1,1,1-Trichloroethane	ND	0.20	EPA 8260D	9-24-21	9-24-21	
Carbon Tetrachloride	ND	0.20	EPA 8260D	9-24-21	9-24-21	
1,1-Dichloropropene	ND	0.20	EPA 8260D	9-24-21	9-24-21	
Benzene	ND	0.20	EPA 8260D	9-24-21	9-24-21	
1,2-Dichloroethane	ND	0.20	EPA 8260D	9-24-21	9-24-21	
Trichloroethene	ND	0.20	EPA 8260D	9-24-21	9-24-21	
1,2-Dichloropropane	ND	0.20	EPA 8260D	9-24-21	9-24-21	
Dibromomethane	ND	0.20	EPA 8260D	9-24-21	9-24-21	
Bromodichloromethane	ND	0.20	EPA 8260D	9-24-21	9-24-21	
2-Chloroethyl Vinyl Ether	ND	1.5	EPA 8260D	9-24-21	9-24-21	
(cis) 1,3-Dichloropropene	ND	0.20	EPA 8260D	9-24-21	9-24-21	
Methyl Isobutyl Ketone	ND	2.0	EPA 8260D	9-24-21	9-24-21	
Toluene	ND	1.0	EPA 8260D	9-24-21	9-24-21	
(trans) 1,3-Dichloropropene	ND	0.20	EPA 8260D	9-24-21	9-24-21	

This report pertains to the samples analyzed in accordance with the chain of custody, and is intended only for the use of the individual or company to whom it is addressed.

Date of Report: September 28, 2021
Samples Submitted: September 24, 2021
Laboratory Reference: 2109-270
Project: 11-05150-003

VOLATILE ORGANICS EPA 8260D
page 2 of 2

Analyte	Result	PQL	Method	Date Prepared	Date Analyzed	Flags
Client ID:	**VTRP210924I-Trip Blank**					
Laboratory ID:	09-270-04					
1,1,2-Trichloroethane	ND	0.20	EPA 8260D	9-24-21	9-24-21	
Tetrachloroethene	ND	0.20	EPA 8260D	9-24-21	9-24-21	
1,3-Dichloropropane	ND	0.20	EPA 8260D	9-24-21	9-24-21	
2-Hexanone	ND	2.0	EPA 8260D	9-24-21	9-24-21	
Dibromochloromethane	ND	0.20	EPA 8260D	9-24-21	9-24-21	
1,2-Dibromoethane	ND	0.20	EPA 8260D	9-24-21	9-24-21	
Chlorobenzene	ND	0.20	EPA 8260D	9-24-21	9-24-21	
1,1,1,2-Tetrachloroethane	ND	0.20	EPA 8260D	9-24-21	9-24-21	
Ethylbenzene	ND	0.20	EPA 8260D	9-24-21	9-24-21	
m,p-Xylene	ND	0.40	EPA 8260D	9-24-21	9-24-21	
o-Xylene	ND	0.20	EPA 8260D	9-24-21	9-24-21	
Styrene	ND	0.20	EPA 8260D	9-24-21	9-24-21	
Bromoform	ND	1.0	EPA 8260D	9-24-21	9-24-21	
Isopropylbenzene	ND	0.20	EPA 8260D	9-24-21	9-24-21	
Bromobenzene	ND	0.20	EPA 8260D	9-24-21	9-24-21	
1,1,2,2-Tetrachloroethane	ND	0.20	EPA 8260D	9-24-21	9-24-21	
1,2,3-Trichloropropane	ND	0.20	EPA 8260D	9-24-21	9-24-21	
n-Propylbenzene	ND	0.20	EPA 8260D	9-24-21	9-24-21	
2-Chlorotoluene	ND	0.20	EPA 8260D	9-24-21	9-24-21	
4-Chlorotoluene	ND	0.20	EPA 8260D	9-24-21	9-24-21	
1,3,5-Trimethylbenzene	ND	0.20	EPA 8260D	9-24-21	9-24-21	
tert-Butylbenzene	ND	0.20	EPA 8260D	9-24-21	9-24-21	
1,2,4-Trimethylbenzene	ND	0.20	EPA 8260D	9-24-21	9-24-21	
sec-Butylbenzene	ND	0.20	EPA 8260D	9-24-21	9-24-21	
1,3-Dichlorobenzene	ND	0.20	EPA 8260D	9-24-21	9-24-21	
p-Isopropyltoluene	ND	0.20	EPA 8260D	9-24-21	9-24-21	
1,4-Dichlorobenzene	ND	0.20	EPA 8260D	9-24-21	9-24-21	
1,2-Dichlorobenzene	ND	0.20	EPA 8260D	9-24-21	9-24-21	
n-Butylbenzene	ND	0.20	EPA 8260D	9-24-21	9-24-21	
1,2-Dibromo-3-chloropropane	ND	1.0	EPA 8260D	9-24-21	9-24-21	
1,2,4-Trichlorobenzene	ND	0.20	EPA 8260D	9-24-21	9-24-21	
Hexachlorobutadiene	ND	1.0	EPA 8260D	9-24-21	9-24-21	
Naphthalene	ND	1.0	EPA 8260D	9-24-21	9-24-21	
1,2,3-Trichlorobenzene	ND	0.20	EPA 8260D	9-24-21	9-24-21	
Surrogate:	*Percent Recovery*	*Control Limits*				
Dibromofluoromethane	*102*	*75-127*				
Toluene-d8	*101*	*80-127*				
4-Bromofluorobenzene	*92*	*78-125*				

This report pertains to the samples analyzed in accordance with the chain of custody, and is intended only for the use of the individual or company to whom it is addressed.

Date of Report: September 28, 2021
Samples Submitted: September 24, 2021
Laboratory Reference: 2109-270
Project: 11-05150-003

VOLATILE ORGANICS EPA 8260D
QUALITY CONTROL
page 1 of 2

Matrix: Water
Units: ug/L

Analyte	Result	PQL	Method	Date Prepared	Date Analyzed	Flags
METHOD BLANK						
Laboratory ID:	MB0924W1					
Dichlorodifluoromethane	ND	0.20	EPA 8260D	9-24-21	9-24-21	
Chloromethane	ND	1.0	EPA 8260D	9-24-21	9-24-21	
Vinyl Chloride	ND	0.20	EPA 8260D	9-24-21	9-24-21	
Bromomethane	ND	0.20	EPA 8260D	9-24-21	9-24-21	
Chloroethane	ND	1.0	EPA 8260D	9-24-21	9-24-21	
Trichlorofluoromethane	ND	0.20	EPA 8260D	9-24-21	9-24-21	
1,1-Dichloroethene	ND	0.20	EPA 8260D	9-24-21	9-24-21	
Acetone	ND	5.0	EPA 8260D	9-24-21	9-24-21	
Iodomethane	ND	1.3	EPA 8260D	9-24-21	9-24-21	
Carbon Disulfide	ND	0.20	EPA 8260D	9-24-21	9-24-21	
Methylene Chloride	ND	1.0	EPA 8260D	9-24-21	9-24-21	
(trans) 1,2-Dichloroethene	ND	0.20	EPA 8260D	9-24-21	9-24-21	
Methyl t-Butyl Ether	ND	0.20	EPA 8260D	9-24-21	9-24-21	
1,1-Dichloroethane	ND	0.20	EPA 8260D	9-24-21	9-24-21	
Vinyl Acetate	ND	1.0	EPA 8260D	9-24-21	9-24-21	
2,2-Dichloropropane	ND	0.20	EPA 8260D	9-24-21	9-24-21	
(cis) 1,2-Dichloroethene	ND	0.20	EPA 8260D	9-24-21	9-24-21	
2-Butanone	ND	5.0	EPA 8260D	9-24-21	9-24-21	
Bromochloromethane	ND	0.20	EPA 8260D	9-24-21	9-24-21	
Chloroform	ND	0.20	EPA 8260D	9-24-21	9-24-21	
1,1,1-Trichloroethane	ND	0.20	EPA 8260D	9-24-21	9-24-21	
Carbon Tetrachloride	ND	0.20	EPA 8260D	9-24-21	9-24-21	
1,1-Dichloropropene	ND	0.20	EPA 8260D	9-24-21	9-24-21	
Benzene	ND	0.20	EPA 8260D	9-24-21	9-24-21	
1,2-Dichloroethane	ND	0.20	EPA 8260D	9-24-21	9-24-21	
Trichloroethene	ND	0.20	EPA 8260D	9-24-21	9-24-21	
1,2-Dichloropropane	ND	0.20	EPA 8260D	9-24-21	9-24-21	
Dibromomethane	ND	0.20	EPA 8260D	9-24-21	9-24-21	
Bromodichloromethane	ND	0.20	EPA 8260D	9-24-21	9-24-21	
2-Chloroethyl Vinyl Ether	ND	1.5	EPA 8260D	9-24-21	9-24-21	
(cis) 1,3-Dichloropropene	ND	0.20	EPA 8260D	9-24-21	9-24-21	
Methyl Isobutyl Ketone	ND	2.0	EPA 8260D	9-24-21	9-24-21	
Toluene	ND	1.0	EPA 8260D	9-24-21	9-24-21	
(trans) 1,3-Dichloropropene	ND	0.20	EPA 8260D	9-24-21	9-24-21	

This report pertains to the samples analyzed in accordance with the chain of custody, and is intended only for the use of the individual or company to whom it is addressed.

Date of Report: September 28, 2021
Samples Submitted: September 24, 2021
Laboratory Reference: 2109-270
Project: 11-05150-003

VOLATILE ORGANICS EPA 8260D
QUALITY CONTROL
page 2 of 2

Analyte	Result	PQL	Method	Date Prepared	Date Analyzed	Flags
METHOD BLANK						
Laboratory ID:	MB0924W1					
1,1,2-Trichloroethane	ND	0.20	EPA 8260D	9-24-21	9-24-21	
Tetrachloroethene	ND	0.20	EPA 8260D	9-24-21	9-24-21	
1,3-Dichloropropane	ND	0.20	EPA 8260D	9-24-21	9-24-21	
2-Hexanone	ND	2.0	EPA 8260D	9-24-21	9-24-21	
Dibromochloromethane	ND	0.20	EPA 8260D	9-24-21	9-24-21	
1,2-Dibromoethane	ND	0.20	EPA 8260D	9-24-21	9-24-21	
Chlorobenzene	ND	0.20	EPA 8260D	9-24-21	9-24-21	
1,1,1,2-Tetrachloroethane	ND	0.20	EPA 8260D	9-24-21	9-24-21	
Ethylbenzene	ND	0.20	EPA 8260D	9-24-21	9-24-21	
m,p-Xylene	ND	0.40	EPA 8260D	9-24-21	9-24-21	
o-Xylene	ND	0.20	EPA 8260D	9-24-21	9-24-21	
Styrene	ND	0.20	EPA 8260D	9-24-21	9-24-21	
Bromoform	ND	1.0	EPA 8260D	9-24-21	9-24-21	
Isopropylbenzene	ND	0.20	EPA 8260D	9-24-21	9-24-21	
Bromobenzene	ND	0.20	EPA 8260D	9-24-21	9-24-21	
1,1,2,2-Tetrachloroethane	ND	0.20	EPA 8260D	9-24-21	9-24-21	
1,2,3-Trichloropropane	ND	0.20	EPA 8260D	9-24-21	9-24-21	
n-Propylbenzene	ND	0.20	EPA 8260D	9-24-21	9-24-21	
2-Chlorotoluene	ND	0.20	EPA 8260D	9-24-21	9-24-21	
4-Chlorotoluene	ND	0.20	EPA 8260D	9-24-21	9-24-21	
1,3,5-Trimethylbenzene	ND	0.20	EPA 8260D	9-24-21	9-24-21	
tert-Butylbenzene	ND	0.20	EPA 8260D	9-24-21	9-24-21	
1,2,4-Trimethylbenzene	ND	0.20	EPA 8260D	9-24-21	9-24-21	
sec-Butylbenzene	ND	0.20	EPA 8260D	9-24-21	9-24-21	
1,3-Dichlorobenzene	ND	0.20	EPA 8260D	9-24-21	9-24-21	
p-Isopropyltoluene	ND	0.20	EPA 8260D	9-24-21	9-24-21	
1,4-Dichlorobenzene	ND	0.20	EPA 8260D	9-24-21	9-24-21	
1,2-Dichlorobenzene	ND	0.20	EPA 8260D	9-24-21	9-24-21	
n-Butylbenzene	ND	0.20	EPA 8260D	9-24-21	9-24-21	
1,2-Dibromo-3-chloropropane	ND	1.0	EPA 8260D	9-24-21	9-24-21	
1,2,4-Trichlorobenzene	ND	0.20	EPA 8260D	9-24-21	9-24-21	
Hexachlorobutadiene	ND	1.0	EPA 8260D	9-24-21	9-24-21	
Naphthalene	ND	1.0	EPA 8260D	9-24-21	9-24-21	
1,2,3-Trichlorobenzene	ND	0.20	EPA 8260D	9-24-21	9-24-21	
Surrogate:	*Percent Recovery*	*Control Limits*				
Dibromofluoromethane	*101*	*75-127*				
Toluene-d8	*99*	*80-127*				
4-Bromofluorobenzene	*93*	*78-125*				

This report pertains to the samples analyzed in accordance with the chain of custody, and is intended only for the use of the individual or company to whom it is addressed.

Date of Report: September 28, 2021
Samples Submitted: September 24, 2021
Laboratory Reference: 2109-270
Project: 11-05150-003

VOLATILE ORGANICS EPA 8260D
QUALITY CONTROL

Matrix: Water
Units: ug/L

Analyte	Result		Spike Level		Percent Recovery		Recovery Limits	RPD	RPD Limit	Flags
SPIKE BLANKS										
Laboratory ID:	SB0924W1									
	SB	SBD	SB	SBD	SB	SBD				
1,1-Dichloroethene	**10.2**	**10.4**	10.0	10.0	102	104	78-124	2	19	
Benzene	**9.48**	**9.73**	10.0	10.0	95	97	80-119	3	16	
Trichloroethene	**10.7**	**10.7**	10.0	10.0	107	107	80-121	0	18	
Toluene	**9.93**	**10.1**	10.0	10.0	99	101	80-117	2	18	
Chlorobenzene	**10.3**	**10.5**	10.0	10.0	103	105	80-117	2	17	
Surrogate:										
Dibromofluoromethane					*101*	*101*	*75-127*			
Toluene-d8					*101*	*100*	*80-127*			
4-Bromofluorobenzene					*102*	*100*	*78-125*			

This report pertains to the samples analyzed in accordance with the chain of custody, and is intended only for the use of the individual or company to whom it is addressed.

Date of Report: September 28, 2021
Samples Submitted: September 24, 2021
Laboratory Reference: 2109-270
Project: 11-05150-003

SEMIVOLATILE ORGANICS EPA 8270E/SIM
page 1 of 2

Matrix: Soil
Units: mg/Kg

Analyte	Result	PQL	Method	Date Prepared	Date Analyzed	Flags
Client ID:	**DA7SWCS24210924I**					
Laboratory ID:	09-270-01					
n-Nitrosodimethylamine	**ND**	0.011	EPA 8270E	9-27-21	9-28-21	
Pyridine	**ND**	0.22	EPA 8270E	9-27-21	9-28-21	
Phenol	**ND**	0.022	EPA 8270E	9-27-21	9-28-21	
Aniline	**ND**	0.11	EPA 8270E	9-27-21	9-28-21	
bis(2-Chloroethyl)ether	**ND**	0.011	EPA 8270E	9-27-21	9-28-21	
2-Chlorophenol	**ND**	0.022	EPA 8270E	9-27-21	9-28-21	
1,3-Dichlorobenzene	**ND**	0.022	EPA 8270E	9-27-21	9-28-21	
1,4-Dichlorobenzene	**ND**	0.022	EPA 8270E	9-27-21	9-28-21	
Benzyl alcohol	**ND**	0.022	EPA 8270E	9-27-21	9-28-21	
1,2-Dichlorobenzene	**ND**	0.022	EPA 8270E	9-27-21	9-28-21	
2-Methylphenol (o-Cresol)	**ND**	0.022	EPA 8270E	9-27-21	9-28-21	
bis(2-Chloroisopropyl)ether	**ND**	0.022	EPA 8270E	9-27-21	9-28-21	
(3+4)-Methylphenol (m,p-Cresol)	**ND**	0.022	EPA 8270E	9-27-21	9-28-21	
n-Nitroso-di-n-propylamine	**ND**	0.011	EPA 8270E	9-27-21	9-28-21	
Hexachloroethane	**ND**	0.022	EPA 8270E	9-27-21	9-28-21	
Nitrobenzene	**ND**	0.022	EPA 8270E	9-27-21	9-28-21	
Isophorone	**ND**	0.022	EPA 8270E	9-27-21	9-28-21	
2-Nitrophenol	**ND**	0.022	EPA 8270E	9-27-21	9-28-21	
2,4-Dimethylphenol	**ND**	0.022	EPA 8270E	9-27-21	9-28-21	
bis(2-Chloroethoxy)methane	**ND**	0.022	EPA 8270E	9-27-21	9-28-21	
2,4-Dichlorophenol	**ND**	0.022	EPA 8270E	9-27-21	9-28-21	
1,2,4-Trichlorobenzene	**ND**	0.022	EPA 8270E	9-27-21	9-28-21	
Naphthalene	**ND**	0.0045	EPA 8270E/SIM	9-27-21	9-27-21	
4-Chloroaniline	**ND**	0.011	EPA 8270E	9-27-21	9-28-21	
Hexachlorobutadiene	**ND**	0.022	EPA 8270E	9-27-21	9-28-21	
4-Chloro-3-methylphenol	**ND**	0.022	EPA 8270E	9-27-21	9-28-21	
2-Methylnaphthalene	**ND**	0.0045	EPA 8270E/SIM	9-27-21	9-27-21	
1-Methylnaphthalene	**ND**	0.0045	EPA 8270E/SIM	9-27-21	9-27-21	
Hexachlorocyclopentadiene	**ND**	0.022	EPA 8270E	9-27-21	9-28-21	
2,4,6-Trichlorophenol	**ND**	0.022	EPA 8270E	9-27-21	9-28-21	
2,3-Dichloroaniline	**ND**	0.022	EPA 8270E	9-27-21	9-28-21	
2,4,5-Trichlorophenol	**ND**	0.022	EPA 8270E	9-27-21	9-28-21	
2-Chloronaphthalene	**ND**	0.022	EPA 8270E	9-27-21	9-28-21	
2-Nitroaniline	**ND**	0.022	EPA 8270E	9-27-21	9-28-21	
1,4-Dinitrobenzene	**ND**	0.022	EPA 8270E	9-27-21	9-28-21	
Dimethylphthalate	**ND**	0.022	EPA 8270E	9-27-21	9-28-21	
1,3-Dinitrobenzene	**ND**	0.022	EPA 8270E	9-27-21	9-28-21	
2,6-Dinitrotoluene	**ND**	0.011	EPA 8270E	9-27-21	9-28-21	
1,2-Dinitrobenzene	**ND**	0.022	EPA 8270E	9-27-21	9-28-21	
Acenaphthylene	**ND**	0.0045	EPA 8270E/SIM	9-27-21	9-27-21	
3-Nitroaniline	**ND**	0.022	EPA 8270E	9-27-21	9-28-21	

This report pertains to the samples analyzed in accordance with the chain of custody, and is intended only for the use of the individual or company to whom it is addressed.

Date of Report: September 28, 2021
Samples Submitted: September 24, 2021
Laboratory Reference: 2109-270
Project: 11-05150-003

SEMIVOLATILE ORGANICS EPA 8270E/SIM
page 2 of 2

Analyte	Result	PQL	Method	Date Prepared	Date Analyzed	Flags
Client ID:	**DA7SWCS24210924I**					
Laboratory ID:	09-270-01					
2,4-Dinitrophenol	**ND**	0.045	EPA 8270E	9-27-21	9-28-21	
Acenaphthene	**ND**	0.0045	EPA 8270E/SIM	9-27-21	9-27-21	
4-Nitrophenol	**ND**	0.022	EPA 8270E	9-27-21	9-28-21	
2,4-Dinitrotoluene	**ND**	0.011	EPA 8270E	9-27-21	9-28-21	
Dibenzofuran	**ND**	0.022	EPA 8270E	9-27-21	9-28-21	
2,3,5,6-Tetrachlorophenol	**ND**	0.022	EPA 8270E	9-27-21	9-28-21	
2,3,4,6-Tetrachlorophenol	**ND**	0.022	EPA 8270E	9-27-21	9-28-21	
Diethylphthalate	**ND**	0.11	EPA 8270E	9-27-21	9-28-21	
4-Chlorophenyl-phenylether	**ND**	0.022	EPA 8270E	9-27-21	9-28-21	
4-Nitroaniline	**ND**	0.022	EPA 8270E	9-27-21	9-28-21	
Fluorene	**ND**	0.0045	EPA 8270E/SIM	9-27-21	9-27-21	
4,6-Dinitro-2-methylphenol	**ND**	0.11	EPA 8270E	9-27-21	9-28-21	
n-Nitrosodiphenylamine	**ND**	0.022	EPA 8270E	9-27-21	9-28-21	
1,2-Diphenylhydrazine	**ND**	0.022	EPA 8270E	9-27-21	9-28-21	
4-Bromophenyl-phenylether	**ND**	0.022	EPA 8270E	9-27-21	9-28-21	
Hexachlorobenzene	**ND**	0.022	EPA 8270E	9-27-21	9-28-21	
Pentachlorophenol	**ND**	0.022	EPA 8270E	9-27-21	9-28-21	
Phenanthrene	**ND**	0.0045	EPA 8270E/SIM	9-27-21	9-27-21	
Anthracene	**ND**	0.0045	EPA 8270E/SIM	9-27-21	9-27-21	
Carbazole	**ND**	0.022	EPA 8270E	9-27-21	9-28-21	
Di-n-butylphthalate	**ND**	0.11	EPA 8270E	9-27-21	9-28-21	
Fluoranthene	**ND**	0.0045	EPA 8270E/SIM	9-27-21	9-27-21	
Pyrene	**ND**	0.0045	EPA 8270E/SIM	9-27-21	9-27-21	
Butylbenzylphthalate	**ND**	0.11	EPA 8270E	9-27-21	9-28-21	
bis-2-Ethylhexyladipate	**ND**	0.11	EPA 8270E	9-27-21	9-28-21	
3,3'-Dichlorobenzidine	**ND**	0.011	EPA 8270E	9-27-21	9-28-21	
Benzo[a]anthracene	**ND**	0.0045	EPA 8270E/SIM	9-27-21	9-27-21	
Chrysene	**ND**	0.0045	EPA 8270E/SIM	9-27-21	9-27-21	
bis(2-Ethylhexyl)phthalate	**ND**	0.11	EPA 8270E	9-27-21	9-28-21	
Di-n-octylphthalate	**ND**	0.11	EPA 8270E	9-27-21	9-28-21	
Benzo[b]fluoranthene	**ND**	0.0045	EPA 8270E/SIM	9-27-21	9-27-21	
Benzo(j,k)fluoranthene	**ND**	0.0045	EPA 8270E/SIM	9-27-21	9-27-21	
Benzo[a]pyrene	**ND**	0.0045	EPA 8270E/SIM	9-27-21	9-27-21	
Indeno[1,2,3-cd]pyrene	**ND**	0.0045	EPA 8270E/SIM	9-27-21	9-27-21	
Dibenz[a,h]anthracene	**ND**	0.0045	EPA 8270E/SIM	9-27-21	9-27-21	
Benzo[g,h,i]perylene	**ND**	0.0045	EPA 8270E/SIM	9-27-21	9-27-21	
Surrogate:	*Percent Recovery*	*Control Limits*				
2-Fluorophenol	*78*	*26 - 109*				
Phenol-d6	*81*	*33 - 113*				
Nitrobenzene-d5	*75*	*31 - 110*				
2-Fluorobiphenyl	*81*	*42 - 107*				
2,4,6-Tribromophenol	*85*	*42 - 123*				
Terphenyl-d14	*82*	*41 - 115*				

This report pertains to the samples analyzed in accordance with the chain of custody, and is intended only for the use of the individual or company to whom it is addressed.

Date of Report: September 28, 2021
Samples Submitted: September 24, 2021
Laboratory Reference: 2109-270
Project: 11-05150-003

SEMIVOLATILE ORGANICS EPA 8270E/SIM
page 1 of 2

Matrix: Soil
Units: mg/Kg

Analyte	Result	PQL	Method	Date Prepared	Date Analyzed	Flags
Client ID:	**DA7SWCS25210924I**					
Laboratory ID:	09-270-02					
n-Nitrosodimethylamine	**ND**	0.011	EPA 8270E	9-27-21	9-28-21	
Pyridine	**ND**	0.23	EPA 8270E	9-27-21	9-28-21	
Phenol	**ND**	0.023	EPA 8270E	9-27-21	9-28-21	
Aniline	**ND**	0.11	EPA 8270E	9-27-21	9-28-21	
bis(2-Chloroethyl)ether	**ND**	0.011	EPA 8270E	9-27-21	9-28-21	
2-Chlorophenol	**ND**	0.023	EPA 8270E	9-27-21	9-28-21	
1,3-Dichlorobenzene	**ND**	0.023	EPA 8270E	9-27-21	9-28-21	
1,4-Dichlorobenzene	**ND**	0.023	EPA 8270E	9-27-21	9-28-21	
Benzyl alcohol	**ND**	0.023	EPA 8270E	9-27-21	9-28-21	
1,2-Dichlorobenzene	**ND**	0.023	EPA 8270E	9-27-21	9-28-21	
2-Methylphenol (o-Cresol)	**ND**	0.023	EPA 8270E	9-27-21	9-28-21	
bis(2-Chloroisopropyl)ether	**ND**	0.023	EPA 8270E	9-27-21	9-28-21	
(3+4)-Methylphenol (m,p-Cresol)	**ND**	0.023	EPA 8270E	9-27-21	9-28-21	
n-Nitroso-di-n-propylamine	**ND**	0.011	EPA 8270E	9-27-21	9-28-21	
Hexachloroethane	**ND**	0.023	EPA 8270E	9-27-21	9-28-21	
Nitrobenzene	**ND**	0.023	EPA 8270E	9-27-21	9-28-21	
Isophorone	**ND**	0.023	EPA 8270E	9-27-21	9-28-21	
2-Nitrophenol	**ND**	0.023	EPA 8270E	9-27-21	9-28-21	
2,4-Dimethylphenol	**ND**	0.023	EPA 8270E	9-27-21	9-28-21	
bis(2-Chloroethoxy)methane	**ND**	0.023	EPA 8270E	9-27-21	9-28-21	
2,4-Dichlorophenol	**ND**	0.023	EPA 8270E	9-27-21	9-28-21	
1,2,4-Trichlorobenzene	**ND**	0.023	EPA 8270E	9-27-21	9-28-21	
Naphthalene	**ND**	0.0045	EPA 8270E/SIM	9-27-21	9-27-21	
4-Chloroaniline	**ND**	0.011	EPA 8270E	9-27-21	9-28-21	
Hexachlorobutadiene	**ND**	0.023	EPA 8270E	9-27-21	9-28-21	
4-Chloro-3-methylphenol	**ND**	0.023	EPA 8270E	9-27-21	9-28-21	
2-Methylnaphthalene	**ND**	0.0045	EPA 8270E/SIM	9-27-21	9-27-21	
1-Methylnaphthalene	**ND**	0.0045	EPA 8270E/SIM	9-27-21	9-27-21	
Hexachlorocyclopentadiene	**ND**	0.023	EPA 8270E	9-27-21	9-28-21	
2,4,6-Trichlorophenol	**ND**	0.023	EPA 8270E	9-27-21	9-28-21	
2,3-Dichloroaniline	**ND**	0.023	EPA 8270E	9-27-21	9-28-21	
2,4,5-Trichlorophenol	**ND**	0.023	EPA 8270E	9-27-21	9-28-21	
2-Chloronaphthalene	**ND**	0.023	EPA 8270E	9-27-21	9-28-21	
2-Nitroaniline	**ND**	0.023	EPA 8270E	9-27-21	9-28-21	
1,4-Dinitrobenzene	**ND**	0.023	EPA 8270E	9-27-21	9-28-21	
Dimethylphthalate	**ND**	0.023	EPA 8270E	9-27-21	9-28-21	
1,3-Dinitrobenzene	**ND**	0.023	EPA 8270E	9-27-21	9-28-21	
2,6-Dinitrotoluene	**ND**	0.011	EPA 8270E	9-27-21	9-28-21	
1,2-Dinitrobenzene	**ND**	0.023	EPA 8270E	9-27-21	9-28-21	
Acenaphthylene	**ND**	0.0045	EPA 8270E/SIM	9-27-21	9-27-21	
3-Nitroaniline	**ND**	0.023	EPA 8270E	9-27-21	9-28-21	

This report pertains to the samples analyzed in accordance with the chain of custody, and is intended only for the use of the individual or company to whom it is addressed.

Date of Report: September 28, 2021
Samples Submitted: September 24, 2021
Laboratory Reference: 2109-270
Project: 11-05150-003

SEMIVOLATILE ORGANICS EPA 8270E/SIM
page 2 of 2

Analyte	Result	PQL	Method	Date Prepared	Date Analyzed	Flags
Client ID:	**DA7SWCS25210924I**					
Laboratory ID:	09-270-02					
2,4-Dinitrophenol	**ND**	0.045	EPA 8270E	9-27-21	9-28-21	
Acenaphthene	**ND**	0.0045	EPA 8270E/SIM	9-27-21	9-27-21	
4-Nitrophenol	**ND**	0.023	EPA 8270E	9-27-21	9-28-21	
2,4-Dinitrotoluene	**ND**	0.011	EPA 8270E	9-27-21	9-28-21	
Dibenzofuran	**ND**	0.023	EPA 8270E	9-27-21	9-28-21	
2,3,5,6-Tetrachlorophenol	**ND**	0.023	EPA 8270E	9-27-21	9-28-21	
2,3,4,6-Tetrachlorophenol	**ND**	0.023	EPA 8270E	9-27-21	9-28-21	
Diethylphthalate	**ND**	0.11	EPA 8270E	9-27-21	9-28-21	
4-Chlorophenyl-phenylether	**ND**	0.023	EPA 8270E	9-27-21	9-28-21	
4-Nitroaniline	**ND**	0.023	EPA 8270E	9-27-21	9-28-21	
Fluorene	**ND**	0.0045	EPA 8270E/SIM	9-27-21	9-27-21	
4,6-Dinitro-2-methylphenol	**ND**	0.11	EPA 8270E	9-27-21	9-28-21	
n-Nitrosodiphenylamine	**ND**	0.023	EPA 8270E	9-27-21	9-28-21	
1,2-Diphenylhydrazine	**ND**	0.023	EPA 8270E	9-27-21	9-28-21	
4-Bromophenyl-phenylether	**ND**	0.023	EPA 8270E	9-27-21	9-28-21	
Hexachlorobenzene	**ND**	0.023	EPA 8270E	9-27-21	9-28-21	
Pentachlorophenol	**ND**	0.023	EPA 8270E	9-27-21	9-28-21	
Phenanthrene	**ND**	0.0045	EPA 8270E/SIM	9-27-21	9-27-21	
Anthracene	**ND**	0.0045	EPA 8270E/SIM	9-27-21	9-27-21	
Carbazole	**ND**	0.023	EPA 8270E	9-27-21	9-28-21	
Di-n-butylphthalate	**ND**	0.11	EPA 8270E	9-27-21	9-28-21	
Fluoranthene	**ND**	0.0045	EPA 8270E/SIM	9-27-21	9-27-21	
Pyrene	**ND**	0.0045	EPA 8270E/SIM	9-27-21	9-27-21	
Butylbenzylphthalate	**ND**	0.11	EPA 8270E	9-27-21	9-28-21	
bis-2-Ethylhexyladipate	**ND**	0.11	EPA 8270E	9-27-21	9-28-21	
3,3'-Dichlorobenzidine	**ND**	0.011	EPA 8270E	9-27-21	9-28-21	
Benzo[a]anthracene	**ND**	0.0045	EPA 8270E/SIM	9-27-21	9-27-21	
Chrysene	**ND**	0.0045	EPA 8270E/SIM	9-27-21	9-27-21	
bis(2-Ethylhexyl)phthalate	**ND**	0.11	EPA 8270E	9-27-21	9-28-21	
Di-n-octylphthalate	**ND**	0.11	EPA 8270E	9-27-21	9-28-21	
Benzo[b]fluoranthene	**ND**	0.0045	EPA 8270E/SIM	9-27-21	9-27-21	
Benzo(j,k)fluoranthene	**ND**	0.0045	EPA 8270E/SIM	9-27-21	9-27-21	
Benzo[a]pyrene	**ND**	0.0045	EPA 8270E/SIM	9-27-21	9-27-21	
Indeno[1,2,3-cd]pyrene	**ND**	0.0045	EPA 8270E/SIM	9-27-21	9-27-21	
Dibenz[a,h]anthracene	**ND**	0.0045	EPA 8270E/SIM	9-27-21	9-27-21	
Benzo[g,h,i]perylene	**ND**	0.0045	EPA 8270E/SIM	9-27-21	9-27-21	
Surrogate:	*Percent Recovery*	*Control Limits*				
2-Fluorophenol	*57*	*26 - 109*				
Phenol-d6	*63*	*33 - 113*				
Nitrobenzene-d5	*56*	*31 - 110*				
2-Fluorobiphenyl	*67*	*42 - 107*				
2,4,6-Tribromophenol	*67*	*42 - 123*				
Terphenyl-d14	*65*	*41 - 115*				

This report pertains to the samples analyzed in accordance with the chain of custody, and is intended only for the use of the individual or company to whom it is addressed.

Date of Report: September 28, 2021
Samples Submitted: September 24, 2021
Laboratory Reference: 2109-270
Project: 11-05150-003

SEMIVOLATILE ORGANICS EPA 8270E/SIM
page 1 of 2

Matrix: Soil
Units: mg/Kg

Analyte	Result	PQL	Method	Date Prepared	Date Analyzed	Flags
Client ID:	**DA7SWCS26210924I**					
Laboratory ID:	09-270-03					
n-Nitrosodimethylamine	**ND**	0.012	EPA 8270E	9-27-21	9-28-21	
Pyridine	**ND**	0.23	EPA 8270E	9-27-21	9-28-21	
Phenol	**ND**	0.023	EPA 8270E	9-27-21	9-28-21	
Aniline	**ND**	0.12	EPA 8270E	9-27-21	9-28-21	
bis(2-Chloroethyl)ether	**ND**	0.012	EPA 8270E	9-27-21	9-28-21	
2-Chlorophenol	**ND**	0.023	EPA 8270E	9-27-21	9-28-21	
1,3-Dichlorobenzene	**ND**	0.023	EPA 8270E	9-27-21	9-28-21	
1,4-Dichlorobenzene	**ND**	0.023	EPA 8270E	9-27-21	9-28-21	
Benzyl alcohol	**ND**	0.023	EPA 8270E	9-27-21	9-28-21	
1,2-Dichlorobenzene	**ND**	0.023	EPA 8270E	9-27-21	9-28-21	
2-Methylphenol (o-Cresol)	**ND**	0.023	EPA 8270E	9-27-21	9-28-21	
bis(2-Chloroisopropyl)ether	**ND**	0.023	EPA 8270E	9-27-21	9-28-21	
(3+4)-Methylphenol (m,p-Cresol)	**ND**	0.023	EPA 8270E	9-27-21	9-28-21	
n-Nitroso-di-n-propylamine	**ND**	0.012	EPA 8270E	9-27-21	9-28-21	
Hexachloroethane	**ND**	0.023	EPA 8270E	9-27-21	9-28-21	
Nitrobenzene	**ND**	0.023	EPA 8270E	9-27-21	9-28-21	
Isophorone	**ND**	0.023	EPA 8270E	9-27-21	9-28-21	
2-Nitrophenol	**ND**	0.023	EPA 8270E	9-27-21	9-28-21	
2,4-Dimethylphenol	**ND**	0.023	EPA 8270E	9-27-21	9-28-21	
bis(2-Chloroethoxy)methane	**ND**	0.023	EPA 8270E	9-27-21	9-28-21	
2,4-Dichlorophenol	**ND**	0.023	EPA 8270E	9-27-21	9-28-21	
1,2,4-Trichlorobenzene	**ND**	0.023	EPA 8270E	9-27-21	9-28-21	
Naphthalene	**ND**	0.0046	EPA 8270E/SIM	9-27-21	9-27-21	
4-Chloroaniline	**ND**	0.012	EPA 8270E	9-27-21	9-28-21	
Hexachlorobutadiene	**ND**	0.023	EPA 8270E	9-27-21	9-28-21	
4-Chloro-3-methylphenol	**ND**	0.023	EPA 8270E	9-27-21	9-28-21	
2-Methylnaphthalene	**ND**	0.0046	EPA 8270E/SIM	9-27-21	9-27-21	
1-Methylnaphthalene	**ND**	0.0046	EPA 8270E/SIM	9-27-21	9-27-21	
Hexachlorocyclopentadiene	**ND**	0.023	EPA 8270E	9-27-21	9-28-21	
2,4,6-Trichlorophenol	**ND**	0.023	EPA 8270E	9-27-21	9-28-21	
2,3-Dichloroaniline	**ND**	0.023	EPA 8270E	9-27-21	9-28-21	
2,4,5-Trichlorophenol	**ND**	0.023	EPA 8270E	9-27-21	9-28-21	
2-Chloronaphthalene	**ND**	0.023	EPA 8270E	9-27-21	9-28-21	
2-Nitroaniline	**ND**	0.023	EPA 8270E	9-27-21	9-28-21	
1,4-Dinitrobenzene	**ND**	0.023	EPA 8270E	9-27-21	9-28-21	
Dimethylphthalate	**ND**	0.023	EPA 8270E	9-27-21	9-28-21	
1,3-Dinitrobenzene	**ND**	0.023	EPA 8270E	9-27-21	9-28-21	
2,6-Dinitrotoluene	**ND**	0.012	EPA 8270E	9-27-21	9-28-21	
1,2-Dinitrobenzene	**ND**	0.023	EPA 8270E	9-27-21	9-28-21	
Acenaphthylene	**ND**	0.0046	EPA 8270E/SIM	9-27-21	9-27-21	
3-Nitroaniline	**ND**	0.023	EPA 8270E	9-27-21	9-28-21	

This report pertains to the samples analyzed in accordance with the chain of custody, and is intended only for the use of the individual or company to whom it is addressed.

Date of Report: September 28, 2021
Samples Submitted: September 24, 2021
Laboratory Reference: 2109-270
Project: 11-05150-003

SEMIVOLATILE ORGANICS EPA 8270E/SIM
page 2 of 2

Analyte	Result	PQL	Method	Date Prepared	Date Analyzed	Flags
Client ID:	**DA7SWCS26210924I**					
Laboratory ID:	09-270-03					
2,4-Dinitrophenol	**ND**	0.046	EPA 8270E	9-27-21	9-28-21	
Acenaphthene	**ND**	0.0046	EPA 8270E/SIM	9-27-21	9-27-21	
4-Nitrophenol	**ND**	0.023	EPA 8270E	9-27-21	9-28-21	
2,4-Dinitrotoluene	**ND**	0.012	EPA 8270E	9-27-21	9-28-21	
Dibenzofuran	**ND**	0.023	EPA 8270E	9-27-21	9-28-21	
2,3,5,6-Tetrachlorophenol	**ND**	0.023	EPA 8270E	9-27-21	9-28-21	
2,3,4,6-Tetrachlorophenol	**ND**	0.023	EPA 8270E	9-27-21	9-28-21	
Diethylphthalate	**ND**	0.12	EPA 8270E	9-27-21	9-28-21	
4-Chlorophenyl-phenylether	**ND**	0.023	EPA 8270E	9-27-21	9-28-21	
4-Nitroaniline	**ND**	0.023	EPA 8270E	9-27-21	9-28-21	
Fluorene	**ND**	0.0046	EPA 8270E/SIM	9-27-21	9-27-21	
4,6-Dinitro-2-methylphenol	**ND**	0.12	EPA 8270E	9-27-21	9-28-21	
n-Nitrosodiphenylamine	**ND**	0.023	EPA 8270E	9-27-21	9-28-21	
1,2-Diphenylhydrazine	**ND**	0.023	EPA 8270E	9-27-21	9-28-21	
4-Bromophenyl-phenylether	**ND**	0.023	EPA 8270E	9-27-21	9-28-21	
Hexachlorobenzene	**ND**	0.023	EPA 8270E	9-27-21	9-28-21	
Pentachlorophenol	**ND**	0.023	EPA 8270E	9-27-21	9-28-21	
Phenanthrene	**ND**	0.0046	EPA 8270E/SIM	9-27-21	9-27-21	
Anthracene	**ND**	0.0046	EPA 8270E/SIM	9-27-21	9-27-21	
Carbazole	**ND**	0.023	EPA 8270E	9-27-21	9-28-21	
Di-n-butylphthalate	**ND**	0.12	EPA 8270E	9-27-21	9-28-21	
Fluoranthene	**ND**	0.0046	EPA 8270E/SIM	9-27-21	9-27-21	
Pyrene	**ND**	0.0046	EPA 8270E/SIM	9-27-21	9-27-21	
Butylbenzylphthalate	**ND**	0.12	EPA 8270E	9-27-21	9-28-21	
bis-2-Ethylhexyladipate	**ND**	0.12	EPA 8270E	9-27-21	9-28-21	
3,3'-Dichlorobenzidine	**ND**	0.012	EPA 8270E	9-27-21	9-28-21	
Benzo[a]anthracene	**ND**	0.0046	EPA 8270E/SIM	9-27-21	9-27-21	
Chrysene	**ND**	0.0046	EPA 8270E/SIM	9-27-21	9-27-21	
bis(2-Ethylhexyl)phthalate	**ND**	0.12	EPA 8270E	9-27-21	9-28-21	
Di-n-octylphthalate	**ND**	0.12	EPA 8270E	9-27-21	9-28-21	
Benzo[b]fluoranthene	**ND**	0.0046	EPA 8270E/SIM	9-27-21	9-27-21	
Benzo(j,k)fluoranthene	**ND**	0.0046	EPA 8270E/SIM	9-27-21	9-27-21	
Benzo[a]pyrene	**ND**	0.0046	EPA 8270E/SIM	9-27-21	9-27-21	
Indeno[1,2,3-cd]pyrene	**ND**	0.0046	EPA 8270E/SIM	9-27-21	9-27-21	
Dibenz[a,h]anthracene	**ND**	0.0046	EPA 8270E/SIM	9-27-21	9-27-21	
Benzo[g,h,i]perylene	**ND**	0.0046	EPA 8270E/SIM	9-27-21	9-27-21	
Surrogate:	*Percent Recovery*	*Control Limits*				
2-Fluorophenol	*70*	*26 - 109*				
Phenol-d6	*73*	*33 - 113*				
Nitrobenzene-d5	*70*	*31 - 110*				
2-Fluorobiphenyl	*72*	*42 - 107*				
2,4,6-Tribromophenol	*74*	*42 - 123*				
Terphenyl-d14	*73*	*41 - 115*				

This report pertains to the samples analyzed in accordance with the chain of custody, and is intended only for the use of the individual or company to whom it is addressed.

Date of Report: September 28, 2021
Samples Submitted: September 24, 2021
Laboratory Reference: 2109-270
Project: 11-05150-003

SEMIVOLATILE ORGANICS EPA 8270E/SIM
QUALITY CONTROL
page 1 of 2

Matrix: Soil
Units: mg/Kg

Analyte	Result	PQL	Method	Date Prepared	Date Analyzed	Flags
METHOD BLANK						
Laboratory ID:	MB0927S1					
n-Nitrosodimethylamine	**ND**	0.010	EPA 8270E	9-27-21	9-28-21	
Pyridine	**ND**	0.20	EPA 8270E	9-27-21	9-28-21	
Phenol	**ND**	0.020	EPA 8270E	9-27-21	9-28-21	
Aniline	**ND**	0.10	EPA 8270E	9-27-21	9-28-21	
bis(2-Chloroethyl)ether	**ND**	0.010	EPA 8270E	9-27-21	9-28-21	
2-Chlorophenol	**ND**	0.020	EPA 8270E	9-27-21	9-28-21	
1,3-Dichlorobenzene	**ND**	0.020	EPA 8270E	9-27-21	9-28-21	
1,4-Dichlorobenzene	**ND**	0.020	EPA 8270E	9-27-21	9-28-21	
Benzyl alcohol	**ND**	0.020	EPA 8270E	9-27-21	9-28-21	
1,2-Dichlorobenzene	**ND**	0.020	EPA 8270E	9-27-21	9-28-21	
2-Methylphenol (o-Cresol)	**ND**	0.020	EPA 8270E	9-27-21	9-28-21	
bis(2-Chloroisopropyl)ether	**ND**	0.020	EPA 8270E	9-27-21	9-28-21	
(3+4)-Methylphenol (m,p-Cresol)	**ND**	0.020	EPA 8270E	9-27-21	9-28-21	
n-Nitroso-di-n-propylamine	**ND**	0.010	EPA 8270E	9-27-21	9-28-21	
Hexachloroethane	**ND**	0.020	EPA 8270E	9-27-21	9-28-21	
Nitrobenzene	**ND**	0.020	EPA 8270E	9-27-21	9-28-21	
Isophorone	**ND**	0.020	EPA 8270E	9-27-21	9-28-21	
2-Nitrophenol	**ND**	0.020	EPA 8270E	9-27-21	9-28-21	
2,4-Dimethylphenol	**ND**	0.020	EPA 8270E	9-27-21	9-28-21	
bis(2-Chloroethoxy)methane	**ND**	0.020	EPA 8270E	9-27-21	9-28-21	
2,4-Dichlorophenol	**ND**	0.020	EPA 8270E	9-27-21	9-28-21	
1,2,4-Trichlorobenzene	**ND**	0.020	EPA 8270E	9-27-21	9-28-21	
Naphthalene	**ND**	0.0040	EPA 8270E/SIM	9-27-21	9-27-21	
4-Chloroaniline	**ND**	0.010	EPA 8270E	9-27-21	9-28-21	
Hexachlorobutadiene	**ND**	0.020	EPA 8270E	9-27-21	9-28-21	
4-Chloro-3-methylphenol	**ND**	0.020	EPA 8270E	9-27-21	9-28-21	
2-Methylnaphthalene	**ND**	0.0040	EPA 8270E/SIM	9-27-21	9-27-21	
1-Methylnaphthalene	**ND**	0.0040	EPA 8270E/SIM	9-27-21	9-27-21	
Hexachlorocyclopentadiene	**ND**	0.020	EPA 8270E	9-27-21	9-28-21	
2,4,6-Trichlorophenol	**ND**	0.020	EPA 8270E	9-27-21	9-28-21	
2,3-Dichloroaniline	**ND**	0.020	EPA 8270E	9-27-21	9-28-21	
2,4,5-Trichlorophenol	**ND**	0.020	EPA 8270E	9-27-21	9-28-21	
2-Chloronaphthalene	**ND**	0.020	EPA 8270E	9-27-21	9-28-21	
2-Nitroaniline	**ND**	0.020	EPA 8270E	9-27-21	9-28-21	
1,4-Dinitrobenzene	**ND**	0.020	EPA 8270E	9-27-21	9-28-21	
Dimethylphthalate	**ND**	0.020	EPA 8270E	9-27-21	9-28-21	
1,3-Dinitrobenzene	**ND**	0.020	EPA 8270E	9-27-21	9-28-21	
2,6-Dinitrotoluene	**ND**	0.010	EPA 8270E	9-27-21	9-28-21	
1,2-Dinitrobenzene	**ND**	0.020	EPA 8270E	9-27-21	9-28-21	
Acenaphthylene	**ND**	0.0040	EPA 8270E/SIM	9-27-21	9-27-21	
3-Nitroaniline	**ND**	0.020	EPA 8270E	9-27-21	9-28-21	

This report pertains to the samples analyzed in accordance with the chain of custody,
and is intended only for the use of the individual or company to whom it is addressed.

Date of Report: September 28, 2021
Samples Submitted: September 24, 2021
Laboratory Reference: 2109-270
Project: 11-05150-003

SEMIVOLATILE ORGANICS EPA 8270E/SIM
QUALITY CONTROL
page 2 of 2

Analyte	Result	PQL	Method	Date Prepared	Date Analyzed	Flags
METHOD BLANK						
Laboratory ID:	MB0927S1					
2,4-Dinitrophenol	**ND**	0.040	EPA 8270E	9-27-21	9-28-21	
Acenaphthene	**ND**	0.0040	EPA 8270E/SIM	9-27-21	9-27-21	
4-Nitrophenol	**ND**	0.020	EPA 8270E	9-27-21	9-28-21	
2,4-Dinitrotoluene	**ND**	0.010	EPA 8270E	9-27-21	9-28-21	
Dibenzofuran	**ND**	0.020	EPA 8270E	9-27-21	9-28-21	
2,3,5,6-Tetrachlorophenol	**ND**	0.020	EPA 8270E	9-27-21	9-28-21	
2,3,4,6-Tetrachlorophenol	**ND**	0.020	EPA 8270E	9-27-21	9-28-21	
Diethylphthalate	**ND**	0.10	EPA 8270E	9-27-21	9-28-21	
4-Chlorophenyl-phenylether	**ND**	0.020	EPA 8270E	9-27-21	9-28-21	
4-Nitroaniline	**ND**	0.020	EPA 8270E	9-27-21	9-28-21	
Fluorene	**ND**	0.0040	EPA 8270E/SIM	9-27-21	9-27-21	
4,6-Dinitro-2-methylphenol	**ND**	0.10	EPA 8270E	9-27-21	9-28-21	
n-Nitrosodiphenylamine	**ND**	0.020	EPA 8270E	9-27-21	9-28-21	
1,2-Diphenylhydrazine	**ND**	0.020	EPA 8270E	9-27-21	9-28-21	
4-Bromophenyl-phenylether	**ND**	0.020	EPA 8270E	9-27-21	9-28-21	
Hexachlorobenzene	**ND**	0.020	EPA 8270E	9-27-21	9-28-21	
Pentachlorophenol	**ND**	0.020	EPA 8270E	9-27-21	9-28-21	
Phenanthrene	**ND**	0.0040	EPA 8270E/SIM	9-27-21	9-27-21	
Anthracene	**ND**	0.0040	EPA 8270E/SIM	9-27-21	9-27-21	
Carbazole	**ND**	0.020	EPA 8270E	9-27-21	9-28-21	
Di-n-butylphthalate	**ND**	0.10	EPA 8270E	9-27-21	9-28-21	
Fluoranthene	**ND**	0.0040	EPA 8270E/SIM	9-27-21	9-27-21	
Pyrene	**ND**	0.0040	EPA 8270E/SIM	9-27-21	9-27-21	
Butylbenzylphthalate	**ND**	0.10	EPA 8270E	9-27-21	9-28-21	
bis-2-Ethylhexyladipate	**ND**	0.10	EPA 8270E	9-27-21	9-28-21	
3,3'-Dichlorobenzidine	**ND**	0.010	EPA 8270E	9-27-21	9-28-21	
Benzo[a]anthracene	**ND**	0.0040	EPA 8270E/SIM	9-27-21	9-27-21	
Chrysene	**ND**	0.0040	EPA 8270E/SIM	9-27-21	9-27-21	
bis(2-Ethylhexyl)phthalate	**ND**	0.10	EPA 8270E	9-27-21	9-28-21	
Di-n-octylphthalate	**ND**	0.10	EPA 8270E	9-27-21	9-28-21	
Benzo[b]fluoranthene	**ND**	0.0040	EPA 8270E/SIM	9-27-21	9-27-21	
Benzo(j,k)fluoranthene	**ND**	0.0040	EPA 8270E/SIM	9-27-21	9-27-21	
Benzo[a]pyrene	**ND**	0.0040	EPA 8270E/SIM	9-27-21	9-27-21	
Indeno[1,2,3-cd]pyrene	**ND**	0.0040	EPA 8270E/SIM	9-27-21	9-27-21	
Dibenz[a,h]anthracene	**ND**	0.0040	EPA 8270E/SIM	9-27-21	9-27-21	
Benzo[g,h,i]perylene	**ND**	0.0040	EPA 8270E/SIM	9-27-21	9-27-21	
Surrogate:	*Percent Recovery*	*Control Limits*				
2-Fluorophenol	*85*	*26 - 109*				
Phenol-d6	*89*	*33 - 113*				
Nitrobenzene-d5	*84*	*31 - 110*				
2-Fluorobiphenyl	*87*	*42 - 107*				
2,4,6-Tribromophenol	*88*	*42 - 123*				
Terphenyl-d14	*84*	*41 - 115*				

This report pertains to the samples analyzed in accordance with the chain of custody, and is intended only for the use of the individual or company to whom it is addressed.

Date of Report: September 28, 2021
Samples Submitted: September 24, 2021
Laboratory Reference: 2109-270
Project: 11-05150-003

SEMIVOLATILE ORGANICS EPA 8270E/SIM
QUALITY CONTROL

Matrix: Soil
Units: mg/Kg

Analyte	Result		Spike Level		Percent Recovery		Recovery Limits	RPD	RPD Limit	Flags
SPIKE BLANKS										
Laboratory ID:	SB0927S1									
	SB	SBD	SB	SBD	SB	SBD				
Phenol	**1.20**	**1.20**	1.33	1.33	90	90	47 - 106	0	30	
2-Chlorophenol	**1.24**	**1.23**	1.33	1.33	93	92	51 - 105	1	31	
1,4-Dichlorobenzene	**0.574**	**0.574**	0.667	0.667	86	86	49 - 101	0	33	
n-Nitroso-di-n-propylamine	**0.591**	**0.594**	0.667	0.667	89	89	50 - 105	1	26	
1,2,4-Trichlorobenzene	**0.613**	**0.616**	0.667	0.667	92	92	50 - 107	0	31	
4-Chloro-3-methylphenol	**1.24**	**1.23**	1.33	1.33	93	92	58 - 114	1	22	
Acenaphthene	**0.604**	**0.598**	0.667	0.667	91	90	52 - 102	1	22	
4-Nitrophenol	**1.33**	**1.36**	1.33	1.33	100	102	51 - 126	2	20	
2,4-Dinitrotoluene	**0.598**	**0.581**	0.667	0.667	90	87	54 - 108	3	19	
Pentachlorophenol	**1.39**	**1.37**	1.33	1.33	105	103	20 - 148	1	30	
Pyrene	**0.630**	**0.622**	0.667	0.667	94	93	55 - 112	1	19	
Surrogate:										
2-Fluorophenol					*82*	*80*	*26 - 109*			
Phenol-d6					*84*	*82*	*33 - 113*			
Nitrobenzene-d5					*80*	*79*	*31 - 110*			
2-Fluorobiphenyl					*80*	*82*	*42 - 107*			
2,4,6-Tribromophenol					*85*	*84*	*42 - 123*			
Terphenyl-d14					*79*	*79*	*41 - 115*			

This report pertains to the samples analyzed in accordance with the chain of custody, and is intended only for the use of the individual or company to whom it is addressed.

Date of Report: September 28, 2021
Samples Submitted: September 24, 2021
Laboratory Reference: 2109-270
Project: 11-05150-003

PCBs EPA 8082A

Matrix: Soil
Units: mg/Kg (ppm)

Analyte	Result	PQL	Method	Date Prepared	Date Analyzed	Flags
Client ID:	**DA7SWCS24210924I**					
Laboratory ID:	09-270-01					
Aroclor 1016	**ND**	0.022	EPA 8082A	9-27-21	9-27-21	
Aroclor 1221	**ND**	0.022	EPA 8082A	9-27-21	9-27-21	
Aroclor 1232	**ND**	0.022	EPA 8082A	9-27-21	9-27-21	
Aroclor 1242	**ND**	0.022	EPA 8082A	9-27-21	9-27-21	
Aroclor 1248	**ND**	0.022	EPA 8082A	9-27-21	9-27-21	
Aroclor 1254	**ND**	0.022	EPA 8082A	9-27-21	9-27-21	
Aroclor 1260	**ND**	0.022	EPA 8082A	9-27-21	9-27-21	
Surrogate:	*Percent Recovery*	*Control Limits*				
DCB	*76*	*54-135*				
Client ID:	**DA7SWCS25210924I**					
Laboratory ID:	09-270-02					
Aroclor 1016	**ND**	0.023	EPA 8082A	9-27-21	9-27-21	
Aroclor 1221	**ND**	0.023	EPA 8082A	9-27-21	9-27-21	
Aroclor 1232	**ND**	0.023	EPA 8082A	9-27-21	9-27-21	
Aroclor 1242	**ND**	0.023	EPA 8082A	9-27-21	9-27-21	
Aroclor 1248	**ND**	0.023	EPA 8082A	9-27-21	9-27-21	
Aroclor 1254	**ND**	0.023	EPA 8082A	9-27-21	9-27-21	
Aroclor 1260	**ND**	0.023	EPA 8082A	9-27-21	9-27-21	
Surrogate:	*Percent Recovery*	*Control Limits*				
DCB	*65*	*54-135*				
Client ID:	**DA7SWCS26210924I**					
Laboratory ID:	09-270-03					
Aroclor 1016	**ND**	0.023	EPA 8082A	9-27-21	9-27-21	
Aroclor 1221	**ND**	0.023	EPA 8082A	9-27-21	9-27-21	
Aroclor 1232	**ND**	0.023	EPA 8082A	9-27-21	9-27-21	
Aroclor 1242	**ND**	0.023	EPA 8082A	9-27-21	9-27-21	
Aroclor 1248	**ND**	0.023	EPA 8082A	9-27-21	9-27-21	
Aroclor 1254	**ND**	0.023	EPA 8082A	9-27-21	9-27-21	
Aroclor 1260	**ND**	0.023	EPA 8082A	9-27-21	9-27-21	
Surrogate:	*Percent Recovery*	*Control Limits*				
DCB	*77*	*54-135*				

This report pertains to the samples analyzed in accordance with the chain of custody, and is intended only for the use of the individual or company to whom it is addressed.

Date of Report: September 28, 2021
Samples Submitted: September 24, 2021
Laboratory Reference: 2109-270
Project: 11-05150-003

PCBs EPA 8082A
QUALITY CONTROL

Matrix: Soil
Units: mg/Kg (ppm)

Analyte	Result	PQL	Method	Date Prepared	Date Analyzed	Flags
METHOD BLANK						
Laboratory ID:	MB0927S1					
Aroclor 1016	**ND**	0.020	EPA 8082A	9-27-21	9-27-21	
Aroclor 1221	**ND**	0.020	EPA 8082A	9-27-21	9-27-21	
Aroclor 1232	**ND**	0.020	EPA 8082A	9-27-21	9-27-21	
Aroclor 1242	**ND**	0.020	EPA 8082A	9-27-21	9-27-21	
Aroclor 1248	**ND**	0.020	EPA 8082A	9-27-21	9-27-21	
Aroclor 1254	**ND**	0.020	EPA 8082A	9-27-21	9-27-21	
Aroclor 1260	**ND**	0.020	EPA 8082A	9-27-21	9-27-21	
Surrogate:	*Percent Recovery*	*Control Limits*				
DCB	*79*	*54-135*				

Analyte	Result		Spike Level		Source Result	Percent Recovery		Recovery Limits	RPD	RPD Limit	Flags
MATRIX SPIKES											
Laboratory ID:	09-270-01										
	MS	MSD	MS	MSD		MS	MSD				
Aroclor 1260	**0.384**	**0.382**	0.500	0.500	ND	**77**	**76**	62-129	1	15	
Surrogate:											
DCB						*80*	*74*	*54-135*			

This report pertains to the samples analyzed in accordance with the chain of custody, and is intended only for the use of the individual or company to whom it is addressed.

Date of Report: September 28, 2021
Samples Submitted: September 24, 2021
Laboratory Reference: 2109-270
Project: 11-05150-003

ORGANOCHLORINE PESTICIDES EPA 8081B

Matrix: Soil
Units: ug/Kg (ppb)

Analyte	Result	PQL	Method	Date Prepared	Date Analyzed	Flags
Client ID:	**DA7SWCS24210924I**					
Laboratory ID:	09-270-01					
alpha-BHC	**ND**	0.22	EPA 8081B	9-28-21	9-28-21	
gamma-BHC (Lindane)	**ND**	0.22	EPA 8081B	9-28-21	9-28-21	
beta-BHC	**ND**	0.22	EPA 8081B	9-28-21	9-28-21	
delta-BHC	**ND**	0.22	EPA 8081B	9-28-21	9-28-21	
Heptachlor	**ND**	0.22	EPA 8081B	9-28-21	9-28-21	
Aldrin	**ND**	0.22	EPA 8081B	9-28-21	9-28-21	
Heptachlor Epoxide	**ND**	0.22	EPA 8081B	9-28-21	9-28-21	
gamma-Chlordane	**ND**	0.22	EPA 8081B	9-28-21	9-28-21	
alpha-Chlordane	**ND**	0.22	EPA 8081B	9-28-21	9-28-21	
4,4'-DDE	**ND**	0.22	EPA 8081B	9-28-21	9-28-21	
Endosulfan I	**ND**	0.22	EPA 8081B	9-28-21	9-28-21	
Dieldrin	**ND**	0.22	EPA 8081B	9-28-21	9-28-21	
Endrin	**ND**	0.22	EPA 8081B	9-28-21	9-28-21	
4,4'-DDD	**ND**	0.22	EPA 8081B	9-28-21	9-28-21	
Endosulfan II	**ND**	0.22	EPA 8081B	9-28-21	9-28-21	
4,4'-DDT	**ND**	0.22	EPA 8081B	9-28-21	9-28-21	
Endrin Aldehyde	**ND**	0.22	EPA 8081B	9-28-21	9-28-21	
Methoxychlor	**ND**	0.22	EPA 8081B	9-28-21	9-28-21	
Endosulfan Sulfate	**ND**	0.22	EPA 8081B	9-28-21	9-28-21	
Endrin Ketone	**ND**	0.22	EPA 8081B	9-28-21	9-28-21	
Toxaphene	**ND**	5.6	EPA 8081B	9-28-21	9-28-21	
Surrogate:	*Percent Recovery*	*Control Limits*				
TCMX	*61*	*30-110*				
DCB	*86*	*40-117*				

This report pertains to the samples analyzed in accordance with the chain of custody, and is intended only for the use of the individual or company to whom it is addressed.

Date of Report: September 28, 2021
Samples Submitted: September 24, 2021
Laboratory Reference: 2109-270
Project: 11-05150-003

ORGANOCHLORINE PESTICIDES EPA 8081B

Matrix: Soil
Units: ug/Kg (ppb)

Analyte	Result	PQL	Method	Date Prepared	Date Analyzed	Flags
Client ID:	**DA7SWCS25210924I**					
Laboratory ID:	09-270-02					
alpha-BHC	**ND**	0.23	EPA 8081B	9-28-21	9-28-21	
gamma-BHC (Lindane)	**ND**	0.23	EPA 8081B	9-28-21	9-28-21	
beta-BHC	**ND**	0.23	EPA 8081B	9-28-21	9-28-21	
delta-BHC	**ND**	0.23	EPA 8081B	9-28-21	9-28-21	
Heptachlor	**ND**	0.23	EPA 8081B	9-28-21	9-28-21	
Aldrin	**ND**	0.23	EPA 8081B	9-28-21	9-28-21	
Heptachlor Epoxide	**ND**	0.23	EPA 8081B	9-28-21	9-28-21	
gamma-Chlordane	**ND**	0.23	EPA 8081B	9-28-21	9-28-21	
alpha-Chlordane	**ND**	0.23	EPA 8081B	9-28-21	9-28-21	
4,4'-DDE	**ND**	0.23	EPA 8081B	9-28-21	9-28-21	
Endosulfan I	**ND**	0.23	EPA 8081B	9-28-21	9-28-21	
Dieldrin	**ND**	0.23	EPA 8081B	9-28-21	9-28-21	
Endrin	**ND**	0.23	EPA 8081B	9-28-21	9-28-21	
4,4'-DDD	**ND**	0.23	EPA 8081B	9-28-21	9-28-21	
Endosulfan II	**ND**	0.23	EPA 8081B	9-28-21	9-28-21	
4,4'-DDT	**ND**	0.23	EPA 8081B	9-28-21	9-28-21	
Endrin Aldehyde	**ND**	0.23	EPA 8081B	9-28-21	9-28-21	
Methoxychlor	**ND**	0.23	EPA 8081B	9-28-21	9-28-21	
Endosulfan Sulfate	**ND**	0.23	EPA 8081B	9-28-21	9-28-21	
Endrin Ketone	**ND**	0.23	EPA 8081B	9-28-21	9-28-21	
Toxaphene	**ND**	5.7	EPA 8081B	9-28-21	9-28-21	
Surrogate:	*Percent Recovery*	*Control Limits*				
TCMX	*64*	*30-110*				
DCB	*78*	*40-117*				

This report pertains to the samples analyzed in accordance with the chain of custody, and is intended only for the use of the individual or company to whom it is addressed.

Date of Report: September 28, 2021
Samples Submitted: September 24, 2021
Laboratory Reference: 2109-270
Project: 11-05150-003

ORGANOCHLORINE PESTICIDES EPA 8081B

Matrix: Soil
Units: ug/Kg (ppb)

Analyte	Result	PQL	Method	Date Prepared	Date Analyzed	Flags
Client ID:	**DA7SWCS26210924I**					
Laboratory ID:	09-270-03					
alpha-BHC	**ND**	0.23	EPA 8081B	9-28-21	9-28-21	
gamma-BHC (Lindane)	**ND**	0.23	EPA 8081B	9-28-21	9-28-21	
beta-BHC	**ND**	0.23	EPA 8081B	9-28-21	9-28-21	
delta-BHC	**ND**	0.23	EPA 8081B	9-28-21	9-28-21	
Heptachlor	**ND**	0.23	EPA 8081B	9-28-21	9-28-21	
Aldrin	**ND**	0.23	EPA 8081B	9-28-21	9-28-21	
Heptachlor Epoxide	**ND**	0.23	EPA 8081B	9-28-21	9-28-21	
gamma-Chlordane	**ND**	0.23	EPA 8081B	9-28-21	9-28-21	
alpha-Chlordane	**ND**	0.23	EPA 8081B	9-28-21	9-28-21	
4,4'-DDE	**ND**	0.23	EPA 8081B	9-28-21	9-28-21	
Endosulfan I	**ND**	0.23	EPA 8081B	9-28-21	9-28-21	
Dieldrin	**ND**	0.23	EPA 8081B	9-28-21	9-28-21	
Endrin	**ND**	0.23	EPA 8081B	9-28-21	9-28-21	
4,4'-DDD	**ND**	0.23	EPA 8081B	9-28-21	9-28-21	
Endosulfan II	**ND**	0.23	EPA 8081B	9-28-21	9-28-21	
4,4'-DDT	**ND**	0.23	EPA 8081B	9-28-21	9-28-21	
Endrin Aldehyde	**ND**	0.23	EPA 8081B	9-28-21	9-28-21	
Methoxychlor	**ND**	0.23	EPA 8081B	9-28-21	9-28-21	
Endosulfan Sulfate	**ND**	0.23	EPA 8081B	9-28-21	9-28-21	
Endrin Ketone	**ND**	0.23	EPA 8081B	9-28-21	9-28-21	
Toxaphene	**ND**	5.8	EPA 8081B	9-28-21	9-28-21	
Surrogate:	*Percent Recovery*	*Control Limits*				
TCMX	*63*	*30-110*				
DCB	*73*	*40-117*				

This report pertains to the samples analyzed in accordance with the chain of custody, and is intended only for the use of the individual or company to whom it is addressed.

Date of Report: September 28, 2021
Samples Submitted: September 24, 2021
Laboratory Reference: 2109-270
Project: 11-05150-003

ORGANOCHLORINE PESTICIDES EPA 8081B QUALITY CONTROL

Matrix: Soil
Units: ug/Kg (ppb)

Analyte	Result	PQL	Method	Date Prepared	Date Analyzed	Flags
METHOD BLANK						
Laboratory ID:	MB0928S1					
alpha-BHC	**ND**	0.20	EPA 8081B	9-28-21	9-28-21	
gamma-BHC (Lindane)	**ND**	0.20	EPA 8081B	9-28-21	9-28-21	
beta-BHC	**ND**	0.20	EPA 8081B	9-28-21	9-28-21	
delta-BHC	**ND**	0.20	EPA 8081B	9-28-21	9-28-21	
Heptachlor	**ND**	0.20	EPA 8081B	9-28-21	9-28-21	
Aldrin	**ND**	0.20	EPA 8081B	9-28-21	9-28-21	
Heptachlor Epoxide	**ND**	0.20	EPA 8081B	9-28-21	9-28-21	
gamma-Chlordane	**ND**	0.20	EPA 8081B	9-28-21	9-28-21	
alpha-Chlordane	**ND**	0.20	EPA 8081B	9-28-21	9-28-21	
4,4'-DDE	**ND**	0.20	EPA 8081B	9-28-21	9-28-21	
Endosulfan I	**ND**	0.20	EPA 8081B	9-28-21	9-28-21	
Dieldrin	**ND**	0.20	EPA 8081B	9-28-21	9-28-21	
Endrin	**ND**	0.20	EPA 8081B	9-28-21	9-28-21	
4,4'-DDD	**ND**	0.20	EPA 8081B	9-28-21	9-28-21	
Endosulfan II	**ND**	0.20	EPA 8081B	9-28-21	9-28-21	
4,4'-DDT	**ND**	0.20	EPA 8081B	9-28-21	9-28-21	
Endrin Aldehyde	**ND**	0.20	EPA 8081B	9-28-21	9-28-21	
Methoxychlor	**ND**	0.20	EPA 8081B	9-28-21	9-28-21	
Endosulfan Sulfate	**ND**	0.20	EPA 8081B	9-28-21	9-28-21	
Endrin Ketone	**ND**	0.20	EPA 8081B	9-28-21	9-28-21	
Toxaphene	**ND**	5.0	EPA 8081B	9-28-21	9-28-21	
Surrogate:	*Percent Recovery*	*Control Limits*				
TCMX	*80*	*30-110*				
DCB	*86*	*40-117*				

This report pertains to the samples analyzed in accordance with the chain of custody, and is intended only for the use of the individual or company to whom it is addressed.

Date of Report: September 28, 2021
Samples Submitted: September 24, 2021
Laboratory Reference: 2109-270
Project: 11-05150-003

ORGANOCHLORINE PESTICIDES EPA 8081B QUALITY CONTROL

Matrix: Soil
Units: ug/Kg (ppb)

Analyte	Result		Spike Level		Source Result	Percent Recovery		Recovery Limits	RPD	RPD Limit	Flags
MATRIX SPIKES											
Laboratory ID:	09-270-02										
	MS	MSD	MS	MSD		MS	MSD				
alpha-BHC	**7.51**	**7.41**	10.0	10.0	ND	**75**	**74**	36-123	1	21	
gamma-BHC (Lindane)	**7.67**	**7.33**	10.0	10.0	ND	**77**	**73**	38-121	5	21	
beta-BHC	**6.71**	**6.48**	10.0	10.0	ND	**67**	**65**	31-125	3	21	
delta-BHC	**7.49**	**7.30**	10.0	10.0	ND	**75**	**73**	37-118	3	23	
Heptachlor	**7.57**	**7.48**	10.0	10.0	ND	**76**	**75**	37-123	1	24	
Aldrin	**7.10**	**7.03**	10.0	10.0	ND	**71**	**70**	45-118	1	22	
Heptachlor Epoxide	**7.70**	**7.47**	10.0	10.0	ND	**77**	**75**	46-114	3	22	
gamma-Chlordane	**6.62**	**6.60**	10.0	10.0	ND	**66**	**66**	41-120	0	23	
alpha-Chlordane	**7.16**	**7.00**	10.0	10.0	ND	**72**	**70**	43-118	2	23	
4,4'-DDE	**9.20**	**8.41**	10.0	10.0	ND	**92**	**84**	34-139	9	22	
Endosulfan I	**8.42**	**8.21**	10.0	10.0	ND	**84**	**82**	43-124	3	25	
Dieldrin	**7.81**	**7.39**	10.0	10.0	ND	**78**	**74**	40-128	6	23	
Endrin	**8.12**	**7.92**	10.0	10.0	ND	**81**	**79**	44-120	2	28	
4,4'-DDD	**8.04**	**7.93**	10.0	10.0	ND	**80**	**79**	42-131	1	21	
Endosulfan II	**7.37**	**7.04**	10.0	10.0	ND	**74**	**70**	47-112	5	22	
4,4'-DDT	**8.94**	**8.12**	10.0	10.0	ND	**89**	**81**	29-141	10	32	
Endrin Aldehyde	**7.34**	**6.90**	10.0	10.0	ND	**73**	**69**	41-114	6	22	
Methoxychlor	**9.23**	**8.16**	10.0	10.0	ND	**92**	**82**	31-139	12	23	
Endosulfan Sulfate	**7.40**	**6.83**	10.0	10.0	ND	**74**	**68**	48-112	8	21	
Endrin Ketone	**7.59**	**7.42**	10.0	10.0	ND	**76**	**74**	46-117	2	22	
Surrogate:											
TCMX						*66*	*65*	*30-110*			
DCB						*74*	*67*	*40-117*			

This report pertains to the samples analyzed in accordance with the chain of custody, and is intended only for the use of the individual or company to whom it is addressed.

Date of Report: September 28, 2021
Samples Submitted: September 24, 2021
Laboratory Reference: 2109-270
Project: 11-05150-003

TOTAL METALS
EPA 6010D/6020B/7471B

Matrix: Soil
Units: mg/Kg (ppm)

Analyte	Result	PQL	Method	Date Prepared	Date Analyzed	Flags
Client ID:	**DA7SWCS24210924I**					
Laboratory ID:	09-270-01					
Arsenic	**ND**	5.6	EPA 6010D	9-27-21	9-27-21	
Barium	**43**	2.8	EPA 6010D	9-27-21	9-27-21	
Cadmium	**ND**	0.56	EPA 6010D	9-27-21	9-27-21	
Chromium	**22**	0.56	EPA 6010D	9-27-21	9-27-21	
Lead	**ND**	5.6	EPA 6010D	9-27-21	9-27-21	
Mercury	**ND**	0.056	EPA 7471B	9-27-21	9-27-21	
Selenium	**0.19**	0.14	EPA 6020B	9-28-21	9-28-21	
Silver	**ND**	1.1	EPA 6010D	9-27-21	9-27-21	
Client ID:	**DA7SWCS25210924I**					
Laboratory ID:	09-270-02					
Arsenic	**ND**	5.7	EPA 6010D	9-27-21	9-27-21	
Barium	**38**	2.8	EPA 6010D	9-27-21	9-27-21	
Cadmium	**ND**	0.57	EPA 6010D	9-27-21	9-27-21	
Chromium	**20**	0.57	EPA 6010D	9-27-21	9-27-21	
Lead	**ND**	5.7	EPA 6010D	9-27-21	9-27-21	
Mercury	**ND**	0.057	EPA 7471B	9-27-21	9-27-21	
Selenium	**0.25**	0.14	EPA 6020B	9-28-21	9-28-21	
Silver	**ND**	1.1	EPA 6010D	9-27-21	9-27-21	
Client ID:	**DA7SWCS26210924I**					
Laboratory ID:	09-270-03					
Arsenic	**ND**	5.8	EPA 6010D	9-27-21	9-27-21	
Barium	**35**	2.9	EPA 6010D	9-27-21	9-27-21	
Cadmium	**ND**	0.58	EPA 6010D	9-27-21	9-27-21	
Chromium	**12**	0.58	EPA 6010D	9-27-21	9-27-21	
Lead	**ND**	5.8	EPA 6010D	9-27-21	9-27-21	
Mercury	**ND**	0.058	EPA 7471B	9-27-21	9-27-21	
Selenium	**0.25**	0.14	EPA 6020B	9-28-21	9-28-21	
Silver	**ND**	1.2	EPA 6010D	9-27-21	9-27-21	

This report pertains to the samples analyzed in accordance with the chain of custody, and is intended only for the use of the individual or company to whom it is addressed.

Date of Report: September 28, 2021
Samples Submitted: September 24, 2021
Laboratory Reference: 2109-270
Project: 11-05150-003

TOTAL METALS
EPA 6010D/6020B/7471B
QUALITY CONTROL

Matrix: Soil
Units: mg/Kg (ppm)

Analyte	Result	PQL	Method	Date Prepared	Date Analyzed	Flags
METHOD BLANK						
Laboratory ID:	MB0927SM1					
Arsenic	**ND**	5.0	EPA 6010D	9-27-21	9-27-21	
Barium	**ND**	2.5	EPA 6010D	9-27-21	9-27-21	
Cadmium	**ND**	0.50	EPA 6010D	9-27-21	9-27-21	
Chromium	**ND**	0.50	EPA 6010D	9-27-21	9-27-21	
Lead	**ND**	5.0	EPA 6010D	9-27-21	9-27-21	
Silver	**ND**	1.0	EPA 6010D	9-27-21	9-27-21	
Laboratory ID:	MB0928SM1					
Selenium	**ND**	0.13	EPA 6020B	9-28-21	9-28-21	
Laboratory ID:	MB0927S1					
Mercury	**ND**	0.050	EPA 7471B	9-27-21	9-27-21	

This report pertains to the samples analyzed in accordance with the chain of custody,
and is intended only for the use of the individual or company to whom it is addressed.

Date of Report: September 28, 2021
Samples Submitted: September 24, 2021
Laboratory Reference: 2109-270
Project: 11-05150-003

TOTAL METALS
EPA 6010D/6020B/7471B
QUALITY CONTROL

Matrix: Soil
Units: mg/Kg (ppm)

Analyte	Result		Spike Level		Source Result	Percent Recovery		Recovery Limits	RPD	RPD Limit	Flags
DUPLICATE											
Laboratory ID:	09-270-01										
	ORIG	DUP									
Arsenic	**ND**	**ND**	NA	NA		NA		NA	NA	20	
Barium	**38.9**	**49.7**	NA	NA		NA		NA	24	20	K
Cadmium	**ND**	**ND**	NA	NA		NA		NA	NA	20	
Chromium	**19.9**	**17.3**	NA	NA		NA		NA	14	20	
Lead	**ND**	**ND**	NA	NA		NA		NA	NA	20	
Silver	**ND**	**ND**	NA	NA		NA		NA	NA	20	
Laboratory ID:	09-270-01										
Selenium	**0.168**	**0.160**	NA	NA		NA		NA	5	20	
Laboratory ID:	09-222-13										
Mercury	**0.0546**	**0.0637**	NA	NA		NA		NA	15	20	
MATRIX SPIKES											
Laboratory ID:	09-270-01										
	MS	MSD	MS	MSD		MS	MSD				
Arsenic	**92.9**	**88.2**	100	100	ND	**93**	**88**	75-125	5	20	
Barium	**136**	**135**	100	100	38.9	**97**	**96**	75-125	0	20	
Cadmium	**49.9**	**49.0**	50.0	50.0	ND	**100**	**98**	75-125	2	20	
Chromium	**118**	**115**	100	100	19.9	**98**	**96**	75-125	2	20	
Lead	**254**	**250**	250	250	ND	**101**	**100**	75-125	2	20	
Silver	**22.4**	**22.0**	25.0	25.0	ND	**89**	**88**	75-125	2	20	
Laboratory ID:	09-270-01										
Selenium	**44.5**	**48.8**	50.0	50.0	0.168	**89**	**97**	75-125	9	20	
Laboratory ID:	09-222-13										
Mercury	**0.580**	**0.598**	0.500	0.500	0.0546	**105**	**109**	80-120	3	20	

This report pertains to the samples analyzed in accordance with the chain of custody,
and is intended only for the use of the individual or company to whom it is addressed.

Date of Report: September 28, 2021
Samples Submitted: September 24, 2021
Laboratory Reference: 2109-270
Project: 11-05150-003

% MOISTURE

Client ID	Lab ID	% Moisture	Date Analyzed
DA7SWCS24210924I	09-270-01	**11**	9-27-21
DA7SWCS25210924I	09-270-02	**12**	9-27-21
DA7SWCS26210924I	09-270-03	**14**	9-27-21

This report pertains to the samples analyzed in accordance with the chain of custody,
and is intended only for the use of the individual or company to whom it is addressed.

OnSite Environmental Inc.

Data Qualifiers and Abbreviations

A - Due to a high sample concentration, the amount spiked is insufficient for meaningful MS/MSD recovery data.

B - The analyte indicated was also found in the blank sample.

C - The duplicate RPD is outside control limits due to high result variability when analyte concentrations are within five times the quantitation limit.

E - The value reported exceeds the quantitation range and is an estimate.

F - Surrogate recovery data is not available due to the high concentration of coeluting target compounds.

H - The analyte indicated is a common laboratory solvent and may have been introduced during sample preparation, and be impacting the sample result.

I - Compound recovery is outside of the control limits.

J - The value reported was below the practical quantitation limit. The value is an estimate.

K - Sample duplicate RPD is outside control limits due to sample inhomogeneity. The sample was re-extracted and re-analyzed with similar results.

L - The RPD is outside of the control limits.

M - Hydrocarbons in the gasoline range are impacting the diesel range result.

M1 - Hydrocarbons in the gasoline range (toluene-naphthalene) are present in the sample.

N - Hydrocarbons in the lube oil range are impacting the diesel range result.

N1 - Hydrocarbons in diesel range are impacting lube oil range results.

O - Hydrocarbons indicative of heavier fuels are present in the sample and are impacting the gasoline result.

P - The RPD of the detected concentrations between the two columns is greater than 40.

Q - Surrogate recovery is outside of the control limits.

S - Surrogate recovery data is not available due to the necessary dilution of the sample.

T - The sample chromatogram is not similar to a typical _____.

U - The analyte was analyzed for, but was not detected above the reported sample quantitation limit.

U1 - The practical quantitation limit is elevated due to interferences present in the sample.

V - Matrix Spike/Matrix Spike Duplicate recoveries are outside control limits due to matrix effects.

W - Matrix Spike/Matrix Spike Duplicate RPD are outside control limits due to matrix effects.

X - Sample extract treated with a mercury cleanup procedure.

X1- Sample extract treated with a sulfuric acid/silica gel cleanup procedure.

Y - The calibration verification for this analyte exceeded the 20% drift specified in methods 8260 & 8270, and therefore the reported result should be considered an estimate. The overall performance of the calibration verification standard met the acceptance criteria of the method.

Y1 - Negative effects of the matrix from this sample on the instrument caused values for this analyte in the bracketing continuing calibration verification standard (CCVs) to be outside of 20% acceptance criteria. Because of this, quantitation limits and sample concentrations should be considered estimates.

Z -

ND - Not Detected at PQL
PQL - Practical Quantitation Limit
RPD - Relative Percent Difference

This report pertains to the samples analyzed in accordance with the chain of custody, and is intended only for the use of the individual or company to whom it is addressed.

Chain of Custody

OnSite Environmental Inc.
Analytical Laboratory Testing Services
14648 NE 95th Street • Redmond, WA 98052
Phone: (425) 883-3881 • www.onsite-env.com

Company: Anchor QEA (Herrera)
Project Number: 11-05150-003
Project Name: Cedar Hills Reg. Landfill
Project Manager: Randy Brown
Sampled by: Camryn Stetner

Turnaround Request (in working days)
(Check One)
☐ Same Day ☐ 1 Day
☒ 2 Days ☐ 3 Days
☐ Standard (7 Days)
☐ _____ (other)

Laboratory Number: 09-270

Lab ID	Sample Identification	Date Sampled	Time Sampled	Matrix	Number of Containers	NWTPH-HCID	NWTPH-Gx/BTEX	NWTPH-Gx	NWTPH-Dx (☐ Acid / SG Clean-up)	Volatiles 8260D	Halogenated Volatiles 8260D	EDB EPA 8011 (Waters Only)	Semivolatiles 8270E/SIM (with low-level PAHs)	PAHs 8270E/SIM (low-level)	PCBs 8082A	Organochlorine Pesticides 8081B	Organophosphorus Pesticides 8270E/SIM	Chlorinated Acid Herbicides 8151A	Total RCRA Metals 6010B/7471A	Total MTCA Metals	TCLP Metals	HEM (oil and grease) 1664A					% Moisture
1	DA75WCS24210924I	9/24/21	9:00	soil	4					X			X		X	X			X								X
2	DA75WCS25210924I	↓	9:35	↓	4					X			X		X	X			X								X
3	DA75WCS26210924I	↓	9:50		4					X			X		X	X			X								X
4	VTRP210924I - Trip Blank	9/24/21	—	W	3					X																	

	Signature	Company	Date	Time
Relinquished	Camryn Stetner	Herrera	9/24/21	11:20
Received		CoSE	9/24/21	1120
Relinquished				
Received				
Relinquished				
Received				
Reviewed/Date		Reviewed/Date		

Comments/Special Instructions
Email to Randy Brown
CC: Herrera
+ cstetner@herrerainc.com

Data Package: Standard ☐ Level III ☐ Level IV ☐

Chromatograms with final report ☐ Electronic Data Deliverables (EDDs) ☐

Sample/Cooler Receipt and Acceptance Checklist

Client: ANC

Client Project Name/Number: 11-05150-003

OnSite Project Number: 09-270

Initiated by: MV

Date Initiated: 9/29/21

1.0 Cooler Verification

1.1 Were there custody seals on the outside of the cooler?	Yes	(No)	N/A	1 2 3 4	
1.2 Were the custody seals intact?	Yes	No	(N/A)	1 2 3 4	
1.3 Were the custody seals signed and dated by last custodian?	Yes	No	(N/A)	1 2 3 4	
1.4 Were the samples delivered on ice or blue ice?	(Yes)	No	N/A	1 2 3 4	
1.5 Were samples received between 0-6 degrees Celsius?	(Yes)	No	N/A	Temperature: 6	
1.6 Have shipping bills (if any) been attached to the back of this form?	Yes	(N/A)			
1.7 How were the samples delivered?	(Client)	Courier	UPS/FedEx	OSE Pickup	Other

2.0 Chain of Custody Verification

2.1 Was a Chain of Custody submitted with the samples?	(Yes)	No		1 2 3 4
2.2 Was the COC legible and written in permanent ink?	(Yes)	No		1 2 3 4
2.3 Have samples been relinquished and accepted by each custodian?	(Yes)	No		1 2 3 4
2.4 Did the sample labels (ID, date, time, preservative) agree with COC?	(Yes)	No		1 2 3 4
2.5 Were all of the samples listed on the COC submitted?	(Yes)	No		1 2 3 4
2.6 Were any of the samples submitted omitted from the COC?	Yes	(No)		1 2 3 4

3.0 Sample Verification

3.1 Were any sample containers broken or compromised?	Yes	(No)		1 2 3 4
3.2 Were any sample labels missing or illegible?	Yes	(No)		1 2 3 4
3.3 Have the correct containers been used for each analysis requested?	(Yes)	No		1 2 3 4
3.4 Have the samples been correctly preserved?	(Yes)	No	N/A	1 2 3 4
3.5 Are volatiles samples free from headspace and bubbles greater than 6mm?	(Yes)	No	N/A	1 2 3 4
3.6 Is there sufficient sample submitted to perform requested analyses?	(Yes)	No		1 2 3 4
3.7 Have any holding times already expired or will expire in 24 hours?	Yes	(No)		1 2 3 4
3.8 Was method 5035A used?	(Yes)	No	N/A	1 2 3 4
3.9 If 5035A was used, which sampling option was used (#1, 2, or 3).	#	1	N/A	1 2 3 4

Explain any discrepancies:

1 - Discuss issue in Case Narrative

2 - Process Sample As-is

3 - Client contacted to discuss problem

4 - Sample cannot be analyzed or client does not wish to proceed

OnSite Environmental Inc.
14648 NE 95th Street, Redmond, WA 98052 • (425) 883-3881

October 6, 2021

Randy Brown
Anchor QEA
1201 3rd Avenue, Suite 2600
Seattle, WA 98101

Re: Analytical Data for Project 11-05150-003
Laboratory Reference No. 2110-012

Dear Randy:

Enclosed are the analytical results and associated quality control data for samples submitted on October 1, 2021.

The standard policy of OnSite Environmental, Inc. is to store your samples for 30 days from the date of receipt. If you require longer storage, please contact the laboratory.

We appreciate the opportunity to be of service to you on this project. If you have any questions concerning the data, or need additional information, please feel free to call me.

Sincerely,

David Baumeister
Project Manager

Enclosures

This report pertains to the samples analyzed in accordance with the chain of custody, and is intended only for the use of the individual or company to whom it is addressed.

Date of Report: October 6, 2021
Samples Submitted: October 1, 2021
Laboratory Reference: 2110-012
Project: 11-05150-003

Case Narrative

Samples were collected on October 1, 2021 and received by the laboratory on October 1, 2021. They were maintained at the laboratory at a temperature of 2°C to 6°C.

Please note that any and all soil sample results are reported on a dry-weight basis, unless otherwise noted below.

General QA/QC issues associated with the analytical data enclosed in this laboratory report will be indicated with a reference to a comment or explanation on the Data Qualifier page. More complex and involved QA/QC issues will be discussed in detail below.

This report pertains to the samples analyzed in accordance with the chain of custody,
and is intended only for the use of the individual or company to whom it is addressed.

Date of Report: October 6, 2021
Samples Submitted: October 1, 2021
Laboratory Reference: 2110-012
Project: 11-05150-003

VOLATILE ORGANICS EPA 8260D
page 1 of 2

Matrix: Soil
Units: mg/kg

Analyte	Result	PQL	Method	Date Prepared	Date Analyzed	Flags
Client ID:	**DA7SWCS27211001I**					
Laboratory ID:	10-012-01					
Dichlorodifluoromethane	ND	0.00090	EPA 8260D	10-4-21	10-4-21	
Chloromethane	ND	0.0045	EPA 8260D	10-4-21	10-4-21	
Vinyl Chloride	ND	0.00090	EPA 8260D	10-4-21	10-4-21	
Bromomethane	ND	0.0045	EPA 8260D	10-4-21	10-4-21	
Chloroethane	ND	0.0045	EPA 8260D	10-4-21	10-4-21	
Trichlorofluoromethane	ND	0.00090	EPA 8260D	10-4-21	10-4-21	
1,1-Dichloroethene	ND	0.00090	EPA 8260D	10-4-21	10-4-21	
Acetone	0.013	0.0090	EPA 8260D	10-4-21	10-4-21	
Iodomethane	ND	0.0045	EPA 8260D	10-4-21	10-4-21	
Carbon Disulfide	ND	0.00090	EPA 8260D	10-4-21	10-4-21	
Methylene Chloride	ND	0.0045	EPA 8260D	10-4-21	10-4-21	
(trans) 1,2-Dichloroethene	ND	0.00090	EPA 8260D	10-4-21	10-4-21	
Methyl t-Butyl Ether	ND	0.00090	EPA 8260D	10-4-21	10-4-21	
1,1-Dichloroethane	ND	0.00090	EPA 8260D	10-4-21	10-4-21	
Vinyl Acetate	ND	0.0045	EPA 8260D	10-4-21	10-4-21	
2,2-Dichloropropane	ND	0.00090	EPA 8260D	10-4-21	10-4-21	
(cis) 1,2-Dichloroethene	ND	0.00090	EPA 8260D	10-4-21	10-4-21	
2-Butanone	ND	0.0045	EPA 8260D	10-4-21	10-4-21	
Bromochloromethane	ND	0.00090	EPA 8260D	10-4-21	10-4-21	
Chloroform	ND	0.00090	EPA 8260D	10-4-21	10-4-21	
1,1,1-Trichloroethane	ND	0.00090	EPA 8260D	10-4-21	10-4-21	
Carbon Tetrachloride	ND	0.00090	EPA 8260D	10-4-21	10-4-21	
1,1-Dichloropropene	ND	0.00090	EPA 8260D	10-4-21	10-4-21	
Benzene	ND	0.00090	EPA 8260D	10-4-21	10-4-21	
1,2-Dichloroethane	ND	0.00090	EPA 8260D	10-4-21	10-4-21	
Trichloroethene	ND	0.00090	EPA 8260D	10-4-21	10-4-21	
1,2-Dichloropropane	ND	0.00090	EPA 8260D	10-4-21	10-4-21	
Dibromomethane	ND	0.00090	EPA 8260D	10-4-21	10-4-21	
Bromodichloromethane	ND	0.00090	EPA 8260D	10-4-21	10-4-21	
2-Chloroethyl Vinyl Ether	ND	0.0045	EPA 8260D	10-4-21	10-4-21	
(cis) 1,3-Dichloropropene	ND	0.00090	EPA 8260D	10-4-21	10-4-21	
Methyl Isobutyl Ketone	ND	0.0045	EPA 8260D	10-4-21	10-4-21	
Toluene	ND	0.0045	EPA 8260D	10-4-21	10-4-21	
(trans) 1,3-Dichloropropene	ND	0.00090	EPA 8260D	10-4-21	10-4-21	

This report pertains to the samples analyzed in accordance with the chain of custody, and is intended only for the use of the individual or company to whom it is addressed.

Date of Report: October 6, 2021
Samples Submitted: October 1, 2021
Laboratory Reference: 2110-012
Project: 11-05150-003

VOLATILE ORGANICS EPA 8260D
page 2 of 2

Analyte	Result	PQL	Method	Date Prepared	Date Analyzed	Flags
Client ID:	**DA7SWCS27211001I**					
Laboratory ID:	10-012-01					
1,1,2-Trichloroethane	ND	0.00090	EPA 8260D	10-4-21	10-4-21	
Tetrachloroethene	ND	0.00090	EPA 8260D	10-4-21	10-4-21	
1,3-Dichloropropane	ND	0.00090	EPA 8260D	10-4-21	10-4-21	
2-Hexanone	ND	0.0045	EPA 8260D	10-4-21	10-4-21	
Dibromochloromethane	ND	0.00090	EPA 8260D	10-4-21	10-4-21	
1,2-Dibromoethane	ND	0.000045	EPA 8260D/SIM	10-4-21	10-4-21	
Chlorobenzene	ND	0.00090	EPA 8260D	10-4-21	10-4-21	
1,1,1,2-Tetrachloroethane	ND	0.00090	EPA 8260D	10-4-21	10-4-21	
Ethylbenzene	ND	0.00090	EPA 8260D	10-4-21	10-4-21	
m,p-Xylene	ND	0.0018	EPA 8260D	10-4-21	10-4-21	
o-Xylene	ND	0.00090	EPA 8260D	10-4-21	10-4-21	
Styrene	ND	0.00090	EPA 8260D	10-4-21	10-4-21	
Bromoform	ND	0.0045	EPA 8260D	10-4-21	10-4-21	
Isopropylbenzene	ND	0.00090	EPA 8260D	10-4-21	10-4-21	
Bromobenzene	ND	0.00090	EPA 8260D	10-4-21	10-4-21	
1,1,2,2-Tetrachloroethane	ND	0.00090	EPA 8260D	10-4-21	10-4-21	
1,2,3-Trichloropropane	ND	0.00090	EPA 8260D	10-4-21	10-4-21	
n-Propylbenzene	ND	0.00090	EPA 8260D	10-4-21	10-4-21	
2-Chlorotoluene	ND	0.00090	EPA 8260D	10-4-21	10-4-21	
4-Chlorotoluene	ND	0.00090	EPA 8260D	10-4-21	10-4-21	
1,3,5-Trimethylbenzene	ND	0.00090	EPA 8260D	10-4-21	10-4-21	
tert-Butylbenzene	ND	0.00090	EPA 8260D	10-4-21	10-4-21	
1,2,4-Trimethylbenzene	ND	0.00090	EPA 8260D	10-4-21	10-4-21	
sec-Butylbenzene	ND	0.00090	EPA 8260D	10-4-21	10-4-21	
1,3-Dichlorobenzene	ND	0.00090	EPA 8260D	10-4-21	10-4-21	
p-Isopropyltoluene	ND	0.00090	EPA 8260D	10-4-21	10-4-21	
1,4-Dichlorobenzene	ND	0.00090	EPA 8260D	10-4-21	10-4-21	
1,2-Dichlorobenzene	ND	0.00090	EPA 8260D	10-4-21	10-4-21	
n-Butylbenzene	ND	0.00090	EPA 8260D	10-4-21	10-4-21	
1,2-Dibromo-3-chloropropane	ND	0.0045	EPA 8260D	10-4-21	10-4-21	
1,2,4-Trichlorobenzene	ND	0.00090	EPA 8260D	10-4-21	10-4-21	
Hexachlorobutadiene	ND	0.0045	EPA 8260D	10-4-21	10-4-21	
Naphthalene	ND	0.0045	EPA 8260D	10-4-21	10-4-21	
1,2,3-Trichlorobenzene	ND	0.00090	EPA 8260D	10-4-21	10-4-21	
Surrogate:	*Percent Recovery*	*Control Limits*				
Dibromofluoromethane	*103*	*74-131*				
Toluene-d8	*103*	*78-128*				
4-Bromofluorobenzene	*96*	*71-130*				

This report pertains to the samples analyzed in accordance with the chain of custody, and is intended only for the use of the individual or company to whom it is addressed.

Date of Report: October 6, 2021
Samples Submitted: October 1, 2021
Laboratory Reference: 2110-012
Project: 11-05150-003

VOLATILE ORGANICS EPA 8260D
page 1 of 2

Matrix: Soil
Units: mg/kg

Analyte	Result	PQL	Method	Date Prepared	Date Analyzed	Flags
Client ID:	**DA7SWCS28211001I**					
Laboratory ID:	10-012-02					
Dichlorodifluoromethane	ND	0.00077	EPA 8260D	10-4-21	10-4-21	
Chloromethane	ND	0.0039	EPA 8260D	10-4-21	10-4-21	
Vinyl Chloride	ND	0.00077	EPA 8260D	10-4-21	10-4-21	
Bromomethane	ND	0.0039	EPA 8260D	10-4-21	10-4-21	
Chloroethane	ND	0.0039	EPA 8260D	10-4-21	10-4-21	
Trichlorofluoromethane	ND	0.00077	EPA 8260D	10-4-21	10-4-21	
1,1-Dichloroethene	ND	0.00077	EPA 8260D	10-4-21	10-4-21	
Acetone	ND	0.0077	EPA 8260D	10-4-21	10-4-21	
Iodomethane	ND	0.0039	EPA 8260D	10-4-21	10-4-21	
Carbon Disulfide	ND	0.00077	EPA 8260D	10-4-21	10-4-21	
Methylene Chloride	ND	0.0039	EPA 8260D	10-4-21	10-4-21	
(trans) 1,2-Dichloroethene	ND	0.00077	EPA 8260D	10-4-21	10-4-21	
Methyl t-Butyl Ether	ND	0.00077	EPA 8260D	10-4-21	10-4-21	
1,1-Dichloroethane	ND	0.00077	EPA 8260D	10-4-21	10-4-21	
Vinyl Acetate	ND	0.0039	EPA 8260D	10-4-21	10-4-21	
2,2-Dichloropropane	ND	0.00077	EPA 8260D	10-4-21	10-4-21	
(cis) 1,2-Dichloroethene	ND	0.00077	EPA 8260D	10-4-21	10-4-21	
2-Butanone	ND	0.0039	EPA 8260D	10-4-21	10-4-21	
Bromochloromethane	ND	0.00077	EPA 8260D	10-4-21	10-4-21	
Chloroform	ND	0.00077	EPA 8260D	10-4-21	10-4-21	
1,1,1-Trichloroethane	ND	0.00077	EPA 8260D	10-4-21	10-4-21	
Carbon Tetrachloride	ND	0.00077	EPA 8260D	10-4-21	10-4-21	
1,1-Dichloropropene	ND	0.00077	EPA 8260D	10-4-21	10-4-21	
Benzene	0.00082	0.00077	EPA 8260D	10-4-21	10-4-21	
1,2-Dichloroethane	ND	0.00077	EPA 8260D	10-4-21	10-4-21	
Trichloroethene	ND	0.00077	EPA 8260D	10-4-21	10-4-21	
1,2-Dichloropropane	ND	0.00077	EPA 8260D	10-4-21	10-4-21	
Dibromomethane	ND	0.00077	EPA 8260D	10-4-21	10-4-21	
Bromodichloromethane	ND	0.00077	EPA 8260D	10-4-21	10-4-21	
2-Chloroethyl Vinyl Ether	ND	0.0039	EPA 8260D	10-4-21	10-4-21	
(cis) 1,3-Dichloropropene	ND	0.00077	EPA 8260D	10-4-21	10-4-21	
Methyl Isobutyl Ketone	ND	0.0039	EPA 8260D	10-4-21	10-4-21	
Toluene	ND	0.0039	EPA 8260D	10-4-21	10-4-21	
(trans) 1,3-Dichloropropene	ND	0.00077	EPA 8260D	10-4-21	10-4-21	

This report pertains to the samples analyzed in accordance with the chain of custody, and is intended only for the use of the individual or company to whom it is addressed.

Date of Report: October 6, 2021
Samples Submitted: October 1, 2021
Laboratory Reference: 2110-012
Project: 11-05150-003

VOLATILE ORGANICS EPA 8260D
page 2 of 2

Analyte	Result	PQL	Method	Date Prepared	Date Analyzed	Flags
Client ID:	**DA7SWCS28211001I**					
Laboratory ID:	10-012-02					
1,1,2-Trichloroethane	ND	0.00077	EPA 8260D	10-4-21	10-4-21	
Tetrachloroethene	ND	0.00077	EPA 8260D	10-4-21	10-4-21	
1,3-Dichloropropane	ND	0.00077	EPA 8260D	10-4-21	10-4-21	
2-Hexanone	ND	0.0039	EPA 8260D	10-4-21	10-4-21	
Dibromochloromethane	ND	0.00077	EPA 8260D	10-4-21	10-4-21	
1,2-Dibromoethane	ND	0.000039	EPA 8260D/SIM	10-4-21	10-4-21	
Chlorobenzene	ND	0.00077	EPA 8260D	10-4-21	10-4-21	
1,1,1,2-Tetrachloroethane	ND	0.00077	EPA 8260D	10-4-21	10-4-21	
Ethylbenzene	ND	0.00077	EPA 8260D	10-4-21	10-4-21	
m,p-Xylene	ND	0.0015	EPA 8260D	10-4-21	10-4-21	
o-Xylene	ND	0.00077	EPA 8260D	10-4-21	10-4-21	
Styrene	ND	0.00077	EPA 8260D	10-4-21	10-4-21	
Bromoform	ND	0.0039	EPA 8260D	10-4-21	10-4-21	
Isopropylbenzene	ND	0.00077	EPA 8260D	10-4-21	10-4-21	
Bromobenzene	ND	0.00077	EPA 8260D	10-4-21	10-4-21	
1,1,2,2-Tetrachloroethane	ND	0.00077	EPA 8260D	10-4-21	10-4-21	
1,2,3-Trichloropropane	ND	0.00077	EPA 8260D	10-4-21	10-4-21	
n-Propylbenzene	ND	0.00077	EPA 8260D	10-4-21	10-4-21	
2-Chlorotoluene	ND	0.00077	EPA 8260D	10-4-21	10-4-21	
4-Chlorotoluene	ND	0.00077	EPA 8260D	10-4-21	10-4-21	
1,3,5-Trimethylbenzene	ND	0.00077	EPA 8260D	10-4-21	10-4-21	
tert-Butylbenzene	ND	0.00077	EPA 8260D	10-4-21	10-4-21	
1,2,4-Trimethylbenzene	ND	0.00077	EPA 8260D	10-4-21	10-4-21	
sec-Butylbenzene	ND	0.00077	EPA 8260D	10-4-21	10-4-21	
1,3-Dichlorobenzene	ND	0.00077	EPA 8260D	10-4-21	10-4-21	
p-Isopropyltoluene	ND	0.00077	EPA 8260D	10-4-21	10-4-21	
1,4-Dichlorobenzene	ND	0.00077	EPA 8260D	10-4-21	10-4-21	
1,2-Dichlorobenzene	ND	0.00077	EPA 8260D	10-4-21	10-4-21	
n-Butylbenzene	ND	0.00077	EPA 8260D	10-4-21	10-4-21	
1,2-Dibromo-3-chloropropane	ND	0.0039	EPA 8260D	10-4-21	10-4-21	
1,2,4-Trichlorobenzene	ND	0.00077	EPA 8260D	10-4-21	10-4-21	
Hexachlorobutadiene	ND	0.0039	EPA 8260D	10-4-21	10-4-21	
Naphthalene	ND	0.0039	EPA 8260D	10-4-21	10-4-21	
1,2,3-Trichlorobenzene	ND	0.00077	EPA 8260D	10-4-21	10-4-21	
Surrogate:	*Percent Recovery*	*Control Limits*				
Dibromofluoromethane	*104*	*74-131*				
Toluene-d8	*102*	*78-128*				
4-Bromofluorobenzene	*95*	*71-130*				

This report pertains to the samples analyzed in accordance with the chain of custody, and is intended only for the use of the individual or company to whom it is addressed.

Date of Report: October 6, 2021
Samples Submitted: October 1, 2021
Laboratory Reference: 2110-012
Project: 11-05150-003

VOLATILE ORGANICS EPA 8260D
page 1 of 2

Matrix: Soil
Units: mg/kg

Analyte	Result	PQL	Method	Date Prepared	Date Analyzed	Flags
Client ID:	**DA7SWCS29211001I**					
Laboratory ID:	10-012-03					
Dichlorodifluoromethane	ND	0.00071	EPA 8260D	10-4-21	10-4-21	
Chloromethane	ND	0.0036	EPA 8260D	10-4-21	10-4-21	
Vinyl Chloride	ND	0.00071	EPA 8260D	10-4-21	10-4-21	
Bromomethane	ND	0.0036	EPA 8260D	10-4-21	10-4-21	
Chloroethane	ND	0.0036	EPA 8260D	10-4-21	10-4-21	
Trichlorofluoromethane	ND	0.00071	EPA 8260D	10-4-21	10-4-21	
1,1-Dichloroethene	ND	0.00071	EPA 8260D	10-4-21	10-4-21	
Acetone	0.036	0.0071	EPA 8260D	10-4-21	10-4-21	
Iodomethane	ND	0.0036	EPA 8260D	10-4-21	10-4-21	
Carbon Disulfide	ND	0.00071	EPA 8260D	10-4-21	10-4-21	
Methylene Chloride	ND	0.0036	EPA 8260D	10-4-21	10-4-21	
(trans) 1,2-Dichloroethene	ND	0.00071	EPA 8260D	10-4-21	10-4-21	
Methyl t-Butyl Ether	ND	0.00071	EPA 8260D	10-4-21	10-4-21	
1,1-Dichloroethane	ND	0.00071	EPA 8260D	10-4-21	10-4-21	
Vinyl Acetate	ND	0.0036	EPA 8260D	10-4-21	10-4-21	
2,2-Dichloropropane	ND	0.00071	EPA 8260D	10-4-21	10-4-21	
(cis) 1,2-Dichloroethene	ND	0.00071	EPA 8260D	10-4-21	10-4-21	
2-Butanone	0.0093	0.0036	EPA 8260D	10-4-21	10-4-21	
Bromochloromethane	ND	0.00071	EPA 8260D	10-4-21	10-4-21	
Chloroform	ND	0.00071	EPA 8260D	10-4-21	10-4-21	
1,1,1-Trichloroethane	ND	0.00071	EPA 8260D	10-4-21	10-4-21	
Carbon Tetrachloride	ND	0.00071	EPA 8260D	10-4-21	10-4-21	
1,1-Dichloropropene	ND	0.00071	EPA 8260D	10-4-21	10-4-21	
Benzene	0.00099	0.00071	EPA 8260D	10-4-21	10-4-21	
1,2-Dichloroethane	ND	0.00071	EPA 8260D	10-4-21	10-4-21	
Trichloroethene	ND	0.00071	EPA 8260D	10-4-21	10-4-21	
1,2-Dichloropropane	ND	0.00071	EPA 8260D	10-4-21	10-4-21	
Dibromomethane	ND	0.00071	EPA 8260D	10-4-21	10-4-21	
Bromodichloromethane	ND	0.00071	EPA 8260D	10-4-21	10-4-21	
2-Chloroethyl Vinyl Ether	ND	0.0036	EPA 8260D	10-4-21	10-4-21	
(cis) 1,3-Dichloropropene	ND	0.00071	EPA 8260D	10-4-21	10-4-21	
Methyl Isobutyl Ketone	ND	0.0036	EPA 8260D	10-4-21	10-4-21	
Toluene	ND	0.0036	EPA 8260D	10-4-21	10-4-21	
(trans) 1,3-Dichloropropene	ND	0.00071	EPA 8260D	10-4-21	10-4-21	

This report pertains to the samples analyzed in accordance with the chain of custody, and is intended only for the use of the individual or company to whom it is addressed.

Date of Report: October 6, 2021
Samples Submitted: October 1, 2021
Laboratory Reference: 2110-012
Project: 11-05150-003

VOLATILE ORGANICS EPA 8260D
page 2 of 2

Analyte	Result	PQL	Method	Date Prepared	Date Analyzed	Flags
Client ID:	**DA7SWCS29211001I**					
Laboratory ID:	10-012-03					
1,1,2-Trichloroethane	ND	0.00071	EPA 8260D	10-4-21	10-4-21	
Tetrachloroethene	ND	0.00071	EPA 8260D	10-4-21	10-4-21	
1,3-Dichloropropane	ND	0.00071	EPA 8260D	10-4-21	10-4-21	
2-Hexanone	ND	0.0036	EPA 8260D	10-4-21	10-4-21	
Dibromochloromethane	ND	0.00071	EPA 8260D	10-4-21	10-4-21	
1,2-Dibromoethane	ND	0.000036	EPA 8260D/SIM	10-4-21	10-4-21	
Chlorobenzene	ND	0.00071	EPA 8260D	10-4-21	10-4-21	
1,1,1,2-Tetrachloroethane	ND	0.00071	EPA 8260D	10-4-21	10-4-21	
Ethylbenzene	ND	0.00071	EPA 8260D	10-4-21	10-4-21	
m,p-Xylene	ND	0.0014	EPA 8260D	10-4-21	10-4-21	
o-Xylene	ND	0.00071	EPA 8260D	10-4-21	10-4-21	
Styrene	ND	0.00071	EPA 8260D	10-4-21	10-4-21	
Bromoform	ND	0.0036	EPA 8260D	10-4-21	10-4-21	
Isopropylbenzene	ND	0.00071	EPA 8260D	10-4-21	10-4-21	
Bromobenzene	ND	0.00071	EPA 8260D	10-4-21	10-4-21	
1,1,2,2-Tetrachloroethane	ND	0.00071	EPA 8260D	10-4-21	10-4-21	
1,2,3-Trichloropropane	ND	0.00071	EPA 8260D	10-4-21	10-4-21	
n-Propylbenzene	ND	0.00071	EPA 8260D	10-4-21	10-4-21	
2-Chlorotoluene	ND	0.00071	EPA 8260D	10-4-21	10-4-21	
4-Chlorotoluene	ND	0.00071	EPA 8260D	10-4-21	10-4-21	
1,3,5-Trimethylbenzene	ND	0.00071	EPA 8260D	10-4-21	10-4-21	
tert-Butylbenzene	ND	0.00071	EPA 8260D	10-4-21	10-4-21	
1,2,4-Trimethylbenzene	ND	0.00071	EPA 8260D	10-4-21	10-4-21	
sec-Butylbenzene	ND	0.00071	EPA 8260D	10-4-21	10-4-21	
1,3-Dichlorobenzene	ND	0.00071	EPA 8260D	10-4-21	10-4-21	
p-Isopropyltoluene	0.0021	0.00071	EPA 8260D	10-4-21	10-4-21	
1,4-Dichlorobenzene	ND	0.00071	EPA 8260D	10-4-21	10-4-21	
1,2-Dichlorobenzene	ND	0.00071	EPA 8260D	10-4-21	10-4-21	
n-Butylbenzene	ND	0.00071	EPA 8260D	10-4-21	10-4-21	
1,2-Dibromo-3-chloropropane	ND	0.0036	EPA 8260D	10-4-21	10-4-21	
1,2,4-Trichlorobenzene	ND	0.00071	EPA 8260D	10-4-21	10-4-21	
Hexachlorobutadiene	ND	0.0036	EPA 8260D	10-4-21	10-4-21	
Naphthalene	ND	0.0036	EPA 8260D	10-4-21	10-4-21	
1,2,3-Trichlorobenzene	ND	0.00071	EPA 8260D	10-4-21	10-4-21	
Surrogate:	*Percent Recovery*	*Control Limits*				
Dibromofluoromethane	*100*	*74-131*				
Toluene-d8	*102*	*78-128*				
4-Bromofluorobenzene	*94*	*71-130*				

This report pertains to the samples analyzed in accordance with the chain of custody, and is intended only for the use of the individual or company to whom it is addressed.

Date of Report: October 6, 2021
Samples Submitted: October 1, 2021
Laboratory Reference: 2110-012
Project: 11-05150-003

VOLATILE ORGANICS EPA 8260D
QUALITY CONTROL
page 1 of 2

Matrix: Soil
Units: mg/kg

Analyte	Result	PQL	Method	Date Prepared	Date Analyzed	Flags
METHOD BLANK						
Laboratory ID:	MB1004S1					
Dichlorodifluoromethane	ND	0.0010	EPA 8260D	10-4-21	10-4-21	
Chloromethane	ND	0.0050	EPA 8260D	10-4-21	10-4-21	
Vinyl Chloride	ND	0.0010	EPA 8260D	10-4-21	10-4-21	
Bromomethane	ND	0.0050	EPA 8260D	10-4-21	10-4-21	
Chloroethane	ND	0.0050	EPA 8260D	10-4-21	10-4-21	
Trichlorofluoromethane	ND	0.0010	EPA 8260D	10-4-21	10-4-21	
1,1-Dichloroethene	ND	0.0010	EPA 8260D	10-4-21	10-4-21	
Acetone	ND	0.010	EPA 8260D	10-4-21	10-4-21	
Iodomethane	ND	0.0050	EPA 8260D	10-4-21	10-4-21	
Carbon Disulfide	ND	0.0010	EPA 8260D	10-4-21	10-4-21	
Methylene Chloride	ND	0.0050	EPA 8260D	10-4-21	10-4-21	
(trans) 1,2-Dichloroethene	ND	0.0010	EPA 8260D	10-4-21	10-4-21	
Methyl t-Butyl Ether	ND	0.0010	EPA 8260D	10-4-21	10-4-21	
1,1-Dichloroethane	ND	0.0010	EPA 8260D	10-4-21	10-4-21	
Vinyl Acetate	ND	0.0050	EPA 8260D	10-4-21	10-4-21	
2,2-Dichloropropane	ND	0.0010	EPA 8260D	10-4-21	10-4-21	
(cis) 1,2-Dichloroethene	ND	0.0010	EPA 8260D	10-4-21	10-4-21	
2-Butanone	ND	0.0050	EPA 8260D	10-4-21	10-4-21	
Bromochloromethane	ND	0.0010	EPA 8260D	10-4-21	10-4-21	
Chloroform	ND	0.0010	EPA 8260D	10-4-21	10-4-21	
1,1,1-Trichloroethane	ND	0.0010	EPA 8260D	10-4-21	10-4-21	
Carbon Tetrachloride	ND	0.0010	EPA 8260D	10-4-21	10-4-21	
1,1-Dichloropropene	ND	0.0010	EPA 8260D	10-4-21	10-4-21	
Benzene	ND	0.0010	EPA 8260D	10-4-21	10-4-21	
1,2-Dichloroethane	ND	0.0010	EPA 8260D	10-4-21	10-4-21	
Trichloroethene	ND	0.0010	EPA 8260D	10-4-21	10-4-21	
1,2-Dichloropropane	ND	0.0010	EPA 8260D	10-4-21	10-4-21	
Dibromomethane	ND	0.0010	EPA 8260D	10-4-21	10-4-21	
Bromodichloromethane	ND	0.0010	EPA 8260D	10-4-21	10-4-21	
2-Chloroethyl Vinyl Ether	ND	0.0050	EPA 8260D	10-4-21	10-4-21	
(cis) 1,3-Dichloropropene	ND	0.0010	EPA 8260D	10-4-21	10-4-21	
Methyl Isobutyl Ketone	ND	0.0050	EPA 8260D	10-4-21	10-4-21	
Toluene	ND	0.0050	EPA 8260D	10-4-21	10-4-21	
(trans) 1,3-Dichloropropene	ND	0.0010	EPA 8260D	10-4-21	10-4-21	

This report pertains to the samples analyzed in accordance with the chain of custody,
and is intended only for the use of the individual or company to whom it is addressed.

Date of Report: October 6, 2021
Samples Submitted: October 1, 2021
Laboratory Reference: 2110-012
Project: 11-05150-003

VOLATILE ORGANICS EPA 8260D
QUALITY CONTROL
page 2 of 2

Analyte	Result	PQL	Method	Date Prepared	Date Analyzed	Flags
METHOD BLANK						
Laboratory ID:	MB1004S1					
1,1,2-Trichloroethane	ND	0.0010	EPA 8260D	10-4-21	10-4-21	
Tetrachloroethene	ND	0.0010	EPA 8260D	10-4-21	10-4-21	
1,3-Dichloropropane	ND	0.0010	EPA 8260D	10-4-21	10-4-21	
2-Hexanone	ND	0.0050	EPA 8260D	10-4-21	10-4-21	
Dibromochloromethane	ND	0.0010	EPA 8260D	10-4-21	10-4-21	
1,2-Dibromoethane	ND	0.000050	EPA 8260D/SIM	10-4-21	10-4-21	
Chlorobenzene	ND	0.0010	EPA 8260D	10-4-21	10-4-21	
1,1,1,2-Tetrachloroethane	ND	0.0010	EPA 8260D	10-4-21	10-4-21	
Ethylbenzene	ND	0.0010	EPA 8260D	10-4-21	10-4-21	
m,p-Xylene	ND	0.0020	EPA 8260D	10-4-21	10-4-21	
o-Xylene	ND	0.0010	EPA 8260D	10-4-21	10-4-21	
Styrene	ND	0.0010	EPA 8260D	10-4-21	10-4-21	
Bromoform	ND	0.0050	EPA 8260D	10-4-21	10-4-21	
Isopropylbenzene	ND	0.0010	EPA 8260D	10-4-21	10-4-21	
Bromobenzene	ND	0.0010	EPA 8260D	10-4-21	10-4-21	
1,1,2,2-Tetrachloroethane	ND	0.0010	EPA 8260D	10-4-21	10-4-21	
1,2,3-Trichloropropane	ND	0.0010	EPA 8260D	10-4-21	10-4-21	
n-Propylbenzene	ND	0.0010	EPA 8260D	10-4-21	10-4-21	
2-Chlorotoluene	ND	0.0010	EPA 8260D	10-4-21	10-4-21	
4-Chlorotoluene	ND	0.0010	EPA 8260D	10-4-21	10-4-21	
1,3,5-Trimethylbenzene	ND	0.0010	EPA 8260D	10-4-21	10-4-21	
tert-Butylbenzene	ND	0.0010	EPA 8260D	10-4-21	10-4-21	
1,2,4-Trimethylbenzene	ND	0.0010	EPA 8260D	10-4-21	10-4-21	
sec-Butylbenzene	ND	0.0010	EPA 8260D	10-4-21	10-4-21	
1,3-Dichlorobenzene	ND	0.0010	EPA 8260D	10-4-21	10-4-21	
p-Isopropyltoluene	ND	0.0010	EPA 8260D	10-4-21	10-4-21	
1,4-Dichlorobenzene	ND	0.0010	EPA 8260D	10-4-21	10-4-21	
1,2-Dichlorobenzene	ND	0.0010	EPA 8260D	10-4-21	10-4-21	
n-Butylbenzene	ND	0.0010	EPA 8260D	10-4-21	10-4-21	
1,2-Dibromo-3-chloropropane	ND	0.0050	EPA 8260D	10-4-21	10-4-21	
1,2,4-Trichlorobenzene	ND	0.0010	EPA 8260D	10-4-21	10-4-21	
Hexachlorobutadiene	ND	0.0050	EPA 8260D	10-4-21	10-4-21	
Naphthalene	ND	0.0050	EPA 8260D	10-4-21	10-4-21	
1,2,3-Trichlorobenzene	ND	0.0010	EPA 8260D	10-4-21	10-4-21	
Surrogate:	*Percent Recovery*	*Control Limits*				
Dibromofluoromethane	*102*	*74-131*				
Toluene-d8	*102*	*78-128*				
4-Bromofluorobenzene	*106*	*71-130*				

This report pertains to the samples analyzed in accordance with the chain of custody, and is intended only for the use of the individual or company to whom it is addressed.

Date of Report: October 6, 2021
Samples Submitted: October 1, 2021
Laboratory Reference: 2110-012
Project: 11-05150-003

VOLATILE ORGANICS EPA 8260D
QUALITY CONTROL

Matrix: Soil
Units: mg/kg

Analyte	Result		Spike Level		Percent Recovery		Recovery Limits	RPD	RPD Limit	Flags
SPIKE BLANKS										
Laboratory ID:	SB1004S1									
	SB	SBD	SB	SBD	SB	SBD				
1,1-Dichloroethene	**0.0561**	**0.0586**	0.0500	0.0500	112	117	71-131	4	19	
Benzene	**0.0531**	**0.0527**	0.0500	0.0500	106	105	73-124	1	18	
Trichloroethene	**0.0520**	**0.0527**	0.0500	0.0500	104	105	79-130	1	18	
Toluene	**0.0497**	**0.0504**	0.0500	0.0500	99	101	76-123	1	18	
Chlorobenzene	**0.0523**	**0.0525**	0.0500	0.0500	105	105	78-122	0	18	
Surrogate:										
Dibromofluoromethane					*99*	*100*	*74-131*			
Toluene-d8					*101*	*101*	*78-128*			
4-Bromofluorobenzene					*106*	*106*	*71-130*			

This report pertains to the samples analyzed in accordance with the chain of custody, and is intended only for the use of the individual or company to whom it is addressed.

Date of Report: October 6, 2021
Samples Submitted: October 1, 2021
Laboratory Reference: 2110-012
Project: 11-05150-003

VOLATILE ORGANICS EPA 8260D
page 1 of 2

Matrix: Water
Units: ug/L

Analyte	Result	PQL	Method	Date Prepared	Date Analyzed	Flags
Client ID:	**VTRP211001I-Trip Blank**					
Laboratory ID:	10-012-04					
Dichlorodifluoromethane	ND	0.20	EPA 8260D	10-4-21	10-4-21	
Chloromethane	ND	1.0	EPA 8260D	10-4-21	10-4-21	
Vinyl Chloride	ND	0.20	EPA 8260D	10-4-21	10-4-21	
Bromomethane	ND	1.0	EPA 8260D	10-4-21	10-4-21	
Chloroethane	ND	1.0	EPA 8260D	10-4-21	10-4-21	
Trichlorofluoromethane	ND	0.20	EPA 8260D	10-4-21	10-4-21	
1,1-Dichloroethene	ND	0.20	EPA 8260D	10-4-21	10-4-21	
Acetone	ND	5.0	EPA 8260D	10-4-21	10-4-21	
Iodomethane	ND	1.3	EPA 8260D	10-4-21	10-4-21	
Carbon Disulfide	ND	0.20	EPA 8260D	10-4-21	10-4-21	
Methylene Chloride	ND	1.0	EPA 8260D	10-4-21	10-4-21	
(trans) 1,2-Dichloroethene	ND	0.20	EPA 8260D	10-4-21	10-4-21	
Methyl t-Butyl Ether	ND	0.20	EPA 8260D	10-4-21	10-4-21	
1,1-Dichloroethane	ND	0.20	EPA 8260D	10-4-21	10-4-21	
Vinyl Acetate	ND	1.0	EPA 8260D	10-4-21	10-4-21	
2,2-Dichloropropane	ND	0.20	EPA 8260D	10-4-21	10-4-21	
(cis) 1,2-Dichloroethene	ND	0.20	EPA 8260D	10-4-21	10-4-21	
2-Butanone	ND	5.0	EPA 8260D	10-4-21	10-4-21	
Bromochloromethane	ND	0.20	EPA 8260D	10-4-21	10-4-21	
Chloroform	ND	0.20	EPA 8260D	10-4-21	10-4-21	
1,1,1-Trichloroethane	ND	0.20	EPA 8260D	10-4-21	10-4-21	
Carbon Tetrachloride	ND	0.20	EPA 8260D	10-4-21	10-4-21	
1,1-Dichloropropene	ND	0.20	EPA 8260D	10-4-21	10-4-21	
Benzene	ND	0.20	EPA 8260D	10-4-21	10-4-21	
1,2-Dichloroethane	ND	0.20	EPA 8260D	10-4-21	10-4-21	
Trichloroethene	ND	0.20	EPA 8260D	10-4-21	10-4-21	
1,2-Dichloropropane	ND	0.20	EPA 8260D	10-4-21	10-4-21	
Dibromomethane	ND	0.20	EPA 8260D	10-4-21	10-4-21	
Bromodichloromethane	ND	0.20	EPA 8260D	10-4-21	10-4-21	
(cis) 1,3-Dichloropropene	ND	0.20	EPA 8260D	10-4-21	10-4-21	
Methyl Isobutyl Ketone	ND	2.0	EPA 8260D	10-4-21	10-4-21	
Toluene	ND	1.0	EPA 8260D	10-4-21	10-4-21	
(trans) 1,3-Dichloropropene	ND	0.20	EPA 8260D	10-4-21	10-4-21	

This report pertains to the samples analyzed in accordance with the chain of custody, and is intended only for the use of the individual or company to whom it is addressed.

Date of Report: October 6, 2021
Samples Submitted: October 1, 2021
Laboratory Reference: 2110-012
Project: 11-05150-003

VOLATILE ORGANICS EPA 8260D
page 2 of 2

Analyte	Result	PQL	Method	Date Prepared	Date Analyzed	Flags
Client ID:	**VTRP211001I-Trip Blank**					
Laboratory ID:	10-012-04					
1,1,2-Trichloroethane	ND	0.20	EPA 8260D	10-4-21	10-4-21	
Tetrachloroethene	ND	0.20	EPA 8260D	10-4-21	10-4-21	
1,3-Dichloropropane	ND	0.20	EPA 8260D	10-4-21	10-4-21	
2-Hexanone	ND	2.0	EPA 8260D	10-4-21	10-4-21	
Dibromochloromethane	ND	0.20	EPA 8260D	10-4-21	10-4-21	
1,2-Dibromoethane	ND	0.20	EPA 8260D	10-4-21	10-4-21	
Chlorobenzene	ND	0.20	EPA 8260D	10-4-21	10-4-21	
1,1,1,2-Tetrachloroethane	ND	0.20	EPA 8260D	10-4-21	10-4-21	
Ethylbenzene	ND	0.20	EPA 8260D	10-4-21	10-4-21	
m,p-Xylene	ND	0.40	EPA 8260D	10-4-21	10-4-21	
o-Xylene	ND	0.20	EPA 8260D	10-4-21	10-4-21	
Styrene	ND	0.20	EPA 8260D	10-4-21	10-4-21	
Bromoform	ND	1.0	EPA 8260D	10-4-21	10-4-21	
Isopropylbenzene	ND	0.20	EPA 8260D	10-4-21	10-4-21	
Bromobenzene	ND	0.20	EPA 8260D	10-4-21	10-4-21	
1,1,2,2-Tetrachloroethane	ND	0.20	EPA 8260D	10-4-21	10-4-21	
1,2,3-Trichloropropane	ND	0.20	EPA 8260D	10-4-21	10-4-21	
n-Propylbenzene	ND	0.20	EPA 8260D	10-4-21	10-4-21	
2-Chlorotoluene	ND	0.20	EPA 8260D	10-4-21	10-4-21	
4-Chlorotoluene	ND	0.20	EPA 8260D	10-4-21	10-4-21	
1,3,5-Trimethylbenzene	ND	0.20	EPA 8260D	10-4-21	10-4-21	
tert-Butylbenzene	ND	0.20	EPA 8260D	10-4-21	10-4-21	
1,2,4-Trimethylbenzene	ND	0.20	EPA 8260D	10-4-21	10-4-21	
sec-Butylbenzene	ND	0.20	EPA 8260D	10-4-21	10-4-21	
1,3-Dichlorobenzene	ND	0.20	EPA 8260D	10-4-21	10-4-21	
p-Isopropyltoluene	ND	0.20	EPA 8260D	10-4-21	10-4-21	
1,4-Dichlorobenzene	ND	0.20	EPA 8260D	10-4-21	10-4-21	
1,2-Dichlorobenzene	ND	0.20	EPA 8260D	10-4-21	10-4-21	
n-Butylbenzene	ND	0.20	EPA 8260D	10-4-21	10-4-21	
1,2-Dibromo-3-chloropropane	ND	1.0	EPA 8260D	10-4-21	10-4-21	
1,2,4-Trichlorobenzene	ND	0.20	EPA 8260D	10-4-21	10-4-21	
Hexachlorobutadiene	ND	1.0	EPA 8260D	10-4-21	10-4-21	
Naphthalene	ND	1.3	EPA 8260D	10-4-21	10-4-21	
1,2,3-Trichlorobenzene	ND	0.27	EPA 8260D	10-4-21	10-4-21	
Surrogate:	*Percent Recovery*	*Control Limits*				
Dibromofluoromethane	*100*	*75-127*				
Toluene-d8	*100*	*80-127*				
4-Bromofluorobenzene	*97*	*78-125*				

This report pertains to the samples analyzed in accordance with the chain of custody, and is intended only for the use of the individual or company to whom it is addressed.

Date of Report: October 6, 2021
Samples Submitted: October 1, 2021
Laboratory Reference: 2110-012
Project: 11-05150-003

VOLATILE ORGANICS EPA 8260D
QUALITY CONTROL
page 1 of 2

Matrix: Water
Units: ug/L

Analyte	Result	PQL	Method	Date Prepared	Date Analyzed	Flags
METHOD BLANK						
Laboratory ID:	MB1004W1					
Dichlorodifluoromethane	ND	0.20	EPA 8260D	10-4-21	10-4-21	
Chloromethane	ND	1.0	EPA 8260D	10-4-21	10-4-21	
Vinyl Chloride	ND	0.20	EPA 8260D	10-4-21	10-4-21	
Bromomethane	ND	1.0	EPA 8260D	10-4-21	10-4-21	
Chloroethane	ND	1.0	EPA 8260D	10-4-21	10-4-21	
Trichlorofluoromethane	ND	0.20	EPA 8260D	10-4-21	10-4-21	
1,1-Dichloroethene	ND	0.20	EPA 8260D	10-4-21	10-4-21	
Acetone	ND	5.0	EPA 8260D	10-4-21	10-4-21	
Iodomethane	ND	1.3	EPA 8260D	10-4-21	10-4-21	
Carbon Disulfide	ND	0.20	EPA 8260D	10-4-21	10-4-21	
Methylene Chloride	ND	1.0	EPA 8260D	10-4-21	10-4-21	
(trans) 1,2-Dichloroethene	ND	0.20	EPA 8260D	10-4-21	10-4-21	
Methyl t-Butyl Ether	ND	0.20	EPA 8260D	10-4-21	10-4-21	
1,1-Dichloroethane	ND	0.20	EPA 8260D	10-4-21	10-4-21	
Vinyl Acetate	ND	1.0	EPA 8260D	10-4-21	10-4-21	
2,2-Dichloropropane	ND	0.20	EPA 8260D	10-4-21	10-4-21	
(cis) 1,2-Dichloroethene	ND	0.20	EPA 8260D	10-4-21	10-4-21	
2-Butanone	ND	5.0	EPA 8260D	10-4-21	10-4-21	
Bromochloromethane	ND	0.20	EPA 8260D	10-4-21	10-4-21	
Chloroform	ND	0.20	EPA 8260D	10-4-21	10-4-21	
1,1,1-Trichloroethane	ND	0.20	EPA 8260D	10-4-21	10-4-21	
Carbon Tetrachloride	ND	0.20	EPA 8260D	10-4-21	10-4-21	
1,1-Dichloropropene	ND	0.20	EPA 8260D	10-4-21	10-4-21	
Benzene	ND	0.20	EPA 8260D	10-4-21	10-4-21	
1,2-Dichloroethane	ND	0.20	EPA 8260D	10-4-21	10-4-21	
Trichloroethene	ND	0.20	EPA 8260D	10-4-21	10-4-21	
1,2-Dichloropropane	ND	0.20	EPA 8260D	10-4-21	10-4-21	
Dibromomethane	ND	0.20	EPA 8260D	10-4-21	10-4-21	
Bromodichloromethane	ND	0.20	EPA 8260D	10-4-21	10-4-21	
(cis) 1,3-Dichloropropene	ND	0.20	EPA 8260D	10-4-21	10-4-21	
Methyl Isobutyl Ketone	ND	2.0	EPA 8260D	10-4-21	10-4-21	
Toluene	ND	1.0	EPA 8260D	10-4-21	10-4-21	
(trans) 1,3-Dichloropropene	ND	0.20	EPA 8260D	10-4-21	10-4-21	

This report pertains to the samples analyzed in accordance with the chain of custody, and is intended only for the use of the individual or company to whom it is addressed.

Date of Report: October 6, 2021
Samples Submitted: October 1, 2021
Laboratory Reference: 2110-012
Project: 11-05150-003

VOLATILE ORGANICS EPA 8260D
QUALITY CONTROL
page 2 of 2

Analyte	Result	PQL	Method	Date Prepared	Date Analyzed	Flags
METHOD BLANK						
Laboratory ID:	MB1004W1					
1,1,2-Trichloroethane	ND	0.20	EPA 8260D	10-4-21	10-4-21	
Tetrachloroethene	ND	0.20	EPA 8260D	10-4-21	10-4-21	
1,3-Dichloropropane	ND	0.20	EPA 8260D	10-4-21	10-4-21	
2-Hexanone	ND	2.0	EPA 8260D	10-4-21	10-4-21	
Dibromochloromethane	ND	0.20	EPA 8260D	10-4-21	10-4-21	
1,2-Dibromoethane	ND	0.20	EPA 8260D	10-4-21	10-4-21	
Chlorobenzene	ND	0.20	EPA 8260D	10-4-21	10-4-21	
1,1,1,2-Tetrachloroethane	ND	0.20	EPA 8260D	10-4-21	10-4-21	
Ethylbenzene	ND	0.20	EPA 8260D	10-4-21	10-4-21	
m,p-Xylene	ND	0.40	EPA 8260D	10-4-21	10-4-21	
o-Xylene	ND	0.20	EPA 8260D	10-4-21	10-4-21	
Styrene	ND	0.20	EPA 8260D	10-4-21	10-4-21	
Bromoform	ND	1.0	EPA 8260D	10-4-21	10-4-21	
Isopropylbenzene	ND	0.20	EPA 8260D	10-4-21	10-4-21	
Bromobenzene	ND	0.20	EPA 8260D	10-4-21	10-4-21	
1,1,2,2-Tetrachloroethane	ND	0.20	EPA 8260D	10-4-21	10-4-21	
1,2,3-Trichloropropane	ND	0.20	EPA 8260D	10-4-21	10-4-21	
n-Propylbenzene	ND	0.20	EPA 8260D	10-4-21	10-4-21	
2-Chlorotoluene	ND	0.20	EPA 8260D	10-4-21	10-4-21	
4-Chlorotoluene	ND	0.20	EPA 8260D	10-4-21	10-4-21	
1,3,5-Trimethylbenzene	ND	0.20	EPA 8260D	10-4-21	10-4-21	
tert-Butylbenzene	ND	0.20	EPA 8260D	10-4-21	10-4-21	
1,2,4-Trimethylbenzene	ND	0.20	EPA 8260D	10-4-21	10-4-21	
sec-Butylbenzene	ND	0.20	EPA 8260D	10-4-21	10-4-21	
1,3-Dichlorobenzene	ND	0.20	EPA 8260D	10-4-21	10-4-21	
p-Isopropyltoluene	ND	0.20	EPA 8260D	10-4-21	10-4-21	
1,4-Dichlorobenzene	ND	0.20	EPA 8260D	10-4-21	10-4-21	
1,2-Dichlorobenzene	ND	0.20	EPA 8260D	10-4-21	10-4-21	
n-Butylbenzene	ND	0.20	EPA 8260D	10-4-21	10-4-21	
1,2-Dibromo-3-chloropropane	ND	1.0	EPA 8260D	10-4-21	10-4-21	
1,2,4-Trichlorobenzene	ND	0.20	EPA 8260D	10-4-21	10-4-21	
Hexachlorobutadiene	ND	1.0	EPA 8260D	10-4-21	10-4-21	
Naphthalene	ND	1.3	EPA 8260D	10-4-21	10-4-21	
1,2,3-Trichlorobenzene	ND	0.27	EPA 8260D	10-4-21	10-4-21	
Surrogate:	*Percent Recovery*	*Control Limits*				
Dibromofluoromethane	*99*	*75-127*				
Toluene-d8	*100*	*80-127*				
4-Bromofluorobenzene	*98*	*78-125*				

This report pertains to the samples analyzed in accordance with the chain of custody, and is intended only for the use of the individual or company to whom it is addressed.

Date of Report: October 6, 2021
Samples Submitted: October 1, 2021
Laboratory Reference: 2110-012
Project: 11-05150-003

VOLATILE ORGANICS EPA 8260D
QUALITY CONTROL

Matrix: Water
Units: ug/L

Analyte	Result		Spike Level		Percent Recovery		Recovery Limits	RPD	RPD Limit	Flags
SPIKE BLANKS										
Laboratory ID:	SB1004W1									
	SB	SBD	SB	SBD	SB	SBD				
1,1-Dichloroethene	**10.4**	**10.6**	10.0	10.0	104	106	78-124	2	19	
Benzene	**9.86**	**10.2**	10.0	10.0	99	102	80-119	3	16	
Trichloroethene	**10.8**	**11.1**	10.0	10.0	108	111	80-121	3	18	
Toluene	**9.94**	**10.2**	10.0	10.0	99	102	80-117	3	18	
Chlorobenzene	**10.3**	**10.6**	10.0	10.0	103	106	80-117	3	17	
Surrogate:										
Dibromofluoromethane					*95*	*95*	*75-127*			
Toluene-d8					*101*	*102*	*80-127*			
4-Bromofluorobenzene					*104*	*106*	*78-125*			

This report pertains to the samples analyzed in accordance with the chain of custody, and is intended only for the use of the individual or company to whom it is addressed.

Date of Report: October 6, 2021
Samples Submitted: October 1, 2021
Laboratory Reference: 2110-012
Project: 11-05150-003

SEMIVOLATILE ORGANICS EPA 8270E/SIM
page 1 of 2

Matrix: Soil
Units: mg/Kg

Analyte	Result	PQL	Method	Date Prepared	Date Analyzed	Flags
Client ID:	**DA7SWCS27211001I**					
Laboratory ID:	10-012-01					
n-Nitrosodimethylamine	**ND**	0.0098	EPA 8270E	10-4-21	10-6-21	
Pyridine	**ND**	0.20	EPA 8270E	10-4-21	10-6-21	
Phenol	**ND**	0.020	EPA 8270E	10-4-21	10-6-21	
Aniline	**ND**	0.098	EPA 8270E	10-4-21	10-6-21	
bis(2-Chloroethyl)ether	**ND**	0.0098	EPA 8270E	10-4-21	10-6-21	
2-Chlorophenol	**ND**	0.020	EPA 8270E	10-4-21	10-6-21	
1,3-Dichlorobenzene	**ND**	0.020	EPA 8270E	10-4-21	10-6-21	
1,4-Dichlorobenzene	**ND**	0.020	EPA 8270E	10-4-21	10-6-21	
Benzyl alcohol	**ND**	0.020	EPA 8270E	10-4-21	10-6-21	
1,2-Dichlorobenzene	**ND**	0.020	EPA 8270E	10-4-21	10-6-21	
2-Methylphenol (o-Cresol)	**ND**	0.020	EPA 8270E	10-4-21	10-6-21	
bis(2-Chloroisopropyl)ether	**ND**	0.020	EPA 8270E	10-4-21	10-6-21	
(3+4)-Methylphenol (m,p-Cresol)	**ND**	0.020	EPA 8270E	10-4-21	10-6-21	
n-Nitroso-di-n-propylamine	**ND**	0.0098	EPA 8270E	10-4-21	10-6-21	
Hexachloroethane	**ND**	0.020	EPA 8270E	10-4-21	10-6-21	
Nitrobenzene	**ND**	0.020	EPA 8270E	10-4-21	10-6-21	
Isophorone	**ND**	0.020	EPA 8270E	10-4-21	10-6-21	
2-Nitrophenol	**ND**	0.020	EPA 8270E	10-4-21	10-6-21	
2,4-Dimethylphenol	**ND**	0.020	EPA 8270E	10-4-21	10-6-21	
bis(2-Chloroethoxy)methane	**ND**	0.020	EPA 8270E	10-4-21	10-6-21	
2,4-Dichlorophenol	**ND**	0.020	EPA 8270E	10-4-21	10-6-21	
1,2,4-Trichlorobenzene	**ND**	0.020	EPA 8270E	10-4-21	10-6-21	
Naphthalene	**ND**	0.0039	EPA 8270E/SIM	10-4-21	10-5-21	
4-Chloroaniline	**ND**	0.0098	EPA 8270E	10-4-21	10-6-21	
Hexachlorobutadiene	**ND**	0.020	EPA 8270E	10-4-21	10-6-21	
4-Chloro-3-methylphenol	**ND**	0.020	EPA 8270E	10-4-21	10-6-21	
2-Methylnaphthalene	**ND**	0.0039	EPA 8270E/SIM	10-4-21	10-5-21	
1-Methylnaphthalene	**ND**	0.0039	EPA 8270E/SIM	10-4-21	10-5-21	
Hexachlorocyclopentadiene	**ND**	0.020	EPA 8270E	10-4-21	10-6-21	
2,4,6-Trichlorophenol	**ND**	0.020	EPA 8270E	10-4-21	10-6-21	
2,3-Dichloroaniline	**ND**	0.020	EPA 8270E	10-4-21	10-6-21	
2,4,5-Trichlorophenol	**ND**	0.020	EPA 8270E	10-4-21	10-6-21	
2-Chloronaphthalene	**ND**	0.020	EPA 8270E	10-4-21	10-6-21	
2-Nitroaniline	**ND**	0.020	EPA 8270E	10-4-21	10-6-21	
1,4-Dinitrobenzene	**ND**	0.020	EPA 8270E	10-4-21	10-6-21	
Dimethylphthalate	**ND**	0.020	EPA 8270E	10-4-21	10-6-21	
1,3-Dinitrobenzene	**ND**	0.020	EPA 8270E	10-4-21	10-6-21	
2,6-Dinitrotoluene	**ND**	0.0098	EPA 8270E	10-4-21	10-6-21	
1,2-Dinitrobenzene	**ND**	0.020	EPA 8270E	10-4-21	10-6-21	
Acenaphthylene	**ND**	0.0039	EPA 8270E/SIM	10-4-21	10-5-21	
3-Nitroaniline	**ND**	0.020	EPA 8270E	10-4-21	10-6-21	

This report pertains to the samples analyzed in accordance with the chain of custody, and is intended only for the use of the individual or company to whom it is addressed.

Date of Report: October 6, 2021
Samples Submitted: October 1, 2021
Laboratory Reference: 2110-012
Project: 11-05150-003

SEMIVOLATILE ORGANICS EPA 8270E/SIM
page 2 of 2

Analyte	Result	PQL	Method	Date Prepared	Date Analyzed	Flags
Client ID:	**DA7SWCS27211001I**					
Laboratory ID:	10-012-01					
2,4-Dinitrophenol	**ND**	0.039	EPA 8270E	10-4-21	10-6-21	
Acenaphthene	**ND**	0.0039	EPA 8270E/SIM	10-4-21	10-5-21	
4-Nitrophenol	**ND**	0.020	EPA 8270E	10-4-21	10-6-21	
2,4-Dinitrotoluene	**ND**	0.0098	EPA 8270E	10-4-21	10-6-21	
Dibenzofuran	**ND**	0.020	EPA 8270E	10-4-21	10-6-21	
2,3,5,6-Tetrachlorophenol	**ND**	0.020	EPA 8270E	10-4-21	10-6-21	
2,3,4,6-Tetrachlorophenol	**ND**	0.020	EPA 8270E	10-4-21	10-6-21	
Diethylphthalate	**ND**	0.098	EPA 8270E	10-4-21	10-6-21	
4-Chlorophenyl-phenylether	**ND**	0.020	EPA 8270E	10-4-21	10-6-21	
4-Nitroaniline	**ND**	0.020	EPA 8270E	10-4-21	10-6-21	
Fluorene	**ND**	0.0039	EPA 8270E/SIM	10-4-21	10-5-21	
4,6-Dinitro-2-methylphenol	**ND**	0.098	EPA 8270E	10-4-21	10-6-21	
n-Nitrosodiphenylamine	**ND**	0.020	EPA 8270E	10-4-21	10-6-21	
1,2-Diphenylhydrazine	**ND**	0.020	EPA 8270E	10-4-21	10-6-21	
4-Bromophenyl-phenylether	**ND**	0.020	EPA 8270E	10-4-21	10-6-21	
Hexachlorobenzene	**ND**	0.020	EPA 8270E	10-4-21	10-6-21	
Pentachlorophenol	**ND**	0.020	EPA 8270E	10-4-21	10-6-21	
Phenanthrene	**ND**	0.0039	EPA 8270E/SIM	10-4-21	10-5-21	
Anthracene	**ND**	0.0039	EPA 8270E/SIM	10-4-21	10-5-21	
Carbazole	**ND**	0.020	EPA 8270E	10-4-21	10-6-21	
Di-n-butylphthalate	**ND**	0.098	EPA 8270E	10-4-21	10-6-21	
Fluoranthene	**ND**	0.0039	EPA 8270E/SIM	10-4-21	10-5-21	
Pyrene	**ND**	0.0039	EPA 8270E/SIM	10-4-21	10-5-21	
Butylbenzylphthalate	**ND**	0.098	EPA 8270E	10-4-21	10-6-21	
bis-2-Ethylhexyladipate	**ND**	0.098	EPA 8270E	10-4-21	10-6-21	
3,3'-Dichlorobenzidine	**ND**	0.0098	EPA 8270E	10-4-21	10-6-21	
Benzo[a]anthracene	**ND**	0.0039	EPA 8270E/SIM	10-4-21	10-5-21	
Chrysene	**ND**	0.0039	EPA 8270E/SIM	10-4-21	10-5-21	
bis(2-Ethylhexyl)phthalate	**ND**	0.098	EPA 8270E	10-4-21	10-6-21	
Di-n-octylphthalate	**ND**	0.098	EPA 8270E	10-4-21	10-6-21	
Benzo[b]fluoranthene	**ND**	0.0039	EPA 8270E/SIM	10-4-21	10-5-21	
Benzo(j,k)fluoranthene	**ND**	0.0039	EPA 8270E/SIM	10-4-21	10-5-21	
Benzo[a]pyrene	**ND**	0.0039	EPA 8270E/SIM	10-4-21	10-5-21	
Indeno[1,2,3-cd]pyrene	**ND**	0.0039	EPA 8270E/SIM	10-4-21	10-5-21	
Dibenz[a,h]anthracene	**ND**	0.0039	EPA 8270E/SIM	10-4-21	10-5-21	
Benzo[g,h,i]perylene	**ND**	0.0039	EPA 8270E/SIM	10-4-21	10-5-21	
Surrogate:	*Percent Recovery*	*Control Limits*				
2-Fluorophenol	*51*	*26 - 109*				
Phenol-d6	*59*	*33 - 113*				
Nitrobenzene-d5	*53*	*31 - 110*				
2-Fluorobiphenyl	*53*	*42 - 107*				
2,4,6-Tribromophenol	*56*	*42 - 123*				
Terphenyl-d14	*54*	*41 - 115*				

This report pertains to the samples analyzed in accordance with the chain of custody, and is intended only for the use of the individual or company to whom it is addressed.

Date of Report: October 6, 2021
Samples Submitted: October 1, 2021
Laboratory Reference: 2110-012
Project: 11-05150-003

SEMIVOLATILE ORGANICS EPA 8270E/SIM
page 1 of 2

Matrix: Soil
Units: mg/Kg

Analyte	Result	PQL	Method	Date Prepared	Date Analyzed	Flags
Client ID:	**DA7SWCS28211001I**					
Laboratory ID:	10-012-02					
n-Nitrosodimethylamine	**ND**	0.019	EPA 8270E	10-4-21	10-6-21	
Pyridine	**ND**	0.37	EPA 8270E	10-4-21	10-6-21	
Phenol	**ND**	0.037	EPA 8270E	10-4-21	10-6-21	
Aniline	**ND**	0.19	EPA 8270E	10-4-21	10-6-21	
bis(2-Chloroethyl)ether	**ND**	0.019	EPA 8270E	10-4-21	10-6-21	
2-Chlorophenol	**ND**	0.037	EPA 8270E	10-4-21	10-6-21	
1,3-Dichlorobenzene	**ND**	0.037	EPA 8270E	10-4-21	10-6-21	
1,4-Dichlorobenzene	**ND**	0.037	EPA 8270E	10-4-21	10-6-21	
Benzyl alcohol	**ND**	0.037	EPA 8270E	10-4-21	10-6-21	
1,2-Dichlorobenzene	**ND**	0.037	EPA 8270E	10-4-21	10-6-21	
2-Methylphenol (o-Cresol)	**ND**	0.037	EPA 8270E	10-4-21	10-6-21	
bis(2-Chloroisopropyl)ether	**ND**	0.037	EPA 8270E	10-4-21	10-6-21	
(3+4)-Methylphenol (m,p-Cresol)	**ND**	0.037	EPA 8270E	10-4-21	10-6-21	
n-Nitroso-di-n-propylamine	**ND**	0.019	EPA 8270E	10-4-21	10-6-21	
Hexachloroethane	**ND**	0.037	EPA 8270E	10-4-21	10-6-21	
Nitrobenzene	**ND**	0.037	EPA 8270E	10-4-21	10-6-21	
Isophorone	**ND**	0.037	EPA 8270E	10-4-21	10-6-21	
2-Nitrophenol	**ND**	0.037	EPA 8270E	10-4-21	10-6-21	
2,4-Dimethylphenol	**ND**	0.037	EPA 8270E	10-4-21	10-6-21	
bis(2-Chloroethoxy)methane	**ND**	0.037	EPA 8270E	10-4-21	10-6-21	
2,4-Dichlorophenol	**ND**	0.037	EPA 8270E	10-4-21	10-6-21	
1,2,4-Trichlorobenzene	**ND**	0.037	EPA 8270E	10-4-21	10-6-21	
Naphthalene	**ND**	0.0037	EPA 8270E/SIM	10-4-21	10-5-21	
4-Chloroaniline	**ND**	0.019	EPA 8270E	10-4-21	10-6-21	
Hexachlorobutadiene	**ND**	0.037	EPA 8270E	10-4-21	10-6-21	
4-Chloro-3-methylphenol	**ND**	0.037	EPA 8270E	10-4-21	10-6-21	
2-Methylnaphthalene	**ND**	0.0037	EPA 8270E/SIM	10-4-21	10-5-21	
1-Methylnaphthalene	**ND**	0.0037	EPA 8270E/SIM	10-4-21	10-5-21	
Hexachlorocyclopentadiene	**ND**	0.037	EPA 8270E	10-4-21	10-6-21	
2,4,6-Trichlorophenol	**ND**	0.037	EPA 8270E	10-4-21	10-6-21	
2,3-Dichloroaniline	**ND**	0.037	EPA 8270E	10-4-21	10-6-21	
2,4,5-Trichlorophenol	**ND**	0.037	EPA 8270E	10-4-21	10-6-21	
2-Chloronaphthalene	**ND**	0.037	EPA 8270E	10-4-21	10-6-21	
2-Nitroaniline	**ND**	0.037	EPA 8270E	10-4-21	10-6-21	
1,4-Dinitrobenzene	**ND**	0.037	EPA 8270E	10-4-21	10-6-21	
Dimethylphthalate	**ND**	0.037	EPA 8270E	10-4-21	10-6-21	
1,3-Dinitrobenzene	**ND**	0.037	EPA 8270E	10-4-21	10-6-21	
2,6-Dinitrotoluene	**ND**	0.019	EPA 8270E	10-4-21	10-6-21	
1,2-Dinitrobenzene	**ND**	0.037	EPA 8270E	10-4-21	10-6-21	
Acenaphthylene	**ND**	0.0037	EPA 8270E/SIM	10-4-21	10-5-21	
3-Nitroaniline	**ND**	0.037	EPA 8270E	10-4-21	10-6-21	

This report pertains to the samples analyzed in accordance with the chain of custody, and is intended only for the use of the individual or company to whom it is addressed.

Date of Report: October 6, 2021
Samples Submitted: October 1, 2021
Laboratory Reference: 2110-012
Project: 11-05150-003

SEMIVOLATILE ORGANICS EPA 8270E/SIM
page 2 of 2

Analyte	Result	PQL	Method	Date Prepared	Date Analyzed	Flags
Client ID:	**DA7SWCS28211001I**					
Laboratory ID:	10-012-02					
2,4-Dinitrophenol	**ND**	0.074	EPA 8270E	10-4-21	10-6-21	
Acenaphthene	**ND**	0.0037	EPA 8270E/SIM	10-4-21	10-5-21	
4-Nitrophenol	**ND**	0.037	EPA 8270E	10-4-21	10-6-21	
2,4-Dinitrotoluene	**ND**	0.019	EPA 8270E	10-4-21	10-6-21	
Dibenzofuran	**ND**	0.037	EPA 8270E	10-4-21	10-6-21	
2,3,5,6-Tetrachlorophenol	**ND**	0.037	EPA 8270E	10-4-21	10-6-21	
2,3,4,6-Tetrachlorophenol	**ND**	0.037	EPA 8270E	10-4-21	10-6-21	
Diethylphthalate	**ND**	0.19	EPA 8270E	10-4-21	10-6-21	
4-Chlorophenyl-phenylether	**ND**	0.037	EPA 8270E	10-4-21	10-6-21	
4-Nitroaniline	**ND**	0.037	EPA 8270E	10-4-21	10-6-21	
Fluorene	**ND**	0.0037	EPA 8270E/SIM	10-4-21	10-5-21	
4,6-Dinitro-2-methylphenol	**ND**	0.19	EPA 8270E	10-4-21	10-6-21	
n-Nitrosodiphenylamine	**ND**	0.037	EPA 8270E	10-4-21	10-6-21	
1,2-Diphenylhydrazine	**ND**	0.037	EPA 8270E	10-4-21	10-6-21	
4-Bromophenyl-phenylether	**ND**	0.037	EPA 8270E	10-4-21	10-6-21	
Hexachlorobenzene	**ND**	0.037	EPA 8270E	10-4-21	10-6-21	
Pentachlorophenol	**ND**	0.037	EPA 8270E	10-4-21	10-6-21	
Phenanthrene	**ND**	0.0037	EPA 8270E/SIM	10-4-21	10-5-21	
Anthracene	**ND**	0.0037	EPA 8270E/SIM	10-4-21	10-5-21	
Carbazole	**ND**	0.037	EPA 8270E	10-4-21	10-6-21	
Di-n-butylphthalate	**ND**	0.19	EPA 8270E	10-4-21	10-6-21	
Fluoranthene	**ND**	0.0037	EPA 8270E/SIM	10-4-21	10-5-21	
Pyrene	**ND**	0.0037	EPA 8270E/SIM	10-4-21	10-5-21	
Butylbenzylphthalate	**ND**	0.19	EPA 8270E	10-4-21	10-6-21	
bis-2-Ethylhexyladipate	**ND**	0.19	EPA 8270E	10-4-21	10-6-21	
3,3'-Dichlorobenzidine	**ND**	0.019	EPA 8270E	10-4-21	10-6-21	
Benzo[a]anthracene	**ND**	0.0037	EPA 8270E/SIM	10-4-21	10-5-21	
Chrysene	**ND**	0.0037	EPA 8270E/SIM	10-4-21	10-5-21	
bis(2-Ethylhexyl)phthalate	**ND**	0.19	EPA 8270E	10-4-21	10-6-21	
Di-n-octylphthalate	**ND**	0.19	EPA 8270E	10-4-21	10-6-21	
Benzo[b]fluoranthene	**ND**	0.0037	EPA 8270E/SIM	10-4-21	10-5-21	
Benzo(j,k)fluoranthene	**ND**	0.0037	EPA 8270E/SIM	10-4-21	10-5-21	
Benzo[a]pyrene	**ND**	0.0037	EPA 8270E/SIM	10-4-21	10-5-21	
Indeno[1,2,3-cd]pyrene	**ND**	0.0037	EPA 8270E/SIM	10-4-21	10-5-21	
Dibenz[a,h]anthracene	**ND**	0.0037	EPA 8270E/SIM	10-4-21	10-5-21	
Benzo[g,h,i]perylene	**ND**	0.0037	EPA 8270E/SIM	10-4-21	10-5-21	
Surrogate:	*Percent Recovery*	*Control Limits*				
2-Fluorophenol	*46*	*26 - 109*				
Phenol-d6	*57*	*33 - 113*				
Nitrobenzene-d5	*52*	*31 - 110*				
2-Fluorobiphenyl	*57*	*42 - 107*				
2,4,6-Tribromophenol	*60*	*42 - 123*				
Terphenyl-d14	*58*	*41 - 115*				

This report pertains to the samples analyzed in accordance with the chain of custody, and is intended only for the use of the individual or company to whom it is addressed.

Date of Report: October 6, 2021
Samples Submitted: October 1, 2021
Laboratory Reference: 2110-012
Project: 11-05150-003

SEMIVOLATILE ORGANICS EPA 8270E/SIM
page 1 of 2

Matrix: Soil
Units: mg/Kg

Analyte	Result	PQL	Method	Date Prepared	Date Analyzed	Flags
Client ID:	**DA7SWCS29211001I**					
Laboratory ID:	10-012-03					
n-Nitrosodimethylamine	**ND**	0.0094	EPA 8270E	10-4-21	10-6-21	
Pyridine	**ND**	0.19	EPA 8270E	10-4-21	10-6-21	
Phenol	**ND**	0.019	EPA 8270E	10-4-21	10-6-21	
Aniline	**ND**	0.094	EPA 8270E	10-4-21	10-6-21	
bis(2-Chloroethyl)ether	**ND**	0.0094	EPA 8270E	10-4-21	10-6-21	
2-Chlorophenol	**ND**	0.019	EPA 8270E	10-4-21	10-6-21	
1,3-Dichlorobenzene	**ND**	0.019	EPA 8270E	10-4-21	10-6-21	
1,4-Dichlorobenzene	**ND**	0.019	EPA 8270E	10-4-21	10-6-21	
Benzyl alcohol	**ND**	0.019	EPA 8270E	10-4-21	10-6-21	
1,2-Dichlorobenzene	**ND**	0.019	EPA 8270E	10-4-21	10-6-21	
2-Methylphenol (o-Cresol)	**ND**	0.019	EPA 8270E	10-4-21	10-6-21	
bis(2-Chloroisopropyl)ether	**ND**	0.019	EPA 8270E	10-4-21	10-6-21	
(3+4)-Methylphenol (m,p-Cresol)	**ND**	0.019	EPA 8270E	10-4-21	10-6-21	
n-Nitroso-di-n-propylamine	**ND**	0.0094	EPA 8270E	10-4-21	10-6-21	
Hexachloroethane	**ND**	0.019	EPA 8270E	10-4-21	10-6-21	
Nitrobenzene	**ND**	0.019	EPA 8270E	10-4-21	10-6-21	
Isophorone	**ND**	0.019	EPA 8270E	10-4-21	10-6-21	
2-Nitrophenol	**ND**	0.019	EPA 8270E	10-4-21	10-6-21	
2,4-Dimethylphenol	**ND**	0.019	EPA 8270E	10-4-21	10-6-21	
bis(2-Chloroethoxy)methane	**ND**	0.019	EPA 8270E	10-4-21	10-6-21	
2,4-Dichlorophenol	**ND**	0.019	EPA 8270E	10-4-21	10-6-21	
1,2,4-Trichlorobenzene	**ND**	0.019	EPA 8270E	10-4-21	10-6-21	
Naphthalene	**ND**	0.0037	EPA 8270E/SIM	10-4-21	10-5-21	
4-Chloroaniline	**ND**	0.0094	EPA 8270E	10-4-21	10-6-21	
Hexachlorobutadiene	**ND**	0.019	EPA 8270E	10-4-21	10-6-21	
4-Chloro-3-methylphenol	**ND**	0.019	EPA 8270E	10-4-21	10-6-21	
2-Methylnaphthalene	**ND**	0.0037	EPA 8270E/SIM	10-4-21	10-5-21	
1-Methylnaphthalene	**ND**	0.0037	EPA 8270E/SIM	10-4-21	10-5-21	
Hexachlorocyclopentadiene	**ND**	0.019	EPA 8270E	10-4-21	10-6-21	
2,4,6-Trichlorophenol	**ND**	0.019	EPA 8270E	10-4-21	10-6-21	
2,3-Dichloroaniline	**ND**	0.019	EPA 8270E	10-4-21	10-6-21	
2,4,5-Trichlorophenol	**ND**	0.019	EPA 8270E	10-4-21	10-6-21	
2-Chloronaphthalene	**ND**	0.019	EPA 8270E	10-4-21	10-6-21	
2-Nitroaniline	**ND**	0.019	EPA 8270E	10-4-21	10-6-21	
1,4-Dinitrobenzene	**ND**	0.019	EPA 8270E	10-4-21	10-6-21	
Dimethylphthalate	**ND**	0.019	EPA 8270E	10-4-21	10-6-21	
1,3-Dinitrobenzene	**ND**	0.019	EPA 8270E	10-4-21	10-6-21	
2,6-Dinitrotoluene	**ND**	0.0094	EPA 8270E	10-4-21	10-6-21	
1,2-Dinitrobenzene	**ND**	0.019	EPA 8270E	10-4-21	10-6-21	
Acenaphthylene	**ND**	0.0037	EPA 8270E/SIM	10-4-21	10-5-21	
3-Nitroaniline	**ND**	0.019	EPA 8270E	10-4-21	10-6-21	

This report pertains to the samples analyzed in accordance with the chain of custody,
and is intended only for the use of the individual or company to whom it is addressed.

Date of Report: October 6, 2021
Samples Submitted: October 1, 2021
Laboratory Reference: 2110-012
Project: 11-05150-003

SEMIVOLATILE ORGANICS EPA 8270E/SIM
page 2 of 2

Analyte	Result	PQL	Method	Date Prepared	Date Analyzed	Flags
Client ID:	**DA7SWCS29211001I**					
Laboratory ID:	10-012-03					
2,4-Dinitrophenol	**ND**	0.037	EPA 8270E	10-4-21	10-6-21	
Acenaphthene	**ND**	0.0037	EPA 8270E/SIM	10-4-21	10-5-21	
4-Nitrophenol	**ND**	0.019	EPA 8270E	10-4-21	10-6-21	
2,4-Dinitrotoluene	**ND**	0.0094	EPA 8270E	10-4-21	10-6-21	
Dibenzofuran	**ND**	0.019	EPA 8270E	10-4-21	10-6-21	
2,3,5,6-Tetrachlorophenol	**ND**	0.019	EPA 8270E	10-4-21	10-6-21	
2,3,4,6-Tetrachlorophenol	**ND**	0.019	EPA 8270E	10-4-21	10-6-21	
Diethylphthalate	**ND**	0.094	EPA 8270E	10-4-21	10-6-21	
4-Chlorophenyl-phenylether	**ND**	0.019	EPA 8270E	10-4-21	10-6-21	
4-Nitroaniline	**ND**	0.019	EPA 8270E	10-4-21	10-6-21	
Fluorene	**ND**	0.0037	EPA 8270E/SIM	10-4-21	10-5-21	
4,6-Dinitro-2-methylphenol	**ND**	0.094	EPA 8270E	10-4-21	10-6-21	
n-Nitrosodiphenylamine	**ND**	0.019	EPA 8270E	10-4-21	10-6-21	
1,2-Diphenylhydrazine	**ND**	0.019	EPA 8270E	10-4-21	10-6-21	
4-Bromophenyl-phenylether	**ND**	0.019	EPA 8270E	10-4-21	10-6-21	
Hexachlorobenzene	**ND**	0.019	EPA 8270E	10-4-21	10-6-21	
Pentachlorophenol	**ND**	0.019	EPA 8270E	10-4-21	10-6-21	
Phenanthrene	**ND**	0.0037	EPA 8270E/SIM	10-4-21	10-5-21	
Anthracene	**ND**	0.0037	EPA 8270E/SIM	10-4-21	10-5-21	
Carbazole	**ND**	0.019	EPA 8270E	10-4-21	10-6-21	
Di-n-butylphthalate	**ND**	0.094	EPA 8270E	10-4-21	10-6-21	
Fluoranthene	**ND**	0.0037	EPA 8270E/SIM	10-4-21	10-5-21	
Pyrene	**ND**	0.0037	EPA 8270E/SIM	10-4-21	10-5-21	
Butylbenzylphthalate	**ND**	0.094	EPA 8270E	10-4-21	10-6-21	
bis-2-Ethylhexyladipate	**ND**	0.094	EPA 8270E	10-4-21	10-6-21	
3,3'-Dichlorobenzidine	**ND**	0.0094	EPA 8270E	10-4-21	10-6-21	
Benzo[a]anthracene	**ND**	0.0037	EPA 8270E/SIM	10-4-21	10-5-21	
Chrysene	**ND**	0.0037	EPA 8270E/SIM	10-4-21	10-5-21	
bis(2-Ethylhexyl)phthalate	**ND**	0.094	EPA 8270E	10-4-21	10-6-21	
Di-n-octylphthalate	**ND**	0.094	EPA 8270E	10-4-21	10-6-21	
Benzo[b]fluoranthene	**ND**	0.0037	EPA 8270E/SIM	10-4-21	10-5-21	
Benzo(j,k)fluoranthene	**ND**	0.0037	EPA 8270E/SIM	10-4-21	10-5-21	
Benzo[a]pyrene	**ND**	0.0037	EPA 8270E/SIM	10-4-21	10-5-21	
Indeno[1,2,3-cd]pyrene	**ND**	0.0037	EPA 8270E/SIM	10-4-21	10-5-21	
Dibenz[a,h]anthracene	**ND**	0.0037	EPA 8270E/SIM	10-4-21	10-5-21	
Benzo[g,h,i]perylene	**ND**	0.0037	EPA 8270E/SIM	10-4-21	10-5-21	
Surrogate:	*Percent Recovery*	*Control Limits*				
2-Fluorophenol	*48*	*26 - 109*				
Phenol-d6	*54*	*33 - 113*				
Nitrobenzene-d5	*50*	*31 - 110*				
2-Fluorobiphenyl	*48*	*42 - 107*				
2,4,6-Tribromophenol	*50*	*42 - 123*				
Terphenyl-d14	*46*	*41 - 115*				

This report pertains to the samples analyzed in accordance with the chain of custody, and is intended only for the use of the individual or company to whom it is addressed.

Date of Report: October 6, 2021
Samples Submitted: October 1, 2021
Laboratory Reference: 2110-012
Project: 11-05150-003

SEMIVOLATILE ORGANICS EPA 8270E/SIM
QUALITY CONTROL
page 1 of 2

Matrix: Soil
Units: mg/Kg

Analyte	Result	PQL	Method	Date Prepared	Date Analyzed	Flags
METHOD BLANK						
Laboratory ID:	MB1004S1					
n-Nitrosodimethylamine	**ND**	0.0083	EPA 8270E	10-4-21	10-6-21	
Pyridine	**ND**	0.17	EPA 8270E	10-4-21	10-6-21	
Phenol	**ND**	0.017	EPA 8270E	10-4-21	10-6-21	
Aniline	**ND**	0.083	EPA 8270E	10-4-21	10-6-21	
bis(2-Chloroethyl)ether	**ND**	0.0083	EPA 8270E	10-4-21	10-6-21	
2-Chlorophenol	**ND**	0.017	EPA 8270E	10-4-21	10-6-21	
1,3-Dichlorobenzene	**ND**	0.017	EPA 8270E	10-4-21	10-6-21	
1,4-Dichlorobenzene	**ND**	0.017	EPA 8270E	10-4-21	10-6-21	
Benzyl alcohol	**ND**	0.017	EPA 8270E	10-4-21	10-6-21	
1,2-Dichlorobenzene	**ND**	0.017	EPA 8270E	10-4-21	10-6-21	
2-Methylphenol (o-Cresol)	**ND**	0.017	EPA 8270E	10-4-21	10-6-21	
bis(2-Chloroisopropyl)ether	**ND**	0.017	EPA 8270E	10-4-21	10-6-21	
(3+4)-Methylphenol (m,p-Cresol)	**ND**	0.017	EPA 8270E	10-4-21	10-6-21	
n-Nitroso-di-n-propylamine	**ND**	0.0083	EPA 8270E	10-4-21	10-6-21	
Hexachloroethane	**ND**	0.017	EPA 8270E	10-4-21	10-6-21	
Nitrobenzene	**ND**	0.017	EPA 8270E	10-4-21	10-6-21	
Isophorone	**ND**	0.017	EPA 8270E	10-4-21	10-6-21	
2-Nitrophenol	**ND**	0.017	EPA 8270E	10-4-21	10-6-21	
2,4-Dimethylphenol	**ND**	0.017	EPA 8270E	10-4-21	10-6-21	
bis(2-Chloroethoxy)methane	**ND**	0.017	EPA 8270E	10-4-21	10-6-21	
2,4-Dichlorophenol	**ND**	0.017	EPA 8270E	10-4-21	10-6-21	
1,2,4-Trichlorobenzene	**ND**	0.017	EPA 8270E	10-4-21	10-6-21	
Naphthalene	**ND**	0.0033	EPA 8270E/SIM	10-4-21	10-5-21	
4-Chloroaniline	**ND**	0.0083	EPA 8270E	10-4-21	10-6-21	
Hexachlorobutadiene	**ND**	0.017	EPA 8270E	10-4-21	10-6-21	
4-Chloro-3-methylphenol	**ND**	0.017	EPA 8270E	10-4-21	10-6-21	
2-Methylnaphthalene	**ND**	0.0033	EPA 8270E/SIM	10-4-21	10-5-21	
1-Methylnaphthalene	**ND**	0.0033	EPA 8270E/SIM	10-4-21	10-5-21	
Hexachlorocyclopentadiene	**ND**	0.017	EPA 8270E	10-4-21	10-6-21	
2,4,6-Trichlorophenol	**ND**	0.017	EPA 8270E	10-4-21	10-6-21	
2,3-Dichloroaniline	**ND**	0.017	EPA 8270E	10-4-21	10-6-21	
2,4,5-Trichlorophenol	**ND**	0.017	EPA 8270E	10-4-21	10-6-21	
2-Chloronaphthalene	**ND**	0.017	EPA 8270E	10-4-21	10-6-21	
2-Nitroaniline	**ND**	0.017	EPA 8270E	10-4-21	10-6-21	
1,4-Dinitrobenzene	**ND**	0.017	EPA 8270E	10-4-21	10-6-21	
Dimethylphthalate	**ND**	0.017	EPA 8270E	10-4-21	10-6-21	
1,3-Dinitrobenzene	**ND**	0.017	EPA 8270E	10-4-21	10-6-21	
2,6-Dinitrotoluene	**ND**	0.0083	EPA 8270E	10-4-21	10-6-21	
1,2-Dinitrobenzene	**ND**	0.017	EPA 8270E	10-4-21	10-6-21	
Acenaphthylene	**ND**	0.0033	EPA 8270E/SIM	10-4-21	10-5-21	
3-Nitroaniline	**ND**	0.017	EPA 8270E	10-4-21	10-6-21	

This report pertains to the samples analyzed in accordance with the chain of custody, and is intended only for the use of the individual or company to whom it is addressed.

Date of Report: October 6, 2021
Samples Submitted: October 1, 2021
Laboratory Reference: 2110-012
Project: 11-05150-003

SEMIVOLATILE ORGANICS EPA 8270E/SIM
QUALITY CONTROL
page 2 of 2

Analyte	Result	PQL	Method	Date Prepared	Date Analyzed	Flags
METHOD BLANK						
Laboratory ID:	MB1004S1					
2,4-Dinitrophenol	**ND**	0.033	EPA 8270E	10-4-21	10-6-21	
Acenaphthene	**ND**	0.0033	EPA 8270E/SIM	10-4-21	10-5-21	
4-Nitrophenol	**ND**	0.017	EPA 8270E	10-4-21	10-6-21	
2,4-Dinitrotoluene	**ND**	0.0083	EPA 8270E	10-4-21	10-6-21	
Dibenzofuran	**ND**	0.017	EPA 8270E	10-4-21	10-6-21	
2,3,5,6-Tetrachlorophenol	**ND**	0.017	EPA 8270E	10-4-21	10-6-21	
2,3,4,6-Tetrachlorophenol	**ND**	0.017	EPA 8270E	10-4-21	10-6-21	
Diethylphthalate	**ND**	0.083	EPA 8270E	10-4-21	10-6-21	
4-Chlorophenyl-phenylether	**ND**	0.017	EPA 8270E	10-4-21	10-6-21	
4-Nitroaniline	**ND**	0.017	EPA 8270E	10-4-21	10-6-21	
Fluorene	**ND**	0.0033	EPA 8270E/SIM	10-4-21	10-5-21	
4,6-Dinitro-2-methylphenol	**ND**	0.083	EPA 8270E	10-4-21	10-6-21	
n-Nitrosodiphenylamine	**ND**	0.017	EPA 8270E	10-4-21	10-6-21	
1,2-Diphenylhydrazine	**ND**	0.017	EPA 8270E	10-4-21	10-6-21	
4-Bromophenyl-phenylether	**ND**	0.017	EPA 8270E	10-4-21	10-6-21	
Hexachlorobenzene	**ND**	0.017	EPA 8270E	10-4-21	10-6-21	
Pentachlorophenol	**ND**	0.017	EPA 8270E	10-4-21	10-6-21	
Phenanthrene	**ND**	0.0033	EPA 8270E/SIM	10-4-21	10-5-21	
Anthracene	**ND**	0.0033	EPA 8270E/SIM	10-4-21	10-5-21	
Carbazole	**ND**	0.017	EPA 8270E	10-4-21	10-6-21	
Di-n-butylphthalate	**ND**	0.083	EPA 8270E	10-4-21	10-6-21	
Fluoranthene	**ND**	0.0033	EPA 8270E/SIM	10-4-21	10-5-21	
Pyrene	**ND**	0.0033	EPA 8270E/SIM	10-4-21	10-5-21	
Butylbenzylphthalate	**ND**	0.083	EPA 8270E	10-4-21	10-6-21	
bis-2-Ethylhexyladipate	**ND**	0.083	EPA 8270E	10-4-21	10-6-21	
3,3'-Dichlorobenzidine	**ND**	0.0083	EPA 8270E	10-4-21	10-6-21	
Benzo[a]anthracene	**ND**	0.0033	EPA 8270E/SIM	10-4-21	10-5-21	
Chrysene	**ND**	0.0033	EPA 8270E/SIM	10-4-21	10-5-21	
bis(2-Ethylhexyl)phthalate	**ND**	0.083	EPA 8270E	10-4-21	10-6-21	
Di-n-octylphthalate	**ND**	0.083	EPA 8270E	10-4-21	10-6-21	
Benzo[b]fluoranthene	**ND**	0.0033	EPA 8270E/SIM	10-4-21	10-5-21	
Benzo(j,k)fluoranthene	**ND**	0.0033	EPA 8270E/SIM	10-4-21	10-5-21	
Benzo[a]pyrene	**ND**	0.0033	EPA 8270E/SIM	10-4-21	10-5-21	
Indeno[1,2,3-cd]pyrene	**ND**	0.0033	EPA 8270E/SIM	10-4-21	10-5-21	
Dibenz[a,h]anthracene	**ND**	0.0033	EPA 8270E/SIM	10-4-21	10-5-21	
Benzo[g,h,i]perylene	**ND**	0.0033	EPA 8270E/SIM	10-4-21	10-5-21	
Surrogate:	*Percent Recovery*	*Control Limits*				
2-Fluorophenol	*60*	*26 - 109*				
Phenol-d6	*67*	*33 - 113*				
Nitrobenzene-d5	*62*	*31 - 110*				
2-Fluorobiphenyl	*59*	*42 - 107*				
2,4,6-Tribromophenol	*64*	*42 - 123*				
Terphenyl-d14	*64*	*41 - 115*				

This report pertains to the samples analyzed in accordance with the chain of custody, and is intended only for the use of the individual or company to whom it is addressed.

Date of Report: October 6, 2021
Samples Submitted: October 1, 2021
Laboratory Reference: 2110-012
Project: 11-05150-003

SEMIVOLATILE ORGANICS EPA 8270E/SIM
QUALITY CONTROL

Matrix: Soil
Units: mg/Kg

Analyte	Result		Spike Level		Percent Recovery		Recovery Limits	RPD	RPD Limit	Flags
SPIKE BLANKS										
Laboratory ID:	SB1004S1									
	SB	SBD	SB	SBD	SB	SBD				
Phenol	**0.906**	**1.11**	1.33	1.33	68	83	47 - 106	20	30	
2-Chlorophenol	**0.850**	**1.05**	1.33	1.33	64	79	51 - 105	21	31	
1,4-Dichlorobenzene	**0.377**	**0.474**	0.667	0.667	57	71	49 - 101	23	33	
n-Nitroso-di-n-propylamine	**0.470**	**0.548**	0.667	0.667	70	82	50 - 105	15	26	
1,2,4-Trichlorobenzene	**0.396**	**0.492**	0.667	0.667	59	74	50 - 107	22	31	
4-Chloro-3-methylphenol	**0.966**	**1.11**	1.33	1.33	73	83	58 - 114	14	22	
Acenaphthene	**0.439**	**0.513**	0.667	0.667	66	77	52 - 102	16	22	
4-Nitrophenol	**1.17**	**1.36**	1.33	1.33	88	102	51 - 126	15	20	
2,4-Dinitrotoluene	**0.446**	**0.498**	0.667	0.667	67	75	54 - 108	11	19	
Pentachlorophenol	**0.848**	**0.988**	1.33	1.33	64	74	20 - 148	15	30	
Pyrene	**0.464**	**0.525**	0.667	0.667	70	79	55 - 112	12	19	
Surrogate:										
2-Fluorophenol					*57*	*69*	*26 - 109*			
Phenol-d6					*63*	*75*	*33 - 113*			
Nitrobenzene-d5					*60*	*72*	*31 - 110*			
2-Fluorobiphenyl					*61*	*68*	*42 - 107*			
2,4,6-Tribromophenol					*63*	*69*	*42 - 123*			
Terphenyl-d14					*61*	*68*	*41 - 115*			

This report pertains to the samples analyzed in accordance with the chain of custody, and is intended only for the use of the individual or company to whom it is addressed.

Date of Report: October 6, 2021
Samples Submitted: October 1, 2021
Laboratory Reference: 2110-012
Project: 11-05150-003

PCBs EPA 8082A

Matrix: Soil
Units: mg/Kg (ppm)

Analyte	Result	PQL	Method	Date Prepared	Date Analyzed	Flags
Client ID:	**DA7SWCS27211001I**					
Laboratory ID:	10-012-01					
Aroclor 1016	**ND**	0.024	EPA 8082A	10-4-21	10-4-21	
Aroclor 1221	**ND**	0.024	EPA 8082A	10-4-21	10-4-21	
Aroclor 1232	**ND**	0.024	EPA 8082A	10-4-21	10-4-21	
Aroclor 1242	**ND**	0.024	EPA 8082A	10-4-21	10-4-21	
Aroclor 1248	**ND**	0.024	EPA 8082A	10-4-21	10-4-21	
Aroclor 1254	**ND**	0.024	EPA 8082A	10-4-21	10-4-21	
Aroclor 1260	**ND**	0.024	EPA 8082A	10-4-21	10-4-21	
Surrogate:	*Percent Recovery*	*Control Limits*				
DCB	*82*	*54-135*				
Client ID:	**DA7SWCS28211001I**					
Laboratory ID:	10-012-02					
Aroclor 1016	**ND**	0.022	EPA 8082A	10-4-21	10-4-21	
Aroclor 1221	**ND**	0.022	EPA 8082A	10-4-21	10-4-21	
Aroclor 1232	**ND**	0.022	EPA 8082A	10-4-21	10-4-21	
Aroclor 1242	**ND**	0.022	EPA 8082A	10-4-21	10-4-21	
Aroclor 1248	**ND**	0.022	EPA 8082A	10-4-21	10-4-21	
Aroclor 1254	**ND**	0.022	EPA 8082A	10-4-21	10-4-21	
Aroclor 1260	**ND**	0.022	EPA 8082A	10-4-21	10-4-21	
Surrogate:	*Percent Recovery*	*Control Limits*				
DCB	*84*	*54-135*				
Client ID:	**DA7SWCS29211001I**					
Laboratory ID:	10-012-03					
Aroclor 1016	**ND**	0.022	EPA 8082A	10-4-21	10-4-21	
Aroclor 1221	**ND**	0.022	EPA 8082A	10-4-21	10-4-21	
Aroclor 1232	**ND**	0.022	EPA 8082A	10-4-21	10-4-21	
Aroclor 1242	**ND**	0.022	EPA 8082A	10-4-21	10-4-21	
Aroclor 1248	**ND**	0.022	EPA 8082A	10-4-21	10-4-21	
Aroclor 1254	**ND**	0.022	EPA 8082A	10-4-21	10-4-21	
Aroclor 1260	**ND**	0.022	EPA 8082A	10-4-21	10-4-21	
Surrogate:	*Percent Recovery*	*Control Limits*				
DCB	*89*	*54-135*				

This report pertains to the samples analyzed in accordance with the chain of custody, and is intended only for the use of the individual or company to whom it is addressed.

Date of Report: October 6, 2021
Samples Submitted: October 1, 2021
Laboratory Reference: 2110-012
Project: 11-05150-003

PCBs EPA 8082A
QUALITY CONTROL

Matrix: Soil
Units: mg/Kg (ppm)

Analyte	Result	PQL	Method	Date Prepared	Date Analyzed	Flags
METHOD BLANK						
Laboratory ID:	MB1004S1					
Aroclor 1016	**ND**	0.020	EPA 8082A	10-4-21	10-4-21	
Aroclor 1221	**ND**	0.020	EPA 8082A	10-4-21	10-4-21	
Aroclor 1232	**ND**	0.020	EPA 8082A	10-4-21	10-4-21	
Aroclor 1242	**ND**	0.020	EPA 8082A	10-4-21	10-4-21	
Aroclor 1248	**ND**	0.020	EPA 8082A	10-4-21	10-4-21	
Aroclor 1254	**ND**	0.020	EPA 8082A	10-4-21	10-4-21	
Aroclor 1260	**ND**	0.020	EPA 8082A	10-4-21	10-4-21	
Surrogate:	*Percent Recovery*	*Control Limits*				
DCB	*93*	*54-135*				

Analyte	Result		Spike Level		Source Result	Percent Recovery		Recovery Limits	RPD	RPD Limit	Flags
MATRIX SPIKES											
Laboratory ID:	10-012-03										
	MS	MSD	MS	MSD		MS	MSD				
Aroclor 1260	**0.417**	**0.365**	0.500	0.500	ND	**83**	**73**	62-129	13	15	
Surrogate:											
DCB						*96*	*89*	*54-135*			

This report pertains to the samples analyzed in accordance with the chain of custody, and is intended only for the use of the individual or company to whom it is addressed.

Date of Report: October 6, 2021
Samples Submitted: October 1, 2021
Laboratory Reference: 2110-012
Project: 11-05150-003

ORGANOCHLORINE PESTICIDES EPA 8081B

Matrix: Soil
Units: ug/Kg (ppb)

Analyte	Result	PQL	Method	Date Prepared	Date Analyzed	Flags
Client ID:	**DA7SWCS27211001I**					
Laboratory ID:	10-012-01					
alpha-BHC	**ND**	0.24	EPA 8081B	10-4-21	10-5-21	
gamma-BHC (Lindane)	**ND**	0.24	EPA 8081B	10-4-21	10-5-21	
beta-BHC	**ND**	0.24	EPA 8081B	10-4-21	10-5-21	
delta-BHC	**ND**	0.24	EPA 8081B	10-4-21	10-5-21	
Heptachlor	**ND**	0.24	EPA 8081B	10-4-21	10-5-21	
Aldrin	**ND**	0.24	EPA 8081B	10-4-21	10-5-21	
Heptachlor Epoxide	**ND**	0.24	EPA 8081B	10-4-21	10-5-21	
gamma-Chlordane	**ND**	0.24	EPA 8081B	10-4-21	10-5-21	
alpha-Chlordane	**ND**	0.24	EPA 8081B	10-4-21	10-5-21	
4,4'-DDE	**ND**	0.24	EPA 8081B	10-4-21	10-5-21	
Endosulfan I	**ND**	0.24	EPA 8081B	10-4-21	10-5-21	
Dieldrin	**ND**	0.24	EPA 8081B	10-4-21	10-5-21	
Endrin	**ND**	0.24	EPA 8081B	10-4-21	10-5-21	
4,4'-DDD	**ND**	0.24	EPA 8081B	10-4-21	10-5-21	
Endosulfan II	**ND**	0.24	EPA 8081B	10-4-21	10-5-21	
4,4'-DDT	**ND**	0.24	EPA 8081B	10-4-21	10-5-21	
Endrin Aldehyde	**ND**	0.24	EPA 8081B	10-4-21	10-5-21	
Methoxychlor	**ND**	0.24	EPA 8081B	10-4-21	10-5-21	
Endosulfan Sulfate	**ND**	0.24	EPA 8081B	10-4-21	10-5-21	
Endrin Ketone	**ND**	0.24	EPA 8081B	10-4-21	10-5-21	
Toxaphene	**ND**	5.9	EPA 8081B	10-4-21	10-5-21	
Surrogate:	*Percent Recovery*	*Control Limits*				
TCMX	*43*	*30-110*				
DCB	*61*	*40-117*				

This report pertains to the samples analyzed in accordance with the chain of custody, and is intended only for the use of the individual or company to whom it is addressed.

Date of Report: October 6, 2021
Samples Submitted: October 1, 2021
Laboratory Reference: 2110-012
Project: 11-05150-003

ORGANOCHLORINE PESTICIDES EPA 8081B

Matrix: Soil
Units: ug/Kg (ppb)

Analyte	Result	PQL	Method	Date Prepared	Date Analyzed	Flags
Client ID:	**DA7SWCS28211001I**					
Laboratory ID:	10-012-02					
alpha-BHC	**ND**	0.22	EPA 8081B	10-4-21	10-5-21	
gamma-BHC (Lindane)	**ND**	0.22	EPA 8081B	10-4-21	10-5-21	
beta-BHC	**ND**	0.22	EPA 8081B	10-4-21	10-5-21	
delta-BHC	**ND**	0.22	EPA 8081B	10-4-21	10-5-21	
Heptachlor	**ND**	0.22	EPA 8081B	10-4-21	10-5-21	
Aldrin	**ND**	0.22	EPA 8081B	10-4-21	10-5-21	
Heptachlor Epoxide	**ND**	0.22	EPA 8081B	10-4-21	10-5-21	
gamma-Chlordane	**ND**	0.22	EPA 8081B	10-4-21	10-5-21	
alpha-Chlordane	**ND**	0.22	EPA 8081B	10-4-21	10-5-21	
4,4'-DDE	**ND**	0.22	EPA 8081B	10-4-21	10-5-21	
Endosulfan I	**ND**	0.22	EPA 8081B	10-4-21	10-5-21	
Dieldrin	**ND**	0.22	EPA 8081B	10-4-21	10-5-21	
Endrin	**ND**	0.22	EPA 8081B	10-4-21	10-5-21	
4,4'-DDD	**ND**	0.22	EPA 8081B	10-4-21	10-5-21	
Endosulfan II	**ND**	0.22	EPA 8081B	10-4-21	10-5-21	
4,4'-DDT	**ND**	0.22	EPA 8081B	10-4-21	10-5-21	
Endrin Aldehyde	**ND**	0.22	EPA 8081B	10-4-21	10-5-21	
Methoxychlor	**ND**	0.22	EPA 8081B	10-4-21	10-5-21	
Endosulfan Sulfate	**ND**	0.22	EPA 8081B	10-4-21	10-5-21	
Endrin Ketone	**ND**	0.22	EPA 8081B	10-4-21	10-5-21	
Toxaphene	**ND**	5.6	EPA 8081B	10-4-21	10-5-21	
Surrogate:	*Percent Recovery*	*Control Limits*				
TCMX	*59*	*30-110*				
DCB	*62*	*40-117*				

This report pertains to the samples analyzed in accordance with the chain of custody, and is intended only for the use of the individual or company to whom it is addressed.

Date of Report: October 6, 2021
Samples Submitted: October 1, 2021
Laboratory Reference: 2110-012
Project: 11-05150-003

ORGANOCHLORINE PESTICIDES EPA 8081B

Matrix: Soil
Units: ug/Kg (ppb)

Analyte	Result	PQL	Method	Date Prepared	Date Analyzed	Flags
Client ID:	**DA7SWCS29211001I**					
Laboratory ID:	10-012-03					
alpha-BHC	**ND**	0.22	EPA 8081B	10-4-21	10-5-21	
gamma-BHC (Lindane)	**ND**	0.22	EPA 8081B	10-4-21	10-5-21	
beta-BHC	**ND**	0.22	EPA 8081B	10-4-21	10-5-21	
delta-BHC	**ND**	0.22	EPA 8081B	10-4-21	10-5-21	
Heptachlor	**ND**	0.22	EPA 8081B	10-4-21	10-5-21	
Aldrin	**ND**	0.22	EPA 8081B	10-4-21	10-5-21	
Heptachlor Epoxide	**ND**	0.22	EPA 8081B	10-4-21	10-5-21	
gamma-Chlordane	**ND**	0.22	EPA 8081B	10-4-21	10-5-21	
alpha-Chlordane	**ND**	0.22	EPA 8081B	10-4-21	10-5-21	
4,4'-DDE	**ND**	0.22	EPA 8081B	10-4-21	10-5-21	
Endosulfan I	**ND**	0.22	EPA 8081B	10-4-21	10-5-21	
Dieldrin	**ND**	0.22	EPA 8081B	10-4-21	10-5-21	
Endrin	**ND**	0.22	EPA 8081B	10-4-21	10-5-21	
4,4'-DDD	**ND**	0.22	EPA 8081B	10-4-21	10-5-21	
Endosulfan II	**ND**	0.22	EPA 8081B	10-4-21	10-5-21	
4,4'-DDT	**ND**	0.22	EPA 8081B	10-4-21	10-5-21	
Endrin Aldehyde	**ND**	0.22	EPA 8081B	10-4-21	10-5-21	
Methoxychlor	**ND**	0.22	EPA 8081B	10-4-21	10-5-21	
Endosulfan Sulfate	**ND**	0.22	EPA 8081B	10-4-21	10-5-21	
Endrin Ketone	**ND**	0.22	EPA 8081B	10-4-21	10-5-21	
Toxaphene	**ND**	5.6	EPA 8081B	10-4-21	10-5-21	
Surrogate:	*Percent Recovery*	*Control Limits*				
TCMX	*51*	*30-110*				
DCB	*62*	*40-117*				

This report pertains to the samples analyzed in accordance with the chain of custody, and is intended only for the use of the individual or company to whom it is addressed.

Date of Report: October 6, 2021
Samples Submitted: October 1, 2021
Laboratory Reference: 2110-012
Project: 11-05150-003

ORGANOCHLORINE PESTICIDES EPA 8081B QUALITY CONTROL

Matrix: Soil
Units: ug/Kg (ppb)

Analyte	Result	PQL	Method	Date Prepared	Date Analyzed	Flags
METHOD BLANK						
Laboratory ID:	MB1004S2					
alpha-BHC	**ND**	0.20	EPA 8081B	10-4-21	10-4-21	
gamma-BHC (Lindane)	**ND**	0.20	EPA 8081B	10-4-21	10-4-21	
beta-BHC	**ND**	0.20	EPA 8081B	10-4-21	10-4-21	
delta-BHC	**ND**	0.20	EPA 8081B	10-4-21	10-4-21	
Heptachlor	**ND**	0.20	EPA 8081B	10-4-21	10-4-21	
Aldrin	**ND**	0.20	EPA 8081B	10-4-21	10-4-21	
Heptachlor Epoxide	**ND**	0.20	EPA 8081B	10-4-21	10-4-21	
gamma-Chlordane	**ND**	0.20	EPA 8081B	10-4-21	10-4-21	
alpha-Chlordane	**ND**	0.20	EPA 8081B	10-4-21	10-4-21	
4,4'-DDE	**ND**	0.20	EPA 8081B	10-4-21	10-4-21	
Endosulfan I	**ND**	0.20	EPA 8081B	10-4-21	10-4-21	
Dieldrin	**ND**	0.20	EPA 8081B	10-4-21	10-4-21	
Endrin	**ND**	0.20	EPA 8081B	10-4-21	10-4-21	
4,4'-DDD	**ND**	0.20	EPA 8081B	10-4-21	10-4-21	
Endosulfan II	**ND**	0.20	EPA 8081B	10-4-21	10-4-21	
4,4'-DDT	**ND**	0.20	EPA 8081B	10-4-21	10-4-21	
Endrin Aldehyde	**ND**	0.20	EPA 8081B	10-4-21	10-4-21	
Methoxychlor	**ND**	0.20	EPA 8081B	10-4-21	10-4-21	
Endosulfan Sulfate	**ND**	0.20	EPA 8081B	10-4-21	10-4-21	
Endrin Ketone	**ND**	0.20	EPA 8081B	10-4-21	10-4-21	
Toxaphene	**ND**	5.0	EPA 8081B	10-4-21	10-4-21	
Surrogate:	*Percent Recovery*	*Control Limits*				
TCMX	*70*	*30-110*				
DCB	*76*	*40-117*				

This report pertains to the samples analyzed in accordance with the chain of custody, and is intended only for the use of the individual or company to whom it is addressed.

Date of Report: October 6, 2021
Samples Submitted: October 1, 2021
Laboratory Reference: 2110-012
Project: 11-05150-003

ORGANOCHLORINE PESTICIDES EPA 8081B QUALITY CONTROL

Matrix: Soil
Units: ug/Kg (ppb)

Analyte	Result		Spike Level		Source Result	Percent Recovery		Recovery Limits	RPD	RPD Limit	Flags
SPIKE BLANKS											
Laboratory ID:	SB1004S2										
	SB	SBD	SB	SBD		SB	SBD				
alpha-BHC	**9.33**	**9.04**	10.0	10.0	N/A	**93**	**90**	65-115	3	15	
gamma-BHC (Lindane)	**9.49**	**9.32**	10.0	10.0	N/A	**95**	**93**	69-116	2	15	
beta-BHC	**8.33**	**8.01**	10.0	10.0	N/A	**83**	**80**	63-116	4	15	
delta-BHC	**8.93**	**8.67**	10.0	10.0	N/A	**89**	**87**	66-116	3	15	
Heptachlor	**9.20**	**9.03**	10.0	10.0	N/A	**92**	**90**	63-119	2	15	
Aldrin	**8.83**	**8.74**	10.0	10.0	N/A	**88**	**87**	60-116	1	15	
Heptachlor Epoxide	**8.89**	**8.67**	10.0	10.0	N/A	**89**	**87**	65-116	3	15	
gamma-Chlordane	**8.26**	**7.12**	10.0	10.0	N/A	**83**	**71**	64-116	15	15	
alpha-Chlordane	**8.00**	**7.89**	10.0	10.0	N/A	**80**	**79**	62-119	1	15	
4,4'-DDE	**7.21**	**7.26**	10.0	10.0	N/A	**72**	**73**	69-120	1	15	
Endosulfan I	**7.57**	**7.21**	10.0	10.0	N/A	**76**	**72**	60-121	5	15	
Dieldrin	**9.21**	**9.01**	10.0	10.0	N/A	**92**	**90**	64-115	2	15	
Endrin	**9.71**	**9.28**	10.0	10.0	N/A	**97**	**93**	62-118	5	15	
4,4'-DDD	**9.21**	**9.03**	10.0	10.0	N/A	**92**	**90**	64-124	2	15	
Endosulfan II	**8.90**	**8.75**	10.0	10.0	N/A	**89**	**87**	64-115	2	15	
4,4'-DDT	**9.71**	**8.95**	10.0	10.0	N/A	**97**	**90**	57-130	8	15	
Endrin Aldehyde	**9.60**	**9.47**	10.0	10.0	N/A	**96**	**95**	57-114	1	15	
Methoxychlor	**10.9**	**10.8**	10.0	10.0	N/A	**109**	**108**	49-129	1	15	
Endosulfan Sulfate	**9.40**	**9.25**	10.0	10.0	N/A	**94**	**92**	61-115	2	15	
Endrin Ketone	**9.73**	**9.52**	10.0	10.0	N/A	**97**	**95**	64-116	2	15	
Surrogate:											
TCMX						*78*	*79*	*30-110*			
DCB						*81*	*80*	*40-117*			

This report pertains to the samples analyzed in accordance with the chain of custody, and is intended only for the use of the individual or company to whom it is addressed.

Date of Report: October 6, 2021
Samples Submitted: October 1, 2021
Laboratory Reference: 2110-012
Project: 11-05150-003

TOTAL METALS
EPA 6010D/6020B/7471B

Matrix: Soil
Units: mg/Kg (ppm)

Analyte	Result	PQL	Method	Date Prepared	Date Analyzed	Flags
Client ID:	**DA7SWCS27211001I**					
Laboratory ID:	10-012-01					
Arsenic	**ND**	5.9	EPA 6010D	10-4-21	10-4-21	
Barium	**62**	2.9	EPA 6010D	10-4-21	10-4-21	
Cadmium	**ND**	0.59	EPA 6010D	10-4-21	10-4-21	
Chromium	**23**	0.59	EPA 6010D	10-4-21	10-4-21	
Lead	**ND**	5.9	EPA 6010D	10-4-21	10-4-21	
Mercury	**ND**	0.059	EPA 7471B	10-4-21	10-4-21	
Selenium	**ND**	0.29	EPA 6020B	10-4-21	10-5-21	
Silver	**ND**	1.2	EPA 6010D	10-4-21	10-4-21	
Client ID:	**DA7SWCS28211001I**					
Laboratory ID:	10-012-02					
Arsenic	**ND**	11	EPA 6010D	10-4-21	10-4-21	
Barium	**41**	2.8	EPA 6010D	10-4-21	10-4-21	
Cadmium	**ND**	0.56	EPA 6010D	10-4-21	10-4-21	
Chromium	**17**	0.56	EPA 6010D	10-4-21	10-4-21	
Lead	**ND**	5.6	EPA 6010D	10-4-21	10-4-21	
Mercury	**ND**	0.056	EPA 7471B	10-4-21	10-4-21	
Selenium	**ND**	0.28	EPA 6020B	10-4-21	10-5-21	
Silver	**ND**	1.1	EPA 6010D	10-4-21	10-4-21	
Client ID:	**DA7SWCS29211001I**					
Laboratory ID:	10-012-03					
Arsenic	**ND**	11	EPA 6010D	10-4-21	10-4-21	
Barium	**59**	2.8	EPA 6010D	10-4-21	10-4-21	
Cadmium	**ND**	0.56	EPA 6010D	10-4-21	10-4-21	
Chromium	**23**	0.56	EPA 6010D	10-4-21	10-4-21	
Lead	**ND**	5.6	EPA 6010D	10-4-21	10-4-21	
Mercury	**ND**	0.056	EPA 7471B	10-4-21	10-4-21	
Selenium	**0.29**	0.28	EPA 6020B	10-4-21	10-5-21	
Silver	**ND**	1.1	EPA 6010D	10-4-21	10-4-21	

This report pertains to the samples analyzed in accordance with the chain of custody, and is intended only for the use of the individual or company to whom it is addressed.

Date of Report: October 6, 2021
Samples Submitted: October 1, 2021
Laboratory Reference: 2110-012
Project: 11-05150-003

TOTAL METALS
EPA 6010D/6020B/7471B
QUALITY CONTROL

Matrix: Soil
Units: mg/Kg (ppm)

Analyte	Result	PQL	Method	Date Prepared	Date Analyzed	Flags
METHOD BLANK						
Laboratory ID:	MB1004SM1					
Arsenic	**ND**	5.0	EPA 6010D	10-4-21	10-4-21	
Barium	**ND**	2.5	EPA 6010D	10-4-21	10-4-21	
Cadmium	**ND**	0.50	EPA 6010D	10-4-21	10-4-21	
Chromium	**ND**	0.50	EPA 6010D	10-4-21	10-4-21	
Lead	**ND**	5.0	EPA 6010D	10-4-21	10-4-21	
Silver	**ND**	1.0	EPA 6010D	10-4-21	10-4-21	
Laboratory ID:	MB1004SM2					
Selenium	**ND**	0.25	EPA 6020B	10-4-21	10-5-21	
Laboratory ID:	MB1004S1					
Mercury	**ND**	0.050	EPA 7471B	10-4-21	10-4-21	

This report pertains to the samples analyzed in accordance with the chain of custody,
and is intended only for the use of the individual or company to whom it is addressed.

Date of Report: October 6, 2021
Samples Submitted: October 1, 2021
Laboratory Reference: 2110-012
Project: 11-05150-003

TOTAL METALS
EPA 6010D/6020B/7471B
QUALITY CONTROL

Matrix: Soil
Units: mg/Kg (ppm)

Analyte	Result		Spike Level		Source Result	Percent Recovery		Recovery Limits	RPD	RPD Limit	Flags
DUPLICATE											
Laboratory ID:	09-268-03										
	ORIG	DUP									
Arsenic	**17.8**	**19.2**	NA	NA		NA		NA	8	20	
Barium	**42.0**	**38.7**	NA	NA		NA		NA	8	20	
Cadmium	**ND**	**ND**	NA	NA		NA		NA	NA	20	
Chromium	**14.8**	**14.6**	NA	NA		NA		NA	1	20	
Lead	**10.1**	**10.5**	NA	NA		NA		NA	4	20	
Silver	**ND**	**ND**	NA	NA		NA		NA	NA	20	
Laboratory ID:	09-268-03										
Selenium	**0.560**	**0.550**	NA	NA		NA		NA	2	20	
Laboratory ID:	09-268-03										
Mercury	**0.0514**	**0.0530**	NA	NA		NA		NA	3	20	
MATRIX SPIKES											
Laboratory ID:	09-268-03										
	MS	MSD	MS	MSD		MS	MSD				
Arsenic	**119**	**119**	100	100	17.8	**101**	**102**	75-125	1	20	
Barium	**136**	**138**	100	100	42.0	**94**	**96**	75-125	1	20	
Cadmium	**47.1**	**47.0**	50.0	50.0	ND	**94**	**94**	75-125	0	20	
Chromium	**115**	**115**	100	100	14.8	**100**	**100**	75-125	0	20	
Lead	**255**	**257**	250	250	10.1	**98**	**99**	75-125	1	20	
Silver	**24.5**	**24.1**	25.0	25.0	ND	**98**	**96**	75-125	1	20	
Laboratory ID:	09-268-03										
Selenium	**87.5**	**91.0**	100	100	0.560	**87**	**90**	75-125	4	20	
Laboratory ID:	09-268-03										
Mercury	**0.564**	**0.555**	0.500	0.500	0.0514	**103**	**101**	80-120	2	20	

This report pertains to the samples analyzed in accordance with the chain of custody,
and is intended only for the use of the individual or company to whom it is addressed.

Date of Report: October 6, 2021
Samples Submitted: October 1, 2021
Laboratory Reference: 2110-012
Project: 11-05150-003

% MOISTURE

Client ID	Lab ID	% Moisture	Date Analyzed
DA7SWCS27211001I	10-012-01	**15**	10-4-21
DA7SWCS28211001I	10-012-02	**10**	10-4-21
DA7SWCS29211001I	10-012-03	**11**	10-4-21

This report pertains to the samples analyzed in accordance with the chain of custody,
and is intended only for the use of the individual or company to whom it is addressed.

OnSite Environmental Inc.

Data Qualifiers and Abbreviations

A - Due to a high sample concentration, the amount spiked is insufficient for meaningful MS/MSD recovery data.

B - The analyte indicated was also found in the blank sample.

C - The duplicate RPD is outside control limits due to high result variability when analyte concentrations are within five times the quantitation limit.

E - The value reported exceeds the quantitation range and is an estimate.

F - Surrogate recovery data is not available due to the high concentration of coeluting target compounds.

H - The analyte indicated is a common laboratory solvent and may have been introduced during sample preparation, and be impacting the sample result.

I - Compound recovery is outside of the control limits.

J - The value reported was below the practical quantitation limit. The value is an estimate.

K - Sample duplicate RPD is outside control limits due to sample inhomogeneity. The sample was re-extracted and re-analyzed with similar results.

L - The RPD is outside of the control limits.

M - Hydrocarbons in the gasoline range are impacting the diesel range result.

M1 - Hydrocarbons in the gasoline range (toluene-naphthalene) are present in the sample.

N - Hydrocarbons in the lube oil range are impacting the diesel range result.

N1 - Hydrocarbons in diesel range are impacting lube oil range results.

O - Hydrocarbons indicative of heavier fuels are present in the sample and are impacting the gasoline result.

P - The RPD of the detected concentrations between the two columns is greater than 40.

Q - Surrogate recovery is outside of the control limits.

S - Surrogate recovery data is not available due to the necessary dilution of the sample.

T - The sample chromatogram is not similar to a typical _____.

U - The analyte was analyzed for, but was not detected above the reported sample quantitation limit.

U1 - The practical quantitation limit is elevated due to interferences present in the sample.

V - Matrix Spike/Matrix Spike Duplicate recoveries are outside control limits due to matrix effects.

W - Matrix Spike/Matrix Spike Duplicate RPD are outside control limits due to matrix effects.

X - Sample extract treated with a mercury cleanup procedure.

X1- Sample extract treated with a sulfuric acid/silica gel cleanup procedure.

Y - The calibration verification for this analyte exceeded the 20% drift specified in methods 8260 & 8270, and therefore the reported result should be considered an estimate. The overall performance of the calibration verification standard met the acceptance criteria of the method.

Y1 - Negative effects of the matrix from this sample on the instrument caused values for this analyte in the bracketing continuing calibration verification standard (CCVs) to be outside of 20% acceptance criteria. Because of this, quantitation limits and sample concentrations should be considered estimates.

Z -

ND - Not Detected at PQL
PQL - Practical Quantitation Limit
RPD - Relative Percent Difference

This report pertains to the samples analyzed in accordance with the chain of custody, and is intended only for the use of the individual or company to whom it is addressed.

Chain of Custody

OnSite Environmental Inc.
Analytical Laboratory Testing Services
14648 NE 95th Street • Redmond, WA 98052
Phone: (425) 883-3881 • www.onsite-env.com

Company: Anchor QEA (Herrera)
Project Number: 11-05150-003
Project Name: Cedar Hills Regional Landfill
Project Manager: Randy Brown
Sampled by: Camryn Steiner

Turnaround Request (in working days)
(Check One)
☐ Same Day ☐ 1 Day
☒ 2 Days ☐ 3 Days
☐ Standard (7 Days)
☐ _____ (other)

Laboratory Number: 10-012

Lab ID	Sample Identification	Date Sampled	Time Sampled	Matrix	Number of Containers	NWTPH-HCID	NWTPH-Gx/BTEX	NWTPH-Gx	NWTPH-Dx (☐ Acid / SG Clean-up)	Volatiles 8260C	Halogenated Volatiles 8260C	EDB EPA 8011 (Waters Only)	Semivolatiles 8270D/SIM (with low-level PAHs)	PAHs 8270D/SIM (low-level)	PCBs 8082A	Organochlorine Pesticides 8081B	Organophosphorus Pesticides 8270D/SIM	Chlorinated Acid Herbicides 8151A	Total RCRA Metals 6010B/7471A	Total MTCA Metals	TCLP Metals	HEM (oil and grease) 1664A					% Moisture
1	DA7SWCS27211001I	10/1/21	12:40	Soil	4					X			X		X	X			X								X
2	DA7SWCS28211001I	↓	12:50	↓	4					X			X		X	X			X								X
3	DA7SWCS29211001I	↓	1:05	↓	4					X			X		X	X			X								X
4	VTRP211001I - Trip Blank				3					X																	

	Signature	Company	Date	Time
Relinquished	Camryn Steiner	Herrera	10/1/21	2:45
Received	[signature]	QSE	10/1/21	2:45
Relinquished				
Received				
Relinquished				
Received				
Reviewed/Date		Reviewed/Date		

Comments/Special Instructions
Email to Randy Brown
CC: Herrera

Data Package: Standard ☐ Level III ☐ Level IV ☐
Chromatograms with final report ☐ Electronic Data Deliverables (EDDs) ☐

Sample/Cooler Receipt and Acceptance Checklist

Client: ANC

Client Project Name/Number: 11-05150-003

OnSite Project Number: 10-012

Initiated by: MV

Date Initiated: 10/1/21

1.0 Cooler Verification

1.1 Were there custody seals on the outside of the cooler?	Yes	(No)	N/A	1 2 3 4	
1.2 Were the custody seals intact?	Yes	No	(N/A)	1 2 3 4	
1.3 Were the custody seals signed and dated by last custodian?	Yes	No	(N/A)	1 2 3 4	
1.4 Were the samples delivered on ice or blue ice?	(Yes)	No	N/A	1 2 3 4	
1.5 Were samples received between 0-6 degrees Celsius?	(Yes)	No	N/A	Temperature: 5	
1.6 Have shipping bills (if any) been attached to the back of this form?	Yes	(N/A)			
1.7 How were the samples delivered?	(Client)	Courier	UPS/FedEx	OSE Pickup	Other

2.0 Chain of Custody Verification

2.1 Was a Chain of Custody submitted with the samples?	(Yes)	No		1 2 3 4
2.2 Was the COC legible and written in permanent ink?	(Yes)	No		1 2 3 4
2.3 Have samples been relinquished and accepted by each custodian?	(Yes)	No		1 2 3 4
2.4 Did the sample labels (ID, date, time, preservative) agree with COC?	(Yes)	No		1 2 3 4
2.5 Were all of the samples listed on the COC submitted?	(Yes)	No		1 2 3 4
2.6 Were any of the samples submitted omitted from the COC?	Yes	(No)		1 2 3 4

3.0 Sample Verification

3.1 Were any sample containers broken or compromised?	Yes	(No)		1 2 3 4
3.2 Were any sample labels missing or illegible?	Yes	(No)		1 2 3 4
3.3 Have the correct containers been used for each analysis requested?	(Yes)	No		1 2 3 4
3.4 Have the samples been correctly preserved?	(Yes)	No	N/A	1 2 3 4
3.5 Are volatiles samples free from headspace and bubbles greater than 6mm?	(Yes)	No	N/A	1 2 3 4
3.6 Is there sufficient sample submitted to perform requested analyses?	(Yes)	No		1 2 3 4
3.7 Have any holding times already expired or will expire in 24 hours?	Yes	(No)		1 2 3 4
3.8 Was method 5035A used?	(Yes)	No	N/A	1 2 3 4
3.9 If 5035A was used, which sampling option was used (#1, 2, or 3).	#	1	N/A	1 2 3 4

Explain any discrepancies:

1 - Discuss issue in Case Narrative

2 - Process Sample As-is

3 - Client contacted to discuss problem

4 - Sample cannot be analyzed or client does not wish to proceed

OnSite Environmental Inc.
14648 NE 95th Street, Redmond, WA 98052 • (425) 883-3881

September 21, 2022

Randy Brown
Anchor QEA
1201 3rd Avenue, Suite 2600
Seattle, WA 98101

Re: Analytical Data for Project 11-05150-003
Laboratory Reference No. 2209-160

Dear Randy:

Enclosed are the analytical results and associated quality control data for samples submitted on September 19, 2022.

The standard policy of OnSite Environmental, Inc. is to store your samples for 30 days from the date of receipt. If you require longer storage, please contact the laboratory.

We appreciate the opportunity to be of service to you on this project. If you have any questions concerning the data, or need additional information, please feel free to call me.

Sincerely,

David Baumeister
Project Manager

Enclosures

This report pertains to the samples analyzed in accordance with the chain of custody, and is intended only for the use of the individual or company to whom it is addressed.

Date of Report: September 21, 2022
Samples Submitted: September 19, 2022
Laboratory Reference: 2209-160
Project: 11-05150-003

Case Narrative

Samples were collected on September 19, 2022 and received by the laboratory on September 19, 2022. They were maintained at the laboratory at a temperature of 2°C to 6°C.

Please note that any and all soil sample results are reported on a dry-weight basis, unless otherwise noted below.

General QA/QC issues associated with the analytical data enclosed in this laboratory report will be indicated with a reference to a comment or explanation on the Data Qualifier page. More complex and involved QA/QC issues will be discussed in detail below.

This report pertains to the samples analyzed in accordance with the chain of custody,
and is intended only for the use of the individual or company to whom it is addressed.

Date of Report: September 21, 2022
Samples Submitted: September 19, 2022
Laboratory Reference: 2209-160
Project: 11-05150-003

VOLATILE ORGANICS EPA 8260D
page 1 of 2

Matrix: Soil
Units: mg/kg

Analyte	Result	PQL	Method	Date Prepared	Date Analyzed	Flags
Client ID:	**DA7SWCS30220919I**					
Laboratory ID:	09-160-01					
Dichlorodifluoromethane	ND	0.00047	EPA 8260D	9-20-22	9-20-22	
Chloromethane	ND	0.0023	EPA 8260D	9-20-22	9-20-22	
Vinyl Chloride	ND	0.00047	EPA 8260D	9-20-22	9-20-22	
Bromomethane	ND	0.0034	EPA 8260D	9-20-22	9-20-22	
Chloroethane	ND	0.0023	EPA 8260D	9-20-22	9-20-22	
Trichlorofluoromethane	ND	0.00047	EPA 8260D	9-20-22	9-20-22	
1,1-Dichloroethene	ND	0.00047	EPA 8260D	9-20-22	9-20-22	
Acetone	1.1	0.38	EPA 8260D	9-20-22	9-20-22	
Iodomethane	ND	0.0023	EPA 8260D	9-20-22	9-20-22	
Carbon Disulfide	ND	0.00047	EPA 8260D	9-20-22	9-20-22	
Methylene Chloride	ND	0.0023	EPA 8260D	9-20-22	9-20-22	
(trans) 1,2-Dichloroethene	ND	0.00047	EPA 8260D	9-20-22	9-20-22	
Methyl t-Butyl Ether	ND	0.00047	EPA 8260D	9-20-22	9-20-22	
1,1-Dichloroethane	ND	0.00047	EPA 8260D	9-20-22	9-20-22	
Vinyl Acetate	ND	0.0023	EPA 8260D	9-20-22	9-20-22	
2,2-Dichloropropane	ND	0.00047	EPA 8260D	9-20-22	9-20-22	
(cis) 1,2-Dichloroethene	ND	0.00047	EPA 8260D	9-20-22	9-20-22	
2-Butanone	0.50	0.19	EPA 8260D	9-20-22	9-20-22	
Bromochloromethane	ND	0.00047	EPA 8260D	9-20-22	9-20-22	
Chloroform	ND	0.00047	EPA 8260D	9-20-22	9-20-22	
1,1,1-Trichloroethane	ND	0.00047	EPA 8260D	9-20-22	9-20-22	
Carbon Tetrachloride	ND	0.00047	EPA 8260D	9-20-22	9-20-22	
1,1-Dichloropropene	ND	0.00047	EPA 8260D	9-20-22	9-20-22	
Benzene	ND	0.00047	EPA 8260D	9-20-22	9-20-22	
1,2-Dichloroethane	ND	0.00047	EPA 8260D	9-20-22	9-20-22	
Trichloroethene	ND	0.00047	EPA 8260D	9-20-22	9-20-22	
1,2-Dichloropropane	ND	0.00047	EPA 8260D	9-20-22	9-20-22	
Dibromomethane	ND	0.00047	EPA 8260D	9-20-22	9-20-22	
Bromodichloromethane	ND	0.00047	EPA 8260D	9-20-22	9-20-22	
2-Chloroethyl Vinyl Ether	ND	0.0023	EPA 8260D	9-20-22	9-20-22	
(cis) 1,3-Dichloropropene	ND	0.00047	EPA 8260D	9-20-22	9-20-22	
Methyl Isobutyl Ketone	0.0026	0.0023	EPA 8260D	9-20-22	9-20-22	
Toluene	ND	0.0023	EPA 8260D	9-20-22	9-20-22	
(trans) 1,3-Dichloropropene	ND	0.00047	EPA 8260D	9-20-22	9-20-22	

This report pertains to the samples analyzed in accordance with the chain of custody, and is intended only for the use of the individual or company to whom it is addressed.

Date of Report: September 21, 2022
Samples Submitted: September 19, 2022
Laboratory Reference: 2209-160
Project: 11-05150-003

VOLATILE ORGANICS EPA 8260D
page 2 of 2

Analyte	Result	PQL	Method	Date Prepared	Date Analyzed	Flags
Client ID:	**DA7SWCS30220919I**					
Laboratory ID:	09-160-01					
1,1,2-Trichloroethane	ND	0.00047	EPA 8260D	9-20-22	9-20-22	
Tetrachloroethene	ND	0.00047	EPA 8260D	9-20-22	9-20-22	
1,3-Dichloropropane	ND	0.00047	EPA 8260D	9-20-22	9-20-22	
2-Hexanone	ND	0.0023	EPA 8260D	9-20-22	9-20-22	
Dibromochloromethane	ND	0.00047	EPA 8260D	9-20-22	9-20-22	
1,2-Dibromoethane	ND	0.000023	EPA 8260D/SIM	9-20-22	9-20-22	
Chlorobenzene	ND	0.00047	EPA 8260D	9-20-22	9-20-22	
1,1,1,2-Tetrachloroethane	ND	0.00047	EPA 8260D	9-20-22	9-20-22	
Ethylbenzene	ND	0.00047	EPA 8260D	9-20-22	9-20-22	
m,p-Xylene	ND	0.00093	EPA 8260D	9-20-22	9-20-22	
o-Xylene	ND	0.00047	EPA 8260D	9-20-22	9-20-22	
Styrene	ND	0.00047	EPA 8260D	9-20-22	9-20-22	
Bromoform	ND	0.0023	EPA 8260D	9-20-22	9-20-22	
Isopropylbenzene	ND	0.00047	EPA 8260D	9-20-22	9-20-22	
Bromobenzene	ND	0.00047	EPA 8260D	9-20-22	9-20-22	
1,1,2,2-Tetrachloroethane	ND	0.00047	EPA 8260D	9-20-22	9-20-22	
1,2,3-Trichloropropane	ND	0.00047	EPA 8260D	9-20-22	9-20-22	
n-Propylbenzene	ND	0.00047	EPA 8260D	9-20-22	9-20-22	
2-Chlorotoluene	ND	0.00047	EPA 8260D	9-20-22	9-20-22	
4-Chlorotoluene	ND	0.00047	EPA 8260D	9-20-22	9-20-22	
1,3,5-Trimethylbenzene	ND	0.00047	EPA 8260D	9-20-22	9-20-22	
tert-Butylbenzene	ND	0.00047	EPA 8260D	9-20-22	9-20-22	
1,2,4-Trimethylbenzene	ND	0.00047	EPA 8260D	9-20-22	9-20-22	
sec-Butylbenzene	ND	0.00047	EPA 8260D	9-20-22	9-20-22	
1,3-Dichlorobenzene	ND	0.00047	EPA 8260D	9-20-22	9-20-22	
p-Isopropyltoluene	0.00079	0.00047	EPA 8260D	9-20-22	9-20-22	
1,4-Dichlorobenzene	ND	0.00047	EPA 8260D	9-20-22	9-20-22	
1,2-Dichlorobenzene	ND	0.00047	EPA 8260D	9-20-22	9-20-22	
n-Butylbenzene	ND	0.00047	EPA 8260D	9-20-22	9-20-22	
1,2-Dibromo-3-chloropropane	ND	0.0023	EPA 8260D	9-20-22	9-20-22	
1,2,4-Trichlorobenzene	ND	0.00047	EPA 8260D	9-20-22	9-20-22	
Hexachlorobutadiene	ND	0.0023	EPA 8260D	9-20-22	9-20-22	
Naphthalene	ND	0.0023	EPA 8260D	9-20-22	9-20-22	
1,2,3-Trichlorobenzene	ND	0.00047	EPA 8260D	9-20-22	9-20-22	
Surrogate:	*Percent Recovery*	*Control Limits*				
Dibromofluoromethane	*83*	*75-130*				
Toluene-d8	*98*	*78-128*				
4-Bromofluorobenzene	*98*	*71-130*				

This report pertains to the samples analyzed in accordance with the chain of custody, and is intended only for the use of the individual or company to whom it is addressed.

Date of Report: September 21, 2022
Samples Submitted: September 19, 2022
Laboratory Reference: 2209-160
Project: 11-05150-003

VOLATILE ORGANICS EPA 8260D
page 1 of 2

Matrix: Soil
Units: mg/kg

Analyte	Result	PQL	Method	Date Prepared	Date Analyzed	Flags
Client ID:	**DA7SWCS31220919I**					
Laboratory ID:	09-160-02					
Dichlorodifluoromethane	ND	0.00061	EPA 8260D	9-20-22	9-20-22	
Chloromethane	ND	0.0030	EPA 8260D	9-20-22	9-20-22	
Vinyl Chloride	ND	0.00061	EPA 8260D	9-20-22	9-20-22	
Bromomethane	ND	0.0044	EPA 8260D	9-20-22	9-20-22	
Chloroethane	ND	0.0030	EPA 8260D	9-20-22	9-20-22	
Trichlorofluoromethane	ND	0.00061	EPA 8260D	9-20-22	9-20-22	
1,1-Dichloroethene	ND	0.00061	EPA 8260D	9-20-22	9-20-22	
Acetone	0.060	0.0061	EPA 8260D	9-20-22	9-20-22	
Iodomethane	ND	0.0030	EPA 8260D	9-20-22	9-20-22	
Carbon Disulfide	ND	0.00061	EPA 8260D	9-20-22	9-20-22	
Methylene Chloride	ND	0.0030	EPA 8260D	9-20-22	9-20-22	
(trans) 1,2-Dichloroethene	ND	0.00061	EPA 8260D	9-20-22	9-20-22	
Methyl t-Butyl Ether	ND	0.00061	EPA 8260D	9-20-22	9-20-22	
1,1-Dichloroethane	ND	0.00061	EPA 8260D	9-20-22	9-20-22	
Vinyl Acetate	ND	0.0030	EPA 8260D	9-20-22	9-20-22	
2,2-Dichloropropane	ND	0.00061	EPA 8260D	9-20-22	9-20-22	
(cis) 1,2-Dichloroethene	ND	0.00061	EPA 8260D	9-20-22	9-20-22	
2-Butanone	0.021	0.0030	EPA 8260D	9-20-22	9-20-22	
Bromochloromethane	ND	0.00061	EPA 8260D	9-20-22	9-20-22	
Chloroform	ND	0.00061	EPA 8260D	9-20-22	9-20-22	
1,1,1-Trichloroethane	ND	0.00061	EPA 8260D	9-20-22	9-20-22	
Carbon Tetrachloride	ND	0.00061	EPA 8260D	9-20-22	9-20-22	
1,1-Dichloropropene	ND	0.00061	EPA 8260D	9-20-22	9-20-22	
Benzene	ND	0.00061	EPA 8260D	9-20-22	9-20-22	
1,2-Dichloroethane	ND	0.00061	EPA 8260D	9-20-22	9-20-22	
Trichloroethene	ND	0.00061	EPA 8260D	9-20-22	9-20-22	
1,2-Dichloropropane	ND	0.00061	EPA 8260D	9-20-22	9-20-22	
Dibromomethane	ND	0.00061	EPA 8260D	9-20-22	9-20-22	
Bromodichloromethane	ND	0.00061	EPA 8260D	9-20-22	9-20-22	
2-Chloroethyl Vinyl Ether	ND	0.0030	EPA 8260D	9-20-22	9-20-22	
(cis) 1,3-Dichloropropene	ND	0.00061	EPA 8260D	9-20-22	9-20-22	
Methyl Isobutyl Ketone	ND	0.0030	EPA 8260D	9-20-22	9-20-22	
Toluene	ND	0.0030	EPA 8260D	9-20-22	9-20-22	
(trans) 1,3-Dichloropropene	ND	0.00061	EPA 8260D	9-20-22	9-20-22	

This report pertains to the samples analyzed in accordance with the chain of custody,
and is intended only for the use of the individual or company to whom it is addressed.

Date of Report: September 21, 2022
Samples Submitted: September 19, 2022
Laboratory Reference: 2209-160
Project: 11-05150-003

VOLATILE ORGANICS EPA 8260D
page 2 of 2

Analyte	Result	PQL	Method	Date Prepared	Date Analyzed	Flags
Client ID:	**DA7SWCS31220919I**					
Laboratory ID:	09-160-02					
1,1,2-Trichloroethane	ND	0.00061	EPA 8260D	9-20-22	9-20-22	
Tetrachloroethene	ND	0.00061	EPA 8260D	9-20-22	9-20-22	
1,3-Dichloropropane	ND	0.00061	EPA 8260D	9-20-22	9-20-22	
2-Hexanone	ND	0.0030	EPA 8260D	9-20-22	9-20-22	
Dibromochloromethane	ND	0.00061	EPA 8260D	9-20-22	9-20-22	
1,2-Dibromoethane	ND	0.000030	EPA 8260D/SIM	9-20-22	9-20-22	
Chlorobenzene	ND	0.00061	EPA 8260D	9-20-22	9-20-22	
1,1,1,2-Tetrachloroethane	ND	0.00061	EPA 8260D	9-20-22	9-20-22	
Ethylbenzene	ND	0.00061	EPA 8260D	9-20-22	9-20-22	
m,p-Xylene	ND	0.0012	EPA 8260D	9-20-22	9-20-22	
o-Xylene	ND	0.00061	EPA 8260D	9-20-22	9-20-22	
Styrene	ND	0.00061	EPA 8260D	9-20-22	9-20-22	
Bromoform	ND	0.0030	EPA 8260D	9-20-22	9-20-22	
Isopropylbenzene	ND	0.00061	EPA 8260D	9-20-22	9-20-22	
Bromobenzene	ND	0.00061	EPA 8260D	9-20-22	9-20-22	
1,1,2,2-Tetrachloroethane	ND	0.00061	EPA 8260D	9-20-22	9-20-22	
1,2,3-Trichloropropane	ND	0.00061	EPA 8260D	9-20-22	9-20-22	
n-Propylbenzene	ND	0.00061	EPA 8260D	9-20-22	9-20-22	
2-Chlorotoluene	ND	0.00061	EPA 8260D	9-20-22	9-20-22	
4-Chlorotoluene	ND	0.00061	EPA 8260D	9-20-22	9-20-22	
1,3,5-Trimethylbenzene	ND	0.00061	EPA 8260D	9-20-22	9-20-22	
tert-Butylbenzene	ND	0.00061	EPA 8260D	9-20-22	9-20-22	
1,2,4-Trimethylbenzene	ND	0.00061	EPA 8260D	9-20-22	9-20-22	
sec-Butylbenzene	ND	0.00061	EPA 8260D	9-20-22	9-20-22	
1,3-Dichlorobenzene	ND	0.00061	EPA 8260D	9-20-22	9-20-22	
p-Isopropyltoluene	ND	0.00061	EPA 8260D	9-20-22	9-20-22	
1,4-Dichlorobenzene	ND	0.00061	EPA 8260D	9-20-22	9-20-22	
1,2-Dichlorobenzene	ND	0.00061	EPA 8260D	9-20-22	9-20-22	
n-Butylbenzene	ND	0.00061	EPA 8260D	9-20-22	9-20-22	
1,2-Dibromo-3-chloropropane	ND	0.0030	EPA 8260D	9-20-22	9-20-22	
1,2,4-Trichlorobenzene	ND	0.00061	EPA 8260D	9-20-22	9-20-22	
Hexachlorobutadiene	ND	0.0030	EPA 8260D	9-20-22	9-20-22	
Naphthalene	ND	0.0030	EPA 8260D	9-20-22	9-20-22	
1,2,3-Trichlorobenzene	ND	0.00061	EPA 8260D	9-20-22	9-20-22	
Surrogate:	*Percent Recovery*	*Control Limits*				
Dibromofluoromethane	*84*	*75-130*				
Toluene-d8	*99*	*78-128*				
4-Bromofluorobenzene	*103*	*71-130*				

This report pertains to the samples analyzed in accordance with the chain of custody, and is intended only for the use of the individual or company to whom it is addressed.

Date of Report: September 21, 2022
Samples Submitted: September 19, 2022
Laboratory Reference: 2209-160
Project: 11-05150-003

VOLATILE ORGANICS EPA 8260D
page 1 of 2

Matrix: Soil
Units: mg/kg

Analyte	Result	PQL	Method	Date Prepared	Date Analyzed	Flags
Client ID:	**DA7SWCS31220919D**					
Laboratory ID:	09-160-03					
Dichlorodifluoromethane	ND	0.00057	EPA 8260D	9-20-22	9-20-22	
Chloromethane	ND	0.0028	EPA 8260D	9-20-22	9-20-22	
Vinyl Chloride	ND	0.00057	EPA 8260D	9-20-22	9-20-22	
Bromomethane	ND	0.0041	EPA 8260D	9-20-22	9-20-22	
Chloroethane	ND	0.0028	EPA 8260D	9-20-22	9-20-22	
Trichlorofluoromethane	ND	0.00057	EPA 8260D	9-20-22	9-20-22	
1,1-Dichloroethene	ND	0.00057	EPA 8260D	9-20-22	9-20-22	
Acetone	0.058	0.0057	EPA 8260D	9-20-22	9-20-22	
Iodomethane	ND	0.0028	EPA 8260D	9-20-22	9-20-22	
Carbon Disulfide	ND	0.00057	EPA 8260D	9-20-22	9-20-22	
Methylene Chloride	ND	0.0028	EPA 8260D	9-20-22	9-20-22	
(trans) 1,2-Dichloroethene	ND	0.00057	EPA 8260D	9-20-22	9-20-22	
Methyl t-Butyl Ether	ND	0.00057	EPA 8260D	9-20-22	9-20-22	
1,1-Dichloroethane	ND	0.00057	EPA 8260D	9-20-22	9-20-22	
Vinyl Acetate	ND	0.0028	EPA 8260D	9-20-22	9-20-22	
2,2-Dichloropropane	ND	0.00057	EPA 8260D	9-20-22	9-20-22	
(cis) 1,2-Dichloroethene	ND	0.00057	EPA 8260D	9-20-22	9-20-22	
2-Butanone	0.026	0.0028	EPA 8260D	9-20-22	9-20-22	
Bromochloromethane	ND	0.00057	EPA 8260D	9-20-22	9-20-22	
Chloroform	ND	0.00057	EPA 8260D	9-20-22	9-20-22	
1,1,1-Trichloroethane	ND	0.00057	EPA 8260D	9-20-22	9-20-22	
Carbon Tetrachloride	ND	0.00057	EPA 8260D	9-20-22	9-20-22	
1,1-Dichloropropene	ND	0.00057	EPA 8260D	9-20-22	9-20-22	
Benzene	ND	0.00057	EPA 8260D	9-20-22	9-20-22	
1,2-Dichloroethane	ND	0.00057	EPA 8260D	9-20-22	9-20-22	
Trichloroethene	ND	0.00057	EPA 8260D	9-20-22	9-20-22	
1,2-Dichloropropane	ND	0.00057	EPA 8260D	9-20-22	9-20-22	
Dibromomethane	ND	0.00057	EPA 8260D	9-20-22	9-20-22	
Bromodichloromethane	ND	0.00057	EPA 8260D	9-20-22	9-20-22	
2-Chloroethyl Vinyl Ether	ND	0.0028	EPA 8260D	9-20-22	9-20-22	
(cis) 1,3-Dichloropropene	ND	0.00057	EPA 8260D	9-20-22	9-20-22	
Methyl Isobutyl Ketone	ND	0.0028	EPA 8260D	9-20-22	9-20-22	
Toluene	ND	0.0028	EPA 8260D	9-20-22	9-20-22	
(trans) 1,3-Dichloropropene	ND	0.00057	EPA 8260D	9-20-22	9-20-22	

This report pertains to the samples analyzed in accordance with the chain of custody, and is intended only for the use of the individual or company to whom it is addressed.

Date of Report: September 21, 2022
Samples Submitted: September 19, 2022
Laboratory Reference: 2209-160
Project: 11-05150-003

VOLATILE ORGANICS EPA 8260D
page 2 of 2

Analyte	Result	PQL	Method	Date Prepared	Date Analyzed	Flags
Client ID:	**DA7SWCS31220919D**					
Laboratory ID:	09-160-03					
1,1,2-Trichloroethane	ND	0.00057	EPA 8260D	9-20-22	9-20-22	
Tetrachloroethene	ND	0.00057	EPA 8260D	9-20-22	9-20-22	
1,3-Dichloropropane	ND	0.00057	EPA 8260D	9-20-22	9-20-22	
2-Hexanone	ND	0.0028	EPA 8260D	9-20-22	9-20-22	
Dibromochloromethane	ND	0.00057	EPA 8260D	9-20-22	9-20-22	
1,2-Dibromoethane	ND	0.000028	EPA 8260D/SIM	9-20-22	9-20-22	
Chlorobenzene	ND	0.00057	EPA 8260D	9-20-22	9-20-22	
1,1,1,2-Tetrachloroethane	ND	0.00057	EPA 8260D	9-20-22	9-20-22	
Ethylbenzene	ND	0.00057	EPA 8260D	9-20-22	9-20-22	
m,p-Xylene	ND	0.0011	EPA 8260D	9-20-22	9-20-22	
o-Xylene	ND	0.00057	EPA 8260D	9-20-22	9-20-22	
Styrene	ND	0.00057	EPA 8260D	9-20-22	9-20-22	
Bromoform	ND	0.0028	EPA 8260D	9-20-22	9-20-22	
Isopropylbenzene	ND	0.00057	EPA 8260D	9-20-22	9-20-22	
Bromobenzene	ND	0.00057	EPA 8260D	9-20-22	9-20-22	
1,1,2,2-Tetrachloroethane	ND	0.00057	EPA 8260D	9-20-22	9-20-22	
1,2,3-Trichloropropane	ND	0.00057	EPA 8260D	9-20-22	9-20-22	
n-Propylbenzene	ND	0.00057	EPA 8260D	9-20-22	9-20-22	
2-Chlorotoluene	ND	0.00057	EPA 8260D	9-20-22	9-20-22	
4-Chlorotoluene	ND	0.00057	EPA 8260D	9-20-22	9-20-22	
1,3,5-Trimethylbenzene	ND	0.00057	EPA 8260D	9-20-22	9-20-22	
tert-Butylbenzene	ND	0.00057	EPA 8260D	9-20-22	9-20-22	
1,2,4-Trimethylbenzene	ND	0.00057	EPA 8260D	9-20-22	9-20-22	
sec-Butylbenzene	ND	0.00057	EPA 8260D	9-20-22	9-20-22	
1,3-Dichlorobenzene	ND	0.00057	EPA 8260D	9-20-22	9-20-22	
p-Isopropyltoluene	ND	0.00057	EPA 8260D	9-20-22	9-20-22	
1,4-Dichlorobenzene	ND	0.00057	EPA 8260D	9-20-22	9-20-22	
1,2-Dichlorobenzene	ND	0.00057	EPA 8260D	9-20-22	9-20-22	
n-Butylbenzene	ND	0.00057	EPA 8260D	9-20-22	9-20-22	
1,2-Dibromo-3-chloropropane	ND	0.0028	EPA 8260D	9-20-22	9-20-22	
1,2,4-Trichlorobenzene	ND	0.00057	EPA 8260D	9-20-22	9-20-22	
Hexachlorobutadiene	ND	0.0028	EPA 8260D	9-20-22	9-20-22	
Naphthalene	ND	0.0028	EPA 8260D	9-20-22	9-20-22	
1,2,3-Trichlorobenzene	ND	0.00057	EPA 8260D	9-20-22	9-20-22	
Surrogate:	*Percent Recovery*	*Control Limits*				
Dibromofluoromethane	*84*	*75-130*				
Toluene-d8	*98*	*78-128*				
4-Bromofluorobenzene	*99*	*71-130*				

This report pertains to the samples analyzed in accordance with the chain of custody, and is intended only for the use of the individual or company to whom it is addressed.

Date of Report: September 21, 2022
Samples Submitted: September 19, 2022
Laboratory Reference: 2209-160
Project: 11-05150-003

VOLATILE ORGANICS EPA 8260D
page 1 of 2

Matrix: Soil
Units: mg/kg

Analyte	Result	PQL	Method	Date Prepared	Date Analyzed	Flags
Client ID:	**DA7SWCS32220919I**					
Laboratory ID:	09-160-04					
Dichlorodifluoromethane	ND	0.00036	EPA 8260D	9-20-22	9-20-22	
Chloromethane	ND	0.0018	EPA 8260D	9-20-22	9-20-22	
Vinyl Chloride	ND	0.00036	EPA 8260D	9-20-22	9-20-22	
Bromomethane	ND	0.0026	EPA 8260D	9-20-22	9-20-22	
Chloroethane	ND	0.0018	EPA 8260D	9-20-22	9-20-22	
Trichlorofluoromethane	ND	0.00036	EPA 8260D	9-20-22	9-20-22	
1,1-Dichloroethene	ND	0.00036	EPA 8260D	9-20-22	9-20-22	
Acetone	1.2	0.26	EPA 8260D	9-20-22	9-20-22	
Iodomethane	ND	0.0018	EPA 8260D	9-20-22	9-20-22	
Carbon Disulfide	ND	0.00036	EPA 8260D	9-20-22	9-20-22	
Methylene Chloride	ND	0.0018	EPA 8260D	9-20-22	9-20-22	
(trans) 1,2-Dichloroethene	ND	0.00036	EPA 8260D	9-20-22	9-20-22	
Methyl t-Butyl Ether	ND	0.00036	EPA 8260D	9-20-22	9-20-22	
1,1-Dichloroethane	ND	0.00036	EPA 8260D	9-20-22	9-20-22	
Vinyl Acetate	ND	0.0018	EPA 8260D	9-20-22	9-20-22	
2,2-Dichloropropane	ND	0.00036	EPA 8260D	9-20-22	9-20-22	
(cis) 1,2-Dichloroethene	ND	0.00036	EPA 8260D	9-20-22	9-20-22	
2-Butanone	0.52	0.13	EPA 8260D	9-20-22	9-20-22	
Bromochloromethane	ND	0.00036	EPA 8260D	9-20-22	9-20-22	
Chloroform	ND	0.00036	EPA 8260D	9-20-22	9-20-22	
1,1,1-Trichloroethane	ND	0.00036	EPA 8260D	9-20-22	9-20-22	
Carbon Tetrachloride	ND	0.00036	EPA 8260D	9-20-22	9-20-22	
1,1-Dichloropropene	ND	0.00036	EPA 8260D	9-20-22	9-20-22	
Benzene	ND	0.00036	EPA 8260D	9-20-22	9-20-22	
1,2-Dichloroethane	ND	0.00036	EPA 8260D	9-20-22	9-20-22	
Trichloroethene	ND	0.00036	EPA 8260D	9-20-22	9-20-22	
1,2-Dichloropropane	ND	0.00036	EPA 8260D	9-20-22	9-20-22	
Dibromomethane	ND	0.00036	EPA 8260D	9-20-22	9-20-22	
Bromodichloromethane	ND	0.00036	EPA 8260D	9-20-22	9-20-22	
2-Chloroethyl Vinyl Ether	ND	0.0018	EPA 8260D	9-20-22	9-20-22	
(cis) 1,3-Dichloropropene	ND	0.00036	EPA 8260D	9-20-22	9-20-22	
Methyl Isobutyl Ketone	0.011	0.0018	EPA 8260D	9-20-22	9-20-22	
Toluene	ND	0.0018	EPA 8260D	9-20-22	9-20-22	
(trans) 1,3-Dichloropropene	ND	0.00036	EPA 8260D	9-20-22	9-20-22	

This report pertains to the samples analyzed in accordance with the chain of custody,
and is intended only for the use of the individual or company to whom it is addressed.

Date of Report: September 21, 2022
Samples Submitted: September 19, 2022
Laboratory Reference: 2209-160
Project: 11-05150-003

VOLATILE ORGANICS EPA 8260D
page 2 of 2

Analyte	Result	PQL	Method	Date Prepared	Date Analyzed	Flags
Client ID:	**DA7SWCS32220919I**					
Laboratory ID:	09-160-04					
1,1,2-Trichloroethane	ND	0.00036	EPA 8260D	9-20-22	9-20-22	
Tetrachloroethene	ND	0.00036	EPA 8260D	9-20-22	9-20-22	
1,3-Dichloropropane	ND	0.00036	EPA 8260D	9-20-22	9-20-22	
2-Hexanone	ND	0.0018	EPA 8260D	9-20-22	9-20-22	
Dibromochloromethane	ND	0.00036	EPA 8260D	9-20-22	9-20-22	
1,2-Dibromoethane	ND	0.000018	EPA 8260D/SIM	9-20-22	9-20-22	
Chlorobenzene	ND	0.00036	EPA 8260D	9-20-22	9-20-22	
1,1,1,2-Tetrachloroethane	ND	0.00036	EPA 8260D	9-20-22	9-20-22	
Ethylbenzene	0.00045	0.00036	EPA 8260D	9-20-22	9-20-22	
m,p-Xylene	0.0012	0.00073	EPA 8260D	9-20-22	9-20-22	
o-Xylene	0.00066	0.00036	EPA 8260D	9-20-22	9-20-22	
Styrene	ND	0.00036	EPA 8260D	9-20-22	9-20-22	
Bromoform	ND	0.0018	EPA 8260D	9-20-22	9-20-22	
Isopropylbenzene	ND	0.00036	EPA 8260D	9-20-22	9-20-22	
Bromobenzene	ND	0.00036	EPA 8260D	9-20-22	9-20-22	
1,1,2,2-Tetrachloroethane	ND	0.00036	EPA 8260D	9-20-22	9-20-22	
1,2,3-Trichloropropane	ND	0.00036	EPA 8260D	9-20-22	9-20-22	
n-Propylbenzene	ND	0.00036	EPA 8260D	9-20-22	9-20-22	
2-Chlorotoluene	ND	0.00036	EPA 8260D	9-20-22	9-20-22	
4-Chlorotoluene	ND	0.00036	EPA 8260D	9-20-22	9-20-22	
1,3,5-Trimethylbenzene	ND	0.00036	EPA 8260D	9-20-22	9-20-22	
tert-Butylbenzene	ND	0.00036	EPA 8260D	9-20-22	9-20-22	
1,2,4-Trimethylbenzene	0.00047	0.00036	EPA 8260D	9-20-22	9-20-22	
sec-Butylbenzene	ND	0.00036	EPA 8260D	9-20-22	9-20-22	
1,3-Dichlorobenzene	ND	0.00036	EPA 8260D	9-20-22	9-20-22	
p-Isopropyltoluene	0.0021	0.00036	EPA 8260D	9-20-22	9-20-22	
1,4-Dichlorobenzene	0.00048	0.00036	EPA 8260D	9-20-22	9-20-22	
1,2-Dichlorobenzene	ND	0.00036	EPA 8260D	9-20-22	9-20-22	
n-Butylbenzene	ND	0.00036	EPA 8260D	9-20-22	9-20-22	
1,2-Dibromo-3-chloropropane	ND	0.0018	EPA 8260D	9-20-22	9-20-22	
1,2,4-Trichlorobenzene	ND	0.00036	EPA 8260D	9-20-22	9-20-22	
Hexachlorobutadiene	ND	0.0018	EPA 8260D	9-20-22	9-20-22	
Naphthalene	ND	0.0018	EPA 8260D	9-20-22	9-20-22	
1,2,3-Trichlorobenzene	ND	0.00036	EPA 8260D	9-20-22	9-20-22	
Surrogate:	*Percent Recovery*	*Control Limits*				
Dibromofluoromethane	*85*	*75-130*				
Toluene-d8	*97*	*78-128*				
4-Bromofluorobenzene	*104*	*71-130*				

This report pertains to the samples analyzed in accordance with the chain of custody, and is intended only for the use of the individual or company to whom it is addressed.

Date of Report: September 21, 2022
Samples Submitted: September 19, 2022
Laboratory Reference: 2209-160
Project: 11-05150-003

VOLATILE ORGANICS EPA 8260D
page 1 of 2

Matrix: Soil
Units: mg/kg

Analyte	Result	PQL	Method	Date Prepared	Date Analyzed	Flags
Client ID:	**DA7SWCS33220919I**					
Laboratory ID:	09-160-05					
Dichlorodifluoromethane	ND	0.00056	EPA 8260D	9-20-22	9-20-22	
Chloromethane	ND	0.0028	EPA 8260D	9-20-22	9-20-22	
Vinyl Chloride	ND	0.00056	EPA 8260D	9-20-22	9-20-22	
Bromomethane	ND	0.0040	EPA 8260D	9-20-22	9-20-22	
Chloroethane	ND	0.0028	EPA 8260D	9-20-22	9-20-22	
Trichlorofluoromethane	ND	0.00056	EPA 8260D	9-20-22	9-20-22	
1,1-Dichloroethene	ND	0.00056	EPA 8260D	9-20-22	9-20-22	
Acetone	0.048	0.0056	EPA 8260D	9-20-22	9-20-22	
Iodomethane	ND	0.0028	EPA 8260D	9-20-22	9-20-22	
Carbon Disulfide	ND	0.00056	EPA 8260D	9-20-22	9-20-22	
Methylene Chloride	ND	0.0028	EPA 8260D	9-20-22	9-20-22	
(trans) 1,2-Dichloroethene	ND	0.00056	EPA 8260D	9-20-22	9-20-22	
Methyl t-Butyl Ether	ND	0.00056	EPA 8260D	9-20-22	9-20-22	
1,1-Dichloroethane	ND	0.00056	EPA 8260D	9-20-22	9-20-22	
Vinyl Acetate	ND	0.0028	EPA 8260D	9-20-22	9-20-22	
2,2-Dichloropropane	ND	0.00056	EPA 8260D	9-20-22	9-20-22	
(cis) 1,2-Dichloroethene	ND	0.00056	EPA 8260D	9-20-22	9-20-22	
2-Butanone	0.019	0.0028	EPA 8260D	9-20-22	9-20-22	
Bromochloromethane	ND	0.00056	EPA 8260D	9-20-22	9-20-22	
Chloroform	ND	0.00056	EPA 8260D	9-20-22	9-20-22	
1,1,1-Trichloroethane	ND	0.00056	EPA 8260D	9-20-22	9-20-22	
Carbon Tetrachloride	ND	0.00056	EPA 8260D	9-20-22	9-20-22	
1,1-Dichloropropene	ND	0.00056	EPA 8260D	9-20-22	9-20-22	
Benzene	ND	0.00056	EPA 8260D	9-20-22	9-20-22	
1,2-Dichloroethane	ND	0.00056	EPA 8260D	9-20-22	9-20-22	
Trichloroethene	ND	0.00056	EPA 8260D	9-20-22	9-20-22	
1,2-Dichloropropane	ND	0.00056	EPA 8260D	9-20-22	9-20-22	
Dibromomethane	ND	0.00056	EPA 8260D	9-20-22	9-20-22	
Bromodichloromethane	ND	0.00056	EPA 8260D	9-20-22	9-20-22	
2-Chloroethyl Vinyl Ether	ND	0.0028	EPA 8260D	9-20-22	9-20-22	
(cis) 1,3-Dichloropropene	ND	0.00056	EPA 8260D	9-20-22	9-20-22	
Methyl Isobutyl Ketone	ND	0.0028	EPA 8260D	9-20-22	9-20-22	
Toluene	ND	0.0028	EPA 8260D	9-20-22	9-20-22	
(trans) 1,3-Dichloropropene	ND	0.00056	EPA 8260D	9-20-22	9-20-22	

This report pertains to the samples analyzed in accordance with the chain of custody, and is intended only for the use of the individual or company to whom it is addressed.

Date of Report: September 21, 2022
Samples Submitted: September 19, 2022
Laboratory Reference: 2209-160
Project: 11-05150-003

VOLATILE ORGANICS EPA 8260D
page 2 of 2

Analyte	Result	PQL	Method	Date Prepared	Date Analyzed	Flags
Client ID:	**DA7SWCS33220919I**					
Laboratory ID:	09-160-05					
1,1,2-Trichloroethane	ND	0.00056	EPA 8260D	9-20-22	9-20-22	
Tetrachloroethene	ND	0.00056	EPA 8260D	9-20-22	9-20-22	
1,3-Dichloropropane	ND	0.00056	EPA 8260D	9-20-22	9-20-22	
2-Hexanone	ND	0.0028	EPA 8260D	9-20-22	9-20-22	
Dibromochloromethane	ND	0.00056	EPA 8260D	9-20-22	9-20-22	
1,2-Dibromoethane	ND	0.000028	EPA 8260D/SIM	9-20-22	9-20-22	
Chlorobenzene	ND	0.00056	EPA 8260D	9-20-22	9-20-22	
1,1,1,2-Tetrachloroethane	ND	0.00056	EPA 8260D	9-20-22	9-20-22	
Ethylbenzene	ND	0.00056	EPA 8260D	9-20-22	9-20-22	
m,p-Xylene	ND	0.0011	EPA 8260D	9-20-22	9-20-22	
o-Xylene	ND	0.00056	EPA 8260D	9-20-22	9-20-22	
Styrene	ND	0.00056	EPA 8260D	9-20-22	9-20-22	
Bromoform	ND	0.0028	EPA 8260D	9-20-22	9-20-22	
Isopropylbenzene	ND	0.00056	EPA 8260D	9-20-22	9-20-22	
Bromobenzene	ND	0.00056	EPA 8260D	9-20-22	9-20-22	
1,1,2,2-Tetrachloroethane	ND	0.00056	EPA 8260D	9-20-22	9-20-22	
1,2,3-Trichloropropane	ND	0.00056	EPA 8260D	9-20-22	9-20-22	
n-Propylbenzene	ND	0.00056	EPA 8260D	9-20-22	9-20-22	
2-Chlorotoluene	ND	0.00056	EPA 8260D	9-20-22	9-20-22	
4-Chlorotoluene	ND	0.00056	EPA 8260D	9-20-22	9-20-22	
1,3,5-Trimethylbenzene	ND	0.00056	EPA 8260D	9-20-22	9-20-22	
tert-Butylbenzene	ND	0.00056	EPA 8260D	9-20-22	9-20-22	
1,2,4-Trimethylbenzene	ND	0.00056	EPA 8260D	9-20-22	9-20-22	
sec-Butylbenzene	ND	0.00056	EPA 8260D	9-20-22	9-20-22	
1,3-Dichlorobenzene	ND	0.00056	EPA 8260D	9-20-22	9-20-22	
p-Isopropyltoluene	ND	0.00056	EPA 8260D	9-20-22	9-20-22	
1,4-Dichlorobenzene	ND	0.00056	EPA 8260D	9-20-22	9-20-22	
1,2-Dichlorobenzene	ND	0.00056	EPA 8260D	9-20-22	9-20-22	
n-Butylbenzene	ND	0.00056	EPA 8260D	9-20-22	9-20-22	
1,2-Dibromo-3-chloropropane	ND	0.0028	EPA 8260D	9-20-22	9-20-22	
1,2,4-Trichlorobenzene	ND	0.00056	EPA 8260D	9-20-22	9-20-22	
Hexachlorobutadiene	ND	0.0028	EPA 8260D	9-20-22	9-20-22	
Naphthalene	ND	0.0028	EPA 8260D	9-20-22	9-20-22	
1,2,3-Trichlorobenzene	ND	0.00056	EPA 8260D	9-20-22	9-20-22	
Surrogate:	*Percent Recovery*	*Control Limits*				
Dibromofluoromethane	*85*	*75-130*				
Toluene-d8	*99*	*78-128*				
4-Bromofluorobenzene	*105*	*71-130*				

This report pertains to the samples analyzed in accordance with the chain of custody, and is intended only for the use of the individual or company to whom it is addressed.

Date of Report: September 21, 2022
Samples Submitted: September 19, 2022
Laboratory Reference: 2209-160
Project: 11-05150-003

VOLATILE ORGANICS EPA 8260D
page 1 of 2

Matrix: Soil
Units: mg/kg

Analyte	Result	PQL	Method	Date Prepared	Date Analyzed	Flags
Client ID:	**DA7SWCS34220919I**					
Laboratory ID:	09-160-06					
Dichlorodifluoromethane	ND	0.00056	EPA 8260D	9-20-22	9-20-22	
Chloromethane	ND	0.0028	EPA 8260D	9-20-22	9-20-22	
Vinyl Chloride	ND	0.00056	EPA 8260D	9-20-22	9-20-22	
Bromomethane	ND	0.0041	EPA 8260D	9-20-22	9-20-22	
Chloroethane	ND	0.0028	EPA 8260D	9-20-22	9-20-22	
Trichlorofluoromethane	ND	0.00056	EPA 8260D	9-20-22	9-20-22	
1,1-Dichloroethene	ND	0.00056	EPA 8260D	9-20-22	9-20-22	
Acetone	ND	0.0056	EPA 8260D	9-20-22	9-20-22	
Iodomethane	ND	0.0028	EPA 8260D	9-20-22	9-20-22	
Carbon Disulfide	ND	0.00056	EPA 8260D	9-20-22	9-20-22	
Methylene Chloride	ND	0.0028	EPA 8260D	9-20-22	9-20-22	
(trans) 1,2-Dichloroethene	ND	0.00056	EPA 8260D	9-20-22	9-20-22	
Methyl t-Butyl Ether	ND	0.00056	EPA 8260D	9-20-22	9-20-22	
1,1-Dichloroethane	ND	0.00056	EPA 8260D	9-20-22	9-20-22	
Vinyl Acetate	ND	0.0028	EPA 8260D	9-20-22	9-20-22	
2,2-Dichloropropane	ND	0.00056	EPA 8260D	9-20-22	9-20-22	
(cis) 1,2-Dichloroethene	ND	0.00056	EPA 8260D	9-20-22	9-20-22	
2-Butanone	ND	0.0028	EPA 8260D	9-20-22	9-20-22	
Bromochloromethane	ND	0.00056	EPA 8260D	9-20-22	9-20-22	
Chloroform	ND	0.00056	EPA 8260D	9-20-22	9-20-22	
1,1,1-Trichloroethane	ND	0.00056	EPA 8260D	9-20-22	9-20-22	
Carbon Tetrachloride	ND	0.00056	EPA 8260D	9-20-22	9-20-22	
1,1-Dichloropropene	ND	0.00056	EPA 8260D	9-20-22	9-20-22	
Benzene	ND	0.00056	EPA 8260D	9-20-22	9-20-22	
1,2-Dichloroethane	ND	0.00056	EPA 8260D	9-20-22	9-20-22	
Trichloroethene	ND	0.00056	EPA 8260D	9-20-22	9-20-22	
1,2-Dichloropropane	ND	0.00056	EPA 8260D	9-20-22	9-20-22	
Dibromomethane	ND	0.00056	EPA 8260D	9-20-22	9-20-22	
Bromodichloromethane	ND	0.00056	EPA 8260D	9-20-22	9-20-22	
2-Chloroethyl Vinyl Ether	ND	0.0028	EPA 8260D	9-20-22	9-20-22	
(cis) 1,3-Dichloropropene	ND	0.00056	EPA 8260D	9-20-22	9-20-22	
Methyl Isobutyl Ketone	ND	0.0028	EPA 8260D	9-20-22	9-20-22	
Toluene	ND	0.0028	EPA 8260D	9-20-22	9-20-22	
(trans) 1,3-Dichloropropene	ND	0.00056	EPA 8260D	9-20-22	9-20-22	

This report pertains to the samples analyzed in accordance with the chain of custody,
and is intended only for the use of the individual or company to whom it is addressed.

Date of Report: September 21, 2022
Samples Submitted: September 19, 2022
Laboratory Reference: 2209-160
Project: 11-05150-003

VOLATILE ORGANICS EPA 8260D
page 2 of 2

Analyte	Result	PQL	Method	Date Prepared	Date Analyzed	Flags
Client ID:	**DA7SWCS34220919I**					
Laboratory ID:	09-160-06					
1,1,2-Trichloroethane	ND	0.00056	EPA 8260D	9-20-22	9-20-22	
Tetrachloroethene	ND	0.00056	EPA 8260D	9-20-22	9-20-22	
1,3-Dichloropropane	ND	0.00056	EPA 8260D	9-20-22	9-20-22	
2-Hexanone	ND	0.0028	EPA 8260D	9-20-22	9-20-22	
Dibromochloromethane	ND	0.00056	EPA 8260D	9-20-22	9-20-22	
1,2-Dibromoethane	ND	0.000028	EPA 8260D/SIM	9-20-22	9-20-22	
Chlorobenzene	ND	0.00056	EPA 8260D	9-20-22	9-20-22	
1,1,1,2-Tetrachloroethane	ND	0.00056	EPA 8260D	9-20-22	9-20-22	
Ethylbenzene	ND	0.00056	EPA 8260D	9-20-22	9-20-22	
m,p-Xylene	ND	0.0011	EPA 8260D	9-20-22	9-20-22	
o-Xylene	ND	0.00056	EPA 8260D	9-20-22	9-20-22	
Styrene	ND	0.00056	EPA 8260D	9-20-22	9-20-22	
Bromoform	ND	0.0028	EPA 8260D	9-20-22	9-20-22	
Isopropylbenzene	ND	0.00056	EPA 8260D	9-20-22	9-20-22	
Bromobenzene	ND	0.00056	EPA 8260D	9-20-22	9-20-22	
1,1,2,2-Tetrachloroethane	ND	0.00056	EPA 8260D	9-20-22	9-20-22	
1,2,3-Trichloropropane	ND	0.00056	EPA 8260D	9-20-22	9-20-22	
n-Propylbenzene	ND	0.00056	EPA 8260D	9-20-22	9-20-22	
2-Chlorotoluene	ND	0.00056	EPA 8260D	9-20-22	9-20-22	
4-Chlorotoluene	ND	0.00056	EPA 8260D	9-20-22	9-20-22	
1,3,5-Trimethylbenzene	ND	0.00056	EPA 8260D	9-20-22	9-20-22	
tert-Butylbenzene	ND	0.00056	EPA 8260D	9-20-22	9-20-22	
1,2,4-Trimethylbenzene	ND	0.00056	EPA 8260D	9-20-22	9-20-22	
sec-Butylbenzene	ND	0.00056	EPA 8260D	9-20-22	9-20-22	
1,3-Dichlorobenzene	ND	0.00056	EPA 8260D	9-20-22	9-20-22	
p-Isopropyltoluene	ND	0.00056	EPA 8260D	9-20-22	9-20-22	
1,4-Dichlorobenzene	ND	0.00056	EPA 8260D	9-20-22	9-20-22	
1,2-Dichlorobenzene	ND	0.00056	EPA 8260D	9-20-22	9-20-22	
n-Butylbenzene	ND	0.00056	EPA 8260D	9-20-22	9-20-22	
1,2-Dibromo-3-chloropropane	ND	0.0028	EPA 8260D	9-20-22	9-20-22	
1,2,4-Trichlorobenzene	ND	0.00056	EPA 8260D	9-20-22	9-20-22	
Hexachlorobutadiene	ND	0.0028	EPA 8260D	9-20-22	9-20-22	
Naphthalene	ND	0.0028	EPA 8260D	9-20-22	9-20-22	
1,2,3-Trichlorobenzene	ND	0.00056	EPA 8260D	9-20-22	9-20-22	
Surrogate:	*Percent Recovery*	*Control Limits*				
Dibromofluoromethane	*83*	*75-130*				
Toluene-d8	*99*	*78-128*				
4-Bromofluorobenzene	*104*	*71-130*				

This report pertains to the samples analyzed in accordance with the chain of custody, and is intended only for the use of the individual or company to whom it is addressed.

Date of Report: September 21, 2022
Samples Submitted: September 19, 2022
Laboratory Reference: 2209-160
Project: 11-05150-003

VOLATILE ORGANICS EPA 8260D
QUALITY CONTROL
page 1 of 2

Matrix: Soil
Units: mg/kg

Analyte	Result	PQL	Method	Date Prepared	Date Analyzed	Flags
METHOD BLANK						
Laboratory ID:	MB0920S1					
Dichlorodifluoromethane	ND	0.0010	EPA 8260D	9-20-22	9-20-22	
Chloromethane	ND	0.0050	EPA 8260D	9-20-22	9-20-22	
Vinyl Chloride	ND	0.0010	EPA 8260D	9-20-22	9-20-22	
Bromomethane	ND	0.0072	EPA 8260D	9-20-22	9-20-22	
Chloroethane	ND	0.0050	EPA 8260D	9-20-22	9-20-22	
Trichlorofluoromethane	ND	0.0010	EPA 8260D	9-20-22	9-20-22	
1,1-Dichloroethene	ND	0.0010	EPA 8260D	9-20-22	9-20-22	
Acetone	ND	0.010	EPA 8260D	9-20-22	9-20-22	
Iodomethane	ND	0.0050	EPA 8260D	9-20-22	9-20-22	
Carbon Disulfide	ND	0.0010	EPA 8260D	9-20-22	9-20-22	
Methylene Chloride	ND	0.0050	EPA 8260D	9-20-22	9-20-22	
(trans) 1,2-Dichloroethene	ND	0.0010	EPA 8260D	9-20-22	9-20-22	
Methyl t-Butyl Ether	ND	0.0010	EPA 8260D	9-20-22	9-20-22	
1,1-Dichloroethane	ND	0.0010	EPA 8260D	9-20-22	9-20-22	
Vinyl Acetate	ND	0.0050	EPA 8260D	9-20-22	9-20-22	
2,2-Dichloropropane	ND	0.0010	EPA 8260D	9-20-22	9-20-22	
(cis) 1,2-Dichloroethene	ND	0.0010	EPA 8260D	9-20-22	9-20-22	
2-Butanone	ND	0.0050	EPA 8260D	9-20-22	9-20-22	
Bromochloromethane	ND	0.0010	EPA 8260D	9-20-22	9-20-22	
Chloroform	ND	0.0010	EPA 8260D	9-20-22	9-20-22	
1,1,1-Trichloroethane	ND	0.0010	EPA 8260D	9-20-22	9-20-22	
Carbon Tetrachloride	ND	0.0010	EPA 8260D	9-20-22	9-20-22	
1,1-Dichloropropene	ND	0.0010	EPA 8260D	9-20-22	9-20-22	
Benzene	ND	0.0010	EPA 8260D	9-20-22	9-20-22	
1,2-Dichloroethane	ND	0.0010	EPA 8260D	9-20-22	9-20-22	
Trichloroethene	ND	0.0010	EPA 8260D	9-20-22	9-20-22	
1,2-Dichloropropane	ND	0.0010	EPA 8260D	9-20-22	9-20-22	
Dibromomethane	ND	0.0010	EPA 8260D	9-20-22	9-20-22	
Bromodichloromethane	ND	0.0010	EPA 8260D	9-20-22	9-20-22	
2-Chloroethyl Vinyl Ether	ND	0.0050	EPA 8260D	9-20-22	9-20-22	
(cis) 1,3-Dichloropropene	ND	0.0010	EPA 8260D	9-20-22	9-20-22	
Methyl Isobutyl Ketone	ND	0.0050	EPA 8260D	9-20-22	9-20-22	
Toluene	ND	0.0050	EPA 8260D	9-20-22	9-20-22	
(trans) 1,3-Dichloropropene	ND	0.0010	EPA 8260D	9-20-22	9-20-22	

This report pertains to the samples analyzed in accordance with the chain of custody, and is intended only for the use of the individual or company to whom it is addressed.

Date of Report: September 21, 2022
Samples Submitted: September 19, 2022
Laboratory Reference: 2209-160
Project: 11-05150-003

VOLATILE ORGANICS EPA 8260D
QUALITY CONTROL
page 2 of 2

Analyte	Result	PQL	Method	Date Prepared	Date Analyzed	Flags
METHOD BLANK						
Laboratory ID:	MB0920S1					
1,1,2-Trichloroethane	ND	0.0010	EPA 8260D	9-20-22	9-20-22	
Tetrachloroethene	ND	0.0010	EPA 8260D	9-20-22	9-20-22	
1,3-Dichloropropane	ND	0.0010	EPA 8260D	9-20-22	9-20-22	
2-Hexanone	ND	0.0050	EPA 8260D	9-20-22	9-20-22	
Dibromochloromethane	ND	0.0010	EPA 8260D	9-20-22	9-20-22	
1,2-Dibromoethane	ND	0.000050	EPA 8260D/SIM	9-20-22	9-20-22	
Chlorobenzene	ND	0.0010	EPA 8260D	9-20-22	9-20-22	
1,1,1,2-Tetrachloroethane	ND	0.0010	EPA 8260D	9-20-22	9-20-22	
Ethylbenzene	ND	0.0010	EPA 8260D	9-20-22	9-20-22	
m,p-Xylene	ND	0.0020	EPA 8260D	9-20-22	9-20-22	
o-Xylene	ND	0.0010	EPA 8260D	9-20-22	9-20-22	
Styrene	ND	0.0010	EPA 8260D	9-20-22	9-20-22	
Bromoform	ND	0.0050	EPA 8260D	9-20-22	9-20-22	
Isopropylbenzene	ND	0.0010	EPA 8260D	9-20-22	9-20-22	
Bromobenzene	ND	0.0010	EPA 8260D	9-20-22	9-20-22	
1,1,2,2-Tetrachloroethane	ND	0.0010	EPA 8260D	9-20-22	9-20-22	
1,2,3-Trichloropropane	ND	0.0010	EPA 8260D	9-20-22	9-20-22	
n-Propylbenzene	ND	0.0010	EPA 8260D	9-20-22	9-20-22	
2-Chlorotoluene	ND	0.0010	EPA 8260D	9-20-22	9-20-22	
4-Chlorotoluene	ND	0.0010	EPA 8260D	9-20-22	9-20-22	
1,3,5-Trimethylbenzene	ND	0.0010	EPA 8260D	9-20-22	9-20-22	
tert-Butylbenzene	ND	0.0010	EPA 8260D	9-20-22	9-20-22	
1,2,4-Trimethylbenzene	ND	0.0010	EPA 8260D	9-20-22	9-20-22	
sec-Butylbenzene	ND	0.0010	EPA 8260D	9-20-22	9-20-22	
1,3-Dichlorobenzene	ND	0.0010	EPA 8260D	9-20-22	9-20-22	
p-Isopropyltoluene	ND	0.0010	EPA 8260D	9-20-22	9-20-22	
1,4-Dichlorobenzene	ND	0.0010	EPA 8260D	9-20-22	9-20-22	
1,2-Dichlorobenzene	ND	0.0010	EPA 8260D	9-20-22	9-20-22	
n-Butylbenzene	ND	0.0010	EPA 8260D	9-20-22	9-20-22	
1,2-Dibromo-3-chloropropane	ND	0.0050	EPA 8260D	9-20-22	9-20-22	
1,2,4-Trichlorobenzene	ND	0.0010	EPA 8260D	9-20-22	9-20-22	
Hexachlorobutadiene	ND	0.0050	EPA 8260D	9-20-22	9-20-22	
Naphthalene	ND	0.0050	EPA 8260D	9-20-22	9-20-22	
1,2,3-Trichlorobenzene	ND	0.0010	EPA 8260D	9-20-22	9-20-22	
Surrogate:	*Percent Recovery*	*Control Limits*				
Dibromofluoromethane	*85*	*75-130*				
Toluene-d8	*98*	*78-128*				
4-Bromofluorobenzene	*110*	*71-130*				

This report pertains to the samples analyzed in accordance with the chain of custody, and is intended only for the use of the individual or company to whom it is addressed.

Date of Report: September 21, 2022
Samples Submitted: September 19, 2022
Laboratory Reference: 2209-160
Project: 11-05150-003

VOLATILE ORGANICS EPA 8260D
QUALITY CONTROL
page 1 of 2

Matrix: Soil
Units: mg/kg

Analyte	Result		Spike Level		Percent Recovery		Recovery Limits	RPD	RPD Limit	Flags
SPIKE BLANKS										
Laboratory ID:	SB0920S1									
	SB	SBD	SB	SBD	SB	SBD				
Dichlorodifluoromethane	**0.0427**	**0.0404**	0.0500	0.0500	85	81	30-160	6	26	
Chloromethane	**0.0447**	**0.0425**	0.0500	0.0500	89	85	59-131	5	26	
Vinyl Chloride	**0.0471**	**0.0465**	0.0500	0.0500	94	93	68-136	1	23	
Bromomethane	**0.0349**	**0.0409**	0.0500	0.0500	70	82	48-155	16	32	
Chloroethane	**0.0463**	**0.0465**	0.0500	0.0500	93	93	67-141	0	16	
Trichlorofluoromethane	**0.0502**	**0.0489**	0.0500	0.0500	100	98	76-127	3	19	
1,1-Dichloroethene	**0.0493**	**0.0484**	0.0500	0.0500	99	97	75-129	2	19	
Acetone	**0.0492**	**0.0575**	0.0500	0.0500	98	115	49-158	16	37	
Iodomethane	**0.0440**	**0.0405**	0.0500	0.0500	88	81	37-140	8	27	
Carbon Disulfide	**0.0455**	**0.0436**	0.0500	0.0500	91	87	41-143	4	19	
Methylene Chloride	**0.0408**	**0.0405**	0.0500	0.0500	82	81	60-124	1	18	
(trans) 1,2-Dichloroethene	**0.0502**	**0.0494**	0.0500	0.0500	100	99	79-133	2	15	
Methyl t-Butyl Ether	**0.0481**	**0.0482**	0.0500	0.0500	96	96	73-125	0	17	
1,1-Dichloroethane	**0.0495**	**0.0486**	0.0500	0.0500	99	97	79-125	2	17	
Vinyl Acetate	**0.0432**	**0.0450**	0.0500	0.0500	86	90	51-145	4	41	
2,2-Dichloropropane	**0.0492**	**0.0543**	0.0500	0.0500	98	109	79-126	10	18	
(cis) 1,2-Dichloroethene	**0.0518**	**0.0514**	0.0500	0.0500	104	103	75-131	1	15	
2-Butanone	**0.0514**	**0.0590**	0.0500	0.0500	103	118	54-145	14	32	
Bromochloromethane	**0.0495**	**0.0488**	0.0500	0.0500	99	98	80-126	1	15	
Chloroform	**0.0485**	**0.0474**	0.0500	0.0500	97	95	80-123	2	15	
1,1,1-Trichloroethane	**0.0470**	**0.0470**	0.0500	0.0500	94	94	78-124	0	21	
Carbon Tetrachloride	**0.0458**	**0.0434**	0.0500	0.0500	92	87	74-127	5	18	
1,1-Dichloropropene	**0.0451**	**0.0440**	0.0500	0.0500	90	88	80-123	2	15	
Benzene	**0.0469**	**0.0463**	0.0500	0.0500	94	93	80-122	1	18	
1,2-Dichloroethane	**0.0482**	**0.0478**	0.0500	0.0500	96	96	75-124	1	15	
Trichloroethene	**0.0589**	**0.0568**	0.0500	0.0500	118	114	80-129	4	18	
1,2-Dichloropropane	**0.0572**	**0.0553**	0.0500	0.0500	114	111	80-123	3	15	
Dibromomethane	**0.0576**	**0.0545**	0.0500	0.0500	115	109	80-123	6	15	
Bromodichloromethane	**0.0587**	**0.0567**	0.0500	0.0500	117	113	80-129	3	15	
(cis) 1,3-Dichloropropene	**0.0588**	**0.0577**	0.0500	0.0500	118	115	80-130	2	15	
Methyl Isobutyl Ketone	**0.0554**	**0.0613**	0.0500	0.0500	111	123	63-137	10	27	
Toluene	**0.0538**	**0.0530**	0.0500	0.0500	108	106	80-120	1	18	
(trans) 1,3-Dichloropropene	**0.0577**	**0.0574**	0.0500	0.0500	115	115	80-124	1	15	

This report pertains to the samples analyzed in accordance with the chain of custody, and is intended only for the use of the individual or company to whom it is addressed.

Date of Report: September 21, 2022
Samples Submitted: September 19, 2022
Laboratory Reference: 2209-160
Project: 11-05150-003

VOLATILE ORGANICS EPA 8260D
QUALITY CONTROL
page 2 of 2

Analyte	Result		Spike Level		Percent Recovery		Recovery Limits	RPD	RPD Limit	Flags
SPIKE BLANKS										
Laboratory ID:	SB0920S1									
	SB	SBD	SB	SBD	SB	SBD				
1,1,2-Trichloroethane	**0.0521**	**0.0537**	0.0500	0.0500	104	107	80-120	3	15	
Tetrachloroethene	**0.0601**	**0.0608**	0.0500	0.0500	120	122	77-126	1	15	
1,3-Dichloropropane	**0.0551**	**0.0552**	0.0500	0.0500	110	110	77-123	0	15	
2-Hexanone	**0.0542**	**0.0566**	0.0500	0.0500	108	113	53-137	4	29	
Dibromochloromethane	**0.0556**	**0.0572**	0.0500	0.0500	111	114	80-128	3	16	
1,2-Dibromoethane	**0.0557**	**0.0563**	0.0500	0.0500	111	113	80-122	1	20	
Chlorobenzene	**0.0534**	**0.0532**	0.0500	0.0500	107	106	80-120	0	18	
1,1,1,2-Tetrachloroethane	**0.0556**	**0.0547**	0.0500	0.0500	111	109	80-120	2	15	
Ethylbenzene	**0.0532**	**0.0532**	0.0500	0.0500	106	106	80-120	0	15	
m,p-Xylene	**0.103**	**0.103**	0.100	0.100	103	103	80-120	0	15	
o-Xylene	**0.0530**	**0.0526**	0.0500	0.0500	106	105	80-120	1	15	
Styrene	**0.0532**	**0.0538**	0.0500	0.0500	106	108	80-122	1	15	
Bromoform	**0.0547**	**0.0567**	0.0500	0.0500	109	113	78-126	4	15	
Isopropylbenzene	**0.0546**	**0.0552**	0.0500	0.0500	109	110	80-125	1	15	
Bromobenzene	**0.0512**	**0.0514**	0.0500	0.0500	102	103	79-124	0	15	
1,1,2,2-Tetrachloroethane	**0.0548**	**0.0574**	0.0500	0.0500	110	115	75-122	5	17	
1,2,3-Trichloropropane	**0.0484**	**0.0507**	0.0500	0.0500	97	101	72-125	5	20	
n-Propylbenzene	**0.0547**	**0.0543**	0.0500	0.0500	109	109	77-126	1	16	
2-Chlorotoluene	**0.0534**	**0.0527**	0.0500	0.0500	107	105	75-128	1	15	
4-Chlorotoluene	**0.0522**	**0.0528**	0.0500	0.0500	104	106	78-127	1	16	
1,3,5-Trimethylbenzene	**0.0532**	**0.0526**	0.0500	0.0500	106	105	77-128	1	15	
tert-Butylbenzene	**0.0511**	**0.0508**	0.0500	0.0500	102	102	73-130	1	20	
1,2,4-Trimethylbenzene	**0.0518**	**0.0520**	0.0500	0.0500	104	104	77-125	0	16	
sec-Butylbenzene	**0.0510**	**0.0525**	0.0500	0.0500	102	105	75-130	3	17	
1,3-Dichlorobenzene	**0.0535**	**0.0534**	0.0500	0.0500	107	107	78-123	0	17	
p-Isopropyltoluene	**0.0549**	**0.0536**	0.0500	0.0500	110	107	75-130	2	18	
1,4-Dichlorobenzene	**0.0514**	**0.0520**	0.0500	0.0500	103	104	77-121	1	17	
1,2-Dichlorobenzene	**0.0530**	**0.0529**	0.0500	0.0500	106	106	80-120	0	15	
n-Butylbenzene	**0.0556**	**0.0553**	0.0500	0.0500	111	111	76-131	1	20	
1,2-Dibromo-3-chloropropane	**0.0549**	**0.0619**	0.0500	0.0500	110	124	61-137	12	28	
1,2,4-Trichlorobenzene	**0.0564**	**0.0559**	0.0500	0.0500	113	112	77-127	1	17	
Hexachlorobutadiene	**0.0542**	**0.0530**	0.0500	0.0500	108	106	77-125	2	22	
Naphthalene	**0.0542**	**0.0584**	0.0500	0.0500	108	117	68-129	7	19	
1,2,3-Trichlorobenzene	**0.0527**	**0.0538**	0.0500	0.0500	105	108	77-124	2	19	
Surrogate:										
Dibromofluoromethane					*83*	*83*	*75-130*			
Toluene-d8					*99*	*99*	*78-128*			
4-Bromofluorobenzene					*105*	*108*	*71-130*			

This report pertains to the samples analyzed in accordance with the chain of custody, and is intended only for the use of the individual or company to whom it is addressed.

Date of Report: September 21, 2022
Samples Submitted: September 19, 2022
Laboratory Reference: 2209-160
Project: 11-05150-003

VOLATILE ORGANICS EPA 8260D
page 1 of 2

Matrix: Water
Units: ug/L

Analyte	Result	PQL	Method	Date Prepared	Date Analyzed	Flags
Client ID:	**VTRP220929I- Trip Blank**					
Laboratory ID:	09-160-07					
Dichlorodifluoromethane	ND	0.32	EPA 8260D	9-20-22	9-20-22	
Chloromethane	ND	1.0	EPA 8260D	9-20-22	9-20-22	
Vinyl Chloride	ND	0.20	EPA 8260D	9-20-22	9-20-22	
Bromomethane	ND	1.0	EPA 8260D	9-20-22	9-20-22	
Chloroethane	ND	1.0	EPA 8260D	9-20-22	9-20-22	
Trichlorofluoromethane	ND	0.20	EPA 8260D	9-20-22	9-20-22	
1,1-Dichloroethene	ND	0.20	EPA 8260D	9-20-22	9-20-22	
Acetone	ND	5.0	EPA 8260D	9-20-22	9-20-22	
Iodomethane	ND	5.0	EPA 8260D	9-20-22	9-20-22	
Carbon Disulfide	ND	0.20	EPA 8260D	9-20-22	9-20-22	
Methylene Chloride	ND	1.0	EPA 8260D	9-20-22	9-20-22	
(trans) 1,2-Dichloroethene	ND	0.20	EPA 8260D	9-20-22	9-20-22	
Methyl t-Butyl Ether	ND	0.20	EPA 8260D	9-20-22	9-20-22	
1,1-Dichloroethane	ND	0.20	EPA 8260D	9-20-22	9-20-22	
Vinyl Acetate	ND	1.0	EPA 8260D	9-20-22	9-20-22	
2,2-Dichloropropane	ND	0.20	EPA 8260D	9-20-22	9-20-22	
(cis) 1,2-Dichloroethene	ND	0.20	EPA 8260D	9-20-22	9-20-22	
2-Butanone	ND	5.0	EPA 8260D	9-20-22	9-20-22	
Bromochloromethane	ND	0.20	EPA 8260D	9-20-22	9-20-22	
Chloroform	ND	0.20	EPA 8260D	9-20-22	9-20-22	
1,1,1-Trichloroethane	ND	0.20	EPA 8260D	9-20-22	9-20-22	
Carbon Tetrachloride	ND	0.20	EPA 8260D	9-20-22	9-20-22	
1,1-Dichloropropene	ND	0.20	EPA 8260D	9-20-22	9-20-22	
Benzene	ND	0.20	EPA 8260D	9-20-22	9-20-22	
1,2-Dichloroethane	ND	0.20	EPA 8260D	9-20-22	9-20-22	
Trichloroethene	ND	0.20	EPA 8260D	9-20-22	9-20-22	
1,2-Dichloropropane	ND	0.20	EPA 8260D	9-20-22	9-20-22	
Dibromomethane	ND	0.20	EPA 8260D	9-20-22	9-20-22	
Bromodichloromethane	ND	0.20	EPA 8260D	9-20-22	9-20-22	
(cis) 1,3-Dichloropropene	ND	0.20	EPA 8260D	9-20-22	9-20-22	
Methyl Isobutyl Ketone	ND	2.0	EPA 8260D	9-20-22	9-20-22	
Toluene	ND	1.0	EPA 8260D	9-20-22	9-20-22	
(trans) 1,3-Dichloropropene	ND	0.20	EPA 8260D	9-20-22	9-20-22	

This report pertains to the samples analyzed in accordance with the chain of custody,
and is intended only for the use of the individual or company to whom it is addressed.

Date of Report: September 21, 2022
Samples Submitted: September 19, 2022
Laboratory Reference: 2209-160
Project: 11-05150-003

VOLATILE ORGANICS EPA 8260D
page 2 of 2

Analyte	Result	PQL	Method	Date Prepared	Date Analyzed	Flags
Client ID:	**VTRP220929I- Trip Blank**					
Laboratory ID:	09-160-07					
1,1,2-Trichloroethane	ND	0.20	EPA 8260D	9-20-22	9-20-22	
Tetrachloroethene	ND	0.20	EPA 8260D	9-20-22	9-20-22	
1,3-Dichloropropane	ND	0.20	EPA 8260D	9-20-22	9-20-22	
2-Hexanone	ND	2.0	EPA 8260D	9-20-22	9-20-22	
Dibromochloromethane	ND	0.20	EPA 8260D	9-20-22	9-20-22	
1,2-Dibromoethane	ND	0.20	EPA 8260D	9-20-22	9-20-22	
Chlorobenzene	ND	0.20	EPA 8260D	9-20-22	9-20-22	
1,1,1,2-Tetrachloroethane	ND	0.20	EPA 8260D	9-20-22	9-20-22	
Ethylbenzene	ND	0.20	EPA 8260D	9-20-22	9-20-22	
m,p-Xylene	ND	0.40	EPA 8260D	9-20-22	9-20-22	
o-Xylene	ND	0.20	EPA 8260D	9-20-22	9-20-22	
Styrene	ND	0.20	EPA 8260D	9-20-22	9-20-22	
Bromoform	ND	1.0	EPA 8260D	9-20-22	9-20-22	
Isopropylbenzene	ND	0.20	EPA 8260D	9-20-22	9-20-22	
Bromobenzene	ND	0.20	EPA 8260D	9-20-22	9-20-22	
1,1,2,2-Tetrachloroethane	ND	0.20	EPA 8260D	9-20-22	9-20-22	
1,2,3-Trichloropropane	ND	0.20	EPA 8260D	9-20-22	9-20-22	
n-Propylbenzene	ND	0.20	EPA 8260D	9-20-22	9-20-22	
2-Chlorotoluene	ND	0.20	EPA 8260D	9-20-22	9-20-22	
4-Chlorotoluene	ND	0.20	EPA 8260D	9-20-22	9-20-22	
1,3,5-Trimethylbenzene	ND	0.20	EPA 8260D	9-20-22	9-20-22	
tert-Butylbenzene	ND	0.20	EPA 8260D	9-20-22	9-20-22	
1,2,4-Trimethylbenzene	ND	0.20	EPA 8260D	9-20-22	9-20-22	
sec-Butylbenzene	ND	0.20	EPA 8260D	9-20-22	9-20-22	
1,3-Dichlorobenzene	ND	0.20	EPA 8260D	9-20-22	9-20-22	
p-Isopropyltoluene	ND	0.20	EPA 8260D	9-20-22	9-20-22	
1,4-Dichlorobenzene	ND	0.20	EPA 8260D	9-20-22	9-20-22	
1,2-Dichlorobenzene	ND	0.20	EPA 8260D	9-20-22	9-20-22	
n-Butylbenzene	ND	0.20	EPA 8260D	9-20-22	9-20-22	
1,2-Dibromo-3-chloropropane	ND	1.0	EPA 8260D	9-20-22	9-20-22	
1,2,4-Trichlorobenzene	ND	0.20	EPA 8260D	9-20-22	9-20-22	
Hexachlorobutadiene	ND	1.0	EPA 8260D	9-20-22	9-20-22	
Naphthalene	ND	1.0	EPA 8260D	9-20-22	9-20-22	
1,2,3-Trichlorobenzene	ND	0.20	EPA 8260D	9-20-22	9-20-22	
Surrogate:	*Percent Recovery*	*Control Limits*				
Dibromofluoromethane	*95*	*75-127*				
Toluene-d8	*90*	*80-127*				
4-Bromofluorobenzene	*99*	*78-125*				

This report pertains to the samples analyzed in accordance with the chain of custody, and is intended only for the use of the individual or company to whom it is addressed.

Date of Report: September 21, 2022
Samples Submitted: September 19, 2022
Laboratory Reference: 2209-160
Project: 11-05150-003

VOLATILE ORGANICS EPA 8260D
QUALITY CONTROL
page 1 of 2

Matrix: Water
Units: ug/L

Analyte	Result	PQL	Method	Date Prepared	Date Analyzed	Flags
METHOD BLANK						
Laboratory ID:	MB0920W1					
Dichlorodifluoromethane	ND	0.32	EPA 8260D	9-20-22	9-20-22	
Chloromethane	ND	1.0	EPA 8260D	9-20-22	9-20-22	
Vinyl Chloride	ND	0.20	EPA 8260D	9-20-22	9-20-22	
Bromomethane	ND	1.0	EPA 8260D	9-20-22	9-20-22	
Chloroethane	ND	1.0	EPA 8260D	9-20-22	9-20-22	
Trichlorofluoromethane	ND	0.20	EPA 8260D	9-20-22	9-20-22	
1,1-Dichloroethene	ND	0.20	EPA 8260D	9-20-22	9-20-22	
Acetone	ND	5.0	EPA 8260D	9-20-22	9-20-22	
Iodomethane	ND	5.0	EPA 8260D	9-20-22	9-20-22	
Carbon Disulfide	ND	0.20	EPA 8260D	9-20-22	9-20-22	
Methylene Chloride	ND	1.0	EPA 8260D	9-20-22	9-20-22	
(trans) 1,2-Dichloroethene	ND	0.20	EPA 8260D	9-20-22	9-20-22	
Methyl t-Butyl Ether	ND	0.20	EPA 8260D	9-20-22	9-20-22	
1,1-Dichloroethane	ND	0.20	EPA 8260D	9-20-22	9-20-22	
Vinyl Acetate	ND	1.0	EPA 8260D	9-20-22	9-20-22	
2,2-Dichloropropane	ND	0.20	EPA 8260D	9-20-22	9-20-22	
(cis) 1,2-Dichloroethene	ND	0.20	EPA 8260D	9-20-22	9-20-22	
2-Butanone	ND	5.0	EPA 8260D	9-20-22	9-20-22	
Bromochloromethane	ND	0.20	EPA 8260D	9-20-22	9-20-22	
Chloroform	ND	0.20	EPA 8260D	9-20-22	9-20-22	
1,1,1-Trichloroethane	ND	0.20	EPA 8260D	9-20-22	9-20-22	
Carbon Tetrachloride	ND	0.20	EPA 8260D	9-20-22	9-20-22	
1,1-Dichloropropene	ND	0.20	EPA 8260D	9-20-22	9-20-22	
Benzene	ND	0.20	EPA 8260D	9-20-22	9-20-22	
1,2-Dichloroethane	ND	0.20	EPA 8260D	9-20-22	9-20-22	
Trichloroethene	ND	0.20	EPA 8260D	9-20-22	9-20-22	
1,2-Dichloropropane	ND	0.20	EPA 8260D	9-20-22	9-20-22	
Dibromomethane	ND	0.20	EPA 8260D	9-20-22	9-20-22	
Bromodichloromethane	ND	0.20	EPA 8260D	9-20-22	9-20-22	
(cis) 1,3-Dichloropropene	ND	0.20	EPA 8260D	9-20-22	9-20-22	
Methyl Isobutyl Ketone	ND	2.0	EPA 8260D	9-20-22	9-20-22	
Toluene	ND	1.0	EPA 8260D	9-20-22	9-20-22	
(trans) 1,3-Dichloropropene	ND	0.20	EPA 8260D	9-20-22	9-20-22	

This report pertains to the samples analyzed in accordance with the chain of custody,
and is intended only for the use of the individual or company to whom it is addressed.

Date of Report: September 21, 2022
Samples Submitted: September 19, 2022
Laboratory Reference: 2209-160
Project: 11-05150-003

VOLATILE ORGANICS EPA 8260D
QUALITY CONTROL
page 2 of 2

Analyte	Result	PQL	Method	Date Prepared	Date Analyzed	Flags
METHOD BLANK						
Laboratory ID:	MB0920W1					
1,1,2-Trichloroethane	ND	0.20	EPA 8260D	9-20-22	9-20-22	
Tetrachloroethene	ND	0.20	EPA 8260D	9-20-22	9-20-22	
1,3-Dichloropropane	ND	0.20	EPA 8260D	9-20-22	9-20-22	
2-Hexanone	ND	2.0	EPA 8260D	9-20-22	9-20-22	
Dibromochloromethane	ND	0.20	EPA 8260D	9-20-22	9-20-22	
1,2-Dibromoethane	ND	0.20	EPA 8260D	9-20-22	9-20-22	
Chlorobenzene	ND	0.20	EPA 8260D	9-20-22	9-20-22	
1,1,1,2-Tetrachloroethane	ND	0.20	EPA 8260D	9-20-22	9-20-22	
Ethylbenzene	ND	0.20	EPA 8260D	9-20-22	9-20-22	
m,p-Xylene	ND	0.40	EPA 8260D	9-20-22	9-20-22	
o-Xylene	ND	0.20	EPA 8260D	9-20-22	9-20-22	
Styrene	ND	0.20	EPA 8260D	9-20-22	9-20-22	
Bromoform	ND	1.0	EPA 8260D	9-20-22	9-20-22	
Isopropylbenzene	ND	0.20	EPA 8260D	9-20-22	9-20-22	
Bromobenzene	ND	0.20	EPA 8260D	9-20-22	9-20-22	
1,1,2,2-Tetrachloroethane	ND	0.20	EPA 8260D	9-20-22	9-20-22	
1,2,3-Trichloropropane	ND	0.20	EPA 8260D	9-20-22	9-20-22	
n-Propylbenzene	ND	0.20	EPA 8260D	9-20-22	9-20-22	
2-Chlorotoluene	ND	0.20	EPA 8260D	9-20-22	9-20-22	
4-Chlorotoluene	ND	0.20	EPA 8260D	9-20-22	9-20-22	
1,3,5-Trimethylbenzene	ND	0.20	EPA 8260D	9-20-22	9-20-22	
tert-Butylbenzene	ND	0.20	EPA 8260D	9-20-22	9-20-22	
1,2,4-Trimethylbenzene	ND	0.20	EPA 8260D	9-20-22	9-20-22	
sec-Butylbenzene	ND	0.20	EPA 8260D	9-20-22	9-20-22	
1,3-Dichlorobenzene	ND	0.20	EPA 8260D	9-20-22	9-20-22	
p-Isopropyltoluene	ND	0.20	EPA 8260D	9-20-22	9-20-22	
1,4-Dichlorobenzene	ND	0.20	EPA 8260D	9-20-22	9-20-22	
1,2-Dichlorobenzene	ND	0.20	EPA 8260D	9-20-22	9-20-22	
n-Butylbenzene	ND	0.20	EPA 8260D	9-20-22	9-20-22	
1,2-Dibromo-3-chloropropane	ND	1.0	EPA 8260D	9-20-22	9-20-22	
1,2,4-Trichlorobenzene	ND	0.20	EPA 8260D	9-20-22	9-20-22	
Hexachlorobutadiene	ND	1.0	EPA 8260D	9-20-22	9-20-22	
Naphthalene	ND	1.0	EPA 8260D	9-20-22	9-20-22	
1,2,3-Trichlorobenzene	ND	0.20	EPA 8260D	9-20-22	9-20-22	
Surrogate:	*Percent Recovery*	*Control Limits*				
Dibromofluoromethane	*94*	*75-127*				
Toluene-d8	*90*	*80-127*				
4-Bromofluorobenzene	*100*	*78-125*				

This report pertains to the samples analyzed in accordance with the chain of custody, and is intended only for the use of the individual or company to whom it is addressed.

Date of Report: September 21, 2022
Samples Submitted: September 19, 2022
Laboratory Reference: 2209-160
Project: 11-05150-003

VOLATILE ORGANICS EPA 8260D
QUALITY CONTROL
page 1 of 2

Matrix: Water
Units: ug/L

Analyte	Result		Spike Level		Percent Recovery		Recovery Limits	RPD	RPD Limit	Flags
SPIKE BLANKS										
Laboratory ID:	SB0920W1									
	SB	SBD	SB	SBD	SB	SBD				
Dichlorodifluoromethane	**6.21**	**6.61**	10.0	10.0	62	66	34-166	6	21	
Chloromethane	**8.40**	**8.95**	10.0	10.0	84	90	63-138	6	18	
Vinyl Chloride	**8.64**	**9.32**	10.0	10.0	86	93	71-135	8	20	
Bromomethane	**8.32**	**9.17**	10.0	10.0	83	92	20-151	10	36	
Chloroethane	**8.30**	**8.89**	10.0	10.0	83	89	76-125	7	20	
Trichlorofluoromethane	**8.29**	**8.82**	10.0	10.0	83	88	75-131	6	19	
1,1-Dichloroethene	**9.11**	**9.77**	10.0	10.0	91	98	78-125	7	19	
Acetone	**8.79**	**8.64**	10.0	10.0	88	86	76-125	2	18	
Iodomethane	**10.2**	**11.4**	10.0	10.0	102	114	10-155	11	40	
Carbon Disulfide	**9.50**	**10.1**	10.0	10.0	95	101	58-129	6	17	
Methylene Chloride	**9.14**	**9.64**	10.0	10.0	91	96	80-120	5	15	
(trans) 1,2-Dichloroethene	**9.15**	**9.86**	10.0	10.0	92	99	80-125	7	17	
Methyl t-Butyl Ether	**8.57**	**9.17**	10.0	10.0	86	92	80-122	7	15	
1,1-Dichloroethane	**9.20**	**9.81**	10.0	10.0	92	98	80-125	6	17	
Vinyl Acetate	**9.34**	**9.79**	10.0	10.0	93	98	80-131	5	15	
2,2-Dichloropropane	**10.2**	**11.1**	10.0	10.0	102	111	80-146	8	21	
(cis) 1,2-Dichloroethene	**9.73**	**10.3**	10.0	10.0	97	103	80-129	6	17	
2-Butanone	**9.26**	**9.60**	10.0	10.0	93	96	80-129	4	16	
Bromochloromethane	**9.66**	**10.3**	10.0	10.0	97	103	80-125	6	18	
Chloroform	**8.88**	**9.34**	10.0	10.0	89	93	80-123	5	16	
1,1,1-Trichloroethane	**8.91**	**9.51**	10.0	10.0	89	95	80-123	7	18	
Carbon Tetrachloride	**8.70**	**9.21**	10.0	10.0	87	92	80-126	6	17	
1,1-Dichloropropene	**8.94**	**9.57**	10.0	10.0	89	96	80-126	7	18	
Benzene	**8.94**	**9.51**	10.0	10.0	89	95	80-121	6	16	
1,2-Dichloroethane	**9.06**	**9.45**	10.0	10.0	91	95	80-124	4	15	
Trichloroethene	**8.69**	**9.14**	10.0	10.0	87	91	80-122	5	18	
1,2-Dichloropropane	**9.22**	**9.71**	10.0	10.0	92	97	80-123	5	15	
Dibromomethane	**9.51**	**9.66**	10.0	10.0	95	97	80-123	2	15	
Bromodichloromethane	**9.36**	**9.72**	10.0	10.0	94	97	80-125	4	15	
(cis) 1,3-Dichloropropene	**9.63**	**10.0**	10.0	10.0	96	100	80-129	4	15	
Methyl Isobutyl Ketone	**9.15**	**9.72**	10.0	10.0	92	97	80-124	6	15	
Toluene	**8.75**	**9.10**	10.0	10.0	88	91	80-120	4	18	
(trans) 1,3-Dichloropropene	**11.2**	**11.6**	10.0	10.0	112	116	80-134	4	17	

This report pertains to the samples analyzed in accordance with the chain of custody, and is intended only for the use of the individual or company to whom it is addressed.

Date of Report: September 21, 2022
Samples Submitted: September 19, 2022
Laboratory Reference: 2209-160
Project: 11-05150-003

VOLATILE ORGANICS EPA 8260D
QUALITY CONTROL
page 2 of 2

Analyte	Result		Spike Level		Percent Recovery		Recovery Limits	RPD	RPD Limit	Flags
SPIKE BLANKS										
Laboratory ID:	SB0920W1									
	SB	SBD	SB	SBD	SB	SBD				
1,1,2-Trichloroethane	**10.3**	**10.9**	10.0	10.0	103	109	77-126	6	20	
Tetrachloroethene	**10.1**	**10.8**	10.0	10.0	101	108	80-124	7	18	
1,3-Dichloropropane	**10.2**	**10.6**	10.0	10.0	102	106	80-120	4	15	
2-Hexanone	**9.96**	**10.0**	10.0	10.0	100	100	80-130	0	16	
Dibromochloromethane	**10.9**	**11.5**	10.0	10.0	109	115	80-128	5	15	
1,2-Dibromoethane	**10.5**	**11.0**	10.0	10.0	105	110	80-127	5	15	
Chlorobenzene	**10.3**	**10.6**	10.0	10.0	103	106	80-120	3	17	
1,1,1,2-Tetrachloroethane	**10.5**	**11.0**	10.0	10.0	105	110	80-125	5	17	
Ethylbenzene	**10.5**	**11.1**	10.0	10.0	105	111	80-125	6	18	
m,p-Xylene	**20.4**	**21.3**	20.0	20.0	102	107	80-127	4	18	
o-Xylene	**10.1**	**10.6**	10.0	10.0	101	106	80-126	5	18	
Styrene	**11.0**	**11.5**	10.0	10.0	110	115	80-130	4	17	
Bromoform	**10.3**	**10.5**	10.0	10.0	103	105	80-130	2	15	
Isopropylbenzene	**10.9**	**11.6**	10.0	10.0	109	116	80-129	6	18	
Bromobenzene	**11.4**	**11.9**	10.0	10.0	114	119	76-128	4	16	
1,1,2,2-Tetrachloroethane	**11.3**	**11.5**	10.0	10.0	113	115	74-130	2	15	
1,2,3-Trichloropropane	**10.6**	**11.0**	10.0	10.0	106	110	71-129	4	25	
n-Propylbenzene	**12.0**	**12.4**	10.0	10.0	120	124	80-129	3	19	
2-Chlorotoluene	**11.8**	**12.3**	10.0	10.0	118	123	80-128	4	18	
4-Chlorotoluene	**11.9**	**12.4**	10.0	10.0	119	124	80-130	4	19	
1,3,5-Trimethylbenzene	**11.9**	**12.3**	10.0	10.0	119	123	80-131	3	18	
tert-Butylbenzene	**10.4**	**12.0**	10.0	10.0	104	120	80-130	14	18	
1,2,4-Trimethylbenzene	**11.9**	**12.4**	10.0	10.0	119	124	80-130	4	18	
sec-Butylbenzene	**12.1**	**12.6**	10.0	10.0	121	126	80-130	4	18	
1,3-Dichlorobenzene	**11.4**	**11.7**	10.0	10.0	114	117	80-126	3	17	
p-Isopropyltoluene	**12.2**	**12.7**	10.0	10.0	122	127	80-132	4	18	
1,4-Dichlorobenzene	**11.2**	**11.7**	10.0	10.0	112	117	80-121	4	17	
1,2-Dichlorobenzene	**11.3**	**11.7**	10.0	10.0	113	117	79-125	3	15	
n-Butylbenzene	**12.4**	**13.2**	10.0	10.0	124	132	80-138	6	19	
1,2-Dibromo-3-chloropropane	**10.7**	**11.2**	10.0	10.0	107	112	73-133	5	15	
1,2,4-Trichlorobenzene	**10.8**	**11.4**	10.0	10.0	108	114	80-139	5	18	
Hexachlorobutadiene	**11.5**	**12.3**	10.0	10.0	115	123	80-151	7	18	
Naphthalene	**9.36**	**10.1**	10.0	10.0	94	101	68-144	8	25	
1,2,3-Trichlorobenzene	**10.7**	**11.4**	10.0	10.0	107	114	75-146	6	28	
Surrogate:										
Dibromofluoromethane					*88*	*90*	*75-127*			
Toluene-d8					*90*	*90*	*80-127*			
4-Bromofluorobenzene					*104*	*104*	*78-125*			

This report pertains to the samples analyzed in accordance with the chain of custody, and is intended only for the use of the individual or company to whom it is addressed.

Date of Report: September 21, 2022
Samples Submitted: September 19, 2022
Laboratory Reference: 2209-160
Project: 11-05150-003

SEMIVOLATILE ORGANICS EPA 8270E/SIM
page 1 of 2

Matrix: Soil
Units: mg/Kg

Analyte	Result	PQL	Method	Date Prepared	Date Analyzed	Flags
Client ID:	**DA7SWCS30220919I**					
Laboratory ID:	09-160-01					
n-Nitrosodimethylamine	**ND**	0.011	EPA 8270E	9-20-22	9-20-22	
Pyridine	**ND**	0.21	EPA 8270E	9-20-22	9-20-22	
Phenol	**1.5**	0.11	EPA 8270E	9-20-22	9-20-22	
Aniline	**ND**	0.11	EPA 8270E	9-20-22	9-20-22	
bis(2-Chloroethyl)ether	**ND**	0.011	EPA 8270E	9-20-22	9-20-22	
2-Chlorophenol	**ND**	0.021	EPA 8270E	9-20-22	9-20-22	
1,3-Dichlorobenzene	**ND**	0.021	EPA 8270E	9-20-22	9-20-22	
1,4-Dichlorobenzene	**ND**	0.021	EPA 8270E	9-20-22	9-20-22	
Benzyl alcohol	**ND**	0.021	EPA 8270E	9-20-22	9-20-22	
1,2-Dichlorobenzene	**ND**	0.021	EPA 8270E	9-20-22	9-20-22	
2-Methylphenol (o-Cresol)	**ND**	0.021	EPA 8270E	9-20-22	9-20-22	
bis(2-Chloroisopropyl)ether	**ND**	0.021	EPA 8270E	9-20-22	9-20-22	
2-Methylphenol (o-Cresol)	**2.0**	0.11	EPA 8270E	9-20-22	9-20-22	
n-Nitroso-di-n-propylamine	**ND**	0.011	EPA 8270E	9-20-22	9-20-22	
Hexachloroethane	**ND**	0.021	EPA 8270E	9-20-22	9-20-22	
Nitrobenzene	**ND**	0.021	EPA 8270E	9-20-22	9-20-22	
Isophorone	**ND**	0.021	EPA 8270E	9-20-22	9-20-22	
2-Nitrophenol	**ND**	0.021	EPA 8270E	9-20-22	9-20-22	
2,4-Dimethylphenol	**ND**	0.021	EPA 8270E	9-20-22	9-20-22	
bis(2-Chloroethoxy)methane	**ND**	0.021	EPA 8270E	9-20-22	9-20-22	
2,4-Dichlorophenol	**ND**	0.021	EPA 8270E	9-20-22	9-20-22	
1,2,4-Trichlorobenzene	**ND**	0.021	EPA 8270E	9-20-22	9-20-22	
Naphthalene	**ND**	0.0043	EPA 8270E/SIM	9-20-22	9-20-22	
4-Chloroaniline	**ND**	0.011	EPA 8270E	9-20-22	9-20-22	
Hexachlorobutadiene	**ND**	0.021	EPA 8270E	9-20-22	9-20-22	
4-Chloro-3-methylphenol	**ND**	0.021	EPA 8270E	9-20-22	9-20-22	
2-Methylnaphthalene	**ND**	0.0043	EPA 8270E/SIM	9-20-22	9-20-22	
1-Methylnaphthalene	**ND**	0.0043	EPA 8270E/SIM	9-20-22	9-20-22	
Hexachlorocyclopentadiene	**ND**	0.021	EPA 8270E	9-20-22	9-20-22	
2,4,6-Trichlorophenol	**ND**	0.021	EPA 8270E	9-20-22	9-20-22	
2,3-Dichloroaniline	**ND**	0.021	EPA 8270E	9-20-22	9-20-22	
2,4,5-Trichlorophenol	**ND**	0.021	EPA 8270E	9-20-22	9-20-22	
2-Chloronaphthalene	**ND**	0.021	EPA 8270E	9-20-22	9-20-22	
2-Nitroaniline	**ND**	0.021	EPA 8270E	9-20-22	9-20-22	
1,4-Dinitrobenzene	**ND**	0.021	EPA 8270E	9-20-22	9-20-22	
Dimethylphthalate	**ND**	0.021	EPA 8270E	9-20-22	9-20-22	
1,3-Dinitrobenzene	**ND**	0.021	EPA 8270E	9-20-22	9-20-22	
2,6-Dinitrotoluene	**ND**	0.011	EPA 8270E	9-20-22	9-20-22	
1,2-Dinitrobenzene	**ND**	0.021	EPA 8270E	9-20-22	9-20-22	
Acenaphthylene	**ND**	0.0043	EPA 8270E/SIM	9-20-22	9-20-22	
3-Nitroaniline	**ND**	0.021	EPA 8270E	9-20-22	9-20-22	

This report pertains to the samples analyzed in accordance with the chain of custody, and is intended only for the use of the individual or company to whom it is addressed.

Date of Report: September 21, 2022
Samples Submitted: September 19, 2022
Laboratory Reference: 2209-160
Project: 11-05150-003

SEMIVOLATILE ORGANICS EPA 8270E/SIM
page 2 of 2

Analyte	Result	PQL	Method	Date Prepared	Date Analyzed	Flags
Client ID:	**DA7SWCS30220919I**					
Laboratory ID:	09-160-01					
2,4-Dinitrophenol	**ND**	0.11	EPA 8270E	9-20-22	9-20-22	
Acenaphthene	**ND**	0.0043	EPA 8270E/SIM	9-20-22	9-20-22	
4-Nitrophenol	**ND**	0.021	EPA 8270E	9-20-22	9-20-22	
2,4-Dinitrotoluene	**ND**	0.011	EPA 8270E	9-20-22	9-20-22	
Dibenzofuran	**ND**	0.021	EPA 8270E	9-20-22	9-20-22	
2,3,5,6-Tetrachlorophenol	**ND**	0.021	EPA 8270E	9-20-22	9-20-22	
2,3,4,6-Tetrachlorophenol	**ND**	0.021	EPA 8270E	9-20-22	9-20-22	
Diethylphthalate	**ND**	0.11	EPA 8270E	9-20-22	9-20-22	
4-Chlorophenyl-phenylether	**ND**	0.021	EPA 8270E	9-20-22	9-20-22	
4-Nitroaniline	**ND**	0.021	EPA 8270E	9-20-22	9-20-22	
Fluorene	**ND**	0.0043	EPA 8270E/SIM	9-20-22	9-20-22	
4,6-Dinitro-2-methylphenol	**ND**	0.13	EPA 8270E	9-20-22	9-20-22	
n-Nitrosodiphenylamine	**ND**	0.021	EPA 8270E	9-20-22	9-20-22	
1,2-Diphenylhydrazine	**ND**	0.021	EPA 8270E	9-20-22	9-20-22	
4-Bromophenyl-phenylether	**ND**	0.021	EPA 8270E	9-20-22	9-20-22	
Hexachlorobenzene	**ND**	0.021	EPA 8270E	9-20-22	9-20-22	
Pentachlorophenol	**ND**	0.021	EPA 8270E	9-20-22	9-20-22	
Phenanthrene	**ND**	0.0043	EPA 8270E/SIM	9-20-22	9-20-22	
Anthracene	**ND**	0.0043	EPA 8270E/SIM	9-20-22	9-20-22	
Carbazole	**ND**	0.021	EPA 8270E	9-20-22	9-20-22	
Di-n-butylphthalate	**ND**	0.11	EPA 8270E	9-20-22	9-20-22	
Fluoranthene	**ND**	0.0043	EPA 8270E/SIM	9-20-22	9-20-22	
Pyrene	**ND**	0.0043	EPA 8270E/SIM	9-20-22	9-20-22	
Butylbenzylphthalate	**ND**	0.11	EPA 8270E	9-20-22	9-20-22	
bis-2-Ethylhexyladipate	**ND**	0.11	EPA 8270E	9-20-22	9-20-22	
3,3'-Dichlorobenzidine	**ND**	0.011	EPA 8270E	9-20-22	9-20-22	
Benzo[a]anthracene	**ND**	0.0043	EPA 8270E/SIM	9-20-22	9-20-22	
Chrysene	**ND**	0.0043	EPA 8270E/SIM	9-20-22	9-20-22	
bis(2-Ethylhexyl)phthalate	**ND**	0.11	EPA 8270E	9-20-22	9-20-22	
Di-n-octylphthalate	**ND**	0.11	EPA 8270E	9-20-22	9-20-22	
Benzo[b]fluoranthene	**ND**	0.0043	EPA 8270E/SIM	9-20-22	9-20-22	
Benzo(j,k)fluoranthene	**ND**	0.0043	EPA 8270E/SIM	9-20-22	9-20-22	
Benzo[a]pyrene	**ND**	0.0043	EPA 8270E/SIM	9-20-22	9-20-22	
Indeno[1,2,3-cd]pyrene	**ND**	0.0043	EPA 8270E/SIM	9-20-22	9-20-22	
Dibenz[a,h]anthracene	**ND**	0.0043	EPA 8270E/SIM	9-20-22	9-20-22	
Benzo[g,h,i]perylene	**ND**	0.0043	EPA 8270E/SIM	9-20-22	9-20-22	
Surrogate:	*Percent Recovery*	*Control Limits*				
2-Fluorophenol	*53*	*22 - 111*				
Phenol-d6	*53*	*31 - 117*				
Nitrobenzene-d5	*55*	*29 - 111*				
2-Fluorobiphenyl	*53*	*39 - 109*				
2,4,6-Tribromophenol	*66*	*36 - 127*				
Terphenyl-d14	*58*	*39 - 116*				

This report pertains to the samples analyzed in accordance with the chain of custody, and is intended only for the use of the individual or company to whom it is addressed.

Date of Report: September 21, 2022
Samples Submitted: September 19, 2022
Laboratory Reference: 2209-160
Project: 11-05150-003

SEMIVOLATILE ORGANICS EPA 8270E/SIM
page 1 of 2

Matrix: Soil
Units: mg/Kg

Analyte	Result	PQL	Method	Date Prepared	Date Analyzed	Flags
Client ID:	**DA7SWCS31220919I**					
Laboratory ID:	09-160-02					
n-Nitrosodimethylamine	**ND**	0.010	EPA 8270E	9-20-22	9-20-22	
Pyridine	**ND**	0.21	EPA 8270E	9-20-22	9-20-22	
Phenol	**ND**	0.021	EPA 8270E	9-20-22	9-20-22	
Aniline	**ND**	0.10	EPA 8270E	9-20-22	9-20-22	
bis(2-Chloroethyl)ether	**ND**	0.010	EPA 8270E	9-20-22	9-20-22	
2-Chlorophenol	**ND**	0.021	EPA 8270E	9-20-22	9-20-22	
1,3-Dichlorobenzene	**ND**	0.021	EPA 8270E	9-20-22	9-20-22	
1,4-Dichlorobenzene	**ND**	0.021	EPA 8270E	9-20-22	9-20-22	
Benzyl alcohol	**ND**	0.021	EPA 8270E	9-20-22	9-20-22	
1,2-Dichlorobenzene	**ND**	0.021	EPA 8270E	9-20-22	9-20-22	
2-Methylphenol (o-Cresol)	**ND**	0.021	EPA 8270E	9-20-22	9-20-22	
bis(2-Chloroisopropyl)ether	**ND**	0.021	EPA 8270E	9-20-22	9-20-22	
(3+4)-Methylphenol (m,p-Cresol)	**ND**	0.021	EPA 8270E	9-20-22	9-20-22	
n-Nitroso-di-n-propylamine	**ND**	0.010	EPA 8270E	9-20-22	9-20-22	
Hexachloroethane	**ND**	0.021	EPA 8270E	9-20-22	9-20-22	
Nitrobenzene	**ND**	0.021	EPA 8270E	9-20-22	9-20-22	
Isophorone	**ND**	0.021	EPA 8270E	9-20-22	9-20-22	
2-Nitrophenol	**ND**	0.021	EPA 8270E	9-20-22	9-20-22	
2,4-Dimethylphenol	**ND**	0.021	EPA 8270E	9-20-22	9-20-22	
bis(2-Chloroethoxy)methane	**ND**	0.021	EPA 8270E	9-20-22	9-20-22	
2,4-Dichlorophenol	**ND**	0.021	EPA 8270E	9-20-22	9-20-22	
1,2,4-Trichlorobenzene	**ND**	0.021	EPA 8270E	9-20-22	9-20-22	
Naphthalene	**ND**	0.0042	EPA 8270E/SIM	9-20-22	9-20-22	
4-Chloroaniline	**ND**	0.010	EPA 8270E	9-20-22	9-20-22	
Hexachlorobutadiene	**ND**	0.021	EPA 8270E	9-20-22	9-20-22	
4-Chloro-3-methylphenol	**ND**	0.021	EPA 8270E	9-20-22	9-20-22	
2-Methylnaphthalene	**ND**	0.0042	EPA 8270E/SIM	9-20-22	9-20-22	
1-Methylnaphthalene	**ND**	0.0042	EPA 8270E/SIM	9-20-22	9-20-22	
Hexachlorocyclopentadiene	**ND**	0.021	EPA 8270E	9-20-22	9-20-22	
2,4,6-Trichlorophenol	**ND**	0.021	EPA 8270E	9-20-22	9-20-22	
2,3-Dichloroaniline	**ND**	0.021	EPA 8270E	9-20-22	9-20-22	
2,4,5-Trichlorophenol	**ND**	0.021	EPA 8270E	9-20-22	9-20-22	
2-Chloronaphthalene	**ND**	0.021	EPA 8270E	9-20-22	9-20-22	
2-Nitroaniline	**ND**	0.021	EPA 8270E	9-20-22	9-20-22	
1,4-Dinitrobenzene	**ND**	0.021	EPA 8270E	9-20-22	9-20-22	
Dimethylphthalate	**ND**	0.021	EPA 8270E	9-20-22	9-20-22	
1,3-Dinitrobenzene	**ND**	0.021	EPA 8270E	9-20-22	9-20-22	
2,6-Dinitrotoluene	**ND**	0.010	EPA 8270E	9-20-22	9-20-22	
1,2-Dinitrobenzene	**ND**	0.021	EPA 8270E	9-20-22	9-20-22	
Acenaphthylene	**ND**	0.0042	EPA 8270E/SIM	9-20-22	9-20-22	
3-Nitroaniline	**ND**	0.021	EPA 8270E	9-20-22	9-20-22	

This report pertains to the samples analyzed in accordance with the chain of custody, and is intended only for the use of the individual or company to whom it is addressed.

Date of Report: September 21, 2022
Samples Submitted: September 19, 2022
Laboratory Reference: 2209-160
Project: 11-05150-003

SEMIVOLATILE ORGANICS EPA 8270E/SIM
page 2 of 2

Analyte	Result	PQL	Method	Date Prepared	Date Analyzed	Flags
Client ID:	**DA7SWCS31220919I**					
Laboratory ID:	09-160-02					
2,4-Dinitrophenol	**ND**	0.10	EPA 8270E	9-20-22	9-20-22	
Acenaphthene	**ND**	0.0042	EPA 8270E/SIM	9-20-22	9-20-22	
4-Nitrophenol	**ND**	0.021	EPA 8270E	9-20-22	9-20-22	
2,4-Dinitrotoluene	**ND**	0.010	EPA 8270E	9-20-22	9-20-22	
Dibenzofuran	**ND**	0.021	EPA 8270E	9-20-22	9-20-22	
2,3,5,6-Tetrachlorophenol	**ND**	0.021	EPA 8270E	9-20-22	9-20-22	
2,3,4,6-Tetrachlorophenol	**ND**	0.021	EPA 8270E	9-20-22	9-20-22	
Diethylphthalate	**ND**	0.10	EPA 8270E	9-20-22	9-20-22	
4-Chlorophenyl-phenylether	**ND**	0.021	EPA 8270E	9-20-22	9-20-22	
4-Nitroaniline	**ND**	0.021	EPA 8270E	9-20-22	9-20-22	
Fluorene	**ND**	0.0042	EPA 8270E/SIM	9-20-22	9-20-22	
4,6-Dinitro-2-methylphenol	**ND**	0.13	EPA 8270E	9-20-22	9-20-22	
n-Nitrosodiphenylamine	**ND**	0.021	EPA 8270E	9-20-22	9-20-22	
1,2-Diphenylhydrazine	**ND**	0.021	EPA 8270E	9-20-22	9-20-22	
4-Bromophenyl-phenylether	**ND**	0.021	EPA 8270E	9-20-22	9-20-22	
Hexachlorobenzene	**ND**	0.021	EPA 8270E	9-20-22	9-20-22	
Pentachlorophenol	**ND**	0.021	EPA 8270E	9-20-22	9-20-22	
Phenanthrene	**ND**	0.0042	EPA 8270E/SIM	9-20-22	9-20-22	
Anthracene	**ND**	0.0042	EPA 8270E/SIM	9-20-22	9-20-22	
Carbazole	**ND**	0.021	EPA 8270E	9-20-22	9-20-22	
Di-n-butylphthalate	**ND**	0.10	EPA 8270E	9-20-22	9-20-22	
Fluoranthene	**ND**	0.0042	EPA 8270E/SIM	9-20-22	9-20-22	
Pyrene	**ND**	0.0042	EPA 8270E/SIM	9-20-22	9-20-22	
Butylbenzylphthalate	**ND**	0.10	EPA 8270E	9-20-22	9-20-22	
bis-2-Ethylhexyladipate	**ND**	0.10	EPA 8270E	9-20-22	9-20-22	
3,3'-Dichlorobenzidine	**ND**	0.010	EPA 8270E	9-20-22	9-20-22	
Benzo[a]anthracene	**ND**	0.0042	EPA 8270E/SIM	9-20-22	9-20-22	
Chrysene	**ND**	0.0042	EPA 8270E/SIM	9-20-22	9-20-22	
bis(2-Ethylhexyl)phthalate	**ND**	0.10	EPA 8270E	9-20-22	9-20-22	
Di-n-octylphthalate	**ND**	0.10	EPA 8270E	9-20-22	9-20-22	
Benzo[b]fluoranthene	**ND**	0.0042	EPA 8270E/SIM	9-20-22	9-20-22	
Benzo(j,k)fluoranthene	**ND**	0.0042	EPA 8270E/SIM	9-20-22	9-20-22	
Benzo[a]pyrene	**ND**	0.0042	EPA 8270E/SIM	9-20-22	9-20-22	
Indeno[1,2,3-cd]pyrene	**ND**	0.0042	EPA 8270E/SIM	9-20-22	9-20-22	
Dibenz[a,h]anthracene	**ND**	0.0042	EPA 8270E/SIM	9-20-22	9-20-22	
Benzo[g,h,i]perylene	**ND**	0.0042	EPA 8270E/SIM	9-20-22	9-20-22	
Surrogate:	*Percent Recovery*	*Control Limits*				
2-Fluorophenol	*60*	*22 - 111*				
Phenol-d6	*69*	*31 - 117*				
Nitrobenzene-d5	*64*	*29 - 111*				
2-Fluorobiphenyl	*63*	*39 - 109*				
2,4,6-Tribromophenol	*74*	*36 - 127*				
Terphenyl-d14	*63*	*39 - 116*				

This report pertains to the samples analyzed in accordance with the chain of custody, and is intended only for the use of the individual or company to whom it is addressed.

Date of Report: September 21, 2022
Samples Submitted: September 19, 2022
Laboratory Reference: 2209-160
Project: 11-05150-003

SEMIVOLATILE ORGANICS EPA 8270E/SIM
page 1 of 2

Matrix: Soil
Units: mg/Kg

Analyte	Result	PQL	Method	Date Prepared	Date Analyzed	Flags
Client ID:	**DA7SWCS31220919D**					
Laboratory ID:	09-160-03					
n-Nitrosodimethylamine	**ND**	0.010	EPA 8270E	9-20-22	9-20-22	
Pyridine	**ND**	0.21	EPA 8270E	9-20-22	9-20-22	
Phenol	**0.13**	0.021	EPA 8270E	9-20-22	9-20-22	
Aniline	**ND**	0.10	EPA 8270E	9-20-22	9-20-22	
bis(2-Chloroethyl)ether	**ND**	0.010	EPA 8270E	9-20-22	9-20-22	
2-Chlorophenol	**ND**	0.021	EPA 8270E	9-20-22	9-20-22	
1,3-Dichlorobenzene	**ND**	0.021	EPA 8270E	9-20-22	9-20-22	
1,4-Dichlorobenzene	**ND**	0.021	EPA 8270E	9-20-22	9-20-22	
Benzyl alcohol	**ND**	0.021	EPA 8270E	9-20-22	9-20-22	
1,2-Dichlorobenzene	**ND**	0.021	EPA 8270E	9-20-22	9-20-22	
2-Methylphenol (o-Cresol)	**ND**	0.021	EPA 8270E	9-20-22	9-20-22	
bis(2-Chloroisopropyl)ether	**ND**	0.021	EPA 8270E	9-20-22	9-20-22	
(3+4)-Methylphenol (m,p-Cresol)	**0.066**	0.021	EPA 8270E	9-20-22	9-20-22	
n-Nitroso-di-n-propylamine	**ND**	0.010	EPA 8270E	9-20-22	9-20-22	
Hexachloroethane	**ND**	0.021	EPA 8270E	9-20-22	9-20-22	
Nitrobenzene	**ND**	0.021	EPA 8270E	9-20-22	9-20-22	
Isophorone	**ND**	0.021	EPA 8270E	9-20-22	9-20-22	
2-Nitrophenol	**ND**	0.021	EPA 8270E	9-20-22	9-20-22	
2,4-Dimethylphenol	**ND**	0.021	EPA 8270E	9-20-22	9-20-22	
bis(2-Chloroethoxy)methane	**ND**	0.021	EPA 8270E	9-20-22	9-20-22	
2,4-Dichlorophenol	**ND**	0.021	EPA 8270E	9-20-22	9-20-22	
1,2,4-Trichlorobenzene	**ND**	0.021	EPA 8270E	9-20-22	9-20-22	
Naphthalene	**ND**	0.0041	EPA 8270E/SIM	9-20-22	9-20-22	
4-Chloroaniline	**ND**	0.010	EPA 8270E	9-20-22	9-20-22	
Hexachlorobutadiene	**ND**	0.021	EPA 8270E	9-20-22	9-20-22	
4-Chloro-3-methylphenol	**ND**	0.021	EPA 8270E	9-20-22	9-20-22	
2-Methylnaphthalene	**ND**	0.0041	EPA 8270E/SIM	9-20-22	9-20-22	
1-Methylnaphthalene	**ND**	0.0041	EPA 8270E/SIM	9-20-22	9-20-22	
Hexachlorocyclopentadiene	**ND**	0.021	EPA 8270E	9-20-22	9-20-22	
2,4,6-Trichlorophenol	**ND**	0.021	EPA 8270E	9-20-22	9-20-22	
2,3-Dichloroaniline	**ND**	0.021	EPA 8270E	9-20-22	9-20-22	
2,4,5-Trichlorophenol	**ND**	0.021	EPA 8270E	9-20-22	9-20-22	
2-Chloronaphthalene	**ND**	0.021	EPA 8270E	9-20-22	9-20-22	
2-Nitroaniline	**ND**	0.021	EPA 8270E	9-20-22	9-20-22	
1,4-Dinitrobenzene	**ND**	0.021	EPA 8270E	9-20-22	9-20-22	
Dimethylphthalate	**ND**	0.021	EPA 8270E	9-20-22	9-20-22	
1,3-Dinitrobenzene	**ND**	0.021	EPA 8270E	9-20-22	9-20-22	
2,6-Dinitrotoluene	**ND**	0.010	EPA 8270E	9-20-22	9-20-22	
1,2-Dinitrobenzene	**ND**	0.021	EPA 8270E	9-20-22	9-20-22	
Acenaphthylene	**ND**	0.0041	EPA 8270E/SIM	9-20-22	9-20-22	
3-Nitroaniline	**ND**	0.021	EPA 8270E	9-20-22	9-20-22	

This report pertains to the samples analyzed in accordance with the chain of custody,
and is intended only for the use of the individual or company to whom it is addressed.

Date of Report: September 21, 2022
Samples Submitted: September 19, 2022
Laboratory Reference: 2209-160
Project: 11-05150-003

SEMIVOLATILE ORGANICS EPA 8270E/SIM
page 2 of 2

Analyte	Result	PQL	Method	Date Prepared	Date Analyzed	Flags
Client ID:	**DA7SWCS31220919D**					
Laboratory ID:	09-160-03					
2,4-Dinitrophenol	**ND**	0.10	EPA 8270E	9-20-22	9-20-22	
Acenaphthene	**ND**	0.0041	EPA 8270E/SIM	9-20-22	9-20-22	
4-Nitrophenol	**ND**	0.021	EPA 8270E	9-20-22	9-20-22	
2,4-Dinitrotoluene	**ND**	0.010	EPA 8270E	9-20-22	9-20-22	
Dibenzofuran	**ND**	0.021	EPA 8270E	9-20-22	9-20-22	
2,3,5,6-Tetrachlorophenol	**ND**	0.021	EPA 8270E	9-20-22	9-20-22	
2,3,4,6-Tetrachlorophenol	**ND**	0.021	EPA 8270E	9-20-22	9-20-22	
Diethylphthalate	**ND**	0.10	EPA 8270E	9-20-22	9-20-22	
4-Chlorophenyl-phenylether	**ND**	0.021	EPA 8270E	9-20-22	9-20-22	
4-Nitroaniline	**ND**	0.021	EPA 8270E	9-20-22	9-20-22	
Fluorene	**ND**	0.0041	EPA 8270E/SIM	9-20-22	9-20-22	
4,6-Dinitro-2-methylphenol	**ND**	0.13	EPA 8270E	9-20-22	9-20-22	
n-Nitrosodiphenylamine	**ND**	0.021	EPA 8270E	9-20-22	9-20-22	
1,2-Diphenylhydrazine	**ND**	0.021	EPA 8270E	9-20-22	9-20-22	
4-Bromophenyl-phenylether	**ND**	0.021	EPA 8270E	9-20-22	9-20-22	
Hexachlorobenzene	**ND**	0.021	EPA 8270E	9-20-22	9-20-22	
Pentachlorophenol	**ND**	0.021	EPA 8270E	9-20-22	9-20-22	
Phenanthrene	**ND**	0.0041	EPA 8270E/SIM	9-20-22	9-20-22	
Anthracene	**ND**	0.0041	EPA 8270E/SIM	9-20-22	9-20-22	
Carbazole	**ND**	0.021	EPA 8270E	9-20-22	9-20-22	
Di-n-butylphthalate	**ND**	0.10	EPA 8270E	9-20-22	9-20-22	
Fluoranthene	**ND**	0.0041	EPA 8270E/SIM	9-20-22	9-20-22	
Pyrene	**ND**	0.0041	EPA 8270E/SIM	9-20-22	9-20-22	
Butylbenzylphthalate	**ND**	0.10	EPA 8270E	9-20-22	9-20-22	
bis-2-Ethylhexyladipate	**ND**	0.10	EPA 8270E	9-20-22	9-20-22	
3,3'-Dichlorobenzidine	**ND**	0.010	EPA 8270E	9-20-22	9-20-22	
Benzo[a]anthracene	**ND**	0.0041	EPA 8270E/SIM	9-20-22	9-20-22	
Chrysene	**ND**	0.0041	EPA 8270E/SIM	9-20-22	9-20-22	
bis(2-Ethylhexyl)phthalate	**ND**	0.10	EPA 8270E	9-20-22	9-20-22	
Di-n-octylphthalate	**ND**	0.10	EPA 8270E	9-20-22	9-20-22	
Benzo[b]fluoranthene	**ND**	0.0041	EPA 8270E/SIM	9-20-22	9-20-22	
Benzo(j,k)fluoranthene	**ND**	0.0041	EPA 8270E/SIM	9-20-22	9-20-22	
Benzo[a]pyrene	**ND**	0.0041	EPA 8270E/SIM	9-20-22	9-20-22	
Indeno[1,2,3-cd]pyrene	**ND**	0.0041	EPA 8270E/SIM	9-20-22	9-20-22	
Dibenz[a,h]anthracene	**ND**	0.0041	EPA 8270E/SIM	9-20-22	9-20-22	
Benzo[g,h,i]perylene	**ND**	0.0041	EPA 8270E/SIM	9-20-22	9-20-22	
Surrogate:	*Percent Recovery*	*Control Limits*				
2-Fluorophenol	*63*	*22 - 111*				
Phenol-d6	*70*	*31 - 117*				
Nitrobenzene-d5	*67*	*29 - 111*				
2-Fluorobiphenyl	*61*	*39 - 109*				
2,4,6-Tribromophenol	*71*	*36 - 127*				
Terphenyl-d14	*59*	*39 - 116*				

This report pertains to the samples analyzed in accordance with the chain of custody, and is intended only for the use of the individual or company to whom it is addressed.

Date of Report: September 21, 2022
Samples Submitted: September 19, 2022
Laboratory Reference: 2209-160
Project: 11-05150-003

SEMIVOLATILE ORGANICS EPA 8270E/SIM
page 1 of 2

Matrix: Soil
Units: mg/Kg

Analyte	Result	PQL	Method	Date Prepared	Date Analyzed	Flags
Client ID:	**DA7SWCS32220919I**					
Laboratory ID:	09-160-04					
n-Nitrosodimethylamine	**ND**	0.011	EPA 8270E	9-20-22	9-20-22	
Pyridine	**ND**	0.21	EPA 8270E	9-20-22	9-20-22	
Phenol	**1.9**	0.11	EPA 8270E	9-20-22	9-20-22	
Aniline	**ND**	0.11	EPA 8270E	9-20-22	9-20-22	
bis(2-Chloroethyl)ether	**ND**	0.011	EPA 8270E	9-20-22	9-20-22	
2-Chlorophenol	**ND**	0.021	EPA 8270E	9-20-22	9-20-22	
1,3-Dichlorobenzene	**ND**	0.021	EPA 8270E	9-20-22	9-20-22	
1,4-Dichlorobenzene	**ND**	0.021	EPA 8270E	9-20-22	9-20-22	
Benzyl alcohol	**ND**	0.021	EPA 8270E	9-20-22	9-20-22	
1,2-Dichlorobenzene	**ND**	0.021	EPA 8270E	9-20-22	9-20-22	
2-Methylphenol (o-Cresol)	**ND**	0.021	EPA 8270E	9-20-22	9-20-22	
bis(2-Chloroisopropyl)ether	**ND**	0.021	EPA 8270E	9-20-22	9-20-22	
(3+4)-Methylphenol (m,p-Cresol)	**1.9**	0.11	EPA 8270E	9-20-22	9-20-22	
n-Nitroso-di-n-propylamine	**ND**	0.011	EPA 8270E	9-20-22	9-20-22	
Hexachloroethane	**ND**	0.021	EPA 8270E	9-20-22	9-20-22	
Nitrobenzene	**ND**	0.021	EPA 8270E	9-20-22	9-20-22	
Isophorone	**ND**	0.021	EPA 8270E	9-20-22	9-20-22	
2-Nitrophenol	**ND**	0.021	EPA 8270E	9-20-22	9-20-22	
2,4-Dimethylphenol	**ND**	0.021	EPA 8270E	9-20-22	9-20-22	
bis(2-Chloroethoxy)methane	**ND**	0.021	EPA 8270E	9-20-22	9-20-22	
2,4-Dichlorophenol	**ND**	0.021	EPA 8270E	9-20-22	9-20-22	
1,2,4-Trichlorobenzene	**ND**	0.021	EPA 8270E	9-20-22	9-20-22	
Naphthalene	**ND**	0.0043	EPA 8270E/SIM	9-20-22	9-20-22	
4-Chloroaniline	**ND**	0.011	EPA 8270E	9-20-22	9-20-22	
Hexachlorobutadiene	**ND**	0.021	EPA 8270E	9-20-22	9-20-22	
4-Chloro-3-methylphenol	**ND**	0.021	EPA 8270E	9-20-22	9-20-22	
2-Methylnaphthalene	**ND**	0.0043	EPA 8270E/SIM	9-20-22	9-20-22	
1-Methylnaphthalene	**ND**	0.0043	EPA 8270E/SIM	9-20-22	9-20-22	
Hexachlorocyclopentadiene	**ND**	0.021	EPA 8270E	9-20-22	9-20-22	
2,4,6-Trichlorophenol	**ND**	0.021	EPA 8270E	9-20-22	9-20-22	
2,3-Dichloroaniline	**ND**	0.021	EPA 8270E	9-20-22	9-20-22	
2,4,5-Trichlorophenol	**ND**	0.021	EPA 8270E	9-20-22	9-20-22	
2-Chloronaphthalene	**ND**	0.021	EPA 8270E	9-20-22	9-20-22	
2-Nitroaniline	**ND**	0.021	EPA 8270E	9-20-22	9-20-22	
1,4-Dinitrobenzene	**ND**	0.021	EPA 8270E	9-20-22	9-20-22	
Dimethylphthalate	**ND**	0.021	EPA 8270E	9-20-22	9-20-22	
1,3-Dinitrobenzene	**ND**	0.021	EPA 8270E	9-20-22	9-20-22	
2,6-Dinitrotoluene	**ND**	0.011	EPA 8270E	9-20-22	9-20-22	
1,2-Dinitrobenzene	**ND**	0.021	EPA 8270E	9-20-22	9-20-22	
Acenaphthylene	**ND**	0.0043	EPA 8270E/SIM	9-20-22	9-20-22	
3-Nitroaniline	**ND**	0.021	EPA 8270E	9-20-22	9-20-22	

This report pertains to the samples analyzed in accordance with the chain of custody, and is intended only for the use of the individual or company to whom it is addressed.

Date of Report: September 21, 2022
Samples Submitted: September 19, 2022
Laboratory Reference: 2209-160
Project: 11-05150-003

SEMIVOLATILE ORGANICS EPA 8270E/SIM
page 2 of 2

Analyte	Result	PQL	Method	Date Prepared	Date Analyzed	Flags
Client ID:	**DA7SWCS32220919I**					
Laboratory ID:	09-160-04					
2,4-Dinitrophenol	**ND**	0.11	EPA 8270E	9-20-22	9-20-22	
Acenaphthene	**ND**	0.0043	EPA 8270E/SIM	9-20-22	9-20-22	
4-Nitrophenol	**ND**	0.021	EPA 8270E	9-20-22	9-20-22	
2,4-Dinitrotoluene	**ND**	0.011	EPA 8270E	9-20-22	9-20-22	
Dibenzofuran	**ND**	0.021	EPA 8270E	9-20-22	9-20-22	
2,3,5,6-Tetrachlorophenol	**ND**	0.021	EPA 8270E	9-20-22	9-20-22	
2,3,4,6-Tetrachlorophenol	**ND**	0.021	EPA 8270E	9-20-22	9-20-22	
Diethylphthalate	**ND**	0.11	EPA 8270E	9-20-22	9-20-22	
4-Chlorophenyl-phenylether	**ND**	0.021	EPA 8270E	9-20-22	9-20-22	
4-Nitroaniline	**ND**	0.021	EPA 8270E	9-20-22	9-20-22	
Fluorene	**ND**	0.0043	EPA 8270E/SIM	9-20-22	9-20-22	
4,6-Dinitro-2-methylphenol	**ND**	0.13	EPA 8270E	9-20-22	9-20-22	
n-Nitrosodiphenylamine	**ND**	0.021	EPA 8270E	9-20-22	9-20-22	
1,2-Diphenylhydrazine	**ND**	0.021	EPA 8270E	9-20-22	9-20-22	
4-Bromophenyl-phenylether	**ND**	0.021	EPA 8270E	9-20-22	9-20-22	
Hexachlorobenzene	**ND**	0.021	EPA 8270E	9-20-22	9-20-22	
Pentachlorophenol	**ND**	0.021	EPA 8270E	9-20-22	9-20-22	
Phenanthrene	**ND**	0.0043	EPA 8270E/SIM	9-20-22	9-20-22	
Anthracene	**ND**	0.0043	EPA 8270E/SIM	9-20-22	9-20-22	
Carbazole	**ND**	0.021	EPA 8270E	9-20-22	9-20-22	
Di-n-butylphthalate	**ND**	0.11	EPA 8270E	9-20-22	9-20-22	
Fluoranthene	**ND**	0.0043	EPA 8270E/SIM	9-20-22	9-20-22	
Pyrene	**ND**	0.0043	EPA 8270E/SIM	9-20-22	9-20-22	
Butylbenzylphthalate	**ND**	0.11	EPA 8270E	9-20-22	9-20-22	
bis-2-Ethylhexyladipate	**ND**	0.11	EPA 8270E	9-20-22	9-20-22	
3,3'-Dichlorobenzidine	**ND**	0.011	EPA 8270E	9-20-22	9-20-22	
Benzo[a]anthracene	**ND**	0.0043	EPA 8270E/SIM	9-20-22	9-20-22	
Chrysene	**ND**	0.0043	EPA 8270E/SIM	9-20-22	9-20-22	
bis(2-Ethylhexyl)phthalate	**ND**	0.11	EPA 8270E	9-20-22	9-20-22	
Di-n-octylphthalate	**ND**	0.11	EPA 8270E	9-20-22	9-20-22	
Benzo[b]fluoranthene	**ND**	0.0043	EPA 8270E/SIM	9-20-22	9-20-22	
Benzo(j,k)fluoranthene	**ND**	0.0043	EPA 8270E/SIM	9-20-22	9-20-22	
Benzo[a]pyrene	**ND**	0.0043	EPA 8270E/SIM	9-20-22	9-20-22	
Indeno[1,2,3-cd]pyrene	**ND**	0.0043	EPA 8270E/SIM	9-20-22	9-20-22	
Dibenz[a,h]anthracene	**ND**	0.0043	EPA 8270E/SIM	9-20-22	9-20-22	
Benzo[g,h,i]perylene	**ND**	0.0043	EPA 8270E/SIM	9-20-22	9-20-22	
Surrogate:	*Percent Recovery*	*Control Limits*				
2-Fluorophenol	*59*	*22 - 111*				
Phenol-d6	*76*	*31 - 117*				
Nitrobenzene-d5	*60*	*29 - 111*				
2-Fluorobiphenyl	*59*	*39 - 109*				
2,4,6-Tribromophenol	*71*	*36 - 127*				
Terphenyl-d14	*61*	*39 - 116*				

This report pertains to the samples analyzed in accordance with the chain of custody, and is intended only for the use of the individual or company to whom it is addressed.

Date of Report: September 21, 2022
Samples Submitted: September 19, 2022
Laboratory Reference: 2209-160
Project: 11-05150-003

SEMIVOLATILE ORGANICS EPA 8270E/SIM
page 1 of 2

Matrix: Soil
Units: mg/Kg

Analyte	Result	PQL	Method	Date Prepared	Date Analyzed	Flags
Client ID:	**DA7SWCS33220919I**					
Laboratory ID:	09-160-05					
n-Nitrosodimethylamine	**ND**	0.011	EPA 8270E	9-20-22	9-20-22	
Pyridine	**ND**	0.21	EPA 8270E	9-20-22	9-20-22	
Phenol	**ND**	0.021	EPA 8270E	9-20-22	9-20-22	
Aniline	**ND**	0.11	EPA 8270E	9-20-22	9-20-22	
bis(2-Chloroethyl)ether	**ND**	0.011	EPA 8270E	9-20-22	9-20-22	
2-Chlorophenol	**ND**	0.021	EPA 8270E	9-20-22	9-20-22	
1,3-Dichlorobenzene	**ND**	0.021	EPA 8270E	9-20-22	9-20-22	
1,4-Dichlorobenzene	**ND**	0.021	EPA 8270E	9-20-22	9-20-22	
Benzyl alcohol	**ND**	0.021	EPA 8270E	9-20-22	9-20-22	
1,2-Dichlorobenzene	**ND**	0.021	EPA 8270E	9-20-22	9-20-22	
2-Methylphenol (o-Cresol)	**ND**	0.021	EPA 8270E	9-20-22	9-20-22	
bis(2-Chloroisopropyl)ether	**ND**	0.021	EPA 8270E	9-20-22	9-20-22	
(3+4)-Methylphenol (m,p-Cresol)	**ND**	0.021	EPA 8270E	9-20-22	9-20-22	
n-Nitroso-di-n-propylamine	**ND**	0.011	EPA 8270E	9-20-22	9-20-22	
Hexachloroethane	**ND**	0.021	EPA 8270E	9-20-22	9-20-22	
Nitrobenzene	**ND**	0.021	EPA 8270E	9-20-22	9-20-22	
Isophorone	**ND**	0.021	EPA 8270E	9-20-22	9-20-22	
2-Nitrophenol	**ND**	0.021	EPA 8270E	9-20-22	9-20-22	
2,4-Dimethylphenol	**ND**	0.021	EPA 8270E	9-20-22	9-20-22	
bis(2-Chloroethoxy)methane	**ND**	0.021	EPA 8270E	9-20-22	9-20-22	
2,4-Dichlorophenol	**ND**	0.021	EPA 8270E	9-20-22	9-20-22	
1,2,4-Trichlorobenzene	**ND**	0.021	EPA 8270E	9-20-22	9-20-22	
Naphthalene	**ND**	0.0042	EPA 8270E/SIM	9-20-22	9-20-22	
4-Chloroaniline	**ND**	0.011	EPA 8270E	9-20-22	9-20-22	
Hexachlorobutadiene	**ND**	0.021	EPA 8270E	9-20-22	9-20-22	
4-Chloro-3-methylphenol	**ND**	0.021	EPA 8270E	9-20-22	9-20-22	
2-Methylnaphthalene	**ND**	0.0042	EPA 8270E/SIM	9-20-22	9-20-22	
1-Methylnaphthalene	**ND**	0.0042	EPA 8270E/SIM	9-20-22	9-20-22	
Hexachlorocyclopentadiene	**ND**	0.021	EPA 8270E	9-20-22	9-20-22	
2,4,6-Trichlorophenol	**ND**	0.021	EPA 8270E	9-20-22	9-20-22	
2,3-Dichloroaniline	**ND**	0.021	EPA 8270E	9-20-22	9-20-22	
2,4,5-Trichlorophenol	**ND**	0.021	EPA 8270E	9-20-22	9-20-22	
2-Chloronaphthalene	**ND**	0.021	EPA 8270E	9-20-22	9-20-22	
2-Nitroaniline	**ND**	0.021	EPA 8270E	9-20-22	9-20-22	
1,4-Dinitrobenzene	**ND**	0.021	EPA 8270E	9-20-22	9-20-22	
Dimethylphthalate	**ND**	0.021	EPA 8270E	9-20-22	9-20-22	
1,3-Dinitrobenzene	**ND**	0.021	EPA 8270E	9-20-22	9-20-22	
2,6-Dinitrotoluene	**ND**	0.011	EPA 8270E	9-20-22	9-20-22	
1,2-Dinitrobenzene	**ND**	0.021	EPA 8270E	9-20-22	9-20-22	
Acenaphthylene	**ND**	0.0042	EPA 8270E/SIM	9-20-22	9-20-22	
3-Nitroaniline	**ND**	0.021	EPA 8270E	9-20-22	9-20-22	

This report pertains to the samples analyzed in accordance with the chain of custody, and is intended only for the use of the individual or company to whom it is addressed.

Date of Report: September 21, 2022
Samples Submitted: September 19, 2022
Laboratory Reference: 2209-160
Project: 11-05150-003

SEMIVOLATILE ORGANICS EPA 8270E/SIM
page 2 of 2

Analyte	Result	PQL	Method	Date Prepared	Date Analyzed	Flags
Client ID:	**DA7SWCS33220919I**					
Laboratory ID:	09-160-05					
2,4-Dinitrophenol	**ND**	0.11	EPA 8270E	9-20-22	9-20-22	
Acenaphthene	**ND**	0.0042	EPA 8270E/SIM	9-20-22	9-20-22	
4-Nitrophenol	**ND**	0.021	EPA 8270E	9-20-22	9-20-22	
2,4-Dinitrotoluene	**ND**	0.011	EPA 8270E	9-20-22	9-20-22	
Dibenzofuran	**ND**	0.021	EPA 8270E	9-20-22	9-20-22	
2,3,5,6-Tetrachlorophenol	**ND**	0.021	EPA 8270E	9-20-22	9-20-22	
2,3,4,6-Tetrachlorophenol	**ND**	0.021	EPA 8270E	9-20-22	9-20-22	
Diethylphthalate	**ND**	0.11	EPA 8270E	9-20-22	9-20-22	
4-Chlorophenyl-phenylether	**ND**	0.021	EPA 8270E	9-20-22	9-20-22	
4-Nitroaniline	**ND**	0.021	EPA 8270E	9-20-22	9-20-22	
Fluorene	**ND**	0.0042	EPA 8270E/SIM	9-20-22	9-20-22	
4,6-Dinitro-2-methylphenol	**ND**	0.13	EPA 8270E	9-20-22	9-20-22	
n-Nitrosodiphenylamine	**ND**	0.021	EPA 8270E	9-20-22	9-20-22	
1,2-Diphenylhydrazine	**ND**	0.021	EPA 8270E	9-20-22	9-20-22	
4-Bromophenyl-phenylether	**ND**	0.021	EPA 8270E	9-20-22	9-20-22	
Hexachlorobenzene	**ND**	0.021	EPA 8270E	9-20-22	9-20-22	
Pentachlorophenol	**ND**	0.021	EPA 8270E	9-20-22	9-20-22	
Phenanthrene	**ND**	0.0042	EPA 8270E/SIM	9-20-22	9-20-22	
Anthracene	**ND**	0.0042	EPA 8270E/SIM	9-20-22	9-20-22	
Carbazole	**ND**	0.021	EPA 8270E	9-20-22	9-20-22	
Di-n-butylphthalate	**ND**	0.11	EPA 8270E	9-20-22	9-20-22	
Fluoranthene	**ND**	0.0042	EPA 8270E/SIM	9-20-22	9-20-22	
Pyrene	**ND**	0.0042	EPA 8270E/SIM	9-20-22	9-20-22	
Butylbenzylphthalate	**ND**	0.11	EPA 8270E	9-20-22	9-20-22	
bis-2-Ethylhexyladipate	**ND**	0.11	EPA 8270E	9-20-22	9-20-22	
3,3'-Dichlorobenzidine	**ND**	0.011	EPA 8270E	9-20-22	9-20-22	
Benzo[a]anthracene	**ND**	0.0042	EPA 8270E/SIM	9-20-22	9-20-22	
Chrysene	**ND**	0.0042	EPA 8270E/SIM	9-20-22	9-20-22	
bis(2-Ethylhexyl)phthalate	**ND**	0.11	EPA 8270E	9-20-22	9-20-22	
Di-n-octylphthalate	**ND**	0.11	EPA 8270E	9-20-22	9-20-22	
Benzo[b]fluoranthene	**ND**	0.0042	EPA 8270E/SIM	9-20-22	9-20-22	
Benzo(j,k)fluoranthene	**ND**	0.0042	EPA 8270E/SIM	9-20-22	9-20-22	
Benzo[a]pyrene	**ND**	0.0042	EPA 8270E/SIM	9-20-22	9-20-22	
Indeno[1,2,3-cd]pyrene	**ND**	0.0042	EPA 8270E/SIM	9-20-22	9-20-22	
Dibenz[a,h]anthracene	**ND**	0.0042	EPA 8270E/SIM	9-20-22	9-20-22	
Benzo[g,h,i]perylene	**ND**	0.0042	EPA 8270E/SIM	9-20-22	9-20-22	
Surrogate:	*Percent Recovery*	*Control Limits*				
2-Fluorophenol	*60*	*22 - 111*				
Phenol-d6	*69*	*31 - 117*				
Nitrobenzene-d5	*66*	*29 - 111*				
2-Fluorobiphenyl	*63*	*39 - 109*				
2,4,6-Tribromophenol	*71*	*36 - 127*				
Terphenyl-d14	*64*	*39 - 116*				

This report pertains to the samples analyzed in accordance with the chain of custody, and is intended only for the use of the individual or company to whom it is addressed.

Date of Report: September 21, 2022
Samples Submitted: September 19, 2022
Laboratory Reference: 2209-160
Project: 11-05150-003

SEMIVOLATILE ORGANICS EPA 8270E/SIM
page 1 of 2

Matrix: Soil
Units: mg/Kg

Analyte	Result	PQL	Method	Date Prepared	Date Analyzed	Flags
Client ID:	**DA7SWCS34220919I**					
Laboratory ID:	09-160-06					
n-Nitrosodimethylamine	**ND**	0.010	EPA 8270E	9-20-22	9-20-22	
Pyridine	**ND**	0.21	EPA 8270E	9-20-22	9-20-22	
Phenol	**ND**	0.021	EPA 8270E	9-20-22	9-20-22	
Aniline	**ND**	0.10	EPA 8270E	9-20-22	9-20-22	
bis(2-Chloroethyl)ether	**ND**	0.010	EPA 8270E	9-20-22	9-20-22	
2-Chlorophenol	**ND**	0.021	EPA 8270E	9-20-22	9-20-22	
1,3-Dichlorobenzene	**ND**	0.021	EPA 8270E	9-20-22	9-20-22	
1,4-Dichlorobenzene	**ND**	0.021	EPA 8270E	9-20-22	9-20-22	
Benzyl alcohol	**ND**	0.021	EPA 8270E	9-20-22	9-20-22	
1,2-Dichlorobenzene	**ND**	0.021	EPA 8270E	9-20-22	9-20-22	
2-Methylphenol (o-Cresol)	**ND**	0.021	EPA 8270E	9-20-22	9-20-22	
bis(2-Chloroisopropyl)ether	**ND**	0.021	EPA 8270E	9-20-22	9-20-22	
(3+4)-Methylphenol (m,p-Cresol)	**ND**	0.021	EPA 8270E	9-20-22	9-20-22	
n-Nitroso-di-n-propylamine	**ND**	0.010	EPA 8270E	9-20-22	9-20-22	
Hexachloroethane	**ND**	0.021	EPA 8270E	9-20-22	9-20-22	
Nitrobenzene	**ND**	0.021	EPA 8270E	9-20-22	9-20-22	
Isophorone	**ND**	0.021	EPA 8270E	9-20-22	9-20-22	
2-Nitrophenol	**ND**	0.021	EPA 8270E	9-20-22	9-20-22	
2,4-Dimethylphenol	**ND**	0.021	EPA 8270E	9-20-22	9-20-22	
bis(2-Chloroethoxy)methane	**ND**	0.021	EPA 8270E	9-20-22	9-20-22	
2,4-Dichlorophenol	**ND**	0.021	EPA 8270E	9-20-22	9-20-22	
1,2,4-Trichlorobenzene	**ND**	0.021	EPA 8270E	9-20-22	9-20-22	
Naphthalene	**ND**	0.0042	EPA 8270E/SIM	9-20-22	9-20-22	
4-Chloroaniline	**ND**	0.010	EPA 8270E	9-20-22	9-20-22	
Hexachlorobutadiene	**ND**	0.021	EPA 8270E	9-20-22	9-20-22	
4-Chloro-3-methylphenol	**ND**	0.021	EPA 8270E	9-20-22	9-20-22	
2-Methylnaphthalene	**ND**	0.0042	EPA 8270E/SIM	9-20-22	9-20-22	
1-Methylnaphthalene	**ND**	0.0042	EPA 8270E/SIM	9-20-22	9-20-22	
Hexachlorocyclopentadiene	**ND**	0.021	EPA 8270E	9-20-22	9-20-22	
2,4,6-Trichlorophenol	**ND**	0.021	EPA 8270E	9-20-22	9-20-22	
2,3-Dichloroaniline	**ND**	0.021	EPA 8270E	9-20-22	9-20-22	
2,4,5-Trichlorophenol	**ND**	0.021	EPA 8270E	9-20-22	9-20-22	
2-Chloronaphthalene	**ND**	0.021	EPA 8270E	9-20-22	9-20-22	
2-Nitroaniline	**ND**	0.021	EPA 8270E	9-20-22	9-20-22	
1,4-Dinitrobenzene	**ND**	0.021	EPA 8270E	9-20-22	9-20-22	
Dimethylphthalate	**ND**	0.021	EPA 8270E	9-20-22	9-20-22	
1,3-Dinitrobenzene	**ND**	0.021	EPA 8270E	9-20-22	9-20-22	
2,6-Dinitrotoluene	**ND**	0.010	EPA 8270E	9-20-22	9-20-22	
1,2-Dinitrobenzene	**ND**	0.021	EPA 8270E	9-20-22	9-20-22	
Acenaphthylene	**ND**	0.0042	EPA 8270E/SIM	9-20-22	9-20-22	
3-Nitroaniline	**ND**	0.021	EPA 8270E	9-20-22	9-20-22	

This report pertains to the samples analyzed in accordance with the chain of custody, and is intended only for the use of the individual or company to whom it is addressed.

Date of Report: September 21, 2022
Samples Submitted: September 19, 2022
Laboratory Reference: 2209-160
Project: 11-05150-003

SEMIVOLATILE ORGANICS EPA 8270E/SIM
page 2 of 2

Analyte	Result	PQL	Method	Date Prepared	Date Analyzed	Flags
Client ID:	**DA7SWCS34220919I**					
Laboratory ID:	09-160-06					
2,4-Dinitrophenol	**ND**	0.10	EPA 8270E	9-20-22	9-20-22	
Acenaphthene	**ND**	0.0042	EPA 8270E/SIM	9-20-22	9-20-22	
4-Nitrophenol	**ND**	0.021	EPA 8270E	9-20-22	9-20-22	
2,4-Dinitrotoluene	**ND**	0.010	EPA 8270E	9-20-22	9-20-22	
Dibenzofuran	**ND**	0.021	EPA 8270E	9-20-22	9-20-22	
2,3,5,6-Tetrachlorophenol	**ND**	0.021	EPA 8270E	9-20-22	9-20-22	
2,3,4,6-Tetrachlorophenol	**ND**	0.021	EPA 8270E	9-20-22	9-20-22	
Diethylphthalate	**ND**	0.10	EPA 8270E	9-20-22	9-20-22	
4-Chlorophenyl-phenylether	**ND**	0.021	EPA 8270E	9-20-22	9-20-22	
4-Nitroaniline	**ND**	0.021	EPA 8270E	9-20-22	9-20-22	
Fluorene	**ND**	0.0042	EPA 8270E/SIM	9-20-22	9-20-22	
4,6-Dinitro-2-methylphenol	**ND**	0.13	EPA 8270E	9-20-22	9-20-22	
n-Nitrosodiphenylamine	**ND**	0.021	EPA 8270E	9-20-22	9-20-22	
1,2-Diphenylhydrazine	**ND**	0.021	EPA 8270E	9-20-22	9-20-22	
4-Bromophenyl-phenylether	**ND**	0.021	EPA 8270E	9-20-22	9-20-22	
Hexachlorobenzene	**ND**	0.021	EPA 8270E	9-20-22	9-20-22	
Pentachlorophenol	**ND**	0.021	EPA 8270E	9-20-22	9-20-22	
Phenanthrene	**ND**	0.0042	EPA 8270E/SIM	9-20-22	9-20-22	
Anthracene	**ND**	0.0042	EPA 8270E/SIM	9-20-22	9-20-22	
Carbazole	**ND**	0.021	EPA 8270E	9-20-22	9-20-22	
Di-n-butylphthalate	**ND**	0.10	EPA 8270E	9-20-22	9-20-22	
Fluoranthene	**ND**	0.0042	EPA 8270E/SIM	9-20-22	9-20-22	
Pyrene	**ND**	0.0042	EPA 8270E/SIM	9-20-22	9-20-22	
Butylbenzylphthalate	**ND**	0.10	EPA 8270E	9-20-22	9-20-22	
bis-2-Ethylhexyladipate	**ND**	0.10	EPA 8270E	9-20-22	9-20-22	
3,3'-Dichlorobenzidine	**ND**	0.010	EPA 8270E	9-20-22	9-20-22	
Benzo[a]anthracene	**ND**	0.0042	EPA 8270E/SIM	9-20-22	9-20-22	
Chrysene	**ND**	0.0042	EPA 8270E/SIM	9-20-22	9-20-22	
bis(2-Ethylhexyl)phthalate	**ND**	0.10	EPA 8270E	9-20-22	9-20-22	
Di-n-octylphthalate	**ND**	0.10	EPA 8270E	9-20-22	9-20-22	
Benzo[b]fluoranthene	**ND**	0.0042	EPA 8270E/SIM	9-20-22	9-20-22	
Benzo(j,k)fluoranthene	**ND**	0.0042	EPA 8270E/SIM	9-20-22	9-20-22	
Benzo[a]pyrene	**ND**	0.0042	EPA 8270E/SIM	9-20-22	9-20-22	
Indeno[1,2,3-cd]pyrene	**ND**	0.0042	EPA 8270E/SIM	9-20-22	9-20-22	
Dibenz[a,h]anthracene	**ND**	0.0042	EPA 8270E/SIM	9-20-22	9-20-22	
Benzo[g,h,i]perylene	**ND**	0.0042	EPA 8270E/SIM	9-20-22	9-20-22	
Surrogate:	*Percent Recovery*	*Control Limits*				
2-Fluorophenol	*56*	*22 - 111*				
Phenol-d6	*62*	*31 - 117*				
Nitrobenzene-d5	*60*	*29 - 111*				
2-Fluorobiphenyl	*56*	*39 - 109*				
2,4,6-Tribromophenol	*65*	*36 - 127*				
Terphenyl-d14	*59*	*39 - 116*				

This report pertains to the samples analyzed in accordance with the chain of custody, and is intended only for the use of the individual or company to whom it is addressed.

Date of Report: September 21, 2022
Samples Submitted: September 19, 2022
Laboratory Reference: 2209-160
Project: 11-05150-003

SEMIVOLATILE ORGANICS EPA 8270E/SIM
QUALITY CONTROL
page 1 of 2

Matrix: Soil
Units: mg/Kg

Analyte	Result	PQL	Method	Date Prepared	Date Analyzed	Flags
METHOD BLANK						
Laboratory ID:	MB0920S1					
n-Nitrosodimethylamine	**ND**	0.010	EPA 8270E	9-20-22	9-20-22	
Pyridine	**ND**	0.20	EPA 8270E	9-20-22	9-20-22	
Phenol	**ND**	0.020	EPA 8270E	9-20-22	9-20-22	
Aniline	**ND**	0.10	EPA 8270E	9-20-22	9-20-22	
bis(2-Chloroethyl)ether	**ND**	0.010	EPA 8270E	9-20-22	9-20-22	
2-Chlorophenol	**ND**	0.020	EPA 8270E	9-20-22	9-20-22	
1,3-Dichlorobenzene	**ND**	0.020	EPA 8270E	9-20-22	9-20-22	
1,4-Dichlorobenzene	**ND**	0.020	EPA 8270E	9-20-22	9-20-22	
Benzyl alcohol	**ND**	0.020	EPA 8270E	9-20-22	9-20-22	
1,2-Dichlorobenzene	**ND**	0.020	EPA 8270E	9-20-22	9-20-22	
2-Methylphenol (o-Cresol)	**ND**	0.020	EPA 8270E	9-20-22	9-20-22	
bis(2-Chloroisopropyl)ether	**ND**	0.020	EPA 8270E	9-20-22	9-20-22	
(3+4)-Methylphenol (m,p-Cresol)	**ND**	0.020	EPA 8270E	9-20-22	9-20-22	
n-Nitroso-di-n-propylamine	**ND**	0.010	EPA 8270E	9-20-22	9-20-22	
Hexachloroethane	**ND**	0.020	EPA 8270E	9-20-22	9-20-22	
Nitrobenzene	**ND**	0.020	EPA 8270E	9-20-22	9-20-22	
Isophorone	**ND**	0.020	EPA 8270E	9-20-22	9-20-22	
2-Nitrophenol	**ND**	0.020	EPA 8270E	9-20-22	9-20-22	
2,4-Dimethylphenol	**ND**	0.020	EPA 8270E	9-20-22	9-20-22	
bis(2-Chloroethoxy)methane	**ND**	0.020	EPA 8270E	9-20-22	9-20-22	
2,4-Dichlorophenol	**ND**	0.020	EPA 8270E	9-20-22	9-20-22	
1,2,4-Trichlorobenzene	**ND**	0.020	EPA 8270E	9-20-22	9-20-22	
Naphthalene	**ND**	0.0040	EPA 8270E/SIM	9-20-22	9-20-22	
4-Chloroaniline	**ND**	0.010	EPA 8270E	9-20-22	9-20-22	
Hexachlorobutadiene	**ND**	0.020	EPA 8270E	9-20-22	9-20-22	
4-Chloro-3-methylphenol	**ND**	0.020	EPA 8270E	9-20-22	9-20-22	
2-Methylnaphthalene	**ND**	0.0040	EPA 8270E/SIM	9-20-22	9-20-22	
1-Methylnaphthalene	**ND**	0.0040	EPA 8270E/SIM	9-20-22	9-20-22	
Hexachlorocyclopentadiene	**ND**	0.020	EPA 8270E	9-20-22	9-20-22	
2,4,6-Trichlorophenol	**ND**	0.020	EPA 8270E	9-20-22	9-20-22	
2,3-Dichloroaniline	**ND**	0.020	EPA 8270E	9-20-22	9-20-22	
2,4,5-Trichlorophenol	**ND**	0.020	EPA 8270E	9-20-22	9-20-22	
2-Chloronaphthalene	**ND**	0.020	EPA 8270E	9-20-22	9-20-22	
2-Nitroaniline	**ND**	0.020	EPA 8270E	9-20-22	9-20-22	
1,4-Dinitrobenzene	**ND**	0.020	EPA 8270E	9-20-22	9-20-22	
Dimethylphthalate	**ND**	0.020	EPA 8270E	9-20-22	9-20-22	
1,3-Dinitrobenzene	**ND**	0.020	EPA 8270E	9-20-22	9-20-22	
2,6-Dinitrotoluene	**ND**	0.010	EPA 8270E	9-20-22	9-20-22	
1,2-Dinitrobenzene	**ND**	0.020	EPA 8270E	9-20-22	9-20-22	
Acenaphthylene	**ND**	0.0040	EPA 8270E/SIM	9-20-22	9-20-22	
3-Nitroaniline	**ND**	0.020	EPA 8270E	9-20-22	9-20-22	

This report pertains to the samples analyzed in accordance with the chain of custody, and is intended only for the use of the individual or company to whom it is addressed.

Date of Report: September 21, 2022
Samples Submitted: September 19, 2022
Laboratory Reference: 2209-160
Project: 11-05150-003

SEMIVOLATILE ORGANICS EPA 8270E/SIM
QUALITY CONTROL
page 2 of 2

Analyte	Result	PQL	Method	Date Prepared	Date Analyzed	Flags
METHOD BLANK						
Laboratory ID:	MB0920S1					
2,4-Dinitrophenol	**ND**	0.10	EPA 8270E	9-20-22	9-20-22	
Acenaphthene	**ND**	0.0040	EPA 8270E/SIM	9-20-22	9-20-22	
4-Nitrophenol	**ND**	0.020	EPA 8270E	9-20-22	9-20-22	
2,4-Dinitrotoluene	**ND**	0.010	EPA 8270E	9-20-22	9-20-22	
Dibenzofuran	**ND**	0.020	EPA 8270E	9-20-22	9-20-22	
2,3,5,6-Tetrachlorophenol	**ND**	0.020	EPA 8270E	9-20-22	9-20-22	
2,3,4,6-Tetrachlorophenol	**ND**	0.020	EPA 8270E	9-20-22	9-20-22	
Diethylphthalate	**ND**	0.10	EPA 8270E	9-20-22	9-20-22	
4-Chlorophenyl-phenylether	**ND**	0.020	EPA 8270E	9-20-22	9-20-22	
4-Nitroaniline	**ND**	0.020	EPA 8270E	9-20-22	9-20-22	
Fluorene	**ND**	0.0040	EPA 8270E/SIM	9-20-22	9-20-22	
4,6-Dinitro-2-methylphenol	**ND**	0.13	EPA 8270E	9-20-22	9-20-22	
n-Nitrosodiphenylamine	**ND**	0.020	EPA 8270E	9-20-22	9-20-22	
1,2-Diphenylhydrazine	**ND**	0.020	EPA 8270E	9-20-22	9-20-22	
4-Bromophenyl-phenylether	**ND**	0.020	EPA 8270E	9-20-22	9-20-22	
Hexachlorobenzene	**ND**	0.020	EPA 8270E	9-20-22	9-20-22	
Pentachlorophenol	**ND**	0.020	EPA 8270E	9-20-22	9-20-22	
Phenanthrene	**ND**	0.0040	EPA 8270E/SIM	9-20-22	9-20-22	
Anthracene	**ND**	0.0040	EPA 8270E/SIM	9-20-22	9-20-22	
Carbazole	**ND**	0.020	EPA 8270E	9-20-22	9-20-22	
Di-n-butylphthalate	**ND**	0.10	EPA 8270E	9-20-22	9-20-22	
Fluoranthene	**ND**	0.0040	EPA 8270E/SIM	9-20-22	9-20-22	
Pyrene	**ND**	0.0040	EPA 8270E/SIM	9-20-22	9-20-22	
Butylbenzylphthalate	**ND**	0.10	EPA 8270E	9-20-22	9-20-22	
bis-2-Ethylhexyladipate	**ND**	0.10	EPA 8270E	9-20-22	9-20-22	
3,3'-Dichlorobenzidine	**ND**	0.010	EPA 8270E	9-20-22	9-20-22	
Benzo[a]anthracene	**ND**	0.0040	EPA 8270E/SIM	9-20-22	9-20-22	
Chrysene	**ND**	0.0040	EPA 8270E/SIM	9-20-22	9-20-22	
bis(2-Ethylhexyl)phthalate	**ND**	0.10	EPA 8270E	9-20-22	9-20-22	
Di-n-octylphthalate	**ND**	0.10	EPA 8270E	9-20-22	9-20-22	
Benzo[b]fluoranthene	**ND**	0.0040	EPA 8270E/SIM	9-20-22	9-20-22	
Benzo(j,k)fluoranthene	**ND**	0.0040	EPA 8270E/SIM	9-20-22	9-20-22	
Benzo[a]pyrene	**ND**	0.0040	EPA 8270E/SIM	9-20-22	9-20-22	
Indeno[1,2,3-cd]pyrene	**ND**	0.0040	EPA 8270E/SIM	9-20-22	9-20-22	
Dibenz[a,h]anthracene	**ND**	0.0040	EPA 8270E/SIM	9-20-22	9-20-22	
Benzo[g,h,i]perylene	**ND**	0.0040	EPA 8270E/SIM	9-20-22	9-20-22	
Surrogate:	*Percent Recovery*	*Control Limits*				
2-Fluorophenol	*70*	*22 - 111*				
Phenol-d6	*78*	*31 - 117*				
Nitrobenzene-d5	*73*	*29 - 111*				
2-Fluorobiphenyl	*72*	*39 - 109*				
2,4,6-Tribromophenol	*79*	*36 - 127*				
Terphenyl-d14	*69*	*39 - 116*				

This report pertains to the samples analyzed in accordance with the chain of custody, and is intended only for the use of the individual or company to whom it is addressed.

Date of Report: September 21, 2022
Samples Submitted: September 19, 2022
Laboratory Reference: 2209-160
Project: 11-05150-003

SEMIVOLATILE ORGANICS EPA 8270E/SIM
QUALITY CONTROL

Matrix: Soil
Units: mg/Kg

Analyte	Result		Spike Level		Percent Recovery		Recovery Limits	RPD	RPD Limit	Flags
SPIKE BLANKS										
Laboratory ID:	SB0920S1									
	SB	SBD	SB	SBD	SB	SBD				
Phenol	**1.07**	**1.07**	1.33	1.33	80	80	42 - 109	0	24	
2-Chlorophenol	**1.06**	**1.08**	1.33	1.33	80	81	47 - 105	2	26	
1,4-Dichlorobenzene	**0.507**	**0.515**	0.667	0.667	76	77	42 - 102	2	31	
n-Nitroso-di-n-propylamine	**0.514**	**0.523**	0.667	0.667	77	78	45 - 111	2	24	
1,2,4-Trichlorobenzene	**0.547**	**0.532**	0.667	0.667	82	80	47 - 106	3	26	
4-Chloro-3-methylphenol	**1.21**	**1.21**	1.33	1.33	91	91	57 - 111	0	20	
Acenaphthene	**0.531**	**0.532**	0.667	0.667	80	80	48 - 101	0	20	
4-Nitrophenol	**1.03**	**1.03**	1.33	1.33	77	77	53 - 138	0	20	
2,4-Dinitrotoluene	**0.587**	**0.583**	0.667	0.667	88	87	53 - 111	1	20	
Pentachlorophenol	**1.20**	**1.15**	1.33	1.33	90	86	38 - 134	4	24	
Pyrene	**0.576**	**0.555**	0.667	0.667	86	83	53 - 113	4	20	
Surrogate:										
2-Fluorophenol					*75*	*74*	*22 - 111*			
Phenol-d6					*79*	*79*	*31 - 117*			
Nitrobenzene-d5					*80*	*78*	*29 - 111*			
2-Fluorobiphenyl					*75*	*74*	*39 - 109*			
2,4,6-Tribromophenol					*90*	*87*	*36 - 127*			
Terphenyl-d14					*79*	*75*	*39 - 116*			

This report pertains to the samples analyzed in accordance with the chain of custody,
and is intended only for the use of the individual or company to whom it is addressed.

Date of Report: September 21, 2022
Samples Submitted: September 19, 2022
Laboratory Reference: 2209-160
Project: 11-05150-003

PCBs EPA 8082A

Matrix: Soil
Units: mg/Kg (ppm)

Analyte	Result	PQL	Method	Date Prepared	Date Analyzed	Flags
Client ID:	**DA7SWCS30220919I**					
Laboratory ID:	09-160-01					
Aroclor 1016	**ND**	0.021	EPA 8082A	9-20-22	9-20-22	
Aroclor 1221	**ND**	0.021	EPA 8082A	9-20-22	9-20-22	
Aroclor 1232	**ND**	0.021	EPA 8082A	9-20-22	9-20-22	
Aroclor 1242	**ND**	0.021	EPA 8082A	9-20-22	9-20-22	
Aroclor 1248	**ND**	0.021	EPA 8082A	9-20-22	9-20-22	
Aroclor 1254	**ND**	0.021	EPA 8082A	9-20-22	9-20-22	
Aroclor 1260	**ND**	0.021	EPA 8082A	9-20-22	9-20-22	
Aroclor 1262	**ND**	0.021	EPA 8082A	9-20-22	9-20-22	
Aroclor 1268	**ND**	0.021	EPA 8082A	9-20-22	9-20-22	
Surrogate:	*Percent Recovery*	*Control Limits*				
DCB	*89*	*53-127*				
Client ID:	**DA7SWCS31220919I**					
Laboratory ID:	09-160-02					
Aroclor 1016	**ND**	0.021	EPA 8082A	9-20-22	9-20-22	
Aroclor 1221	**ND**	0.021	EPA 8082A	9-20-22	9-20-22	
Aroclor 1232	**ND**	0.021	EPA 8082A	9-20-22	9-20-22	
Aroclor 1242	**ND**	0.021	EPA 8082A	9-20-22	9-20-22	
Aroclor 1248	**ND**	0.021	EPA 8082A	9-20-22	9-20-22	
Aroclor 1254	**ND**	0.021	EPA 8082A	9-20-22	9-20-22	
Aroclor 1260	**ND**	0.021	EPA 8082A	9-20-22	9-20-22	
Aroclor 1262	**ND**	0.021	EPA 8082A	9-20-22	9-20-22	
Aroclor 1268	**ND**	0.021	EPA 8082A	9-20-22	9-20-22	
Surrogate:	*Percent Recovery*	*Control Limits*				
DCB	*92*	*53-127*				
Client ID:	**DA7SWCS31220919D**					
Laboratory ID:	09-160-03					
Aroclor 1016	**ND**	0.021	EPA 8082A	9-20-22	9-20-22	
Aroclor 1221	**ND**	0.021	EPA 8082A	9-20-22	9-20-22	
Aroclor 1232	**ND**	0.021	EPA 8082A	9-20-22	9-20-22	
Aroclor 1242	**ND**	0.021	EPA 8082A	9-20-22	9-20-22	
Aroclor 1248	**ND**	0.021	EPA 8082A	9-20-22	9-20-22	
Aroclor 1254	**ND**	0.021	EPA 8082A	9-20-22	9-20-22	
Aroclor 1260	**ND**	0.021	EPA 8082A	9-20-22	9-20-22	
Aroclor 1262	**ND**	0.021	EPA 8082A	9-20-22	9-20-22	
Aroclor 1268	**ND**	0.021	EPA 8082A	9-20-22	9-20-22	
Surrogate:	*Percent Recovery*	*Control Limits*				
DCB	*96*	*53-127*				

This report pertains to the samples analyzed in accordance with the chain of custody, and is intended only for the use of the individual or company to whom it is addressed.

Date of Report: September 21, 2022
Samples Submitted: September 19, 2022
Laboratory Reference: 2209-160
Project: 11-05150-003

PCBs EPA 8082A

Matrix: Soil
Units: mg/Kg (ppm)

Analyte	Result	PQL	Method	Date Prepared	Date Analyzed	Flags
Client ID:	**DA7SWCS32220919I**					
Laboratory ID:	09-160-04					
Aroclor 1016	**ND**	0.021	EPA 8082A	9-20-22	9-20-22	
Aroclor 1221	**ND**	0.021	EPA 8082A	9-20-22	9-20-22	
Aroclor 1232	**ND**	0.021	EPA 8082A	9-20-22	9-20-22	
Aroclor 1242	**ND**	0.021	EPA 8082A	9-20-22	9-20-22	
Aroclor 1248	**ND**	0.021	EPA 8082A	9-20-22	9-20-22	
Aroclor 1254	**ND**	0.021	EPA 8082A	9-20-22	9-20-22	
Aroclor 1260	**ND**	0.021	EPA 8082A	9-20-22	9-20-22	
Aroclor 1262	**ND**	0.021	EPA 8082A	9-20-22	9-20-22	
Aroclor 1268	**ND**	0.021	EPA 8082A	9-20-22	9-20-22	
Surrogate:	*Percent Recovery*	*Control Limits*				
DCB	*91*	*53-127*				
Client ID:	**DA7SWCS33220919I**					
Laboratory ID:	09-160-05					
Aroclor 1016	**ND**	0.021	EPA 8082A	9-20-22	9-20-22	
Aroclor 1221	**ND**	0.021	EPA 8082A	9-20-22	9-20-22	
Aroclor 1232	**ND**	0.021	EPA 8082A	9-20-22	9-20-22	
Aroclor 1242	**ND**	0.021	EPA 8082A	9-20-22	9-20-22	
Aroclor 1248	**ND**	0.021	EPA 8082A	9-20-22	9-20-22	
Aroclor 1254	**ND**	0.021	EPA 8082A	9-20-22	9-20-22	
Aroclor 1260	**ND**	0.021	EPA 8082A	9-20-22	9-20-22	
Aroclor 1262	**ND**	0.021	EPA 8082A	9-20-22	9-20-22	
Aroclor 1268	**ND**	0.021	EPA 8082A	9-20-22	9-20-22	
Surrogate:	*Percent Recovery*	*Control Limits*				
DCB	*84*	*53-127*				
Client ID:	**DA7SWCS34220919I**					
Laboratory ID:	09-160-06					
Aroclor 1016	**ND**	0.021	EPA 8082A	9-20-22	9-20-22	
Aroclor 1221	**ND**	0.021	EPA 8082A	9-20-22	9-20-22	
Aroclor 1232	**ND**	0.021	EPA 8082A	9-20-22	9-20-22	
Aroclor 1242	**ND**	0.021	EPA 8082A	9-20-22	9-20-22	
Aroclor 1248	**ND**	0.021	EPA 8082A	9-20-22	9-20-22	
Aroclor 1254	**ND**	0.021	EPA 8082A	9-20-22	9-20-22	
Aroclor 1260	**ND**	0.021	EPA 8082A	9-20-22	9-20-22	
Aroclor 1262	**ND**	0.021	EPA 8082A	9-20-22	9-20-22	
Aroclor 1268	**ND**	0.021	EPA 8082A	9-20-22	9-20-22	
Surrogate:	*Percent Recovery*	*Control Limits*				
DCB	*89*	*53-127*				

This report pertains to the samples analyzed in accordance with the chain of custody, and is intended only for the use of the individual or company to whom it is addressed.

Date of Report: September 21, 2022
Samples Submitted: September 19, 2022
Laboratory Reference: 2209-160
Project: 11-05150-003

PCBs EPA 8082A
QUALITY CONTROL

Matrix: Soil
Units: mg/Kg (ppm)

Analyte	Result	PQL	Method	Date Prepared	Date Analyzed	Flags
METHOD BLANK						
Laboratory ID:	MB0920S1					
Aroclor 1016	**ND**	0.020	EPA 8082A	9-20-22	9-20-22	
Aroclor 1221	**ND**	0.020	EPA 8082A	9-20-22	9-20-22	
Aroclor 1232	**ND**	0.020	EPA 8082A	9-20-22	9-20-22	
Aroclor 1242	**ND**	0.020	EPA 8082A	9-20-22	9-20-22	
Aroclor 1248	**ND**	0.020	EPA 8082A	9-20-22	9-20-22	
Aroclor 1254	**ND**	0.020	EPA 8082A	9-20-22	9-20-22	
Aroclor 1260	**ND**	0.020	EPA 8082A	9-20-22	9-20-22	
Aroclor 1262	**ND**	0.020	EPA 8082A	9-20-22	9-20-22	
Aroclor 1268	**ND**	0.020	EPA 8082A	9-20-22	9-20-22	
Surrogate:	*Percent Recovery*	*Control Limits*				
DCB	*95*	*53-127*				

Analyte	Result		Spike Level		Source Result	Percent Recovery		Recovery Limits	RPD	RPD Limit	Flags
SPIKE BLANKS											
Laboratory ID:	SB0920S1										
	SB	SBD	SB	SBD		SB	SBD				
Aroclor 1260	**0.426**	**0.422**	0.500	0.500	N/A	**85**	**84**	65-134	1	18	
Surrogate:											
DCB						*95*	*94*	*53-127*			

This report pertains to the samples analyzed in accordance with the chain of custody, and is intended only for the use of the individual or company to whom it is addressed.

Date of Report: September 21, 2022
Samples Submitted: September 19, 2022
Laboratory Reference: 2209-160
Project: 11-05150-003

ORGANOCHLORINE PESTICIDES EPA 8081B

Matrix: Soil
Units: ug/Kg (ppb)

Analyte	Result	PQL	Method	Date Prepared	Date Analyzed	Flags
Client ID:	**DA7SWCS30220919I**					
Laboratory ID:	09-160-01					
alpha-BHC	ND	0.21	EPA 8081B	9-20-22	9-20-22	
gamma-BHC	ND	0.21	EPA 8081B	9-20-22	9-20-22	
beta-BHC	ND	0.21	EPA 8081B	9-20-22	9-20-22	
delta-BHC	ND	0.21	EPA 8081B	9-20-22	9-20-22	
Heptachlor	ND	0.21	EPA 8081B	9-20-22	9-20-22	
Aldrin	ND	0.21	EPA 8081B	9-20-22	9-20-22	
Heptachlor epoxide	ND	0.21	EPA 8081B	9-20-22	9-20-22	
gamma-Chlordane	ND	0.21	EPA 8081B	9-20-22	9-20-22	
alpha-Chlordane	ND	0.21	EPA 8081B	9-20-22	9-20-22	
4,4'-DDE	ND	0.21	EPA 8081B	9-20-22	9-20-22	
Endosulfan I	ND	0.21	EPA 8081B	9-20-22	9-20-22	
Dieldrin	ND	0.21	EPA 8081B	9-20-22	9-20-22	
Endrin	ND	0.21	EPA 8081B	9-20-22	9-20-22	
4,4'-DDD	ND	0.21	EPA 8081B	9-20-22	9-20-22	
Endosulfan II	ND	0.21	EPA 8081B	9-20-22	9-20-22	
4,4'-DDT	ND	4.2	EPA 8081B	9-20-22	9-20-22	
Endrin aldehyde	ND	0.21	EPA 8081B	9-20-22	9-20-22	
Methoxychlor	ND	4.2	EPA 8081B	9-20-22	9-20-22	
Endosulfan sulfate	ND	0.21	EPA 8081B	9-20-22	9-20-22	
Endrin ketone	ND	0.21	EPA 8081B	9-20-22	9-20-22	
Toxaphene	ND	2.1	EPA 8081B	9-20-22	9-20-22	
Tech Chlordane	ND	2.1	EPA 8081B	9-20-22	9-20-22	
Surrogate:	*Percent Recovery*	*Control limits*				
Tetrachloro-m-xylene	*85*	*35-110*				
Decachlorobiphenyl	*84*	*32-122*				

This report pertains to the samples analyzed in accordance with the chain of custody, and is intended only for the use of the individual or company to whom it is addressed.

Date of Report: September 21, 2022
Samples Submitted: September 19, 2022
Laboratory Reference: 2209-160
Project: 11-05150-003

ORGANOCHLORINE PESTICIDES EPA 8081B

Matrix: Soil
Units: ug/Kg (ppb)

Analyte	Result	PQL	Method	Date Prepared	Date Analyzed	Flags
Client ID:	**DA7SWCS31220919I**					
Laboratory ID:	09-160-02					
alpha-BHC	ND	0.21	EPA 8081B	9-20-22	9-20-22	
gamma-BHC	ND	0.21	EPA 8081B	9-20-22	9-20-22	
beta-BHC	ND	0.21	EPA 8081B	9-20-22	9-20-22	
delta-BHC	ND	0.21	EPA 8081B	9-20-22	9-20-22	
Heptachlor	ND	0.21	EPA 8081B	9-20-22	9-20-22	
Aldrin	ND	0.21	EPA 8081B	9-20-22	9-20-22	
Heptachlor epoxide	ND	0.21	EPA 8081B	9-20-22	9-20-22	
gamma-Chlordane	ND	0.21	EPA 8081B	9-20-22	9-20-22	
alpha-Chlordane	ND	0.21	EPA 8081B	9-20-22	9-20-22	
4,4'-DDE	ND	0.21	EPA 8081B	9-20-22	9-20-22	
Endosulfan I	ND	0.21	EPA 8081B	9-20-22	9-20-22	
Dieldrin	ND	0.21	EPA 8081B	9-20-22	9-20-22	
Endrin	ND	0.21	EPA 8081B	9-20-22	9-20-22	
4,4'-DDD	ND	0.21	EPA 8081B	9-20-22	9-20-22	
Endosulfan II	ND	0.21	EPA 8081B	9-20-22	9-20-22	
4,4'-DDT	ND	4.2	EPA 8081B	9-20-22	9-20-22	
Endrin aldehyde	ND	0.21	EPA 8081B	9-20-22	9-20-22	
Methoxychlor	ND	4.2	EPA 8081B	9-20-22	9-20-22	
Endosulfan sulfate	ND	0.21	EPA 8081B	9-20-22	9-20-22	
Endrin ketone	ND	0.21	EPA 8081B	9-20-22	9-20-22	
Toxaphene	ND	2.1	EPA 8081B	9-20-22	9-20-22	
Tech Chlordane	ND	2.1	EPA 8081B	9-20-22	9-20-22	
Surrogate:	*Percent Recovery*	*Control limits*				
Tetrachloro-m-xylene	*77*	*35-110*				
Decachlorobiphenyl	*72*	*32-122*				

This report pertains to the samples analyzed in accordance with the chain of custody, and is intended only for the use of the individual or company to whom it is addressed.

Date of Report: September 21, 2022
Samples Submitted: September 19, 2022
Laboratory Reference: 2209-160
Project: 11-05150-003

ORGANOCHLORINE PESTICIDES EPA 8081B

Matrix: Soil
Units: ug/Kg (ppb)

Analyte	Result	PQL	Method	Date Prepared	Date Analyzed	Flags
Client ID:	**DA7SWCS31220919D**					
Laboratory ID:	09-160-03					
alpha-BHC	ND	0.21	EPA 8081B	9-20-22	9-20-22	
gamma-BHC	ND	0.21	EPA 8081B	9-20-22	9-20-22	
beta-BHC	ND	0.21	EPA 8081B	9-20-22	9-20-22	
delta-BHC	ND	0.21	EPA 8081B	9-20-22	9-20-22	
Heptachlor	ND	0.21	EPA 8081B	9-20-22	9-20-22	
Aldrin	ND	0.21	EPA 8081B	9-20-22	9-20-22	
Heptachlor epoxide	ND	0.21	EPA 8081B	9-20-22	9-20-22	
gamma-Chlordane	ND	0.21	EPA 8081B	9-20-22	9-20-22	
alpha-Chlordane	ND	0.21	EPA 8081B	9-20-22	9-20-22	
4,4'-DDE	ND	0.21	EPA 8081B	9-20-22	9-20-22	
Endosulfan I	ND	0.21	EPA 8081B	9-20-22	9-20-22	
Dieldrin	ND	0.21	EPA 8081B	9-20-22	9-20-22	
Endrin	ND	0.21	EPA 8081B	9-20-22	9-20-22	
4,4'-DDD	ND	0.21	EPA 8081B	9-20-22	9-20-22	
Endosulfan II	ND	0.21	EPA 8081B	9-20-22	9-20-22	
4,4'-DDT	ND	4.2	EPA 8081B	9-20-22	9-20-22	
Endrin aldehyde	ND	0.21	EPA 8081B	9-20-22	9-20-22	
Methoxychlor	ND	4.2	EPA 8081B	9-20-22	9-20-22	
Endosulfan sulfate	ND	0.21	EPA 8081B	9-20-22	9-20-22	
Endrin ketone	ND	0.21	EPA 8081B	9-20-22	9-20-22	
Toxaphene	ND	2.1	EPA 8081B	9-20-22	9-20-22	
Tech Chlordane	ND	2.1	EPA 8081B	9-20-22	9-20-22	
Surrogate:	*Percent Recovery*	*Control limits*				
Tetrachloro-m-xylene	*96*	*35-110*				
Decachlorobiphenyl	*87*	*32-122*				

This report pertains to the samples analyzed in accordance with the chain of custody, and is intended only for the use of the individual or company to whom it is addressed.

Date of Report: September 21, 2022
Samples Submitted: September 19, 2022
Laboratory Reference: 2209-160
Project: 11-05150-003

ORGANOCHLORINE PESTICIDES EPA 8081B

Matrix: Soil
Units: ug/Kg (ppb)

Analyte	Result	PQL	Method	Date Prepared	Date Analyzed	Flags
Client ID:	**DA7SWCS32220919I**					
Laboratory ID:	09-160-04					
alpha-BHC	ND	0.21	EPA 8081B	9-20-22	9-20-22	
gamma-BHC	ND	0.21	EPA 8081B	9-20-22	9-20-22	
beta-BHC	ND	0.21	EPA 8081B	9-20-22	9-20-22	
delta-BHC	ND	0.21	EPA 8081B	9-20-22	9-20-22	
Heptachlor	ND	0.21	EPA 8081B	9-20-22	9-20-22	
Aldrin	ND	0.21	EPA 8081B	9-20-22	9-20-22	
Heptachlor epoxide	ND	0.21	EPA 8081B	9-20-22	9-20-22	
gamma-Chlordane	ND	0.21	EPA 8081B	9-20-22	9-20-22	
alpha-Chlordane	ND	0.21	EPA 8081B	9-20-22	9-20-22	
4,4'-DDE	ND	0.21	EPA 8081B	9-20-22	9-20-22	
Endosulfan I	ND	0.21	EPA 8081B	9-20-22	9-20-22	
Dieldrin	ND	0.21	EPA 8081B	9-20-22	9-20-22	
Endrin	ND	0.21	EPA 8081B	9-20-22	9-20-22	
4,4'-DDD	ND	0.21	EPA 8081B	9-20-22	9-20-22	
Endosulfan II	ND	0.21	EPA 8081B	9-20-22	9-20-22	
4,4'-DDT	ND	4.2	EPA 8081B	9-20-22	9-20-22	
Endrin aldehyde	ND	0.21	EPA 8081B	9-20-22	9-20-22	
Methoxychlor	ND	4.2	EPA 8081B	9-20-22	9-20-22	
Endosulfan sulfate	ND	0.21	EPA 8081B	9-20-22	9-20-22	
Endrin ketone	ND	0.21	EPA 8081B	9-20-22	9-20-22	
Toxaphene	ND	2.1	EPA 8081B	9-20-22	9-20-22	
Tech Chlordane	ND	2.1	EPA 8081B	9-20-22	9-20-22	
Surrogate:	*Percent Recovery*	*Control limits*				
Tetrachloro-m-xylene	*73*	*35-110*				
Decachlorobiphenyl	*73*	*32-122*				

This report pertains to the samples analyzed in accordance with the chain of custody, and is intended only for the use of the individual or company to whom it is addressed.

Date of Report: September 21, 2022
Samples Submitted: September 19, 2022
Laboratory Reference: 2209-160
Project: 11-05150-003

ORGANOCHLORINE PESTICIDES EPA 8081B

Matrix: Soil
Units: ug/Kg (ppb)

Analyte	Result	PQL	Method	Date Prepared	Date Analyzed	Flags
Client ID:	**DA7SWCS33220919I**					
Laboratory ID:	09-160-05					
alpha-BHC	ND	0.21	EPA 8081B	9-20-22	9-20-22	
gamma-BHC	ND	0.21	EPA 8081B	9-20-22	9-20-22	
beta-BHC	ND	0.21	EPA 8081B	9-20-22	9-20-22	
delta-BHC	ND	0.21	EPA 8081B	9-20-22	9-20-22	
Heptachlor	ND	0.21	EPA 8081B	9-20-22	9-20-22	
Aldrin	ND	0.21	EPA 8081B	9-20-22	9-20-22	
Heptachlor epoxide	ND	0.21	EPA 8081B	9-20-22	9-20-22	
gamma-Chlordane	ND	0.21	EPA 8081B	9-20-22	9-20-22	
alpha-Chlordane	ND	0.21	EPA 8081B	9-20-22	9-20-22	
4,4'-DDE	ND	0.21	EPA 8081B	9-20-22	9-20-22	
Endosulfan I	ND	0.21	EPA 8081B	9-20-22	9-20-22	
Dieldrin	ND	0.21	EPA 8081B	9-20-22	9-20-22	
Endrin	ND	0.21	EPA 8081B	9-20-22	9-20-22	
4,4'-DDD	ND	0.21	EPA 8081B	9-20-22	9-20-22	
Endosulfan II	ND	0.21	EPA 8081B	9-20-22	9-20-22	
4,4'-DDT	ND	4.2	EPA 8081B	9-20-22	9-20-22	
Endrin aldehyde	ND	0.21	EPA 8081B	9-20-22	9-20-22	
Methoxychlor	ND	4.2	EPA 8081B	9-20-22	9-20-22	
Endosulfan sulfate	ND	0.21	EPA 8081B	9-20-22	9-20-22	
Endrin ketone	ND	0.21	EPA 8081B	9-20-22	9-20-22	
Toxaphene	ND	2.1	EPA 8081B	9-20-22	9-20-22	
Tech Chlordane	ND	2.1	EPA 8081B	9-20-22	9-20-22	
Surrogate:	*Percent Recovery*	*Control limits*				
Tetrachloro-m-xylene	*78*	*35-110*				
Decachlorobiphenyl	*70*	*32-122*				

This report pertains to the samples analyzed in accordance with the chain of custody, and is intended only for the use of the individual or company to whom it is addressed.

Date of Report: September 21, 2022
Samples Submitted: September 19, 2022
Laboratory Reference: 2209-160
Project: 11-05150-003

ORGANOCHLORINE PESTICIDES EPA 8081B

Matrix: Soil
Units: ug/Kg (ppb)

Analyte	Result	PQL	Method	Date Prepared	Date Analyzed	Flags
Client ID:	**DA7SWCS34220919I**					
Laboratory ID:	09-160-06					
alpha-BHC	ND	0.21	EPA 8081B	9-20-22	9-20-22	
gamma-BHC	ND	0.21	EPA 8081B	9-20-22	9-20-22	
beta-BHC	ND	0.21	EPA 8081B	9-20-22	9-20-22	
delta-BHC	ND	0.21	EPA 8081B	9-20-22	9-20-22	
Heptachlor	ND	0.21	EPA 8081B	9-20-22	9-20-22	
Aldrin	ND	0.21	EPA 8081B	9-20-22	9-20-22	
Heptachlor epoxide	ND	0.21	EPA 8081B	9-20-22	9-20-22	
gamma-Chlordane	ND	0.21	EPA 8081B	9-20-22	9-20-22	
alpha-Chlordane	ND	0.21	EPA 8081B	9-20-22	9-20-22	
4,4'-DDE	ND	0.21	EPA 8081B	9-20-22	9-20-22	
Endosulfan I	ND	0.21	EPA 8081B	9-20-22	9-20-22	
Dieldrin	ND	0.21	EPA 8081B	9-20-22	9-20-22	
Endrin	ND	0.21	EPA 8081B	9-20-22	9-20-22	
4,4'-DDD	ND	0.21	EPA 8081B	9-20-22	9-20-22	
Endosulfan II	ND	0.21	EPA 8081B	9-20-22	9-20-22	
4,4'-DDT	ND	4.2	EPA 8081B	9-20-22	9-20-22	
Endrin aldehyde	ND	0.21	EPA 8081B	9-20-22	9-20-22	
Methoxychlor	ND	4.2	EPA 8081B	9-20-22	9-20-22	
Endosulfan sulfate	ND	0.21	EPA 8081B	9-20-22	9-20-22	
Endrin ketone	ND	0.21	EPA 8081B	9-20-22	9-20-22	
Toxaphene	ND	2.1	EPA 8081B	9-20-22	9-20-22	
Tech Chlordane	ND	2.1	EPA 8081B	9-20-22	9-20-22	
Surrogate:	*Percent Recovery*	*Control limits*				
Tetrachloro-m-xylene	*90*	*35-110*				
Decachlorobiphenyl	*77*	*32-122*				

This report pertains to the samples analyzed in accordance with the chain of custody, and is intended only for the use of the individual or company to whom it is addressed.

Date of Report: September 21, 2022
Samples Submitted: September 19, 2022
Laboratory Reference: 2209-160
Project: 11-05150-003

ORGANOCHLORINE PESTICIDES EPA 8081B QUALITY CONTROL

Matrix: Soil
Units: ug/Kg (ppb)

Analyte	Result	PQL	Method	Date Prepared	Date Analyzed	Flags
METHOD BLANK						
Laboratory ID:	MB0920S2					
alpha-BHC	ND	0.20	EPA 8081B	9-20-22	9-20-22	
gamma-BHC	ND	0.20	EPA 8081B	9-20-22	9-20-22	
beta-BHC	ND	0.20	EPA 8081B	9-20-22	9-20-22	
delta-BHC	ND	0.20	EPA 8081B	9-20-22	9-20-22	
Heptachlor	ND	0.20	EPA 8081B	9-20-22	9-20-22	
Aldrin	ND	0.20	EPA 8081B	9-20-22	9-20-22	
Heptachlor epoxide	ND	0.20	EPA 8081B	9-20-22	9-20-22	
gamma-Chlordane	ND	0.20	EPA 8081B	9-20-22	9-20-22	
alpha-Chlordane	ND	0.20	EPA 8081B	9-20-22	9-20-22	
4,4'-DDE	ND	0.20	EPA 8081B	9-20-22	9-20-22	
Endosulfan I	ND	0.20	EPA 8081B	9-20-22	9-20-22	
Dieldrin	ND	0.20	EPA 8081B	9-20-22	9-20-22	
Endrin	ND	0.20	EPA 8081B	9-20-22	9-20-22	
4,4'-DDD	ND	0.20	EPA 8081B	9-20-22	9-20-22	
Endosulfan II	ND	0.20	EPA 8081B	9-20-22	9-20-22	
4,4'-DDT	ND	0.20	EPA 8081B	9-20-22	9-20-22	
Endrin aldehyde	ND	0.20	EPA 8081B	9-20-22	9-20-22	
Methoxychlor	ND	0.20	EPA 8081B	9-20-22	9-20-22	
Endosulfan sulfate	ND	0.20	EPA 8081B	9-20-22	9-20-22	
Endrin ketone	ND	0.20	EPA 8081B	9-20-22	9-20-22	
Toxaphene	ND	2.0	EPA 8081B	9-20-22	9-20-22	
Tech Chlordane	ND	2.0	EPA 8081B	9-20-22	9-20-22	
Surrogate:	*Percent Recovery*	*Control limits*				
Tetrachloro-m-xylene	*98*	*35-110*				
Decachlorobiphenyl	*90*	*32-122*				

This report pertains to the samples analyzed in accordance with the chain of custody, and is intended only for the use of the individual or company to whom it is addressed.

Date of Report: September 21, 2022
Samples Submitted: September 19, 2022
Laboratory Reference: 2209-160
Project: 11-05150-003

ORGANOCHLORINE PESTICIDES EPA 8081B QUALITY CONTROL

Matrix: Soil
Units: ug/Kg (ppb)

Analyte	Result		Spike Level		Source Result	Percent Recovery		Recovery Limits	RPD	RPD Limit	Flags
SPIKE BLANKS											
Laboratory ID:	SB0920S2										
	SB	SBD	SB	SBD		SB	SBD				
alpha-BHC	**8.03**	**7.43**	10.0	10.0	N/A	**80**	**74**	48-113	8	15	
gamma-BHC	**6.45**	**6.24**	10.0	10.0	N/A	**65**	**62**	51-112	3	15	
beta-BHC	**9.16**	**8.77**	10.0	10.0	N/A	**92**	**88**	52-108	4	15	
delta-BHC	**9.01**	**8.40**	10.0	10.0	N/A	**90**	**84**	51-110	7	15	
Heptachlor	**7.75**	**7.32**	10.0	10.0	N/A	**78**	**73**	49-115	6	15	
Aldrin	**7.65**	**7.04**	10.0	10.0	N/A	**77**	**70**	52-112	8	15	
Heptachlor epoxide	**9.73**	**9.11**	10.0	10.0	N/A	**97**	**91**	50-116	7	15	
gamma-Chlordane	**9.91**	**9.25**	10.0	10.0	N/A	**99**	**93**	51-110	7	15	
alpha-Chlordane	**9.40**	**8.72**	10.0	10.0	N/A	**94**	**87**	51-110	8	15	
4,4'-DDE	**9.58**	**9.02**	10.0	10.0	N/A	**96**	**90**	52-125	6	15	
Endosulfan I	**7.38**	**6.84**	10.0	10.0	N/A	**74**	**68**	50-111	8	15	
Dieldrin	**9.93**	**9.43**	10.0	10.0	N/A	**99**	**94**	55-118	5	15	
Endrin	**7.29**	**6.78**	10.0	10.0	N/A	**73**	**68**	49-122	7	15	
4,4'-DDD	**9.67**	**9.31**	10.0	10.0	N/A	**97**	**93**	51-120	4	15	
Endosulfan II	**9.89**	**9.48**	10.0	10.0	N/A	**99**	**95**	47-119	4	15	
4,4'-DDT	**8.52**	**8.29**	10.0	10.0	N/A	**85**	**83**	56-125	3	15	
Endrin aldehyde	**8.86**	**8.31**	10.0	10.0	N/A	**89**	**83**	53-112	6	15	
Methoxychlor	**9.66**	**9.25**	10.0	10.0	N/A	**97**	**93**	49-132	4	15	
Endosulfan sulfate	**9.57**	**9.18**	10.0	10.0	N/A	**96**	**92**	52-111	4	15	
Endrin ketone	**10.3**	**9.93**	10.0	10.0	N/A	**103**	**99**	49-110	4	15	
Surrogate:											
Tetrachloro-m-xylene						*91*	*89*	*35-110*			
Decachlorobiphenyl						*88*	*83*	*32-122*			

This report pertains to the samples analyzed in accordance with the chain of custody, and is intended only for the use of the individual or company to whom it is addressed.

Date of Report: September 21, 2022
Samples Submitted: September 19, 2022
Laboratory Reference: 2209-160
Project: 11-05150-003

TOTAL METALS
EPA 6010D/6020B/7471B

Matrix: Soil
Units: mg/Kg (ppm)

Analyte	Result	PQL	Method	Date Prepared	Date Analyzed	Flags
Client ID:	**DA7SWCS30220919I**					
Laboratory ID:	09-160-01					
Arsenic	**ND**	5.4	EPA 6010D	9-20-22	9-20-22	
Barium	**45**	2.7	EPA 6010D	9-20-22	9-20-22	
Cadmium	**ND**	0.54	EPA 6010D	9-20-22	9-20-22	
Chromium	**13**	0.54	EPA 6010D	9-20-22	9-20-22	
Lead	**ND**	5.4	EPA 6010D	9-20-22	9-20-22	
Mercury	**ND**	0.27	EPA 7471B	9-20-22	9-20-22	
Selenium	**0.37**	0.27	EPA 6020B	9-20-22	9-20-22	
Silver	**ND**	1.1	EPA 6010D	9-20-22	9-20-22	
Client ID:	**DA7SWCS31220919I**					
Laboratory ID:	09-160-02					
Arsenic	**ND**	5.2	EPA 6010D	9-20-22	9-20-22	
Barium	**44**	2.6	EPA 6010D	9-20-22	9-20-22	
Cadmium	**ND**	0.52	EPA 6010D	9-20-22	9-20-22	
Chromium	**20**	0.52	EPA 6010D	9-20-22	9-20-22	
Lead	**ND**	5.2	EPA 6010D	9-20-22	9-20-22	
Mercury	**ND**	0.26	EPA 7471B	9-20-22	9-20-22	
Selenium	**ND**	0.26	EPA 6020B	9-20-22	9-20-22	
Silver	**ND**	1.0	EPA 6010D	9-20-22	9-20-22	
Client ID:	**DA7SWCS31220919D**					
Laboratory ID:	09-160-03					
Arsenic	**ND**	5.2	EPA 6010D	9-20-22	9-20-22	
Barium	**47**	2.6	EPA 6010D	9-20-22	9-20-22	
Cadmium	**ND**	0.52	EPA 6010D	9-20-22	9-20-22	
Chromium	**19**	0.52	EPA 6010D	9-20-22	9-20-22	
Lead	**ND**	5.2	EPA 6010D	9-20-22	9-20-22	
Mercury	**ND**	0.26	EPA 7471B	9-20-22	9-20-22	
Selenium	**0.36**	0.26	EPA 6020B	9-20-22	9-20-22	
Silver	**ND**	1.0	EPA 6010D	9-20-22	9-20-22	

This report pertains to the samples analyzed in accordance with the chain of custody, and is intended only for the use of the individual or company to whom it is addressed.

Date of Report: September 21, 2022
Samples Submitted: September 19, 2022
Laboratory Reference: 2209-160
Project: 11-05150-003

TOTAL METALS
EPA 6010D/6020B/7471B

Matrix: Soil
Units: mg/Kg (ppm)

Analyte	Result	PQL	Method	Date Prepared	Date Analyzed	Flags
Client ID:	**DA7SWCS32220919I**					
Laboratory ID:	09-160-04					
Arsenic	**ND**	5.3	EPA 6010D	9-20-22	9-20-22	
Barium	**45**	2.7	EPA 6010D	9-20-22	9-20-22	
Cadmium	**ND**	0.53	EPA 6010D	9-20-22	9-20-22	
Chromium	**14**	0.53	EPA 6010D	9-20-22	9-20-22	
Lead	**ND**	5.3	EPA 6010D	9-20-22	9-20-22	
Mercury	**ND**	0.27	EPA 7471B	9-20-22	9-20-22	
Selenium	**0.30**	0.27	EPA 6020B	9-20-22	9-20-22	
Silver	**ND**	1.1	EPA 6010D	9-20-22	9-20-22	
Client ID:	**DA7SWCS33220919I**					
Laboratory ID:	09-160-05					
Arsenic	**ND**	5.3	EPA 6010D	9-20-22	9-20-22	
Barium	**42**	2.6	EPA 6010D	9-20-22	9-20-22	
Cadmium	**ND**	0.53	EPA 6010D	9-20-22	9-20-22	
Chromium	**17**	0.53	EPA 6010D	9-20-22	9-20-22	
Lead	**ND**	5.3	EPA 6010D	9-20-22	9-20-22	
Mercury	**ND**	0.26	EPA 7471B	9-20-22	9-20-22	
Selenium	**ND**	0.26	EPA 6020B	9-20-22	9-20-22	
Silver	**ND**	1.1	EPA 6010D	9-20-22	9-20-22	
Client ID:	**DA7SWCS34220919I**					
Laboratory ID:	09-160-06					
Arsenic	**ND**	5.2	EPA 6010D	9-20-22	9-20-22	
Barium	**38**	2.6	EPA 6010D	9-20-22	9-20-22	
Cadmium	**ND**	0.52	EPA 6010D	9-20-22	9-20-22	
Chromium	**12**	0.52	EPA 6010D	9-20-22	9-20-22	
Lead	**ND**	5.2	EPA 6010D	9-20-22	9-20-22	
Mercury	**ND**	0.26	EPA 7471B	9-20-22	9-20-22	
Selenium	**ND**	0.26	EPA 6020B	9-20-22	9-20-22	
Silver	**ND**	1.0	EPA 6010D	9-20-22	9-20-22	

This report pertains to the samples analyzed in accordance with the chain of custody, and is intended only for the use of the individual or company to whom it is addressed.

Date of Report: September 21, 2022
Samples Submitted: September 19, 2022
Laboratory Reference: 2209-160
Project: 11-05150-003

TOTAL METALS
EPA 6010D/6020B/7471B
QUALITY CONTROL

Matrix: Soil
Units: mg/Kg (ppm)

Analyte	Result	PQL	Method	Date Prepared	Date Analyzed	Flags
METHOD BLANK						
Laboratory ID:	MB0920SM1					
Arsenic	**ND**	5.0	EPA 6010D	9-20-22	9-20-22	
Barium	**ND**	2.5	EPA 6010D	9-20-22	9-20-22	
Cadmium	**ND**	0.50	EPA 6010D	9-20-22	9-20-22	
Chromium	**ND**	0.50	EPA 6010D	9-20-22	9-20-22	
Lead	**ND**	5.0	EPA 6010D	9-20-22	9-20-22	
Silver	**ND**	1.0	EPA 6010D	9-20-22	9-20-22	
Laboratory ID:	MB0920SM1					
Selenium	**ND**	0.25	EPA 6020B	9-20-22	9-20-22	
Laboratory ID:	MB0920S1					
Mercury	**ND**	0.25	EPA 7471B	9-20-22	9-20-22	

This report pertains to the samples analyzed in accordance with the chain of custody,
and is intended only for the use of the individual or company to whom it is addressed.

Date of Report: September 21, 2022
Samples Submitted: September 19, 2022
Laboratory Reference: 2209-160
Project: 11-05150-003

TOTAL METALS
EPA 6010D/6020B/7471B
QUALITY CONTROL

Matrix: Soil
Units: mg/Kg (ppm)

Analyte	Result		Spike Level		Source Result	Percent Recovery		Recovery Limits	RPD	RPD Limit	Flags
DUPLICATE											
Laboratory ID:	09-160-03										
	ORIG	DUP									
Arsenic	**ND**	**ND**	NA	NA		NA		NA	NA	20	
Barium	**45.3**	**41.2**	NA	NA		NA		NA	9	20	
Cadmium	**ND**	**ND**	NA	NA		NA		NA	NA	20	
Chromium	**18.0**	**15.2**	NA	NA		NA		NA	17	20	
Lead	**ND**	**ND**	NA	NA		NA		NA	NA	20	
Silver	**ND**	**ND**	NA	NA		NA		NA	NA	20	
Laboratory ID:	09-160-03										
Selenium	**0.347**	**0.324**	NA	NA		NA		NA	7	20	
Laboratory ID:	09-149-01										
Mercury	**ND**	**ND**	NA	NA		NA		NA	NA	20	
MATRIX SPIKES											
Laboratory ID:	09-160-03										
	MS	MSD	MS	MSD		MS	MSD				
Arsenic	**101**	**98.3**	100	100	ND	**101**	**98**	75-125	2	20	
Barium	**142**	**143**	100	100	45.3	**97**	**98**	75-125	0	20	
Cadmium	**50.4**	**49.2**	50.0	50.0	ND	**101**	**98**	75-125	2	20	
Chromium	**111**	**109**	100	100	18.0	**93**	**92**	75-125	2	20	
Lead	**239**	**232**	250	250	ND	**96**	**93**	75-125	3	20	
Silver	**23.5**	**23.2**	25.0	25.0	ND	**94**	**93**	75-125	1	20	
Laboratory ID:	09-160-03										
Selenium	**95.8**	**90.0**	100	100	0.347	**95**	**90**	75-125	6	20	
Laboratory ID:	09-149-01										
Mercury	**0.523**	**0.509**	0.500	0.500	0.0489	**95**	**92**	80-120	3	20	

This report pertains to the samples analyzed in accordance with the chain of custody, and is intended only for the use of the individual or company to whom it is addressed.

Date of Report: September 21, 2022
Samples Submitted: September 19, 2022
Laboratory Reference: 2209-160
Project: 11-05150-003

% MOISTURE

Client ID	Lab ID	% Moisture	Date Analyzed
DA7SWCS30220919I	09-160-01	**7**	9-19-22
DA7SWCS31220919I	09-160-02	**4**	9-19-22
DA7SWCS31220919D	09-160-03	**4**	9-19-22
DA7SWCS32220919I	09-160-04	**6**	9-19-22
DA7SWCS33220919I	09-160-05	**5**	9-19-22
DA7SWCS34220919I	09-160-06	**4**	9-19-22

This report pertains to the samples analyzed in accordance with the chain of custody,
and is intended only for the use of the individual or company to whom it is addressed.

OnSite Environmental Inc.

Data Qualifiers and Abbreviations

A - Due to a high sample concentration, the amount spiked is insufficient for meaningful MS/MSD recovery data.

B - The analyte indicated was also found in the blank sample.

C - The duplicate RPD is outside control limits due to high result variability when analyte concentrations are within five times the quantitation limit.

E - The value reported exceeds the quantitation range and is an estimate.

F - Surrogate recovery data is not available due to the high concentration of coeluting target compounds.

H - The analyte indicated is a common laboratory solvent and may have been introduced during sample preparation, and be impacting the sample result.

I - Compound recovery is outside of the control limits.

J - The value reported was below the practical quantitation limit. The value is an estimate.

K - Sample duplicate RPD is outside control limits due to sample inhomogeneity. The sample was re-extracted and re-analyzed with similar results.

L - The RPD is outside of the control limits.

M - Hydrocarbons in the gasoline range are impacting the diesel range result.

M1 - Hydrocarbons in the gasoline range (toluene-naphthalene) are present in the sample.

N - Hydrocarbons in the lube oil range are impacting the diesel range result.

N1 - Hydrocarbons in diesel range are impacting lube oil range results.

O - Hydrocarbons indicative of heavier fuels are present in the sample and are impacting the gasoline result.

P - The RPD of the detected concentrations between the two columns is greater than 40.

Q - Surrogate recovery is outside of the control limits.

S - Surrogate recovery data is not available due to the necessary dilution of the sample.

T - The sample chromatogram is not similar to a typical _____.

U - The analyte was analyzed for, but was not detected above the reported sample quantitation limit.

U1 - The practical quantitation limit is elevated due to interferences present in the sample.

V - Matrix Spike/Matrix Spike Duplicate recoveries are outside control limits due to matrix effects.

W - Matrix Spike/Matrix Spike Duplicate RPD are outside control limits due to matrix effects.

X - Sample extract treated with a mercury cleanup procedure.

X1 - Sample extract treated with a sulfuric acid/silica gel cleanup procedure.

X2 - Sample extract treated with a silica gel cleanup procedure.

Y - The calibration verification for this analyte exceeded the 20% drift specified in methods 8260 & 8270, and therefore the reported result should be considered an estimate. The overall performance of the calibration verification standard met the acceptance criteria of the method.

Y1 - Negative effects of the matrix from this sample on the instrument caused values for this analyte in the bracketing continuing calibration verification standard (CCVs) to be outside of 20% acceptance criteria. Because of this, quantitation limits and sample concentrations should be considered estimates.

Z -

ND - Not Detected at PQL
PQL - Practical Quantitation Limit
RPD - Relative Percent Difference

This report pertains to the samples analyzed in accordance with the chain of custody, and is intended only for the use of the individual or company to whom it is addressed.

Chain of Custody

Page 1 of 1

OnSite Environmental Inc.
Analytical Laboratory Testing Services
14648 NE 95th Street • Redmond, WA 98052
Phone: (425) 883-3881 • www.onsite-env.com

Laboratory Number: 09-160

Company: Anchor QEA (Herrera)
Project Number: 11-05150-003
Project Name: Cedar Hills Regional Landfill
Project Manager: Randy Brown
Sampled by: Camryn Stevens

Turnaround Request (in working days)
(Check One)
- [X] Same Day
- [X] ~~1 Day~~ D3
- [ ] 2 Days
- [ ] 3 Days
- [ ] Standard (7 Days)
- [ ] _____ (other)

Lab ID	Sample Identification	Date Sampled	Time Sampled	Matrix	Number of Containers	NWTPH-HCID	NWTPH-Gx/BTEX (8021☐ 8260☐)	NWTPH-Gx	NWTPH-Dx (Acid / SG Clean-up☐)	Volatiles 8260	Halogenated Volatiles 8260	EDB EPA 8011 (Waters Only)	Semivolatiles 8270/SIM (with low-level PAHs)	PAHs 8270/SIM (low-level)	PCBs 8082	Organochlorine Pesticides 8081	Organophosphorus Pesticides 8270/SIM	Chlorinated Acid Herbicides 8151	Total RCRA Metals 6010B/7471A	Total MTCA Metals	TCLP Metals	HEM (oil and grease) 1664					% Moisture
1	DA75WCS30220919I	9/19/22	1545	Soil	4					X			X		X	X			X								X
2	DA75WCS31220919I		1555		4					X			X		X	X			X								
3	DA75WCS31220919D		1555		4					X			X		X	X			X								
4	DA75WCS32220919I		1605		4					X			X		X	X			X								
5	DA75WCS33220919I		1610		4					X			X		X	X			X								
6	DA75WCS34220919I		1620		4					X			X		X	X			X								
7	VTRP220919I - Trip Blank				3					X																	

	Signature	Company	Date	Time
Relinquished	Camryn Stevens	Herrera	9/19/22	1755
Received		CORE	9/19/22	1755
Relinquished				
Received				
Relinquished				
Received				
Reviewed/Date		Reviewed/Date		

Comments/Special Instructions

Data Package: Standard ☐ Level III ☐ Level IV ☐

Chromatograms with final report ☐ Electronic Data Deliverables (EDDs) ☐

OnSite Environmental Inc.
14648 NE 95th Street, Redmond, WA 98052 • (425) 883-3881

September 26, 2022

Mike Roberts
Anchor QEA
1201 3rd Avenue, Suite 2600
Seattle, WA 98101

Re: Analytical Data for Project 11-05150-003
Laboratory Reference No. 2209-217

Dear Mike:

Enclosed are the analytical results and associated quality control data for samples submitted on September 22, 2022.

The standard policy of OnSite Environmental, Inc. is to store your samples for 30 days from the date of receipt. If you require longer storage, please contact the laboratory.

We appreciate the opportunity to be of service to you on this project. If you have any questions concerning the data, or need additional information, please feel free to call me.

Sincerely,

David Baumeister
Project Manager

Enclosures

This report pertains to the samples analyzed in accordance with the chain of custody, and is intended only for the use of the individual or company to whom it is addressed.

Date of Report: September 26, 2022
Samples Submitted: September 22, 2022
Laboratory Reference: 2209-217
Project: 11-05150-003

Case Narrative

Samples were collected on September 22, 2022 and received by the laboratory on September 22, 2022. They were maintained at the laboratory at a temperature of 2°C to 6°C.

Please note that any and all soil sample results are reported on a dry-weight basis, unless otherwise noted below.

General QA/QC issues associated with the analytical data enclosed in this laboratory report will be indicated with a reference to a comment or explanation on the Data Qualifier page. More complex and involved QA/QC issues will be discussed in detail below.

Volatiles EPA 8260D (soil) Analysis

The percent recovery for Chloroethane is outside the control limits in the Spike Blank and Spike Blank Duplicate. The method allows for a percentage of the compounds to fall outside of the control limits due to the large number of analytes being spiked.

Any other QA/QC issues associated with this extraction and analysis will be indicated with a footnote reference and discussed in detail on the Data Qualifier page.

This report pertains to the samples analyzed in accordance with the chain of custody, and is intended only for the use of the individual or company to whom it is addressed.

Date of Report: September 26, 2022
Samples Submitted: September 22, 2022
Laboratory Reference: 2209-217
Project: 11-05150-003

VOLATILE ORGANICS EPA 8260D/SIM
page 1 of 2

Matrix: Soil
Units: mg/kg

Analyte	Result	PQL	Method	Date Prepared	Date Analyzed	Flags
Client ID:	**DA7SWCS35220922I**					
Laboratory ID:	09-217-01					
Dichlorodifluoromethane	ND	0.00096	EPA 8260D	9-23-22	9-23-22	
Chloromethane	ND	0.0043	EPA 8260D	9-23-22	9-23-22	
Vinyl Chloride	ND	0.00069	EPA 8260D	9-23-22	9-23-22	
Bromomethane	ND	0.0034	EPA 8260D	9-23-22	9-23-22	
Chloroethane	ND	0.0034	EPA 8260D	9-23-22	9-23-22	
Trichlorofluoromethane	ND	0.00069	EPA 8260D	9-23-22	9-23-22	
1,1-Dichloroethene	ND	0.00069	EPA 8260D	9-23-22	9-23-22	
Acetone	0.084	0.010	EPA 8260D	9-23-22	9-23-22	
Iodomethane	ND	0.0034	EPA 8260D	9-23-22	9-23-22	
Carbon Disulfide	ND	0.00069	EPA 8260D	9-23-22	9-23-22	
Methylene Chloride	ND	0.0045	EPA 8260D	9-23-22	9-23-22	
(trans) 1,2-Dichloroethene	ND	0.00069	EPA 8260D	9-23-22	9-23-22	
Methyl t-Butyl Ether	ND	0.00069	EPA 8260D	9-23-22	9-23-22	
1,1-Dichloroethane	ND	0.00069	EPA 8260D	9-23-22	9-23-22	
Vinyl Acetate	ND	0.0034	EPA 8260D	9-23-22	9-23-22	
2,2-Dichloropropane	ND	0.00069	EPA 8260D	9-23-22	9-23-22	
(cis) 1,2-Dichloroethene	ND	0.00069	EPA 8260D	9-23-22	9-23-22	
2-Butanone	0.019	0.0034	EPA 8260D	9-23-22	9-23-22	
Bromochloromethane	ND	0.00069	EPA 8260D	9-23-22	9-23-22	
Chloroform	ND	0.00069	EPA 8260D	9-23-22	9-23-22	
1,1,1-Trichloroethane	ND	0.00069	EPA 8260D	9-23-22	9-23-22	
Carbon Tetrachloride	ND	0.00069	EPA 8260D	9-23-22	9-23-22	
1,1-Dichloropropene	ND	0.00069	EPA 8260D	9-23-22	9-23-22	
Benzene	ND	0.00069	EPA 8260D	9-23-22	9-23-22	
1,2-Dichloroethane	ND	0.00069	EPA 8260D	9-23-22	9-23-22	
Trichloroethene	ND	0.00069	EPA 8260D	9-23-22	9-23-22	
1,2-Dichloropropane	ND	0.00069	EPA 8260D	9-23-22	9-23-22	
Dibromomethane	ND	0.00069	EPA 8260D	9-23-22	9-23-22	
Bromodichloromethane	ND	0.00069	EPA 8260D	9-23-22	9-23-22	
2-Chloroethyl Vinyl Ether	ND	0.0034	EPA 8260D	9-23-22	9-23-22	
(cis) 1,3-Dichloropropene	ND	0.00069	EPA 8260D	9-23-22	9-23-22	
Methyl Isobutyl Ketone	ND	0.0034	EPA 8260D	9-23-22	9-23-22	
Toluene	ND	0.0034	EPA 8260D	9-23-22	9-23-22	
(trans) 1,3-Dichloropropene	ND	0.00069	EPA 8260D	9-23-22	9-23-22	

This report pertains to the samples analyzed in accordance with the chain of custody,
and is intended only for the use of the individual or company to whom it is addressed.

Date of Report: September 26, 2022
Samples Submitted: September 22, 2022
Laboratory Reference: 2209-217
Project: 11-05150-003

VOLATILE ORGANICS EPA 8260D/SIM
page 2 of 2

Analyte	Result	PQL	Method	Date Prepared	Date Analyzed	Flags
Client ID:	**DA7SWCS35220922I**					
Laboratory ID:	09-217-01					
1,1,2-Trichloroethane	ND	0.00069	EPA 8260D	9-23-22	9-23-22	
Tetrachloroethene	ND	0.00069	EPA 8260D	9-23-22	9-23-22	
1,3-Dichloropropane	ND	0.00069	EPA 8260D	9-23-22	9-23-22	
2-Hexanone	ND	0.0034	EPA 8260D	9-23-22	9-23-22	
Dibromochloromethane	ND	0.00069	EPA 8260D	9-23-22	9-23-22	
1,2-Dibromoethane	ND	0.000034	EPA 8260D/SIM	9-23-22	9-23-22	
Chlorobenzene	ND	0.00069	EPA 8260D	9-23-22	9-23-22	
1,1,1,2-Tetrachloroethane	ND	0.00069	EPA 8260D	9-23-22	9-23-22	
Ethylbenzene	ND	0.00069	EPA 8260D	9-23-22	9-23-22	
m,p-Xylene	ND	0.0014	EPA 8260D	9-23-22	9-23-22	
o-Xylene	ND	0.00069	EPA 8260D	9-23-22	9-23-22	
Styrene	ND	0.00069	EPA 8260D	9-23-22	9-23-22	
Bromoform	ND	0.0034	EPA 8260D	9-23-22	9-23-22	
Isopropylbenzene	ND	0.00069	EPA 8260D	9-23-22	9-23-22	
Bromobenzene	ND	0.00069	EPA 8260D	9-23-22	9-23-22	
1,1,2,2-Tetrachloroethane	ND	0.00069	EPA 8260D	9-23-22	9-23-22	
1,2,3-Trichloropropane	ND	0.00069	EPA 8260D	9-23-22	9-23-22	
n-Propylbenzene	ND	0.00069	EPA 8260D	9-23-22	9-23-22	
2-Chlorotoluene	ND	0.00069	EPA 8260D	9-23-22	9-23-22	
4-Chlorotoluene	ND	0.00069	EPA 8260D	9-23-22	9-23-22	
1,3,5-Trimethylbenzene	ND	0.00069	EPA 8260D	9-23-22	9-23-22	
tert-Butylbenzene	ND	0.00069	EPA 8260D	9-23-22	9-23-22	
1,2,4-Trimethylbenzene	ND	0.00069	EPA 8260D	9-23-22	9-23-22	
sec-Butylbenzene	ND	0.00069	EPA 8260D	9-23-22	9-23-22	
1,3-Dichlorobenzene	ND	0.00069	EPA 8260D	9-23-22	9-23-22	
p-Isopropyltoluene	ND	0.00069	EPA 8260D	9-23-22	9-23-22	
1,4-Dichlorobenzene	ND	0.00069	EPA 8260D	9-23-22	9-23-22	
1,2-Dichlorobenzene	ND	0.00069	EPA 8260D	9-23-22	9-23-22	
n-Butylbenzene	ND	0.00069	EPA 8260D	9-23-22	9-23-22	
1,2-Dibromo-3-chloropropane	ND	0.0034	EPA 8260D	9-23-22	9-23-22	
1,2,4-Trichlorobenzene	ND	0.00069	EPA 8260D	9-23-22	9-23-22	
Hexachlorobutadiene	ND	0.0034	EPA 8260D	9-23-22	9-23-22	
Naphthalene	ND	0.0034	EPA 8260D	9-23-22	9-23-22	
1,2,3-Trichlorobenzene	ND	0.00069	EPA 8260D	9-23-22	9-23-22	
Surrogate:	*Percent Recovery*	*Control Limits*				
Dibromofluoromethane	*107*	*75-130*				
Toluene-d8	*100*	*78-128*				
4-Bromofluorobenzene	*96*	*71-130*				

This report pertains to the samples analyzed in accordance with the chain of custody, and is intended only for the use of the individual or company to whom it is addressed.

Date of Report: September 26, 2022
Samples Submitted: September 22, 2022
Laboratory Reference: 2209-217
Project: 11-05150-003

VOLATILE ORGANICS EPA 8260D/SIM
page 1 of 2

Matrix: Soil
Units: mg/kg

Analyte	Result	PQL	Method	Date Prepared	Date Analyzed	Flags
Client ID:	**DA7SWCS36220922I**					
Laboratory ID:	09-217-02					
Dichlorodifluoromethane	ND	0.00073	EPA 8260D	9-23-22	9-23-22	
Chloromethane	ND	0.0033	EPA 8260D	9-23-22	9-23-22	
Vinyl Chloride	ND	0.00052	EPA 8260D	9-23-22	9-23-22	
Bromomethane	ND	0.0026	EPA 8260D	9-23-22	9-23-22	
Chloroethane	ND	0.0026	EPA 8260D	9-23-22	9-23-22	
Trichlorofluoromethane	ND	0.00052	EPA 8260D	9-23-22	9-23-22	
1,1-Dichloroethene	ND	0.00052	EPA 8260D	9-23-22	9-23-22	
Acetone	ND	0.0078	EPA 8260D	9-23-22	9-23-22	
Iodomethane	ND	0.0026	EPA 8260D	9-23-22	9-23-22	
Carbon Disulfide	ND	0.00052	EPA 8260D	9-23-22	9-23-22	
Methylene Chloride	ND	0.0034	EPA 8260D	9-23-22	9-23-22	
(trans) 1,2-Dichloroethene	ND	0.00052	EPA 8260D	9-23-22	9-23-22	
Methyl t-Butyl Ether	ND	0.00052	EPA 8260D	9-23-22	9-23-22	
1,1-Dichloroethane	ND	0.00052	EPA 8260D	9-23-22	9-23-22	
Vinyl Acetate	ND	0.0026	EPA 8260D	9-23-22	9-23-22	
2,2-Dichloropropane	ND	0.00052	EPA 8260D	9-23-22	9-23-22	
(cis) 1,2-Dichloroethene	ND	0.00052	EPA 8260D	9-23-22	9-23-22	
2-Butanone	ND	0.0026	EPA 8260D	9-23-22	9-23-22	
Bromochloromethane	ND	0.00052	EPA 8260D	9-23-22	9-23-22	
Chloroform	ND	0.00052	EPA 8260D	9-23-22	9-23-22	
1,1,1-Trichloroethane	ND	0.00052	EPA 8260D	9-23-22	9-23-22	
Carbon Tetrachloride	ND	0.00052	EPA 8260D	9-23-22	9-23-22	
1,1-Dichloropropene	ND	0.00052	EPA 8260D	9-23-22	9-23-22	
Benzene	ND	0.00052	EPA 8260D	9-23-22	9-23-22	
1,2-Dichloroethane	ND	0.00052	EPA 8260D	9-23-22	9-23-22	
Trichloroethene	ND	0.00052	EPA 8260D	9-23-22	9-23-22	
1,2-Dichloropropane	ND	0.00052	EPA 8260D	9-23-22	9-23-22	
Dibromomethane	ND	0.00052	EPA 8260D	9-23-22	9-23-22	
Bromodichloromethane	ND	0.00052	EPA 8260D	9-23-22	9-23-22	
2-Chloroethyl Vinyl Ether	ND	0.0026	EPA 8260D	9-23-22	9-23-22	
(cis) 1,3-Dichloropropene	ND	0.00052	EPA 8260D	9-23-22	9-23-22	
Methyl Isobutyl Ketone	ND	0.0026	EPA 8260D	9-23-22	9-23-22	
Toluene	ND	0.0026	EPA 8260D	9-23-22	9-23-22	
(trans) 1,3-Dichloropropene	ND	0.00052	EPA 8260D	9-23-22	9-23-22	

This report pertains to the samples analyzed in accordance with the chain of custody, and is intended only for the use of the individual or company to whom it is addressed.

Date of Report: September 26, 2022
Samples Submitted: September 22, 2022
Laboratory Reference: 2209-217
Project: 11-05150-003

VOLATILE ORGANICS EPA 8260D/SIM
page 2 of 2

Analyte	Result	PQL	Method	Date Prepared	Date Analyzed	Flags
Client ID:	**DA7SWCS36220922I**					
Laboratory ID:	09-217-02					
1,1,2-Trichloroethane	ND	0.00052	EPA 8260D	9-23-22	9-23-22	
Tetrachloroethene	ND	0.00052	EPA 8260D	9-23-22	9-23-22	
1,3-Dichloropropane	ND	0.00052	EPA 8260D	9-23-22	9-23-22	
2-Hexanone	ND	0.0026	EPA 8260D	9-23-22	9-23-22	
Dibromochloromethane	ND	0.00052	EPA 8260D	9-23-22	9-23-22	
1,2-Dibromoethane	ND	0.000026	EPA 8260D/SIM	9-23-22	9-23-22	
Chlorobenzene	ND	0.00052	EPA 8260D	9-23-22	9-23-22	
1,1,1,2-Tetrachloroethane	ND	0.00052	EPA 8260D	9-23-22	9-23-22	
Ethylbenzene	ND	0.00052	EPA 8260D	9-23-22	9-23-22	
m,p-Xylene	ND	0.0010	EPA 8260D	9-23-22	9-23-22	
o-Xylene	ND	0.00052	EPA 8260D	9-23-22	9-23-22	
Styrene	ND	0.00052	EPA 8260D	9-23-22	9-23-22	
Bromoform	ND	0.0026	EPA 8260D	9-23-22	9-23-22	
Isopropylbenzene	ND	0.00052	EPA 8260D	9-23-22	9-23-22	
Bromobenzene	ND	0.00052	EPA 8260D	9-23-22	9-23-22	
1,1,2,2-Tetrachloroethane	ND	0.00052	EPA 8260D	9-23-22	9-23-22	
1,2,3-Trichloropropane	ND	0.00052	EPA 8260D	9-23-22	9-23-22	
n-Propylbenzene	ND	0.00052	EPA 8260D	9-23-22	9-23-22	
2-Chlorotoluene	ND	0.00052	EPA 8260D	9-23-22	9-23-22	
4-Chlorotoluene	ND	0.00052	EPA 8260D	9-23-22	9-23-22	
1,3,5-Trimethylbenzene	ND	0.00052	EPA 8260D	9-23-22	9-23-22	
tert-Butylbenzene	ND	0.00052	EPA 8260D	9-23-22	9-23-22	
1,2,4-Trimethylbenzene	ND	0.00052	EPA 8260D	9-23-22	9-23-22	
sec-Butylbenzene	ND	0.00052	EPA 8260D	9-23-22	9-23-22	
1,3-Dichlorobenzene	ND	0.00052	EPA 8260D	9-23-22	9-23-22	
p-Isopropyltoluene	ND	0.00052	EPA 8260D	9-23-22	9-23-22	
1,4-Dichlorobenzene	ND	0.00052	EPA 8260D	9-23-22	9-23-22	
1,2-Dichlorobenzene	ND	0.00052	EPA 8260D	9-23-22	9-23-22	
n-Butylbenzene	ND	0.00052	EPA 8260D	9-23-22	9-23-22	
1,2-Dibromo-3-chloropropane	ND	0.0026	EPA 8260D	9-23-22	9-23-22	
1,2,4-Trichlorobenzene	ND	0.00052	EPA 8260D	9-23-22	9-23-22	
Hexachlorobutadiene	ND	0.0026	EPA 8260D	9-23-22	9-23-22	
Naphthalene	ND	0.0026	EPA 8260D	9-23-22	9-23-22	
1,2,3-Trichlorobenzene	ND	0.00052	EPA 8260D	9-23-22	9-23-22	
Surrogate:	*Percent Recovery*	*Control Limits*				
Dibromofluoromethane	*103*	*75-130*				
Toluene-d8	*100*	*78-128*				
4-Bromofluorobenzene	*100*	*71-130*				

This report pertains to the samples analyzed in accordance with the chain of custody, and is intended only for the use of the individual or company to whom it is addressed.

Date of Report: September 26, 2022
Samples Submitted: September 22, 2022
Laboratory Reference: 2209-217
Project: 11-05150-003

VOLATILE ORGANICS EPA 8260D/SIM
page 1 of 2

Matrix: Soil
Units: mg/kg

Analyte	Result	PQL	Method	Date Prepared	Date Analyzed	Flags
Client ID:	**DA7SWCS37220922I**					
Laboratory ID:	09-217-03					
Dichlorodifluoromethane	ND	0.00095	EPA 8260D	9-23-22	9-23-22	
Chloromethane	ND	0.0043	EPA 8260D	9-23-22	9-23-22	
Vinyl Chloride	ND	0.00068	EPA 8260D	9-23-22	9-23-22	
Bromomethane	ND	0.0034	EPA 8260D	9-23-22	9-23-22	
Chloroethane	ND	0.0034	EPA 8260D	9-23-22	9-23-22	
Trichlorofluoromethane	ND	0.00068	EPA 8260D	9-23-22	9-23-22	
1,1-Dichloroethene	ND	0.00068	EPA 8260D	9-23-22	9-23-22	
Acetone	ND	0.010	EPA 8260D	9-23-22	9-23-22	
Iodomethane	ND	0.0034	EPA 8260D	9-23-22	9-23-22	
Carbon Disulfide	ND	0.00068	EPA 8260D	9-23-22	9-23-22	
Methylene Chloride	ND	0.0045	EPA 8260D	9-23-22	9-23-22	
(trans) 1,2-Dichloroethene	ND	0.00068	EPA 8260D	9-23-22	9-23-22	
Methyl t-Butyl Ether	ND	0.00068	EPA 8260D	9-23-22	9-23-22	
1,1-Dichloroethane	ND	0.00068	EPA 8260D	9-23-22	9-23-22	
Vinyl Acetate	ND	0.0034	EPA 8260D	9-23-22	9-23-22	
2,2-Dichloropropane	ND	0.00068	EPA 8260D	9-23-22	9-23-22	
(cis) 1,2-Dichloroethene	ND	0.00068	EPA 8260D	9-23-22	9-23-22	
2-Butanone	ND	0.0034	EPA 8260D	9-23-22	9-23-22	
Bromochloromethane	ND	0.00068	EPA 8260D	9-23-22	9-23-22	
Chloroform	ND	0.00068	EPA 8260D	9-23-22	9-23-22	
1,1,1-Trichloroethane	ND	0.00068	EPA 8260D	9-23-22	9-23-22	
Carbon Tetrachloride	ND	0.00068	EPA 8260D	9-23-22	9-23-22	
1,1-Dichloropropene	ND	0.00068	EPA 8260D	9-23-22	9-23-22	
Benzene	ND	0.00068	EPA 8260D	9-23-22	9-23-22	
1,2-Dichloroethane	ND	0.00068	EPA 8260D	9-23-22	9-23-22	
Trichloroethene	ND	0.00068	EPA 8260D	9-23-22	9-23-22	
1,2-Dichloropropane	ND	0.00068	EPA 8260D	9-23-22	9-23-22	
Dibromomethane	ND	0.00068	EPA 8260D	9-23-22	9-23-22	
Bromodichloromethane	ND	0.00068	EPA 8260D	9-23-22	9-23-22	
2-Chloroethyl Vinyl Ether	ND	0.0034	EPA 8260D	9-23-22	9-23-22	
(cis) 1,3-Dichloropropene	ND	0.00068	EPA 8260D	9-23-22	9-23-22	
Methyl Isobutyl Ketone	ND	0.0034	EPA 8260D	9-23-22	9-23-22	
Toluene	ND	0.0034	EPA 8260D	9-23-22	9-23-22	
(trans) 1,3-Dichloropropene	ND	0.00068	EPA 8260D	9-23-22	9-23-22	

This report pertains to the samples analyzed in accordance with the chain of custody,
and is intended only for the use of the individual or company to whom it is addressed.

Date of Report: September 26, 2022
Samples Submitted: September 22, 2022
Laboratory Reference: 2209-217
Project: 11-05150-003

VOLATILE ORGANICS EPA 8260D/SIM
page 2 of 2

Analyte	Result	PQL	Method	Date Prepared	Date Analyzed	Flags
Client ID:	**DA7SWCS37220922I**					
Laboratory ID:	09-217-03					
1,1,2-Trichloroethane	ND	0.00068	EPA 8260D	9-23-22	9-23-22	
Tetrachloroethene	ND	0.00068	EPA 8260D	9-23-22	9-23-22	
1,3-Dichloropropane	ND	0.00068	EPA 8260D	9-23-22	9-23-22	
2-Hexanone	ND	0.0034	EPA 8260D	9-23-22	9-23-22	
Dibromochloromethane	ND	0.00068	EPA 8260D	9-23-22	9-23-22	
1,2-Dibromoethane	ND	0.000034	EPA 8260D/SIM	9-23-22	9-23-22	
Chlorobenzene	ND	0.00068	EPA 8260D	9-23-22	9-23-22	
1,1,1,2-Tetrachloroethane	ND	0.00068	EPA 8260D	9-23-22	9-23-22	
Ethylbenzene	ND	0.00068	EPA 8260D	9-23-22	9-23-22	
m,p-Xylene	ND	0.0014	EPA 8260D	9-23-22	9-23-22	
o-Xylene	ND	0.00068	EPA 8260D	9-23-22	9-23-22	
Styrene	ND	0.00068	EPA 8260D	9-23-22	9-23-22	
Bromoform	ND	0.0034	EPA 8260D	9-23-22	9-23-22	
Isopropylbenzene	ND	0.00068	EPA 8260D	9-23-22	9-23-22	
Bromobenzene	ND	0.00068	EPA 8260D	9-23-22	9-23-22	
1,1,2,2-Tetrachloroethane	ND	0.00068	EPA 8260D	9-23-22	9-23-22	
1,2,3-Trichloropropane	ND	0.00068	EPA 8260D	9-23-22	9-23-22	
n-Propylbenzene	ND	0.00068	EPA 8260D	9-23-22	9-23-22	
2-Chlorotoluene	ND	0.00068	EPA 8260D	9-23-22	9-23-22	
4-Chlorotoluene	ND	0.00068	EPA 8260D	9-23-22	9-23-22	
1,3,5-Trimethylbenzene	ND	0.00068	EPA 8260D	9-23-22	9-23-22	
tert-Butylbenzene	ND	0.00068	EPA 8260D	9-23-22	9-23-22	
1,2,4-Trimethylbenzene	ND	0.00068	EPA 8260D	9-23-22	9-23-22	
sec-Butylbenzene	ND	0.00068	EPA 8260D	9-23-22	9-23-22	
1,3-Dichlorobenzene	ND	0.00068	EPA 8260D	9-23-22	9-23-22	
p-Isopropyltoluene	ND	0.00068	EPA 8260D	9-23-22	9-23-22	
1,4-Dichlorobenzene	ND	0.00068	EPA 8260D	9-23-22	9-23-22	
1,2-Dichlorobenzene	ND	0.00068	EPA 8260D	9-23-22	9-23-22	
n-Butylbenzene	ND	0.00068	EPA 8260D	9-23-22	9-23-22	
1,2-Dibromo-3-chloropropane	ND	0.0034	EPA 8260D	9-23-22	9-23-22	
1,2,4-Trichlorobenzene	ND	0.00068	EPA 8260D	9-23-22	9-23-22	
Hexachlorobutadiene	ND	0.0034	EPA 8260D	9-23-22	9-23-22	
Naphthalene	ND	0.0034	EPA 8260D	9-23-22	9-23-22	
1,2,3-Trichlorobenzene	ND	0.00068	EPA 8260D	9-23-22	9-23-22	
Surrogate:	*Percent Recovery*	*Control Limits*				
Dibromofluoromethane	*102*	*75-130*				
Toluene-d8	*100*	*78-128*				
4-Bromofluorobenzene	*97*	*71-130*				

This report pertains to the samples analyzed in accordance with the chain of custody, and is intended only for the use of the individual or company to whom it is addressed.

Date of Report: September 26, 2022
Samples Submitted: September 22, 2022
Laboratory Reference: 2209-217
Project: 11-05150-003

VOLATILE ORGANICS EPA 8260D/SIM
page 1 of 2

Matrix: Soil
Units: mg/kg

Analyte	Result	PQL	Method	Date Prepared	Date Analyzed	Flags
Client ID:	**DA7SWCS38220922I**					
Laboratory ID:	09-217-04					
Dichlorodifluoromethane	ND	0.00091	EPA 8260D	9-23-22	9-23-22	
Chloromethane	ND	0.0041	EPA 8260D	9-23-22	9-23-22	
Vinyl Chloride	ND	0.00065	EPA 8260D	9-23-22	9-23-22	
Bromomethane	ND	0.0032	EPA 8260D	9-23-22	9-23-22	
Chloroethane	ND	0.0032	EPA 8260D	9-23-22	9-23-22	
Trichlorofluoromethane	ND	0.00065	EPA 8260D	9-23-22	9-23-22	
1,1-Dichloroethene	ND	0.00065	EPA 8260D	9-23-22	9-23-22	
Acetone	ND	0.0098	EPA 8260D	9-23-22	9-23-22	
Iodomethane	ND	0.0032	EPA 8260D	9-23-22	9-23-22	
Carbon Disulfide	ND	0.00065	EPA 8260D	9-23-22	9-23-22	
Methylene Chloride	ND	0.0043	EPA 8260D	9-23-22	9-23-22	
(trans) 1,2-Dichloroethene	ND	0.00065	EPA 8260D	9-23-22	9-23-22	
Methyl t-Butyl Ether	ND	0.00065	EPA 8260D	9-23-22	9-23-22	
1,1-Dichloroethane	ND	0.00065	EPA 8260D	9-23-22	9-23-22	
Vinyl Acetate	ND	0.0032	EPA 8260D	9-23-22	9-23-22	
2,2-Dichloropropane	ND	0.00065	EPA 8260D	9-23-22	9-23-22	
(cis) 1,2-Dichloroethene	ND	0.00065	EPA 8260D	9-23-22	9-23-22	
2-Butanone	0.0062	0.0032	EPA 8260D	9-23-22	9-23-22	
Bromochloromethane	ND	0.00065	EPA 8260D	9-23-22	9-23-22	
Chloroform	ND	0.00065	EPA 8260D	9-23-22	9-23-22	
1,1,1-Trichloroethane	ND	0.00065	EPA 8260D	9-23-22	9-23-22	
Carbon Tetrachloride	ND	0.00065	EPA 8260D	9-23-22	9-23-22	
1,1-Dichloropropene	ND	0.00065	EPA 8260D	9-23-22	9-23-22	
Benzene	ND	0.00065	EPA 8260D	9-23-22	9-23-22	
1,2-Dichloroethane	ND	0.00065	EPA 8260D	9-23-22	9-23-22	
Trichloroethene	ND	0.00065	EPA 8260D	9-23-22	9-23-22	
1,2-Dichloropropane	ND	0.00065	EPA 8260D	9-23-22	9-23-22	
Dibromomethane	ND	0.00065	EPA 8260D	9-23-22	9-23-22	
Bromodichloromethane	ND	0.00065	EPA 8260D	9-23-22	9-23-22	
2-Chloroethyl Vinyl Ether	ND	0.0032	EPA 8260D	9-23-22	9-23-22	
(cis) 1,3-Dichloropropene	ND	0.00065	EPA 8260D	9-23-22	9-23-22	
Methyl Isobutyl Ketone	ND	0.0032	EPA 8260D	9-23-22	9-23-22	
Toluene	ND	0.0032	EPA 8260D	9-23-22	9-23-22	
(trans) 1,3-Dichloropropene	ND	0.00065	EPA 8260D	9-23-22	9-23-22	

This report pertains to the samples analyzed in accordance with the chain of custody, and is intended only for the use of the individual or company to whom it is addressed.

Date of Report: September 26, 2022
Samples Submitted: September 22, 2022
Laboratory Reference: 2209-217
Project: 11-05150-003

VOLATILE ORGANICS EPA 8260D/SIM
page 2 of 2

Analyte	Result	PQL	Method	Date Prepared	Date Analyzed	Flags
Client ID:	**DA7SWCS38220922I**					
Laboratory ID:	09-217-04					
1,1,2-Trichloroethane	ND	0.00065	EPA 8260D	9-23-22	9-23-22	
Tetrachloroethene	ND	0.00065	EPA 8260D	9-23-22	9-23-22	
1,3-Dichloropropane	ND	0.00065	EPA 8260D	9-23-22	9-23-22	
2-Hexanone	ND	0.0032	EPA 8260D	9-23-22	9-23-22	
Dibromochloromethane	ND	0.00065	EPA 8260D	9-23-22	9-23-22	
1,2-Dibromoethane	ND	0.000032	EPA 8260D/SIM	9-23-22	9-23-22	
Chlorobenzene	ND	0.00065	EPA 8260D	9-23-22	9-23-22	
1,1,1,2-Tetrachloroethane	ND	0.00065	EPA 8260D	9-23-22	9-23-22	
Ethylbenzene	ND	0.00065	EPA 8260D	9-23-22	9-23-22	
m,p-Xylene	ND	0.0013	EPA 8260D	9-23-22	9-23-22	
o-Xylene	ND	0.00065	EPA 8260D	9-23-22	9-23-22	
Styrene	ND	0.00065	EPA 8260D	9-23-22	9-23-22	
Bromoform	ND	0.0032	EPA 8260D	9-23-22	9-23-22	
Isopropylbenzene	ND	0.00065	EPA 8260D	9-23-22	9-23-22	
Bromobenzene	ND	0.00065	EPA 8260D	9-23-22	9-23-22	
1,1,2,2-Tetrachloroethane	ND	0.00065	EPA 8260D	9-23-22	9-23-22	
1,2,3-Trichloropropane	ND	0.00065	EPA 8260D	9-23-22	9-23-22	
n-Propylbenzene	ND	0.00065	EPA 8260D	9-23-22	9-23-22	
2-Chlorotoluene	ND	0.00065	EPA 8260D	9-23-22	9-23-22	
4-Chlorotoluene	ND	0.00065	EPA 8260D	9-23-22	9-23-22	
1,3,5-Trimethylbenzene	ND	0.00065	EPA 8260D	9-23-22	9-23-22	
tert-Butylbenzene	ND	0.00065	EPA 8260D	9-23-22	9-23-22	
1,2,4-Trimethylbenzene	ND	0.00065	EPA 8260D	9-23-22	9-23-22	
sec-Butylbenzene	ND	0.00065	EPA 8260D	9-23-22	9-23-22	
1,3-Dichlorobenzene	ND	0.00065	EPA 8260D	9-23-22	9-23-22	
p-Isopropyltoluene	ND	0.00065	EPA 8260D	9-23-22	9-23-22	
1,4-Dichlorobenzene	ND	0.00065	EPA 8260D	9-23-22	9-23-22	
1,2-Dichlorobenzene	ND	0.00065	EPA 8260D	9-23-22	9-23-22	
n-Butylbenzene	ND	0.00065	EPA 8260D	9-23-22	9-23-22	
1,2-Dibromo-3-chloropropane	ND	0.0032	EPA 8260D	9-23-22	9-23-22	
1,2,4-Trichlorobenzene	ND	0.00065	EPA 8260D	9-23-22	9-23-22	
Hexachlorobutadiene	ND	0.0032	EPA 8260D	9-23-22	9-23-22	
Naphthalene	ND	0.0032	EPA 8260D	9-23-22	9-23-22	
1,2,3-Trichlorobenzene	ND	0.00065	EPA 8260D	9-23-22	9-23-22	
Surrogate:	*Percent Recovery*	*Control Limits*				
Dibromofluoromethane	*107*	*75-130*				
Toluene-d8	*100*	*78-128*				
4-Bromofluorobenzene	*96*	*71-130*				

This report pertains to the samples analyzed in accordance with the chain of custody, and is intended only for the use of the individual or company to whom it is addressed.

Date of Report: September 26, 2022
Samples Submitted: September 22, 2022
Laboratory Reference: 2209-217
Project: 11-05150-003

VOLATILE ORGANICS EPA 8260D/SIM
page 1 of 2

Matrix: Soil
Units: mg/kg

Analyte	Result	PQL	Method	Date Prepared	Date Analyzed	Flags
Client ID:	**DA7SWCS39220922I**					
Laboratory ID:	09-217-05					
Dichlorodifluoromethane	ND	0.0012	EPA 8260D	9-23-22	9-23-22	
Chloromethane	ND	0.0052	EPA 8260D	9-23-22	9-23-22	
Vinyl Chloride	ND	0.00083	EPA 8260D	9-23-22	9-23-22	
Bromomethane	ND	0.0041	EPA 8260D	9-23-22	9-23-22	
Chloroethane	ND	0.0041	EPA 8260D	9-23-22	9-23-22	
Trichlorofluoromethane	ND	0.00083	EPA 8260D	9-23-22	9-23-22	
1,1-Dichloroethene	ND	0.00083	EPA 8260D	9-23-22	9-23-22	
Acetone	ND	0.012	EPA 8260D	9-23-22	9-23-22	
Iodomethane	ND	0.0041	EPA 8260D	9-23-22	9-23-22	
Carbon Disulfide	ND	0.00083	EPA 8260D	9-23-22	9-23-22	
Methylene Chloride	ND	0.0055	EPA 8260D	9-23-22	9-23-22	
(trans) 1,2-Dichloroethene	ND	0.00083	EPA 8260D	9-23-22	9-23-22	
Methyl t-Butyl Ether	ND	0.00083	EPA 8260D	9-23-22	9-23-22	
1,1-Dichloroethane	ND	0.00083	EPA 8260D	9-23-22	9-23-22	
Vinyl Acetate	ND	0.0041	EPA 8260D	9-23-22	9-23-22	
2,2-Dichloropropane	ND	0.00083	EPA 8260D	9-23-22	9-23-22	
(cis) 1,2-Dichloroethene	ND	0.00083	EPA 8260D	9-23-22	9-23-22	
2-Butanone	ND	0.0041	EPA 8260D	9-23-22	9-23-22	
Bromochloromethane	ND	0.00083	EPA 8260D	9-23-22	9-23-22	
Chloroform	ND	0.00083	EPA 8260D	9-23-22	9-23-22	
1,1,1-Trichloroethane	ND	0.00083	EPA 8260D	9-23-22	9-23-22	
Carbon Tetrachloride	ND	0.00083	EPA 8260D	9-23-22	9-23-22	
1,1-Dichloropropene	ND	0.00083	EPA 8260D	9-23-22	9-23-22	
Benzene	ND	0.00083	EPA 8260D	9-23-22	9-23-22	
1,2-Dichloroethane	ND	0.00083	EPA 8260D	9-23-22	9-23-22	
Trichloroethene	ND	0.00083	EPA 8260D	9-23-22	9-23-22	
1,2-Dichloropropane	ND	0.00083	EPA 8260D	9-23-22	9-23-22	
Dibromomethane	ND	0.00083	EPA 8260D	9-23-22	9-23-22	
Bromodichloromethane	ND	0.00083	EPA 8260D	9-23-22	9-23-22	
2-Chloroethyl Vinyl Ether	ND	0.0041	EPA 8260D	9-23-22	9-23-22	
(cis) 1,3-Dichloropropene	ND	0.00083	EPA 8260D	9-23-22	9-23-22	
Methyl Isobutyl Ketone	ND	0.0041	EPA 8260D	9-23-22	9-23-22	
Toluene	ND	0.0041	EPA 8260D	9-23-22	9-23-22	
(trans) 1,3-Dichloropropene	ND	0.00083	EPA 8260D	9-23-22	9-23-22	

This report pertains to the samples analyzed in accordance with the chain of custody, and is intended only for the use of the individual or company to whom it is addressed.

Date of Report: September 26, 2022
Samples Submitted: September 22, 2022
Laboratory Reference: 2209-217
Project: 11-05150-003

VOLATILE ORGANICS EPA 8260D/SIM
page 2 of 2

Analyte	Result	PQL	Method	Date Prepared	Date Analyzed	Flags
Client ID:	**DA7SWCS39220922I**					
Laboratory ID:	09-217-05					
1,1,2-Trichloroethane	ND	0.00083	EPA 8260D	9-23-22	9-23-22	
Tetrachloroethene	ND	0.00083	EPA 8260D	9-23-22	9-23-22	
1,3-Dichloropropane	ND	0.00083	EPA 8260D	9-23-22	9-23-22	
2-Hexanone	ND	0.0041	EPA 8260D	9-23-22	9-23-22	
Dibromochloromethane	ND	0.00083	EPA 8260D	9-23-22	9-23-22	
1,2-Dibromoethane	ND	0.000041	EPA 8260D/SIM	9-23-22	9-23-22	
Chlorobenzene	ND	0.00083	EPA 8260D	9-23-22	9-23-22	
1,1,1,2-Tetrachloroethane	ND	0.00083	EPA 8260D	9-23-22	9-23-22	
Ethylbenzene	ND	0.00083	EPA 8260D	9-23-22	9-23-22	
m,p-Xylene	ND	0.0017	EPA 8260D	9-23-22	9-23-22	
o-Xylene	ND	0.00083	EPA 8260D	9-23-22	9-23-22	
Styrene	ND	0.00083	EPA 8260D	9-23-22	9-23-22	
Bromoform	ND	0.0041	EPA 8260D	9-23-22	9-23-22	
Isopropylbenzene	ND	0.00083	EPA 8260D	9-23-22	9-23-22	
Bromobenzene	ND	0.00083	EPA 8260D	9-23-22	9-23-22	
1,1,2,2-Tetrachloroethane	ND	0.00083	EPA 8260D	9-23-22	9-23-22	
1,2,3-Trichloropropane	ND	0.00083	EPA 8260D	9-23-22	9-23-22	
n-Propylbenzene	ND	0.00083	EPA 8260D	9-23-22	9-23-22	
2-Chlorotoluene	ND	0.00083	EPA 8260D	9-23-22	9-23-22	
4-Chlorotoluene	ND	0.00083	EPA 8260D	9-23-22	9-23-22	
1,3,5-Trimethylbenzene	ND	0.00083	EPA 8260D	9-23-22	9-23-22	
tert-Butylbenzene	ND	0.00083	EPA 8260D	9-23-22	9-23-22	
1,2,4-Trimethylbenzene	ND	0.00083	EPA 8260D	9-23-22	9-23-22	
sec-Butylbenzene	ND	0.00083	EPA 8260D	9-23-22	9-23-22	
1,3-Dichlorobenzene	ND	0.00083	EPA 8260D	9-23-22	9-23-22	
p-Isopropyltoluene	ND	0.00083	EPA 8260D	9-23-22	9-23-22	
1,4-Dichlorobenzene	ND	0.00083	EPA 8260D	9-23-22	9-23-22	
1,2-Dichlorobenzene	ND	0.00083	EPA 8260D	9-23-22	9-23-22	
n-Butylbenzene	ND	0.00083	EPA 8260D	9-23-22	9-23-22	
1,2-Dibromo-3-chloropropane	ND	0.0041	EPA 8260D	9-23-22	9-23-22	
1,2,4-Trichlorobenzene	ND	0.00083	EPA 8260D	9-23-22	9-23-22	
Hexachlorobutadiene	ND	0.0041	EPA 8260D	9-23-22	9-23-22	
Naphthalene	ND	0.0041	EPA 8260D	9-23-22	9-23-22	
1,2,3-Trichlorobenzene	ND	0.00083	EPA 8260D	9-23-22	9-23-22	
Surrogate:	*Percent Recovery*	*Control Limits*				
Dibromofluoromethane	*102*	*75-130*				
Toluene-d8	*100*	*78-128*				
4-Bromofluorobenzene	*97*	*71-130*				

This report pertains to the samples analyzed in accordance with the chain of custody, and is intended only for the use of the individual or company to whom it is addressed.

Date of Report: September 26, 2022
Samples Submitted: September 22, 2022
Laboratory Reference: 2209-217
Project: 11-05150-003

VOLATILE ORGANICS EPA 8260D/SIM
page 1 of 2

Matrix: Soil
Units: mg/kg

Analyte	Result	PQL	Method	Date Prepared	Date Analyzed	Flags
Client ID:	**DA7SWCS39220922D**					
Laboratory ID:	09-217-06					
Dichlorodifluoromethane	ND	0.00090	EPA 8260D	9-23-22	9-23-22	
Chloromethane	ND	0.0040	EPA 8260D	9-23-22	9-23-22	
Vinyl Chloride	ND	0.00064	EPA 8260D	9-23-22	9-23-22	
Bromomethane	ND	0.0032	EPA 8260D	9-23-22	9-23-22	
Chloroethane	ND	0.0032	EPA 8260D	9-23-22	9-23-22	
Trichlorofluoromethane	ND	0.00064	EPA 8260D	9-23-22	9-23-22	
1,1-Dichloroethene	ND	0.00064	EPA 8260D	9-23-22	9-23-22	
Acetone	ND	0.0096	EPA 8260D	9-23-22	9-23-22	
Iodomethane	ND	0.0032	EPA 8260D	9-23-22	9-23-22	
Carbon Disulfide	ND	0.00064	EPA 8260D	9-23-22	9-23-22	
Methylene Chloride	ND	0.0042	EPA 8260D	9-23-22	9-23-22	
(trans) 1,2-Dichloroethene	ND	0.00064	EPA 8260D	9-23-22	9-23-22	
Methyl t-Butyl Ether	ND	0.00064	EPA 8260D	9-23-22	9-23-22	
1,1-Dichloroethane	ND	0.00064	EPA 8260D	9-23-22	9-23-22	
Vinyl Acetate	ND	0.0032	EPA 8260D	9-23-22	9-23-22	
2,2-Dichloropropane	ND	0.00064	EPA 8260D	9-23-22	9-23-22	
(cis) 1,2-Dichloroethene	ND	0.00064	EPA 8260D	9-23-22	9-23-22	
2-Butanone	ND	0.0032	EPA 8260D	9-23-22	9-23-22	
Bromochloromethane	ND	0.00064	EPA 8260D	9-23-22	9-23-22	
Chloroform	ND	0.00064	EPA 8260D	9-23-22	9-23-22	
1,1,1-Trichloroethane	ND	0.00064	EPA 8260D	9-23-22	9-23-22	
Carbon Tetrachloride	ND	0.00064	EPA 8260D	9-23-22	9-23-22	
1,1-Dichloropropene	ND	0.00064	EPA 8260D	9-23-22	9-23-22	
Benzene	ND	0.00064	EPA 8260D	9-23-22	9-23-22	
1,2-Dichloroethane	ND	0.00064	EPA 8260D	9-23-22	9-23-22	
Trichloroethene	ND	0.00064	EPA 8260D	9-23-22	9-23-22	
1,2-Dichloropropane	ND	0.00064	EPA 8260D	9-23-22	9-23-22	
Dibromomethane	ND	0.00064	EPA 8260D	9-23-22	9-23-22	
Bromodichloromethane	ND	0.00064	EPA 8260D	9-23-22	9-23-22	
2-Chloroethyl Vinyl Ether	ND	0.0032	EPA 8260D	9-23-22	9-23-22	
(cis) 1,3-Dichloropropene	ND	0.00064	EPA 8260D	9-23-22	9-23-22	
Methyl Isobutyl Ketone	ND	0.0032	EPA 8260D	9-23-22	9-23-22	
Toluene	ND	0.0032	EPA 8260D	9-23-22	9-23-22	
(trans) 1,3-Dichloropropene	ND	0.00064	EPA 8260D	9-23-22	9-23-22	

This report pertains to the samples analyzed in accordance with the chain of custody, and is intended only for the use of the individual or company to whom it is addressed.

Date of Report: September 26, 2022
Samples Submitted: September 22, 2022
Laboratory Reference: 2209-217
Project: 11-05150-003

VOLATILE ORGANICS EPA 8260D/SIM
page 2 of 2

Analyte	Result	PQL	Method	Date Prepared	Date Analyzed	Flags
Client ID:	**DA7SWCS39220922D**					
Laboratory ID:	09-217-06					
1,1,2-Trichloroethane	ND	0.00064	EPA 8260D	9-23-22	9-23-22	
Tetrachloroethene	ND	0.00064	EPA 8260D	9-23-22	9-23-22	
1,3-Dichloropropane	ND	0.00064	EPA 8260D	9-23-22	9-23-22	
2-Hexanone	ND	0.0032	EPA 8260D	9-23-22	9-23-22	
Dibromochloromethane	ND	0.00064	EPA 8260D	9-23-22	9-23-22	
1,2-Dibromoethane	ND	0.000032	EPA 8260D/SIM	9-23-22	9-23-22	
Chlorobenzene	ND	0.00064	EPA 8260D	9-23-22	9-23-22	
1,1,1,2-Tetrachloroethane	ND	0.00064	EPA 8260D	9-23-22	9-23-22	
Ethylbenzene	ND	0.00064	EPA 8260D	9-23-22	9-23-22	
m,p-Xylene	ND	0.0013	EPA 8260D	9-23-22	9-23-22	
o-Xylene	ND	0.00064	EPA 8260D	9-23-22	9-23-22	
Styrene	ND	0.00064	EPA 8260D	9-23-22	9-23-22	
Bromoform	ND	0.0032	EPA 8260D	9-23-22	9-23-22	
Isopropylbenzene	ND	0.00064	EPA 8260D	9-23-22	9-23-22	
Bromobenzene	ND	0.00064	EPA 8260D	9-23-22	9-23-22	
1,1,2,2-Tetrachloroethane	ND	0.00064	EPA 8260D	9-23-22	9-23-22	
1,2,3-Trichloropropane	ND	0.00064	EPA 8260D	9-23-22	9-23-22	
n-Propylbenzene	ND	0.00064	EPA 8260D	9-23-22	9-23-22	
2-Chlorotoluene	ND	0.00064	EPA 8260D	9-23-22	9-23-22	
4-Chlorotoluene	ND	0.00064	EPA 8260D	9-23-22	9-23-22	
1,3,5-Trimethylbenzene	ND	0.00064	EPA 8260D	9-23-22	9-23-22	
tert-Butylbenzene	ND	0.00064	EPA 8260D	9-23-22	9-23-22	
1,2,4-Trimethylbenzene	ND	0.00064	EPA 8260D	9-23-22	9-23-22	
sec-Butylbenzene	ND	0.00064	EPA 8260D	9-23-22	9-23-22	
1,3-Dichlorobenzene	ND	0.00064	EPA 8260D	9-23-22	9-23-22	
p-Isopropyltoluene	ND	0.00064	EPA 8260D	9-23-22	9-23-22	
1,4-Dichlorobenzene	ND	0.00064	EPA 8260D	9-23-22	9-23-22	
1,2-Dichlorobenzene	ND	0.00064	EPA 8260D	9-23-22	9-23-22	
n-Butylbenzene	ND	0.00064	EPA 8260D	9-23-22	9-23-22	
1,2-Dibromo-3-chloropropane	ND	0.0032	EPA 8260D	9-23-22	9-23-22	
1,2,4-Trichlorobenzene	ND	0.00064	EPA 8260D	9-23-22	9-23-22	
Hexachlorobutadiene	ND	0.0032	EPA 8260D	9-23-22	9-23-22	
Naphthalene	ND	0.0032	EPA 8260D	9-23-22	9-23-22	
1,2,3-Trichlorobenzene	ND	0.00064	EPA 8260D	9-23-22	9-23-22	
Surrogate:	*Percent Recovery*	*Control Limits*				
Dibromofluoromethane	*104*	*75-130*				
Toluene-d8	*99*	*78-128*				
4-Bromofluorobenzene	*100*	*71-130*				

This report pertains to the samples analyzed in accordance with the chain of custody, and is intended only for the use of the individual or company to whom it is addressed.

Date of Report: September 26, 2022
Samples Submitted: September 22, 2022
Laboratory Reference: 2209-217
Project: 11-05150-003

VOLATILE ORGANICS EPA 8260D/SIM
page 1 of 2

Matrix: Soil
Units: mg/kg

Analyte	Result	PQL	Method	Date Prepared	Date Analyzed	Flags
Client ID:	**DA7SWCS40220922I**					
Laboratory ID:	09-217-07					
Dichlorodifluoromethane	ND	0.00090	EPA 8260D	9-23-22	9-23-22	
Chloromethane	ND	0.0041	EPA 8260D	9-23-22	9-23-22	
Vinyl Chloride	ND	0.00064	EPA 8260D	9-23-22	9-23-22	
Bromomethane	ND	0.0032	EPA 8260D	9-23-22	9-23-22	
Chloroethane	ND	0.0032	EPA 8260D	9-23-22	9-23-22	
Trichlorofluoromethane	ND	0.00064	EPA 8260D	9-23-22	9-23-22	
1,1-Dichloroethene	ND	0.00064	EPA 8260D	9-23-22	9-23-22	
Acetone	ND	0.0096	EPA 8260D	9-23-22	9-23-22	
Iodomethane	ND	0.0032	EPA 8260D	9-23-22	9-23-22	
Carbon Disulfide	ND	0.00064	EPA 8260D	9-23-22	9-23-22	
Methylene Chloride	ND	0.0043	EPA 8260D	9-23-22	9-23-22	
(trans) 1,2-Dichloroethene	ND	0.00064	EPA 8260D	9-23-22	9-23-22	
Methyl t-Butyl Ether	ND	0.00064	EPA 8260D	9-23-22	9-23-22	
1,1-Dichloroethane	ND	0.00064	EPA 8260D	9-23-22	9-23-22	
Vinyl Acetate	ND	0.0032	EPA 8260D	9-23-22	9-23-22	
2,2-Dichloropropane	ND	0.00064	EPA 8260D	9-23-22	9-23-22	
(cis) 1,2-Dichloroethene	ND	0.00064	EPA 8260D	9-23-22	9-23-22	
2-Butanone	ND	0.0032	EPA 8260D	9-23-22	9-23-22	
Bromochloromethane	ND	0.00064	EPA 8260D	9-23-22	9-23-22	
Chloroform	ND	0.00064	EPA 8260D	9-23-22	9-23-22	
1,1,1-Trichloroethane	ND	0.00064	EPA 8260D	9-23-22	9-23-22	
Carbon Tetrachloride	ND	0.00064	EPA 8260D	9-23-22	9-23-22	
1,1-Dichloropropene	ND	0.00064	EPA 8260D	9-23-22	9-23-22	
Benzene	ND	0.00064	EPA 8260D	9-23-22	9-23-22	
1,2-Dichloroethane	ND	0.00064	EPA 8260D	9-23-22	9-23-22	
Trichloroethene	ND	0.00064	EPA 8260D	9-23-22	9-23-22	
1,2-Dichloropropane	ND	0.00064	EPA 8260D	9-23-22	9-23-22	
Dibromomethane	ND	0.00064	EPA 8260D	9-23-22	9-23-22	
Bromodichloromethane	ND	0.00064	EPA 8260D	9-23-22	9-23-22	
2-Chloroethyl Vinyl Ether	ND	0.0032	EPA 8260D	9-23-22	9-23-22	
(cis) 1,3-Dichloropropene	ND	0.00064	EPA 8260D	9-23-22	9-23-22	
Methyl Isobutyl Ketone	ND	0.0032	EPA 8260D	9-23-22	9-23-22	
Toluene	ND	0.0032	EPA 8260D	9-23-22	9-23-22	
(trans) 1,3-Dichloropropene	ND	0.00064	EPA 8260D	9-23-22	9-23-22	

This report pertains to the samples analyzed in accordance with the chain of custody, and is intended only for the use of the individual or company to whom it is addressed.

Date of Report: September 26, 2022
Samples Submitted: September 22, 2022
Laboratory Reference: 2209-217
Project: 11-05150-003

VOLATILE ORGANICS EPA 8260D/SIM
page 2 of 2

Analyte	Result	PQL	Method	Date Prepared	Date Analyzed	Flags
Client ID:	**DA7SWCS40220922I**					
Laboratory ID:	09-217-07					
1,1,2-Trichloroethane	ND	0.00064	EPA 8260D	9-23-22	9-23-22	
Tetrachloroethene	ND	0.00064	EPA 8260D	9-23-22	9-23-22	
1,3-Dichloropropane	ND	0.00064	EPA 8260D	9-23-22	9-23-22	
2-Hexanone	ND	0.0032	EPA 8260D	9-23-22	9-23-22	
Dibromochloromethane	ND	0.00064	EPA 8260D	9-23-22	9-23-22	
1,2-Dibromoethane	ND	0.000032	EPA 8260D/SIM	9-23-22	9-23-22	
Chlorobenzene	ND	0.00064	EPA 8260D	9-23-22	9-23-22	
1,1,1,2-Tetrachloroethane	ND	0.00064	EPA 8260D	9-23-22	9-23-22	
Ethylbenzene	ND	0.00064	EPA 8260D	9-23-22	9-23-22	
m,p-Xylene	ND	0.0013	EPA 8260D	9-23-22	9-23-22	
o-Xylene	ND	0.00064	EPA 8260D	9-23-22	9-23-22	
Styrene	ND	0.00064	EPA 8260D	9-23-22	9-23-22	
Bromoform	ND	0.0032	EPA 8260D	9-23-22	9-23-22	
Isopropylbenzene	ND	0.00064	EPA 8260D	9-23-22	9-23-22	
Bromobenzene	ND	0.00064	EPA 8260D	9-23-22	9-23-22	
1,1,2,2-Tetrachloroethane	ND	0.00064	EPA 8260D	9-23-22	9-23-22	
1,2,3-Trichloropropane	ND	0.00064	EPA 8260D	9-23-22	9-23-22	
n-Propylbenzene	ND	0.00064	EPA 8260D	9-23-22	9-23-22	
2-Chlorotoluene	ND	0.00064	EPA 8260D	9-23-22	9-23-22	
4-Chlorotoluene	ND	0.00064	EPA 8260D	9-23-22	9-23-22	
1,3,5-Trimethylbenzene	ND	0.00064	EPA 8260D	9-23-22	9-23-22	
tert-Butylbenzene	ND	0.00064	EPA 8260D	9-23-22	9-23-22	
1,2,4-Trimethylbenzene	ND	0.00064	EPA 8260D	9-23-22	9-23-22	
sec-Butylbenzene	ND	0.00064	EPA 8260D	9-23-22	9-23-22	
1,3-Dichlorobenzene	ND	0.00064	EPA 8260D	9-23-22	9-23-22	
p-Isopropyltoluene	ND	0.00064	EPA 8260D	9-23-22	9-23-22	
1,4-Dichlorobenzene	ND	0.00064	EPA 8260D	9-23-22	9-23-22	
1,2-Dichlorobenzene	ND	0.00064	EPA 8260D	9-23-22	9-23-22	
n-Butylbenzene	ND	0.00064	EPA 8260D	9-23-22	9-23-22	
1,2-Dibromo-3-chloropropane	ND	0.0032	EPA 8260D	9-23-22	9-23-22	
1,2,4-Trichlorobenzene	ND	0.00064	EPA 8260D	9-23-22	9-23-22	
Hexachlorobutadiene	ND	0.0032	EPA 8260D	9-23-22	9-23-22	
Naphthalene	ND	0.0032	EPA 8260D	9-23-22	9-23-22	
1,2,3-Trichlorobenzene	ND	0.00064	EPA 8260D	9-23-22	9-23-22	
Surrogate:	*Percent Recovery*	*Control Limits*				
Dibromofluoromethane	*104*	*75-130*				
Toluene-d8	*100*	*78-128*				
4-Bromofluorobenzene	*100*	*71-130*				

This report pertains to the samples analyzed in accordance with the chain of custody, and is intended only for the use of the individual or company to whom it is addressed.

Date of Report: September 26, 2022
Samples Submitted: September 22, 2022
Laboratory Reference: 2209-217
Project: 11-05150-003

VOLATILE ORGANICS EPA 8260D/SIM
page 1 of 2

Matrix: Soil
Units: mg/kg

Analyte	Result	PQL	Method	Date Prepared	Date Analyzed	Flags
Client ID:	**DA7SWCS41220922I**					
Laboratory ID:	09-217-08					
Dichlorodifluoromethane	ND	0.00064	EPA 8260D	9-23-22	9-23-22	
Chloromethane	ND	0.0029	EPA 8260D	9-23-22	9-23-22	
Vinyl Chloride	ND	0.00046	EPA 8260D	9-23-22	9-23-22	
Bromomethane	ND	0.0023	EPA 8260D	9-23-22	9-23-22	
Chloroethane	ND	0.0023	EPA 8260D	9-23-22	9-23-22	
Trichlorofluoromethane	ND	0.00046	EPA 8260D	9-23-22	9-23-22	
1,1-Dichloroethene	ND	0.00046	EPA 8260D	9-23-22	9-23-22	
Acetone	ND	0.0069	EPA 8260D	9-23-22	9-23-22	
Iodomethane	ND	0.0023	EPA 8260D	9-23-22	9-23-22	
Carbon Disulfide	ND	0.00046	EPA 8260D	9-23-22	9-23-22	
Methylene Chloride	ND	0.0030	EPA 8260D	9-23-22	9-23-22	
(trans) 1,2-Dichloroethene	ND	0.00046	EPA 8260D	9-23-22	9-23-22	
Methyl t-Butyl Ether	ND	0.00046	EPA 8260D	9-23-22	9-23-22	
1,1-Dichloroethane	ND	0.00046	EPA 8260D	9-23-22	9-23-22	
Vinyl Acetate	ND	0.0023	EPA 8260D	9-23-22	9-23-22	
2,2-Dichloropropane	ND	0.00046	EPA 8260D	9-23-22	9-23-22	
(cis) 1,2-Dichloroethene	ND	0.00046	EPA 8260D	9-23-22	9-23-22	
2-Butanone	ND	0.0023	EPA 8260D	9-23-22	9-23-22	
Bromochloromethane	ND	0.00046	EPA 8260D	9-23-22	9-23-22	
Chloroform	ND	0.00046	EPA 8260D	9-23-22	9-23-22	
1,1,1-Trichloroethane	ND	0.00046	EPA 8260D	9-23-22	9-23-22	
Carbon Tetrachloride	ND	0.00046	EPA 8260D	9-23-22	9-23-22	
1,1-Dichloropropene	ND	0.00046	EPA 8260D	9-23-22	9-23-22	
Benzene	ND	0.00046	EPA 8260D	9-23-22	9-23-22	
1,2-Dichloroethane	ND	0.00046	EPA 8260D	9-23-22	9-23-22	
Trichloroethene	ND	0.00046	EPA 8260D	9-23-22	9-23-22	
1,2-Dichloropropane	ND	0.00046	EPA 8260D	9-23-22	9-23-22	
Dibromomethane	ND	0.00046	EPA 8260D	9-23-22	9-23-22	
Bromodichloromethane	ND	0.00046	EPA 8260D	9-23-22	9-23-22	
2-Chloroethyl Vinyl Ether	ND	0.0023	EPA 8260D	9-23-22	9-23-22	
(cis) 1,3-Dichloropropene	ND	0.00046	EPA 8260D	9-23-22	9-23-22	
Methyl Isobutyl Ketone	ND	0.0023	EPA 8260D	9-23-22	9-23-22	
Toluene	ND	0.0023	EPA 8260D	9-23-22	9-23-22	
(trans) 1,3-Dichloropropene	ND	0.00046	EPA 8260D	9-23-22	9-23-22	

This report pertains to the samples analyzed in accordance with the chain of custody,
and is intended only for the use of the individual or company to whom it is addressed.

Date of Report: September 26, 2022
Samples Submitted: September 22, 2022
Laboratory Reference: 2209-217
Project: 11-05150-003

VOLATILE ORGANICS EPA 8260D/SIM
page 2 of 2

Analyte	Result	PQL	Method	Date Prepared	Date Analyzed	Flags
Client ID:	**DA7SWCS41220922I**					
Laboratory ID:	09-217-08					
1,1,2-Trichloroethane	ND	0.00046	EPA 8260D	9-23-22	9-23-22	
Tetrachloroethene	ND	0.00046	EPA 8260D	9-23-22	9-23-22	
1,3-Dichloropropane	ND	0.00046	EPA 8260D	9-23-22	9-23-22	
2-Hexanone	ND	0.0023	EPA 8260D	9-23-22	9-23-22	
Dibromochloromethane	ND	0.00046	EPA 8260D	9-23-22	9-23-22	
1,2-Dibromoethane	ND	0.000023	EPA 8260D/SIM	9-23-22	9-23-22	
Chlorobenzene	ND	0.00046	EPA 8260D	9-23-22	9-23-22	
1,1,1,2-Tetrachloroethane	ND	0.00046	EPA 8260D	9-23-22	9-23-22	
Ethylbenzene	ND	0.00046	EPA 8260D	9-23-22	9-23-22	
m,p-Xylene	ND	0.00092	EPA 8260D	9-23-22	9-23-22	
o-Xylene	ND	0.00046	EPA 8260D	9-23-22	9-23-22	
Styrene	ND	0.00046	EPA 8260D	9-23-22	9-23-22	
Bromoform	ND	0.0023	EPA 8260D	9-23-22	9-23-22	
Isopropylbenzene	ND	0.00046	EPA 8260D	9-23-22	9-23-22	
Bromobenzene	ND	0.00046	EPA 8260D	9-23-22	9-23-22	
1,1,2,2-Tetrachloroethane	ND	0.00046	EPA 8260D	9-23-22	9-23-22	
1,2,3-Trichloropropane	ND	0.00046	EPA 8260D	9-23-22	9-23-22	
n-Propylbenzene	ND	0.00046	EPA 8260D	9-23-22	9-23-22	
2-Chlorotoluene	ND	0.00046	EPA 8260D	9-23-22	9-23-22	
4-Chlorotoluene	ND	0.00046	EPA 8260D	9-23-22	9-23-22	
1,3,5-Trimethylbenzene	ND	0.00046	EPA 8260D	9-23-22	9-23-22	
tert-Butylbenzene	ND	0.00046	EPA 8260D	9-23-22	9-23-22	
1,2,4-Trimethylbenzene	ND	0.00046	EPA 8260D	9-23-22	9-23-22	
sec-Butylbenzene	ND	0.00046	EPA 8260D	9-23-22	9-23-22	
1,3-Dichlorobenzene	ND	0.00046	EPA 8260D	9-23-22	9-23-22	
p-Isopropyltoluene	ND	0.00046	EPA 8260D	9-23-22	9-23-22	
1,4-Dichlorobenzene	ND	0.00046	EPA 8260D	9-23-22	9-23-22	
1,2-Dichlorobenzene	ND	0.00046	EPA 8260D	9-23-22	9-23-22	
n-Butylbenzene	ND	0.00046	EPA 8260D	9-23-22	9-23-22	
1,2-Dibromo-3-chloropropane	ND	0.0023	EPA 8260D	9-23-22	9-23-22	
1,2,4-Trichlorobenzene	ND	0.00046	EPA 8260D	9-23-22	9-23-22	
Hexachlorobutadiene	ND	0.0023	EPA 8260D	9-23-22	9-23-22	
Naphthalene	ND	0.0023	EPA 8260D	9-23-22	9-23-22	
1,2,3-Trichlorobenzene	ND	0.00046	EPA 8260D	9-23-22	9-23-22	
Surrogate:	*Percent Recovery*	*Control Limits*				
Dibromofluoromethane	*105*	*75-130*				
Toluene-d8	*100*	*78-128*				
4-Bromofluorobenzene	*96*	*71-130*				

This report pertains to the samples analyzed in accordance with the chain of custody, and is intended only for the use of the individual or company to whom it is addressed.

Date of Report: September 26, 2022
Samples Submitted: September 22, 2022
Laboratory Reference: 2209-217
Project: 11-05150-003

VOLATILE ORGANICS EPA 8260D/SIM
page 1 of 2

Matrix: Soil
Units: mg/kg

Analyte	Result	PQL	Method	Date Prepared	Date Analyzed	Flags
Client ID:	**DA7SWCS42220922I**					
Laboratory ID:	09-217-09					
Dichlorodifluoromethane	ND	0.00083	EPA 8260D	9-23-22	9-23-22	
Chloromethane	ND	0.0038	EPA 8260D	9-23-22	9-23-22	
Vinyl Chloride	ND	0.00060	EPA 8260D	9-23-22	9-23-22	
Bromomethane	ND	0.0030	EPA 8260D	9-23-22	9-23-22	
Chloroethane	ND	0.0030	EPA 8260D	9-23-22	9-23-22	
Trichlorofluoromethane	ND	0.00060	EPA 8260D	9-23-22	9-23-22	
1,1-Dichloroethene	ND	0.00060	EPA 8260D	9-23-22	9-23-22	
Acetone	ND	0.0090	EPA 8260D	9-23-22	9-23-22	
Iodomethane	ND	0.0030	EPA 8260D	9-23-22	9-23-22	
Carbon Disulfide	ND	0.00060	EPA 8260D	9-23-22	9-23-22	
Methylene Chloride	ND	0.0039	EPA 8260D	9-23-22	9-23-22	
(trans) 1,2-Dichloroethene	ND	0.00060	EPA 8260D	9-23-22	9-23-22	
Methyl t-Butyl Ether	ND	0.00060	EPA 8260D	9-23-22	9-23-22	
1,1-Dichloroethane	ND	0.00060	EPA 8260D	9-23-22	9-23-22	
Vinyl Acetate	ND	0.0030	EPA 8260D	9-23-22	9-23-22	
2,2-Dichloropropane	ND	0.00060	EPA 8260D	9-23-22	9-23-22	
(cis) 1,2-Dichloroethene	ND	0.00060	EPA 8260D	9-23-22	9-23-22	
2-Butanone	ND	0.0030	EPA 8260D	9-23-22	9-23-22	
Bromochloromethane	ND	0.00060	EPA 8260D	9-23-22	9-23-22	
Chloroform	ND	0.00060	EPA 8260D	9-23-22	9-23-22	
1,1,1-Trichloroethane	ND	0.00060	EPA 8260D	9-23-22	9-23-22	
Carbon Tetrachloride	ND	0.00060	EPA 8260D	9-23-22	9-23-22	
1,1-Dichloropropene	ND	0.00060	EPA 8260D	9-23-22	9-23-22	
Benzene	ND	0.00060	EPA 8260D	9-23-22	9-23-22	
1,2-Dichloroethane	ND	0.00060	EPA 8260D	9-23-22	9-23-22	
Trichloroethene	ND	0.00060	EPA 8260D	9-23-22	9-23-22	
1,2-Dichloropropane	ND	0.00060	EPA 8260D	9-23-22	9-23-22	
Dibromomethane	ND	0.00060	EPA 8260D	9-23-22	9-23-22	
Bromodichloromethane	ND	0.00060	EPA 8260D	9-23-22	9-23-22	
2-Chloroethyl Vinyl Ether	ND	0.0030	EPA 8260D	9-23-22	9-23-22	
(cis) 1,3-Dichloropropene	ND	0.00060	EPA 8260D	9-23-22	9-23-22	
Methyl Isobutyl Ketone	ND	0.0030	EPA 8260D	9-23-22	9-23-22	
Toluene	ND	0.0030	EPA 8260D	9-23-22	9-23-22	
(trans) 1,3-Dichloropropene	ND	0.00060	EPA 8260D	9-23-22	9-23-22	

This report pertains to the samples analyzed in accordance with the chain of custody, and is intended only for the use of the individual or company to whom it is addressed.

Date of Report: September 26, 2022
Samples Submitted: September 22, 2022
Laboratory Reference: 2209-217
Project: 11-05150-003

VOLATILE ORGANICS EPA 8260D/SIM
page 2 of 2

Analyte	Result	PQL	Method	Date Prepared	Date Analyzed	Flags
Client ID:	**DA7SWCS42220922I**					
Laboratory ID:	09-217-09					
1,1,2-Trichloroethane	ND	0.00060	EPA 8260D	9-23-22	9-23-22	
Tetrachloroethene	ND	0.00060	EPA 8260D	9-23-22	9-23-22	
1,3-Dichloropropane	ND	0.00060	EPA 8260D	9-23-22	9-23-22	
2-Hexanone	ND	0.0030	EPA 8260D	9-23-22	9-23-22	
Dibromochloromethane	ND	0.00060	EPA 8260D	9-23-22	9-23-22	
1,2-Dibromoethane	ND	0.000030	EPA 8260D/SIM	9-23-22	9-23-22	
Chlorobenzene	ND	0.00060	EPA 8260D	9-23-22	9-23-22	
1,1,1,2-Tetrachloroethane	ND	0.00060	EPA 8260D	9-23-22	9-23-22	
Ethylbenzene	ND	0.00060	EPA 8260D	9-23-22	9-23-22	
m,p-Xylene	ND	0.0012	EPA 8260D	9-23-22	9-23-22	
o-Xylene	ND	0.00060	EPA 8260D	9-23-22	9-23-22	
Styrene	ND	0.00060	EPA 8260D	9-23-22	9-23-22	
Bromoform	ND	0.0030	EPA 8260D	9-23-22	9-23-22	
Isopropylbenzene	ND	0.00060	EPA 8260D	9-23-22	9-23-22	
Bromobenzene	ND	0.00060	EPA 8260D	9-23-22	9-23-22	
1,1,2,2-Tetrachloroethane	ND	0.00060	EPA 8260D	9-23-22	9-23-22	
1,2,3-Trichloropropane	ND	0.00060	EPA 8260D	9-23-22	9-23-22	
n-Propylbenzene	ND	0.00060	EPA 8260D	9-23-22	9-23-22	
2-Chlorotoluene	ND	0.00060	EPA 8260D	9-23-22	9-23-22	
4-Chlorotoluene	ND	0.00060	EPA 8260D	9-23-22	9-23-22	
1,3,5-Trimethylbenzene	ND	0.00060	EPA 8260D	9-23-22	9-23-22	
tert-Butylbenzene	ND	0.00060	EPA 8260D	9-23-22	9-23-22	
1,2,4-Trimethylbenzene	ND	0.00060	EPA 8260D	9-23-22	9-23-22	
sec-Butylbenzene	ND	0.00060	EPA 8260D	9-23-22	9-23-22	
1,3-Dichlorobenzene	ND	0.00060	EPA 8260D	9-23-22	9-23-22	
p-Isopropyltoluene	ND	0.00060	EPA 8260D	9-23-22	9-23-22	
1,4-Dichlorobenzene	ND	0.00060	EPA 8260D	9-23-22	9-23-22	
1,2-Dichlorobenzene	ND	0.00060	EPA 8260D	9-23-22	9-23-22	
n-Butylbenzene	ND	0.00060	EPA 8260D	9-23-22	9-23-22	
1,2-Dibromo-3-chloropropane	ND	0.0030	EPA 8260D	9-23-22	9-23-22	
1,2,4-Trichlorobenzene	ND	0.00060	EPA 8260D	9-23-22	9-23-22	
Hexachlorobutadiene	ND	0.0030	EPA 8260D	9-23-22	9-23-22	
Naphthalene	ND	0.0030	EPA 8260D	9-23-22	9-23-22	
1,2,3-Trichlorobenzene	ND	0.00060	EPA 8260D	9-23-22	9-23-22	
Surrogate:	*Percent Recovery*	*Control Limits*				
Dibromofluoromethane	*101*	*75-130*				
Toluene-d8	*100*	*78-128*				
4-Bromofluorobenzene	*98*	*71-130*				

This report pertains to the samples analyzed in accordance with the chain of custody, and is intended only for the use of the individual or company to whom it is addressed.

Date of Report: September 26, 2022
Samples Submitted: September 22, 2022
Laboratory Reference: 2209-217
Project: 11-05150-003

VOLATILE ORGANICS EPA 8260D/SIM
page 1 of 2

Matrix: Soil
Units: mg/kg

Analyte	Result	PQL	Method	Date Prepared	Date Analyzed	Flags
Client ID:	**DA7SWCS43220922I**					
Laboratory ID:	09-217-10					
Dichlorodifluoromethane	ND	0.0011	EPA 8260D	9-23-22	9-23-22	
Chloromethane	ND	0.0048	EPA 8260D	9-23-22	9-23-22	
Vinyl Chloride	ND	0.00077	EPA 8260D	9-23-22	9-23-22	
Bromomethane	ND	0.0038	EPA 8260D	9-23-22	9-23-22	
Chloroethane	ND	0.0038	EPA 8260D	9-23-22	9-23-22	
Trichlorofluoromethane	ND	0.00077	EPA 8260D	9-23-22	9-23-22	
1,1-Dichloroethene	ND	0.00077	EPA 8260D	9-23-22	9-23-22	
Acetone	0.24	0.012	EPA 8260D	9-23-22	9-23-22	
Iodomethane	ND	0.0038	EPA 8260D	9-23-22	9-23-22	
Carbon Disulfide	ND	0.00077	EPA 8260D	9-23-22	9-23-22	
Methylene Chloride	ND	0.0051	EPA 8260D	9-23-22	9-23-22	
(trans) 1,2-Dichloroethene	ND	0.00077	EPA 8260D	9-23-22	9-23-22	
Methyl t-Butyl Ether	ND	0.00077	EPA 8260D	9-23-22	9-23-22	
1,1-Dichloroethane	ND	0.00077	EPA 8260D	9-23-22	9-23-22	
Vinyl Acetate	ND	0.0038	EPA 8260D	9-23-22	9-23-22	
2,2-Dichloropropane	ND	0.00077	EPA 8260D	9-23-22	9-23-22	
(cis) 1,2-Dichloroethene	ND	0.00077	EPA 8260D	9-23-22	9-23-22	
2-Butanone	0.091	0.0038	EPA 8260D	9-23-22	9-23-22	
Bromochloromethane	ND	0.00077	EPA 8260D	9-23-22	9-23-22	
Chloroform	ND	0.00077	EPA 8260D	9-23-22	9-23-22	
1,1,1-Trichloroethane	ND	0.00077	EPA 8260D	9-23-22	9-23-22	
Carbon Tetrachloride	ND	0.00077	EPA 8260D	9-23-22	9-23-22	
1,1-Dichloropropene	ND	0.00077	EPA 8260D	9-23-22	9-23-22	
Benzene	ND	0.00077	EPA 8260D	9-23-22	9-23-22	
1,2-Dichloroethane	ND	0.00077	EPA 8260D	9-23-22	9-23-22	
Trichloroethene	ND	0.00077	EPA 8260D	9-23-22	9-23-22	
1,2-Dichloropropane	ND	0.00077	EPA 8260D	9-23-22	9-23-22	
Dibromomethane	ND	0.00077	EPA 8260D	9-23-22	9-23-22	
Bromodichloromethane	ND	0.00077	EPA 8260D	9-23-22	9-23-22	
2-Chloroethyl Vinyl Ether	ND	0.0038	EPA 8260D	9-23-22	9-23-22	
(cis) 1,3-Dichloropropene	ND	0.00077	EPA 8260D	9-23-22	9-23-22	
Methyl Isobutyl Ketone	ND	0.0038	EPA 8260D	9-23-22	9-23-22	
Toluene	ND	0.0038	EPA 8260D	9-23-22	9-23-22	
(trans) 1,3-Dichloropropene	ND	0.00077	EPA 8260D	9-23-22	9-23-22	

This report pertains to the samples analyzed in accordance with the chain of custody, and is intended only for the use of the individual or company to whom it is addressed.

Date of Report: September 26, 2022
Samples Submitted: September 22, 2022
Laboratory Reference: 2209-217
Project: 11-05150-003

VOLATILE ORGANICS EPA 8260D/SIM
page 2 of 2

Analyte	Result	PQL	Method	Date Prepared	Date Analyzed	Flags
Client ID:	**DA7SWCS43220922I**					
Laboratory ID:	09-217-10					
1,1,2-Trichloroethane	ND	0.00077	EPA 8260D	9-23-22	9-23-22	
Tetrachloroethene	ND	0.00077	EPA 8260D	9-23-22	9-23-22	
1,3-Dichloropropane	ND	0.00077	EPA 8260D	9-23-22	9-23-22	
2-Hexanone	ND	0.0038	EPA 8260D	9-23-22	9-23-22	
Dibromochloromethane	ND	0.00077	EPA 8260D	9-23-22	9-23-22	
1,2-Dibromoethane	ND	0.000038	EPA 8260D/SIM	9-23-22	9-23-22	
Chlorobenzene	ND	0.00077	EPA 8260D	9-23-22	9-23-22	
1,1,1,2-Tetrachloroethane	ND	0.00077	EPA 8260D	9-23-22	9-23-22	
Ethylbenzene	ND	0.00077	EPA 8260D	9-23-22	9-23-22	
m,p-Xylene	ND	0.0015	EPA 8260D	9-23-22	9-23-22	
o-Xylene	ND	0.00077	EPA 8260D	9-23-22	9-23-22	
Styrene	ND	0.00077	EPA 8260D	9-23-22	9-23-22	
Bromoform	ND	0.0038	EPA 8260D	9-23-22	9-23-22	
Isopropylbenzene	ND	0.00077	EPA 8260D	9-23-22	9-23-22	
Bromobenzene	ND	0.00077	EPA 8260D	9-23-22	9-23-22	
1,1,2,2-Tetrachloroethane	ND	0.00077	EPA 8260D	9-23-22	9-23-22	
1,2,3-Trichloropropane	ND	0.00077	EPA 8260D	9-23-22	9-23-22	
n-Propylbenzene	ND	0.00077	EPA 8260D	9-23-22	9-23-22	
2-Chlorotoluene	ND	0.00077	EPA 8260D	9-23-22	9-23-22	
4-Chlorotoluene	ND	0.00077	EPA 8260D	9-23-22	9-23-22	
1,3,5-Trimethylbenzene	ND	0.00077	EPA 8260D	9-23-22	9-23-22	
tert-Butylbenzene	ND	0.00077	EPA 8260D	9-23-22	9-23-22	
1,2,4-Trimethylbenzene	ND	0.00077	EPA 8260D	9-23-22	9-23-22	
sec-Butylbenzene	ND	0.00077	EPA 8260D	9-23-22	9-23-22	
1,3-Dichlorobenzene	ND	0.00077	EPA 8260D	9-23-22	9-23-22	
p-Isopropyltoluene	ND	0.00077	EPA 8260D	9-23-22	9-23-22	
1,4-Dichlorobenzene	ND	0.00077	EPA 8260D	9-23-22	9-23-22	
1,2-Dichlorobenzene	ND	0.00077	EPA 8260D	9-23-22	9-23-22	
n-Butylbenzene	ND	0.00077	EPA 8260D	9-23-22	9-23-22	
1,2-Dibromo-3-chloropropane	ND	0.0038	EPA 8260D	9-23-22	9-23-22	
1,2,4-Trichlorobenzene	ND	0.00077	EPA 8260D	9-23-22	9-23-22	
Hexachlorobutadiene	ND	0.0038	EPA 8260D	9-23-22	9-23-22	
Naphthalene	ND	0.0038	EPA 8260D	9-23-22	9-23-22	
1,2,3-Trichlorobenzene	ND	0.00077	EPA 8260D	9-23-22	9-23-22	
Surrogate:	*Percent Recovery*	*Control Limits*				
Dibromofluoromethane	*103*	*75-130*				
Toluene-d8	*100*	*78-128*				
4-Bromofluorobenzene	*98*	*71-130*				

This report pertains to the samples analyzed in accordance with the chain of custody, and is intended only for the use of the individual or company to whom it is addressed.

Date of Report: September 26, 2022
Samples Submitted: September 22, 2022
Laboratory Reference: 2209-217
Project: 11-05150-003

VOLATILE ORGANICS EPA 8260D/SIM
page 1 of 2

Matrix: Soil
Units: mg/kg

Analyte	Result	PQL	Method	Date Prepared	Date Analyzed	Flags
Client ID:	**DA7SWCS44220922I**					
Laboratory ID:	09-217-11					
Dichlorodifluoromethane	ND	0.00090	EPA 8260D	9-23-22	9-23-22	
Chloromethane	ND	0.0040	EPA 8260D	9-23-22	9-23-22	
Vinyl Chloride	ND	0.00064	EPA 8260D	9-23-22	9-23-22	
Bromomethane	ND	0.0032	EPA 8260D	9-23-22	9-23-22	
Chloroethane	ND	0.0032	EPA 8260D	9-23-22	9-23-22	
Trichlorofluoromethane	ND	0.00064	EPA 8260D	9-23-22	9-23-22	
1,1-Dichloroethene	ND	0.00064	EPA 8260D	9-23-22	9-23-22	
Acetone	0.31	0.0096	EPA 8260D	9-23-22	9-23-22	
Iodomethane	ND	0.0032	EPA 8260D	9-23-22	9-23-22	
Carbon Disulfide	ND	0.00064	EPA 8260D	9-23-22	9-23-22	
Methylene Chloride	ND	0.0042	EPA 8260D	9-23-22	9-23-22	
(trans) 1,2-Dichloroethene	ND	0.00064	EPA 8260D	9-23-22	9-23-22	
Methyl t-Butyl Ether	ND	0.00064	EPA 8260D	9-23-22	9-23-22	
1,1-Dichloroethane	ND	0.00064	EPA 8260D	9-23-22	9-23-22	
Vinyl Acetate	ND	0.0032	EPA 8260D	9-23-22	9-23-22	
2,2-Dichloropropane	ND	0.00064	EPA 8260D	9-23-22	9-23-22	
(cis) 1,2-Dichloroethene	ND	0.00064	EPA 8260D	9-23-22	9-23-22	
2-Butanone	0.050	0.0032	EPA 8260D	9-23-22	9-23-22	
Bromochloromethane	ND	0.00064	EPA 8260D	9-23-22	9-23-22	
Chloroform	ND	0.00064	EPA 8260D	9-23-22	9-23-22	
1,1,1-Trichloroethane	ND	0.00064	EPA 8260D	9-23-22	9-23-22	
Carbon Tetrachloride	ND	0.00064	EPA 8260D	9-23-22	9-23-22	
1,1-Dichloropropene	ND	0.00064	EPA 8260D	9-23-22	9-23-22	
Benzene	ND	0.00064	EPA 8260D	9-23-22	9-23-22	
1,2-Dichloroethane	ND	0.00064	EPA 8260D	9-23-22	9-23-22	
Trichloroethene	ND	0.00064	EPA 8260D	9-23-22	9-23-22	
1,2-Dichloropropane	ND	0.00064	EPA 8260D	9-23-22	9-23-22	
Dibromomethane	ND	0.00064	EPA 8260D	9-23-22	9-23-22	
Bromodichloromethane	ND	0.00064	EPA 8260D	9-23-22	9-23-22	
2-Chloroethyl Vinyl Ether	ND	0.0032	EPA 8260D	9-23-22	9-23-22	
(cis) 1,3-Dichloropropene	ND	0.00064	EPA 8260D	9-23-22	9-23-22	
Methyl Isobutyl Ketone	ND	0.0032	EPA 8260D	9-23-22	9-23-22	
Toluene	ND	0.0032	EPA 8260D	9-23-22	9-23-22	
(trans) 1,3-Dichloropropene	ND	0.00064	EPA 8260D	9-23-22	9-23-22	

This report pertains to the samples analyzed in accordance with the chain of custody, and is intended only for the use of the individual or company to whom it is addressed.

Date of Report: September 26, 2022
Samples Submitted: September 22, 2022
Laboratory Reference: 2209-217
Project: 11-05150-003

VOLATILE ORGANICS EPA 8260D/SIM
page 2 of 2

Analyte	Result	PQL	Method	Date Prepared	Date Analyzed	Flags
Client ID:	**DA7SWCS44220922I**					
Laboratory ID:	09-217-11					
1,1,2-Trichloroethane	ND	0.00064	EPA 8260D	9-23-22	9-23-22	
Tetrachloroethene	ND	0.00064	EPA 8260D	9-23-22	9-23-22	
1,3-Dichloropropane	ND	0.00064	EPA 8260D	9-23-22	9-23-22	
2-Hexanone	ND	0.0032	EPA 8260D	9-23-22	9-23-22	
Dibromochloromethane	ND	0.00064	EPA 8260D	9-23-22	9-23-22	
1,2-Dibromoethane	ND	0.000032	EPA 8260D/SIM	9-23-22	9-23-22	
Chlorobenzene	ND	0.00064	EPA 8260D	9-23-22	9-23-22	
1,1,1,2-Tetrachloroethane	ND	0.00064	EPA 8260D	9-23-22	9-23-22	
Ethylbenzene	ND	0.00064	EPA 8260D	9-23-22	9-23-22	
m,p-Xylene	ND	0.0013	EPA 8260D	9-23-22	9-23-22	
o-Xylene	ND	0.00064	EPA 8260D	9-23-22	9-23-22	
Styrene	ND	0.00064	EPA 8260D	9-23-22	9-23-22	
Bromoform	ND	0.0032	EPA 8260D	9-23-22	9-23-22	
Isopropylbenzene	ND	0.00064	EPA 8260D	9-23-22	9-23-22	
Bromobenzene	ND	0.00064	EPA 8260D	9-23-22	9-23-22	
1,1,2,2-Tetrachloroethane	ND	0.00064	EPA 8260D	9-23-22	9-23-22	
1,2,3-Trichloropropane	ND	0.00064	EPA 8260D	9-23-22	9-23-22	
n-Propylbenzene	ND	0.00064	EPA 8260D	9-23-22	9-23-22	
2-Chlorotoluene	ND	0.00064	EPA 8260D	9-23-22	9-23-22	
4-Chlorotoluene	ND	0.00064	EPA 8260D	9-23-22	9-23-22	
1,3,5-Trimethylbenzene	ND	0.00064	EPA 8260D	9-23-22	9-23-22	
tert-Butylbenzene	ND	0.00064	EPA 8260D	9-23-22	9-23-22	
1,2,4-Trimethylbenzene	ND	0.00064	EPA 8260D	9-23-22	9-23-22	
sec-Butylbenzene	ND	0.00064	EPA 8260D	9-23-22	9-23-22	
1,3-Dichlorobenzene	ND	0.00064	EPA 8260D	9-23-22	9-23-22	
p-Isopropyltoluene	ND	0.00064	EPA 8260D	9-23-22	9-23-22	
1,4-Dichlorobenzene	ND	0.00064	EPA 8260D	9-23-22	9-23-22	
1,2-Dichlorobenzene	ND	0.00064	EPA 8260D	9-23-22	9-23-22	
n-Butylbenzene	ND	0.00064	EPA 8260D	9-23-22	9-23-22	
1,2-Dibromo-3-chloropropane	ND	0.0032	EPA 8260D	9-23-22	9-23-22	
1,2,4-Trichlorobenzene	ND	0.00064	EPA 8260D	9-23-22	9-23-22	
Hexachlorobutadiene	ND	0.0032	EPA 8260D	9-23-22	9-23-22	
Naphthalene	ND	0.0032	EPA 8260D	9-23-22	9-23-22	
1,2,3-Trichlorobenzene	ND	0.00064	EPA 8260D	9-23-22	9-23-22	
Surrogate:	*Percent Recovery*	*Control Limits*				
Dibromofluoromethane	*100*	*75-130*				
Toluene-d8	*100*	*78-128*				
4-Bromofluorobenzene	*96*	*71-130*				

This report pertains to the samples analyzed in accordance with the chain of custody, and is intended only for the use of the individual or company to whom it is addressed.

Date of Report: September 26, 2022
Samples Submitted: September 22, 2022
Laboratory Reference: 2209-217
Project: 11-05150-003

VOLATILE ORGANICS EPA 8260D/SIM
page 1 of 2

Matrix: Soil
Units: mg/kg

Analyte	Result	PQL	Method	Date Prepared	Date Analyzed	Flags
Client ID:	**DA7SWCS45220922I**					
Laboratory ID:	09-217-12					
Dichlorodifluoromethane	ND	0.00097	EPA 8260D	9-23-22	9-23-22	
Chloromethane	ND	0.0044	EPA 8260D	9-23-22	9-23-22	
Vinyl Chloride	ND	0.00069	EPA 8260D	9-23-22	9-23-22	
Bromomethane	ND	0.0035	EPA 8260D	9-23-22	9-23-22	
Chloroethane	ND	0.0035	EPA 8260D	9-23-22	9-23-22	
Trichlorofluoromethane	ND	0.00069	EPA 8260D	9-23-22	9-23-22	
1,1-Dichloroethene	ND	0.00069	EPA 8260D	9-23-22	9-23-22	
Acetone	2.1	0.54	EPA 8260D	9-26-22	9-26-22	Y
Iodomethane	ND	0.0035	EPA 8260D	9-23-22	9-23-22	
Carbon Disulfide	ND	0.00069	EPA 8260D	9-23-22	9-23-22	
Methylene Chloride	ND	0.0046	EPA 8260D	9-23-22	9-23-22	
(trans) 1,2-Dichloroethene	ND	0.00069	EPA 8260D	9-23-22	9-23-22	
Methyl t-Butyl Ether	ND	0.00069	EPA 8260D	9-23-22	9-23-22	
1,1-Dichloroethane	ND	0.00069	EPA 8260D	9-23-22	9-23-22	
Vinyl Acetate	ND	0.0035	EPA 8260D	9-23-22	9-23-22	
2,2-Dichloropropane	ND	0.00069	EPA 8260D	9-23-22	9-23-22	
(cis) 1,2-Dichloroethene	ND	0.00069	EPA 8260D	9-23-22	9-23-22	
2-Butanone	0.30	0.0035	EPA 8260D	9-23-22	9-23-22	
Bromochloromethane	ND	0.00069	EPA 8260D	9-23-22	9-23-22	
Chloroform	ND	0.00069	EPA 8260D	9-23-22	9-23-22	
1,1,1-Trichloroethane	ND	0.00069	EPA 8260D	9-23-22	9-23-22	
Carbon Tetrachloride	ND	0.00069	EPA 8260D	9-23-22	9-23-22	
1,1-Dichloropropene	ND	0.00069	EPA 8260D	9-23-22	9-23-22	
Benzene	ND	0.00069	EPA 8260D	9-23-22	9-23-22	
1,2-Dichloroethane	ND	0.00069	EPA 8260D	9-23-22	9-23-22	
Trichloroethene	ND	0.00069	EPA 8260D	9-23-22	9-23-22	
1,2-Dichloropropane	ND	0.00069	EPA 8260D	9-23-22	9-23-22	
Dibromomethane	ND	0.00069	EPA 8260D	9-23-22	9-23-22	
Bromodichloromethane	ND	0.00069	EPA 8260D	9-23-22	9-23-22	
2-Chloroethyl Vinyl Ether	ND	0.0035	EPA 8260D	9-23-22	9-23-22	
(cis) 1,3-Dichloropropene	ND	0.00069	EPA 8260D	9-23-22	9-23-22	
Methyl Isobutyl Ketone	ND	0.0035	EPA 8260D	9-23-22	9-23-22	
Toluene	ND	0.0035	EPA 8260D	9-23-22	9-23-22	
(trans) 1,3-Dichloropropene	ND	0.00069	EPA 8260D	9-23-22	9-23-22	

This report pertains to the samples analyzed in accordance with the chain of custody, and is intended only for the use of the individual or company to whom it is addressed.

Date of Report: September 26, 2022
Samples Submitted: September 22, 2022
Laboratory Reference: 2209-217
Project: 11-05150-003

VOLATILE ORGANICS EPA 8260D/SIM
page 2 of 2

Analyte	Result	PQL	Method	Date Prepared	Date Analyzed	Flags
Client ID:	**DA7SWCS45220922I**					
Laboratory ID:	09-217-12					
1,1,2-Trichloroethane	ND	0.00069	EPA 8260D	9-23-22	9-23-22	
Tetrachloroethene	ND	0.00069	EPA 8260D	9-23-22	9-23-22	
1,3-Dichloropropane	ND	0.00069	EPA 8260D	9-23-22	9-23-22	
2-Hexanone	ND	0.0035	EPA 8260D	9-23-22	9-23-22	
Dibromochloromethane	ND	0.00069	EPA 8260D	9-23-22	9-23-22	
1,2-Dibromoethane	ND	0.000035	EPA 8260D/SIM	9-23-22	9-23-22	
Chlorobenzene	ND	0.00069	EPA 8260D	9-23-22	9-23-22	
1,1,1,2-Tetrachloroethane	ND	0.00069	EPA 8260D	9-23-22	9-23-22	
Ethylbenzene	ND	0.00069	EPA 8260D	9-23-22	9-23-22	
m,p-Xylene	ND	0.0014	EPA 8260D	9-23-22	9-23-22	
o-Xylene	ND	0.00069	EPA 8260D	9-23-22	9-23-22	
Styrene	ND	0.00069	EPA 8260D	9-23-22	9-23-22	
Bromoform	ND	0.0035	EPA 8260D	9-23-22	9-23-22	
Isopropylbenzene	ND	0.00069	EPA 8260D	9-23-22	9-23-22	
Bromobenzene	ND	0.00069	EPA 8260D	9-23-22	9-23-22	
1,1,2,2-Tetrachloroethane	ND	0.00069	EPA 8260D	9-23-22	9-23-22	
1,2,3-Trichloropropane	ND	0.00069	EPA 8260D	9-23-22	9-23-22	
n-Propylbenzene	ND	0.00069	EPA 8260D	9-23-22	9-23-22	
2-Chlorotoluene	ND	0.00069	EPA 8260D	9-23-22	9-23-22	
4-Chlorotoluene	ND	0.00069	EPA 8260D	9-23-22	9-23-22	
1,3,5-Trimethylbenzene	ND	0.00069	EPA 8260D	9-23-22	9-23-22	
tert-Butylbenzene	ND	0.00069	EPA 8260D	9-23-22	9-23-22	
1,2,4-Trimethylbenzene	ND	0.00069	EPA 8260D	9-23-22	9-23-22	
sec-Butylbenzene	ND	0.00069	EPA 8260D	9-23-22	9-23-22	
1,3-Dichlorobenzene	ND	0.00069	EPA 8260D	9-23-22	9-23-22	
p-Isopropyltoluene	ND	0.00069	EPA 8260D	9-23-22	9-23-22	
1,4-Dichlorobenzene	ND	0.00069	EPA 8260D	9-23-22	9-23-22	
1,2-Dichlorobenzene	ND	0.00069	EPA 8260D	9-23-22	9-23-22	
n-Butylbenzene	ND	0.00069	EPA 8260D	9-23-22	9-23-22	
1,2-Dibromo-3-chloropropane	ND	0.0035	EPA 8260D	9-23-22	9-23-22	
1,2,4-Trichlorobenzene	ND	0.00069	EPA 8260D	9-23-22	9-23-22	
Hexachlorobutadiene	ND	0.0035	EPA 8260D	9-23-22	9-23-22	
Naphthalene	ND	0.0035	EPA 8260D	9-23-22	9-23-22	
1,2,3-Trichlorobenzene	ND	0.00069	EPA 8260D	9-23-22	9-23-22	
Surrogate:	*Percent Recovery*	*Control Limits*				
Dibromofluoromethane	*101*	*75-130*				
Toluene-d8	*100*	*78-128*				
4-Bromofluorobenzene	*100*	*71-130*				

This report pertains to the samples analyzed in accordance with the chain of custody, and is intended only for the use of the individual or company to whom it is addressed.

Date of Report: September 26, 2022
Samples Submitted: September 22, 2022
Laboratory Reference: 2209-217
Project: 11-05150-003

VOLATILE ORGANICS EPA 8260D/SIM
page 1 of 2

Matrix: Soil
Units: mg/kg

Analyte	Result	PQL	Method	Date Prepared	Date Analyzed	Flags
Client ID:	**DA7SWCS46220922I**					
Laboratory ID:	09-217-13					
Dichlorodifluoromethane	ND	0.00082	EPA 8260D	9-23-22	9-23-22	
Chloromethane	ND	0.0037	EPA 8260D	9-23-22	9-23-22	
Vinyl Chloride	ND	0.00058	EPA 8260D	9-23-22	9-23-22	
Bromomethane	ND	0.0029	EPA 8260D	9-23-22	9-23-22	
Chloroethane	ND	0.0029	EPA 8260D	9-23-22	9-23-22	
Trichlorofluoromethane	ND	0.00058	EPA 8260D	9-23-22	9-23-22	
1,1-Dichloroethene	ND	0.00058	EPA 8260D	9-23-22	9-23-22	
Acetone	0.051	0.0087	EPA 8260D	9-23-22	9-23-22	
Iodomethane	ND	0.0029	EPA 8260D	9-23-22	9-23-22	
Carbon Disulfide	ND	0.00058	EPA 8260D	9-23-22	9-23-22	
Methylene Chloride	ND	0.0038	EPA 8260D	9-23-22	9-23-22	
(trans) 1,2-Dichloroethene	ND	0.00058	EPA 8260D	9-23-22	9-23-22	
Methyl t-Butyl Ether	ND	0.00058	EPA 8260D	9-23-22	9-23-22	
1,1-Dichloroethane	ND	0.00058	EPA 8260D	9-23-22	9-23-22	
Vinyl Acetate	ND	0.0029	EPA 8260D	9-23-22	9-23-22	
2,2-Dichloropropane	ND	0.00058	EPA 8260D	9-23-22	9-23-22	
(cis) 1,2-Dichloroethene	ND	0.00058	EPA 8260D	9-23-22	9-23-22	
2-Butanone	0.045	0.0029	EPA 8260D	9-23-22	9-23-22	
Bromochloromethane	ND	0.00058	EPA 8260D	9-23-22	9-23-22	
Chloroform	ND	0.00058	EPA 8260D	9-23-22	9-23-22	
1,1,1-Trichloroethane	ND	0.00058	EPA 8260D	9-23-22	9-23-22	
Carbon Tetrachloride	ND	0.00058	EPA 8260D	9-23-22	9-23-22	
1,1-Dichloropropene	ND	0.00058	EPA 8260D	9-23-22	9-23-22	
Benzene	ND	0.00058	EPA 8260D	9-23-22	9-23-22	
1,2-Dichloroethane	ND	0.00058	EPA 8260D	9-23-22	9-23-22	
Trichloroethene	ND	0.00058	EPA 8260D	9-23-22	9-23-22	
1,2-Dichloropropane	ND	0.00058	EPA 8260D	9-23-22	9-23-22	
Dibromomethane	ND	0.00058	EPA 8260D	9-23-22	9-23-22	
Bromodichloromethane	ND	0.00058	EPA 8260D	9-23-22	9-23-22	
2-Chloroethyl Vinyl Ether	ND	0.0029	EPA 8260D	9-23-22	9-23-22	
(cis) 1,3-Dichloropropene	ND	0.00058	EPA 8260D	9-23-22	9-23-22	
Methyl Isobutyl Ketone	0.0032	0.0029	EPA 8260D	9-23-22	9-23-22	Y
Toluene	ND	0.0029	EPA 8260D	9-23-22	9-23-22	
(trans) 1,3-Dichloropropene	ND	0.00058	EPA 8260D	9-23-22	9-23-22	

This report pertains to the samples analyzed in accordance with the chain of custody, and is intended only for the use of the individual or company to whom it is addressed.

Date of Report: September 26, 2022
Samples Submitted: September 22, 2022
Laboratory Reference: 2209-217
Project: 11-05150-003

VOLATILE ORGANICS EPA 8260D/SIM
page 2 of 2

Analyte	Result	PQL	Method	Date Prepared	Date Analyzed	Flags
Client ID:	**DA7SWCS46220922I**					
Laboratory ID:	09-217-13					
1,1,2-Trichloroethane	ND	0.00058	EPA 8260D	9-23-22	9-23-22	
Tetrachloroethene	ND	0.00058	EPA 8260D	9-23-22	9-23-22	
1,3-Dichloropropane	ND	0.00058	EPA 8260D	9-23-22	9-23-22	
2-Hexanone	ND	0.0029	EPA 8260D	9-23-22	9-23-22	
Dibromochloromethane	ND	0.00058	EPA 8260D	9-23-22	9-23-22	
1,2-Dibromoethane	ND	0.000029	EPA 8260D/SIM	9-23-22	9-23-22	
Chlorobenzene	ND	0.00058	EPA 8260D	9-23-22	9-23-22	
1,1,1,2-Tetrachloroethane	ND	0.00058	EPA 8260D	9-23-22	9-23-22	
Ethylbenzene	ND	0.00058	EPA 8260D	9-23-22	9-23-22	
m,p-Xylene	ND	0.0012	EPA 8260D	9-23-22	9-23-22	
o-Xylene	ND	0.00058	EPA 8260D	9-23-22	9-23-22	
Styrene	ND	0.00058	EPA 8260D	9-23-22	9-23-22	
Bromoform	ND	0.0029	EPA 8260D	9-23-22	9-23-22	
Isopropylbenzene	ND	0.00058	EPA 8260D	9-23-22	9-23-22	
Bromobenzene	ND	0.00058	EPA 8260D	9-23-22	9-23-22	
1,1,2,2-Tetrachloroethane	ND	0.00058	EPA 8260D	9-23-22	9-23-22	
1,2,3-Trichloropropane	ND	0.00058	EPA 8260D	9-23-22	9-23-22	
n-Propylbenzene	ND	0.00058	EPA 8260D	9-23-22	9-23-22	
2-Chlorotoluene	ND	0.00058	EPA 8260D	9-23-22	9-23-22	
4-Chlorotoluene	ND	0.00058	EPA 8260D	9-23-22	9-23-22	
1,3,5-Trimethylbenzene	ND	0.00058	EPA 8260D	9-23-22	9-23-22	
tert-Butylbenzene	ND	0.00058	EPA 8260D	9-23-22	9-23-22	
1,2,4-Trimethylbenzene	ND	0.00058	EPA 8260D	9-23-22	9-23-22	
sec-Butylbenzene	ND	0.00058	EPA 8260D	9-23-22	9-23-22	
1,3-Dichlorobenzene	ND	0.00058	EPA 8260D	9-23-22	9-23-22	
p-Isopropyltoluene	ND	0.00058	EPA 8260D	9-23-22	9-23-22	
1,4-Dichlorobenzene	ND	0.00058	EPA 8260D	9-23-22	9-23-22	
1,2-Dichlorobenzene	ND	0.00058	EPA 8260D	9-23-22	9-23-22	
n-Butylbenzene	ND	0.00058	EPA 8260D	9-23-22	9-23-22	
1,2-Dibromo-3-chloropropane	ND	0.0029	EPA 8260D	9-23-22	9-23-22	
1,2,4-Trichlorobenzene	ND	0.00058	EPA 8260D	9-23-22	9-23-22	
Hexachlorobutadiene	ND	0.0029	EPA 8260D	9-23-22	9-23-22	
Naphthalene	ND	0.0029	EPA 8260D	9-23-22	9-23-22	
1,2,3-Trichlorobenzene	ND	0.00058	EPA 8260D	9-23-22	9-23-22	
Surrogate:	*Percent Recovery*	*Control Limits*				
Dibromofluoromethane	*104*	*75-130*				
Toluene-d8	*100*	*78-128*				
4-Bromofluorobenzene	*99*	*71-130*				

This report pertains to the samples analyzed in accordance with the chain of custody, and is intended only for the use of the individual or company to whom it is addressed.

Date of Report: September 26, 2022
Samples Submitted: September 22, 2022
Laboratory Reference: 2209-217
Project: 11-05150-003

VOLATILE ORGANICS EPA 8260D/SIM
QUALITY CONTROL
page 1 of 2

Matrix: Soil
Units: mg/kg

Analyte	Result	PQL	Method	Date Prepared	Date Analyzed	Flags
METHOD BLANK						
Laboratory ID:	MB0923S1					
Dichlorodifluoromethane	ND	0.0014	EPA 8260D	9-23-22	9-23-22	
Chloromethane	ND	0.0063	EPA 8260D	9-23-22	9-23-22	
Vinyl Chloride	ND	0.0010	EPA 8260D	9-23-22	9-23-22	
Bromomethane	ND	0.0050	EPA 8260D	9-23-22	9-23-22	
Chloroethane	ND	0.0050	EPA 8260D	9-23-22	9-23-22	
Trichlorofluoromethane	ND	0.0010	EPA 8260D	9-23-22	9-23-22	
1,1-Dichloroethene	ND	0.0010	EPA 8260D	9-23-22	9-23-22	
Acetone	ND	0.015	EPA 8260D	9-23-22	9-23-22	
Iodomethane	ND	0.0050	EPA 8260D	9-23-22	9-23-22	
Carbon Disulfide	ND	0.0010	EPA 8260D	9-23-22	9-23-22	
Methylene Chloride	ND	0.0066	EPA 8260D	9-23-22	9-23-22	
(trans) 1,2-Dichloroethene	ND	0.0010	EPA 8260D	9-23-22	9-23-22	
Methyl t-Butyl Ether	ND	0.0010	EPA 8260D	9-23-22	9-23-22	
1,1-Dichloroethane	ND	0.0010	EPA 8260D	9-23-22	9-23-22	
Vinyl Acetate	ND	0.0050	EPA 8260D	9-23-22	9-23-22	
2,2-Dichloropropane	ND	0.0010	EPA 8260D	9-23-22	9-23-22	
(cis) 1,2-Dichloroethene	ND	0.0010	EPA 8260D	9-23-22	9-23-22	
2-Butanone	ND	0.0050	EPA 8260D	9-23-22	9-23-22	
Bromochloromethane	ND	0.0010	EPA 8260D	9-23-22	9-23-22	
Chloroform	ND	0.0010	EPA 8260D	9-23-22	9-23-22	
1,1,1-Trichloroethane	ND	0.0010	EPA 8260D	9-23-22	9-23-22	
Carbon Tetrachloride	ND	0.0010	EPA 8260D	9-23-22	9-23-22	
1,1-Dichloropropene	ND	0.0010	EPA 8260D	9-23-22	9-23-22	
Benzene	ND	0.0010	EPA 8260D	9-23-22	9-23-22	
1,2-Dichloroethane	ND	0.0010	EPA 8260D	9-23-22	9-23-22	
Trichloroethene	ND	0.0010	EPA 8260D	9-23-22	9-23-22	
1,2-Dichloropropane	ND	0.0010	EPA 8260D	9-23-22	9-23-22	
Dibromomethane	ND	0.0010	EPA 8260D	9-23-22	9-23-22	
Bromodichloromethane	ND	0.0010	EPA 8260D	9-23-22	9-23-22	
2-Chloroethyl Vinyl Ether	ND	0.0050	EPA 8260D	9-23-22	9-23-22	
(cis) 1,3-Dichloropropene	ND	0.0010	EPA 8260D	9-23-22	9-23-22	
Methyl Isobutyl Ketone	ND	0.0050	EPA 8260D	9-23-22	9-23-22	
Toluene	ND	0.0050	EPA 8260D	9-23-22	9-23-22	
(trans) 1,3-Dichloropropene	ND	0.0010	EPA 8260D	9-23-22	9-23-22	

This report pertains to the samples analyzed in accordance with the chain of custody,
and is intended only for the use of the individual or company to whom it is addressed.

Date of Report: September 26, 2022
Samples Submitted: September 22, 2022
Laboratory Reference: 2209-217
Project: 11-05150-003

VOLATILE ORGANICS EPA 8260D/SIM
QUALITY CONTROL
page 2 of 2

Analyte	Result	PQL	Method	Date Prepared	Date Analyzed	Flags
METHOD BLANK						
Laboratory ID:	MB0923S1					
1,1,2-Trichloroethane	ND	0.0010	EPA 8260D	9-23-22	9-23-22	
Tetrachloroethene	ND	0.0010	EPA 8260D	9-23-22	9-23-22	
1,3-Dichloropropane	ND	0.0010	EPA 8260D	9-23-22	9-23-22	
2-Hexanone	ND	0.0050	EPA 8260D	9-23-22	9-23-22	
Dibromochloromethane	ND	0.0010	EPA 8260D	9-23-22	9-23-22	
1,2-Dibromoethane	ND	0.000050	EPA 8260D/SIM	9-23-22	9-23-22	
Chlorobenzene	ND	0.0010	EPA 8260D	9-23-22	9-23-22	
1,1,1,2-Tetrachloroethane	ND	0.0010	EPA 8260D	9-23-22	9-23-22	
Ethylbenzene	ND	0.0010	EPA 8260D	9-23-22	9-23-22	
m,p-Xylene	ND	0.0020	EPA 8260D	9-23-22	9-23-22	
o-Xylene	ND	0.0010	EPA 8260D	9-23-22	9-23-22	
Styrene	ND	0.0010	EPA 8260D	9-23-22	9-23-22	
Bromoform	ND	0.0050	EPA 8260D	9-23-22	9-23-22	
Isopropylbenzene	ND	0.0010	EPA 8260D	9-23-22	9-23-22	
Bromobenzene	ND	0.0010	EPA 8260D	9-23-22	9-23-22	
1,1,2,2-Tetrachloroethane	ND	0.0010	EPA 8260D	9-23-22	9-23-22	
1,2,3-Trichloropropane	ND	0.0010	EPA 8260D	9-23-22	9-23-22	
n-Propylbenzene	ND	0.0010	EPA 8260D	9-23-22	9-23-22	
2-Chlorotoluene	ND	0.0010	EPA 8260D	9-23-22	9-23-22	
4-Chlorotoluene	ND	0.0010	EPA 8260D	9-23-22	9-23-22	
1,3,5-Trimethylbenzene	ND	0.0010	EPA 8260D	9-23-22	9-23-22	
tert-Butylbenzene	ND	0.0010	EPA 8260D	9-23-22	9-23-22	
1,2,4-Trimethylbenzene	ND	0.0010	EPA 8260D	9-23-22	9-23-22	
sec-Butylbenzene	ND	0.0010	EPA 8260D	9-23-22	9-23-22	
1,3-Dichlorobenzene	ND	0.0010	EPA 8260D	9-23-22	9-23-22	
p-Isopropyltoluene	ND	0.0010	EPA 8260D	9-23-22	9-23-22	
1,4-Dichlorobenzene	ND	0.0010	EPA 8260D	9-23-22	9-23-22	
1,2-Dichlorobenzene	ND	0.0010	EPA 8260D	9-23-22	9-23-22	
n-Butylbenzene	ND	0.0010	EPA 8260D	9-23-22	9-23-22	
1,2-Dibromo-3-chloropropane	ND	0.0050	EPA 8260D	9-23-22	9-23-22	
1,2,4-Trichlorobenzene	ND	0.0010	EPA 8260D	9-23-22	9-23-22	
Hexachlorobutadiene	ND	0.0050	EPA 8260D	9-23-22	9-23-22	
Naphthalene	ND	0.0050	EPA 8260D	9-23-22	9-23-22	
1,2,3-Trichlorobenzene	ND	0.0010	EPA 8260D	9-23-22	9-23-22	
Surrogate:	*Percent Recovery*	*Control Limits*				
Dibromofluoromethane	*98*	*75-130*				
Toluene-d8	*100*	*78-128*				
4-Bromofluorobenzene	*101*	*71-130*				

This report pertains to the samples analyzed in accordance with the chain of custody, and is intended only for the use of the individual or company to whom it is addressed.

Date of Report: September 26, 2022
Samples Submitted: September 22, 2022
Laboratory Reference: 2209-217
Project: 11-05150-003

VOLATILE ORGANICS EPA 8260D/SIM
QUALITY CONTROL
page 1 of 2

Matrix: Soil
Units: mg/kg

Analyte	Result	PQL	Method	Date Prepared	Date Analyzed	Flags
METHOD BLANK						
Laboratory ID:	MB0926S1					
Dichlorodifluoromethane	ND	0.0010	EPA 8260D	9-26-22	9-26-22	
Chloromethane	ND	0.0050	EPA 8260D	9-26-22	9-26-22	
Vinyl Chloride	ND	0.0010	EPA 8260D	9-26-22	9-26-22	
Bromomethane	ND	0.0050	EPA 8260D	9-26-22	9-26-22	
Chloroethane	ND	0.0050	EPA 8260D	9-26-22	9-26-22	
Trichlorofluoromethane	ND	0.0010	EPA 8260D	9-26-22	9-26-22	
1,1-Dichloroethene	ND	0.0010	EPA 8260D	9-26-22	9-26-22	
Acetone	ND	0.015	EPA 8260D	9-26-22	9-26-22	
Iodomethane	ND	0.0050	EPA 8260D	9-26-22	9-26-22	
Carbon Disulfide	ND	0.0010	EPA 8260D	9-26-22	9-26-22	
Methylene Chloride	ND	0.0050	EPA 8260D	9-26-22	9-26-22	
(trans) 1,2-Dichloroethene	ND	0.0010	EPA 8260D	9-26-22	9-26-22	
Methyl t-Butyl Ether	ND	0.0010	EPA 8260D	9-26-22	9-26-22	
1,1-Dichloroethane	ND	0.0010	EPA 8260D	9-26-22	9-26-22	
Vinyl Acetate	ND	0.0050	EPA 8260D	9-26-22	9-26-22	
2,2-Dichloropropane	ND	0.0010	EPA 8260D	9-26-22	9-26-22	
(cis) 1,2-Dichloroethene	ND	0.0010	EPA 8260D	9-26-22	9-26-22	
2-Butanone	ND	0.0050	EPA 8260D	9-26-22	9-26-22	
Bromochloromethane	ND	0.0010	EPA 8260D	9-26-22	9-26-22	
Chloroform	ND	0.0010	EPA 8260D	9-26-22	9-26-22	
1,1,1-Trichloroethane	ND	0.0010	EPA 8260D	9-26-22	9-26-22	
Carbon Tetrachloride	ND	0.0010	EPA 8260D	9-26-22	9-26-22	
1,1-Dichloropropene	ND	0.0010	EPA 8260D	9-26-22	9-26-22	
Benzene	ND	0.0010	EPA 8260D	9-26-22	9-26-22	
1,2-Dichloroethane	ND	0.0010	EPA 8260D	9-26-22	9-26-22	
Trichloroethene	ND	0.0010	EPA 8260D	9-26-22	9-26-22	
1,2-Dichloropropane	ND	0.0010	EPA 8260D	9-26-22	9-26-22	
Dibromomethane	ND	0.0010	EPA 8260D	9-26-22	9-26-22	
Bromodichloromethane	ND	0.0010	EPA 8260D	9-26-22	9-26-22	
2-Chloroethyl Vinyl Ether	ND	0.0050	EPA 8260D	9-26-22	9-26-22	
(cis) 1,3-Dichloropropene	ND	0.0010	EPA 8260D	9-26-22	9-26-22	
Methyl Isobutyl Ketone	ND	0.0050	EPA 8260D	9-26-22	9-26-22	
Toluene	ND	0.0050	EPA 8260D	9-26-22	9-26-22	
(trans) 1,3-Dichloropropene	ND	0.0010	EPA 8260D	9-26-22	9-26-22	

This report pertains to the samples analyzed in accordance with the chain of custody, and is intended only for the use of the individual or company to whom it is addressed.

Date of Report: September 26, 2022
Samples Submitted: September 22, 2022
Laboratory Reference: 2209-217
Project: 11-05150-003

VOLATILE ORGANICS EPA 8260D/SIM
QUALITY CONTROL
page 2 of 2

Analyte	Result	PQL	Method	Date Prepared	Date Analyzed	Flags
METHOD BLANK						
Laboratory ID:	MB0926S1					
1,1,2-Trichloroethane	ND	0.0010	EPA 8260D	9-26-22	9-26-22	
Tetrachloroethene	ND	0.0010	EPA 8260D	9-26-22	9-26-22	
1,3-Dichloropropane	ND	0.0010	EPA 8260D	9-26-22	9-26-22	
2-Hexanone	ND	0.0050	EPA 8260D	9-26-22	9-26-22	
Dibromochloromethane	ND	0.0010	EPA 8260D	9-26-22	9-26-22	
1,2-Dibromoethane	ND	0.0010	EPA 8260D	9-26-22	9-26-22	
Chlorobenzene	ND	0.0010	EPA 8260D	9-26-22	9-26-22	
1,1,1,2-Tetrachloroethane	ND	0.0010	EPA 8260D	9-26-22	9-26-22	
Ethylbenzene	ND	0.0010	EPA 8260D	9-26-22	9-26-22	
m,p-Xylene	ND	0.0020	EPA 8260D	9-26-22	9-26-22	
o-Xylene	ND	0.0010	EPA 8260D	9-26-22	9-26-22	
Styrene	ND	0.0010	EPA 8260D	9-26-22	9-26-22	
Bromoform	ND	0.0050	EPA 8260D	9-26-22	9-26-22	
Isopropylbenzene	ND	0.0010	EPA 8260D	9-26-22	9-26-22	
Bromobenzene	ND	0.0010	EPA 8260D	9-26-22	9-26-22	
1,1,2,2-Tetrachloroethane	ND	0.0010	EPA 8260D	9-26-22	9-26-22	
1,2,3-Trichloropropane	ND	0.0010	EPA 8260D	9-26-22	9-26-22	
n-Propylbenzene	ND	0.0010	EPA 8260D	9-26-22	9-26-22	
2-Chlorotoluene	ND	0.0010	EPA 8260D	9-26-22	9-26-22	
4-Chlorotoluene	ND	0.0010	EPA 8260D	9-26-22	9-26-22	
1,3,5-Trimethylbenzene	ND	0.0010	EPA 8260D	9-26-22	9-26-22	
tert-Butylbenzene	ND	0.0010	EPA 8260D	9-26-22	9-26-22	
1,2,4-Trimethylbenzene	ND	0.0010	EPA 8260D	9-26-22	9-26-22	
sec-Butylbenzene	ND	0.0010	EPA 8260D	9-26-22	9-26-22	
1,3-Dichlorobenzene	ND	0.0010	EPA 8260D	9-26-22	9-26-22	
p-Isopropyltoluene	ND	0.0010	EPA 8260D	9-26-22	9-26-22	
1,4-Dichlorobenzene	ND	0.0010	EPA 8260D	9-26-22	9-26-22	
1,2-Dichlorobenzene	ND	0.0010	EPA 8260D	9-26-22	9-26-22	
n-Butylbenzene	ND	0.0010	EPA 8260D	9-26-22	9-26-22	
1,2-Dibromo-3-chloropropane	ND	0.0050	EPA 8260D	9-26-22	9-26-22	
1,2,4-Trichlorobenzene	ND	0.0010	EPA 8260D	9-26-22	9-26-22	
Hexachlorobutadiene	ND	0.0050	EPA 8260D	9-26-22	9-26-22	
Naphthalene	ND	0.0050	EPA 8260D	9-26-22	9-26-22	
1,2,3-Trichlorobenzene	ND	0.0010	EPA 8260D	9-26-22	9-26-22	
Surrogate:	*Percent Recovery*	*Control Limits*				
Dibromofluoromethane	*109*	*75-130*				
Toluene-d8	*108*	*78-128*				
4-Bromofluorobenzene	*103*	*71-130*				

This report pertains to the samples analyzed in accordance with the chain of custody, and is intended only for the use of the individual or company to whom it is addressed.

Date of Report: September 26, 2022
Samples Submitted: September 22, 2022
Laboratory Reference: 2209-217
Project: 11-05150-003

VOLATILE ORGANICS EPA 8260D/SIM
QUALITY CONTROL
page 1 of 2

Matrix: Soil
Units: mg/kg

Analyte	Result		Spike Level		Percent Recovery		Recovery Limits	RPD	RPD Limit	Flags
SPIKE BLANKS										
Laboratory ID:	SB0923S1									
	SB	SBD	SB	SBD	SB	SBD				
Dichlorodifluoromethane	**0.0363**	**0.0352**	0.0500	0.0500	73	70	30-160	3	26	
Chloromethane	**0.0395**	**0.0396**	0.0500	0.0500	79	79	59-131	0	26	
Vinyl Chloride	**0.0450**	**0.0449**	0.0500	0.0500	90	90	68-136	0	23	
Bromomethane	**0.0413**	**0.0428**	0.0500	0.0500	83	86	48-155	4	32	
Chloroethane	**0.0431**	**0.0438**	0.0500	0.0500	86	88	67-141	2	16	
Trichlorofluoromethane	**0.0443**	**0.0469**	0.0500	0.0500	89	94	76-127	6	19	
1,1-Dichloroethene	**0.0459**	**0.0471**	0.0500	0.0500	92	94	75-129	3	19	
Acetone	**0.0562**	**0.0666**	0.0500	0.0500	112	133	49-158	17	37	
Iodomethane	**0.0455**	**0.0477**	0.0500	0.0500	91	95	37-140	5	27	
Carbon Disulfide	**0.0404**	**0.0430**	0.0500	0.0500	81	86	41-143	6	19	
Methylene Chloride	**0.0379**	**0.0413**	0.0500	0.0500	76	83	60-124	9	18	
(trans) 1,2-Dichloroethene	**0.0475**	**0.0492**	0.0500	0.0500	95	98	79-133	4	15	
Methyl t-Butyl Ether	**0.0465**	**0.0483**	0.0500	0.0500	93	97	73-125	4	17	
1,1-Dichloroethane	**0.0471**	**0.0484**	0.0500	0.0500	94	97	79-125	3	17	
Vinyl Acetate	**0.0453**	**0.0456**	0.0500	0.0500	91	91	51-145	1	41	
2,2-Dichloropropane	**0.0527**	**0.0537**	0.0500	0.0500	105	107	79-126	2	18	
(cis) 1,2-Dichloroethene	**0.0495**	**0.0512**	0.0500	0.0500	99	102	75-131	3	15	
2-Butanone	**0.0581**	**0.0554**	0.0500	0.0500	116	111	54-145	5	32	
Bromochloromethane	**0.0475**	**0.0501**	0.0500	0.0500	95	100	80-126	5	15	
Chloroform	**0.0452**	**0.0475**	0.0500	0.0500	90	95	80-123	5	15	
1,1,1-Trichloroethane	**0.0435**	**0.0460**	0.0500	0.0500	87	92	78-124	6	21	
Carbon Tetrachloride	**0.0408**	**0.0432**	0.0500	0.0500	82	86	74-127	6	18	
1,1-Dichloropropene	**0.0420**	**0.0423**	0.0500	0.0500	84	85	80-123	1	15	
Benzene	**0.0445**	**0.0459**	0.0500	0.0500	89	92	80-122	3	18	
1,2-Dichloroethane	**0.0458**	**0.0472**	0.0500	0.0500	92	94	75-124	3	15	
Trichloroethene	**0.0552**	**0.0555**	0.0500	0.0500	110	111	80-129	1	18	
1,2-Dichloropropane	**0.0553**	**0.0556**	0.0500	0.0500	111	111	80-123	1	15	
Dibromomethane	**0.0563**	**0.0563**	0.0500	0.0500	113	113	80-123	0	15	
Bromodichloromethane	**0.0554**	**0.0562**	0.0500	0.0500	111	112	80-129	1	15	
(cis) 1,3-Dichloropropene	**0.0579**	**0.0581**	0.0500	0.0500	116	116	80-130	0	15	
Methyl Isobutyl Ketone	**0.0611**	**0.0573**	0.0500	0.0500	122	115	63-137	6	27	
Toluene	**0.0508**	**0.0527**	0.0500	0.0500	102	105	80-120	4	18	
(trans) 1,3-Dichloropropene	**0.0567**	**0.0567**	0.0500	0.0500	113	113	80-124	0	15	

This report pertains to the samples analyzed in accordance with the chain of custody, and is intended only for the use of the individual or company to whom it is addressed.

Date of Report: September 26, 2022
Samples Submitted: September 22, 2022
Laboratory Reference: 2209-217
Project: 11-05150-003

VOLATILE ORGANICS EPA 8260D/SIM
QUALITY CONTROL
page 2 of 2

Analyte	Result		Spike Level		Percent Recovery		Recovery Limits	RPD	RPD Limit	Flags
SPIKE BLANKS										
Laboratory ID:	SB0923S1									
	SB	SBD	SB	SBD	SB	SBD				
1,1,2-Trichloroethane	**0.0505**	**0.0512**	0.0500	0.0500	101	102	80-120	1	15	
Tetrachloroethene	**0.0566**	**0.0583**	0.0500	0.0500	113	117	77-126	3	15	
1,3-Dichloropropane	**0.0536**	**0.0531**	0.0500	0.0500	107	106	77-123	1	15	
2-Hexanone	**0.0626**	**0.0650**	0.0500	0.0500	125	130	53-137	4	29	
Dibromochloromethane	**0.0537**	**0.0542**	0.0500	0.0500	107	108	80-128	1	16	
1,2-Dibromoethane	**0.0542**	**0.0549**	0.0500	0.0500	108	110	80-122	1	20	
Chlorobenzene	**0.0510**	**0.0516**	0.0500	0.0500	102	103	80-120	1	18	
1,1,1,2-Tetrachloroethane	**0.0522**	**0.0540**	0.0500	0.0500	104	108	80-120	3	15	
Ethylbenzene	**0.0506**	**0.0512**	0.0500	0.0500	101	102	80-120	1	15	
m,p-Xylene	**0.0987**	**0.101**	0.100	0.100	99	101	80-120	2	15	
o-Xylene	**0.0506**	**0.0512**	0.0500	0.0500	101	102	80-120	1	15	
Styrene	**0.0511**	**0.0528**	0.0500	0.0500	102	106	80-122	3	15	
Bromoform	**0.0550**	**0.0540**	0.0500	0.0500	110	108	78-126	2	15	
Isopropylbenzene	**0.0528**	**0.0530**	0.0500	0.0500	106	106	80-125	0	15	
Bromobenzene	**0.0487**	**0.0497**	0.0500	0.0500	97	99	79-124	2	15	
1,1,2,2-Tetrachloroethane	**0.0546**	**0.0529**	0.0500	0.0500	109	106	75-122	3	17	
1,2,3-Trichloropropane	**0.0478**	**0.0469**	0.0500	0.0500	96	94	72-125	2	20	
n-Propylbenzene	**0.0507**	**0.0515**	0.0500	0.0500	101	103	77-126	2	16	
2-Chlorotoluene	**0.0483**	**0.0497**	0.0500	0.0500	97	99	75-128	3	15	
4-Chlorotoluene	**0.0485**	**0.0505**	0.0500	0.0500	97	101	78-127	4	16	
1,3,5-Trimethylbenzene	**0.0492**	**0.0499**	0.0500	0.0500	98	100	77-128	1	15	
tert-Butylbenzene	**0.0478**	**0.0497**	0.0500	0.0500	96	99	73-130	4	20	
1,2,4-Trimethylbenzene	**0.0488**	**0.0495**	0.0500	0.0500	98	99	77-125	1	16	
sec-Butylbenzene	**0.0443**	**0.0442**	0.0500	0.0500	89	88	75-130	0	17	
1,3-Dichlorobenzene	**0.0497**	**0.0519**	0.0500	0.0500	99	104	78-123	4	17	
p-Isopropyltoluene	**0.0503**	**0.0526**	0.0500	0.0500	101	105	75-130	4	18	
1,4-Dichlorobenzene	**0.0479**	**0.0492**	0.0500	0.0500	96	98	77-121	3	17	
1,2-Dichlorobenzene	**0.0497**	**0.0512**	0.0500	0.0500	99	102	80-120	3	15	
n-Butylbenzene	**0.0525**	**0.0542**	0.0500	0.0500	105	108	76-131	3	20	
1,2-Dibromo-3-chloropropane	**0.0592**	**0.0556**	0.0500	0.0500	118	111	61-137	6	28	
1,2,4-Trichlorobenzene	**0.0521**	**0.0571**	0.0500	0.0500	104	114	77-127	9	17	
Hexachlorobutadiene	**0.0468**	**0.0530**	0.0500	0.0500	94	106	77-125	12	22	
Naphthalene	**0.0555**	**0.0570**	0.0500	0.0500	111	114	68-129	3	19	
1,2,3-Trichlorobenzene	**0.0493**	**0.0537**	0.0500	0.0500	99	107	77-124	9	19	
Surrogate:										
Dibromofluoromethane					*100*	*102*	*75-130*			
Toluene-d8					*100*	*101*	*78-128*			
4-Bromofluorobenzene					*100*	*102*	*71-130*			

This report pertains to the samples analyzed in accordance with the chain of custody, and is intended only for the use of the individual or company to whom it is addressed.

Date of Report: September 26, 2022
Samples Submitted: September 22, 2022
Laboratory Reference: 2209-217
Project: 11-05150-003

VOLATILE ORGANICS EPA 8260D/SIM
QUALITY CONTROL
page 1 of 2

Matrix: Soil
Units: mg/kg

Analyte	Result		Spike Level		Percent Recovery		Recovery Limits	RPD	RPD Limit	Flags
SPIKE BLANKS										
Laboratory ID:	SB0926S1									
	SB	SBD	SB	SBD	SB	SBD				
Dichlorodifluoromethane	**0.0634**	**0.0602**	0.0500	0.0500	127	120	30-160	5	26	
Chloromethane	**0.0579**	**0.0588**	0.0500	0.0500	116	118	59-131	2	26	
Vinyl Chloride	**0.0602**	**0.0608**	0.0500	0.0500	120	122	68-136	1	23	
Bromomethane	**0.0521**	**0.0497**	0.0500	0.0500	104	99	48-155	5	32	
Chloroethane	**0.0892**	**0.0910**	0.0500	0.0500	178	182	67-141	2	16	I,I
Trichlorofluoromethane	**0.0543**	**0.0554**	0.0500	0.0500	109	111	76-127	2	19	
1,1-Dichloroethene	**0.0614**	**0.0629**	0.0500	0.0500	123	126	75-129	2	19	
Acetone	**0.0675**	**0.0655**	0.0500	0.0500	135	131	49-158	3	37	
Iodomethane	**0.0413**	**0.0395**	0.0500	0.0500	83	79	37-140	4	27	
Carbon Disulfide	**0.0426**	**0.0355**	0.0500	0.0500	85	71	41-143	18	19	
Methylene Chloride	**0.0566**	**0.0579**	0.0500	0.0500	113	116	60-124	2	18	
(trans) 1,2-Dichloroethene	**0.0593**	**0.0601**	0.0500	0.0500	119	120	79-133	1	15	
Methyl t-Butyl Ether	**0.0524**	**0.0545**	0.0500	0.0500	105	109	73-125	4	17	
1,1-Dichloroethane	**0.0582**	**0.0608**	0.0500	0.0500	116	122	79-125	4	17	
Vinyl Acetate	**0.0502**	**0.0492**	0.0500	0.0500	100	98	51-145	2	41	
2,2-Dichloropropane	**0.0563**	**0.0572**	0.0500	0.0500	113	114	79-126	2	18	
(cis) 1,2-Dichloroethene	**0.0573**	**0.0589**	0.0500	0.0500	115	118	75-131	3	15	
2-Butanone	**0.0643**	**0.0560**	0.0500	0.0500	129	112	54-145	14	32	
Bromochloromethane	**0.0550**	**0.0568**	0.0500	0.0500	110	114	80-126	3	15	
Chloroform	**0.0544**	**0.0565**	0.0500	0.0500	109	113	80-123	4	15	
1,1,1-Trichloroethane	**0.0541**	**0.0560**	0.0500	0.0500	108	112	78-124	3	21	
Carbon Tetrachloride	**0.0540**	**0.0548**	0.0500	0.0500	108	110	74-127	1	18	
1,1-Dichloropropene	**0.0574**	**0.0593**	0.0500	0.0500	115	119	80-123	3	15	
Benzene	**0.0529**	**0.0538**	0.0500	0.0500	106	108	80-122	2	18	
1,2-Dichloroethane	**0.0530**	**0.0548**	0.0500	0.0500	106	110	75-124	3	15	
Trichloroethene	**0.0530**	**0.0551**	0.0500	0.0500	106	110	80-129	4	18	
1,2-Dichloropropane	**0.0578**	**0.0582**	0.0500	0.0500	116	116	80-123	1	15	
Dibromomethane	**0.0511**	**0.0527**	0.0500	0.0500	102	105	80-123	3	15	
Bromodichloromethane	**0.0549**	**0.0574**	0.0500	0.0500	110	115	80-129	4	15	
(cis) 1,3-Dichloropropene	**0.0551**	**0.0573**	0.0500	0.0500	110	115	80-130	4	15	
Methyl Isobutyl Ketone	**0.0590**	**0.0540**	0.0500	0.0500	118	108	63-137	9	27	
Toluene	**0.0547**	**0.0568**	0.0500	0.0500	109	114	80-120	4	18	
(trans) 1,3-Dichloropropene	**0.0534**	**0.0552**	0.0500	0.0500	107	110	80-124	3	15	

This report pertains to the samples analyzed in accordance with the chain of custody, and is intended only for the use of the individual or company to whom it is addressed.

Date of Report: September 26, 2022
Samples Submitted: September 22, 2022
Laboratory Reference: 2209-217
Project: 11-05150-003

VOLATILE ORGANICS EPA 8260D/SIM
QUALITY CONTROL
page 2 of 2

Analyte	Result		Spike Level		Percent Recovery		Recovery Limits	RPD	RPD Limit	Flags
SPIKE BLANKS										
Laboratory ID:	SB0926S1									
	SB	SBD	SB	SBD	SB	SBD				
1,1,2-Trichloroethane	**0.0485**	**0.0497**	0.0500	0.0500	97	99	80-120	2	15	
Tetrachloroethene	**0.0529**	**0.0528**	0.0500	0.0500	106	106	77-126	0	15	
1,3-Dichloropropane	**0.0515**	**0.0533**	0.0500	0.0500	103	107	77-123	3	15	
2-Hexanone	**0.0583**	**0.0527**	0.0500	0.0500	117	105	53-137	10	29	
Dibromochloromethane	**0.0522**	**0.0541**	0.0500	0.0500	104	108	80-128	4	16	
1,2-Dibromoethane	**0.0544**	**0.0554**	0.0500	0.0500	109	111	80-122	2	20	
Chlorobenzene	**0.0514**	**0.0528**	0.0500	0.0500	103	106	80-120	3	18	
1,1,1,2-Tetrachloroethane	**0.0509**	**0.0533**	0.0500	0.0500	102	107	80-120	5	15	
Ethylbenzene	**0.0520**	**0.0526**	0.0500	0.0500	104	105	80-120	1	15	
m,p-Xylene	**0.103**	**0.104**	0.100	0.100	103	104	80-120	1	15	
o-Xylene	**0.0502**	**0.0518**	0.0500	0.0500	100	104	80-120	3	15	
Styrene	**0.0525**	**0.0535**	0.0500	0.0500	105	107	80-122	2	15	
Bromoform	**0.0516**	**0.0524**	0.0500	0.0500	103	105	78-126	2	15	
Isopropylbenzene	**0.0523**	**0.0531**	0.0500	0.0500	105	106	80-125	2	15	
Bromobenzene	**0.0498**	**0.0514**	0.0500	0.0500	100	103	79-124	3	15	
1,1,2,2-Tetrachloroethane	**0.0544**	**0.0538**	0.0500	0.0500	109	108	75-122	1	17	
1,2,3-Trichloropropane	**0.0544**	**0.0524**	0.0500	0.0500	109	105	72-125	4	20	
n-Propylbenzene	**0.0517**	**0.0527**	0.0500	0.0500	103	105	77-126	2	16	
2-Chlorotoluene	**0.0501**	**0.0525**	0.0500	0.0500	100	105	75-128	5	15	
4-Chlorotoluene	**0.0521**	**0.0531**	0.0500	0.0500	104	106	78-127	2	16	
1,3,5-Trimethylbenzene	**0.0511**	**0.0521**	0.0500	0.0500	102	104	77-128	2	15	
tert-Butylbenzene	**0.0506**	**0.0523**	0.0500	0.0500	101	105	73-130	3	20	
1,2,4-Trimethylbenzene	**0.0495**	**0.0513**	0.0500	0.0500	99	103	77-125	4	16	
sec-Butylbenzene	**0.0518**	**0.0534**	0.0500	0.0500	104	107	75-130	3	17	
1,3-Dichlorobenzene	**0.0493**	**0.0521**	0.0500	0.0500	99	104	78-123	6	17	
p-Isopropyltoluene	**0.0509**	**0.0523**	0.0500	0.0500	102	105	75-130	3	18	
1,4-Dichlorobenzene	**0.0494**	**0.0516**	0.0500	0.0500	99	103	77-121	4	17	
1,2-Dichlorobenzene	**0.0498**	**0.0517**	0.0500	0.0500	100	103	80-120	4	15	
n-Butylbenzene	**0.0534**	**0.0543**	0.0500	0.0500	107	109	76-131	2	20	
1,2-Dibromo-3-chloropropane	**0.0527**	**0.0509**	0.0500	0.0500	105	102	61-137	3	28	
1,2,4-Trichlorobenzene	**0.0497**	**0.0512**	0.0500	0.0500	99	102	77-127	3	17	
Hexachlorobutadiene	**0.0494**	**0.0515**	0.0500	0.0500	99	103	77-125	4	22	
Naphthalene	**0.0498**	**0.0503**	0.0500	0.0500	100	101	68-129	1	19	
1,2,3-Trichlorobenzene	**0.0484**	**0.0507**	0.0500	0.0500	97	101	77-124	5	19	
Surrogate:										
Dibromofluoromethane					*104*	*109*	*75-130*			
Toluene-d8					*106*	*106*	*78-128*			
4-Bromofluorobenzene					*103*	*104*	*71-130*			

This report pertains to the samples analyzed in accordance with the chain of custody, and is intended only for the use of the individual or company to whom it is addressed.

Date of Report: September 26, 2022
Samples Submitted: September 22, 2022
Laboratory Reference: 2209-217
Project: 11-05150-003

VOLATILE ORGANICS EPA 8260D/SIM
page 1 of 2

Matrix: Water
Units: ug/L

Analyte	Result	PQL	Method	Date Prepared	Date Analyzed	Flags
Client ID:	**VTRP220922I-Trip Blank**					
Laboratory ID:	09-217-14					
Dichlorodifluoromethane	ND	0.30	EPA 8260D	9-23-22	9-23-22	
Chloromethane	ND	1.0	EPA 8260D	9-23-22	9-23-22	
Vinyl Chloride	ND	0.20	EPA 8260D	9-23-22	9-23-22	
Bromomethane	ND	1.3	EPA 8260D	9-23-22	9-23-22	
Chloroethane	ND	1.0	EPA 8260D	9-23-22	9-23-22	
Trichlorofluoromethane	ND	0.20	EPA 8260D	9-23-22	9-23-22	
1,1-Dichloroethene	ND	0.20	EPA 8260D	9-23-22	9-23-22	
Acetone	ND	5.0	EPA 8260D	9-23-22	9-23-22	
Iodomethane	ND	5.0	EPA 8260D	9-23-22	9-23-22	
Carbon Disulfide	ND	0.20	EPA 8260D	9-23-22	9-23-22	
Methylene Chloride	ND	1.0	EPA 8260D	9-23-22	9-23-22	
(trans) 1,2-Dichloroethene	ND	0.20	EPA 8260D	9-23-22	9-23-22	
Methyl t-Butyl Ether	ND	0.20	EPA 8260D	9-23-22	9-23-22	
1,1-Dichloroethane	ND	0.20	EPA 8260D	9-23-22	9-23-22	
Vinyl Acetate	ND	1.0	EPA 8260D	9-23-22	9-23-22	
2,2-Dichloropropane	ND	0.20	EPA 8260D	9-23-22	9-23-22	
(cis) 1,2-Dichloroethene	ND	0.20	EPA 8260D	9-23-22	9-23-22	
2-Butanone	ND	5.0	EPA 8260D	9-23-22	9-23-22	
Bromochloromethane	ND	0.20	EPA 8260D	9-23-22	9-23-22	
Chloroform	ND	0.20	EPA 8260D	9-23-22	9-23-22	
1,1,1-Trichloroethane	ND	0.20	EPA 8260D	9-23-22	9-23-22	
Carbon Tetrachloride	ND	0.20	EPA 8260D	9-23-22	9-23-22	
1,1-Dichloropropene	ND	0.20	EPA 8260D	9-23-22	9-23-22	
Benzene	ND	0.20	EPA 8260D	9-23-22	9-23-22	
1,2-Dichloroethane	ND	0.20	EPA 8260D	9-23-22	9-23-22	
Trichloroethene	ND	0.20	EPA 8260D	9-23-22	9-23-22	
1,2-Dichloropropane	ND	0.20	EPA 8260D	9-23-22	9-23-22	
Dibromomethane	ND	0.20	EPA 8260D	9-23-22	9-23-22	
Bromodichloromethane	ND	0.20	EPA 8260D	9-23-22	9-23-22	
(cis) 1,3-Dichloropropene	ND	0.20	EPA 8260D	9-23-22	9-23-22	
Methyl Isobutyl Ketone	ND	2.0	EPA 8260D	9-23-22	9-23-22	
Toluene	ND	1.0	EPA 8260D	9-23-22	9-23-22	
(trans) 1,3-Dichloropropene	ND	0.20	EPA 8260D	9-23-22	9-23-22	

This report pertains to the samples analyzed in accordance with the chain of custody, and is intended only for the use of the individual or company to whom it is addressed.

Date of Report: September 26, 2022
Samples Submitted: September 22, 2022
Laboratory Reference: 2209-217
Project: 11-05150-003

VOLATILE ORGANICS EPA 8260D/SIM
page 2 of 2

Analyte	Result	PQL	Method	Date Prepared	Date Analyzed	Flags
Client ID:	**VTRP220922I-Trip Blank**					
Laboratory ID:	09-217-14					
1,1,2-Trichloroethane	ND	0.20	EPA 8260D	9-23-22	9-23-22	
Tetrachloroethene	ND	0.20	EPA 8260D	9-23-22	9-23-22	
1,3-Dichloropropane	ND	0.20	EPA 8260D	9-23-22	9-23-22	
2-Hexanone	ND	2.0	EPA 8260D	9-23-22	9-23-22	
Dibromochloromethane	ND	0.20	EPA 8260D	9-23-22	9-23-22	
1,2-Dibromoethane	ND	0.20	EPA 8260D	9-23-22	9-23-22	
Chlorobenzene	ND	0.20	EPA 8260D	9-23-22	9-23-22	
1,1,1,2-Tetrachloroethane	ND	0.20	EPA 8260D	9-23-22	9-23-22	
Ethylbenzene	ND	0.20	EPA 8260D	9-23-22	9-23-22	
m,p-Xylene	ND	0.40	EPA 8260D	9-23-22	9-23-22	
o-Xylene	ND	0.20	EPA 8260D	9-23-22	9-23-22	
Styrene	ND	0.20	EPA 8260D	9-23-22	9-23-22	
Bromoform	ND	1.0	EPA 8260D	9-23-22	9-23-22	
Isopropylbenzene	ND	0.20	EPA 8260D	9-23-22	9-23-22	
Bromobenzene	ND	0.20	EPA 8260D	9-23-22	9-23-22	
1,1,2,2-Tetrachloroethane	ND	0.20	EPA 8260D	9-23-22	9-23-22	
1,2,3-Trichloropropane	ND	0.20	EPA 8260D	9-23-22	9-23-22	
n-Propylbenzene	ND	0.20	EPA 8260D	9-23-22	9-23-22	
2-Chlorotoluene	ND	0.20	EPA 8260D	9-23-22	9-23-22	
4-Chlorotoluene	ND	0.20	EPA 8260D	9-23-22	9-23-22	
1,3,5-Trimethylbenzene	ND	0.20	EPA 8260D	9-23-22	9-23-22	
tert-Butylbenzene	ND	0.20	EPA 8260D	9-23-22	9-23-22	
1,2,4-Trimethylbenzene	ND	0.20	EPA 8260D	9-23-22	9-23-22	
sec-Butylbenzene	ND	0.20	EPA 8260D	9-23-22	9-23-22	
1,3-Dichlorobenzene	ND	0.20	EPA 8260D	9-23-22	9-23-22	
p-Isopropyltoluene	ND	0.20	EPA 8260D	9-23-22	9-23-22	
1,4-Dichlorobenzene	ND	0.20	EPA 8260D	9-23-22	9-23-22	
1,2-Dichlorobenzene	ND	0.20	EPA 8260D	9-23-22	9-23-22	
n-Butylbenzene	ND	0.20	EPA 8260D	9-23-22	9-23-22	
1,2-Dibromo-3-chloropropane	ND	1.0	EPA 8260D	9-23-22	9-23-22	
1,2,4-Trichlorobenzene	ND	0.20	EPA 8260D	9-23-22	9-23-22	
Hexachlorobutadiene	ND	1.0	EPA 8260D	9-23-22	9-23-22	
Naphthalene	ND	1.0	EPA 8260D	9-23-22	9-23-22	
1,2,3-Trichlorobenzene	ND	0.20	EPA 8260D	9-23-22	9-23-22	
Surrogate:	*Percent Recovery*	*Control Limits*				
Dibromofluoromethane	*89*	*75-127*				
Toluene-d8	*99*	*80-127*				
4-Bromofluorobenzene	*101*	*78-125*				

This report pertains to the samples analyzed in accordance with the chain of custody, and is intended only for the use of the individual or company to whom it is addressed.

Date of Report: September 26, 2022
Samples Submitted: September 22, 2022
Laboratory Reference: 2209-217
Project: 11-05150-003

VOLATILE ORGANICS EPA 8260D/SIM
QUALITY CONTROL
page 1 of 2

Matrix: Water
Units: ug/L

Analyte	Result	PQL	Method	Date Prepared	Date Analyzed	Flags
METHOD BLANK						
Laboratory ID:	MB0923W1					
Dichlorodifluoromethane	ND	0.30	EPA 8260D	9-23-22	9-23-22	
Chloromethane	ND	1.0	EPA 8260D	9-23-22	9-23-22	
Vinyl Chloride	ND	0.20	EPA 8260D	9-23-22	9-23-22	
Bromomethane	ND	1.3	EPA 8260D	9-23-22	9-23-22	
Chloroethane	ND	1.0	EPA 8260D	9-23-22	9-23-22	
Trichlorofluoromethane	ND	0.20	EPA 8260D	9-23-22	9-23-22	
1,1-Dichloroethene	ND	0.20	EPA 8260D	9-23-22	9-23-22	
Acetone	ND	5.0	EPA 8260D	9-23-22	9-23-22	
Iodomethane	ND	5.0	EPA 8260D	9-23-22	9-23-22	
Carbon Disulfide	ND	0.20	EPA 8260D	9-23-22	9-23-22	
Methylene Chloride	ND	1.0	EPA 8260D	9-23-22	9-23-22	
(trans) 1,2-Dichloroethene	ND	0.20	EPA 8260D	9-23-22	9-23-22	
Methyl t-Butyl Ether	ND	0.20	EPA 8260D	9-23-22	9-23-22	
1,1-Dichloroethane	ND	0.20	EPA 8260D	9-23-22	9-23-22	
Vinyl Acetate	ND	1.0	EPA 8260D	9-23-22	9-23-22	
2,2-Dichloropropane	ND	0.20	EPA 8260D	9-23-22	9-23-22	
(cis) 1,2-Dichloroethene	ND	0.20	EPA 8260D	9-23-22	9-23-22	
2-Butanone	ND	5.0	EPA 8260D	9-23-22	9-23-22	
Bromochloromethane	ND	0.20	EPA 8260D	9-23-22	9-23-22	
Chloroform	ND	0.20	EPA 8260D	9-23-22	9-23-22	
1,1,1-Trichloroethane	ND	0.20	EPA 8260D	9-23-22	9-23-22	
Carbon Tetrachloride	ND	0.20	EPA 8260D	9-23-22	9-23-22	
1,1-Dichloropropene	ND	0.20	EPA 8260D	9-23-22	9-23-22	
Benzene	ND	0.20	EPA 8260D	9-23-22	9-23-22	
1,2-Dichloroethane	ND	0.20	EPA 8260D	9-23-22	9-23-22	
Trichloroethene	ND	0.20	EPA 8260D	9-23-22	9-23-22	
1,2-Dichloropropane	ND	0.20	EPA 8260D	9-23-22	9-23-22	
Dibromomethane	ND	0.20	EPA 8260D	9-23-22	9-23-22	
Bromodichloromethane	ND	0.20	EPA 8260D	9-23-22	9-23-22	
(cis) 1,3-Dichloropropene	ND	0.20	EPA 8260D	9-23-22	9-23-22	
Methyl Isobutyl Ketone	ND	2.0	EPA 8260D	9-23-22	9-23-22	
Toluene	ND	1.0	EPA 8260D	9-23-22	9-23-22	
(trans) 1,3-Dichloropropene	ND	0.20	EPA 8260D	9-23-22	9-23-22	

This report pertains to the samples analyzed in accordance with the chain of custody,
and is intended only for the use of the individual or company to whom it is addressed.

Date of Report: September 26, 2022
Samples Submitted: September 22, 2022
Laboratory Reference: 2209-217
Project: 11-05150-003

VOLATILE ORGANICS EPA 8260D/SIM
QUALITY CONTROL
page 2 of 2

Analyte	Result	PQL	Method	Date Prepared	Date Analyzed	Flags
METHOD BLANK						
Laboratory ID:	MB0923W1					
1,1,2-Trichloroethane	ND	0.20	EPA 8260D	9-23-22	9-23-22	
Tetrachloroethene	ND	0.20	EPA 8260D	9-23-22	9-23-22	
1,3-Dichloropropane	ND	0.20	EPA 8260D	9-23-22	9-23-22	
2-Hexanone	ND	2.0	EPA 8260D	9-23-22	9-23-22	
Dibromochloromethane	ND	0.20	EPA 8260D	9-23-22	9-23-22	
1,2-Dibromoethane	ND	0.20	EPA 8260D	9-23-22	9-23-22	
Chlorobenzene	ND	0.20	EPA 8260D	9-23-22	9-23-22	
1,1,1,2-Tetrachloroethane	ND	0.20	EPA 8260D	9-23-22	9-23-22	
Ethylbenzene	ND	0.20	EPA 8260D	9-23-22	9-23-22	
m,p-Xylene	ND	0.40	EPA 8260D	9-23-22	9-23-22	
o-Xylene	ND	0.20	EPA 8260D	9-23-22	9-23-22	
Styrene	ND	0.20	EPA 8260D	9-23-22	9-23-22	
Bromoform	ND	1.0	EPA 8260D	9-23-22	9-23-22	
Isopropylbenzene	ND	0.20	EPA 8260D	9-23-22	9-23-22	
Bromobenzene	ND	0.20	EPA 8260D	9-23-22	9-23-22	
1,1,2,2-Tetrachloroethane	ND	0.20	EPA 8260D	9-23-22	9-23-22	
1,2,3-Trichloropropane	ND	0.20	EPA 8260D	9-23-22	9-23-22	
n-Propylbenzene	ND	0.20	EPA 8260D	9-23-22	9-23-22	
2-Chlorotoluene	ND	0.20	EPA 8260D	9-23-22	9-23-22	
4-Chlorotoluene	ND	0.20	EPA 8260D	9-23-22	9-23-22	
1,3,5-Trimethylbenzene	ND	0.20	EPA 8260D	9-23-22	9-23-22	
tert-Butylbenzene	ND	0.20	EPA 8260D	9-23-22	9-23-22	
1,2,4-Trimethylbenzene	ND	0.20	EPA 8260D	9-23-22	9-23-22	
sec-Butylbenzene	ND	0.20	EPA 8260D	9-23-22	9-23-22	
1,3-Dichlorobenzene	ND	0.20	EPA 8260D	9-23-22	9-23-22	
p-Isopropyltoluene	ND	0.20	EPA 8260D	9-23-22	9-23-22	
1,4-Dichlorobenzene	ND	0.20	EPA 8260D	9-23-22	9-23-22	
1,2-Dichlorobenzene	ND	0.20	EPA 8260D	9-23-22	9-23-22	
n-Butylbenzene	ND	0.20	EPA 8260D	9-23-22	9-23-22	
1,2-Dibromo-3-chloropropane	ND	1.0	EPA 8260D	9-23-22	9-23-22	
1,2,4-Trichlorobenzene	ND	0.20	EPA 8260D	9-23-22	9-23-22	
Hexachlorobutadiene	ND	1.0	EPA 8260D	9-23-22	9-23-22	
Naphthalene	ND	1.0	EPA 8260D	9-23-22	9-23-22	
1,2,3-Trichlorobenzene	ND	0.20	EPA 8260D	9-23-22	9-23-22	
Surrogate:	*Percent Recovery*	*Control Limits*				
Dibromofluoromethane	*97*	*75-127*				
Toluene-d8	*100*	*80-127*				
4-Bromofluorobenzene	*100*	*78-125*				

This report pertains to the samples analyzed in accordance with the chain of custody, and is intended only for the use of the individual or company to whom it is addressed.

Date of Report: September 26, 2022
Samples Submitted: September 22, 2022
Laboratory Reference: 2209-217
Project: 11-05150-003

VOLATILE ORGANICS EPA 8260D/SIM
QUALITY CONTROL
page 1 of 2

Matrix: Water
Units: ug/L

Analyte	Result		Spike Level		Percent Recovery		Recovery Limits	RPD	RPD Limit	Flags
SPIKE BLANKS										
Laboratory ID:	SB0923W1									
	SB	SBD	SB	SBD	SB	SBD				
Dichlorodifluoromethane	**6.78**	**6.39**	10.0	10.0	68	64	34-166	6	21	
Chloromethane	**9.07**	**8.76**	10.0	10.0	91	88	63-138	3	18	
Vinyl Chloride	**9.99**	**9.55**	10.0	10.0	100	96	71-135	5	20	
Bromomethane	**7.97**	**9.12**	10.0	10.0	80	91	20-151	13	36	
Chloroethane	**10.2**	**9.56**	10.0	10.0	102	96	76-125	6	20	
Trichlorofluoromethane	**9.55**	**9.19**	10.0	10.0	96	92	75-131	4	19	
1,1-Dichloroethene	**10.4**	**9.85**	10.0	10.0	104	99	78-125	5	19	
Acetone	**10.5**	**9.60**	10.0	10.0	105	96	76-125	9	18	
Iodomethane	**11.6**	**10.4**	10.0	10.0	116	104	10-155	11	40	
Carbon Disulfide	**9.18**	**8.80**	10.0	10.0	92	88	58-129	4	17	
Methylene Chloride	**10.3**	**9.72**	10.0	10.0	103	97	80-120	6	15	
(trans) 1,2-Dichloroethene	**10.6**	**10.0**	10.0	10.0	106	100	80-125	6	17	
Methyl t-Butyl Ether	**10.9**	**10.3**	10.0	10.0	109	103	80-122	6	15	
1,1-Dichloroethane	**10.7**	**10.3**	10.0	10.0	107	103	80-125	4	17	
Vinyl Acetate	**10.6**	**10.1**	10.0	10.0	106	101	80-131	5	15	
2,2-Dichloropropane	**12.7**	**11.9**	10.0	10.0	127	119	80-146	7	21	
(cis) 1,2-Dichloroethene	**11.2**	**10.7**	10.0	10.0	112	107	80-129	5	17	
2-Butanone	**11.1**	**10.1**	10.0	10.0	111	101	80-129	9	16	
Bromochloromethane	**11.5**	**11.0**	10.0	10.0	115	110	80-125	4	18	
Chloroform	**10.8**	**10.5**	10.0	10.0	108	105	80-123	3	16	
1,1,1-Trichloroethane	**10.5**	**9.92**	10.0	10.0	105	99	80-123	6	18	
Carbon Tetrachloride	**10.7**	**10.3**	10.0	10.0	107	103	80-126	4	17	
1,1-Dichloropropene	**10.6**	**10.3**	10.0	10.0	106	103	80-126	3	18	
Benzene	**10.5**	**10.0**	10.0	10.0	105	100	80-121	5	16	
1,2-Dichloroethane	**11.0**	**10.5**	10.0	10.0	110	105	80-124	5	15	
Trichloroethene	**11.0**	**10.7**	10.0	10.0	110	107	80-122	3	18	
1,2-Dichloropropane	**11.2**	**10.9**	10.0	10.0	112	109	80-123	3	15	
Dibromomethane	**11.4**	**11.2**	10.0	10.0	114	112	80-123	2	15	
Bromodichloromethane	**11.6**	**11.2**	10.0	10.0	116	112	80-125	4	15	
(cis) 1,3-Dichloropropene	**11.9**	**11.7**	10.0	10.0	119	117	80-129	2	15	
Methyl Isobutyl Ketone	**11.7**	**10.7**	10.0	10.0	117	107	80-124	9	15	
Toluene	**10.7**	**10.4**	10.0	10.0	107	104	80-120	3	18	
(trans) 1,3-Dichloropropene	**12.4**	**12.0**	10.0	10.0	124	120	80-134	3	17	

This report pertains to the samples analyzed in accordance with the chain of custody, and is intended only for the use of the individual or company to whom it is addressed.

Date of Report: September 26, 2022
Samples Submitted: September 22, 2022
Laboratory Reference: 2209-217
Project: 11-05150-003

VOLATILE ORGANICS EPA 8260D/SIM
QUALITY CONTROL
page 2 of 2

Analyte	Result		Spike Level		Percent Recovery		Recovery Limits	RPD	RPD Limit	Flags
SPIKE BLANKS										
Laboratory ID:	SB0923W1									
	SB	SBD	SB	SBD	SB	SBD				
1,1,2-Trichloroethane	**11.7**	**11.3**	10.0	10.0	117	113	77-126	3	20	
Tetrachloroethene	**11.2**	**10.7**	10.0	10.0	112	107	80-124	5	18	
1,3-Dichloropropane	**11.5**	**11.0**	10.0	10.0	115	110	80-120	4	15	
2-Hexanone	**11.4**	**10.6**	10.0	10.0	114	106	80-130	7	16	
Dibromochloromethane	**11.7**	**11.6**	10.0	10.0	117	116	80-128	1	15	
1,2-Dibromoethane	**12.0**	**11.8**	10.0	10.0	120	118	80-127	2	15	
Chlorobenzene	**11.4**	**11.2**	10.0	10.0	114	112	80-120	2	17	
1,1,1,2-Tetrachloroethane	**11.6**	**11.5**	10.0	10.0	116	115	80-125	1	17	
Ethylbenzene	**11.5**	**11.2**	10.0	10.0	115	112	80-125	3	18	
m,p-Xylene	**22.0**	**21.6**	20.0	20.0	110	108	80-127	2	18	
o-Xylene	**11.3**	**11.1**	10.0	10.0	113	111	80-126	2	18	
Styrene	**12.3**	**12.1**	10.0	10.0	123	121	80-130	2	17	
Bromoform	**11.8**	**11.7**	10.0	10.0	118	117	80-130	1	15	
Isopropylbenzene	**12.1**	**11.9**	10.0	10.0	121	119	80-129	2	18	
Bromobenzene	**11.5**	**11.1**	10.0	10.0	115	111	76-128	4	16	
1,1,2,2-Tetrachloroethane	**11.6**	**11.0**	10.0	10.0	116	110	74-130	5	15	
1,2,3-Trichloropropane	**11.3**	**10.9**	10.0	10.0	113	109	71-129	4	25	
n-Propylbenzene	**11.8**	**11.3**	10.0	10.0	118	113	80-129	4	19	
2-Chlorotoluene	**11.5**	**11.3**	10.0	10.0	115	113	80-128	2	18	
4-Chlorotoluene	**12.1**	**11.6**	10.0	10.0	121	116	80-130	4	19	
1,3,5-Trimethylbenzene	**11.8**	**11.4**	10.0	10.0	118	114	80-131	3	18	
tert-Butylbenzene	**11.7**	**11.3**	10.0	10.0	117	113	80-130	3	18	
1,2,4-Trimethylbenzene	**11.8**	**11.3**	10.0	10.0	118	113	80-130	4	18	
sec-Butylbenzene	**11.9**	**11.5**	10.0	10.0	119	115	80-130	3	18	
1,3-Dichlorobenzene	**11.7**	**11.2**	10.0	10.0	117	112	80-126	4	17	
p-Isopropyltoluene	**12.0**	**11.5**	10.0	10.0	120	115	80-132	4	18	
1,4-Dichlorobenzene	**11.5**	**11.0**	10.0	10.0	115	110	80-121	4	17	
1,2-Dichlorobenzene	**11.6**	**11.1**	10.0	10.0	116	111	79-125	4	15	
n-Butylbenzene	**12.0**	**11.8**	10.0	10.0	120	118	80-138	2	19	
1,2-Dibromo-3-chloropropane	**11.3**	**11.6**	10.0	10.0	113	116	73-133	3	15	
1,2,4-Trichlorobenzene	**12.0**	**11.7**	10.0	10.0	120	117	80-139	3	18	
Hexachlorobutadiene	**11.1**	**11.1**	10.0	10.0	111	111	80-151	0	18	
Naphthalene	**10.5**	**10.4**	10.0	10.0	105	104	68-144	1	25	
1,2,3-Trichlorobenzene	**11.8**	**11.7**	10.0	10.0	118	117	75-146	1	28	
Surrogate:										
Dibromofluoromethane					*95*	*94*	*75-127*			
Toluene-d8					*99*	*100*	*80-127*			
4-Bromofluorobenzene					*102*	*102*	*78-125*			

This report pertains to the samples analyzed in accordance with the chain of custody, and is intended only for the use of the individual or company to whom it is addressed.

Date of Report: September 26, 2022
Samples Submitted: September 22, 2022
Laboratory Reference: 2209-217
Project: 11-05150-003

SEMIVOLATILE ORGANICS EPA 8270E/SIM
page 1 of 2

Matrix: Soil
Units: mg/Kg

Analyte	Result	PQL	Method	Date Prepared	Date Analyzed	Flags
Client ID:	**DA7SWCS35220922I**					
Laboratory ID:	09-217-01					
n-Nitrosodimethylamine	**ND**	0.021	EPA 8270E	9-23-22	9-23-22	
Pyridine	**ND**	0.21	EPA 8270E	9-23-22	9-23-22	
Phenol	**0.035**	0.021	EPA 8270E	9-23-22	9-23-22	
Aniline	**ND**	0.10	EPA 8270E	9-23-22	9-23-22	
bis(2-Chloroethyl)ether	**ND**	0.021	EPA 8270E	9-23-22	9-23-22	
2-Chlorophenol	**ND**	0.021	EPA 8270E	9-23-22	9-23-22	
1,3-Dichlorobenzene	**ND**	0.021	EPA 8270E	9-23-22	9-23-22	
1,4-Dichlorobenzene	**ND**	0.021	EPA 8270E	9-23-22	9-23-22	
Benzyl alcohol	**ND**	0.021	EPA 8270E	9-23-22	9-23-22	
1,2-Dichlorobenzene	**ND**	0.021	EPA 8270E	9-23-22	9-23-22	
2-Methylphenol (o-Cresol)	**ND**	0.021	EPA 8270E	9-23-22	9-23-22	
bis(2-Chloroisopropyl)ether	**ND**	0.021	EPA 8270E	9-23-22	9-23-22	
(3+4)-Methylphenol (m,p-Cresol)	**0.026**	0.021	EPA 8270E	9-23-22	9-23-22	
n-Nitroso-di-n-propylamine	**ND**	0.021	EPA 8270E	9-23-22	9-23-22	
Hexachloroethane	**ND**	0.021	EPA 8270E	9-23-22	9-23-22	
Nitrobenzene	**ND**	0.021	EPA 8270E	9-23-22	9-23-22	
Isophorone	**ND**	0.021	EPA 8270E	9-23-22	9-23-22	
2-Nitrophenol	**ND**	0.021	EPA 8270E	9-23-22	9-23-22	
2,4-Dimethylphenol	**ND**	0.021	EPA 8270E	9-23-22	9-23-22	
bis(2-Chloroethoxy)methane	**ND**	0.021	EPA 8270E	9-23-22	9-23-22	
2,4-Dichlorophenol	**ND**	0.021	EPA 8270E	9-23-22	9-23-22	
1,2,4-Trichlorobenzene	**ND**	0.021	EPA 8270E	9-23-22	9-23-22	
Naphthalene	**ND**	0.0042	EPA 8270E/SIM	9-23-22	9-23-22	
4-Chloroaniline	**ND**	0.10	EPA 8270E	9-23-22	9-23-22	
Hexachlorobutadiene	**ND**	0.021	EPA 8270E	9-23-22	9-23-22	
4-Chloro-3-methylphenol	**ND**	0.021	EPA 8270E	9-23-22	9-23-22	
2-Methylnaphthalene	**ND**	0.0042	EPA 8270E/SIM	9-23-22	9-23-22	
1-Methylnaphthalene	**ND**	0.0042	EPA 8270E/SIM	9-23-22	9-23-22	
Hexachlorocyclopentadiene	**ND**	0.021	EPA 8270E	9-23-22	9-23-22	
2,4,6-Trichlorophenol	**ND**	0.021	EPA 8270E	9-23-22	9-23-22	
2,3-Dichloroaniline	**ND**	0.021	EPA 8270E	9-23-22	9-23-22	
2,4,5-Trichlorophenol	**ND**	0.021	EPA 8270E	9-23-22	9-23-22	
2-Chloronaphthalene	**ND**	0.021	EPA 8270E	9-23-22	9-23-22	
2-Nitroaniline	**ND**	0.021	EPA 8270E	9-23-22	9-23-22	
1,4-Dinitrobenzene	**ND**	0.021	EPA 8270E	9-23-22	9-23-22	
Dimethylphthalate	**ND**	0.021	EPA 8270E	9-23-22	9-23-22	
1,3-Dinitrobenzene	**ND**	0.021	EPA 8270E	9-23-22	9-23-22	
2,6-Dinitrotoluene	**ND**	0.021	EPA 8270E	9-23-22	9-23-22	
1,2-Dinitrobenzene	**ND**	0.021	EPA 8270E	9-23-22	9-23-22	
Acenaphthylene	**ND**	0.0042	EPA 8270E/SIM	9-23-22	9-23-22	
3-Nitroaniline	**ND**	0.021	EPA 8270E	9-23-22	9-23-22	

This report pertains to the samples analyzed in accordance with the chain of custody, and is intended only for the use of the individual or company to whom it is addressed.

Date of Report: September 26, 2022
Samples Submitted: September 22, 2022
Laboratory Reference: 2209-217
Project: 11-05150-003

SEMIVOLATILE ORGANICS EPA 8270E/SIM
page 2 of 2

Analyte	Result	PQL	Method	Date Prepared	Date Analyzed	Flags
Client ID:	**DA7SWCS35220922I**					
Laboratory ID:	09-217-01					
2,4-Dinitrophenol	**ND**	0.10	EPA 8270E	9-23-22	9-23-22	
Acenaphthene	**ND**	0.0042	EPA 8270E/SIM	9-23-22	9-23-22	
4-Nitrophenol	**ND**	0.021	EPA 8270E	9-23-22	9-23-22	
2,4-Dinitrotoluene	**ND**	0.021	EPA 8270E	9-23-22	9-23-22	
Dibenzofuran	**ND**	0.021	EPA 8270E	9-23-22	9-23-22	
2,3,5,6-Tetrachlorophenol	**ND**	0.021	EPA 8270E	9-23-22	9-23-22	
2,3,4,6-Tetrachlorophenol	**ND**	0.021	EPA 8270E	9-23-22	9-23-22	
Diethylphthalate	**ND**	0.10	EPA 8270E	9-23-22	9-23-22	
4-Chlorophenyl-phenylether	**ND**	0.021	EPA 8270E	9-23-22	9-23-22	
4-Nitroaniline	**ND**	0.021	EPA 8270E	9-23-22	9-23-22	
Fluorene	**ND**	0.0042	EPA 8270E/SIM	9-23-22	9-23-22	
4,6-Dinitro-2-methylphenol	**ND**	0.10	EPA 8270E	9-23-22	9-23-22	
n-Nitrosodiphenylamine	**ND**	0.021	EPA 8270E	9-23-22	9-23-22	
1,2-Diphenylhydrazine	**ND**	0.021	EPA 8270E	9-23-22	9-23-22	
4-Bromophenyl-phenylether	**ND**	0.021	EPA 8270E	9-23-22	9-23-22	
Hexachlorobenzene	**ND**	0.021	EPA 8270E	9-23-22	9-23-22	
Pentachlorophenol	**ND**	0.10	EPA 8270E	9-23-22	9-23-22	
Phenanthrene	**ND**	0.0042	EPA 8270E/SIM	9-23-22	9-23-22	
Anthracene	**ND**	0.0042	EPA 8270E/SIM	9-23-22	9-23-22	
Carbazole	**ND**	0.021	EPA 8270E	9-23-22	9-23-22	
Di-n-butylphthalate	**ND**	0.10	EPA 8270E	9-23-22	9-23-22	
Fluoranthene	**ND**	0.0042	EPA 8270E/SIM	9-23-22	9-23-22	
Pyrene	**ND**	0.0042	EPA 8270E/SIM	9-23-22	9-23-22	
Butylbenzylphthalate	**ND**	0.10	EPA 8270E	9-23-22	9-23-22	
bis-2-Ethylhexyladipate	**ND**	0.10	EPA 8270E	9-23-22	9-23-22	
3,3'-Dichlorobenzidine	**ND**	0.10	EPA 8270E	9-23-22	9-23-22	
Benzo[a]anthracene	**ND**	0.0042	EPA 8270E/SIM	9-23-22	9-23-22	
Chrysene	**ND**	0.0042	EPA 8270E/SIM	9-23-22	9-23-22	
bis(2-Ethylhexyl)phthalate	**ND**	0.10	EPA 8270E	9-23-22	9-23-22	
Di-n-octylphthalate	**ND**	0.10	EPA 8270E	9-23-22	9-23-22	
Benzo[b]fluoranthene	**ND**	0.0042	EPA 8270E/SIM	9-23-22	9-23-22	
Benzo(j,k)fluoranthene	**ND**	0.0042	EPA 8270E/SIM	9-23-22	9-23-22	
Benzo[a]pyrene	**ND**	0.0042	EPA 8270E/SIM	9-23-22	9-23-22	
Indeno[1,2,3-cd]pyrene	**ND**	0.0042	EPA 8270E/SIM	9-23-22	9-23-22	
Dibenz[a,h]anthracene	**ND**	0.0042	EPA 8270E/SIM	9-23-22	9-23-22	
Benzo[g,h,i]perylene	**ND**	0.0042	EPA 8270E/SIM	9-23-22	9-23-22	
Surrogate:	*Percent Recovery*	*Control Limits*				
2-Fluorophenol	*67*	*22 - 111*				
Phenol-d6	*68*	*31 - 117*				
Nitrobenzene-d5	*65*	*29 - 111*				
2-Fluorobiphenyl	*67*	*39 - 109*				
2,4,6-Tribromophenol	*64*	*36 - 127*				
Terphenyl-d14	*71*	*39 - 116*				

This report pertains to the samples analyzed in accordance with the chain of custody, and is intended only for the use of the individual or company to whom it is addressed.

Date of Report: September 26, 2022
Samples Submitted: September 22, 2022
Laboratory Reference: 2209-217
Project: 11-05150-003

SEMIVOLATILE ORGANICS EPA 8270E/SIM
page 1 of 2

Matrix: Soil
Units: mg/Kg

Analyte	Result	PQL	Method	Date Prepared	Date Analyzed	Flags
Client ID:	**DA7SWCS36220922I**					
Laboratory ID:	09-217-02					
n-Nitrosodimethylamine	**ND**	0.021	EPA 8270E	9-23-22	9-23-22	
Pyridine	**ND**	0.21	EPA 8270E	9-23-22	9-23-22	
Phenol	**ND**	0.021	EPA 8270E	9-23-22	9-23-22	
Aniline	**ND**	0.11	EPA 8270E	9-23-22	9-23-22	
bis(2-Chloroethyl)ether	**ND**	0.021	EPA 8270E	9-23-22	9-23-22	
2-Chlorophenol	**ND**	0.021	EPA 8270E	9-23-22	9-23-22	
1,3-Dichlorobenzene	**ND**	0.021	EPA 8270E	9-23-22	9-23-22	
1,4-Dichlorobenzene	**ND**	0.021	EPA 8270E	9-23-22	9-23-22	
Benzyl alcohol	**ND**	0.021	EPA 8270E	9-23-22	9-23-22	
1,2-Dichlorobenzene	**ND**	0.021	EPA 8270E	9-23-22	9-23-22	
2-Methylphenol (o-Cresol)	**ND**	0.021	EPA 8270E	9-23-22	9-23-22	
bis(2-Chloroisopropyl)ether	**ND**	0.021	EPA 8270E	9-23-22	9-23-22	
(3+4)-Methylphenol (m,p-Cresol)	**ND**	0.021	EPA 8270E	9-23-22	9-23-22	
n-Nitroso-di-n-propylamine	**ND**	0.021	EPA 8270E	9-23-22	9-23-22	
Hexachloroethane	**ND**	0.021	EPA 8270E	9-23-22	9-23-22	
Nitrobenzene	**ND**	0.021	EPA 8270E	9-23-22	9-23-22	
Isophorone	**ND**	0.021	EPA 8270E	9-23-22	9-23-22	
2-Nitrophenol	**ND**	0.021	EPA 8270E	9-23-22	9-23-22	
2,4-Dimethylphenol	**ND**	0.021	EPA 8270E	9-23-22	9-23-22	
bis(2-Chloroethoxy)methane	**ND**	0.021	EPA 8270E	9-23-22	9-23-22	
2,4-Dichlorophenol	**ND**	0.021	EPA 8270E	9-23-22	9-23-22	
1,2,4-Trichlorobenzene	**ND**	0.021	EPA 8270E	9-23-22	9-23-22	
Naphthalene	**ND**	0.0043	EPA 8270E/SIM	9-23-22	9-23-22	
4-Chloroaniline	**ND**	0.11	EPA 8270E	9-23-22	9-23-22	
Hexachlorobutadiene	**ND**	0.021	EPA 8270E	9-23-22	9-23-22	
4-Chloro-3-methylphenol	**ND**	0.021	EPA 8270E	9-23-22	9-23-22	
2-Methylnaphthalene	**ND**	0.0043	EPA 8270E/SIM	9-23-22	9-23-22	
1-Methylnaphthalene	**ND**	0.0043	EPA 8270E/SIM	9-23-22	9-23-22	
Hexachlorocyclopentadiene	**ND**	0.021	EPA 8270E	9-23-22	9-23-22	
2,4,6-Trichlorophenol	**ND**	0.021	EPA 8270E	9-23-22	9-23-22	
2,3-Dichloroaniline	**ND**	0.021	EPA 8270E	9-23-22	9-23-22	
2,4,5-Trichlorophenol	**ND**	0.021	EPA 8270E	9-23-22	9-23-22	
2-Chloronaphthalene	**ND**	0.021	EPA 8270E	9-23-22	9-23-22	
2-Nitroaniline	**ND**	0.021	EPA 8270E	9-23-22	9-23-22	
1,4-Dinitrobenzene	**ND**	0.021	EPA 8270E	9-23-22	9-23-22	
Dimethylphthalate	**ND**	0.021	EPA 8270E	9-23-22	9-23-22	
1,3-Dinitrobenzene	**ND**	0.021	EPA 8270E	9-23-22	9-23-22	
2,6-Dinitrotoluene	**ND**	0.021	EPA 8270E	9-23-22	9-23-22	
1,2-Dinitrobenzene	**ND**	0.021	EPA 8270E	9-23-22	9-23-22	
Acenaphthylene	**ND**	0.0043	EPA 8270E/SIM	9-23-22	9-23-22	
3-Nitroaniline	**ND**	0.021	EPA 8270E	9-23-22	9-23-22	

This report pertains to the samples analyzed in accordance with the chain of custody, and is intended only for the use of the individual or company to whom it is addressed.

Date of Report: September 26, 2022
Samples Submitted: September 22, 2022
Laboratory Reference: 2209-217
Project: 11-05150-003

SEMIVOLATILE ORGANICS EPA 8270E/SIM
page 2 of 2

Analyte	Result	PQL	Method	Date Prepared	Date Analyzed	Flags
Client ID:	**DA7SWCS36220922I**					
Laboratory ID:	09-217-02					
2,4-Dinitrophenol	**ND**	0.11	EPA 8270E	9-23-22	9-23-22	
Acenaphthene	**ND**	0.0043	EPA 8270E/SIM	9-23-22	9-23-22	
4-Nitrophenol	**ND**	0.021	EPA 8270E	9-23-22	9-23-22	
2,4-Dinitrotoluene	**ND**	0.021	EPA 8270E	9-23-22	9-23-22	
Dibenzofuran	**ND**	0.021	EPA 8270E	9-23-22	9-23-22	
2,3,5,6-Tetrachlorophenol	**ND**	0.021	EPA 8270E	9-23-22	9-23-22	
2,3,4,6-Tetrachlorophenol	**ND**	0.021	EPA 8270E	9-23-22	9-23-22	
Diethylphthalate	**ND**	0.11	EPA 8270E	9-23-22	9-23-22	
4-Chlorophenyl-phenylether	**ND**	0.021	EPA 8270E	9-23-22	9-23-22	
4-Nitroaniline	**ND**	0.021	EPA 8270E	9-23-22	9-23-22	
Fluorene	**ND**	0.0043	EPA 8270E/SIM	9-23-22	9-23-22	
4,6-Dinitro-2-methylphenol	**ND**	0.11	EPA 8270E	9-23-22	9-23-22	
n-Nitrosodiphenylamine	**ND**	0.021	EPA 8270E	9-23-22	9-23-22	
1,2-Diphenylhydrazine	**ND**	0.021	EPA 8270E	9-23-22	9-23-22	
4-Bromophenyl-phenylether	**ND**	0.021	EPA 8270E	9-23-22	9-23-22	
Hexachlorobenzene	**ND**	0.021	EPA 8270E	9-23-22	9-23-22	
Pentachlorophenol	**ND**	0.11	EPA 8270E	9-23-22	9-23-22	
Phenanthrene	**ND**	0.0043	EPA 8270E/SIM	9-23-22	9-23-22	
Anthracene	**ND**	0.0043	EPA 8270E/SIM	9-23-22	9-23-22	
Carbazole	**ND**	0.021	EPA 8270E	9-23-22	9-23-22	
Di-n-butylphthalate	**ND**	0.11	EPA 8270E	9-23-22	9-23-22	
Fluoranthene	**ND**	0.0043	EPA 8270E/SIM	9-23-22	9-23-22	
Pyrene	**ND**	0.0043	EPA 8270E/SIM	9-23-22	9-23-22	
Butylbenzylphthalate	**ND**	0.11	EPA 8270E	9-23-22	9-23-22	
bis-2-Ethylhexyladipate	**ND**	0.11	EPA 8270E	9-23-22	9-23-22	
3,3'-Dichlorobenzidine	**ND**	0.11	EPA 8270E	9-23-22	9-23-22	
Benzo[a]anthracene	**ND**	0.0043	EPA 8270E/SIM	9-23-22	9-23-22	
Chrysene	**ND**	0.0043	EPA 8270E/SIM	9-23-22	9-23-22	
bis(2-Ethylhexyl)phthalate	**ND**	0.11	EPA 8270E	9-23-22	9-23-22	
Di-n-octylphthalate	**ND**	0.11	EPA 8270E	9-23-22	9-23-22	
Benzo[b]fluoranthene	**ND**	0.0043	EPA 8270E/SIM	9-23-22	9-23-22	
Benzo(j,k)fluoranthene	**ND**	0.0043	EPA 8270E/SIM	9-23-22	9-23-22	
Benzo[a]pyrene	**ND**	0.0043	EPA 8270E/SIM	9-23-22	9-23-22	
Indeno[1,2,3-cd]pyrene	**ND**	0.0043	EPA 8270E/SIM	9-23-22	9-23-22	
Dibenz[a,h]anthracene	**ND**	0.0043	EPA 8270E/SIM	9-23-22	9-23-22	
Benzo[g,h,i]perylene	**ND**	0.0043	EPA 8270E/SIM	9-23-22	9-23-22	
Surrogate:	*Percent Recovery*	*Control Limits*				
2-Fluorophenol	*66*	*22 - 111*				
Phenol-d6	*66*	*31 - 117*				
Nitrobenzene-d5	*62*	*29 - 111*				
2-Fluorobiphenyl	*64*	*39 - 109*				
2,4,6-Tribromophenol	*66*	*36 - 127*				
Terphenyl-d14	*69*	*39 - 116*				

This report pertains to the samples analyzed in accordance with the chain of custody, and is intended only for the use of the individual or company to whom it is addressed.

Date of Report: September 26, 2022
Samples Submitted: September 22, 2022
Laboratory Reference: 2209-217
Project: 11-05150-003

SEMIVOLATILE ORGANICS EPA 8270E/SIM
page 1 of 2

Matrix: Soil
Units: mg/Kg

Analyte	Result	PQL	Method	Date Prepared	Date Analyzed	Flags
Client ID:	**DA7SWCS37220922I**					
Laboratory ID:	09-217-03					
n-Nitrosodimethylamine	**ND**	0.022	EPA 8270E	9-23-22	9-23-22	
Pyridine	**ND**	0.22	EPA 8270E	9-23-22	9-23-22	
Phenol	**ND**	0.022	EPA 8270E	9-23-22	9-23-22	
Aniline	**ND**	0.11	EPA 8270E	9-23-22	9-23-22	
bis(2-Chloroethyl)ether	**ND**	0.022	EPA 8270E	9-23-22	9-23-22	
2-Chlorophenol	**ND**	0.022	EPA 8270E	9-23-22	9-23-22	
1,3-Dichlorobenzene	**ND**	0.022	EPA 8270E	9-23-22	9-23-22	
1,4-Dichlorobenzene	**ND**	0.022	EPA 8270E	9-23-22	9-23-22	
Benzyl alcohol	**ND**	0.022	EPA 8270E	9-23-22	9-23-22	
1,2-Dichlorobenzene	**ND**	0.022	EPA 8270E	9-23-22	9-23-22	
2-Methylphenol (o-Cresol)	**ND**	0.022	EPA 8270E	9-23-22	9-23-22	
bis(2-Chloroisopropyl)ether	**ND**	0.022	EPA 8270E	9-23-22	9-23-22	
(3+4)-Methylphenol (m,p-Cresol)	**ND**	0.022	EPA 8270E	9-23-22	9-23-22	
n-Nitroso-di-n-propylamine	**ND**	0.022	EPA 8270E	9-23-22	9-23-22	
Hexachloroethane	**ND**	0.022	EPA 8270E	9-23-22	9-23-22	
Nitrobenzene	**ND**	0.022	EPA 8270E	9-23-22	9-23-22	
Isophorone	**ND**	0.022	EPA 8270E	9-23-22	9-23-22	
2-Nitrophenol	**ND**	0.022	EPA 8270E	9-23-22	9-23-22	
2,4-Dimethylphenol	**ND**	0.022	EPA 8270E	9-23-22	9-23-22	
bis(2-Chloroethoxy)methane	**ND**	0.022	EPA 8270E	9-23-22	9-23-22	
2,4-Dichlorophenol	**ND**	0.022	EPA 8270E	9-23-22	9-23-22	
1,2,4-Trichlorobenzene	**ND**	0.022	EPA 8270E	9-23-22	9-23-22	
Naphthalene	**ND**	0.0044	EPA 8270E/SIM	9-23-22	9-23-22	
4-Chloroaniline	**ND**	0.11	EPA 8270E	9-23-22	9-23-22	
Hexachlorobutadiene	**ND**	0.022	EPA 8270E	9-23-22	9-23-22	
4-Chloro-3-methylphenol	**ND**	0.022	EPA 8270E	9-23-22	9-23-22	
2-Methylnaphthalene	**ND**	0.0044	EPA 8270E/SIM	9-23-22	9-23-22	
1-Methylnaphthalene	**ND**	0.0044	EPA 8270E/SIM	9-23-22	9-23-22	
Hexachlorocyclopentadiene	**ND**	0.022	EPA 8270E	9-23-22	9-23-22	
2,4,6-Trichlorophenol	**ND**	0.022	EPA 8270E	9-23-22	9-23-22	
2,3-Dichloroaniline	**ND**	0.022	EPA 8270E	9-23-22	9-23-22	
2,4,5-Trichlorophenol	**ND**	0.022	EPA 8270E	9-23-22	9-23-22	
2-Chloronaphthalene	**ND**	0.022	EPA 8270E	9-23-22	9-23-22	
2-Nitroaniline	**ND**	0.022	EPA 8270E	9-23-22	9-23-22	
1,4-Dinitrobenzene	**ND**	0.022	EPA 8270E	9-23-22	9-23-22	
Dimethylphthalate	**ND**	0.022	EPA 8270E	9-23-22	9-23-22	
1,3-Dinitrobenzene	**ND**	0.022	EPA 8270E	9-23-22	9-23-22	
2,6-Dinitrotoluene	**ND**	0.022	EPA 8270E	9-23-22	9-23-22	
1,2-Dinitrobenzene	**ND**	0.022	EPA 8270E	9-23-22	9-23-22	
Acenaphthylene	**ND**	0.0044	EPA 8270E/SIM	9-23-22	9-23-22	
3-Nitroaniline	**ND**	0.022	EPA 8270E	9-23-22	9-23-22	

This report pertains to the samples analyzed in accordance with the chain of custody, and is intended only for the use of the individual or company to whom it is addressed.

Date of Report: September 26, 2022
Samples Submitted: September 22, 2022
Laboratory Reference: 2209-217
Project: 11-05150-003

SEMIVOLATILE ORGANICS EPA 8270E/SIM
page 2 of 2

Analyte	Result	PQL	Method	Date Prepared	Date Analyzed	Flags
Client ID:	**DA7SWCS37220922I**					
Laboratory ID:	09-217-03					
2,4-Dinitrophenol	**ND**	0.11	EPA 8270E	9-23-22	9-23-22	
Acenaphthene	**ND**	0.0044	EPA 8270E/SIM	9-23-22	9-23-22	
4-Nitrophenol	**ND**	0.022	EPA 8270E	9-23-22	9-23-22	
2,4-Dinitrotoluene	**ND**	0.022	EPA 8270E	9-23-22	9-23-22	
Dibenzofuran	**ND**	0.022	EPA 8270E	9-23-22	9-23-22	
2,3,5,6-Tetrachlorophenol	**ND**	0.022	EPA 8270E	9-23-22	9-23-22	
2,3,4,6-Tetrachlorophenol	**ND**	0.022	EPA 8270E	9-23-22	9-23-22	
Diethylphthalate	**ND**	0.11	EPA 8270E	9-23-22	9-23-22	
4-Chlorophenyl-phenylether	**ND**	0.022	EPA 8270E	9-23-22	9-23-22	
4-Nitroaniline	**ND**	0.022	EPA 8270E	9-23-22	9-23-22	
Fluorene	**ND**	0.0044	EPA 8270E/SIM	9-23-22	9-23-22	
4,6-Dinitro-2-methylphenol	**ND**	0.11	EPA 8270E	9-23-22	9-23-22	
n-Nitrosodiphenylamine	**ND**	0.022	EPA 8270E	9-23-22	9-23-22	
1,2-Diphenylhydrazine	**ND**	0.022	EPA 8270E	9-23-22	9-23-22	
4-Bromophenyl-phenylether	**ND**	0.022	EPA 8270E	9-23-22	9-23-22	
Hexachlorobenzene	**ND**	0.022	EPA 8270E	9-23-22	9-23-22	
Pentachlorophenol	**ND**	0.11	EPA 8270E	9-23-22	9-23-22	
Phenanthrene	**ND**	0.0044	EPA 8270E/SIM	9-23-22	9-23-22	
Anthracene	**ND**	0.0044	EPA 8270E/SIM	9-23-22	9-23-22	
Carbazole	**ND**	0.022	EPA 8270E	9-23-22	9-23-22	
Di-n-butylphthalate	**ND**	0.11	EPA 8270E	9-23-22	9-23-22	
Fluoranthene	**ND**	0.0044	EPA 8270E/SIM	9-23-22	9-23-22	
Pyrene	**ND**	0.0044	EPA 8270E/SIM	9-23-22	9-23-22	
Butylbenzylphthalate	**ND**	0.11	EPA 8270E	9-23-22	9-23-22	
bis-2-Ethylhexyladipate	**ND**	0.11	EPA 8270E	9-23-22	9-23-22	
3,3'-Dichlorobenzidine	**ND**	0.11	EPA 8270E	9-23-22	9-23-22	
Benzo[a]anthracene	**ND**	0.0044	EPA 8270E/SIM	9-23-22	9-23-22	
Chrysene	**ND**	0.0044	EPA 8270E/SIM	9-23-22	9-23-22	
bis(2-Ethylhexyl)phthalate	**ND**	0.11	EPA 8270E	9-23-22	9-23-22	
Di-n-octylphthalate	**ND**	0.11	EPA 8270E	9-23-22	9-23-22	
Benzo[b]fluoranthene	**ND**	0.0044	EPA 8270E/SIM	9-23-22	9-23-22	
Benzo(j,k)fluoranthene	**ND**	0.0044	EPA 8270E/SIM	9-23-22	9-23-22	
Benzo[a]pyrene	**ND**	0.0044	EPA 8270E/SIM	9-23-22	9-23-22	
Indeno[1,2,3-cd]pyrene	**ND**	0.0044	EPA 8270E/SIM	9-23-22	9-23-22	
Dibenz[a,h]anthracene	**ND**	0.0044	EPA 8270E/SIM	9-23-22	9-23-22	
Benzo[g,h,i]perylene	**ND**	0.0044	EPA 8270E/SIM	9-23-22	9-23-22	
Surrogate:	*Percent Recovery*	*Control Limits*				
2-Fluorophenol	*63*	*22 - 111*				
Phenol-d6	*63*	*31 - 117*				
Nitrobenzene-d5	*62*	*29 - 111*				
2-Fluorobiphenyl	*63*	*39 - 109*				
2,4,6-Tribromophenol	*63*	*36 - 127*				
Terphenyl-d14	*68*	*39 - 116*				

This report pertains to the samples analyzed in accordance with the chain of custody, and is intended only for the use of the individual or company to whom it is addressed.

Date of Report: September 26, 2022
Samples Submitted: September 22, 2022
Laboratory Reference: 2209-217
Project: 11-05150-003

SEMIVOLATILE ORGANICS EPA 8270E/SIM
page 1 of 2

Matrix: Soil
Units: mg/Kg

Analyte	Result	PQL	Method	Date Prepared	Date Analyzed	Flags
Client ID:	**DA7SWCS38220922I**					
Laboratory ID:	09-217-04					
n-Nitrosodimethylamine	**ND**	0.021	EPA 8270E	9-23-22	9-23-22	
Pyridine	**ND**	0.21	EPA 8270E	9-23-22	9-23-22	
Phenol	**0.040**	0.021	EPA 8270E	9-23-22	9-23-22	
Aniline	**ND**	0.11	EPA 8270E	9-23-22	9-23-22	
bis(2-Chloroethyl)ether	**ND**	0.021	EPA 8270E	9-23-22	9-23-22	
2-Chlorophenol	**ND**	0.021	EPA 8270E	9-23-22	9-23-22	
1,3-Dichlorobenzene	**ND**	0.021	EPA 8270E	9-23-22	9-23-22	
1,4-Dichlorobenzene	**ND**	0.021	EPA 8270E	9-23-22	9-23-22	
Benzyl alcohol	**ND**	0.021	EPA 8270E	9-23-22	9-23-22	
1,2-Dichlorobenzene	**ND**	0.021	EPA 8270E	9-23-22	9-23-22	
2-Methylphenol (o-Cresol)	**ND**	0.021	EPA 8270E	9-23-22	9-23-22	
bis(2-Chloroisopropyl)ether	**ND**	0.021	EPA 8270E	9-23-22	9-23-22	
(3+4)-Methylphenol (m,p-Cresol)	**ND**	0.021	EPA 8270E	9-23-22	9-23-22	
n-Nitroso-di-n-propylamine	**ND**	0.021	EPA 8270E	9-23-22	9-23-22	
Hexachloroethane	**ND**	0.021	EPA 8270E	9-23-22	9-23-22	
Nitrobenzene	**ND**	0.021	EPA 8270E	9-23-22	9-23-22	
Isophorone	**ND**	0.021	EPA 8270E	9-23-22	9-23-22	
2-Nitrophenol	**ND**	0.021	EPA 8270E	9-23-22	9-23-22	
2,4-Dimethylphenol	**ND**	0.021	EPA 8270E	9-23-22	9-23-22	
bis(2-Chloroethoxy)methane	**ND**	0.021	EPA 8270E	9-23-22	9-23-22	
2,4-Dichlorophenol	**ND**	0.021	EPA 8270E	9-23-22	9-23-22	
1,2,4-Trichlorobenzene	**ND**	0.021	EPA 8270E	9-23-22	9-23-22	
Naphthalene	**ND**	0.0042	EPA 8270E/SIM	9-23-22	9-23-22	
4-Chloroaniline	**ND**	0.11	EPA 8270E	9-23-22	9-23-22	
Hexachlorobutadiene	**ND**	0.021	EPA 8270E	9-23-22	9-23-22	
4-Chloro-3-methylphenol	**ND**	0.021	EPA 8270E	9-23-22	9-23-22	
2-Methylnaphthalene	**ND**	0.0042	EPA 8270E/SIM	9-23-22	9-23-22	
1-Methylnaphthalene	**ND**	0.0042	EPA 8270E/SIM	9-23-22	9-23-22	
Hexachlorocyclopentadiene	**ND**	0.021	EPA 8270E	9-23-22	9-23-22	
2,4,6-Trichlorophenol	**ND**	0.021	EPA 8270E	9-23-22	9-23-22	
2,3-Dichloroaniline	**ND**	0.021	EPA 8270E	9-23-22	9-23-22	
2,4,5-Trichlorophenol	**ND**	0.021	EPA 8270E	9-23-22	9-23-22	
2-Chloronaphthalene	**ND**	0.021	EPA 8270E	9-23-22	9-23-22	
2-Nitroaniline	**ND**	0.021	EPA 8270E	9-23-22	9-23-22	
1,4-Dinitrobenzene	**ND**	0.021	EPA 8270E	9-23-22	9-23-22	
Dimethylphthalate	**ND**	0.021	EPA 8270E	9-23-22	9-23-22	
1,3-Dinitrobenzene	**ND**	0.021	EPA 8270E	9-23-22	9-23-22	
2,6-Dinitrotoluene	**ND**	0.021	EPA 8270E	9-23-22	9-23-22	
1,2-Dinitrobenzene	**ND**	0.021	EPA 8270E	9-23-22	9-23-22	
Acenaphthylene	**ND**	0.0042	EPA 8270E/SIM	9-23-22	9-23-22	
3-Nitroaniline	**ND**	0.021	EPA 8270E	9-23-22	9-23-22	

This report pertains to the samples analyzed in accordance with the chain of custody, and is intended only for the use of the individual or company to whom it is addressed.

Date of Report: September 26, 2022
Samples Submitted: September 22, 2022
Laboratory Reference: 2209-217
Project: 11-05150-003

SEMIVOLATILE ORGANICS EPA 8270E/SIM
page 2 of 2

Analyte	Result	PQL	Method	Date Prepared	Date Analyzed	Flags
Client ID:	**DA7SWCS38220922I**					
Laboratory ID:	09-217-04					
2,4-Dinitrophenol	**ND**	0.11	EPA 8270E	9-23-22	9-23-22	
Acenaphthene	**ND**	0.0042	EPA 8270E/SIM	9-23-22	9-23-22	
4-Nitrophenol	**ND**	0.021	EPA 8270E	9-23-22	9-23-22	
2,4-Dinitrotoluene	**ND**	0.021	EPA 8270E	9-23-22	9-23-22	
Dibenzofuran	**ND**	0.021	EPA 8270E	9-23-22	9-23-22	
2,3,5,6-Tetrachlorophenol	**ND**	0.021	EPA 8270E	9-23-22	9-23-22	
2,3,4,6-Tetrachlorophenol	**ND**	0.021	EPA 8270E	9-23-22	9-23-22	
Diethylphthalate	**ND**	0.11	EPA 8270E	9-23-22	9-23-22	
4-Chlorophenyl-phenylether	**ND**	0.021	EPA 8270E	9-23-22	9-23-22	
4-Nitroaniline	**ND**	0.021	EPA 8270E	9-23-22	9-23-22	
Fluorene	**ND**	0.0042	EPA 8270E/SIM	9-23-22	9-23-22	
4,6-Dinitro-2-methylphenol	**ND**	0.11	EPA 8270E	9-23-22	9-23-22	
n-Nitrosodiphenylamine	**ND**	0.021	EPA 8270E	9-23-22	9-23-22	
1,2-Diphenylhydrazine	**ND**	0.021	EPA 8270E	9-23-22	9-23-22	
4-Bromophenyl-phenylether	**ND**	0.021	EPA 8270E	9-23-22	9-23-22	
Hexachlorobenzene	**ND**	0.021	EPA 8270E	9-23-22	9-23-22	
Pentachlorophenol	**ND**	0.11	EPA 8270E	9-23-22	9-23-22	
Phenanthrene	**ND**	0.0042	EPA 8270E/SIM	9-23-22	9-23-22	
Anthracene	**ND**	0.0042	EPA 8270E/SIM	9-23-22	9-23-22	
Carbazole	**ND**	0.021	EPA 8270E	9-23-22	9-23-22	
Di-n-butylphthalate	**ND**	0.11	EPA 8270E	9-23-22	9-23-22	
Fluoranthene	**ND**	0.0042	EPA 8270E/SIM	9-23-22	9-23-22	
Pyrene	**ND**	0.0042	EPA 8270E/SIM	9-23-22	9-23-22	
Butylbenzylphthalate	**ND**	0.11	EPA 8270E	9-23-22	9-23-22	
bis-2-Ethylhexyladipate	**ND**	0.11	EPA 8270E	9-23-22	9-23-22	
3,3'-Dichlorobenzidine	**ND**	0.11	EPA 8270E	9-23-22	9-23-22	
Benzo[a]anthracene	**ND**	0.0042	EPA 8270E/SIM	9-23-22	9-23-22	
Chrysene	**ND**	0.0042	EPA 8270E/SIM	9-23-22	9-23-22	
bis(2-Ethylhexyl)phthalate	**ND**	0.11	EPA 8270E	9-23-22	9-23-22	
Di-n-octylphthalate	**ND**	0.11	EPA 8270E	9-23-22	9-23-22	
Benzo[b]fluoranthene	**ND**	0.0042	EPA 8270E/SIM	9-23-22	9-23-22	
Benzo(j,k)fluoranthene	**ND**	0.0042	EPA 8270E/SIM	9-23-22	9-23-22	
Benzo[a]pyrene	**ND**	0.0042	EPA 8270E/SIM	9-23-22	9-23-22	
Indeno[1,2,3-cd]pyrene	**ND**	0.0042	EPA 8270E/SIM	9-23-22	9-23-22	
Dibenz[a,h]anthracene	**ND**	0.0042	EPA 8270E/SIM	9-23-22	9-23-22	
Benzo[g,h,i]perylene	**ND**	0.0042	EPA 8270E/SIM	9-23-22	9-23-22	
Surrogate:	*Percent Recovery*	*Control Limits*				
2-Fluorophenol	*61*	*22 - 111*				
Phenol-d6	*62*	*31 - 117*				
Nitrobenzene-d5	*60*	*29 - 111*				
2-Fluorobiphenyl	*60*	*39 - 109*				
2,4,6-Tribromophenol	*56*	*36 - 127*				
Terphenyl-d14	*63*	*39 - 116*				

This report pertains to the samples analyzed in accordance with the chain of custody, and is intended only for the use of the individual or company to whom it is addressed.

Date of Report: September 26, 2022
Samples Submitted: September 22, 2022
Laboratory Reference: 2209-217
Project: 11-05150-003

SEMIVOLATILE ORGANICS EPA 8270E/SIM
page 1 of 2

Matrix: Soil
Units: mg/Kg

Analyte	Result	PQL	Method	Date Prepared	Date Analyzed	Flags
Client ID:	**DA7SWCS39220922I**					
Laboratory ID:	09-217-05					
n-Nitrosodimethylamine	**ND**	0.021	EPA 8270E	9-23-22	9-23-22	
Pyridine	**ND**	0.21	EPA 8270E	9-23-22	9-23-22	
Phenol	**ND**	0.021	EPA 8270E	9-23-22	9-23-22	
Aniline	**ND**	0.11	EPA 8270E	9-23-22	9-23-22	
bis(2-Chloroethyl)ether	**ND**	0.021	EPA 8270E	9-23-22	9-23-22	
2-Chlorophenol	**ND**	0.021	EPA 8270E	9-23-22	9-23-22	
1,3-Dichlorobenzene	**ND**	0.021	EPA 8270E	9-23-22	9-23-22	
1,4-Dichlorobenzene	**ND**	0.021	EPA 8270E	9-23-22	9-23-22	
Benzyl alcohol	**ND**	0.021	EPA 8270E	9-23-22	9-23-22	
1,2-Dichlorobenzene	**ND**	0.021	EPA 8270E	9-23-22	9-23-22	
2-Methylphenol (o-Cresol)	**ND**	0.021	EPA 8270E	9-23-22	9-23-22	
bis(2-Chloroisopropyl)ether	**ND**	0.021	EPA 8270E	9-23-22	9-23-22	
(3+4)-Methylphenol (m,p-Cresol)	**ND**	0.021	EPA 8270E	9-23-22	9-23-22	
n-Nitroso-di-n-propylamine	**ND**	0.021	EPA 8270E	9-23-22	9-23-22	
Hexachloroethane	**ND**	0.021	EPA 8270E	9-23-22	9-23-22	
Nitrobenzene	**ND**	0.021	EPA 8270E	9-23-22	9-23-22	
Isophorone	**ND**	0.021	EPA 8270E	9-23-22	9-23-22	
2-Nitrophenol	**ND**	0.021	EPA 8270E	9-23-22	9-23-22	
2,4-Dimethylphenol	**ND**	0.021	EPA 8270E	9-23-22	9-23-22	
bis(2-Chloroethoxy)methane	**ND**	0.021	EPA 8270E	9-23-22	9-23-22	
2,4-Dichlorophenol	**ND**	0.021	EPA 8270E	9-23-22	9-23-22	
1,2,4-Trichlorobenzene	**ND**	0.021	EPA 8270E	9-23-22	9-23-22	
Naphthalene	**ND**	0.0042	EPA 8270E/SIM	9-23-22	9-23-22	
4-Chloroaniline	**ND**	0.11	EPA 8270E	9-23-22	9-23-22	
Hexachlorobutadiene	**ND**	0.021	EPA 8270E	9-23-22	9-23-22	
4-Chloro-3-methylphenol	**ND**	0.021	EPA 8270E	9-23-22	9-23-22	
2-Methylnaphthalene	**ND**	0.0042	EPA 8270E/SIM	9-23-22	9-23-22	
1-Methylnaphthalene	**ND**	0.0042	EPA 8270E/SIM	9-23-22	9-23-22	
Hexachlorocyclopentadiene	**ND**	0.021	EPA 8270E	9-23-22	9-23-22	
2,4,6-Trichlorophenol	**ND**	0.021	EPA 8270E	9-23-22	9-23-22	
2,3-Dichloroaniline	**ND**	0.021	EPA 8270E	9-23-22	9-23-22	
2,4,5-Trichlorophenol	**ND**	0.021	EPA 8270E	9-23-22	9-23-22	
2-Chloronaphthalene	**ND**	0.021	EPA 8270E	9-23-22	9-23-22	
2-Nitroaniline	**ND**	0.021	EPA 8270E	9-23-22	9-23-22	
1,4-Dinitrobenzene	**ND**	0.021	EPA 8270E	9-23-22	9-23-22	
Dimethylphthalate	**ND**	0.021	EPA 8270E	9-23-22	9-23-22	
1,3-Dinitrobenzene	**ND**	0.021	EPA 8270E	9-23-22	9-23-22	
2,6-Dinitrotoluene	**ND**	0.021	EPA 8270E	9-23-22	9-23-22	
1,2-Dinitrobenzene	**ND**	0.021	EPA 8270E	9-23-22	9-23-22	
Acenaphthylene	**ND**	0.0042	EPA 8270E/SIM	9-23-22	9-23-22	
3-Nitroaniline	**ND**	0.021	EPA 8270E	9-23-22	9-23-22	

This report pertains to the samples analyzed in accordance with the chain of custody, and is intended only for the use of the individual or company to whom it is addressed.

Date of Report: September 26, 2022
Samples Submitted: September 22, 2022
Laboratory Reference: 2209-217
Project: 11-05150-003

SEMIVOLATILE ORGANICS EPA 8270E/SIM
page 2 of 2

Analyte	Result	PQL	Method	Date Prepared	Date Analyzed	Flags
Client ID:	**DA7SWCS39220922I**					
Laboratory ID:	09-217-05					
2,4-Dinitrophenol	**ND**	0.11	EPA 8270E	9-23-22	9-23-22	
Acenaphthene	**ND**	0.0042	EPA 8270E/SIM	9-23-22	9-23-22	
4-Nitrophenol	**ND**	0.021	EPA 8270E	9-23-22	9-23-22	
2,4-Dinitrotoluene	**ND**	0.021	EPA 8270E	9-23-22	9-23-22	
Dibenzofuran	**ND**	0.021	EPA 8270E	9-23-22	9-23-22	
2,3,5,6-Tetrachlorophenol	**ND**	0.021	EPA 8270E	9-23-22	9-23-22	
2,3,4,6-Tetrachlorophenol	**ND**	0.021	EPA 8270E	9-23-22	9-23-22	
Diethylphthalate	**ND**	0.11	EPA 8270E	9-23-22	9-23-22	
4-Chlorophenyl-phenylether	**ND**	0.021	EPA 8270E	9-23-22	9-23-22	
4-Nitroaniline	**ND**	0.021	EPA 8270E	9-23-22	9-23-22	
Fluorene	**ND**	0.0042	EPA 8270E/SIM	9-23-22	9-23-22	
4,6-Dinitro-2-methylphenol	**ND**	0.11	EPA 8270E	9-23-22	9-23-22	
n-Nitrosodiphenylamine	**ND**	0.021	EPA 8270E	9-23-22	9-23-22	
1,2-Diphenylhydrazine	**ND**	0.021	EPA 8270E	9-23-22	9-23-22	
4-Bromophenyl-phenylether	**ND**	0.021	EPA 8270E	9-23-22	9-23-22	
Hexachlorobenzene	**ND**	0.021	EPA 8270E	9-23-22	9-23-22	
Pentachlorophenol	**ND**	0.11	EPA 8270E	9-23-22	9-23-22	
Phenanthrene	**ND**	0.0042	EPA 8270E/SIM	9-23-22	9-23-22	
Anthracene	**ND**	0.0042	EPA 8270E/SIM	9-23-22	9-23-22	
Carbazole	**ND**	0.021	EPA 8270E	9-23-22	9-23-22	
Di-n-butylphthalate	**ND**	0.11	EPA 8270E	9-23-22	9-23-22	
Fluoranthene	**ND**	0.0042	EPA 8270E/SIM	9-23-22	9-23-22	
Pyrene	**ND**	0.0042	EPA 8270E/SIM	9-23-22	9-23-22	
Butylbenzylphthalate	**ND**	0.11	EPA 8270E	9-23-22	9-23-22	
bis-2-Ethylhexyladipate	**ND**	0.11	EPA 8270E	9-23-22	9-23-22	
3,3'-Dichlorobenzidine	**ND**	0.11	EPA 8270E	9-23-22	9-23-22	
Benzo[a]anthracene	**ND**	0.0042	EPA 8270E/SIM	9-23-22	9-23-22	
Chrysene	**ND**	0.0042	EPA 8270E/SIM	9-23-22	9-23-22	
bis(2-Ethylhexyl)phthalate	**ND**	0.11	EPA 8270E	9-23-22	9-23-22	
Di-n-octylphthalate	**ND**	0.11	EPA 8270E	9-23-22	9-23-22	
Benzo[b]fluoranthene	**ND**	0.0042	EPA 8270E/SIM	9-23-22	9-23-22	
Benzo(j,k)fluoranthene	**ND**	0.0042	EPA 8270E/SIM	9-23-22	9-23-22	
Benzo[a]pyrene	**ND**	0.0042	EPA 8270E/SIM	9-23-22	9-23-22	
Indeno[1,2,3-cd]pyrene	**ND**	0.0042	EPA 8270E/SIM	9-23-22	9-23-22	
Dibenz[a,h]anthracene	**ND**	0.0042	EPA 8270E/SIM	9-23-22	9-23-22	
Benzo[g,h,i]perylene	**ND**	0.0042	EPA 8270E/SIM	9-23-22	9-23-22	
Surrogate:	*Percent Recovery*	*Control Limits*				
2-Fluorophenol	*57*	*22 - 111*				
Phenol-d6	*57*	*31 - 117*				
Nitrobenzene-d5	*56*	*29 - 111*				
2-Fluorobiphenyl	*55*	*39 - 109*				
2,4,6-Tribromophenol	*55*	*36 - 127*				
Terphenyl-d14	*59*	*39 - 116*				

This report pertains to the samples analyzed in accordance with the chain of custody, and is intended only for the use of the individual or company to whom it is addressed.

Date of Report: September 26, 2022
Samples Submitted: September 22, 2022
Laboratory Reference: 2209-217
Project: 11-05150-003

SEMIVOLATILE ORGANICS EPA 8270E/SIM
page 1 of 2

Matrix: Soil
Units: mg/Kg

Analyte	Result	PQL	Method	Date Prepared	Date Analyzed	Flags
Client ID:	**DA7SWCS39220922D**					
Laboratory ID:	09-217-06					
n-Nitrosodimethylamine	**ND**	0.021	EPA 8270E	9-23-22	9-23-22	
Pyridine	**ND**	0.21	EPA 8270E	9-23-22	9-23-22	
Phenol	**ND**	0.021	EPA 8270E	9-23-22	9-23-22	
Aniline	**ND**	0.10	EPA 8270E	9-23-22	9-23-22	
bis(2-Chloroethyl)ether	**ND**	0.021	EPA 8270E	9-23-22	9-23-22	
2-Chlorophenol	**ND**	0.021	EPA 8270E	9-23-22	9-23-22	
1,3-Dichlorobenzene	**ND**	0.021	EPA 8270E	9-23-22	9-23-22	
1,4-Dichlorobenzene	**ND**	0.021	EPA 8270E	9-23-22	9-23-22	
Benzyl alcohol	**ND**	0.021	EPA 8270E	9-23-22	9-23-22	
1,2-Dichlorobenzene	**ND**	0.021	EPA 8270E	9-23-22	9-23-22	
2-Methylphenol (o-Cresol)	**ND**	0.021	EPA 8270E	9-23-22	9-23-22	
bis(2-Chloroisopropyl)ether	**ND**	0.021	EPA 8270E	9-23-22	9-23-22	
(3+4)-Methylphenol (m,p-Cresol)	**ND**	0.021	EPA 8270E	9-23-22	9-23-22	
n-Nitroso-di-n-propylamine	**ND**	0.021	EPA 8270E	9-23-22	9-23-22	
Hexachloroethane	**ND**	0.021	EPA 8270E	9-23-22	9-23-22	
Nitrobenzene	**ND**	0.021	EPA 8270E	9-23-22	9-23-22	
Isophorone	**ND**	0.021	EPA 8270E	9-23-22	9-23-22	
2-Nitrophenol	**ND**	0.021	EPA 8270E	9-23-22	9-23-22	
2,4-Dimethylphenol	**ND**	0.021	EPA 8270E	9-23-22	9-23-22	
bis(2-Chloroethoxy)methane	**ND**	0.021	EPA 8270E	9-23-22	9-23-22	
2,4-Dichlorophenol	**ND**	0.021	EPA 8270E	9-23-22	9-23-22	
1,2,4-Trichlorobenzene	**ND**	0.021	EPA 8270E	9-23-22	9-23-22	
Naphthalene	**ND**	0.0042	EPA 8270E/SIM	9-23-22	9-23-22	
4-Chloroaniline	**ND**	0.10	EPA 8270E	9-23-22	9-23-22	
Hexachlorobutadiene	**ND**	0.021	EPA 8270E	9-23-22	9-23-22	
4-Chloro-3-methylphenol	**ND**	0.021	EPA 8270E	9-23-22	9-23-22	
2-Methylnaphthalene	**ND**	0.0042	EPA 8270E/SIM	9-23-22	9-23-22	
1-Methylnaphthalene	**ND**	0.0042	EPA 8270E/SIM	9-23-22	9-23-22	
Hexachlorocyclopentadiene	**ND**	0.021	EPA 8270E	9-23-22	9-23-22	
2,4,6-Trichlorophenol	**ND**	0.021	EPA 8270E	9-23-22	9-23-22	
2,3-Dichloroaniline	**ND**	0.021	EPA 8270E	9-23-22	9-23-22	
2,4,5-Trichlorophenol	**ND**	0.021	EPA 8270E	9-23-22	9-23-22	
2-Chloronaphthalene	**ND**	0.021	EPA 8270E	9-23-22	9-23-22	
2-Nitroaniline	**ND**	0.021	EPA 8270E	9-23-22	9-23-22	
1,4-Dinitrobenzene	**ND**	0.021	EPA 8270E	9-23-22	9-23-22	
Dimethylphthalate	**ND**	0.021	EPA 8270E	9-23-22	9-23-22	
1,3-Dinitrobenzene	**ND**	0.021	EPA 8270E	9-23-22	9-23-22	
2,6-Dinitrotoluene	**ND**	0.021	EPA 8270E	9-23-22	9-23-22	
1,2-Dinitrobenzene	**ND**	0.021	EPA 8270E	9-23-22	9-23-22	
Acenaphthylene	**ND**	0.0042	EPA 8270E/SIM	9-23-22	9-23-22	
3-Nitroaniline	**ND**	0.021	EPA 8270E	9-23-22	9-23-22	

This report pertains to the samples analyzed in accordance with the chain of custody, and is intended only for the use of the individual or company to whom it is addressed.

Date of Report: September 26, 2022
Samples Submitted: September 22, 2022
Laboratory Reference: 2209-217
Project: 11-05150-003

SEMIVOLATILE ORGANICS EPA 8270E/SIM
page 2 of 2

Analyte	Result	PQL	Method	Date Prepared	Date Analyzed	Flags
Client ID:	**DA7SWCS39220922D**					
Laboratory ID:	09-217-06					
2,4-Dinitrophenol	**ND**	0.10	EPA 8270E	9-23-22	9-23-22	
Acenaphthene	**ND**	0.0042	EPA 8270E/SIM	9-23-22	9-23-22	
4-Nitrophenol	**ND**	0.021	EPA 8270E	9-23-22	9-23-22	
2,4-Dinitrotoluene	**ND**	0.021	EPA 8270E	9-23-22	9-23-22	
Dibenzofuran	**ND**	0.021	EPA 8270E	9-23-22	9-23-22	
2,3,5,6-Tetrachlorophenol	**ND**	0.021	EPA 8270E	9-23-22	9-23-22	
2,3,4,6-Tetrachlorophenol	**ND**	0.021	EPA 8270E	9-23-22	9-23-22	
Diethylphthalate	**ND**	0.10	EPA 8270E	9-23-22	9-23-22	
4-Chlorophenyl-phenylether	**ND**	0.021	EPA 8270E	9-23-22	9-23-22	
4-Nitroaniline	**ND**	0.021	EPA 8270E	9-23-22	9-23-22	
Fluorene	**ND**	0.0042	EPA 8270E/SIM	9-23-22	9-23-22	
4,6-Dinitro-2-methylphenol	**ND**	0.10	EPA 8270E	9-23-22	9-23-22	
n-Nitrosodiphenylamine	**ND**	0.021	EPA 8270E	9-23-22	9-23-22	
1,2-Diphenylhydrazine	**ND**	0.021	EPA 8270E	9-23-22	9-23-22	
4-Bromophenyl-phenylether	**ND**	0.021	EPA 8270E	9-23-22	9-23-22	
Hexachlorobenzene	**ND**	0.021	EPA 8270E	9-23-22	9-23-22	
Pentachlorophenol	**ND**	0.10	EPA 8270E	9-23-22	9-23-22	
Phenanthrene	**ND**	0.0042	EPA 8270E/SIM	9-23-22	9-23-22	
Anthracene	**ND**	0.0042	EPA 8270E/SIM	9-23-22	9-23-22	
Carbazole	**ND**	0.021	EPA 8270E	9-23-22	9-23-22	
Di-n-butylphthalate	**ND**	0.10	EPA 8270E	9-23-22	9-23-22	
Fluoranthene	**ND**	0.0042	EPA 8270E/SIM	9-23-22	9-23-22	
Pyrene	**ND**	0.0042	EPA 8270E/SIM	9-23-22	9-23-22	
Butylbenzylphthalate	**ND**	0.10	EPA 8270E	9-23-22	9-23-22	
bis-2-Ethylhexyladipate	**ND**	0.10	EPA 8270E	9-23-22	9-23-22	
3,3'-Dichlorobenzidine	**ND**	0.10	EPA 8270E	9-23-22	9-23-22	
Benzo[a]anthracene	**ND**	0.0042	EPA 8270E/SIM	9-23-22	9-23-22	
Chrysene	**ND**	0.0042	EPA 8270E/SIM	9-23-22	9-23-22	
bis(2-Ethylhexyl)phthalate	**ND**	0.10	EPA 8270E	9-23-22	9-23-22	
Di-n-octylphthalate	**ND**	0.10	EPA 8270E	9-23-22	9-23-22	
Benzo[b]fluoranthene	**ND**	0.0042	EPA 8270E/SIM	9-23-22	9-23-22	
Benzo(j,k)fluoranthene	**ND**	0.0042	EPA 8270E/SIM	9-23-22	9-23-22	
Benzo[a]pyrene	**ND**	0.0042	EPA 8270E/SIM	9-23-22	9-23-22	
Indeno[1,2,3-cd]pyrene	**ND**	0.0042	EPA 8270E/SIM	9-23-22	9-23-22	
Dibenz[a,h]anthracene	**ND**	0.0042	EPA 8270E/SIM	9-23-22	9-23-22	
Benzo[g,h,i]perylene	**ND**	0.0042	EPA 8270E/SIM	9-23-22	9-23-22	
Surrogate:	*Percent Recovery*	*Control Limits*				
2-Fluorophenol	*59*	*22 - 111*				
Phenol-d6	*60*	*31 - 117*				
Nitrobenzene-d5	*59*	*29 - 111*				
2-Fluorobiphenyl	*59*	*39 - 109*				
2,4,6-Tribromophenol	*57*	*36 - 127*				
Terphenyl-d14	*63*	*39 - 116*				

This report pertains to the samples analyzed in accordance with the chain of custody, and is intended only for the use of the individual or company to whom it is addressed.

Date of Report: September 26, 2022
Samples Submitted: September 22, 2022
Laboratory Reference: 2209-217
Project: 11-05150-003

SEMIVOLATILE ORGANICS EPA 8270E/SIM
page 1 of 2

Matrix: Soil
Units: mg/Kg

Analyte	Result	PQL	Method	Date Prepared	Date Analyzed	Flags
Client ID:	**DA7SWCS40220922I**					
Laboratory ID:	09-217-07					
n-Nitrosodimethylamine	**ND**	0.021	EPA 8270E	9-23-22	9-23-22	
Pyridine	**ND**	0.21	EPA 8270E	9-23-22	9-23-22	
Phenol	**ND**	0.021	EPA 8270E	9-23-22	9-23-22	
Aniline	**ND**	0.11	EPA 8270E	9-23-22	9-23-22	
bis(2-Chloroethyl)ether	**ND**	0.021	EPA 8270E	9-23-22	9-23-22	
2-Chlorophenol	**ND**	0.021	EPA 8270E	9-23-22	9-23-22	
1,3-Dichlorobenzene	**ND**	0.021	EPA 8270E	9-23-22	9-23-22	
1,4-Dichlorobenzene	**ND**	0.021	EPA 8270E	9-23-22	9-23-22	
Benzyl alcohol	**ND**	0.021	EPA 8270E	9-23-22	9-23-22	
1,2-Dichlorobenzene	**ND**	0.021	EPA 8270E	9-23-22	9-23-22	
2-Methylphenol (o-Cresol)	**ND**	0.021	EPA 8270E	9-23-22	9-23-22	
bis(2-Chloroisopropyl)ether	**ND**	0.021	EPA 8270E	9-23-22	9-23-22	
(3+4)-Methylphenol (m,p-Cresol)	**ND**	0.021	EPA 8270E	9-23-22	9-23-22	
n-Nitroso-di-n-propylamine	**ND**	0.021	EPA 8270E	9-23-22	9-23-22	
Hexachloroethane	**ND**	0.021	EPA 8270E	9-23-22	9-23-22	
Nitrobenzene	**ND**	0.021	EPA 8270E	9-23-22	9-23-22	
Isophorone	**ND**	0.021	EPA 8270E	9-23-22	9-23-22	
2-Nitrophenol	**ND**	0.021	EPA 8270E	9-23-22	9-23-22	
2,4-Dimethylphenol	**ND**	0.021	EPA 8270E	9-23-22	9-23-22	
bis(2-Chloroethoxy)methane	**ND**	0.021	EPA 8270E	9-23-22	9-23-22	
2,4-Dichlorophenol	**ND**	0.021	EPA 8270E	9-23-22	9-23-22	
1,2,4-Trichlorobenzene	**ND**	0.021	EPA 8270E	9-23-22	9-23-22	
Naphthalene	**ND**	0.0043	EPA 8270E/SIM	9-23-22	9-23-22	
4-Chloroaniline	**ND**	0.11	EPA 8270E	9-23-22	9-23-22	
Hexachlorobutadiene	**ND**	0.021	EPA 8270E	9-23-22	9-23-22	
4-Chloro-3-methylphenol	**ND**	0.021	EPA 8270E	9-23-22	9-23-22	
2-Methylnaphthalene	**ND**	0.0043	EPA 8270E/SIM	9-23-22	9-23-22	
1-Methylnaphthalene	**ND**	0.0043	EPA 8270E/SIM	9-23-22	9-23-22	
Hexachlorocyclopentadiene	**ND**	0.021	EPA 8270E	9-23-22	9-23-22	
2,4,6-Trichlorophenol	**ND**	0.021	EPA 8270E	9-23-22	9-23-22	
2,3-Dichloroaniline	**ND**	0.021	EPA 8270E	9-23-22	9-23-22	
2,4,5-Trichlorophenol	**ND**	0.021	EPA 8270E	9-23-22	9-23-22	
2-Chloronaphthalene	**ND**	0.021	EPA 8270E	9-23-22	9-23-22	
2-Nitroaniline	**ND**	0.021	EPA 8270E	9-23-22	9-23-22	
1,4-Dinitrobenzene	**ND**	0.021	EPA 8270E	9-23-22	9-23-22	
Dimethylphthalate	**ND**	0.021	EPA 8270E	9-23-22	9-23-22	
1,3-Dinitrobenzene	**ND**	0.021	EPA 8270E	9-23-22	9-23-22	
2,6-Dinitrotoluene	**ND**	0.021	EPA 8270E	9-23-22	9-23-22	
1,2-Dinitrobenzene	**ND**	0.021	EPA 8270E	9-23-22	9-23-22	
Acenaphthylene	**ND**	0.0043	EPA 8270E/SIM	9-23-22	9-23-22	
3-Nitroaniline	**ND**	0.021	EPA 8270E	9-23-22	9-23-22	

This report pertains to the samples analyzed in accordance with the chain of custody, and is intended only for the use of the individual or company to whom it is addressed.

Date of Report: September 26, 2022
Samples Submitted: September 22, 2022
Laboratory Reference: 2209-217
Project: 11-05150-003

SEMIVOLATILE ORGANICS EPA 8270E/SIM
page 2 of 2

Analyte	Result	PQL	Method	Date Prepared	Date Analyzed	Flags
Client ID:	**DA7SWCS40220922I**					
Laboratory ID:	09-217-07					
2,4-Dinitrophenol	**ND**	0.11	EPA 8270E	9-23-22	9-23-22	
Acenaphthene	**ND**	0.0043	EPA 8270E/SIM	9-23-22	9-23-22	
4-Nitrophenol	**ND**	0.021	EPA 8270E	9-23-22	9-23-22	
2,4-Dinitrotoluene	**ND**	0.021	EPA 8270E	9-23-22	9-23-22	
Dibenzofuran	**ND**	0.021	EPA 8270E	9-23-22	9-23-22	
2,3,5,6-Tetrachlorophenol	**ND**	0.021	EPA 8270E	9-23-22	9-23-22	
2,3,4,6-Tetrachlorophenol	**ND**	0.021	EPA 8270E	9-23-22	9-23-22	
Diethylphthalate	**ND**	0.11	EPA 8270E	9-23-22	9-23-22	
4-Chlorophenyl-phenylether	**ND**	0.021	EPA 8270E	9-23-22	9-23-22	
4-Nitroaniline	**ND**	0.021	EPA 8270E	9-23-22	9-23-22	
Fluorene	**ND**	0.0043	EPA 8270E/SIM	9-23-22	9-23-22	
4,6-Dinitro-2-methylphenol	**ND**	0.11	EPA 8270E	9-23-22	9-23-22	
n-Nitrosodiphenylamine	**ND**	0.021	EPA 8270E	9-23-22	9-23-22	
1,2-Diphenylhydrazine	**ND**	0.021	EPA 8270E	9-23-22	9-23-22	
4-Bromophenyl-phenylether	**ND**	0.021	EPA 8270E	9-23-22	9-23-22	
Hexachlorobenzene	**ND**	0.021	EPA 8270E	9-23-22	9-23-22	
Pentachlorophenol	**ND**	0.11	EPA 8270E	9-23-22	9-23-22	
Phenanthrene	**ND**	0.0043	EPA 8270E/SIM	9-23-22	9-23-22	
Anthracene	**ND**	0.0043	EPA 8270E/SIM	9-23-22	9-23-22	
Carbazole	**ND**	0.021	EPA 8270E	9-23-22	9-23-22	
Di-n-butylphthalate	**ND**	0.11	EPA 8270E	9-23-22	9-23-22	
Fluoranthene	**ND**	0.0043	EPA 8270E/SIM	9-23-22	9-23-22	
Pyrene	**ND**	0.0043	EPA 8270E/SIM	9-23-22	9-23-22	
Butylbenzylphthalate	**ND**	0.11	EPA 8270E	9-23-22	9-23-22	
bis-2-Ethylhexyladipate	**ND**	0.11	EPA 8270E	9-23-22	9-23-22	
3,3'-Dichlorobenzidine	**ND**	0.11	EPA 8270E	9-23-22	9-23-22	
Benzo[a]anthracene	**ND**	0.0043	EPA 8270E/SIM	9-23-22	9-23-22	
Chrysene	**ND**	0.0043	EPA 8270E/SIM	9-23-22	9-23-22	
bis(2-Ethylhexyl)phthalate	**ND**	0.11	EPA 8270E	9-23-22	9-23-22	
Di-n-octylphthalate	**ND**	0.11	EPA 8270E	9-23-22	9-23-22	
Benzo[b]fluoranthene	**ND**	0.0043	EPA 8270E/SIM	9-23-22	9-23-22	
Benzo(j,k)fluoranthene	**ND**	0.0043	EPA 8270E/SIM	9-23-22	9-23-22	
Benzo[a]pyrene	**ND**	0.0043	EPA 8270E/SIM	9-23-22	9-23-22	
Indeno[1,2,3-cd]pyrene	**ND**	0.0043	EPA 8270E/SIM	9-23-22	9-23-22	
Dibenz[a,h]anthracene	**ND**	0.0043	EPA 8270E/SIM	9-23-22	9-23-22	
Benzo[g,h,i]perylene	**ND**	0.0043	EPA 8270E/SIM	9-23-22	9-23-22	
Surrogate:	*Percent Recovery*	*Control Limits*				
2-Fluorophenol	*56*	*22 - 111*				
Phenol-d6	*58*	*31 - 117*				
Nitrobenzene-d5	*56*	*29 - 111*				
2-Fluorobiphenyl	*58*	*39 - 109*				
2,4,6-Tribromophenol	*59*	*36 - 127*				
Terphenyl-d14	*62*	*39 - 116*				

This report pertains to the samples analyzed in accordance with the chain of custody, and is intended only for the use of the individual or company to whom it is addressed.

Date of Report: September 26, 2022
Samples Submitted: September 22, 2022
Laboratory Reference: 2209-217
Project: 11-05150-003

SEMIVOLATILE ORGANICS EPA 8270E/SIM
page 1 of 2

Matrix: Soil
Units: mg/Kg

Analyte	Result	PQL	Method	Date Prepared	Date Analyzed	Flags
Client ID:	**DA7SWCS41220922I**					
Laboratory ID:	09-217-08					
n-Nitrosodimethylamine	**ND**	0.021	EPA 8270E	9-23-22	9-23-22	
Pyridine	**ND**	0.21	EPA 8270E	9-23-22	9-23-22	
Phenol	**0.033**	0.021	EPA 8270E	9-23-22	9-23-22	
Aniline	**ND**	0.11	EPA 8270E	9-23-22	9-23-22	
bis(2-Chloroethyl)ether	**ND**	0.021	EPA 8270E	9-23-22	9-23-22	
2-Chlorophenol	**ND**	0.021	EPA 8270E	9-23-22	9-23-22	
1,3-Dichlorobenzene	**ND**	0.021	EPA 8270E	9-23-22	9-23-22	
1,4-Dichlorobenzene	**ND**	0.021	EPA 8270E	9-23-22	9-23-22	
Benzyl alcohol	**ND**	0.021	EPA 8270E	9-23-22	9-23-22	
1,2-Dichlorobenzene	**ND**	0.021	EPA 8270E	9-23-22	9-23-22	
2-Methylphenol (o-Cresol)	**ND**	0.021	EPA 8270E	9-23-22	9-23-22	
bis(2-Chloroisopropyl)ether	**ND**	0.021	EPA 8270E	9-23-22	9-23-22	
(3+4)-Methylphenol (m,p-Cresol)	**0.021**	0.021	EPA 8270E	9-23-22	9-23-22	
n-Nitroso-di-n-propylamine	**ND**	0.021	EPA 8270E	9-23-22	9-23-22	
Hexachloroethane	**ND**	0.021	EPA 8270E	9-23-22	9-23-22	
Nitrobenzene	**ND**	0.021	EPA 8270E	9-23-22	9-23-22	
Isophorone	**ND**	0.021	EPA 8270E	9-23-22	9-23-22	
2-Nitrophenol	**ND**	0.021	EPA 8270E	9-23-22	9-23-22	
2,4-Dimethylphenol	**ND**	0.021	EPA 8270E	9-23-22	9-23-22	
bis(2-Chloroethoxy)methane	**ND**	0.021	EPA 8270E	9-23-22	9-23-22	
2,4-Dichlorophenol	**ND**	0.021	EPA 8270E	9-23-22	9-23-22	
1,2,4-Trichlorobenzene	**ND**	0.021	EPA 8270E	9-23-22	9-23-22	
Naphthalene	**ND**	0.0043	EPA 8270E/SIM	9-23-22	9-23-22	
4-Chloroaniline	**ND**	0.11	EPA 8270E	9-23-22	9-23-22	
Hexachlorobutadiene	**ND**	0.021	EPA 8270E	9-23-22	9-23-22	
4-Chloro-3-methylphenol	**ND**	0.021	EPA 8270E	9-23-22	9-23-22	
2-Methylnaphthalene	**ND**	0.0043	EPA 8270E/SIM	9-23-22	9-23-22	
1-Methylnaphthalene	**ND**	0.0043	EPA 8270E/SIM	9-23-22	9-23-22	
Hexachlorocyclopentadiene	**ND**	0.021	EPA 8270E	9-23-22	9-23-22	
2,4,6-Trichlorophenol	**ND**	0.021	EPA 8270E	9-23-22	9-23-22	
2,3-Dichloroaniline	**ND**	0.021	EPA 8270E	9-23-22	9-23-22	
2,4,5-Trichlorophenol	**ND**	0.021	EPA 8270E	9-23-22	9-23-22	
2-Chloronaphthalene	**ND**	0.021	EPA 8270E	9-23-22	9-23-22	
2-Nitroaniline	**ND**	0.021	EPA 8270E	9-23-22	9-23-22	
1,4-Dinitrobenzene	**ND**	0.021	EPA 8270E	9-23-22	9-23-22	
Dimethylphthalate	**ND**	0.021	EPA 8270E	9-23-22	9-23-22	
1,3-Dinitrobenzene	**ND**	0.021	EPA 8270E	9-23-22	9-23-22	
2,6-Dinitrotoluene	**ND**	0.021	EPA 8270E	9-23-22	9-23-22	
1,2-Dinitrobenzene	**ND**	0.021	EPA 8270E	9-23-22	9-23-22	
Acenaphthylene	**ND**	0.0043	EPA 8270E/SIM	9-23-22	9-23-22	
3-Nitroaniline	**ND**	0.021	EPA 8270E	9-23-22	9-23-22	

This report pertains to the samples analyzed in accordance with the chain of custody, and is intended only for the use of the individual or company to whom it is addressed.

Date of Report: September 26, 2022
Samples Submitted: September 22, 2022
Laboratory Reference: 2209-217
Project: 11-05150-003

SEMIVOLATILE ORGANICS EPA 8270E/SIM
page 2 of 2

Analyte	Result	PQL	Method	Date Prepared	Date Analyzed	Flags
Client ID:	**DA7SWCS41220922I**					
Laboratory ID:	09-217-08					
2,4-Dinitrophenol	**ND**	0.11	EPA 8270E	9-23-22	9-23-22	
Acenaphthene	**ND**	0.0043	EPA 8270E/SIM	9-23-22	9-23-22	
4-Nitrophenol	**ND**	0.021	EPA 8270E	9-23-22	9-23-22	
2,4-Dinitrotoluene	**ND**	0.021	EPA 8270E	9-23-22	9-23-22	
Dibenzofuran	**ND**	0.021	EPA 8270E	9-23-22	9-23-22	
2,3,5,6-Tetrachlorophenol	**ND**	0.021	EPA 8270E	9-23-22	9-23-22	
2,3,4,6-Tetrachlorophenol	**ND**	0.021	EPA 8270E	9-23-22	9-23-22	
Diethylphthalate	**ND**	0.11	EPA 8270E	9-23-22	9-23-22	
4-Chlorophenyl-phenylether	**ND**	0.021	EPA 8270E	9-23-22	9-23-22	
4-Nitroaniline	**ND**	0.021	EPA 8270E	9-23-22	9-23-22	
Fluorene	**ND**	0.0043	EPA 8270E/SIM	9-23-22	9-23-22	
4,6-Dinitro-2-methylphenol	**ND**	0.11	EPA 8270E	9-23-22	9-23-22	
n-Nitrosodiphenylamine	**ND**	0.021	EPA 8270E	9-23-22	9-23-22	
1,2-Diphenylhydrazine	**ND**	0.021	EPA 8270E	9-23-22	9-23-22	
4-Bromophenyl-phenylether	**ND**	0.021	EPA 8270E	9-23-22	9-23-22	
Hexachlorobenzene	**ND**	0.021	EPA 8270E	9-23-22	9-23-22	
Pentachlorophenol	**ND**	0.11	EPA 8270E	9-23-22	9-23-22	
Phenanthrene	**ND**	0.0043	EPA 8270E/SIM	9-23-22	9-23-22	
Anthracene	**ND**	0.0043	EPA 8270E/SIM	9-23-22	9-23-22	
Carbazole	**ND**	0.021	EPA 8270E	9-23-22	9-23-22	
Di-n-butylphthalate	**ND**	0.11	EPA 8270E	9-23-22	9-23-22	
Fluoranthene	**ND**	0.0043	EPA 8270E/SIM	9-23-22	9-23-22	
Pyrene	**ND**	0.0043	EPA 8270E/SIM	9-23-22	9-23-22	
Butylbenzylphthalate	**ND**	0.11	EPA 8270E	9-23-22	9-23-22	
bis-2-Ethylhexyladipate	**ND**	0.11	EPA 8270E	9-23-22	9-23-22	
3,3'-Dichlorobenzidine	**ND**	0.11	EPA 8270E	9-23-22	9-23-22	
Benzo[a]anthracene	**ND**	0.0043	EPA 8270E/SIM	9-23-22	9-23-22	
Chrysene	**ND**	0.0043	EPA 8270E/SIM	9-23-22	9-23-22	
bis(2-Ethylhexyl)phthalate	**ND**	0.11	EPA 8270E	9-23-22	9-23-22	
Di-n-octylphthalate	**ND**	0.11	EPA 8270E	9-23-22	9-23-22	
Benzo[b]fluoranthene	**ND**	0.0043	EPA 8270E/SIM	9-23-22	9-23-22	
Benzo(j,k)fluoranthene	**ND**	0.0043	EPA 8270E/SIM	9-23-22	9-23-22	
Benzo[a]pyrene	**ND**	0.0043	EPA 8270E/SIM	9-23-22	9-23-22	
Indeno[1,2,3-cd]pyrene	**ND**	0.0043	EPA 8270E/SIM	9-23-22	9-23-22	
Dibenz[a,h]anthracene	**ND**	0.0043	EPA 8270E/SIM	9-23-22	9-23-22	
Benzo[g,h,i]perylene	**ND**	0.0043	EPA 8270E/SIM	9-23-22	9-23-22	
Surrogate:	*Percent Recovery*	*Control Limits*				
2-Fluorophenol	*54*	*22 - 111*				
Phenol-d6	*56*	*31 - 117*				
Nitrobenzene-d5	*54*	*29 - 111*				
2-Fluorobiphenyl	*56*	*39 - 109*				
2,4,6-Tribromophenol	*59*	*36 - 127*				
Terphenyl-d14	*61*	*39 - 116*				

This report pertains to the samples analyzed in accordance with the chain of custody, and is intended only for the use of the individual or company to whom it is addressed.

Date of Report: September 26, 2022
Samples Submitted: September 22, 2022
Laboratory Reference: 2209-217
Project: 11-05150-003

SEMIVOLATILE ORGANICS EPA 8270E/SIM
page 1 of 2

Matrix: Soil
Units: mg/Kg

Analyte	Result	PQL	Method	Date Prepared	Date Analyzed	Flags
Client ID:	**DA7SWCS42220922I**					
Laboratory ID:	09-217-09					
n-Nitrosodimethylamine	**ND**	0.022	EPA 8270E	9-23-22	9-23-22	
Pyridine	**ND**	0.22	EPA 8270E	9-23-22	9-23-22	
Phenol	**ND**	0.022	EPA 8270E	9-23-22	9-23-22	
Aniline	**ND**	0.11	EPA 8270E	9-23-22	9-23-22	
bis(2-Chloroethyl)ether	**ND**	0.022	EPA 8270E	9-23-22	9-23-22	
2-Chlorophenol	**ND**	0.022	EPA 8270E	9-23-22	9-23-22	
1,3-Dichlorobenzene	**ND**	0.022	EPA 8270E	9-23-22	9-23-22	
1,4-Dichlorobenzene	**ND**	0.022	EPA 8270E	9-23-22	9-23-22	
Benzyl alcohol	**ND**	0.022	EPA 8270E	9-23-22	9-23-22	
1,2-Dichlorobenzene	**ND**	0.022	EPA 8270E	9-23-22	9-23-22	
2-Methylphenol (o-Cresol)	**ND**	0.022	EPA 8270E	9-23-22	9-23-22	
bis(2-Chloroisopropyl)ether	**ND**	0.022	EPA 8270E	9-23-22	9-23-22	
(3+4)-Methylphenol (m,p-Cresol)	**ND**	0.022	EPA 8270E	9-23-22	9-23-22	
n-Nitroso-di-n-propylamine	**ND**	0.022	EPA 8270E	9-23-22	9-23-22	
Hexachloroethane	**ND**	0.022	EPA 8270E	9-23-22	9-23-22	
Nitrobenzene	**ND**	0.022	EPA 8270E	9-23-22	9-23-22	
Isophorone	**ND**	0.022	EPA 8270E	9-23-22	9-23-22	
2-Nitrophenol	**ND**	0.022	EPA 8270E	9-23-22	9-23-22	
2,4-Dimethylphenol	**ND**	0.022	EPA 8270E	9-23-22	9-23-22	
bis(2-Chloroethoxy)methane	**ND**	0.022	EPA 8270E	9-23-22	9-23-22	
2,4-Dichlorophenol	**ND**	0.022	EPA 8270E	9-23-22	9-23-22	
1,2,4-Trichlorobenzene	**ND**	0.022	EPA 8270E	9-23-22	9-23-22	
Naphthalene	**ND**	0.0044	EPA 8270E/SIM	9-23-22	9-23-22	
4-Chloroaniline	**ND**	0.11	EPA 8270E	9-23-22	9-23-22	
Hexachlorobutadiene	**ND**	0.022	EPA 8270E	9-23-22	9-23-22	
4-Chloro-3-methylphenol	**ND**	0.022	EPA 8270E	9-23-22	9-23-22	
2-Methylnaphthalene	**ND**	0.0044	EPA 8270E/SIM	9-23-22	9-23-22	
1-Methylnaphthalene	**ND**	0.0044	EPA 8270E/SIM	9-23-22	9-23-22	
Hexachlorocyclopentadiene	**ND**	0.022	EPA 8270E	9-23-22	9-23-22	
2,4,6-Trichlorophenol	**ND**	0.022	EPA 8270E	9-23-22	9-23-22	
2,3-Dichloroaniline	**ND**	0.022	EPA 8270E	9-23-22	9-23-22	
2,4,5-Trichlorophenol	**ND**	0.022	EPA 8270E	9-23-22	9-23-22	
2-Chloronaphthalene	**ND**	0.022	EPA 8270E	9-23-22	9-23-22	
2-Nitroaniline	**ND**	0.022	EPA 8270E	9-23-22	9-23-22	
1,4-Dinitrobenzene	**ND**	0.022	EPA 8270E	9-23-22	9-23-22	
Dimethylphthalate	**ND**	0.022	EPA 8270E	9-23-22	9-23-22	
1,3-Dinitrobenzene	**ND**	0.022	EPA 8270E	9-23-22	9-23-22	
2,6-Dinitrotoluene	**ND**	0.022	EPA 8270E	9-23-22	9-23-22	
1,2-Dinitrobenzene	**ND**	0.022	EPA 8270E	9-23-22	9-23-22	
Acenaphthylene	**ND**	0.0044	EPA 8270E/SIM	9-23-22	9-23-22	
3-Nitroaniline	**ND**	0.022	EPA 8270E	9-23-22	9-23-22	

This report pertains to the samples analyzed in accordance with the chain of custody, and is intended only for the use of the individual or company to whom it is addressed.

Date of Report: September 26, 2022
Samples Submitted: September 22, 2022
Laboratory Reference: 2209-217
Project: 11-05150-003

SEMIVOLATILE ORGANICS EPA 8270E/SIM
page 2 of 2

Analyte	Result	PQL	Method	Date Prepared	Date Analyzed	Flags
Client ID:	**DA7SWCS42220922I**					
Laboratory ID:	09-217-09					
2,4-Dinitrophenol	**ND**	0.11	EPA 8270E	9-23-22	9-23-22	
Acenaphthene	**ND**	0.0044	EPA 8270E/SIM	9-23-22	9-23-22	
4-Nitrophenol	**ND**	0.022	EPA 8270E	9-23-22	9-23-22	
2,4-Dinitrotoluene	**ND**	0.022	EPA 8270E	9-23-22	9-23-22	
Dibenzofuran	**ND**	0.022	EPA 8270E	9-23-22	9-23-22	
2,3,5,6-Tetrachlorophenol	**ND**	0.022	EPA 8270E	9-23-22	9-23-22	
2,3,4,6-Tetrachlorophenol	**ND**	0.022	EPA 8270E	9-23-22	9-23-22	
Diethylphthalate	**ND**	0.11	EPA 8270E	9-23-22	9-23-22	
4-Chlorophenyl-phenylether	**ND**	0.022	EPA 8270E	9-23-22	9-23-22	
4-Nitroaniline	**ND**	0.022	EPA 8270E	9-23-22	9-23-22	
Fluorene	**ND**	0.0044	EPA 8270E/SIM	9-23-22	9-23-22	
4,6-Dinitro-2-methylphenol	**ND**	0.11	EPA 8270E	9-23-22	9-23-22	
n-Nitrosodiphenylamine	**ND**	0.022	EPA 8270E	9-23-22	9-23-22	
1,2-Diphenylhydrazine	**ND**	0.022	EPA 8270E	9-23-22	9-23-22	
4-Bromophenyl-phenylether	**ND**	0.022	EPA 8270E	9-23-22	9-23-22	
Hexachlorobenzene	**ND**	0.022	EPA 8270E	9-23-22	9-23-22	
Pentachlorophenol	**ND**	0.11	EPA 8270E	9-23-22	9-23-22	
Phenanthrene	**ND**	0.0044	EPA 8270E/SIM	9-23-22	9-23-22	
Anthracene	**ND**	0.0044	EPA 8270E/SIM	9-23-22	9-23-22	
Carbazole	**ND**	0.022	EPA 8270E	9-23-22	9-23-22	
Di-n-butylphthalate	**ND**	0.11	EPA 8270E	9-23-22	9-23-22	
Fluoranthene	**ND**	0.0044	EPA 8270E/SIM	9-23-22	9-23-22	
Pyrene	**ND**	0.0044	EPA 8270E/SIM	9-23-22	9-23-22	
Butylbenzylphthalate	**ND**	0.11	EPA 8270E	9-23-22	9-23-22	
bis-2-Ethylhexyladipate	**ND**	0.11	EPA 8270E	9-23-22	9-23-22	
3,3'-Dichlorobenzidine	**ND**	0.11	EPA 8270E	9-23-22	9-23-22	
Benzo[a]anthracene	**ND**	0.0044	EPA 8270E/SIM	9-23-22	9-23-22	
Chrysene	**ND**	0.0044	EPA 8270E/SIM	9-23-22	9-23-22	
bis(2-Ethylhexyl)phthalate	**ND**	0.11	EPA 8270E	9-23-22	9-23-22	
Di-n-octylphthalate	**ND**	0.11	EPA 8270E	9-23-22	9-23-22	
Benzo[b]fluoranthene	**ND**	0.0044	EPA 8270E/SIM	9-23-22	9-23-22	
Benzo(j,k)fluoranthene	**ND**	0.0044	EPA 8270E/SIM	9-23-22	9-23-22	
Benzo[a]pyrene	**ND**	0.0044	EPA 8270E/SIM	9-23-22	9-23-22	
Indeno[1,2,3-cd]pyrene	**ND**	0.0044	EPA 8270E/SIM	9-23-22	9-23-22	
Dibenz[a,h]anthracene	**ND**	0.0044	EPA 8270E/SIM	9-23-22	9-23-22	
Benzo[g,h,i]perylene	**ND**	0.0044	EPA 8270E/SIM	9-23-22	9-23-22	
Surrogate:	*Percent Recovery*	*Control Limits*				
2-Fluorophenol	*64*	*22 - 111*				
Phenol-d6	*66*	*31 - 117*				
Nitrobenzene-d5	*65*	*29 - 111*				
2-Fluorobiphenyl	*65*	*39 - 109*				
2,4,6-Tribromophenol	*64*	*36 - 127*				
Terphenyl-d14	*68*	*39 - 116*				

This report pertains to the samples analyzed in accordance with the chain of custody, and is intended only for the use of the individual or company to whom it is addressed.

Date of Report: September 26, 2022
Samples Submitted: September 22, 2022
Laboratory Reference: 2209-217
Project: 11-05150-003

SEMIVOLATILE ORGANICS EPA 8270E/SIM
page 1 of 2

Matrix: Soil
Units: mg/Kg

Analyte	Result	PQL	Method	Date Prepared	Date Analyzed	Flags
Client ID:	**DA7SWCS43220922I**					
Laboratory ID:	09-217-10					
n-Nitrosodimethylamine	**ND**	0.021	EPA 8270E	9-23-22	9-23-22	
Pyridine	**ND**	0.21	EPA 8270E	9-23-22	9-23-22	
Phenol	**0.23**	0.021	EPA 8270E	9-23-22	9-23-22	
Aniline	**ND**	0.11	EPA 8270E	9-23-22	9-23-22	
bis(2-Chloroethyl)ether	**ND**	0.021	EPA 8270E	9-23-22	9-23-22	
2-Chlorophenol	**ND**	0.021	EPA 8270E	9-23-22	9-23-22	
1,3-Dichlorobenzene	**ND**	0.021	EPA 8270E	9-23-22	9-23-22	
1,4-Dichlorobenzene	**ND**	0.021	EPA 8270E	9-23-22	9-23-22	
Benzyl alcohol	**ND**	0.021	EPA 8270E	9-23-22	9-23-22	
1,2-Dichlorobenzene	**ND**	0.021	EPA 8270E	9-23-22	9-23-22	
2-Methylphenol (o-Cresol)	**ND**	0.021	EPA 8270E	9-23-22	9-23-22	
bis(2-Chloroisopropyl)ether	**ND**	0.021	EPA 8270E	9-23-22	9-23-22	
(3+4)-Methylphenol (m,p-Cresol)	**0.030**	0.021	EPA 8270E	9-23-22	9-23-22	
n-Nitroso-di-n-propylamine	**ND**	0.021	EPA 8270E	9-23-22	9-23-22	
Hexachloroethane	**ND**	0.021	EPA 8270E	9-23-22	9-23-22	
Nitrobenzene	**ND**	0.021	EPA 8270E	9-23-22	9-23-22	
Isophorone	**ND**	0.021	EPA 8270E	9-23-22	9-23-22	
2-Nitrophenol	**ND**	0.021	EPA 8270E	9-23-22	9-23-22	
2,4-Dimethylphenol	**ND**	0.021	EPA 8270E	9-23-22	9-23-22	
bis(2-Chloroethoxy)methane	**ND**	0.021	EPA 8270E	9-23-22	9-23-22	
2,4-Dichlorophenol	**ND**	0.021	EPA 8270E	9-23-22	9-23-22	
1,2,4-Trichlorobenzene	**ND**	0.021	EPA 8270E	9-23-22	9-23-22	
Naphthalene	**ND**	0.0042	EPA 8270E/SIM	9-23-22	9-23-22	
4-Chloroaniline	**ND**	0.11	EPA 8270E	9-23-22	9-23-22	
Hexachlorobutadiene	**ND**	0.021	EPA 8270E	9-23-22	9-23-22	
4-Chloro-3-methylphenol	**ND**	0.021	EPA 8270E	9-23-22	9-23-22	
2-Methylnaphthalene	**ND**	0.0042	EPA 8270E/SIM	9-23-22	9-23-22	
1-Methylnaphthalene	**ND**	0.0042	EPA 8270E/SIM	9-23-22	9-23-22	
Hexachlorocyclopentadiene	**ND**	0.021	EPA 8270E	9-23-22	9-23-22	
2,4,6-Trichlorophenol	**ND**	0.021	EPA 8270E	9-23-22	9-23-22	
2,3-Dichloroaniline	**ND**	0.021	EPA 8270E	9-23-22	9-23-22	
2,4,5-Trichlorophenol	**ND**	0.021	EPA 8270E	9-23-22	9-23-22	
2-Chloronaphthalene	**ND**	0.021	EPA 8270E	9-23-22	9-23-22	
2-Nitroaniline	**ND**	0.021	EPA 8270E	9-23-22	9-23-22	
1,4-Dinitrobenzene	**ND**	0.021	EPA 8270E	9-23-22	9-23-22	
Dimethylphthalate	**ND**	0.021	EPA 8270E	9-23-22	9-23-22	
1,3-Dinitrobenzene	**ND**	0.021	EPA 8270E	9-23-22	9-23-22	
2,6-Dinitrotoluene	**ND**	0.021	EPA 8270E	9-23-22	9-23-22	
1,2-Dinitrobenzene	**ND**	0.021	EPA 8270E	9-23-22	9-23-22	
Acenaphthylene	**ND**	0.0042	EPA 8270E/SIM	9-23-22	9-23-22	
3-Nitroaniline	**ND**	0.021	EPA 8270E	9-23-22	9-23-22	

This report pertains to the samples analyzed in accordance with the chain of custody, and is intended only for the use of the individual or company to whom it is addressed.

Date of Report: September 26, 2022
Samples Submitted: September 22, 2022
Laboratory Reference: 2209-217
Project: 11-05150-003

SEMIVOLATILE ORGANICS EPA 8270E/SIM
page 2 of 2

Analyte	Result	PQL	Method	Date Prepared	Date Analyzed	Flags
Client ID:	**DA7SWCS43220922I**					
Laboratory ID:	09-217-10					
2,4-Dinitrophenol	**ND**	0.11	EPA 8270E	9-23-22	9-23-22	
Acenaphthene	**ND**	0.0042	EPA 8270E/SIM	9-23-22	9-23-22	
4-Nitrophenol	**ND**	0.021	EPA 8270E	9-23-22	9-23-22	
2,4-Dinitrotoluene	**ND**	0.021	EPA 8270E	9-23-22	9-23-22	
Dibenzofuran	**ND**	0.021	EPA 8270E	9-23-22	9-23-22	
2,3,5,6-Tetrachlorophenol	**ND**	0.021	EPA 8270E	9-23-22	9-23-22	
2,3,4,6-Tetrachlorophenol	**ND**	0.021	EPA 8270E	9-23-22	9-23-22	
Diethylphthalate	**ND**	0.11	EPA 8270E	9-23-22	9-23-22	
4-Chlorophenyl-phenylether	**ND**	0.021	EPA 8270E	9-23-22	9-23-22	
4-Nitroaniline	**ND**	0.021	EPA 8270E	9-23-22	9-23-22	
Fluorene	**ND**	0.0042	EPA 8270E/SIM	9-23-22	9-23-22	
4,6-Dinitro-2-methylphenol	**ND**	0.11	EPA 8270E	9-23-22	9-23-22	
n-Nitrosodiphenylamine	**ND**	0.021	EPA 8270E	9-23-22	9-23-22	
1,2-Diphenylhydrazine	**ND**	0.021	EPA 8270E	9-23-22	9-23-22	
4-Bromophenyl-phenylether	**ND**	0.021	EPA 8270E	9-23-22	9-23-22	
Hexachlorobenzene	**ND**	0.021	EPA 8270E	9-23-22	9-23-22	
Pentachlorophenol	**ND**	0.11	EPA 8270E	9-23-22	9-23-22	
Phenanthrene	**ND**	0.0042	EPA 8270E/SIM	9-23-22	9-23-22	
Anthracene	**ND**	0.0042	EPA 8270E/SIM	9-23-22	9-23-22	
Carbazole	**ND**	0.021	EPA 8270E	9-23-22	9-23-22	
Di-n-butylphthalate	**ND**	0.11	EPA 8270E	9-23-22	9-23-22	
Fluoranthene	**ND**	0.0042	EPA 8270E/SIM	9-23-22	9-23-22	
Pyrene	**ND**	0.0042	EPA 8270E/SIM	9-23-22	9-23-22	
Butylbenzylphthalate	**ND**	0.11	EPA 8270E	9-23-22	9-23-22	
bis-2-Ethylhexyladipate	**ND**	0.11	EPA 8270E	9-23-22	9-23-22	
3,3'-Dichlorobenzidine	**ND**	0.11	EPA 8270E	9-23-22	9-23-22	
Benzo[a]anthracene	**ND**	0.0042	EPA 8270E/SIM	9-23-22	9-23-22	
Chrysene	**ND**	0.0042	EPA 8270E/SIM	9-23-22	9-23-22	
bis(2-Ethylhexyl)phthalate	**ND**	0.11	EPA 8270E	9-23-22	9-23-22	
Di-n-octylphthalate	**ND**	0.11	EPA 8270E	9-23-22	9-23-22	
Benzo[b]fluoranthene	**ND**	0.0042	EPA 8270E/SIM	9-23-22	9-23-22	
Benzo(j,k)fluoranthene	**ND**	0.0042	EPA 8270E/SIM	9-23-22	9-23-22	
Benzo[a]pyrene	**ND**	0.0042	EPA 8270E/SIM	9-23-22	9-23-22	
Indeno[1,2,3-cd]pyrene	**ND**	0.0042	EPA 8270E/SIM	9-23-22	9-23-22	
Dibenz[a,h]anthracene	**ND**	0.0042	EPA 8270E/SIM	9-23-22	9-23-22	
Benzo[g,h,i]perylene	**ND**	0.0042	EPA 8270E/SIM	9-23-22	9-23-22	
Surrogate:	*Percent Recovery*	*Control Limits*				
2-Fluorophenol	*62*	*22 - 111*				
Phenol-d6	*61*	*31 - 117*				
Nitrobenzene-d5	*61*	*29 - 111*				
2-Fluorobiphenyl	*63*	*39 - 109*				
2,4,6-Tribromophenol	*65*	*36 - 127*				
Terphenyl-d14	*66*	*39 - 116*				

This report pertains to the samples analyzed in accordance with the chain of custody, and is intended only for the use of the individual or company to whom it is addressed.

Date of Report: September 26, 2022
Samples Submitted: September 22, 2022
Laboratory Reference: 2209-217
Project: 11-05150-003

SEMIVOLATILE ORGANICS EPA 8270E/SIM
page 1 of 2

Matrix: Soil
Units: mg/Kg

Analyte	Result	PQL	Method	Date Prepared	Date Analyzed	Flags
Client ID:	**DA7SWCS44220922I**					
Laboratory ID:	09-217-11					
n-Nitrosodimethylamine	**ND**	0.021	EPA 8270E	9-23-22	9-23-22	
Pyridine	**ND**	0.21	EPA 8270E	9-23-22	9-23-22	
Phenol	**0.21**	0.021	EPA 8270E	9-23-22	9-23-22	
Aniline	**ND**	0.11	EPA 8270E	9-23-22	9-23-22	
bis(2-Chloroethyl)ether	**ND**	0.021	EPA 8270E	9-23-22	9-23-22	
2-Chlorophenol	**ND**	0.021	EPA 8270E	9-23-22	9-23-22	
1,3-Dichlorobenzene	**ND**	0.021	EPA 8270E	9-23-22	9-23-22	
1,4-Dichlorobenzene	**ND**	0.021	EPA 8270E	9-23-22	9-23-22	
Benzyl alcohol	**ND**	0.021	EPA 8270E	9-23-22	9-23-22	
1,2-Dichlorobenzene	**ND**	0.021	EPA 8270E	9-23-22	9-23-22	
2-Methylphenol (o-Cresol)	**ND**	0.021	EPA 8270E	9-23-22	9-23-22	
bis(2-Chloroisopropyl)ether	**ND**	0.021	EPA 8270E	9-23-22	9-23-22	
(3+4)-Methylphenol (m,p-Cresol)	**0.029**	0.021	EPA 8270E	9-23-22	9-23-22	
n-Nitroso-di-n-propylamine	**ND**	0.021	EPA 8270E	9-23-22	9-23-22	
Hexachloroethane	**ND**	0.021	EPA 8270E	9-23-22	9-23-22	
Nitrobenzene	**ND**	0.021	EPA 8270E	9-23-22	9-23-22	
Isophorone	**ND**	0.021	EPA 8270E	9-23-22	9-23-22	
2-Nitrophenol	**ND**	0.021	EPA 8270E	9-23-22	9-23-22	
2,4-Dimethylphenol	**ND**	0.021	EPA 8270E	9-23-22	9-23-22	
bis(2-Chloroethoxy)methane	**ND**	0.021	EPA 8270E	9-23-22	9-23-22	
2,4-Dichlorophenol	**ND**	0.021	EPA 8270E	9-23-22	9-23-22	
1,2,4-Trichlorobenzene	**ND**	0.021	EPA 8270E	9-23-22	9-23-22	
Naphthalene	**ND**	0.0043	EPA 8270E/SIM	9-23-22	9-23-22	
4-Chloroaniline	**ND**	0.11	EPA 8270E	9-23-22	9-23-22	
Hexachlorobutadiene	**ND**	0.021	EPA 8270E	9-23-22	9-23-22	
4-Chloro-3-methylphenol	**ND**	0.021	EPA 8270E	9-23-22	9-23-22	
2-Methylnaphthalene	**ND**	0.0043	EPA 8270E/SIM	9-23-22	9-23-22	
1-Methylnaphthalene	**ND**	0.0043	EPA 8270E/SIM	9-23-22	9-23-22	
Hexachlorocyclopentadiene	**ND**	0.021	EPA 8270E	9-23-22	9-23-22	
2,4,6-Trichlorophenol	**ND**	0.021	EPA 8270E	9-23-22	9-23-22	
2,3-Dichloroaniline	**ND**	0.021	EPA 8270E	9-23-22	9-23-22	
2,4,5-Trichlorophenol	**ND**	0.021	EPA 8270E	9-23-22	9-23-22	
2-Chloronaphthalene	**ND**	0.021	EPA 8270E	9-23-22	9-23-22	
2-Nitroaniline	**ND**	0.021	EPA 8270E	9-23-22	9-23-22	
1,4-Dinitrobenzene	**ND**	0.021	EPA 8270E	9-23-22	9-23-22	
Dimethylphthalate	**ND**	0.021	EPA 8270E	9-23-22	9-23-22	
1,3-Dinitrobenzene	**ND**	0.021	EPA 8270E	9-23-22	9-23-22	
2,6-Dinitrotoluene	**ND**	0.021	EPA 8270E	9-23-22	9-23-22	
1,2-Dinitrobenzene	**ND**	0.021	EPA 8270E	9-23-22	9-23-22	
Acenaphthylene	**ND**	0.0043	EPA 8270E/SIM	9-23-22	9-23-22	
3-Nitroaniline	**ND**	0.021	EPA 8270E	9-23-22	9-23-22	

This report pertains to the samples analyzed in accordance with the chain of custody, and is intended only for the use of the individual or company to whom it is addressed.

Date of Report: September 26, 2022
Samples Submitted: September 22, 2022
Laboratory Reference: 2209-217
Project: 11-05150-003

SEMIVOLATILE ORGANICS EPA 8270E/SIM
page 2 of 2

Analyte	Result	PQL	Method	Date Prepared	Date Analyzed	Flags
Client ID:	**DA7SWCS44220922I**					
Laboratory ID:	09-217-11					
2,4-Dinitrophenol	**ND**	0.11	EPA 8270E	9-23-22	9-23-22	
Acenaphthene	**ND**	0.0043	EPA 8270E/SIM	9-23-22	9-23-22	
4-Nitrophenol	**ND**	0.021	EPA 8270E	9-23-22	9-23-22	
2,4-Dinitrotoluene	**ND**	0.021	EPA 8270E	9-23-22	9-23-22	
Dibenzofuran	**ND**	0.021	EPA 8270E	9-23-22	9-23-22	
2,3,5,6-Tetrachlorophenol	**ND**	0.021	EPA 8270E	9-23-22	9-23-22	
2,3,4,6-Tetrachlorophenol	**ND**	0.021	EPA 8270E	9-23-22	9-23-22	
Diethylphthalate	**ND**	0.11	EPA 8270E	9-23-22	9-23-22	
4-Chlorophenyl-phenylether	**ND**	0.021	EPA 8270E	9-23-22	9-23-22	
4-Nitroaniline	**ND**	0.021	EPA 8270E	9-23-22	9-23-22	
Fluorene	**ND**	0.0043	EPA 8270E/SIM	9-23-22	9-23-22	
4,6-Dinitro-2-methylphenol	**ND**	0.11	EPA 8270E	9-23-22	9-23-22	
n-Nitrosodiphenylamine	**ND**	0.021	EPA 8270E	9-23-22	9-23-22	
1,2-Diphenylhydrazine	**ND**	0.021	EPA 8270E	9-23-22	9-23-22	
4-Bromophenyl-phenylether	**ND**	0.021	EPA 8270E	9-23-22	9-23-22	
Hexachlorobenzene	**ND**	0.021	EPA 8270E	9-23-22	9-23-22	
Pentachlorophenol	**ND**	0.11	EPA 8270E	9-23-22	9-23-22	
Phenanthrene	**ND**	0.0043	EPA 8270E/SIM	9-23-22	9-23-22	
Anthracene	**ND**	0.0043	EPA 8270E/SIM	9-23-22	9-23-22	
Carbazole	**ND**	0.021	EPA 8270E	9-23-22	9-23-22	
Di-n-butylphthalate	**ND**	0.11	EPA 8270E	9-23-22	9-23-22	
Fluoranthene	**ND**	0.0043	EPA 8270E/SIM	9-23-22	9-23-22	
Pyrene	**ND**	0.0043	EPA 8270E/SIM	9-23-22	9-23-22	
Butylbenzylphthalate	**ND**	0.11	EPA 8270E	9-23-22	9-23-22	
bis-2-Ethylhexyladipate	**ND**	0.11	EPA 8270E	9-23-22	9-23-22	
3,3'-Dichlorobenzidine	**ND**	0.11	EPA 8270E	9-23-22	9-23-22	
Benzo[a]anthracene	**ND**	0.0043	EPA 8270E/SIM	9-23-22	9-23-22	
Chrysene	**ND**	0.0043	EPA 8270E/SIM	9-23-22	9-23-22	
bis(2-Ethylhexyl)phthalate	**ND**	0.11	EPA 8270E	9-23-22	9-23-22	
Di-n-octylphthalate	**ND**	0.11	EPA 8270E	9-23-22	9-23-22	
Benzo[b]fluoranthene	**ND**	0.0043	EPA 8270E/SIM	9-23-22	9-23-22	
Benzo(j,k)fluoranthene	**ND**	0.0043	EPA 8270E/SIM	9-23-22	9-23-22	
Benzo[a]pyrene	**ND**	0.0043	EPA 8270E/SIM	9-23-22	9-23-22	
Indeno[1,2,3-cd]pyrene	**ND**	0.0043	EPA 8270E/SIM	9-23-22	9-23-22	
Dibenz[a,h]anthracene	**ND**	0.0043	EPA 8270E/SIM	9-23-22	9-23-22	
Benzo[g,h,i]perylene	**ND**	0.0043	EPA 8270E/SIM	9-23-22	9-23-22	
Surrogate:	*Percent Recovery*	*Control Limits*				
2-Fluorophenol	*53*	*22 - 111*				
Phenol-d6	*56*	*31 - 117*				
Nitrobenzene-d5	*52*	*29 - 111*				
2-Fluorobiphenyl	*54*	*39 - 109*				
2,4,6-Tribromophenol	*56*	*36 - 127*				
Terphenyl-d14	*57*	*39 - 116*				

This report pertains to the samples analyzed in accordance with the chain of custody, and is intended only for the use of the individual or company to whom it is addressed.

Date of Report: September 26, 2022
Samples Submitted: September 22, 2022
Laboratory Reference: 2209-217
Project: 11-05150-003

SEMIVOLATILE ORGANICS EPA 8270E/SIM
page 1 of 2

Matrix: Soil
Units: mg/Kg

Analyte	Result	PQL	Method	Date Prepared	Date Analyzed	Flags
Client ID:	**DA7SWCS45220922I**					
Laboratory ID:	09-217-12					
n-Nitrosodimethylamine	**ND**	0.022	EPA 8270E	9-23-22	9-23-22	
Pyridine	**ND**	0.22	EPA 8270E	9-23-22	9-23-22	
Phenol	**1.3**	0.11	EPA 8270E	9-23-22	9-24-22	
Aniline	**ND**	0.11	EPA 8270E	9-23-22	9-23-22	
bis(2-Chloroethyl)ether	**ND**	0.022	EPA 8270E	9-23-22	9-23-22	
2-Chlorophenol	**ND**	0.022	EPA 8270E	9-23-22	9-23-22	
1,3-Dichlorobenzene	**ND**	0.022	EPA 8270E	9-23-22	9-23-22	
1,4-Dichlorobenzene	**ND**	0.022	EPA 8270E	9-23-22	9-23-22	
Benzyl alcohol	**ND**	0.022	EPA 8270E	9-23-22	9-23-22	
1,2-Dichlorobenzene	**ND**	0.022	EPA 8270E	9-23-22	9-23-22	
2-Methylphenol (o-Cresol)	**ND**	0.022	EPA 8270E	9-23-22	9-23-22	
bis(2-Chloroisopropyl)ether	**ND**	0.022	EPA 8270E	9-23-22	9-23-22	
(3+4)-Methylphenol (m,p-Cresol)	**0.048**	0.022	EPA 8270E	9-23-22	9-23-22	
n-Nitroso-di-n-propylamine	**ND**	0.022	EPA 8270E	9-23-22	9-23-22	
Hexachloroethane	**ND**	0.022	EPA 8270E	9-23-22	9-23-22	
Nitrobenzene	**ND**	0.022	EPA 8270E	9-23-22	9-23-22	
Isophorone	**ND**	0.022	EPA 8270E	9-23-22	9-23-22	
2-Nitrophenol	**ND**	0.022	EPA 8270E	9-23-22	9-23-22	
2,4-Dimethylphenol	**ND**	0.022	EPA 8270E	9-23-22	9-23-22	
bis(2-Chloroethoxy)methane	**ND**	0.022	EPA 8270E	9-23-22	9-23-22	
2,4-Dichlorophenol	**ND**	0.022	EPA 8270E	9-23-22	9-23-22	
1,2,4-Trichlorobenzene	**ND**	0.022	EPA 8270E	9-23-22	9-23-22	
Naphthalene	**ND**	0.0043	EPA 8270E/SIM	9-23-22	9-23-22	
4-Chloroaniline	**ND**	0.11	EPA 8270E	9-23-22	9-23-22	
Hexachlorobutadiene	**ND**	0.022	EPA 8270E	9-23-22	9-23-22	
4-Chloro-3-methylphenol	**ND**	0.022	EPA 8270E	9-23-22	9-23-22	
2-Methylnaphthalene	**ND**	0.0043	EPA 8270E/SIM	9-23-22	9-23-22	
1-Methylnaphthalene	**ND**	0.0043	EPA 8270E/SIM	9-23-22	9-23-22	
Hexachlorocyclopentadiene	**ND**	0.022	EPA 8270E	9-23-22	9-23-22	
2,4,6-Trichlorophenol	**ND**	0.022	EPA 8270E	9-23-22	9-23-22	
2,3-Dichloroaniline	**ND**	0.022	EPA 8270E	9-23-22	9-23-22	
2,4,5-Trichlorophenol	**ND**	0.022	EPA 8270E	9-23-22	9-23-22	
2-Chloronaphthalene	**ND**	0.022	EPA 8270E	9-23-22	9-23-22	
2-Nitroaniline	**ND**	0.022	EPA 8270E	9-23-22	9-23-22	
1,4-Dinitrobenzene	**ND**	0.022	EPA 8270E	9-23-22	9-23-22	
Dimethylphthalate	**ND**	0.022	EPA 8270E	9-23-22	9-23-22	
1,3-Dinitrobenzene	**ND**	0.022	EPA 8270E	9-23-22	9-23-22	
2,6-Dinitrotoluene	**ND**	0.022	EPA 8270E	9-23-22	9-23-22	
1,2-Dinitrobenzene	**ND**	0.022	EPA 8270E	9-23-22	9-23-22	
Acenaphthylene	**ND**	0.0043	EPA 8270E/SIM	9-23-22	9-23-22	
3-Nitroaniline	**ND**	0.022	EPA 8270E	9-23-22	9-23-22	

This report pertains to the samples analyzed in accordance with the chain of custody, and is intended only for the use of the individual or company to whom it is addressed.

Date of Report: September 26, 2022
Samples Submitted: September 22, 2022
Laboratory Reference: 2209-217
Project: 11-05150-003

SEMIVOLATILE ORGANICS EPA 8270E/SIM
page 2 of 2

Analyte	Result	PQL	Method	Date Prepared	Date Analyzed	Flags
Client ID:	**DA7SWCS45220922I**					
Laboratory ID:	09-217-12					
2,4-Dinitrophenol	**ND**	0.11	EPA 8270E	9-23-22	9-23-22	
Acenaphthene	**ND**	0.0043	EPA 8270E/SIM	9-23-22	9-23-22	
4-Nitrophenol	**ND**	0.022	EPA 8270E	9-23-22	9-23-22	
2,4-Dinitrotoluene	**ND**	0.022	EPA 8270E	9-23-22	9-23-22	
Dibenzofuran	**ND**	0.022	EPA 8270E	9-23-22	9-23-22	
2,3,5,6-Tetrachlorophenol	**ND**	0.022	EPA 8270E	9-23-22	9-23-22	
2,3,4,6-Tetrachlorophenol	**ND**	0.022	EPA 8270E	9-23-22	9-23-22	
Diethylphthalate	**ND**	0.11	EPA 8270E	9-23-22	9-23-22	
4-Chlorophenyl-phenylether	**ND**	0.022	EPA 8270E	9-23-22	9-23-22	
4-Nitroaniline	**ND**	0.022	EPA 8270E	9-23-22	9-23-22	
Fluorene	**ND**	0.0043	EPA 8270E/SIM	9-23-22	9-23-22	
4,6-Dinitro-2-methylphenol	**ND**	0.11	EPA 8270E	9-23-22	9-23-22	
n-Nitrosodiphenylamine	**ND**	0.022	EPA 8270E	9-23-22	9-23-22	
1,2-Diphenylhydrazine	**ND**	0.022	EPA 8270E	9-23-22	9-23-22	
4-Bromophenyl-phenylether	**ND**	0.022	EPA 8270E	9-23-22	9-23-22	
Hexachlorobenzene	**ND**	0.022	EPA 8270E	9-23-22	9-23-22	
Pentachlorophenol	**ND**	0.11	EPA 8270E	9-23-22	9-23-22	
Phenanthrene	**ND**	0.0043	EPA 8270E/SIM	9-23-22	9-23-22	
Anthracene	**ND**	0.0043	EPA 8270E/SIM	9-23-22	9-23-22	
Carbazole	**ND**	0.022	EPA 8270E	9-23-22	9-23-22	
Di-n-butylphthalate	**ND**	0.11	EPA 8270E	9-23-22	9-23-22	
Fluoranthene	**ND**	0.0043	EPA 8270E/SIM	9-23-22	9-23-22	
Pyrene	**ND**	0.0043	EPA 8270E/SIM	9-23-22	9-23-22	
Butylbenzylphthalate	**ND**	0.11	EPA 8270E	9-23-22	9-23-22	
bis-2-Ethylhexyladipate	**ND**	0.11	EPA 8270E	9-23-22	9-23-22	
3,3'-Dichlorobenzidine	**ND**	0.11	EPA 8270E	9-23-22	9-23-22	
Benzo[a]anthracene	**ND**	0.0043	EPA 8270E/SIM	9-23-22	9-23-22	
Chrysene	**ND**	0.0043	EPA 8270E/SIM	9-23-22	9-23-22	
bis(2-Ethylhexyl)phthalate	**ND**	0.11	EPA 8270E	9-23-22	9-23-22	
Di-n-octylphthalate	**ND**	0.11	EPA 8270E	9-23-22	9-23-22	
Benzo[b]fluoranthene	**ND**	0.0043	EPA 8270E/SIM	9-23-22	9-23-22	
Benzo(j,k)fluoranthene	**ND**	0.0043	EPA 8270E/SIM	9-23-22	9-23-22	
Benzo[a]pyrene	**ND**	0.0043	EPA 8270E/SIM	9-23-22	9-23-22	
Indeno[1,2,3-cd]pyrene	**ND**	0.0043	EPA 8270E/SIM	9-23-22	9-23-22	
Dibenz[a,h]anthracene	**ND**	0.0043	EPA 8270E/SIM	9-23-22	9-23-22	
Benzo[g,h,i]perylene	**ND**	0.0043	EPA 8270E/SIM	9-23-22	9-23-22	
Surrogate:	*Percent Recovery*	*Control Limits*				
2-Fluorophenol	*64*	*22 - 111*				
Phenol-d6	*65*	*31 - 117*				
Nitrobenzene-d5	*62*	*29 - 111*				
2-Fluorobiphenyl	*63*	*39 - 109*				
2,4,6-Tribromophenol	*64*	*36 - 127*				
Terphenyl-d14	*67*	*39 - 116*				

This report pertains to the samples analyzed in accordance with the chain of custody, and is intended only for the use of the individual or company to whom it is addressed.

Date of Report: September 26, 2022
Samples Submitted: September 22, 2022
Laboratory Reference: 2209-217
Project: 11-05150-003

SEMIVOLATILE ORGANICS EPA 8270E/SIM
page 1 of 2

Matrix: Soil
Units: mg/Kg

Analyte	Result	PQL	Method	Date Prepared	Date Analyzed	Flags
Client ID:	**DA7SWCS46220922I**					
Laboratory ID:	09-217-13					
n-Nitrosodimethylamine	**ND**	0.022	EPA 8270E	9-23-22	9-23-22	
Pyridine	**ND**	0.22	EPA 8270E	9-23-22	9-23-22	
Phenol	**0.082**	0.022	EPA 8270E	9-23-22	9-23-22	
Aniline	**ND**	0.11	EPA 8270E	9-23-22	9-23-22	
bis(2-Chloroethyl)ether	**ND**	0.022	EPA 8270E	9-23-22	9-23-22	
2-Chlorophenol	**ND**	0.022	EPA 8270E	9-23-22	9-23-22	
1,3-Dichlorobenzene	**ND**	0.022	EPA 8270E	9-23-22	9-23-22	
1,4-Dichlorobenzene	**ND**	0.022	EPA 8270E	9-23-22	9-23-22	
Benzyl alcohol	**ND**	0.022	EPA 8270E	9-23-22	9-23-22	
1,2-Dichlorobenzene	**ND**	0.022	EPA 8270E	9-23-22	9-23-22	
2-Methylphenol (o-Cresol)	**ND**	0.022	EPA 8270E	9-23-22	9-23-22	
bis(2-Chloroisopropyl)ether	**ND**	0.022	EPA 8270E	9-23-22	9-23-22	
(3+4)-Methylphenol (m,p-Cresol)	**0.050**	0.022	EPA 8270E	9-23-22	9-23-22	
n-Nitroso-di-n-propylamine	**ND**	0.022	EPA 8270E	9-23-22	9-23-22	
Hexachloroethane	**ND**	0.022	EPA 8270E	9-23-22	9-23-22	
Nitrobenzene	**ND**	0.022	EPA 8270E	9-23-22	9-23-22	
Isophorone	**ND**	0.022	EPA 8270E	9-23-22	9-23-22	
2-Nitrophenol	**ND**	0.022	EPA 8270E	9-23-22	9-23-22	
2,4-Dimethylphenol	**ND**	0.022	EPA 8270E	9-23-22	9-23-22	
bis(2-Chloroethoxy)methane	**ND**	0.022	EPA 8270E	9-23-22	9-23-22	
2,4-Dichlorophenol	**ND**	0.022	EPA 8270E	9-23-22	9-23-22	
1,2,4-Trichlorobenzene	**ND**	0.022	EPA 8270E	9-23-22	9-23-22	
Naphthalene	**ND**	0.0044	EPA 8270E/SIM	9-23-22	9-23-22	
4-Chloroaniline	**ND**	0.11	EPA 8270E	9-23-22	9-23-22	
Hexachlorobutadiene	**ND**	0.022	EPA 8270E	9-23-22	9-23-22	
4-Chloro-3-methylphenol	**ND**	0.022	EPA 8270E	9-23-22	9-23-22	
2-Methylnaphthalene	**ND**	0.0044	EPA 8270E/SIM	9-23-22	9-23-22	
1-Methylnaphthalene	**ND**	0.0044	EPA 8270E/SIM	9-23-22	9-23-22	
Hexachlorocyclopentadiene	**ND**	0.022	EPA 8270E	9-23-22	9-23-22	
2,4,6-Trichlorophenol	**ND**	0.022	EPA 8270E	9-23-22	9-23-22	
2,3-Dichloroaniline	**ND**	0.022	EPA 8270E	9-23-22	9-23-22	
2,4,5-Trichlorophenol	**ND**	0.022	EPA 8270E	9-23-22	9-23-22	
2-Chloronaphthalene	**ND**	0.022	EPA 8270E	9-23-22	9-23-22	
2-Nitroaniline	**ND**	0.022	EPA 8270E	9-23-22	9-23-22	
1,4-Dinitrobenzene	**ND**	0.022	EPA 8270E	9-23-22	9-23-22	
Dimethylphthalate	**ND**	0.022	EPA 8270E	9-23-22	9-23-22	
1,3-Dinitrobenzene	**ND**	0.022	EPA 8270E	9-23-22	9-23-22	
2,6-Dinitrotoluene	**ND**	0.022	EPA 8270E	9-23-22	9-23-22	
1,2-Dinitrobenzene	**ND**	0.022	EPA 8270E	9-23-22	9-23-22	
Acenaphthylene	**ND**	0.0044	EPA 8270E/SIM	9-23-22	9-23-22	
3-Nitroaniline	**ND**	0.022	EPA 8270E	9-23-22	9-23-22	

This report pertains to the samples analyzed in accordance with the chain of custody, and is intended only for the use of the individual or company to whom it is addressed.

Date of Report: September 26, 2022
Samples Submitted: September 22, 2022
Laboratory Reference: 2209-217
Project: 11-05150-003

SEMIVOLATILE ORGANICS EPA 8270E/SIM
page 2 of 2

Analyte	Result	PQL	Method	Date Prepared	Date Analyzed	Flags
Client ID:	**DA7SWCS46220922I**					
Laboratory ID:	09-217-13					
2,4-Dinitrophenol	**ND**	0.11	EPA 8270E	9-23-22	9-23-22	
Acenaphthene	**ND**	0.0044	EPA 8270E/SIM	9-23-22	9-23-22	
4-Nitrophenol	**ND**	0.022	EPA 8270E	9-23-22	9-23-22	
2,4-Dinitrotoluene	**ND**	0.022	EPA 8270E	9-23-22	9-23-22	
Dibenzofuran	**ND**	0.022	EPA 8270E	9-23-22	9-23-22	
2,3,5,6-Tetrachlorophenol	**ND**	0.022	EPA 8270E	9-23-22	9-23-22	
2,3,4,6-Tetrachlorophenol	**ND**	0.022	EPA 8270E	9-23-22	9-23-22	
Diethylphthalate	**ND**	0.11	EPA 8270E	9-23-22	9-23-22	
4-Chlorophenyl-phenylether	**ND**	0.022	EPA 8270E	9-23-22	9-23-22	
4-Nitroaniline	**ND**	0.022	EPA 8270E	9-23-22	9-23-22	
Fluorene	**ND**	0.0044	EPA 8270E/SIM	9-23-22	9-23-22	
4,6-Dinitro-2-methylphenol	**ND**	0.11	EPA 8270E	9-23-22	9-23-22	
n-Nitrosodiphenylamine	**ND**	0.022	EPA 8270E	9-23-22	9-23-22	
1,2-Diphenylhydrazine	**ND**	0.022	EPA 8270E	9-23-22	9-23-22	
4-Bromophenyl-phenylether	**ND**	0.022	EPA 8270E	9-23-22	9-23-22	
Hexachlorobenzene	**ND**	0.022	EPA 8270E	9-23-22	9-23-22	
Pentachlorophenol	**ND**	0.11	EPA 8270E	9-23-22	9-23-22	
Phenanthrene	**ND**	0.0044	EPA 8270E/SIM	9-23-22	9-23-22	
Anthracene	**ND**	0.0044	EPA 8270E/SIM	9-23-22	9-23-22	
Carbazole	**ND**	0.022	EPA 8270E	9-23-22	9-23-22	
Di-n-butylphthalate	**ND**	0.11	EPA 8270E	9-23-22	9-23-22	
Fluoranthene	**ND**	0.0044	EPA 8270E/SIM	9-23-22	9-23-22	
Pyrene	**ND**	0.0044	EPA 8270E/SIM	9-23-22	9-23-22	
Butylbenzylphthalate	**ND**	0.11	EPA 8270E	9-23-22	9-23-22	
bis-2-Ethylhexyladipate	**ND**	0.11	EPA 8270E	9-23-22	9-23-22	
3,3'-Dichlorobenzidine	**ND**	0.11	EPA 8270E	9-23-22	9-23-22	
Benzo[a]anthracene	**ND**	0.0044	EPA 8270E/SIM	9-23-22	9-23-22	
Chrysene	**ND**	0.0044	EPA 8270E/SIM	9-23-22	9-23-22	
bis(2-Ethylhexyl)phthalate	**ND**	0.11	EPA 8270E	9-23-22	9-23-22	
Di-n-octylphthalate	**ND**	0.11	EPA 8270E	9-23-22	9-23-22	
Benzo[b]fluoranthene	**ND**	0.0044	EPA 8270E/SIM	9-23-22	9-23-22	
Benzo(j,k)fluoranthene	**ND**	0.0044	EPA 8270E/SIM	9-23-22	9-23-22	
Benzo[a]pyrene	**ND**	0.0044	EPA 8270E/SIM	9-23-22	9-23-22	
Indeno[1,2,3-cd]pyrene	**ND**	0.0044	EPA 8270E/SIM	9-23-22	9-23-22	
Dibenz[a,h]anthracene	**ND**	0.0044	EPA 8270E/SIM	9-23-22	9-23-22	
Benzo[g,h,i]perylene	**ND**	0.0044	EPA 8270E/SIM	9-23-22	9-23-22	
Surrogate:	*Percent Recovery*	*Control Limits*				
2-Fluorophenol	*54*	*22 - 111*				
Phenol-d6	*54*	*31 - 117*				
Nitrobenzene-d5	*51*	*29 - 111*				
2-Fluorobiphenyl	*53*	*39 - 109*				
2,4,6-Tribromophenol	*49*	*36 - 127*				
Terphenyl-d14	*55*	*39 - 116*				

This report pertains to the samples analyzed in accordance with the chain of custody, and is intended only for the use of the individual or company to whom it is addressed.

Date of Report: September 26, 2022
Samples Submitted: September 22, 2022
Laboratory Reference: 2209-217
Project: 11-05150-003

SEMIVOLATILE ORGANICS EPA 8270E/SIM
QUALITY CONTROL
page 1 of 2

Matrix: Soil
Units: mg/Kg

Analyte	Result	PQL	Method	Date Prepared	Date Analyzed	Flags
METHOD BLANK						
Laboratory ID:	MB0923S1					
n-Nitrosodimethylamine	**ND**	0.020	EPA 8270E	9-23-22	9-23-22	
Pyridine	**ND**	0.20	EPA 8270E	9-23-22	9-23-22	
Phenol	**ND**	0.020	EPA 8270E	9-23-22	9-23-22	
Aniline	**ND**	0.10	EPA 8270E	9-23-22	9-23-22	
bis(2-Chloroethyl)ether	**ND**	0.020	EPA 8270E	9-23-22	9-23-22	
2-Chlorophenol	**ND**	0.020	EPA 8270E	9-23-22	9-23-22	
1,3-Dichlorobenzene	**ND**	0.020	EPA 8270E	9-23-22	9-23-22	
1,4-Dichlorobenzene	**ND**	0.020	EPA 8270E	9-23-22	9-23-22	
Benzyl alcohol	**ND**	0.020	EPA 8270E	9-23-22	9-23-22	
1,2-Dichlorobenzene	**ND**	0.020	EPA 8270E	9-23-22	9-23-22	
2-Methylphenol (o-Cresol)	**ND**	0.020	EPA 8270E	9-23-22	9-23-22	
bis(2-Chloroisopropyl)ether	**ND**	0.020	EPA 8270E	9-23-22	9-23-22	
(3+4)-Methylphenol (m,p-Cresol)	**ND**	0.020	EPA 8270E	9-23-22	9-23-22	
n-Nitroso-di-n-propylamine	**ND**	0.020	EPA 8270E	9-23-22	9-23-22	
Hexachloroethane	**ND**	0.020	EPA 8270E	9-23-22	9-23-22	
Nitrobenzene	**ND**	0.020	EPA 8270E	9-23-22	9-23-22	
Isophorone	**ND**	0.020	EPA 8270E	9-23-22	9-23-22	
2-Nitrophenol	**ND**	0.020	EPA 8270E	9-23-22	9-23-22	
2,4-Dimethylphenol	**ND**	0.020	EPA 8270E	9-23-22	9-23-22	
bis(2-Chloroethoxy)methane	**ND**	0.020	EPA 8270E	9-23-22	9-23-22	
2,4-Dichlorophenol	**ND**	0.020	EPA 8270E	9-23-22	9-23-22	
1,2,4-Trichlorobenzene	**ND**	0.020	EPA 8270E	9-23-22	9-23-22	
Naphthalene	**ND**	0.0040	EPA 8270E/SIM	9-23-22	9-23-22	
4-Chloroaniline	**ND**	0.10	EPA 8270E	9-23-22	9-23-22	
Hexachlorobutadiene	**ND**	0.020	EPA 8270E	9-23-22	9-23-22	
4-Chloro-3-methylphenol	**ND**	0.020	EPA 8270E	9-23-22	9-23-22	
2-Methylnaphthalene	**ND**	0.0040	EPA 8270E/SIM	9-23-22	9-23-22	
1-Methylnaphthalene	**ND**	0.0040	EPA 8270E/SIM	9-23-22	9-23-22	
Hexachlorocyclopentadiene	**ND**	0.020	EPA 8270E	9-23-22	9-23-22	
2,4,6-Trichlorophenol	**ND**	0.020	EPA 8270E	9-23-22	9-23-22	
2,3-Dichloroaniline	**ND**	0.020	EPA 8270E	9-23-22	9-23-22	
2,4,5-Trichlorophenol	**ND**	0.020	EPA 8270E	9-23-22	9-23-22	
2-Chloronaphthalene	**ND**	0.020	EPA 8270E	9-23-22	9-23-22	
2-Nitroaniline	**ND**	0.020	EPA 8270E	9-23-22	9-23-22	
1,4-Dinitrobenzene	**ND**	0.020	EPA 8270E	9-23-22	9-23-22	
Dimethylphthalate	**ND**	0.020	EPA 8270E	9-23-22	9-23-22	
1,3-Dinitrobenzene	**ND**	0.020	EPA 8270E	9-23-22	9-23-22	
2,6-Dinitrotoluene	**ND**	0.020	EPA 8270E	9-23-22	9-23-22	
1,2-Dinitrobenzene	**ND**	0.020	EPA 8270E	9-23-22	9-23-22	
Acenaphthylene	**ND**	0.0040	EPA 8270E/SIM	9-23-22	9-23-22	
3-Nitroaniline	**ND**	0.020	EPA 8270E	9-23-22	9-23-22	

This report pertains to the samples analyzed in accordance with the chain of custody, and is intended only for the use of the individual or company to whom it is addressed.

Date of Report: September 26, 2022
Samples Submitted: September 22, 2022
Laboratory Reference: 2209-217
Project: 11-05150-003

SEMIVOLATILE ORGANICS EPA 8270E/SIM
QUALITY CONTROL
page 2 of 2

Analyte	Result	PQL	Method	Date Prepared	Date Analyzed	Flags
METHOD BLANK						
Laboratory ID:	MB0923S1					
2,4-Dinitrophenol	**ND**	0.10	EPA 8270E	9-23-22	9-23-22	
Acenaphthene	**ND**	0.0040	EPA 8270E/SIM	9-23-22	9-23-22	
4-Nitrophenol	**ND**	0.020	EPA 8270E	9-23-22	9-23-22	
2,4-Dinitrotoluene	**ND**	0.020	EPA 8270E	9-23-22	9-23-22	
Dibenzofuran	**ND**	0.020	EPA 8270E	9-23-22	9-23-22	
2,3,5,6-Tetrachlorophenol	**ND**	0.020	EPA 8270E	9-23-22	9-23-22	
2,3,4,6-Tetrachlorophenol	**ND**	0.020	EPA 8270E	9-23-22	9-23-22	
Diethylphthalate	**ND**	0.10	EPA 8270E	9-23-22	9-23-22	
4-Chlorophenyl-phenylether	**ND**	0.020	EPA 8270E	9-23-22	9-23-22	
4-Nitroaniline	**ND**	0.020	EPA 8270E	9-23-22	9-23-22	
Fluorene	**ND**	0.0040	EPA 8270E/SIM	9-23-22	9-23-22	
4,6-Dinitro-2-methylphenol	**ND**	0.10	EPA 8270E	9-23-22	9-23-22	
n-Nitrosodiphenylamine	**ND**	0.020	EPA 8270E	9-23-22	9-23-22	
1,2-Diphenylhydrazine	**ND**	0.020	EPA 8270E	9-23-22	9-23-22	
4-Bromophenyl-phenylether	**ND**	0.020	EPA 8270E	9-23-22	9-23-22	
Hexachlorobenzene	**ND**	0.020	EPA 8270E	9-23-22	9-23-22	
Pentachlorophenol	**ND**	0.10	EPA 8270E	9-23-22	9-23-22	
Phenanthrene	**ND**	0.0040	EPA 8270E/SIM	9-23-22	9-23-22	
Anthracene	**ND**	0.0040	EPA 8270E/SIM	9-23-22	9-23-22	
Carbazole	**ND**	0.020	EPA 8270E	9-23-22	9-23-22	
Di-n-butylphthalate	**ND**	0.10	EPA 8270E	9-23-22	9-23-22	
Fluoranthene	**ND**	0.0040	EPA 8270E/SIM	9-23-22	9-23-22	
Pyrene	**ND**	0.0040	EPA 8270E/SIM	9-23-22	9-23-22	
Butylbenzylphthalate	**ND**	0.10	EPA 8270E	9-23-22	9-23-22	
bis-2-Ethylhexyladipate	**ND**	0.10	EPA 8270E	9-23-22	9-23-22	
3,3'-Dichlorobenzidine	**ND**	0.10	EPA 8270E	9-23-22	9-23-22	
Benzo[a]anthracene	**ND**	0.0040	EPA 8270E/SIM	9-23-22	9-23-22	
Chrysene	**ND**	0.0040	EPA 8270E/SIM	9-23-22	9-23-22	
bis(2-Ethylhexyl)phthalate	**ND**	0.10	EPA 8270E	9-23-22	9-23-22	
Di-n-octylphthalate	**ND**	0.10	EPA 8270E	9-23-22	9-23-22	
Benzo[b]fluoranthene	**ND**	0.0040	EPA 8270E/SIM	9-23-22	9-23-22	
Benzo(j,k)fluoranthene	**ND**	0.0040	EPA 8270E/SIM	9-23-22	9-23-22	
Benzo[a]pyrene	**ND**	0.0040	EPA 8270E/SIM	9-23-22	9-23-22	
Indeno[1,2,3-cd]pyrene	**ND**	0.0040	EPA 8270E/SIM	9-23-22	9-23-22	
Dibenz[a,h]anthracene	**ND**	0.0040	EPA 8270E/SIM	9-23-22	9-23-22	
Benzo[g,h,i]perylene	**ND**	0.0040	EPA 8270E/SIM	9-23-22	9-23-22	
Surrogate:	*Percent Recovery*	*Control Limits*				
2-Fluorophenol	*45*	*22 - 111*				
Phenol-d6	*50*	*31 - 117*				
Nitrobenzene-d5	*44*	*29 - 111*				
2-Fluorobiphenyl	*49*	*39 - 109*				
2,4,6-Tribromophenol	*67*	*36 - 127*				
Terphenyl-d14	*72*	*39 - 116*				

This report pertains to the samples analyzed in accordance with the chain of custody, and is intended only for the use of the individual or company to whom it is addressed.

Date of Report: September 26, 2022
Samples Submitted: September 22, 2022
Laboratory Reference: 2209-217
Project: 11-05150-003

SEMIVOLATILE ORGANICS EPA 8270E/SIM
QUALITY CONTROL

Matrix: Soil
Units: mg/Kg

Analyte	Result		Spike Level		Percent Recovery		Recovery Limits	RPD	RPD Limit	Flags
SPIKE BLANKS										
Laboratory ID:	SB0923S1									
	SB	SBD	SB	SBD	SB	SBD				
Phenol	**0.951**	**0.840**	1.33	1.33	72	63	42 - 109	12	24	
2-Chlorophenol	**1.08**	**0.951**	1.33	1.33	81	72	47 - 105	13	26	
1,4-Dichlorobenzene	**0.480**	**0.415**	0.667	0.667	72	62	42 - 102	15	31	
n-Nitroso-di-n-propylamine	**0.455**	**0.409**	0.667	0.667	68	61	45 - 111	11	24	
1,2,4-Trichlorobenzene	**0.507**	**0.432**	0.667	0.667	76	65	47 - 106	16	26	
4-Chloro-3-methylphenol	**1.10**	**0.985**	1.33	1.33	83	74	57 - 111	11	20	
Acenaphthene	**0.508**	**0.453**	0.667	0.667	76	68	48 - 101	11	20	
4-Nitrophenol	**0.950**	**0.837**	1.33	1.33	71	63	53 - 138	13	20	
2,4-Dinitrotoluene	**0.519**	**0.451**	0.667	0.667	78	68	53 - 111	14	20	
Pentachlorophenol	**1.07**	**0.921**	1.33	1.33	80	69	38 - 134	15	24	
Pyrene	**0.539**	**0.490**	0.667	0.667	81	73	53 - 113	10	20	
Surrogate:										
2-Fluorophenol					*77*	*66*	*22 - 111*			
Phenol-d6					*77*	*68*	*31 - 117*			
Nitrobenzene-d5					*76*	*66*	*29 - 111*			
2-Fluorobiphenyl					*77*	*68*	*39 - 109*			
2,4,6-Tribromophenol					*79*	*70*	*36 - 127*			
Terphenyl-d14					*82*	*76*	*39 - 116*			

This report pertains to the samples analyzed in accordance with the chain of custody, and is intended only for the use of the individual or company to whom it is addressed.

Date of Report: September 26, 2022
Samples Submitted: September 22, 2022
Laboratory Reference: 2209-217
Project: 11-05150-003

PCBs EPA 8082A

Matrix: Soil
Units: mg/Kg (ppm)

Analyte	Result	PQL	Method	Date Prepared	Date Analyzed	Flags
Client ID:	**DA7SWCS35220922I**					
Laboratory ID:	09-217-01					
Aroclor 1016	**ND**	0.021	EPA 8082A	9-23-22	9-23-22	
Aroclor 1221	**ND**	0.021	EPA 8082A	9-23-22	9-23-22	
Aroclor 1232	**ND**	0.021	EPA 8082A	9-23-22	9-23-22	
Aroclor 1242	**ND**	0.021	EPA 8082A	9-23-22	9-23-22	
Aroclor 1248	**ND**	0.021	EPA 8082A	9-23-22	9-23-22	
Aroclor 1254	**ND**	0.021	EPA 8082A	9-23-22	9-23-22	
Aroclor 1260	**ND**	0.021	EPA 8082A	9-23-22	9-23-22	
Aroclor 1262	**ND**	0.021	EPA 8082A	9-23-22	9-23-22	
Aroclor 1268	**ND**	0.021	EPA 8082A	9-23-22	9-23-22	
Surrogate:	*Percent Recovery*	*Control Limits*				
DCB	*74*	*53-127*				
Client ID:	**DA7SWCS36220922I**					
Laboratory ID:	09-217-02					
Aroclor 1016	**ND**	0.021	EPA 8082A	9-23-22	9-23-22	
Aroclor 1221	**ND**	0.021	EPA 8082A	9-23-22	9-23-22	
Aroclor 1232	**ND**	0.021	EPA 8082A	9-23-22	9-23-22	
Aroclor 1242	**ND**	0.021	EPA 8082A	9-23-22	9-23-22	
Aroclor 1248	**ND**	0.021	EPA 8082A	9-23-22	9-23-22	
Aroclor 1254	**ND**	0.021	EPA 8082A	9-23-22	9-23-22	
Aroclor 1260	**ND**	0.021	EPA 8082A	9-23-22	9-23-22	
Aroclor 1262	**ND**	0.021	EPA 8082A	9-23-22	9-23-22	
Aroclor 1268	**ND**	0.021	EPA 8082A	9-23-22	9-23-22	
Surrogate:	*Percent Recovery*	*Control Limits*				
DCB	*76*	*53-127*				
Client ID:	**DA7SWCS37220922I**					
Laboratory ID:	09-217-03					
Aroclor 1016	**ND**	0.022	EPA 8082A	9-23-22	9-23-22	
Aroclor 1221	**ND**	0.022	EPA 8082A	9-23-22	9-23-22	
Aroclor 1232	**ND**	0.022	EPA 8082A	9-23-22	9-23-22	
Aroclor 1242	**ND**	0.022	EPA 8082A	9-23-22	9-23-22	
Aroclor 1248	**ND**	0.022	EPA 8082A	9-23-22	9-23-22	
Aroclor 1254	**ND**	0.022	EPA 8082A	9-23-22	9-23-22	
Aroclor 1260	**ND**	0.022	EPA 8082A	9-23-22	9-23-22	
Aroclor 1262	**ND**	0.022	EPA 8082A	9-23-22	9-23-22	
Aroclor 1268	**ND**	0.022	EPA 8082A	9-23-22	9-23-22	
Surrogate:	*Percent Recovery*	*Control Limits*				
DCB	*76*	*53-127*				

This report pertains to the samples analyzed in accordance with the chain of custody, and is intended only for the use of the individual or company to whom it is addressed.

Date of Report: September 26, 2022
Samples Submitted: September 22, 2022
Laboratory Reference: 2209-217
Project: 11-05150-003

PCBs EPA 8082A

Matrix: Soil
Units: mg/Kg (ppm)

Analyte	Result	PQL	Method	Date Prepared	Date Analyzed	Flags
Client ID:	**DA7SWCS38220922I**					
Laboratory ID:	09-217-04					
Aroclor 1016	**ND**	0.021	EPA 8082A	9-23-22	9-23-22	
Aroclor 1221	**ND**	0.021	EPA 8082A	9-23-22	9-23-22	
Aroclor 1232	**ND**	0.021	EPA 8082A	9-23-22	9-23-22	
Aroclor 1242	**ND**	0.021	EPA 8082A	9-23-22	9-23-22	
Aroclor 1248	**ND**	0.021	EPA 8082A	9-23-22	9-23-22	
Aroclor 1254	**ND**	0.021	EPA 8082A	9-23-22	9-23-22	
Aroclor 1260	**ND**	0.021	EPA 8082A	9-23-22	9-23-22	
Aroclor 1262	**ND**	0.021	EPA 8082A	9-23-22	9-23-22	
Aroclor 1268	**ND**	0.021	EPA 8082A	9-23-22	9-23-22	
Surrogate:	*Percent Recovery*	*Control Limits*				
DCB	*81*	*53-127*				
Client ID:	**DA7SWCS39220922I**					
Laboratory ID:	09-217-05					
Aroclor 1016	**ND**	0.021	EPA 8082A	9-23-22	9-23-22	
Aroclor 1221	**ND**	0.021	EPA 8082A	9-23-22	9-23-22	
Aroclor 1232	**ND**	0.021	EPA 8082A	9-23-22	9-23-22	
Aroclor 1242	**ND**	0.021	EPA 8082A	9-23-22	9-23-22	
Aroclor 1248	**ND**	0.021	EPA 8082A	9-23-22	9-23-22	
Aroclor 1254	**ND**	0.021	EPA 8082A	9-23-22	9-23-22	
Aroclor 1260	**ND**	0.021	EPA 8082A	9-23-22	9-23-22	
Aroclor 1262	**ND**	0.021	EPA 8082A	9-23-22	9-23-22	
Aroclor 1268	**ND**	0.021	EPA 8082A	9-23-22	9-23-22	
Surrogate:	*Percent Recovery*	*Control Limits*				
DCB	*71*	*53-127*				
Client ID:	**DA7SWCS39220922D**					
Laboratory ID:	09-217-06					
Aroclor 1016	**ND**	0.021	EPA 8082A	9-23-22	9-23-22	
Aroclor 1221	**ND**	0.021	EPA 8082A	9-23-22	9-23-22	
Aroclor 1232	**ND**	0.021	EPA 8082A	9-23-22	9-23-22	
Aroclor 1242	**ND**	0.021	EPA 8082A	9-23-22	9-23-22	
Aroclor 1248	**ND**	0.021	EPA 8082A	9-23-22	9-23-22	
Aroclor 1254	**ND**	0.021	EPA 8082A	9-23-22	9-23-22	
Aroclor 1260	**ND**	0.021	EPA 8082A	9-23-22	9-23-22	
Aroclor 1262	**ND**	0.021	EPA 8082A	9-23-22	9-23-22	
Aroclor 1268	**ND**	0.021	EPA 8082A	9-23-22	9-23-22	
Surrogate:	*Percent Recovery*	*Control Limits*				
DCB	*81*	*53-127*				

This report pertains to the samples analyzed in accordance with the chain of custody, and is intended only for the use of the individual or company to whom it is addressed.

Date of Report: September 26, 2022
Samples Submitted: September 22, 2022
Laboratory Reference: 2209-217
Project: 11-05150-003

PCBs EPA 8082A

Matrix: Soil
Units: mg/Kg (ppm)

Analyte	Result	PQL	Method	Date Prepared	Date Analyzed	Flags
Client ID:	**DA7SWCS40220922I**					
Laboratory ID:	09-217-07					
Aroclor 1016	**ND**	0.021	EPA 8082A	9-23-22	9-23-22	
Aroclor 1221	**ND**	0.021	EPA 8082A	9-23-22	9-23-22	
Aroclor 1232	**ND**	0.021	EPA 8082A	9-23-22	9-23-22	
Aroclor 1242	**ND**	0.021	EPA 8082A	9-23-22	9-23-22	
Aroclor 1248	**ND**	0.021	EPA 8082A	9-23-22	9-23-22	
Aroclor 1254	**ND**	0.021	EPA 8082A	9-23-22	9-23-22	
Aroclor 1260	**ND**	0.021	EPA 8082A	9-23-22	9-23-22	
Aroclor 1262	**ND**	0.021	EPA 8082A	9-23-22	9-23-22	
Aroclor 1268	**ND**	0.021	EPA 8082A	9-23-22	9-23-22	
Surrogate:	*Percent Recovery*	*Control Limits*				
DCB	*80*	*53-127*				
Client ID:	**DA7SWCS41220922I**					
Laboratory ID:	09-217-08					
Aroclor 1016	**ND**	0.021	EPA 8082A	9-23-22	9-23-22	
Aroclor 1221	**ND**	0.021	EPA 8082A	9-23-22	9-23-22	
Aroclor 1232	**ND**	0.021	EPA 8082A	9-23-22	9-23-22	
Aroclor 1242	**ND**	0.021	EPA 8082A	9-23-22	9-23-22	
Aroclor 1248	**ND**	0.021	EPA 8082A	9-23-22	9-23-22	
Aroclor 1254	**ND**	0.021	EPA 8082A	9-23-22	9-23-22	
Aroclor 1260	**ND**	0.021	EPA 8082A	9-23-22	9-23-22	
Aroclor 1262	**ND**	0.021	EPA 8082A	9-23-22	9-23-22	
Aroclor 1268	**ND**	0.021	EPA 8082A	9-23-22	9-23-22	
Surrogate:	*Percent Recovery*	*Control Limits*				
DCB	*73*	*53-127*				
Client ID:	**DA7SWCS42220922I**					
Laboratory ID:	09-217-09					
Aroclor 1016	**ND**	0.022	EPA 8082A	9-23-22	9-23-22	
Aroclor 1221	**ND**	0.022	EPA 8082A	9-23-22	9-23-22	
Aroclor 1232	**ND**	0.022	EPA 8082A	9-23-22	9-23-22	
Aroclor 1242	**ND**	0.022	EPA 8082A	9-23-22	9-23-22	
Aroclor 1248	**ND**	0.022	EPA 8082A	9-23-22	9-23-22	
Aroclor 1254	**ND**	0.022	EPA 8082A	9-23-22	9-23-22	
Aroclor 1260	**ND**	0.022	EPA 8082A	9-23-22	9-23-22	
Aroclor 1262	**ND**	0.022	EPA 8082A	9-23-22	9-23-22	
Aroclor 1268	**ND**	0.022	EPA 8082A	9-23-22	9-23-22	
Surrogate:	*Percent Recovery*	*Control Limits*				
DCB	*69*	*53-127*				

This report pertains to the samples analyzed in accordance with the chain of custody, and is intended only for the use of the individual or company to whom it is addressed.

Date of Report: September 26, 2022
Samples Submitted: September 22, 2022
Laboratory Reference: 2209-217
Project: 11-05150-003

PCBs EPA 8082A

Matrix: Soil
Units: mg/Kg (ppm)

Analyte	Result	PQL	Method	Date Prepared	Date Analyzed	Flags
Client ID:	**DA7SWCS43220922I**					
Laboratory ID:	09-217-10					
Aroclor 1016	**ND**	0.021	EPA 8082A	9-23-22	9-24-22	
Aroclor 1221	**ND**	0.021	EPA 8082A	9-23-22	9-24-22	
Aroclor 1232	**ND**	0.021	EPA 8082A	9-23-22	9-24-22	
Aroclor 1242	**ND**	0.021	EPA 8082A	9-23-22	9-24-22	
Aroclor 1248	**ND**	0.021	EPA 8082A	9-23-22	9-24-22	
Aroclor 1254	**ND**	0.021	EPA 8082A	9-23-22	9-24-22	
Aroclor 1260	**ND**	0.021	EPA 8082A	9-23-22	9-24-22	
Aroclor 1262	**ND**	0.021	EPA 8082A	9-23-22	9-24-22	
Aroclor 1268	**ND**	0.021	EPA 8082A	9-23-22	9-24-22	
Surrogate:	*Percent Recovery*	*Control Limits*				
DCB	*82*	*53-127*				
Client ID:	**DA7SWCS44220922I**					
Laboratory ID:	09-217-11					
Aroclor 1016	**ND**	0.021	EPA 8082A	9-23-22	9-24-22	
Aroclor 1221	**ND**	0.021	EPA 8082A	9-23-22	9-24-22	
Aroclor 1232	**ND**	0.021	EPA 8082A	9-23-22	9-24-22	
Aroclor 1242	**ND**	0.021	EPA 8082A	9-23-22	9-24-22	
Aroclor 1248	**ND**	0.021	EPA 8082A	9-23-22	9-24-22	
Aroclor 1254	**ND**	0.021	EPA 8082A	9-23-22	9-24-22	
Aroclor 1260	**ND**	0.021	EPA 8082A	9-23-22	9-24-22	
Aroclor 1262	**ND**	0.021	EPA 8082A	9-23-22	9-24-22	
Aroclor 1268	**ND**	0.021	EPA 8082A	9-23-22	9-24-22	
Surrogate:	*Percent Recovery*	*Control Limits*				
DCB	*78*	*53-127*				
Client ID:	**DA7SWCS45220922I**					
Laboratory ID:	09-217-12					
Aroclor 1016	**ND**	0.022	EPA 8082A	9-23-22	9-24-22	
Aroclor 1221	**ND**	0.022	EPA 8082A	9-23-22	9-24-22	
Aroclor 1232	**ND**	0.022	EPA 8082A	9-23-22	9-24-22	
Aroclor 1242	**ND**	0.022	EPA 8082A	9-23-22	9-24-22	
Aroclor 1248	**ND**	0.022	EPA 8082A	9-23-22	9-24-22	
Aroclor 1254	**ND**	0.022	EPA 8082A	9-23-22	9-24-22	
Aroclor 1260	**ND**	0.022	EPA 8082A	9-23-22	9-24-22	
Aroclor 1262	**ND**	0.022	EPA 8082A	9-23-22	9-24-22	
Aroclor 1268	**ND**	0.022	EPA 8082A	9-23-22	9-24-22	
Surrogate:	*Percent Recovery*	*Control Limits*				
DCB	*73*	*53-127*				

This report pertains to the samples analyzed in accordance with the chain of custody, and is intended only for the use of the individual or company to whom it is addressed.

Date of Report: September 26, 2022
Samples Submitted: September 22, 2022
Laboratory Reference: 2209-217
Project: 11-05150-003

PCBs EPA 8082A

Matrix: Soil
Units: mg/Kg (ppm)

Analyte	Result	PQL	Method	Date Prepared	Date Analyzed	Flags
Client ID:	**DA7SWCS46220922I**					
Laboratory ID:	09-217-13					
Aroclor 1016	**ND**	0.022	EPA 8082A	9-23-22	9-24-22	
Aroclor 1221	**ND**	0.022	EPA 8082A	9-23-22	9-24-22	
Aroclor 1232	**ND**	0.022	EPA 8082A	9-23-22	9-24-22	
Aroclor 1242	**ND**	0.022	EPA 8082A	9-23-22	9-24-22	
Aroclor 1248	**ND**	0.022	EPA 8082A	9-23-22	9-24-22	
Aroclor 1254	**ND**	0.022	EPA 8082A	9-23-22	9-24-22	
Aroclor 1260	**ND**	0.022	EPA 8082A	9-23-22	9-24-22	
Aroclor 1262	**ND**	0.022	EPA 8082A	9-23-22	9-24-22	
Aroclor 1268	**ND**	0.022	EPA 8082A	9-23-22	9-24-22	
Surrogate:	*Percent Recovery*	*Control Limits*				
DCB	*74*	*53-127*				

This report pertains to the samples analyzed in accordance with the chain of custody, and is intended only for the use of the individual or company to whom it is addressed.

Date of Report: September 26, 2022
Samples Submitted: September 22, 2022
Laboratory Reference: 2209-217
Project: 11-05150-003

PCBs EPA 8082A
QUALITY CONTROL

Matrix: Soil
Units: mg/Kg (ppm)

Analyte	Result	PQL	Method	Date Prepared	Date Analyzed	Flags
METHOD BLANK						
Laboratory ID:	MB0923S2					
Aroclor 1016	**ND**	0.020	EPA 8082A	9-23-22	9-23-22	
Aroclor 1221	**ND**	0.020	EPA 8082A	9-23-22	9-23-22	
Aroclor 1232	**ND**	0.020	EPA 8082A	9-23-22	9-23-22	
Aroclor 1242	**ND**	0.020	EPA 8082A	9-23-22	9-23-22	
Aroclor 1248	**ND**	0.020	EPA 8082A	9-23-22	9-23-22	
Aroclor 1254	**ND**	0.020	EPA 8082A	9-23-22	9-23-22	
Aroclor 1260	**ND**	0.020	EPA 8082A	9-23-22	9-23-22	
Aroclor 1262	**ND**	0.020	EPA 8082A	9-23-22	9-23-22	
Aroclor 1268	**ND**	0.020	EPA 8082A	9-23-22	9-23-22	
Surrogate:	*Percent Recovery*	*Control Limits*				
DCB	*75*	*53-127*				

Analyte	Result		Spike Level		Source Result	Percent Recovery		Recovery Limits	RPD	RPD Limit	Flags
SPIKE BLANKS											
Laboratory ID:	SB0923S2										
	SB	SBD	SB	SBD		SB	SBD				
Aroclor 1260	**0.363**	**0.402**	0.500	0.500	N/A	**73**	**80**	65-134	10	18	
Surrogate:											
DCB						*81*	*81*	*53-127*			

This report pertains to the samples analyzed in accordance with the chain of custody, and is intended only for the use of the individual or company to whom it is addressed.

Date of Report: September 26, 2022
Samples Submitted: September 22, 2022
Laboratory Reference: 2209-217
Project: 11-05150-003

ORGANOCHLORINE PESTICIDES EPA 8081B

Matrix: Soil
Units: ug/Kg (ppb)

Analyte	Result	PQL	Method	Date Prepared	Date Analyzed	Flags
Client ID:	**DA7SWCS35220922I**					
Laboratory ID:	09-217-01					
alpha-BHC	ND	0.21	EPA 8081B	9-23-22	9-23-22	
gamma-BHC	ND	0.21	EPA 8081B	9-23-22	9-23-22	
beta-BHC	ND	0.21	EPA 8081B	9-23-22	9-23-22	
delta-BHC	ND	0.21	EPA 8081B	9-23-22	9-23-22	
Heptachlor	ND	0.21	EPA 8081B	9-23-22	9-23-22	
Aldrin	ND	0.21	EPA 8081B	9-23-22	9-23-22	
Heptachlor epoxide	ND	0.21	EPA 8081B	9-23-22	9-23-22	
gamma-Chlordane	ND	0.21	EPA 8081B	9-23-22	9-23-22	
alpha-Chlordane	ND	0.21	EPA 8081B	9-23-22	9-23-22	
4,4'-DDE	ND	0.21	EPA 8081B	9-23-22	9-23-22	
Endosulfan I	ND	0.21	EPA 8081B	9-23-22	9-23-22	
Dieldrin	ND	0.21	EPA 8081B	9-23-22	9-23-22	
Endrin	ND	0.21	EPA 8081B	9-23-22	9-23-22	
4,4'-DDD	ND	0.21	EPA 8081B	9-23-22	9-23-22	
Endosulfan II	ND	0.21	EPA 8081B	9-23-22	9-23-22	
4,4'-DDT	ND	4.2	EPA 8081B	9-23-22	9-23-22	
Endrin aldehyde	ND	0.21	EPA 8081B	9-23-22	9-23-22	
Methoxychlor	ND	4.2	EPA 8081B	9-23-22	9-23-22	
Endosulfan sulfate	ND	0.21	EPA 8081B	9-23-22	9-23-22	
Endrin ketone	ND	0.21	EPA 8081B	9-23-22	9-23-22	
Toxaphene	ND	2.1	EPA 8081B	9-23-22	9-23-22	
Tech Chlordane	ND	2.1	EPA 8081B	9-23-22	9-23-22	
Surrogate:	*Percent Recovery*	*Control limits*				
Tetrachloro-m-xylene	*56*	*35-110*				
Decachlorobiphenyl	*64*	*32-122*				

This report pertains to the samples analyzed in accordance with the chain of custody, and is intended only for the use of the individual or company to whom it is addressed.

Date of Report: September 26, 2022
Samples Submitted: September 22, 2022
Laboratory Reference: 2209-217
Project: 11-05150-003

ORGANOCHLORINE PESTICIDES EPA 8081B

Matrix: Soil
Units: ug/Kg (ppb)

Analyte	Result	PQL	Method	Date Prepared	Date Analyzed	Flags
Client ID:	**DA7SWCS36220922I**					
Laboratory ID:	09-217-02					
alpha-BHC	ND	0.21	EPA 8081B	9-23-22	9-23-22	
gamma-BHC	ND	0.21	EPA 8081B	9-23-22	9-23-22	
beta-BHC	ND	0.21	EPA 8081B	9-23-22	9-23-22	
delta-BHC	ND	0.21	EPA 8081B	9-23-22	9-23-22	
Heptachlor	ND	0.21	EPA 8081B	9-23-22	9-23-22	
Aldrin	ND	0.21	EPA 8081B	9-23-22	9-23-22	
Heptachlor epoxide	ND	0.21	EPA 8081B	9-23-22	9-23-22	
gamma-Chlordane	ND	0.21	EPA 8081B	9-23-22	9-23-22	
alpha-Chlordane	ND	0.21	EPA 8081B	9-23-22	9-23-22	
4,4'-DDE	ND	0.21	EPA 8081B	9-23-22	9-23-22	
Endosulfan I	ND	0.21	EPA 8081B	9-23-22	9-23-22	
Dieldrin	ND	0.21	EPA 8081B	9-23-22	9-23-22	
Endrin	ND	0.21	EPA 8081B	9-23-22	9-23-22	
4,4'-DDD	ND	0.21	EPA 8081B	9-23-22	9-23-22	
Endosulfan II	ND	0.21	EPA 8081B	9-23-22	9-23-22	
4,4'-DDT	ND	4.3	EPA 8081B	9-23-22	9-23-22	
Endrin aldehyde	ND	0.21	EPA 8081B	9-23-22	9-23-22	
Methoxychlor	ND	4.3	EPA 8081B	9-23-22	9-23-22	
Endosulfan sulfate	ND	0.21	EPA 8081B	9-23-22	9-23-22	
Endrin ketone	ND	0.21	EPA 8081B	9-23-22	9-23-22	
Toxaphene	ND	2.1	EPA 8081B	9-23-22	9-23-22	
Tech Chlordane	ND	2.1	EPA 8081B	9-23-22	9-23-22	
Surrogate:	*Percent Recovery*	*Control limits*				
Tetrachloro-m-xylene	*63*	*35-110*				
Decachlorobiphenyl	*65*	*32-122*				

This report pertains to the samples analyzed in accordance with the chain of custody, and is intended only for the use of the individual or company to whom it is addressed.

Date of Report: September 26, 2022
Samples Submitted: September 22, 2022
Laboratory Reference: 2209-217
Project: 11-05150-003

ORGANOCHLORINE PESTICIDES EPA 8081B

Matrix: Soil
Units: ug/Kg (ppb)

Analyte	Result	PQL	Method	Date Prepared	Date Analyzed	Flags
Client ID:	**DA7SWCS37220922I**					
Laboratory ID:	09-217-03					
alpha-BHC	ND	0.22	EPA 8081B	9-23-22	9-23-22	
gamma-BHC	ND	0.22	EPA 8081B	9-23-22	9-23-22	
beta-BHC	ND	0.22	EPA 8081B	9-23-22	9-23-22	
delta-BHC	ND	0.22	EPA 8081B	9-23-22	9-23-22	
Heptachlor	ND	0.22	EPA 8081B	9-23-22	9-23-22	
Aldrin	ND	0.22	EPA 8081B	9-23-22	9-23-22	
Heptachlor epoxide	ND	0.22	EPA 8081B	9-23-22	9-23-22	
gamma-Chlordane	ND	0.22	EPA 8081B	9-23-22	9-23-22	
alpha-Chlordane	ND	0.22	EPA 8081B	9-23-22	9-23-22	
4,4'-DDE	ND	0.22	EPA 8081B	9-23-22	9-23-22	
Endosulfan I	ND	0.22	EPA 8081B	9-23-22	9-23-22	
Dieldrin	ND	0.22	EPA 8081B	9-23-22	9-23-22	
Endrin	ND	0.22	EPA 8081B	9-23-22	9-23-22	
4,4'-DDD	ND	0.22	EPA 8081B	9-23-22	9-23-22	
Endosulfan II	ND	0.22	EPA 8081B	9-23-22	9-23-22	
4,4'-DDT	ND	4.4	EPA 8081B	9-23-22	9-23-22	
Endrin aldehyde	ND	0.22	EPA 8081B	9-23-22	9-23-22	
Methoxychlor	ND	4.4	EPA 8081B	9-23-22	9-23-22	
Endosulfan sulfate	ND	0.22	EPA 8081B	9-23-22	9-23-22	
Endrin ketone	ND	0.22	EPA 8081B	9-23-22	9-23-22	
Toxaphene	ND	2.2	EPA 8081B	9-23-22	9-23-22	
Tech Chlordane	ND	2.2	EPA 8081B	9-23-22	9-23-22	
Surrogate:	*Percent Recovery*	*Control limits*				
Tetrachloro-m-xylene	*61*	*35-110*				
Decachlorobiphenyl	*64*	*32-122*				

This report pertains to the samples analyzed in accordance with the chain of custody, and is intended only for the use of the individual or company to whom it is addressed.

Date of Report: September 26, 2022
Samples Submitted: September 22, 2022
Laboratory Reference: 2209-217
Project: 11-05150-003

ORGANOCHLORINE PESTICIDES EPA 8081B

Matrix: Soil
Units: ug/Kg (ppb)

Analyte	Result	PQL	Method	Date Prepared	Date Analyzed	Flags
Client ID:	**DA7SWCS38220922I**					
Laboratory ID:	09-217-04					
alpha-BHC	ND	0.21	EPA 8081B	9-23-22	9-23-22	
gamma-BHC	ND	0.21	EPA 8081B	9-23-22	9-23-22	
beta-BHC	ND	0.21	EPA 8081B	9-23-22	9-23-22	
delta-BHC	ND	0.21	EPA 8081B	9-23-22	9-23-22	
Heptachlor	ND	0.21	EPA 8081B	9-23-22	9-23-22	
Aldrin	ND	0.21	EPA 8081B	9-23-22	9-23-22	
Heptachlor epoxide	ND	0.21	EPA 8081B	9-23-22	9-23-22	
gamma-Chlordane	ND	0.21	EPA 8081B	9-23-22	9-23-22	
alpha-Chlordane	ND	0.21	EPA 8081B	9-23-22	9-23-22	
4,4'-DDE	ND	0.21	EPA 8081B	9-23-22	9-23-22	
Endosulfan I	ND	0.21	EPA 8081B	9-23-22	9-23-22	
Dieldrin	ND	0.21	EPA 8081B	9-23-22	9-23-22	
Endrin	ND	0.21	EPA 8081B	9-23-22	9-23-22	
4,4'-DDD	ND	0.21	EPA 8081B	9-23-22	9-23-22	
Endosulfan II	ND	0.21	EPA 8081B	9-23-22	9-23-22	
4,4'-DDT	ND	4.2	EPA 8081B	9-23-22	9-23-22	
Endrin aldehyde	ND	0.21	EPA 8081B	9-23-22	9-23-22	
Methoxychlor	ND	4.2	EPA 8081B	9-23-22	9-23-22	
Endosulfan sulfate	ND	0.21	EPA 8081B	9-23-22	9-23-22	
Endrin ketone	ND	0.21	EPA 8081B	9-23-22	9-23-22	
Toxaphene	ND	2.1	EPA 8081B	9-23-22	9-23-22	
Tech Chlordane	ND	2.1	EPA 8081B	9-23-22	9-23-22	
Surrogate:	*Percent Recovery*	*Control limits*				
Tetrachloro-m-xylene	*58*	*35-110*				
Decachlorobiphenyl	*62*	*32-122*				

This report pertains to the samples analyzed in accordance with the chain of custody, and is intended only for the use of the individual or company to whom it is addressed.

Date of Report: September 26, 2022
Samples Submitted: September 22, 2022
Laboratory Reference: 2209-217
Project: 11-05150-003

ORGANOCHLORINE PESTICIDES EPA 8081B

Matrix: Soil
Units: ug/Kg (ppb)

Analyte	Result	PQL	Method	Date Prepared	Date Analyzed	Flags
Client ID:	**DA7SWCS39220922I**					
Laboratory ID:	09-217-05					
alpha-BHC	ND	0.21	EPA 8081B	9-23-22	9-23-22	
gamma-BHC	ND	0.21	EPA 8081B	9-23-22	9-23-22	
beta-BHC	ND	0.21	EPA 8081B	9-23-22	9-23-22	
delta-BHC	ND	0.21	EPA 8081B	9-23-22	9-23-22	
Heptachlor	ND	0.21	EPA 8081B	9-23-22	9-23-22	
Aldrin	ND	0.21	EPA 8081B	9-23-22	9-23-22	
Heptachlor epoxide	ND	0.21	EPA 8081B	9-23-22	9-23-22	
gamma-Chlordane	ND	0.21	EPA 8081B	9-23-22	9-23-22	
alpha-Chlordane	ND	0.21	EPA 8081B	9-23-22	9-23-22	
4,4'-DDE	ND	0.21	EPA 8081B	9-23-22	9-23-22	
Endosulfan I	ND	0.21	EPA 8081B	9-23-22	9-23-22	
Dieldrin	ND	0.21	EPA 8081B	9-23-22	9-23-22	
Endrin	ND	0.21	EPA 8081B	9-23-22	9-23-22	
4,4'-DDD	ND	0.21	EPA 8081B	9-23-22	9-23-22	
Endosulfan II	ND	0.21	EPA 8081B	9-23-22	9-23-22	
4,4'-DDT	ND	4.2	EPA 8081B	9-23-22	9-23-22	
Endrin aldehyde	ND	0.21	EPA 8081B	9-23-22	9-23-22	
Methoxychlor	ND	4.2	EPA 8081B	9-23-22	9-23-22	
Endosulfan sulfate	ND	0.21	EPA 8081B	9-23-22	9-23-22	
Endrin ketone	ND	0.21	EPA 8081B	9-23-22	9-23-22	
Toxaphene	ND	2.1	EPA 8081B	9-23-22	9-23-22	
Tech Chlordane	ND	2.1	EPA 8081B	9-23-22	9-23-22	
Surrogate:	*Percent Recovery*	*Control limits*				
Tetrachloro-m-xylene	*59*	*35-110*				
Decachlorobiphenyl	*63*	*32-122*				

This report pertains to the samples analyzed in accordance with the chain of custody, and is intended only for the use of the individual or company to whom it is addressed.

Date of Report: September 26, 2022
Samples Submitted: September 22, 2022
Laboratory Reference: 2209-217
Project: 11-05150-003

ORGANOCHLORINE PESTICIDES EPA 8081B

Matrix: Soil
Units: ug/Kg (ppb)

Analyte	Result	PQL	Method	Date Prepared	Date Analyzed	Flags
Client ID:	**DA7SWCS39220922D**					
Laboratory ID:	09-217-06					
alpha-BHC	ND	0.21	EPA 8081B	9-23-22	9-23-22	
gamma-BHC	ND	0.21	EPA 8081B	9-23-22	9-23-22	
beta-BHC	ND	0.21	EPA 8081B	9-23-22	9-23-22	
delta-BHC	ND	0.21	EPA 8081B	9-23-22	9-23-22	
Heptachlor	ND	0.21	EPA 8081B	9-23-22	9-23-22	
Aldrin	ND	0.21	EPA 8081B	9-23-22	9-23-22	
Heptachlor epoxide	ND	0.21	EPA 8081B	9-23-22	9-23-22	
gamma-Chlordane	ND	0.21	EPA 8081B	9-23-22	9-23-22	
alpha-Chlordane	ND	0.21	EPA 8081B	9-23-22	9-23-22	
4,4'-DDE	ND	0.21	EPA 8081B	9-23-22	9-23-22	
Endosulfan I	ND	0.21	EPA 8081B	9-23-22	9-23-22	
Dieldrin	ND	0.21	EPA 8081B	9-23-22	9-23-22	
Endrin	ND	0.21	EPA 8081B	9-23-22	9-23-22	
4,4'-DDD	ND	0.21	EPA 8081B	9-23-22	9-23-22	
Endosulfan II	ND	0.21	EPA 8081B	9-23-22	9-23-22	
4,4'-DDT	ND	4.2	EPA 8081B	9-23-22	9-23-22	
Endrin aldehyde	ND	0.21	EPA 8081B	9-23-22	9-23-22	
Methoxychlor	ND	4.2	EPA 8081B	9-23-22	9-23-22	
Endosulfan sulfate	ND	0.21	EPA 8081B	9-23-22	9-23-22	
Endrin ketone	ND	0.21	EPA 8081B	9-23-22	9-23-22	
Toxaphene	ND	2.1	EPA 8081B	9-23-22	9-23-22	
Tech Chlordane	ND	2.1	EPA 8081B	9-23-22	9-23-22	
Surrogate:	*Percent Recovery*	*Control limits*				
Tetrachloro-m-xylene	*67*	*35-110*				
Decachlorobiphenyl	*71*	*32-122*				

This report pertains to the samples analyzed in accordance with the chain of custody, and is intended only for the use of the individual or company to whom it is addressed.

Date of Report: September 26, 2022
Samples Submitted: September 22, 2022
Laboratory Reference: 2209-217
Project: 11-05150-003

ORGANOCHLORINE PESTICIDES EPA 8081B

Matrix: Soil
Units: ug/Kg (ppb)

Analyte	Result	PQL	Method	Date Prepared	Date Analyzed	Flags
Client ID:	**DA7SWCS40220922I**					
Laboratory ID:	09-217-07					
alpha-BHC	ND	0.21	EPA 8081B	9-23-22	9-23-22	
gamma-BHC	ND	0.21	EPA 8081B	9-23-22	9-23-22	
beta-BHC	ND	0.21	EPA 8081B	9-23-22	9-23-22	
delta-BHC	ND	0.21	EPA 8081B	9-23-22	9-23-22	
Heptachlor	ND	0.21	EPA 8081B	9-23-22	9-23-22	
Aldrin	ND	0.21	EPA 8081B	9-23-22	9-23-22	
Heptachlor epoxide	ND	0.21	EPA 8081B	9-23-22	9-23-22	
gamma-Chlordane	ND	0.21	EPA 8081B	9-23-22	9-23-22	
alpha-Chlordane	ND	0.21	EPA 8081B	9-23-22	9-23-22	
4,4'-DDE	ND	0.21	EPA 8081B	9-23-22	9-23-22	
Endosulfan I	ND	0.21	EPA 8081B	9-23-22	9-23-22	
Dieldrin	ND	0.21	EPA 8081B	9-23-22	9-23-22	
Endrin	ND	0.21	EPA 8081B	9-23-22	9-23-22	
4,4'-DDD	ND	0.21	EPA 8081B	9-23-22	9-23-22	
Endosulfan II	ND	0.21	EPA 8081B	9-23-22	9-23-22	
4,4'-DDT	ND	4.3	EPA 8081B	9-23-22	9-23-22	
Endrin aldehyde	ND	0.21	EPA 8081B	9-23-22	9-23-22	
Methoxychlor	ND	4.3	EPA 8081B	9-23-22	9-23-22	
Endosulfan sulfate	ND	0.21	EPA 8081B	9-23-22	9-23-22	
Endrin ketone	ND	0.21	EPA 8081B	9-23-22	9-23-22	
Toxaphene	ND	2.1	EPA 8081B	9-23-22	9-23-22	
Tech Chlordane	ND	2.1	EPA 8081B	9-23-22	9-23-22	
Surrogate:	*Percent Recovery*	*Control limits*				
Tetrachloro-m-xylene	*59*	*35-110*				
Decachlorobiphenyl	*57*	*32-122*				

This report pertains to the samples analyzed in accordance with the chain of custody, and is intended only for the use of the individual or company to whom it is addressed.

Date of Report: September 26, 2022
Samples Submitted: September 22, 2022
Laboratory Reference: 2209-217
Project: 11-05150-003

ORGANOCHLORINE PESTICIDES EPA 8081B

Matrix: Soil
Units: ug/Kg (ppb)

Analyte	Result	PQL	Method	Date Prepared	Date Analyzed	Flags
Client ID:	**DA7SWCS41220922I**					
Laboratory ID:	09-217-08					
alpha-BHC	ND	0.21	EPA 8081B	9-23-22	9-23-22	
gamma-BHC	ND	0.21	EPA 8081B	9-23-22	9-23-22	
beta-BHC	ND	0.21	EPA 8081B	9-23-22	9-23-22	
delta-BHC	ND	0.21	EPA 8081B	9-23-22	9-23-22	
Heptachlor	ND	0.21	EPA 8081B	9-23-22	9-23-22	
Aldrin	ND	0.21	EPA 8081B	9-23-22	9-23-22	
Heptachlor epoxide	ND	0.21	EPA 8081B	9-23-22	9-23-22	
gamma-Chlordane	ND	0.21	EPA 8081B	9-23-22	9-23-22	
alpha-Chlordane	ND	0.21	EPA 8081B	9-23-22	9-23-22	
4,4'-DDE	ND	0.21	EPA 8081B	9-23-22	9-23-22	
Endosulfan I	ND	0.21	EPA 8081B	9-23-22	9-23-22	
Dieldrin	ND	0.21	EPA 8081B	9-23-22	9-23-22	
Endrin	ND	0.21	EPA 8081B	9-23-22	9-23-22	
4,4'-DDD	ND	0.21	EPA 8081B	9-23-22	9-23-22	
Endosulfan II	ND	0.21	EPA 8081B	9-23-22	9-23-22	
4,4'-DDT	ND	4.3	EPA 8081B	9-23-22	9-23-22	
Endrin aldehyde	ND	0.21	EPA 8081B	9-23-22	9-23-22	
Methoxychlor	ND	4.3	EPA 8081B	9-23-22	9-23-22	
Endosulfan sulfate	ND	0.21	EPA 8081B	9-23-22	9-23-22	
Endrin ketone	ND	0.21	EPA 8081B	9-23-22	9-23-22	
Toxaphene	ND	2.1	EPA 8081B	9-23-22	9-23-22	
Tech Chlordane	ND	2.1	EPA 8081B	9-23-22	9-23-22	
Surrogate:	*Percent Recovery*	*Control limits*				
Tetrachloro-m-xylene	*69*	*35-110*				
Decachlorobiphenyl	*69*	*32-122*				

This report pertains to the samples analyzed in accordance with the chain of custody, and is intended only for the use of the individual or company to whom it is addressed.

Date of Report: September 26, 2022
Samples Submitted: September 22, 2022
Laboratory Reference: 2209-217
Project: 11-05150-003

ORGANOCHLORINE PESTICIDES EPA 8081B

Matrix: Soil
Units: ug/Kg (ppb)

Analyte	Result	PQL	Method	Date Prepared	Date Analyzed	Flags
Client ID:	**DA7SWCS42220922I**					
Laboratory ID:	09-217-09					
alpha-BHC	ND	0.22	EPA 8081B	9-23-22	9-24-22	
gamma-BHC	ND	0.22	EPA 8081B	9-23-22	9-24-22	
beta-BHC	ND	0.22	EPA 8081B	9-23-22	9-24-22	
delta-BHC	ND	0.22	EPA 8081B	9-23-22	9-24-22	
Heptachlor	ND	0.22	EPA 8081B	9-23-22	9-24-22	
Aldrin	ND	0.22	EPA 8081B	9-23-22	9-24-22	
Heptachlor epoxide	ND	0.22	EPA 8081B	9-23-22	9-24-22	
gamma-Chlordane	ND	0.22	EPA 8081B	9-23-22	9-24-22	
alpha-Chlordane	ND	0.22	EPA 8081B	9-23-22	9-24-22	
4,4'-DDE	ND	0.22	EPA 8081B	9-23-22	9-24-22	
Endosulfan I	ND	0.22	EPA 8081B	9-23-22	9-24-22	
Dieldrin	ND	0.22	EPA 8081B	9-23-22	9-24-22	
Endrin	ND	0.22	EPA 8081B	9-23-22	9-24-22	
4,4'-DDD	ND	0.22	EPA 8081B	9-23-22	9-24-22	
Endosulfan II	ND	0.22	EPA 8081B	9-23-22	9-24-22	
4,4'-DDT	ND	4.4	EPA 8081B	9-23-22	9-23-22	
Endrin aldehyde	ND	0.22	EPA 8081B	9-23-22	9-24-22	
Methoxychlor	ND	4.4	EPA 8081B	9-23-22	9-23-22	
Endosulfan sulfate	ND	0.22	EPA 8081B	9-23-22	9-24-22	
Endrin ketone	ND	0.22	EPA 8081B	9-23-22	9-24-22	
Toxaphene	ND	2.2	EPA 8081B	9-23-22	9-24-22	
Tech Chlordane	ND	2.2	EPA 8081B	9-23-22	9-24-22	
Surrogate:	*Percent Recovery*	*Control limits*				
Tetrachloro-m-xylene	*64*	*35-110*				
Decachlorobiphenyl	*66*	*32-122*				

This report pertains to the samples analyzed in accordance with the chain of custody, and is intended only for the use of the individual or company to whom it is addressed.

Date of Report: September 26, 2022
Samples Submitted: September 22, 2022
Laboratory Reference: 2209-217
Project: 11-05150-003

ORGANOCHLORINE PESTICIDES EPA 8081B

Matrix: Soil
Units: ug/Kg (ppb)

Analyte	Result	PQL	Method	Date Prepared	Date Analyzed	Flags
Client ID:	**DA7SWCS43220922I**					
Laboratory ID:	09-217-10					
alpha-BHC	ND	0.21	EPA 8081B	9-23-22	9-24-22	
gamma-BHC	ND	0.21	EPA 8081B	9-23-22	9-24-22	
beta-BHC	ND	0.21	EPA 8081B	9-23-22	9-24-22	
delta-BHC	ND	0.21	EPA 8081B	9-23-22	9-24-22	
Heptachlor	ND	0.21	EPA 8081B	9-23-22	9-24-22	
Aldrin	ND	0.21	EPA 8081B	9-23-22	9-24-22	
Heptachlor epoxide	ND	0.21	EPA 8081B	9-23-22	9-24-22	
gamma-Chlordane	ND	0.21	EPA 8081B	9-23-22	9-24-22	
alpha-Chlordane	ND	0.21	EPA 8081B	9-23-22	9-24-22	
4,4'-DDE	ND	0.21	EPA 8081B	9-23-22	9-24-22	
Endosulfan I	ND	0.21	EPA 8081B	9-23-22	9-24-22	
Dieldrin	ND	0.21	EPA 8081B	9-23-22	9-24-22	
Endrin	ND	0.21	EPA 8081B	9-23-22	9-24-22	
4,4'-DDD	ND	0.21	EPA 8081B	9-23-22	9-24-22	
Endosulfan II	ND	0.21	EPA 8081B	9-23-22	9-24-22	
4,4'-DDT	ND	4.2	EPA 8081B	9-23-22	9-23-22	
Endrin aldehyde	ND	0.21	EPA 8081B	9-23-22	9-24-22	
Methoxychlor	ND	4.2	EPA 8081B	9-23-22	9-23-22	
Endosulfan sulfate	ND	0.21	EPA 8081B	9-23-22	9-24-22	
Endrin ketone	ND	0.21	EPA 8081B	9-23-22	9-24-22	
Toxaphene	ND	2.1	EPA 8081B	9-23-22	9-24-22	
Tech Chlordane	ND	2.1	EPA 8081B	9-23-22	9-24-22	
Surrogate:	*Percent Recovery*	*Control limits*				
Tetrachloro-m-xylene	*61*	*35-110*				
Decachlorobiphenyl	*61*	*32-122*				

This report pertains to the samples analyzed in accordance with the chain of custody, and is intended only for the use of the individual or company to whom it is addressed.

Date of Report: September 26, 2022
Samples Submitted: September 22, 2022
Laboratory Reference: 2209-217
Project: 11-05150-003

ORGANOCHLORINE PESTICIDES EPA 8081B

Matrix: Soil
Units: ug/Kg (ppb)

Analyte	Result	PQL	Method	Date Prepared	Date Analyzed	Flags
Client ID:	**DA7SWCS44220922I**					
Laboratory ID:	09-217-11					
alpha-BHC	ND	0.21	EPA 8081B	9-23-22	9-24-22	
gamma-BHC	ND	0.21	EPA 8081B	9-23-22	9-24-22	
beta-BHC	ND	0.21	EPA 8081B	9-23-22	9-24-22	
delta-BHC	ND	0.21	EPA 8081B	9-23-22	9-24-22	
Heptachlor	ND	0.21	EPA 8081B	9-23-22	9-24-22	
Aldrin	ND	0.21	EPA 8081B	9-23-22	9-24-22	
Heptachlor epoxide	ND	0.21	EPA 8081B	9-23-22	9-24-22	
gamma-Chlordane	ND	0.21	EPA 8081B	9-23-22	9-24-22	
alpha-Chlordane	ND	0.21	EPA 8081B	9-23-22	9-24-22	
4,4'-DDE	ND	0.21	EPA 8081B	9-23-22	9-24-22	
Endosulfan I	ND	0.21	EPA 8081B	9-23-22	9-24-22	
Dieldrin	ND	0.21	EPA 8081B	9-23-22	9-24-22	
Endrin	ND	0.21	EPA 8081B	9-23-22	9-24-22	
4,4'-DDD	ND	0.21	EPA 8081B	9-23-22	9-24-22	
Endosulfan II	ND	0.21	EPA 8081B	9-23-22	9-24-22	
4,4'-DDT	ND	4.3	EPA 8081B	9-23-22	9-23-22	
Endrin aldehyde	ND	0.21	EPA 8081B	9-23-22	9-24-22	
Methoxychlor	ND	4.3	EPA 8081B	9-23-22	9-23-22	
Endosulfan sulfate	ND	0.21	EPA 8081B	9-23-22	9-24-22	
Endrin ketone	ND	0.21	EPA 8081B	9-23-22	9-24-22	
Toxaphene	ND	2.1	EPA 8081B	9-23-22	9-24-22	
Tech Chlordane	ND	2.1	EPA 8081B	9-23-22	9-24-22	
Surrogate:	*Percent Recovery*	*Control limits*				
Tetrachloro-m-xylene	*52*	*35-110*				
Decachlorobiphenyl	*55*	*32-122*				

This report pertains to the samples analyzed in accordance with the chain of custody, and is intended only for the use of the individual or company to whom it is addressed.

Date of Report: September 26, 2022
Samples Submitted: September 22, 2022
Laboratory Reference: 2209-217
Project: 11-05150-003

ORGANOCHLORINE PESTICIDES EPA 8081B

Matrix: Soil
Units: ug/Kg (ppb)

Analyte	Result	PQL	Method	Date Prepared	Date Analyzed	Flags
Client ID:	**DA7SWCS45220922I**					
Laboratory ID:	09-217-12					
alpha-BHC	ND	0.22	EPA 8081B	9-23-22	9-24-22	
gamma-BHC	ND	0.22	EPA 8081B	9-23-22	9-24-22	
beta-BHC	ND	0.22	EPA 8081B	9-23-22	9-24-22	
delta-BHC	ND	0.22	EPA 8081B	9-23-22	9-24-22	
Heptachlor	ND	0.22	EPA 8081B	9-23-22	9-24-22	
Aldrin	ND	0.22	EPA 8081B	9-23-22	9-24-22	
Heptachlor epoxide	ND	0.22	EPA 8081B	9-23-22	9-24-22	
gamma-Chlordane	ND	0.22	EPA 8081B	9-23-22	9-24-22	
alpha-Chlordane	ND	0.22	EPA 8081B	9-23-22	9-24-22	
4,4'-DDE	ND	0.22	EPA 8081B	9-23-22	9-24-22	
Endosulfan I	ND	0.22	EPA 8081B	9-23-22	9-24-22	
Dieldrin	ND	0.22	EPA 8081B	9-23-22	9-24-22	
Endrin	ND	0.22	EPA 8081B	9-23-22	9-24-22	
4,4'-DDD	ND	0.22	EPA 8081B	9-23-22	9-24-22	
Endosulfan II	ND	0.22	EPA 8081B	9-23-22	9-24-22	
4,4'-DDT	ND	4.3	EPA 8081B	9-23-22	9-23-22	
Endrin aldehyde	ND	0.22	EPA 8081B	9-23-22	9-24-22	
Methoxychlor	ND	4.3	EPA 8081B	9-23-22	9-23-22	
Endosulfan sulfate	ND	0.22	EPA 8081B	9-23-22	9-24-22	
Endrin ketone	ND	0.22	EPA 8081B	9-23-22	9-24-22	
Toxaphene	ND	2.2	EPA 8081B	9-23-22	9-24-22	
Tech Chlordane	ND	2.2	EPA 8081B	9-23-22	9-24-22	
Surrogate:	*Percent Recovery*	*Control limits*				
Tetrachloro-m-xylene	*61*	*35-110*				
Decachlorobiphenyl	*63*	*32-122*				

This report pertains to the samples analyzed in accordance with the chain of custody, and is intended only for the use of the individual or company to whom it is addressed.

Date of Report: September 26, 2022
Samples Submitted: September 22, 2022
Laboratory Reference: 2209-217
Project: 11-05150-003

ORGANOCHLORINE PESTICIDES EPA 8081B

Matrix: Soil
Units: ug/Kg (ppb)

Analyte	Result	PQL	Method	Date Prepared	Date Analyzed	Flags
Client ID:	**DA7SWCS46220922I**					
Laboratory ID:	09-217-13					
alpha-BHC	ND	0.22	EPA 8081B	9-23-22	9-24-22	
gamma-BHC	ND	0.22	EPA 8081B	9-23-22	9-24-22	
beta-BHC	ND	0.22	EPA 8081B	9-23-22	9-24-22	
delta-BHC	ND	0.22	EPA 8081B	9-23-22	9-24-22	
Heptachlor	ND	0.22	EPA 8081B	9-23-22	9-24-22	
Aldrin	ND	0.22	EPA 8081B	9-23-22	9-24-22	
Heptachlor epoxide	ND	0.22	EPA 8081B	9-23-22	9-24-22	
gamma-Chlordane	ND	0.22	EPA 8081B	9-23-22	9-24-22	
alpha-Chlordane	ND	0.22	EPA 8081B	9-23-22	9-24-22	
4,4'-DDE	ND	0.22	EPA 8081B	9-23-22	9-24-22	
Endosulfan I	ND	0.22	EPA 8081B	9-23-22	9-24-22	
Dieldrin	ND	0.22	EPA 8081B	9-23-22	9-24-22	
Endrin	ND	0.22	EPA 8081B	9-23-22	9-24-22	
4,4'-DDD	ND	0.22	EPA 8081B	9-23-22	9-24-22	
Endosulfan II	ND	0.22	EPA 8081B	9-23-22	9-24-22	
4,4'-DDT	ND	4.4	EPA 8081B	9-23-22	9-23-22	
Endrin aldehyde	ND	0.22	EPA 8081B	9-23-22	9-24-22	
Methoxychlor	ND	4.4	EPA 8081B	9-23-22	9-23-22	
Endosulfan sulfate	ND	0.22	EPA 8081B	9-23-22	9-24-22	
Endrin ketone	ND	0.22	EPA 8081B	9-23-22	9-24-22	
Toxaphene	ND	2.2	EPA 8081B	9-23-22	9-24-22	
Tech Chlordane	ND	2.2	EPA 8081B	9-23-22	9-24-22	
Surrogate:	*Percent Recovery*	*Control limits*				
Tetrachloro-m-xylene	*60*	*35-110*				
Decachlorobiphenyl	*61*	*32-122*				

This report pertains to the samples analyzed in accordance with the chain of custody, and is intended only for the use of the individual or company to whom it is addressed.

Date of Report: September 26, 2022
Samples Submitted: September 22, 2022
Laboratory Reference: 2209-217
Project: 11-05150-003

ORGANOCHLORINE PESTICIDES EPA 8081B QUALITY CONTROL

Matrix: Soil
Units: ug/Kg (ppb)

Analyte	Result	PQL	Method	Date Prepared	Date Analyzed	Flags
METHOD BLANK						
Laboratory ID:	MB0923S3					
alpha-BHC	ND	0.20	EPA 8081B	9-23-22	9-23-22	
gamma-BHC	ND	0.20	EPA 8081B	9-23-22	9-23-22	
beta-BHC	ND	0.20	EPA 8081B	9-23-22	9-23-22	
delta-BHC	ND	0.20	EPA 8081B	9-23-22	9-23-22	
Heptachlor	ND	0.20	EPA 8081B	9-23-22	9-23-22	
Aldrin	ND	0.20	EPA 8081B	9-23-22	9-23-22	
Heptachlor epoxide	ND	0.20	EPA 8081B	9-23-22	9-23-22	
gamma-Chlordane	ND	0.20	EPA 8081B	9-23-22	9-23-22	
alpha-Chlordane	ND	0.20	EPA 8081B	9-23-22	9-23-22	
4,4'-DDE	ND	0.20	EPA 8081B	9-23-22	9-23-22	
Endosulfan I	ND	0.20	EPA 8081B	9-23-22	9-23-22	
Dieldrin	ND	0.20	EPA 8081B	9-23-22	9-23-22	
Endrin	ND	0.20	EPA 8081B	9-23-22	9-23-22	
4,4'-DDD	ND	0.20	EPA 8081B	9-23-22	9-23-22	
Endosulfan II	ND	0.20	EPA 8081B	9-23-22	9-23-22	
4,4'-DDT	ND	0.20	EPA 8081B	9-23-22	9-23-22	
Endrin aldehyde	ND	0.20	EPA 8081B	9-23-22	9-23-22	
Methoxychlor	ND	0.20	EPA 8081B	9-23-22	9-23-22	
Endosulfan sulfate	ND	0.20	EPA 8081B	9-23-22	9-23-22	
Endrin ketone	ND	0.20	EPA 8081B	9-23-22	9-23-22	
Toxaphene	ND	2.0	EPA 8081B	9-23-22	9-23-22	
Tech Chlordane	ND	2.0	EPA 8081B	9-23-22	9-23-22	
Surrogate:	*Percent Recovery*	*Control limits*				
Tetrachloro-m-xylene	*85*	*35-110*				
Decachlorobiphenyl	*89*	*32-122*				

This report pertains to the samples analyzed in accordance with the chain of custody, and is intended only for the use of the individual or company to whom it is addressed.

Date of Report: September 26, 2022
Samples Submitted: September 22, 2022
Laboratory Reference: 2209-217
Project: 11-05150-003

ORGANOCHLORINE PESTICIDES EPA 8081B QUALITY CONTROL

Matrix: Soil
Units: ug/Kg (ppb)

Analyte	Result		Spike Level		Source Result	Percent Recovery		Recovery Limits	RPD	RPD Limit	Flags
SPIKE BLANKS											
Laboratory ID:	SB0923S3										
	SB	SBD	SB	SBD		SB	SBD				
alpha-BHC	**8.56**	**9.42**	10.0	10.0	N/A	**86**	**94**	48-113	10	15	
gamma-BHC	**8.87**	**9.39**	10.0	10.0	N/A	**89**	**94**	51-112	6	15	
beta-BHC	**7.91**	**8.56**	10.0	10.0	N/A	**79**	**86**	52-108	8	15	
delta-BHC	**8.34**	**8.89**	10.0	10.0	N/A	**83**	**89**	51-110	6	15	
Heptachlor	**8.65**	**9.21**	10.0	10.0	N/A	**87**	**92**	49-115	6	15	
Aldrin	**8.49**	**9.21**	10.0	10.0	N/A	**85**	**92**	52-112	8	15	
Heptachlor epoxide	**8.32**	**9.04**	10.0	10.0	N/A	**83**	**90**	50-116	8	15	
gamma-Chlordane	**8.50**	**9.06**	10.0	10.0	N/A	**85**	**91**	51-110	6	15	
alpha-Chlordane	**8.22**	**8.69**	10.0	10.0	N/A	**82**	**87**	51-110	6	15	
4,4'-DDE	**8.32**	**9.02**	10.0	10.0	N/A	**83**	**90**	52-125	8	15	
Endosulfan I	**7.72**	**8.50**	10.0	10.0	N/A	**77**	**85**	50-111	10	15	
Dieldrin	**8.67**	**9.38**	10.0	10.0	N/A	**87**	**94**	55-118	8	15	
Endrin	**8.90**	**9.56**	10.0	10.0	N/A	**89**	**96**	49-122	7	15	
4,4'-DDD	**8.69**	**9.52**	10.0	10.0	N/A	**87**	**95**	51-120	9	15	
Endosulfan II	**8.31**	**9.19**	10.0	10.0	N/A	**83**	**92**	47-119	10	15	
4,4'-DDT	**7.40**	**8.22**	10.0	10.0	N/A	**74**	**82**	56-125	10	15	
Endrin aldehyde	**8.30**	**9.01**	10.0	10.0	N/A	**83**	**90**	53-112	8	15	
Methoxychlor	**8.46**	**9.26**	10.0	10.0	N/A	**85**	**93**	49-132	9	15	
Endosulfan sulfate	**8.79**	**9.64**	10.0	10.0	N/A	**88**	**96**	52-111	9	15	
Endrin ketone	**9.46**	**10.2**	10.0	10.0	N/A	**95**	**102**	49-110	8	15	
Surrogate:											
Tetrachloro-m-xylene						*77*	*78*	*35-110*			
Decachlorobiphenyl						*78*	*81*	*32-122*			

This report pertains to the samples analyzed in accordance with the chain of custody, and is intended only for the use of the individual or company to whom it is addressed.

Date of Report: September 26, 2022
Samples Submitted: September 22, 2022
Laboratory Reference: 2209-217
Project: 11-05150-003

TOTAL METALS
EPA 6010D/6020B/7471B

Matrix: Soil
Units: mg/Kg (ppm)

Analyte	Result	PQL	Method	Date Prepared	Date Analyzed	Flags
Client ID:	**DA7SWCS35220922I**					
Laboratory ID:	09-217-01					
Arsenic	**ND**	5.2	EPA 6010D	9-23-22	9-23-22	
Barium	**34**	2.6	EPA 6010D	9-23-22	9-23-22	
Cadmium	**ND**	0.52	EPA 6010D	9-23-22	9-23-22	
Chromium	**10**	0.52	EPA 6010D	9-23-22	9-23-22	
Lead	**ND**	5.2	EPA 6010D	9-23-22	9-23-22	
Mercury	**ND**	0.052	EPA 7471B	9-26-22	9-26-22	
Selenium	**ND**	0.26	EPA 6020B	9-26-22	9-26-22	
Silver	**ND**	1.0	EPA 6010D	9-23-22	9-23-22	
Client ID:	**DA7SWCS36220922I**					
Laboratory ID:	09-217-02					
Arsenic	**ND**	5.4	EPA 6010D	9-23-22	9-23-22	
Barium	**38**	2.7	EPA 6010D	9-23-22	9-23-22	
Cadmium	**ND**	0.54	EPA 6010D	9-23-22	9-23-22	
Chromium	**15**	0.54	EPA 6010D	9-23-22	9-23-22	
Lead	**ND**	5.4	EPA 6010D	9-23-22	9-23-22	
Mercury	**ND**	0.054	EPA 7471B	9-26-22	9-26-22	
Selenium	**ND**	0.27	EPA 6020B	9-26-22	9-26-22	
Silver	**ND**	1.1	EPA 6010D	9-23-22	9-23-22	
Client ID:	**DA7SWCS37220922I**					
Laboratory ID:	09-217-03					
Arsenic	**ND**	5.5	EPA 6010D	9-23-22	9-23-22	
Barium	**35**	2.7	EPA 6010D	9-23-22	9-23-22	
Cadmium	**ND**	0.55	EPA 6010D	9-23-22	9-23-22	
Chromium	**13**	0.55	EPA 6010D	9-23-22	9-23-22	
Lead	**ND**	5.5	EPA 6010D	9-23-22	9-23-22	
Mercury	**ND**	0.055	EPA 7471B	9-26-22	9-26-22	
Selenium	**ND**	0.27	EPA 6020B	9-26-22	9-26-22	
Silver	**ND**	1.1	EPA 6010D	9-23-22	9-23-22	

This report pertains to the samples analyzed in accordance with the chain of custody, and is intended only for the use of the individual or company to whom it is addressed.

Date of Report: September 26, 2022
Samples Submitted: September 22, 2022
Laboratory Reference: 2209-217
Project: 11-05150-003

TOTAL METALS
EPA 6010D/6020B/7471B

Matrix: Soil
Units: mg/Kg (ppm)

Analyte	Result	PQL	Method	Date Prepared	Date Analyzed	Flags
Client ID:	**DA7SWCS38220922I**					
Laboratory ID:	09-217-04					
Arsenic	**ND**	5.3	EPA 6010D	9-23-22	9-23-22	
Barium	**35**	2.7	EPA 6010D	9-23-22	9-23-22	
Cadmium	**ND**	0.53	EPA 6010D	9-23-22	9-23-22	
Chromium	**13**	0.53	EPA 6010D	9-23-22	9-23-22	
Lead	**ND**	5.3	EPA 6010D	9-23-22	9-23-22	
Mercury	**ND**	0.053	EPA 7471B	9-26-22	9-26-22	
Selenium	**ND**	0.27	EPA 6020B	9-26-22	9-26-22	
Silver	**ND**	1.1	EPA 6010D	9-23-22	9-23-22	
Client ID:	**DA7SWCS39220922I**					
Laboratory ID:	09-217-05					
Arsenic	**ND**	5.3	EPA 6010D	9-23-22	9-23-22	
Barium	**26**	2.6	EPA 6010D	9-23-22	9-23-22	
Cadmium	**ND**	0.53	EPA 6010D	9-23-22	9-23-22	
Chromium	**11**	0.53	EPA 6010D	9-23-22	9-23-22	
Lead	**ND**	5.3	EPA 6010D	9-23-22	9-23-22	
Mercury	**ND**	0.053	EPA 7471B	9-26-22	9-26-22	
Selenium	**ND**	0.26	EPA 6020B	9-26-22	9-26-22	
Silver	**ND**	1.1	EPA 6010D	9-23-22	9-23-22	
Client ID:	**DA7SWCS39220922D**					
Laboratory ID:	09-217-06					
Arsenic	**ND**	5.2	EPA 6010D	9-23-22	9-23-22	
Barium	**30**	2.6	EPA 6010D	9-23-22	9-23-22	
Cadmium	**ND**	0.52	EPA 6010D	9-23-22	9-23-22	
Chromium	**12**	0.52	EPA 6010D	9-23-22	9-23-22	
Lead	**ND**	5.2	EPA 6010D	9-23-22	9-23-22	
Mercury	**ND**	0.052	EPA 7471B	9-26-22	9-26-22	
Selenium	**ND**	0.26	EPA 6020B	9-26-22	9-26-22	
Silver	**ND**	1.0	EPA 6010D	9-23-22	9-23-22	

This report pertains to the samples analyzed in accordance with the chain of custody, and is intended only for the use of the individual or company to whom it is addressed.

Date of Report: September 26, 2022
Samples Submitted: September 22, 2022
Laboratory Reference: 2209-217
Project: 11-05150-003

TOTAL METALS
EPA 6010D/6020B/7471B

Matrix: Soil
Units: mg/Kg (ppm)

Analyte	Result	PQL	Method	Date Prepared	Date Analyzed	Flags
Client ID:	**DA7SWCS40220922I**					
Laboratory ID:	09-217-07					
Arsenic	**ND**	5.3	EPA 6010D	9-23-22	9-23-22	
Barium	**37**	2.7	EPA 6010D	9-23-22	9-23-22	
Cadmium	**ND**	0.53	EPA 6010D	9-23-22	9-23-22	
Chromium	**16**	0.53	EPA 6010D	9-23-22	9-23-22	
Lead	**ND**	5.3	EPA 6010D	9-23-22	9-23-22	
Mercury	**ND**	0.053	EPA 7471B	9-26-22	9-26-22	
Selenium	**ND**	0.27	EPA 6020B	9-26-22	9-26-22	
Silver	**ND**	1.1	EPA 6010D	9-23-22	9-23-22	
Client ID:	**DA7SWCS41220922I**					
Laboratory ID:	09-217-08					
Arsenic	**ND**	5.3	EPA 6010D	9-23-22	9-23-22	
Barium	**38**	2.7	EPA 6010D	9-23-22	9-23-22	
Cadmium	**ND**	0.53	EPA 6010D	9-23-22	9-23-22	
Chromium	**15**	0.53	EPA 6010D	9-23-22	9-23-22	
Lead	**ND**	5.3	EPA 6010D	9-23-22	9-23-22	
Mercury	**ND**	0.053	EPA 7471B	9-26-22	9-26-22	
Selenium	**ND**	0.27	EPA 6020B	9-26-22	9-26-22	
Silver	**ND**	1.1	EPA 6010D	9-23-22	9-23-22	
Client ID:	**DA7SWCS42220922I**					
Laboratory ID:	09-217-09					
Arsenic	**ND**	5.5	EPA 6010D	9-23-22	9-23-22	
Barium	**34**	2.8	EPA 6010D	9-23-22	9-23-22	
Cadmium	**ND**	0.55	EPA 6010D	9-23-22	9-23-22	
Chromium	**18**	0.55	EPA 6010D	9-23-22	9-23-22	
Lead	**ND**	5.5	EPA 6010D	9-23-22	9-23-22	
Mercury	**ND**	0.055	EPA 7471B	9-26-22	9-26-22	
Selenium	**ND**	0.28	EPA 6020B	9-26-22	9-26-22	
Silver	**ND**	1.1	EPA 6010D	9-23-22	9-23-22	

This report pertains to the samples analyzed in accordance with the chain of custody, and is intended only for the use of the individual or company to whom it is addressed.

Date of Report: September 26, 2022
Samples Submitted: September 22, 2022
Laboratory Reference: 2209-217
Project: 11-05150-003

TOTAL METALS
EPA 6010D/6020B/7471B

Matrix: Soil
Units: mg/Kg (ppm)

Analyte	Result	PQL	Method	Date Prepared	Date Analyzed	Flags
Client ID:	**DA7SWCS43220922I**					
Laboratory ID:	09-217-10					
Arsenic	**ND**	5.3	EPA 6010D	9-23-22	9-23-22	
Barium	**40**	2.6	EPA 6010D	9-23-22	9-23-22	
Cadmium	**ND**	0.53	EPA 6010D	9-23-22	9-23-22	
Chromium	**10**	0.53	EPA 6010D	9-23-22	9-23-22	
Lead	**ND**	5.3	EPA 6010D	9-23-22	9-23-22	
Mercury	**ND**	0.053	EPA 7471B	9-26-22	9-26-22	
Selenium	**ND**	0.26	EPA 6020B	9-26-22	9-26-22	
Silver	**ND**	1.1	EPA 6010D	9-23-22	9-23-22	
Client ID:	**DA7SWCS44220922I**					
Laboratory ID:	09-217-11					
Arsenic	**ND**	5.3	EPA 6010D	9-23-22	9-23-22	
Barium	**34**	2.7	EPA 6010D	9-23-22	9-23-22	
Cadmium	**ND**	0.53	EPA 6010D	9-23-22	9-23-22	
Chromium	**12**	0.53	EPA 6010D	9-23-22	9-23-22	
Lead	**ND**	5.3	EPA 6010D	9-23-22	9-23-22	
Mercury	**ND**	0.053	EPA 7471B	9-26-22	9-26-22	
Selenium	**ND**	0.27	EPA 6020B	9-26-22	9-26-22	
Silver	**ND**	1.1	EPA 6010D	9-23-22	9-23-22	
Client ID:	**DA7SWCS45220922I**					
Laboratory ID:	09-217-12					
Arsenic	**ND**	5.4	EPA 6010D	9-23-22	9-23-22	
Barium	**30**	2.7	EPA 6010D	9-23-22	9-23-22	
Cadmium	**ND**	0.54	EPA 6010D	9-23-22	9-23-22	
Chromium	**14**	0.54	EPA 6010D	9-23-22	9-23-22	
Lead	**ND**	5.4	EPA 6010D	9-23-22	9-23-22	
Mercury	**ND**	0.054	EPA 7471B	9-26-22	9-26-22	
Selenium	**ND**	0.27	EPA 6020B	9-26-22	9-26-22	
Silver	**ND**	1.1	EPA 6010D	9-23-22	9-23-22	

This report pertains to the samples analyzed in accordance with the chain of custody, and is intended only for the use of the individual or company to whom it is addressed.

Date of Report: September 26, 2022
Samples Submitted: September 22, 2022
Laboratory Reference: 2209-217
Project: 11-05150-003

TOTAL METALS
EPA 6010D/6020B/7471B

Matrix: Soil
Units: mg/Kg (ppm)

Analyte	Result	PQL	Method	Date Prepared	Date Analyzed	Flags
Client ID:	**DA7SWCS46220922I**					
Laboratory ID:	09-217-13					
Arsenic	**ND**	5.6	EPA 6010D	9-23-22	9-23-22	
Barium	**38**	2.8	EPA 6010D	9-23-22	9-23-22	
Cadmium	**ND**	0.56	EPA 6010D	9-23-22	9-23-22	
Chromium	**17**	0.56	EPA 6010D	9-23-22	9-23-22	
Lead	**ND**	5.6	EPA 6010D	9-23-22	9-23-22	
Mercury	**ND**	0.056	EPA 7471B	9-26-22	9-26-22	
Selenium	**ND**	0.28	EPA 6020B	9-26-22	9-26-22	
Silver	**ND**	1.1	EPA 6010D	9-23-22	9-23-22	

This report pertains to the samples analyzed in accordance with the chain of custody,
and is intended only for the use of the individual or company to whom it is addressed.

Date of Report: September 26, 2022
Samples Submitted: September 22, 2022
Laboratory Reference: 2209-217
Project: 11-05150-003

TOTAL METALS
EPA 6010D/6020B/7471B
QUALITY CONTROL

Matrix: Soil
Units: mg/Kg (ppm)

Analyte	Result	PQL	Method	Date Prepared	Date Analyzed	Flags
METHOD BLANK						
Laboratory ID:	MB0923SM1					
Arsenic	**ND**	5.0	EPA 6010D	9-23-22	9-23-22	
Barium	**ND**	2.5	EPA 6010D	9-23-22	9-23-22	
Cadmium	**ND**	0.50	EPA 6010D	9-23-22	9-23-22	
Chromium	**ND**	0.50	EPA 6010D	9-23-22	9-23-22	
Lead	**ND**	5.0	EPA 6010D	9-23-22	9-23-22	
Silver	**ND**	1.0	EPA 6010D	9-23-22	9-23-22	
Laboratory ID:	MB0926S1					
Selenium	**ND**	0.25	EPA 6020B	9-26-22	9-26-22	
Laboratory ID:	MB0926S1					
Mercury	**ND**	0.050	EPA 7471B	9-26-22	9-26-22	

This report pertains to the samples analyzed in accordance with the chain of custody, and is intended only for the use of the individual or company to whom it is addressed.

Date of Report: September 26, 2022
Samples Submitted: September 22, 2022
Laboratory Reference: 2209-217
Project: 11-05150-003

TOTAL METALS
EPA 6010D/6020B/7471B
QUALITY CONTROL

Matrix: Soil
Units: mg/Kg (ppm)

Analyte	Result		Spike Level		Source Result	Percent Recovery		Recovery Limits	RPD	RPD Limit	Flags
DUPLICATE											
Laboratory ID:	09-207-01										
	ORIG	DUP									
Arsenic	**ND**	**ND**	NA	NA		NA		NA	NA	20	
Barium	**63.2**	**58.3**	NA	NA		NA		NA	8	20	
Cadmium	**ND**	**ND**	NA	NA		NA		NA	NA	20	
Chromium	**24.7**	**21.3**	NA	NA		NA		NA	15	20	
Lead	**15.8**	**14.4**	NA	NA		NA		NA	9	20	
Silver	**ND**	**ND**	NA	NA		NA		NA	NA	20	
Laboratory ID:	09-207-01										
Selenium	**ND**	**0.254**	NA	NA		NA		NA	NA	20	
Laboratory ID:	09-217-03										
Mercury	**ND**	**ND**	NA	NA		NA		NA	NA	20	
MATRIX SPIKES											
Laboratory ID:	09-207-01										
	MS	MSD	MS	MSD		MS	MSD				
Arsenic	**94.9**	**94.8**	100	100	ND	**95**	**95**	75-125	0	20	
Barium	**161**	**157**	100	100	63.2	**98**	**94**	75-125	3	20	
Cadmium	**45.3**	**45.1**	50.0	50.0	ND	**91**	**90**	75-125	0	20	
Chromium	**117**	**116**	100	100	24.7	**92**	**92**	75-125	0	20	
Lead	**250**	**252**	250	250	15.8	**94**	**95**	75-125	1	20	
Silver	**21.9**	**22.1**	25.0	25.0	ND	**87**	**88**	75-125	1	20	
Laboratory ID:	09-207-01										
Selenium	**97.5**	**99.3**	100	100	ND	**98**	**99**	75-125	2	20	
Laboratory ID:	09-217-03										
Mercury	**0.494**	**0.519**	0.500	0.500	0.0176	**95**	**100**	80-120	5	20	

This report pertains to the samples analyzed in accordance with the chain of custody, and is intended only for the use of the individual or company to whom it is addressed.

Date of Report: September 26, 2022
Samples Submitted: September 22, 2022
Laboratory Reference: 2209-217
Project: 11-05150-003

% MOISTURE

Client ID	Lab ID	% Moisture	Date Analyzed
DA7SWCS35220922I	09-217-01	**5**	9-23-22
DA7SWCS36220922I	09-217-02	**7**	9-23-22
DA7SWCS37220922I	09-217-03	**9**	9-23-22
DA7SWCS38220922I	09-217-04	**6**	9-23-22
DA7SWCS39220922I	09-217-05	**5**	9-23-22
DA7SWCS39220922D	09-217-06	**5**	9-23-22
DA7SWCS40220922I	09-217-07	**6**	9-23-22
DA7SWCS41220922I	09-217-08	**6**	9-23-22
DA7SWCS42220922I	09-217-09	**9**	9-23-22
DA7SWCS43220922I	09-217-10	**6**	9-23-22
DA7SWCS44220922I	09-217-11	**7**	9-23-22
DA7SWCS45220922I	09-217-12	**8**	9-23-22
DA7SWCS46220922I	09-217-13	**10**	9-23-22

This report pertains to the samples analyzed in accordance with the chain of custody, and is intended only for the use of the individual or company to whom it is addressed.

OnSite Environmental Inc.

Data Qualifiers and Abbreviations

A - Due to a high sample concentration, the amount spiked is insufficient for meaningful MS/MSD recovery data.

B - The analyte indicated was also found in the blank sample.

C - The duplicate RPD is outside control limits due to high result variability when analyte concentrations are within five times the quantitation limit.

E - The value reported exceeds the quantitation range and is an estimate.

F - Surrogate recovery data is not available due to the high concentration of coeluting target compounds.

H - The analyte indicated is a common laboratory solvent and may have been introduced during sample preparation, and be impacting the sample result.

I - Compound recovery is outside of the control limits.

J - The value reported was below the practical quantitation limit. The value is an estimate.

K - Sample duplicate RPD is outside control limits due to sample inhomogeneity. The sample was re-extracted and re-analyzed with similar results.

L - The RPD is outside of the control limits.

M - Hydrocarbons in the gasoline range are impacting the diesel range result.

M1 - Hydrocarbons in the gasoline range (toluene-naphthalene) are present in the sample.

N - Hydrocarbons in the lube oil range are impacting the diesel range result.

N1 - Hydrocarbons in diesel range are impacting lube oil range results.

O - Hydrocarbons indicative of heavier fuels are present in the sample and are impacting the gasoline result.

P - The RPD of the detected concentrations between the two columns is greater than 40.

Q - Surrogate recovery is outside of the control limits.

S - Surrogate recovery data is not available due to the necessary dilution of the sample.

T - The sample chromatogram is not similar to a typical _____.

U - The analyte was analyzed for, but was not detected above the reported sample quantitation limit.

U1 - The practical quantitation limit is elevated due to interferences present in the sample.

V - Matrix Spike/Matrix Spike Duplicate recoveries are outside control limits due to matrix effects.

W - Matrix Spike/Matrix Spike Duplicate RPD are outside control limits due to matrix effects.

X - Sample extract treated with a mercury cleanup procedure.

X1 - Sample extract treated with a sulfuric acid/silica gel cleanup procedure.

X2 - Sample extract treated with a silica gel cleanup procedure.

Y - The calibration verification for this analyte exceeded the 20% drift specified in methods 8260 & 8270, and therefore the reported result should be considered an estimate. The overall performance of the calibration verification standard met the acceptance criteria of the method.

Y1 - Negative effects of the matrix from this sample on the instrument caused values for this analyte in the bracketing continuing calibration verification standard (CCVs) to be outside of 20% acceptance criteria. Because of this, quantitation limits and sample concentrations should be considered estimates.

Z -

ND - Not Detected at PQL
PQL - Practical Quantitation Limit
RPD - Relative Percent Difference

This report pertains to the samples analyzed in accordance with the chain of custody, and is intended only for the use of the individual or company to whom it is addressed.

Chain of Custody

Page 1 of 2

OnSite Environmental Inc.
Analytical Laboratory Testing Services
14648 NE 95th Street • Redmond, WA 98052
Phone: (425) 883-3881 • www.onsite-env.com

Company: Anchor QEA (Herrera)
Project Number: 11-05150-003
Project Name: Cedar Hills Regional Landfill
Project Manager: Mike Roberts
Sampled by: Camryn Stever

Turnaround Request (in working days)
(Check One)
☒ Same Day ☐ 1 Day
☐ 2 Days ☐ 3 Days
☐ Standard (7 Days)
☐ _____ (other)

Laboratory Number: 09-217

Lab ID	Sample Identification	Date Sampled	Time Sampled	Matrix	Number of Containers	NWTPH-HCID	NWTPH-Gx/BTEX (8021☐ 8260☐)	NWTPH-Gx	NWTPH-Dx (Acid / SG Clean-up☐)	Volatiles 8260	Halogenated Volatiles 8260	EDB EPA 8011 (Waters Only)	Semivolatiles 8270 SIM (with low-level PAHs)	PAHs 8270/SIM (low-level)	PCBs 8082	Organochlorine Pesticides 8081	Organophosphorus Pesticides 8270/SIM	Chlorinated Acid Herbicides 8151	Total RCRA Metals 6010B /7471A	Total MTCA Metals	TCLP Metals	HEM (oil and grease) 1664					% Moisture
1	DA7SWCS35220922I	9/22/22	1515	Soil	4					X			X		X	X			X								
2	DA7SWCS36220922I		1520							X			X		X	X			X								
3	DA7SWCS37220922I		1520							X			X		X	X			X								
4	DA7SWCS38220922I		1530							X			X		X	X			X								
5	DA7SWCS39220922I		1540							X			X		X	X			X								
6	DA7SWCS39220922D		1540							X			X		X	X			X								
7	DA7SWCS40220922I		1550							X			X		X	X			X								
8	DA7SWCS41220922I		1610							X			X		X	X			X								
9	DA7SWCS42220922I		1615							X			X		X	X			X								
10	DA7SWCS43220922I	↓	1620	↓	↓					X			X		X	X			X								

	Signature	Company	Date	Time	Comments/Special Instructions
Relinquished	Camryn Stever	Herrera	9/22/22	1905	
Received		COSE	9/22/22	1905	
Relinquished					
Received					
Relinquished					
Received					Data Package: Standard ☐ Level III ☐ Level IV ☐
Reviewed/Date		Reviewed/Date			Chromatograms with final report ☐ Electronic Data Deliverables (EDDs) ☐

Chain of Custody

OnSite Environmental Inc.
Analytical Laboratory Testing Services
14648 NE 95th Street • Redmond, WA 98052
Phone: (425) 883-3881 • www.onsite-env.com

Company: Anchor QEA
Project Number: 11-05150-003
Project Name: Cedar Hills Reg Landfill
Project Manager: Mike Roberts
Sampled by: Camryn Stenner

Turnaround Request (in working days)
(Check One)
☒ Same Day ☐ 1 Day
☐ 2 Days ☐ 3 Days
☐ Standard (7 Days)
☐ _____ (other)

Laboratory Number: 09-217

Lab ID	Sample Identification	Date Sampled	Time Sampled	Matrix	Number of Containers	NWTPH-HCID	NWTPH-Gx/BTEX (8021☐ 8260☐)	NWTPH-Gx	NWTPH-Dx (Acid / SG Clean-up☐)	Volatiles 8260	Halogenated Volatiles 8260	EDB EPA 8011 (Waters Only)	Semivolatiles 8270/SIM (with low-level PAHs)	PAHs 8270/SIM (low-level)	PCBs 8082	Organochlorine Pesticides 8081	Organophosphorus Pesticides 8270/SIM	Chlorinated Acid Herbicides 8151	Total RCRA Metals 6010B/7471A	Total MTCA Metals	TCLP Metals	HEM (oil and grease) 1664					% Moisture
11	DA7SWCS4422092 2I	9/22/22	1635	Soil	4					X			X		X	X			X								
12	DA7SWCS4522092 2I	↓	1640	↓	4					X			X		X	X			X								
~~13~~	DA7SWCS4622092 2I	↓	1645	↓	4					X			X		X	X			X								
14	VTBP220922I - Trip Blank	9/22/22		water	3					X			~~X~~	~~X~~													

	Signature	Company	Date	Time
Relinquished	Camryn Stenner	Herrera	9/22/22	1905
Received		QSE	9/22/22	1905
Relinquished				
Received				
Relinquished				
Received				
Reviewed/Date		Reviewed/Date		

Comments/Special Instructions

Data Package: Standard ☐ Level III ☐ Level IV ☐

Chromatograms with final report ☐ Electronic Data Deliverables (EDDs) ☐

APPENDIX E

Data Summary Tables

Table 1. Summary of Soil Sampling Analytical Results, Cedar Hills Regional Landfill Area 7 Contaminated Soils, King County, Washington.
For Samples Collected at West End of Area 6/7 South Berm Road

Analytical Parameter	Sample ID													
	DA7SWCS 1210608I	**DA7SWCS 2210608I**	**DA7SWCS 3210608I**	**DA7SWCS 4210608I**	**DA7SWCS 5210608I**	**DA7SWCS 6210611I**	**DA7SWCS 7210611I**	**DA7SWCS 8210615I**	**DA7SWCS 9210615I**	**DA7SWCS 10210615I**	**DA7SWCS 112106017I**	**DA7SWCS 12210616I**		
Sample Number Called Out in Appendix C and Report Text	**1**	**2**	**3**	**4**	**5**	**6**	**7**	**8**	**9**	**10**	**11**	**12**		
Date Collected	6/8/21					6/11/21		6/15/21			6/17/21	6/16/21		
Sample Location	Bottom Excavation	Bottom Ditch	Bottom Ditch	Bottom Ditch	Sidewall South	Bottom Excavation	Sidewall North	Sidewall North	Bottom Excavation	Stained Soil by Pipe	Sidewall South Deep	Sidewall North Deep		
Sample Description	Confirm Clean	Confirm Clean	Confirm Clean	Confirm Clean	Confirm Clean	Confirm Clean	Confirm Clean	Confirm Clean	Confirm Clean	Confirm Clean	Confirm Clean	Confirm Clean		
Approx. Depth (feet) [a]	8	3	3	3	8	15.5	8	8.5	15.5	8	9	9		
Beneath or Beyond Lining System as Shown in Appendix C	Beyond Lining System	Beyond Lining System	Beyond Lining System	Beyond Lining System	Beyond Lining System	Beyond Lining System, Beneath Asphalt Pavement	Beyond Lining System, Beneath Asphalt Pavement	Beyond Lining System, Beneath Asphalt Pavement	Beyond Lining System, Beneath Asphalt Pavement	Beyond Lining System, Beneath Asphalt Pavement	Beyond Lining System, Beneath Asphalt Pavement	Beyond Lining System, Beneath Asphalt Pavement		
Northing Coordinate	169543.08	169495.26	169526.17	169550.16	169536.80	169559.43	169568.53	169575.72	169552.10	169564.86	169548.96	169586.41		
Easting Coordinate	1698226.19	1698214.71	1698214.30	1698217.78	1698227.98	1698253.00	1698266.38	1698287.30	1698280.25	1698298.49	1698292.64	1698301.67		
PID Reading (ppm)	0.4	1.9	0.8	0.4	0.3	0.1	272.1	2.9	0.6	5.5	0.7	97.1		
Staining, Odor?	No	No	No	No	No	No	Staining, No Odor	No	No	Staining, No Odor	No	Staining and Acrid Odor	**MTCA Method B PCUL**	**MTCA Method B PCUL – Potable GW**
Metals (mg/kg)														
Arsenic	ND (5.7)	ND (5.6)	ND (5.5)	ND (5.7)	ND (5.6)	ND (5.6)	ND (6.2)	ND (6.0)	ND (5.6)	ND (7.0)	ND (6.1)	ND (6.5)	7.3	7.3
Barium	**56**	**43**	**41**	**52**	**30**	**40**	**92**	**82**	**45**	**86**	**72**	**70**	100	1,600
Cadmium	ND (0.57)	ND (0.56)	ND (0.55)	ND (0.57)	ND (0.56)	ND (0.56)	ND (0.62)	ND (0.60)	ND (0.56)	ND (0.70)	ND (0.61)	ND (0.65)	0.77	0.77
Chromium	**18**	**16**	**15**	**17**	**14**	**20**	**26**	**31**	**18**	**21**	**19**	**19**	48	480,000
Lead	ND (5.7)	ND (5.6)	ND (5.5)	ND (5.7)	ND (5.6)	ND (5.6)	ND (6.2)	ND (6.0)	ND (5.6)	**9.1**	**6.7**	ND (6.5)	50	3,000
Mercury	ND (0.057)	ND (0.056)	ND (0.055)	ND (0.057)	ND (0.056)	ND (0.056)	ND (0.062)	ND (0.060)	ND (0.056)	ND (0.070)	ND (0.061)	ND (0.065)	0.10	2.1
Selenium	ND (0.14)	ND (0.14)	ND (0.14)	ND (0.14)	ND (0.14)	ND (0.14)	**0.37**	**0.31**	ND (0.28)	**0.40**	**0.22**	**0.36**	0.30	5.2
Silver	ND (1.1)	ND (1.1)	ND (1.1)	ND (1.1)	ND (1.1)	ND (1.1)	ND (1.2)	ND (1.2)	ND (1.1)	ND (1.4)	ND (1.2)	ND (1.3)	2.0	14
VOCs (mg/kg)														
Acetone	**0.031**	ND (0.0085)	**0.028**	**0.017**	ND (0.0093)	**0.019**	**0.34**	**0.12**	ND (0.0088)	ND (0.90)	**0.28**	**0.41**	29	29
Carbon disulfide	ND (0.0011)	ND (0.0011)	ND (0.0012)	ND (0.0011)	ND (0.0012)	ND (0.0009)	ND (0.0012)	ND (0.001)	ND (0.0009)	ND (0.090)	ND (0.0012)	**0.0013**	5.0	5.0
2-butanone	ND (0.0042)	ND (0.0042)	ND (0.0045)	ND (0.0044)	ND (0.0046)	ND (0.0044)	**0.06**	**0.013**	ND (0.0044)	ND (0.45)	**0.03**	**0.076**	48,000	--
p-Isopropyltoluene	ND (0.0008)	ND (0.0009)	ND (0.0009)	ND (0.0009)	ND (0.0009)	ND (0.0009)	**0.022**	ND (0.001)	ND (0.0009)	ND (0.090)	ND (0.070)	**0.0014**	--	--
SVOCS (mg/kg)														
Benzo[a]anthracene	ND (0.0046)	ND (0.0045)	ND (0.0044)	ND (0.0045)	ND (0.0044)	ND (0.0044)	ND (0.005)	ND (0.0048)	ND (0.0045)	ND (0.0056)	ND (0.0049)	ND (0.0052)	--	--
Benzo[b]fluoranthene	ND (0.0046)	ND (0.0045)	ND (0.0044)	ND (0.0045)	ND (0.0044)	ND (0.0044)	ND (0.005)	ND (0.0048)	ND (0.0045)	ND (0.0056)	ND (0.0049)	ND (0.0052)	--	--
Benzo[k]fluoranthene	ND (0.0046)	ND (0.0045)	ND (0.0044)	ND (0.0045)	ND (0.0044)	ND (0.0044)	ND (0.005)	ND (0.0048)	ND (0.0045)	ND (0.0056)	ND (0.0049)	ND (0.0052)	--	--
Benzo[a]pyrene	ND (0.0046)	ND (0.0045)	ND (0.0044)	ND (0.0045)	ND (0.0044)	ND (0.0044)	ND (0.005)	ND (0.0048)	ND (0.0045)	ND (0.0056)	ND (0.0049)	ND (0.0052)	--	--
Benzyl alcohol	ND (0.023)	ND (0.022)	ND (0.022)	ND (0.023)	ND (0.022)	ND (0.022)	ND (0.025)	ND (0.024)	ND (0.022)	ND (0.028)	ND (0.025)	**0.22**	3,000	--

Chrysene	ND (0.0046)	ND (0.0045)	ND (0.0044)	ND (0.0045)	ND (0.0044)	ND (0.0044)	ND (0.005)	ND (0.0048)	ND (0.0045)	ND (0.0056)	ND (0.0049)	ND (0.0052)	--	--
Dibenz[a,h]anthracene	ND (0.0046)	ND (0.0045)	ND (0.0044)	ND (0.0045)	ND (0.0044)	ND (0.0044)	ND (0.005)	ND (0.0048)	ND (0.0045)	ND (0.0056)	ND (0.0049)	ND (0.0052)	--	--
Indeno[1,2,3-c,d]pyrene	ND (0.0046)	ND (0.0045)	ND (0.0044)	ND (0.0045)	ND (0.0044)	ND (0.0044)	ND (0.005)	ND (0.0048)	ND (0.0045)	ND (0.0056)	ND (0.0049)	ND (0.0052)	--	--
2-Methylphenol (o-Cresol)	ND (0.023)	ND (0.022)	ND (0.022)	ND (0.023)	ND (0.022)	ND (0.022)	**0.062**	ND (0.024)	ND (0.022)	**0.10**	0.027	**0.072**	2.3	2.3
(3+4)-Methylphenol (m,p-Cresol)	ND (0.023)	ND (0.022)	ND (0.022)	ND (0.023)	ND (0.022)	ND (0.022)	**0.036**	ND (0.024)	ND (0.022)	**0.27**	0.063	**0.13**	4,000/8,000	--
2-Methylnaphthalene	ND (0.0046)	ND (0.0045)	ND (0.0044)	ND (0.0045)	ND (0.0044)	ND (0.0044)	ND (0.005)	ND (0.0048)	ND (0.0045)	**0.039**	ND (0.0049)	ND (0.0052)	320	--
1-Methylnaphthalene	ND (0.0046)	ND (0.0045)	ND (0.0044)	ND (0.0045)	ND (0.0044)	ND (0.0044)	ND (0.005)	ND (0.0048)	ND (0.0045)	**0.030**	ND (0.0049)	ND (0.0052)	5,600 [b]	5,600 [b]
Fluoranthene	ND (0.0046)	ND (0.0045)	ND (0.0044)	ND (0.0045)	ND (0.0044)	ND (0.0044)	ND (0.005)	ND (0.0048)	ND (0.0045)	**0.0068**	ND (0.0049)	ND (0.0052)	630	630
Fluorene	ND (0.0046)	ND (0.0045)	ND (0.0044)	ND (0.0045)	ND (0.0044)	ND (0.0044)	ND (0.005)	ND (0.0048)	ND (0.0045)	**0.0056**	ND (0.0049)	ND (0.0052)	30	100
Naphthalene	ND (0.0046)	ND (0.0045)	ND (0.0044)	ND (0.0045)	ND (0.0044)	ND (0.0044)	**0.0056**	ND (0.0048)	ND (0.0045)	**0.14**	**0.0052**	**0.0071**	4.5	4.5
Phenanthrene	ND (0.0046)	ND (0.0045)	ND (0.0044)	ND (0.0045)	ND (0.0044)	ND (0.0044)	ND (0.005)	ND (0.0048)	ND (0.0045)	**0.031**	**0.0058**	**0.0052**	--	--
Phenol	ND (0.023)	ND (0.022)	ND (0.022)	ND (0.023)	ND (0.022)	ND (0.022)	ND (0.025)	ND (0.024)	ND (0.022)	ND (0.1)	ND (0.025)	**0.13**	11	11
Pyrene	ND (0.0046)	ND (0.0045)	ND (0.0044)	ND (0.0045)	ND (0.0044)	ND (0.0044)	ND (0.005)	ND (0.0048)	ND (0.0045)	ND (0.0056)	ND (0.0049)	ND (0.0052)	650	650
Total cPAHs (TEQ)[c]	**0.0035**	**0.0034**	**0.0033**	**0.0034**	**0.0033**	**0.0033**	**0.0038**	**0.0036**	**0.0034**	**0.0042**	**0.0037**	**0.0039**	0.19	3.9
Total PCBs (mg/kg)	ND (0.023)	ND (0.022)	ND (0.022)	ND (0.023)	ND (0.022)	ND (0.022)	ND (0.025)	ND (0.024)	ND (0.022)	ND (0.028)	ND (0.025)	ND (0.026)	0.5 [b]	0.5 [b]
Organochlorine Pesticides (µg/kg)														
alpha-Chlordane	ND (1.1)	ND (1.1)	ND (1.1)	ND (1.1)	ND (1.1)	ND (1.1)	ND (1.2)	ND (1.2)	ND (1.1)	ND (0.28)	**0.61**	**0.85**	1.0	2.1
4,4'-DDT	ND (1.1)	ND (1.1)	ND (1.1)	ND (1.1)	ND (1.1)	ND (1.1)	ND (1.2)	ND (1.2)	ND (1.1)	ND (0.28)	**0.55**	**0.43**	3.5	3.5
Endrin Ketone [d]	ND (1.1)	ND (1.1)	ND (1.1)	ND (1.1)	ND (1.1)	ND (1.1)	ND (1.2)	ND (1.2)	ND (1.1)	ND (0.28)	**0.42**	**0.55**	--	--

Table 1 cont. Summary of Soil Sampling Analytical Results, Cedar Hills Regional Landfill Area 7 Contaminated Soils, King County, Washington.
For Samples Collected at West End of Area 6/7 South Berm Road

Analytical Parameter	Sample ID												
	DA7SWCS 13210616I	**DA7SWCS 14210616I**	**DA7SWCS 15210617I**	**DA7SWCS 16210618I**	**DA7SWCS 17210621I**	**DA7SWCS 18210621I**	**DA7SWCS 19210621I**	**DA7SWCS 20210910I**	**DA7SWCS 21210910I**	**DA7SWCS 22210910I**	**DA7SWCS 23210910I**	**MTCA Method B PCUL**	**MTCA Method B PCUL – Potable GW**
Sample Number Called Out in Appendix C and Report Text	**13**	**14**	**15**	**16**	**17**	**18**	**19**	**20**	**21**	**22**	**23**		
Date Collected	6/16/21		6/17/21	6/18/21	6/21/21			9/10/21					
Sample Location	Sidewall North Shallow	Sidewall Ditch South	Sidewall South	Bottom Excavation	Bottom Excavation	Sidewall South	Bottom Excavation	Bottom Excavation	Sidewall South	Bottom Excavation	Sidewall South		
Sample Description	Confirm Clean	Confirm Clean	Confirm Clean	Confirm Clean	Confirm Clean	Confirm Clean	Confirm Clean	Confirm Clean	Confirm Clean	Confirm Clean	Confirm Clean		
Approx. Depth (feet) [a]	2.5	1.5	7	15.5	8.5	7.5	8.5	3	2	3	2.5		
Beneath or Beyond Lining System as Shown in Appendix C	Beyond Lining System, Beneath Asphalt Pavement	Beyond Lining System	Beyond Lining System, Beneath Asphalt Pavement	Beyond Lining System, Beneath Asphalt Pavement	Beyond Lining System, Beneath Asphalt Pavement	Beyond Lining System, Beneath Asphalt Pavement	Beyond Lining System, Beneath Asphalt Pavement	Beneath Lining System	Beneath Lining System	Beneath Lining System	Beneath Lining System		
Northing Coordinate	169586.71	169487.80	169553.81	169564.21	169568.64	169562.33	169575.27	169586.51	169580.62	169584.22	169570.95		
Easting Coordinate	1698298.93	1698211.82	1698305.46	1698314.04	1698323.31	1698333.99	1698332.98	1698398.89	1698393.96	1698358.27	1698363.83		
PID Reading (ppm)	0.7	0.3	30.7	0.5	1.4	0.6	0.4	-0.8 [e]	-0.9 [e]	-0.9 [e]	-0.9 [e]		
Staining, Odor?	No Staining, Acrid Odor	No	No Staining, Acrid Odor	No	No	No	No	No Staining, Acrid Odor	No	No Staining, Acrid Odor	No		
Metals (mg/kg)													
Arsenic	ND (5.9)	ND (6.1)	ND (5.4)	ND (5.6)	ND (5.5)	ND (5.7)	ND (5.7)	ND (5.6)	ND (5.3)	ND (5.6)	ND (5.4)	7.3	7.3
Barium	**56**	**66**	**54**	**39**	**36**	**42**	**50**	**43**	**52**	**45**	**47**	100	1,600
Cadmium	ND (0.59)	ND (0.61)	ND (0.54)	ND (0.56)	ND (0.55)	ND (0.57)	ND (0.57)	ND (0.56)	ND (0.53)	ND (0.56)	ND (0.54)	0.77	0.77
Chromium	**26**	**23**	**18**	**19**	**18**	**19**	**21**	**20**	**22**	**18**	**19**	48	480,000
Lead	**7.9**	ND (6.1)	ND (5.4)	ND (5.6)	ND (5.5)	ND (5.7)	ND (5.7)	ND (5.6)	ND (5.3)	ND (5.6)	ND (5.4)	50	3,000
Mercury	ND (0.059)	ND (0.061)	ND (0.054)	ND (0.056)	ND (0.082)	ND (0.085)	**0.11**	ND (0.056)	ND (0.053)	ND (0.056)	**0.24**	0.10	2.1
Selenium	**0.25**	**0.16**	**0.30**	ND (0.14)	**0.23**	**0.15**	**0.46**	ND (0.28)	**0.31**	ND (0.28)	**0.27**	0.30	5.2
Silver	ND (1.2)	ND (1.2)	ND (1.1)	ND (1.1)	ND (1.1)	ND (1.1)	ND (1.1)	ND (1.1)	ND (1.1)	ND (1.1)	ND (1.1)	2.0	14
VOCs (mg/kg)													
Acetone	ND (0.010)	ND (0.009)	**0.21**	ND (0.008)	**0.019**	ND (0.0082)	**0.025**	ND (0.016)	**0.042**	**0.021**	**0.059**	29	29
Carbon disulfide	ND (0.001)	ND (0.0009)	ND (0.00096)	ND (0.0008)	ND (0.00094)	ND (0.00082)	ND (0.00093)	ND (0.00078)	ND (0.0011)	ND (0.00099)	ND (0.00093)	5.0	5.0
2-butanone	ND (0.0051)	ND (0.0045)	**0.023**	ND (0.004)	ND (0.0047)	ND (0.0041)	ND (0.0047)	ND (0.0039)	ND (0.0057)	ND (0.0050)	**0.0048**	48,000	--
p-Isopropyltoluene	ND (0.001)	ND (0.0009)	**0.0077**	ND (0.0008)	ND (0.00094)	ND (0.00082)	ND (0.00093)	ND (0.00078)	ND (0.0011)	ND (0.00099)	ND (0.00093)	--	--
SVOCS (mg/kg)													
Benzo[a]anthracene	ND (0.0047)	ND (0.0049)	ND (0.0044)	ND (0.0045)	ND (0.0044)	ND (0.0045)	ND (0.0045)	ND (0.0045)	ND (0.0043)	ND (0.0045)	ND (0.0043)	--	--

Benzo[b]fluoranthene	**0.0051**	ND (0.0049)	ND (0.0044)	ND (0.0045)	ND (0.0044)	ND (0.0045)	ND (0.0045)	ND (0.0045)	ND (0.0043)	ND (0.0045)	ND (0.0043)	--	--
Benzo[k]fluoranthene	ND (0.0047)	ND (0.0049)	ND (0.0044)	ND (0.0045)	ND (0.0044)	ND (0.0045)	ND (0.0045)	ND (0.0045)	ND (0.0043)	ND (0.0045)	ND (0.0043)	--	--
Benzo[a]pyrene	ND (0.0047)	ND (0.0049)	ND (0.0044)	ND (0.0045)	ND (0.0044)	ND (0.0045)	ND (0.0045)	ND (0.0045)	ND (0.0043)	ND (0.0045)	ND (0.0043)	--	--
Benzyl alcohol	ND (0.024)	**0.038**	ND (0.022)	ND (0.022)	ND (0.022)	ND (0.023)	ND (0.023)	ND (0.022)	ND (0.021)	ND (0.022)	ND (0.043)	3,000	--
Chrysene	ND (0.0047)	ND (0.0049)	ND (0.0044)	ND (0.0045)	ND (0.0044)	ND (0.0045)	ND (0.0045)	ND (0.0045)	ND (0.0043)	ND (0.0045)	ND (0.0043)	--	--
Dibenz[a,h]anthracene	ND (0.0047)	ND (0.0049)	ND (0.0044)	ND (0.0045)	ND (0.0044)	ND (0.0045)	ND (0.0045)	ND (0.0045)	ND (0.0043)	ND (0.0045)	ND (0.0043)	--	--
Indeno[1,2,3-c,d]pyrene	ND (0.0047)	ND (0.0049)	ND (0.0044)	ND (0.0045)	ND (0.0044)	ND (0.0045)	ND (0.0045)	ND (0.0045)	ND (0.0043)	ND (0.0045)	ND (0.0043)	--	--
2-Methylphenol (o-Cresol)	ND (0.024)	ND (0.025)	ND (0.022)	ND (0.022)	ND (0.022)	ND (0.023)	ND (0.023)	ND (0.022)	ND (0.021)	ND (0.022)	ND (0.043)	2.3	2.3
(3+4)-Methylphenol (m,p-Cresol)	ND (0.024)	ND (0.025)	ND (0.022)	ND (0.022)	ND (0.022)	ND (0.023)	ND (0.023)	ND (0.022)	ND (0.021)	**0.061**	ND (0.043)	4,000/8,000	--
2-Methylnaphthalene	ND (0.0047)	ND (0.0049)	ND (0.0044)	ND (0.0045)	ND (0.0044)	ND (0.0045)	ND (0.0045)	ND (0.0045)	ND (0.0043)	ND (0.0045)	ND (0.0043)	320	--
1-Methylnaphthalene	ND (0.0047)	ND (0.0049)	ND (0.0044)	ND (0.0045)	ND (0.0044)	ND (0.0045)	ND (0.0045)	ND (0.0045)	ND (0.0043)	ND (0.0045)	ND (0.0043)	5,600 [b]	5,600 [b]
Fluoranthene	**0.0053**	ND (0.0049)	ND (0.0044)	ND (0.0045)	ND (0.0044)	ND (0.0045)	ND (0.0045)	ND (0.0045)	ND (0.0043)	ND (0.0045)	ND (0.0043)	630	630
Fluorene	ND (0.0047)	ND (0.0049)	ND (0.0044)	ND (0.0045)	ND (0.0044)	ND (0.0045)	ND (0.0045)	ND (0.0045)	ND (0.0043)	ND (0.0045)	ND (0.0043)	30	100
Naphthalene	ND (0.0047)	ND (0.0049)	ND (0.0044)	ND (0.0045)	ND (0.0044)	ND (0.0045)	ND (0.0045)	ND (0.0045)	ND (0.0043)	ND (0.0045)	ND (0.0043)	4.5	4.5
Phenanthrene	ND (0.0047)	ND (0.0049)	ND (0.0044)	ND (0.0045)	ND (0.0044)	ND (0.0045)	ND (0.0045)	ND (0.0045)	ND (0.0043)	ND (0.0045)	ND (0.0043)	--	--
Phenol	ND (0.024)	ND (0.025)	ND (0.022)	ND (0.022)	ND (0.022)	ND (0.023)	ND (0.023)	ND (0.022)	ND (0.021)	ND (0.022)	ND (0.043)	11	11
Pyrene	**0.0049**	ND (0.0049)	ND (0.0044)	ND (0.0045)	ND (0.0044)	ND (0.0045)	ND (0.0045)	ND (0.0045)	ND (0.0043)	ND (0.0045)	ND (0.0043)	650	650
Total cPAHs (TEQ)[c]	**0.0038**	**0.0037**	**0.0033**	**0.0034**	**0.0033**	**0.0034**	**0.0034**	**0.0034**	**0.0032**	**0.0034**	**0.0032**	0.19	3.9
Total PCBs (mg/kg)	ND (0.024)	ND (0.025)	ND (0.022)	ND (0.022)	ND (0.022)	ND (0.023)	ND (0.023)	ND (0.022)	ND (0.021)	ND (0.022)	ND (0.022)	0.5 [b]	0.5 [b]
Organochlorine Pesticides (µg/kg)													
alpha-Chlordane	ND (0.24)	ND (0.25)	ND (0.22)	ND (0.22)	ND (0.22)	ND (0.23)	ND (0.23)	ND (0.45)	ND (0.43)	ND (0.45)	ND (0.43)	1.0	2.1
4,4'-DDT	ND (0.24)	ND (0.25)	ND (0.22)	ND (0.22)	ND (0.22)	ND (0.23)	ND (0.23)	ND (0.45)	ND (0.43)	ND (0.45)	ND (0.43)	3.5	3.5
Endrin Ketone [d]	ND (0.24)	ND (0.25)	ND (0.22)	ND (0.22)	ND (0.22)	ND (0.23)	ND (0.23)	ND (0.45)	ND (0.43)	ND (0.45)	ND (0.43)	--	--

Table 2. Summary of Soil Sampling Analytical Results, Cedar Hills Regional Landfill Area 7 Contaminated Soils, King County, Washington.
For Samples Collected at East End of Area 6/7 South Berm Road

Analytical Parameter	Sample ID						MTCA Method B PCUL	MTCA Method B PCUL – Potable GW
	DA7SWCS 24210924I	DA7SWCS 25210924I	DA7SWCS 26210924I	DA7SWCS 27211001I	DA7SWCS 28211001I	DA7SWCS 29211001I		
Sample Number Called Out in Appendix C and Report Text	**24**	**25**	**26**	**27**	**28**	**29**		
Date Collected	9/24/21			10/1/21				
Sample Location	Bottom Excavation	Bottom Excavation	Bottom Excavation	Bottom Excavation	Bottom Excavation	Bottom Excavation		
Sample Description	Confirm Clean	Confirm Clean	Confirm Clean	Confirm Clean	Confirm Clean	Confirm Clean		
Approx. Depth (feet) [a]	2	1	1.5	2	2	2		
Beneath or Beyond Lining System as Shown in Appendix C	Beneath Lining System	Beneath Lining System	Beneath Lining System	Beneath Lining System	Beneath Lining System	Beyond Lining System		
Northing Coordinate	169466.29	169459.97	169469.77	169458.27	169458.93	169460.73		
Easting Coordinate	1699822.15	1699770.03	1699749.56	1699826.87	1699852.64	1699887.74		
PID Reading (ppm)	-0.7 [e]	-0.9 [e]	-0.8 [e]	-0.5 [e]	-0.5 [e]	-0.4 [e]		
Staining, Odor?	No	No	No	No	No	No		
Metals (mg/kg)								
Arsenic	ND (5.6)	ND (5.7)	ND (5.8)	ND (5.9)	ND (11)	ND (11)	7.3	7.3
Barium	**43**	**38**	**35**	**62**	**41**	**59**	100	1,600
Cadmium	ND (0.56)	ND (0.57)	ND (0.58)	ND (0.59)	ND (0.56)	ND (0.56)	0.77	0.77
Chromium	**22**	**20**	**12**	**23**	**17**	**23**	48	480,000
Lead	ND (5.6)	ND (5.7)	ND (5.8)	ND (5.9)	ND (5.6)	ND (5.6)	50	3,000
Mercury	ND (0.056)	ND (0.057)	ND (0.058)	ND (0.059)	ND (0.056)	ND (0.056)	0.10	2.1
Selenium	**0.19**	**0.25**	**0.25**	ND (0.29)	ND (0.28)	**0.29**	0.30	5.2
Silver	ND (1.1)	ND (1.1)	ND (1.2)	ND (1.2)	ND (1.1)	ND (1.1)	2.0	14
VOCs (mg/kg)								
Acetone	**0.015**	**0.090**	ND (0.010)	**0.013**	ND (0.0077)	**0.036**	29	29
Carbon disulfide	ND (0.00086)	ND (0.00088)	ND (0.0010)	ND (0.00090)	ND (0.00077)	ND (0.00071)	5.0	5.0
2-butanone	**0.0050**	**0.0090**	ND (0.0052)	ND (0.0045)	ND (0.0039)	**0.0093**	48,000	--
p-Isopropyltoluene	ND (0.00086)	ND (0.00088)	ND (0.0010)	ND (0.00090)	ND (0.00077)	**0.0021**	--	--
SVOCS (mg/kg)								
Benzo[a]anthracene	ND (0.0045)	ND (0.0045)	ND (0.0046)	ND (0.0039)	ND (0.0037)	ND (0.0037)	--	--
Benzo[b]fluoranthene	ND (0.0045)	ND (0.0045)	ND (0.0046)	ND (0.0039)	ND (0.0037)	ND (0.0037)	--	--
Benzo[k]fluoranthene	ND (0.0045)	ND (0.0045)	ND (0.0046)	ND (0.0039)	ND (0.0037)	ND (0.0037)	--	--

Benzo[a]pyrene	ND (0.0045)	ND (0.0045)	ND (0.0046)	ND (0.0039)	ND (0.0037)	ND (0.0037)	--	--
Benzyl alcohol	ND (0.022)	ND (0.023)	ND (0.023)	ND (0.020)	ND (0.037)	ND (0.019)	3,000	--
Chrysene	ND (0.0045)	ND (0.0045)	ND (0.0046)	ND (0.0039)	ND (0.0037)	ND (0.0037)	--	--
Dibenz[a,h]anthracene	ND (0.0045)	ND (0.0045)	ND (0.0046)	ND (0.0039)	ND (0.0037)	ND (0.0037)	--	--
Indeno[1,2,3-c,d]pyrene	ND (0.0045)	ND (0.0045)	ND (0.0046)	ND (0.0039)	ND (0.0037)	ND (0.0037)	--	--
2-Methylphenol (o-Cresol)	ND (0.022)	ND (0.023)	ND (0.023)	ND (0.020)	ND (0.037)	ND (0.019)	2.3	2.3
(3+4)-Methylphenol (m,p-Cresol)	ND (0.022)	ND (0.023)	ND (0.023)	ND (0.020)	ND (0.037)	ND (0.019)	4,000/8,000	--
2-Methylnaphthalene	ND (0.0045)	ND (0.0045)	ND (0.0046)	ND (0.0039)	ND (0.0037)	ND (0.0037)	320	--
1-Methylnaphthalene	ND (0.0045)	ND (0.0045)	ND (0.0046)	ND (0.0039)	ND (0.0037)	ND (0.0037)	5,600 [b]	5,600 [b]
Fluoranthene	ND (0.0045)	ND (0.0045)	ND (0.0046)	ND (0.0039)	ND (0.0037)	ND (0.0037)	630	630
Fluorene	ND (0.0045)	ND (0.0045)	ND (0.0046)	ND (0.0039)	ND (0.0037)	ND (0.0037)	30	100
Naphthalene	ND (0.0045)	ND (0.0045)	ND (0.0046)	ND (0.0039)	ND (0.0037)	ND (0.0037)	4.5	4.5
Phenanthrene	ND (0.0045)	ND (0.0045)	ND (0.0046)	ND (0.0039)	ND (0.0037)	ND (0.0037)	--	--
Phenol	ND (0.022)	ND (0.023)	ND (0.023)	ND (0.020)	ND (0.037)	ND (0.019)	11	11
Pyrene	ND (0.0045)	ND (0.0045)	ND (0.0046)	ND (0.0039)	ND (0.0037)	ND (0.0037)	650	650
Total cPAHs (TEQ)[c]	**0.0034**	**0.0034**	**0.0035**	**0.0029**	**0.0028**	**0.0028**	0.19	3.9
Total PCBs (mg/kg)	ND (0.022)	ND (0.023)	ND (0.023)	ND (0.024)	ND (0.022)	ND (0.022)	0.5 [b]	0.5 [b]
Organochlorine Pesticides (µg/kg)								
alpha-Chlordane	ND (0.22)	ND (0.23)	ND (0.23)	ND (0.24)	ND (0.22)	ND (0.22)	1.0	2.1
4,4'-DDT	ND (0.22)	ND (0.23)	ND (0.23)	ND (0.24)	ND (0.22)	ND (0.22)	3.5	3.5
Endrin Ketone [d]	ND (0.22)	ND (0.23)	ND (0.23)	ND (0.24)	ND (0.22)	ND (0.22)	--	--

Table 3. Summary of Soil Sampling Analytical Results, Cedar Hills Regional Landfill Area 7 Contaminated Soils, King County, Washington.
For Samples Collected Around Condensate/Leachate Manhole at West End of Area 6/7 South Berm Road on September 19, 2022

Analytical Parameter	Sample ID					MTCA Method B PCUL	MTCA Method B PCUL – Potable GW
	DA7SWCS 30220919I	DA7SWCS 31220919I	DA7SWCS 32220919I	DA7SWCS 33220919I	DA7SWCS 34220919I		
Sample Number Called Out in Appendix C and Report Text	**30**	**31**	**32**	**33**	**34**		
Date Collected	9/19/22						
Sample Location	Bottom Excavation	Bottom Excavation	Sidewall	Sidewall	Sidewall		
Sample Description	Confirm Clean	Confirm Clean	Confirm Clean	Confirm Clean	Confirm Clean		
Approx. Depth (feet) [a]	7	7	4	2.5	1.5		
Beneath or Beyond Lining System as Shown in Appendix C	Beyond Lining System, Beneath Asphalt Pavement	Beyond Lining System, Beneath Asphalt Pavement	Beyond Lining System, Beneath Asphalt Pavement	Beyond Lining System, Beneath Asphalt Pavement	Beyond Lining System, Beneath Asphalt Pavement		
Northing Coordinate	Not Available	Not Available	Not Available	Not Available	Not Available		
Easting Coordinate	Not Available	Not Available	Not Available	Not Available	Not Available		
PID Reading (ppm)	0	0	0	0	0		
Staining, Odor?	Acrid Odor, No Staining	Acrid Odor, No Staining	No	No	No		
Metals (mg/kg)							
Arsenic	ND (5.4)	ND (5.2)	ND (5.3)	ND (5.3)	ND (5.2)	7.3	7.3
Barium	**45**	**44**	**45**	**42**	**38**	100	1,600
Cadmium	ND (0.54)	ND (0.52)	ND (0.53)	ND (0.53)	ND (0.52)	0.77	0.77
Chromium	**13**	**20**	**14**	**17**	**12**	48	480,000
Lead	ND (5.4)	ND (5.2)	ND (5.3)	ND (5.3)	ND (5.2)	50	3,000
Mercury	ND (0.27)	ND (0.26)	ND (0.27)	ND (0.26)	ND (0.26)	0.10	2.1
Selenium	**0.37**	ND (0.26)	**0.30**	ND (0.26)	ND (0.26)	0.30	5.2
Silver	ND (1.1)	ND (1.0)	ND (1.1)	ND (1.1)	ND (1.0)	2.0	14
VOCs (mg/kg)							
Acetone	**1.1**	**0.060**	**1.2**	**0.048**	ND (0.0056)	29	29
Carbon disulfide	ND (0.00047)	ND (0.00061)	ND (0.00036)	ND (0.00056)	ND (0.00056)	5.0	5.0
2-butanone	**0.50**	**0.021**	**0.52**	**0.019**	ND (0.0028)	48,000	--
p-Isopropyltoluene	**0.00079**	ND (0.00061)	**0.0021**	ND (0.00056)	ND (0.00056)	--	--
SVOCS (mg/kg)							
Benzo[a]anthracene	ND (0.0043)	ND (0.0042)	ND (0.0043)	ND (0.0042)	ND (0.0042)	--	--
Benzo[b]fluoranthene	ND (0.0043)	ND (0.0042)	ND (0.0043)	ND (0.0042)	ND (0.0042)	--	--
Benzo[k]fluoranthene	ND (0.0043)	ND (0.0042)	ND (0.0043)	ND (0.0042)	ND (0.0042)	--	--

Benzo[a]pyrene	ND (0.0043)	ND (0.0042)	ND (0.0043)	ND (0.0042)	ND (0.0042)	--	--
Benzyl alcohol	ND (0.021)	ND (0.021)	ND (0.021)	ND (0.021)	ND (0.021)	3,000	--
Chrysene	ND (0.0043)	ND (0.0042)	ND (0.0043)	ND (0.0042)	ND (0.0042)	--	--
Dibenz[a,h]anthracene	ND (0.0043)	ND (0.0042)	ND (0.0043)	ND (0.0042)	ND (0.0042)	--	--
Indeno[1,2,3-c,d]pyrene	ND (0.0043)	ND (0.0042)	ND (0.0043)	ND (0.0042)	ND (0.0042)	--	--
2-Methylphenol (o-Cresol)	**2.0**	ND (0.021)	ND (0.021)	ND (0.021)	ND (0.021)	2.3	2.3
(3+4)-Methylphenol (m,p-Cresol)	N/A	ND (0.021)	**1.9**	ND (0.021)	ND (0.021)	4,000/8,000	--
2-Methylnaphthalene	ND (0.0043)	ND (0.0042)	ND (0.0043)	ND (0.0042)	ND (0.0042)	320	--
1-Methylnaphthalene	ND (0.0043)	ND (0.0042)	ND (0.0043)	ND (0.0042)	ND (0.0042)	5,600 [b]	5,600 [b]
Fluoranthene	ND (0.0043)	ND (0.0042)	ND (0.0043)	ND (0.0042)	ND (0.0042)	630	630
Fluorene	ND (0.0043)	ND (0.0042)	ND (0.0043)	ND (0.0042)	ND (0.0042)	30	100
Naphthalene	ND (0.0043)	ND (0.0042)	ND (0.0043)	ND (0.0042)	ND (0.0042)	4.5	4.5
Phenanthrene	ND (0.0043)	ND (0.0042)	ND (0.0043)	ND (0.0042)	ND (0.0042)	--	--
Phenol	**1.5**	ND (0.021)	**1.9**	ND (0.021)	ND (0.021)	11	11
Pyrene	ND (0.0043)	ND (0.0042)	ND (0.0043)	ND (0.0042)	ND (0.0042)	650	650
Total cPAHs (TEQ)[c]	**0.003247**	**0.003171**	**0.003247**	**0.003171**	**0.003171**	0.19	3.9
Total PCBs (mg/kg)	ND (0.021)	ND (0.021)	ND (0.021)	ND (0.021)	ND (0.021)	0.5 [b]	0.5 [b]
Organochlorine Pesticides (µg/kg)							
alpha-Chlordane	ND (0.21)	ND (0.21)	ND (0.21)	ND (0.21)	ND (0.21)	1.0	2.1
4,4'-DDT	ND (4.2)	ND (4.2)	ND (4.2)	ND (4.2)	ND (4.2)	3.5	3.5
Endrin Ketone [d]	ND (0.21)	ND (0.21)	ND (0.21)	ND (0.21)	ND (0.21)	--	--

Table 4. Summary of Soil Sampling Analytical Results, Cedar Hills Regional Landfill Area 7 Contaminated Soils, King County, Washington.
For Samples Collected Around Condensate/Leachate Manhole at West End of Area 6/7 South Berm Road on September 22, 2022

Analytical Parameter	Sample ID													
	DA7SWCS 35220922I	**DA7SWCS 36220922I**	**DA7SWCS 37220922I**	**DA7SWCS 38220922I**	**DA7SWCS 39220922I**	**DA7SWCS 40220922I**	**DA7SWCS 41220922I**	**DA7SWCS 42220922I**	**DA7SWCS 43220922I**	**DA7SWCS 44220922I**	**DA7SWCS 45220922I**	**DA7SWCS 46220922I**	**MTCA Method B PCUL**	**MTCA Method B PCUL – Potable GW**
Sample Number Called Out in Appendix C and Report Text	**35**	**36**	**37**	**38**	**39**	**40**	**41**	**42**	**43**	**44**	**45**	**46**		
Date Collected	9/22/2022													
Sample Location	Bottom Excavation	Sidewall	Sidewall	Bottom Excavation	Sidewall	Sidewall	Bottom Excavation	Sidewall	Sidewall	Bottom Excavation	Sidewall	Sidewall		
Sample Description	Confirm Clean	Confirm Clean	Confirm Clean	Confirm Clean	Confirm Clean	Confirm Clean	Confirm Clean	Confirm Clean	Confirm Clean	Confirm Clean	Confirm Clean	Confirm Clean		
Approx. Depth (feet) [a]	10	6	4	10	6	4	10	6	3	10	6	3		
Beneath or Beyond Lining System as Shown in Appendix C	Beyond Lining System, Beneath Asphalt Pavement	Beyond Lining System, Beneath Asphalt Pavement	Beyond Lining System, Beneath Asphalt Pavement	Beyond Lining System, Beneath Asphalt Pavement	Beyond Lining System, Beneath Asphalt Pavement	Beyond Lining System, Beneath Asphalt Pavement	Beyond Lining System, Beneath Asphalt Pavement	Beyond Lining System, Beneath Asphalt Pavement	Beyond Lining System, Beneath Asphalt Pavement	Beyond Lining System, Beneath Asphalt Pavement	Beyond Lining System, Beneath Asphalt Pavement	Beyond Lining System, Beneath Asphalt Pavement		
Northing Coordinate	169573.1	169573.1	169573.1	169574.1	169574.1	169574.1	169577.7	169577.7	169577.7	169578.7	169578.7	169578.7		
Easting Coordinate	1698292	1698292	1698292	1698298	1698298	1698298	1698291	1698291	1698291	1698297	1698297	1698297		
PID Reading (ppm)	0	0	0	0	0	0	0	0	0	0	0	0		
Staining, Odor?	Acrid Odor, No Staining	No	No	No	No	No	Acrid Odor, No Staining	No	No	Acrid Odor, No Staining	No	No		
Metals (mg/kg)														
Arsenic	ND (5.2)	ND (5.4)	ND (5.5)	ND (5.3)	ND (5.3)	ND (5.3)	ND (5.3)	ND (5.5)	ND (5.3)	ND (5.3)	ND (5.4)	ND (5.6)	7.3	7.3
Barium	**34**	**38**	**35**	**35**	**26**	**37**	**38**	**34**	**40**	**34**	**30**	**38**	100	1,600
Cadmium	ND (0.52)	ND (0.54)	ND (0.55)	ND (0.53)	ND (0.53)	ND (0.53)	ND (0.53)	ND (0.55)	ND (0.53)	ND (0.53)	ND (0.54)	ND (0.56)	0.77	0.77
Chromium	**10**	**15**	**13**	**13**	**11**	**16**	**15**	**18**	**10**	**12**	**14**	**17**	48	480,000
Lead	ND (5.2)	ND (5.4)	ND (5.5)	ND (5.3)	ND (5.3)	ND (5.3)	ND (5.3)	ND (5.5)	ND (5.3)	ND (5.3)	ND (5.4)	ND (5.6)	50	3,000
Mercury	ND (0.052)	ND (0.054)	ND (0.055)	ND (0.053)	ND (0.053)	ND (0.053)	ND (0.053)	ND (0.055)	ND (0.053)	ND (0.053)	ND (0.054)	ND (0.056)	0.10	2.1
Selenium	ND (0.26)	ND (0.27)	ND (0.27)	ND (0.27)	ND (0.26)	ND (0.27)	ND (0.27)	ND (0.28)	ND (0.26)	ND (0.27)	ND (0.27)	ND (0.28)	0.30	5.2
Silver	ND (1.0)	ND (1.1)	ND (1.1)	ND (1.1)	ND (1.1)	ND (1.1)	ND (1.1)	ND (1.1)	ND (1.1)	ND (1.1)	ND (1.1)	ND (1.1)	2.0	14
VOCs (mg/kg)														
Acetone	**0.084**	ND (0.0078)	ND (0.10)	ND (0.0098)	ND (0.0012)	ND (0.0096)	ND (0.0069)	ND (0.0090)	**0.24**	**0.31**	**2.1**	**0.051**	29	29
Carbon disulfide	ND (0.00069)	ND (0.00052)	ND (0.00068)	ND (0.00065)	ND (0.00083)	ND (0.00064)	ND (0.00046)	ND (0.0006)	ND (0.00077)	ND (0.00064)	ND (0.00069)	ND (0.00058)	5.0	5.0
2-butanone	**0.019**	ND (0.0026)	ND (0.0034)	**0.0062**	ND (0.0041)	ND (0.0032)	ND (0.0023)	ND (0.0030)	**0.091**	**0.050**	**0.30**	**0.045**	48,000	--
p-Isopropyltoluene	ND (0.00069)	ND (0.00052)	ND (0.00068)	ND (0.00065)	ND (0.00083)	ND (0.00064)	ND (0.00046)	ND (0.0006)	ND (0.00077)	ND (0.00064)	ND (0.00069)	ND (0.00058)	--	--
SVOCS (mg/kg)														
Benzo[a]anthracene	ND (0.0042)	ND (0.0043)	ND (0.0044)	ND (0.0042)	ND (0.0042)	ND (0.0043)	ND (0.0043)	ND (0.0043)	ND (0.0042)	ND (0.0043)	ND (0.0043)	ND (0.0044)	--	--
Benzo[b]fluoranthene	ND (0.0042)	ND (0.0043)	ND (0.0044)	ND (0.0042)	ND (0.0042)	ND (0.0043)	ND (0.0043)	ND (0.0043)	ND (0.0042)	ND (0.0043)	ND (0.0043)	ND (0.0044)	--	--
Benzo[k]fluoranthene	ND (0.0042)	ND (0.0043)	ND (0.0044)	ND (0.0042)	ND (0.0042)	ND (0.0043)	ND (0.0043)	ND (0.0043)	ND (0.0042)	ND (0.0043)	ND (0.0043)	ND (0.0044)	--	--
Benzo[a]pyrene	ND (0.0042)	ND (0.0043)	ND (0.0044)	ND (0.0042)	ND (0.0042)	ND (0.0043)	ND (0.0043)	ND (0.0043)	ND (0.0042)	ND (0.0043)	ND (0.0043)	ND (0.0044)	--	--
Benzyl alcohol	ND (0.021)	ND (0.021)	ND (0.022)	ND (0.021)	ND (0.021)	ND (0.021)	ND (0.021)	ND (0.022)	ND (0.021)	ND (0.021)	ND (0.022)	ND (0.022)	3,000	--
Chrysene	ND (0.0042)	ND (0.0043)	ND (0.0044)	ND (0.0042)	ND (0.0042)	ND (0.0043)	ND (0.0043)	ND (0.0043)	ND (0.0042)	ND (0.0043)	ND (0.0043)	ND (0.0044)	--	--
Dibenz[a,h]anthracene	ND (0.0042)	ND (0.0043)	ND (0.0044)	ND (0.0042)	ND (0.0042)	ND (0.0043)	ND (0.0043)	ND (0.0043)	ND (0.0042)	ND (0.0043)	ND (0.0043)	ND (0.0044)	--	--

Indeno[1,2,3-c,d]pyrene	ND (0.0042)	ND (0.0043)	ND (0.0044)	ND (0.0042)	ND (0.0042)	ND (0.0043)	ND (0.0043)	ND (0.0043)	ND (0.0042)	ND (0.0043)	ND (0.0043)	ND (0.0044)	--	--
2-Methylphenol (o-Cresol)	ND (0.021)	ND (0.021)	ND (0.022)	ND (0.021)	ND (0.021)	ND (0.021)	ND (0.021)	ND (0.022)	ND (0.021)	ND (0.021)	ND (0.022)	ND (0.022)	2.3	2.3
(3+4)-Methylphenol (m,p-Cresol)	**0.026**	ND (0.021)	ND (0.022)	ND (0.021)	ND (0.021)	ND (0.021)	**0.021**	ND (0.022)	**0.030**	**0.029**	**0.048**	**0.050**	4,000/8,000	--
2-Methylnaphthalene	ND (0.0042)	ND (0.0043)	ND (0.0044)	ND (0.0042)	ND (0.0042)	ND (0.0043)	ND (0.0043)	ND (0.0043)	ND (0.0042)	ND (0.0043)	ND (0.0043)	ND (0.0044)	320	--
1-Methylnaphthalene	ND (0.0042)	ND (0.0043)	ND (0.0044)	ND (0.0042)	ND (0.0042)	ND (0.0043)	ND (0.0043)	ND (0.0043)	ND (0.0042)	ND (0.0043)	ND (0.0043)	ND (0.0044)	5,600 [b]	5,600 [b]
Fluoranthene	ND (0.0042)	ND (0.0043)	ND (0.0044)	ND (0.0042)	ND (0.0042)	ND (0.0043)	ND (0.0043)	ND (0.0043)	ND (0.0042)	ND (0.0043)	ND (0.0043)	ND (0.0044)	630	630
Fluorene	ND (0.0042)	ND (0.0043)	ND (0.0044)	ND (0.0042)	ND (0.0042)	ND (0.0043)	ND (0.0043)	ND (0.0043)	ND (0.0042)	ND (0.0043)	ND (0.0043)	ND (0.0044)	30	100
Naphthalene	ND (0.0042)	ND (0.0043)	ND (0.0044)	ND (0.0042)	ND (0.0042)	ND (0.0043)	ND (0.0043)	ND (0.0043)	ND (0.0042)	ND (0.0043)	ND (0.0043)	ND (0.0044)	4.5	4.5
Phenanthrene	ND (0.0042)	ND (0.0043)	ND (0.0044)	ND (0.0042)	ND (0.0042)	ND (0.0043)	ND (0.0043)	ND (0.0043)	ND (0.0042)	ND (0.0043)	ND (0.0043)	ND (0.0044)	--	--
Phenol	**0.035**	ND (0.021)	ND (0.022)	**0.040**	ND (0.021)	ND (0.021)	**0.033**	ND (0.022)	**0.23**	**0.21**	**1.3**	**0.082**	11	11
Pyrene	ND (0.0042)	ND (0.0043)	ND (0.0044)	ND (0.0042)	ND (0.0042)	ND (0.0043)	ND (0.0043)	ND (0.0043)	ND (0.0042)	ND (0.0043)	ND (0.0043)	ND (0.0044)	650	650
Total cPAHs (TEQ)[c]	**0.0032**	**0.0032**	**0.0033**	**0.0032**	**0.0032**	**0.0032**	**0.0032**	**0.0032**	**0.0032**	**0.0032**	**0.0032**	**0.0033**	0.19	3.9
Total PCBs (mg/kg)	ND (0.021)	ND (0.021)	ND (0.022)	ND (0.021)	ND (0.021)	ND (0.021)	ND (0.021)	ND (0.022)	ND (0.021)	ND (0.021)	ND (0.022)	ND (0.022)	0.5 [b]	0.5 [b]
Organochlorine Pesticides (µg/kg)														
alpha-Chlordane	ND (0.21)	ND (0.21)	ND (0.22)	ND (0.21)	ND (0.21)	ND (0.21)	ND (0.21)	ND (0.22)	ND (0.21)	ND (0.21)	ND (0.22)	ND (0.22)	1.0	2.1
4,4'-DDT	ND (4.2)	ND (4.3)	ND (4.4)	ND (4.2)	ND (4.2)	ND (4.3)	ND (4.3)	ND (4.4)	ND (4.2)	ND (4.3)	ND (4.3)	ND (4.4)	3.5	3.5
Endrin Ketone [d]	ND (0.21)	ND (0.21)	ND (0.22)	ND (0.21)	ND (0.21)	ND (0.21)	ND (0.21)	ND (0.22)	ND (0.21)	ND (0.21)	ND (0.22)	ND (0.22)	--	--

BOLD values detected above the reporting limit

Shaded bold values exceed the MTCA Method B PCUL for unrestricted land use but remain below MTCA Method B PCUL for potable groundwater.

[a] Approximate depth taken from ground surface elevation at time of sampling, not original South Berm Road elevation.

[b] Cleanup level based on Model Toxics Control Act (MTCA) Method B Cleanup Levels and Risk Calculation (CLARC) values for PCULs not listed in table provided by Ecology.

[c] Total cPAHs toxicity equivalency factor (TEF) was calculated using 1/2 the reporting limit for compounds that were not detected above the reporting limit.

[d] Only the chemical endrin, not endrin ketone, was listed in table provided by Ecology and the MTCA CLARC Table.

[e] Used KCSWD owned PID rather than rented one. Calibration set close-to-zero negative values as zero. Negative value indicates no PID hit.

mg/kg = milligrams per kilogram

MTCA = Model Toxics Control Act

ND = Not detected above laboratory reporting limits shown in parentheses

PCUL = Preliminary Cleanup Level

--=Criteria not established.