REMEDIAL INVESTIGATION AND FEASIBILITY STUDY

Kimberly-Clark Worldwide Site Upland Area, Everett, Washington

Appendix A

Prepared for: Port of Everett

Project No. AS190583A-08 • May 21, 2025 • Final

Aspect
A Geosyntec Company

earth + water

APPENDIX A

Interim Cleanup Action (IA) Reports

INTERIM ACTION REPORT

Kimberly-Clark Worldwide Site Upland Area
Everett, Washington

Prepared for: Kimberly-Clark Worldwide, Inc.

Project No. 110207 • April 8, 2015 Final

Aspect CONSULTING

earth + water

INTERIM ACTION REPORT

Kimberly-Clark Worldwide Site Upland Area
Everett, Washington

Prepared for: Kimberly-Clark Worldwide, Inc.

Project No. 110207 • April 8, 2015 Final

Aspect Consulting, LLC

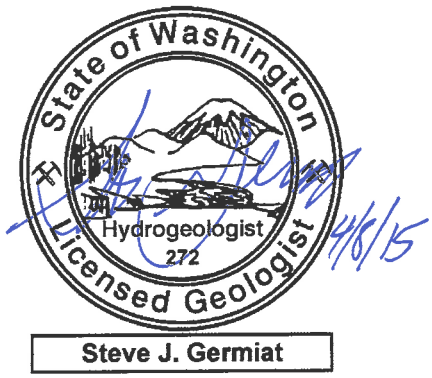

Robert R. Hanford, LG
Senior Geologist
bhanford@aspectconsulting.com

Steve J. Germiat
Steve Germiat, LHG
Principal Hydrogeologist
sgermiat@aspectconsulting.com

v:\110207 KC Everett Mill\Deliverables\IA Report\Final 4-8-15\IA Report - Final.docx

Contents

Acronyms ..... **v**

1 Introduction **1**
1.1 Interim Action Goal 1
1.2 Interim Action Soil Cleanup Levels 1

2 Interim Action Activities and Methodology **3**
2.1 Interim Action Areas 4
2.2 Excavation Dewatering and Management of Water 4
2.3 Soil Excavation and Segregation 5
2.4 Archaeological Monitoring 6
2.5 Performance Monitoring and Over-Excavation 6
2.6 Overburden Soil Sampling and Disposition 7
2.7 Profiling and Off-Site Disposal of Excavated Material 8
2.8 Excavation Backfill 9
2.8.1 Farmers Market 9
2.8.2 Hidden Lake 9
2.8.3 Stilly Sand and Gravel 9
2.8.4 Quarry Spalls 10
2.9 Confirmational Groundwater Monitoring 10

3 Interim Action Soil Cleanup by Area **10**
3.1 BA-MW-6 Area 11
3.2 Boiler/Baghouse Area 12
3.3 Bunker C ASTs Area 13
3.4 CN-B-2 Area (Clark-Nickerson Mill) 16
3.5 GF-11 Area 18
3.6 Heavy Duty Shop Sump Area 19
3.7 Hydraulic Barker Vault Area 19
3.8 Naval Reserve Parcel UST Area 20
3.9 Naval Reserve Parcel South Area 21
3.10 Rail Car Dumper Area 22
3.11 REC2-MW-5 Area (near Diesel AST) 23
3.12 SHB-MW-1 Area (Small Hydraulic Barker Area) 24
3.13 UST 29/Latex Spill Area 26
3.14 UST 70 Area 27
3.15 USTs 71, 72, 73 Area 27
3.16 Removal of Hydraulic Oil from Former Elevator Base inside Warehouse 29

4 Conclusions 30

5 References 31

Limitations 32

List of Tables

1 Interim Action Cleanup Levels for Soil

2 Analytical Data for Treated Water Discharged to Sanitary Sewer

3 Overburden Soil Quality Data

4 Import Backfill Soil Quality Data

5 Excavation Verification Soil Quality Data for BA-MW-6 Interim Action Area

6 Excavation Verification Soil Quality Data for Boiler/Baghouse Interim Action Area

7 Excavation Verification Soil Quality Data for Bunker C ASTs Interim Action Area

8 Excavation Verification Soil Quality Data for CN-B-2 Interim Action Area

9 Excavation Verification Soil Quality Data for GF-11 Interim Action Area

10 Excavation Verification Soil Quality Data for Heavy Duty Shop Sump Area

11 Excavation Verification Soil Quality Data for Hydraulic Barker Vault Interim Action Area

12 Excavation Verification Soil Quality Data for Naval Reserve Parcel UST Interim Action Area

13 Excavation Verification Soil Quality Data for Naval Reserve Parcel South Interim Action Area

14 Excavation Verification Soil Quality Data for Rail Car Dumper Interim Action Area

15 Excavation Verification Soil Quality Data for Proposed Confirmational Monitoring Wells, REC2-MW-5 (near Diesel AST) Interim Action Area

16 Excavation Verification Soil Quality Data for SHB-MW-1 Interim Action Area

17 Excavation Verification Soil Quality Data for UST 29/Latex Spill Interim Action Area

18 Excavation Verification Soil Quality Data for UST 70 Interim Action Area Verification Samples and Residual Exceedances

19 Excavation Verification Soil Quality Data for USTs 71, 72, 73 Interim Action Area

20 Excavation Verification Extractable and Volatile Petroleum Hydrocarbons (EPH/VPH) Soil Quality Data for All Areas

21 Concentrations of Contaminants Remaining Above IACLs

22 Summary of Interim Action by Area

List of Figures

1 Interim Action Excavation Areas

2 BA-MW-6 Interim Action Area Verification Samples and Residual Exceedances

3 Boiler/Baghouse Interim Action Area Verification Samples and Residual Exceedances

4a Bunker C ASTs Interim Action Area Verification Samples and Residual TPHs/cPAHs Exceedances

4b Bunker C ASTs Interim Action Area Verification Samples and Residual Metals Exceedances

5 CN-B-2 Interim Action Area Verification Samples and Residual Exceedances

6 GF-11 Interim Action Area Verification Samples and Residual Exceedances

7 Heavy Duty Shop Sump Interim Action Area Verification Samples and Residual Exceedances

8 Hydraulic Barker Vault Interim Action Area Verification Samples and Residual Exceedances

9 Naval Reserve Parcel UST Interim Action Area Verification Samples and Residual Exceedances

10 Naval Reserve Parcel South Interim Action Area Verification Samples and Residual Exceedances

11 Rail Car Dumper Interim Action Area Verification Samples and Residual Exceedances

12 REC2-MW-5 (near Diesel AST) Interim Action Area Verification Samples and Residual Exceedances

13 SHB-MW-1 Interim Action Area Verification Samples and Residual Exceedances

14 UST 29/Latex Spill Interim Action Area Verification Samples and Residual Exceedances

15 UST 70 Interim Action Area Verification Samples and Residual Exceedances

16 USTs 71, 72, 73 Interim Action Area Verification Samples and Residual Exceedances

List of Appendices

A Waste Disposal Records

B Photographs from Interim Action

C Data Validation Reports

Acronyms

Aspect	Aspect Consulting, LLC
AST	above-ground storage tank
bgs	below ground surface
BMP	best management practice
BTEX	benzene, toluene, ethylbenzene, and xylenes
CEMEX	CEMEX USA soil remediation facility in Everett, Washington
City	City of Everett
Contractor	Clearcreek Contractors Inc.
COC	contaminant of concern
cPAH	carcinogenic polycyclic aromatic hydrocarbon
CSO	combined sewer overflow
CWM	Chemical Waste Management
DA	discharge authorization
DAHP	Washington State Department of Archaeology and Historic Preservation
D008	federal waste code for lead-contaminated characteristic hazardous waste
Ecology	Washington State Department of Ecology
EPH	extractable petroleum hydrocarbons
ESA	environmental site assessment
FS	Feasibility Study
GAC	granular activated carbon
IA	interim action
IACL	interim action cleanup level
K-C	Kimberly-Clark Worldwide Inc.
LDR	Land disposal restrictions
LLC	limited liability company
mg/kg	milligrams/kilograms
mg/L	milligrams per liter
MTCA	Model Toxics Control Act
NAPL	non-aqueous phase liquid

Order	Agreed Order No. DE 9476
PAH	polycyclic aromatic hydrocarbon
PCB	polychlorinated biphenyl
PCS	petroleum-contaminated soil
pH	negative log of the hydrogen ion concentration in solution
PID	photoionization detector
POTW	publicly owned treatment works
PQL	practical quantitation limit
REC	recognized environmental condition
RI	Remedial Investigation
RI/FS	Remedial Investigation/Feasibility Study
SAP	Sampling and Analysis Plan
Site	K-C Worldwide Site
SPLP	synthetic precipitation leaching procedure
SVOC	semivolatile organic compound
TCLP	toxicity characteristic leaching procedure
TEQ	toxic equivalent quotient/concentration
TPH	total petroleum hydrocarbons
µg/L	micrograms per liter
U.S.	United States
Upland Area	Upland Area of the Kimberly-Clark Worldwide Site
UST	underground storage tank
VPH	volatile petroleum hydrocarbons
VOC	volatile organic compound
WAC	Washington Administrative Code
95% UCL	95 percent upper confidence limit on the arithmetic mean

1 Introduction

Aspect Consulting, LLC (Aspect) has prepared this Interim Action Report on behalf of Kimberly-Clark Worldwide, Inc. (K-C), to document the interim action activities completed within the Upland Area of the Kimberly-Clark Worldwide Site (herein referred to as the Upland Area) (Figure 1). The interim action was conducted in accordance with the Interim Action Plan (Aspect, 2012), included as Exhibit C to Agreed Order No. ED 9476 (Order), which was prepared to guide opportunistic cleanup activities conducted in conjunction with facility demolition and prior to redevelopment of the Upland Area.

1.1 Interim Action Goal

The interim action represented a proactive early cleanup of contaminated soils identified from the Upland Area Phase 2 environmental site assessment (ESA) and remedial investigation (RI) sampling and analysis, with a goal to expedite the overall Upland Area cleanup process. The interim action involved permanent removal of contaminated soil, to the maximum extent practicable, to meet interim action soil cleanup levels (IACLs). The interim action did not conflict with or eliminate reasonable alternatives for the Upland Area final cleanup action in accordance with WAC 173-340-430(3)(b).

1.2 Interim Action Soil Cleanup Levels

The 2012 Interim Action Plan dictated that the interim action would, to the extent practicable, remove soil containing contaminant concentrations above soil IACLs. At the time of the Interim Action Plan and the beginning of the interim action, the soil IACLs were defined based on unrestricted land use because the future land use for the Upland Area was not determined. The Interim Action Plan allowed for a change to industrial-use IACLs if it became known that the Upland Area would remain in an industrial land use consistent with the Model Toxics Control Act (MTCA; Chapter 173-340 WAC).

The unrestricted soil IACLs accounted for soil-human direct contact, contact with terrestrial ecological receptors, and soil leaching to groundwater (groundwater protection). Site groundwater is not potable and the groundwater cleanup levels are therefore based on discharge to marine surface water and, for volatile organic compounds (VOCs) only, vapor intrusion. The MTCA-default soil concentrations based on groundwater protection of the marine surface water environment are intentionally conservative, applying the groundwater cleanup levels and default assumptions of MTCA (three-phase partitioning model in WAC 173-340-747(4)), but not fully accounting for contaminant attenuation occurring between a soil location and a location where a receptor could be exposed to groundwater. Soil concentrations protective of groundwater are commonly more stringent than those protective of direct contact, particularly for metals.

Consistent with the RI/FS Work Plan (Aspect, 2013b), IACLs based on direct contact were applied for those contaminants for which empirical evidence (based on pre-RI groundwater data) appeared to indicate that current soil concentrations are protective of groundwater. The empirical demonstration that soil concentrations are protective of

groundwater will be fully evaluated based on all of the RI data. This evaluation may result in changes to the soil screening levels identified in the RI/FS Work Plan (i.e., whether they should be based on direct contact or groundwater protection) if exceedances in groundwater are identified for compounds that had no exceedances based solely on the pre-RI groundwater data. As a result, some residual concentrations of chemicals in soil in the IA areas, which have been reported herein as meeting IACLs based only on the direct contact pathway, may actually be above screening levels identified for the RI/FS if it is shown that soil is not protective of groundwater.

Notably, mercury and zinc were not identified as groundwater constituents of concern in the RI/FS Work Plan, based on the pre-RI data. Groundwater data collected during the RI indicate that those two metals are constituents of concern for groundwater in some portions of the Upland Area. Consequently, soil screening levels that will be applied in the RI for these metals will incorporate groundwater protection criteria, and thus will be reduced by several orders of magnitude. The revised criteria for these metals are at or nearly at natural background concentrations[1] determined in Ecology (1994), and any detection of mercury is an exceedance. These new lower criteria were not applied as IACLs in the interim action, but they are used for purposes of identifying residual exceedances for this report.

Ultimately, the groundwater monitoring proposed in the Interim Action Confirmational Groundwater Monitoring Work Plan (Aspect, 2014c), as well as long-term groundwater compliance monitoring requirements imposed for final cleanup action, will demonstrate whether residual soil concentrations in the interim action areas are protective of groundwater, in accordance with MTCA (WAC 173-340-747(9)).

In late September 2013, shortly after the interim action excavation program began, K-C contracted to sell the property to a maritime ship-building company, with a planned water-dependent industrial redevelopment consistent with City zoning and meeting MTCA requirements to qualify as an industrial property. In light of the anticipated future use as an industrial shipyard with no public access, K-C communicated to Ecology on October 7, 2013 requesting use of industrial-based IACLs. Ecology agreed at that time that the Upland Area would qualify for industrial cleanup levels based on the anticipated future use as an industrial shipyard with no public access. From that point forward, the interim actions were conducted applying industrial-use IACLs. It was expected that the planned industrial use would have qualified for an exclusion from a terrestrial ecological evaluation in accordance with WAC 173-340-7491(1)(b), so MTCA ecological indicator soil concentrations were not considered in the IACLs applied. Table 1 presents the IACLs.

Following completion of the interim action excavation work, the maritime ship building company terminated the contract to acquire the property. Even though the future use of the property is anticipated to be industrial, based on K-C's experience in the marketplace, unless the future use is certain, the forthcoming Upland Area RI/FS will proceed with evaluation relative to unrestricted cleanup levels, including incorporation of terrestrial ecological soil indicator concentrations as appropriate. This will result in changes to the soil screening levels identified in the RI/FS Work Plan and, as a result, some residual

[1] Representing natural mineral content without anthropogenic influence.

concentrations of chemicals in soil in the interim action areas that have been reported herein as meeting IACLs may actually be above screening levels identified for the RI/FS.

Since the majority of the interim action work was conducted considering industrial IACLs (beginning in October 2013), those IACLs are presented and discussed in this report. All of the interim action data representing in-place soil (i.e., representing current conditions) will be incorporated into the Upland Area RI/FS. Therefore, the interim action data will be evaluated relative to unrestricted cleanup levels as part of the RI/FS.

Pyron Environmental, under subcontract to Aspect, completed independent Level III data quality validation of the analytical data generated during the interim action, following procedures specified in U.S. Environmental Protection Agency (EPA) Contract Laboratory Program (CLP) functional guidelines. Based on the validation, the data were of acceptable quality for their intended purposes. Data qualifiers after the validation are included in the data tables in this report. Appendix C provides the data validation reports.

2 Interim Action Activities and Methodology

Through a competitive bid process, K-C selected Clearcreek Contractors Inc. of Everett, Washington, as the construction contractor (Contractor) for the interim action in August 2013. Interim action activities were conducted between mid-August of 2013 and mid-May of 2014. Aspect was the Engineer responsible for field direction of the Contractor, and performance monitoring of the interim action cleanup activities, on behalf of K-C, and is termed the Engineer in this Plan.

The Contractor began mobilization for the interim action on August 19, 2013, and then conducted several weeks of preparatory activities including:

- Installation of truck wash and other erosion control best management practices (BMPs);
- Mobilization of water treatment system components;
- Removal of remaining hog fuel present across the surface in the areas of the underground storage tank (UST) 70 and USTs 71/72/73 interim action areas;
- Physical screening and off-site disposal of stockpiled demolition debris from mill demolition;
- Test pitting to better define contaminant nature and extent for selected interim action areas; and
- Characterization and import of backfill material from the Farmers Market and Hidden Lake sources.

Excavation of potentially contaminated soil began on September 12, 2013, and continued through late March 2014. Final off-site transport of excavated material, final site grading, and demobilization occurred discontinuously into mid-May 2014.

2.1 Interim Action Areas

The 15 interim action areas (see Figure 1) and the contaminants targeted for removal in each were as follows:

- BA-MW-6 Area (oil-range total petroleum hydrocarbons [TPH]);
- Boiler/Baghouse Area (lead);
- Bunker C ASTs Area (oil-range TPH, gasoline-range TPH, and polycyclic aromatic hydrocarbons [PAHs]);
- CN-B-2 Area (oil-range TPH);
- GF-11 Area (lead);
- Heavy Duty Shop Sump Area (oil-range TPH);
- Hydraulic Barker Vault Area (oil-range TPH);
- Naval Reserve Parcel UST Area (diesel-range and gasoline-range TPH);
- Naval Reserve Parcel South Area (oil-range and gasoline-range TPH);
- Rail Car Dumper Area (oil-range TPH);
- REC2-MW-5 Area (near Diesel AST) (oil-range TPH);
- SHB-MW-1 Area (gasoline-range TPH, oil-range TPH, and copper);
- UST 29/Latex Spill Area (xylene and latex);
- UST 70 Area (diesel-range TPH); and
- USTs 71, 72, 73 Area (oil-range TPH).

2.2 Excavation Dewatering and Management of Water

Throughout the interim action, the Contractor conducted excavation dewatering using sumps adjacent to and/or within the excavation as needed to facilitate excavation/handling of soil and Aspect's excavation verification soil sampling (performance monitoring). In accordance with the Interim Action Plan, water produced during dewatering was treated on-site using a temporary water treatment system prior to discharge of the treated water to City of Everett's (City) sanitary sewer in accordance with City Discharge Authorization (DA) number 254-13 granted to K-C in July 2013.

The Contractor's temporary water treatment system consisted of three 3-chamber weir tanks, bag filters, and two granular activated carbon (GAC) vessels. The weir tanks provided removal of settleable solids and floating separate-phase petroleum. Weir tank effluent was pumped through bag filters (5 to 20 micron) for removal of finer suspended solids, and then through GAC vessels for removal of dissolved-phase organics. The treated water was then discharged into K-C's on-site wastewater settling basin, from which it was discharged to City sanitary sewer with regulation of flow rate by the City. Water discharged to sewer was further treated in the City's publicly owned treatment works (POTW). Total discharge to the City POTW over the duration of the interim action was 5,676,900 gallons.

In accordance with the DA, water samples were collected monthly from a sampling port downstream of the GAC vessels throughout the period of water discharge from the interim action. There were no exceedances of the DA effluent criteria during the interim action (Table 2).

Separate-phase petroleum (free product) collected during excavation either by vacuum truck or adsorbent material was characterized and managed for off-site disposal by Emerald Services, as a subcontractor to the Contractor. In addition, approximately 6,230 gallons of separate-phase oil (free product) with oily water was removed and properly disposed of.

During demobilization of the water treatment system, the Contractor cleaned the weir tanks by removing and stockpiling the settled solids from within the tanks. The removed solids were solidified using polymer to allow handling, and hauled off-site for disposal at Republic Services' Regional Subtitle D Landfill in Roosevelt, Washington.

2.3 Soil Excavation and Segregation

The interim action cleanup involved conventional excavation and off-site disposal of contaminated soils. Excavation sidewalls were sloped as needed to facilitate excavation to the depths required to achieve cleanup goals. The dewatering was successful in allowing excavation and handling of unsaturated soil. In some cases, saturated soil was temporarily placed within the confines of the excavation, above the water table, to allow drainage of water back into the excavation prior to loading that material into trucks.

During excavation, Aspect made a determination of whether or not the materials being excavated were contaminated or not (met IACLs or not), based on information from prior investigations, pre-excavation test pits, and field screening evidence during excavation. Field screening methods included visual and olfactory observations, use of a photoionization detector (PID) for determining presence/absence of VOCs, and the use of a sheen test for presence of petroleum (although it was determined to be of limited utility).

Excavated material determined from field screening to be potentially not contaminated, was referred to as "overburden" and was stockpiled in stockpile areas underlined with reinforced 10-mil plastic sheeting and bermed with import sand. The stockpiled overburden was sampled to determine its disposition, as described in Section 2.4.

Excavated materials determined from field screening to be contaminated were loaded for off-site disposal. To the extent practical, contaminated soil that had been drained to an unsaturated condition was directly loaded into waiting dump trucks or intermodal containers for off-site transport to a licensed disposal facility, rather than stockpiled temporarily on-site. Contaminated soil that was temporarily stockpiled on-site, based on availability of trucks or intermodal containers for off-site transport, was placed in stockpile areas underlined with reinforced 10-mil plastic sheeting and bermed with import sand. When contaminated soil was temporarily stockpiled outside of the excavation, it was stockpiled outside of the 200-foot shoreline buffer and the stockpiles were covered daily and maintained until the material was loaded and hauled off-site for disposal.

2.4 Archaeological Monitoring

In accordance with the site-specific Cultural Resources Monitoring and Discovery Plan (SWCA, 2013), archaeological monitoring was conducted by qualified personnel from SWCA during the interim action where excavation through the fill unit into underlying native soil was possible. This occurred during excavation of the Bunker C ASTs area located in the eastern portion of the Upland Area where fill thickness is less and where excavation to depth was planned.

The excavation remained within hydraulically placed dredge fill material, and no archaeological sites were identified. Non-significant historical remains (e.g., pilings supporting a former fuel AST) were also observed. Localized deeper excavations for installation of a dewatering sump encountered apparent native organic-rich silt at a depth of approximately 11 to 12 feet. During excavation, a shelly deposit was observed, which required a work stoppage and further investigation by SWCA to determine if it was an archaeological midden; however, the SWCA archaeologists on-site determined that the shelly deposit did not contain intact midden.

One lithic artifact, an edge-altered cobble, associated with a few fire-modified rocks, was identified within the dredge fill, which also required a work stoppage for investigation by SWCA. Identification of the cobble and its association with fire-modified rocks warranted recording the artifact as an isolate. SWCA retained the isolate in curation until the end of the interim action, and then donated it on K-C's behalf for permanent curation at the Tulalip Tribe's Hibulb Cultural Center and Natural History Preserve, which is a certified collections and archaeological repository. The isolate was also recorded with the state Department of Archaeology and Historic Preservation (DAHP), as required. SWCA's cultural resource monitoring report for the interim action has been provided to DAHP and Ecology; however, state law restricts public disclosure of the locational information regarding the artifact.

2.5 Performance Monitoring and Over-Excavation

Throughout the interim action, Aspect collected verification soil samples for chemical analysis from the sidewalls and bottoms of the excavations to assess compliance with IACLs. Excavation verification samples were collected by hand within the excavation if safe to do so, or using the excavator bucket. Excavation sidewall samples were generally collected at a horizontal spacing of roughly 15 feet and at 3-foot depth intervals across the depth of the sidewall, subject to access limitations. Excavation bottom samples were collected on roughly 15-foot spacing, subject to access limitations. The area-specific descriptions of Section 3 include discussion of sample numbers and differences from a strict 15-foot sample spacing.

Chemical analyses for the verification soil samples specific to each interim cleanup area were discussed with and approved by Ecology. For excavation areas targeting petroleum-related compounds, and which lacked prior data for metals or PCBs, pre-excavation characterization soil sampling and analysis (from test pits) was conducted to obtain metals and PCB data. If the characterization data indicated no exceedances for PCBs, PCBs were not included as analyses for the excavation verification samples. If the characterization data indicated no exceedances for metals, metals were analyzed in every

fifth excavation verification sample collected. If there were exceedances indicated for PCBs or metals, those analytes were included in the verification analyses. Analytical results were generally obtained with a 24-hour laboratory turnaround to guide the excavation efforts with minimal down time.

If the excavation verification data indicated that IACLs were not achieved in an area of the excavation, that portion of the excavation was extended (over-excavated) to remove additional soil so as to meet IACLs, to the extent practicable. Where an excavation sidewall sample exceeded a IACL, the sidewall soil represented by that sample was over-excavated approximately 2 feet laterally, followed by collection of a new sidewall verification sample in that location. Where an excavation bottom sample exceeded IACLs, additional soil from the bottom of the excavation was over-excavated by a depth of approximately 1 foot, followed by collection of a new bottom verification soil sample at that location.

Ecology required that, to avoid the potential for additional remedial action within the footprints of the interim action excavations, over-excavation of the excavation bottom be conducted to meet IACLs for all constituents, if practicable.

Of note is copper, which, with the exception of Area SHB-MW-1, was not a contaminant targeted for removal in the interim action areas, but which commonly exceeded its IACL because the 36 milligrams per kilogram (mg/kg) IACL is equal to a natural background soil concentration as determined by Ecology (1994). Following discussion with Ecology regarding extending excavations solely based on copper exceeding 36 mg/kg, K-C agreed to excavate a maximum of two additional 1-foot lifts (vertically) from excavation bottoms to try to achieve the 36 mg/kg IACLs. If after the second lift the new bottom sample exceeded 36 mg/kg, additional excavation would be conducted if needed to achieve a bottom-sample copper concentration of 60 mg/kg copper, which is near the 90th percentile of the site data collected prior to the interim action. If K-C determined it technically impracticable to do such over-excavation, K-C would discuss with Ecology. At the end of the interim action, no excavation bottom verification samples remaining in place exceed 60 mg/kg copper.

Specifics of the excavation efforts and data for each area are described in Section 3.

2.6 Overburden Soil Sampling and Disposition

In most interim action areas, shallow soil was determined, based on existing data and field screening information, to be contaminated, so no overburden was generated. For the four excavation areas from which overburden soil was produced, the soil was temporarily stockpiled for sampling and analysis to characterize it for appropriate disposition. Three discrete samples of soil were collected and analyzed for each 100 cubic yards of stockpiled overburden from an area. The exception was collection of a single 3-point composite sample from the very small (approximately 4-cubic yard) stockpile of overburden produced from the small Heavy Duty Shop Sump area excavation (Section 3.6). The overburden soil samples were analyzed for gasoline-, diesel-, and oil-range TPH, priority pollutant metals (antimony, arsenic, beryllium, cadmium, chromium, copper, lead, mercury, nickel, selenium, silver, thallium, and zinc), SVOCs including PAHs, VOCs, and PCBs. The soil samples were typically analyzed with rush turnaround of results, and the results were used to qualify the material for use as backfill.

No geotechnically unsuitable overburden (as defined in Interim Action Plan) was produced during the interim action.

In total, approximately 1,700 cubic yards of geotechnically suitable overburden soil were excavated from the Bunker C ASTs, Heavy Duty Shop Sump, Naval Reserve Parcel UST, and Naval Reserve Parcel South areas and stockpiled for sampling and analysis. Fifty-two samples of the stockpiled overburden soil were collected for analysis, and the analytical data are presented in Table 3. For compaction purposes, the overburden soil was intended for placement only above the water table, thus IACLs for unsaturated soil are applicable.

Individual sample results from the overburden soil met IACLs except for a limited number of low-level exceedances for arsenic (3 of 52 exceedances, maximum 30 mg/kg concentration), copper (2 of 52 exceedances, maximum 53.2 mg/kg), zinc (11 of 52 exceedances, maximum 260 mg/kg), and mercury (5 of 52 exceedances, maximum 0.33 mg/kg concentration).

The overburden soil from each excavation area was placed as backfill above the water table (unsaturated soil) within the excavation from which it was produced.

2.7 Profiling and Off-Site Disposal of Excavated Material

Excavated materials to be disposed of off-site were first chemically profiled for waste designation using existing data, and approved for disposal by the licensed disposal facilities. Waste streams generated and disposed of off-site during the interim action included the following:

- Petroleum-contaminated soil (PCS) acceptable for treatment by thermal desorption and landfilling at the CEMEX USA soil remediation facility in Everett, Washington (CEMEX);
- PCS not acceptable by CEMEX because of excessive organic matter (wood) or debris, which was disposed of at Republic Services' Subtitle D landfill in Roosevelt, Washington;
- Xylene-contaminated soil which was landfilled at CEMEX;
- Material containing contaminants other than petroleum, which was disposed of at Republic Services' Subtitle D landfill in Roosevelt, Washington; and
- Characteristic hazardous waste soil (for lead; federal waste designation D008) which required treatment to meet universal treatment standards under the federal Land Disposal Restrictions (LDR) prior to disposal at the Chemical Waste Management (CWM) Subtitle C landfill in Arlington, Oregon. As required by CWM, three loads (truck + trailer, approximately 90 tons total) of this waste were initially delivered to CWM for their treatment pilot testing (chemical stabilization) to ensure that their treatment could meet the universal treatment standards. CWM confirmed that their treatment met the universal treatment standards. Each load of hazardous waste was transported under manifest from the site to the CWM facility.

In total, approximately 38,450 tons of contaminated soil and debris and 1,380 tons of inert debris were removed from the Upland Area and properly disposed of off-site during the interim action. Quantities of material removed from each cleanup area are described in Section 3. Appendix A provides the certificates of disposal for the waste streams along with the Hazardous Waste Manifests for the hazardous waste generated from the GF-11 area.

2.8 Excavation Backfill

Backfill of the interim action excavations largely consisted of imported aggregate from three local sources: Farmer's Market site in Everett, Hidden Lake in Shoreline, Washington, and the Stilly Sand and Gravel Quarry in Arlington, Washington. Approximately 24,650 cubic yards of imported aggregate were used for backfill during the interim action. The approximately 1,700 cubic yards of overburden soil described in Section 2.6 also comprised a small percentage of the total backfill quantity.

Representative sampling and chemical analyses of imported backfill material was conducted in accordance with the Interim Action Plan: 5 samples for up to 1,000 cubic yards of material, and 1 additional sample for every additional 1,000 cubic yards of material. The import soil samples were analyzed for gasoline-, diesel-, and oil-range TPH, priority pollutant metals (antimony, arsenic, beryllium, cadmium, chromium, copper, lead, mercury, nickel, selenium, silver, thallium, and zinc), SVOCs including PAHs, VOCs, and PCBs. Table 4 presents the analytical data for the import materials.

Fifty four of the 55 samples of import soil met the IACLs applied during the interim action; one sample had a detectable mercury concentration above the new IACL as discussed in Section 2.8.3.

Each source of import material is described briefly below.

2.8.1 Farmers Market

A total of 12,525 tons or about 8,000 cubic yards of material for use as backfill was imported from the Everett Farmers Market construction project located within one mile of the site. The material was native glacial outwash sand at depth. Twelve characterization samples were collected from the borrow source for chemical analysis - one sample of stockpiled soil and 11 from *in situ* material - using excavated test pits for sampling. The 12 samples met IACLs (Table 4).

2.8.2 Hidden Lake

A total of 5,472 tons or about 3,650 cubic yards of backfill material was imported from a sediment control project at Hidden Lake in Shoreline, Washington, which is an open-water feature constructed to improve aquatic habitat. The import material was sand removed from a sediment trap on Boeing Creek designed to keep sediment from filling Hidden Lake. Nine characterization samples were collected from the *in situ* material for chemical analysis using hand auger methods. The nine samples met IACLs (Table 4).

2.8.3 Stilly Sand and Gravel

A total of 19,549 tons or about 13,000 cubic yards of material used as backfill was imported from the Stilly Sand and Gravel Quarry in Arlington, Washington. Sixteen characterization samples were collected and analyzed from both stockpiled and *in situ*

material. Fifteen of the 16 samples met IACLs. One sample, STIL-G16, had a detection of mercury (0.47 mg/kg) above the new IACL (any detection is an exceedance) (Table 4). As discussed in Section 1.2, the new IACL for mercury was not applied at the time of the interim action work.

2.8.4 Quarry Spalls

Quarry spalls (fractured bedrock, in the size range of 4 to 7 inches) were used for backfill below the water table in deeper excavated areas to provide a more stable base for compaction of overlying aggregate backfill. The spalls are native bedrock, but there is concern for naturally occurring metals concentrations in bedrock materials based on experiences at other sites. The lab was unable to crush the quarry spall to a particle size small enough for analysis of total metals in their instruments. However, the material could be crushed to an adequately small size to run the synthetic precipitation leaching procedure (SPLP; EPA Method 1312); therefore, the SPLP extraction with analysis of the leachate for priority pollutant metals was conducted to assess protectiveness of groundwater in accordance with WAC 173-340-747(7).

Zinc was the only metal detected in the SPLP leachate (Table 3). The detected leachable zinc concentration (31.6 µg/L) was less than 10 times the 81 µg/L groundwater cleanup level, so the material is protective of groundwater in accordance with WAC 173-340-747(7)(c)(i) (Table 4).

2.9 Confirmational Groundwater Monitoring

Post-construction confirmational groundwater monitoring is underway for the interim action areas, in accordance with the Ecology-approved Confirmational Groundwater Monitoring Work Plan (Aspect, 2014c), to assess whether the completed interim action soil cleanup activities are protective of groundwater (eliminated sources of leachable contaminants). The confirmational groundwater monitoring will initially be conducted on a quarterly basis for one year to assess potential seasonal variability in groundwater quality. Measured analyte concentrations well below groundwater IACLs for the monitoring period could demonstrate compliance for that analyte at that well.

A report of results from the initial four quarters of monitoring will be submitted to Ecology for review and determination of whether IACLs have been met for the specific interim action cleanup areas. If Ecology determines that the data do not adequately demonstrate compliance with cleanup standards for specific areas, additional confirmational monitoring will be conducted for those areas as agreed to with Ecology.

3 Interim Action Soil Cleanup by Area

The section describes the interim action activities completed for each area. Note that, in the verification soil sample data tables, the segregation of soil samples into unsaturated soil (above water table) versus saturated soil (below water table) is based on an analysis done for the forthcoming Upland Area RI, based on groundwater elevations measured in May 2014, which are the highest levels measured since 2012. As such, soil samples that were collected above the water table at the time of excavation may be represented as

saturated soil in the data tables. This represents a conservative assessment because soil screening levels based on groundwater protection are more stringent for saturated soil than for unsaturated soil.

The table of soil analytical data for each area includes samples representing in-place soil, as well as over-excavated samples (at the end of the table) which represent soil removed from the site. In each table, a sample with a designation of "SAT" in the header represents saturated soil; a sample without that designation in the header represents unsaturated soil. The IACLs for saturated and unsaturated soil are also presented in the tables. At the end of the data tables, Table 21 summarizes contaminant concentrations remaining above IACLs in each interim action area, and Table 22 summarizes, for each area, the contaminants targeted for removal, tons of material removed, and the compliance monitoring conducted.

The figure(s) presented for each interim action area depicts verification soil sample data representing in-place soil, for the primary constituents of concern that had IACL exceedances before or after excavation (TPH, cPAHs, metals). In several interim action areas, the verification soil samples were also analyzed for other constituents. The interim action verification data representing in-place soil will be presented with the rest of the site data as part of the RI, with mapping of the collective sample data representing post-interim action conditions.

In addition, Appendix B presents photographs of the interim action excavation in each area.

3.1 BA-MW-6 Area

Oil-range TPH was the contaminant of concern (COC) targeted in the interim action for this area. An elevated oil-range TPH concentration was initially detected in a shallow soil sample (9,300 mg/kg at 1.5-foot depth) collected from RI monitoring well BA-MW-6 in late October 2013. The boring had no exceedances for metals, PAHs, VOCs, or PCBs.

Based on the detected TPH concentration, and its location within 200 feet of the shoreline, K-C decided to include removal of TPH-impacted soil in this area (and the SHB-MW-1 and CN-B-2 areas, described below) as part of the interim action.

In January 2014, prior to initiating interim action excavation activities, four pre-excavation test pits (BA-6N, BA-6S, BA-6E, and BA-6W; Figure 2) were advanced proximate to the BA-MW-6 location to further characterize the lateral extent of the oil-range TPH exceeding IACLs. Two shallow soil samples were collected from each test pit at depths of approximately 0.5 and 2 feet below ground surface (bgs), and submitted for laboratory analysis of diesel- and oil-range TPH. The pre-excavation test pit samples successfully bound the lateral extent of soil with TPH concentrations exceeding the 2,000 mg/kg IACL (Table 4). The collective soil data from the BA-MW-6 area were transmitted to Ecology, and the additional interim action discussed and agreed to, in February 2014.

Prior to initiating excavation in this area, monitoring well BA-MW-6 was decommissioned in accordance with Chapter 173-160 WAC. However, prior to decommissioning, the well was sampled twice for purposes of the RI in accordance with the RI/FS Work Plan (Aspect, 2013b). TPH was not detected and there were no PAH

exceedances in the two groundwater samples collected from well BA-MW-6 (data to be reported in the forthcoming RI Data Report).

The interim action for this area included excavation and proper off-site disposal of approximately 100 tons of soil. The excavation area depicted on Figure 2 reached a final depth of approximately 4 feet bgs. The eastern boundary of the excavation was bounded by a concrete footing. Soil excavated from this area was transported to CEMEX for thermal desorption and then permanent disposal in their permitted landfill.

A total of five excavation verification soil samples (three sidewall and two bottom samples) were collected from the final limits of the small excavation; a portion of the excavation was bounded by a concrete foundation wall (Figure 2). The verification sample frequency, with the additional eight samples collected from the pre-excavation test pits, was substantially compliant with the Interim Action Plan. Verification sample depths are included in Table 5. The verification soil samples were analyzed for diesel- and oil-range TPH and PAHs. The laboratory analytical results for the verification soil samples are included in Table 5.

No concentrations of diesel- or oil-range TPH or PAHs were detected in the five verification soil samples, demonstrating the excavation area complies with soil IACLs (Table 5).

As described in the Groundwater Monitoring Work Plan (Aspect, 2014c), confirmational groundwater monitoring for this area will be completed at new monitoring well BA6-MW-101 (Figure 2).

3.2 Boiler/Baghouse Area

Lead was the COC targeted for removal in the interim action for this area, although pre-excavation soil concentrations of arsenic, copper, mercury, nickel, and zinc also exceeded MTCA-default soil IACLs based on groundwater leaching to protect the marine environment. The Boiler/Baghouse area overlaps with petroleum impacts from the adjacent UST 71 interim action area; petroleum-related compounds in that area are addressed under the UST 71 interim action (refer to Section 3.15). Based on the toxicity characteristic leaching procedure (TCLP) metals data, the lead-contaminated soil designated as non-hazardous waste once excavated. The interim action excavation area and verification soil samples are depicted on Figure 3.

The interim action for this area included excavation and proper off-site disposal of approximately 2,380 tons of soil. The excavation area reached final depths ranging between approximately 2 to 6 feet bgs, with deeper depths in areas of over-excavation to removing soils with IACL exceedances. Groundwater was not encountered while excavating in this area. Soil excavated in this area was transported to Allied for permanent disposal via Subtitle D landfill.

During the excavation, an apparent 10-inch-diameter, 65-feet-deep steel-cased water supply well was exposed; no pump or other instrumentation was present in the well. A review of historical drawings did not reveal the existence of this well. In February 2014, Holt Services decommissioned the apparent well in accordance with Chapter 173-160

WAC, by perforating the entire depth of the casing and pressure grouting with high-yield bentonite grout from the bottom of the casing up to ground surface (via tremie pipe).

The east end of the excavation exposed large bundles of copper wire trending in a north-south orientation. The wire was removed from the excavation but no effort was made to chase wire across the site.

A total of 49 excavation verification soil samples (29 sidewall and 20 bottom samples) were collected from the final limits of the excavation (Figure 3). Subsurface concrete structures limited collection of bottom samples from the northeast and northwest ends of the excavation. Sample frequency was generally consistent with the Interim Action Plan. The verification soil samples were analyzed for metals (antimony, arsenic, cadmium, copper, lead, mercury, nickel, and zinc). Eleven samples were also analyzed for PAHs, and four samples were also analyzed for dioxins/furans.

Soil represented by eight bottom samples and one sidewall sample was subsequently over-excavated based on concentrations of arsenic, copper and/or lead above IACLs. The laboratory analytical results for the verification soil samples are included in Table 6.

Based on the verification soil sample results, soil contaminated by lead (target COC) was successfully removed to meet its industrial-based IACL (i.e., below 1,000 mg/kg). PAH and dioxin/furan concentrations met IACLs. Following over-excavation, residual concentrations of copper exceed its IACL. Concentrations of mercury and zinc meet the IACLs that were in effect at the time of the excavation (based on industrial direct contact), but exceed the IACLs subsequently applied for purposes of this report (based on groundwater leaching to protect the marine environment). The other metals met IACLs (Table 6).

Residual concentrations of copper exceed the 36 mg/kg IACL in three of the final excavation bottom samples (Figure 3), ranging from 45.3 mg/kg to 57.3 mg/kg; all residual detected copper concentrations in the excavation bottom samples are less than 60 mg/kg. Within the excavation bottom, residual concentrations of mercury exceed the new 0.1 mg/kg IACL in four samples (0.13 mg/kg to 16 mg/kg) (Table 5).

On the excavation sidewalls, 18 final verification samples exceed the IACL for copper, ranging from 36.6 mg/kg to 96.9 mg/kg. Residual concentrations of mercury exceed the new 0.1 mg/kg IACL in most sidewall samples (0.13 to 1.9 mg/kg). Eleven sidewall samples exceed the new 100 mg/kg zinc IACL (103 to 328 mg/kg) (Table 5).

In accordance with Aspect (2014c), confirmational groundwater monitoring for this area will be completed at new monitoring wells BBH-MW-101, BBH-MW-102, BBH-MW-103, and BBH-MW-104, as depicted on Figure 3.

3.3 Bunker C ASTs Area

Oil-range TPH (Bunker C fuel oil), gasoline-range TPH, and PAHs were the COCs targeted for removal in the interim action for this area. Based on verification soil sampling during excavation, soil concentrations of copper and mercury also exceeded IACLs in this area. During the process of decommissioning and removing the Bunker C oil and caustic ASTs in the mid-1990s, Scott Paper conducted an independent cleanup of petroleum-contaminated shallow soils within the AST secondary containment area (Scott

Paper, 1995); that letter documents that the Bunker C oil tank being decommissioned did not have a bottom in it. A geomembrane separating the cleanup's import fill from the underlying soil was observed during the interim action excavation. In addition to the Bunker C fuel storage, gasoline ASTs were present in the northwestern portion of the area[2] (see Figures 4a and 4b), and a sump was discovered in the southwestern corner of the excavation as indicated on Figure 4a. The truck loading area on the north side of the building had reinforced concrete pavement ranging in thickness from 8 to 10 inches, which was removed prior to the start of the excavation. The interim action excavation area, and excavation verification soil samples are depicted on Figure 4a (TPH/cPAH exceedance data) and Figure 4b (metals exceedance data).

Monitoring wells MW-3, MW-4, and UST68-MW-6 were decommissioned in accordance with Chapter 173-160 WAC prior to interim action excavation in those areas.

During excavation, groundwater was encountered approximately 2 feet bgs within the eastern limits of the excavation and gradually deepened to the west, approaching 6 feet bgs in the western portion of the excavation. Dewatering was necessary during the excavation and prior to backfilling. The water was pumped to the water treatment system and ultimately to the City POTW under the DA, as described in Section 2.2.

The interim action successfully removed approximately 9,690 tons of petroleum-contaminated material from this area, including removal of several hundred feet of an 11-foot wide, 2-foot-thick monolithic concrete footer[3] to access underlying petroleum-saturated soils that were not removed during the mid-1990s independent cleanup. The only section of the footer that remains in place is next to the northern edge of the Warehouse (Figure 4a). The footer/foundation was wider in its northwest corner, where gasoline ASTs had also been present historically. Removal of the massive footer and gasoline AST area determined the configuration of the excavation's western edge (Figure 4a). The excavation area reached final depths ranging from approximately 6 to 8 feet bgs. Soil excavated in this area was transported to CEMEX for thermal treatment and then landfilling. Petroleum-contaminated concrete and wood pilings removed from this area were transported to Roosevelt Regional Landfill for disposal.

The south and east ends of the excavation were advanced as close as feasible to the edges of the Warehouse structure. Petroleum-contaminated soil exists beneath the northern portion of the Warehouse, as is documented by sidewall verification soil samples collected along the interim action excavation's southern edge (Figure 4a; Table 7). RI sampling and analysis beneath the Warehouse identified residual petroleum in soils associated with historical fuel storage facilities present prior to construction of the Warehouse (data presented in Aspect, 2014a). cPAHs also exceed IACLs in soil beneath the Warehouse. Petroleum-contaminated soil beneath the Warehouse was not targeted for removal during the interim action since the Warehouse may remain on-site for future use.

A total of 170 excavation verification soil samples (95 sidewall and 75 bottom samples) were collected from the limits of the excavation, with 2 bottom and 20 sidewall samples

[2] Based on available aerial photographs, four gasoline ASTs were present in this area from the 1940s through 1960s, and one was present in the 1970s and 1980s.

[3] Footer for the secondary containment wall surrounding on three sides the most recent configuration of the tank farm.

subsequently over-excavated based on exceedances of IACLs (Figure 4a). Due to the expansion of the excavation, sample frequency in the Bunker AST area was reduced from the Interim Action Plan, with collection of sidewall samples at an interval ranging from 15 to 25 feet laterally and in a 25-foot grid for bottom samples. Given that the excavation was expanded in multiple locations in multiple times, particularly on the west side, the sampling locations adapted in an attempt to provide coverage for the changing configuration.

The verification soil samples were analyzed for diesel- and oil-range TPH and PAHs, and every fifth sample was analyzed for metals. When excavating in areas with field screening evidence of gasoline-range hydrocarbons, the verification samples were also analyzed for gasoline-range TPH and VOCs. The sample of petroleum-contaminated soil overexcavated from the former sump area was also analyzed for PCBs, which were not detected. The laboratory analytical results for the verification soil samples are included in Table 7.

Following the interim action soil removal, including over-excavation, residual soil concentrations of gasoline-range TPH, Bunker C (oil-range) TPH[4], total cPAH (TEQ[5]), copper, and mercury at one or more excavation verification sample locations exceed their respective IACLs based on groundwater leaching to protect marine surface water. No VOC exceedances were detected, and benzene, ethylbenzene, toluene, and xylenes were not detected in the verification soil samples, including in samples that were over-excavated (Table 7).

On the excavation bottom, TPH and PAH concentrations meet IACLs (Figure 4a), copper was detected at concentrations greater than its IACL in 2 of 15 verification soil samples (maximum detection of 42.7 mg/kg), and mercury exceeded its new IACL in 1 of 15 samples (0.13 mg/kg; Figure 4b) (Table 6).

On the excavation sidewalls away from the Warehouse, TPH concentrations meet IACLs. Total cPAH (TEQ) was detected in one 3-foot sidewall sample, BAST-S024, at a concentration (0.84 mg/kg) greater than the 0.4 mg/kg IACL for saturated soil but below the 7.9 mg/kg IACL for unsaturated soil; a 3-foot depth at this location was unsaturated at the time of excavation in October 2013, but during seasonal high water conditions (as assumed for this analysis) it is calculated to be saturated. In addition, low-level metals exceedances were detected at two sidewall sample locations away from the Warehouse: copper (52.9 mg/kg) and mercury (0.11 mg/kg) in sample BAST-S016, and mercury (0.18 mg/kg) in sample BAST-S043 (Table 6).

On the eastern excavation sidewall, along the northwest side of the Warehouse, samples BAST-S003 through BAST-S006 have no detectable TPH, consistent with the lack of historical petroleum storage and lack of observed TPH contamination beneath the northeastern portion of the Warehouse (refer to data in Aspect, 2014a). At the southeastern corner of the excavation, a marginal TPH exceedance (2,300 mg/kg TPH[6])

[4] For this area, oil-range TPH was quantified using a Bunker C oil calibration standard and thus reported as Bunker C.
[5] Total toxicity equivalence.
[6] Sum of diesel-range + oil-range TPH concentrations assuming a single petroleum product, in accordance with Ecology policy.

was detected in sample BAST-S01 collected beneath the edge of the Warehouse (Figure 4a).

On the southern excavation sidewall, where residual petroleum-contaminated soils are present beneath the Warehouse, verification soil samples exceed IACLs for TPH (e.g., up to 9,300 mg/kg Total TPH at BAST-S007; up to 2,100 mg/kg gasoline-range TPH at BAST-S51). No metals exceedances were detected in samples collected along the southern excavation sidewall. Sidewall soil samples BAST-S065 (150 mg/kg gasoline-range TPH) and BAST-S075 (10,400 mg/kg Total TPH) were collected adjacent to a large concrete footer supporting the corner of the Warehouse; while these samples are not beneath the Warehouse per se, they represent soil considered inaccessible by conventional excavation without potentially compromising the Warehouse structure.

Selected verification soil samples of petroleum-contaminated soil collected on the southern excavation sidewall were also submitted for laboratory analysis of volatile petroleum hydrocarbons (VPH) and extractable petroleum hydrocarbons (EPH), analyses which provide more detailed information regarding the hydrocarbon composition of the residual petroleum product. Table 20 presents the VPH/EPH data from collective interim action samples from all areas. The RI also included samples of petroleum-contaminated soil collected elsewhere beneath the Warehouse for VPH/EPH analysis. The collective data will be used, as part of the RI, to calculate risk-based soil cleanup levels for the residual petroleum-contaminated soil beneath the Warehouse. In addition, indoor air and sub-slab vapor sampling is being conducted as part of the RI to assess potential vapor intrusion risk posed by the subsurface soils (Aspect, 2014b). Using the collective information, the appropriate cleanup action for residual petroleum-contaminated soil beneath the Warehouse will be determined during completion of the Upland Area Feasibility Study.

In accordance with Aspect (2014c), confirmational groundwater monitoring for this area will be completed at the eight new monitoring wells BCT-MW-101 through BCT-MW-108, as depicted on Figure 4a.

3.4 CN-B-2 Area (Clark-Nickerson Mill)

Oil-range TPH was the COC targeted for removal in the interim action for this area. Based on verification soil sampling during excavation, soil concentrations of arsenic, copper, lead, mercury, zinc, and cPAHs also exceeded IACLs. An elevated oil-range TPH concentration was initially detected in two soil samples (66,000 and 14,000 mg/kg at 6-foot and 10-foot depths respectively) collected from RI soil boring CN-B-2 in December 2013. Based on the detected soil concentrations, and general proximity to the shoreline, K-C decided to include removal of TPH-impacted soil in this area as part of the interim action.

In January 2014, prior to initiating interim action excavation activities, four pre-excavation test pits (CN-2N, CN-2E, CN-2S and CN-2W; Figure 5) were advanced around the CN-B-2 location to further characterize the lateral extent of the oil-range TPH exceeding IACLs. Three soil samples were collected from each test pit at depths of approximately 5, 10, and 11 feet bgs, and submitted for laboratory analysis of diesel- and oil-range TPH. PCBs were analyzed but not detected in a pre-excavation characterization soil sample containing 86,000 mg/kg oil-range TPH. The pre-excavation test pit samples

did not successfully bound the lateral or vertical extent of soil with TPH concentrations exceeding the 2,000 mg/kg IACL (Table 7). The collective soil data from the CN-B-2 area were transmitted to Ecology, and the additional interim action discussed and agreed to, in February 2014.

Prior to initiating the interim action activities in this area, groundwater monitoring well TM-MW-1 was sampled twice for purposes of the RI in accordance with the RI/FS Work Plan (Aspect, 2013b). TPH was not detected in either of the two groundwater samples from well TM-MW-1, and one of the samples had a marginal exceedance (0.034 µg/L) for total cPAH (TEQ) (data to be reported in the forthcoming RI report). While the interim action excavation extended approximately up to well TM-MW-1, the well remains intact following completion of the interim action.

Groundwater was encountered approximately 4 feet bgs within the limits of the excavation. Active dewatering continued throughout the duration of the excavation. The water was pumped to the water treatment system and ultimately to the City POTW under the DA described in Section 2.2.

The interim action for this area included excavation and proper off-site disposal of approximately 6,560 tons of soil. The excavation area depicted on Figure 5 reached a final depth of approximately 18 feet bgs. Two monolithic concrete foundation elements associated with the former Clark Nickerson Mill were left in place (Figure 5). The concrete foundations extend to a depth of approximately 12 feet with wood cribbing visible beneath the concrete to an unknown depth. The excavation contained abundant brick and dimensional lumber and was underlain by an unknown depth of sawdust, all associated with the former Clark Nickerson mill. Material excavated from this area that lacked a substantial percentage of debris was transported to CEMEX for thermal desorption and then landfilling. Much of the soil contained substantial brick and wood debris, making it unsuitable for CEMEX's thermal treatment process, and thus was transported to Roosevelt Regional Landfill for disposal.

A total of 81 excavation verification soil samples (53 sidewall and 28 bottom samples) were collected from the limits of the excavation, with 27 samples subsequently over-excavated based on exceedances of IACLs (Figure 6). The sample interval for bottom samples was greater than 15 feet due to the depth of the excavation and the large concrete monoliths which limited access with the excavator. Excavated material from the deepest areas of the excavation consisted of sawdust and was easily screened for presence of petroleum using olfactory and visual methods along with sheen testing. The verification soil samples were analyzed for diesel- and oil-range TPH, PAHs, and metals. The laboratory analytical results for the verification soil samples are included in Table 8.

Based on the verification soil sample results, residual soil concentrations of TPH within the excavated area meet soil IACLs.

On the excavation bottom, at depths of 16 to 18 feet below grade, one sample contains a low-level arsenic exceedance (25.2 mg/kg in CNB2-B21), one sample has a low-level lead exceedance (114 mg/kg in CNB2-B18), and three samples CNB2-B18, -B25, and -B27 have zinc concentrations greater than the new 85 mg/kg IACL for saturated soil (103 mg/kg, 102 mg/kg, and 216 mg/kg, respectively). In addition, a total cPAH (TEQ) concentration of 6.4 mg/kg, greater than the 0.4 mg/kg saturated soil IACL but less than

the 7.9 mg/kg unsaturated soil IACL, was detected in one bottom sample (CNB2-B27) at a depth of 4 feet; the sample location was unsaturated at the time of excavation, but designates as saturated soil based on the seasonally high water table estimate used for the RI analysis of saturated vs. unsaturated soils (Table 8).

On the excavation sidewalls, sporadic low-level metals exceedances were also detected in selected samples: four copper exceedances (ranging from 36.8 to 77.6 mg/kg), one lead exceedance (121 mg/kg), and two mercury exceedances of the new 0.1 mg/kg IACL (0.13 to 0.15 mg/kg). One sample of saturated soil from the excavation sidewall also has an exceedance for total cPAH (TEQ) (0.73 mg/kg in CNB2-S36) (Table 8).

In accordance with Aspect (2014c), confirmational groundwater monitoring for this area will be completed at new monitoring wells CN-MW-101, CN-MW-102, CN-MW-103 and CN-MW-104 (Figure 5).

3.5 GF-11 Area

Lead was the COC targeted for removal in this interim action area, based on a surficial occurrence of lead contamination at boring GF-11 conducted during the Phase 2 ESA. Based on the TCLP-leachable concentration of lead at the GF-11 boring, the lead-contaminated soils from this area designated as characteristic hazardous waste (federal waste code D008), and required treatment to meet universal treatment standards under the federal Land Disposal Restrictions prior to land disposal in a Subtitle C landfill.

Prior to initiating interim action excavation, six pre-excavation test pits (TP-1 through TP-6; Figure 6) were initially advanced in August 2013 around the anticipated perimeter of the GF-11 excavation area to better define the quantity of soil requiring excavation. From each test pit, soil samples from the test pit sidewall closest to boring GF-11 and from the test pit bottom were collected for chemical analysis of metals. Lead concentrations in the test pits ranged from 2.4 to 120 mg/kg, meeting the IACL for unsaturated soil (Table 8).

The interim action for this area included excavation and proper off-site treatment and disposal of 224 tons of hazardous (D008) soil. The excavation area depicted on Figure 6 reached a final depth of approximately 3 feet below the original soil grade. No groundwater was encountered during the excavation activities.

As stated in Section 2.7, approximately 90 tons of this waste were initially delivered under hazardous waste manifest to CWM's Subtitle C facility in Arlington, Oregon, for their treatment pilot testing (chemical stabilization). CWM confirmed that their treatment met the universal treatment standards. Once approved by CWM, the remaining excavated soils were transported under hazardous waste manifest to CWM's facility for chemical stabilization followed by Subtitle C land disposal. The hazardous soil was treated and disposed of within 90 days of generation.

The interim action excavation area, excavation verification soil samples, and pre-excavation characterization test pits are depicted on Figure 6. A total of nine excavation verification soil samples (seven sidewall and two bottom samples) were collected from the final limits of the excavation (Figure 6). Sample frequency for verification samples generally followed Interim Action Plan. The verification soil samples were analyzed for

metals (arsenic, cadmium, copper, lead, mercury, nickel, and zinc) and PAHs. The laboratory analytical results for the verification soil samples are included in Table 9.

Following the interim action soil removal, lead concentrations within the excavated area meet the IACL. However, residual soil concentrations of copper, mercury, and zinc within the excavation exceed IACLs based on groundwater leaching to protect the marine environment. PAHs meet IACLs in the excavation (Table 9).

On the excavation bottom, mercury concentrations in two samples (0.33 to 0.43 mg/kg) exceed the new 0.1 mg/kg IACL. On the excavation sidewalls, detected concentrations of copper exceed the 36 mg/kg IACL in two samples (36.2 to 99.2 mg/kg), detected concentrations of mercury exceed the new 0.1 mg/kg IACL in five samples (0.11 to 0.50 mg/kg), and the detected zinc concentration in one sample (126 mg/kg) exceeded the new 100 mg/kg IACL. Soil samples from the surrounding test pits also exceeded IACLs for copper (up to 52.8 mg/kg) and mercury (up to 0.36 mg/kg) (Table 9).

In accordance with Aspect (2014c), confirmational groundwater monitoring for this area will be completed at new monitoring well GF11-MW-101, as depicted on Figure 6.

3.6 Heavy Duty Shop Sump Area

Oil-range TPH was the inferred COC targeted in the interim action for this area, based on oily material observed in the sump structure during the Phase ESA (Recognized Environmental Condition [REC] 3 in AECOM, 2011). The contents of the sump structure were removed and properly disposed of during demolition of the Shop structure. No groundwater was observed during excavation. The interim action excavation and excavation verification soil samples are depicted on Figure 7.

No visual or olfactory evidence of contamination was observed during the interim action excavation of the sump structure or immediately surrounding sub-slab soils. Because of the extremely small excavation size (6- by 10-feet), only one verification sample was collected from each sidewall of the excavation. The five verification soil samples (one bottom and four sidewall) collected from the 6- by 10-foot sump removal excavation were sampled for SVOCs including PAHs, metals, TPH, PCBs, and VOCs. Excavation sample results contained no detectable TPH, PCBs or VOCs and no concentrations of SVOCs including PAHs above IACLs (Table 10). With the change in IACLs for zinc, one sidewall sample (HDS-EX-NSW) contained a zinc concentration (114 mg/kg) marginally exceeding the 100 mg/kg IACL; no other metals exceeded IACLs in the verification samples (Table 10).

Contamination of this area was inferred in the Phase 1 ESA but was not confirmed by the interim action field screening or analytical data. Therefore, no confirmational groundwater monitoring is being conducted for this area (Aspect, 2014c).

3.7 Hydraulic Barker Vault Area

During demolition of the mill, a vault was uncovered in the general area of the former Hydraulic Barker Building operations. The vault reportedly contained water with an approximately 2-inch layer of hydraulic oil floating on it. During demolition, a vactor truck was used to pump out the oil and water from the vault, and a steel plate was placed over it, pending cleanup in the interim action. Based on oil-contaminated soil within and

immediately surrounding the vault, K-C decided to include removal of TPH-impacted soil in this area as part of the interim action.

Oil-range TPH was the COC targeted for removal in the interim action for this area. In September 2013, prior to initiating interim action excavation activities, one pre-excavation test pit (XYAREAVT-TP1; Figure 8) was advanced proximate to the vault location to further characterize the nature of the oil-range TPH. One soil sample was collected from the test pit at a depth of 8 feet bgs, and submitted for laboratory analysis of diesel- and oil-range TPH, metals, and PCBs. The pre-excavation test pit sample contained 8,650 mg/kg oil-range TPH, but PCB and metals concentrations were below IACLs (Table 10).

As a first step in the interim action, accumulated fluids within the vault were removed again by vactor. The vault structure was subsequently removed and properly disposed of, and visually impacted soil excavated. The excavation area depicted on Figure 8 reached a final depth of approximately 8 feet bgs. Minor groundwater seepage was noted at about 7.5 feet, but no dewatering was necessary to complete the excavation in this area. The interim action for this area included excavation of approximately 10 tons of soil, which was transported to CEMEX for thermal treatment and then landfill disposal.

A total of six excavation verification soil samples (four sidewall and two bottom samples) were collected from the limits of the very small excavation (Figure 8). Because of the small, irregular excavation shape, only one verification sample was collected from each sidewall of the excavation - approximately 10 feet apart. The verification soil samples were analyzed for diesel- and oil-range TPH and PAHs; every fifth sample was analyzed for metals. The laboratory analytical results for the verification soil samples are included in Table 11.

Based on the verification soil sample results, residual soil contaminant concentrations within the excavated area meet IACLs (Table 11).

In accordance with Aspect (2014c), confirmational groundwater monitoring for this area will be completed at new monitoring well HBV-MW-101 (Figure 8).

3.8 Naval Reserve Parcel UST Area

Soils containing diesel-range TPH concentrations up to 40,000 mg/kg were left in place following the Navy's removal of gasoline and diesel USTs (Foster Wheeler, 1998). Diesel-range TPH was therefore the COC targeted for removal in the interim action for this area. Gasoline-range TPH was also a COC targeted for removal. Although not targeted for removal, cPAHs also exceeded soil IACLs in this area. The interim action excavation area and excavation verification soil samples for this area are depicted on Figure 9.

Groundwater was encountered approximately 8 feet bgs within the limits of the excavation. Dewatering was necessary during the deeper portions of the excavation and prior to backfilling. The water was pumped to the water treatment system and ultimately to the City POTW under the DA described in Section 2.2.

The interim action for this area included excavation and proper off-site disposal of approximately 2,280 tons of soil. The excavation area reached a final depth of

approximately 12 feet bgs. Most of the soil excavated in this area was transported to CEMEX for thermal desorption and landfilling. However, abundant milled wood debris was present in the northeastern edge of the excavation, making this material unsuitable for CEMEX's thermal desorption process; the wood-laden material was therefore disposed of at Roosevelt Regional Landfill.

A total of 37 excavation verification soil samples (30 sidewall and 7 bottom samples) were collected from the limits of the excavation (Figure 9), with 2 sidewall and 1 bottom samples subsequently over-excavated based on exceedances of IACLs. Large quantities of milled lumber debris were present in the eastern and northeastern sidewalls of the excavation, which limited the number of verification sidewall samples collected. Steep unstable sidewalls and caving soil limited access to the bottom of the excavation. Bottom samples were limited by the reach of the excavator bucket while keeping a safe distance from the edge of the excavation.

The verification soil samples were analyzed for diesel- and oil-range TPH and PAHs; when field screening suggested the possible presence of gasoline-range hydrocarbons, verification samples were also analyzed for gasoline-range TPH and VOCs. Prior data from the Phase 2 ESA (Aspect, 2013a) demonstrated no metals exceedances, so metals analyses were not conducted for the verification samples. PCBs were not detected in any of the twelve soil samples collected during the Navy's 1997 demolition of the Naval Reserve Parcel and removal of the USTs in this area (Foster Wheeler, 1998). Based on these data, and the fact that the petroleum targeted for removal was from releases of gasoline and diesel fuels, for which MTCA does not require PCB sampling[7], PCB analyses were not conducted for the verification soil sampling in this UST area. The laboratory analytical results for the verification soil samples are included in Table 12. One verification soil sample subsequently overexcavated was also analyzed for EPH/VPH (Table 20).

Following the interim action soil removal, residual contaminant concentrations within the excavated area meet IACLs, with the exception of one sample of saturated soil from the excavation sidewall (NRU-S06) containing a 0.53 mg/kg total cPAH (TEQ) concentration marginally exceeding the 0.4 mg/kg IACL based on groundwater leaching for marine protection (Table 12).

In accordance with Aspect (2014c), confirmation groundwater monitoring for this area will be completed at existing monitoring well NRP-MW-2 and new monitoring wells NRU-MW-101 and NRU-MW-102, as depicted on Figure 9.

3.9 Naval Reserve Parcel South Area

During the Phase 2 ESA, petroleum-impacted soils (including gasoline-range and oil-range hydrocarbons) were identified at depths at and below the water table within this southern portion of the former Naval Reserve Parcel (former borings NRP-B-2, NRP-B-7, and NRP-B-17 through NRP-B-21). Despite the elevated soil TPH concentrations, no petroleum or PAH exceedances were detected in groundwater samples collected from well NRP-MW-1 in that immediate area. Given that the TPH-impacted soils were located within approximately 100 feet of the shoreline, Ecology requested that they be removed

[7] See Table 830-1 of WAC 173-340-900.

during the interim action (email communication from Andy Kallus to Steve Germiat and Cindy Jernigan, December 9, 2013, with follow-up teleconference on December 11, 2013).

Prior to initiating the interim action activities in this area, monitoring well NRP-MW-1 was decommissioned in accordance with Chapter 173-160 WAC. Three characterization test pits (NRA1-PC1, -PC2, and -PC3) were advanced within the initially planned excavation area; soil samples were collected from them at the water table depth for chemical analyses of gasoline-, diesel-, and oil-range TPH, BTEX, PAHs, metals, and PCBs. No exceedances were detected in soil samples from the three locations (Table 13).

The interim action for this area included excavation and proper off-site disposal of approximately 1,710 tons of soil. The excavation area depicted on Figure 10 reached a final depth of approximately 12 feet bgs. Groundwater was encountered approximately 8 feet bgs and dewatering was required to accomplish the excavation. Abundant creosote-treated piles were exposed on the east side of the excavation, presumed to be part of the former Clark-Nickerson mill. The Contractor was unsuccessful at pulling the piles out using the excavator, and they were therefore cut or broken off at the bottom of the excavation. Much of the contaminated soil excavated from this area was transported to CEMEX for thermal treatment and landfilling. Contaminated material containing excessive debris was transported and disposed of at Roosevelt Regional Landfill.

A total of 38 excavation verification soil samples (29 sidewall and 9 bottom samples) were collected from the limits of the excavation (Figure 10), four of which were subsequently over-excavated including sample NRS-S07 with an exceedance of gasoline-range TPH (Table 13). Verification sample frequency was adjusted somewhat from the Interim Action Plan due to the depth of the excavation, steep caving sidewalls, piling and bulkhead structures in the excavation. Final verification sampling intervals were was approximately 20 to 25 feet laterally, with a bottom grid of about 25-foot spacing.

The verification soil samples were analyzed for gasoline-, diesel-, and oil-range TPH, PAHs, and VOCs; every fifth sample was also analyzed for metals. The laboratory analytical results for the verification soil samples are included in Table 13. Apparent creosote sheen was observed at the NRS-S21/-S22 sample location after collection of those samples; therefore, that area was over-excavated despite the NRS-S21 and –S22 samples having no detected exceedances (Table 13).

Based on the verification soil sample results, residual soil contaminant concentrations within the excavated area meet soil IACLs (Table 12; Figure 10).

In accordance with Aspect (2014c), confirmational groundwater monitoring for this area will be completed at new monitoring wells NRS-MW-101 and NRS-MW-102 (Figure 10).

3.10 Rail Car Dumper Area

Oil-range TPH was the COC targeted in the interim action for this area, based on oil staining observed on the structure (REC 4) during the Phase 1 ESA (AECOM, 2011), Based on verification soil sampling during excavation, soil concentrations of arsenic,

copper, mercury, nickel, and zinc also exceeded IACLs in this area. The interim action excavation area and excavation verification soil samples are depicted on Figure 11.

The interim action for this area included excavation and proper off-site disposal of approximately 140 tons of soil. The excavation area depicted on Figure 11 reached final depths of approximately 2 to 6 feet bgs after localized over-excavation; groundwater was not observed during excavation. The western edge of the excavation was bounded by the seawall and the north and northeastern edges were bounded by the concrete structures associated with the former railcar dumper. Soil excavated in this area was transported to CEMEX for thermal treatment and then landfilling. Apparent boiler clinker (light gray indurated material, 1 to 2 inches in size) located adjacent to the northern concrete structure within the excavation was also removed and disposed of at Roosevelt Regional Landfill.

A total of 15 excavation verification soil samples (11 sidewall and 4 bottom samples) were collected from the limits of the excavation, with 5 samples subsequently over-excavated based on exceedances of IACLs (Figure 11). Verification sample frequency was consistent with the Interim Action Plan. The verification soil samples were analyzed for diesel- and oil-range TPH, PAHs, metals, and PCBs. The laboratory analytical results for the verification soil samples are included in Table 14.

Following the interim action soil removal including over-excavation, residual contaminant concentrations within the excavated area meet IACLs (Table 14).

In accordance with Aspect (2014c), confirmational groundwater monitoring for this area will be completed at new monitoring well RCD-MW-101 (Figure 11).

3.11 REC2-MW-5 Area (near Diesel AST)

Oil-range TPH was the COC targeted for removal in this interim action area. Based on verification soil sampling during excavation, soil concentrations of copper, lead, mercury, zinc, and cPAHs also exceeded IACLs in this area. This location has previously been referred to as part of the Diesel AST area because of proximity to the former Diesel AST; however, the shallow soil contamination observed at the REC2-MW-5 location during the Phase 2 ESA was oil-range TPH – consistent with the adjacent Bunker C AST area – and it was unrelated to the former Diesel AST. The interim action excavation area and excavation verification soil samples are depicted on Figure 12.

Prior to initiating the interim action excavation, monitoring well REC2-MW-5 was decommissioned in accordance with Chapter 173-160 WAC.

Groundwater was encountered approximately 3 feet bgs within the limits of the excavation. Dewatering was necessary to accomplish over-excavation after initial verification sampling and prior to backfilling. The water was pumped to the water treatment system and ultimately to the City POTW under the DA described in Section 2.2.

The interim action for this area included excavation and proper off-site disposal of approximately 510 tons of soil. The excavation area depicted on Figure 12 reached a final depth of approximately 3 to 4 feet bgs. A cluster of stranded bare copper wires approximately 1 inch in diameter was exposed and removed during the excavation. Soil

excavated in this area was transported to CEMEX for thermal treatment and then landfilling.

A total of 20 excavation verification soil samples (11 sidewall and 9 bottom samples) were collected from the limits of the excavation (Figure 12), with 3 samples subsequently over-excavated based on exceedances of IACLs. Verification sample frequency was consistent with the Interim Action Plan with a slight adjustment on the east side of the excavation due to the presence of subsurface concrete footings that limited access. The verification soil samples were analyzed for diesel- and oil-range TPH, PAHs, metals, and PCBs. The laboratory analytical results for the verification soil samples are included in Table 15.

Following the interim action soil removal including over-excavation, residual soil TPH concentrations within the excavated area meet IACLs. However, residual soil concentrations of copper, mercury, and zinc within the excavated area exceed respective IACLs based on groundwater leaching to protect the marine environment (Table 15).

On the excavation bottom, copper exceedances were detected in three samples (up to 56.9 mg/kg). In addition, concentrations of mercury in two samples (up to 0.17 mg/kg), and zinc in two samples (up to 525 mg/kg) exceeded their respective new IACLs. During over-excavation, the northern sidewall was sloughing and covered the excavation bottom represented by verification samples DAST-B04, DAST-B06, and DAST-B07 with metals exceedances.

On the excavation sidewalls, 5 of the 10 final verification samples contained minor copper exceedances (up to 47.7 mg/kg), while two samples each contained concentrations of mercury (up to 0.31 mg/kg) and zinc (up to 456 mg/kg) exceeded their respective new IACLs (Table 14; Figure 12).

In accordance with Aspect (2014c), confirmational groundwater monitoring for this area will be completed at new monitoring well DAST-MW-101 (Figure 12).

3.12 SHB-MW-1 Area (Small Hydraulic Barker Area)

Gasoline-range and oil-range TPH along with copper were the COCs targeted for removal in this interim action area. Based on verification soil sampling during excavation, soil concentrations of mercury and zinc also exceeded IACLs in this area. Elevated TPH concentrations (4,800 mg/kg gasoline-range and 28,000 oil-range) were initially detected in a 3-foot soil sample collected from RI monitoring well SHB-MW-1 in late October 2013. Despite the high gasoline-range TPH concentration, no VOC exceedances were detected. Based on the detected soil TPH concentrations, and location within 200 feet of the shoreline, K-C decided to include removal of TPH-impacted soil in this area as part of the interim action.

In January 2014, prior to initiating interim action excavation activities, four pre-excavation test pits (SHB-1N, SHB-1E, SHB-1S and SHB-1W; Figure 13) were advanced proximate to the SHB-MW-1 location to further characterize the lateral extent of the oil-range TPH exceeding IACLs. One shallow soil sample was collected from each test pit at a depth of 2.5 to 3.5 feet bgs, and submitted for laboratory analysis of diesel- and oil-range TPH and copper. The pre-excavation test pit samples successfully bound

the lateral extent of soil with TPH concentrations exceeding the 2,000 mg/kg IACL (Table 15). However, copper was detected at a concentration of 562 mg/kg, well above the IACL, in the soil sample from the northern test pit (SHB-1N). The collective pre-excavation soil data from the SHB-MW-1 area were transmitted to Ecology, and the additional interim action discussed and agreed to, in February 2014.

Prior to initiating the interim action activities in this area, monitoring well SHB-MW-1 was decommissioned in accordance with Chapter 173-160 WAC. Prior to decommissioning, the well was sampled twice for purposes of the RI in accordance with the RI/FS Work Plan (Aspect, 2013b). The two groundwater samples from well SHB-MW-1 had no detectable TPH and no PAH exceedances, but had arsenic exceedances (data to be reported in the forthcoming RI report).

The interim action for this area included excavation and proper off-site disposal of approximately 210 tons of soil. The excavation area depicted on Figure 13 reached a final depth of approximately 4 feet bgs. Groundwater was not encountered during excavation.

Because of the detected metals concentrations and debris content, the soil excavated from this area was deemed unacceptable for thermal treatment at CEMEX, so it was transported for disposal at Roosevelt Regional Landfill.

Initially, nine excavation verification soil samples (six sidewall and three bottom samples) were collected from the limits of the excavation (Figure 13). Verification sample frequency was consistent with the Interim Action Plan. The verification soil samples were analyzed for gasoline-, diesel-, and oil-range TPH, PAHs, metals, and VOCs.

The southern sidewall verification sample SHB-S03 had a detection of oil-range TPH at 4,300 mg/kg, so the sidewall was over-excavated in that area. Following over-excavation, the new verification sample collected from the south sidewall (SHB-S07) contained a TPH concentration less than the IACL. The laboratory analytical results for the verification soil samples are included in Table 16.

Following the interim action soil removal including over-excavation, residual soil TPH concentrations within the excavated area meet IACLs. However, residual soil concentrations of copper, mercury, and zinc within the excavated area exceed respective IACLs based on groundwater leaching to protect the marine environment (Table 16).

Soils on the excavation bottom meet IACLs.

On the excavation sidewalls, detected copper concentrations exceeded the IACL in three samples (up to 65.1 mg/kg), one mercury concentration (0.12 mg/kg) exceeded the new IACL, and zinc concentrations exceeded the new IACL in two samples (up to 229 mg/kg) (Table 16).

In accordance with Aspect (2014c), confirmational groundwater monitoring for this area will be completed at new monitoring wells SHB-MW-101 and SHB-MW-102 (Figure 13).

3.13 UST 29/Latex Spill Area

Xylenes were the COC targeted for removal in this interim action area. Soil concentrations of cPAH along with diesel- and gasoline-range organics also exceeded IACLs in this area. A release of latex also occurred east of the former UST 29 xylene release location, and the latex partially overlaps the xylene release area. While the latex product spilled in this area contained trace concentrations of formaldehyde, vinyl acetate, and 1,4-dioxane, those compounds were not detected at concentrations greater than analytical reporting limits in soil or groundwater during the Phase 2 ESA (Aspect, 2013a). The interim action excavation area and excavation verification soil samples are depicted on Figure 14.

Monitoring wells UST29-MW-1 and REC6-MW-1 were decommissioned in accordance with Chapter 173-160 WAC prior to the interim action excavation.

Groundwater was encountered approximately 6 feet bgs within the limits of the excavation. Dewatering was necessary during the excavation and backfilling. The water was pumped to the water treatment system and ultimately to the City POTW under the DA described in Section 2.2.

The interim action for this area included excavation and proper off-site disposal of approximately 5,440 tons of soil. The excavation area reached a final depth of approximately 5 feet bgs on the eastern latex-impacted area, and from 15 to 17 feet bgs in the xylene release area. A concrete slab with tie downs for the two former underground storage tanks (USTs[8]) was exposed in the xylene release area. The presence of inert debris in the excavation made some soil excavated from this area unsuitable for thermal desorption at CEMEX. Much of the xylene-contaminated soil excavated from this area was transported to CEMEX for landfilling, whereas excavated material containing visible latex and/or excessive debris was transported to Roosevelt Regional Landfill for disposal.

A total of 57 excavation verification soil samples (41 sidewall and 16 bottom samples) were collected from the limits of the excavation, with 9 sidewall and 3 bottom samples subsequently over-excavated based on exceedances of IACLs (Figure 14). Verification bottom sample frequency was limited due to the depth of the excavation, steep sidewalls, and steel I-beam piles. The excavation bottom grid is on the order of 25 feet for the bottom verification samples.

The verification soil samples were analyzed for gasoline-, diesel-, and oil-range TPH, PAHs, and VOCs. PCBs were analyzed for but not detected in the characterization sample (XY-TPSW2-8) collected prior to excavation. Every fifth sample was also analyzed for metals, and samples collected from the latex release area were also analyzed for formaldehyde. The laboratory analytical results for the verification soil samples are included in Table 17.

Following the interim action soil removal including over-excavation, contaminant concentrations within the excavated area meet IACLs (Table 17). In accordance with Aspect (2014c), confirmation groundwater monitoring for this area will be completed at new monitoring wells UST29-MW-101 through UST29-MW-103 (Figure 14).

[8] UST 29 contained xylene and UST 67 contained kerosene (Aspect, 2013a).

3.14 UST 70 Area

Diesel-range TPH was the COC targeted for removal in this interim action area. The interim action excavation area and excavation verification soil samples are depicted on Figure 15.

Monitoring well UST70-MW-1 was decommissioned in accordance with Chapter 173-160 WAC prior to excavation in this area.

Groundwater was encountered approximately 11 feet bgs within the limits of the excavation. Dewatering was necessary prior to backfilling. The water was pumped to the water treatment system and ultimately to the City POTW under the DA described in Section 2.2.

The interim action for this area included excavation and proper off-site disposal of approximately 1,050 tons of soil. The excavation area reached a final depth of approximately 10 to 12 feet bgs. A pair of concrete footings with tank tie downs was exposed and removed during the excavation. Numerous steel I-beams and steel tiebacks, which appeared to be from a former bulkhead structure, were exposed along the western wall of the excavation. Soil excavated from this area was transported to CEMEX for thermal treatment and then landfilling.

A total of 27 excavation verification soil samples (22 sidewall and 5 bottom samples) were collected from the limits of the excavation, with 8 sidewall samples subsequently over-excavated based on exceedances of IACLs (Figure 15). Verification bottom sample frequency was limited due to the depth of the excavation and access restrictions posed by the former tank's concrete pad, tie backs for the bulkhead, and, on the western sidewall, steel I-beam piles. The excavation bottom grid is on the order of 25 feet for the bottom verification samples.

The verification soil samples were analyzed for diesel- and oil-range TPH and PAHs; every fifth sample was also analyzed for metals. PCBs were analyzed for but not detected in the characterization sample (UST70-TP1) collected prior to excavation. The laboratory analytical results for the verification soil samples are included in Table 18.

Following the interim action soil removal including over-excavation, residual contaminant concentrations within the excavated area meet IACLs (Table 18).

In accordance with Aspect (2014c), confirmational groundwater monitoring for this area will be completed at existing monitoring well UST70-MW-2 and new monitoring wells UST70-MW-101 and UST70-MW-102 (Figure 15).

3.15 USTs 71, 72, 73 Area

Oil-range TPH (Bunker C oil) (with associated cPAHs) was the COC targeted for removal in this interim action area. Based on verification soil sampling during excavation, soil concentrations of copper, mercury, and zinc also exceeded IACLs in this area. The interim action excavation area and excavation verification soil samples are depicted on Figure 16.

The interim action for this area included excavation and proper off-site disposal of approximately 8,150 tons of soil. The excavation area reached a final depth of

approximately 15 feet bgs. Soil excavated from this area was transported to CEMEX for thermal desorption treatment and then landfilling; however, some soil containing abundant debris was transported to Roosevelt Regional Landfill for disposal.

Monitoring wells UST71-MW-1 and Boiler-MW-1 were decommissioned in accordance with Chapter 173-160 WAC prior to the interim action excavation of this area.

An operational 12-inch-diameter combined stormwater/sewer overflow (CSO) pipe existed within the area of the excavation. As part of this excavation, the Contractor constructed a temporary bypass pipe around the excavation area and plugged the existing CSO pipe just upstream of the excavation to maintain CSO function. Two temporary bypass lines were inserted in the CSO line's Type 2 catch basin upstream (east) of the expected excavation extent and routed to the Type 2 catch basin downstream (west) of the expected excavation. A float-controlled pump was installed in the upstream catch basin. When the water level in the catch basin began to rise, the pump engaged and pumped the upstream water past the excavation to the downstream catch basin, from where it discharged via the CSO outfall. The bypass system successfully maintained the CSO function throughout the excavation project. Following completion of excavation, and during backfill, the Contractor installed a new 18-inch-diameter corrugated high density polyethylene (HDPE) line between the Type 2 catch basins to restore (and improve) the CSO function.

Groundwater was encountered approximately 8 feet bgs within the limits of the excavation. Dewatering was necessary during the excavation and prior to backfilling; the water was treated and discharged to City POTW as described in Section 2.2. Separate-phase petroleum (free product) collected either by vacuum truck or absorbent material was characterized and managed for off-site disposal by Emerald Services, as a subcontractor to the Contractor.

During excavation, numerous large concrete foundation structures were exposed within or bounding the excavation. Along the southwest sidewall was a massive east-west-trending concrete wall or footing with a bottom depth of approximately 8 feet bgs. Visible Bunker C oil was present in a thin layer extending beneath the wall, which was inaccessible. At the northeast sidewall, three massive concrete foundations formally supporting boilers were exposed (Figure 16). The Contractor brought in large breaker equipment in an attempt to remove these structures, but was unsuccessful after two days effort.

A metal sheet pile wall separated the excavation into western and eastern sections; the western section encompassed the three former USTs whereas the eastern section encompassed the boiler area where the oil was burned as fuel. The western portion of the excavation exposed numerous wood piles which were broken off at the limits of the excavation. The pilings did not appear to be treated but many were at least partially coated in Bunker C oil. Each of the piles removed, and the abundant brick and concrete with soil from the eastern portion of the excavation, was disposed of at Roosevelt Regional Landfill. Soil from the western portion of the excavation was transported to CEMEX for thermal treatment and then landfilling.

A total of 102 excavation verification soil samples (71 sidewall and 31 bottom samples) were collected from the limits of the excavation (Figure 16), with 12 sidewall and 4

bottom samples subsequently over-excavated based on exceedances of IACLs. Grid spacing for bottom verification samples on the eastern third of the excavation was approximately 25 feet due to the depth and restricted access with the excavator.

The verification soil samples were analyzed for diesel- and oil-range TPH (quantified based as Bunker C) and PAHs; every fifth sample was also analyzed for metals. PCBs were analyzed for but not detected in the characterization sample (UST71-H06TP7) collected prior to excavation. The laboratory analytical results for the verification soil samples are included in Table 19.

Following the interim action soil removal including over-excavation, TPH and PAH concentrations within the accessible excavated area meet IACLs. Limited quantities of Bunker C-/cPAH-contaminated soil were left in place beneath four monolithic foundation elements, since it was deemed impracticable to remove the foundations (Figure 16; Table 19). Soil concentrations of Bunker C left in place ranged from 3,800 to 28,000 mg/kg, and cPAH ranged from 0.71 to 1.3 mg/kg. EPH data were collected for those soils and they will be assessed as part of the RI/FS.

In addition, residual soil concentrations of copper and mercury in selected verification soil samples exceed respective IACLs based on groundwater leaching to protect the marine environment. Metals concentrations in soils across the excavation bottom meet IACLs, except for marginal exceedances of the new mercury IACL in 4 of 27 samples (0.11 to 0.17 mg/kg). On the excavation sidewalls, 7 of 55 samples had detected mercury concentrations greater than the IACL (0.11 to 0.22 mg/kg), and 4 of the samples had detected copper concentrations greater than the IACL (36.9 to 74.5 mg/kg). Soils beneath the southern foundation monoliths had detected metals concentrations meeting IACLs. Beneath the northeastern foundation structures, detected metals concentrations also met IACLs except for one marginal mercury exceedance (0.11 mg/kg in sample BUST-B39); marginal mercury exceedances are also detected in soil samples collected adjacent to the northeastern structures (0.11 mg/kg in BUST-B41 and 0.17 mg/kg in BUST-S42; Table 19).

In accordance with Aspect (2014c), confirmational groundwater monitoring for this area will be completed at new monitoring wells UST71-MW-101 through UST71-MW-104, as depicted on Figure 16.

3.16 Removal of Hydraulic Oil from Former Elevator Base inside Warehouse

Hydraulic fluid was present in two vertical 14-inch-diameter pipes extending below the floor of the warehouse building. The pipes held hydraulic cylinders as part of a materials handling lift that was removed during demolition. A vacuum truck was used to remove the fluid and solids from the pipes, and the removed material was profiled and disposed of by Emerald Services. No groundwater was present in the pipes four weeks after vacuuming them out, indicating the pipes are not in connection with groundwater. The above-grade portion of the pipes were ground flush to the existing concrete floor, and the below-grade portions were filled with bentonite and pea gravel and sealed with a 2-foot-thick concrete cap.

4 Conclusions

The interim action achieved permanent removal of approximately 38,450 tons of contaminated material from the Upland Area, and successfully met industrial-based IACLs for the contaminants targeted for removal to the extent practicable. However, it is noted that for a number of IA areas, a reduced number of compliance samples could be collected from what was planned in the IA work plan (see prior discussions throughout this report). The reduced number of compliance samples lessens the confidence that IACLs were achieved throughout some of the IA areas. This uncertainty will be addressed in the Upland Area RI/FS. More than 5.6 million gallons of groundwater were also removed from the collective excavation areas for treatment. In addition, approximately 6,230 gallons of separate-phase oil (free product) with oily water was removed and properly disposed of off site.

Petroleum-contaminated soil was left in place beneath very large foundation elements within the USTs 71, 72, 73 interim action area. Petroleum-contaminated soil also remains in place beneath the Warehouse, which may remain on-site for future use. In addition, residual soil concentrations of selected metals (primarily copper, mercury, and zinc) within the excavation areas exceed IACLs based on leaching to groundwater for protection of the marine environment. The IACLs for copper, mercury, and, for saturated soil, zinc, are equal to natural background concentrations or analytical reporting limits, while the IACL for zinc in unsaturated soil (based on groundwater protection) is slightly greater than the natural background concentration. Exceedances for these metals are common throughout the Upland Area soil. These soils will also be addressed as part of the RI/FS.

All of the interim action data representing in-place soil (i.e., representing current conditions) will be incorporated into the Upland Area RI/FS. As long as the future site use is uncertain, the RI/FS will proceed with data evaluation relative to both unrestricted and industrial cleanup levels, including incorporation of terrestrial ecological soil indicator concentrations as appropriate.

5 References

AECOM, 2011, Phase I Environmental Site Assessment, Everett Pulp and Paper Mill, Everett Washington, April 2011.

Aspect, 2013a, Data Report for Phase 2 Environmental Site Assessment, Kimberly-Clark Worldwide Site Upland Area, Everett, Washington, March 15, 2013.

Aspect, 2013b, Work Plan for Remedial Investigation/Feasibility Study, Kimberly-Clark Worldwide Site Upland Area, Everett, Washington, November 22, 2013.

Aspect, 2014a, Design Information for Subsurface Barrier Wall Adjacent to Warehouse, K-C Worldwide Site Upland Area Interim Action, Everett Washington, January 23, 2014.

Aspect, 2014b, RI/FS Work Plan Addendum for Warehouse Vapor Intrusion Assessment, K-C Worldwide Site Upland Area RI/FS, February 18, 2014.

Aspect, 2014c, Interim Action Confirmational Groundwater Monitoring Work Plan, Kimberly-Clark Worldwide Site Upland Area, Everett, Washington, Final, June 12, 2013.

Ecology, 1992, Statistical Guidance for Ecology Site Managers, Washington State Department of Ecology Toxics Cleanup Program Public No. 92-54, August 1992.

Foster Wheeler, 1998, Independent Remedial Action Closure Report, Old Naval Reserve Center, Everett, Washington, December 16, 1998.

Scott Paper Company, 1995, Letter from Dick Abrams to Mark Dirkx (Ecology) regarding status of voluntary cleanup of contaminated soil in Bunker C fuel oil tank farm, November 10, 1995.

SWCA, 2013, Cultural Resources Monitoring and Discovery Plan for the Kimberly-Clark Worldwide Site upland Area, Everett, Snohomish County, Washington, August 16, 2013.

Limitations

Work for this project was performed for Kimberly-Clark Worldwide, Inc. (Client), and this report was prepared in accordance with generally accepted professional practices for the nature and conditions of work completed in the same or similar localities, at the time the work was performed. This report does not represent a legal opinion. No other warranty, expressed or implied, is made.

All reports prepared by Aspect Consulting for the Client apply only to the services described in the Agreement(s) with the Client. Any use or reuse by any party other than the Client is at the sole risk of that party, and without liability to Aspect Consulting. Aspect Consulting's original files/reports shall govern in the event of any dispute regarding the content of electronic documents furnished to others.

TABLES

Table 1 - Interim Action Cleanup Levels for Soil

K-C Worldwide Site Upland Area

ANALYTE (BY GROUP)	Most Stringent Groundwater Screening Level (Industrial) (ug/L)		APPLICABLE SOIL CRITERIA: Soil Protective of Groundwater — Constants and Coefficients [a]: K_{oc} (Soil Organic Carbon-Water Partitioning Coefficient for organics) (L/kg)	K_d (Distribution Coefficient for metals) (L/kg)	Henrys Law Constant (Hcc; unitless)	Calculated Values: Unsaturated Soil Concentration Protective of Leachability to Groundwater (mg/kg)[b] (gwl-u)	Saturated Soil Concentration Protective of Leachability to Groundwater (mg/kg)[c] (gwl-s)	Groundwater Exceedances Confirmed Empirically for Analyte?[d] (Y = yes; blank = no)	Soil, Method A, Industrial Land Use, Table Value (mg/kg)[e] (mA)	Soil Protective of Human Direct Contact[f]: Soil, Method C, Most-Restrictive Standard Formula Value, Direct Contact, Industrial Land Use (mg/kg) (mC)	Natural Background Concentration (mg/kg)[g] (back)	Practical Quantitation Level (PQL) (mg/kg)[h] (pql)	Interim Action Cleanup Level (mg/kg): Unsaturated Soil		Saturated Soil	
Total Petroleum Hydrocarbons															
Gasoline Range Hydrocarbons	800	*(pot)*						Y	30/100			5	30/100	*(mA)*	30/100	*(mA)*
Diesel Range Hydrocarbons	500	*(pot)*						Y	2000			25	2000	*(mA)*	2000	*(mA)*
Oil Range Hydrocarbons	500	*(pot)*						Y	2000			100	2000	*(mA)*	2000	*(mA)*
Metals															
Antimony	640	*(marine)*		*45*	*0.00E+00*	580	29			1400		1	1400	*(mC)*	1400	*(mC)*
Arsenic	5	*(footnote j)*		*29*	*0.00E+00*	2.9	0.15	Y		88	20	1	20	*(back)*	20	*(back)*
Barium	2000	*(pot)*		*41*	*0.00E+00*	1600	83			700000		1	700000	*(mC)*	700000	*(mC)*
Beryllium	270	*(marine)*		*790*	*0.00E+00*	4300	210			7000	0.6	1	7000	*(mC)*	7000	*(mC)*
Cadmium	8.8	*(marine)*		*6.7*	*0.00E+00*	1.2	0.061			3500	1	1	3500	*(mC)*	3500	*(mC)*
Chromium (Total)	240000	*(marine)*		*1000*	*0.00E+00*	4800000	240000			5.3E+06	48	1	5300000	*(mC)*	5300000	*(mC)*
Copper	3.1	*(marine)*		*22*	*0.00E+00*	1.4	0.069	Y		140000	36	1	36	*(back)*	36	*(back)*
Lead	8.1	*(marine)*		*10000*	*0.00E+00*	1600	81	Y	1000		24	1	1000	*(mA)*	81	*(gwl-s)*
Mercury	0.025	*(marine)*		*52*	*4.70E-01*	0.026	0.0013	Y		1050	0.07	0.1	0.1	*(pql)*	0.1	*(pql)*
Nickel	8.2	*(marine)*		*65*	*0.00E+00*	11	0.54	Y		70000	48	1	48	*(back)*	48	*(back)*
Selenium	71	*(marine)*		*5*	*0.00E+00*	7.4	0.38			18000		1	18000	*(mC)*	18000	*(mC)*
Silver	1.9	*(marine)*		*8.3*	*0.00E+00*	0.32	0.016			18000		1	18000	*(mC)*	18000	*(mC)*
Thallium	0.22	*(marine)*		*71*	*0.00E+00*	0.31	0.016			35		1	35	*(mC)*	35	*(mC)*
Zinc	81	*(marine)*		*62*	*0.00E+00*	100	5	Y		1100000	85	1	100	*(gwl-u)*	85	*(back)*
Conventionals															
Formaldehyde	1600	*(footnote k)*								700000		0.05	700000	*(mC)*	700000	*(mC)*
Volatile Organic Compounds															
1,1,1,2-Tetrachloroethane	1.7	*(pot)*	*86*		*1.0E-01*	0.035	0.0019			5000		0.05	5000	*(mC)*	5000	*(mC)*
1,1,1-Trichloroethane	12000	*(vi-c)*	*140*		*7.1E-01*	380	19			7000000		0.05	7000000	*(mC)*	7000000	*(mC)*
1,1,2,2-Tetrachloroethane	11	*(marine)*	*79*		*1.4E-02*	0.21	0.011			660		0.05	660	*(mC)*	660	*(mC)*
1,1,2-Trichloroethane	42	*(marine)*	*75*		*3.7E-02*	0.77	0.042			2300		0.05	2300	*(mC)*	2300	*(mC)*
1,1-Dichloroethane	1600	*(pot)*	*53*		*2.3E-01*	23	1.3			23000		0.05	23000	*(mC)*	23000	*(mC)*
1,1-Dichloroethene	280	*(vi-c)*	*65*		*1.1E+00*	5.1	0.25			180000		0.05	180000	*(mC)*	180000	*(mC)*
1,1-Dichloropropene												0.05				
1,2,3-Trichlorobenzene												0.25				
1,2,3-Trichloropropane	0.5	*(pql)*	*116*		*1.4E-02*	0.013	0.00069			4.4		0.05	4.4	*(mC)*	4.4	*(mC)*
1,2,4-Trichlorobenzene	2	*(marine)*	*1700*		*5.8E-02*	0.65	0.033			4500		0.25	4500	*(mC)*	4500	*(mC)*
1,2,4-Trimethylbenzene	61	*(vi-c)*	*614*		*2.5E-01*	7.4	0.37					0.05				
1,2-Dibromo-3-chloropropane	2	*(pql)*	*116*		*6.0E-03*	0.052	0.0028			160		0.05	160	*(mC)*	160	*(mC)*
1,2-Dibromoethane (EDB)	1	*(pql)*	*66*		*2.7E-02*	0.017	0.00091			66		0.05	66	*(mC)*	66	*(mC)*
1,2-Dichlorobenzene	1300	*(marine)*	*380*		*7.8E-02*	99	5			320000		0.05	320000	*(mC)*	320000	*(mC)*
1,2-Dichloroethane (EDC)	42	*(vi-c)*	*38*		*4.0E-02*	0.47	0.027			1400		0.05	1400	*(mC)*	1400	*(mC)*
1,2-Dichloropropane	15	*(marine)*	*47*		*1.2E-01*	0.2	0.011			3600		0.05	3600	*(mC)*	3600	*(mC)*
1,3,5-Trimethylbenzene	80	*(pot)*	*602*		*3.6E-01*	9.5	0.48			35000		0.05	35000	*(mC)*	35000	*(mC)*
1,3-Dichlorobenzene	960	*(marine)*										0.05				
1,3-Dichloropropane												0.05				
1,4-Dioxane	10	*(pql)*								1312		0.5	1312	*(mC)*	1312	*(mC)*
2,2-Dichloropropane												0.05				
2-Butanone	4800	*(pot)*	*4.51*		*2.3E-03*	23	1.6			2100000		0.5	2100000	*(mC)*	2100000	*(mC)*
2-Chlorotoluene	160	*(pot)*	*382.9*		*1.5E-01*	12	0.63			70000		0.05	70000	*(mC)*	70000	*(mC)*
2-Hexanone												0.5				
4-Chlorotoluene												0.05				
4-Methyl-2-pentanone	640	*(pot)*	*12.6*		*5.6E-03*	4.1	0.26			280000		0.5	280000	*(mC)*	280000	*(mC)*

Table 1 - Interim Action Cleanup Levels for Soil

K-C Worldwide Site Upland Area

ANALYTE (BY GROUP)	Most Stringent Groundwater Screening Level (Industrial) (ug/L)		APPLICABLE SOIL CRITERIA: Soil Protective of Groundwater — Constants and Coefficients [a]: K_{oc} (Soil Organic Carbon-Water Partitioning Coefficient for organics) (L/kg)	K_d (Distribution Coefficient for metals) (L/kg)	Henrys Law Constant (Hcc; unitless)	Calculated Values: Unsaturated Soil Concentration Protective of Leachability to Groundwater (mg/kg)[b] *(gwl-u)*	Saturated Soil Concentration Protective of Leachability to Groundwater (mg/kg)[c] *(gwl-s)*	Groundwater Exceedances Confirmed Empirically for Analyte?[d] (Y = yes; blank = no)	Soil, Method A, Industrial Land Use, Table Value (mg/kg)[e] *(mA)*	Soil Protective of Human Direct Contact[f]: Soil, Method C, Most-Restrictive Standard Formula Value, Direct Contact, Industrial Land Use (mg/kg) *(mC)*	Natural Background Concentration (mg/kg)[g] *(back)*	Practical Quantitation Level (PQL) (mg/kg)[h] *(pql)*	Interim Action Cleanup Level (mg/kg): Unsaturated Soil		Saturated Soil	
Acetone	7200	*(pot)*	*0.58*		*1.6E-03*	30	2.1			3200000		0.05	3200000	*(mC)*	3200000	*(mC)*
Benzene	24	*(vi-c)*	*62*		*2.3E-01*	0.39	0.021			2400		0.05	2400	*(mC)*	2400	*(mC)*
Bromobenzene												0.05				
Bromodichloromethane	0.9	*(vi-c)*	*55*		*6.6E-02*	0.013	0.00073			2100		0.05	2100	*(mC)*	2100	*(mC)*
Bromoform	360	*(marine)*	*130*		*2.2E-02*	10	0.55			17000		0.05	17000	*(mC)*	17000	*(mC)*
Bromomethane	28	*(vi-c)*	*9*		*2.6E-01*	0.17	0.01			4900		0.05	4900	*(mC)*	4900	*(mC)*
Carbon tetrachloride	4.4	*(marine)*	*150*		*1.3E+00*	0.15	0.0075			1900		0.05	1900	*(mC)*	1900	*(mC)*
Chlorobenzene	640	*(vi-c)*	*220*		*1.5E-01*	29	1.5			70000		0.05	70000	*(mC)*	70000	*(mC)*
Chloroethane	40000	*(vi-c)*	*22*		*4.5E-01*	360	20					0.05				
Chloroform	12	*(vi-c)*	*53*		*1.5E-01*	0.17	0.0095			4200		0.05	4200	*(mC)*	4200	*(mC)*
Chloromethane	340	*(vi-c)*	*6*		*3.6E-01*	2	0.12					0.5				
cis-1,2-Dichloroethene (DCE)	16	*(pot)*	*36*		*1.7E-01*	0.18	0.01			7000		0.05	7000	*(mC)*	7000	*(mC)*
cis-1,3-Dichloropropene												0.05				
Dibromochloromethane	2.2	*(vi-c)*	*63*		*3.2E-02*	0.035	0.0019			1600		0.05	1600	*(mC)*	1600	*(mC)*
Dibromomethane	80	*(pot)*	*22*		*3.4E-02*	0.65	0.039			35000		0.05	35000	*(mC)*	35000	*(mC)*
Dichlorodifluoromethane	25	*(vi-c)*	*44*		*1.4E+01*	0.92	0.018			700000		0.5	700000	*(mC)*	700000	*(mC)*
Ethylbenzene	2100	*(marine)*	*200*		*3.2E-01*	89	4.6			350000		0.05	350000	*(mC)*	350000	*(mC)*
Hexachlorobutadiene	8.1	*(vi-c)*	*54000*		*3.3E-01*	83	4.1			1700		0.25	1700	*(mC)*	1700	*(mC)*
Isopropylbenzene	800	*(pot)*	*698*		*4.7E-01*	110	5.5			350000		0.05	350000	*(mC)*	350000	*(mC)*
m,p-Xylenes	1000	*(pot)*	*233*		*2.8E-01*	49	2.5	Y		700000		0.1	49	*(gwl-u)*	2.5	*(gwl-s)*
Methylene chloride	940	*(vi-c)*	*10*		*9.0E-02*	5.7	0.36			21000		0.05	21000	*(mC)*	21000	*(mC)*
Methyl tert-butyl ether	190000	*(vi-c)*	*10.9*		*1.8E-02*	1200	74			73000		0.05	73000	*(mC)*	73000	*(mC)*
n-Propylbenzene	800	*(pot)*								350000		0.05	350000	*(mC)*	350000	*(mC)*
o-Xylene	1600	*(pot)*	*240*		*2.1E-01*	80	4.1	Y		700000		0.05	80	*(gwl-u)*	4.1	*(gwl-s)*
p-Isopropyltoluene	1600	*(vi-c)*										0.05				
sec-Butylbenzene	800	*(pot)*								350000		0.05	350000	*(mC)*	350000	*(mC)*
Styrene	100	*(pot)*	*910*		*1.1E-01*	18	0.89			700000		0.05	700000	*(mC)*	700000	*(mC)*
tert-Butylbenzene	800	*(pot)*								350000		0.05	350000	*(mC)*	350000	*(mC)*
Tetrachloroethene (PCE)	8.9	*(marine)*	*270*		*7.5E-01*	0.5	0.025			21000		0.025	21000	*(mC)*	21000	*(mC)*
Toluene	15000	*(marine)*	*140*		*2.7E-01*	460	24			280000		0.05	280000	*(mC)*	280000	*(mC)*
trans-1,2-Dichloroethene	250	*(vi-c)*	*38*		*3.9E-01*	3	0.16			70000		0.05	70000	*(mC)*	70000	*(mC)*
trans-1,3-Dichloropropene												0.05				
Trichloroethene (TCE)	8.4	*(vi-c)*	*94*		*4.2E-01*	0.19	0.0099			1800		0.05	1800	*(mC)*	1800	*(mC)*
Trichlorofluoromethane	260	*(vi-c)*	*44*		*4.0E+00*	5	0.18			1100000		0.05	1100000	*(mC)*	1100000	*(mC)*
Vinyl acetate	8000	*(pot)*	*5.3*		*2.1E-02*	40	2.7			3500000		0.05	3500000	*(mC)*	3500000	*(mC)*
Vinyl chloride	2.4	*(marine)*	*19*		*1.1E+00*	0.023	0.0011			88		0.05	88	*(mC)*	88	*(mC)*
Xylenes (total)	720	*(vi-c)*	*230*		*2.8E-01*	35	1.8	Y		700000		0.05	35	*(gwl-u)*	1.8	*(gwl-s)*
Polycyclic Aromatic Hydrocarbons (PAHs)																
Acenaphthene	650	*(marine)*	*4900*		*6.4E-03*	610	30			210000		0.03	210000	*(mC)*	210000	*(mC)*
Acenaphthylene	650	*(marine)*										0.03				
Anthracene	26000	*(marine)*	*23000*		*2.7E-03*	110000	5700			1100000		0.03	1100000	*(mC)*	1100000	*(mC)*
Benzo(g,h,i)perylene												0.03				
Fluoranthene	86	*(marine)*	*49000*		*6.6E-04*	800	40			140000		0.03	140000	*(mC)*	140000	*(mC)*
Fluorene	3500	*(marine)*	*7700*		*2.6E-03*	5100	260			140000		0.03	140000	*(mC)*	140000	*(mC)*
Phenanthrene												0.03				
Pyrene	2600	*(marine)*	*68000*		*4.5E-04*	33000	1700			110000		0.03	110000	*(mC)*	110000	*(mC)*
1-Methylnaphthalene	1.5	*(pot)*	*2528*		*2.1E-02*	0.72	0.036			4500		0.03	4500	*(mC)*	4500	*(mC)*
2-Methylnaphthalene	32	*(pot)*	*2478*		*2.1E-02*	15	0.76	Y		14000		0.03	15	*(gwl-u)*	0.76	*(gwl-s)*
Naphthalene	360	*(vi-c)*	*1200*		*2.0E-02*	83	4.2			70000		0.03	70000	*(mC)*	70000	*(mC)*
Benz(a)anthracene			*360000*		*1.4E-04*							0.01				
Benzo(a)pyrene			*970000*		*4.6E-05*							0.01				
Benzo(b)fluoranthene			*1200000*		*4.6E-03*							0.01				
Benzo(k)fluoranthene			*1200000*		*3.4E-05*							0.01				
Chrysene			*400000*		*3.9E-03*							0.01				
Dibenzo(a,h)anthracene			*1800000*		*6.0E-07*							0.01				
Indeno(1,2,3-cd)pyrene			*3500000*		*6.6E-05*							0.01				
Total cPAHs TEQ	0.031	*(marine)*	*1350000*		*1.3E-03*	7.9	0.40	Y		18		0.015	7.9	*(gwl-u)*	0.4	*(gwl-s)*

Table 1 - Interim Action Cleanup Levels for Soil

K-C Worldwide Site Upland Area

ANALYTE (BY GROUP)	Most Stringent Groundwater Screening Level (Industrial) (ug/L)		APPLICABLE SOIL CRITERIA: Soil Protective of Groundwater: Constants and Coefficients [a]: K_{oc} (Soil Organic Carbon-Water Partitioning Coefficient for organics) (L/kg)	K_d (Distribution Coefficient for metals) (L/kg)	Henrys Law Constant (Hcc; unitless)	Calculated Values: Unsaturated Soil Concentration Protective of Leachability to Groundwater (mg/kg)[b] *(gwl-u)*	Saturated Soil Concentration Protective of Leachability to Groundwater (mg/kg)[c] *(gwl-s)*	Groundwater Exceedances Confirmed Empirically for Analyte?[d] (Y = yes; blank = no)	Soil, Method A, Industrial Land Use, Table Value (mg/kg)[e] *(mA)*	Soil Protective of Human Direct Contact[f]: Soil, Method C, Most-Restrictive Standard Formula Value, Direct Contact, Industrial Land Use (mg/kg) *(mC)*	Natural Background Concentration (mg/kg)[g] *(back)*	Practical Quantitation Level (PQL) (mg/kg)[h] *(pql)*	Interim Action Cleanup Level (mg/kg): Unsaturated Soil		Saturated Soil	
Other Semivolatile Organics															
1,2,4-Trichlorobenzene	2	*(marine)*	*1700*		*5.8E-02*	0.65	0.033			4500		0.03	4500	*(mC)*	4500	*(mC)*
1,2-Dichlorobenzene	1300	*(marine)*	*380*		*7.8E-02*	99	5			320000		0.03	320000	*(mC)*	320000	*(mC)*
1,3-Dichlorobenzene	960	*(marine)*										0.03				
1,4-Dichlorobenzene	21	*(marine)*	*620*		*1.0E-01*	2.6	0.13			24000		0.03	24000	*(mC)*	24000	*(mC)*
2,4,5-Trichlorophenol	3600	*(marine)*	*1600*		*1.8E-04*	1100	56			350000		0.3	350000	*(mC)*	350000	*(mC)*
2,4,6-Trichlorophenol	10	*(pql)*	*380*		*3.2E-04*	0.76	0.039			3500		0.3	3500	*(mC)*	3500	*(mC)*
2,4-Dichlorophenol	190	*(marine)*	*150*		*1.3E-04*	6.2	0.32			11000		0.3	11000	*(mC)*	11000	*(mC)*
2,4-Dimethylphenol	550	*(marine)*	*210*		*8.2E-05*	24	1.3			70000		0.3	70000	*(mC)*	70000	*(mC)*
2,4-Dinitrophenol	3500	*(marine)*	*0.01*		*1.8E-05*	14	1			7000		0.3	7000	*(mC)*	7000	*(mC)*
2-Chloronaphthalene	1000	*(marine)*	*2478*		*1.3E-02*	470	24			280000		0.03	280000	*(mC)*	280000	*(mC)*
2-Chlorophenol	100	*(marine)*	*390*		*1.6E-02*	7.8	0.4			18000		0.3	18000	*(mC)*	18000	*(mC)*
2-Methylphenol	400	*(pot)*	*91*		*4.9E-05*	8.5	0.46			180000		0.3	180000	*(mC)*	180000	*(mC)*
2-Nitroaniline	160	*(pot)*	*111*		*2.4E-06*	4	0.21			35000		0.03	35000	*(mC)*	35000	*(mC)*
2-Nitrophenol												0.03				
3-Nitroaniline												0.9				
3-Methylphenol and 4-Methylphenol coelution	400	*(pot)*								175000		0.3	175000	*(mC)*	175000	*(mC)*
4,6-Dinitro-2-methylphenol												0.03				
4-Bromophenyl phenyl ether												0.03				
4-Chloro-3-methylphenol												0.3				
4-Chloroaniline	5	*(pql)*	*66*		*1.4E-05*	0.082	0.0046			660		3	660	*(mC)*	660	*(mC)*
4-Chlorophenyl phenyl ether												0.03				
4-Nitroaniline												0.9				
4-Nitrophenol												0.3				
Benzoic acid	64000	*(marine)*	*0.6*		*6.3E-05*	260	19			14000000		3	14000000	*(mC)*	14000000	*(mC)*
Benzyl alcohol	800	*(pot)*	*21*		*1.4E-05*	6.4	0.39			350000		0.03	350000	*(mC)*	350000	*(mC)*
Benzyl butyl phthalate	8.3	*(marine)*	*14000*		*5.2E-05*	22	1.1			69000		0.03	69000	*(mC)*	69000	*(mC)*
Bis(2-chloro-1-methylethyl) ether	37	*(marine)*	*83*		*3.0E-03*	0.73	0.04			1900		0.3	1900	*(mC)*	1900	*(mC)*
Bis(2-chloroethoxy)methane												0.3				
Bis(2-chloroethyl) ether	1.4	*(marine)*	*76*		*7.4E-04*	0.026	0.0014			120		0.3	120	*(mC)*	120	*(mC)*
Bis(2-ethylhexyl) phthalate	5.9	*(marine)*	*110000*		*4.2E-06*	120	6.1			9400		0.3	9400	*(mC)*	9400	*(mC)*
Carbazole			*3400*		*6.3E-07*							0.06				
Dibenzofuran	16	*(pot)*	*9161*		*8.7E-03*	28	1.4			3500		0.03	3500	*(mC)*	3500	*(mC)*
Diethyl phthalate	28000	*(marine)*	*82*		*1.9E-05*	550	30			2800000		0.03	2800000	*(mC)*	2800000	*(mC)*
Dimethyl phthalate	1100000	*(marine)*										0.03				
Di-n-butyl phthalate	2900	*(marine)*	*1600*		*3.9E-08*	890	45			350000		0.03	350000	*(mC)*	350000	*(mC)*
Di-n-octyl phthalate	160	*(pot)*	*83000000*		*2.7E-03*	2500000	130000			35000		0.03	35000	*(mC)*	35000	*(mC)*
Hexachlorobenzene	1	*(pql)*	*80000*		*5.4E-02*	15	0.76			82		0.03	82	*(mC)*	82	*(mC)*
Hexachlorobutadiene	8.1	*(marine)*	*54000*		*3.3E-01*	83	4.1			1700		0.03	1700	*(mC)*	1700	*(mC)*
Hexachlorocyclopentadiene	1100	*(marine)*	*200000*		*1.1E+00*	42000	2100			21000		0.09	21000	*(mC)*	21000	*(mC)*
Hexachloroethane	8.9	*(marine)*	*1800*		*1.6E-01*	3.1	0.15			2500		0.03	2500	*(mC)*	2500	*(mC)*
Isophorone	960	*(marine)*	*47*		*2.7E-04*	12	0.7			140000		0.03	140000	*(mC)*	140000	*(mC)*
Nitrobenzene	690	*(marine)*	*120*		*9.8E-04*	18	0.98			7000		0.03	7000	*(mC)*	7000	*(mC)*
N-Nitroso-di-n-propylamine	1	*(pql)*	*24*		*9.2E-05*	0.0085	0.00051			19		0.06	19	*(mC)*	19	*(mC)*
N-Nitrosodiphenylamine	6	*(marine)*	*1300*		*2.1E-04*	1.5	0.076			27000		0.06	27000	*(mC)*	27000	*(mC)*
Pentachlorophenol	10	*(pql)*	*590*		*1.0E-06*	1.2	0.059			330		0.3	330	*(mC)*	330	*(mC)*
Phenol	560000	*(marine)*	*29*		*1.6E-05*	5300	310			1100000		0.3	1100000	*(mC)*	1100000	*(mC)*
2,4-Dinitrotoluene	3.4	*(marine)*	*96*		*3.8E-06*	0.075	0.0041			420		0.03	420	*(mC)*	420	*(mC)*
2,6-Dinitrotoluene	16	*(pot)*	*69*		*3.1E-05*	0.27	0.015			88		0.03	88	*(mC)*	88	*(mC)*

Table 1 - Interim Action Cleanup Levels for Soil

K-C Worldwide Site Upland Area

ANALYTE (BY GROUP)	Most Stringent Groundwater Screening Level (Industrial) (ug/L)	APPLICABLE SOIL CRITERIA: Soil Protective of Groundwater — Constants and Coefficients[a]: K_{oc} (Soil Organic Carbon-Water Partitioning Coefficient for organics) (L/kg)	K_d (Distribution Coefficient for metals) (L/kg)	Henrys Law Constant (Hcc; unitless)	Calculated Values: Unsaturated Soil Concentration Protective of Leachability to Groundwater (mg/kg)[b] *(gwl-u)*	Saturated Soil Concentration Protective of Leachability to Groundwater (mg/kg)[c] *(gwl-s)*	Groundwater Exceedances Confirmed Empirically for Analyte?[d] (Y = yes; blank = no)	Soil, Method A, Industrial Land Use, Table Value (mg/kg)[e] *(mA)*	Soil Protective of Human Direct Contact[f]: Soil, Method C, Most-Restrictive Standard Formula Value, Direct Contact, Industrial Land Use (mg/kg) *(mC)*	Natural Background Concentration (mg/kg)[g] *(back)*	Practical Quantitation Level (PQL) (mg/kg)[h] *(pql)*	Interim Action Cleanup Level (mg/kg): Unsaturated Soil	Interim Action Cleanup Level (mg/kg): Saturated Soil
Polychlorinated Biphenyls (PCBs)													
Aroclor 1016		*110000*		*8.2E-03*							0.1		
Aroclor 1221											0.1		
Aroclor 1232											0.1		
Aroclor 1242											0.1		
Aroclor 1248											0.1		
Aroclor 1254		*130500*		*1.2E-02*							0.1		
Aroclor 1260		*820000*		*1.4E-02*							0.1		
Total PCBs	0.07 *(pql)*	*353500*		*7.8E-03*	5	0.23		10	66		0.7	10 *(mA)*	10 *(mA)*
Dioxins/Furans													
2,3,7,8-TCDD		*1.4E+07*		*4.2E-03*							1.0E-06		
1,2,3,7,8-PeCDD											2.5E-06		
1,2,3,4,7,8-HxCDD											2.5E-06		
1,2,3,6,7,8-HxCDD											2.5E-06		
1,2,3,7,8,9-HxCDD											2.5E-06		
1,2,3,4,6,7,8-HpCDD											2.5E-06		
OCDD											5.0E-06		
2,3,7,8-TCDF											1.0E-06		
1,2,3,7,8-PeCDF											2.5E-06		
2,3,4,7,8-PeCDF											2.5E-06		
1,2,3,4,7,8-HxCDF											2.5E-06		
1,2,3,6,7,8-HxCDF											2.5E-06		
1,2,3,7,8,9-HxCDF											2.5E-06		
2,3,4,6,7,8-HxCDF											2.5E-06		
1,2,3,4,6,7,8-HpCDF											2.5E-06		
1,2,3,4,7,8,9-HpCDF											2.5E-06		
OCDF											5.0E-06		
Total 2,3,7,8 TCDD (TEQ)[k]	6.3E-05 *(pql)*	*1.4E+07*		*4.2E-03*	1.6E-01	8.1E-03			1.7E-03	5.2E-06	6.3E-06	1.7E-03 *(mC)*	1.7E-03 *(mC)*

Notes:

a Values obtained from Ecology's CLARC database, June 2014.

b Calculated values from three-phase model, per MTCA Equation 747-1, with groundwater value (Cw) as most stringent land-use-specific groundwater screening level, site-specific f_{oc} = 0.0095, and MTCA-default dilution factor = 20. WAC 173-340-747 provides multiple additional means to evaluate soil concentrations protective of groundwater.

c Calculated values from three-phase model, per MTCA Equation 747-1, with groundwater value (Cw) as most stringent land-use-specific groundwater screening level, site-specific f_{oc} = 0.0095, and MTCA-default dilution factor = 1. WAC 173-340-747 provides multiple additional means to evaluate soil concentrations protective of groundwater.

d If the existing empirical groundwater data demonstrate no groundwater exceedances for a compound, the soil-leachability-to-groundwater pathway is considered incomplete for that compound, and the calculated soil-protective-of-groundwater criteria are not included for establishing that compound's preliminary soil screening levels.

e Because Upland Area groundwater is not a practicable source of drinking water, many Method A soil cleanup levels are not applicable. Method A soil cleanup levels are used for TPH, PCBs (ARAR), and arsenic (natural background).

f Direct contact screening levels applicable for soils to 15-foot depth.

g Natural background values for metals except arsenic from Natural Background Soil Metals Concentrations in Washington State (Ecology, 1994). Natural background concentration for arsenic from WAC 173-340-900, Table 720-1. Natural background value for dioxins/furans from Natural Background for Dioxins/Furans in Washington Soils—Technical Memorandum #8 (Ecology, 2010).

h Analytical method reporting limits. PQLs for total cPAH (TEQ) and total TCDD (TEQ) are adjusted for TEFs.

i K_{oc} and Hcc values for 2,3,7,8-TCDD are not provided in CLARC; therefore K_{oc} value is average of nine literature values and Hcc value is from ATSDR (1998).

j Based on background concentrations in Washington state (WAC 173-340-900, Table 720-1).

k Formaldehyde value based on protection of aquatic life (Anchor Environmental, 2008). Value is coincidentally equal to potable water screening level.

Basis for most-stringent groundwater screening level: (*marine*): marine water quality criterion. (*pot*): potable water criterion; (*vi-c*) Industrial vapor intrusion groundwater screening level. (*pql*): practical quantitation limit.

Table 2 - Analytical Data for Treated Water Discharged to Sanitary Sewer

K-C Worldwide Site Upland Area 110207

Chemical Name	City of Everett Wastewater Discharge Criteria (mg/L)	10/3/13	10/17/13	11/11/13	12/17/13	1/9/14	1/13/14	2/17/14	3/21/14
Total Petroleum Hydrocarbons (TPH)									
Gasoline Range Hydrocarbons in ug/L							100 U		
Diesel Range Hydrocarbons in ug/L							50 U		
Oil Range Hydrocarbons in ug/L							250 U		
Metals									
Total Arsenic in mg/L	0.5	0.00937	0.00539	0.0272	0.00886	0.0019		0.0104	0.00169
Total Cadmium in mg/L	0.24	0.001 U	0.001 U	0.001 U	0.001 U	0.001 U		0.001 U	0.001 U
Total Chromium (Total) in mg/L	5.0	0.00816	0.001 U	0.00761	0.00235	0.001 U		0.0112	0.001 U
Total Copper in mg/L	3.0	0.0213	0.00348	0.0109	0.0038	0.00166		0.0182	0.005 U
Total Lead in mg/L	1.89	0.0238	0.0016	0.00342	0.001 U	0.001 U		0.00254	0.001 U
Total Mercury in mg/L	0.1	0.0001 U	0.0001 U	0.0001 U	0.0001 U	0.0001 U		0.0001 U	0.0001 U
Total Nickel in mg/L	2.83	0.0102	0.00148	0.00855	0.0067	0.00285		0.00639	0.00265
Total Silver in mg/L	0.49	0.001 U	0.001 U	0.001 U	0.001 U	0.001 U		0.001 U	0.001 U
Total Zinc in mg/L	4.0	0.0505	0.00462	0.0129	0.343	0.0315		0.441	0.445
Conventional Chemistry Parameters									
Total Cyanide	0.65	0.05 U	0.05 U	0.05 U	0.05 U	0.05 U		0.05 U	0.05 U
Fats/Oils/Grease in mg/L	200	3 U	3 U	3 U	3 U	3 U		3 U	3 U
pH	5.0 to 11.0	6.97	7.48		7.33	7.14		7.14	7.30
Volatile Organic Compounds (VOC)									
1,1,1,2-Tetrachloroethane in ug/L							1 U		
1,1,1-Trichloroethane in ug/L							1 U		
1,1,2,2-Tetrachloroethane in ug/L							1 U		
1,1,2-Trichloroethane in ug/L							1 U		
1,1-Dichloroethane in ug/L							1 U		
1,1-Dichloroethene in ug/L							1 U		
1,1-Dichloropropene in ug/L							1 U		
1,2,3-Trichlorobenzene in ug/L							1 U		
1,2,3-Trichloropropane in ug/L							1 U		
1,2,4-Trichlorobenzene in ug/L							1 U		
1,2,4-Trimethylbenzene in ug/L							1 U		
1,2-Dibromo-3-chloropropane in ug/L							10 U		
1,2-Dibromoethane (EDB) in ug/L							1 U		
1,2-Dichlorobenzene in ug/L							1 U		
1,2-Dichloroethane (EDC) in ug/L							1 U		
1,2-Dichloropropane in ug/L							1 U		
1,3,5-Trimethylbenzene in ug/L							1 U		
1,3-Dichlorobenzene in ug/L							1 U		
1,3-Dichloropropane in ug/L							1 U		
1,4-Dichlorobenzene in ug/L							1 U		
2,2-Dichloropropane in ug/L							1 U		
2-Butanone in ug/L							10 U		
2-Chlorotoluene in ug/L							1 U		
2-Hexanone in ug/L							10 U		
4-Chlorotoluene in ug/L							1 U		
4-Methyl-2-pentanone in ug/L							10 U		
Acetone in ug/L							10 U		
Benzene in ug/L							0.35 U		
Bromobenzene in ug/L							1 U		
Bromodichloromethane in ug/L							1 U		
Bromoform in ug/L							1 U		
Bromomethane in ug/L							1 U		
Carbon tetrachloride in ug/L							1 U		
Chlorobenzene in ug/L							1 U		
Chloroethane in ug/L							1 U		
Chloroform in ug/L							1 U		
Chloromethane in ug/L							10 U		
cis-1,2-Dichloroethene (DCE) in ug/L							1 U		
cis-1,3-Dichloropropene in ug/L							1 U		
Dibromochloromethane in ug/L							1 U		
Dibromomethane in ug/L							1 U		
Dichlorodifluoromethane in ug/L							1 U		
Ethylbenzene in ug/L							1 U		
Hexachlorobutadiene in ug/L							1 U		
Isopropylbenzene in ug/L							1 U		
Methyl tert-butyl ether (MTBE) in ug/L							1 U		
Methylene chloride in ug/L							5 U		
n-Propylbenzene in ug/L							1 U		
p-Isopropyltoluene in ug/L							1 U		
sec-Butylbenzene in ug/L							1 U		
Styrene in ug/L							1 U		
tert-Butylbenzene in ug/L							1 U		
Tetrachloroethene (PCE) in ug/L							1 U		
Toluene in ug/L							1 U		
trans-1,2-Dichloroethene in ug/L							1 U		
trans-1,3-Dichloropropene in ug/L							1 U		
Trichloroethene (TCE) in ug/L							1 U		
Trichlorofluoromethane in ug/L							1 U		
Vinyl chloride in ug/L							0.2 U		
m,p-Xylenes in ug/L							2 U		
o-Xylene in ug/L							1.2		
Naphthalene in ug/L							1 U		

Notes

Concentrations in shaded cells indicate value exceeds City of Everett Wastewater Discharge Criteria (mg/L).

U = Analyte was not detected at or above the reported result.

The 1/13/14 sample was collected when there was concern for breakthrough of petroleum contaminants from the contractor's wastewater treatment system.

Table 3 - Overburden Soil Quality Data

K-C Worldwide Site Upland Area 110207

		Bunker C AST Area			Heavy Duty Shop Sump	Naval Reserve Parcel UST Area																
Chemical Name	Interim Action Cleanup Level - Unsaturated Soil	BAST-SP01-1-021714	BAST-SP01-2-021714	BAST-SP01-3-021714	HDS-SP-1	NRU-SP01-1-012414	NRU-SP01-2-012414	NRU-SP01-3-012414	NRU-SP02-1-012414	NRU-SP02-2-012414	NRU-SP02-3-012414	NRU-SP03-1-012414	NRU-SP03-2-012414	NRU-SP03-3-012414	NRU-SP04-1-012414	NRU-SP04-2-012414	NRU-SP04-3-012414	NRU-SP05-1-012414	NRU-SP05-2-012414	NRU-SP05-3-012414	NRU-SP06-1-012414	NRU-SP06-2-012414	NRU-SP06-3-012414
Total Petroleum Hydrocarbons (TPH)																						
Gasoline Range Hydrocarbons in mg/kg	100	2 UJ	2 UJ	2 UJ	2 UJ	2 UJ	2 UJ	2 UJ	2 UJ	2 UJ	2 UJ	2 UJ	2 UJ	2 UJ	2 UJ	2 UJ	2 UJ	2 UJ	2 UJ	2 UJ	2 UJ	2 UJ
Diesel Range Hydrocarbons in mg/kg	2,000	50 U	50 U	50 U	50 U	50 U	50 U	50 U	72 x	50 U	50 U	50 U	50 U	50 U	50 U	50 U	50 U	50 U	50 U	50 U	50 U	50 U
Oil Range Hydrocarbons in mg/kg	2,000	250 U	250 U	250 U	250 U	250 U	250 U	250 U	250 U	250 U	250 U	250 U	250 U	250 U	250 U	250 U	250 U	250 U	250 U	250 U	250 U	250 U
Total TPHs in mg/kg	2,000	ND	ND	ND	ND	ND	ND	ND	197	ND	ND	ND	ND	ND	ND	ND	ND	ND	ND	ND	ND	ND
Metals																						
Antimony in mg/kg	1,400	3.09 J	1 U	1 U	1.21	3.85	2.66	5.52	2.74	2.37	2.47	1 U	1.2	1 U	1 U	1 U	1 U	2.92	2.98	3.3	1.5	1.45	1.81
Arsenic in mg/kg	20	23.3	6.69	5.93	4.02	22.3 J	15.8 J	30 J	20 J	14.9 J	15.9 J	18.9 J	10.9 J	10.1 J	7.52 J	8.32 J	10.5 J	17.5 J	17.7 J	19.8 J	10.1 J	7.18 J	10.5 J
Beryllium in mg/kg	7,000	1 U	1 U	1 U	1 U	1 U	1 U	1 U	1 U	1 U	1 U	1 U	1 U	1 U	1 U	1 U	1 U	1 U	1 U	1 U	1 U	1 U	1 U
Cadmium in mg/kg	3,500	1 U	1 U	1 U	1 U	1 U	1 U	1 U	1 U	1 U	1 U	1 U	1 U	1 U	1 U	1 U	1 U	1 U	1 U	1 U	1 U	1 U	1 U
Chromium (Total) in mg/kg	5,300,000	8.9	5.83	12.9	10.6	12.4	12.2	12.1	10.8	11.3	11.9	9.14	9.9	6.89	11	12.6	11.6	13.5	12.1	15	12.8	11.5	10.5
Copper in mg/kg	36	24.7	8.36	21.5	12	31.6	29.8	35.1	35.8	33.4	28.9	24.2	29.2	53.2	21.5	28.5	26.2	28.7	32.9	36.6	29.7	20.8	24.7
Lead in mg/kg	1,000	33.2	6.73	23.5	15.5	66.8	62.4	76.5	85.4	81.7	70.1	16.7	21.1	14.3	10.8	16.1	15.8	130	92.3	109	40.2	43.7	35.2
Mercury in mg/kg	0.1	0.1 U	0.1 U	0.1 U	0.1 U	0.1 U	0.1 U	0.1 U	0.1 U	0.1 U	0.1 U	0.1 U	0.1 U	0.1 U	0.1 U	0.1 U	0.18	0.1 U	0.1 U	0.1 U	0.29	0.1 U	0.1 U
Nickel in mg/kg	48	12.2	11.1	14.1	13.9 J	19.5	20.7	18.1	17.2	17.6	17.3	17.1	19.6	20.1	16.5	19.7	18	15.1	16.9	17.7	24.9	20.6	18.9
Selenium in mg/kg	18,000	1 U	1 U	1 U	1 U	1 U	1 U	1 U	1 U	1 U	1 U	1 U	1 U	1 U	1 U	1 U	1 U	1 U	1 U	1 U	1 U	1 U	1 U
Silver in mg/kg	18,000	1 U	1 U	1 U	1 U	1 U	1 U	1 U	1 U	1 U	1 U	1 U	1 U	1 U	1 U	1 U	1 U	1 U	1 U	1 U	1 U	1 U	1 U
Thallium in mg/kg	35	1 U	1 U	1 U	1 U	1 U	1 U	1 U	1 U	1 U	1 U	1 U	1 U	1 U	1 U	1 U	1 U	1 U	1 U	1 U	1 U	1 U	1 U
Zinc in mg/kg	100	77.8	17.6	33.7	27.8	197 J	129 J	256 J	154 J	260 J	132 J	88.4 J	93.9 J	81.7 J	55.8 J	67.3 J	71.3 J	141 J	156 J	177 J	95.3 J	102 J	108 J
Polycyclic Aromatic Hydrocarbons (PAHs)																						
Acenaphthene in mg/kg	210,000	0.01 U	0.01 U	0.01 U	0.03 U	0.046	0.036	0.045	0.021	0.038	0.11	0.017	0.042	0.034	0.013	0.01 U	0.01 U	0.014	0.029	0.011	0.01	0.018	0.023
Acenaphthylene in mg/kg		0.01 U	0.01 U	0.01 U	0.03 U	0.01	0.01 U	0.01 U	0.01 U	0.01 U	0.1 U	0.01 U	0.01 U	0.01 U	0.01 U	0.01 U	0.01 U	0.025	0.01 U	0.01 U	0.01 U	0.016	0.047
Anthracene in mg/kg	1,100,000	0.01 U	0.01 U	0.01 U	0.03 U	0.039	0.04	0.04	0.02	0.025	0.1 U	0.015	0.17	0.028	0.019	0.015	0.01 U	0.067	0.043	0.025	0.012	0.02	0.11
Benzo(g,h,i)perylene in mg/kg		0.018	0.016	0.01 U	0.03 U	0.083	0.11	0.098	0.064	0.078	0.15	0.018	0.046	0.018	0.024	0.022	0.013	0.13	0.11	0.085	0.026	0.053	0.12
Dibenzofuran in mg/kg	3,500	0.01 U	0.01 U	0.01 U	0.03 U	0.016	0.013	0.018	0.01 U	0.013	0.1 U	0.01 U	0.014	0.01	0.01 U	0.01 U	0.01 U	0.01 U	0.01	0.01 U	0.01 U	0.011	0.018
Fluoranthene in mg/kg	140,000	0.038	0.014	0.011	0.03 U	0.27	0.33	0.27	0.17	0.2	0.3	0.051	0.21	0.088	0.081	0.075	0.043	1	0.3	0.21	0.06	0.1	0.37
Fluorene in mg/kg	140,000	0.01 U	0.01 U	0.01 U	0.03 U	0.036	0.031	0.036	0.013	0.022	0.1 U	0.01 U	0.024	0.018	0.014	0.011	0.01 U	0.012	0.018	0.01 U	0.011	0.019	0.074
Phenanthrene in mg/kg		0.033	0.01 U	0.01 U	0.03 U	0.17	0.17	0.18	0.083	0.11	0.22	0.027	0.05	0.031	0.082	0.059	0.038	0.17	0.17	0.11	0.045	0.063	0.62
Pyrene in mg/kg	110,000	0.05	0.016	0.013	0.03 U	0.3	0.34	0.34	0.19	0.26	0.43	0.071	0.27	0.12	0.11	0.12	0.053	1.2	0.37	0.28	0.092	0.18	0.67
2-Methylnaphthalene in mg/kg	15	0.011	0.01 U	0.01 U	0.03 U	0.012	0.012	0.013	0.01 U	0.011	0.1 U	0.01 U	0.01 U	0.01 U	0.01 U	0.01 U	0.01 U	0.01 U	0.01 U	0.01 U	0.01 U	0.01 U	0.019
Naphthalene in mg/kg	70,000	0.01 U	0.01 U	0.01 U	0.03 U	0.019	0.019	0.022	0.016	0.023	0.1 U	0.01 U	0.01 U	0.01 U	0.019	0.016	0.01 U	0.015	0.015	0.023	0.011	0.019	0.019
Benz(a)anthracene in mg/kg		0.022	0.01 U	0.01 U	0.021	0.12	0.15	0.14	0.082	0.1	0.19	0.027	0.12	0.033	0.039	0.034	0.021	0.39	0.16	0.11	0.026	0.072	0.21
Benzo(a)pyrene in mg/kg		0.02	0.01 U	0.01 U	0.028	0.12	0.15	0.14	0.088	0.11	0.2	0.025	0.088	0.025	0.037	0.034	0.019	0.26	0.17	0.12	0.028	0.078	0.18
Benzo(b)fluoranthene in mg/kg		0.027	0.014	0.01 U	0.037	0.15	0.2	0.18	0.12	0.15	0.24	0.03	0.12	0.031	0.042	0.039	0.023	0.36	0.21	0.17	0.037	0.084	0.19
Benzo(k)fluoranthene in mg/kg		0.01 U	0.01 U	0.01 U	0.011	0.054	0.064	0.057	0.04	0.054	0.1 U	0.01	0.044	0.011	0.017	0.016	0.01 U	0.12	0.078	0.057	0.014	0.026	0.068
Chrysene in mg/kg		0.037	0.012	0.01 U	0.026	0.16	0.18	0.18	0.11	0.14	0.22	0.035	0.24	0.046	0.055	0.046	0.027	0.54	0.21	0.17	0.04	0.095	0.24
Dibenzo(a,h)anthracene in mg/kg		0.01 U	0.01 U	0.01 U	0.0057	0.023	0.028	0.026	0.017	0.021	0.1 U	0.01 U	0.014	0.01 U	0.01 U	0.01 U	0.01 U	0.04	0.03	0.023	0.01 U	0.012	0.029
Indeno(1,2,3-cd)pyrene in mg/kg		0.013	0.012	0.01 U	0.024	0.09	0.12	0.099	0.065	0.078	0.17	0.017	0.044	0.016	0.024	0.021	0.014	0.14	0.13	0.091	0.023	0.047	0.12
Total cPAHs TEQ in mg/kg	7.9	0.0276	0.00922	ND	0.0381	0.165	0.208	0.192	0.122	0.152	0.272	0.0343	0.125	0.0351	0.0503	0.046	0.0261	0.37	0.233	0.167	0.0389	0.103	0.244
Other Semivolatiles																						
1,2,4-Trichlorobenzene in mg/kg	4,500	0.01 U	0.01 U	0.01 U	0.03 U	0.01 U	0.01 U	0.01 U	0.01 U	0.01 U	0.1 U	0.01 U	0.01 U	0.01 U	0.01 U	0.01 U	0.01 U	0.01 U	0.01 U	0.01 U	0.01 U	0.01 U	0.01 U
1,2-Dichlorobenzene in mg/kg	320,000	0.01 U	0.01 U	0.01 U	0.03 U	0.01 U	0.01 U	0.01 U	0.01 U	0.01 U	0.1 U	0.01 U	0.01 U	0.01 U	0.01 U	0.01 U	0.01 U	0.01 U	0.01 U	0.01 U	0.01 U	0.01 U	0.01 U
1,3-Dichlorobenzene in mg/kg		0.01 U	0.01 U	0.01 U	0.03 U	0.01 U	0.01 U	0.01 U	0.01 U	0.01 U	0.1 U	0.01 U	0.01 U	0.01 U	0.01 U	0.01 U	0.01 U	0.01 U	0.01 U	0.01 U	0.01 U	0.01 U	0.01 U
1,4-Dichlorobenzene in mg/kg	24,000	0.01 U	0.01 U	0.011 U	0.03 U	0.01 U	0.01 U	0.01 U	0.01 U	0.01 U	0.1 U	0.01 U	0.01 U	0.01 U	0.01 U	0.01 U	0.01 U	0.01 U	0.01 U	0.01 U	0.01 U	0.01 U	0.01 U
2,4,5-Trichlorophenol in mg/kg	350,000	0.1 U	0.1 U	0.1 U	0.3 U	0.1 U	0.1 U	0.1 U	0.1 U	0.1 U	1 U	0.1 U	0.1 U	0.1 U	0.1 U	0.1 U	0.1 U	0.1 U	0.1 U	0.1 U	0.1 U	0.1 U	0.1 U
2,4,6-Trichlorophenol in mg/kg	3,500	0.1 U	0.1 U	0.1 U	0.3 U	0.1 U	0.1 U	0.1 U	0.1 U	0.1 U	1 U	0.1 U	0.1 U	0.1 U	0.1 U	0.1 U	0.1 U	0.1 U	0.1 U	0.1 U	0.1 U	0.1 U	0.1 U
2,4-Dichlorophenol in mg/kg	11,000	0.1 U	0.1 U	0.1 U	0.3 U	0.1 U	0.1 U	0.1 U	0.1 U	0.1 U	1 U	0.1 U	0.1 U	0.1 U	0.1 U	0.1 U	0.1 U	0.1 U	0.1 U	0.1 U	0.1 U	0.1 U	0.1 U
2,4-Dimethylphenol in mg/kg	70,000	0.1 U	0.1 U	0.1 U	0.3 U	0.1 U	0.1 U	0.1 U	0.1 U	0.1 U	1 U	0.1 U	0.1 U	0.1 U	0.1 U	0.1 U	0.1 U	0.1 U	0.1 U	0.1 U	0.1 U	0.1 U	0.1 U
2,4-Dinitrophenol in mg/kg	7,000	0.3 U	0.3 UJ	0.3 U	0.9 U	0.3 UJ	0.3 U	0.3 U	0.3 U	0.3 U	3 U	0.3 U	0.3 U	0.3 U	0.3 U	0.3 U	0.3 U	0.3 U	0.3 U	0.3 U	0.3 U	0.3 U	0.3 U
2-Chloronaphthalene in mg/kg	280,000	0.01 U	0.01 U	0.01 U	0.03 U	0.01 U	0.01 U	0.01 U	0.01 U	0.01 U	0.1 U	0.01 U	0.01 U	0.01 U	0.01 U	0.01 U	0.01 U	0.01 U	0.01 U	0.01 U	0.01 U	0.01 U	0.01 U
2-Chlorophenol in mg/kg	18,000	0.1 U	0.1 U	0.1 U	0.3 U	0.1 U	0.1 U	0.1 U	0.1 U	0.1 U	1 U	0.1 U	0.1 U	0.1 U	0.1 U	0.1 U	0.1 U	0.1 U	0.1 U	0.1 U	0.1 U	0.1 U	0.1 U
2-Methylphenol in mg/kg	180,000	0.1 U	0.1 U	0.1 U	0.3 U	0.1 U	0.1 U	0.1 U	0.1 U	0.1 U	1 U	0.1 U	0.1 U	0.1 U	0.1 U	0.1 U	0.1 U	0.1 U	0.1 U	0.1 U	0.1 U	0.1 U	0.1 U
2-Nitroaniline in mg/kg	35,000	0.05 U	0.05 U	0.05 U	0.03 U	0.05 U	0.05 U	0.05 U	0.05 U	0.05 U	0.5 U	0.05 U	0.05 U	0.05 U	0.05 U	0.05 U	0.05 U	0.05 U	0.05 U	0.05 U	0.05 U	0.05 U	0.05 U
2-Nitrophenol in mg/kg		0.1 U	0.1 U	0.1 U	0.3 U	0.1 U	0.1 U	0.1 U	0.1 U	0.1 U	1 U	0.1 U	0.1 U	0.1 U	0.1 U	0.1 U	0.1 U	0.1 U	0.1 U	0.1 U	0.1 U	0.1 U	0.1 U
3 & 4 Methylphenol in mg/kg	175000	0.2 U	0.2 U	0.2 U	0.6 U	0.2 U	0.2 U	0.2 U	0.2 U	0.2 U	2 U	0.2 U	0.2 U	0.2 U	0.2 U	0.2 U	0.2 U	0.2 U	0.2 U	0.2 U	0.2 U	0.2 U	0.2 U
3-Nitroaniline in mg/kg		1 U	1 U	1 U	3 U	1 U	1 U	1 U	1 U	1 U	10 U	1 U	1 U	1 U	1 U	1 U	1 U	1 U	1 U	1 U	1 U	1 U	1 U
4,6-Dinitro-2-methylphenol in mg/kg		0.3 U	0.3 U	0.3 U	0.9 U	0.3 UJ	0.3 U	0.3 U	0.3 U	0.3 U	3 U	0.3 U	0.3 U	0.3 U	0.3 U	0.3 U	0.3 U	0.3 U	0.3 U	0.3 U	0.3 U	0.3 U	0.3 U
4-Bromophenyl phenyl ether in mg/kg		0.01 U	0.01 U	0.01 U	0.03 U	0.01 U	0.01 U	0.01 U	0.01 U	0.01 U	0.1 U	0.01 U	0.01 U	0.01 U	0.01 U	0.01 U	0.01 U	0.01 U	0.01 U	0.01 U	0.01 U	0.01 U	0.01 U
4-Chloro-3-methylphenol in mg/kg		0.1 U	0.1 U	0.1 U	0.3 U	0.1 U	0.1 U	0.1 U	0.1 U	0.1 U	1 U	0.1 U	0.1 U	0.1 U	0.1 U	0.1 U	0.1 U	0.1 U	0.1 U	0.1 U	0.1 U	0.1 U	0.1 U

Table 3 - Overburden Soil Quality Data

K-C Worldwide Site Upland Area 110207

		Bunker C AST Area			Heavy Duty Shop Sump	Naval Reserve Parcel UST Area																
Chemical Name	Interim Action Cleanup Level - Unsaturated Soil	BAST-SP01-1-021714	BAST-SP01-2-021714	BAST-SP01-3-021714	HDS-SP-1	NRU-SP01-1-012414	NRU-SP01-2-012414	NRU-SP01-3-012414	NRU-SP02-1-012414	NRU-SP02-2-012414	NRU-SP02-3-012414	NRU-SP03-1-012414	NRU-SP03-2-012414	NRU-SP03-3-012414	NRU-SP04-1-012414	NRU-SP04-2-012414	NRU-SP04-3-012414	NRU-SP05-1-012414	NRU-SP05-2-012414	NRU-SP05-3-012414	NRU-SP06-1-012414	NRU-SP06-2-012414	NRU-SP06-3-012414
4-Chloroaniline in mg/kg	660	1 U	1 U	1 U	3 U	1 U	1 U	1 U	1 U	1 U	10 U	1 U	1 U	1 U	1 U	1 U	1 U	1 U	1 U	1 U	1 U	1 U
4-Chlorophenyl phenyl ether in mg/kg		0.01 U	0.01 U	0.01 U	0.03 U	0.01 U	0.01 U	0.01 U	0.01 U	0.01 U	0.1 U	0.01 U	0.01 U	0.01 U	0.01 U	0.01 U	0.01 U	0.01 U	0.01 U	0.01 U	0.01 U	0.01 U
4-Nitroaniline in mg/kg		1 U	1 U	1 U	3 U	1 U	1 U	1 U	1 U	1 U	10 U	1 U	1 U	1 U	1 U	1 U	1 U	1 U	1 U	1 U	1 U	1 U
4-Nitrophenol in mg/kg		0.3 U	0.3 U	0.3 U	0.9 U	0.3 UJ	0.3 U	0.3 U	0.3 U	0.3 U	3 U	0.3 U	0.3 U	0.3 U	0.3 U	0.3 U	0.3 U	0.3 U	0.3 U	0.3 U	0.3 U	0.3 U
Benzoic acid in mg/kg	14,000,000	0.5 U	0.5 UJ	0.5 U	1.5 UJ	0.5 U	0.5 U	0.5 U	0.5 U	0.5 U	5 U	0.5 U	0.5 U	0.5 U	0.5 U	0.5 U	0.5 U	0.5 U	0.5 U	0.5 U	0.5 U	0.5 U
Benzyl alcohol in mg/kg	350,000	0.1 U	0.1 U	0.1 U	0.3 U	0.1 U	0.1 U	0.1 U	0.1 U	0.1 U	1 U	0.1 U	0.1 U	0.1 U	0.1 U	0.1 U	0.1 U	0.1 U	0.1 U	0.1 U	0.1 U	0.1 U
Benzyl butyl phthalate in mg/kg	69,000	0.1 U	0.1 U	0.1 U	0.03 U	0.1 U	0.1 U	0.1 U	0.1 U	0.1 U	1 U	0.1 U	0.1 U	0.1 U	0.1 U	0.1 U	0.1 U	0.1 U	0.1 U	0.1 U	0.1 U	0.1 U
Bis(2-chloro-1-methylethyl) ether in mg/kg	1,900	0.01 U	0.01 U	0.01 U	0.03 U	0.01 U	0.01 U	0.01 U	0.01 U	0.01 U	0.1 U	0.01 U	0.01 U	0.01 U	0.01 U	0.01 U	0.01 U	0.01 U	0.01 U	0.01 U	0.01 U	0.01 U
Bis(2-chloroethoxy)methane in mg/kg		0.01 U	0.01 U	0.01 U	0.03 U	0.01 U	0.01 U	0.01 U	0.01 U	0.01 U	0.1 U	0.01 U	0.01 U	0.01 U	0.01 U	0.01 U	0.01 U	0.01 U	0.01 U	0.01 U	0.01 U	0.01 U
Bis(2-chloroethyl) ether in mg/kg	120	0.01 U	0.01 U	0.01 U	0.03 U	0.01 U	0.01 U	0.01 U	0.01 U	0.01 U	0.1 U	0.01 U	0.01 U	0.01 U	0.01 U	0.01 U	0.01 U	0.01 U	0.01 U	0.01 U	0.01 U	0.01 U
Bis(2-ethylhexyl) phthalate in mg/kg	9,400	0.16 U	0.16 U	0.16 U	0.48 U	0.16 U	0.16 U	0.16 U	0.16 U	0.16 U	1.6 U	0.16 U	0.16 U	0.16 U	0.16 U	0.16 U	0.16 U	0.16 U	0.16 U	0.16 U	0.16 U	0.16 U
Carbazole in mg/kg		0.1 U	0.1 U	0.1 U	0.03 U	0.1 U	0.1 U	0.1 U	0.1 U	0.1 U	1 U	0.1 U	0.1 U	0.1 U	0.1 U	0.1 U	0.1 U	0.1 U	0.1 U	0.1 U	0.1 U	0.1 U
Diethyl phthalate in mg/kg	2,800,000	0.1 U	0.1 U	0.1 U	0.03 U	0.1 U	0.1 U	0.1 U	0.1 U	0.1 U	1 U	0.1 U	0.1 U	0.1 U	0.1 U	0.1 U	0.1 U	0.1 U	0.1 U	0.1 U	0.1 U	0.1 U
Dimethyl phthalate in mg/kg		0.1 U	0.1 U	0.1 U	0.03 U	0.1 U	0.1 U	0.1 U	0.1 U	0.1 U	1 U	0.1 U	0.1 U	0.1 U	0.1 U	0.1 U	0.1 U	0.1 U	0.1 U	0.1 U	0.1 U	0.1 U
Di-n-butyl phthalate in mg/kg	350,000	0.1 U	0.1 U	0.1 U	0.05 U	0.1 U	0.1 U	0.1 U	0.1 U	0.1 U	1 U	0.1 U	0.1 U	0.1 U	0.1 U	0.1 U	0.1 U	0.1 U	0.1 U	0.1 U	0.1 U	0.1 U
Di-n-octyl phthalate in mg/kg	35,000	0.1 U	0.1 U	0.1 U	0.03 U	0.1 U	0.1 U	0.1 U	0.1 U	0.1 U	1 U	0.1 U	0.1 U	0.1 U	0.1 U	0.1 U	0.1 U	0.1 U	0.1 U	0.1 U	0.1 U	0.1 U
Hexachlorobenzene in mg/kg	82	0.01 U	0.01 U	0.01 U	0.03 U	0.01 U	0.01 U	0.01 U	0.01 U	0.01 U	0.1 U	0.01 U	0.01 U	0.01 U	0.01 U	0.01 U	0.01 U	0.01 U	0.01 U	0.01 U	0.01 U	0.01 U
Hexachlorobutadiene in mg/kg	1,700	0.01 U	0.01 U	0.01 U	0.03 U	0.01 U	0.01 U	0.01 U	0.01 U	0.01 U	0.1 U	0.01 U	0.01 U	0.01 U	0.01 U	0.01 U	0.01 U	0.01 U	0.01 U	0.01 U	0.01 U	0.01 U
Hexachlorocyclopentadiene in mg/kg	21,000	0.03 U	0.03 U	0.03 U	0.09 U	0.03 UJ	0.03 U	0.03 U	0.03 U	0.03 U	0.3 U	0.03 U	0.03 U	0.03 U	0.03 U	0.03 U	0.03 U	0.03 U	0.03 U	0.03 U	0.03 U	0.03 U
Hexachloroethane in mg/kg	2,500	0.01 U	0.01 U	0.01 U	0.03 U	0.01 U	0.01 U	0.01 U	0.01 U	0.01 U	0.1 U	0.01 U	0.01 U	0.01 U	0.01 U	0.01 U	0.01 U	0.01 U	0.01 U	0.01 U	0.01 U	0.01 U
Isophorone in mg/kg	140,000	0.01 U	0.01 U	0.01 U	0.03 U	0.01 U	0.01 U	0.01 U	0.01 U	0.01 U	0.1 U	0.01 U	0.01 U	0.01 U	0.01 U	0.01 U	0.01 U	0.01 U	0.01 U	0.01 U	0.01 U	0.01 U
Nitrobenzene in mg/kg	7,000	0.01 U	0.01 U	0.01 U	0.03 U	0.01 U	0.01 U	0.01 U	0.01 U	0.01 U	0.1 U	0.01 U	0.01 U	0.01 U	0.01 U	0.01 U	0.01 U	0.01 U	0.01 U	0.01 U	0.01 U	0.01 U
N-Nitroso-di-n-propylamine in mg/kg	19	0.01 U	0.01 U	0.01 U	0.03 U	0.01 U	0.01 U	0.01 U	0.01 U	0.01 U	0.1 U	0.01 U	0.01 U	0.01 U	0.01 U	0.01 U	0.01 U	0.01 U	0.01 U	0.01 U	0.01 U	0.01 U
N-Nitrosodiphenylamine in mg/kg	27,000	0.01 U	0.01 U	0.01 U	0.03 U	0.01 U	0.01 U	0.01 U	0.01 U	0.01 U	0.1 U	0.01 U	0.01 U	0.01 U	0.01 U	0.01 U	0.01 U	0.01 U	0.01 U	0.01 U	0.01 U	0.01 U
Pentachlorophenol in mg/kg	330	0.1 U	0.1 U	0.1 U	0.3 U	0.1 U	0.1 U	0.1 U	0.1 U	0.1 U	1 U	0.1 U	0.1 U	0.1 U	0.1 U	0.1 U	0.1 U	0.1 U	0.1 U	0.1 U	0.1 U	0.1 U
Phenol in mg/kg	1,100,000	0.1 U	0.1 U	0.1 U	0.3 U	0.1 U	0.1 U	0.1 U	0.1 U	0.1 U	1 U	0.1 U	0.1 U	0.1 U	0.1 U	0.1 U	0.1 U	0.1 U	0.1 U	0.1 U	0.1 U	0.1 U
2,4-Dinitrotoluene in mg/kg	420	0.05 U	0.05 U	0.05 U	0.03 U	0.05 U	0.05 U	0.05 U	0.05 U	0.05 U	0.5 U	0.05 U	0.05 U	0.05 U	0.05 U	0.05 U	0.05 U	0.05 U	0.05 U	0.05 U	0.05 U	0.05 U
2,6-Dinitrotoluene in mg/kg	88	0.05 U	0.05 U	0.05 U	0.03 U	0.05 U	0.05 U	0.05 U	0.05 U	0.05 U	0.5 U	0.05 U	0.05 U	0.05 U	0.05 U	0.05 U	0.05 U	0.05 U	0.05 U	0.05 U	0.05 U	0.05 U
Volatile Organic Compounds (VOC)																						
1,1,1,2-Tetrachloroethane in mg/kg	5,000	0.05 UJ	0.05 UJ	0.05 UJ	0.05 UJ	0.05 UJ	0.05 UJ	0.05 UJ	0.05 UJ	0.05 UJ	0.05 UJ	0.05 UJ	0.05 UJ	0.05 UJ	0.05 UJ	0.05 UJ	0.05 UJ	0.05 UJ	0.05 UJ	0.05 UJ	0.05 UJ	0.05 UJ
1,1,1-Trichloroethane in mg/kg	7,000,000	0.05 UJ	0.05 UJ	0.05 UJ	0.05 UJ	0.05 UJ	0.05 UJ	0.05 UJ	0.05 UJ	0.05 UJ	0.05 UJ	0.05 UJ	0.05 UJ	0.05 UJ	0.05 UJ	0.05 UJ	0.05 UJ	0.05 UJ	0.05 UJ	0.05 UJ	0.05 UJ	0.05 UJ
1,1,2,2-Tetrachloroethane in mg/kg	660	0.05 UJ	0.05 UJ	0.05 UJ	0.05 UJ	0.05 UJ	0.05 UJ	0.05 UJ	0.05 UJ	0.05 UJ	0.05 UJ	0.05 UJ	0.05 UJ	0.05 UJ	0.05 UJ	0.05 UJ	0.05 UJ	0.05 UJ	0.05 UJ	0.05 UJ	0.05 UJ	0.05 UJ
1,1,2-Trichloroethane in mg/kg	2,300	0.05 UJ	0.05 UJ	0.05 UJ	0.05 UJ	0.05 UJ	0.05 UJ	0.05 UJ	0.05 UJ	0.05 UJ	0.05 UJ	0.05 UJ	0.05 UJ	0.05 UJ	0.05 UJ	0.05 UJ	0.05 UJ	0.05 UJ	0.05 UJ	0.05 UJ	0.05 UJ	0.05 UJ
1,1-Dichloroethane in mg/kg	23,000	0.05 UJ	0.05 UJ	0.05 UJ	0.05 UJ	0.05 UJ	0.05 UJ	0.05 UJ	0.05 UJ	0.05 UJ	0.05 UJ	0.05 UJ	0.05 UJ	0.05 UJ	0.05 UJ	0.05 UJ	0.05 UJ	0.05 UJ	0.05 UJ	0.05 UJ	0.05 UJ	0.05 UJ
1,1-Dichloroethene in mg/kg	180,000	0.05 UJ	0.05 UJ	0.05 UJ	0.05 UJ	0.05 UJ	0.05 UJ	0.05 UJ	0.05 UJ	0.05 UJ	0.05 UJ	0.05 UJ	0.05 UJ	0.05 UJ	0.05 UJ	0.05 UJ	0.05 UJ	0.05 UJ	0.05 UJ	0.05 UJ	0.05 UJ	0.05 UJ
1,1-Dichloropropene in mg/kg		0.05 UJ	0.05 UJ	0.05 UJ	0.05 UJ	0.05 UJ	0.05 UJ	0.05 UJ	0.05 UJ	0.05 UJ	0.05 UJ	0.05 UJ	0.05 UJ	0.05 UJ	0.05 UJ	0.05 UJ	0.05 UJ	0.05 UJ	0.05 UJ	0.05 UJ	0.05 UJ	0.05 UJ
1,2,3-Trichlorobenzene in mg/kg		0.25 UJ	0.25 UJ	0.25 UJ	0.25 UJ	0.25 UJ	0.25 UJ	0.25 UJ	0.25 UJ	0.25 UJ	0.25 UJ	0.25 UJ	0.25 UJ	0.25 UJ	0.25 UJ	0.25 UJ	0.25 UJ	0.25 UJ	0.25 UJ	0.25 UJ	0.25 UJ	0.25 UJ
1,2,3-Trichloropropane in mg/kg	4.4	0.05 UJ	0.05 UJ	0.05 UJ	0.05 UJ	0.05 UJ	0.05 UJ	0.05 UJ	0.05 UJ	0.05 UJ	0.05 UJ	0.05 UJ	0.05 UJ	0.05 UJ	0.05 UJ	0.05 UJ	0.05 UJ	0.05 UJ	0.05 UJ	0.05 UJ	0.05 UJ	0.05 UJ
1,2,4-Trichlorobenzene in mg/kg	4,500	0.25 UJ	0.25 UJ	0.25 UJ		0.25 UJ	0.25 UJ	0.25 UJ	0.25 UJ	0.25 UJ	0.25 UJ	0.25 UJ	0.25 UJ	0.25 UJ	0.25 UJ	0.25 UJ	0.25 UJ	0.25 UJ	0.25 UJ	0.25 UJ	0.25 UJ	0.25 UJ
1,2,4-Trimethylbenzene in mg/kg		0.05 UJ	0.05 UJ	0.05 UJ	0.05 UJ	0.05 UJ	0.05 UJ	0.05 UJ	0.05 UJ	0.05 UJ	0.05 UJ	0.05 UJ	0.05 UJ	0.05 UJ	0.05 UJ	0.05 UJ	0.05 UJ	0.05 UJ	0.05 UJ	0.05 UJ	0.05 UJ	0.05 UJ
1,2-Dibromo-3-chloropropane in mg/kg	160	0.5 UJ	0.5 UJ	0.5 UJ	0.5 UJ	0.5 UJ	0.5 UJ	0.5 UJ	0.5 UJ	0.5 UJ	0.5 UJ	0.5 UJ	0.5 UJ	0.5 UJ	0.5 UJ	0.5 UJ	0.5 UJ	0.5 UJ	0.5 UJ	0.5 UJ	0.5 UJ	0.5 UJ
1,2-Dibromoethane (EDB) in mg/kg	66	0.05 UJ	0.05 UJ	0.05 UJ	0.05 UJ	0.05 UJ	0.05 UJ	0.05 UJ	0.05 UJ	0.05 UJ	0.05 UJ	0.05 UJ	0.05 UJ	0.05 UJ	0.05 UJ	0.05 UJ	0.05 UJ	0.05 UJ	0.05 UJ	0.05 UJ	0.05 UJ	0.05 UJ
1,2-Dichlorobenzene in mg/kg	320,000	0.05 UJ	0.05 UJ	0.05 UJ		0.05 UJ	0.05 UJ	0.05 UJ	0.05 UJ	0.05 UJ	0.05 UJ	0.05 UJ	0.05 UJ	0.05 UJ	0.05 UJ	0.05 UJ	0.05 UJ	0.05 UJ	0.05 UJ	0.05 UJ	0.05 UJ	0.05 UJ
1,2-Dichloroethane (EDC) in mg/kg	1,400	0.05 UJ	0.05 UJ	0.05 UJ	0.05 UJ	0.05 UJ	0.05 UJ	0.05 UJ	0.05 UJ	0.05 UJ	0.05 UJ	0.05 UJ	0.05 UJ	0.05 UJ	0.05 UJ	0.05 UJ	0.05 UJ	0.05 UJ	0.05 UJ	0.05 UJ	0.05 UJ	0.05 UJ
1,2-Dichloropropane in mg/kg	3,600	0.05 UJ	0.05 UJ	0.05 UJ	0.05 UJ	0.05 UJ	0.05 UJ	0.05 UJ	0.05 UJ	0.05 UJ	0.05 UJ	0.05 UJ	0.05 UJ	0.05 UJ	0.05 UJ	0.05 UJ	0.05 UJ	0.05 UJ	0.05 UJ	0.05 UJ	0.05 UJ	0.05 UJ
1,3,5-Trimethylbenzene in mg/kg	35,000	0.05 UJ	0.05 UJ	0.05 UJ	0.05 UJ	0.05 UJ	0.05 UJ	0.05 UJ	0.05 UJ	0.05 UJ	0.05 UJ	0.05 UJ	0.05 UJ	0.05 UJ	0.05 UJ	0.05 UJ	0.05 UJ	0.05 UJ	0.05 UJ	0.05 UJ	0.05 UJ	0.05 UJ
1,3-Dichlorobenzene in mg/kg		0.05 UJ	0.05 UJ	0.05 UJ		0.05 UJ	0.05 UJ	0.05 UJ	0.05 UJ	0.05 UJ	0.05 UJ	0.05 UJ	0.05 UJ	0.05 UJ	0.05 UJ	0.05 UJ	0.05 UJ	0.05 UJ	0.05 UJ	0.05 UJ	0.05 UJ	0.05 UJ
1,3-Dichloropropane in mg/kg		0.05 UJ	0.05 UJ	0.05 UJ	0.05 UJ	0.05 UJ	0.05 UJ	0.05 UJ	0.05 UJ	0.05 UJ	0.05 UJ	0.05 UJ	0.05 UJ	0.05 UJ	0.05 UJ	0.05 UJ	0.05 UJ	0.05 UJ	0.05 UJ	0.05 UJ	0.05 UJ	0.05 UJ
1,4-Dichlorobenzene in mg/kg	24,000	0.05 UJ	0.05 UJ	0.05 UJ		0.05 UJ	0.05 UJ	0.05 UJ	0.05 UJ	0.05 UJ	0.05 UJ	0.05 UJ	0.05 UJ	0.05 UJ	0.05 UJ	0.05 UJ	0.05 UJ	0.05 UJ	0.05 UJ	0.05 UJ	0.05 UJ	0.05 UJ
2,2-Dichloropropane in mg/kg		0.05 UJ	0.05 UJ	0.05 UJ	0.05 UJ	0.05 UJ	0.05 UJ	0.05 UJ	0.05 UJ	0.05 UJ	0.05 UJ	0.05 UJ	0.05 UJ	0.05 UJ	0.05 UJ	0.05 UJ	0.05 UJ	0.05 UJ	0.05 UJ	0.05 UJ	0.05 UJ	0.05 UJ
2-Butanone in mg/kg	2,100,000	0.5 UJ	0.5 UJ	0.5 UJ	0.5 UJ	0.5 UJ	0.5 UJ	0.5 UJ	0.5 UJ	0.5 UJ	0.5 UJ	0.5 UJ	0.5 UJ	0.5 UJ	0.5 UJ	0.5 UJ	0.5 UJ	0.5 UJ	0.5 UJ	0.5 UJ	0.5 UJ	0.5 UJ
2-Chlorotoluene in mg/kg	70,000	0.05 UJ	0.05 UJ	0.05 UJ	0.05 UJ	0.05 UJ	0.05 UJ	0.05 UJ	0.05 UJ	0.05 UJ	0.05 UJ	0.05 UJ	0.05 UJ	0.05 UJ	0.05 UJ	0.05 UJ	0.05 UJ	0.05 UJ	0.05 UJ	0.05 UJ	0.05 UJ	0.05 UJ
2-Hexanone in mg/kg		0.5 UJ	0.5 UJ	0.5 UJ	0.5 UJ	0.5 UJ	0.5 UJ	0.5 UJ	0.5 UJ	0.5 UJ	0.5 UJ	0.5 UJ	0.5 UJ	0.5 UJ	0.5 UJ	0.5 UJ	0.5 UJ	0.5 UJ	0.5 UJ	0.5 UJ	0.5 UJ	0.5 UJ
4-Chlorotoluene in mg/kg		0.05 UJ	0.05 UJ	0.05 UJ	0.05 UJ	0.05 UJ	0.05 UJ	0.05 UJ	0.05 UJ	0.05 UJ	0.05 UJ	0.05 UJ	0.05 UJ	0.05 UJ	0.05 UJ	0.05 UJ	0.05 UJ	0.05 UJ	0.05 UJ	0.05 UJ	0.05 UJ	0.05 UJ
4-Methyl-2-pentanone in mg/kg	280,000	0.5 UJ	0.5 UJ	0.5 UJ	0.5 UJ	0.5 UJ	0.5 UJ	0.5 UJ	0.5 UJ	0.5 UJ	0.5 UJ	0.5 UJ	0.5 UJ	0.5 UJ	0.5 UJ	0.5 UJ	0.5 UJ	0.5 UJ	0.5 UJ	0.5 UJ	0.5 UJ	0.5 UJ
Acetone in mg/kg	3,200,000	0.5 UJ	0.5 UJ	0.5 UJ	0.5 UJ	0.5 UJ	0.5 UJ	0.5 UJ	0.5 UJ	0.5 UJ	0.5 UJ	0.5 UJ	0.5 UJ	0.5 UJ	0.5 UJ	0.5 UJ	0.5 UJ	0.5 UJ	0.5 UJ	0.5 UJ	0.5 UJ	0.5 UJ
Benzene in mg/kg	2,400	0.03 UJ	0.03 UJ	0.03 UJ	0.03 UJ	0.03 UJ	0.03 UJ	0.03 UJ	0.03 UJ	0.03 UJ	0.03 UJ	0.03 UJ	0.03 UJ	0.03 UJ	0.03 UJ	0.03 UJ	0.03 UJ	0.03 UJ	0.03 UJ	0.03 UJ	0.03 UJ	0.03 UJ
Bromobenzene in mg/kg		0.05 UJ	0.05 UJ	0.05 UJ	0.05 UJ	0.05 UJ	0.05 UJ	0.05 UJ	0.05 UJ	0.05 UJ	0.05 UJ	0.05 UJ	0.05 UJ	0.05 UJ	0.05 UJ	0.05 UJ	0.05 UJ	0.05 UJ	0.05 UJ	0.05 UJ	0.05 UJ	0.05 UJ
Bromodichloromethane in mg/kg	2,100	0.05 UJ	0.05 UJ	0.05 UJ	0.05 UJ	0.05 UJ	0.05 UJ	0.05 UJ	0.05 UJ	0.05 UJ	0.05 UJ	0.05 UJ	0.05 UJ	0.05 UJ	0.05 UJ	0.05 UJ	0.05 UJ	0.05 UJ	0.05 UJ	0.05 UJ	0.05 UJ	0.05 UJ

Table 3 - Overburden Soil Quality Data

K-C Worldwide Site Upland Area 110207

		Bunker C AST Area			Heavy Duty Shop Sump	Naval Reserve Parcel UST Area																
Chemical Name	Interim Action Cleanup Level - Unsaturated Soil	BAST-SP01-1-021714	BAST-SP01-2-021714	BAST-SP01-3-021714	HDS-SP-1	NRU-SP01-1-012414	NRU-SP01-2-012414	NRU-SP01-3-012414	NRU-SP02-1-012414	NRU-SP02-2-012414	NRU-SP02-3-012414	NRU-SP03-1-012414	NRU-SP03-2-012414	NRU-SP03-3-012414	NRU-SP04-1-012414	NRU-SP04-2-012414	NRU-SP04-3-012414	NRU-SP05-1-012414	NRU-SP05-2-012414	NRU-SP05-3-012414	NRU-SP06-1-012414	NRU-SP06-2-012414	NRU-SP06-3-012414
Bromoform in mg/kg	17,000	0.05 UJ	0.05 UJ	0.05 UJ	0.05 UJ	0.05 UJ	0.05 UJ	0.05 UJ	0.05 UJ	0.05 UJ	0.05 UJ	0.05 UJ	0.05 UJ	0.05 UJ	0.05 UJ	0.05 UJ	0.05 UJ	0.05 UJ	0.05 UJ	0.05 UJ	0.05 UJ	0.05 UJ
Bromomethane in mg/kg	4,900	0.5 UJ	0.5 UJ	0.5 UJ	0.5 UJ	0.5 UJ	0.5 UJ	0.5 UJ	0.5 UJ	0.5 UJ	0.5 UJ	0.5 UJ	0.5 UJ	0.5 UJ	0.5 UJ	0.5 UJ	0.5 UJ	0.5 UJ	0.5 UJ	0.5 UJ	0.5 UJ	0.5 UJ
Carbon tetrachloride in mg/kg	1,900	0.05 UJ	0.05 UJ	0.05 UJ	0.05 UJ	0.05 UJ	0.05 UJ	0.05 UJ	0.05 UJ	0.05 UJ	0.05 UJ	0.05 UJ	0.05 UJ	0.05 UJ	0.05 UJ	0.05 UJ	0.05 UJ	0.05 UJ	0.05 UJ	0.05 UJ	0.05 UJ	0.05 UJ
Chlorobenzene in mg/kg	70,000	0.05 UJ	0.05 UJ	0.05 UJ	0.05 UJ	0.05 UJ	0.05 UJ	0.05 UJ	0.05 UJ	0.05 UJ	0.05 UJ	0.05 UJ	0.05 UJ	0.05 UJ	0.05 UJ	0.05 UJ	0.05 UJ	0.05 UJ	0.05 UJ	0.05 UJ	0.05 UJ	0.05 UJ
Chloroethane in mg/kg		0.5 UJ	0.5 UJ	0.5 UJ	0.5 UJ	0.5 UJ	0.5 UJ	0.5 UJ	0.5 UJ	0.5 UJ	0.5 UJ	0.5 UJ	0.5 UJ	0.5 UJ	0.5 UJ	0.5 UJ	0.5 UJ	0.5 UJ	0.5 UJ	0.5 UJ	0.5 UJ	0.5 UJ
Chloroform in mg/kg	4,200	0.05 UJ	0.05 UJ	0.05 UJ	0.05 UJ	0.05 UJ	0.05 UJ	0.05 UJ	0.05 UJ	0.05 UJ	0.05 UJ	0.05 UJ	0.05 UJ	0.05 UJ	0.05 UJ	0.05 UJ	0.05 UJ	0.05 UJ	0.05 UJ	0.05 UJ	0.05 UJ	0.05 UJ
Chloromethane in mg/kg		0.5 UJ	0.5 UJ	0.5 UJ	0.5 UJ	0.5 UJ	0.5 UJ	0.5 UJ	0.5 UJ	0.5 UJ	0.5 UJ	0.5 UJ	0.5 UJ	0.5 UJ	0.5 UJ	0.5 UJ	0.5 UJ	0.5 UJ	0.5 UJ	0.5 UJ	0.5 UJ	0.5 UJ
cis-1,2-Dichloroethene (DCE) in mg/kg	7,000	0.05 UJ	0.05 UJ	0.05 UJ	0.05 UJ	0.05 UJ	0.05 UJ	0.05 UJ	0.05 UJ	0.05 UJ	0.05 UJ	0.05 UJ	0.05 UJ	0.05 UJ	0.05 UJ	0.05 UJ	0.05 UJ	0.05 UJ	0.05 UJ	0.05 UJ	0.05 UJ	0.05 UJ
cis-1,3-Dichloropropene in mg/kg		0.05 UJ	0.05 UJ	0.05 UJ	0.05 UJ	0.05 UJ	0.05 UJ	0.05 UJ	0.05 UJ	0.05 UJ	0.05 UJ	0.05 UJ	0.05 UJ	0.05 UJ	0.05 UJ	0.05 UJ	0.05 UJ	0.05 UJ	0.05 UJ	0.05 UJ	0.05 UJ	0.05 UJ
Dibromochloromethane in mg/kg	1,600	0.05 UJ	0.05 UJ	0.05 UJ	0.05 UJ	0.05 UJ	0.05 UJ	0.05 UJ	0.05 UJ	0.05 UJ	0.05 UJ	0.05 UJ	0.05 UJ	0.05 UJ	0.05 UJ	0.05 UJ	0.05 UJ	0.05 UJ	0.05 UJ	0.05 UJ	0.05 UJ	0.05 UJ
Dibromomethane in mg/kg	35,000	0.05 UJ	0.05 UJ	0.05 UJ	0.05 UJ	0.05 UJ	0.05 UJ	0.05 UJ	0.05 UJ	0.05 UJ	0.05 UJ	0.05 UJ	0.05 UJ	0.05 UJ	0.05 UJ	0.05 UJ	0.05 UJ	0.05 UJ	0.05 UJ	0.05 UJ	0.05 UJ	0.05 UJ
Dichlorodifluoromethane in mg/kg	700,000	0.5 UJ	0.5 UJ	0.5 UJ	0.5 UJ	0.5 UJ	0.5 UJ	0.5 UJ	0.5 UJ	0.5 UJ	0.5 UJ	0.5 UJ	0.5 UJ	0.5 UJ	0.5 UJ	0.5 UJ	0.5 UJ	0.5 UJ	0.5 UJ	0.5 UJ	0.5 UJ	0.5 UJ
Ethylbenzene in mg/kg	350,000	0.05 UJ	0.05 UJ	0.05 UJ	0.05 UJ	0.05 UJ	0.05 UJ	0.05 UJ	0.05 UJ	0.05 UJ	0.05 UJ	0.05 UJ	0.05 UJ	0.05 UJ	0.05 UJ	0.05 UJ	0.05 UJ	0.05 UJ	0.05 UJ	0.05 UJ	0.05 UJ	0.05 UJ
Hexachlorobutadiene in mg/kg	1,700	0.25 UJ	0.25 UJ	0.25 UJ		0.25 UJ	0.25 UJ	0.25 UJ	0.25 UJ	0.25 UJ	0.25 UJ	0.25 UJ	0.25 UJ	0.25 UJ	0.25 UJ	0.25 UJ	0.25 UJ	0.25 UJ	0.25 UJ	0.25 UJ	0.25 UJ	0.25 UJ
Isopropylbenzene in mg/kg	350,000	0.05 UJ	0.05 UJ	0.05 UJ	0.05 UJ	0.05 UJ	0.05 UJ	0.05 UJ	0.05 UJ	0.05 UJ	0.05 UJ	0.05 UJ	0.05 UJ	0.05 UJ	0.05 UJ	0.05 UJ	0.05 UJ	0.05 UJ	0.05 UJ	0.05 UJ	0.05 UJ	0.05 UJ
Methyl tert-butyl ether (MTBE) in mg/kg	73,000	0.05 UJ	0.05 UJ	0.05 UJ	0.05 UJ	0.05 UJ	0.05 UJ	0.05 UJ	0.05 UJ	0.05 UJ	0.05 UJ	0.05 UJ	0.05 UJ	0.05 UJ	0.05 UJ	0.05 UJ	0.05 UJ	0.05 UJ	0.05 UJ	0.05 UJ	0.05 UJ	0.05 UJ
Methylene chloride in mg/kg	21,000	0.5 UJ	0.5 UJ	0.5 UJ	0.5 UJ	0.5 UJ	0.5 UJ	0.5 UJ	0.5 UJ	0.5 UJ	0.5 UJ	0.5 UJ	0.5 UJ	0.5 UJ	0.5 UJ	0.5 UJ	0.5 UJ	0.5 UJ	0.5 UJ	0.5 UJ	0.5 UJ	0.5 UJ
n-Propylbenzene in mg/kg	350,000	0.05 UJ	0.05 UJ	0.05 UJ	0.05 UJ	0.05 UJ	0.05 UJ	0.05 UJ	0.05 UJ	0.05 UJ	0.05 UJ	0.05 UJ	0.05 UJ	0.05 UJ	0.05 UJ	0.05 UJ	0.05 UJ	0.05 UJ	0.05 UJ	0.05 UJ	0.05 UJ	0.05 UJ
p-Isopropyltoluene in mg/kg		0.05 UJ	0.05 UJ	0.05 UJ	0.05 UJ	0.05 UJ	0.05 UJ	0.05 UJ	0.05 UJ	0.05 UJ	0.05 UJ	0.05 UJ	0.05 UJ	0.05 UJ	0.05 UJ	0.05 UJ	0.05 UJ	0.05 UJ	0.05 UJ	0.05 UJ	0.05 UJ	0.05 UJ
sec-Butylbenzene in mg/kg	350,000	0.05 UJ	0.05 UJ	0.05 UJ	0.05 UJ	0.05 UJ	0.05 UJ	0.05 UJ	0.05 UJ	0.05 UJ	0.05 UJ	0.05 UJ	0.05 UJ	0.05 UJ	0.05 UJ	0.05 UJ	0.05 UJ	0.05 UJ	0.05 UJ	0.05 UJ	0.05 UJ	0.05 UJ
Styrene in mg/kg	700,000	0.05 UJ	0.05 UJ	0.05 UJ	0.05 UJ	0.05 UJ	0.05 UJ	0.05 UJ	0.05 UJ	0.05 UJ	0.05 UJ	0.05 UJ	0.05 UJ	0.05 UJ	0.05 UJ	0.05 UJ	0.05 UJ	0.05 UJ	0.05 UJ	0.05 UJ	0.05 UJ	0.05 UJ
tert-Butylbenzene in mg/kg	350,000	0.05 UJ	0.05 UJ	0.05 UJ	0.05 UJ	0.05 UJ	0.05 UJ	0.05 UJ	0.05 UJ	0.05 UJ	0.05 UJ	0.05 UJ	0.05 UJ	0.05 UJ	0.05 UJ	0.05 UJ	0.05 UJ	0.05 UJ	0.05 UJ	0.05 UJ	0.05 UJ	0.05 UJ
Tetrachloroethene (PCE) in mg/kg	21,000	0.025 UJ	0.025 UJ	0.025 UJ	0.025 UJ	0.025 UJ	0.025 UJ	0.025 UJ	0.025 UJ	0.025 UJ	0.025 UJ	0.025 UJ	0.025 UJ	0.025 UJ	0.025 UJ	0.025 UJ	0.025 UJ	0.025 UJ	0.025 UJ	0.025 UJ	0.025 UJ	0.025 UJ
Toluene in mg/kg	280,000	0.05 UJ	0.05 UJ	0.05 UJ	0.05 UJ	0.05 UJ	0.05 UJ	0.05 UJ	0.05 UJ	0.05 UJ	0.05 UJ	0.05 UJ	0.05 UJ	0.05 UJ	0.05 UJ	0.05 UJ	0.05 UJ	0.05 UJ	0.05 UJ	0.05 UJ	0.05 UJ	0.05 UJ
trans-1,2-Dichloroethene in mg/kg	70,000	0.05 UJ	0.05 UJ	0.05 UJ	0.05 UJ	0.05 UJ	0.05 UJ	0.05 UJ	0.05 UJ	0.05 UJ	0.05 UJ	0.05 UJ	0.05 UJ	0.05 UJ	0.05 UJ	0.05 UJ	0.05 UJ	0.05 UJ	0.05 UJ	0.05 UJ	0.05 UJ	0.05 UJ
trans-1,3-Dichloropropene in mg/kg		0.05 UJ	0.05 UJ	0.05 UJ	0.05 UJ	0.05 UJ	0.05 UJ	0.05 UJ	0.05 UJ	0.05 UJ	0.05 UJ	0.05 UJ	0.05 UJ	0.05 UJ	0.05 UJ	0.05 UJ	0.05 UJ	0.05 UJ	0.05 UJ	0.05 UJ	0.05 UJ	0.05 UJ
Trichloroethene (TCE) in mg/kg	1,800	0.03 UJ	0.03 UJ	0.03 UJ	0.03 UJ	0.03 UJ	0.03 UJ	0.03 UJ	0.03 UJ	0.03 UJ	0.03 UJ	0.03 UJ	0.03 UJ	0.03 UJ	0.03 UJ	0.03 UJ	0.03 UJ	0.03 UJ	0.03 UJ	0.03 UJ	0.03 UJ	0.03 UJ
Trichlorofluoromethane in mg/kg	1,100,000	0.5 UJ	0.5 UJ	0.5 UJ	0.5 UJ	0.5 UJ	0.5 UJ	0.5 UJ	0.5 UJ	0.5 UJ	0.5 UJ	0.5 UJ	0.5 UJ	0.5 UJ	0.5 UJ	0.5 UJ	0.5 UJ	0.5 UJ	0.5 UJ	0.5 UJ	0.5 UJ	0.5 UJ
Vinyl chloride in mg/kg	88	0.05 UJ	0.05 UJ	0.05 UJ	0.05 UJ	0.05 UJ	0.05 UJ	0.05 UJ	0.05 UJ	0.05 UJ	0.05 UJ	0.05 UJ	0.05 UJ	0.05 UJ	0.05 UJ	0.05 UJ	0.05 UJ	0.05 UJ	0.05 UJ	0.05 UJ	0.05 UJ	0.05 UJ
m,p-Xylenes in mg/kg	700,000	0.1 UJ	0.1 UJ	0.1 UJ	0.1 UJ	0.1 UJ	0.1 UJ	0.1 UJ	0.1 UJ	0.1 UJ	0.1 UJ	0.1 UJ	0.1 UJ	0.1 UJ	0.1 UJ	0.1 UJ	0.1 UJ	0.1 UJ	0.1 UJ	0.1 UJ	0.1 UJ	0.1 UJ
o-Xylene in mg/kg	700,000	0.05 UJ	0.05 UJ	0.05 UJ	0.05 UJ	0.05 UJ	0.05 UJ	0.05 UJ	0.05 UJ	0.05 UJ	0.05 UJ	0.05 UJ	0.05 UJ	0.05 UJ	0.05 UJ	0.05 UJ	0.05 UJ	0.05 UJ	0.05 UJ	0.05 UJ	0.05 UJ	0.05 UJ
Naphthalene in mg/kg	70,000	0.05 UJ	0.05 UJ	0.05 UJ																		
Polychlorinated Biphenyls (PCBs)																						
Aroclor 1016 in mg/kg		0.02 U	0.02 U	0.02 U	0.1 U	0.02 U	0.02 U	0.02 U	0.02 U	0.02 U	0.02 U	0.02 U	0.02 U	0.02 U	0.02 U	0.02 U	0.02 U	0.02 U	0.02 U	0.02 U	0.02 U	0.02 U
Aroclor 1221 in mg/kg		0.02 U	0.02 U	0.02 U	0.1 U	0.02 U	0.02 U	0.02 U	0.02 U	0.02 U	0.02 U	0.02 U	0.02 U	0.02 U	0.02 U	0.02 U	0.02 U	0.02 U	0.02 U	0.02 U	0.02 U	0.02 U
Aroclor 1232 in mg/kg		0.02 U	0.02 U	0.02 U	0.1 U	0.02 U	0.02 U	0.02 U	0.02 U	0.02 U	0.02 U	0.02 U	0.02 U	0.02 U	0.02 U	0.02 U	0.02 U	0.02 U	0.02 U	0.02 U	0.02 U	0.02 U
Aroclor 1242 in mg/kg		0.02 U	0.02 U	0.02 U	0.1 U	0.02 U	0.02 U	0.02 U	0.02 U	0.02 U	0.02 U	0.02 U	0.02 U	0.02 U	0.02 U	0.02 U	0.02 U	0.02 U	0.02 U	0.02 U	0.02 U	0.02 U
Aroclor 1248 in mg/kg		0.02 U	0.02 U	0.02 U	0.1 U	0.02 U	0.02 U	0.02 U	0.02 U	0.02 U	0.02 U	0.02 U	0.02 U	0.02 U	0.02 U	0.02 U	0.02 U	0.02 U	0.02 U	0.02 U	0.02 U	0.02 U
Aroclor 1254 in mg/kg		0.02 U	0.02 U	0.02 U	0.1 U	0.02 U	0.02 U	0.021	0.02 U	0.02 U	0.02 U	0.02 U	0.02 U	0.02 U	0.17	0.13	0.068	0.02 U	0.02 U	0.02 U	0.02 U	0.02 U	0.02 U
Aroclor 1260 in mg/kg		0.027	0.02 U	0.02 U	0.1 U	0.02 U	0.02 U	0.02 U	0.02 U	0.02 U	0.02 U	0.02 U	0.02 U	0.02 U	0.02 U	0.02 U	0.02 U	0.02 U	0.02 U	0.02 U	0.02 U	0.02 U	0.02 U
Total PCBs (Sum of Aroclors) in mg/kg	10	0.087	ND	ND	ND	ND	ND	0.081	ND	ND	ND	ND	ND	ND	0.23	0.19	0.128	ND	ND	ND	ND	ND	ND

Notes

Concentrations in shaded cells indicate value exceeds Interim Action Cleanup Level - Unsaturated Soil.

J = Analyte was positively identified. The reported result is an estimate.

U = Analyte was not detected at or above the reported result.

UJ = Analyte was not detected at or above the reported estimate

x = The sample chromatographic pattern does not resemble the fuel standard used for quantitation.

Table 3 - Overburden Soil Quality Data

K-C Worldwide Site Upland Area 110207

Chemical Name	Interim Action Cleanup Level - Unsaturated Soil	Naval Reserve Parcel South Area																		
		NRS-SP01-1-021014	NRS-SP01-2-021014	NRS-SP01-3-021014	NRS-SP02-1-021014	NRS-SP02-2-021014	NRS-SP02-3-021014	NRS-SP03-1-021014	NRS-SP03-2-021014	NRS-SP03-3-021014	NRS-SP04-1-021014	NRS-SP04-2-021014	NRS-SP04-3-021014	NRS-SP05-1-021014	NRS-SP05-2-021014	NRS-SP05-3-021014	NRS-SP06-1-021014	NRS-SP06-2-021014	NRS-SP06-3-021014	NRS-SP07-1-021014	NRS-SP07-2-021014
Total Petroleum Hydrocarbons (TPH)																				
Gasoline Range Hydrocarbons in mg/kg	100	2 UJ	2 UJ	2 UJ	2 UJ	2 UJ	2 UJ	2 UJ	2 UJ	2 UJ	2 UJ	2 UJ	2 UJ	2 UJ	2 UJ	2 UJ	2 UJ	2 UJ	2 UJ	2 UJ
Diesel Range Hydrocarbons in mg/kg	2,000	50 U	50 U	50 U	50 U	50 U	50 U	50 U	50 U	50 U	50 U	50 U	50 U	50 U	50 U	50 U	200	50 U	50 U	50 U	50 U
Oil Range Hydrocarbons in mg/kg	2,000	250 U	250 U	250 U	250 U	250 U	250 U	250 U	250 U	250 U	250 U	250 U	250 U	250 U	250 U	250 U	250 U	250 U	250 U	250 U	250 U
Total TPHs in mg/kg	2,000	ND	ND	ND	ND	ND	ND	ND	ND	ND	ND	ND	ND	ND	ND	ND	325	ND	ND	ND	ND
Metals																				
Antimony in mg/kg	1,400	1 U	1 U	1 U	1 U	1 U	1 U	1 U	1 U	1 U	1 U	1 U	1 U	1 U	1 U	1 U	1 U	1 U	1 U	1 U	1 U
Arsenic in mg/kg	20	4.95	4.04	4.02	4.57	4.06	5.43	9.43	12.6	8.47	13.5	7.57	12.6	6.57	7.9	6.57	8.84	10.4	6.51	4.27	3.9
Beryllium in mg/kg	7,000	1 U	1 U	1 U	1 U	1 U	1 U	1 U	1 U	1 U	1 U	1 U	1 U	1 U	1 U	1 U	1 U	1 U	1 U	1 U	1 U
Cadmium in mg/kg	3,500	1 U	1 U	1 U	1 U	1 U	1 U	1 U	1 U	1 U	1 U	1 U	1 U	1 U	1 U	1 U	1 U	1 U	1 U	1 U	1 U
Chromium (Total) in mg/kg	5,300,000	12.6	11.8	11.4	9.93	9.71	11.7	14	14	11	12.3	15.1	14.9	13.6	12.8	13.5	12.2	14.5	14.1	9.13	9.07
Copper in mg/kg	36	21.1	15	14.3	15.2	14.9	17.5	27.9	29.5	25.1	22.7	23.2	27.3	18	19	19.5	21.3	23.6	17.6	10.9	11.3
Lead in mg/kg	1,000	4.8	3.58	3.89	9.98	8.34	8.61	16	17.3	10.9	24.6	14.9	31.3	5.66	7.37	8.39	5.86	8.27	5.33	2.65	2.52
Mercury in mg/kg	0.1	0.12 J	0.1 U	0.12	0.1 U	0.1 U	0.1 U	0.1 U	0.1 U	0.1 U	0.1 U	0.1 U	0.1 U	0.1 U	0.1 U	0.1 U	0.1 U	0.1 U	0.1 U	0.1 U	0.1 U
Nickel in mg/kg	48	17	16.2	16.5	17.4	17.1	18.1	18	20.9	14.3	17.4	19.5	22.8	18.7	20.8	17.5	15.7	18.9	17.2	14	13.8
Selenium in mg/kg	18,000	1 U	1 U	1 U	1 U	1 U	1 U	1 U	1 U	1 U	1 U	1 U	1 U	1 U	1 U	1 U	1 U	1 U	1 U	1 U	1 U
Silver in mg/kg	18,000	1 U	1 U	1 U	1 U	1 U	1 U	1 U	1 U	1 U	1 U	1 U	1 U	1 U	1 U	1 U	1 U	1 U	1 U	1 U	1 U
Thallium in mg/kg	35	1 U	1 U	1 U	1 U	1 U	1 U	1 U	1 U	1 U	1 U	1 U	1 U	1 U	1 U	1 U	1 U	1 U	1 U	1 U	1 U
Zinc in mg/kg	100	32.9	25.6	23.5	43.1	37.8	52.9	58.8	80.2	43.8	58.5	48.9	62.9	30.4	31.9	33.5	32	41	29.6	18.2	18
Polycyclic Aromatic Hydrocarbons (PAHs)																				
Acenaphthene in mg/kg	210,000	0.01 U	0.01 U	0.01 U	0.034	0.044	0.07	0.01 U	0.01 U	0.01 U	0.01 U	0.01 U	0.01 U	0.01 U	0.01 U	0.01 U	0.01 U	0.01 U	0.01 U	0.01 U	0.01 U
Acenaphthylene in mg/kg		0.01 U	0.01 U	0.01 U	0.01 U	0.01 U	0.01 U	0.01 U	0.01 U	0.01 U	0.01 U	0.01 U	0.01 U	0.01 U	0.01 U	0.01 U	0.01 U	0.01 U	0.01 U	0.01 U	0.01 U
Anthracene in mg/kg	1,100,000	0.01 U	0.01 U	0.01 U	0.021	0.03	0.044	0.01 U	0.01 U	0.01 U	0.01 U	0.01 U	0.013	0.01 U	0.01 U	0.01 U	0.014	0.01 U	0.01 U	0.01 U	0.01 U
Benzo(g,h,i)perylene in mg/kg		0.01 U	0.01 U	0.01 U	0.01	0.014	0.013	0.01 U	0.011	0.01 U	0.041	0.047	0.046	0.011	0.02	0.014	0.025	0.023	0.022	0.01 U	0.01 U
Dibenzofuran in mg/kg	3,500	0.01 U	0.01 U	0.01 U	0.024	0.026	0.049	0.01 U	0.01 U	0.01 U	0.01 U	0.01 U	0.01 U	0.01 U	0.01 U	0.01 U	0.01 U	0.01 U	0.01 U	0.01 U	0.01 U
Fluoranthene in mg/kg	140,000	0.01 U	0.01 U	0.01 U	0.077	0.16	0.2	0.015	0.023	0.018	0.082	0.094	0.12	0.029	0.05	0.027	0.06	0.031	0.026	0.01 U	0.01 U
Fluorene in mg/kg	140,000	0.01 U	0.01 U	0.01 U	0.033	0.046	0.096	0.01 U	0.01 U	0.01 U	0.01 U	0.01 U	0.01 U	0.01 U	0.01 U	0.01 U	0.016	0.01 U	0.01 U	0.01 U	0.01 U
Phenanthrene in mg/kg		0.015	0.01 U	0.01 U	0.097	0.15	0.3	0.01 U	0.01 U	0.01	0.035	0.029	0.058	0.01 U	0.018	0.015	0.046	0.034	0.015	0.01 U	0.01 U
Pyrene in mg/kg	110,000	0.014 J	0.01 U	0.01 U	0.082	0.15	0.21 J	0.018	0.03	0.022	0.1	0.11	0.12	0.03	0.056	0.033	0.07	0.06	0.036	0.01 U	0.011
2-Methylnaphthalene in mg/kg	15	0.01 U	0.01 U	0.01 U	0.026	0.033	0.025	0.01 U	0.01 U	0.01 U	0.01 U	0.01 U	0.01 U	0.01 U	0.01 U	0.01 U	0.01 U	0.01 U	0.01 U	0.01 U	0.01 U
Naphthalene in mg/kg	70,000	0.01 U	0.01 U	0.01 U	0.054	0.061	0.039	0.01 U	0.01 U	0.01 U	0.01 U	0.014	0.013	0.01 U	0.013	0.01 U	0.016	0.024	0.012	0.01 U	0.01 U
Benz(a)anthracene in mg/kg		0.01 U	0.01 U	0.01 U	0.021	0.055	0.048 J	0.01 U	0.016	0.01 U	0.051	0.06	0.065	0.021	0.035	0.02	0.032	0.022	0.021	0.01 U	0.01 U
Benzo(a)pyrene in mg/kg		0.01 U	0.01 U	0.01 U	0.014	0.025	0.02	0.01 U	0.015	0.01 U	0.058	0.065	0.062	0.017	0.032	0.021	0.029	0.021	0.022	0.01 U	0.01 U
Benzo(b)fluoranthene in mg/kg		0.01 U	0.01 U	0.01 U	0.021	0.045	0.033	0.012	0.02	0.014	0.077	0.093	0.09	0.024	0.041	0.023	0.04	0.028	0.027	0.01 U	0.01 U
Benzo(k)fluoranthene in mg/kg		0.01 U	0.01 U	0.01 U	0.01 U	0.016	0.011	0.01 U	0.01 U	0.01 U	0.026	0.032	0.027	0.01 U	0.013	0.01 U	0.014	0.013	0.013	0.01 U	0.01 U
Chrysene in mg/kg		0.01 U	0.01 U	0.01 U	0.034	0.088	0.051 J	0.01	0.018	0.012	0.063	0.07	0.077	0.022	0.035	0.022	0.049	0.033	0.028	0.01 U	0.01 U
Dibenzo(a,h)anthracene in mg/kg		0.01 U	0.01 U	0.01 U	0.01 U	0.01 U	0.01 U	0.01 U	0.01 U	0.01 U	0.011	0.012	0.013	0.01 U	0.01 U	0.01 U	0.01 U	0.01 U	0.01 U	0.01 U	0.01 U
Indeno(1,2,3-cd)pyrene in mg/kg		0.01 U	0.01 U	0.01 U	0.01 U	0.014	0.012	0.01 U	0.011	0.01 U	0.043	0.051	0.05	0.011	0.021	0.015	0.025	0.021	0.023	0.01 U	0.01 U
Total cPAHs TEQ in mg/kg	7.9	ND	ND	ND	0.02	0.0394	0.0314 J	0.0083	0.0209	0.00852	0.0794	0.0905	0.0873	0.0238	0.0439	0.028	0.0411	0.0302	0.0312	ND	ND
Other Semivolatiles																				
1,2,4-Trichlorobenzene in mg/kg	4,500	0.01 U	0.01 U	0.01 U	0.01 U	0.01 U	0.01 U	0.01 U	0.01 U	0.01 U	0.01 U	0.01 U	0.01 U	0.01 U	0.01 U	0.01 U	0.01 U	0.01 U	0.01 U	0.01 U	0.01 U
1,2-Dichlorobenzene in mg/kg	320,000	0.01 U	0.01 U	0.01 U	0.01 U	0.01 U	0.01 U	0.01 U	0.01 U	0.01 U	0.01 U	0.01 U	0.01 U	0.01 U	0.01 U	0.01 U	0.01 U	0.01 U	0.01 U	0.01 U	0.01 U
1,3-Dichlorobenzene in mg/kg		0.01 U	0.01 U	0.01 U	0.01 U	0.01 U	0.01 U	0.01 U	0.01 U	0.01 U	0.01 U	0.01 U	0.01 U	0.01 U	0.01 U	0.01 U	0.01 U	0.01 U	0.01 U	0.01 U	0.01 U
1,4-Dichlorobenzene in mg/kg	24,000	0.010 U	0.012 U	0.010 U	0.01 U	0.01 U	0.01 U	0.01 U	0.01 U	0.01 U	0.01 U	0.01 U	0.01 U	0.011 U	0.01 U	0.01 U	0.01 U	0.01 U	0.011 U	0.01 U	0.01 U
2,4,5-Trichlorophenol in mg/kg	350,000	0.1 U	0.1 U	0.1 U	0.1 U	0.1 U	0.1 U	0.1 U	0.1 U	0.1 U	0.1 U	0.1 U	0.1 U	0.1 U	0.1 U	0.1 U	0.1 U	0.1 U	0.1 U	0.1 U	0.1 U
2,4,6-Trichlorophenol in mg/kg	3,500	0.1 U	0.1 U	0.1 U	0.1 U	0.1 U	0.1 U	0.1 U	0.1 U	0.1 U	0.1 U	0.1 U	0.1 U	0.1 U	0.1 U	0.1 U	0.1 U	0.1 U	0.1 U	0.1 U	0.1 U
2,4-Dichlorophenol in mg/kg	11,000	0.1 U	0.1 U	0.1 U	0.1 U	0.1 U	0.1 U	0.1 U	0.1 U	0.1 U	0.1 U	0.1 U	0.1 U	0.1 U	0.1 U	0.1 U	0.1 U	0.1 U	0.1 U	0.1 U	0.1 U
2,4-Dimethylphenol in mg/kg	70,000	0.1 U	0.1 U	0.1 U	0.1 U	0.1 U	0.1 U	0.1 U	0.1 U	0.1 U	0.1 U	0.1 U	0.1 U	0.1 U	0.1 U	0.1 U	0.1 U	0.1 U	0.1 U	0.1 U	0.1 U
2,4-Dinitrophenol in mg/kg	7,000	0.3 UJ	0.3 U	0.3 U	0.3 UJ	0.3 UJ	0.3 U	0.3 U	0.3 UJ	0.3 U	0.3 U	0.3 U	0.3 U	0.3 U	0.3 UJ	0.3 UJ	0.3 UJ	0.3 UJ	0.3 UJ	0.3 UJ	0.3 U
2-Chloronaphthalene in mg/kg	280,000	0.01 U	0.01 U	0.01 U	0.01 U	0.01 U	0.01 U	0.01 U	0.01 U	0.01 U	0.01 U	0.01 U	0.01 U	0.01 U	0.01 U	0.01 U	0.01 U	0.01 U	0.01 U	0.01 U	0.01 U
2-Chlorophenol in mg/kg	18,000	0.1 U	0.1 U	0.1 U	0.1 U	0.1 U	0.1 U	0.1 U	0.1 U	0.1 U	0.1 U	0.1 U	0.1 U	0.1 U	0.1 U	0.1 U	0.1 U	0.1 U	0.1 U	0.1 U	0.1 U
2-Methylphenol in mg/kg	180,000	0.1 U	0.1 U	0.1 U	0.1 U	0.1 U	0.1 U	0.1 U	0.1 U	0.1 U	0.1 U	0.1 U	0.1 U	0.1 U	0.1 U	0.1 U	0.1 U	0.1 U	0.1 U	0.1 U	0.1 U
2-Nitroaniline in mg/kg	35,000	0.05 U	0.05 U	0.05 U	0.05 U	0.05 U	0.05 U	0.05 U	0.05 U	0.05 U	0.05 U	0.05 U	0.05 U	0.05 U	0.05 U	0.05 U	0.05 U	0.05 U	0.05 U	0.05 U	0.05 U
2-Nitrophenol in mg/kg		0.1 U	0.1 U	0.1 U	0.1 U	0.1 U	0.1 U	0.1 U	0.1 U	0.1 U	0.1 U	0.1 U	0.1 U	0.1 U	0.1 U	0.1 U	0.1 U	0.1 U	0.1 U	0.1 U	0.1 U
3 & 4 Methylphenol in mg/kg	175000	0.2 U	0.2 U	0.2 U	0.2 U	0.2 U	0.2 U	0.2 U	0.2 U	0.2 U	0.2 U	0.2 U	0.2 U	0.2 U	0.2 U	0.2 U	0.2 U	0.2 U	0.2 U	0.2 U	0.2 U
3-Nitroaniline in mg/kg		1 U	1 U	1 U	1 U	1 U	1 U	1 U	1 U	1 U	1 U	1 U	1 U	1 U	1 U	1 U	1 U	1 U	1 U	1 U	1 U
4,6-Dinitro-2-methylphenol in mg/kg		0.3 UJ	0.3 U	0.3 U	0.3 UJ	0.3 UJ	0.3 U	0.3 U	0.3 UJ	0.3 U	0.3 U	0.3 U	0.3 U	0.3 U	0.3 UJ	0.3 UJ	0.3 UJ	0.3 UJ	0.3 UJ	0.3 UJ	0.3 U
4-Bromophenyl phenyl ether in mg/kg		0.01 U	0.01 U	0.01 U	0.01 U	0.01 U	0.01 U	0.01 U	0.01 U	0.01 U	0.01 U	0.01 U	0.01 U	0.01 U	0.01 U	0.01 U	0.01 U	0.01 U	0.01 U	0.01 U	0.01 U
4-Chloro-3-methylphenol in mg/kg		0.1 U	0.1 U	0.1 U	0.1 U	0.1 U	0.1 U	0.1 U	0.1 U	0.1 U	0.1 U	0.1 U	0.1 U	0.1 U	0.1 U	0.1 U	0.1 U	0.1 U	0.1 U	0.1 U	0.1 U

Table 3 - Overburden Soil Quality Data

K-C Worldwide Site Upland Area 110207

		Naval Reserve Parcel South Area																			
Chemical Name	Interim Action Cleanup Level - Unsaturated Soil	NRS-SP01-1-021014	NRS-SP01-2-021014	NRS-SP01-3-021014	NRS-SP02-1-021014	NRS-SP02-2-021014	NRS-SP02-3-021014	NRS-SP03-1-021014	NRS-SP03-2-021014	NRS-SP03-3-021014	NRS-SP04-1-021014	NRS-SP04-2-021014	NRS-SP04-3-021014	NRS-SP05-1-021014	NRS-SP05-2-021014	NRS-SP05-3-021014	NRS-SP06-1-021014	NRS-SP06-2-021014	NRS-SP06-3-021014	NRS-SP07-1-021014	NRS-SP07-2-021014
4-Chloroaniline in mg/kg	660	1 U	1 U	1 U	1 U	1 U	1 U	1 U	1 U	1 U	1 U	1 U	1 U	1 U	1 U	1 U	1 U	1 U	1 U	1 U	1 U
4-Chlorophenyl phenyl ether in mg/kg		0.01 U	0.01 U	0.01 U	0.01 U	0.01 U	0.01 U	0.01 U	0.01 U	0.01 U	0.01 U	0.01 U	0.01 U	0.01 U	0.01 U	0.01 U	0.01 U	0.01 U	0.01 U	0.01 U	0.01 U
4-Nitroaniline in mg/kg		1 U	1 U	1 U	1 U	1 U	1 U	1 U	1 U	1 U	1 U	1 U	1 U	1 U	1 U	1 U	1 U	1 U	1 U	1 U	1 U
4-Nitrophenol in mg/kg		0.3 U	0.3 U	0.3 U	0.3 U	0.3 U	0.3 U	0.3 U	0.3 U	0.3 U	0.3 U	0.3 U	0.3 U	0.3 U	0.3 U	0.3 U	0.3 U	0.3 U	0.3 U	0.3 U	0.3 U
Benzoic acid in mg/kg	14,000,000	0.5 U	0.5 UJ	0.5 UJ	0.5 U	0.5 U	0.5 UJ	0.5 U	0.5 U	0.5 U	0.5 UJ	0.5 U	0.5 U	0.5 U	0.5 U	0.5 U	0.5 U	0.5 U	0.5 U	0.5 U	0.5 U
Benzyl alcohol in mg/kg	350,000	0.1 U	0.1 U	0.1 U	0.1 U	0.1 U	0.1 U	0.1 U	0.1 U	0.1 U	0.1 U	0.1 U	0.1 U	0.1 U	0.1 U	0.1 U	0.1 U	0.1 U	0.1 U	0.1 U	0.1 U
Benzyl butyl phthalate in mg/kg	69,000	0.1 U	0.1 U	0.1 U	0.1 U	0.1 U	0.1 UJ	0.1 U	0.1 U	0.1 U	0.1 U	0.1 U	0.1 U	0.1 U	0.1 U	0.1 U	0.1 U	0.1 U	0.1 U	0.1 U	0.1 U
Bis(2-chloro-1-methylethyl) ether in mg/kg	1,900	0.01 U	0.01 U	0.01 U	0.01 U	0.01 U	0.01 U	0.01 U	0.01 U	0.01 U	0.01 U	0.01 U	0.01 U	0.01 U	0.01 U	0.01 U	0.01 U	0.01 U	0.01 U	0.01 U	0.01 U
Bis(2-chloroethoxy)methane in mg/kg		0.01 U	0.01 U	0.01 U	0.01 U	0.01 U	0.01 U	0.01 U	0.01 U	0.01 U	0.01 U	0.01 U	0.01 U	0.01 U	0.01 U	0.01 U	0.01 U	0.01 U	0.01 U	0.01 U	0.01 U
Bis(2-chloroethyl) ether in mg/kg	120	0.01 U	0.01 U	0.01 U	0.01 U	0.01 U	0.01 U	0.01 U	0.01 U	0.01 U	0.01 U	0.01 U	0.01 U	0.01 U	0.01 U	0.01 U	0.01 U	0.01 U	0.01 U	0.01 U	0.01 U
Bis(2-ethylhexyl) phthalate in mg/kg	9,400	0.16 U	0.16 U	0.16 U	0.16 U	0.16 U	0.16 UJ	0.16 U	0.16 U	0.16 U	0.16 U	0.16 U	0.16 U	0.16 U	0.16 U	0.16 U	0.16 U	0.16 U	0.16 U	0.16 U	0.16 U
Carbazole in mg/kg		0.1 U	0.1 U	0.1 U	0.1 U	0.1 U	0.1 U	0.1 U	0.1 U	0.1 U	0.1 U	0.1 U	0.1 U	0.1 U	0.1 U	0.1 U	0.1 U	0.1 U	0.1 U	0.1 U	0.1 U
Diethyl phthalate in mg/kg	2,800,000	0.1 U	0.1 U	0.1 U	0.1 U	0.1 U	0.1 U	0.1 U	0.1 U	0.1 U	0.1 U	0.1 U	0.1 U	0.1 U	0.1 U	0.1 U	0.1 U	0.1 U	0.1 U	0.1 U	0.1 U
Dimethyl phthalate in mg/kg		0.1 U	0.1 U	0.1 U	0.1 U	0.1 U	0.1 U	0.1 U	0.1 U	0.1 U	0.1 U	0.1 U	0.1 U	0.1 U	0.1 U	0.1 U	0.1 U	0.1 U	0.1 U	0.1 U	0.1 U
Di-n-butyl phthalate in mg/kg	350,000	0.1 U	0.1 U	0.1 U	0.1 U	0.1 U	0.1 U	0.1 U	0.1 U	0.1 U	0.1 U	0.1 U	0.1 U	0.1 U	0.1 U	0.1 U	0.1 U	0.1 U	0.1 U	0.1 U	0.1 U
Di-n-octyl phthalate in mg/kg	35,000	0.1 U	0.1 U	0.1 U	0.1 U	0.1 U	0.1 U	0.1 U	0.1 U	0.1 U	0.1 U	0.1 U	0.1 U	0.1 U	0.1 U	0.1 U	0.1 U	0.1 U	0.1 U	0.1 U	0.1 U
Hexachlorobenzene in mg/kg	82	0.01 U	0.01 U	0.01 U	0.01 U	0.01 U	0.01 U	0.01 U	0.01 U	0.01 U	0.01 U	0.01 U	0.01 U	0.01 U	0.01 U	0.01 U	0.01 U	0.01 U	0.01 U	0.01 U	0.01 U
Hexachlorobutadiene in mg/kg	1,700	0.01 U	0.01 U	0.01 U	0.01 U	0.01 U	0.01 U	0.01 U	0.01 U	0.01 U	0.01 U	0.01 U	0.01 U	0.01 U	0.01 U	0.01 U	0.01 U	0.01 U	0.01 U	0.01 U	0.01 U
Hexachlorocyclopentadiene in mg/kg	21,000	0.03 UJ	0.03 U	0.03 U	0.03 U	0.03 U	0.03 U	0.03 U	0.03 U	0.03 U	0.03 U	0.03 U	0.03 U	0.03 U	0.03 U	0.03 U	0.03 U	0.03 U	0.03 U	0.03 U	0.03 U
Hexachloroethane in mg/kg	2,500	0.01 U	0.01 U	0.01 U	0.01 U	0.01 U	0.01 U	0.01 U	0.01 U	0.01 U	0.01 U	0.01 U	0.01 U	0.01 U	0.01 U	0.01 U	0.01 U	0.01 U	0.01 U	0.01 U	0.01 U
Isophorone in mg/kg	140,000	0.01 U	0.01 U	0.01 U	0.01 U	0.01 U	0.01 U	0.01 U	0.01 U	0.01 U	0.01 U	0.01 U	0.01 U	0.01 U	0.01 U	0.01 U	0.01 U	0.01 U	0.01 U	0.01 U	0.01 U
Nitrobenzene in mg/kg	7,000	0.01 U	0.01 U	0.01 U	0.01 U	0.01 U	0.01 U	0.01 U	0.01 U	0.01 U	0.01 U	0.01 U	0.01 U	0.01 U	0.01 U	0.01 U	0.01 U	0.01 U	0.01 U	0.01 U	0.01 U
N-Nitroso-di-n-propylamine in mg/kg	19	0.01 U	0.01 U	0.01 U	0.01 U	0.01 U	0.01 U	0.01 U	0.01 U	0.01 U	0.01 U	0.01 U	0.01 U	0.01 U	0.01 U	0.01 U	0.01 U	0.01 U	0.01 U	0.01 U	0.01 U
N-Nitrosodiphenylamine in mg/kg	27,000	0.01 U	0.01 U	0.01 U	0.01 U	0.01 U	0.01 U	0.01 U	0.01 U	0.01 U	0.01 U	0.01 U	0.01 U	0.01 U	0.01 U	0.01 U	0.01 U	0.01 U	0.01 U	0.01 U	0.01 U
Pentachlorophenol in mg/kg	330	0.1 U	0.1 U	0.1 U	0.1 U	0.1 U	0.1 U	0.1 U	0.1 U	0.1 U	0.1 U	0.1 U	0.1 U	0.1 U	0.1 U	0.1 U	0.1 U	0.1 U	0.1 U	0.1 U	0.1 U
Phenol in mg/kg	1,100,000	0.1 U	0.1 U	0.1 U	0.1 U	0.1 U	0.1 U	0.1 U	0.1 U	0.1 U	0.1 U	0.1 U	0.1 U	0.1 U	0.1 U	0.1 U	0.1 U	0.1 U	0.1 U	0.1 U	0.1 U
2,4-Dinitrotoluene in mg/kg	420	0.05 U	0.05 U	0.05 U	0.05 U	0.05 U	0.05 U	0.05 U	0.05 U	0.05 U	0.05 U	0.05 U	0.05 U	0.05 U	0.05 U	0.05 U	0.05 U	0.05 U	0.05 U	0.05 U	0.05 U
2,6-Dinitrotoluene in mg/kg	88	0.05 U	0.05 U	0.05 U	0.05 U	0.05 U	0.05 U	0.05 U	0.05 U	0.05 U	0.05 U	0.05 U	0.05 U	0.05 U	0.05 U	0.05 U	0.05 U	0.05 U	0.05 U	0.05 U	0.05 U
Volatile Organic Compounds (VOC)																					
1,1,1,2-Tetrachloroethane in mg/kg	5,000	0.05 UJ	0.05 UJ	0.05 UJ	0.05 UJ	0.05 UJ	0.05 UJ	0.05 UJ	0.05 UJ	0.05 UJ	0.05 UJ	0.05 UJ	0.05 UJ	0.05 UJ	0.05 UJ	0.05 UJ	0.05 UJ	0.05 UJ	0.05 UJ	0.05 UJ	0.05 UJ
1,1,1-Trichloroethane in mg/kg	7,000,000	0.05 UJ	0.05 UJ	0.05 UJ	0.05 UJ	0.05 UJ	0.05 UJ	0.05 UJ	0.05 UJ	0.05 UJ	0.05 UJ	0.05 UJ	0.05 UJ	0.05 UJ	0.05 UJ	0.05 UJ	0.05 UJ	0.05 UJ	0.05 UJ	0.05 UJ	0.05 UJ
1,1,2,2-Tetrachloroethane in mg/kg	660	0.05 UJ	0.05 UJ	0.05 UJ	0.05 UJ	0.05 UJ	0.05 UJ	0.05 UJ	0.05 UJ	0.05 UJ	0.05 UJ	0.05 UJ	0.05 UJ	0.05 UJ	0.05 UJ	0.05 UJ	0.05 UJ	0.05 UJ	0.05 UJ	0.05 UJ	0.05 UJ
1,1,2-Trichloroethane in mg/kg	2,300	0.05 UJ	0.05 UJ	0.05 UJ	0.05 UJ	0.05 UJ	0.05 UJ	0.05 UJ	0.05 UJ	0.05 UJ	0.05 UJ	0.05 UJ	0.05 UJ	0.05 UJ	0.05 UJ	0.05 UJ	0.05 UJ	0.05 UJ	0.05 UJ	0.05 UJ	0.05 UJ
1,1-Dichloroethane in mg/kg	23,000	0.05 UJ	0.05 UJ	0.05 UJ	0.05 UJ	0.05 UJ	0.05 UJ	0.05 UJ	0.05 UJ	0.05 UJ	0.05 UJ	0.05 UJ	0.05 UJ	0.05 UJ	0.05 UJ	0.05 UJ	0.05 UJ	0.05 UJ	0.05 UJ	0.05 UJ	0.05 UJ
1,1-Dichloroethene in mg/kg	180,000	0.05 UJ	0.05 UJ	0.05 UJ	0.05 UJ	0.05 UJ	0.05 UJ	0.05 UJ	0.05 UJ	0.05 UJ	0.05 UJ	0.05 UJ	0.05 UJ	0.05 UJ	0.05 UJ	0.05 UJ	0.05 UJ	0.05 UJ	0.05 UJ	0.05 UJ	0.05 UJ
1,1-Dichloropropene in mg/kg		0.05 UJ	0.05 UJ	0.05 UJ	0.05 UJ	0.05 UJ	0.05 UJ	0.05 UJ	0.05 UJ	0.05 UJ	0.05 UJ	0.05 UJ	0.05 UJ	0.05 UJ	0.05 UJ	0.05 UJ	0.05 UJ	0.05 UJ	0.05 UJ	0.05 UJ	0.05 UJ
1,2,3-Trichlorobenzene in mg/kg		0.25 UJ	0.25 UJ	0.25 UJ	0.25 UJ	0.25 UJ	0.25 UJ	0.25 UJ	0.25 UJ	0.25 UJ	0.25 UJ	0.25 UJ	0.25 UJ	0.25 UJ	0.25 UJ	0.25 UJ	0.25 UJ	0.25 UJ	0.25 UJ	0.25 UJ	0.25 UJ
1,2,3-Trichloropropane in mg/kg	4.4	0.05 UJ	0.05 UJ	0.05 UJ	0.05 UJ	0.05 UJ	0.05 UJ	0.05 UJ	0.05 UJ	0.05 UJ	0.05 UJ	0.05 UJ	0.05 UJ	0.05 UJ	0.05 UJ	0.05 UJ	0.05 UJ	0.05 UJ	0.05 UJ	0.05 UJ	0.05 UJ
1,2,4-Trichlorobenzene in mg/kg	4,500	0.25 UJ	0.25 UJ	0.25 UJ	0.25 UJ	0.25 UJ	0.25 UJ	0.25 UJ	0.25 UJ	0.25 UJ	0.25 UJ	0.25 UJ	0.25 UJ	0.25 UJ	0.25 UJ	0.25 UJ	0.25 UJ	0.25 UJ	0.25 UJ	0.25 UJ	0.25 UJ
1,2,4-Trimethylbenzene in mg/kg		0.05 UJ	0.05 UJ	0.05 UJ	0.05 UJ	0.05 UJ	0.05 UJ	0.05 UJ	0.05 UJ	0.05 UJ	0.05 UJ	0.05 UJ	0.05 UJ	0.05 UJ	0.05 UJ	0.05 UJ	0.05 UJ	0.05 UJ	0.05 UJ	0.05 UJ	0.05 UJ
1,2-Dibromo-3-chloropropane in mg/kg	160	0.5 UJ	0.5 UJ	0.5 UJ	0.5 UJ	0.5 UJ	0.5 UJ	0.5 UJ	0.5 UJ	0.5 UJ	0.5 UJ	0.5 UJ	0.5 UJ	0.5 UJ	0.5 UJ	0.5 UJ	0.5 UJ	0.5 UJ	0.5 UJ	0.5 UJ	0.5 UJ
1,2-Dibromoethane (EDB) in mg/kg	66	0.05 UJ	0.05 UJ	0.05 UJ	0.05 UJ	0.05 UJ	0.05 UJ	0.05 UJ	0.05 UJ	0.05 UJ	0.05 UJ	0.05 UJ	0.05 UJ	0.05 UJ	0.05 UJ	0.05 UJ	0.05 UJ	0.05 UJ	0.05 UJ	0.05 UJ	0.05 UJ
1,2-Dichlorobenzene in mg/kg	320,000	0.05 UJ	0.05 UJ	0.05 UJ	0.05 UJ	0.05 UJ	0.05 UJ	0.05 UJ	0.05 UJ	0.05 UJ	0.05 UJ	0.05 UJ	0.05 UJ	0.05 UJ	0.05 UJ	0.05 UJ	0.05 UJ	0.05 UJ	0.05 UJ	0.05 UJ	0.05 UJ
1,2-Dichloroethane (EDC) in mg/kg	1,400	0.05 UJ	0.05 UJ	0.05 UJ	0.05 UJ	0.05 UJ	0.05 UJ	0.05 UJ	0.05 UJ	0.05 UJ	0.05 UJ	0.05 UJ	0.05 UJ	0.05 UJ	0.05 UJ	0.05 UJ	0.05 UJ	0.05 UJ	0.05 UJ	0.05 UJ	0.05 UJ
1,2-Dichloropropane in mg/kg	3,600	0.05 UJ	0.05 UJ	0.05 UJ	0.05 UJ	0.05 UJ	0.05 UJ	0.05 UJ	0.05 UJ	0.05 UJ	0.05 UJ	0.05 UJ	0.05 UJ	0.05 UJ	0.05 UJ	0.05 UJ	0.05 UJ	0.05 UJ	0.05 UJ	0.05 UJ	0.05 UJ
1,3,5-Trimethylbenzene in mg/kg	35,000	0.05 UJ	0.05 UJ	0.05 UJ	0.05 UJ	0.05 UJ	0.05 UJ	0.05 UJ	0.05 UJ	0.05 UJ	0.05 UJ	0.05 UJ	0.05 UJ	0.05 UJ	0.05 UJ	0.05 UJ	0.05 UJ	0.05 UJ	0.05 UJ	0.05 UJ	0.05 UJ
1,3-Dichlorobenzene in mg/kg		0.05 UJ	0.05 UJ	0.05 UJ	0.05 UJ	0.05 UJ	0.05 UJ	0.05 UJ	0.05 UJ	0.05 UJ	0.05 UJ	0.05 UJ	0.05 UJ	0.05 UJ	0.05 UJ	0.05 UJ	0.05 UJ	0.05 UJ	0.05 UJ	0.05 UJ	0.05 UJ
1,3-Dichloropropane in mg/kg		0.05 UJ	0.05 UJ	0.05 UJ	0.05 UJ	0.05 UJ	0.05 UJ	0.05 UJ	0.05 UJ	0.05 UJ	0.05 UJ	0.05 UJ	0.05 UJ	0.05 UJ	0.05 UJ	0.05 UJ	0.05 UJ	0.05 UJ	0.05 UJ	0.05 UJ	0.05 UJ
1,4-Dichlorobenzene in mg/kg	24,000	0.05 UJ	0.05 UJ	0.05 UJ	0.05 UJ	0.05 UJ	0.05 UJ	0.05 UJ	0.05 UJ	0.05 UJ	0.05 UJ	0.05 UJ	0.05 UJ	0.05 UJ	0.05 UJ	0.05 UJ	0.05 UJ	0.05 UJ	0.05 UJ	0.05 UJ	0.05 UJ
2,2-Dichloropropane in mg/kg		0.05 UJ	0.05 UJ	0.05 UJ	0.05 UJ	0.05 UJ	0.05 UJ	0.05 UJ	0.05 UJ	0.05 UJ	0.05 UJ	0.05 UJ	0.05 UJ	0.05 UJ	0.05 UJ	0.05 UJ	0.05 UJ	0.05 UJ	0.05 UJ	0.05 UJ	0.05 UJ
2-Butanone in mg/kg	2,100,000	0.5 UJ	0.5 UJ	0.5 UJ	0.5 UJ	0.5 UJ	0.5 UJ	0.5 UJ	0.5 UJ	0.5 UJ	0.5 UJ	0.5 UJ	0.5 UJ	0.5 UJ	0.5 UJ	0.5 UJ	0.5 UJ	0.5 UJ	0.5 UJ	0.5 UJ	0.5 UJ
2-Chlorotoluene in mg/kg	70,000	0.05 UJ	0.05 UJ	0.05 UJ	0.05 UJ	0.05 UJ	0.05 UJ	0.05 UJ	0.05 UJ	0.05 UJ	0.05 UJ	0.05 UJ	0.05 UJ	0.05 UJ	0.05 UJ	0.05 UJ	0.05 UJ	0.05 UJ	0.05 UJ	0.05 UJ	0.05 UJ
2-Hexanone in mg/kg		0.5 UJ	0.5 UJ	0.5 UJ	0.5 UJ	0.5 UJ	0.5 UJ	0.5 UJ	0.5 UJ	0.5 UJ	0.5 UJ	0.5 UJ	0.5 UJ	0.5 UJ	0.5 UJ	0.5 UJ	0.5 UJ	0.5 UJ	0.5 UJ	0.5 UJ	0.5 UJ
4-Chlorotoluene in mg/kg		0.05 UJ	0.05 UJ	0.05 UJ	0.05 UJ	0.05 UJ	0.05 UJ	0.05 UJ	0.05 UJ	0.05 UJ	0.05 UJ	0.05 UJ	0.05 UJ	0.05 UJ	0.05 UJ	0.05 UJ	0.05 UJ	0.05 UJ	0.05 UJ	0.05 UJ	0.05 UJ
4-Methyl-2-pentanone in mg/kg	280,000	0.5 UJ	0.5 UJ	0.5 UJ	0.5 UJ	0.5 UJ	0.5 UJ	0.5 UJ	0.5 UJ	0.5 UJ	0.5 UJ	0.5 UJ	0.5 UJ	0.5 UJ	0.5 UJ	0.5 UJ	0.5 UJ	0.5 UJ	0.5 UJ	0.5 UJ	0.5 UJ
Acetone in mg/kg	3,200,000	0.5 UJ	0.5 UJ	0.5 UJ	0.5 UJ	0.5 UJ	0.5 UJ	0.5 UJ	0.5 UJ	0.5 UJ	0.5 UJ	0.5 UJ	0.5 UJ	0.5 UJ	0.5 UJ	0.5 UJ	0.5 UJ	0.5 UJ	0.5 UJ	0.5 UJ	0.5 UJ
Benzene in mg/kg	2,400	0.03 UJ	0.03 UJ	0.03 UJ	0.03 UJ	0.03 UJ	0.03 UJ	0.03 UJ	0.03 UJ	0.03 UJ	0.03 UJ	0.03 UJ	0.03 UJ	0.03 UJ	0.03 UJ	0.03 UJ	0.03 UJ	0.03 UJ	0.03 UJ	0.03 UJ	0.03 UJ
Bromobenzene in mg/kg		0.05 UJ	0.05 UJ	0.05 UJ	0.05 UJ	0.05 UJ	0.05 UJ	0.05 UJ	0.05 UJ	0.05 UJ	0.05 UJ	0.05 UJ	0.05 UJ	0.05 UJ	0.05 UJ	0.05 UJ	0.05 UJ	0.05 UJ	0.05 UJ	0.05 UJ	0.05 UJ
Bromodichloromethane in mg/kg	2,100	0.05 UJ	0.05 UJ	0.05 UJ	0.05 UJ	0.05 UJ	0.05 UJ	0.05 UJ	0.05 UJ	0.05 UJ	0.05 UJ	0.05 UJ	0.05 UJ	0.05 UJ	0.05 UJ	0.05 UJ	0.05 UJ	0.05 UJ	0.05 UJ	0.05 UJ	0.05 UJ

Table 3 - Overburden Soil Quality Data

K-C Worldwide Site Upland Area 110207

		Naval Reserve Parcel South Area																			
Chemical Name	Interim Action Cleanup Level - Unsaturated Soil	NRS-SP01-1-021014	NRS-SP01-2-021014	NRS-SP01-3-021014	NRS-SP02-1-021014	NRS-SP02-2-021014	NRS-SP02-3-021014	NRS-SP03-1-021014	NRS-SP03-2-021014	NRS-SP03-3-021014	NRS-SP04-1-021014	NRS-SP04-2-021014	NRS-SP04-3-021014	NRS-SP05-1-021014	NRS-SP05-2-021014	NRS-SP05-3-021014	NRS-SP06-1-021014	NRS-SP06-2-021014	NRS-SP06-3-021014	NRS-SP07-1-021014	NRS-SP07-2-021014
Bromoform in mg/kg	17,000	0.05 UJ	0.05 UJ	0.05 UJ	0.05 UJ	0.05 UJ	0.05 UJ	0.05 UJ	0.05 UJ	0.05 UJ	0.05 UJ	0.05 UJ	0.05 UJ	0.05 UJ	0.05 UJ	0.05 UJ	0.05 UJ	0.05 UJ	0.05 UJ	0.05 UJ	0.05 UJ
Bromomethane in mg/kg	4,900	0.5 UJ	0.5 UJ	0.5 UJ	0.5 UJ	0.5 UJ	0.5 UJ	0.5 UJ	0.5 UJ	0.5 UJ	0.5 UJ	0.5 UJ	0.5 UJ	0.5 UJ	0.5 UJ	0.5 UJ	0.5 UJ	0.5 UJ	0.5 UJ	0.5 UJ	0.5 UJ
Carbon tetrachloride in mg/kg	1,900	0.05 UJ	0.05 UJ	0.05 UJ	0.05 UJ	0.05 UJ	0.05 UJ	0.05 UJ	0.05 UJ	0.05 UJ	0.05 UJ	0.05 UJ	0.05 UJ	0.05 UJ	0.05 UJ	0.05 UJ	0.05 UJ	0.05 UJ	0.05 UJ	0.05 UJ	0.05 UJ
Chlorobenzene in mg/kg	70,000	0.05 UJ	0.05 UJ	0.05 UJ	0.05 UJ	0.05 UJ	0.05 UJ	0.05 UJ	0.05 UJ	0.05 UJ	0.05 UJ	0.05 UJ	0.05 UJ	0.05 UJ	0.05 UJ	0.05 UJ	0.05 UJ	0.05 UJ	0.05 UJ	0.05 UJ	0.05 UJ
Chloroethane in mg/kg		0.5 UJ	0.5 UJ	0.5 UJ	0.5 UJ	0.5 UJ	0.5 UJ	0.5 UJ	0.5 UJ	0.5 UJ	0.5 UJ	0.5 UJ	0.5 UJ	0.5 UJ	0.5 UJ	0.5 UJ	0.5 UJ	0.5 UJ	0.5 UJ	0.5 UJ	0.5 UJ
Chloroform in mg/kg	4,200	0.05 UJ	0.05 UJ	0.05 UJ	0.05 UJ	0.05 UJ	0.05 UJ	0.05 UJ	0.05 UJ	0.05 UJ	0.05 UJ	0.05 UJ	0.05 UJ	0.05 UJ	0.05 UJ	0.05 UJ	0.05 UJ	0.05 UJ	0.05 UJ	0.05 UJ	0.05 UJ
Chloromethane in mg/kg		0.5 UJ	0.5 UJ	0.5 UJ	0.5 UJ	0.5 UJ	0.5 UJ	0.5 UJ	0.5 UJ	0.5 UJ	0.5 UJ	0.5 UJ	0.5 UJ	0.5 UJ	0.5 UJ	0.5 UJ	0.5 UJ	0.5 UJ	0.5 UJ	0.5 UJ	0.5 UJ
cis-1,2-Dichloroethene (DCE) in mg/kg	7,000	0.05 UJ	0.05 UJ	0.05 UJ	0.05 UJ	0.05 UJ	0.05 UJ	0.05 UJ	0.05 UJ	0.05 UJ	0.05 UJ	0.05 UJ	0.05 UJ	0.05 UJ	0.05 UJ	0.05 UJ	0.05 UJ	0.05 UJ	0.05 UJ	0.05 UJ	0.05 UJ
cis-1,3-Dichloropropene in mg/kg		0.05 UJ	0.05 UJ	0.05 UJ	0.05 UJ	0.05 UJ	0.05 UJ	0.05 UJ	0.05 UJ	0.05 UJ	0.05 UJ	0.05 UJ	0.05 UJ	0.05 UJ	0.05 UJ	0.05 UJ	0.05 UJ	0.05 UJ	0.05 UJ	0.05 UJ	0.05 UJ
Dibromochloromethane in mg/kg	1,600	0.05 UJ	0.05 UJ	0.05 UJ	0.05 UJ	0.05 UJ	0.05 UJ	0.05 UJ	0.05 UJ	0.05 UJ	0.05 UJ	0.05 UJ	0.05 UJ	0.05 UJ	0.05 UJ	0.05 UJ	0.05 UJ	0.05 UJ	0.05 UJ	0.05 UJ	0.05 UJ
Dibromomethane in mg/kg	35,000	0.05 UJ	0.05 UJ	0.05 UJ	0.05 UJ	0.05 UJ	0.05 UJ	0.05 UJ	0.05 UJ	0.05 UJ	0.05 UJ	0.05 UJ	0.05 UJ	0.05 UJ	0.05 UJ	0.05 UJ	0.05 UJ	0.05 UJ	0.05 UJ	0.05 UJ	0.05 UJ
Dichlorodifluoromethane in mg/kg	700,000	0.5 UJ	0.5 UJ	0.5 UJ	0.5 UJ	0.5 UJ	0.5 UJ	0.5 UJ	0.5 UJ	0.5 UJ	0.5 UJ	0.5 UJ	0.5 UJ	0.5 UJ	0.5 UJ	0.5 UJ	0.5 UJ	0.5 UJ	0.5 UJ	0.5 UJ	0.5 UJ
Ethylbenzene in mg/kg	350,000	0.05 UJ	0.05 UJ	0.05 UJ	0.05 UJ	0.05 UJ	0.05 UJ	0.05 UJ	0.05 UJ	0.05 UJ	0.05 UJ	0.05 UJ	0.05 UJ	0.05 UJ	0.05 UJ	0.05 UJ	0.05 UJ	0.05 UJ	0.05 UJ	0.05 UJ	0.05 UJ
Hexachlorobutadiene in mg/kg	1,700	0.25 UJ	0.25 UJ	0.25 UJ	0.25 UJ	0.25 UJ	0.25 UJ	0.25 UJ	0.25 UJ	0.25 UJ	0.25 UJ	0.25 UJ	0.25 UJ	0.25 UJ	0.25 UJ	0.25 UJ	0.25 UJ	0.25 UJ	0.25 UJ	0.25 UJ	0.25 UJ
Isopropylbenzene in mg/kg	350,000	0.05 UJ	0.05 UJ	0.05 UJ	0.05 UJ	0.05 UJ	0.05 UJ	0.05 UJ	0.05 UJ	0.05 UJ	0.05 UJ	0.05 UJ	0.05 UJ	0.05 UJ	0.05 UJ	0.05 UJ	0.05 UJ	0.05 UJ	0.05 UJ	0.05 UJ	0.05 UJ
Methyl tert-butyl ether (MTBE) in mg/kg	73,000	0.05 UJ	0.05 UJ	0.05 UJ	0.05 UJ	0.05 UJ	0.05 UJ	0.05 UJ	0.05 UJ	0.05 UJ	0.05 UJ	0.05 UJ	0.05 UJ	0.05 UJ	0.05 UJ	0.05 UJ	0.05 UJ	0.05 UJ	0.05 UJ	0.05 UJ	0.05 UJ
Methylene chloride in mg/kg	21,000	0.5 UJ	0.5 UJ	0.5 UJ	0.5 UJ	0.5 UJ	0.5 UJ	0.5 UJ	0.5 UJ	0.5 UJ	0.5 UJ	0.5 UJ	0.5 UJ	0.5 UJ	0.5 UJ	0.5 UJ	0.5 UJ	0.5 UJ	0.5 UJ	0.5 UJ	0.5 UJ
n-Propylbenzene in mg/kg	350,000	0.05 UJ	0.05 UJ	0.05 UJ	0.05 UJ	0.05 UJ	0.05 UJ	0.05 UJ	0.05 UJ	0.05 UJ	0.05 UJ	0.05 UJ	0.05 UJ	0.05 UJ	0.05 UJ	0.05 UJ	0.05 UJ	0.05 UJ	0.05 UJ	0.05 UJ	0.05 UJ
p-Isopropyltoluene in mg/kg		0.05 UJ	0.05 UJ	0.05 UJ	0.05 UJ	0.05 UJ	0.05 UJ	0.05 UJ	0.05 UJ	0.05 UJ	0.05 UJ	0.05 UJ	0.05 UJ	0.05 UJ	0.05 UJ	0.05 UJ	0.05 UJ	0.05 UJ	0.05 UJ	0.05 UJ	0.05 UJ
sec-Butylbenzene in mg/kg	350,000	0.05 UJ	0.05 UJ	0.05 UJ	0.05 UJ	0.05 UJ	0.05 UJ	0.05 UJ	0.05 UJ	0.05 UJ	0.05 UJ	0.05 UJ	0.05 UJ	0.05 UJ	0.05 UJ	0.05 UJ	0.05 UJ	0.05 UJ	0.05 UJ	0.05 UJ	0.05 UJ
Styrene in mg/kg	700,000	0.05 UJ	0.05 UJ	0.05 UJ	0.05 UJ	0.05 UJ	0.05 UJ	0.05 UJ	0.05 UJ	0.05 UJ	0.05 UJ	0.05 UJ	0.05 UJ	0.05 UJ	0.05 UJ	0.05 UJ	0.05 UJ	0.05 UJ	0.05 UJ	0.05 UJ	0.05 UJ
tert-Butylbenzene in mg/kg	350,000	0.05 UJ	0.05 UJ	0.05 UJ	0.05 UJ	0.05 UJ	0.05 UJ	0.05 UJ	0.05 UJ	0.05 UJ	0.05 UJ	0.05 UJ	0.05 UJ	0.05 UJ	0.05 UJ	0.05 UJ	0.05 UJ	0.05 UJ	0.05 UJ	0.05 UJ	0.05 UJ
Tetrachloroethene (PCE) in mg/kg	21,000	0.025 UJ	0.025 UJ	0.025 UJ	0.025 UJ	0.025 UJ	0.025 UJ	0.025 UJ	0.025 UJ	0.025 UJ	0.025 UJ	0.025 UJ	0.025 UJ	0.025 UJ	0.025 UJ	0.025 UJ	0.025 UJ	0.025 UJ	0.025 UJ	0.025 UJ	0.025 UJ
Toluene in mg/kg	280,000	0.05 UJ	0.05 UJ	0.05 UJ	0.05 UJ	0.05 UJ	0.05 UJ	0.05 UJ	0.05 UJ	0.05 UJ	0.05 UJ	0.05 UJ	0.05 UJ	0.05 UJ	0.05 UJ	0.05 UJ	0.05 UJ	0.05 UJ	0.05 UJ	0.05 UJ	0.05 UJ
trans-1,2-Dichloroethene in mg/kg	70,000	0.05 UJ	0.05 UJ	0.05 UJ	0.05 UJ	0.05 UJ	0.05 UJ	0.05 UJ	0.05 UJ	0.05 UJ	0.05 UJ	0.05 UJ	0.05 UJ	0.05 UJ	0.05 UJ	0.05 UJ	0.05 UJ	0.05 UJ	0.05 UJ	0.05 UJ	0.05 UJ
trans-1,3-Dichloropropene in mg/kg		0.05 UJ	0.05 UJ	0.05 UJ	0.05 UJ	0.05 UJ	0.05 UJ	0.05 UJ	0.05 UJ	0.05 UJ	0.05 UJ	0.05 UJ	0.05 UJ	0.05 UJ	0.05 UJ	0.05 UJ	0.05 UJ	0.05 UJ	0.05 UJ	0.05 UJ	0.05 UJ
Trichloroethene (TCE) in mg/kg	1,800	0.03 UJ	0.03 UJ	0.03 UJ	0.03 UJ	0.03 UJ	0.03 UJ	0.03 UJ	0.03 UJ	0.03 UJ	0.03 UJ	0.03 UJ	0.03 UJ	0.03 UJ	0.03 UJ	0.03 UJ	0.03 UJ	0.03 UJ	0.03 UJ	0.03 UJ	0.03 UJ
Trichlorofluoromethane in mg/kg	1,100,000	0.5 UJ	0.5 UJ	0.5 UJ	0.5 UJ	0.5 UJ	0.5 UJ	0.5 UJ	0.5 UJ	0.5 UJ	0.5 UJ	0.5 UJ	0.5 UJ	0.5 UJ	0.5 UJ	0.5 UJ	0.5 UJ	0.5 UJ	0.5 UJ	0.5 UJ	0.5 UJ
Vinyl chloride in mg/kg	88	0.05 UJ	0.05 UJ	0.05 UJ	0.05 UJ	0.05 UJ	0.05 UJ	0.05 UJ	0.05 UJ	0.05 UJ	0.05 UJ	0.05 UJ	0.05 UJ	0.05 UJ	0.05 UJ	0.05 UJ	0.05 UJ	0.05 UJ	0.05 UJ	0.05 UJ	0.05 UJ
m,p-Xylenes in mg/kg	700,000	0.1 UJ	0.1 UJ	0.1 UJ	0.1 UJ	0.1 UJ	0.1 UJ	0.1 UJ	0.1 UJ	0.1 UJ	0.1 UJ	0.1 UJ	0.1 UJ	0.1 UJ	0.1 UJ	0.1 UJ	0.1 UJ	0.1 UJ	0.1 UJ	0.1 UJ	0.1 UJ
o-Xylene in mg/kg	700,000	0.05 UJ	0.05 UJ	0.05 UJ	0.05 UJ	0.05 UJ	0.05 UJ	0.05 UJ	0.05 UJ	0.05 UJ	0.05 UJ	0.05 UJ	0.05 UJ	0.05 UJ	0.05 UJ	0.05 UJ	0.05 UJ	0.05 UJ	0.05 UJ	0.05 UJ	0.05 UJ
Naphthalene in mg/kg	70,000	0.05 UJ	0.05 UJ	0.05 UJ	0.059 J	0.076 J	0.1 J	0.05 UJ	0.05 UJ	0.05 UJ	0.05 UJ	0.05 UJ	0.05 UJ	0.05 UJ	0.05 UJ	0.05 UJ	0.05 UJ	0.05 UJ	0.05 UJ	0.05 UJ	0.05 UJ
Polychlorinated Biphenyls (PCBs)																					
Aroclor 1016 in mg/kg		0.02 U	0.02 U	0.02 U	0.02 U	0.02 U	0.02 U	0.02 U	0.02 U	0.02 U	0.02 U	0.02 U	0.02 U	0.02 U	0.02 U	0.02 U	0.02 U	0.02 U	0.02 U	0.02 U	0.02 U
Aroclor 1221 in mg/kg		0.02 U	0.02 U	0.02 U	0.02 U	0.02 U	0.02 U	0.02 U	0.02 U	0.02 U	0.02 U	0.02 U	0.02 U	0.02 U	0.02 U	0.02 U	0.02 U	0.02 U	0.02 U	0.02 U	0.02 U
Aroclor 1232 in mg/kg		0.02 U	0.02 U	0.02 U	0.02 U	0.02 U	0.02 U	0.02 U	0.02 U	0.02 U	0.02 U	0.02 U	0.02 U	0.02 U	0.02 U	0.02 U	0.02 U	0.02 U	0.02 U	0.02 U	0.02 U
Aroclor 1242 in mg/kg		0.02 U	0.02 U	0.02 U	0.02 U	0.02 U	0.02 U	0.02 U	0.02 U	0.02 U	0.02 U	0.02 U	0.02 U	0.02 U	0.02 U	0.02 U	0.02 U	0.02 U	0.02 U	0.02 U	0.02 U
Aroclor 1248 in mg/kg		0.02 U	0.02 U	0.02 U	0.02 U	0.02 U	0.02 U	0.02 U	0.02 U	0.02 U	0.02 U	0.02 U	0.02 U	0.02 U	0.02 U	0.02 U	0.02 U	0.02 U	0.02 U	0.02 U	0.02 U
Aroclor 1254 in mg/kg		0.02 U	0.02 U	0.02 U	0.02 U	0.02 U	0.02 U	0.02 U	0.02 U	0.02 U	0.02 U	0.02 U	0.02 U	0.02 U	0.02 U	0.02 U	0.02 U	0.02 U	0.02 U	0.02 U	0.02 U
Aroclor 1260 in mg/kg		0.02 U	0.02 U	0.02 U	0.02 U	0.02 U	0.02 U	0.02 U	0.02 U	0.02 U	0.02 U	0.02 U	0.02 U	0.02 U	0.02 U	0.02 U	0.02 U	0.02 U	0.02 U	0.024	0.02 U
Total PCBs (Sum of Aroclors) in mg/kg	10	ND	ND	ND	ND	ND	ND	ND	ND	ND	ND	ND	ND	ND	ND	ND	ND	ND	ND	0.084	ND

Notes

Concentrations in shaded cells indicate value exceeds Interim Action Cleanup Level - Unsaturated Soil.

J = Analyte was positively identified. The reported result is an estimate.

U = Analyte was not detected at or above the reported result.

UJ = Analyte was not detected at or above the reported estimate

x = The sample chromatographic pattern does not resemble the fuel standard used for quantitation.

Table 3 - Overburden Soil Quality Data

K-C Worldwide Site Upland Area 110207

Chemical Name	Interim Action Cleanup Level - Unsaturated Soil	Naval Reserve Parcel South Area									
		NRS-SP07-3-021014	NRS-SP08-1-021914	NRS-SP08-2-021914	NRS-SP08-3-021914	NRS-SP09-1-021914	NRS-SP09-2-021914	NRS-SP09-3-021914	NRS-SP10-1-021914	NRS-SP10-2-021914	NRS-SP10-3-021914
Total Petroleum Hydrocarbons (TPH)											
Gasoline Range Hydrocarbons in mg/kg	100	2 UJ	2 UJ	2 UJ	2 UJ	2 UJ	2 UJ	2 UJ	2 UJ	2 UJ	2 UJ
Diesel Range Hydrocarbons in mg/kg	2,000	50 U	50 U	50 U	50 U	50 U	50 U	50 U	50 U	50 U	50 U
Oil Range Hydrocarbons in mg/kg	2,000	250 U	250 U	250 U	250 U	250 U	250 U	250 U	250 U	250 U	250 U
Total TPHs in mg/kg	2,000	ND	ND	ND	ND	ND	ND	ND	ND	ND	ND
Metals											
Antimony in mg/kg	1,400	1 U	1 U	1 U	1 U	1 U	1 U	1 U	1 U	1 U	1.4
Arsenic in mg/kg	20	3.91	4.24	5.77	4.67	4.06	4.48	4.44	5.42	4.02	5.6
Beryllium in mg/kg	7,000	1 U	1 U	1 U	1 U	1 U	1 U	1 U	1 U	1 U	1 U
Cadmium in mg/kg	3,500	1 U	1 U	1 U	1 U	1 U	1 U	1 U	1 U	1 U	1 U
Chromium (Total) in mg/kg	5,300,000	7.95	10.3	14.1	11.5	14.4	11.1	11.4	13.1	11.4	11.8
Copper in mg/kg	36	9.63	18.2	21.6	19.7	19.4	17.2	17.6	19.8	17.2	18.6
Lead in mg/kg	1,000	2.85	5.55	5.58	36.2	8.75	12.8	15.2	233	7.36	9.64
Mercury in mg/kg	0.1	0.1 U	0.33	0.1 U	0.1 U	0.1 U	0.1 U	0.1 U	0.1 U	0.1 U	0.1 U
Nickel in mg/kg	48	13.2	14.1	16.3	17.6	18.6	16.3	17.3	17	15.7	17.3
Selenium in mg/kg	18,000	1 U	1 U	1 U	1 U	1 U	1 U	1 U	1 U	1 U	1 U
Silver in mg/kg	18,000	1 U	1 U	1 U	1 U	1 U	1 U	1 U	1 U	1 U	1 U
Thallium in mg/kg	35	1 U	1 U	1 U	1 U	1 U	1 U	1 U	1 U	1 U	1 U
Zinc in mg/kg	100	16.9	27.5	33.2	47.6	38.4	43.7	36.1	58.4	29.8	75.9
Polycyclic Aromatic Hydrocarbons (PAHs)											
Acenaphthene in mg/kg	210,000	0.01 U	0.01 U	0.01 U	0.028	0.01 U	0.01 U	0.01 U	0.01 U	0.01 U	0.1 U
Acenaphthylene in mg/kg		0.01 U	0.01 U	0.01 U	0.01 U	0.01 U	0.01 U	0.01 U	0.01 U	0.01 U	0.1 U
Anthracene in mg/kg	1,100,000	0.01 U	0.01 U	0.01 U	0.014	0.01 U	0.01 U	0.01 U	0.01 U	0.01 U	0.19
Benzo(g,h,i)perylene in mg/kg		0.01 U	0.01 U	0.01 U	0.029	0.01 U	0.01	0.01 U	0.01 U	0.016	0.16
Dibenzofuran in mg/kg	3,500	0.01 U	0.01 U	0.01 U	0.02	0.01 U	0.01 U	0.01 U	0.01 U	0.01 U	0.1 U
Fluoranthene in mg/kg	140,000	0.01 U	0.01 U	0.014	0.11	0.015	0.027	0.014	0.023	0.028	0.69
Fluorene in mg/kg	140,000	0.01 U	0.01 U	0.01 U	0.029	0.01 U	0.01 U	0.01 U	0.01 U	0.01 U	0.1 U
Phenanthrene in mg/kg		0.01 U	0.01 U	0.015	0.2	0.013	0.011	0.01 U	0.018	0.024	0.69
Pyrene in mg/kg	110,000	0.01 U	0.01 U	0.024	0.22	0.017	0.032	0.015	0.024	0.032	0.94
2-Methylnaphthalene in mg/kg	15	0.01 U	0.01 U	0.01 U	0.017	0.01 U	0.01 U	0.01 U	0.01 U	0.01 U	0.1 U
Naphthalene in mg/kg	70,000	0.01 U	0.01 U	0.01	0.054	0.01 U	0.01 U	0.01 U	0.03	0.01 U	0.1 U
Benz(a)anthracene in mg/kg		0.01 U	0.01 U	0.01 U	0.046	0.01 U	0.015	0.01 U	0.01 U	0.013	0.36
Benzo(a)pyrene in mg/kg		0.01 U	0.01 U	0.01 U	0.043	0.01 U	0.015	0.01 U	0.01 U	0.014	0.31
Benzo(b)fluoranthene in mg/kg		0.01 U	0.01 U	0.01 U	0.043	0.01 U	0.02	0.01 U	0.01 U	0.016	0.36
Benzo(k)fluoranthene in mg/kg		0.01 U	0.01 U	0.01 U	0.014	0.01 U	0.01 U	0.01 U	0.01 U	0.01 U	0.14
Chrysene in mg/kg		0.01 U	0.01 U	0.012	0.061	0.01 U	0.019	0.01 U	0.01	0.017	0.45
Dibenzo(a,h)anthracene in mg/kg		0.01 U	0.01 U	0.01 U	0.01 U	0.01 U	0.01 U	0.01 U	0.01 U	0.01 U	0.1 U
Indeno(1,2,3-cd)pyrene in mg/kg		0.01 U	0.01 U	0.01 U	0.021	0.01 U	0.01	0.01 U	0.01 U	0.012	0.16
Total cPAHs TEQ in mg/kg	7.9	ND	ND	0.00762	0.0565	ND	0.0207	ND	0.0076	0.0193	0.422
Other Semivolatiles											
1,2,4-Trichlorobenzene in mg/kg	4,500	0.01 U	0.01 U	0.01 U	0.01 U	0.01 U	0.01 U	0.01 U	0.01 U	0.01 U	0.1 U
1,2-Dichlorobenzene in mg/kg	320,000	0.01 U	0.01 U	0.01 U	0.01 U	0.01 U	0.01 U	0.01 U	0.01 U	0.01 U	0.1 U
1,3-Dichlorobenzene in mg/kg		0.01 U	0.01 U	0.01 UJ	0.01 U	0.01 U	0.01 U	0.01 U	0.01 U	0.01 UJ	0.1 UJ
1,4-Dichlorobenzene in mg/kg	24,000	0.01 U	0.01 U	0.01 U	0.01 U	0.01 U	0.01 U	0.01 U	0.01 U	0.01 U	0.1 U
2,4,5-Trichlorophenol in mg/kg	350,000	0.1 U	0.1 U	0.1 U	0.1 U	0.1 U	0.1 U	0.1 U	0.1 U	0.1 U	1 U
2,4,6-Trichlorophenol in mg/kg	3,500	0.1 U	0.1 U	0.1 U	0.1 U	0.1 U	0.1 U	0.1 U	0.1 U	0.1 U	1 U
2,4-Dichlorophenol in mg/kg	11,000	0.1 U	0.1 U	0.1 U	0.1 U	0.1 U	0.1 U	0.1 U	0.1 U	0.1 U	1 U
2,4-Dimethylphenol in mg/kg	70,000	0.1 U	0.1 U	0.1 U	0.1 U	0.1 U	0.1 U	0.1 U	0.1 U	0.1 U	1 U
2,4-Dinitrophenol in mg/kg	7,000	0.3 UJ	0.3 U	0.3 UJ	0.3 U	0.3 U	0.3 U	0.3 U	0.3 U	0.3 UJ	3 UJ
2-Chloronaphthalene in mg/kg	280,000	0.01 U	0.01 U	0.01 U	0.01 U	0.01 U	0.01 U	0.01 U	0.01 U	0.01 U	0.1 U
2-Chlorophenol in mg/kg	18,000	0.1 U	0.1 U	0.1 U	0.1 U	0.1 U	0.1 U	0.1 U	0.1 U	0.1 U	1 U
2-Methylphenol in mg/kg	180,000	0.1 U	0.1 U	0.1 U	0.1 U	0.1 U	0.1 U	0.1 U	0.1 U	0.1 U	1 U
2-Nitroaniline in mg/kg	35,000	0.05 U	0.05 U	0.05 U	0.05 U	0.05 U	0.05 U	0.05 U	0.05 U	0.05 U	0.5 U
2-Nitrophenol in mg/kg		0.1 U	0.1 U	0.1 U	0.1 U	0.1 U	0.1 U	0.1 U	0.1 U	0.1 U	1 U
3 & 4 Methylphenol in mg/kg	175000	0.2 U	0.2 U	0.2 U	0.2 U	0.2 U	0.2 U	0.2 U	0.2 U	0.2 U	2 U
3-Nitroaniline in mg/kg		1 U	1 U	1 U	1 U	1 U	1 U	1 U	1 U	1 U	10 U
4,6-Dinitro-2-methylphenol in mg/kg		0.3 UJ	0.3 U	0.3 UJ	0.3 U	0.3 U	0.3 U	0.3 U	0.3 U	0.3 UJ	3 UJ
4-Bromophenyl phenyl ether in mg/kg		0.01 U	0.01 U	0.01 U	0.01 U	0.01 U	0.01 U	0.01 U	0.01 U	0.01 U	0.1 U
4-Chloro-3-methylphenol in mg/kg		0.1 U	0.1 U	0.1 U	0.1 U	0.1 U	0.1 U	0.1 U	0.1 U	0.1 U	1 U

Table 3 - Overburden Soil Quality Data

K-C Worldwide Site Upland Area 110207

		Naval Reserve Parcel South Area									
Chemical Name	Interim Action Cleanup Level - Unsaturated Soil	NRS-SP07-3-021014	NRS-SP08-1-021914	NRS-SP08-2-021914	NRS-SP08-3-021914	NRS-SP09-1-021914	NRS-SP09-2-021914	NRS-SP09-3-021914	NRS-SP10-1-021914	NRS-SP10-2-021914	NRS-SP10-3-021914
4-Chloroaniline in mg/kg	660	1 U	1 U	1 U	1 U	1 U	1 U	1 U	1 U	1 U	10 U
4-Chlorophenyl phenyl ether in mg/kg		0.01 U	0.01 U	0.01 U	0.01 U	0.01 U	0.01 U	0.01 U	0.01 U	0.01 U	0.1 U
4-Nitroaniline in mg/kg		1 U	1 U	1 U	1 U	1 U	1 U	1 U	1 U	1 U	10 U
4-Nitrophenol in mg/kg		0.3 U	0.3 U	0.3 U	0.3 U	0.3 U	0.3 U	0.3 U	0.3 U	0.3 U	3 U
Benzoic acid in mg/kg	14,000,000	0.5 U	0.5 U	0.5 UJ	0.5 UJ	0.5 UJ	0.5 UJ	0.5 UJ	0.5 UJ	0.5 UJ	5 UJ
Benzyl alcohol in mg/kg	350,000	0.1 U	0.1 U	0.1 U	0.1 U	0.1 U	0.1 U	0.1 U	0.1 U	0.1 U	1 U
Benzyl butyl phthalate in mg/kg	69,000	0.1 U	0.1 U	0.1 U	0.1 U	0.1 U	0.1 U	0.1 U	0.1 U	0.1 U	1 U
Bis(2-chloro-1-methylethyl) ether in mg/kg	1,900	0.01 U	0.01 U	0.01 U	0.01 U	0.01 U	0.01 U	0.01 U	0.01 U	0.01 U	0.1 U
Bis(2-chloroethoxy)methane in mg/kg		0.01 U	0.01 U	0.01 U	0.01 U	0.01 U	0.01 U	0.01 U	0.01 U	0.01 U	0.1 U
Bis(2-chloroethyl) ether in mg/kg	120	0.01 U	0.01 U	0.01 U	0.01 U	0.01 U	0.01 U	0.01 U	0.01 U	0.01 U	0.1 U
Bis(2-ethylhexyl) phthalate in mg/kg	9,400	0.16 U	0.16 U	0.16 U	0.16 U	0.16 U	0.16 U	0.16 U	0.16 U	0.16 U	1.6 U
Carbazole in mg/kg		0.1 U	0.1 U	0.1 U	0.1 U	0.1 U	0.1 U	0.1 U	0.1 U	0.1 U	1 U
Diethyl phthalate in mg/kg	2,800,000	0.1 U	0.1 U	0.1 U	0.1 U	0.1 U	0.1 U	0.1 U	0.1 U	0.1 U	1 U
Dimethyl phthalate in mg/kg		0.1 U	0.1 U	0.1 U	0.1 U	0.1 U	0.1 U	0.1 U	0.1 U	0.1 U	1 U
Di-n-butyl phthalate in mg/kg	350,000	0.1 U	0.1 U	0.1 U	0.1 U	0.1 U	0.1 U	0.1 U	0.1 U	0.1 U	1 U
Di-n-octyl phthalate in mg/kg	35,000	0.1 U	0.1 U	0.1 U	0.1 U	0.1 U	0.1 U	0.1 U	0.1 U	0.1 U	1 U
Hexachlorobenzene in mg/kg	82	0.01 U	0.01 U	0.01 U	0.01 U	0.01 U	0.01 U	0.01 U	0.01 U	0.01 U	0.1 U
Hexachlorobutadiene in mg/kg	1,700	0.01 U	0.01 U	0.01 U	0.01 U	0.01 U	0.01 U	0.01 U	0.01 U	0.01 U	0.1 U
Hexachlorocyclopentadiene in mg/kg	21,000	0.03 UJ	0.03 U	0.03 U	0.03 U	0.03 U	0.03 U	0.03 U	0.03 U	0.03 U	0.3 U
Hexachloroethane in mg/kg	2,500	0.01 U	0.01 U	0.01 U	0.01 U	0.01 U	0.01 U	0.01 U	0.01 U	0.01 U	0.1 U
Isophorone in mg/kg	140,000	0.01 U	0.01 U	0.01 U	0.01 U	0.01 U	0.01 U	0.01 U	0.01 U	0.01 U	0.1 U
Nitrobenzene in mg/kg	7,000	0.01 U	0.01 U	0.01 U	0.01 U	0.01 U	0.01 U	0.01 U	0.01 U	0.01 U	0.1 U
N-Nitroso-di-n-propylamine in mg/kg	19	0.01 U	0.01 U	0.01 U	0.01 U	0.01 U	0.01 U	0.01 U	0.01 U	0.01 U	0.1 U
N-Nitrosodiphenylamine in mg/kg	27,000	0.01 U	0.01 U	0.01 U	0.01 U	0.01 U	0.01 U	0.01 U	0.01 U	0.01 U	0.1 U
Pentachlorophenol in mg/kg	330	0.1 U	0.1 U	0.1 U	0.1 U	0.1 U	0.1 U	0.1 U	0.1 U	0.1 U	1 U
Phenol in mg/kg	1,100,000	0.1 U	0.1 U	0.1 U	0.1 U	0.1 U	0.1 U	0.1 U	0.1 U	0.1 U	1 U
2,4-Dinitrotoluene in mg/kg	420	0.05 U	0.05 U	0.05 U	0.05 U	0.05 U	0.05 U	0.05 U	0.05 U	0.05 U	0.5 U
2,6-Dinitrotoluene in mg/kg	88	0.05 U	0.05 U	0.05 U	0.05 U	0.05 U	0.05 U	0.05 U	0.05 U	0.05 U	0.5 U
Volatile Organic Compounds (VOC)											
1,1,1,2-Tetrachloroethane in mg/kg	5,000	0.05 UJ	0.05 UJ	0.05 UJ	0.05 UJ	0.05 UJ	0.05 UJ	0.05 UJ	0.05 UJ	0.05 UJ	0.05 UJ
1,1,1-Trichloroethane in mg/kg	7,000,000	0.05 UJ	0.05 UJ	0.05 UJ	0.05 UJ	0.05 UJ	0.05 UJ	0.05 UJ	0.05 UJ	0.05 UJ	0.05 UJ
1,1,2,2-Tetrachloroethane in mg/kg	660	0.05 UJ	0.05 UJ	0.05 UJ	0.05 UJ	0.05 UJ	0.05 UJ	0.05 UJ	0.05 UJ	0.05 UJ	0.05 UJ
1,1,2-Trichloroethane in mg/kg	2,300	0.05 UJ	0.05 UJ	0.05 UJ	0.05 UJ	0.05 UJ	0.05 UJ	0.05 UJ	0.05 UJ	0.05 UJ	0.05 UJ
1,1-Dichloroethane in mg/kg	23,000	0.05 UJ	0.05 UJ	0.05 UJ	0.05 UJ	0.05 UJ	0.05 UJ	0.05 UJ	0.05 UJ	0.05 UJ	0.05 UJ
1,1-Dichloroethene in mg/kg	180,000	0.05 UJ	0.05 UJ	0.05 UJ	0.05 UJ	0.05 UJ	0.05 UJ	0.05 UJ	0.05 UJ	0.05 UJ	0.05 UJ
1,1-Dichloropropene in mg/kg		0.05 UJ	0.05 UJ	0.05 UJ	0.05 UJ	0.05 UJ	0.05 UJ	0.05 UJ	0.05 UJ	0.05 UJ	0.05 UJ
1,2,3-Trichlorobenzene in mg/kg		0.25 UJ	0.25 UJ	0.25 UJ	0.25 UJ	0.25 UJ	0.25 UJ	0.25 UJ	0.25 UJ	0.25 UJ	0.25 UJ
1,2,3-Trichloropropane in mg/kg	4.4	0.05 UJ	0.05 UJ	0.05 UJ	0.05 UJ	0.05 UJ	0.05 UJ	0.05 UJ	0.05 UJ	0.05 UJ	0.05 UJ
1,2,4-Trichlorobenzene in mg/kg	4,500	0.25 UJ	0.25 UJ	0.25 UJ	0.25 UJ	0.25 UJ	0.25 UJ	0.25 UJ	0.25 UJ	0.25 UJ	0.25 UJ
1,2,4-Trimethylbenzene in mg/kg		0.05 UJ	0.05 UJ	0.05 UJ	0.05 UJ	0.05 UJ	0.05 UJ	0.05 UJ	0.05 UJ	0.05 UJ	0.05 UJ
1,2-Dibromo-3-chloropropane in mg/kg	160	0.5 UJ	0.5 UJ	0.5 UJ	0.5 UJ	0.5 UJ	0.5 UJ	0.5 UJ	0.5 UJ	0.5 UJ	0.5 UJ
1,2-Dibromoethane (EDB) in mg/kg	66	0.05 UJ	0.05 UJ	0.05 UJ	0.05 UJ	0.05 UJ	0.05 UJ	0.05 UJ	0.05 UJ	0.05 UJ	0.05 UJ
1,2-Dichlorobenzene in mg/kg	320,000	0.05 UJ	0.05 UJ	0.05 UJ	0.05 UJ	0.05 UJ	0.05 UJ	0.05 UJ	0.05 UJ	0.05 UJ	0.05 UJ
1,2-Dichloroethane (EDC) in mg/kg	1,400	0.05 UJ	0.05 UJ	0.05 UJ	0.05 UJ	0.05 UJ	0.05 UJ	0.05 UJ	0.05 UJ	0.05 UJ	0.05 UJ
1,2-Dichloropropane in mg/kg	3,600	0.05 UJ	0.05 UJ	0.05 UJ	0.05 UJ	0.05 UJ	0.05 UJ	0.05 UJ	0.05 UJ	0.05 UJ	0.05 UJ
1,3,5-Trimethylbenzene in mg/kg	35,000	0.05 UJ	0.05 UJ	0.05 UJ	0.05 UJ	0.05 UJ	0.05 UJ	0.05 UJ	0.05 UJ	0.05 UJ	0.05 UJ
1,3-Dichlorobenzene in mg/kg		0.05 UJ	0.05 UJ	0.05 UJ	0.05 UJ	0.05 UJ	0.05 UJ	0.05 UJ	0.05 UJ	0.05 UJ	0.05 UJ
1,3-Dichloropropane in mg/kg		0.05 UJ	0.05 UJ	0.05 UJ	0.05 UJ	0.05 UJ	0.05 UJ	0.05 UJ	0.05 UJ	0.05 UJ	0.05 UJ
1,4-Dichlorobenzene in mg/kg	24,000	0.05 UJ	0.05 UJ	0.05 UJ	0.05 UJ	0.05 UJ	0.05 UJ	0.05 UJ	0.05 UJ	0.05 UJ	0.05 UJ
2,2-Dichloropropane in mg/kg		0.05 UJ	0.05 UJ	0.05 UJ	0.05 UJ	0.05 UJ	0.05 UJ	0.05 UJ	0.05 UJ	0.05 UJ	0.05 UJ
2-Butanone in mg/kg	2,100,000	0.5 UJ	0.5 UJ	0.5 UJ	0.5 UJ	0.5 UJ	0.5 UJ	0.5 UJ	0.5 UJ	0.5 UJ	0.5 UJ
2-Chlorotoluene in mg/kg	70,000	0.05 UJ	0.05 UJ	0.05 UJ	0.05 UJ	0.05 UJ	0.05 UJ	0.05 UJ	0.05 UJ	0.05 UJ	0.05 UJ
2-Hexanone in mg/kg		0.5 UJ	0.5 UJ	0.5 UJ	0.5 UJ	0.5 UJ	0.5 UJ	0.5 UJ	0.5 UJ	0.5 UJ	0.5 UJ
4-Chlorotoluene in mg/kg		0.05 UJ	0.05 UJ	0.05 UJ	0.05 UJ	0.05 UJ	0.05 UJ	0.05 UJ	0.05 UJ	0.05 UJ	0.05 UJ
4-Methyl-2-pentanone in mg/kg	280,000	0.5 UJ	0.5 UJ	0.5 UJ	0.5 UJ	0.5 UJ	0.5 UJ	0.5 UJ	0.5 UJ	0.5 UJ	0.5 UJ
Acetone in mg/kg	3,200,000	0.5 UJ	0.5 UJ	0.5 UJ	0.5 UJ	0.5 UJ	0.5 UJ	0.5 UJ	0.5 UJ	0.5 UJ	0.5 UJ
Benzene in mg/kg	2,400	0.03 UJ	0.03 UJ	0.03 UJ	0.03 UJ	0.03 UJ	0.03 UJ	0.03 UJ	0.03 UJ	0.03 UJ	0.03 UJ
Bromobenzene in mg/kg		0.05 UJ	0.05 UJ	0.05 UJ	0.05 UJ	0.05 UJ	0.05 UJ	0.05 UJ	0.05 UJ	0.05 UJ	0.05 UJ
Bromodichloromethane in mg/kg	2,100	0.05 UJ	0.05 UJ	0.05 UJ	0.05 UJ	0.05 UJ	0.05 UJ	0.05 UJ	0.05 UJ	0.05 UJ	0.05 UJ

Table 3 - Overburden Soil Quality Data

K-C Worldwide Site Upland Area 110207

		Naval Reserve Parcel South Area									
Chemical Name	Interim Action Cleanup Level - Unsaturated Soil	NRS-SP07-3-021014	NRS-SP08-1-021914	NRS-SP08-2-021914	NRS-SP08-3-021914	NRS-SP09-1-021914	NRS-SP09-2-021914	NRS-SP09-3-021914	NRS-SP10-1-021914	NRS-SP10-2-021914	NRS-SP10-3-021914
Bromoform in mg/kg	17,000	0.05 UJ	0.05 UJ	0.05 UJ	0.05 UJ	0.05 UJ	0.05 UJ	0.05 UJ	0.05 UJ	0.05 UJ	0.05 UJ
Bromomethane in mg/kg	4,900	0.5 UJ	0.5 UJ	0.5 UJ	0.5 UJ	0.5 UJ	0.5 UJ	0.5 UJ	0.5 UJ	0.5 UJ	0.5 UJ
Carbon tetrachloride in mg/kg	1,900	0.05 UJ	0.05 UJ	0.05 UJ	0.05 UJ	0.05 UJ	0.05 UJ	0.05 UJ	0.05 UJ	0.05 UJ	0.05 UJ
Chlorobenzene in mg/kg	70,000	0.05 UJ	0.05 UJ	0.05 UJ	0.05 UJ	0.05 UJ	0.05 UJ	0.05 UJ	0.05 UJ	0.05 UJ	0.05 UJ
Chloroethane in mg/kg		0.5 UJ	0.5 UJ	0.5 UJ	0.5 UJ	0.5 UJ	0.5 UJ	0.5 UJ	0.5 UJ	0.5 UJ	0.5 UJ
Chloroform in mg/kg	4,200	0.05 UJ	0.05 UJ	0.05 UJ	0.05 UJ	0.05 UJ	0.05 UJ	0.05 UJ	0.05 UJ	0.05 UJ	0.05 UJ
Chloromethane in mg/kg		0.5 UJ	0.5 UJ	0.5 UJ	0.5 UJ	0.5 UJ	0.5 UJ	0.5 UJ	0.5 UJ	0.5 UJ	0.5 UJ
cis-1,2-Dichloroethene (DCE) in mg/kg	7,000	0.05 UJ	0.05 UJ	0.05 UJ	0.05 UJ	0.05 UJ	0.05 UJ	0.05 UJ	0.05 UJ	0.05 UJ	0.05 UJ
cis-1,3-Dichloropropene in mg/kg		0.05 UJ	0.05 UJ	0.05 UJ	0.05 UJ	0.05 UJ	0.05 UJ	0.05 UJ	0.05 UJ	0.05 UJ	0.05 UJ
Dibromochloromethane in mg/kg	1,600	0.05 UJ	0.05 UJ	0.05 UJ	0.05 UJ	0.05 UJ	0.05 UJ	0.05 UJ	0.05 UJ	0.05 UJ	0.05 UJ
Dibromomethane in mg/kg	35,000	0.05 UJ	0.05 UJ	0.05 UJ	0.05 UJ	0.05 UJ	0.05 UJ	0.05 UJ	0.05 UJ	0.05 UJ	0.05 UJ
Dichlorodifluoromethane in mg/kg	700,000	0.5 UJ	0.5 UJ	0.5 UJ	0.5 UJ	0.5 UJ	0.5 UJ	0.5 UJ	0.5 UJ	0.5 UJ	0.5 UJ
Ethylbenzene in mg/kg	350,000	0.05 UJ	0.05 UJ	0.05 UJ	0.05 UJ	0.05 UJ	0.05 UJ	0.05 UJ	0.05 UJ	0.05 UJ	0.05 UJ
Hexachlorobutadiene in mg/kg	1,700	0.25 UJ	0.25 UJ	0.25 UJ	0.25 UJ	0.25 UJ	0.25 UJ	0.25 UJ	0.25 UJ	0.25 UJ	0.25 UJ
Isopropylbenzene in mg/kg	350,000	0.05 UJ	0.05 UJ	0.05 UJ	0.05 UJ	0.05 UJ	0.05 UJ	0.05 UJ	0.05 UJ	0.05 UJ	0.05 UJ
Methyl tert-butyl ether (MTBE) in mg/kg	73,000	0.05 UJ	0.05 UJ	0.05 UJ	0.05 UJ	0.05 UJ	0.05 UJ	0.05 UJ	0.05 UJ	0.05 UJ	0.05 UJ
Methylene chloride in mg/kg	21,000	0.5 UJ	0.5 UJ	0.5 UJ	0.5 UJ	0.5 UJ	0.5 UJ	0.5 UJ	0.5 UJ	0.5 UJ	0.5 UJ
n-Propylbenzene in mg/kg	350,000	0.05 UJ	0.05 UJ	0.05 UJ	0.05 UJ	0.05 UJ	0.05 UJ	0.05 UJ	0.05 UJ	0.05 UJ	0.05 UJ
p-Isopropyltoluene in mg/kg		0.05 UJ	0.05 UJ	0.05 UJ	0.05 UJ	0.05 UJ	0.05 UJ	0.05 UJ	0.05 UJ	0.05 UJ	0.05 UJ
sec-Butylbenzene in mg/kg	350,000	0.05 UJ	0.05 UJ	0.05 UJ	0.05 UJ	0.05 UJ	0.05 UJ	0.05 UJ	0.05 UJ	0.05 UJ	0.05 UJ
Styrene in mg/kg	700,000	0.05 UJ	0.05 UJ	0.05 UJ	0.05 UJ	0.05 UJ	0.05 UJ	0.05 UJ	0.05 UJ	0.05 UJ	0.05 UJ
tert-Butylbenzene in mg/kg	350,000	0.05 UJ	0.05 UJ	0.05 UJ	0.05 UJ	0.05 UJ	0.05 UJ	0.05 UJ	0.05 UJ	0.05 UJ	0.05 UJ
Tetrachloroethene (PCE) in mg/kg	21,000	0.025 UJ	0.025 UJ	0.025 UJ	0.025 UJ	0.025 UJ	0.025 UJ	0.025 UJ	0.025 UJ	0.025 UJ	0.025 UJ
Toluene in mg/kg	280,000	0.05 UJ	0.05 UJ	0.05 UJ	0.05 UJ	0.05 UJ	0.05 UJ	0.05 UJ	0.05 UJ	0.05 UJ	0.05 UJ
trans-1,2-Dichloroethene in mg/kg	70,000	0.05 UJ	0.05 UJ	0.05 UJ	0.05 UJ	0.05 UJ	0.05 UJ	0.05 UJ	0.05 UJ	0.05 UJ	0.05 UJ
trans-1,3-Dichloropropene in mg/kg		0.05 UJ	0.05 UJ	0.05 UJ	0.05 UJ	0.05 UJ	0.05 UJ	0.05 UJ	0.05 UJ	0.05 UJ	0.05 UJ
Trichloroethene (TCE) in mg/kg	1,800	0.03 UJ	0.03 UJ	0.03 UJ	0.03 UJ	0.03 UJ	0.03 UJ	0.03 UJ	0.03 UJ	0.03 UJ	0.03 UJ
Trichlorofluoromethane in mg/kg	1,100,000	0.5 UJ	0.5 UJ	0.5 UJ	0.5 UJ	0.5 UJ	0.5 UJ	0.5 UJ	0.5 UJ	0.5 UJ	0.5 UJ
Vinyl chloride in mg/kg	88	0.05 UJ	0.05 UJ	0.05 UJ	0.05 UJ	0.05 UJ	0.05 UJ	0.05 UJ	0.05 UJ	0.05 UJ	0.05 UJ
m,p-Xylenes in mg/kg	700,000	0.1 UJ	0.1 UJ	0.1 UJ	0.1 UJ	0.1 UJ	0.1 UJ	0.1 UJ	0.1 UJ	0.1 UJ	0.1 UJ
o-Xylene in mg/kg	700,000	0.05 UJ	0.05 UJ	0.05 UJ	0.05 UJ	0.05 UJ	0.05 UJ	0.05 UJ	0.05 UJ	0.05 UJ	0.05 UJ
Naphthalene in mg/kg	70,000	0.05 UJ	0.05 UJ	0.05 UJ	0.2 J	0.05 UJ	0.05 UJ	0.05 UJ	0.05 UJ	0.05 UJ	0.05 UJ
Polychlorinated Biphenyls (PCBs)											
Aroclor 1016 in mg/kg		0.02 U	0.02 U	0.02 U	0.02 U	0.02 U	0.02 U	0.02 U	0.02 U	0.02 U	0.02 U
Aroclor 1221 in mg/kg		0.02 U	0.02 U	0.02 U	0.02 U	0.02 U	0.02 U	0.02 U	0.02 U	0.02 U	0.02 U
Aroclor 1232 in mg/kg		0.02 U	0.02 U	0.02 U	0.02 U	0.02 U	0.02 U	0.02 U	0.02 U	0.02 U	0.02 U
Aroclor 1242 in mg/kg		0.02 U	0.02 U	0.02 U	0.02 U	0.02 U	0.02 U	0.02 U	0.02 U	0.02 U	0.02 U
Aroclor 1248 in mg/kg		0.02 U	0.02 U	0.02 U	0.02 U	0.02 U	0.02 U	0.02 U	0.02 U	0.02 U	0.02 U
Aroclor 1254 in mg/kg		0.02 U	0.02 U	0.02 U	0.02 U	0.02 U	0.02 U	0.02 U	0.02 U	0.02 U	0.04
Aroclor 1260 in mg/kg		0.02 U	0.02 U	0.02 U	0.02 U	0.02 U	0.02 U	0.02 U	0.02 U	0.02 U	0.039
Total PCBs (Sum of Aroclors) in mg/kg	10	ND	ND	ND	ND	ND	ND	ND	ND	ND	0.129

Notes

Concentrations in shaded cells indicate value exceeds Interim Action Cleanup Level - Unsaturated Soil.

J = Analyte was positively identified. The reported result is an estimate.

U = Analyte was not detected at or above the reported result.

UJ = Analyte was not detected at or above the reported estimate

x = The sample chromatographic pattern does not resemble the fuel standard used for quantitation.

Table 4 - Import Backfill Soil Quality Data

K-C Worldwide Site Upland Area 110207

Chemical Name	Interim Action Cleanup Level - Unsaturated Soil	BACKFILL-FARM-STOCKPILE1 8/23/13	BACKFILL-FARM-TP1 8/20/13 (10 ft)	BACKFILL-FARM-TP1 8/20/13 (25 ft)	BACKFILL-FARM-TP2 8/20/13 (15 ft)	BACKFILL-FARM-TP3 8/20/13 (6 ft)	BACKFILL-FARM-TP4 8/20/13 (12 ft)	BACKFILL-FARM-TP5 8/20/13 (10 ft)	BACKFILL-FARM-TP6 8/23/13 (12 ft)	BACKFILL-FARM-TP7 8/23/13 (14 ft)	BACKFILL-FARM-TP8 8/23/13 (12 ft)	BACKFILL-FARM-TP9 8/23/13 (12 ft)	BACKFILL-FARM-TP10 8/23/13 (12 ft)	BACKFILL-HL-HA1 8/29/13 (2 ft)	BACKFILL-HL-HA2 8/29/13 (2 ft)	BACKFILL-HL-HA3 8/29/13 (2 ft)	BACKFILL-HL-HA4 8/29/13 (2 ft)	BACKFILL-HL-HA5 8/29/13 (2 ft)	BACKFILL-HL-HA6 8/29/13 (2 ft)	BACKFILL-HL-HA7 8/29/13 (2 ft)	BACKFILL-HL-HA8 8/29/13 (2 ft)	BACKFILL-HL-HA9 8/29/13 (2 ft)	Cemex-QS-011014 1/10/14
Total Petroleum Hydrocarbons (TPH)																							
Gasoline Range Hydrocarbons in mg/k	100	2 U	2 U	2 U	2 U	2 U	2 U	2 U	2 U	2 U	2 U	2 U	2 U	2 U	2 U	2 U	2 U	2 U	2 U	2 U	2 U	2 U	
Diesel Range Hydrocarbons in mg/kg	2,000	50 UJ	50 UJ	50 U	50 UJ	50 UJ	50 UJ	50 UJ	50 UJ	50 UJ	50 UJ	50 UJ	50 UJ	50 U	50 U	50 U	50 U	50 U	50 U	50 U	50 U	50 U	
Oil Range Hydrocarbons in mg/kg	2,000	250 U	250 U	250 U	250 U	250 U	250 U	250 U	250 U	250 U	250 U	250 U	250 U	250 U	250 U	250 U	250 U	250 U	250 U	250 U	250 U	250 U	
Total TPHs in mg/kg	2,000	ND	ND	ND	ND	ND	ND	ND	ND	ND	ND	ND	ND	ND	ND	ND	ND	ND	ND	ND	ND	ND	
Metals																							
Antimony in mg/kg	1,400	1 U	1 U	1 U	1 U	1 U	1 U	1 U	1 U	1 U	1 U	1 U	1 U	1 U	1 U	1 U	1 U	1 U	1 U	1 U	1 U	1 U	
Arsenic in mg/kg	20	1.7	1.37	1.17	2.37	1.07	1.49	1.49	3.61	1.26	1.93	1.34	1.36	1.29	1 U	1 U	1 U	1 U	1 U	1 U	1 U	1 U	
Beryllium in mg/kg	7,000	1 U	1 U	1 U	1 U	1 U	1 U	1 U	1 U	1 U	1 U	1 U	1 U	1 U	1 U	1 U	1 U	1 U	1 U	1 U	1 U	1 U	
Cadmium in mg/kg	3,500	1 U	1 U	1 U	1 U	1 U	1 U	1 U	1 U	1 U	1 U	1 U	1 U	1 U	1 U	1 U	1 U	1 U	1 U	1 U	1 U	1 U	
Chromium (Total) in mg/kg	5,300,000	7.89	5.71	12	8.17	7.97	7.6	7.55	16.6	6.63	9.56	7.12	6.83	9.24	8	7.23	8.47	7.56	6.27	9.03	7.54	5.82	
Copper in mg/kg	36	7.02	6.17	8.47	14	5.05	8.48	6.01	10.4	5.74	6.84	6.2	6.06	5.99	5.57	5.11	5.15	5.17	5.46	5.75	4.85	4.24	
Lead in mg/kg	1,000	10.8	1.2	2.12	52	1.27	9.7	1.93	2.52	1.18	1.63	2.02	1 U	4.01	2.32	2.56	2.25	2.83	1.95	3.23	2.54	1.92	
Mercury in mg/kg	0.1	0.1 U	0.1 U	0.1 U	0.1 U		0.1 U	0.1 U	0.1 U	0.1 U	0.1 U	0.1 U	0.1 U	0.1 U	0.1 U	0.1 U	0.1 U	0.1 U	0.1 U	0.1 U	0.1 U	0.1 U	
Nickel in mg/kg	48	20.6	21	21.6	21.6	23.2	20.4	22.5	27	20.8	25.2	23.8	24	18.7 J	17.8 J	17 J	17.7 J	16.1 J	13.4 J	17.9 J	16.4 J	14.5 J	
Selenium in mg/kg	18,000	1 U	1 U	1 U	1 U	1 U	1 U	1 U	1 U	1 U	1 U	1 U	1 U	1 U	1 U	1 U	1 U	1 U	1 U	1 U	1 U	1 U	
Silver in mg/kg	18,000	1 U	1 U	1 U	1 U	1 U	1 U	1 U	1 U	1 U	1 U	1 U	1 U	1 U	1 U	1 U	1 U	1 U	1 U	1 U	1 U	1 U	
Thallium in mg/kg	35	1 U	1 U	1 U	1 U	1 U	1 U	1 U	1 U	1 U	1 U	1 U	1 U	1 U	1 U	1 U	1 U	1 U	1 U	1 U	1 U	1 U	
Zinc in mg/kg	100	17.4	8.67	14.4	33	8.17	13.3	9.79	14.7	9.25	13.1	11.6	8.64	22.5	18.2	21.5	17	21.5	15.2	21.6	20.2	12.2	
SPLP Metals																							
Antimony in mg/L	1,400																						0.005 U
Arsenic in mg/L	20																						0.005 U
Beryllium in mg/L	7,000																						0.005 U
Cadmium in mg/L	3,500																						0.005 U
Chromium (Total) in mg/L	5,300,000																						0.005 U
Copper in mg/L	36																						0.005 U
Lead in mg/L	1,000																						0.005 U
Mercury in mg/L	0.1																						0.1 U
Nickel in mg/L	48																						0.005 U
Selenium in mg/L	18,000																						0.005 U
Silver in mg/L	18,000																						0.005 U
Thallium in mg/L	35																						0.005 U
Zinc in mg/L	100																						0.0316 J
Polycyclic Aromatic Hydrocarbons (PAHs)																							
Acenaphthene in mg/kg	210,000	0.01 U	0.01 U	0.01 U	0.01 U	0.01 U	0.01 U	0.01 U	0.01 U	0.01 U	0.01 U	0.01 U	0.01 U	0.01 U	0.01 U	0.01 U	0.01 U	0.01 U	0.01 U	0.01 U	0.01 U	0.01 U	
Acenaphthylene in mg/kg		0.01 U	0.01 U	0.01 U	0.01 U	0.01 U	0.01 U	0.01 U	0.01 U	0.01 U	0.01 U	0.01 U	0.01 U	0.01 U	0.01 U	0.01 U	0.01 U	0.01 U	0.01 U	0.01 U	0.01 U	0.01 U	
Anthracene in mg/kg	1,100,000	0.01 U	0.01 U	0.01 U	0.01 U	0.01 U	0.01 U	0.01 U	0.01 U	0.01 U	0.01 U	0.01 U	0.01 U	0.01 U	0.01 U	0.01 U	0.01 U	0.01 U	0.01 U	0.01 U	0.01 U	0.01 U	
Benzo(g,h,i)perylene in mg/kg		0.01 U	0.01 U	0.01 U	0.01 U	0.01 U	0.01 U	0.01 U	0.01 U	0.01 U	0.01 U	0.01 U	0.01 U	0.051	0.01 U	0.01 U	0.01 U	0.01 U	0.01 U	0.01 U	0.01 U	0.01 U	
Dibenzofuran in mg/kg	3,500	0.03 U	0.03 U	0.03 U	0.03 U	0.03 U	0.03 U	0.03 U	0.03 U	0.03 U	0.03 U	0.03 U	0.03 U	0.03 U	0.03 U	0.03 U	0.03 U	0.03 U	0.03 U	0.03 U	0.03 U	0.03 U	
Fluoranthene in mg/kg	140,000	0.01 U	0.01 U	0.01 U	0.01 U	0.01 U	0.01 U	0.01 U	0.01 U	0.01 U	0.01 U	0.01 U	0.01 U	0.14	0.01 U	0.014	0.024	0.034	0.01 U	0.023	0.01 U	0.01 U	
Fluorene in mg/kg	140,000	0.01 U	0.01 U	0.01 U	0.01 U	0.01 U	0.01 U	0.01 U	0.01 U	0.01 U	0.01 U	0.01 U	0.01 U	0.01 U	0.01 U	0.01 U	0.01 U	0.01 U	0.01 U	0.01 U	0.01 U	0.01 U	
Phenanthrene in mg/kg		0.01 U	0.01 U	0.01 U	0.01 U	0.01 U	0.01 U	0.01 U	0.01 U	0.01 U	0.01 U	0.01 U	0.01 U	0.096	0.01 U	0.01 U	0.013	0.028	0.01 U	0.015	0.01 U	0.01 U	
Pyrene in mg/kg	110,000	0.01 U	0.01 U	0.01 U	0.01 U	0.01 U	0.01 U	0.01 U	0.01 U	0.01 U	0.01 U	0.01 U	0.01 U	0.16 J	0.01 U	0.012	0.021	0.032	0.01 U	0.025	0.01 U	0.01 U	
2-Methylnaphthalene in mg/kg	14,000	0.01 U	0.01 U	0.01 U	0.01 U	0.01 U	0.01 U	0.01 U	0.01 U	0.01 U	0.01 U	0.01 U	0.01 U	0.01 U	0.01 U	0.01 U	0.01 U	0.01 U	0.01 U	0.01 U	0.01 U	0.01 U	
Naphthalene in mg/kg	70,000	0.01 U	0.01 U	0.01 U	0.01 U	0.01 U	0.01 U	0.01 U	0.01 U	0.01 U	0.01 U	0.01 U	0.01 U	0.01 U	0.01 U	0.01 U	0.01 U	0.01 U	0.01 U	0.01 U	0.01 U	0.01 U	
Benz(a)anthracene in mg/kg		0.01 U	0.01 U	0.01 U	0.01 U	0.01 U	0.01 U	0.01 U	0.01 U	0.01 U	0.01 U	0.01 U	0.01 U	0.057 J	0.01 U	0.01 U	0.01 U	0.011	0.01 U	0.01 U	0.01 U	0.01 U	
Benzo(a)pyrene in mg/kg		0.01 U	0.01 U	0.01 U	0.01 U	0.01 U	0.01 U	0.01 U	0.01 U	0.01 U	0.01 U	0.01 U	0.01 U	0.066	0.01 U	0.01 U	0.01 U	0.013	0.01 U	0.012	0.01 U	0.01 U	
Benzo(b)fluoranthene in mg/kg		0.01 U	0.01 U	0.01 U	0.01 U	0.01 U	0.01 U	0.01 U	0.01 U	0.01 U	0.01 U	0.01 U	0.01 U	0.091	0.01 U	0.01 U	0.014	0.016	0.01 U	0.015	0.01 U	0.01 U	
Benzo(k)fluoranthene in mg/kg		0.01 U	0.01 U	0.01 U	0.01 U	0.01 U	0.01 U	0.01 U	0.01 U	0.01 U	0.01 U	0.01 U	0.01 U	0.036	0.01 U	0.01 U	0.01 U	0.01 U	0.01 U	0.01 U	0.01 U	0.01 U	
Chrysene in mg/kg		0.01 U	0.01 U	0.01 U	0.01 U	0.01 U	0.01 U	0.01 U	0.01 U	0.01 U	0.01 U	0.01 U	0.01 U	0.077 J	0.01 U	0.01 U	0.013	0.016	0.01 U	0.015	0.01 U	0.01 U	
Dibenzo(a,h)anthracene in mg/kg		0.01 U	0.01 U	0.01 U	0.01 U	0.01 U	0.01 U	0.01 U	0.01 U	0.01 U	0.01 U	0.01 U	0.01 U	0.012	0.01 U	0.01 U	0.01 U	0.01 U	0.01 U	0.01 U	0.01 U	0.01 U	
Indeno(1,2,3-cd)pyrene in mg/kg		0.01 U	0.01 U	0.01 U	0.01 U	0.01 U	0.01 U	0.01 U	0.01 U	0.01 U	0.01 U	0.01 U	0.01 U	0.052	0.01 U	0.01 U	0.01 U	0.01 U	0.01 U	0.01	0.01 U	0.01 U	
Total cPAHs TEQ in mg/kg	7.9	ND	ND	ND	ND	ND	ND	ND	ND	ND	ND	ND	ND	0.0916	ND	ND	0.00853	0.0174	ND	0.0162	ND	ND	

Table 4 - Import Backfill Soil Quality Data

K-C Worldwide Site Upland Area 110207

Chemical Name	Interim Action Cleanup Level - Unsaturated Soil	BACKFILL-FARM-STOCKPILE1 8/23/13	BACKFILL-FARM-TP1 8/20/13 (10 ft)	BACKFILL-FARM-TP1 8/20/13 (25 ft)	BACKFILL-FARM-TP2 8/20/13 (15 ft)	BACKFILL-FARM-TP3 8/20/13 (6 ft)	BACKFILL-FARM-TP4 8/20/13 (12 ft)	BACKFILL-FARM-TP5 8/20/13 (10 ft)	BACKFILL-FARM-TP6 8/23/13 (12 ft)	BACKFILL-FARM-TP7 8/23/13 (14 ft)	BACKFILL-FARM-TP8 8/23/13 (12 ft)	BACKFILL-FARM-TP9 8/23/13 (12 ft)	BACKFILL-FARM-TP10 8/23/13 (12 ft)	BACKFILL-HL-HA1 8/29/13 (2 ft)	BACKFILL-HL-HA2 8/29/13 (2 ft)	BACKFILL-HL-HA3 8/29/13 (2 ft)	BACKFILL-HL-HA4 8/29/13 (2 ft)	BACKFILL-HL-HA5 8/29/13 (2 ft)	BACKFILL-HL-HA6 8/29/13 (2 ft)	BACKFILL-HL-HA7 8/29/13 (2 ft)	BACKFILL-HL-HA8 8/29/13 (2 ft)	BACKFILL-HL-HA9 8/29/13 (2 ft)	Cemex-QS-011014 1/10/14
Other Semivolatiles																								
1,2,4-Trichlorobenzene in mg/kg	4,500	0.03 U	0.03 U	0.03 U	0.03 U	0.03 U	0.03 U	0.03 U	0.03 U	0.03 U	0.03 U	0.03 U	0.03 U	0.03 U	0.03 U	0.03 U	0.03 U	0.03 U	0.03 U	0.03 U	0.03 U	0.03 U	0.03 U	
1,2-Dichlorobenzene in mg/kg	320,000	0.03 U	0.03 U	0.03 U	0.03 U	0.03 U	0.03 U	0.03 U	0.03 U	0.03 U	0.03 U	0.03 U	0.03 U	0.03 U	0.03 U	0.03 U	0.03 U	0.03 U	0.03 U	0.03 U	0.03 U	0.03 U	0.03 U	
1,3-Dichlorobenzene in mg/kg		0.03 U	0.03 U	0.03 U	0.03 U	0.03 U	0.03 U	0.03 U	0.03 U	0.03 U	0.03 U	0.03 U	0.03 U	0.03 U	0.03 U	0.03 U	0.03 U	0.03 U	0.03 U	0.03 U	0.03 U	0.03 U	0.03 U	
1,4-Dichlorobenzene in mg/kg	24,000	0.03 U	0.03 U	0.03 U	0.03 U	0.03 U	0.03 U	0.03 U	0.03 U	0.03 U	0.03 U	0.03 U	0.03 U	0.03 U	0.03 U	0.03 U	0.03 U	0.03 U	0.03 U	0.03 U	0.03 U	0.03 U	0.03 U	
2,4,5-Trichlorophenol in mg/kg	350,000	0.3 U	0.3 U	0.3 U	0.3 U	0.3 U	0.3 U	0.3 U	0.3 U	0.3 U	0.3 U	0.3 U	0.3 U	0.3 U	0.3 U	0.3 U	0.3 U	0.3 U	0.3 U	0.3 U	0.3 U	0.3 U	0.3 U	
2,4,6-Trichlorophenol in mg/kg	3,500	0.3 U	0.3 U	0.3 U	0.3 U	0.3 U	0.3 U	0.3 U	0.3 U	0.3 U	0.3 U	0.3 U	0.3 U	0.3 U	0.3 U	0.3 U	0.3 U	0.3 U	0.3 U	0.3 U	0.3 U	0.3 U	0.3 U	
2,4-Dichlorophenol in mg/kg	11,000	0.3 U	0.3 U	0.3 U	0.3 U	0.3 U	0.3 U	0.3 U	0.3 U	0.3 U	0.3 U	0.3 U	0.3 U	0.3 UJ	0.3 UJ	0.3 UJ	0.3 UJ	0.3 UJ	0.3 UJ	0.3 UJ	0.3 UJ	0.3 UJ	0.3 UJ	
2,4-Dimethylphenol in mg/kg	70,000	0.3 U	0.3 U	0.3 U	0.3 U	0.3 U	0.3 U	0.3 U	0.3 U	0.3 U	0.3 U	0.3 U	0.3 U	0.3 U	0.3 U	0.3 U	0.3 U	0.3 U	0.3 U	0.3 U	0.3 U	0.3 U	0.3 U	
2,4-Dinitrophenol in mg/kg	7,000	0.9 U	0.9 U	0.9 UJ	0.9 U	0.9 U	0.9 U	0.9 U	0.9 U	0.9 U	0.9 U	0.9 U	0.9 U	0.9 U	0.9 U	0.9 U	0.9 U	0.9 U	0.9 U	0.9 U	0.9 U	0.9 U	0.9 U	
2-Chloronaphthalene in mg/kg	280,000	0.03 U	0.03 U	0.03 U	0.03 U	0.03 U	0.03 U	0.03 U	0.03 U	0.03 U	0.03 U	0.03 U	0.03 U	0.03 U	0.03 U	0.03 U	0.03 U	0.03 U	0.03 U	0.03 U	0.03 U	0.03 U	0.03 U	
2-Chlorophenol in mg/kg	18,000	0.3 U	0.3 U	0.3 U	0.3 U	0.3 U	0.3 U	0.3 U	0.3 U	0.3 U	0.3 U	0.3 U	0.3 U	0.3 U	0.3 U	0.3 U	0.3 U	0.3 U	0.3 U	0.3 U	0.3 U	0.3 U	0.3 U	
2-Methylphenol in mg/kg	180,000	0.3 U	0.3 U	0.3 U	0.3 U	0.3 U	0.3 U	0.3 U	0.3 U	0.3 U	0.3 U	0.3 U	0.3 U	0.3 U	0.3 U	0.3 U	0.3 U	0.3 U	0.3 U	0.3 U	0.3 U	0.3 U	0.3 U	
2-Nitroaniline in mg/kg	35,000	0.03 U	0.03 U	0.03 U	0.03 U	0.03 U	0.03 U	0.03 U	0.03 U	0.03 U	0.03 U	0.03 U	0.03 U	0.03 U	0.03 U	0.03 U	0.03 U	0.03 U	0.03 U	0.03 U	0.03 U	0.03 U	0.03 U	
2-Nitrophenol in mg/kg		0.3 U	0.3 U	0.3 U	0.3 U	0.3 U	0.3 U	0.3 U	0.3 U	0.3 U	0.3 U	0.3 U	0.3 U	0.3 U	0.3 U	0.3 U	0.3 U	0.3 U	0.3 U	0.3 U	0.3 U	0.3 U	0.3 U	
3 & 4 Methylphenol in mg/kg	175000	0.6 U	0.6 U	0.6 U	0.6 U	0.6 U	0.6 U	0.6 U	0.6 U	0.6 U	0.6 U	0.6 U	0.6 U	0.6 U	0.6 U	0.6 U	0.6 U	0.6 U	0.6 U	0.6 U	0.6 U	0.6 U	0.6 U	
3-Nitroaniline in mg/kg		3 U	3 U	3 U	3 U	3 U	3 U	3 U	3 U	3 U	3 U	3 U	3 U	3 U	3 U	3 U	3 U	3 U	3 U	3 U	3 U	3 U	3 U	
4,6-Dinitro-2-methylphenol in mg/kg		0.9 U	0.9 U	0.9 UJ	0.9 U	0.9 U	0.9 U	0.9 U	0.9 U	0.9 U	0.9 U	0.9 U	0.9 U	0.9 U	0.9 U	0.9 U	0.9 U	0.9 U	0.9 U	0.9 U	0.9 U	0.9 U	0.9 U	
4-Bromophenyl phenyl ether in mg/kg		0.03 U	0.03 U	0.03 U	0.03 U	0.03 U	0.03 U	0.03 U	0.03 U	0.03 U	0.03 U	0.03 U	0.03 U	0.03 U	0.03 U	0.03 U	0.03 U	0.03 U	0.03 U	0.03 U	0.03 U	0.03 U	0.03 U	
4-Chloro-3-methylphenol in mg/kg		0.3 U	0.3 U	0.3 U	0.3 U	0.3 U	0.3 U	0.3 U	0.3 U	0.3 U	0.3 U	0.3 U	0.3 U	0.3 U	0.3 U	0.3 U	0.3 U	0.3 U	0.3 U	0.3 U	0.3 U	0.3 U	0.3 U	
4-Chloroaniline in mg/kg	660	3 U	3 U	3 U	3 U	3 U	3 U	3 U	3 U	3 U	3 U	3 U	3 U	3 U	3 U	3 U	3 U	3 U	3 U	3 U	3 U	3 U	3 U	
4-Chlorophenyl phenyl ether in mg/kg		0.03 U	0.03 U	0.03 U	0.03 U	0.03 U	0.03 U	0.03 U	0.03 U	0.03 U	0.03 U	0.03 U	0.03 U	0.03 U	0.03 U	0.03 U	0.03 U	0.03 U	0.03 U	0.03 U	0.03 U	0.03 U	0.03 U	
4-Nitroaniline in mg/kg		3 U	3 U	3 U	3 U	3 U	3 U	3 U	3 U	3 U	3 U	3 U	3 U	3 U	3 U	3 U	3 U	3 U	3 U	3 U	3 U	3 U	3 U	
4-Nitrophenol in mg/kg		0.9 U	0.9 U	0.9 U	0.9 U	0.9 U	0.9 U	0.9 U	0.9 U	0.9 U	0.9 U	0.9 U	0.9 U	0.9 U	0.9 U	0.9 U	0.9 U	0.9 U	0.9 U	0.9 U	0.9 U	0.9 U	0.9 U	
Benzoic acid in mg/kg	14,000,000	1.5 U	1.5 U	1.5 U	1.5 U	1.5 U	1.5 U	1.5 U	1.5 U	1.5 U	1.5 U	1.5 U	1.5 U	1.5 U	1.5 U	1.5 U	1.5 U	1.5 U	1.5 U	1.5 U	1.5 U	1.5 U	1.5 U	
Benzyl alcohol in mg/kg	350,000	0.3 U	0.3 U	0.3 U	0.3 U	0.3 U	0.3 U	0.3 U	0.3 U	0.3 U	0.3 U	0.3 U	0.3 U	0.3 U	0.3 U	0.3 U	0.3 U	0.3 U	0.3 U	0.3 U	0.3 U	0.3 U	0.3 U	
Benzyl butyl phthalate in mg/kg	69,000	0.03 U	0.03 U	0.03 U	0.03 U	0.03 U	0.03 U	0.03 U	0.03 U	0.03 U	0.03 U	0.03 U	0.03 U	0.03 UJ	0.03 U	0.03 U	0.03 U	0.03 U	0.03 U	0.03 U	0.03 U	0.03 U	0.03 U	
Bis(2-chloro-1-methylethyl) ether in n	1,900	0.03 U	0.03 U	0.03 U	0.03 U	0.03 U	0.03 U	0.03 U	0.03 U	0.03 U	0.03 U	0.03 U	0.03 U	0.03 U	0.03 U	0.03 U	0.03 U	0.03 U	0.03 U	0.03 U	0.03 U	0.03 U	0.03 U	
Bis(2-chloroethoxy)methane in mg/kg		0.03 U	0.03 U	0.03 U	0.03 U	0.03 U	0.03 U	0.03 U	0.03 U	0.03 U	0.03 U	0.03 U	0.03 U	0.03 U	0.03 U	0.03 U	0.03 U	0.03 U	0.03 U	0.03 U	0.03 U	0.03 U	0.03 U	
Bis(2-chloroethyl) ether in mg/kg	120	0.03 U	0.03 U	0.03 U	0.03 U	0.03 U	0.03 U	0.03 U	0.03 U	0.03 U	0.03 U	0.03 U	0.03 U	0.03 U	0.03 U	0.03 U	0.03 U	0.03 U	0.03 U	0.03 U	0.03 U	0.03 U	0.03 U	
Bis(2-ethylhexyl) phthalate in mg/kg	9,400	0.48 U	0.48 U	0.48 U	0.48 U	0.48 U	0.48 U	0.48 U	0.48 U	0.48 U	0.48 U	0.48 U	0.48 U	0.48 UJ	0.48 U	0.48 U	0.48 U	0.48 U	0.48 U	0.48 U	0.48 U	0.48 U	0.48 U	
Carbazole in mg/kg		0.03 U	0.03 U	0.03 U	0.03 U	0.03 U	0.03 U	0.03 U	0.03 U	0.03 U	0.03 U	0.03 U	0.03 U	0.03 U	0.03 U	0.03 U	0.03 U	0.03 U	0.03 U	0.03 U	0.03 U	0.03 U	0.03 U	
Diethyl phthalate in mg/kg	2,800,000	0.03 U	0.03 U	0.03 U	0.03 U	0.03 U	0.03 U	0.03 U	0.03 U	0.03 U	0.03 U	0.03 U	0.03 U	0.03 U	0.03 U	0.03 U	0.03 U	0.03 U	0.03 U	0.03 U	0.03 U	0.03 U	0.03 U	
Dimethyl phthalate in mg/kg		0.03 U	0.03 U	0.03 U	0.03 U	0.03 U	0.03 U	0.03 U	0.03 U	0.03 U	0.03 U	0.03 U	0.03 U	0.03 U	0.03 U	0.03 U	0.03 U	0.03 U	0.03 U	0.03 U	0.03 U	0.03 U	0.03 U	
Di-n-butyl phthalate in mg/kg	350,000	0.03 U	0.03 U	0.03 U	0.03 U	0.03 U	0.03 U	0.03 U	0.03 U	0.03 U	0.03 U	0.03 U	0.03 U	0.03 U	0.03 U	0.03 U	0.03 U	0.03 U	0.03 U	0.03 U	0.03 U	0.03 U	0.03 U	
Di-n-octyl phthalate in mg/kg	35,000	0.03 U	0.03 U	0.03 U	0.03 U	0.03 U	0.03 U	0.03 U	0.03 U	0.03 U	0.03 U	0.03 U	0.03 U	0.03 U	0.03 U	0.03 U	0.03 U	0.03 U	0.03 U	0.03 U	0.03 U	0.03 U	0.03 U	
Hexachlorobenzene in mg/kg	82	0.03 U	0.03 U	0.03 U	0.03 U	0.03 U	0.03 U	0.03 U	0.03 U	0.03 U	0.03 U	0.03 U	0.03 U	0.03 U	0.03 U	0.03 U	0.03 U	0.03 U	0.03 U	0.03 U	0.03 U	0.03 U	0.03 U	
Hexachlorobutadiene in mg/kg	1,700	0.03 U	0.03 U	0.03 U	0.03 U	0.03 U	0.03 U	0.03 U	0.03 U	0.03 U	0.03 U	0.03 U	0.03 U	0.03 UJ	0.03 U	0.03 U	0.03 U	0.03 U	0.03 U	0.03 U	0.03 U	0.03 U	0.03 UJ	
Hexachlorocyclopentadiene in mg/kg	21,000	0.09 U	0.09 U	0.09 U	0.09 U	0.09 U	0.09 U	0.09 U	0.09 U	0.09 U	0.09 U	0.09 U	0.09 U	0.09 U	0.09 U	0.09 U	0.09 U	0.09 U	0.09 U	0.09 U	0.09 U	0.09 U	0.09 U	
Hexachloroethane in mg/kg	2,500	0.03 U	0.03 U	0.03 U	0.03 U	0.03 U	0.03 U	0.03 U	0.03 U	0.03 U	0.03 U	0.03 U	0.03 U	0.03 U	0.03 U	0.03 U	0.03 U	0.03 U	0.03 U	0.03 U	0.03 U	0.03 U	0.03 U	
Isophorone in mg/kg	140,000	0.03 U	0.03 U	0.03 U	0.03 U	0.03 U	0.03 U	0.03 U	0.03 U	0.03 U	0.03 U	0.03 U	0.03 U	0.03 U	0.03 U	0.03 U	0.03 U	0.03 U	0.03 U	0.03 U	0.03 U	0.03 U	0.03 U	
Nitrobenzene in mg/kg	7,000	0.03 U	0.03 U	0.03 U	0.03 U	0.03 U	0.03 U	0.03 U	0.03 U	0.03 U	0.03 U	0.03 U	0.03 U	0.03 U	0.03 U	0.03 U	0.03 U	0.03 U	0.03 U	0.03 U	0.03 U	0.03 U	0.03 U	
N-Nitroso-di-n-propylamine in mg/kg	19	0.03 U	0.03 U	0.03 U	0.03 U	0.03 U	0.03 U	0.03 U	0.03 U	0.03 U	0.03 U	0.03 U	0.03 U	0.03 U	0.03 U	0.03 U	0.03 U	0.03 U	0.03 U	0.03 U	0.03 U	0.03 U	0.03 U	
N-Nitrosodiphenylamine in mg/kg	27,000	0.03 U	0.03 U	0.03 U	0.03 U	0.03 U	0.03 U	0.03 U	0.03 U	0.03 U	0.03 U	0.03 U	0.03 U	0.03 U	0.03 U	0.03 U	0.03 U	0.03 U	0.03 U	0.03 U	0.03 U	0.03 U	0.03 U	
Pentachlorophenol in mg/kg	330	0.3 U	0.3 U	0.3 U	0.3 U	0.3 U	0.3 U	0.3 U	0.3 U	0.3 U	0.3 U	0.3 U	0.3 U	0.3 U	0.3 U	0.3 U	0.3 U	0.3 U	0.3 U	0.3 U	0.3 U	0.3 U	0.3 U	
Phenol in mg/kg	1,100,000	0.3 U	0.3 U	0.3 U	0.3 U	0.3 U	0.3 U	0.3 U	0.3 U	0.3 U	0.3 U	0.3 U	0.3 U	0.3 U	0.3 U	0.3 U	0.3 U	0.3 U	0.3 U	0.3 U	0.3 U	0.3 U	0.3 U	
2,4-Dinitrotoluene in mg/kg	420	0.03 U	0.03 U	0.03 U	0.03 U	0.03 U	0.03 U	0.03 U	0.03 U	0.03 U	0.03 U	0.03 U	0.03 U	0.03 U	0.03 U	0.03 U	0.03 U	0.03 U	0.03 U	0.03 U	0.03 U	0.03 U	0.03 U	
2,6-Dinitrotoluene in mg/kg	88	0.03 U	0.03 U	0.03 U	0.03 U	0.03 U	0.03 U	0.03 U	0.03 U	0.03 U	0.03 U	0.03 U	0.03 U	0.03 U	0.03 U	0.03 U	0.03 U	0.03 U	0.03 U	0.03 U	0.03 U	0.03 U	0.03 U	

Table 4 - Import Backfill Soil Quality Data

K-C Worldwide Site Upland Area 110207

Chemical Name	Interim Action Cleanup Level - Unsaturated Soil	BACKFILL-FARM-STOCKPILE1 8/23/13	BACKFILL-FARM-TP1 8/20/13 (10 ft)	BACKFILL-FARM-TP1 8/20/13 (25 ft)	BACKFILL-FARM-TP2 8/20/13 (15 ft)	BACKFILL-FARM-TP3 8/20/13 (6 ft)	BACKFILL-FARM-TP4 8/20/13 (12 ft)	BACKFILL-FARM-TP5 8/20/13 (10 ft)	BACKFILL-FARM-TP6 8/23/13 (12 ft)	BACKFILL-FARM-TP7 8/23/13 (14 ft)	BACKFILL-FARM-TP8 8/23/13 (12 ft)	BACKFILL-FARM-TP9 8/23/13 (12 ft)	BACKFILL-FARM-TP10 8/23/13 (12 ft)	BACKFILL-HL-HA1 8/29/13 (2 ft)	BACKFILL-HL-HA2 8/29/13 (2 ft)	BACKFILL-HL-HA3 8/29/13 (2 ft)	BACKFILL-HL-HA4 8/29/13 (2 ft)	BACKFILL-HL-HA5 8/29/13 (2 ft)	BACKFILL-HL-HA6 8/29/13 (2 ft)	BACKFILL-HL-HA7 8/29/13 (2 ft)	BACKFILL-HL-HA8 8/29/13 (2 ft)	BACKFILL-HL-HA9 8/29/13 (2 ft)	Cemex-QS-011014 1/10/14
Volatile Organic Compounds (VOC)																								
1,1,1,2-Tetrachloroethane in mg/kg	5,000	0.05 U	0.05 U	0.05 U	0.05 U	0.05 U	0.05 U	0.05 U	0.05 U	0.05 U	0.05 U	0.05 U	0.05 U	0.05 U	0.05 U	0.05 U	0.05 U	0.05 U	0.05 U	0.05 U	0.05 U	0.05 U	0.05 U	
1,1,1-Trichloroethane in mg/kg	7,000,000	0.05 U	0.05 U	0.05 U	0.05 U	0.05 U	0.05 U	0.05 U	0.05 U	0.05 U	0.05 U	0.05 U	0.05 U	0.05 U	0.05 U	0.05 U	0.05 U	0.05 U	0.05 U	0.05 U	0.05 U	0.05 U	0.05 U	
1,1,2,2-Tetrachloroethane in mg/kg	660	0.05 U	0.05 U	0.05 U	0.05 U	0.05 U	0.05 U	0.05 U	0.05 U	0.05 U	0.05 U	0.05 U	0.05 U	0.05 U	0.05 U	0.05 U	0.05 U	0.05 U	0.05 U	0.05 U	0.05 U	0.05 U	0.05 U	
1,1,2-Trichloroethane in mg/kg	2,300	0.05 U	0.05 U	0.05 U	0.05 U	0.05 U	0.05 U	0.05 U	0.05 U	0.05 U	0.05 U	0.05 U	0.05 U	0.05 U	0.05 U	0.05 U	0.05 U	0.05 U	0.05 U	0.05 U	0.05 U	0.05 U	0.05 U	
1,1-Dichloroethane in mg/kg	23,000	0.05 U	0.05 U	0.05 U	0.05 U	0.05 U	0.05 U	0.05 U	0.05 U	0.05 U	0.05 U	0.05 U	0.05 U	0.05 U	0.05 U	0.05 U	0.05 U	0.05 U	0.05 U	0.05 U	0.05 U	0.05 U	0.05 U	
1,1-Dichloroethene in mg/kg	180,000	0.05 U	0.05 U	0.05 U	0.05 U	0.05 U	0.05 U	0.05 U	0.05 U	0.05 U	0.05 U	0.05 U	0.05 U	0.05 U	0.05 U	0.05 U	0.05 U	0.05 U	0.05 U	0.05 U	0.05 U	0.05 U	0.05 U	
1,1-Dichloropropene in mg/kg		0.05 U	0.05 U	0.05 U	0.05 U	0.05 U	0.05 U	0.05 U	0.05 U	0.05 U	0.05 U	0.05 U	0.05 U	0.05 U	0.05 U	0.05 U	0.05 U	0.05 U	0.05 U	0.05 U	0.05 U	0.05 U	0.05 U	
1,2,3-Trichlorobenzene in mg/kg		0.25 U	0.25 U	0.25 U	0.25 U	0.25 U	0.25 U	0.25 U	0.25 U	0.25 U	0.25 U	0.25 U	0.25 U	0.25 U	0.25 U	0.25 U	0.25 U	0.25 U	0.25 U	0.25 U	0.25 U	0.25 U	0.25 U	
1,2,3-Trichloropropane in mg/kg	4.4	0.05 U	0.05 U	0.05 U	0.05 U	0.05 U	0.05 U	0.05 U	0.05 U	0.05 U	0.05 U	0.05 U	0.05 U	0.05 U	0.05 U	0.05 U	0.05 U	0.05 U	0.05 U	0.05 U	0.05 U	0.05 U	0.05 U	
1,2,4-Trichlorobenzene in mg/kg	4,500																							
1,2,4-Trimethylbenzene in mg/kg		0.05 U	0.05 U	0.05 U	0.05 U	0.05 U	0.05 U	0.05 U	0.05 U	0.05 U	0.05 U	0.05 U	0.05 U	0.05 U	0.05 U	0.05 U	0.05 U	0.05 U	0.05 U	0.05 U	0.05 U	0.05 U	0.05 U	
1,2-Dibromo-3-chloropropane in mg/	160	0.5 U	0.5 U	0.5 U	0.5 U	0.5 U	0.5 U	0.5 U	0.5 U	0.5 U	0.5 U	0.5 U	0.5 U	0.5 U	0.5 U	0.5 U	0.5 U	0.5 U	0.5 U	0.5 U	0.5 U	0.5 U	0.5 U	
1,2-Dibromoethane (EDB) in mg/kg	66	0.05 U	0.05 U	0.05 U	0.05 U	0.05 U	0.05 U	0.05 U	0.05 U	0.05 U	0.05 U	0.05 U	0.05 U	0.05 U	0.05 U	0.05 U	0.05 U	0.05 U	0.05 U	0.05 U	0.05 U	0.05 U	0.05 U	
1,2-Dichlorobenzene in mg/kg	320,000																							
1,2-Dichloroethane (EDC) in mg/kg	1,400	0.05 U	0.05 U	0.05 U	0.05 U	0.05 U	0.05 U	0.05 U	0.05 U	0.05 U	0.05 U	0.05 U	0.05 U	0.05 U	0.05 U	0.05 U	0.05 U	0.05 U	0.05 U	0.05 U	0.05 U	0.05 U	0.05 U	
1,2-Dichloropropane in mg/kg	3,600	0.05 U	0.05 U	0.05 U	0.05 U	0.05 U	0.05 U	0.05 U	0.05 U	0.05 U	0.05 U	0.05 U	0.05 U	0.05 U	0.05 U	0.05 U	0.05 U	0.05 U	0.05 U	0.05 U	0.05 U	0.05 U	0.05 U	
1,3,5-Trimethylbenzene in mg/kg	35,000	0.05 U	0.05 U	0.05 U	0.05 U	0.05 U	0.05 U	0.05 U	0.05 U	0.05 U	0.05 U	0.05 U	0.05 U	0.05 U	0.05 U	0.05 U	0.05 U	0.05 U	0.05 U	0.05 U	0.05 U	0.05 U	0.05 U	
1,3-Dichlorobenzene in mg/kg																								
1,3-Dichloropropane in mg/kg		0.05 U	0.05 U	0.05 U	0.05 U	0.05 U	0.05 U	0.05 U	0.05 U	0.05 U	0.05 U	0.05 U	0.05 U	0.05 U	0.05 U	0.05 U	0.05 U	0.05 U	0.05 U	0.05 U	0.05 U	0.05 U	0.05 U	
1,4-Dichlorobenzene in mg/kg	24,000																							
2,2-Dichloropropane in mg/kg		0.05 U	0.05 U	0.05 U	0.05 U	0.05 U	0.05 U	0.05 U	0.05 U	0.05 U	0.05 U	0.05 U	0.05 U	0.05 U	0.05 U	0.05 U	0.05 U	0.05 U	0.05 U	0.05 U	0.05 U	0.05 U	0.05 U	
2-Butanone in mg/kg	2,100,000	0.5 U	0.5 U	0.5 U	0.5 U	0.5 U	0.5 U	0.5 U	0.5 U	0.5 U	0.5 U	0.5 U	0.5 U	0.5 U	0.5 U	0.5 U	0.5 U	0.5 U	0.5 U	0.5 U	0.5 U	0.5 U	0.5 U	
2-Chlorotoluene in mg/kg	70,000	0.05 U	0.05 U	0.05 U	0.05 U	0.05 U	0.05 U	0.05 U	0.05 U	0.05 U	0.05 U	0.05 U	0.05 U	0.05 U	0.05 U	0.05 U	0.05 U	0.05 U	0.05 U	0.05 U	0.05 U	0.05 U	0.05 U	
2-Hexanone in mg/kg		0.5 U	0.5 U	0.5 U	0.5 U	0.5 U	0.5 U	0.5 U	0.5 U	0.5 U	0.5 U	0.5 U	0.5 U	0.5 U	0.5 U	0.5 U	0.5 U	0.5 U	0.5 U	0.5 U	0.5 U	0.5 U	0.5 U	
4-Chlorotoluene in mg/kg		0.05 U	0.05 U	0.05 U	0.05 U	0.05 U	0.05 U	0.05 U	0.05 U	0.05 U	0.05 U	0.05 U	0.05 U	0.05 U	0.05 U	0.05 U	0.05 U	0.05 U	0.05 U	0.05 U	0.05 U	0.05 U	0.05 U	
4-Methyl-2-pentanone in mg/kg	280,000	0.5 U	0.5 U	0.5 U	0.5 U	0.5 U	0.5 U	0.5 U	0.5 U	0.5 U	0.5 U	0.5 U	0.5 U	0.5 U	0.5 U	0.5 U	0.5 U	0.5 U	0.5 U	0.5 U	0.5 U	0.5 U	0.5 U	
Acetone in mg/kg	3,200,000	0.5 U	0.5 U	0.5 U	0.5 U	0.5 U	0.5 U	0.5 U	0.5 U	0.5 U	0.5 U	0.5 U	0.5 U	0.5 U	0.5 U	0.5 U	0.5 U	0.5 U	0.5 U	0.5 U	0.5 U	0.5 U	0.5 U	
Benzene in mg/kg	2,400	0.03 U	0.03 U	0.03 U	0.03 U	0.03 U	0.03 U	0.03 U	0.03 U	0.03 U	0.03 U	0.03 U	0.03 U	0.03 U	0.03 U	0.03 U	0.03 U	0.03 U	0.03 U	0.03 U	0.03 U	0.03 U	0.03 U	
Bromobenzene in mg/kg		0.05 U	0.05 U	0.05 U	0.05 U	0.05 U	0.05 U	0.05 U	0.05 U	0.05 U	0.05 U	0.05 U	0.05 U	0.05 U	0.05 U	0.05 U	0.05 U	0.05 U	0.05 U	0.05 U	0.05 U	0.05 U	0.05 U	
Bromodichloromethane in mg/kg	2,100	0.05 U	0.05 U	0.05 U	0.05 U	0.05 U	0.05 U	0.05 U	0.05 U	0.05 U	0.05 U	0.05 U	0.05 U	0.05 U	0.05 U	0.05 U	0.05 U	0.05 U	0.05 U	0.05 U	0.05 U	0.05 U	0.05 U	
Bromoform in mg/kg	17,000	0.05 U	0.05 U	0.05 U	0.05 U	0.05 U	0.05 U	0.05 U	0.05 U	0.05 U	0.05 U	0.05 U	0.05 U	0.05 U	0.05 U	0.05 U	0.05 U	0.05 U	0.05 U	0.05 U	0.05 U	0.05 U	0.05 U	
Bromomethane in mg/kg	4,900	0.5 U	0.5 U	0.5 U	0.5 U	0.5 U	0.5 U	0.5 U	0.5 U	0.5 U	0.5 U	0.5 U	0.5 U	0.5 U	0.5 U	0.5 U	0.5 U	0.5 U	0.5 U	0.5 U	0.5 U	0.5 U	0.5 U	
Carbon tetrachloride in mg/kg	1,900	0.05 U	0.05 U	0.05 U	0.05 U	0.05 U	0.05 U	0.05 U	0.05 U	0.05 U	0.05 U	0.05 U	0.05 U	0.05 U	0.05 U	0.05 U	0.05 U	0.05 U	0.05 U	0.05 U	0.05 U	0.05 U	0.05 U	
Chlorobenzene in mg/kg	70,000	0.05 U	0.05 U	0.05 U	0.05 U	0.05 U	0.05 U	0.05 U	0.05 U	0.05 U	0.05 U	0.05 U	0.05 U	0.05 U	0.05 U	0.05 U	0.05 U	0.05 U	0.05 U	0.05 U	0.05 U	0.05 U	0.05 U	
Chloroethane in mg/kg		0.5 U	0.5 U	0.5 U	0.5 U	0.5 U	0.5 U	0.5 U	0.5 U	0.5 U	0.5 U	0.5 U	0.5 U	0.5 U	0.5 U	0.5 U	0.5 U	0.5 U	0.5 U	0.5 U	0.5 U	0.5 U	0.5 U	
Chloroform in mg/kg	4,200	0.05 U	0.05 U	0.05 U	0.05 U	0.05 U	0.05 U	0.05 U	0.05 U	0.05 U	0.05 U	0.05 U	0.05 U	0.05 U	0.05 U	0.05 U	0.05 U	0.05 U	0.05 U	0.05 U	0.05 U	0.05 U	0.05 U	
Chloromethane in mg/kg		0.5 U	0.5 U	0.5 U	0.5 U	0.5 U	0.5 U	0.5 U	0.5 U	0.5 U	0.5 U	0.5 U	0.5 U	0.5 U	0.5 U	0.5 U	0.5 U	0.5 U	0.5 U	0.5 U	0.5 U	0.5 U	0.5 U	
cis-1,2-Dichloroethene (DCE) in mg/kg	7,000	0.05 U	0.05 U	0.05 U	0.05 U	0.05 U	0.05 U	0.05 U	0.05 U	0.05 U	0.05 U	0.05 U	0.05 U	0.05 U	0.05 U	0.05 U	0.05 U	0.05 U	0.05 U	0.05 U	0.05 U	0.05 U	0.05 U	
cis-1,3-Dichloropropene in mg/kg		0.05 U	0.05 U	0.05 U	0.05 U	0.05 U	0.05 U	0.05 U	0.05 U	0.05 U	0.05 U	0.05 U	0.05 U	0.05 U	0.05 U	0.05 U	0.05 U	0.05 U	0.05 U	0.05 U	0.05 U	0.05 U	0.05 U	
Dibromochloromethane in mg/kg	1,600	0.05 U	0.05 U	0.05 U	0.05 U	0.05 U	0.05 U	0.05 U	0.05 U	0.05 U	0.05 U	0.05 U	0.05 U	0.05 U	0.05 U	0.05 U	0.05 U	0.05 U	0.05 U	0.05 U	0.05 U	0.05 U	0.05 U	
Dibromomethane in mg/kg	35,000	0.05 U	0.05 U	0.05 U	0.05 U	0.05 U	0.05 U	0.05 U	0.05 U	0.05 U	0.05 U	0.05 U	0.05 U	0.05 U	0.05 U	0.05 U	0.05 U	0.05 U	0.05 U	0.05 U	0.05 U	0.05 U	0.05 U	
Dichlorodifluoromethane in mg/kg	700,000	0.5 U	0.5 U	0.5 U	0.5 U	0.5 U	0.5 U	0.5 U	0.5 U	0.5 U	0.5 U	0.5 U	0.5 U	0.5 U	0.5 U	0.5 U	0.5 U	0.5 U	0.5 U	0.5 U	0.5 U	0.5 U	0.5 U	
Ethylbenzene in mg/kg	350,000	0.05 U	0.05 U	0.05 U	0.05 U	0.05 U	0.05 U	0.05 U	0.05 U	0.05 U	0.05 U	0.05 U	0.05 U	0.05 U	0.05 U	0.05 U	0.05 U	0.05 U	0.05 U	0.05 U	0.05 U	0.05 U	0.05 U	
Hexachlorobutadiene in mg/kg	1,700																							
Isopropylbenzene in mg/kg	350,000	0.05 U	0.05 U	0.05 U	0.05 U	0.05 U	0.05 U	0.05 U	0.05 U	0.05 U	0.05 U	0.05 U	0.05 U	0.05 U	0.05 U	0.05 U	0.05 U	0.05 U	0.05 U	0.05 U	0.05 U	0.05 U	0.05 U	
Methyl tert-butyl ether (MTBE) in mg/	73,000	0.05 U	0.05 U	0.05 U	0.05 U	0.05 U	0.05 U	0.05 U	0.05 U	0.05 U	0.05 U	0.05 U	0.05 U	0.05 U	0.05 U	0.05 U	0.05 U	0.05 U	0.05 U	0.05 U	0.05 U	0.05 U	0.05 U	
Methylene chloride in mg/kg	21,000	0.5 U	0.72 U	0.5 U	0.76 U	0.67 U	0.59 U	0.62 U	0.5 U	0.5 U	0.76 U	0.52 U	0.70 U	0.5 U	0.5 U	0.5 U	0.5 U	0.5 U	0.5 U	0.5 U	0.5 U	0.5 U	0.5 U	
n-Propylbenzene in mg/kg	350,000	0.05 U	0.05 U	0.05 U	0.05 U	0.05 U	0.05 U	0.05 U	0.05 U	0.05 U	0.05 U	0.05 U	0.05 U	0.05 U	0.05 U	0.05 U	0.05 U	0.05 U	0.05 U	0.05 U	0.05 U	0.05 U	0.05 U	
p-Isopropyltoluene in mg/kg		0.05 U	0.05 U	0.05 U	0.05 U	0.05 U	0.05 U	0.05 U	0.05 U	0.05 U	0.05 U	0.05 U	0.05 U	0.05 U	0.05 U	0.05 U	0.05 U	0.05 U	0.05 U	0.05 U	0.05 U	0.05 U	0.05 U	
sec-Butylbenzene in mg/kg	350,000	0.05 U	0.05 U	0.05 U	0.05 U	0.05 U	0.05 U	0.05 U	0.05 U	0.05 U	0.05 U	0.05 U	0.05 U	0.05 U	0.05 U	0.05 U	0.05 U	0.05 U	0.05 U	0.05 U	0.05 U	0.05 U	0.05 U	
Styrene in mg/kg	700,000	0.05 U	0.05 U	0.05 U	0.05 U	0.05 U	0.05 U	0.05 U	0.05 U	0.05 U	0.05 U	0.05 U	0.05 U	0.05 U	0.05 U	0.05 U	0.05 U	0.05 U	0.05 U	0.05 U	0.05 U	0.05 U	0.05 U	
tert-Butylbenzene in mg/kg	350,000	0.05 U	0.05 U	0.05 U	0.05 U	0.05 U	0.05 U	0.05 U	0.05 U	0.05 U	0.05 U	0.05 U	0.05 U	0.05 U	0.05 U	0.05 U	0.05 U	0.05 U	0.05 U	0.05 U	0.05 U	0.05 U	0.05 U	
Tetrachloroethene (PCE) in mg/kg	21,000	0.025 U	0.025 U	0.025 U	0.025 U	0.025 U	0.025 U	0.025 U	0.025 U	0.025 U	0.025 U	0.025 U	0.025 U	0.025 U	0.025 U	0.025 U	0.025 U	0.025 U	0.025 U	0.025 U	0.025 U	0.025 U	0.025 U	
Toluene in mg/kg	280,000	0.05 U	0.05 U	0.05 U	0.05 U	0.05 U	0.05 U	0.05 U	0.05 U	0.05 U	0.05 U	0.05 U	0.05 U	0.05 U	0.05 U	0.05 U	0.05 U	0.05 U	0.05 U	0.05 U	0.05 U	0.05 U	0.05 U	
trans-1,2-Dichloroethene in mg/kg	70,000	0.05 U	0.05 U	0.05 U	0.05 U	0.05 U	0.05 U	0.05 U	0.05 U	0.05 U	0.05 U	0.05 U	0.05 U	0.05 U	0.05 U	0.05 U	0.05 U	0.05 U	0.05 U	0.05 U	0.05 U	0.05 U	0.05 U	
trans-1,3-Dichloropropene in mg/kg		0.05 U	0.05 U	0.05 U	0.05 U	0.05 U	0.05 U	0.05 U	0.05 U	0.05 U	0.05 U	0.05 U	0.05 U	0.05 U	0.05 U	0.05 U	0.05 U	0.05 U	0.05 U	0.05 U	0.05 U	0.05 U	0.05 U	
Trichloroethene (TCE) in mg/kg	1,800	0.03 U	0.03 U	0.03 U	0.03 U	0.03 U	0.03 U	0.03 U	0.03 U	0.03 U	0.03 U	0.03 U	0.03 U	0.03 U	0.03 U	0.03 U	0.03 U	0.03 U	0.03 U	0.03 U	0.03 U	0.03 U	0.03 U	
Trichlorofluoromethane in mg/kg	1,100,000	0.5 U	0.5 U	0.5 U	0.5 U	0.5 U	0.5 U	0.5 U	0.5 U	0.5 U	0.5 U	0.5 U	0.5 U	0.5 U	0.5 U	0.5 U	0.5 U	0.5 U	0.5 U	0.5 U	0.5 U	0.5 U	0.5 U	
Vinyl chloride in mg/kg	88	0.05 U	0.05 U	0.05 U	0.05 U	0.05 U	0.05 U	0.05 U	0.05 U	0.05 U	0.05 U	0.05 U	0.05 U	0.05 U	0.05 U	0.05 U	0.05 U	0.05 U	0.05 U	0.05 U	0.05 U	0.05 U	0.05 U	
m,p-Xylenes in mg/kg	49	0.1 U	0.1 U	0.1 U	0.1 U	0.1 U	0.1 U	0.1 U	0.1 U	0.1 U	0.1 U	0.1 U	0.1 U	0.1 U	0.1 U	0.1 U	0.1 U	0.1 U	0.1 U	0.1 U	0.1 U	0.1 U	0.1 U	
o-Xylene in mg/kg	80	0.05 U	0.05 U	0.05 U	0.05 U	0.05 U	0.05 U	0.05 U	0.05 U	0.05 U	0.05 U	0.05 U	0.05 U	0.05 U	0.05 U	0.05 U	0.05 U	0.05 U	0.05 U	0.05 U	0.05 U	0.05 U	0.05 U	
Naphthalene in mg/kg	70,000																							

Table 4 - Import Backfill Soil Quality Data

K-C Worldwide Site Upland Area 110207

Chemical Name	Interim Action Cleanup Level - Unsaturated Soil	BACKFILL-FARM-STOCKPILE1 8/23/13	BACKFILL-FARM-TP1 8/20/13 (10 ft)	BACKFILL-FARM-TP1 8/20/13 (25 ft)	BACKFILL-FARM-TP2 8/20/13 (15 ft)	BACKFILL-FARM-TP3 8/20/13 (6 ft)	BACKFILL-FARM-TP4 8/20/13 (12 ft)	BACKFILL-FARM-TP5 8/20/13 (10 ft)	BACKFILL-FARM-TP6 8/23/13 (12 ft)	BACKFILL-FARM-TP7 8/23/13 (14 ft)	BACKFILL-FARM-TP8 8/23/13 (12 ft)	BACKFILL-FARM-TP9 8/23/13 (12 ft)	BACKFILL-FARM-TP10 8/23/13 (12 ft)	BACKFILL-HL-HA1 8/29/13 (2 ft)	BACKFILL-HL-HA2 8/29/13 (2 ft)	BACKFILL-HL-HA3 8/29/13 (2 ft)	BACKFILL-HL-HA4 8/29/13 (2 ft)	BACKFILL-HL-HA5 8/29/13 (2 ft)	BACKFILL-HL-HA6 8/29/13 (2 ft)	BACKFILL-HL-HA7 8/29/13 (2 ft)	BACKFILL-HL-HA8 8/29/13 (2 ft)	BACKFILL-HL-HA9 8/29/13 (2 ft)	Cemex-QS-011014 1/10/14
Polychlorinated Biphenyls (PCBs)																							
Aroclor 1016 in mg/kg		0.1 U	0.1 U	0.1 U	0.1 U	0.1 U	0.1 U	0.1 U	0.1 U	0.1 U	0.1 U	0.1 U	0.1 U	0.1 U	0.1 U	0.1 U	0.1 U	0.1 U	0.1 U	0.1 U	0.1 U	0.1 U	
Aroclor 1221 in mg/kg		0.1 U	0.1 U	0.1 U	0.1 U	0.1 U	0.1 U	0.1 U	0.1 U	0.1 U	0.1 U	0.1 U	0.1 U	0.1 U	0.1 U	0.1 U	0.1 U	0.1 U	0.1 U	0.1 U	0.1 U	0.1 U	
Aroclor 1232 in mg/kg		0.1 U	0.1 U	0.1 U	0.1 U	0.1 U	0.1 U	0.1 U	0.1 U	0.1 U	0.1 U	0.1 U	0.1 U	0.1 U	0.1 U	0.1 U	0.1 U	0.1 U	0.1 U	0.1 U	0.1 U	0.1 U	
Aroclor 1242 in mg/kg		0.1 U	0.1 U	0.1 U	0.1 U	0.1 U	0.1 U	0.1 U	0.1 U	0.1 U	0.1 U	0.1 U	0.1 U	0.1 U	0.1 U	0.1 U	0.1 U	0.1 U	0.1 U	0.1 U	0.1 U	0.1 U	
Aroclor 1248 in mg/kg		0.1 U	0.1 U	0.1 U	0.1 U	0.1 U	0.1 U	0.1 U	0.1 U	0.1 U	0.1 U	0.1 U	0.1 U	0.1 U	0.1 U	0.1 U	0.1 U	0.1 U	0.1 U	0.1 U	0.1 U	0.1 U	
Aroclor 1254 in mg/kg		0.1 U	0.1 U	0.1 U	0.1 U	0.1 U	0.1 U	0.1 U	0.1 U	0.1 U	0.1 U	0.1 U	0.1 U	0.1 U	0.1 U	0.1 U	0.1 U	0.1 U	0.1 U	0.1 U	0.1 U	0.1 U	
Aroclor 1260 in mg/kg		0.1 UJ	0.1 U	0.1 U	0.1 U	0.1 U	0.1 U	0.1 U	0.1 U	0.1 U	0.1 U	0.1 U	0.1 U	0.1 U	0.1 U	0.1 U	0.1 U	0.1 U	0.1 U	0.1 U	0.1 U	0.1 U	
Total PCBs (Sum of Aroclors) in mg/kg	10	ND	ND	ND	ND	ND	ND	ND	ND	ND	ND	ND	ND	ND	ND	ND	ND	ND	ND	ND	ND	ND	

Notes

Concentrations in shaded cells indicate value exceeds Interim Action Cleanup Level - Unsaturated Soil.

J = Analyte was positively identified. The reported result is an estimate.

U = Analyte was not detected at or above the reported result.

UJ = Analyte was not detected at or above the reported estimate.

Table 4 - Import Backfill Soil Quality Data

K-C Worldwide Site Upland Area 110207

Chemical Name	Interim Action Cleanup Level - Unsaturated Soil	STIL-G1 12/5/13	STIL-G2 12/5/13	STIL-G3 12/5/13	STIL-G4 12/5/13	STIL-G5 12/5/13	STIL-G6 12/5/13	STIL-G7 12/5/13	STIL-G8 12/5/13	STIL-G9 1/14/14	STIL-G10 1/14/14	STIL-G11 1/14/14	STIL-G12 1/14/14	STIL-G13 2/19/14	STIL-G14 2/19/14	STIL-G15 2/19/14	STIL-G16 2/19/14
Total Petroleum Hydrocarbons (TPH)																	
Gasoline Range Hydrocarbons in mg/k	100	2 U	2 U	2 U	2 U	2 U	2 U	2 U	2 U	2 U	2 U	2 U	2 U	2 U	2 U	2 U	2 U
Diesel Range Hydrocarbons in mg/kg	2,000	50 U	50 U	50 U	50 U	50 U	50 U	50 U	50 U	50 U	50 U	50 U	50 U	50 U	50 U	50 U	50 U
Oil Range Hydrocarbons in mg/kg	2,000	250 U	250 U	250 U	250 U	250 U	250 U	250 U	250 U	250 U	250 U	250 U	250 U	250 U	250 U	250 U	250 U
Total TPHs in mg/kg	2,000	ND	ND	ND	ND	ND	ND	ND	ND	ND	ND	ND	ND	ND	ND	ND	ND
Metals																	
Antimony in mg/kg	1,400	1 U	1 U	1 U	1 U	1 U	1 U	1 U	1 U	1 U	1 U	1 U	1 U	1 U	1 U	1 U	1 U
Arsenic in mg/kg	20	1.95	1.64	1.98	1.68	1.85	1.92	1 U	2.56	2.14	2.33	2.24	1.71	2.56	2.57	2.88	2.59
Beryllium in mg/kg	7,000	1 U	1 U	1 U	1 U	1 U	1 U	1 U	1 U	1 U	1 U	1 U	1 U	1 U	1 U	1 U	1 U
Cadmium in mg/kg	3,500	1 U	1 U	1 U	1 U	1 U	1 U	1 U	1 U	1 U	1 U	1 U	1 U	1 U	1 U	1 U	1 U
Chromium (Total) in mg/kg	5,300,000	16.7	14.6	18	10.4	23.6	9.18	8.26	14.3	13.4	17.7	14.1	11.4	13	11.3	12.2	9.92
Copper in mg/kg	36	10.1	12.7	13.8	11.8	13.4	11.5	10.4	14.9	14.5	14.5	13.2	11.8	13.1	12.8	13.5	12.7
Lead in mg/kg	1,000	2.35	2.36	2.59	2.39	2.35	2.21	2.1	2.4	2.86	2.76	2.84	2.53	2.8	2.83	2.66	2.88
Mercury in mg/kg	0.1	0.1 U	0.1 U	0.1 U	0.1 U	0.1 U	0.1 U	0.1 U	0.1 U	0.1 U	0.1 U	0.1 U	0.1 U	0.1 U	0.1 U	0.1 U	0.47
Nickel in mg/kg	48	32.8	29.3	31.1	24.8	29.9	20.5	20.6	34.4	35.5	37.9	33.5	29.3	27.4	28.2	29.6	26.1
Selenium in mg/kg	18,000	1 U	1 U	1 U	1 U	1 U	1 U	1 U	1 U	1 U	1 U	1 U	1 U	1 U	1 U	1 U	1 U
Silver in mg/kg	18,000	1 U	1 U	1 U	1 U	1 U	1 U	1 U	1 U	1 U	1 U	1 U	1 U	1 U	1 U	1 U	1 U
Thallium in mg/kg	35	1 U	1 U	1 U	1 U	1 U	1 U	1 U	1 U	1 U	1 U	1 U	1 U	1 U	1 U	1 U	1 U
Zinc in mg/kg	100	13	14.3	14.3	11.4	13.8	10.8	11.5	16.9	15	17.2	15.1	12.8	14.4	15.2	15.2	14.2
SPLP Metals																	
Antimony in mg/L	1,400																
Arsenic in mg/L	20																
Beryllium in mg/L	7,000																
Cadmium in mg/L	3,500																
Chromium (Total) in mg/L	5,300,000																
Copper in mg/L	36																
Lead in mg/L	1,000																
Mercury in mg/L	0.1																
Nickel in mg/L	48																
Selenium in mg/L	18,000																
Silver in mg/L	18,000																
Thallium in mg/L	35																
Zinc in mg/L	100																
Polycyclic Aromatic Hydrocarbons (PAHs)																	
Acenaphthene in mg/kg	210,000	0.01 U	0.01 U	0.01 U	0.01 U	0.01 U	0.01 U	0.01 U	0.01 U	0.01 U	0.01 U	0.01 U	0.01 U	0.01 U	0.01 U	0.01 U	0.016
Acenaphthylene in mg/kg		0.01 U	0.01 U	0.01 U	0.01 U	0.01 U	0.01 U	0.01 U	0.01 U	0.01 U	0.01 U	0.01 U	0.01 U	0.01 U	0.01 U	0.01 U	0.01 U
Anthracene in mg/kg	1,100,000	0.01 U	0.01 U	0.01 U	0.01 U	0.01 U	0.01 U	0.01 U	0.01 U	0.01 U	0.01 U	0.01 U	0.01 U	0.01 U	0.01 U	0.01 U	0.037
Benzo(g,h,i)perylene in mg/kg		0.01 U	0.01 U	0.01 U	0.01 U	0.01 U	0.01 U	0.01 U	0.01 U	0.01 U	0.01 U	0.01 U	0.01 U	0.01 U	0.01 U	0.01 U	0.045
Dibenzofuran in mg/kg	3,500	0.01 U	0.01 U	0.01 U	0.01 U	0.01 U	0.01 U	0.01 U	0.01 U	0.01 U	0.01 U	0.01 U	0.01 U	0.01 U	0.01 U	0.01 U	0.01
Fluoranthene in mg/kg	140,000	0.01 U	0.01 U	0.01 U	0.01 U	0.01 U	0.01 U	0.01 U	0.01 U	0.01 U	0.01 U	0.01 U	0.01 U	0.01 U	0.01 U	0.01 U	0.15
Fluorene in mg/kg	140,000	0.01 U	0.01 U	0.01 U	0.01 U	0.01 U	0.01 U	0.01 U	0.01 U	0.01 U	0.01 U	0.01 U	0.01 U	0.01 U	0.01 U	0.01 U	0.016
Phenanthrene in mg/kg		0.01 U	0.01 U	0.01 U	0.01 U	0.01 U	0.01 U	0.01 U	0.01 U	0.01 U	0.01 U	0.01 U	0.01 U	0.01 U	0.01 U	0.01 U	0.14
Pyrene in mg/kg	110,000	0.01 U	0.01 U	0.01 U	0.01 U	0.01 U	0.01 U	0.01 U	0.01 U	0.01 U	0.01 U	0.01 U	0.01 U	0.01 U	0.01 U	0.01 U	0.21
2-Methylnaphthalene in mg/kg	14,000	0.01 U	0.01 U	0.01 U	0.01 U	0.01 U	0.01 U	0.01 U	0.01 U	0.01 U	0.01 U	0.01 U	0.01 U	0.01 U	0.01 U	0.01 U	0.013
Naphthalene in mg/kg	70,000	0.01 U	0.01 U	0.01 U	0.01 U	0.01 U	0.01 U	0.01 U	0.01 U	0.01 U	0.01 U	0.01 U	0.01 U	0.01 U	0.01 U	0.01 U	0.021
Benz(a)anthracene in mg/kg		0.01 U	0.01 U	0.01 U	0.01 U	0.01 U	0.01 U	0.01 U	0.01 U	0.01 U	0.01 U	0.01 U	0.01 U	0.01 U	0.01 U	0.01 U	0.088
Benzo(a)pyrene in mg/kg		0.01 U	0.01 U	0.01 U	0.01 U	0.01 U	0.01 U	0.01 U	0.01 U	0.01 U	0.01 U	0.01 U	0.01 U	0.01 U	0.01 U	0.01 U	0.079
Benzo(b)fluoranthene in mg/kg		0.01 U	0.01 U	0.01 U	0.01 U	0.01 U	0.01 U	0.01 U	0.01 U	0.01 U	0.01 U	0.01 U	0.01 U	0.01 U	0.01 U	0.01 U	0.092
Benzo(k)fluoranthene in mg/kg		0.01 U	0.01 U	0.01 U	0.01 U	0.01 U	0.01 U	0.01 U	0.01 U	0.01 U	0.01 U	0.01 U	0.01 U	0.01 U	0.01 U	0.01 U	0.034
Chrysene in mg/kg		0.01 U	0.01 U	0.01 U	0.01 U	0.01 U	0.01 U	0.01 U	0.01 U	0.01 U	0.01 U	0.01 U	0.01 U	0.01 U	0.01 U	0.01 U	0.11
Dibenzo(a,h)anthracene in mg/kg		0.01 U	0.01 U	0.01 U	0.01 U	0.01 U	0.01 U	0.01 U	0.01 U	0.01 U	0.01 U	0.01 U	0.01 U	0.01 U	0.01 U	0.01 U	0.014
Indeno(1,2,3-cd)pyrene in mg/kg		0.01 U	0.01 U	0.01 U	0.01 U	0.01 U	0.01 U	0.01 U	0.01 U	0.01 U	0.01 U	0.01 U	0.01 U	0.01 U	0.01 U	0.01 U	0.047
Total cPAHs TEQ in mg/kg	7.9	ND	ND	ND	ND	ND	ND	ND	ND	ND	ND	ND	ND	ND	ND	ND	0.108

Table 4 - Import Backfill Soil Quality Data

K-C Worldwide Site Upland Area 110207

Chemical Name	Interim Action Cleanup Level - Unsaturated Soil	STIL-G1 12/5/13	STIL-G2 12/5/13	STIL-G3 12/5/13	STIL-G4 12/5/13	STIL-G5 12/5/13	STIL-G6 12/5/13	STIL-G7 12/5/13	STIL-G8 12/5/13	STIL-G9 1/14/14	STIL-G10 1/14/14	STIL-G11 1/14/14	STIL-G12 1/14/14	STIL-G13 2/19/14	STIL-G14 2/19/14	STIL-G15 2/19/14	STIL-G16 2/19/14
Other Semivolatiles																	
1,2,4-Trichlorobenzene in mg/kg	4,500	0.01 U	0.01 U	0.01 U	0.01 U	0.01 U	0.01 U	0.01 U	0.01 U	0.01 U	0.01 U	0.01 U	0.01 U	0.01 U	0.01 U	0.01 U	0.01 U
1,2-Dichlorobenzene in mg/kg	320,000	0.01 U	0.01 U	0.01 U	0.01 U	0.01 U	0.01 U	0.01 U	0.01 U	0.01 U	0.01 U	0.01 U	0.01 U	0.01 U	0.01 U	0.01 U	0.01 U
1,3-Dichlorobenzene in mg/kg		0.01 U	0.01 U	0.01 U	0.01 U	0.01 U	0.01 U	0.01 U	0.01 U	0.01 U	0.01 U	0.01 U	0.01 U	0.01 U	0.01 U	0.01 U	0.01 U
1,4-Dichlorobenzene in mg/kg	24,000	0.01 U	0.01 U	0.01 U	0.01 U	0.01 U	0.01 U	0.01 U	0.01 U	0.01 U	0.01 U	0.01 U	0.01 U	0.01 U	0.01 U	0.01 U	0.01 U
2,4,5-Trichlorophenol in mg/kg	350,000	0.1 U	0.1 U	0.1 U	0.1 U	0.1 U	0.1 U	0.1 U	0.1 U	0.1 U	0.1 U	0.1 U	0.1 U	0.1 U	0.1 U	0.1 U	0.1 U
2,4,6-Trichlorophenol in mg/kg	3,500	0.1 U	0.1 U	0.1 U	0.1 U	0.1 U	0.1 U	0.1 U	0.1 U	0.1 U	0.1 U	0.1 U	0.1 U	0.1 U	0.1 U	0.1 U	0.1 U
2,4-Dichlorophenol in mg/kg	11,000	0.1 U	0.1 U	0.1 U	0.1 U	0.1 U	0.1 U	0.1 U	0.1 U	0.1 U	0.1 U	0.1 U	0.1 U	0.1 U	0.1 U	0.1 U	0.1 U
2,4-Dimethylphenol in mg/kg	70,000	0.1 U	0.1 U	0.1 U	0.1 U	0.1 U	0.1 U	0.1 U	0.1 U	0.1 U	0.1 U	0.1 U	0.1 U	0.1 U	0.1 U	0.1 U	0.1 U
2,4-Dinitrophenol in mg/kg	7,000	0.3 U	0.3 U	0.3 U	0.3 U	0.3 U	0.3 U	0.3 U	0.3 U	0.3 U	0.3 U	0.3 U	0.3 U	0.3 U	0.3 U	0.3 U	0.3 U
2-Chloronaphthalene in mg/kg	280,000	0.01 U	0.01 U	0.01 U	0.01 U	0.01 U	0.01 U	0.01 U	0.01 U	0.01 U	0.01 U	0.01 U	0.01 U	0.01 U	0.01 U	0.01 U	0.01 U
2-Chlorophenol in mg/kg	18,000	0.1 U	0.1 U	0.1 U	0.1 U	0.1 U	0.1 U	0.1 U	0.1 U	0.1 U	0.1 U	0.1 U	0.1 U	0.1 U	0.1 U	0.1 U	0.1 U
2-Methylphenol in mg/kg	180,000	0.1 U	0.1 U	0.1 U	0.1 U	0.1 U	0.1 U	0.1 U	0.1 U	0.1 U	0.1 U	0.1 U	0.1 U	0.1 U	0.1 U	0.1 U	0.1 U
2-Nitroaniline in mg/kg	35,000	0.05 U	0.05 U	0.05 U	0.05 U	0.05 U	0.05 U	0.05 U	0.05 U	0.05 U	0.05 U	0.05 U	0.05 U	0.05 U	0.05 U	0.05 U	0.05 U
2-Nitrophenol in mg/kg		0.1 U	0.1 U	0.1 U	0.1 U	0.1 U	0.1 U	0.1 U	0.1 U	0.1 U	0.1 U	0.1 U	0.1 U	0.1 U	0.1 U	0.1 U	0.1 U
3 & 4 Methylphenol in mg/kg	175000	0.2 U	0.2 U	0.2 U	0.2 U	0.2 U	0.2 U	0.2 U	0.2 U	0.2 U	0.2 U	0.2 U	0.2 U	0.2 U	0.2 U	0.2 U	0.2 U
3-Nitroaniline in mg/kg		1 U	1 U	1 U	1 U	1 U	1 U	1 U	1 U	1 U	1 U	1 U	1 U	1 U	1 U	1 U	1 U
4,6-Dinitro-2-methylphenol in mg/kg		0.3 U	0.3 U	0.3 U	0.3 U	0.3 U	0.3 U	0.3 U	0.3 U	0.3 U	0.3 U	0.3 U	0.3 U	0.3 U	0.3 U	0.3 U	0.3 U
4-Bromophenyl phenyl ether in mg/kg		0.01 U	0.01 U	0.01 U	0.01 U	0.01 U	0.01 U	0.01 U	0.01 U	0.01 U	0.01 U	0.01 U	0.01 U	0.01 U	0.01 U	0.01 U	0.01 U
4-Chloro-3-methylphenol in mg/kg		0.1 U	0.1 U	0.1 U	0.1 U	0.1 U	0.1 U	0.1 U	0.1 U	0.1 U	0.1 U	0.1 U	0.1 U	0.1 U	0.1 U	0.1 U	0.1 U
4-Chloroaniline in mg/kg	660	1 U	1 U	1 U	1 U	1 U	1 U	1 U	1 U	1 U	1 U	1 U	1 U	1 U	1 U	1 U	1 U
4-Chlorophenyl phenyl ether in mg/kg		0.01 U	0.01 U	0.01 U	0.01 U	0.01 U	0.01 U	0.01 U	0.01 U	0.01 U	0.01 U	0.01 U	0.01 U	0.01 U	0.01 U	0.01 U	0.01 U
4-Nitroaniline in mg/kg		1 U	1 U	1 U	1 U	1 U	1 U	1 U	1 U	1 U	1 U	1 U	1 U	1 U	1 U	1 U	1 U
4-Nitrophenol in mg/kg		0.3 U	0.3 U	0.3 U	0.3 U	0.3 U	0.3 U	0.3 U	0.3 U	0.3 U	0.3 U	0.3 U	0.3 U	0.3 U	0.3 U	0.3 U	0.3 U
Benzoic acid in mg/kg	14,000,000	0.5 U	0.5 U	0.5 U	0.5 U	0.5 U	0.5 U	0.5 U	0.5 U	0.5 U	0.5 UJ	0.5 UJ	0.5 UJ	0.5 U	0.5 U	0.5 U	0.5 U
Benzyl alcohol in mg/kg	350,000	0.1 U	0.1 U	0.1 U	0.1 U	0.1 U	0.1 U	0.1 U	0.1 U	0.1 U	0.1 U	0.1 U	0.1 U	0.1 U	0.1 U	0.1 U	0.1 U
Benzyl butyl phthalate in mg/kg	69,000	0.1 U	0.1 U	0.1 U	0.1 U	0.1 U	0.1 U	0.1 U	0.1 U	0.1 U	0.1 U	0.1 U	0.1 U	0.1 U	0.1 U	0.1 U	0.1 U
Bis(2-chloro-1-methylethyl) ether in n	1,900	0.01 U	0.01 U	0.01 U	0.01 U	0.01 U	0.01 U	0.01 U	0.01 U	0.01 U	0.01 U	0.01 U	0.01 U	0.01 U	0.01 U	0.01 U	0.01 U
Bis(2-chloroethoxy)methane in mg/kg		0.01 U	0.01 U	0.01 U	0.01 U	0.01 U	0.01 U	0.01 U	0.01 U	0.01 U	0.01 U	0.01 U	0.01 U	0.01 U	0.01 U	0.01 U	0.01 U
Bis(2-chloroethyl) ether in mg/kg	120	0.01 U	0.01 U	0.01 U	0.01 U	0.01 U	0.01 U	0.01 U	0.01 U	0.01 U	0.01 U	0.01 U	0.01 U	0.01 U	0.01 U	0.01 U	0.01 U
Bis(2-ethylhexyl) phthalate in mg/kg	9,400	0.16 U	0.16 U	0.16 U	0.16 U	0.16 U	0.16 U	0.16 U	0.16 U	0.16 U	0.16 U	0.16 U	0.16 U	0.16 U	0.16 U	0.16 U	0.16 U
Carbazole in mg/kg		0.1 U	0.1 U	0.1 U	0.1 U	0.1 U	0.1 U	0.1 U	0.1 U	0.1 U	0.1 U	0.1 U	0.1 U	0.1 U	0.1 U	0.1 U	0.1 U
Diethyl phthalate in mg/kg	2,800,000	0.1 U	0.1 U	0.1 U	0.1 U	0.1 U	0.1 U	0.1 U	0.1 U	0.1 U	0.1 U	0.1 U	0.1 U	0.1 U	0.1 U	0.1 U	0.1 U
Dimethyl phthalate in mg/kg		0.1 U	0.1 U	0.1 U	0.1 U	0.1 U	0.1 U	0.1 U	0.1 U	0.1 U	0.1 U	0.1 U	0.1 U	0.1 U	0.1 U	0.1 U	0.1 U
Di-n-butyl phthalate in mg/kg	350,000	0.1 U	0.1 U	0.1 U	0.1 U	0.1 U	0.1 U	0.1 U	0.1 U	0.1 U	0.1 U	0.1 U	0.1 U	0.1 U	0.1 U	0.1 U	0.1 U
Di-n-octyl phthalate in mg/kg	35,000	0.1 U	0.1 U	0.1 U	0.1 U	0.1 U	0.1 U	0.1 U	0.1 U	0.1 U	0.1 U	0.1 U	0.1 U	0.1 U	0.1 U	0.1 U	0.1 U
Hexachlorobenzene in mg/kg	82	0.01 U	0.01 U	0.01 U	0.01 U	0.01 U	0.01 U	0.01 U	0.01 U	0.01 U	0.01 U	0.01 U	0.01 U	0.01 U	0.01 U	0.01 U	0.01 U
Hexachlorobutadiene in mg/kg	1,700	0.01 U	0.01 U	0.01 U	0.01 U	0.01 U	0.01 U	0.01 U	0.01 U	0.01 U	0.01 U	0.01 U	0.01 U	0.01 U	0.01 U	0.01 U	0.01 U
Hexachlorocyclopentadiene in mg/kg	21,000	0.03 U	0.03 U	0.03 U	0.03 U	0.03 U	0.03 U	0.03 U	0.03 U	0.03 U	0.03 U	0.03 U	0.03 U	0.03 U	0.03 U	0.03 U	0.03 U
Hexachloroethane in mg/kg	2,500	0.01 U	0.01 U	0.01 U	0.01 U	0.01 U	0.01 U	0.01 U	0.01 U	0.01 U	0.01 U	0.01 U	0.01 U	0.01 U	0.01 U	0.01 U	0.01 U
Isophorone in mg/kg	140,000	0.01 U	0.01 U	0.01 U	0.01 U	0.01 U	0.01 U	0.01 U	0.01 U	0.01 U	0.01 U	0.01 U	0.01 U	0.01 U	0.01 U	0.01 U	0.01 U
Nitrobenzene in mg/kg	7,000	0.01 U	0.01 U	0.01 U	0.01 U	0.01 U	0.01 U	0.01 U	0.01 U	0.01 U	0.01 U	0.01 U	0.01 U	0.01 U	0.01 U	0.01 U	0.01 U
N-Nitroso-di-n-propylamine in mg/kg	19	0.01 U	0.01 U	0.01 U	0.01 U	0.01 U	0.01 U	0.01 U	0.01 U	0.01 U	0.01 U	0.01 U	0.01 U	0.01 U	0.01 U	0.01 U	0.01 U
N-Nitrosodiphenylamine in mg/kg	27,000	0.01 U	0.01 U	0.01 U	0.01 U	0.01 U	0.01 U	0.01 U	0.01 U	0.01 U	0.01 U	0.01 U	0.01 U	0.01 U	0.01 U	0.01 U	0.01 U
Pentachlorophenol in mg/kg	330	0.1 U	0.1 U	0.1 U	0.1 U	0.1 U	0.1 U	0.1 U	0.1 U	0.1 U	0.1 U	0.1 U	0.1 U	0.1 U	0.1 U	0.1 U	0.1 U
Phenol in mg/kg	1,100,000	0.1 U	0.1 U	0.1 U	0.1 U	0.1 U	0.1 U	0.1 U	0.1 U	0.1 U	0.1 U	0.1 U	0.1 U	0.1 U	0.1 U	0.1 U	0.1 U
2,4-Dinitrotoluene in mg/kg	420	0.05 U	0.05 U	0.05 U	0.05 U	0.05 U	0.05 U	0.05 U	0.05 U	0.05 U	0.05 U	0.05 U	0.05 U	0.05 U	0.05 U	0.05 U	0.05 U
2,6-Dinitrotoluene in mg/kg	88	0.05 U	0.05 U	0.05 U	0.05 U	0.05 U	0.05 U	0.05 U	0.05 U	0.05 U	0.05 U	0.05 U	0.05 U	0.05 U	0.05 U	0.05 U	0.05 U

Table 4 - Import Backfill Soil Quality Data

K-C Worldwide Site Upland Area 110207

Chemical Name	Interim Action Cleanup Level - Unsaturated Soil	STIL-G1 12/5/13	STIL-G2 12/5/13	STIL-G3 12/5/13	STIL-G4 12/5/13	STIL-G5 12/5/13	STIL-G6 12/5/13	STIL-G7 12/5/13	STIL-G8 12/5/13	STIL-G9 1/14/14	STIL-G10 1/14/14	STIL-G11 1/14/14	STIL-G12 1/14/14	STIL-G13 2/19/14	STIL-G14 2/19/14	STIL-G15 2/19/14	STIL-G16 2/19/14
Volatile Organic Compounds (VOC)																	
1,1,1,2-Tetrachloroethane in mg/kg	5,000	0.05 U	0.05 U	0.05 U	0.05 U	0.05 U	0.05 U	0.05 U	0.05 U	0.05 U	0.05 U	0.05 U	0.05 U	0.05 U	0.05 U	0.05 U	0.05 U
1,1,1-Trichloroethane in mg/kg	7,000,000	0.05 U	0.05 U	0.05 U	0.05 U	0.05 U	0.05 U	0.05 U	0.05 U	0.05 U	0.05 U	0.05 U	0.05 U	0.05 U	0.05 U	0.05 U	0.05 U
1,1,2,2-Tetrachloroethane in mg/kg	660	0.05 U	0.05 U	0.05 U	0.05 U	0.05 U	0.05 U	0.05 U	0.05 U	0.05 U	0.05 U	0.05 U	0.05 U	0.05 U	0.05 U	0.05 U	0.05 U
1,1,2-Trichloroethane in mg/kg	2,300	0.05 U	0.05 U	0.05 U	0.05 U	0.05 U	0.05 U	0.05 U	0.05 U	0.05 U	0.05 U	0.05 U	0.05 U	0.05 U	0.05 U	0.05 U	0.05 U
1,1-Dichloroethane in mg/kg	23,000	0.05 U	0.05 U	0.05 U	0.05 U	0.05 U	0.05 U	0.05 U	0.05 U	0.05 U	0.05 U	0.05 U	0.05 U	0.05 U	0.05 U	0.05 U	0.05 U
1,1-Dichloroethene in mg/kg	180,000	0.05 U	0.05 U	0.05 U	0.05 U	0.05 U	0.05 U	0.05 U	0.05 U	0.05 U	0.05 U	0.05 U	0.05 U	0.05 U	0.05 U	0.05 U	0.05 U
1,1-Dichloropropene in mg/kg		0.05 U	0.05 U	0.05 U	0.05 U	0.05 U	0.05 U	0.05 U	0.05 U	0.05 U	0.05 U	0.05 U	0.05 U	0.05 U	0.05 U	0.05 U	0.05 U
1,2,3-Trichlorobenzene in mg/kg		0.25 U	0.25 U	0.25 U	0.25 U	0.25 U	0.25 U	0.25 U	0.25 U	0.25 U	0.25 U	0.25 U	0.25 U	0.25 U	0.25 U	0.25 U	0.25 U
1,2,3-Trichloropropane in mg/kg	4.4	0.05 U	0.05 U	0.05 U	0.05 U	0.05 U	0.05 U	0.05 U	0.05 U	0.05 U	0.05 U	0.05 U	0.05 U	0.05 U	0.05 U	0.05 U	0.05 U
1,2,4-Trichlorobenzene in mg/kg	4,500	0.25 U	0.25 U	0.25 U	0.25 U	0.25 U	0.25 U	0.25 U	0.25 U	0.25 U	0.25 U	0.25 U	0.25 U	0.25 U	0.25 U	0.25 U	0.25 U
1,2,4-Trimethylbenzene in mg/kg		0.05 U	0.05 U	0.05 U	0.05 U	0.05 U	0.05 U	0.05 U	0.05 U	0.05 U	0.05 U	0.05 U	0.05 U	0.05 U	0.05 U	0.05 U	0.05 U
1,2-Dibromo-3-chloropropane in mg/	160	0.5 U	0.5 U	0.5 U	0.5 U	0.5 U	0.5 U	0.5 U	0.5 U	0.5 U	0.5 U	0.5 U	0.5 U	0.5 U	0.5 U	0.5 U	0.5 U
1,2-Dibromoethane (EDB) in mg/kg	66	0.05 U	0.05 U	0.05 U	0.05 U	0.05 U	0.05 U	0.05 U	0.05 U	0.05 U	0.05 U	0.05 U	0.05 U	0.05 U	0.05 U	0.05 U	0.05 U
1,2-Dichlorobenzene in mg/kg	320,000	0.05 U	0.05 U	0.05 U	0.05 U	0.05 U	0.05 U	0.05 U	0.05 U	0.05 U	0.05 U	0.05 U	0.05 U	0.05 U	0.05 U	0.05 U	0.05 U
1,2-Dichloroethane (EDC) in mg/kg	1,400	0.05 U	0.05 U	0.05 U	0.05 U	0.05 U	0.05 U	0.05 U	0.05 U	0.05 U	0.05 U	0.05 U	0.05 U	0.05 U	0.05 U	0.05 U	0.05 U
1,2-Dichloropropane in mg/kg	3,600	0.05 U	0.05 U	0.05 U	0.05 U	0.05 U	0.05 U	0.05 U	0.05 U	0.05 U	0.05 U	0.05 U	0.05 U	0.05 U	0.05 U	0.05 U	0.05 U
1,3,5-Trimethylbenzene in mg/kg	35,000	0.05 U	0.05 U	0.05 U	0.05 U	0.05 U	0.05 U	0.05 U	0.05 U	0.05 U	0.05 U	0.05 U	0.05 U	0.05 U	0.05 U	0.05 U	0.05 U
1,3-Dichlorobenzene in mg/kg		0.05 U	0.05 U	0.05 U	0.05 U	0.05 U	0.05 U	0.05 U	0.05 U	0.05 U	0.05 U	0.05 U	0.05 U	0.05 U	0.05 U	0.05 U	0.05 U
1,3-Dichloropropane in mg/kg		0.05 U	0.05 U	0.05 U	0.05 U	0.05 U	0.05 U	0.05 U	0.05 U	0.05 U	0.05 U	0.05 U	0.05 U	0.05 U	0.05 U	0.05 U	0.05 U
1,4-Dichlorobenzene in mg/kg	24,000	0.05 U	0.05 U	0.05 U	0.05 U	0.05 U	0.05 U	0.05 U	0.05 U	0.05 U	0.05 U	0.05 U	0.05 U	0.05 U	0.05 U	0.05 U	0.05 U
2,2-Dichloropropane in mg/kg		0.05 U	0.05 U	0.05 U	0.05 U	0.05 U	0.05 U	0.05 U	0.05 U	0.05 U	0.05 U	0.05 U	0.05 U	0.05 U	0.05 U	0.05 U	0.05 U
2-Butanone in mg/kg	2,100,000	0.5 U	0.5 U	0.5 U	0.5 U	0.5 U	0.5 U	0.5 U	0.5 U	0.5 U	0.5 U	0.5 U	0.5 U	0.5 U	0.5 U	0.5 U	0.5 U
2-Chlorotoluene in mg/kg	70,000	0.05 U	0.05 U	0.05 U	0.05 U	0.05 U	0.05 U	0.05 U	0.05 U	0.05 U	0.05 U	0.05 U	0.05 U	0.05 U	0.05 U	0.05 U	0.05 U
2-Hexanone in mg/kg		0.5 U	0.5 U	0.5 U	0.5 U	0.5 U	0.5 U	0.5 U	0.5 U	0.5 U	0.5 U	0.5 U	0.5 U	0.5 U	0.5 U	0.5 U	0.5 U
4-Chlorotoluene in mg/kg		0.05 U	0.05 U	0.05 U	0.05 U	0.05 U	0.05 U	0.05 U	0.05 U	0.05 U	0.05 U	0.05 U	0.05 U	0.05 U	0.05 U	0.05 U	0.05 U
4-Methyl-2-pentanone in mg/kg	280,000	0.5 U	0.5 U	0.5 U	0.5 U	0.5 U	0.5 U	0.5 U	0.5 U	0.5 U	0.5 U	0.5 U	0.5 U	0.5 U	0.5 U	0.5 U	0.5 U
Acetone in mg/kg	3,200,000	0.5 U	0.5 U	0.5 U	0.5 U	0.5 U	0.5 U	0.5 U	0.5 U	0.5 U	0.5 U	0.5 U	0.5 U	0.5 U	0.5 U	0.5 U	0.5 U
Benzene in mg/kg	2,400	0.03 U	0.03 U	0.03 U	0.03 U	0.03 U	0.03 U	0.03 U	0.03 U	0.03 U	0.03 U	0.03 U	0.03 U	0.03 U	0.03 U	0.03 U	0.03 U
Bromobenzene in mg/kg		0.05 U	0.05 U	0.05 U	0.05 U	0.05 U	0.05 U	0.05 U	0.05 U	0.05 U	0.05 U	0.05 U	0.05 U	0.05 U	0.05 U	0.05 U	0.05 U
Bromodichloromethane in mg/kg	2,100	0.05 U	0.05 U	0.05 U	0.05 U	0.05 U	0.05 U	0.05 U	0.05 U	0.05 U	0.05 U	0.05 U	0.05 U	0.05 U	0.05 U	0.05 U	0.05 U
Bromoform in mg/kg	17,000	0.05 U	0.05 U	0.05 U	0.05 U	0.05 U	0.05 U	0.05 U	0.05 U	0.05 U	0.05 U	0.05 U	0.05 U	0.05 U	0.05 U	0.05 U	0.05 U
Bromomethane in mg/kg	4,900	0.5 U	0.5 U	0.5 U	0.5 U	0.5 U	0.5 U	0.5 U	0.5 U	0.5 U	0.5 U	0.5 U	0.5 U	0.5 U	0.5 U	0.5 U	0.5 U
Carbon tetrachloride in mg/kg	1,900	0.05 U	0.05 U	0.05 U	0.05 U	0.05 U	0.05 U	0.05 U	0.05 U	0.05 U	0.05 U	0.05 U	0.05 U	0.05 U	0.05 U	0.05 U	0.05 U
Chlorobenzene in mg/kg	70,000	0.05 U	0.05 U	0.05 U	0.05 U	0.05 U	0.05 U	0.05 U	0.05 U	0.05 U	0.05 U	0.05 U	0.05 U	0.05 U	0.05 U	0.05 U	0.05 U
Chloroethane in mg/kg		0.5 U	0.5 U	0.5 U	0.5 U	0.5 U	0.5 U	0.5 U	0.5 U	0.5 U	0.5 U	0.5 U	0.5 U	0.5 U	0.5 U	0.5 U	0.5 U
Chloroform in mg/kg	4,200	0.05 U	0.05 U	0.05 U	0.05 U	0.05 U	0.05 U	0.05 U	0.05 U	0.05 U	0.05 U	0.05 U	0.05 U	0.05 U	0.05 U	0.05 U	0.05 U
Chloromethane in mg/kg		0.5 U	0.5 U	0.5 U	0.5 U	0.5 U	0.5 U	0.5 U	0.5 U	0.5 U	0.5 U	0.5 U	0.5 U	0.5 U	0.5 U	0.5 U	0.5 U
cis-1,2-Dichloroethene (DCE) in mg/kg	7,000	0.05 U	0.05 U	0.05 U	0.05 U	0.05 U	0.05 U	0.05 U	0.05 U	0.05 U	0.05 U	0.05 U	0.05 U	0.05 U	0.05 U	0.05 U	0.05 U
cis-1,3-Dichloropropene in mg/kg		0.05 U	0.05 U	0.05 U	0.05 U	0.05 U	0.05 U	0.05 U	0.05 U	0.05 U	0.05 U	0.05 U	0.05 U	0.05 U	0.05 U	0.05 U	0.05 U
Dibromochloromethane in mg/kg	1,600	0.05 U	0.05 U	0.05 U	0.05 U	0.05 U	0.05 U	0.05 U	0.05 U	0.05 U	0.05 U	0.05 U	0.05 U	0.05 U	0.05 U	0.05 U	0.05 U
Dibromomethane in mg/kg	35,000	0.05 U	0.05 U	0.05 U	0.05 U	0.05 U	0.05 U	0.05 U	0.05 U	0.05 U	0.05 U	0.05 U	0.05 U	0.05 U	0.05 U	0.05 U	0.05 U
Dichlorodifluoromethane in mg/kg	700,000	0.5 U	0.5 U	0.5 U	0.5 U	0.5 U	0.5 U	0.5 U	0.5 U	0.5 U	0.5 U	0.5 U	0.5 U	0.5 U	0.5 U	0.5 U	0.5 U
Ethylbenzene in mg/kg	350,000	0.05 U	0.05 U	0.05 U	0.05 U	0.05 U	0.05 U	0.05 U	0.05 U	0.05 U	0.05 U	0.05 U	0.05 U	0.05 U	0.05 U	0.05 U	0.05 U
Hexachlorobutadiene in mg/kg	1,700	0.25 U	0.25 U	0.25 U	0.25 U	0.25 U	0.25 U	0.25 U	0.25 U	0.25 U	0.25 U	0.25 U	0.25 U	0.25 U	0.25 U	0.25 U	0.25 U
Isopropylbenzene in mg/kg	350,000	0.05 U	0.05 U	0.05 U	0.05 U	0.05 U	0.05 U	0.05 U	0.05 U	0.05 U	0.05 U	0.05 U	0.05 U	0.05 U	0.05 U	0.05 U	0.05 U
Methyl tert-butyl ether (MTBE) in mg/	73,000	0.05 U	0.05 U	0.05 U	0.05 U	0.05 U	0.05 U	0.05 U	0.05 U	0.05 U	0.05 U	0.05 U	0.05 U	0.05 U	0.05 U	0.05 U	0.05 U
Methylene chloride in mg/kg	21,000	0.5 U	0.5 U	0.5 U	1.1 J	0.5 U	0.5 U	0.5 U	0.5 U	0.5 UJ	0.5 UJ	0.5 UJ	0.5 UJ	0.5 U	0.5 U	0.5 U	0.5 U
n-Propylbenzene in mg/kg	350,000	0.05 U	0.05 U	0.05 U	0.05 U	0.05 U	0.05 U	0.05 U	0.05 U	0.05 U	0.05 U	0.05 U	0.05 U	0.05 U	0.05 U	0.05 U	0.05 U
p-Isopropyltoluene in mg/kg		0.05 U	0.05 U	0.05 U	0.05 U	0.05 U	0.05 U	0.05 U	0.05 U	0.05 U	0.05 U	0.05 U	0.05 U	0.05 U	0.05 U	0.05 U	0.05 U
sec-Butylbenzene in mg/kg	350,000	0.05 U	0.05 U	0.05 U	0.05 U	0.05 U	0.05 U	0.05 U	0.05 U	0.05 U	0.05 U	0.05 U	0.05 U	0.05 U	0.05 U	0.05 U	0.05 U
Styrene in mg/kg	700,000	0.05 U	0.05 U	0.05 U	0.05 U	0.05 U	0.05 U	0.05 U	0.05 U	0.05 U	0.05 U	0.05 U	0.05 U	0.05 U	0.05 U	0.05 U	0.05 U
tert-Butylbenzene in mg/kg	350,000	0.05 U	0.05 U	0.05 U	0.05 U	0.05 U	0.05 U	0.05 U	0.05 U	0.05 U	0.05 U	0.05 U	0.05 U	0.05 U	0.05 U	0.05 U	0.05 U
Tetrachloroethene (PCE) in mg/kg	21,000	0.025 U	0.025 U	0.025 U	0.025 U	0.025 U	0.025 U	0.025 U	0.025 U	0.025 U	0.025 U	0.025 U	0.025 U	0.025 U	0.025 U	0.025 U	0.025 U
Toluene in mg/kg	280,000	0.05 U	0.05 U	0.05 U	0.05 U	0.05 U	0.05 U	0.05 U	0.05 U	0.05 U	0.05 U	0.05 U	0.05 U	0.05 U	0.05 U	0.05 U	0.05 U
trans-1,2-Dichloroethene in mg/kg	70,000	0.05 U	0.05 U	0.05 U	0.05 U	0.05 U	0.05 U	0.05 U	0.05 U	0.05 U	0.05 U	0.05 U	0.05 U	0.05 U	0.05 U	0.05 U	0.05 U
trans-1,3-Dichloropropene in mg/kg		0.05 U	0.05 U	0.05 U	0.05 U	0.05 U	0.05 U	0.05 U	0.05 U	0.05 U	0.05 U	0.05 U	0.05 U	0.05 U	0.05 U	0.05 U	0.05 U
Trichloroethene (TCE) in mg/kg	1,800	0.03 U	0.03 U	0.03 U	0.03 U	0.03 U	0.03 U	0.03 U	0.03 U	0.03 U	0.03 U	0.03 U	0.03 U	0.03 U	0.03 U	0.03 U	0.03 U
Trichlorofluoromethane in mg/kg	1,100,000	0.5 U	0.5 U	0.5 U	0.5 U	0.5 U	0.5 U	0.5 U	0.5 U	0.5 U	0.5 U	0.5 U	0.5 U	0.5 U	0.5 U	0.5 U	0.5 U
Vinyl chloride in mg/kg	88	0.05 U	0.05 U	0.05 U	0.05 U	0.05 U	0.05 U	0.05 U	0.05 U	0.05 U	0.05 U	0.05 U	0.05 U	0.05 U	0.05 U	0.05 U	0.05 U
m,p-Xylenes in mg/kg	49	0.1 U	0.1 U	0.1 U	0.1 U	0.1 U	0.1 U	0.1 U	0.1 U	0.1 U	0.1 U	0.1 U	0.1 U	0.1 U	0.1 U	0.1 U	0.1 U
o-Xylene in mg/kg	80	0.05 U	0.05 U	0.05 U	0.05 U	0.05 U	0.05 U	0.05 U	0.05 U	0.05 U	0.05 U	0.05 U	0.05 U	0.05 U	0.05 U	0.05 U	0.05 U
Naphthalene in mg/kg	70,000	0.05 U	0.05 U	0.05 U	0.05 U	0.05 U	0.05 U	0.05 U	0.05 U	0.05 U	0.05 U	0.05 U	0.05 U	0.05 U	0.05 U	0.05 U	0.05 U

Table 4 - Import Backfill Soil Quality Data

K-C Worldwide Site Upland Area 110207

Chemical Name	Interim Action Cleanup Level - Unsaturated Soil	STIL-G1 12/5/13	STIL-G2 12/5/13	STIL-G3 12/5/13	STIL-G4 12/5/13	STIL-G5 12/5/13	STIL-G6 12/5/13	STIL-G7 12/5/13	STIL-G8 12/5/13	STIL-G9 1/14/14	STIL-G10 1/14/14	STIL-G11 1/14/14	STIL-G12 1/14/14	STIL-G13 2/19/14	STIL-G14 2/19/14	STIL-G15 2/19/14	STIL-G16 2/19/14
Polychlorinated Biphenyls (PCBs)																	
Aroclor 1016 in mg/kg		0.02 U	0.02 U	0.02 U	0.02 U	0.02 U	0.02 U	0.02 U	0.02 U	0.02 U	0.02 U	0.02 U	0.02 U	0.02 U	0.02 U	0.02 U	0.02 U
Aroclor 1221 in mg/kg		0.02 U	0.02 U	0.02 U	0.02 U	0.02 U	0.02 U	0.02 U	0.02 U	0.02 U	0.02 U	0.02 U	0.02 U	0.02 U	0.02 U	0.02 U	0.02 U
Aroclor 1232 in mg/kg		0.02 U	0.02 U	0.02 U	0.02 U	0.02 U	0.02 U	0.02 U	0.02 U	0.02 U	0.02 U	0.02 U	0.02 U	0.02 U	0.02 U	0.02 U	0.02 U
Aroclor 1242 in mg/kg		0.02 U	0.02 U	0.02 U	0.02 U	0.02 U	0.02 U	0.02 U	0.02 U	0.02 U	0.02 U	0.02 U	0.02 U	0.02 U	0.02 U	0.02 U	0.02 U
Aroclor 1248 in mg/kg		0.02 U	0.02 U	0.02 U	0.02 U	0.02 U	0.02 U	0.02 U	0.02 U	0.02 U	0.02 U	0.02 U	0.02 U	0.02 U	0.02 U	0.02 U	0.02 U
Aroclor 1254 in mg/kg		0.02 U	0.02 U	0.02 U	0.02 U	0.02 U	0.02 U	0.02 U	0.02 U	0.02 U	0.02 U	0.02 U	0.02 U	0.02 U	0.02 U	0.02 U	0.02 U
Aroclor 1260 in mg/kg		0.02 U	0.02 U	0.02 U	0.02 U	0.02 U	0.02 U	0.02 U	0.02 U	0.02 U	0.02 U	0.02 U	0.02 U	0.02 U	0.02 U	0.02 U	0.02 U
Total PCBs (Sum of Aroclors) in mg/kg	10	ND	ND	ND	ND	ND	ND	ND	ND	ND	ND	ND	ND	ND	ND	ND	ND

Notes

Concentrations in shaded cells indicate value exceeds Interi

J = Analyte was positively identified. The reported result is a

U = Analyte was not detected at or above the reported resu

UJ = Analyte was not detected at or above the reported esti

Table 5 - Excavation Verification Soil Quality Data for BA-MW-6 Interim Action Area

K-C Worldwide Site Upland Area 110207

			Bottom Samples in Place		Sidewall Samples in Place				Pre-Excavation Characterization Samples							
Chemical Name	Interim Action Cleanup Level - Saturated Soil	Interim Action Cleanup Level - Unsaturated Soil	BA-B01 3/5/14 (5 ft)	BA-B02 3/5/14 (6 ft)	BA-S01 3/5/14 (4 ft)	BA-S01 FD 3/5/14 (4 ft)	BA-S02 3/5/14 (4 ft)	BA-S03 3/5/14 (4 ft)	BA-6E 1/15/14 (0.5-1 ft)	BA-6E 1/15/14 (1.5-2 ft)	BA-6N 1/15/14 (0.5-1 ft)	BA-6N 1/15/14 (1.5-2 ft)	BA-6S 1/15/14 (0.5-1 ft)	BA-6S 1/15/14 (1.5-2 ft)	BA-6W 1/15/14 (0.5-1 ft)	BA-6W 1/15/14 (1.5-2 ft)
Total Petroleum Hydrocarbons (TPH)																
Diesel Range Hydrocarbons in mg/kg	2,000	2,000	50 U	50 U	50 U	50 U	50 U	50 U	50 U	50 U	50 U	50 U	50 U	50 U	50 U	50 U
Oil Range Hydrocarbons in mg/kg	2,000	2,000	250 U	250 U	250 U	250 U	250 U	250 U	430	250 U	650	1,100	250 U	250 U	250 U	940
Total TPHs in mg/kg	2,000	2,000	ND	ND	ND	ND	ND	ND	455	ND	675	1,120	ND	ND	ND	965
Polycyclic Aromatic Hydrocarbons (PAHs)																
Acenaphthene in mg/kg	210,000	210,000	0.01 U	0.01 U	0.01 U	0.01 U	0.01 U	0.01 U								
Acenaphthylene in mg/kg			0.01 U	0.01 U	0.01 U	0.01 U	0.01 U	0.01 U								
Anthracene in mg/kg	1,100,000	1,100,000	0.01 U	0.01 U	0.01 U	0.01 U	0.01 U	0.01 U								
Benzo(g,h,i)perylene in mg/kg			0.01 U	0.01 U	0.01 U	0.01 U	0.01 U	0.01 U								
Fluoranthene in mg/kg	140,000	140,000	0.01 U	0.01 U	0.01 U	0.01 U	0.01 U	0.01 U								
Fluorene in mg/kg	140,000	140,000	0.01 U	0.01 U	0.01 U	0.01 U	0.01 U	0.01 U								
Phenanthrene in mg/kg			0.01 U	0.01 U	0.01 U	0.01 U	0.01 U	0.01 U								
Pyrene in mg/kg	110,000	110,000	0.01 U	0.01 U	0.01 U	0.01 U	0.01 U	0.01 U								
Naphthalene in mg/kg	70,000	70,000	0.01 U	0.01 U	0.01 U	0.01 U	0.01 U	0.01 U								
Benz(a)anthracene in mg/kg			0.01 U	0.01 U	0.01 U	0.01 U	0.01 U	0.01 U								
Benzo(a)pyrene in mg/kg			0.01 U	0.01 U	0.01 U	0.01 U	0.01 U	0.01 U								
Benzo(b)fluoranthene in mg/kg			0.01 U	0.01 U	0.01 U	0.01 U	0.01 U	0.01 U								
Benzo(k)fluoranthene in mg/kg			0.01 U	0.01 U	0.01 U	0.01 U	0.01 U	0.01 U								
Chrysene in mg/kg			0.01 U	0.01 U	0.01 U	0.01 U	0.01 U	0.01 U								
Dibenzo(a,h)anthracene in mg/kg			0.01 U	0.01 U	0.01 U	0.01 U	0.01 U	0.01 U								
Indeno(1,2,3-cd)pyrene in mg/kg			0.01 U	0.01 U	0.01 U	0.01 U	0.01 U	0.01 U								
Total cPAHs TEQ in mg/kg	0.4	7.9	ND	ND	ND	ND	ND	ND								

Notes

Concentrations in shaded cells indicate value exceeds Interim Action Cleanup Level - Saturated Soil.

Concentrations in bold text indicate value exceeds Interim Action Cleanup Level - Unsaturated Soil.

SAT = Sample of saturated soil; samples without this designation are unsaturated soil.

U = Analyte was not detected at or above the reported result.

Table 6 - Excavation Verification Soil Quality Data for Boiler/Baghouse Interim Action Area

K-C Worldwide Site Upland Area 110207

		Bottom Samples in Place												Sidewall Samples in Place											
Chemical Name	Interim Action Cleanup Level - Unsaturated Soil	BBH-B01 10/16/13 (3 ft)	BBH-B01 FD 10/16/13 (3 ft)	BBH-B02 10/16/13 (2 ft)	BBH-B03 10/16/13 (3 ft)	BBH-B05 10/16/13 (2 ft)	BBH-B06 10/16/13 (3 ft)	BBH-B07 10/16/13 (3 ft)	BBH-B10 10/16/13 (4 ft)	BBH-B16 10/23/13 (3 ft)	BBH-B17 10/30/13 (5 ft)	BBH-B19 10/30/13 (5 ft)	BBH-B20 11/18/13 (6 ft)	BBH-S01 10/15/13 (1.5 ft)	BBH-S01 FD 10/15/13 (1.5 ft)	BBH-S02 10/15/13 (1.5 ft)	BBH-S03 10/15/13 (1.5 ft)	BBH-S04 10/15/13 (1.5 ft)	BBH-S05 10/15/13 (1.5 ft)	BBH-S06 10/15/13 (1.5 ft)	BBH-S07 10/15/13 (1.5 ft)	BBH-S08 10/15/13 (1.5 ft)	BBH-S09 10/15/13 (1.5 ft)	BBH-S11 10/15/13 (1.5 ft)	BBH-S12 10/15/13 (1.5 ft)	BBH-S13 10/15/13 (1.5 ft)	BBH-S14 10/15/13 (1.5 ft)
Total Petroleum Hydrocarbons (TPH)																												
Diesel Range Hydrocarbons in mg/kg	2,000																											
Oil Range Hydrocarbons in mg/kg	2,000																											
Total TPHs in mg/kg	2,000																											
Metals																												
Antimony in mg/kg	1,400	1 U	1 U	1 U	1 U	4.01	1 U	1.22	1.52	2.07	1.59	6.62	1 U	1.12	1 U	4.21	12.4	2.34	5.57	8.29	6.05	1 U	5.91	23.1	2.42	2.76	3.62
Arsenic in mg/kg	20	3.85	3.87	2.2	3.03	5.58	8.07	2.1	1 U	3.62	1.58	1 U	1 U	12.6	11.9	13.3	18	4.18	15.5	12.3	11.1	2.56	10.5	9.8	4.56	4.13	7.11
Cadmium in mg/kg	3,500	1 U	1 U	1 U	1 U	1 U	1 U	1 U	1 U	1 U	1 U	1 U	1 U	1 U	1.17	26.4	9.78	1 U	9.16	1.44	1 U	1 U	1.86	1 U	1 U	1 U	1 U
Copper in mg/kg	36	12.7	13.1	17.8	18.1	23.3	**45.3**	**57.3**	13.1	10.6	21.1	**47.3**	17.7	27.7	34.3	**67.9**	**44.1**	28.8	**75.3**	**52.2**	**58.5**	30.6	**76.5**	**74.5**	28.4	**69.9**	**72.3**
Lead in mg/kg	1,000	5.96	4.6	3.76	3.47	65.3	595	15.1	7.3	28.6	9.59	326	8.81	27.5	36.4	143	125	17.2	58.2	374	78.6	57.6	132	485	62.1	282	160
Mercury in mg/kg	0.1	0.1 U	0.1 U	0.1 U	0.1 U	**0.13** J	**0.43** J	0.1 U	0.1 U	0.1 U	**0.13**	**16**	0.1 U	**0.21** J	**0.31**	**0.58** J	**0.4** J	**0.22** J	**0.53** J	**0.84** J	**0.94** J	**0.12** J	**1.1** J	**1.9** J	**0.34** J	**1.7** J	**0.99** J
Nickel in mg/kg	48	15.4 J	16.3 J	12.3 J	11.6 J	9.89 J	17.8 J	15 J	10.1 J	8.25	11.9	9.21	1.96	16.3	18.4	19.2	19.9	23	16.6	19	14	16.7	20	26	16.7	2.34	6.3
Zinc in mg/kg	100	25.9	25.6	25.8	18.1	27.7	56.8	40.6	30.2	12.9	24.5	16.3	3.64	67.4	**103** J	**328**	**207** J	64.2 J	**216** J	**172** J	95.1 J	40.9 J	**131** J	79.7 J	33.6 J	17.3 J	55.1 J
Polycyclic Aromatic Hydrocarbons (PAHs)																											
Acenaphthene in mg/kg	210,000	0.01 U	0.01 U			0.048						0.01 U	0.01 U	0.073	0.01 U					0.58				0.2			
Acenaphthylene in mg/kg		0.01 U	0.01 U			0.01 U						0.01 U	0.01 U	0.01 U	0.01 U					0.1 U				0.1 U			
Anthracene in mg/kg	1,100,000	0.01 U	0.01 U			0.091						0.01 U	0.01 U	0.097	0.01 U					0.65				0.41			
Benzo(g,h,i)perylene in mg/kg		0.01 U	0.01 U			0.081						0.01 U	0.01 U	0.061	0.041					0.4				0.24			
Fluoranthene in mg/kg	140,000	0.011	0.01 U			0.3						0.01 U	0.01 U	0.27	0.079					2.5				1.4			
Fluorene in mg/kg	140,000	0.01 U	0.01 U			0.05						0.01 U	0.01 U	0.1	0.01 U					0.32				0.17			
Phenanthrene in mg/kg		0.01 U	0.01 U			0.37						0.01 U	0.01 U	0.37	0.012					2.2				1.4			
Pyrene in mg/kg	110,000	0.012	0.01 U			0.37						0.01 U	0.01 U	0.23	0.078					2.4				1.3			
Naphthalene in mg/kg	70,000	0.01 U	0.01 U			0.052						0.01 U	0.01 U	0.56	0.01 U					0.13				0.1 U			
Benz(a)anthracene in mg/kg		0.01 U	0.01 U			0.16						0.01 U	0.01 U	0.11	0.072					0.95				0.55			
Benzo(a)pyrene in mg/kg		0.01 U	0.01 U			0.14						0.01 U	0.01 U	0.1	0.065					0.76				0.43			
Benzo(b)fluoranthene in mg/kg		0.013	0.01 U			0.17						0.01 U	0.01 U	0.13	0.09					0.85				0.49			
Benzo(k)fluoranthene in mg/kg		0.01 U	0.01 U			0.068						0.01 U	0.01 U	0.044	0.035					0.29				0.25			
Chrysene in mg/kg		0.01 U	0.01 U			0.2						0.01 U	0.01 U	0.11	0.076					1.1				0.64			
Dibenzo(a,h)anthracene in mg/kg		0.01 U	0.01 U			0.025						0.01 U	0.01 U	0.016	0.011					0.12				0.1 U			
Indeno(1,2,3-cd)pyrene in mg/kg		0.01 U	0.01 U			0.094						0.01 U	0.01 U	0.065	0.045					0.46				0.26			
Total cPAHs TEQ in mg/kg	7.9	0.00835	ND			0.194						ND	ND	0.138	0.0911					1.04				0.596			
Dioxins/Furans																											
Total HpCDD in mg/kg		2.9E-05	0.00015																								
Total HpCDF in mg/kg		1.1E-05	2.4E-05																								
Total HxCDD in mg/kg		1.3E-05	3E-05																								
Total HxCDF in mg/kg		3.3E-06	7E-06																								
Total PeCDD in mg/kg		9.1E-06	1.7E-05																								
Total PeCDF in mg/kg		3.2E-06	2.8E-06																								
Total TCDD in mg/kg		7.3E-06	1.2E-05																								
Total TCDF in mg/kg		3.7E-06	3.2E-06																								
2,3,7,8-TCDD in mg/kg		5.4E-07 U	5.3E-07 U																								
1,2,3,7,8-PeCDD in mg/kg		3.2E-07 U	5.9E-07 U																								
1,2,3,4,7,8-HxCDD in mg/kg		2.7E-07 U	5E-07 U																								
1,2,3,6,7,8-HxCDD in mg/kg		1.1E-06 J	5.5E-07 U																								
1,2,3,7,8,9-HxCDD in mg/kg		6.7E-07 J	1.9E-06 J																								
1,2,3,4,6,7,8-HpCDD in mg/kg		1.2E-05	4.6E-05																								
OCDD in mg/kg		8.8E-05	0.0005																								
2,3,7,8-TCDF in mg/kg		5.4E-07 U	3.6E-07 J																								
1,2,3,7,8-PeCDF in mg/kg		2.7E-07 J	4.3E-07 J																								
2,3,4,7,8-PeCDF in mg/kg		3.3E-07 J	5.8E-07 U																								
1,2,3,4,7,8-HxCDF in mg/kg		6.2E-07 J	9.5E-07 J																								
1,2,3,6,7,8-HxCDF in mg/kg		3E-07 J	3.7E-07 U																								
1,2,3,7,8,9-HxCDF in mg/kg		2.7E-06 U	2.7E-06 U																								
2,3,4,6,7,8-HxCDF in mg/kg		3.2E-07 U	5.1E-07 J																								
1,2,3,4,6,7,8-HpCDF in mg/kg		5E-06	6.1E-06																								
1,2,3,4,7,8,9-HpCDF in mg/kg		2.7E-06 U	4.9E-07 J																								
OCDF in mg/kg		7.1E-06	2.4E-05																								
Total 2,3,7,8 TCDD [TEQ] (ND = 1/2 RDL) in mg/kg	0.0017	1.4E-06 J	2.4E-06 J																								

Notes

All soils in this excavation are unsaturated. Concentrations shaded and bolded indicate value exceeds Interim Action Cleanup Level - Unsaturated Soil.

J = Analyte was positively identified. The reported result is an estimate.

U = Analyte was not detected at or above the reported result.

Table 6 - Excavation Verification Soil Quality Data for Boiler/Baghouse Interim Action Area

K-C Worldwide Site Upland Area 110207

Chemical Name	Interim Action Cleanup Level - Unsaturated Soil	Sidewall Samples in Place																Overexcavated Samples								
		BBH-S15 10/15/13 (1.5 ft)	BBH-S16 10/15/13 (1.5 ft)	BBH-S17 10/15/13 (1.5 ft)	BBH-S18 10/15/13 (1.5 ft)	BBH-S19 10/15/13 (1.5 ft)	BBH-S20 10/15/13 (1.5 ft)	BBH-S20 FD 10/15/13 (1.5 ft)	BBH-S21 10/15/13 (1.5 ft)	BBH-S22 10/15/13 (1.5 ft)	BBH-S23 10/15/13 (1.5 ft)	BBH-S24 10/15/13 (1.5 ft)	BBH-S25 10/15/13 (1.5 ft)	BBH-S26 10/15/13 (1.5 ft)	BBH-S27 10/15/13 (1.5 ft)	BBH-S28 10/15/13 (1.5 ft)	BBH-S29 10/23/13 (1.5 ft)	BBH-B04 10/16/13 (2 ft) OverEx	BBH-B08 10/16/13 (3 ft) OverEx	BBH-B09 10/16/13 (3 ft) OverEx	BBH-B11 10/16/13 (3 ft) OverEx	BBH-B13 10/23/13 (4 ft) OverEx	BBH-B14 10/23/13 (4 ft) OverEx	BBH-B15 10/23/13 (4 ft) OverEx	BBH-B18 10/30/13 (5 ft) OverEx	BBH-S10 10/15/13 (1.5 ft) OverEx
Total Petroleum Hydrocarbons (TPH)																										
Diesel Range Hydrocarbons in mg/kg	2,000																									
Oil Range Hydrocarbons in mg/kg	2,000																									
Total TPHs in mg/kg	2,000																									
Metals																										
Antimony in mg/kg	1,400	3.75	3.05	2.31	5.12	9.02	7.9	10.3 J	24 J	4.56 J	1 U	1 U	1 U	1 U	1 U	1 U	13.4	5.24	35.5	19.9	4.56	18	4.03	2.49	1.44	16.4
Arsenic in mg/kg	20	4.86	3.03	5.75	8.58	16.2	9.2	9.93	12	8.45	2.35	4.25	4.78	6.18	3.76	3.86	18.5	13.5	**34.8**	13.5	1 U	**58.2**	4	1 U	1.4	13.5
Cadmium in mg/kg	3,500	1 U	1 U	1 U	1 U	1.18	1.29	1.6	2.46	2.4	1 U	1 U	1 U	1 U	1 U	1 U	3.33	1 U	1.79	1.35	1 U	1 U	1 U	1 U	1 U	2.72
Copper in mg/kg	36	**96.9**	**36.6**	**63.5**	**49.6**	35.6	**81.5**	**81.7**	**47.9**	**71.8**	16.5	14.3	32.9	18.9	19.2	14.1	**59.2**	**90.3**	**180**	**86.7**	**164**	**140**	26.6	**137**	**901**	**136**
Lead in mg/kg	1,000	151	73.1	114	99.7	80.2	182	232	779	54.7	4.32	3.76	4.72	4.07	3.1	5.18	275	35.3	**1,840**	407	132	301	94.7	67.3	174	584
Mercury in mg/kg	0.1	**0.41** J	0.1 U	**0.31** J	**0.25** J	**0.19** J	**0.52** J	**0.78**	**0.81**	**0.49**	0.1 U	0.1 U	**0.13**	**0.14**	0.1 U	0.1 U	**0.8**	0.1 U	**1.1** J	**1.2** J	0.1 U	**0.64**	**0.33**	0.1 U	**0.11**	**2.1** J
Nickel in mg/kg	48	4.96	8.6	4.36	14.3	18.2	19	21.7	12.7	14.9	23.3	14.7	15.2	9.51	12.3	12.3	19.8	26.7 J	12.8 J	17.7 J	1.88 J	12.1	13.1	1 U	8.79	18.1
Zinc in mg/kg	100	32 J	24 J	40.8 J	93.5 J	**145** J	**106** J	**149** J	84.3 J	**121** J	33.5 J	27 J	25.6 J	12.7 J	19.7 J	19.9 J	**299**	30.2	**343**	**187**	11.4	**515**	**152**	6.3	62.5	**167** J
Polycyclic Aromatic Hydrocarbons (PAHs)																										
Acenaphthene in mg/kg	210,000		0.01 U						0.063					0.01 U					0.026							
Acenaphthylene in mg/kg			0.01 U						0.01 U					0.01 U					0.01 U							
Anthracene in mg/kg	1,100,000		0.01 U						0.13					0.01 U					0.063							
Benzo(g,h,i)perylene in mg/kg			0.01 U						0.08					0.01 U					0.11							
Fluoranthene in mg/kg	140,000		0.01 U						0.37					0.01 U					0.36							
Fluorene in mg/kg	140,000		0.01 U						0.052					0.01 U					0.021							
Phenanthrene in mg/kg			0.01 U						0.4					0.01 U					0.2							
Pyrene in mg/kg	110,000		0.01 U						0.4					0.01 U					0.36							
Naphthalene in mg/kg	70,000		0.01 U						0.022					0.01 U					0.015							
Benz(a)anthracene in mg/kg			0.01 U						0.19					0.01 U					0.2							
Benzo(a)pyrene in mg/kg			0.01 U						0.15					0.01 U					0.19							
Benzo(b)fluoranthene in mg/kg			0.011						0.18					0.01 U					0.23							
Benzo(k)fluoranthene in mg/kg			0.01 U						0.056					0.01 U					0.075							
Chrysene in mg/kg			0.01 U						0.23					0.01 U					0.24							
Dibenzo(a,h)anthracene in mg/kg			0.01 U						0.025					0.01 U					0.03							
Indeno(1,2,3-cd)pyrene in mg/kg			0.01 U						0.089					0.01 U					0.12							
Total cPAHs TEQ in mg/kg	7.9		0.00815						0.206					ND					0.258							
Dioxins/Furans																										
Total HpCDD in mg/kg																		6.9E-05	0.00138							
Total HpCDF in mg/kg																		2.3E-06 U	0.00028							
Total HxCDD in mg/kg																		1.9E-05	0.00211							
Total HxCDF in mg/kg																		1.2E-06 J	0.00018							
Total PeCDD in mg/kg																		2.6E-07 J	0.00166							
Total PeCDF in mg/kg																		1.5E-06 J	0.00033							
Total TCDD in mg/kg																		6.6E-06	0.00145							
Total TCDF in mg/kg																		2.7E-06	0.00073							
2,3,7,8-TCDD in mg/kg																		5.6E-07 U	7E-06							
1,2,3,7,8-PeCDD in mg/kg																		2.6E-07 J	2.5E-05							
1,2,3,4,7,8-HxCDD in mg/kg																		2.1E-07 J	3.2E-05							
1,2,3,6,7,8-HxCDD in mg/kg																		1.1E-06 J	6.8E-05							
1,2,3,7,8,9-HxCDD in mg/kg																		7.9E-07 J	5.9E-05							
1,2,3,4,6,7,8-HpCDD in mg/kg																		1.8E-05	0.00066							
OCDD in mg/kg																		0.00017	0.00474							
2,3,7,8-TCDF in mg/kg																		5.6E-07 U	3.3E-05							
1,2,3,7,8-PeCDF in mg/kg																		1.7E-07 U	2.2E-05 J							
2,3,4,7,8-PeCDF in mg/kg																		2.4E-07 J	3.3E-05							
1,2,3,4,7,8-HxCDF in mg/kg																		3E-07 U	2.5E-05 J							
1,2,3,6,7,8-HxCDF in mg/kg																		1.7E-07 U	1.3E-05							
1,2,3,7,8,9-HxCDF in mg/kg																		2.8E-06 U	1.7E-06 J							
2,3,4,6,7,8-HxCDF in mg/kg																		1.6E-07 U	1.7E-05 J							
1,2,3,4,6,7,8-HpCDF in mg/kg																		9.6E-07 U	7.4E-05							
1,2,3,4,7,8,9-HpCDF in mg/kg																		2.8E-06 U	7.4E-06							
OCDF in mg/kg																		1.6E-06 J	0.00026							
Total 2,3,7,8 TCDD [TEQ] (ND = 1/2 RDL) in mg/kg	0.0017																	1.3E-06 J	7.7E-05							

Notes

All soils in this excavation are unsaturated. Concentrations shaded and bolded indicate value exceeds Interim Action Cleanup Level - Unsaturated Soil.

J = Analyte was positively identified. The reported result is an estimate.

U = Analyte was not detected at or above the reported result.

Table 7 - Excavation Verification Soil Quality Data for Bunker C ASTs Interim Action Area

K-C Worldwide Site Upland Area 110207

Chemical Name	Interim Action Cleanup Level - Saturated Soil	Interim Action Cleanup Level - Unsaturated Soil	Bottom Samples in Place																							
			BAST-B001 10/10/13 (3.5 ft) SAT	BAST-B002 10/17/13 (4 ft) SAT	BAST-B003 10/17/13 (5 ft) SAT	BAST-B004 10/17/13 (5 ft) SAT	BAST-B005 10/17/13 (6 ft) SAT	BAST-B006 10/17/13 (6 ft) SAT	BAST-B007 10/17/13 (5 ft) SAT	BAST-B008 10/17/13 (6 ft) SAT	BAST-B010 10/18/13 (5 ft) SAT	BAST-B011 10/17/13 (4 ft) SAT	BAST-B012 10/17/13 (4 ft) SAT	BAST-B013 10/17/13 (4 ft) SAT	BAST-B014 10/17/13 (4 ft) SAT	BAST-B015 10/17/13 (5 ft) SAT	BAST-B016 10/17/13 (5 ft) SAT	BAST-B017 10/17/13 (5 ft) SAT	BAST-B018 10/17/13 (5 ft) SAT	BAST-B021 10/17/13 (4 ft) SAT	BAST-B022 10/22/13 (7 ft) SAT	BAST-B023 10/18/13 (4 ft) SAT	BAST-B023 FD 10/18/13 (4 ft) SAT	BAST-B024 10/17/13 (5 ft) SAT	BAST-B026 10/22/13 (6 ft) SAT	BAST-B027 10/22/13 (7 ft) SAT	BAST-B028 10/22/13 (7 ft) SAT
Total Petroleum Hydrocarbons (TPH)																										
Gasoline Range Hydrocarbons in mg/kg	100	100																								
Diesel Range Hydrocarbons in mg/kg	2,000	2,000																								
Oil Range Hydrocarbons in mg/kg	2,000	2,000																								
Bunker C in mg/kg	2,000	2,000	250 U	250 U	250 U	250 U	250 U	250 U	250 U	250 U	250 U	330	250 U	250 U	250 U	250 U	250 U	250 U	250 U	250 U	250 U	250 U	250 U	250 U	250 U	250 U	280
Total TPHs in mg/kg	2,000	2,000	250 U	250 U	250 U	250 U	250 U	250 U	250 U	250 U	250 U	330	250 U	250 U	250 U	250 U	250 U	250 U	250 U	250 U	250 U	250 U	250 U	250 U	250 U	250 U	280
Metals																										
Antimony in mg/kg	1,400	1,400						1 U																1 U			
Arsenic in mg/kg	20	20						5.67																1 U		1 U	
Barium in mg/kg	700,000	700,000																									
Beryllium in mg/kg	7,000	7,000																									
Cadmium in mg/kg	3,500	3,500						1 U																1 U		1 U	
Chromium (Total) in mg/kg	5,300,000	5,300,000																									
Copper in mg/kg	36	36						27.2																5.12		6.68	
Lead in mg/kg	81	1,000						2.55																1.5		1 U	
Mercury in mg/kg	0.1	0.1						0.1 U																0.1 U		0.1 U	
Nickel in mg/kg	48	48						14.5																11.6		10.9	
Selenium in mg/kg	18,000	18,000																									
Silver in mg/kg	18,000	18,000																									
Thallium in mg/kg	35	35																									
Zinc in mg/kg	85	100						25																9.04		12.8 J	
Polycyclic Aromatic Hydrocarbons (PAHs)																										
Acenaphthene in mg/kg	210,000	210,000	0.01 U	0.01 U	0.01 U	0.01 U	0.01 U	0.01 U	0.01 U	0.01 U	0.01 U	0.011	0.01 U	0.01 U	0.01 U	0.01 U	0.01 U	0.01 U	0.013	0.01 U	0.01 U	0.01 U	0.01 U	0.01 U	0.01 U	0.01 U	0.021
Acenaphthylene in mg/kg			0.01 U	0.01 U	0.01 U	0.01 U	0.01 U	0.01 U	0.01 U	0.01 U	0.01 U	0.01 U	0.01 U	0.01 U	0.01 U	0.01 U	0.01 U	0.01 U	0.01 U	0.01 U	0.01 U	0.01 U	0.01 U	0.01 U	0.01 U	0.01 U	0.01 U
Anthracene in mg/kg	1,100,000	1,100,000	0.01 U	0.01 U	0.01 U	0.01 U	0.01 U	0.01 U	0.01 U	0.01 U	0.01 U	0.02	0.01 U	0.01 U	0.01 U	0.01 U	0.01 U	0.01 U	0.01 U	0.01 U	0.01 U	0.01 U	0.01 U	0.01 U	0.01 U	0.01 U	0.025
Benzo(g,h,i)perylene in mg/kg			0.022	0.01 U	0.01 U	0.01 U	0.01 U	0.01 U	0.01 U	0.01 U	0.01 U	0.01 U	0.02	0.01 U	0.01 U	0.01 U	0.01 U	0.01 U	0.01 U	0.01 U	0.01 U	0.01 U	0.01 U	0.01 U	0.01 U	0.01 U	0.01 U
Dibenzofuran in mg/kg	3,500	3,500																									
Fluoranthene in mg/kg	140,000	140,000	0.038	0.01 U	0.01 U	0.01 U	0.01 U	0.01 U	0.01 U	0.01 U	0.01 U	0.01 U	0.01 U	0.01 U	0.01 U	0.01 U	0.01 U	0.01 U	0.01 U	0.01 U	0.01 U	0.01 U	0.01 U	0.01 U	0.01 U	0.01 U	0.01
Fluorene in mg/kg	140,000	140,000	0.01 U	0.01 U	0.01 U	0.01 U	0.01 U	0.01 U	0.01 U	0.01 U	0.01 U	0.017	0.01 U	0.01 U	0.01 U	0.01 U	0.01 U	0.01 U	0.01 U	0.01 U	0.01 U	0.01 U	0.01 U	0.01 U	0.01 U	0.01 U	0.023
Phenanthrene in mg/kg			0.019	0.01 U	0.01 U	0.01 U	0.01 U	0.01 U	0.01 U	0.01 U	0.01 U	0.07	0.01 U	0.01 U	0.01 U	0.01 U	0.01 U	0.01 U	0.01 U	0.01 U	0.01 U	0.01 U	0.01 U	0.01 U	0.01 U	0.01 U	0.075
Pyrene in mg/kg	110,000	110,000	0.038	0.01 U	0.01 U	0.01 U	0.01 U	0.01 U	0.01 U	0.01 U	0.012	0.065	0.048	0.01 U	0.016	0.01 U	0.01 U	0.01 U	0.01 U	0.01 U	0.01 U	0.01 U	0.01 U	0.01 U	0.01 U	0.01 U	0.071
2-Methylnaphthalene in mg/kg	14,000	14,000																									
Naphthalene in mg/kg	70,000	70,000	0.01 U	0.01 U	0.01 U	0.01 U	0.01 U	0.01 U	0.01 U	0.01 U	0.01 U	0.01 U	0.01 U	0.01 U	0.01 U	0.01 U	0.01 U	0.01 U	0.01 U	0.01 U	0.01 U	0.01 U	0.01 U	0.01 U	0.01 U	0.01 U	0.01 U
Benz(a)anthracene in mg/kg			0.012	0.01 U	0.01 U	0.01 U	0.01 U	0.01 U	0.01 U	0.01 U	0.01	0.019	0.012	0.01 U	0.01 U	0.01 U	0.01 U	0.01 U	0.01 U	0.01 U	0.01 U	0.01 U	0.01 U	0.01 U	0.01 U	0.01 U	0.027
Benzo(a)pyrene in mg/kg			0.015	0.01 U	0.01 U	0.01 U	0.01 U	0.01 U	0.01 U	0.01 U	0.011	0.013	0.025	0.01 U	0.01 U	0.01 U	0.01 U	0.01 U	0.01 U	0.01 U	0.01 U	0.01 U	0.01 U	0.01 U	0.01 U	0.01 U	0.017
Benzo(b)fluoranthene in mg/kg			0.026	0.01 U	0.01 U	0.01 U	0.01 U	0.01 U	0.01 U	0.01 U	0.01	0.01 U	0.01 U	0.01 U	0.01 U	0.01 U	0.01 U	0.01 U	0.01 U	0.01 U	0.01 U	0.01 U	0.01 U	0.01 U	0.01 U	0.01 U	0.01 U
Benzo(k)fluoranthene in mg/kg			0.01 U	0.01 U	0.01 U	0.01 U	0.01 U	0.01 U	0.01 U	0.01 U	0.01 U	0.01 U	0.01 U	0.01 U	0.01 U	0.01 U	0.01 U	0.01 U	0.01 U	0.01 U	0.01 U	0.01 U	0.01 U	0.01 U	0.01 U	0.01 U	0.01 U
Chrysene in mg/kg			0.021	0.01 U	0.01 U	0.01 U	0.01 U	0.01 U	0.01 U	0.01 U	0.013	0.032	0.02	0.01 U	0.01 U	0.01 U	0.01 U	0.01 U	0.01 U	0.01 U	0.01 U	0.01 U	0.01 U	0.01 U	0.01 U	0.01 U	0.036
Dibenzo(a,h)anthracene in mg/kg			0.01 U	0.01 U	0.01 U	0.01 U	0.01 U	0.01 U	0.01 U	0.01 U	0.01 U	0.01 U	0.01 U	0.01 U	0.01 U	0.01 U	0.01 U	0.01 U	0.01 U	0.01 U	0.01 U	0.01 U	0.01 U	0.01 U	0.01 U	0.01 U	0.01 U
Indeno(1,2,3-cd)pyrene in mg/kg			0.019	0.01 U	0.01 U	0.01 U	0.01 U	0.01 U	0.01 U	0.01 U	0.01 U	0.01 U	0.01 U	0.01 U	0.01 U	0.01 U	0.01 U	0.01 U	0.01 U	0.01 U	0.01 U	0.01 U	0.01 U	0.01 U	0.01 U	0.01 U	0.01 U
Total cPAHs TEQ in mg/kg	0.4	7.9	0.0219	ND	ND	ND	ND	ND	ND	ND	0.0146	0.0172	0.0284	ND	ND	ND	ND	ND	ND	ND	ND	ND	ND	ND	ND	ND	0.0221
Volatile Organic Compounds (VOC)																										
1,1,1,2-Tetrachloroethane in mg/kg	5,000	5,000																									
1,1,1-Trichloroethane in mg/kg	7,000,000	7,000,000																									
1,1,2,2-Tetrachloroethane in mg/kg	660	660																									
1,1,2-Trichloroethane in mg/kg	2,300	2,300																									
1,1-Dichloroethane in mg/kg	23,000	23,000																									
1,1-Dichloroethene in mg/kg	180,000	180,000																									
1,1-Dichloropropene in mg/kg																											
1,2,3-Trichlorobenzene in mg/kg																											
1,2,3-Trichloropropane in mg/kg	4.4	4.4																									
1,2,4-Trichlorobenzene in mg/kg	4,500	4,500																									
1,2,4-Trimethylbenzene in mg/kg																											
1,2-Dibromo-3-chloropropane in mg/kg	160	160																									
1,2-Dibromoethane (EDB) in mg/kg	66	66																									
1,2-Dichlorobenzene in mg/kg	320,000	320,000																									
1,2-Dichloroethane (EDC) in mg/kg	1,400	1,400																									
1,2-Dichloropropane in mg/kg	3,600	3,600																									
1,3,5-Trimethylbenzene in mg/kg	35,000	35,000																									
1,3-Dichlorobenzene in mg/kg																											
1,3-Dichloropropane in mg/kg																											
1,4-Dichlorobenzene in mg/kg	24,000	24,000																									
2,2-Dichloropropane in mg/kg																											
2-Butanone in mg/kg	2,100,000	2,100,000																									
2-Chlorotoluene in mg/kg	70,000	70,000																									
2-Hexanone in mg/kg																											
4-Chlorotoluene in mg/kg																											
4-Methyl-2-pentanone in mg/kg	280,000	280,000																									

Table 7 - Excavation Verification Soil Quality Data for Bunker C ASTs Interim Action Area

K-C Worldwide Site Upland Area 110207

Chemical Name	Interim Action Cleanup Level - Saturated Soil	Interim Action Cleanup Level - Unsaturated Soil	Bottom Samples in Place																							
			BAST-B001 10/10/13 (3.5 ft) SAT	BAST-B002 10/17/13 (4 ft) SAT	BAST-B003 10/17/13 (5 ft) SAT	BAST-B004 10/17/13 (5 ft) SAT	BAST-B005 10/17/13 (6 ft) SAT	BAST-B006 10/17/13 (6 ft) SAT	BAST-B007 10/17/13 (5 ft) SAT	BAST-B008 10/17/13 (6 ft) SAT	BAST-B010 10/18/13 (5 ft) SAT	BAST-B011 10/17/13 (4 ft) SAT	BAST-B012 10/17/13 (4 ft) SAT	BAST-B013 10/17/13 (4 ft) SAT	BAST-B014 10/17/13 (4 ft) SAT	BAST-B015 10/17/13 (5 ft) SAT	BAST-B016 10/17/13 (5 ft) SAT	BAST-B017 10/17/13 (5 ft) SAT	BAST-B018 10/17/13 (5 ft) SAT	BAST-B021 10/17/13 (4 ft) SAT	BAST-B022 10/22/13 (7 ft) SAT	BAST-B023 10/18/13 (4 ft) SAT	BAST-B023 FD 10/18/13 (4 ft) SAT	BAST-B024 10/17/13 (5 ft) SAT	BAST-B026 10/22/13 (6 ft) SAT	BAST-B027 10/22/13 (7 ft) SAT	BAST-B028 10/22/13 (7 ft) SAT
Acetone in mg/kg	3,200,000	3,200,000																								
Benzene in mg/kg	2,400	2,400																								
Bromobenzene in mg/kg																										
Bromodichloromethane in mg/kg	2,100	2,100																								
Bromoform in mg/kg	17,000	17,000																								
Bromomethane in mg/kg	4,900	4,900																								
Carbon tetrachloride in mg/kg	1,900	1,900																								
Chlorobenzene in mg/kg	70,000	70,000																								
Chloroethane in mg/kg																										
Chloroform in mg/kg	4,200	4,200																								
Chloromethane in mg/kg																										
cis-1,2-Dichloroethene (DCE) in mg/kg	7,000	7,000																								
cis-1,3-Dichloropropene in mg/kg																										
Dibromochloromethane in mg/kg	1,600	1,600																								
Dibromomethane in mg/kg	35,000	35,000																								
Dichlorodifluoromethane in mg/kg	700,000	700,000																								
Ethylbenzene in mg/kg	350,000	350,000																								
Hexachlorobutadiene in mg/kg	1,700	1,700																								
Isopropylbenzene in mg/kg	350,000	350,000																								
Methyl tert-butyl ether (MTBE) in mg/kg	73,000	73,000																								
Methylene chloride in mg/kg	21,000	21,000																								
n-Propylbenzene in mg/kg	350,000	350,000																								
p-Isopropyltoluene in mg/kg																										
sec-Butylbenzene in mg/kg	350,000	350,000																								
Styrene in mg/kg	700,000	700,000																								
tert-Butylbenzene in mg/kg	350,000	350,000																								
Tetrachloroethene (PCE) in mg/kg	21,000	21,000																								
Toluene in mg/kg	280,000	280,000																								
trans-1,2-Dichloroethene in mg/kg	70,000	70,000																								
trans-1,3-Dichloropropene in mg/kg																										
Trichloroethene (TCE) in mg/kg	1,800	1,800																								
Trichlorofluoromethane in mg/kg	1,100,000	1,100,000																								
Vinyl chloride in mg/kg	88	88																								
m,p-Xylenes in mg/kg	49	2.5																								
o-Xylene in mg/kg	80	4.1																								
Naphthalene in mg/kg	70,000	70,000																								
Polychlorinated Biphenyls (PCBs)																										
Aroclor 1016 in mg/kg																										
Aroclor 1221 in mg/kg																										
Aroclor 1232 in mg/kg																										
Aroclor 1242 in mg/kg																										
Aroclor 1248 in mg/kg																										
Aroclor 1254 in mg/kg																										
Aroclor 1260 in mg/kg																										
Total PCBs (Sum of Aroclors) in mg/kg	10	10																								

Notes

Concentrations in shaded cells indicate value exceeds Interim Action Cleanup Level - Saturated Soil.
Concentrations in bold text indicate value exceeds Interim Action Cleanup Level - Unsaturated Soil.
SAT = Sample of saturated soil; samples without this designation are unsaturated soil.
J = Analyte was positively identified. The reported result is an estimate.
U = Analyte was not detected at or above the reported result.
UJ = Analyte was not detected at or above the reported estimate.
x = The sample chromatographic pattern does not resemble the fuel standard used for quantitation.

Table 7 - Excavation Verification Soil Quality Data for Bunker C ASTs Interim Action Area

K-C Worldwide Site Upland Area 110207

Chemical Name	Interim Action Cleanup Level - Saturated Soil	Interim Action Cleanup Level - Unsaturated Soil	Bottom Samples in Place																							
			BAST-B029 10/22/13 (7 ft) SAT	BAST-B030 10/17/13 (3.5 ft) SAT	BAST-B031 10/17/13 (4 ft) SAT	BAST-B032 10/23/13 (3 ft)	BAST-B033 10/22/13 (3 ft) SAT	BAST-B034 10/22/13 (7 ft) SAT	BAST-B035 10/22/13 (7 ft) SAT	BAST-B036 10/21/13 (7 ft) SAT	BAST-B037 10/22/13 (7 ft) SAT	BAST-B038 10/22/13 (7 ft) SAT	BAST-B039 10/21/13 (3 ft)	BAST-B040 10/22/13 (3 ft) SAT	BAST-B041 10/17/13 (3.5 ft) SAT	BAST-B042 10/18/13 (6 ft) SAT	BAST-B043 10/24/13 (9 ft) SAT	BAST-B044 10/24/13 (9 ft) SAT	BAST-B045 10/24/13 (9 ft) SAT	BAST-B046 10/25/13 (7 ft) SAT	BAST-B047 10/25/13 (8 ft) SAT	BAST-B048 10/30/13 (3 ft)	BAST-B048 FD 10/30/13 (3 ft)	BAST-B049 10/30/13 (3 ft)	BAST-B050 10/30/13 (3 ft)	BAST-B051 11/1/13 (5 ft) SAT	BAST-B051 FD 11/1/13 (5 ft) SAT
Total Petroleum Hydrocarbons (TPH)																										
Gasoline Range Hydrocarbons in mg/kg	100	100				2 U																				
Diesel Range Hydrocarbons in mg/kg	2,000	2,000																								
Oil Range Hydrocarbons in mg/kg	2,000	2,000																								
Bunker C in mg/kg	2,000	2,000	250 U	250 U	250 U	250 U	250 U	250 U	540	250 U	250 U	250 U	250 U	250 U	250 U	250 U	250 U	250 U	450	250 U	250 U	250 U	250 U	250 U	250 U	1,000 J	250 UJ
Total TPHs in mg/kg	2,000	2,000	250 U	250 U	250 U	250 U	250 U	250 U	540	250 U	250 U	250 U	250 U	250 U	250 U	250 U	250 U	250 U	450	250 U	250 U	250 U	250 U	250 U	250 U	1,000	250 U
Metals																										
Antimony in mg/kg	1,400	1,400			1 U																					
Arsenic in mg/kg	20	20			1 U						6.95															1.92 J	1.37 J
Barium in mg/kg	700,000	700,000																									
Beryllium in mg/kg	7,000	7,000																									
Cadmium in mg/kg	3,500	3,500			1 U						1 U															1 U	1 U
Chromium (Total) in mg/kg	5,300,000	5,300,000																									
Copper in mg/kg	36	36			2.81						32.9															**42.7**	**40.4**
Lead in mg/kg	81	1,000			2.48						5.62															15.8	16.3
Mercury in mg/kg	0.1	0.1			0.1 U						0.1 U															0.1 U	0.1 U
Nickel in mg/kg	48	48			4.98						24.5															9.98	10.1
Selenium in mg/kg	18,000	18,000																									
Silver in mg/kg	18,000	18,000																									
Thallium in mg/kg	35	35																									
Zinc in mg/kg	85	100			21.8						39.2 J															30.6	23
Polycyclic Aromatic Hydrocarbons (PAHs)																										
Acenaphthene in mg/kg	210,000	210,000	0.01 U	0.01 U	0.01 U	0.01 U	0.01 U	0.01 U	0.063	0.01 U	0.01 U	0.01 U	0.01 U	0.01 U	0.01 U	0.01 U	0.011	0.01 U	0.01 U	0.01 U	0.017	0.01 U	0.01 U	0.01 U	0.01 U	1.4	1.1
Acenaphthylene in mg/kg			0.01 U	0.01 U	0.01 U	0.01 U	0.01 U	0.01 U	0.01 U	0.01 U	0.01 U	0.01 U	0.01 U	0.01 U	0.01 U	0.01 U	0.01 U	0.01 U	0.01 U	0.01 U	0.01 U	0.01 U	0.01 U	0.01 U	0.01 U	0.01	0.01 U
Anthracene in mg/kg	1,100,000	1,100,000	0.01 U	0.01 U	0.01 U	0.01 U	0.01 U	0.01 U	0.066	0.01 U	0.01 U	0.01 U	0.01 U	0.01 U	0.01 U	0.01 U	0.014	0.01 U	0.01 U	0.01 U	0.01 U	0.01 U	0.01 U	0.01 U	0.01 U	0.056	0.051
Benzo(g,h,i)perylene in mg/kg			0.01 U	0.01 U	0.01 U	0.01 U	0.01 U	0.01 U	0.024	0.01 U	0.01 U	0.01 U	0.01 U	0.01 U	0.01 U	0.01 U	0.047	0.01 U	0.01 U	0.01 U	0.01 U	0.01 U	0.01 U	0.01 U	0.01 U	0.027	0.025
Dibenzofuran in mg/kg	3,500	3,500																									
Fluoranthene in mg/kg	140,000	140,000	0.01 U	0.01 U	0.011	0.01 U	0.01 U	0.01 U	0.027	0.01 U	0.01 U	0.017	0.01 U	0.01 U	0.01 U	0.01 U	0.041	0.01 U	0.01 U	0.016	0.01 U	0.01 U	0.01 U	0.01 U	0.01 U	0.047	0.041
Fluorene in mg/kg	140,000	140,000	0.01 U	0.01 U	0.01 U	0.01 U	0.01 U	0.01 U	0.071	0.01 U	0.01 U	0.01 U	0.01 U	0.01 U	0.01 U	0.01 U	0.017	0.01 U	0.01 U	0.01 U	0.012	0.01 U	0.01 U	0.01 U	0.01 U	2.3	1.7
Phenanthrene in mg/kg			0.01 U	0.01 U	0.01 U	0.01 U	0.01 U	0.01 U	0.27	0.01 U	0.01 U	0.018	0.01 U	0.01 U	0.01 U	0.01 U	0.01	0.01 U	0.01 U	0.01 U	0.01 U	0.01 U	0.01 U	0.01 U	0.01 U	0.63	0.57
Pyrene in mg/kg	110,000	110,000	0.01 U	0.015	0.011	0.01 U	0.01 U	0.01 U	0.19	0.01 U	0.012	0.03	0.01 U	0.01 U	0.01 U	0.01 U	0.12	0.01 U	0.01	0.023	0.01 U	0.01 U	0.01 U	0.01 U	0.01 U	0.1	0.087
2-Methylnaphthalene in mg/kg	14,000	14,000																									
Naphthalene in mg/kg	70,000	70,000	0.01 U	0.01 U	0.01 U	0.06	0.01 U	0.01 U	0.01 U	0.01 U	0.01 U	0.01 U	0.01 U	0.01 U	0.01 U	0.01 U	0.01 U	0.01 U	0.036	0.01 U	0.01 U	0.014	0.011	0.033	0.042	0.11	0.13
Benz(a)anthracene in mg/kg			0.01 U	0.01 U	0.01 U	0.01 U	0.01 U	0.01 U	0.072	0.01 U	0.01 U	0.01 U	0.01 U	0.01 U	0.01 U	0.01 U	0.041	0.01 U	0.01 U	0.01 U	0.01 U	0.01 U	0.01 U	0.01 U	0.01 U	0.033	0.031
Benzo(a)pyrene in mg/kg			0.01 U	0.01 U	0.01 U	0.01 U	0.01 U	0.01 U	0.043	0.01 U	0.01 U	0.01 U	0.01 U	0.01 U	0.01 U	0.01 U	0.05	0.01 U	0.01 U	0.01 U	0.01 U	0.01 U	0.01 U	0.01 U	0.01 U	0.03	0.027
Benzo(b)fluoranthene in mg/kg			0.01 U	0.01 U	0.01 U	0.01 U	0.01 U	0.01 U	0.019	0.01 U	0.01 U	0.01 U	0.01 U	0.01 U	0.01 U	0.01 U	0.041	0.01 U	0.01 U	0.01 U	0.01 U	0.01 U	0.01 U	0.01 U	0.01 U	0.028	0.027
Benzo(k)fluoranthene in mg/kg			0.01 U	0.01 U	0.01 U	0.01 U	0.01 U	0.01 U	0.01 U	0.01 U	0.01 U	0.01 U	0.01 U	0.01 U	0.01 U	0.01 U	0.01 U	0.01 U	0.01 U	0.01 U	0.01 U	0.01 U	0.01 U	0.01 U	0.01 U	0.01 U	0.01 U
Chrysene in mg/kg			0.01 U	0.01 U	0.01 U	0.01 U	0.01 U	0.01 U	0.097	0.01 U	0.01 U	0.01 U	0.01 U	0.01 U	0.01 U	0.01 U	0.071	0.01 U	0.01 U	0.01 U	0.01 U	0.01 U	0.01 U	0.01 U	0.01 U	0.053	0.05
Dibenzo(a,h)anthracene in mg/kg			0.01 U	0.01 U	0.01 U	0.01 U	0.01 U	0.01 U	0.01 U	0.01 U	0.01 U	0.01 U	0.01 U	0.01 U	0.01 U	0.01 U	0.01	0.01 U	0.01 U	0.01 U	0.01 U	0.01 U	0.01 U	0.01 U	0.01 U	0.01 U	0.01 U
Indeno(1,2,3-cd)pyrene in mg/kg			0.01 U	0.01 U	0.01 U	0.01 U	0.01 U	0.01 U	0.01 U	0.01 U	0.01 U	0.01 U	0.01 U	0.01 U	0.01 U	0.01 U	0.017	0.01 U	0.01 U	0.01 U	0.01 U	0.01 U	0.01 U	0.01 U	0.01 U	0.019	0.02
Total cPAHs TEQ in mg/kg	0.4	7.9	ND	ND	ND	ND	ND	ND	0.0546	ND	ND	ND	ND	ND	ND	ND	0.0621	ND	ND	ND	ND	ND	ND	ND	ND	0.0395	0.0363
Volatile Organic Compounds (VOC)																											
1,1,1,2-Tetrachloroethane in mg/kg	5,000	5,000				0.05 U																					
1,1,1-Trichloroethane in mg/kg	7,000,000	7,000,000				0.05 U																					
1,1,2,2-Tetrachloroethane in mg/kg	660	660				0.05 U																					
1,1,2-Trichloroethane in mg/kg	2,300	2,300				0.05 U																					
1,1-Dichloroethane in mg/kg	23,000	23,000				0.05 U																					
1,1-Dichloroethene in mg/kg	180,000	180,000				0.05 U																					
1,1-Dichloropropene in mg/kg						0.05 U																					
1,2,3-Trichlorobenzene in mg/kg						0.25 U																					
1,2,3-Trichloropropane in mg/kg	4.4	4.4				0.05 U																					
1,2,4-Trichlorobenzene in mg/kg	4,500	4,500				0.25 U																					
1,2,4-Trimethylbenzene in mg/kg						0.05 U																					
1,2-Dibromo-3-chloropropane in mg/kg	160	160				0.5 U																					
1,2-Dibromoethane (EDB) in mg/kg	66	66				0.05 U																					
1,2-Dichlorobenzene in mg/kg	320,000	320,000				0.05 U																					
1,2-Dichloroethane (EDC) in mg/kg	1,400	1,400				0.05 U																					
1,2-Dichloropropane in mg/kg	3,600	3,600				0.05 U																					
1,3,5-Trimethylbenzene in mg/kg	35,000	35,000				0.05 U																					
1,3-Dichlorobenzene in mg/kg						0.05 U																					
1,3-Dichloropropane in mg/kg						0.05 U																					
1,4-Dichlorobenzene in mg/kg	24,000	24,000				0.05 U																					
2,2-Dichloropropane in mg/kg						0.05 U																					
2-Butanone in mg/kg	2,100,000	2,100,000				0.5 U																					
2-Chlorotoluene in mg/kg	70,000	70,000				0.05 U																					
2-Hexanone in mg/kg						0.5 U																					
4-Chlorotoluene in mg/kg						0.05 U																					
4-Methyl-2-pentanone in mg/kg	280,000	280,000				0.5 U																					

Table 7 - Excavation Verification Soil Quality Data for Bunker C ASTs Interim Action Area

K-C Worldwide Site Upland Area 110207

			Bottom Samples in Place																								
Chemical Name	Interim Action Cleanup Level - Saturated Soil	Interim Action Cleanup Level - Unsaturated Soil	BAST-B029 10/22/13 (7 ft) SAT	BAST-B030 10/17/13 (3.5 ft) SAT	BAST-B031 10/17/13 (4 ft) SAT	BAST-B032 10/23/13 (3 ft)	BAST-B033 10/22/13 (3 ft) SAT	BAST-B034 10/22/13 (7 ft) SAT	BAST-B035 10/22/13 (7 ft) SAT	BAST-B036 10/21/13 (7 ft) SAT	BAST-B037 10/22/13 (7 ft) SAT	BAST-B038 10/22/13 (7 ft) SAT	BAST-B039 10/21/13 (3 ft)	BAST-B040 10/22/13 (3 ft) SAT	BAST-B041 10/17/13 (3.5 ft) SAT	BAST-B042 10/18/13 (6 ft) SAT	BAST-B043 10/24/13 (9 ft) SAT	BAST-B044 10/24/13 (9 ft) SAT	BAST-B045 10/24/13 (9 ft) SAT	BAST-B046 10/25/13 (7 ft) SAT	BAST-B047 10/25/13 (8 ft) SAT	BAST-B048 10/30/13 (3 ft)	BAST-B048 FD 10/30/13 (3 ft)	BAST-B049 10/30/13 (3 ft)	BAST-B050 10/30/13 (3 ft)	BAST-B051 11/1/13 (5 ft) SAT	BAST-B051 FD 11/1/13 (5 ft) SAT
Acetone in mg/kg	3,200,000	3,200,000				0.5 U																					
Benzene in mg/kg	2,400	2,400				0.03 U																					
Bromobenzene in mg/kg						0.05 U																					
Bromodichloromethane in mg/kg	2,100	2,100				0.05 U																					
Bromoform in mg/kg	17,000	17,000				0.05 U																					
Bromomethane in mg/kg	4,900	4,900				0.5 U																					
Carbon tetrachloride in mg/kg	1,900	1,900				0.05 U																					
Chlorobenzene in mg/kg	70,000	70,000				0.05 U																					
Chloroethane in mg/kg						0.5 U																					
Chloroform in mg/kg	4,200	4,200				0.05 U																					
Chloromethane in mg/kg						0.5 U																					
cis-1,2-Dichloroethene (DCE) in mg/kg	7,000	7,000				0.05 U																					
cis-1,3-Dichloropropene in mg/kg						0.05 U																					
Dibromochloromethane in mg/kg	1,600	1,600				0.05 U																					
Dibromomethane in mg/kg	35,000	35,000				0.05 U																					
Dichlorodifluoromethane in mg/kg	700,000	700,000				0.5 U																					
Ethylbenzene in mg/kg	350,000	350,000				0.05 U																					
Hexachlorobutadiene in mg/kg	1,700	1,700				0.25 U																					
Isopropylbenzene in mg/kg	350,000	350,000				0.05 U																					
Methyl tert-butyl ether (MTBE) in mg/kg	73,000	73,000				0.05 U																					
Methylene chloride in mg/kg	21,000	21,000				0.5 U																					
n-Propylbenzene in mg/kg	350,000	350,000				0.05 U																					
p-Isopropyltoluene in mg/kg						0.05 U																					
sec-Butylbenzene in mg/kg	350,000	350,000				0.05 U																					
Styrene in mg/kg	700,000	700,000				0.05 U																					
tert-Butylbenzene in mg/kg	350,000	350,000				0.05 U																					
Tetrachloroethene (PCE) in mg/kg	21,000	21,000				0.025 U																					
Toluene in mg/kg	280,000	280,000				0.05 U																					
trans-1,2-Dichloroethene in mg/kg	70,000	70,000				0.05 U																					
trans-1,3-Dichloropropene in mg/kg						0.05 U																					
Trichloroethene (TCE) in mg/kg	1,800	1,800				0.03 U																					
Trichlorofluoromethane in mg/kg	1,100,000	1,100,000				0.5 U																					
Vinyl chloride in mg/kg	88	88				0.05 U																					
m,p-Xylenes in mg/kg	49	2.5				0.1 U																					
o-Xylene in mg/kg	80	4.1				0.05 U																					
Naphthalene in mg/kg	70,000	70,000				0.05 U																					
Polychlorinated Biphenyls (PCBs)																											
Aroclor 1016 in mg/kg																											
Aroclor 1221 in mg/kg																											
Aroclor 1232 in mg/kg																											
Aroclor 1242 in mg/kg																											
Aroclor 1248 in mg/kg																											
Aroclor 1254 in mg/kg																											
Aroclor 1260 in mg/kg																											
Total PCBs (Sum of Aroclors) in mg/kg	10	10																									

Notes

Concentrations in shaded cells indicate value exceeds Interim Action Cleanup Level - Saturated Soil.
Concentrations in bold text indicate value exceeds Interim Action Cleanup Level - Unsaturated Soil.
SAT = Sample of saturated soil; samples without this designation are unsaturated soil.
J = Analyte was positively identified. The reported result is an estimate.
U = Analyte was not detected at or above the reported result.
UJ = Analyte was not detected at or above the reported estimate.
x = The sample chromatographic pattern does not resemble the fuel standard used for quantitation.

Table 7 - Excavation Verification Soil Quality Data for Bunker C ASTs Interim Action Area

K-C Worldwide Site Upland Area 110207

Chemical Name	Interim Action Cleanup Level - Saturated Soil	Interim Action Cleanup Level - Unsaturated Soil	Bottom Samples in Place																							
			BAST-B052 12/23/13 (7 ft) SAT	BAST-B052 FD 12/23/13 (7 ft) SAT	BAST-B053 1/2/14 (10 ft) SAT	BAST-B054 12/23/13 (7 ft) SAT	BAST-B055 1/2/14 (10 ft) SAT	BAST-B056 1/27/14 (4 ft)	BAST-B057 1/27/14 (7 ft) SAT	BAST-B058 1/27/14 (4 ft)	BAST-B059 1/27/14 (4 ft)	BAST-B060 1/27/14 (4 ft)	BAST-B061 1/27/14 (4 ft)	BAST-B062 1/27/14 (4 ft) SAT	BAST-B063 1/27/14 (4 ft) SAT	BAST-B064 1/27/14 (4 ft) SAT	BAST-B065 1/27/14 (3.5 ft)	BAST-B065 FD 1/27/14 (3.5 ft)	BAST-B066 1/28/14 (7 ft) SAT	BAST-B067 2/11/14 (5 ft)	BAST-B068 2/11/14 (5 ft)	BAST-B069 2/11/14 (5 ft)	BAST-B070 2/13/14 (4 ft)	BAST-B072 2/20/14 (6 ft)	BAST-B072 FD 2/20/14 (6 ft)	BAST-B073 2/20/14 (7 ft) SAT	BAST-B074 2/21/14 (7 ft) SAT
Total Petroleum Hydrocarbons (TPH)																										
Gasoline Range Hydrocarbons in mg/kg	100	100			2 U		2 U												2 U	4.4	2 U	2 U	2 U	2 U	2 U	2 U
Diesel Range Hydrocarbons in mg/kg	2,000	2,000	50 U	50 U	50 U	290	50 U												50 U	91	50 U	50 U	68	50 U	50 U	50 U
Oil Range Hydrocarbons in mg/kg	2,000	2,000	250 U	250 U	250 U	250 U	250 U												250 U	250 U	250 U	250 U	250 U	250 U	250 U	250 U
Bunker C in mg/kg	2,000	2,000						250 U	250 U	250 U	250 U	250 U	250 U	250 U	250 U	250 U	250 U	250 U								
Total TPHs in mg/kg	2,000	2,000	ND	ND	ND	415	ND	250 U	250 U	250 U	250 U	250 U	250 U	250 U	250 U	250 U	250 U	250 U	ND	216	ND	ND	193	ND	ND	ND
Metals																										
Antimony in mg/kg	1,400	1,400	1 U	1 U																						
Arsenic in mg/kg	20	20	2.99	3.44								5.18					1 U	1 U						4.93	4.62	
Barium in mg/kg	700,000	700,000																								
Beryllium in mg/kg	7,000	7,000																								
Cadmium in mg/kg	3,500	3,500	1 U	1 U								1 U					1 U	1 U						1 U	1 U	
Chromium (Total) in mg/kg	5,300,000	5,300,000																								
Copper in mg/kg	36	36	6.32	6.11								19.6					15.6	14.9						6.4	5.94	
Lead in mg/kg	81	1,000	2.22	2.39								5.68					3.22	2.47						1.79	1.75	
Mercury in mg/kg	0.1	0.1	0.1 U	0.1 U								**0.13**					0.1 U	0.1 U						0.1 U	0.1 U	
Nickel in mg/kg	48	48	12	12.9								16.8					11.5	11.3						9.75	9.27	
Selenium in mg/kg	18,000	18,000																								
Silver in mg/kg	18,000	18,000																								
Thallium in mg/kg	35	35																								
Zinc in mg/kg	85	100	11.2	11.8								45.6					71.6	66.7						10.9	10.1	
Polycyclic Aromatic Hydrocarbons (PAHs)																										
Acenaphthene in mg/kg	210,000	210,000	0.027	0.025	0.01 U	0.17	0.01 U	0.01 U	0.016	0.01 U	0.01 U	0.057	0.01 U	0.01 U	0.01 U	0.01 U	0.01 U	0.011	0.01 U	0.015	0.011	0.01 U	0.01 U	0.01 U	0.01 U	0.01 U
Acenaphthylene in mg/kg			0.01 U	0.01 U	0.01 U	0.01 U	0.01 U	0.01 U	0.01 U	0.01 U	0.01 U	0.01 U	0.01 U	0.01 U	0.01 U	0.01 U	0.01 U	0.01 U	0.01 U	0.01 U	0.01 U	0.01 U	0.01 U	0.01 U	0.01 U	0.01 U
Anthracene in mg/kg	1,100,000	1,100,000	0.01 U	0.01 U	0.01 U	0.01 U	0.01 U	0.01 U	0.01 U	0.01 U	0.01 U	0.1	0.01 U	0.01 U	0.01 U	0.01 U	0.01 UJ	0.025 J	0.01 U	0.01 U	0.01 U	0.01 U	0.01 U	0.01 U	0.01 U	0.01 U
Benzo(g,h,i)perylene in mg/kg			0.01 U	0.01 U	0.01 U	0.01 U	0.01 U	0.01 U	0.01 U	0.01 U	0.01 U	0.041	0.01 U	0.01 U	0.01 U	0.01 U	0.01 U	0.01 U	0.01 U	0.01 U	0.01 U	0.01 U	0.01 U	0.01 U	0.01 U	0.01 U
Dibenzofuran in mg/kg	3,500	3,500																								
Fluoranthene in mg/kg	140,000	140,000	0.01 U	0.01 U	0.01 U	0.01 U	0.01 U	0.01 U	0.01 U	0.01 U	0.01 U	0.036	0.01 U	0.01 U	0.01 U	0.01 U	0.01 U	0.01 U	0.01 U	0.01 U	0.01 U	0.01 U	0.01 U	0.01 U	0.01 U	0.01 U
Fluorene in mg/kg	140,000	140,000	0.01 U	0.01 U	0.01 U	0.044	0.01 U	0.01 U	0.01 U	0.01 U	0.01 U	0.079	0.01 U	0.01 U	0.014	0.01 U	0.01 U	0.016	0.01 U	0.094	0.06	0.01 U	0.01 U	0.01 U	0.01	0.013	0.01 U
Phenanthrene in mg/kg			0.01 U	0.01 U	0.01 U	0.01 U	0.01 U	0.01 U	0.01 U	0.01 U	0.015	0.35	0.01 U	0.01 U	0.027	0.01 U	0.018 J	0.084 J	0.01 U	0.1	0.01 U	0.01 U	0.01 U	0.01 U	0.01 U	0.01 U	0.01 U
Pyrene in mg/kg	110,000	110,000	0.01 U	0.01 U	0.01 U	0.014	0.01 U	0.01 U	0.01 U	0.01 U	0.015	0.25	0.01 U	0.01 U	0.015	0.01 U	0.01 UJ	0.06 J	0.01 U	0.013	0.01 U	0.01 U	0.01 U	0.01 U	0.01 U	0.01 U
2-Methylnaphthalene in mg/kg	14,000	14,000																								
Naphthalene in mg/kg	70,000	70,000	0.01 U	0.01 U	0.01 U	0.01 U	0.01 U	0.015	0.092	0.01 U	0.01 U	0.089	0.01 U	0.01 U	0.025	0.01 U	0.01 U	0.01 U	0.015	0.016	0.01 U	0.01 U	0.01 U	0.01 U	0.013	0.01 U
Benz(a)anthracene in mg/kg			0.01 U	0.01 U	0.01 U	0.01 U	0.01 U	0.01 U	0.01 U	0.01 U	0.01 U	0.084	0.01 U	0.01 U	0.01 U	0.01 U	0.01 UJ	0.029 J	0.01 U	0.01 U	0.01 U	0.01 U	0.01 U	0.01 U	0.01 U	0.01 U
Benzo(a)pyrene in mg/kg			0.01 U	0.01 U	0.01 U	0.01 U	0.01 U	0.01 U	0.01 U	0.01 U	0.01 U	0.066	0.01 U	0.01 U	0.01 U	0.01 U	0.01 U	0.017	0.01 U	0.01 U	0.01 U	0.01 U	0.01 U	0.01 U	0.01 U	0.01 U
Benzo(b)fluoranthene in mg/kg			0.01 U	0.01 U	0.01 U	0.01 U	0.01 U	0.01 U	0.01 U	0.01 U	0.01 U	0.026	0.01 U	0.01 U	0.01 U	0.01 U	0.01 U	0.01 U	0.01 U	0.01 U	0.01 U	0.01 U	0.01 U	0.01 U	0.01 U	0.01 U
Benzo(k)fluoranthene in mg/kg			0.01 U	0.01 U	0.01 U	0.01 U	0.01 U	0.01 U	0.01 U	0.01 U	0.01 U	0.01 U	0.01 U	0.01 U	0.01 U	0.01 U	0.01 U	0.01 U	0.01 U	0.01 U	0.01 U	0.01 U	0.01 U	0.01 U	0.01 U	0.01 U
Chrysene in mg/kg			0.01 U	0.01 U	0.01 U	0.01 U	0.01 U	0.01 U	0.01 U	0.01 U	0.01 U	0.1	0.01 U	0.01 U	0.01 U	0.01 U	0.01 UJ	0.034 J	0.01 U	0.01 U	0.01 U	0.01 U	0.01 U	0.01 U	0.01 U	0.01 U
Dibenzo(a,h)anthracene in mg/kg			0.01 U	0.01 U	0.01 U	0.01 U	0.01 U	0.01 U	0.01 U	0.01 U	0.01 U	0.01 U	0.01 U	0.01 U	0.01 U	0.01 U	0.01 U	0.01 U	0.01 U	0.01 U	0.01 U	0.01 U	0.01 U	0.01 U	0.01 U	0.01 U
Indeno(1,2,3-cd)pyrene in mg/kg			0.01 U	0.01 U	0.01 U	0.01 U	0.01 U	0.01 U	0.01 U	0.01 U	0.01 U	0.01	0.01 U	0.01 U	0.01 U	0.01 U	0.01 U	0.01 U	0.01 U	0.01 U	0.01 U	0.01 U	0.01 U	0.01 U	0.01 U	0.01 U
Total cPAHs TEQ in mg/kg	0.4	7.9	ND	ND	ND	ND	ND	ND	ND	ND	ND	0.08	ND	ND	ND	ND	ND	0.0222	ND	ND	ND	ND	ND	ND	ND	ND
Volatile Organic Compounds (VOC)																										
1,1,1,2-Tetrachloroethane in mg/kg	5,000	5,000			0.05 U		0.05 U												0.05 U	0.05 U	0.05 U	0.05 U	0.05 U	0.05 U	0.05 U	0.05 U
1,1,1-Trichloroethane in mg/kg	7,000,000	7,000,000			0.05 U		0.05 U												0.05 U	0.05 U	0.05 U	0.05 U	0.05 U	0.05 U	0.05 U	0.05 U
1,1,2,2-Tetrachloroethane in mg/kg	660	660			0.05 U		0.05 U												0.05 U	0.05 U	0.05 U	0.05 U	0.05 U	0.05 U	0.05 U	0.05 U
1,1,2-Trichloroethane in mg/kg	2,300	2,300			0.05 U		0.05 U												0.05 U	0.05 U	0.05 U	0.05 U	0.05 U	0.05 U	0.05 U	0.05 U
1,1-Dichloroethane in mg/kg	23,000	23,000			0.05 U		0.05 U												0.05 U	0.05 U	0.05 U	0.05 U	0.05 U	0.05 U	0.05 U	0.05 U
1,1-Dichloroethene in mg/kg	180,000	180,000			0.05 U		0.05 U												0.05 U	0.05 U	0.05 U	0.05 U	0.05 U	0.05 U	0.05 U	0.05 U
1,1-Dichloropropene in mg/kg					0.05 U		0.05 U												0.05 U	0.05 U	0.05 U	0.05 U	0.05 U	0.05 U	0.05 U	0.05 U
1,2,3-Trichlorobenzene in mg/kg					0.25 U		0.25 U												0.25 U	0.25 U	0.25 U	0.25 U	0.25 U	0.25 U	0.25 U	0.25 U
1,2,3-Trichloropropane in mg/kg	4.4	4.4			0.05 U		0.05 U												0.05 U	0.05 U	0.05 U	0.05 U	0.05 U	0.05 U	0.05 U	0.05 U
1,2,4-Trichlorobenzene in mg/kg	4,500	4,500			0.25 U		0.25 U												0.25 U	0.25 U	0.25 U	0.25 U	0.25 U	0.25 U	0.25 U	0.25 U
1,2,4-Trimethylbenzene in mg/kg					0.05 U		0.05 U												0.05 U	0.05 U	0.05 U	0.05 U	0.05 U	0.05 U	0.05 U	0.05 U
1,2-Dibromo-3-chloropropane in mg/kg	160	160			0.5 U		0.5 U												0.5 U	0.5 U	0.5 U	0.5 U	0.5 U	0.5 U	0.5 U	0.5 U
1,2-Dibromoethane (EDB) in mg/kg	66	66			0.05 U		0.05 U												0.05 U	0.05 U	0.05 U	0.05 U	0.05 U	0.05 U	0.05 U	0.05 U
1,2-Dichlorobenzene in mg/kg	320,000	320,000			0.05 U		0.05 U												0.05 U	0.05 U	0.05 U	0.05 U	0.05 U	0.05 U	0.05 U	0.05 U
1,2-Dichloroethane (EDC) in mg/kg	1,400	1,400			0.05 U		0.05 U												0.05 U	0.05 U	0.05 U	0.05 U	0.05 U	0.05 U	0.05 U	0.05 U
1,2-Dichloropropane in mg/kg	3,600	3,600			0.05 U		0.05 U												0.05 U	0.05 U	0.05 U	0.05 U	0.05 U	0.05 U	0.05 U	0.05 U
1,3,5-Trimethylbenzene in mg/kg	35,000	35,000			0.05 U		0.05 U												0.05 U	0.05 U	0.05 U	0.05 U	0.05 U	0.05 U	0.05 U	0.05 U
1,3-Dichlorobenzene in mg/kg					0.05 U		0.05 U												0.05 U	0.05 U	0.05 U	0.05 U	0.05 U	0.05 U	0.05 U	0.05 U
1,3-Dichloropropane in mg/kg					0.05 U		0.05 U												0.05 U	0.05 U	0.05 U	0.05 U	0.05 U	0.05 U	0.05 U	0.05 U
1,4-Dichlorobenzene in mg/kg	24,000	24,000			0.05 U		0.05 U												0.05 U	0.05 U	0.05 U	0.05 U	0.05 U	0.05 U	0.05 U	0.05 U
2,2-Dichloropropane in mg/kg					0.05 U		0.05 U												0.05 U	0.05 U	0.05 U	0.05 U	0.05 U	0.05 U	0.05 U	0.05 U
2-Butanone in mg/kg	2,100,000	2,100,000			0.5 U		0.5 U												0.5 U	0.5 U	0.5 U	0.5 U	0.5 U	0.5 U	0.5 U	0.5 U
2-Chlorotoluene in mg/kg	70,000	70,000			0.05 U		0.05 U												0.05 U	0.05 U	0.05 U	0.05 U	0.05 U	0.05 U	0.05 U	0.05 U
2-Hexanone in mg/kg					0.5 U		0.5 U												0.5 U	0.5 U	0.5 U	0.5 U	0.5 U	0.5 U	0.5 U	0.5 U
4-Chlorotoluene in mg/kg					0.05 U		0.05 U												0.05 U	0.05 U	0.05 U	0.05 U	0.05 U	0.05 U	0.05 U	0.05 U
4-Methyl-2-pentanone in mg/kg	280,000	280,000			0.5 U		0.5 U												0.5 U	0.5 U	0.5 U	0.5 U	0.5 U	0.5 U	0.5 U	0.5 U

Table 7 - Excavation Verification Soil Quality Data for Bunker C ASTs Interim Action Area

K-C Worldwide Site Upland Area 110207

			Bottom Samples in Place																						
Chemical Name	Interim Action Cleanup Level - Saturated Soil	Interim Action Cleanup Level - Unsaturated Soil	BAST-B052 12/23/13 (7 ft) SAT	BAST-B052 FD 12/23/13 (7 ft) SAT	BAST-B053 1/2/14 (10 ft) SAT	BAST-B054 12/23/13 (7 ft) SAT	BAST-B055 1/2/14 (10 ft) SAT	BAST-B056 1/27/14 (4 ft)	BAST-B057 1/27/14 (7 ft) SAT	BAST-B058 1/27/14 (4 ft)	BAST-B059 1/27/14 (4 ft)	BAST-B060 1/27/14 (4 ft)	BAST-B061 1/27/14 (4 ft)	BAST-B062 1/27/14 (4 ft) SAT	BAST-B063 1/27/14 (4 ft) SAT	BAST-B064 1/27/14 (4 ft) SAT	BAST-B065 1/27/14 (3.5 ft)	BAST-B065 FD 1/27/14 (3.5 ft)	BAST-B066 1/28/14 (7 ft) SAT	BAST-B067 2/11/14 (5 ft)	BAST-B068 2/11/14 (5 ft)	BAST-B069 2/11/14 (5 ft)	BAST-B070 2/13/14 (4 ft)	BAST-B072 2/20/14 (6 ft)	BAST-B072 FD 2/20/14 (6 ft)	BAST-B073 2/20/14 (7 ft) SAT	BAST-B074 2/21/14 (7 ft) SAT
Acetone in mg/kg	3,200,000	3,200,000			0.5 U		0.5 U												0.5 U	0.5 U	0.5 U	0.5 U	0.5 U	0.5 U	0.5 U	0.5 U	0.5 U
Benzene in mg/kg	2,400	2,400			0.03 U		0.03 U												0.03 U	0.03 U	0.03 U	0.03 U	0.03 U	0.03 U	0.03 U	0.03 U	0.03 U
Bromobenzene in mg/kg					0.05 U		0.05 U												0.05 U	0.05 U	0.05 U	0.05 U	0.05 U	0.05 U	0.05 U	0.05 U	0.05 U
Bromodichloromethane in mg/kg	2,100	2,100			0.05 U		0.05 U												0.05 U	0.05 U	0.05 U	0.05 U	0.05 U	0.05 U	0.05 U	0.05 U	0.05 U
Bromoform in mg/kg	17,000	17,000			0.05 U		0.05 U												0.05 U	0.05 U	0.05 U	0.05 U	0.05 U	0.05 U	0.05 U	0.05 U	0.05 U
Bromomethane in mg/kg	4,900	4,900			0.5 U		0.5 U												0.5 U	0.5 UJ	0.5 UJ	0.5 UJ	0.5 U	0.5 U	0.5 U	0.5 U	0.5 U
Carbon tetrachloride in mg/kg	1,900	1,900			0.05 U		0.05 U												0.05 U	0.05 U	0.05 U	0.05 U	0.05 U	0.05 U	0.05 U	0.05 U	0.05 U
Chlorobenzene in mg/kg	70,000	70,000			0.05 U		0.05 U												0.05 U	0.05 U	0.05 U	0.05 U	0.05 U	0.05 U	0.05 U	0.05 U	0.05 U
Chloroethane in mg/kg					0.5 U		0.5 U												0.5 U	0.5 U	0.5 U	0.5 U	0.5 U	0.5 U	0.5 U	0.5 U	0.5 U
Chloroform in mg/kg	4,200	4,200			0.05 U		0.05 U												0.05 U	0.05 U	0.05 U	0.05 U	0.05 U	0.05 U	0.05 U	0.05 U	0.05 U
Chloromethane in mg/kg					0.5 U		0.5 U												0.5 U	0.5 U	0.5 U	0.5 U	0.5 U	0.5 U	0.5 U	0.5 U	0.5 U
cis-1,2-Dichloroethene (DCE) in mg/kg	7,000	7,000			0.05 U		0.05 U												0.05 U	0.05 U	0.05 U	0.05 U	0.05 U	0.05 U	0.05 U	0.05 U	0.05 U
cis-1,3-Dichloropropene in mg/kg					0.05 U		0.05 U												0.05 U	0.05 U	0.05 U	0.05 U	0.05 U	0.05 U	0.05 U	0.05 U	0.05 U
Dibromochloromethane in mg/kg	1,600	1,600			0.05 U		0.05 U												0.05 U	0.05 U	0.05 U	0.05 U	0.05 U	0.05 U	0.05 U	0.05 U	0.05 U
Dibromomethane in mg/kg	35,000	35,000			0.05 U		0.05 U												0.05 U	0.05 U	0.05 U	0.05 U	0.05 U	0.05 U	0.05 U	0.05 U	0.05 U
Dichlorodifluoromethane in mg/kg	700,000	700,000			0.5 U		0.5 U												0.5 U	0.5 U	0.5 U	0.5 U	0.5 U	0.5 U	0.5 U	0.5 U	0.5 U
Ethylbenzene in mg/kg	350,000	350,000			0.05 U		0.05 U												0.05 U	0.05 U	0.05 U	0.05 U	0.05 U	0.05 U	0.05 U	0.05 U	0.05 U
Hexachlorobutadiene in mg/kg	1,700	1,700			0.25 U		0.25 U												0.25 U	0.25 U	0.25 U	0.25 U	0.25 U	0.25 U	0.25 U	0.25 U	0.25 U
Isopropylbenzene in mg/kg	350,000	350,000			0.05 U		0.05 U												0.05 U	0.05 U	0.05 U	0.05 U	0.05 U	0.05 U	0.05 U	0.05 U	0.05 U
Methyl tert-butyl ether (MTBE) in mg/kg	73,000	73,000			0.05 U		0.05 U												0.05 U	0.05 U	0.05 U	0.05 U	0.05 U	0.05 U	0.05 U	0.05 U	0.05 U
Methylene chloride in mg/kg	21,000	21,000			0.5 U		0.5 U												0.5 U	0.5 U	0.5 U	0.5 U	0.5 U	0.5 U	0.5 U	0.5 U	0.5 U
n-Propylbenzene in mg/kg	350,000	350,000			0.05 U		0.05 U												0.05 U	0.05 U	0.05 U	0.05 U	0.05 U	0.05 U	0.05 U	0.05 U	0.05 U
p-Isopropyltoluene in mg/kg					0.05 U		0.05 U												0.05 U	0.05 U	0.05 U	0.05 U	0.05 U	0.05 U	0.05 U	0.05 U	0.05 U
sec-Butylbenzene in mg/kg	350,000	350,000			0.05 U		0.05 U												0.05 U	0.05 U	0.05 U	0.05 U	0.05 U	0.05 U	0.05 U	0.05 U	0.05 U
Styrene in mg/kg	700,000	700,000			0.05 U		0.05 U												0.05 U	0.05 U	0.05 U	0.05 U	0.05 U	0.05 U	0.05 U	0.05 U	0.05 U
tert-Butylbenzene in mg/kg	350,000	350,000			0.05 U		0.05 U												0.05 U	0.05 U	0.05 U	0.05 U	0.05 U	0.05 U	0.05 U	0.05 U	0.05 U
Tetrachloroethene (PCE) in mg/kg	21,000	21,000			0.025 U		0.025 U												0.025 U	0.025 U	0.025 U	0.025 U	0.025 U	0.025 U	0.025 U	0.025 U	0.025 U
Toluene in mg/kg	280,000	280,000			0.05 U		0.05 U												0.05 U	0.05 U	0.05 U	0.05 U	0.05 U	0.05 U	0.05 U	0.05 U	0.05 U
trans-1,2-Dichloroethene in mg/kg	70,000	70,000			0.05 U		0.05 U												0.05 U	0.05 U	0.05 U	0.05 U	0.05 U	0.05 U	0.05 U	0.05 U	0.05 U
trans-1,3-Dichloropropene in mg/kg					0.05 U		0.05 U												0.05 U	0.05 U	0.05 U	0.05 U	0.05 U	0.05 U	0.05 U	0.05 U	0.05 U
Trichloroethene (TCE) in mg/kg	1,800	1,800			0.03 U		0.03 U												0.03 U	0.03 U	0.03 U	0.03 U	0.03 U	0.03 U	0.03 U	0.03 U	0.03 U
Trichlorofluoromethane in mg/kg	1,100,000	1,100,000			0.5 U		0.5 U												0.5 U	0.5 U	0.5 U	0.5 U	0.5 U	0.5 U	0.5 U	0.5 U	0.5 U
Vinyl chloride in mg/kg	88	88			0.05 U		0.05 U												0.05 U	0.05 U	0.05 U	0.05 U	0.05 U	0.05 U	0.05 U	0.05 U	0.05 U
m,p-Xylenes in mg/kg	49	2.5			0.1 U		0.1 U												0.1 U	0.1 U	0.1 U	0.1 U	0.1 U	0.1 U	0.1 U	0.1 U	0.1 U
o-Xylene in mg/kg	80	4.1			0.05 U		0.05 U												0.05 U	0.05 U	0.05 U	0.05 U	0.05 U	0.05 U	0.05 U	0.05 U	0.05 U
Naphthalene in mg/kg	70,000	70,000																		0.05 U	0.05 U	0.05 U	0.05 U	0.05 U	0.05 U	0.05 U	0.05 U
Polychlorinated Biphenyls (PCBs)																											
Aroclor 1016 in mg/kg																											
Aroclor 1221 in mg/kg																											
Aroclor 1232 in mg/kg																											
Aroclor 1242 in mg/kg																											
Aroclor 1248 in mg/kg																											
Aroclor 1254 in mg/kg																											
Aroclor 1260 in mg/kg																											
Total PCBs (Sum of Aroclors) in mg/kg	10	10																									

Notes

Concentrations in shaded cells indicate value exceeds Interim Action Cleanup Level - Saturated Soil.
Concentrations in bold text indicate value exceeds Interim Action Cleanup Level - Unsaturated Soil.
SAT = Sample of saturated soil; samples without this designation are unsaturated soil.
J = Analyte was positively identified. The reported result is an estimate.
U = Analyte was not detected at or above the reported result.
UJ = Analyte was not detected at or above the reported estimate.
x = The sample chromatographic pattern does not resemble the fuel standard used for quantitation.

Table 7 - Excavation Verification Soil Quality Data for Bunker C ASTs Interim Action Area

K-C Worldwide Site Upland Area 110207

			Bottom Samples in Place				Sidewall Samples in Place																	
Chemical Name	Interim Action Cleanup Level - Saturated Soil	Interim Action Cleanup Level - Unsaturated Soil	BAST-B075 2/21/14 (7 ft) SAT	BAST-B076 2/21/14 (7 ft) SAT	BAST-B077 2/21/14 (8 ft) SAT	BAST-B078 2/24/14 (4 ft)	BAST-S013 10/21/13 (3 ft)	BAST-S014 10/21/13 (3 ft)	BAST-S015 10/21/13 (3 ft)	BAST-S016 10/18/13 (3 ft)	BAST-S022 10/22/13 (3 ft)	BAST-S024 10/22/13 (3 ft) SAT	BAST-S025 10/18/13 (3 ft)	BAST-S026 10/23/13 (3 ft)	BAST-S027 10/23/13 (3 ft)	BAST-S028 10/23/13 (3 ft)	BAST-S029 10/23/13 (3 ft)	BAST-S033 10/25/13 (3 ft) SAT	BAST-S034 10/23/13 (3 ft)	BAST-S034A 11/1/13 (3 ft) SAT	BAST-S035 11/1/13 (3 ft) SAT	BAST-S036 11/1/13 (3 ft) SAT	BAST-S041 12/23/13 (3 ft)	BAST-S042 12/23/13 (5 ft) SAT	BAST-S043 12/30/13 (3 ft)
Total Petroleum Hydrocarbons (TPH)																									
Gasoline Range Hydrocarbons in mg/kg	100	100	2 U	2 U	2 U	2 U									2 U	2 U	2 U								2 U
Diesel Range Hydrocarbons in mg/kg	2,000	2,000	50 U	50 U	50 U	50 U																	50 U	50 U	50 U
Oil Range Hydrocarbons in mg/kg	2,000	2,000	250 U	250 U	250 U	250 U																	250 U	250 U	1,700
Bunker C in mg/kg	2,000	2,000					250 U	250 U	250 U	250 U	250 U	650	250 U	250 U	250 U	250 U	250 U	250 U	250 U	250 U	250 U	250 U			
Total TPHs in mg/kg	2,000	2,000	ND	ND	ND	ND	250 U	250 U	250 U	250 U	250 U	650	250 U	250 U	250 U	250 U	250 U	250 U	250 U	250 U	250 U	250 U	ND	ND	1,720
Metals																									
Antimony in mg/kg	1,400	1,400								1 U															
Arsenic in mg/kg	20	20		1 U					1 U	17								1.69 J	4.03						3.05
Barium in mg/kg	700,000	700,000																							
Beryllium in mg/kg	7,000	7,000																							
Cadmium in mg/kg	3,500	3,500		1 U					1 U	1 U								1 U	1 U						1 U
Chromium (Total) in mg/kg	5,300,000	5,300,000																							
Copper in mg/kg	36	36		3.92					13.5	**52.9**								4.54 J	25.4						9.53
Lead in mg/kg	81	1,000		1.33					2.16	10.1								1.85 J	3.27						97.6
Mercury in mg/kg	0.1	0.1		0.1 U					0.1 U	**0.11**								0.1 U	0.1 U						**0.18**
Nickel in mg/kg	48	48		10.7					11.1	40.6								6.7	24.6						9.33
Selenium in mg/kg	18,000	18,000																							
Silver in mg/kg	18,000	18,000																							
Thallium in mg/kg	35	35																							
Zinc in mg/kg	85	100		7.99					57.7 J	64.5								20.8	38.1						94.5
Polycyclic Aromatic Hydrocarbons (PAHs)																									
Acenaphthene in mg/kg	210,000	210,000	0.01 U	0.01 U	0.01 U	0.034	0.01 U	0.01 U	0.01 U	0.01 U	0.01 U	0.1	0.01 U	0.01 U	0.01 U	0.01 U	0.01 U	0.01 U	0.01 U	0.011	0.01 U	0.01 U	0.01 U	0.017	0.1 U
Acenaphthylene in mg/kg			0.01 U	0.01 U	0.01 U	0.01 U	0.01 U	0.01 U	0.01 U	0.01 U	0.01 U	0.1 U	0.01 U	0.01 U	0.01 U	0.01 U	0.01 U	0.01 U	0.01 U	0.01 U	0.01 U	0.01 U	0.01 U	0.01 U	0.1 U
Anthracene in mg/kg	1,100,000	1,100,000	0.01 U	0.01 U	0.01 U	0.01 U	0.01 U	0.01 U	0.01 U	0.01 U	0.01 U	0.6	0.01 U	0.01 U	0.01 U	0.01 U	0.01 U	0.01 U	0.01 U	0.018	0.01 U	0.01 U	0.01 U	0.01 U	0.1 U
Benzo(g,h,i)perylene in mg/kg			0.01 U	0.01 U	0.01 U	0.012	0.01 U	0.01 U	0.01 U	0.01 U	0.01 U	0.44	0.01 U	0.01 U	0.01 U	0.01 U	0.01 U	0.01 U	0.01 U	0.012	0.014	0.01	0.01 U	0.01 U	0.48
Dibenzofuran in mg/kg	3,500	3,500																							
Fluoranthene in mg/kg	140,000	140,000	0.01 U	0.01 U	0.01 U	0.045	0.01 U	0.01 U	0.01 U	0.017	0.01 U	1.9	0.01 U	0.01 U	0.01 U	0.01 U	0.011	0.01 U	0.01 U	0.07	0.026	0.013	0.01 U	0.01 U	0.1 U
Fluorene in mg/kg	140,000	140,000	0.01 U	0.01 U	0.01 U	0.01 U	0.01 U	0.01 U	0.01 U	0.01 U	0.01 U	0.13	0.01 U	0.01 U	0.01 U	0.01 U	0.01 U	0.012	0.01 U	0.01 U	0.01 U	0.01 U	0.01 U	0.01 U	0.1 U
Phenanthrene in mg/kg			0.01 U	0.01 U	0.01 U	0.035	0.01 U	0.01 U	0.01 U	0.01 U	0.01 U	1.5	0.022	0.01 U	0.01 U	0.01 U	0.01 U	0.01 U	0.014	0.072	0.01 U	0.034	0.01 U	0.01 U	0.1 U
Pyrene in mg/kg	110,000	110,000	0.01 U	0.01 U	0.01 U	0.051	0.01 U	0.01 U	0.01 U	0.019	0.01 U	1.9	0.01 U	0.01 U	0.01 U	0.01 U	0.014	0.01 U	0.01 U	0.073	0.025	0.024	0.01 U	0.01 U	0.24
2-Methylnaphthalene in mg/kg	14,000	14,000																							
Naphthalene in mg/kg	70,000	70,000	0.01 U	0.01 U	0.01 U	2.5	0.01 U	0.019	0.023	0.01 U	0.01 U	0.1 U	0.01 U	0.015	0.01 U	0.01 U	0.01	0.01 U	0.023	0.01 U	0.01 U	0.01 U	0.01 U	0.01 U	0.1 U
Benz(a)anthracene in mg/kg			0.01 U	0.01 U	0.01 U	0.014	0.01 U	0.01 U	0.01 U	0.01 U	0.01 U	0.78	0.01 U	0.01 U	0.01 U	0.01 U	0.01 U	0.01 U	0.01 U	0.032	0.01	0.013	0.01 U	0.01 U	0.1 U
Benzo(a)pyrene in mg/kg			0.01 U	0.01 U	0.01 U	0.013	0.01 U	0.01 U	0.01 U	0.01 U	0.01 U	0.61	0.01 U	0.01 U	0.01 U	0.01 U	0.01 U	0.01 U	0.01 U	0.024	0.013	0.01 U	0.01 U	0.01 U	0.25
Benzo(b)fluoranthene in mg/kg			0.01 U	0.01 U	0.01 U	0.024	0.01 U	0.01 U	0.01 U	0.01 U	0.01 U	0.76	0.01 U	0.01 U	0.01 U	0.01 U	0.01 U	0.01 U	0.01 U	0.029	0.015	0.013	0.01 U	0.01 U	0.1
Benzo(k)fluoranthene in mg/kg			0.01 U	0.01 U	0.01 U	0.01 U	0.01 U	0.01 U	0.01 U	0.01 U	0.01 U	0.27	0.01 U	0.01 U	0.01 U	0.01 U	0.01 U	0.01 U	0.01 U	0.012	0.01 U	0.01 U	0.01 U	0.01 U	0.1 U
Chrysene in mg/kg			0.01 U	0.01 U	0.01 U	0.02	0.01 U	0.01 U	0.01 U	0.01 U	0.01 U	0.97	0.01 U	0.01 U	0.01 U	0.01 U	0.01 U	0.01 U	0.01 U	0.036	0.011	0.017	0.01 U	0.01 U	0.19
Dibenzo(a,h)anthracene in mg/kg			0.01 U	0.01 U	0.01 U	0.01 U	0.01 U	0.01 U	0.01 U	0.01 U	0.01 U	0.1 U	0.01 U	0.01 U	0.01 U	0.01 U	0.01 U	0.01 U	0.01 U	0.01 U	0.01 U	0.01 U	0.01 U	0.01 U	0.1 U
Indeno(1,2,3-cd)pyrene in mg/kg			0.01 U	0.01 U	0.01 U	0.011 J	0.01 U	0.01 U	0.01 U	0.01 U	0.01 U	0.35	0.01 U	0.01 U	0.01 U	0.01 U	0.01 U	0.01 U	0.01 U	0.015	0.01 U	0.01 U	0.01 U	0.01 U	0.16
Total cPAHs TEQ in mg/kg	0.4	7.9	ND	ND	ND	0.0191	ND	ND	ND	ND	ND	0.841	ND	ND	ND	ND	ND	ND	ND	0.0337	0.0171	0.00927	ND	ND	0.293
Volatile Organic Compounds (VOC)																									
1,1,1,2-Tetrachloroethane in mg/kg	5,000	5,000	0.05 U	0.05 U	0.05 U	0.05 U									0.05 U	0.05 U	0.05 U								0.05 U
1,1,1-Trichloroethane in mg/kg	7,000,000	7,000,000	0.05 U	0.05 U	0.05 U	0.05 U									0.05 U	0.05 U	0.05 U								0.05 U
1,1,2,2-Tetrachloroethane in mg/kg	660	660	0.05 U	0.05 U	0.05 U	0.05 U									0.05 U	0.05 U	0.05 U								0.05 U
1,1,2-Trichloroethane in mg/kg	2,300	2,300	0.05 U	0.05 U	0.05 U	0.05 U									0.05 U	0.05 U	0.05 U								0.05 U
1,1-Dichloroethane in mg/kg	23,000	23,000	0.05 U	0.05 U	0.05 U	0.05 U									0.05 U	0.05 U	0.05 U								0.05 U
1,1-Dichloroethene in mg/kg	180,000	180,000	0.05 U	0.05 U	0.05 U	0.05 U									0.05 U	0.05 U	0.05 U								0.05 U
1,1-Dichloropropene in mg/kg			0.05 U	0.05 U	0.05 U	0.05 U									0.05 U	0.05 U	0.05 U								0.05 U
1,2,3-Trichlorobenzene in mg/kg			0.25 U	0.25 U	0.25 U	0.25 U									0.25 U	0.25 U	0.25 U								0.25 U
1,2,3-Trichloropropane in mg/kg	4.4	4.4	0.05 U	0.05 U	0.05 U	0.05 U									0.05 U	0.05 U	0.05 U								0.05 U
1,2,4-Trichlorobenzene in mg/kg	4,500	4,500	0.25 U	0.25 U	0.25 U	0.25 U									0.25 U	0.25 U	0.25 U								0.25 U
1,2,4-Trimethylbenzene in mg/kg			0.05 U	0.05 U	0.05 U	0.05 U									0.05 U	0.05 U	0.05 U								0.05 U
1,2-Dibromo-3-chloropropane in mg/kg	160	160	0.5 U	0.5 U	0.5 U	0.5 U									0.5 U	0.5 U	0.5 U								0.5 U
1,2-Dibromoethane (EDB) in mg/kg	66	66	0.05 U	0.05 U	0.05 U	0.05 U									0.05 U	0.05 U	0.05 U								0.05 U
1,2-Dichlorobenzene in mg/kg	320,000	320,000	0.05 U	0.05 U	0.05 U	0.05 U									0.05 U	0.05 U	0.05 U								0.05 U
1,2-Dichloroethane (EDC) in mg/kg	1,400	1,400	0.05 U	0.05 U	0.05 U	0.05 U									0.05 U	0.05 U	0.05 U								0.05 U
1,2-Dichloropropane in mg/kg	3,600	3,600	0.05 U	0.05 U	0.05 U	0.05 U									0.05 U	0.05 U	0.05 U								0.05 U
1,3,5-Trimethylbenzene in mg/kg	35,000	35,000	0.05 U	0.05 U	0.05 U	0.05 U									0.05 U	0.05 U	0.05 U								0.05 U
1,3-Dichlorobenzene in mg/kg			0.05 U	0.05 U	0.05 U	0.05 U									0.05 U	0.05 U	0.05 U								0.05 U
1,3-Dichloropropane in mg/kg			0.05 U	0.05 U	0.05 U	0.05 U									0.05 U	0.05 U	0.05 U								0.05 U
1,4-Dichlorobenzene in mg/kg	24,000	24,000	0.05 U	0.05 U	0.05 U	0.05 U									0.05 U	0.05 U	0.05 U								0.05 U
2,2-Dichloropropane in mg/kg			0.05 U	0.05 U	0.05 U	0.05 U									0.05 U	0.05 U	0.05 U								0.05 U
2-Butanone in mg/kg	2,100,000	2,100,000	0.5 U	0.5 U	0.5 U	0.5 U									0.5 U	0.5 U	0.5 U								0.5 U
2-Chlorotoluene in mg/kg	70,000	70,000	0.05 U	0.05 U	0.05 U	0.05 U									0.05 U	0.05 U	0.05 U								0.05 U
2-Hexanone in mg/kg			0.5 U	0.5 U	0.5 U	0.5 U									0.5 U	0.5 U	0.5 U								0.5 U
4-Chlorotoluene in mg/kg			0.05 U	0.05 U	0.05 U	0.05 U									0.05 U	0.05 U	0.05 U								0.05 U
4-Methyl-2-pentanone in mg/kg	280,000	280,000	0.5 U	0.5 U	0.5 U	0.5 U									0.5 U	0.5 U	0.5 U								0.5 U

Table 7 - Excavation Verification Soil Quality Data for Bunker C ASTs Interim Action Area

K-C Worldwide Site Upland Area 110207

			Bottom Samples in Place				Sidewall Samples in Place																	
Chemical Name	Interim Action Cleanup Level - Saturated Soil	Interim Action Cleanup Level - Unsaturated Soil	BAST-B075 2/21/14 (7 ft) SAT	BAST-B076 2/21/14 (7 ft) SAT	BAST-B077 2/21/14 (8 ft) SAT	BAST-B078 2/24/14 (4 ft)	BAST-S013 10/21/13 (3 ft)	BAST-S014 10/21/13 (3 ft)	BAST-S015 10/21/13 (3 ft)	BAST-S016 10/18/13 (3 ft)	BAST-S022 10/22/13 (3 ft)	BAST-S024 10/22/13 (3 ft) SAT	BAST-S025 10/18/13 (3 ft)	BAST-S026 10/23/13 (3 ft)	BAST-S027 10/23/13 (3 ft)	BAST-S028 10/23/13 (3 ft)	BAST-S029 10/23/13 (3 ft)	BAST-S033 10/25/13 (3 ft) SAT	BAST-S034 10/23/13 (3 ft)	BAST-S034A 11/1/13 (3 ft) SAT	BAST-S035 11/1/13 (3 ft) SAT	BAST-S036 11/1/13 (3 ft) SAT	BAST-S041 12/23/13 (3 ft)	BAST-S042 12/23/13 (5 ft) SAT	BAST-S043 12/30/13 (3 ft)
Acetone in mg/kg	3,200,000	3,200,000	0.5 U	0.5 U	0.5 U	0.5 U									0.5 U	0.5 U	0.5 U								0.5 U
Benzene in mg/kg	2,400	2,400	0.03 U	0.03 U	0.03 U	0.03 U									0.03 U	0.03 U	0.03 U								0.03 U
Bromobenzene in mg/kg			0.05 U	0.05 U	0.05 U	0.05 U									0.05 U	0.05 U	0.05 U								0.05 U
Bromodichloromethane in mg/kg	2,100	2,100	0.05 U	0.05 U	0.05 U	0.05 U									0.05 U	0.05 U	0.05 U								0.05 U
Bromoform in mg/kg	17,000	17,000	0.05 U	0.05 U	0.05 U	0.05 U									0.05 U	0.05 U	0.05 U								0.05 U
Bromomethane in mg/kg	4,900	4,900	0.5 U	0.5 U	0.5 U	0.5 U									0.5 U	0.5 U	0.5 U								0.5 U
Carbon tetrachloride in mg/kg	1,900	1,900	0.05 U	0.05 U	0.05 U	0.05 U									0.05 U	0.05 U	0.05 U								0.05 U
Chlorobenzene in mg/kg	70,000	70,000	0.05 U	0.05 U	0.05 U	0.05 U									0.05 U	0.05 U	0.05 U								0.05 U
Chloroethane in mg/kg			0.5 U	0.5 U	0.5 U	0.5 U									0.5 U	0.5 U	0.5 U								0.5 U
Chloroform in mg/kg	4,200	4,200	0.05 U	0.05 U	0.05 U	0.05 U									0.05 U	0.05 U	0.05 U								0.05 U
Chloromethane in mg/kg			0.5 U	0.5 U	0.5 U	0.5 U									0.5 U	0.5 U	0.5 U								0.5 U
cis-1,2-Dichloroethene (DCE) in mg/kg	7,000	7,000	0.05 U	0.05 U	0.05 U	0.05 U									0.05 U	0.05 U	0.05 U								0.05 U
cis-1,3-Dichloropropene in mg/kg			0.05 U	0.05 U	0.05 U	0.05 U									0.05 U	0.05 U	0.05 U								0.05 U
Dibromochloromethane in mg/kg	1,600	1,600	0.05 U	0.05 U	0.05 U	0.05 U									0.05 U	0.05 U	0.05 U								0.05 U
Dibromomethane in mg/kg	35,000	35,000	0.05 U	0.05 U	0.05 U	0.05 U									0.05 U	0.05 U	0.05 U								0.05 U
Dichlorodifluoromethane in mg/kg	700,000	700,000	0.5 U	0.5 U	0.5 U	0.5 U									0.5 U	0.5 U	0.5 U								0.5 U
Ethylbenzene in mg/kg	350,000	350,000	0.05 U	0.05 U	0.05 U	0.05 U									0.05 U	0.05 U	0.05 U								0.05 U
Hexachlorobutadiene in mg/kg	1,700	1,700	0.25 U	0.25 U	0.25 U	0.25 U									0.25 U	0.25 U	0.25 U								0.25 U
Isopropylbenzene in mg/kg	350,000	350,000	0.05 U	0.05 U	0.05 U	0.05 U									0.05 U	0.05 U	0.05 U								0.05 U
Methyl tert-butyl ether (MTBE) in mg/kg	73,000	73,000	0.05 U	0.05 U	0.05 U	0.05 U									0.05 U	0.05 U	0.05 U								0.05 U
Methylene chloride in mg/kg	21,000	21,000	0.5 U	0.5 U	0.5 U	0.5 U									0.5 U	0.5 U	0.5 U								0.5 U
n-Propylbenzene in mg/kg	350,000	350,000	0.05 U	0.05 U	0.05 U	0.05 U									0.05 U	0.05 U	0.05 U								0.05 U
p-Isopropyltoluene in mg/kg			0.05 U	0.05 U	0.05 U	0.05 U									0.05 U	0.05 U	0.05 U								0.05 U
sec-Butylbenzene in mg/kg	350,000	350,000	0.05 U	0.05 U	0.05 U	0.05 U									0.05 U	0.05 U	0.05 U								0.05 U
Styrene in mg/kg	700,000	700,000	0.05 U	0.05 U	0.05 U	0.05 U									0.05 U	0.05 U	0.05 U								0.05 U
tert-Butylbenzene in mg/kg	350,000	350,000	0.05 U	0.05 U	0.05 U	0.05 U									0.05 U	0.05 U	0.05 U								0.05 U
Tetrachloroethene (PCE) in mg/kg	21,000	21,000	0.025 U	0.025 U	0.025 U	0.025 U									0.025 U	0.025 U	0.025 U								0.025 U
Toluene in mg/kg	280,000	280,000	0.05 U	0.05 U	0.05 U	0.05 U									0.05 U	0.05 U	0.05 U								0.05 U
trans-1,2-Dichloroethene in mg/kg	70,000	70,000	0.05 U	0.05 U	0.05 U	0.05 U									0.05 U	0.05 U	0.05 U								0.05 U
trans-1,3-Dichloropropene in mg/kg			0.05 U	0.05 U	0.05 U	0.05 U									0.05 U	0.05 U	0.05 U								0.05 U
Trichloroethene (TCE) in mg/kg	1,800	1,800	0.03 U	0.03 U	0.03 U	0.03 U									0.03 U	0.03 U	0.03 U								0.03 U
Trichlorofluoromethane in mg/kg	1,100,000	1,100,000	0.5 U	0.5 U	0.5 U	0.5 U									0.5 U	0.5 U	0.5 U								0.5 U
Vinyl chloride in mg/kg	88	88	0.05 U	0.05 U	0.05 U	0.05 U									0.05 U	0.05 U	0.05 U								0.05 U
m,p-Xylenes in mg/kg	49	2.5	0.1 U	0.1 U	0.1 U	0.1 U									0.1 U	0.1 U	0.1 U								0.1 U
o-Xylene in mg/kg	80	4.1	0.05 U	0.05 U	0.05 U	0.05 U									0.05 U	0.05 U	0.05 U								0.05 U
Naphthalene in mg/kg	70,000	70,000	0.05 U	0.05 U	0.05 U	1.2									0.05 U	0.05 U	0.05 U								
Polychlorinated Biphenyls (PCBs)																									
Aroclor 1016 in mg/kg																									
Aroclor 1221 in mg/kg																									
Aroclor 1232 in mg/kg																									
Aroclor 1242 in mg/kg																									
Aroclor 1248 in mg/kg																									
Aroclor 1254 in mg/kg																									
Aroclor 1260 in mg/kg																									
Total PCBs (Sum of Aroclors) in mg/kg	10	10																							

Notes

Concentrations in shaded cells indicate value exceeds Interim Action Cleanup Level - Saturated Soil.
Concentrations in bold text indicate value exceeds Interim Action Cleanup Level - Unsaturated Soil.
SAT = Sample of saturated soil; samples without this designation are unsaturated soil.
J = Analyte was positively identified. The reported result is an estimate.
U = Analyte was not detected at or above the reported result.
UJ = Analyte was not detected at or above the reported estimate.
x = The sample chromatographic pattern does not resemble the fuel standard used for quantitation.

Table 7 - Excavation Verification Soil Quality Data for Bunker C ASTs Interim Action Area

K-C Worldwide Site Upland Area 110207

			Sidewall Samples in Place																							
Chemical Name	Interim Action Cleanup Level - Saturated Soil	Interim Action Cleanup Level - Unsaturated Soil	BAST-S044 12/30/13 (5 ft) SAT	BAST-S047 12/30/13 (3 ft)	BAST-S048 12/30/13 (5 ft) SAT	BAST-S049 1/2/14 (8 ft) SAT	BAST-S052 1/7/14 (8 ft) SAT	BAST-S053 1/7/14 (5 ft) SAT	BAST-S054 1/7/14 (8 ft) SAT	BAST-S056 1/20/14 (3 ft) SAT	BAST-S064 1/21/14 (6 ft)	BAST-S068 1/28/14 (4 ft)	BAST-S070 2/11/14 (3 ft)	BAST-S071 2/11/14 (3 ft)	BAST-S072 2/13/14 (3 ft)	BAST-S074 2/13/14 (3 ft)	BAST-S076 2/20/14 (4 ft)	BAST-S077 2/20/14 (4 ft)	BAST-S078 2/20/14 (4 ft)	BAST-S079 2/21/14 (4 ft)	BAST-S080 2/21/14 (4 ft)	BAST-S081 2/21/14 (4 ft)	BAST-S083 2/21/14 (4 ft)	BAST-S084 2/21/14 (4 ft)	BAST-S085 2/21/14 (4 ft)	BAST-S086 2/21/14 (4 ft)	BAST-S087 2/24/14 (2 ft)
Total Petroleum Hydrocarbons (TPH)																												
Gasoline Range Hydrocarbons in mg/kg	100	100	3	2 U	2 U	2 U	2 U	2 U	2 U		2 U	11	2 U	2 U	2 U	2 U	2 U	2 U	2 U	2 U	2 U	2 U	2 U	2 U	2 U	2 U	2 U
Diesel Range Hydrocarbons in mg/kg	2,000	2,000	50 U	50 U	50 U	50 U	50 U	50 U	50 U	50 U	50 U	1,300	50 U	50 U	50 U	50 U	50 U	50 U	500	50 U	50 U	50 U	50 U	50 U	50 U	50 U	50 U
Oil Range Hydrocarbons in mg/kg	2,000	2,000	250 U	250 U	250 U	250 U	250 U	250 U	250 U	250 U	250 U	250 U	250 U	250 U	250 U	250 U	250 U	250 U	250 U	250 U	250 U	250 U	250 U	250 U	250 U	250 U	250 U
Bunker C in mg/kg	2,000	2,000																									
Total TPHs in mg/kg	2,000	2,000	ND	ND	ND	ND	ND	ND	ND	ND	ND	1,420	ND	ND	ND	ND	ND	ND	625	ND	ND	ND	ND	ND	ND	ND	ND
Metals																											
Antimony in mg/kg	1,400	1,400																									
Arsenic in mg/kg	20	20							5.48											5.16				4.26			
Barium in mg/kg	700,000	700,000																									
Beryllium in mg/kg	7,000	7,000																									
Cadmium in mg/kg	3,500	3,500							1 U											1 U				1 U			
Chromium (Total) in mg/kg	5,300,000	5,300,000																									
Copper in mg/kg	36	36							4.01											14.3				33.4			
Lead in mg/kg	81	1,000							1.99											2.93				27			
Mercury in mg/kg	0.1	0.1							0.1 U											0.1 U				0.1 U			
Nickel in mg/kg	48	48							10.7											16.8				17.9			
Selenium in mg/kg	18,000	18,000																									
Silver in mg/kg	18,000	18,000																									
Thallium in mg/kg	35	35																									
Zinc in mg/kg	85	100							8.61											22.4				50.1			
Polycyclic Aromatic Hydrocarbons (PAHs)																											
Acenaphthene in mg/kg	210,000	210,000	0.01 U	0.01 U	0.01 U	0.01 U	0.01 U	0.018	0.01 U	0.01 U	0.01 U	0.074	0.01 U	0.01 U	0.01 U	0.01 U	0.01 U	0.013	0.039	0.01 U	0.01 U	0.01 U	0.01 U	0.01 U	0.01 U	0.01 U	0.01 U
Acenaphthylene in mg/kg			0.01 U	0.01 U	0.01 U	0.01 U	0.01 U	0.014	0.01 U	0.01 U	0.01 U	0.01 U	0.01 U	0.01 U	0.01 U	0.01 U	0.01 U	0.01 U	0.01 U	0.01 U	0.01 U	0.01 U	0.01 U	0.01 U	0.01 U	0.01 U	0.01 U
Anthracene in mg/kg	1,100,000	1,100,000	0.01 U	0.01 U	0.01 U	0.01 U	0.01	0.015	0.01 U	0.01 U	0.01 U	0.021	0.01 U	0.01 U	0.01 U	0.01 U	0.01 U	0.01 U	0.01 U	0.01 U	0.01 U	0.01 U	0.01 U	0.01 U	0.01 U	0.01 U	0.01 U
Benzo(g,h,i)perylene in mg/kg			0.01 U	0.012	0.01 U	0.01 U	0.01 U	0.01 U	0.01 U	0.011	0.01 U	0.01 U	0.01 U	0.01 U	0.01 U	0.01 U	0.01 U	0.01 U	0.01 U	0.01 U	0.01 U	0.01 U	0.01 U	0.018	0.01 U	0.01 U	0.02
Dibenzofuran in mg/kg	3,500	3,500																									
Fluoranthene in mg/kg	140,000	140,000	0.01 U	0.01 U	0.01 U	0.01 U	0.018	0.014	0.01 U	0.03	0.01 U	0.011	0.01 U	0.01 U	0.01 U	0.01 U	0.01 U	0.01 U	0.01 U	0.01 U	0.01 U	0.01 U	0.01 U	0.034	0.01 U	0.01 U	0.039
Fluorene in mg/kg	140,000	140,000	0.01 U	0.01 U	0.01 U	0.01 U	0.01 U	0.019	0.01 U	0.01 U	0.01 U	0.47	0.011	0.01 U	0.01 U	0.01 U	0.01 U	0.041	0.086	0.027	0.01 U	0.01 U	0.01 U	0.01 U	0.01 U	0.01 U	0.01 U
Phenanthrene in mg/kg			0.01 U	0.01 U	0.01 U	0.014	0.01 U	0.026	0.01 U	0.014	0.01 U	0.27	0.012	0.01 U	0.01 U	0.01 U	0.01 U	0.01 U	0.081	0.01	0.01 U	0.01 U	0.01 U	0.018	0.01 U	0.01 U	0.031
Pyrene in mg/kg	110,000	110,000	0.01 U	0.01 U	0.01 U	0.01 U	0.034	0.017	0.01 U	0.027	0.01 U	0.03	0.01 U	0.01 U	0.01 U	0.01 U	0.01 U	0.01 U	0.01 U	0.01 U	0.01 U	0.01 U	0.01 U	0.036	0.01 U	0.01 U	0.045
2-Methylnaphthalene in mg/kg	14,000	14,000																									
Naphthalene in mg/kg	70,000	70,000	0.045	0.01 U	0.01 U	0.01 U	0.015	0.016	0.01 U	0.01 U	0.01 U	0.041	0.01 U	0.01 U	0.01 U	0.01 U	0.01 U	0.053	0.029	0.033	0.02	0.01 U	0.01 U	0.01 U	0.01 U	0.01 U	0.017
Benz(a)anthracene in mg/kg			0.01 U	0.01 U	0.01 U	0.01 U	0.017	0.015	0.01 U	0.011	0.01 U	0.01 U	0.01 U	0.01 U	0.01 U	0.01 U	0.01 U	0.01 U	0.01 U	0.01 U	0.01 U	0.01 U	0.01 U	0.018	0.01 U	0.01 U	0.022
Benzo(a)pyrene in mg/kg			0.01 U	0.01 U	0.01 U	0.01 U	0.015	0.01 U	0.01 U	0.012	0.01 U	0.01 U	0.01 U	0.01 U	0.01 U	0.01 U	0.01 U	0.01 U	0.01 U	0.01 U	0.01 U	0.01 U	0.01 U	0.021	0.01 U	0.01 U	0.028
Benzo(b)fluoranthene in mg/kg			0.01 U	0.01 U	0.01 U	0.01 U	0.014	0.01 U	0.01 U	0.019	0.01 U	0.01 U	0.01 U	0.01 U	0.01 U	0.01 U	0.01 U	0.01 U	0.01 U	0.01 U	0.01 U	0.01 U	0.01 U	0.028	0.01 U	0.01 U	0.034
Benzo(k)fluoranthene in mg/kg			0.01 U	0.01 U	0.01 U	0.01 U	0.01 U	0.012 J	0.01 U	0.01 U	0.01 U	0.01 U	0.01 U	0.01 U	0.01 U	0.01 U	0.01 U	0.01 U	0.01 U	0.01 U	0.01 U	0.01 U	0.01 U	0.012	0.01 U	0.01 U	0.011
Chrysene in mg/kg			0.01 U	0.01 U	0.01 U	0.01 U	0.021	0.015	0.01 U	0.016	0.01 U	0.014	0.01 U	0.01 U	0.01 U	0.01 U	0.01 U	0.01 U	0.01 U	0.01 U	0.01 U	0.01 U	0.01 U	0.022	0.01 U	0.01 U	0.032
Dibenzo(a,h)anthracene in mg/kg			0.01 U	0.01 U	0.01 U	0.01 U	0.01 U	0.01 U	0.01 U	0.01 U	0.01 U	0.01 U	0.01 U	0.01 U	0.01 U	0.01 U	0.01 U	0.01 U	0.01 U	0.01 U	0.01 U	0.01 U	0.01 U	0.01 U	0.01 U	0.01 U	0.01 U
Indeno(1,2,3-cd)pyrene in mg/kg			0.01 U	0.01 U	0.01 U	0.01 U	0.01 U	0.01 U	0.01 U	0.01 U	0.01 U	0.01 U	0.01 U	0.01 U	0.01 U	0.01 U	0.01 U	0.01 U	0.01 U	0.01 U	0.01 U	0.01 U	0.01 U	0.013	0.01 U	0.01 U	0.020 J
Total cPAHs TEQ in mg/kg	0.4	7.9	ND	ND	ND	ND	0.0198	0.00935	ND	0.0167	ND	0.00764	ND	ND	ND	ND	ND	ND	ND	ND	ND	ND	ND	0.0288	ND	ND	0.0375
Volatile Organic Compounds (VOC)																											
1,1,1,2-Tetrachloroethane in mg/kg	5,000	5,000	0.05 U	0.05 U	0.05 U	0.05 U	0.05 U	0.05 U	0.05 U		0.05 U	0.05 U	0.05 U	0.05 U	0.05 U	0.05 U	0.05 U	0.05 U	0.05 U	0.05 U	0.05 U	0.05 U	0.05 U	0.05 U	0.05 U	0.05 U	0.05 U
1,1,1-Trichloroethane in mg/kg	7,000,000	7,000,000	0.05 U	0.05 U	0.05 U	0.05 U	0.05 U	0.05 U	0.05 U		0.05 U	0.05 U	0.05 U	0.05 U	0.05 U	0.05 U	0.05 U	0.05 U	0.05 U	0.05 U	0.05 U	0.05 U	0.05 U	0.05 U	0.05 U	0.05 U	0.05 U
1,1,2,2-Tetrachloroethane in mg/kg	660	660	0.05 U	0.05 U	0.05 U	0.05 U	0.05 U	0.05 U	0.05 U		0.05 U	0.05 U	0.05 U	0.05 U	0.05 U	0.05 U	0.05 U	0.05 U	0.05 U	0.05 U	0.05 U	0.05 U	0.05 U	0.05 U	0.05 U	0.05 U	0.05 U
1,1,2-Trichloroethane in mg/kg	2,300	2,300	0.05 U	0.05 U	0.05 U	0.05 U	0.05 U	0.05 U	0.05 U		0.05 U	0.05 U	0.05 U	0.05 U	0.05 U	0.05 U	0.05 U	0.05 U	0.05 U	0.05 U	0.05 U	0.05 U	0.05 U	0.05 U	0.05 U	0.05 U	0.05 U
1,1-Dichloroethane in mg/kg	23,000	23,000	0.05 U	0.05 U	0.05 U	0.05 U	0.05 U	0.05 U	0.05 U		0.05 U	0.05 U	0.05 U	0.05 U	0.05 U	0.05 U	0.05 U	0.05 U	0.05 U	0.05 U	0.05 U	0.05 U	0.05 U	0.05 U	0.05 U	0.05 U	0.05 U
1,1-Dichloroethene in mg/kg	180,000	180,000	0.05 U	0.05 U	0.05 U	0.05 U	0.05 U	0.05 U	0.05 U		0.05 U	0.05 U	0.05 U	0.05 U	0.05 U	0.05 U	0.05 U	0.05 U	0.05 U	0.05 U	0.05 U	0.05 U	0.05 U	0.05 U	0.05 U	0.05 U	0.05 U
1,1-Dichloropropene in mg/kg			0.05 U	0.05 U	0.05 U	0.05 U	0.05 U	0.05 U	0.05 U		0.05 U	0.05 U	0.05 U	0.05 U	0.05 U	0.05 U	0.05 U	0.05 U	0.05 U	0.05 U	0.05 U	0.05 U	0.05 U	0.05 U	0.05 U	0.05 U	0.05 U
1,2,3-Trichlorobenzene in mg/kg			0.25 U	0.25 U	0.25 U	0.25 U	0.25 U	0.25 U	0.25 U		0.25 U	0.25 U	0.25 U	0.25 U	0.25 U	0.25 U	0.25 U	0.25 U	0.25 U	0.25 U	0.25 U	0.25 U	0.25 U	0.25 U	0.25 U	0.25 U	0.25 U
1,2,3-Trichloropropane in mg/kg	4.4	4.4	0.05 U	0.05 U	0.05 U	0.05 U	0.05 U	0.05 U	0.05 U		0.05 U	0.05 U	0.05 U	0.05 U	0.05 U	0.05 U	0.05 U	0.05 U	0.05 U	0.05 U	0.05 U	0.05 U	0.05 U	0.05 U	0.05 U	0.05 U	0.05 U
1,2,4-Trichlorobenzene in mg/kg	4,500	4,500	0.25 U	0.25 U	0.25 U	0.25 U	0.25 U	0.25 U	0.25 U		0.25 U	0.25 U	0.25 U	0.25 U	0.25 U	0.25 U	0.25 U	0.25 U	0.25 U	0.25 U	0.25 U	0.25 U	0.25 U	0.25 U	0.25 U	0.25 U	0.25 U
1,2,4-Trimethylbenzene in mg/kg			0.05 U	0.05 U	0.05 U	0.05 U	0.05 U	0.05 U	0.05 U		0.05 U	0.05 U	0.05 U	0.05 U	0.05 U	0.05 U	0.05 U	0.05 U	0.05 U	0.05 U	0.05 U	0.05 U	0.05 U	0.05 U	0.05 U	0.05 U	0.05 U
1,2-Dibromo-3-chloropropane in mg/kg	160	160	0.5 U	0.5 U	0.5 U	0.5 U	0.5 U	0.5 U	0.5 U		0.5 U	0.5 U	0.5 U	0.5 U	0.5 U	0.5 U	0.5 U	0.5 U	0.5 U	0.5 U	0.5 U	0.5 U	0.5 U	0.5 U	0.5 U	0.5 U	0.5 U
1,2-Dibromoethane (EDB) in mg/kg	66	66	0.05 U	0.05 U	0.05 U	0.05 U	0.05 U	0.05 U	0.05 U		0.05 U	0.05 U	0.05 U	0.05 U	0.05 U	0.05 U	0.05 U	0.05 U	0.05 U	0.05 U	0.05 U	0.05 U	0.05 U	0.05 U	0.05 U	0.05 U	0.05 U
1,2-Dichlorobenzene in mg/kg	320,000	320,000	0.05 U	0.05 U	0.05 U	0.05 U	0.05 U	0.05 U	0.05 U		0.05 U	0.05 U	0.05 U	0.05 U	0.05 U	0.05 U	0.05 U	0.05 U	0.05 U	0.05 U	0.05 U	0.05 U	0.05 U	0.05 U	0.05 U	0.05 U	0.05 U
1,2-Dichloroethane (EDC) in mg/kg	1,400	1,400	0.05 U	0.05 U	0.05 U	0.05 U	0.05 U	0.05 U	0.05 U		0.05 U	0.05 U	0.05 U	0.05 U	0.05 U	0.05 U	0.05 U	0.05 U	0.05 U	0.05 U	0.05 U	0.05 U	0.05 U	0.05 U	0.05 U	0.05 U	0.05 U
1,2-Dichloropropane in mg/kg	3,600	3,600	0.05 U	0.05 U	0.05 U	0.05 U	0.05 U	0.05 U	0.05 U		0.05 U	0.05 U	0.05 U	0.05 U	0.05 U	0.05 U	0.05 U	0.05 U	0.05 U	0.05 U	0.05 U	0.05 U	0.05 U	0.05 U	0.05 U	0.05 U	0.05 U
1,3,5-Trimethylbenzene in mg/kg	35,000	35,000	0.05 U	0.05 U	0.05 U	0.05 U	0.05 U	0.05 U	0.05 U		0.05 U	0.05 U	0.05 U	0.05 U	0.05 U	0.05 U	0.05 U	0.05 U	0.05 U	0.05 U	0.05 U	0.05 U	0.05 U	0.05 U	0.05 U	0.05 U	0.05 U
1,3-Dichlorobenzene in mg/kg			0.05 U	0.05 U	0.05 U	0.05 U	0.05 U	0.05 U	0.05 U		0.05 U	0.05 U	0.05 U	0.05 U	0.05 U	0.05 U	0.05 U	0.05 U	0.05 U	0.05 U	0.05 U	0.05 U	0.05 U	0.05 U	0.05 U	0.05 U	0.05 U
1,3-Dichloropropane in mg/kg			0.05 U	0.05 U	0.05 U	0.05 U	0.05 U	0.05 U	0.05 U		0.05 U	0.05 U	0.05 U	0.05 U	0.05 U	0.05 U	0.05 U	0.05 U	0.05 U	0.05 U	0.05 U	0.05 U	0.05 U	0.05 U	0.05 U	0.05 U	0.05 U
1,4-Dichlorobenzene in mg/kg	24,000	24,000	0.05 U	0.05 U	0.05 U	0.05 U	0.05 U	0.05 U	0.05 U		0.05 U	0.05 U	0.05 U	0.05 U	0.05 U	0.05 U	0.05 U	0.05 U	0.05 U	0.05 U	0.05 U	0.05 U	0.05 U	0.05 U	0.05 U	0.05 U	0.05 U
2,2-Dichloropropane in mg/kg			0.05 U	0.05 U	0.05 U	0.05 U	0.05 U	0.05 U	0.05 U		0.05 U	0.05 U	0.05 U	0.05 U	0.05 U	0.05 U	0.05 U	0.05 U	0.05 U	0.05 U	0.05 U	0.05 U	0.05 U	0.05 U	0.05 U	0.05 U	0.05 U
2-Butanone in mg/kg	2,100,000	2,100,000	0.5 U	0.5 U	0.5 U	0.5 U	0.5 U	0.5 U	0.5 U		0.5 U	0.5 U	0.5 U	0.5 U	0.5 U	0.5 U	0.5 U	0.5 U	0.5 U	0.5 U	0.5 U	0.5 U	0.5 U	0.5 U	0.5 U	0.5 U	0.5 U
2-Chlorotoluene in mg/kg	70,000	70,000	0.05 U	0.05 U	0.05 U	0.05 U	0.05 U	0.05 U	0.05 U		0.05 U	0.05 U	0.05 U	0.05 U	0.05 U	0.05 U	0.05 U	0.05 U	0.05 U	0.05 U	0.05 U	0.05 U	0.05 U	0.05 U	0.05 U	0.05 U	0.05 U
2-Hexanone in mg/kg			0.5 U	0.5 U	0.5 U	0.5 U	0.5 U	0.5 U	0.5 U		0.5 U	0.5 U	0.5 U	0.5 U	0.5 U	0.5 U	0.5 U	0.5 U	0.5 U	0.5 U	0.5 U	0.5 U	0.5 U	0.5 U	0.5 U	0.5 U	0.5 U
4-Chlorotoluene in mg/kg			0.05 U	0.05 U	0.05 U	0.05 U	0.05 U	0.05 U	0.05 U		0.05 U	0.05 U	0.05 U	0.05 U	0.05 U	0.05 U	0.05 U	0.05 U	0.05 U	0.05 U	0.05 U	0.05 U	0.05 U	0.05 U	0.05 U	0.05 U	0.05 U
4-Methyl-2-pentanone in mg/kg	280,000	280,000	0.5 U	0.5 U	0.5 U	0.5 U	0.5 U	0.5 U	0.5 U		0.5 U	0.5 U	0.5 U	0.5 U	0.5 U	0.5 U	0.5 U	0.5 U	0.5 U	0.5 U	0.5 U	0.5 U	0.5 U	0.5 U	0.5 U	0.5 U	0.5 U

Table 7 - Excavation Verification Soil Quality Data for Bunker C ASTs Interim Action Area

K-C Worldwide Site Upland Area 110207

			Sidewall Samples in Place																								
Chemical Name	Interim Action Cleanup Level - Saturated Soil	Interim Action Cleanup Level - Unsaturated Soil	BAST-S044 12/30/13 (5 ft) SAT	BAST-S047 12/30/13 (3 ft)	BAST-S048 12/30/13 (5 ft) SAT	BAST-S049 1/2/14 (8 ft) SAT	BAST-S052 1/7/14 (8 ft) SAT	BAST-S053 1/7/14 (5 ft) SAT	BAST-S054 1/7/14 (8 ft) SAT	BAST-S056 1/20/14 (3 ft) SAT	BAST-S064 1/21/14 (6 ft)	BAST-S068 1/28/14 (4 ft)	BAST-S070 2/11/14 (3 ft)	BAST-S071 2/11/14 (3 ft)	BAST-S072 2/13/14 (3 ft)	BAST-S074 2/13/14 (3 ft)	BAST-S076 2/20/14 (4 ft)	BAST-S077 2/20/14 (4 ft)	BAST-S078 2/20/14 (4 ft)	BAST-S079 2/21/14 (4 ft)	BAST-S080 2/21/14 (4 ft)	BAST-S081 2/21/14 (4 ft)	BAST-S083 2/21/14 (4 ft)	BAST-S084 2/21/14 (4 ft)	BAST-S085 2/21/14 (4 ft)	BAST-S086 2/21/14 (4 ft)	BAST-S087 2/24/14 (2 ft)
Acetone in mg/kg	3,200,000	3,200,000	0.5 U	0.5 U	0.5 U	0.5 U	0.5 U	0.5 U	0.5 U		0.5 U	0.5 U	0.5 U	0.5 U	0.5 U	0.5 U	0.5 U	0.5 U	0.5 U	0.5 U	0.5 U	0.5 U	0.5 U	0.5 U	0.5 U	0.5 U	0.5 U
Benzene in mg/kg	2,400	2,400	0.03 U	0.03 U	0.03 U	0.03 U	0.03 U	0.03 U	0.03 U		0.03 U	0.03 U	0.03 U	0.03 U	0.03 U	0.03 U	0.03 U	0.03 U	0.03 U	0.03 U	0.03 U	0.03 U	0.03 U	0.03 U	0.03 U	0.03 U	0.03 U
Bromobenzene in mg/kg			0.05 U	0.05 U	0.05 U	0.05 U	0.05 U	0.05 U	0.05 U		0.05 U	0.05 U	0.05 U	0.05 U	0.05 U	0.05 U	0.05 U	0.05 U	0.05 U	0.05 U	0.05 U	0.05 U	0.05 U	0.05 U	0.05 U	0.05 U	0.05 U
Bromodichloromethane in mg/kg	2,100	2,100	0.05 U	0.05 U	0.05 U	0.05 U	0.05 U	0.05 U	0.05 U		0.05 U	0.05 U	0.05 U	0.05 U	0.05 U	0.05 U	0.05 U	0.05 U	0.05 U	0.05 U	0.05 U	0.05 U	0.05 U	0.05 U	0.05 U	0.05 U	0.05 U
Bromoform in mg/kg	17,000	17,000	0.05 U	0.05 U	0.05 U	0.05 U	0.05 U	0.05 U	0.05 U		0.05 U	0.05 U	0.05 U	0.05 U	0.05 U	0.05 U	0.05 U	0.05 U	0.05 U	0.05 U	0.05 U	0.05 U	0.05 U	0.05 U	0.05 U	0.05 U	0.05 U
Bromomethane in mg/kg	4,900	4,900	0.5 U	0.5 U	0.5 U	0.5 U	0.5 U	0.5 U	0.5 U		0.5 U	0.5 U	0.5 UJ	0.5 UJ	0.5 U	0.5 U	0.5 U	0.5 U	0.5 U	0.5 U	0.5 U	0.5 U	0.5 U	0.5 U	0.5 U	0.5 U	0.5 U
Carbon tetrachloride in mg/kg	1,900	1,900	0.05 U	0.05 U	0.05 U	0.05 U	0.05 U	0.05 U	0.05 U		0.05 U	0.05 U	0.05 U	0.05 U	0.05 U	0.05 U	0.05 U	0.05 U	0.05 U	0.05 U	0.05 U	0.05 U	0.05 U	0.05 U	0.05 U	0.05 U	0.05 U
Chlorobenzene in mg/kg	70,000	70,000	0.05 U	0.05 U	0.05 U	0.05 U	0.05 U	0.05 U	0.05 U		0.05 U	0.05 U	0.05 U	0.05 U	0.05 U	0.05 U	0.05 U	0.05 U	0.05 U	0.05 U	0.05 U	0.05 U	0.05 U	0.05 U	0.05 U	0.05 U	0.05 U
Chloroethane in mg/kg			0.5 U	0.5 U	0.5 U	0.5 U	0.5 U	0.5 U	0.5 U		0.5 U	0.5 U	0.5 U	0.5 U	0.5 U	0.5 U	0.5 U	0.5 U	0.5 U	0.5 U	0.5 U	0.5 U	0.5 U	0.5 U	0.5 U	0.5 U	0.5 U
Chloroform in mg/kg	4,200	4,200	0.05 U	0.05 U	0.05 U	0.05 U	0.05 U	0.05 U	0.05 U		0.05 U	0.05 U	0.05 U	0.05 U	0.05 U	0.05 U	0.05 U	0.05 U	0.05 U	0.05 U	0.05 U	0.05 U	0.05 U	0.05 U	0.05 U	0.05 U	0.05 U
Chloromethane in mg/kg			0.5 U	0.5 U	0.5 U	0.5 U	0.5 U	0.5 U	0.5 U		0.5 U	0.5 U	0.5 U	0.5 U	0.5 U	0.5 U	0.5 U	0.5 U	0.5 U	0.5 U	0.5 U	0.5 U	0.5 U	0.5 U	0.5 U	0.5 U	0.5 U
cis-1,2-Dichloroethene (DCE) in mg/kg	7,000	7,000	0.05 U	0.05 U	0.05 U	0.05 U	0.05 U	0.05 U	0.05 U		0.05 U	0.05 U	0.05 U	0.05 U	0.05 U	0.05 U	0.05 U	0.05 U	0.05 U	0.05 U	0.05 U	0.05 U	0.05 U	0.05 U	0.05 U	0.05 U	0.05 U
cis-1,3-Dichloropropene in mg/kg			0.05 U	0.05 U	0.05 U	0.05 U	0.05 U	0.05 U	0.05 U		0.05 U	0.05 U	0.05 U	0.05 U	0.05 U	0.05 U	0.05 U	0.05 U	0.05 U	0.05 U	0.05 U	0.05 U	0.05 U	0.05 U	0.05 U	0.05 U	0.05 U
Dibromochloromethane in mg/kg	1,600	1,600	0.05 U	0.05 U	0.05 U	0.05 U	0.05 U	0.05 U	0.05 U		0.05 U	0.05 U	0.05 U	0.05 U	0.05 U	0.05 U	0.05 U	0.05 U	0.05 U	0.05 U	0.05 U	0.05 U	0.05 U	0.05 U	0.05 U	0.05 U	0.05 U
Dibromomethane in mg/kg	35,000	35,000	0.05 U	0.05 U	0.05 U	0.05 U	0.05 U	0.05 U	0.05 U		0.05 U	0.05 U	0.05 U	0.05 U	0.05 U	0.05 U	0.05 U	0.05 U	0.05 U	0.05 U	0.05 U	0.05 U	0.05 U	0.05 U	0.05 U	0.05 U	0.05 U
Dichlorodifluoromethane in mg/kg	700,000	700,000	0.5 U	0.5 U	0.5 U	0.5 U	0.5 U	0.5 U	0.5 U		0.5 U	0.5 U	0.5 U	0.5 U	0.5 U	0.5 U	0.5 U	0.5 U	0.5 U	0.5 U	0.5 U	0.5 U	0.5 U	0.5 U	0.5 U	0.5 U	0.5 U
Ethylbenzene in mg/kg	350,000	350,000	0.05 U	0.05 U	0.05 U	0.05 U	0.05 U	0.05 U	0.05 U		0.05 U	0.05 U	0.05 U	0.05 U	0.05 U	0.05 U	0.05 U	0.05 U	0.05 U	0.05 U	0.05 U	0.05 U	0.05 U	0.05 U	0.05 U	0.05 U	0.05 U
Hexachlorobutadiene in mg/kg	1,700	1,700	0.25 U	0.25 U	0.25 U	0.25 U	0.25 U	0.25 U	0.25 U		0.25 U	0.25 U	0.25 U	0.25 U	0.25 U	0.25 U	0.25 U	0.25 U	0.25 U	0.25 U	0.25 U	0.25 U	0.25 U	0.25 U	0.25 U	0.25 U	0.25 U
Isopropylbenzene in mg/kg	350,000	350,000	0.05 U	0.05 U	0.05 U	0.05 U	0.05 U	0.05 U	0.05 U		0.05 U	0.05 U	0.05 U	0.05 U	0.05 U	0.05 U	0.05 U	0.05 U	0.05 U	0.05 U	0.05 U	0.05 U	0.05 U	0.05 U	0.05 U	0.05 U	0.05 U
Methyl tert-butyl ether (MTBE) in mg/kg	73,000	73,000	0.05 U	0.05 U	0.05 U	0.05 U	0.05 U	0.05 U	0.05 U		0.05 U	0.05 U	0.05 U	0.05 U	0.05 U	0.05 U	0.05 U	0.05 U	0.05 U	0.05 U	0.05 U	0.05 U	0.05 U	0.05 U	0.05 U	0.05 U	0.05 U
Methylene chloride in mg/kg	21,000	21,000	0.5 U	0.5 U	0.5 U	0.5 U	0.5 U	0.5 U	0.5 U		0.5 U	0.5 U	0.5 U	0.5 U	0.5 U	0.5 U	0.5 U	0.5 U	0.5 U	0.5 U	0.5 U	0.5 U	0.5 U	0.5 U	0.5 U	0.5 U	0.5 U
n-Propylbenzene in mg/kg	350,000	350,000	0.05 U	0.05 U	0.05 U	0.05 U	0.05 U	0.05 U	0.05 U		0.05 U	0.05 U	0.05 U	0.05 U	0.05 U	0.05 U	0.05 U	0.05 U	0.05 U	0.05 U	0.05 U	0.05 U	0.05 U	0.05 U	0.05 U	0.05 U	0.05 U
p-Isopropyltoluene in mg/kg			0.05 U	0.05 U	0.05 U	0.05 U	0.05 U	0.05 U	0.05 U		0.05 U	0.05 U	0.05 U	0.05 U	0.05 U	0.05 U	0.05 U	0.05 U	0.05 U	0.05 U	0.05 U	0.05 U	0.05 U	0.05 U	0.05 U	0.05 U	0.05 U
sec-Butylbenzene in mg/kg	350,000	350,000	0.05 U	0.05 U	0.05 U	0.05 U	0.05 U	0.05 U	0.05 U		0.05 U	0.05 U	0.05 U	0.05 U	0.05 U	0.05 U	0.05 U	0.05 U	0.05 U	0.05 U	0.05 U	0.05 U	0.05 U	0.05 U	0.05 U	0.05 U	0.05 U
Styrene in mg/kg	700,000	700,000	0.05 U	0.05 U	0.05 U	0.05 U	0.05 U	0.05 U	0.05 U		0.05 U	0.05 U	0.05 U	0.05 U	0.05 U	0.05 U	0.05 U	0.05 U	0.05 U	0.05 U	0.05 U	0.05 U	0.05 U	0.05 U	0.05 U	0.05 U	0.05 U
tert-Butylbenzene in mg/kg	350,000	350,000	0.05 U	0.05 U	0.05 U	0.05 U	0.05 U	0.05 U	0.05 U		0.05 U	0.05 U	0.05 U	0.05 U	0.05 U	0.05 U	0.05 U	0.05 U	0.05 U	0.05 U	0.05 U	0.05 U	0.05 U	0.05 U	0.05 U	0.05 U	0.05 U
Tetrachloroethene (PCE) in mg/kg	21,000	21,000	0.025 U	0.025 U	0.025 U	0.025 U	0.025 U	0.025 U	0.025 U		0.025 U	0.025 U	0.025 U	0.025 U	0.025 U	0.025 U	0.025 U	0.025 U	0.025 U	0.025 U	0.025 U	0.025 U	0.025 U	0.025 U	0.025 U	0.025 U	0.025 U
Toluene in mg/kg	280,000	280,000	0.05 U	0.05 U	0.05 U	0.05 U	0.05 U	0.05 U	0.05 U		0.05 U	0.05 U	0.05 U	0.05 U	0.05 U	0.05 U	0.05 U	0.05 U	0.05 U	0.05 U	0.05 U	0.05 U	0.05 U	0.05 U	0.05 U	0.05 U	0.05 U
trans-1,2-Dichloroethene in mg/kg	70,000	70,000	0.05 U	0.05 U	0.05 U	0.05 U	0.05 U	0.05 U	0.05 U		0.05 U	0.05 U	0.05 U	0.05 U	0.05 U	0.05 U	0.05 U	0.05 U	0.05 U	0.05 U	0.05 U	0.05 U	0.05 U	0.05 U	0.05 U	0.05 U	0.05 U
trans-1,3-Dichloropropene in mg/kg			0.05 U	0.05 U	0.05 U	0.05 U	0.05 U	0.05 U	0.05 U		0.05 U	0.05 U	0.05 U	0.05 U	0.05 U	0.05 U	0.05 U	0.05 U	0.05 U	0.05 U	0.05 U	0.05 U	0.05 U	0.05 U	0.05 U	0.05 U	0.05 U
Trichloroethene (TCE) in mg/kg	1,800	1,800	0.03 U	0.03 U	0.03 U	0.03 U	0.03 U	0.03 U	0.03 U		0.03 U	0.03 U	0.03 U	0.03 U	0.03 U	0.03 U	0.03 U	0.03 U	0.03 U	0.03 U	0.03 U	0.03 U	0.03 U	0.03 U	0.03 U	0.03 U	0.03 U
Trichlorofluoromethane in mg/kg	1,100,000	1,100,000	0.5 U	0.5 U	0.5 U	0.5 U	0.5 U	0.5 U	0.5 U		0.5 U	0.5 U	0.5 U	0.5 U	0.5 U	0.5 U	0.5 U	0.5 U	0.5 U	0.5 U	0.5 U	0.5 U	0.5 U	0.5 U	0.5 U	0.5 U	0.5 U
Vinyl chloride in mg/kg	88	88	0.05 U	0.05 U	0.05 U	0.05 U	0.05 U	0.05 U	0.05 U		0.05 U	0.05 U	0.05 U	0.05 U	0.05 U	0.05 U	0.05 U	0.05 U	0.05 U	0.05 U	0.05 U	0.05 U	0.05 U	0.05 U	0.05 U	0.05 U	0.05 U
m,p-Xylenes in mg/kg	49	2.5	0.1 U	0.1 U	0.1 U	0.1 U	0.1 U	0.1 U	0.1 U		0.1 U	0.1 U	0.1 U	0.1 U	0.1 U	0.1 U	0.1 U	0.1 U	0.1 U	0.1 U	0.1 U	0.1 U	0.1 U	0.1 U	0.1 U	0.1 U	0.1 U
o-Xylene in mg/kg	80	4.1	0.05 U	0.05 U	0.05 U	0.05 U	0.05 U	0.05 U	0.05 U		0.05 U	0.05 U	0.05 U	0.05 U	0.05 U	0.05 U	0.05 U	0.05 U	0.05 U	0.05 U	0.05 U	0.05 U	0.05 U	0.05 U	0.05 U	0.05 U	0.05 U
Naphthalene in mg/kg	70,000	70,000									0.05 U		0.05 U	0.05 U	0.05 U	0.05 U	0.05 U	0.05 U	0.05 U	0.05 U	0.05 U	0.05 U	0.05 U	0.05 U	0.05 U	0.05 U	0.05 U
Polychlorinated Biphenyls (PCBs)																											
Aroclor 1016 in mg/kg																											
Aroclor 1221 in mg/kg																											
Aroclor 1232 in mg/kg																											
Aroclor 1242 in mg/kg																											
Aroclor 1248 in mg/kg																											
Aroclor 1254 in mg/kg																											
Aroclor 1260 in mg/kg																											
Total PCBs (Sum of Aroclors) in mg/kg	10	10																									

Notes

Concentrations in shaded cells indicate value exceeds Interim Action Cleanup Level - Saturated Soil.
Concentrations in bold text indicate value exceeds Interim Action Cleanup Level - Unsaturated Soil.
SAT = Sample of saturated soil; samples without this designation are unsaturated soil.
J = Analyte was positively identified. The reported result is an estimate.
U = Analyte was not detected at or above the reported result.
UJ = Analyte was not detected at or above the reported estimate.
x = The sample chromatographic pattern does not resemble the fuel standard used for quantitation.

Table 7 - Excavation Verification Soil Quality Data for Bunker C ASTs Interim Action Area

K-C Worldwide Site Upland Area 110207

			Sidewall Samples in Place								Inaccessible Soil at the Edge of or Beneath Warehouse																
Chemical Name	Interim Action Cleanup Level - Saturated Soil	Interim Action Cleanup Level - Unsaturated Soil	BAST-S088 2/25/14 (4 ft)	BAST-S089 2/25/14 (4 ft)	BAST-S091 2/25/14 (4 ft)	BAST-S092 2/25/14 (4 ft)	BAST-S093 2/25/14 (4 ft)	BAST-S093 FD 2/25/14 (4 ft)	BAST-S094 3/4/14 (4 ft)	BAST-S095 3/4/14 (4 ft)	BAST-EPH-03 10/21/13 (2 ft) SAT	BAST-EPH-04 10/21/13 (2 ft) SAT	BAST-S001 10/10/13 (2 ft)	BAST-S002 10/10/13 (2 ft) SAT	BAST-S003 10/17/13 (3.5 ft)	BAST-S004 10/17/13 (3.5 ft)	BAST-S005 10/17/13 (3.5 ft)	BAST-S006 10/17/13 (3.5 ft)	BAST-S007 10/17/13 (3.5 ft) SAT	BAST-S007 FD 10/17/13 (3.5 ft) SAT	BAST-S008 10/18/13 (3.5 ft) SAT	BAST-S009 10/18/13 (3.5 ft) SAT	BAST-S010 10/21/13 (3.5 ft) SAT	BAST-S010 FD 10/21/13 (3.5 ft) SAT	BAST-S037 12/23/13 (3 ft) SAT	BAST-S038 12/23/13 (5 ft) SAT	BAST-S039 12/23/13 (3 ft)
Total Petroleum Hydrocarbons (TPH)																											
Gasoline Range Hydrocarbons in mg/kg	100	100	2 U	2 U	2 U	2 U	2 U	2 U																			
Diesel Range Hydrocarbons in mg/kg	2,000	2,000	50 U	50 U	50 U	50 U	50 U	50 U	50 U	50 U															810	50 U	50 U
Oil Range Hydrocarbons in mg/kg	2,000	2,000	250 U	250 U	250 U	250 U	250 U	250 U	250 U	250 U															250 U	250 U	250 U
Bunker C in mg/kg	2,000	2,000											**2,300**	250 U	250 U	250 U	250 U	250 U	**9,300**	**9,700**	250 U	610	810	800			
Total TPHs in mg/kg	2,000	2,000	ND	ND	ND	ND	ND	ND	ND	ND			**2,300**	250 U	250 U	250 U	250 U	250 U	**9,300**	**9,700**	250 U	610	810	800	935	ND	ND
Metals																											
Antimony in mg/kg	1,400	1,400																1 U							1 U		
Arsenic in mg/kg	20	20	2.28				5.62											1 U					2.81		4.23		
Barium in mg/kg	700,000	700,000																									
Beryllium in mg/kg	7,000	7,000																									
Cadmium in mg/kg	3,500	3,500	1 U				1 U											1 U					1 U		1 U		
Chromium (Total) in mg/kg	5,300,000	5,300,000																									
Copper in mg/kg	36	36	3.96				12.4											4.08					6.76		4.6		
Lead in mg/kg	81	1,000	1.45				3.22			6.57								1.73					1.51		2.6		
Mercury in mg/kg	0.1	0.1	0.1 U				0.1 U											0.1 U					0.1 U		0.1 U		
Nickel in mg/kg	48	48	7.93				13.7											14.1					9.28		10		
Selenium in mg/kg	18,000	18,000																									
Silver in mg/kg	18,000	18,000																									
Thallium in mg/kg	35	35																									
Zinc in mg/kg	85	100	9.27 J				22.1											21.4					11.5 J		8.81		
Polycyclic Aromatic Hydrocarbons (PAHs)																											
Acenaphthene in mg/kg	210,000	210,000	0.01 U	0.01 U	0.01 U	0.01 U	0.01 U	0.01 U	0.01 U		5.6	6	0.01 U	0.01 U	0.01 U	0.01 U	0.01 U	0.01 U	0.63	0.77	0.01 U	0.051	0.039	0.037	0.097	0.018	0.01 U
Acenaphthylene in mg/kg			0.01 U	0.01 U	0.01 U	0.01 U	0.01 U	0.01 U	0.01 U		0.2 U	0.2 U	0.01 U	0.014	0.01 U	0.01 U	0.01 U	0.01 U	0.01 U	0.01 U	0.01 U	0.01 U	0.01 U	0.01 U	0.01 U	0.01 U	0.01 U
Anthracene in mg/kg	1,100,000	1,100,000	0.01 U	0.01 U	0.01 U	0.01 U	0.01 U	0.01 U	0.01 U		4	6.6	0.01 U	0.01 U	0.01 U	0.01 U	0.01 U	0.01 U	0.62	0.64	0.01 U	0.036	0.01 U	0.01 U	0.01 U	0.01 U	0.01 U
Benzo(g,h,i)perylene in mg/kg			0.01 U	0.01 U	0.01 U	0.01 U	0.01 U	0.01 U	0.01 U		2.6	4.3	0.044	0.014	0.01 U	0.01 U	0.01 U	0.01 U	0.17	0.2	0.01 U	0.014	0.01 U	0.01 U	0.01 U	0.01 U	0.01 U
Dibenzofuran in mg/kg	3,500	3,500																									
Fluoranthene in mg/kg	140,000	140,000	0.01 U	0.01 U	0.01 U	0.01 U	0.01 U	0.01 U	0.02		2.3	3.3	0.01 U	0.025	0.01 U	0.01 U	0.01 U	0.01 U	0.25	0.23	0.01 U	0.022	0.01 U	0.01 U	0.01 U	0.01 U	0.01 U
Fluorene in mg/kg	140,000	140,000	0.01 U	0.01 U	0.01 U	0.01 U	0.01 U	0.01 U	0.01 U		12	7.4	0.01 U	0.01 U	0.01 U	0.01 U	0.01 U	0.01 U	1.3	1.6	0.01 U	0.08	0.079	0.085	0.01 U	0.012	0.01 U
Phenanthrene in mg/kg			0.019	0.01 U	0.01 U	0.01 U	0.01 U	0.01 U	0.014		28	23	0.01 U	0.01 U	0.01 U	0.01 U	0.01 U	0.01 U	0.01 U	0.01 U	0.01 U	0.056	0.071	0.077	0.01 U	0.035	0.01 U
Pyrene in mg/kg	110,000	110,000	0.016	0.01 U	0.01 U	0.01 U	0.01 U	0.01 U	0.017		16	35	0.01 U	0.05	0.01 U	0.01 U	0.011	0.012	2.0	2.2	0.01 U	0.13	0.01 U	0.01 U	0.01 U	0.025	0.01 U
2-Methylnaphthalene in mg/kg	14,000	14,000																									
Naphthalene in mg/kg	70,000	70,000	0.01 U	0.01 U	0.01 U	0.01 U	0.01 U	0.01 U	0.01 U		2	0.2 U	0.01 U	0.01 U	0.01 U	0.01 U	0.01 U	0.01 U	0.01 U	0.01 U	0.01 U	0.01 U	0.01 U	0.01 U	0.01 U	0.01 U	0.019
Benz(a)anthracene in mg/kg			0.01 U	0.01 U	0.01 U	0.01 U	0.01 U	0.01 U	0.01 U		4.9	9.3	0.01 U	0.041	0.01 U	0.01 U	0.01 U	0.01 U	0.58 J	0.85 J	0.01 U	0.039	0.01 U	0.01 U	0.01 U	0.01	0.01 U
Benzo(a)pyrene in mg/kg			0.01 U	0.01 U	0.01 U	0.01 U	0.01 U	0.01 U	0.01 U		3.6	6.3	0.01 U	0.029	0.01 U	0.01 U	0.01 U	0.01 U	0.35	0.36	0.01 U	0.029	0.01 U	0.01 U	0.01 U	0.01 U	0.01 U
Benzo(b)fluoranthene in mg/kg			0.01 U	0.01 U	0.01 U	0.01 U	0.01 U	0.01 U	0.01 U		1.8	2	0.011	0.031	0.01 U	0.01 U	0.01 U	0.01 U	0.17	0.21	0.01 U	0.015	0.01 U	0.01 U	0.01 U	0.01 U	0.01 U
Benzo(k)fluoranthene in mg/kg			0.01 U	0.01 U	0.01 U	0.01 U	0.01 U	0.01 U	0.01 U		0.2	0.23	0.01 U	0.011	0.01 U	0.01 U	0.01 U	0.01 U	0.024	0.028	0.01 U	0.01 U	0.01 U	0.01 U	0.01 U	0.01 U	0.01 U
Chrysene in mg/kg			0.01 U	0.01 U	0.01 U	0.01 U	0.01 U	0.01 U	0.01 U		8.7	12	0.01 U	0.053	0.01 U	0.01 U	0.01 U	0.011	0.98	1.1	0.01 U	0.07	0.01 U	0.01 U	0.01 U	0.011	0.01 U
Dibenzo(a,h)anthracene in mg/kg			0.01 U	0.01 U	0.01 U	0.01 U	0.01 U	0.01 U	0.01 U		0.61	0.98	0.01 U	0.01 U	0.01 U	0.01 U	0.01 U	0.01 U	0.061	0.07	0.01 U	0.01 U	0.01 U	0.01 U	0.01 U	0.01 U	0.01 U
Indeno(1,2,3-cd)pyrene in mg/kg			0.01 U	0.01 U	0.01 U	0.01 U	0.01 U	0.01 U	0.01 U		0.7	1	0.01 U	0.014	0.01 U	0.01 U	0.01 U	0.01 U	0.046	0.055	0.01 U	0.01 U	0.01 U	0.01 U	0.01 U	0.01 U	0.01 U
Total cPAHs TEQ in mg/kg	0.4	7.9	ND	ND	ND	ND	ND	ND	ND		4.51	7.77	0.00815	0.0397	ND	ND	ND	0.00761	0.448	0.492	ND	0.0366	ND	ND	ND	0.00811	ND
Volatile Organic Compounds (VOC)																											
1,1,1,2-Tetrachloroethane in mg/kg	5,000	5,000	0.05 U	0.05 U	0.05 U	0.05 U	0.05 U	0.05 U																			
1,1,1-Trichloroethane in mg/kg	7,000,000	7,000,000	0.05 U	0.05 U	0.05 U	0.05 U	0.05 U	0.05 U																			
1,1,2,2-Tetrachloroethane in mg/kg	660	660	0.05 U	0.05 U	0.05 U	0.05 U	0.05 U	0.05 U																			
1,1,2-Trichloroethane in mg/kg	2,300	2,300	0.05 U	0.05 U	0.05 U	0.05 U	0.05 U	0.05 U																			
1,1-Dichloroethane in mg/kg	23,000	23,000	0.05 U	0.05 U	0.05 U	0.05 U	0.05 U	0.05 U																			
1,1-Dichloroethene in mg/kg	180,000	180,000	0.05 U	0.05 U	0.05 U	0.05 U	0.05 U	0.05 U																			
1,1-Dichloropropene in mg/kg			0.05 U	0.05 U	0.05 U	0.05 U	0.05 U	0.05 U																			
1,2,3-Trichlorobenzene in mg/kg			0.25 U	0.25 U	0.25 U	0.25 U	0.25 U	0.25 U																			
1,2,3-Trichloropropane in mg/kg	4.4	4.4	0.05 U	0.05 U	0.05 U	0.05 U	0.05 U	0.05 U																			
1,2,4-Trichlorobenzene in mg/kg	4,500	4,500	0.25 U	0.25 U	0.25 U	0.25 U	0.25 U	0.25 U																			
1,2,4-Trimethylbenzene in mg/kg			0.05 U	0.05 U	0.05 U	0.05 U	0.05 U	0.05 U																			
1,2-Dibromo-3-chloropropane in mg/kg	160	160	0.5 U	0.5 U	0.5 U	0.5 U	0.5 U	0.5 U																			
1,2-Dibromoethane (EDB) in mg/kg	66	66	0.05 U	0.05 U	0.05 U	0.05 U	0.05 U	0.05 U																			
1,2-Dichlorobenzene in mg/kg	320,000	320,000	0.05 U	0.05 U	0.05 U	0.05 U	0.05 U	0.05 U																			
1,2-Dichloroethane (EDC) in mg/kg	1,400	1,400	0.05 U	0.05 U	0.05 U	0.05 U	0.05 U	0.05 U																			
1,2-Dichloropropane in mg/kg	3,600	3,600	0.05 U	0.05 U	0.05 U	0.05 U	0.05 U	0.05 U																			
1,3,5-Trimethylbenzene in mg/kg	35,000	35,000	0.05 U	0.05 U	0.05 U	0.05 U	0.05 U	0.05 U																			
1,3-Dichlorobenzene in mg/kg			0.05 U	0.05 U	0.05 U	0.05 U	0.05 U	0.05 U																			
1,3-Dichloropropane in mg/kg			0.05 U	0.05 U	0.05 U	0.05 U	0.05 U	0.05 U																			
1,4-Dichlorobenzene in mg/kg	24,000	24,000	0.05 U	0.05 U	0.05 U	0.05 U	0.05 U	0.05 U																			
2,2-Dichloropropane in mg/kg			0.05 U	0.05 U	0.05 U	0.05 U	0.05 U	0.05 U																			
2-Butanone in mg/kg	2,100,000	2,100,000	0.5 U	0.5 U	0.5 U	0.5 U	0.5 U	0.5 U																			
2-Chlorotoluene in mg/kg	70,000	70,000	0.05 U	0.05 U	0.05 U	0.05 U	0.05 U	0.05 U																			
2-Hexanone in mg/kg			0.5 U	0.5 U	0.5 U	0.5 U	0.5 U	0.5 U																			
4-Chlorotoluene in mg/kg			0.05 U	0.05 U	0.05 U	0.05 U	0.05 U	0.05 U																			
4-Methyl-2-pentanone in mg/kg	280,000	280,000	0.5 U	0.5 U	0.5 U	0.5 U	0.5 U	0.5 U																			

Table 7 - Excavation Verification Soil Quality Data for Bunker C ASTs Interim Action Area

K-C Worldwide Site Upland Area 110207

			Sidewall Samples in Place								Inaccessible Soil at the Edge of or Beneath Warehouse																
Chemical Name	Interim Action Cleanup Level - Saturated Soil	Interim Action Cleanup Level - Unsaturated Soil	BAST-S088 2/25/14 (4 ft)	BAST-S089 2/25/14 (4 ft)	BAST-S091 2/25/14 (4 ft)	BAST-S092 2/25/14 (4 ft)	BAST-S093 2/25/14 (4 ft)	BAST-S093 FD 2/25/14 (4 ft)	BAST-S094 3/4/14 (4 ft)	BAST-S095 3/4/14 (4 ft)	BAST-EPH-03 10/21/13 (2 ft) SAT	BAST-EPH-04 10/21/13 (2 ft) SAT	BAST-S001 10/10/13 (2 ft)	BAST-S002 10/10/13 (2 ft) SAT	BAST-S003 10/17/13 (3.5 ft)	BAST-S004 10/17/13 (3.5 ft)	BAST-S005 10/17/13 (3.5 ft)	BAST-S006 10/17/13 (3.5 ft)	BAST-S007 10/17/13 (3.5 ft) SAT	BAST-S007 FD 10/17/13 (3.5 ft) SAT	BAST-S008 10/18/13 (3.5 ft) SAT	BAST-S009 10/18/13 (3.5 ft) SAT	BAST-S010 10/21/13 (3.5 ft) SAT	BAST-S010 FD 10/21/13 (3.5 ft) SAT	BAST-S037 12/23/13 (3 ft) SAT	BAST-S038 12/23/13 (5 ft) SAT	BAST-S039 12/23/13 (3 ft)
Acetone in mg/kg	3,200,000	3,200,000	0.5 U	0.5 U	0.5 U	0.5 U	0.5 U	0.5 U																			
Benzene in mg/kg	2,400	2,400	0.03 U	0.03 U	0.03 U	0.03 U	0.03 U	0.03 U																			
Bromobenzene in mg/kg			0.05 U	0.05 U	0.05 U	0.05 U	0.05 U	0.05 U																			
Bromodichloromethane in mg/kg	2,100	2,100	0.05 U	0.05 U	0.05 U	0.05 U	0.05 U	0.05 U																			
Bromoform in mg/kg	17,000	17,000	0.05 U	0.05 U	0.05 U	0.05 U	0.05 U	0.05 U																			
Bromomethane in mg/kg	4,900	4,900	0.5 U	0.5 U	0.5 U	0.5 U	0.5 U	0.5 U																			
Carbon tetrachloride in mg/kg	1,900	1,900	0.05 U	0.05 U	0.05 U	0.05 U	0.05 U	0.05 U																			
Chlorobenzene in mg/kg	70,000	70,000	0.05 U	0.05 U	0.05 U	0.05 U	0.05 U	0.05 U																			
Chloroethane in mg/kg			0.5 U	0.5 U	0.5 U	0.5 U	0.5 U	0.5 U																			
Chloroform in mg/kg	4,200	4,200	0.05 U	0.05 U	0.05 U	0.05 U	0.05 U	0.05 U																			
Chloromethane in mg/kg			0.5 U	0.5 U	0.5 U	0.5 U	0.5 U	0.5 U																			
cis-1,2-Dichloroethene (DCE) in mg/kg	7,000	7,000	0.05 U	0.05 U	0.05 U	0.05 U	0.05 U	0.05 U																			
cis-1,3-Dichloropropene in mg/kg			0.05 U	0.05 U	0.05 U	0.05 U	0.05 U	0.05 U																			
Dibromochloromethane in mg/kg	1,600	1,600	0.05 U	0.05 U	0.05 U	0.05 U	0.05 U	0.05 U																			
Dibromomethane in mg/kg	35,000	35,000	0.05 U	0.05 U	0.05 U	0.05 U	0.05 U	0.05 U																			
Dichlorodifluoromethane in mg/kg	700,000	700,000	0.5 U	0.5 U	0.5 U	0.5 U	0.5 U	0.5 U																			
Ethylbenzene in mg/kg	350,000	350,000	0.05 U	0.05 U	0.05 U	0.05 U	0.05 U	0.05 U																			
Hexachlorobutadiene in mg/kg	1,700	1,700	0.25 U	0.25 U	0.25 U	0.25 U	0.25 U	0.25 U																			
Isopropylbenzene in mg/kg	350,000	350,000	0.05 U	0.05 U	0.05 U	0.05 U	0.05 U	0.05 U																			
Methyl tert-butyl ether (MTBE) in mg/kg	73,000	73,000	0.05 U	0.05 U	0.05 U	0.05 U	0.05 U	0.05 U																			
Methylene chloride in mg/kg	21,000	21,000	0.5 U	0.5 U	0.5 U	0.5 U	0.5 U	0.5 U																			
n-Propylbenzene in mg/kg	350,000	350,000	0.05 U	0.05 U	0.05 U	0.05 U	0.05 U	0.05 U																			
p-Isopropyltoluene in mg/kg			0.05 U	0.05 U	0.05 U	0.05 U	0.05 U	0.05 U																			
sec-Butylbenzene in mg/kg	350,000	350,000	0.05 U	0.05 U	0.05 U	0.05 U	0.05 U	0.05 U																			
Styrene in mg/kg	700,000	700,000	0.05 U	0.05 U	0.05 U	0.05 U	0.05 U	0.05 U																			
tert-Butylbenzene in mg/kg	350,000	350,000	0.05 U	0.05 U	0.05 U	0.05 U	0.05 U	0.05 U																			
Tetrachloroethene (PCE) in mg/kg	21,000	21,000	0.025 U	0.025 U	0.025 U	0.025 U	0.025 U	0.025 U																			
Toluene in mg/kg	280,000	280,000	0.05 U	0.05 U	0.05 U	0.05 U	0.05 U	0.05 U																			
trans-1,2-Dichloroethene in mg/kg	70,000	70,000	0.05 U	0.05 U	0.05 U	0.05 U	0.05 U	0.05 U																			
trans-1,3-Dichloropropene in mg/kg			0.05 U	0.05 U	0.05 U	0.05 U	0.05 U	0.05 U																			
Trichloroethene (TCE) in mg/kg	1,800	1,800	0.03 U	0.03 U	0.03 U	0.03 U	0.03 U	0.03 U																			
Trichlorofluoromethane in mg/kg	1,100,000	1,100,000	0.5 U	0.5 U	0.5 U	0.5 U	0.5 U	0.5 U																			
Vinyl chloride in mg/kg	88	88	0.05 U	0.05 U	0.05 U	0.05 U	0.05 U	0.05 U																			
m,p-Xylenes in mg/kg	49	2.5	0.1 U	0.1 U	0.1 U	0.1 U	0.1 U	0.1 U																			
o-Xylene in mg/kg	80	4.1	0.05 U	0.05 U	0.05 U	0.05 U	0.05 U	0.05 U																			
Naphthalene in mg/kg	70,000	70,000	0.05 U	0.05 U	0.05 U	0.05 U	0.05 U	0.05 U																			
Polychlorinated Biphenyls (PCBs)																											
Aroclor 1016 in mg/kg																											
Aroclor 1221 in mg/kg																											
Aroclor 1232 in mg/kg																											
Aroclor 1242 in mg/kg																											
Aroclor 1248 in mg/kg																											
Aroclor 1254 in mg/kg																											
Aroclor 1260 in mg/kg																											
Total PCBs (Sum of Aroclors) in mg/kg	10	10																									

Notes

Concentrations in shaded cells indicate value exceeds Interim Action Cleanup Level - Saturated Soil.
Concentrations in bold text indicate value exceeds Interim Action Cleanup Level - Unsaturated Soil.
SAT = Sample of saturated soil; samples without this designation are unsaturated soil.
J = Analyte was positively identified. The reported result is an estimate.
U = Analyte was not detected at or above the reported result.
UJ = Analyte was not detected at or above the reported estimate.
x = The sample chromatographic pattern does not resemble the fuel standard used for quantitation.

Table 7 - Excavation Verification Soil Quality Data for Bunker C ASTs Interim Action Area

K-C Worldwide Site Upland Area 110207

			Inaccessible Soil at the Edge of or Beneath Warehouse												Overexcavated Samples											
Chemical Name	Interim Action Cleanup Level - Saturated Soil	Interim Action Cleanup Level - Unsaturated Soil	BAST-S040 12/23/13 (5 ft) SAT	BAST-S051 1/7/14 (8 ft) SAT	BAST-S057 1/21/14 (5 ft) SAT	BAST-S058 1/21/14 (8 ft) SAT	BAST-S059 1/21/14 (7 ft) SAT	BAST-S060 1/21/14 (8 ft) SAT	BAST-S061 1/21/14 (5 ft)	BAST-S062 1/21/14 (8 ft) SAT	BAST-S063 1/21/14 (9 ft) SAT	BAST-S065 1/21/14 (8 ft) SAT	BAST-S066 1/21/14 (3 ft) SAT	BAST-S075 2/17/14 (4 ft)	BAST-B009 10/17/13 (5 ft) OverEx SAT	BAST-B071 2/13/14 (4 ft) OverEx	BAST-EPH-01 10/21/13 (2 ft) OverEx	BAST-EPH-02 10/21/13 (2 ft) OverEx	BAST-S011 10/21/13 (3 ft) OverEx SAT	BAST-S012 10/21/13 (3 ft) OverEx SAT	BAST-S017 10/21/13 (3 ft) OverEx	BAST-S018 10/21/13 (3 ft) OverEx	BAST-S019 10/22/13 (3 ft) OverEx	BAST-S020 10/22/13 (3 ft) OverEx	BAST-S021 10/22/13 (3 ft) OverEx	BAST-S023 10/22/13 (3 ft) OverEx SAT	BAST-S030 10/25/13 (3 ft) OverEx SAT
Total Petroleum Hydrocarbons (TPH)																										
Gasoline Range Hydrocarbons in mg/kg	100	100		**2,100**	2 U	2 U	**250**	2 U	2 U	2 U	2 U	**150**	2 U	69		2 U										
Diesel Range Hydrocarbons in mg/kg	2,000	2,000	50 U	**2,800**	50 U	50 U	1,100	50 U	50 U	50 U	50 U	250	50 U	**6,600**		**6,500**										
Oil Range Hydrocarbons in mg/kg	2,000	2,000	250 U	250 U	250 U	250 U	250 U	250 U	250 U	250 U	250 U	250 U	1,200	**3,800**		250 U										
Bunker C in mg/kg	2,000	2,000													250 U				**2,600**	250 U	250 U	250 U	250 U	250 U	820	**28,000**	**22,000**
Total TPHs in mg/kg	2,000	2,000	ND	**2,920**	ND	ND	1,220	ND	ND	ND	ND	375	1,220	**10,400**	250 U	**6,620**			**2,600**	250 U	250 U	250 U	250 U	250 U	820	**28,000**	**22,000**
Metals																										
Antimony in mg/kg	1,400	1,400													1 U											
Arsenic in mg/kg	20	20			1.94					7.72					1 U	4.4									1 U		7.31 J
Barium in mg/kg	700,000	700,000																								
Beryllium in mg/kg	7,000	7,000																								
Cadmium in mg/kg	3,500	3,500			1 U					1 U					1 U	1 U									1 U		1 U
Chromium (Total) in mg/kg	5,300,000	5,300,000																								
Copper in mg/kg	36	36			7.76					28.6					14.5	12									17.4		11.3 J
Lead in mg/kg	81	1,000			2.06					5.79					2.04	2.35									483		2 J
Mercury in mg/kg	0.1	0.1			0.1 U					0.1 U					0.1 U	0.1 U									0.1 U		0.1 U
Nickel in mg/kg	48	48			8.43					21.8					12	14									12.9		9.76
Selenium in mg/kg	18,000	18,000																								
Silver in mg/kg	18,000	18,000																								
Thallium in mg/kg	35	35																								
Zinc in mg/kg	85	100			11.2					34.2					22.3	18.3									78.8		13.4
Polycyclic Aromatic Hydrocarbons (PAHs)																										
Acenaphthene in mg/kg	210,000	210,000	0.01 U	0.6	0.01 U	0.01 U	0.15	0.01 U	0.01 U	0.01 U	0.01 U	0.03	0.021	2.5	0.01 U	0.27	0.76	0.51	0.14	0.01 U	0.01 U	0.01 U	0.014	0.013	0.03	1 U	0.045
Acenaphthylene in mg/kg			0.01 U	0.01 U	0.01 U	0.01 U	0.01 U	0.01 U	0.01 U	0.01 U	0.01 U	0.01 U	0.018	0.5 U	0.01 U	0.01 U	0.2 U	0.2 U	0.01 U	0.01 U	0.01 U	0.01 U	0.01 U	0.01 U	0.01 U	1 U	0.01 U
Anthracene in mg/kg	1,100,000	1,100,000	0.01 U	0.081	0.01 U	0.01 U	0.079	0.01 U	0.01 U	0.01 U	0.01 U	0.01 U	0.041	4.4	0.01 U	0.01 U	1.2	0.68	0.01 U	0.01 U	0.01 U	0.01 U	0.01 U	0.017	0.063	1 U	0.01 U
Benzo(g,h,i)perylene in mg/kg			0.01 U	0.01 U	0.01 U	0.01 U	0.038	0.01 U	0.01 U	0.01 U	0.01 U	0.01 U	0.061	1.3	0.01 U	0.01 U	0.6	0.25	0.01 U	0.01 U	0.01 U	0.01 U	0.01 U	0.01 U	0.033	1 U	0.01 U
Dibenzofuran in mg/kg	3,500	3,500																								
Fluoranthene in mg/kg	140,000	140,000	0.01 U	0.047	0.01 U	0.023	0.46	0.01 U	0.01 U	0.01 U	0.01 U	0.017	0.052	1.4	0.01 U	0.063	0.63	0.33	0.01 U	0.01 U	0.01 U	0.01 U	0.01 U	0.01 U	0.049	1 U	0.01
Fluorene in mg/kg	140,000	140,000	0.01 U	0.21	0.01 U	0.01 U	0.11	0.01 U	0.01 U	0.01 U	0.01 U	0.052	0.028	3.5	0.01 U	1.6	1.5	0.85	0.01 U	0.01 U	0.01 U	0.01 U	0.019	0.036	0.032	1 U	0.01 U
Phenanthrene in mg/kg			0.01 U	0.29	0.01 U	0.01 U	0.045	0.01 U	0.01 U	0.01 U	0.01 U	0.06	0.13	15	0.01 U	0.01 U	3.7	1.7	0.01 U	0.01 U	0.01	0.01 U	0.025	0.072	0.2	1 U	0.01 U
Pyrene in mg/kg	110,000	110,000	0.01 U	0.064	0.01 U	0.022	0.43	0.01 U	0.01 U	0.01 U	0.01 U	0.015	0.17	9.5	0.01 U	0.2	4.4	2.4	0.024	0.01 U	0.014	0.01 U	0.01	0.041	0.22	1 U	0.053
2-Methylnaphthalene in mg/kg	14,000	14,000																								
Naphthalene in mg/kg	70,000	70,000	0.01 U	0.01 U	0.01 U	0.01 U	0.01 U	0.01 U	0.01 U	0.01	0.01 U	0.01 U	0.015	0.5 U	0.01 U	0.01 U	0.31	0.2 U	0.01 U	0.01 U	0.033	0.012	0.049	0.049	0.02	1 U	0.01 U
Benz(a)anthracene in mg/kg			0.01 U	0.018	0.01 U	0.011	0.24	0.01 U	0.01 U	0.01 U	0.01 U	0.01 U	0.057	4.2	0.01 U	0.01 U	1.3	0.67	0.015	0.01 U	0.01 U	0.01 U	0.01 U	0.01 U	0.011	0.083	1 U	0.019
Benzo(a)pyrene in mg/kg			0.01 U	0.012	0.01 U	0.01 U	0.12	0.01 U	0.01 U	0.01 U	0.01 U	0.01 U	0.049	2.7	0.01 U	0.01 U	0.7	0.32	0.01 U	0.01 U	0.01 U	0.01 U	0.01 U	0.01 U	0.048	1 U	0.01 U
Benzo(b)fluoranthene in mg/kg			0.01 U	0.014	0.01 U	0.01 U	0.18	0.01 U	0.01 U	0.01 U	0.01 U	0.01 U	0.042	0.88	0.01 U	0.01 U	0.44	0.22	0.01 U	0.01 U	0.01 U	0.01 U	0.01 U	0.01 U	0.03	1 U	0.01 U
Benzo(k)fluoranthene in mg/kg			0.01 U	0.01 U	0.01 U	0.01 U	0.057	0.01 U	0.01 U	0.01 U	0.01 U	0.01 U	0.012	0.5 U	0.01 U	0.01 U	0.2 U	0.2 U	0.01 U	0.01 U	0.01 U	0.01 U	0.01 U	0.01 U	0.01 U	1 U	0.01 U
Chrysene in mg/kg			0.01 U	0.028	0.01 U	0.011	0.29	0.01 U	0.01 U	0.01 U	0.01 U	0.01 U	0.088	3.9	0.01 U	0.11	2.5	1.3	0.021	0.01 U	0.01 U	0.01 U	0.01 U	0.02	0.1	1 U	0.038
Dibenzo(a,h)anthracene in mg/kg			0.01 U	0.01 U	0.01 U	0.01 U	0.01 U	0.01 U	0.01 U	0.01 U	0.01 U	0.01 U	0.01 U	0.5 U	0.01 U	0.01 U	0.2 U	0.2 U	0.01 U	0.01 U	0.01 U	0.01 U	0.01 U	0.01 U	0.01 U	1 U	0.01 U
Indeno(1,2,3-cd)pyrene in mg/kg			0.01 U	0.01 U	0.01 U	0.01 U	0.038	0.01 U	0.01 U	0.01 U	0.01 U	0.01 U	0.033	0.5 U	0.01 U	0.01 U	0.2 U	0.2 U	0.01 U	0.01 U	0.01 U	0.01 U	0.01 U	0.01 U	0.014	1 U	0.01 U
Total cPAHs TEQ in mg/kg	0.4	7.9	ND	0.017	ND	0.00821	0.175	ND	ND	ND	ND	ND	0.0648	3.32	ND	0.0851	0.929	0.452	0.00871	ND	ND	ND	ND	0.0083	0.0627	ND	0.00928
Volatile Organic Compounds (VOC)																										
1,1,1,2-Tetrachloroethane in mg/kg	5,000	5,000		0.05 U	0.05 U	0.05 U	0.05 U	0.05 U	0.05 U	0.05 U	0.05 U	0.05 U	0.05 U	0.05 U		0.05 U										
1,1,1-Trichloroethane in mg/kg	7,000,000	7,000,000		0.05 U	0.05 U	0.05 U	0.05 U	0.05 U	0.05 U	0.05 U	0.05 U	0.05 U	0.05 U	0.05 U		0.05 U										
1,1,2,2-Tetrachloroethane in mg/kg	660	660		0.05 U	0.05 U	0.05 U	0.05 U	0.05 U	0.05 U	0.05 U	0.05 U	0.05 U	0.05 U	0.05 U		0.05 U										
1,1,2-Trichloroethane in mg/kg	2,300	2,300		0.05 U	0.05 U	0.05 U	0.05 U	0.05 U	0.05 U	0.05 U	0.05 U	0.05 U	0.05 U	0.05 U		0.05 U										
1,1-Dichloroethane in mg/kg	23,000	23,000		0.05 U	0.05 U	0.05 U	0.05 U	0.05 U	0.05 U	0.05 U	0.05 U	0.05 U	0.05 U	0.05 U		0.05 U										
1,1-Dichloroethene in mg/kg	180,000	180,000		0.05 U	0.05 U	0.05 U	0.05 U	0.05 U	0.05 U	0.05 U	0.05 U	0.05 U	0.05 U	0.05 U		0.05 U										
1,1-Dichloropropene in mg/kg				0.05 U	0.05 U	0.05 U	0.05 U	0.05 U	0.05 U	0.05 U	0.05 U	0.05 U	0.05 U	0.05 U		0.05 U										
1,2,3-Trichlorobenzene in mg/kg				0.25 U	0.25 U	0.25 U	0.25 U	0.25 U	0.25 U	0.25 U	0.25 U	0.25 U	0.25 U	0.25 U		0.25 U										
1,2,3-Trichloropropane in mg/kg	4.4	4.4		0.05 U	0.05 U	0.05 U	0.05 U	0.05 U	0.05 U	0.05 U	0.05 U	0.05 U	0.05 U	0.05 U		0.05 U										
1,2,4-Trichlorobenzene in mg/kg	4,500	4,500		0.25 U	0.25 U	0.25 U	0.25 U	0.25 U	0.25 U	0.25 U	0.25 U	0.25 U	0.25 U	0.25 U		0.25 U										
1,2,4-Trimethylbenzene in mg/kg				0.05 U	0.05 U	0.05 U	0.05 U	0.05 U	0.05 U	0.05 U	0.05 U	0.05 U	0.05 U	0.055		0.05 U										
1,2-Dibromo-3-chloropropane in mg/kg	160	160		0.5 U	0.5 U	0.5 U	0.5 U	0.5 U	0.5 U	0.5 U	0.5 U	0.5 U	0.5 U	0.5 U		0.5 U										
1,2-Dibromoethane (EDB) in mg/kg	66	66		0.05 U	0.05 U	0.05 U	0.05 U	0.05 U	0.05 U	0.05 U	0.05 U	0.05 U	0.05 U	0.05 U		0.05 U										
1,2-Dichlorobenzene in mg/kg	320,000	320,000		0.05 U	0.05 U	0.05 U	0.05 U	0.05 U	0.05 U	0.05 U	0.05 U	0.05 U	0.05 U	0.05 U		0.05 U										
1,2-Dichloroethane (EDC) in mg/kg	1,400	1,400		0.05 U	0.05 U	0.05 U	0.05 U	0.05 U	0.05 U	0.05 U	0.05 U	0.05 U	0.05 U	0.05 U		0.05 U										
1,2-Dichloropropane in mg/kg	3,600	3,600		0.05 U	0.05 U	0.05 U	0.05 U	0.05 U	0.05 U	0.05 U	0.05 U	0.05 U	0.05 U	0.05 U		0.05 U										
1,3,5-Trimethylbenzene in mg/kg	35,000	35,000		0.05 U	0.05 U	0.05 U	0.05 U	0.05 U	0.05 U	0.05 U	0.05 U	0.05 U	0.05 U	0.05 U		0.05 U										
1,3-Dichlorobenzene in mg/kg				0.05 U	0.05 U	0.05 U	0.05 U	0.05 U	0.05 U	0.05 U	0.05 U	0.05 U	0.05 U	0.05 U		0.05 U										
1,3-Dichloropropane in mg/kg				0.05 U	0.05 U	0.05 U	0.05 U	0.05 U	0.05 U	0.05 U	0.05 U	0.05 U	0.05 U	0.05 U		0.05 U										
1,4-Dichlorobenzene in mg/kg	24,000	24,000		0.05 U	0.05 U	0.05 U	0.05 U	0.05 U	0.05 U	0.05 U	0.05 U	0.05 U	0.05 U	0.05 U		0.05 U										
2,2-Dichloropropane in mg/kg				0.05 U	0.05 U	0.05 U	0.05 U	0.05 U	0.05 U	0.05 U	0.05 U	0.05 U	0.05 U	0.05 U		0.05 U										
2-Butanone in mg/kg	2,100,000	2,100,000		0.5 U	0.5 U	0.5 U	0.5 U	0.5 U	0.5 U	0.5 U	0.5 U	0.5 U	0.5 U	0.5 U		0.5 U										
2-Chlorotoluene in mg/kg	70,000	70,000		0.05 U	0.05 U	0.05 U	0.05 U	0.05 U	0.05 U	0.05 U	0.05 U	0.05 U	0.05 U	0.05 U		0.05 U										
2-Hexanone in mg/kg				0.5 U	0.5 U	0.5 U	0.5 U	0.5 U	0.5 U	0.5 U	0.5 U	0.5 U	0.5 U	0.5 U		0.5 U										
4-Chlorotoluene in mg/kg				0.05 U	0.05 U	0.05 U	0.05 U	0.05 U	0.05 U	0.05 U	0.05 U	0.05 U	0.05 U	0.05 U		0.05 U										
4-Methyl-2-pentanone in mg/kg	280,000	280,000		0.5 U	0.5 U	0.5 U	0.5 U	0.5 U	0.5 U	0.5 U	0.5 U	0.5 U	0.5 U	0.5 U		0.5 U										

Table 7 - Excavation Verification Soil Quality Data for Bunker C ASTs Interim Action Area

K-C Worldwide Site Upland Area 110207

			Inaccessible Soil at the Edge of or Beneath Warehouse													Overexcavated Samples											
Chemical Name	Interim Action Cleanup Level - Saturated Soil	Interim Action Cleanup Level - Unsaturated Soil	BAST-S040 12/23/13 (5 ft) SAT	BAST-S051 1/7/14 (8 ft) SAT	BAST-S057 1/21/14 (5 ft) SAT	BAST-S058 1/21/14 (8 ft) SAT	BAST-S059 1/21/14 (7 ft) SAT	BAST-S060 1/21/14 (8 ft) SAT	BAST-S061 1/21/14 (5 ft)	BAST-S062 1/21/14 (8 ft) SAT	BAST-S063 1/21/14 (9 ft) SAT	BAST-S065 1/21/14 (8 ft) SAT	BAST-S066 1/21/14 (3 ft) SAT	BAST-S075 2/17/14 (4 ft)	BAST-B009 10/17/13 (5 ft) OverEx SAT	BAST-B071 2/13/14 (4 ft) OverEx	BAST-EPH-01 10/21/13 (2 ft) OverEx	BAST-EPH-02 10/21/13 (2 ft) OverEx	BAST-S011 10/21/13 (3 ft) OverEx SAT	BAST-S012 10/21/13 (3 ft) OverEx SAT	BAST-S017 10/21/13 (3 ft) OverEx	BAST-S018 10/21/13 (3 ft) OverEx	BAST-S019 10/22/13 (3 ft) OverEx	BAST-S020 10/22/13 (3 ft) OverEx	BAST-S021 10/22/13 (3 ft) OverEx	BAST-S023 10/22/13 (3 ft) OverEx SAT	BAST-S030 10/25/13 (3 ft) OverEx SAT
Acetone in mg/kg	3,200,000	3,200,000		0.5 U	0.5 U	0.5 U	0.5 U	0.5 U	0.5 U	0.5 U	0.5 U	0.5 U	0.5 U	0.5 U		0.5 U											
Benzene in mg/kg	2,400	2,400		0.03 U	0.03 U	0.03 U	0.03 U	0.03 U	0.03 U	0.03 U	0.03 U	0.03 U	0.03 U	0.03 U		0.03 U											
Bromobenzene in mg/kg				0.05 U	0.05 U	0.05 U	0.05 U	0.05 U	0.05 U	0.05 U	0.05 U	0.05 U	0.05 U	0.05 U		0.05 U											
Bromodichloromethane in mg/kg	2,100	2,100		0.05 U	0.05 U	0.05 U	0.05 U	0.05 U	0.05 U	0.05 U	0.05 U	0.05 U	0.05 U	0.05 U		0.05 U											
Bromoform in mg/kg	17,000	17,000		0.05 U	0.05 U	0.05 U	0.05 U	0.05 U	0.05 U	0.05 U	0.05 U	0.05 U	0.05 U	0.05 U		0.05 U											
Bromomethane in mg/kg	4,900	4,900		0.5 U	0.5 U	0.5 U	0.5 U	0.5 U	0.5 U	0.5 U	0.5 U	0.5 U	0.5 U	0.5 U		0.5 U											
Carbon tetrachloride in mg/kg	1,900	1,900		0.05 U	0.05 U	0.05 U	0.05 U	0.05 U	0.05 U	0.05 U	0.05 U	0.05 U	0.05 U	0.05 U		0.05 U											
Chlorobenzene in mg/kg	70,000	70,000		0.05 U	0.05 U	0.05 U	0.05 U	0.05 U	0.05 U	0.05 U	0.05 U	0.05 U	0.05 U	0.05 U		0.05 U											
Chloroethane in mg/kg				0.5 U	0.5 U	0.5 U	0.5 U	0.5 U	0.5 U	0.5 U	0.5 U	0.5 U	0.5 U	0.5 U		0.5 U											
Chloroform in mg/kg	4,200	4,200		0.05 U	0.05 U	0.05 U	0.05 U	0.05 U	0.05 U	0.05 U	0.05 U	0.05 U	0.05 U	0.05 U		0.05 U											
Chloromethane in mg/kg				0.5 U	0.5 U	0.5 U	0.5 U	0.5 U	0.5 U	0.5 U	0.5 U	0.5 U	0.5 U	0.5 U		0.5 U											
cis-1,2-Dichloroethene (DCE) in mg/kg	7,000	7,000		0.05 U	0.05 U	0.05 U	0.05 U	0.05 U	0.05 U	0.05 U	0.05 U	0.05 U	0.05 U	0.05 U		0.05 U											
cis-1,3-Dichloropropene in mg/kg				0.05 U	0.05 U	0.05 U	0.05 U	0.05 U	0.05 U	0.05 U	0.05 U	0.05 U	0.05 U	0.05 U		0.05 U											
Dibromochloromethane in mg/kg	1,600	1,600		0.05 U	0.05 U	0.05 U	0.05 U	0.05 U	0.05 U	0.05 U	0.05 U	0.05 U	0.05 U	0.05 U		0.05 U											
Dibromomethane in mg/kg	35,000	35,000		0.05 U	0.05 U	0.05 U	0.05 U	0.05 U	0.05 U	0.05 U	0.05 U	0.05 U	0.05 U	0.05 U		0.05 U											
Dichlorodifluoromethane in mg/kg	700,000	700,000		0.5 U	0.5 U	0.5 U	0.5 U	0.5 U	0.5 U	0.5 U	0.5 U	0.5 U	0.5 U	0.5 U		0.5 U											
Ethylbenzene in mg/kg	350,000	350,000		0.05 U	0.05 U	0.05 U	0.05 U	0.05 U	0.05 U	0.05 U	0.05 U	0.05 U	0.05 U	0.05 U		0.05 U											
Hexachlorobutadiene in mg/kg	1,700	1,700		0.25 U	0.25 U	0.25 U	0.25 U	0.25 U	0.25 U	0.25 U	0.25 U	0.25 U	0.25 U	0.25 U		0.25 U											
Isopropylbenzene in mg/kg	350,000	350,000		0.05 U	0.05 U	0.05 U	0.082	0.05 U	0.05 U	0.05 U	0.05 U	0.064	0.05 U	0.48		0.05 U											
Methyl tert-butyl ether (MTBE) in mg/kg	73,000	73,000		0.05 U	0.05 U	0.05 U	0.05 U	0.05 U	0.05 U	0.05 U	0.05 U	0.05 U	0.05 U	0.05 U		0.05 U											
Methylene chloride in mg/kg	21,000	21,000		0.5 U	0.5 U	0.5 U	0.5 U	0.5 U	0.5 U	0.5 U	0.5 U	0.5 U	0.5 U	0.5 U		0.5 U											
n-Propylbenzene in mg/kg	350,000	350,000		0.05 U	0.05 U	0.05 U	0.28	0.05 U	0.05 U	0.05 U	0.05 U	0.42	0.05 U	1.7		0.05 U											
p-Isopropyltoluene in mg/kg				0.05 U	0.05 U	0.05 U	0.05 U	0.05 U	0.05 U	0.05 U	0.05 U	0.05 U	0.05 U	0.05 U		0.05 U											
sec-Butylbenzene in mg/kg	350,000	350,000		0.05 U	0.05 U	0.05 U	0.26	0.05 U	0.05 U	0.05 U	0.05 U	0.2	0.05 U	1.4		0.05 U											
Styrene in mg/kg	700,000	700,000		0.05 U	0.05 U	0.05 U	0.05 U	0.05 U	0.05 U	0.05 U	0.05 U	0.05 U	0.05 U	0.05 U		0.05 U											
tert-Butylbenzene in mg/kg	350,000	350,000		0.05 U	0.05 U	0.05 U	0.05 U	0.05 U	0.05 U	0.05 U	0.05 U	0.05 U	0.05 U	0.055		0.05 U											
Tetrachloroethene (PCE) in mg/kg	21,000	21,000		0.025 U	0.025 U	0.025 U	0.025 U	0.025 U	0.025 U	0.025 U	0.025 U	0.025 U	0.025 U	0.025 U		0.025 U											
Toluene in mg/kg	280,000	280,000		0.05 U	0.05 U	0.05 U	0.05 U	0.05 U	0.05 U	0.05 U	0.05 U	0.05 U	0.05 U	0.05 U		0.05 U											
trans-1,2-Dichloroethene in mg/kg	70,000	70,000		0.05 U	0.05 U	0.05 U	0.05 U	0.05 U	0.05 U	0.05 U	0.05 U	0.05 U	0.05 U	0.05 U		0.05 U											
trans-1,3-Dichloropropene in mg/kg				0.05 U	0.05 U	0.05 U	0.05 U	0.05 U	0.05 U	0.05 U	0.05 U	0.05 U	0.05 U	0.05 U		0.05 U											
Trichloroethene (TCE) in mg/kg	1,800	1,800		0.03 U	0.03 U	0.03 U	0.03 U	0.03 U	0.03 U	0.03 U	0.03 U	0.03 U	0.03 U	0.03 U		0.03 U											
Trichlorofluoromethane in mg/kg	1,100,000	1,100,000		0.5 U	0.5 U	0.5 U	0.5 U	0.5 U	0.5 U	0.5 U	0.5 U	0.5 U	0.5 U	0.5 U		0.5 U											
Vinyl chloride in mg/kg	88	88		0.05 U	0.05 U	0.05 U	0.05 U	0.05 U	0.05 U	0.05 U	0.05 U	0.05 U	0.05 U	0.05 U		0.05 U											
m,p-Xylenes in mg/kg	49	2.5		0.1 U	0.1 U	0.1 U	0.1 U	0.1 U	0.1 U	0.1 U	0.1 U	0.1 U	0.1 U	0.1 U		0.1 U											
o-Xylene in mg/kg	80	4.1		0.05 U	0.05 U	0.05 U	0.05 U	0.05 U	0.05 U	0.05 U	0.05 U	0.05 U	0.05 U	0.05 U		0.05 U											
Naphthalene in mg/kg	70,000	70,000			0.05 U	0.05 U	0.05 U	0.05 U	0.05 U	0.05 U	0.05 U	0.05 U	0.05 U	0.64		0.05 U											
Polychlorinated Biphenyls (PCBs)																											
Aroclor 1016 in mg/kg																											
Aroclor 1221 in mg/kg																											
Aroclor 1232 in mg/kg																											
Aroclor 1242 in mg/kg																											
Aroclor 1248 in mg/kg																											
Aroclor 1254 in mg/kg																											
Aroclor 1260 in mg/kg																											
Total PCBs (Sum of Aroclors) in mg/kg	10	10																									

Notes

Concentrations in shaded cells indicate value exceeds Interim Action Cleanup Level - Saturated Soil.
Concentrations in bold text indicate value exceeds Interim Action Cleanup Level - Unsaturated Soil.
SAT = Sample of saturated soil; samples without this designation are unsaturated soil.
J = Analyte was positively identified. The reported result is an estimate.
U = Analyte was not detected at or above the reported result.
UJ = Analyte was not detected at or above the reported estimate.
x = The sample chromatographic pattern does not resemble the fuel standard used for quantitation.

Table 7 - Excavation Verification Soil Quality Data for Bunker C ASTs Interim Action Area

K-C Worldwide Site Upland Area 110207

Chemical Name	Interim Action Cleanup Level - Saturated Soil	Interim Action Cleanup Level - Unsaturated Soil	Overexcavated Samples													
			BAST-S031 10/25/13 (3 ft) OverEx SAT	BAST-S032 10/25/13 (3 ft) OverEx SAT	BAST-S045 12/30/13 (3 ft) OverEx	BAST-S046 12/30/13 (5 ft) OverEx SAT	BAST-S050 1/3/14 (8 ft) OverEx SAT	BAST-S055 1/20/14 (3 ft) OverEx SAT	BAST-S067 1/28/14 (4 ft) OverEx	BAST-S069 2/11/14 (3 ft) OverEx	BAST-S069 FD 2/11/14 (3 ft) OverEx	BAST-S073 2/13/14 (3 ft) OverEx	BAST-S082 2/21/14 (4 ft) OverEx	BAST-S090 2/25/14 (4 ft) OverEx	BCAST-SUMP-1 10/8/13 OverEx
Total Petroleum Hydrocarbons (TPH)																
Gasoline Range Hydrocarbons in mg/kg	100	100			2 U	**120**	**660**		97	2 U	2 U	2 U	2 U	14		
Diesel Range Hydrocarbons in mg/kg	2,000	2,000			50 U	510	1,200	50 U	**4,500**	50 U	50 U	**9,600**	50 U	**2,100** x		
Oil Range Hydrocarbons in mg/kg	2,000	2,000			250 U	250 U	250 U	**13,000**	440 x	250 U	250 U	250 U	250 U	1,500		
Bunker C in mg/kg	2,000	2,000	**15,000**	250 U											**140,000**	
Total TPHs in mg/kg	2,000	2,000	**15,000**	250 U	ND	635	1,320	**13,000**	**4,940**	ND	ND	**9,720**	ND	**3,600**	**140,000**	
Metals																
Antimony in mg/kg	1,400	1,400														
Arsenic in mg/kg	20	20								2.06	10				1.71	
Barium in mg/kg	700,000	700,000													12.1	
Beryllium in mg/kg	7,000	7,000														
Cadmium in mg/kg	3,500	3,500								1 U	1 U				1 U	
Chromium (Total) in mg/kg	5,300,000	5,300,000													7.29	
Copper in mg/kg	36	36								22.3	**40.1**				12.8	
Lead in mg/kg	81	1,000								4.62	7.56				30.4	
Mercury in mg/kg	0.1	0.1								**0.11** J	0.1 UJ				0.1 U	
Nickel in mg/kg	48	48								19.4	28.7				13.2	
Selenium in mg/kg	18,000	18,000													1 U	
Silver in mg/kg	18,000	18,000													1 U	
Thallium in mg/kg	35	35														
Zinc in mg/kg	85	100								86.2	45.9				25.2	
Polycyclic Aromatic Hydrocarbons (PAHs)																
Acenaphthene in mg/kg	210,000	210,000	0.043	0.048	0.01 U	0.01 U	0.28	0.01 U	0.15	0.01 U	0.01 U	0.25	0.01 U	0.5 U		
Acenaphthylene in mg/kg			0.017	0.01 U	0.01 U	0.01 U	0.01 U	0.01 U	0.01 U	0.01 U	0.01 U	0.01 U	0.01 U	0.5 U		
Anthracene in mg/kg	1,100,000	1,100,000	0.014	0.01 U	0.01 U	0.01 U	0.01 U	0.01 U	0.01 U	0.01 U	0.01 U	0.01 U	0.01 U	0.56		
Benzo(g,h,i)perylene in mg/kg			0.06	0.01 U	0.01 U	0.011	0.01 U	0.01 U	0.01 U	0.01 U	0.01 U	0.01 U	0.01 U	0.56		
Dibenzofuran in mg/kg	3,500	3,500														
Fluoranthene in mg/kg	140,000	140,000	0.026	0.018	0.01 U	0.024	0.029	0.01 U	0.045	0.01 U	0.01 U	0.05	0.01 U	1.3		
Fluorene in mg/kg	140,000	140,000	0.01 U	0.027	0.01 U	0.01 U	0.048	0.01 U	1.5	0.01 U	0.01 U	1.8	0.01 U	0.5 U		
Phenanthrene in mg/kg			0.025	0.01 U	0.01 U	0.017	0.01 U	0.01 U	0.01 U	0.01 U	0.01 U	1	0.01 U	0.5 U		
Pyrene in mg/kg	110,000	110,000	0.081	0.023	0.01 U	0.038	0.031	0.033	0.16	0.01 U	0.01 U	0.17	0.01 U	2.6		
2-Methylnaphthalene in mg/kg	14,000	14,000														
Naphthalene in mg/kg	70,000	70,000	0.01 U	0.01 U	0.01 U	0.01 U	0.01 U	0.01 U	0.01 U	0.01 U	0.01 U	0.01 U	0.01 U	0.5 U		
Benz(a)anthracene in mg/kg			0.022	0.01	0.01 U	0.015	0.01 U	0.014	0.034	0.01 U	0.01 U	0.018	0.01 U	1.4		
Benzo(a)pyrene in mg/kg			0.037	0.01 U	0.01 U	0.019	0.01 U	0.01 U	0.01 U	0.01 U	0.01 U	0.01 U	0.01 U	1.2		
Benzo(b)fluoranthene in mg/kg			0.01 U	0.01 U	0.01 U	0.01 U	0.01 U	0.01 U	0.01 U	0.01 U	0.01 U	0.01 U	0.01 U	1.1		
Benzo(k)fluoranthene in mg/kg			0.01 U	0.01 U	0.01 U	0.01 U	0.01 U	0.01 U	0.01 U	0.01 U	0.01 U	0.01 U	0.01 U	0.5 U		
Chrysene in mg/kg			0.042	0.015	0.01 U	0.028	0.01 U	0.023	0.11	0.01 U	0.01 U	0.074	0.01 U	1.5		
Dibenzo(a,h)anthracene in mg/kg			0.01 U	0.01 U	0.01 U	0.01 U	0.01 U	0.01 U	0.01 U	0.01 U	0.01 U	0.01 U	0.01 U	0.5 U		
Indeno(1,2,3-cd)pyrene in mg/kg			0.036	0.01 U	0.01 U	0.01 U	0.01 U	0.01 U	0.01 U	0.01 U	0.01 U	0.01 U	0.01 U	0.51 J		
Total cPAHs TEQ in mg/kg	0.4	7.9	0.0447	0.00815	ND	0.0228	ND	0.00863	0.0115	ND	ND	0.085	ND	1.57		
Volatile Organic Compounds (VOC)																
1,1,1,2-Tetrachloroethane in mg/kg	5,000	5,000			0.05 U	0.05 U	0.05 U		0.05 U	0.05 U	0.05 U	0.05 U	0.05 U	0.05 U		
1,1,1-Trichloroethane in mg/kg	7,000,000	7,000,000			0.05 U	0.05 U	0.05 U		0.05 U	0.05 U	0.05 U	0.05 U	0.05 U	0.05 U		
1,1,2,2-Tetrachloroethane in mg/kg	660	660			0.05 U	0.05 U	0.05 U		0.05 U	0.05 U	0.05 U	0.05 U	0.05 U	0.05 U		
1,1,2-Trichloroethane in mg/kg	2,300	2,300			0.05 U	0.05 U	0.05 U		0.05 U	0.05 U	0.05 U	0.05 U	0.05 U	0.05 U		
1,1-Dichloroethane in mg/kg	23,000	23,000			0.05 U	0.05 U	0.05 U		0.05 U	0.05 U	0.05 U	0.05 U	0.05 U	0.05 U		
1,1-Dichloroethene in mg/kg	180,000	180,000			0.05 U	0.05 U	0.05 U		0.05 U	0.05 U	0.05 U	0.05 U	0.05 U	0.05 U		
1,1-Dichloropropene in mg/kg					0.05 U	0.05 U	0.05 U		0.05 U	0.05 U	0.05 U	0.05 U	0.05 U	0.05 U		
1,2,3-Trichlorobenzene in mg/kg					0.25 U	0.25 U	0.25 U		0.25 U	0.25 U	0.25 U	0.25 U	0.25 U	0.25 U		
1,2,3-Trichloropropane in mg/kg	4.4	4.4			0.05 U	0.05 U	0.05 U		0.05 U	0.05 U	0.05 U	0.05 U	0.05 U	0.05 U		
1,2,4-Trichlorobenzene in mg/kg	4,500	4,500			0.25 U	0.25 U	0.25 U		0.25 U	0.25 U	0.25 U	0.25 U	0.25 U	0.25 U		
1,2,4-Trimethylbenzene in mg/kg					0.05 U	0.05 U	0.05 U		0.05 U	0.05 U	0.05 U	0.05 U	0.05 U	0.05 U		
1,2-Dibromo-3-chloropropane in mg/kg	160	160			0.5 U	0.5 U	0.5 U		0.5 U	0.5 U	0.5 U	0.5 U	0.5 U	0.5 U		
1,2-Dibromoethane (EDB) in mg/kg	66	66			0.05 U	0.05 U	0.05 U		0.05 U	0.05 U	0.05 U	0.05 U	0.05 U	0.05 U		
1,2-Dichlorobenzene in mg/kg	320,000	320,000			0.05 U	0.05 U	0.05 U		0.05 U	0.05 U	0.05 U	0.05 U	0.05 U	0.05 U		
1,2-Dichloroethane (EDC) in mg/kg	1,400	1,400			0.05 U	0.05 U	0.05 U		0.05 U	0.05 U	0.05 U	0.05 U	0.05 U	0.05 U		
1,2-Dichloropropane in mg/kg	3,600	3,600			0.05 U	0.05 U	0.05 U		0.05 U	0.05 U	0.05 U	0.05 U	0.05 U	0.05 U		
1,3,5-Trimethylbenzene in mg/kg	35,000	35,000			0.05 U	0.05 U	0.05 U		0.05 U	0.05 U	0.05 U	0.05 U	0.05 U	0.05 U		
1,3-Dichlorobenzene in mg/kg					0.05 U	0.05 U	0.05 U		0.05 U	0.05 U	0.05 U	0.05 U	0.05 U	0.05 U		
1,3-Dichloropropane in mg/kg					0.05 U	0.05 U	0.05 U		0.05 U	0.05 U	0.05 U	0.05 U	0.05 U	0.05 U		
1,4-Dichlorobenzene in mg/kg	24,000	24,000			0.05 U	0.05 U	0.05 U		0.05 U	0.05 U	0.05 U	0.05 U	0.05 U	0.05 U		
2,2-Dichloropropane in mg/kg					0.05 U	0.05 U	0.05 U		0.05 U	0.05 U	0.05 U	0.05 U	0.05 U	0.05 U		
2-Butanone in mg/kg	2,100,000	2,100,000			0.5 U	0.5 U	0.5 U		0.5 U	0.5 U	0.5 U	0.5 U	0.5 U	0.5 U		
2-Chlorotoluene in mg/kg	70,000	70,000			0.05 U	0.05 U	0.05 U		0.05 U	0.05 U	0.05 U	0.05 U	0.05 U	0.05 U		
2-Hexanone in mg/kg					0.5 U	0.5 U	0.5 U		0.5 U	0.5 U	0.5 U	0.5 U	0.5 U	0.5 U		
4-Chlorotoluene in mg/kg					0.05 U	0.05 U	0.05 U		0.05 U	0.05 U	0.05 U	0.05 U	0.05 U	0.05 U		
4-Methyl-2-pentanone in mg/kg	280,000	280,000			0.5 U	0.5 U	0.5 U		0.5 U	0.5 U	0.5 U	0.5 U	0.5 U	0.5 U		

Table 7 - Excavation Verification Soil Quality Data for Bunker C ASTs Interim Action Area

K-C Worldwide Site Upland Area 110207

			Overexcavated Samples												
Chemical Name	Interim Action Cleanup Level - Saturated Soil	Interim Action Cleanup Level - Unsaturated Soil	BAST-S031 10/25/13 (3 ft) OverEx SAT	BAST-S032 10/25/13 (3 ft) OverEx SAT	BAST-S045 12/30/13 (3 ft) OverEx	BAST-S046 12/30/13 (5 ft) OverEx SAT	BAST-S050 1/3/14 (8 ft) OverEx SAT	BAST-S055 1/20/14 (3 ft) OverEx SAT	BAST-S067 1/28/14 (4 ft) OverEx	BAST-S069 2/11/14 (3 ft) OverEx	BAST-S069 FD 2/11/14 (3 ft) OverEx	BAST-S073 2/13/14 (3 ft) OverEx	BAST-S082 2/21/14 (4 ft) OverEx	BAST-S090 2/25/14 (4 ft) OverEx	BCAST-SUMP-1 10/8/13 OverEx
Acetone in mg/kg	3,200,000	3,200,000			0.5 U	0.5 U	0.5 U		0.5 U	0.5 U	0.5 U	0.5 U	0.5 U	0.5 U	
Benzene in mg/kg	2,400	2,400			0.03 U	0.03 U	0.03 U		0.03 U	0.03 U	0.03 U	0.03 U	0.03 U	0.03 U	
Bromobenzene in mg/kg					0.05 U	0.05 U	0.05 U		0.05 U	0.05 U	0.05 U	0.05 U	0.05 U	0.05 U	
Bromodichloromethane in mg/kg	2,100	2,100			0.05 U	0.05 U	0.05 U		0.05 U	0.05 U	0.05 U	0.05 U	0.05 U	0.05 U	
Bromoform in mg/kg	17,000	17,000			0.05 U	0.05 U	0.05 U		0.05 U	0.05 U	0.05 U	0.05 U	0.05 U	0.05 U	
Bromomethane in mg/kg	4,900	4,900			0.5 U	0.5 U	0.5 U		0.5 U	0.5 UJ	0.5 U	0.5 U	0.5 U	0.5 U	
Carbon tetrachloride in mg/kg	1,900	1,900			0.05 U	0.05 U	0.05 U		0.05 U	0.05 U	0.05 U	0.05 U	0.05 U	0.05 U	
Chlorobenzene in mg/kg	70,000	70,000			0.05 U	0.05 U	0.05 U		0.05 U	0.05 U	0.05 U	0.05 U	0.05 U	0.05 U	
Chloroethane in mg/kg					0.5 U	0.5 U	0.5 U		0.5 U	0.5 U	0.5 U	0.5 U	0.5 U	0.5 U	
Chloroform in mg/kg	4,200	4,200			0.05 U	0.05 U	0.05 U		0.05 U	0.05 U	0.05 U	0.05 U	0.05 U	0.05 U	
Chloromethane in mg/kg					0.5 U	0.5 U	0.5 U		0.5 U	0.5 U	0.5 U	0.5 U	0.5 U	0.5 U	
cis-1,2-Dichloroethene (DCE) in mg/kg	7,000	7,000			0.05 U	0.05 U	0.05 U		0.05 U	0.05 U	0.05 U	0.05 U	0.05 U	0.05 U	
cis-1,3-Dichloropropene in mg/kg					0.05 U	0.05 U	0.05 U		0.05 U	0.05 U	0.05 U	0.05 U	0.05 U	0.05 U	
Dibromochloromethane in mg/kg	1,600	1,600			0.05 U	0.05 U	0.05 U		0.05 U	0.05 U	0.05 U	0.05 U	0.05 U	0.05 U	
Dibromomethane in mg/kg	35,000	35,000			0.05 U	0.05 U	0.05 U		0.05 U	0.05 U	0.05 U	0.05 U	0.05 U	0.05 U	
Dichlorodifluoromethane in mg/kg	700,000	700,000			0.5 U	0.5 U	0.5 U		0.5 U	0.5 U	0.5 U	0.5 U	0.5 U	0.5 U	
Ethylbenzene in mg/kg	350,000	350,000			0.05 U	0.05 U	0.05 U		0.05 U	0.05 U	0.05 U	0.05 U	0.05 U	0.05 U	
Hexachlorobutadiene in mg/kg	1,700	1,700			0.25 U	0.25 U	0.25 U		0.25 U	0.25 U	0.25 U	0.25 U	0.25 U	0.25 U	
Isopropylbenzene in mg/kg	350,000	350,000			0.05 U	0.05 U	0.05 U		0.05 U	0.05 U	0.05 U	0.05 U	0.05 U	0.05 U	
Methyl tert-butyl ether (MTBE) in mg/kg	73,000	73,000			0.05 U	0.05 U	0.05 U		0.05 U	0.05 U	0.05 U	0.05 U	0.05 U	0.05 U	
Methylene chloride in mg/kg	21,000	21,000			0.5 U	0.5 U	0.5 U		0.5 U	0.5 U	0.5 U	0.5 U	0.5 U	0.5 U	
n-Propylbenzene in mg/kg	350,000	350,000			0.05 U	0.05 U	0.05 U		0.073	0.05 U	0.05 U	0.05 U	0.05 U	0.05 U	
p-Isopropyltoluene in mg/kg					0.05 U	0.05 U	0.05 U		0.05 U	0.05 U	0.05 U	0.05 U	0.05 U	0.05 U	
sec-Butylbenzene in mg/kg	350,000	350,000			0.05 U	0.05 U	0.052		0.088	0.05 U	0.05 U	0.05 U	0.05 U	0.05 U	
Styrene in mg/kg	700,000	700,000			0.05 U	0.05 U	0.05 U		0.05 U	0.05 U	0.05 U	0.05 U	0.05 U	0.05 U	
tert-Butylbenzene in mg/kg	350,000	350,000			0.05 U	0.05 U	0.05 U		0.05 U	0.05 U	0.05 U	0.05 U	0.05 U	0.05 U	
Tetrachloroethene (PCE) in mg/kg	21,000	21,000			0.025 U	0.025 U	0.025 U		0.025 U	0.025 U	0.025 U	0.025 U	0.025 U	0.025 U	
Toluene in mg/kg	280,000	280,000			0.05 U	0.05 U	0.05 U		0.05 U	0.05 U	0.05 U	0.05 U	0.05 U	0.05 U	
trans-1,2-Dichloroethene in mg/kg	70,000	70,000			0.05 U	0.05 U	0.05 U		0.05 U	0.05 U	0.05 U	0.05 U	0.05 U	0.05 U	
trans-1,3-Dichloropropene in mg/kg					0.05 U	0.05 U	0.05 U		0.05 U	0.05 U	0.05 U	0.05 U	0.05 U	0.05 U	
Trichloroethene (TCE) in mg/kg	1,800	1,800			0.03 U	0.03 U	0.03 U		0.03 U	0.03 U	0.03 U	0.03 U	0.03 U	0.03 U	
Trichlorofluoromethane in mg/kg	1,100,000	1,100,000			0.5 U	0.5 U	0.5 U		0.5 U	0.5 U	0.5 U	0.5 U	0.5 U	0.5 U	
Vinyl chloride in mg/kg	88	88			0.05 U	0.05 U	0.05 U		0.05 U	0.05 U	0.05 U	0.05 U	0.05 U	0.05 U	
m,p-Xylenes in mg/kg	49	2.5			0.1 U	0.1 U	0.1 U		0.1 U	0.1 U	0.1 U	0.1 U	0.1 U	0.1 U	
o-Xylene in mg/kg	80	4.1			0.05 U	0.05 U	0.05 U		0.05 U	0.05 U	0.05 U	0.05 U	0.05 U	0.05 U	
Naphthalene in mg/kg	70,000	70,000								0.05 U	0.05 U	0.05 U	0.05 U	0.05 U	
Polychlorinated Biphenyls (PCBs)															
Aroclor 1016 in mg/kg															0.1 U
Aroclor 1221 in mg/kg															0.1 U
Aroclor 1232 in mg/kg															0.1 U
Aroclor 1242 in mg/kg															0.1 U
Aroclor 1248 in mg/kg															0.1 U
Aroclor 1254 in mg/kg															0.1 U
Aroclor 1260 in mg/kg															0.1 U
Total PCBs (Sum of Aroclors) in mg/kg	10	10													ND

Notes

Concentrations in shaded cells indicate value exceeds Interim Action Cleanup Level - Saturated Soil.
Concentrations in bold text indicate value exceeds Interim Action Cleanup Level - Unsaturated Soil.
SAT = Sample of saturated soil; samples without this designation are unsaturated soil.
J = Analyte was positively identified. The reported result is an estimate.
U = Analyte was not detected at or above the reported result.
UJ = Analyte was not detected at or above the reported estimate.
x = The sample chromatographic pattern does not resemble the fuel standard used for quantitation.

Table 8 - Excavation Verification Soil Quality Data for CN-B-2 Interim Action Area

K-C Worldwide Site Upland Area 110207

Chemical Name	Interim Action Cleanup Level - Saturated Soil	Interim Action Cleanup Level - Unsaturated Soil	Bottom Samples in Place																			
			CNB2-B01 3/3/14 (4 ft) SAT	CNB2-B02 3/3/14 (4 ft) SAT	CNB2-B03 3/3/14 (8 ft) SAT	CNB2-B03 FD 3/3/14 (8 ft) SAT	CNB2-B04 3/3/14 (8 ft) SAT	CNB2-B10 3/7/14 (11 ft) SAT	CNB2-B10 FD 3/7/14 (11 ft) SAT	CNB2-B14 3/14/14 (15 ft) SAT	CNB2-B15 3/15/14 (18 ft) SAT	CNB2-B16 3/15/14 (18 ft) SAT	CNB2-B17 3/15/14 (18 ft) SAT	CNB2-B18 3/15/14 (18 ft) SAT	CNB2-B19 3/15/14 (18 ft) SAT	CNB2-B21 3/15/14 (16 ft) SAT	CNB2-B24 3/19/14 (16 ft) SAT	CNB2-B24 FD 3/19/14 (16 ft) SAT	CNB2-B25 3/19/14 (18 ft) SAT	CNB2-B26 3/20/14 (4 ft) SAT	CNB2-B27 3/20/14 (4 ft) SAT	CNB2-B28 3/20/14 (4 ft) SAT
Total Petroleum Hydrocarbons (TPH)																						
Diesel Range Hydrocarbons in mg/kg	2,000	2,000	50 U	50 U	50 U	50 U	50 U	50 U	50 U	50 U		200 U	200 U	200 U	200 U	200 U	250 U	250 U	250 U	50 U	50 U	50 U
Oil Range Hydrocarbons in mg/kg	2,000	2,000	250 U	250 U	250 U	250 U	250 U	250 U	250 U	250 U		1,000 U	1,000 U	1,000 U	1,000 U	1,000 U	1,250 U	1,250 U	1,250 U	250 U	250 U	250 U
Total TPHs in mg/kg	2,000	2,000	ND	ND	ND	ND	ND	ND	ND	ND		ND	ND	ND	ND	ND	ND	ND	ND	ND	ND	ND
Metals																						
Arsenic in mg/kg	20	20			3.61	3.36		3.94	5.04	1.59	12.6	13.7	1 U	12.5	1 U	**25.2**	1 U	1 U	14.7	2.16	5.14	2.02
Cadmium in mg/kg	3,500	3,500			1 U	1 U		1 U	1 U	1 U	1 U	1 U	1 U	1 U	1 U	1 U	1 U	1 U	1 U	1 U	1 U	1 U
Copper in mg/kg	36	36			7.57	6.83		16	17.2	4.68	13.5	11.4	12.9	12.4	1 U	21.2	1 U	1 U	8.83	10.4	14.3	8.87
Lead in mg/kg	81	1,000			3.57	2.12		5.19	5.68	2	19.5	65.8	25.4	114	1 U	10.6	27.6	20.6	8	3.38	23.3	2.94
Mercury in mg/kg	0.1	0.1			0.1 U	0.1 U		0.1 U	0.1 U	0.1 U	0.1 U	0.1 U	0.1 U	0.1 U	0.1 U	0.1 U	0.1 U	0.1 U	0.1 U	0.1 U	0.1 U	0.1 U
Nickel in mg/kg	48	48			11.1	11.3		16.1	17.6	16.4	1 U	6.89	1 U	7.15	1 U	12.2	9.12	7.83	7.94	20.9	16.8	10.4
Zinc in mg/kg	85	100			14.3	15.8 J		27.4	28.7	10.7	25.2	73.2	1 U	**103**	6.37	51.8	40 J	55.8	**102**	13.7 J	**216**	13.7 J
Polycyclic Aromatic Hydrocarbons (PAHs)																						
Acenaphthene in mg/kg	210,000	210,000	0.017	0.01 U	0.01 U	0.01 U	0.01 U	0.011	0.021	0.01 U	0.05 U	0.05 U	0.05 U	0.05 U	0.05 U	0.05 U	0.05 U	0.05 U	0.05 U	0.01 U	0.11	0.017
Acenaphthylene in mg/kg			0.01 U	0.01 U	0.01 U	0.01 U	0.01 U	0.01 U	0.01 U	0.01 U	0.05 U	0.05 U	0.05 U	0.05 U	0.05 U	0.05 U	0.05 U	0.05 U	0.05 U	0.01 U	0.91	0.01 U
Anthracene in mg/kg	1,100,000	1,100,000	0.01 U	0.01 U	0.01 U	0.01 U	0.01 U	0.01	0.019	0.01 U	0.05 U	0.05 U	0.05 U	0.05 U	0.05 U	0.05 U	0.05 U	0.05 U	0.05 U	0.01 U	1.1	0.01 U
Benzo(g,h,i)perylene in mg/kg			0.01 U	0.01 U	0.01 U	0.01 U	0.015	0.012	0.03	0.01 U	0.05 U	0.05 U	0.05 U	0.05 U	0.05 U	0.05 U	0.05 U	0.05 U	0.05 U	0.01 U	3.9	0.035
Fluoranthene in mg/kg	140,000	140,000	0.01 U	0.018	0.01 U	0.01 U	0.049	0.052 J	0.086 J	0.01 U	0.05 U	0.05 U	0.05 U	0.05 U	0.05 U	0.05 U	0.05 U	0.05 U	0.05 U	0.018	8.2	0.022
Fluorene in mg/kg	140,000	140,000	0.01 U	0.01 U	0.01 U	0.01 U	0.01 U	0.01 U	0.017	0.01 U	0.05 U	0.05 U	0.05 U	0.05 U	0.05 U	0.05 U	0.05 U	0.05 U	0.05 U	0.01 U	0.38	0.011
Phenanthrene in mg/kg			0.01 U	0.01 U	0.01 U	0.01 U	0.031	0.038 J	0.085 J	0.01 U	0.05 U	0.05 U	0.05 U	0.05 U	0.05 U	0.05 U	0.05 U	0.05 U	0.05 U	0.012	5	0.014
Pyrene in mg/kg	110,000	110,000	0.01 U	0.015	0.01 U	0.01 U	0.061	0.057 J	0.11 J	0.01 U	0.05 U	0.05 U	0.05 U	0.05 U	0.05 U	0.05 U	0.05 U	0.05 U	0.05 U	0.017	9.9	0.021
Naphthalene in mg/kg	70,000	70,000	0.01 U	0.01 U	0.01 U	0.01 U	0.032	0.019 J	0.049 J	0.01 U	0.05 U	0.05 U	0.05 U	0.05 U	0.05 U	0.05 U	0.05 U	0.05 U	0.05 U	0.01 U	0.34	0.019
Benz(a)anthracene in mg/kg			0.01 U	0.012	0.01 U	0.01 U	0.019	0.026	0.045	0.01 U	0.05 U	0.05 U	0.05 U	0.05 U	0.05 U	0.05 U	0.05 U	0.05 U	0.05 U	0.01 U	3.6	0.033
Benzo(a)pyrene in mg/kg			0.01 U	0.01 U	0.01 U	0.01 U	0.017	0.021 J	0.044 J	0.01 U	0.05 U	0.05 U	0.05 U	0.05 U	0.05 U	0.05 U	0.05 U	0.05 U	0.05 U	0.01 U	4.7	0.049
Benzo(b)fluoranthene in mg/kg			0.01 U	0.01 U	0.01 U	0.01 U	0.025	0.027 J	0.055 J	0.01 U	0.05 U	0.05 U	0.05 U	0.05 U	0.05 U	0.05 U	0.05 U	0.05 U	0.05 U	0.013	6	0.081
Benzo(k)fluoranthene in mg/kg			0.01 U	0.01 U	0.01 U	0.01 U	0.01 U	0.01 U	0.02	0.01 U	0.05 U	0.05 U	0.05 U	0.05 U	0.05 U	0.05 U	0.05 U	0.05 U	0.05 U	0.01 U	1.9	0.022
Chrysene in mg/kg			0.01 U	0.019	0.01 U	0.01 U	0.029	0.029 J	0.055 J	0.01 U	0.05 U	0.05 U	0.05 U	0.05 U	0.05 U	0.05 U	0.05 U	0.05 U	0.05 U	0.011	5.1	0.053
Dibenzo(a,h)anthracene in mg/kg			0.01 U	0.01 U	0.01 U	0.01 U	0.01 U	0.01 U	0.01 U	0.01 U	0.05 U	0.05 U	0.05 U	0.05 U	0.05 U	0.05 U	0.05 U	0.05 U	0.05 U	0.01 U	0.85	0.01 U
Indeno(1,2,3-cd)pyrene in mg/kg			0.01 U	0.01 U	0.01 U	0.01 U	0.014	0.012	0.032	0.01 U	0.05 U	0.05 U	0.05 U	0.05 U	0.05 U	0.05 U	0.05 U	0.05 U	0.05 U	0.01 U	4	0.043
Total cPAHs TEQ in mg/kg	0.4	7.9	ND	0.00839	ND	ND	0.0241	0.0288	0.0603	ND	ND	ND	ND	ND	ND	ND	ND	ND	ND	0.00841	6.39	0.0679
Polychlorinated Biphenyls (PCBs)																						
Aroclor 1016 in mg/kg																						
Aroclor 1221 in mg/kg																						
Aroclor 1232 in mg/kg																						
Aroclor 1242 in mg/kg																						
Aroclor 1248 in mg/kg																						
Aroclor 1254 in mg/kg																						
Aroclor 1260 in mg/kg																						
Total PCBs (Sum of Aroclors) in mg/kg	10	10																				

Notes

Concentrations in shaded cells indicate value exceeds Interim Action Cleanup Level - Saturated Soil.

Concentrations in bold text indicate value exceeds Interim Action Cleanup Level - Unsaturated Soil.

SAT = Sample of saturated soil; samples without this designation are unsaturated soil.

J = Analyte was positively identified. The reported result is an estimate.

U = Analyte was not detected at or above the reported result.

UJ = Analyte was not detected at or above the reported estimate.

x = The sample chromatographic pattern does not resemble the fuel standard used for quantitation.

Table 8 - Excavation Verification Soil Quality Data for CN-B-2 Interim Action Area

K-C Worldwide Site Upland Area 110207

			Sidewall Samples in Place																		
Chemical Name	Interim Action Cleanup Level - Saturated Soil	Interim Action Cleanup Level - Unsaturated Soil	CNB2-S01 3/3/14 (3 ft)	CNB2-S02 3/3/14 (3 ft)	CNB2-S03 3/3/14 (4 ft) SAT	CNB2-S04 3/3/14 (3 ft)	CNB2-S05 3/3/14 (6 ft) SAT	CNB2-S06 3/3/14 (3 ft)	CNB2-S07 3/3/14 (6 ft) SAT	CNB2-S08 3/3/14 (3 ft)	CNB2-S09 3/3/14 (6 ft) SAT	CNB2-S11 3/3/14 (3 ft)	CNB2-S12 3/3/14 (3 ft)	CNB2-S13 3/15/14 (4 ft) SAT	CNB2-S26 3/15/14 (8 ft) SAT	CNB2-S27 3/15/14 (12 ft) SAT	CNB2-S28 3/15/14 (4 ft) SAT	CNB2-S29 3/15/14 (8 ft) SAT	CNB2-S30 3/15/14 (12 ft) SAT	CNB2-S31 3/15/14 (4 ft) SAT	CNB2-S32 3/15/14 (8 ft) SAT	CNB2-S33 3/15/14 (12 ft) SAT
Total Petroleum Hydrocarbons (TPH)																					
Diesel Range Hydrocarbons in mg/kg	2,000	2,000	50 U	50 U	50 U	50 U	50 U	50 U	50 U	50 U	50 U	50 U	50 U	50 U	50 U	200 U	50 U	50 U	50 U	50 U	50 U	50 U
Oil Range Hydrocarbons in mg/kg	2,000	2,000	250 U	250 U	250 U	250 U	250 U	250 U	250 U	250 U	250 U	250 U	250 U	250 U	250 U	1,000 U	250 U	250 U	250 U	250 U	250 U	250 U
Total TPHs in mg/kg	2,000	2,000	ND	ND	ND	ND	ND	ND	ND	ND	ND	ND	ND	ND	ND	ND	ND	ND	ND	ND	ND	ND
Metals																					
Arsenic in mg/kg	20	20					3.35							4.67	3.28	1 U	6.23	3.23	3.04	8.07	4.82	3.19
Cadmium in mg/kg	3,500	3,500					1 U							1 U	1 U	1 U	1 U	1 U	1 U	1 U	1 U	1 U
Copper in mg/kg	36	36					5.14							15.6	5.59	28	29.5	5.03	5.56	**36.8**	14.1	5.11
Lead in mg/kg	81	1,000					2.14							2.29	1.62	24.6	5.68	1.46	1.56	8.07	2.34	1.65
Mercury in mg/kg	0.1	0.1					0.1 U							0.1 U	0.1 U	0.1 U	**0.15**	0.1 U	0.1 U	0.1 U	0.1 U	0.1 U
Nickel in mg/kg	48	48					9.27							17.3	10	6.86	25.1	11.3	11.3	28.3	15.5	10.3
Zinc in mg/kg	85	100					10.4 J							28.7	11.1	16.4	39.5	10.5	11.8	47.9	23.5	11.4
Polycyclic Aromatic Hydrocarbons (PAHs)																					
Acenaphthene in mg/kg	210,000	210,000	0.01 U	0.01 U	0.01 U	0.01 U	0.01 U	0.01 U	0.01 U	0.01 U	0.01 U	0.01 U	0.01 U	0.01 U	0.01 U	0.05 U	0.01 U	0.01 U	0.01 U	0.023	0.011	0.01 U
Acenaphthylene in mg/kg			0.01 U	0.01 U	0.01 U	0.01 U	0.01 U	0.01 U	0.01 U	0.01 U	0.01 U	0.01 U	0.01 U	0.01 U	0.01 U	0.05 U	0.01 U	0.01 U	0.01 U	0.01 U	0.01 U	0.01 U
Anthracene in mg/kg	1,100,000	1,100,000	0.01 U	0.01 U	0.01 U	0.01 U	0.01 U	0.01 U	0.01 U	0.016	0.011	0.01 U	0.018	0.01 U	0.01 U	0.05 U	0.01 U	0.01 U	0.01 U	0.01 U	0.01 U	0.01 U
Benzo(g,h,i)perylene in mg/kg			0.01 U	0.01 U	0.01 U	0.01 U	0.01 U	0.013	0.01 U	0.021	0.011	0.01 U	0.027	0.01 U	0.01 U	0.05 U	0.01 U	0.01 U	0.01 U	0.01 U	0.01 U	0.01 U
Fluoranthene in mg/kg	140,000	140,000	0.024	0.01 U	0.017	0.026	0.01 U	0.032	0.01 U	0.069	0.042	0.01 U	0.052	0.01 U	0.01 U	0.05 U	0.01 U	0.01 U	0.01 U	0.024	0.01 U	0.01 U
Fluorene in mg/kg	140,000	140,000	0.01 U	0.01 U	0.01 U	0.01 U	0.01 U	0.01 U	0.01 U	0.01 U	0.01 U	0.01 U	0.01 U	0.01 U	0.01 U	0.05 U	0.01 U	0.01 U	0.01 U	0.01 U	0.011	0.01 U
Phenanthrene in mg/kg			0.019	0.01 U	0.012	0.019	0.01 U	0.015	0.01 U	0.073	0.036	0.01 U	0.044	0.01 U	0.01 U	0.05 U	0.01 U	0.01 U	0.01 U	0.013	0.01 U	0.01 U
Pyrene in mg/kg	110,000	110,000	0.029	0.01 U	0.019	0.027	0.01 U	0.034	0.01 U	0.074	0.042	0.01 U	0.04	0.01 U	0.01 U	0.05 U	0.01 U	0.01 U	0.01 U	0.02	0.01 U	0.01 U
Naphthalene in mg/kg	70,000	70,000	0.015	0.01 U	0.011	0.011	0.01 U	0.01 U	0.01 U	0.027	0.012	0.01 U	0.026	0.01 U	0.01 U	0.05 U	0.01 U	0.01 U	0.01 U	0.022	0.01 U	0.01 U
Benz(a)anthracene in mg/kg			0.013 J	0.01 U	0.01 U	0.01 U	0.01 U	0.017	0.01 U	0.037	0.019	0.01 U	0.046	0.01 U	0.01 U	0.05 U	0.01 U	0.01 U	0.01 U	0.01 U	0.01 U	0.01 U
Benzo(a)pyrene in mg/kg			0.01 J	0.01 U	0.01 U	0.01 U	0.01 U	0.018	0.01 U	0.035	0.017	0.01 U	0.04	0.01 U	0.01 U	0.05 U	0.01 U	0.01 U	0.01 U	0.01 U	0.01 U	0.01 U
Benzo(b)fluoranthene in mg/kg			0.013 J	0.01 U	0.01 U	0.013	0.01 U	0.02	0.01 U	0.042	0.021	0.01 U	0.062	0.01 U	0.01 U	0.05 U	0.01 U	0.01 U	0.01 U	0.01 U	0.01 U	0.01 U
Benzo(k)fluoranthene in mg/kg			0.01 U	0.01 U	0.01 U	0.01 U	0.01 U	0.01 U	0.01 U	0.016	0.01 U	0.01 U	0.028	0.01 U	0.01 U	0.05 U	0.01 U	0.01 U	0.01 U	0.01 U	0.01 U	0.01 U
Chrysene in mg/kg			0.014 J	0.01 U	0.01 U	0.011	0.01 U	0.018	0.01 U	0.044	0.022	0.01 U	0.09	0.01 U	0.01 U	0.05 U	0.01 U	0.01 U	0.01 U	0.01 U	0.01 U	0.01 U
Dibenzo(a,h)anthracene in mg/kg			0.01 U	0.01 U	0.01 U	0.01 U	0.01 U	0.01 U	0.01 U	0.01 U	0.01 U	0.01 U	0.01 U	0.01 U	0.01 U	0.05 U	0.01 U	0.01 U	0.01 U	0.01 U	0.01 U	0.01 U
Indeno(1,2,3-cd)pyrene in mg/kg			0.01 U	0.01 U	0.01 U	0.01 U	0.01 U	0.012	0.01 U	0.022	0.01	0.01 U	0.028	0.01 U	0.01 U	0.05 U	0.01 U	0.01 U	0.01 U	0.01 U	0.01 U	0.01 U
Total cPAHs TEQ in mg/kg	0.4	7.9	0.0142	ND	ND	0.00841	ND	0.0241	ND	0.0476	0.0232	ND	0.0578	ND	ND	ND	ND	ND	ND	ND	ND	ND
Polychlorinated Biphenyls (PCBs)																					
Aroclor 1016 in mg/kg																					
Aroclor 1221 in mg/kg																					
Aroclor 1232 in mg/kg																					
Aroclor 1242 in mg/kg																					
Aroclor 1248 in mg/kg																					
Aroclor 1254 in mg/kg																					
Aroclor 1260 in mg/kg																					
Total PCBs (Sum of Aroclors) in mg/kg	10	10																			

Notes

Concentrations in shaded cells indicate value exceeds Interim Action Cleanup Level - Saturated Soil.

Concentrations in bold text indicate value exceeds Interim Action Cleanup Level - Unsaturated Soil.

SAT = Sample of saturated soil; samples without this designation are unsaturated soil.

J = Analyte was positively identified. The reported result is an estimate.

U = Analyte was not detected at or above the reported result.

UJ = Analyte was not detected at or above the reported estimate.

x = The sample chromatographic pattern does not resemble the fuel standard used for quantitation.

Table 8 - Excavation Verification Soil Quality Data for CN-B-2 Interim Action Area

K-C Worldwide Site Upland Area 110207

Chemical Name	Interim Action Cleanup Level - Saturated Soil	Interim Action Cleanup Level - Unsaturated Soil	Sidewall Samples in Place																
			CNB2-S34 3/15/14 (4 ft) SAT	CNB2-S35 3/15/14 (8 ft) SAT	CNB2-S36 3/15/14 (12 ft) SAT	CNB2-S37 3/15/14 (4 ft) SAT	CNB2-S38 3/15/14 (8 ft) SAT	CNB2-S39 3/15/14 (12 ft) SAT	CNB2-S40 3/15/14 (4 ft) SAT	CNB2-S41 3/15/14 (8 ft) SAT	CNB2-S42 3/15/14 (12 ft) SAT	CNB2-S43 3/15/14 (4 ft) SAT	CNB2-S44 3/15/14 (8 ft) SAT	CNB2-S45 3/15/14 (12 ft) SAT	CNB2-S49 3/19/14 (12 ft) SAT	CNB2-S50 3/20/14 (3 ft)	CNB2-S51 3/20/14 (3 ft)	CNB2-S52 3/20/14 (3 ft)	CNB2-S53 3/20/14 (3 ft)
Total Petroleum Hydrocarbons (TPH)																			
Diesel Range Hydrocarbons in mg/kg	2,000	2,000	50 U	50 U	320 x	50 U	50 U	50 U	50 U	50 U	200 U	50 U	50 U	200 U	250 U	50 U	50 U	50 U	50 U
Oil Range Hydrocarbons in mg/kg	2,000	2,000	250 U	250 U	1,500	250 U	250 U	250 U	250 U	250 U	1,000 U	250 U	250 U	1,000 U	1,250 U	250 U	250 U	250 U	250 U
Total TPHs in mg/kg	2,000	2,000	ND	ND	1,820	ND	ND	ND	ND	ND	ND	ND	ND	ND	ND	ND	ND	ND	ND
Metals																			
Arsenic in mg/kg	20	20	1.43	3.52	5.21 J	5.64	3.28	7.53	3.22	3.31	1 U	3.45	3.07	1 U	8.89	8.28	1.93	4.96	4.49
Cadmium in mg/kg	3,500	3,500	1 U	1 U	1 U	1 U	1 U	1 U	1 U	1 U	1 U	1 U	1 U	1 U	1 U	1 U	1 U	1 U	1 U
Copper in mg/kg	36	36	10.9	4.78	**77.6**	26	5.12	**37.2**	9.67	4.94	35.7	14	5.6	15.9	15.2	**37.1**	9.53	22.7	11.9
Lead in mg/kg	81	1,000	1.87	1.55	121	4.15	1.59	8.24	1.99	1.62	16.7	2.25	1.71	15.9	13.2	7.64	3.12	10	4.27
Mercury in mg/kg	0.1	0.1	0.1 U	0.1 U	0.1 U	0.1 U	0.1 U	0.1 U	0.1 U	0.1 U	**0.13**	0.1 U	0.1 U	0.1 U	0.1 U	0.1 U	0.1 U	0.1 U	0.1 U
Nickel in mg/kg	48	48	23.6	10.5	9.45 J	22.6	10.4	29.6	12.8	9.84	11.2 J	16.3	11.3	1 U	6	25	11.2	22.2	16.4
Zinc in mg/kg	85	100	13.9	10.4	58.3	35.9	11.2	45	18.1	10.9	17 J	23.9	12	17.1	19.5 J	40.8	15.7 J	39.9	5.2 J
Polycyclic Aromatic Hydrocarbons (PAHs)																			
Acenaphthene in mg/kg	210,000	210,000	0.01 U	0.01 U	0.3 U	0.014	0.01 U	0.01 U	0.01 U	0.01 U	0.05 U	0.01 U	0.01 U	0.05 U	0.05 U	0.01 U	0.01 U	0.01 U	0.12
Acenaphthylene in mg/kg			0.01 U	0.01 U	0.3 U	0.01 U	0.01 U	0.01 U	0.01 U	0.01 U	0.05 U	0.01 U	0.01 U	0.05 U	0.05 U	0.01 U	0.01 U	0.01 U	0.01 U
Anthracene in mg/kg	1,100,000	1,100,000	0.01 U	0.01 U	0.3 U	0.057	0.01 U	0.01 U	0.01 U	0.01 U	0.05 U	0.01 U	0.01 U	0.05 U	0.05 U	0.01 U	0.01 U	0.01 U	0.015
Benzo(g,h,i)perylene in mg/kg			0.01 U	0.01 U	0.54	0.034	0.01 U	0.01 U	0.01 U	0.01 U	0.05 U	0.01 U	0.01 U	0.05 U	0.05 U	0.01 U	0.01 U	0.01 U	0.01 U
Fluoranthene in mg/kg	140,000	140,000	0.01 U	0.01 U	0.62	0.059	0.01 U	0.01 U	0.018	0.01 U	0.05 U	0.01 U	0.01 U	0.05 U	0.05 U	0.01 U	0.01 U	0.01 U	0.017
Fluorene in mg/kg	140,000	140,000	0.01 U	0.01 U	0.3 U	0.02	0.01 U	0.01 U	0.01 U	0.01 U	0.05 U	0.01 U	0.01 U	0.05 U	0.05 U	0.01 U	0.01 U	0.01 U	0.088
Phenanthrene in mg/kg			0.01 U	0.01 U	0.3 U	0.042	0.01 U	0.01 U	0.013	0.01 U	0.05 U	0.01 U	0.01 U	0.05 U	0.05 U	0.01 U	0.01 U	0.01 U	0.093
Pyrene in mg/kg	110,000	110,000	0.01 U	0.01 U	0.68	0.046	0.01 U	0.01 U	0.016	0.01 U	0.05 U	0.01 U	0.01 U	0.05 U	0.05 U	0.01 U	0.01 U	0.01 U	0.013
Naphthalene in mg/kg	70,000	70,000	0.01 U	0.01 U	0.3 U	0.023	0.01 U	0.01 U	0.016	0.01 U	0.05 U	0.01 U	0.01 U	0.05 U	0.05 U	0.01 U	0.01 U	0.01 U	0.032
Benz(a)anthracene in mg/kg			0.01 U	0.01 U	0.34	0.088	0.01 U	0.01 U	0.01 U	0.01 U	0.05 U	0.01 U	0.01 U	0.05 U	0.05 U	0.01 U	0.01 U	0.01 U	0.01 U
Benzo(a)pyrene in mg/kg			0.01 U	0.01 U	0.54	0.071	0.01 U	0.01 U	0.01 U	0.01 U	0.05 U	0.01 U	0.01 U	0.05 U	0.05 U	0.01 U	0.01 U	0.01 U	0.01 U
Benzo(b)fluoranthene in mg/kg			0.01 U	0.01 U	0.68	0.099	0.01 U	0.01 U	0.01 U	0.01 U	0.05 U	0.01 U	0.01 U	0.05 U	0.05 U	0.01 U	0.01 U	0.01 U	0.01 U
Benzo(k)fluoranthene in mg/kg			0.01 U	0.01 U	0.3 U	0.043	0.01 U	0.01 U	0.01 U	0.01 U	0.05 U	0.01 U	0.01 U	0.05 U	0.05 U	0.01 U	0.01 U	0.01 U	0.01 U
Chrysene in mg/kg			0.01 U	0.01 U	0.51	0.19	0.01 U	0.01 U	0.01 U	0.01 U	0.05 U	0.01 U	0.01 U	0.05 U	0.05 U	0.01 U	0.01 U	0.01 U	0.01 U
Dibenzo(a,h)anthracene in mg/kg			0.01 U	0.01 U	0.3 U	0.012	0.01 U	0.01 U	0.01 U	0.01 U	0.05 U	0.01 U	0.01 U	0.05 U	0.05 U	0.01 U	0.01 U	0.01 U	0.01 U
Indeno(1,2,3-cd)pyrene in mg/kg			0.01 U	0.01 U	0.54	0.041	0.01 U	0.01 U	0.01 U	0.01 U	0.05 U	0.01 U	0.01 U	0.05 U	0.05 U	0.01 U	0.01 U	0.01 U	0.01 U
Total cPAHs TEQ in mg/kg	0.4	7.9	ND	ND	0.73	0.101	ND	ND	ND	ND	ND	ND	ND	ND	ND	ND	ND	ND	ND
Polychlorinated Biphenyls (PCBs)																			
Aroclor 1016 in mg/kg																			
Aroclor 1221 in mg/kg																			
Aroclor 1232 in mg/kg																			
Aroclor 1242 in mg/kg																			
Aroclor 1248 in mg/kg																			
Aroclor 1254 in mg/kg																			
Aroclor 1260 in mg/kg																			
Total PCBs (Sum of Aroclors) in mg/kg	10	10																	

Notes

Concentrations in shaded cells indicate value exceeds Interim Action Cleanup Level - Saturated Soil.

Concentrations in bold text indicate value exceeds Interim Action Cleanup Level - Unsaturated Soil.

SAT = Sample of saturated soil; samples without this designation are unsaturated soil.

J = Analyte was positively identified. The reported result is an estimate.

U = Analyte was not detected at or above the reported result.

UJ = Analyte was not detected at or above the reported estimate.

x = The sample chromatographic pattern does not resemble the fuel standard used for quantitation.

Table 8 - Excavation Verification Soil Quality Data for CN-B-2 Interim Action Area

K-C Worldwide Site Upland Area 110207

Chemical Name	Interim Action Cleanup Level - Saturated Soil	Interim Action Cleanup Level - Unsaturated Soil	Overexcavated Samples																		
			CN-2E 1/15/14 (5-6 ft) OverEx SAT	CN-2E 1/15/14 (9-10 ft) OverEx SAT	CN-2E 1/15/14 (10-11 ft) OverEx SAT	CN-2N 1/15/14 (5-6 ft) OverEx SAT	CN-2N 1/15/14 (10-11 ft) OverEx SAT	CN-2N 1/15/14 (11-12 ft) OverEx SAT	CN-2S 1/15/14 (5-6 ft) OverEx SAT	CN-2S 1/15/14 (9-10 ft) OverEx SAT	CN-2S 1/15/14 (11-12 ft) OverEx SAT	CN-2W 1/15/14 (5-6 ft) OverEx SAT	CN-2W 1/15/14 (9-10 ft) OverEx SAT	CN-2W 1/15/14 (10-11 ft) OverEx SAT	CNB2-B05 3/3/14 (7 ft) OverEx SAT	CNB2-B06 3/3/14 (7 ft) OverEx SAT	CNB2-B07 3/3/14 (4 ft) OverEx SAT	CNB2-B08 3/7/14 (12 ft) OverEx SAT	CNB2-B09 3/7/14 (11 ft) OverEx SAT	CNB2-B11 3/7/14 (11 ft) OverEx SAT	CNB2-B12 3/7/14 (11 ft) OverEx SAT	CNB2-B13 3/7/14 (11 ft) OverEx SAT
Total Petroleum Hydrocarbons (TPH)																					
Diesel Range Hydrocarbons in mg/kg	2,000	2,000	500 U	500 U	500 U	50 U	50 U	50 U	50 U	50 U	500 U	50 U	500 U	50 U	50 U	50 U	50 U	50 U	500 U	50 U	50 U	50 U
Oil Range Hydrocarbons in mg/kg	2,000	2,000	**120,000**	**33,000**	**170,000**	**5,900**	**5,200**	250 U	250 U	**9,400**	**260,000**	250 U	**86,000**	**4,600**	1,800	600	250 U	**2,500**	**51,000**	250 U	1,800	**13,000**
Total TPHs in mg/kg	2,000	2,000	**120,000**	**33,200**	**170,000**	**5,920**	**5,220**	ND	ND	**9,420**	**260,000**	ND	**86,200**	**4,620**	1,820	625	ND	**2,520**	**51,200**	ND	1,820	**13,000**
Metals																						
Arsenic in mg/kg	20	20																6.32	1 U	8.04	6.68	**20.6**
Cadmium in mg/kg	3,500	3,500																1 U	1 U	1 U	1 U	1 U
Copper in mg/kg	36	36																**56.5**	17	**38.5**	20.2	**87**
Lead in mg/kg	81	1,000																161	33.6	5.83	46.4	62.7
Mercury in mg/kg	0.1	0.1																**0.14**	0.1 U	0.1 U	0.1 U	0.1 U
Nickel in mg/kg	48	48																18.2	4.45	10	1 U	**48.8**
Zinc in mg/kg	85	100																39.7	8.06	5.22	18.7	**256**
Polycyclic Aromatic Hydrocarbons (PAHs)																						
Acenaphthene in mg/kg	210,000	210,000													0.078	0.062	0.01 U	0.25	0.5 U	0.05 U	0.05 U	0.5 U
Acenaphthylene in mg/kg															0.13	0.26	0.01 U	0.29	0.5 U	0.05 U	0.05 U	0.59
Anthracene in mg/kg	1,100,000	1,100,000													0.17	0.26	0.01 U		0.5 U	0.05 U	0.05 U	0.88
Benzo(g,h,i)perylene in mg/kg															0.6	0.91	0.01 U	2.7	0.5 U	0.05 U	0.05 U	2.4
Fluoranthene in mg/kg	140,000	140,000													1.1	2.9	0.01	8.5	0.53	0.05 U	0.05 U	6.8
Fluorene in mg/kg	140,000	140,000													0.11	0.14	0.01 U	0.38	0.5 U	0.05 U	0.05 U	0.5 U
Phenanthrene in mg/kg															1.1	1.5	0.01 U	5.4	0.5 U	0.05 U	0.05 U	4.7
Pyrene in mg/kg	110,000	110,000													1.3	2.8	0.01 U	8.6	0.89	0.05 U	0.05 U	8.2
Naphthalene in mg/kg	70,000	70,000													0.37	0.15	0.015	0.13	0.5 U	0.05 U	0.076	0.5 U
Benz(a)anthracene in mg/kg															0.64	0.94	0.01 U	3.7	1.1	0.05 U	0.05 U	3.1
Benzo(a)pyrene in mg/kg															0.74	1.2	0.01 U	3.9	0.5 U	0.05 U	0.05 U	3.6
Benzo(b)fluoranthene in mg/kg															1	1.7	0.01 U	4.3	0.5 U	0.05 U	0.05 U	4.2
Benzo(k)fluoranthene in mg/kg															0.34	0.49	0.01 U		0.5 U	0.05 U	0.05 U	1.5
Chrysene in mg/kg															0.85	1.5	0.01 U	3.8	1.4	0.05 U	0.05 U	3.8
Dibenzo(a,h)anthracene in mg/kg															0.11	0.19	0.01 U		0.5 U	0.05 U	0.05 U	0.54
Indeno(1,2,3-cd)pyrene in mg/kg															0.59	0.99	0.01 U	2.8	0.5 U	0.05 U	0.05 U	2.5
Total cPAHs TEQ in mg/kg	0.4	7.9													1.02	1.65	ND	5.21	0.474	ND	ND	4.82
Polychlorinated Biphenyls (PCBs)																						
Aroclor 1016 in mg/kg													0.1 U									
Aroclor 1221 in mg/kg													0.1 U									
Aroclor 1232 in mg/kg													0.1 U									
Aroclor 1242 in mg/kg													0.1 U									
Aroclor 1248 in mg/kg													0.1 U									
Aroclor 1254 in mg/kg													0.1 U									
Aroclor 1260 in mg/kg													0.1 U									
Total PCBs (Sum of Aroclors) in mg/kg	10	10											ND									

Notes

Concentrations in shaded cells indicate value exceeds Interim Action Cleanup Level - Saturated Soil.

Concentrations in bold text indicate value exceeds Interim Action Cleanup Level - Unsaturated Soil.

SAT = Sample of saturated soil; samples without this designation are unsaturated soil.

J = Analyte was positively identified. The reported result is an estimate.

U = Analyte was not detected at or above the reported result.

UJ = Analyte was not detected at or above the reported estimate.

x = The sample chromatographic pattern does not resemble the fuel standard used for quantitation.

Table 8 - Excavation Verification Soil Quality Data for CN-B-2 Interim Action Area

K-C Worldwide Site Upland Area 110207

Chemical Name	Interim Action Cleanup Level - Saturated Soil	Interim Action Cleanup Level - Unsaturated Soil	Overexcavated Samples																		
			CNB2-B20 3/15/14 (16 ft) OverEx SAT	FD 3/15/14 (16 ft) OverEx SAT	CNB2-B22 3/15/14 (14 ft) OverEx SAT	CNB2-B23 3/15/14 (14 ft) OverEx SAT	CNB2-S10 3/3/14 (6 ft) OverEx SAT	CNB2-S14 3/7/14 (6 ft) OverEx SAT	CNB2-S15 3/7/14 (10 ft) OverEx SAT	CNB2-S16 3/7/14 (6 ft) OverEx SAT	CNB2-S17 3/7/14 (10 ft) OverEx SAT	CNB2-S18 3/7/14 (6 ft) OverEx SAT	CNB2-S19 3/7/14 (10 ft) OverEx SAT	CNB2-S20 3/7/14 (6 ft) OverEx SAT	CNB2-S21 3/7/14 (10 ft) OverEx SAT	CNB2-S22 3/7/14 (6 ft) OverEx SAT	CNB2-S23 3/7/14 (10 ft) OverEx SAT	CNB2-S24 3/7/14 (6 ft) OverEx SAT	CNB2-S25 3/7/14 (10 ft) OverEx SAT	CNB2-S46 3/15/14 (4 ft) OverEx SAT	CNB2-S47 3/15/14 (8 ft) OverEx SAT	CNB2-S48 3/15/14 (12 ft) OverEx SAT
Total Petroleum Hydrocarbons (TPH)																					
Diesel Range Hydrocarbons in mg/kg	2,000	2,000	200 U	200 U	200 U	**38,000** x	50 U	50 U	50 U	50 U	50 U	50 U	50 U	50 U	50 U	50 U	50 U	50 U	50 U	50 U	660 x
Oil Range Hydrocarbons in mg/kg	2,000	2,000	1,000 U	1,000 U	1,000 U	**120,000**	250 U	250 U	**16,000**	250 U	**18,000**	250 U	250 U	250 U	250 U	**3,700**	250 U	**9,800**	**4,900**	250 U	250 U	**3,200**
Total TPHs in mg/kg	2,000	2,000	ND	ND	ND	**158,000**	ND	ND	**16,000**	ND	**18,000**	ND	ND	ND	ND	**3,720**	ND	**9,820**	**4,920**	ND	ND	**3,860**
Metals																					
Arsenic in mg/kg	20	20	10.5 J	6.95 J	1 U	1 U	5.53	5.85	**58**	6.32	11.3	5.77	6.92	4.23	**56**	**20.5**	**24.9**	14.8	**38.8**	4.01	4.47	**23.5**
Cadmium in mg/kg	3,500	3,500	1 U	1 U	1 U	1 U	1 U	1 U	1 U	1 U	1 U	1 U	1 U	1 U	1 U	1 U	1 U	1 U	1 U	1 U	1 U	1 U
Copper in mg/kg	36	36	**123**	**136**	11	4.62	22.2	24	**156**	25.9	**132**	25	**40.8**	18.2	**153**	**95.5**	**193**	**154**	**104**	12.3	7.27	**53.3**
Lead in mg/kg	81	1,000	156	152	21.1	25.4	9.56	4.22	201	5.72	175	5.74	11.9	4.14	192	183	119	258	161	2	1.91	65
Mercury in mg/kg	0.1	0.1	**0.13**	**0.14**	0.1 U	0.1 U	0.1 U	0.1 U	0.1 U	0.1 U	**0.14**	0.1 U	0.1 U	0.1 U	0.1 U	0.1	0.1 U	**0.19**	0.1 U	0.1 U	0.1 U	0.1 U
Nickel in mg/kg	48	48	7.85	7.52 J	8.85	1 U	18.5	19.6	31.7	21.5	11.4	21.8	14.9	25.6	42.7	14.8	29	23.6	16.5	14.5	11.6	12.7
Zinc in mg/kg	85	100	5.4 J	8.48 J	10.4	1 U	31.4 J	32.8	**502**	35.9	**147**	36.5	72.4	40.6	**703**	**120**	74.1	**411**	**145**	22.1	14.9	94.6
Polycyclic Aromatic Hydrocarbons (PAHs)																					
Acenaphthene in mg/kg	210,000	210,000	0.05 U	0.05 U	0.05 U	0.3 U	0.01 U	0.01 U	5 U	0.01 U	5 U	0.01 U	0.1 U	0.01 U	0.05 U	0.5 U	0.01 U	0.5 U	0.05 U	0.01 U	0.01 U	0.04 U
Acenaphthylene in mg/kg			0.05 U	0.05 U	0.05 U	0.3 U	0.01 U	0.01 U	5 U	0.01 U	5 U	0.01 U	0.15	0.01 U	0.25	0.56	0.01 U	0.5 U	0.05 U	0.01 U	0.01 U	0.04 U
Anthracene in mg/kg	1,100,000	1,100,000	0.05 U	0.05 U	0.05 U	0.3 U	0.01 U	0.01 U	5 U	0.01 U	5 U	0.01 U	0.21	0.01 U	0.26	0.5 U	0.01 U	0.5 U	0.05 U	0.01 U	0.01 U	0.04 U
Benzo(g,h,i)perylene in mg/kg			0.05 U	0.05 U	0.05 U	0.79	0.01 U	0.01 U	6.7	0.01 U	5.5	0.01 U	0.72	0.011	2.3	3.2	0.01 U	2.2 J	0.13	0.01 U	0.01 U	0.075
Fluoranthene in mg/kg	140,000	140,000	0.05 U	0.05 U	0.05 U	0.77	0.01 U	0.01 U	9	0.021	8	0.027	2	0.027	2.7	1.2	0.01 U	0.5 U	0.16	0.01 U	0.01 U	0.1
Fluorene in mg/kg	140,000	140,000	0.05 U	0.05 U	0.05 U	0.47	0.01 U	0.01 U	5 U	0.01 U	5 U	0.01 U	0.11	0.01 U	0.058	0.5 U	0.01 U	0.5 U	0.05 U	0.01 U	0.01 U	0.04 U
Phenanthrene in mg/kg			0.05 U	0.05 U	0.05 U	0.3 U	0.01 U	0.01 U	5 U	0.018	5 U	0.018	1.5	0.025	0.9	0.5 U	0.01 U	0.5 U	0.054	0.01 U	0.01 U	0.042
Pyrene in mg/kg	110,000	110,000	0.05 U	0.05 U	0.05 U	2.7	0.01 U	0.01 U	11	0.02	9.5	0.028	2.1	0.027	3	1.8	0.01 U	0.72	0.2	0.01 U	0.01 U	0.13
Naphthalene in mg/kg	70,000	70,000	0.05 U	0.05 U	0.05 U	0.3 U	0.01 U	0.01 U	5 U	0.016	5 U	0.023	0.1 U	0.01 U	0.11	0.5 U	0.01 U	0.5 U	0.05 U	0.01 U	0.01 U	0.04 U
Benz(a)anthracene in mg/kg			0.05 U	0.05 U	0.05 U	1.8	0.01 U	0.01 U	5	0.01 U	5 U	0.01 U	0.81	0.013	2	1.3	0.01 U	0.5 U	0.079	0.01 U	0.01 U	0.07
Benzo(a)pyrene in mg/kg			0.05 U	0.05 U	0.05 U	1.6	0.01 U	0.01 U	8.1	0.01 U	6.4	0.01 U	1	0.018	3	4.3	0.01 U	1.1 J	0.092	0.01 U	0.01 U	0.071
Benzo(b)fluoranthene in mg/kg			0.05 U	0.05 U	0.05 U	1.9	0.01 U	0.01 U	9.7	0.01 U	7.7	0.01 U	1.3	0.02	3.4	4.3	0.01 U	1.6 J	0.15	0.01 U	0.01 U	0.11
Benzo(k)fluoranthene in mg/kg			0.05 U	0.05 U	0.05 U	0.3 U	0.01 U	0.01 U	5 U	0.01 U	5 U	0.01 U	0.38	0.01 U	1.1	1.5	0.01 U	0.5 UJ	0.057	0.01 U	0.01 U	0.04 U
Chrysene in mg/kg			0.05 U	0.05 U	0.05 U	5.3	0.01 U	0.01 U	7.1	0.01 U	6.1	0.01 U	1.1	0.018	2.5	1.8	0.01 U	0.68	0.13	0.01 U	0.01 U	0.096
Dibenzo(a,h)anthracene in mg/kg			0.05 U	0.05 U	0.05 U	1.4	0.01 U	0.01 U	5 U	0.01 U	5 U	0.01 U	0.13	0.01 U	0.47	0.68	0.01 U	0.58 J	0.05 U	0.01 U	0.01 U	0.04 U
Indeno(1,2,3-cd)pyrene in mg/kg			0.05 U	0.05 U	0.05 U	0.5	0.01 U	0.01 U	6.2	0.01 U	5.3	0.01 U	0.72	0.01	2.4	3.3	0.01 U	1.7 J	0.11	0.01 U	0.01 U	0.078
Total cPAHs TEQ in mg/kg	0.4	7.9	ND	ND	ND	2.23	ND	ND	**10.8**	ND	**8.51**	ND	1.35	0.0235	3.96	5.43	ND	1.54 J	0.135	ND	ND	0.102
Polychlorinated Biphenyls (PCBs)																					
Aroclor 1016 in mg/kg							0.02 U															
Aroclor 1221 in mg/kg							0.02 U															
Aroclor 1232 in mg/kg							0.02 U															
Aroclor 1242 in mg/kg							0.02 U															
Aroclor 1248 in mg/kg							0.02 U															
Aroclor 1254 in mg/kg							0.02 U															
Aroclor 1260 in mg/kg							0.02 U															
Total PCBs (Sum of Aroclors) in mg/kg	10	10					ND															

Notes

Concentrations in shaded cells indicate value exceeds Interim Action Cleanup Level - Saturated Soil.

Concentrations in bold text indicate value exceeds Interim Action Cleanup Level - Unsaturated Soil.

SAT = Sample of saturated soil; samples without this designation are unsaturated soil.

J = Analyte was positively identified. The reported result is an estimate.

U = Analyte was not detected at or above the reported result.

UJ = Analyte was not detected at or above the reported estimate.

x = The sample chromatographic pattern does not resemble the fuel standard used for quantitation.

Table 9 - Excavation Verification Soil Quality Data for GF-11 Interim Action Area

K-C Worldwide Site Upland Area 110207

		Bottom Samples in Place			Sidewall Samples in Place							Pre-Excavation Characterization Samples											
Chemical Name	Interim Action Cleanup Level - Unsaturated Soil	GF11-B01 10/11/13 (3 ft)	GF11-B02 10/11/13 (3 ft)	GF11-B02 FD 10/11/13 (3 ft)	GF11-S01 10/11/13 (1.5 ft)	GF11-S02 10/11/13 (1.5 ft)	GF11-S03 10/11/13 (1.5 ft)	GF11-S04 10/11/13 (1.5 ft)	GF11-S05 10/11/13 (1.5 ft)	GF11-S06 10/11/13 (1.5 ft)	GF11-S07 10/11/13 (1.5 ft)	GF11-TP1-B 8/22/13 (3 ft)	GF11-TP1-S 8/22/13 (0-3 ft)	GF11-TP2-B 8/22/13 (3 ft)	GF11-TP2-S 8/22/13 (0-3 ft)	GF11-TP3-B 8/22/13 (3 ft)	GF11-TP3-S 8/22/13 (0-3 ft)	GF11-TP4-B 8/22/13 (3 ft)	GF11-TP4-S 8/22/13 (0-3 ft)	GF11-TP5-B 8/22/13 (3 ft)	GF11-TP5-S 8/22/13 (0-3 ft)	GF11-TP6-B 8/22/13 (3 ft)	GF11-TP6-S 8/22/13 (0-3 ft)
Metals																							
Arsenic in mg/kg	20	1 U	4.65	5.16	3.81	5.3	8.74	6.26	6.11	3.39	2.9	2.78	3.6	2.92	4.17	3.39	6.34	2.8	4.36	2.73	3.56	13.6	9.87
Cadmium in mg/kg	3,500	1 U	1 U	1 U	1 U	1 U	1 U	1 U	1 U	1 U	1 U	1 U	1 U	1 U	1 U	1 U	1 U	1 U	1 U	1 U	1 U	1 U	1 U
Chromium (Total) in mg/kg	5,300,000											6.02	13.4	15.9	10.3	10.9	22.8	12.5	13.1	12.3	11.3	13.7	13.6
Copper in mg/kg	36	3.12 J	22 J	31.6 J	31.8 J	29.2 J	32.9 J	30.3 J	26.3 J	**36.2 J**	**99.2 J**	5.36	18.2	17.4	16.7	11.9	**52.8**	17	**40.3**	28.3	18.9	**39.7**	24.7
Lead in mg/kg	1,000	40.1	15.6	24.7	44.4	448	32.8	28.1	58	59	169	22.2	12.5	16.4	17.7	7.91	14.2	2.4	120	9.06	30.3	40.8	34.9
Mercury in mg/kg	0.1	**0.33**	0.1	**0.43**	0.1 U	0.1 U	**0.11**	**0.16**	**0.5**	**0.39**	**0.11**	0.1 U	0.1 U	0.1 U	0.1 U	**0.3**	**0.36**	0.1 U	**0.15**	0.1 U	**0.14**	0.1 U	0.1 U
Nickel in mg/kg	48	1 U	6.86	7.92	15.6	17.5	15.9	12.8	9.23	13.5	17.3	11.2	17.2	12.4	11.6	12.4	20	12.5	32.3	14.3	13.9	16.8	14.1
Zinc in mg/kg	100	1.33 J	17.5 J	22 J	35.9 J	39.1 J	63.3 J	43.6 J	18.2 J	45.6 J	**126 J**	18.4	34.1	25.6	24.4	22	50.2	25.9	81.4	25.7	32.3	81.6	64.6
Polycyclic Aromatic Hydrocarbons (PAHs)																							
Acenaphthene in mg/kg	210,000	1.6	3.9	3.8	0.01 U	0.01 U	0.01 U	0.01 U	0.034	0.018	0.11												
Acenaphthylene in mg/kg		0.018	0.16	0.15	0.01 U	0.01 U	0.01 U	0.01 U	0.01 U	0.016	0.045												
Anthracene in mg/kg	1,100,000	0.012	4.4	4.3	0.013	0.01 U	0.019	0.01 U	0.034	0.013	0.037												
Benzo(g,h,i)perylene in mg/kg		0.023	0.38	0.39	0.027	0.028	0.04	0.019	0.034	0.054	0.11												
Fluoranthene in mg/kg	140,000	0.065	39	38	0.06	0.036	0.13	0.048	0.17	0.083	0.075												
Fluorene in mg/kg	140,000	0.45	6.7	6.5	0.01 U	0.01 U	0.01 U	0.01 U	0.022	0.01 U	0.15												
Phenanthrene in mg/kg		0.041	40	39	0.053	0.026	0.062	0.026	0.13	0.042	0.022												
Pyrene in mg/kg	110,000	0.081	28	27	0.059	0.038	0.13	0.047	0.17	0.098	0.12												
Naphthalene in mg/kg	70,000	0.023	0.017	0.021	0.016	0.01	0.018	0.01 U	0.018	0.013	0.01 U												
Benz(a)anthracene in mg/kg		0.024	5.2	5.1	0.028	0.022	0.057	0.02	0.057	0.044	0.12												
Benzo(a)pyrene in mg/kg		0.024	1.2	1.2	0.03	0.023	0.048	0.019	0.046	0.051	0.17												
Benzo(b)fluoranthene in mg/kg		0.037	2.6	2.5	0.042	0.03	0.08	0.037	0.074	0.085	0.16												
Benzo(k)fluoranthene in mg/kg		0.011	0.73	0.8	0.011	0.011	0.027	0.012	0.026	0.027	0.053												
Chrysene in mg/kg		0.036	5.1	4.9	0.037	0.036	0.085	0.027	0.079	0.083	0.19												
Dibenzo(a,h)anthracene in mg/kg		0.01 U	0.13	0.13	0.01 U	0.01 U	0.01 U	0.01 U	0.01 U	0.015	0.033												
Indeno(1,2,3-cd)pyrene in mg/kg		0.021	0.5	0.51	0.025	0.019	0.04	0.018	0.036	0.052	0.096												
Total cPAHs TEQ in mg/kg	7.9	0.0342	2.17	2.15	0.0415	0.0321	0.0698	0.0285	0.0666	0.0741	0.218												

Notes

All soils in this excavation are unsaturated. Concentrations shaded and bolded indicate value exceeds Interim Action Cleanup Level - Unsaturated Soil.

J = Analyte was positively identified. The reported result is an estimate.

U = Analyte was not detected at or above the reported result.

Table 10 - Excavation Verification Soil Quality Data for Heavy Duty Shop Sump Area

K-C Worldwide Site Upland Area 110207

		Bottom Sample in Place	Sidewall Samples in Place			
Chemical Name	Interim Action Cleanup Level - Unsaturated Soil	HDS-EX-BTM 9/12/13 (4 ft)	HDS-EX-ESW 9/12/13 (2 ft)	HDS-EX-NSW 9/12/13 (2 ft)	HDS-EX-SSW 9/12/13 (2 ft)	HDS-EX-WSW 9/12/13 (2 ft)
Total Petroleum Hydrocarbons (TPH)						
Gasoline Range Hydrocarbons in mg/kg	100	2 U	2 U	2 U	2 U	2 U
Diesel Range Hydrocarbons in mg/kg	2,000	50 U	50 U	50 U	50 U	50 U
Oil Range Hydrocarbons in mg/kg	2,000	250 U	250 U	250 U	250 U	250 U
Total TPHs in mg/kg	2,000	ND	ND	ND	ND	ND
Metals						
Antimony in mg/kg	1,400	1 U	1 U	1.51	1 U	1 U
Arsenic in mg/kg	20	7.79	4.05	13.2	4.02	6.09
Beryllium in mg/kg	7,000	1 U	1 U	1 U	1 U	1 U
Cadmium in mg/kg	3,500	1 U	1 U	1 U	1 U	1 U
Chromium (Total) in mg/kg	5,300,000	11.3	9.07	12.4	10.6	9.45
Copper in mg/kg	36	16.1	12.2	19.6	12.1	21.4
Lead in mg/kg	1,000	53.2	26	62.5	5.3	17.1
Mercury in mg/kg	0.1	0.1 U	0.1 U	0.1 U	0.1 U	0.1 U
Nickel in mg/kg	48	17.2 J	12.9 J	17 J	14.3 J	13 J
Selenium in mg/kg	18,000	1 U	1 U	1 U	1 U	1 U
Silver in mg/kg	18,000	1 U	1 U	1 U	1 U	1 U
Thallium in mg/kg	35	1 U	1 U	1 U	1 U	1 U
Zinc in mg/kg	100	45.6	27.8	**114**	23.7	48.6
Polycyclic Aromatic Hydrocarbons (PAHs)						
Acenaphthene in mg/kg	210,000	0.03 U	0.03 U	0.03 U	0.03 U	0.03 U
Acenaphthylene in mg/kg		0.03 U	0.03 U	0.03 U	0.03 U	0.03 U
Anthracene in mg/kg	1,100,000	0.03 U	0.03 U	0.03 U	0.03 U	0.03 U
Benzo(g,h,i)perylene in mg/kg		0.03 U	0.072	0.03 U	0.03 U	0.03 U
Dibenzofuran in mg/kg	3,500	0.03 U	0.03 U	0.03 U	0.03 U	0.03 U
Fluoranthene in mg/kg	140,000	0.048	0.53	0.03 U	0.03 U	0.03 U
Fluorene in mg/kg	140,000	0.03 U	0.03 U	0.03 U	0.03 U	0.03 U
Phenanthrene in mg/kg		0.057	0.053	0.03 U	0.03 U	0.03 U
Pyrene in mg/kg	110,000	0.078	0.5	0.03 U	0.03 U	0.03 U
2-Methylnaphthalene in mg/kg	15	0.03 U	0.03 U	0.03 U	0.03 U	0.03 U
Naphthalene in mg/kg	70,000	0.03 U	0.03 U	0.03 U	0.03 U	0.03 U
Benz(a)anthracene in mg/kg		0.03	0.0041	0.0062	0.002 U	0.012
Benzo(a)pyrene in mg/kg		0.036	0.0054	0.0083	0.0023	0.014
Benzo(b)fluoranthene in mg/kg		0.046	0.0075	0.011	0.0034 J	0.017
Benzo(k)fluoranthene in mg/kg		0.017	0.0026	0.0031	0.002 U	0.005
Chrysene in mg/kg		0.042	0.0059	0.0097	0.0026	0.017
Dibenzo(a,h)anthracene in mg/kg		0.0078	0.002 U	0.002 U	0.002 U	0.0027
Indeno(1,2,3-cd)pyrene in mg/kg		0.028	0.0052	0.0071	0.0021	0.011
Total cPAHs TEQ in mg/kg	7.9	0.0493	0.0075	0.0112	0.00318	0.0189

Table 10 - Excavation Verification Soil Quality Data for Heavy Duty Shop Sump Area

K-C Worldwide Site Upland Area 110207

		Bottom Sample in Place	Sidewall Samples in Place			
Chemical Name	Interim Action Cleanup Level - Unsaturated Soil	HDS-EX-BTM 9/12/13 (4 ft)	HDS-EX-ESW 9/12/13 (2 ft)	HDS-EX-NSW 9/12/13 (2 ft)	HDS-EX-SSW 9/12/13 (2 ft)	HDS-EX-WSW 9/12/13 (2 ft)
Other Semivolatiles						
1,2,4-Trichlorobenzene in mg/kg	4,500	0.03 U	0.03 U	0.03 U	0.03 U	0.03 U
1,2-Dichlorobenzene in mg/kg	320,000	0.03 U	0.03 U	0.03 U	0.03 U	0.03 U
1,3-Dichlorobenzene in mg/kg		0.03 U	0.03 U	0.03 U	0.03 U	0.03 U
1,4-Dichlorobenzene in mg/kg	24,000	0.03 U	0.03 U	0.03 U	0.03 U	0.03 U
2,4,5-Trichlorophenol in mg/kg	350,000	0.3 U	0.3 U	0.3 U	0.3 U	0.3 U
2,4,6-Trichlorophenol in mg/kg	3,500	0.3 U	0.3 U	0.3 U	0.3 U	0.3 U
2,4-Dichlorophenol in mg/kg	11,000	0.3 U	0.3 U	0.3 U	0.3 U	0.3 U
2,4-Dimethylphenol in mg/kg	70,000	0.3 U	0.3 U	0.3 U	0.3 U	0.3 U
2,4-Dinitrophenol in mg/kg	7,000	0.9 U	0.9 U	0.9 U	0.9 U	0.9 U
2-Chloronaphthalene in mg/kg	280,000	0.03 U	0.03 U	0.03 U	0.03 U	0.03 U
2-Chlorophenol in mg/kg	18,000	0.3 U	0.3 U	0.3 U	0.3 U	0.3 U
2-Methylphenol in mg/kg	180,000	0.3 U	0.3 U	0.3 U	0.3 U	0.3 U
2-Nitroaniline in mg/kg	35,000	0.03 U	0.03 U	0.03 U	0.03 U	0.03 U
2-Nitrophenol in mg/kg		0.3 U	0.3 U	0.3 U	0.3 U	0.3 U
3 & 4 Methylphenol in mg/kg	175000	0.6 U	0.6 U	0.6 U	0.6 U	0.6 U
3-Nitroaniline in mg/kg		3 U	3 U	3 U	3 U	3 U
4,6-Dinitro-2-methylphenol in mg/kg		0.9 U	0.9 U	0.9 U	0.9 U	0.9 U
4-Bromophenyl phenyl ether in mg/kg		0.03 U	0.03 U	0.03 U	0.03 U	0.03 U
4-Chloro-3-methylphenol in mg/kg		0.3 U	0.3 U	0.3 U	0.3 U	0.3 U
4-Chloroaniline in mg/kg	660	3 U	3 U	3 U	3 U	3 U
4-Chlorophenyl phenyl ether in mg/kg		0.03 U	0.03 U	0.03 U	0.03 U	0.03 U
4-Nitroaniline in mg/kg		3 U	3 U	3 U	3 U	3 U
4-Nitrophenol in mg/kg		0.9 U	0.9 U	0.9 U	0.9 U	0.9 U
Benzoic acid in mg/kg	14,000,000	1.5 U	1.5 U	1.5 U	1.5 U	1.5 U
Benzyl alcohol in mg/kg	350,000	0.3 U	0.3 U	0.3 U	0.3 U	0.3 U
Benzyl butyl phthalate in mg/kg	69,000	0.03 U	0.03 U	0.03 U	0.03 U	0.03 U
Bis(2-chloro-1-methylethyl) ether in mg/kg	1,900	0.03 U	0.03 U	0.03 U	0.03 U	0.03 U
Bis(2-chloroethoxy)methane in mg/kg		0.03 U	0.03 U	0.03 U	0.03 U	0.03 U
Bis(2-chloroethyl) ether in mg/kg	120	0.03 U	0.03 U	0.03 U	0.03 U	0.03 U
Bis(2-ethylhexyl) phthalate in mg/kg	9,400	0.48 U	0.48 U	0.48 U	0.48 U	0.48 U
Carbazole in mg/kg		0.03 U	0.03 U	0.03 U	0.03 U	0.03 U
Diethyl phthalate in mg/kg	2,800,000	0.03 U	0.03 U	0.03 U	0.03 U	0.03 U
Dimethyl phthalate in mg/kg		0.03 U	0.03 U	0.03 U	0.03 U	0.03 U
Di-n-butyl phthalate in mg/kg	350,000	0.05 U	0.05 U	0.05 U	0.05 U	0.05 U
Di-n-octyl phthalate in mg/kg	35,000	0.03 U	0.03 U	0.03 U	0.03 U	0.03 U
Hexachlorobenzene in mg/kg	82	0.03 U	0.03 U	0.03 U	0.03 U	0.03 U
Hexachlorobutadiene in mg/kg	1,700	0.03 U	0.03 U	0.03 U	0.03 U	0.03 U
Hexachlorocyclopentadiene in mg/kg	21,000	0.09 U	0.09 U	0.09 U	0.09 U	0.09 U
Hexachloroethane in mg/kg	2,500	0.03 U	0.03 U	0.03 U	0.03 U	0.03 U
Isophorone in mg/kg	140,000	0.03 U	0.03 U	0.03 U	0.03 U	0.03 U
Nitrobenzene in mg/kg	7,000	0.03 U	0.03 U	0.03 U	0.03 U	0.03 U
N-Nitroso-di-n-propylamine in mg/kg	19	0.03 U	0.03 U	0.03 U	0.03 U	0.03 U
N-Nitrosodiphenylamine in mg/kg	27,000	0.03 U	0.03 U	0.03 U	0.03 U	0.03 U
Pentachlorophenol in mg/kg	330	0.3 U	0.3 U	0.3 U	0.3 U	0.3 U
Phenol in mg/kg	1,100,000	0.3 U	0.3 U	0.3 U	0.3 U	0.3 U
2,4-Dinitrotoluene in mg/kg	420	0.03 U	0.03 U	0.03 U	0.03 U	0.03 U
2,6-Dinitrotoluene in mg/kg	88	0.03 U	0.03 U	0.03 U	0.03 U	0.03 U

Table 10 - Excavation Verification Soil Quality Data for Heavy Duty Shop Sump Area

K-C Worldwide Site Upland Area 110207

		Bottom Sample in Place	Sidewall Samples in Place			
Chemical Name	Interim Action Cleanup Level - Unsaturated Soil	HDS-EX-BTM 9/12/13 (4 ft)	HDS-EX-ESW 9/12/13 (2 ft)	HDS-EX-NSW 9/12/13 (2 ft)	HDS-EX-SSW 9/12/13 (2 ft)	HDS-EX-WSW 9/12/13 (2 ft)
Volatile Organic Compounds (VOC)						
1,1,1,2-Tetrachloroethane in mg/kg	5,000	0.05 U	0.05 U	0.05 U	0.05 U	0.05 U
1,1,1-Trichloroethane in mg/kg	7,000,000	0.05 U	0.05 U	0.05 U	0.05 U	0.05 U
1,1,2,2-Tetrachloroethane in mg/kg	660	0.05 U	0.05 U	0.05 U	0.05 U	0.05 U
1,1,2-Trichloroethane in mg/kg	2,300	0.05 U	0.05 U	0.05 U	0.05 U	0.05 U
1,1-Dichloroethane in mg/kg	23,000	0.05 U	0.05 U	0.05 U	0.05 U	0.05 U
1,1-Dichloroethene in mg/kg	180,000	0.05 U	0.05 U	0.05 U	0.05 U	0.05 U
1,1-Dichloropropene in mg/kg		0.05 U	0.05 U	0.05 U	0.05 U	0.05 U
1,2,3-Trichlorobenzene in mg/kg		0.25 U	0.25 U	0.25 U	0.25 U	0.25 U
1,2,3-Trichloropropane in mg/kg	4.4	0.05 U	0.05 U	0.05 U	0.05 U	0.05 U
1,2,4-Trimethylbenzene in mg/kg		0.05 U	0.05 U	0.05 U	0.05 U	0.05 U
1,2-Dibromo-3-chloropropane in mg/kg	160	0.5 U	0.5 U	0.5 U	0.5 U	0.5 U
1,2-Dibromoethane (EDB) in mg/kg	66	0.05 U	0.05 U	0.05 U	0.05 U	0.05 U
1,2-Dichloroethane (EDC) in mg/kg	1,400	0.05 U	0.05 U	0.05 U	0.05 U	0.05 U
1,2-Dichloropropane in mg/kg	3,600	0.05 U	0.05 U	0.05 U	0.05 U	0.05 U
1,3,5-Trimethylbenzene in mg/kg	35,000	0.05 U	0.05 U	0.05 U	0.05 U	0.05 U
1,3-Dichloropropane in mg/kg		0.05 U	0.05 U	0.05 U	0.05 U	0.05 U
2,2-Dichloropropane in mg/kg		0.05 U	0.05 U	0.05 U	0.05 U	0.05 U
2-Butanone in mg/kg	2,100,000	0.5 U	0.5 U	0.5 U	0.5 U	0.5 U
2-Chlorotoluene in mg/kg	70,000	0.05 U	0.05 U	0.05 U	0.05 U	0.05 U
2-Hexanone in mg/kg		0.5 U	0.5 U	0.5 U	0.5 U	0.5 U
4-Chlorotoluene in mg/kg		0.05 U	0.05 U	0.05 U	0.05 U	0.05 U
4-Methyl-2-pentanone in mg/kg	280,000	0.5 U	0.5 U	0.5 U	0.5 U	0.5 U
Acetone in mg/kg	3,200,000	0.5 U	0.5 U	0.5 U	0.5 U	0.5 U
Benzene in mg/kg	2,400	0.03 U	0.03 U	0.03 U	0.03 U	0.03 U
Bromobenzene in mg/kg		0.05 U	0.05 U	0.05 U	0.05 U	0.05 U
Bromodichloromethane in mg/kg	2,100	0.05 U	0.05 U	0.05 U	0.05 U	0.05 U
Bromoform in mg/kg	17,000	0.05 U	0.05 U	0.05 U	0.05 U	0.05 U
Bromomethane in mg/kg	4,900	0.5 U	0.5 U	0.5 U	0.5 U	0.5 U
Carbon tetrachloride in mg/kg	1,900	0.05 U	0.05 U	0.05 U	0.05 U	0.05 U
Chlorobenzene in mg/kg	70,000	0.05 U	0.05 U	0.05 U	0.05 U	0.05 U
Chloroethane in mg/kg		0.5 U	0.5 U	0.5 U	0.5 U	0.5 U
Chloroform in mg/kg	4,200	0.05 U	0.05 U	0.05 U	0.05 U	0.05 U
Chloromethane in mg/kg		0.5 U	0.5 U	0.5 U	0.5 U	0.5 U
cis-1,2-Dichloroethene (DCE) in mg/kg	7,000	0.05 U	0.05 U	0.05 U	0.05 U	0.05 U
cis-1,3-Dichloropropene in mg/kg		0.05 U	0.05 U	0.05 U	0.05 U	0.05 U
Dibromochloromethane in mg/kg	1,600	0.05 U	0.05 U	0.05 U	0.05 U	0.05 U
Dibromomethane in mg/kg	35,000	0.05 U	0.05 U	0.05 U	0.05 U	0.05 U
Dichlorodifluoromethane in mg/kg	700,000	0.5 U	0.5 U	0.5 U	0.5 U	0.5 U
Ethylbenzene in mg/kg	350,000	0.05 U	0.05 U	0.05 U	0.05 U	0.05 U
Isopropylbenzene in mg/kg	350,000	0.05 U	0.05 U	0.05 U	0.05 U	0.05 U
Methyl tert-butyl ether (MTBE) in mg/kg	73,000	0.05 U	0.05 U	0.05 U	0.05 U	0.05 U
Methylene chloride in mg/kg	21,000	0.5 U	0.5 U	0.5 U	0.5 U	0.5 U
n-Propylbenzene in mg/kg	350,000	0.05 U	0.05 U	0.05 U	0.05 U	0.05 U
p-Isopropyltoluene in mg/kg		0.05 U	0.05 U	0.05 U	0.05 U	0.05 U
sec-Butylbenzene in mg/kg	350,000	0.05 U	0.05 U	0.05 U	0.05 U	0.05 U
Styrene in mg/kg	700,000	0.05 U	0.05 U	0.05 U	0.05 U	0.05 U
tert-Butylbenzene in mg/kg	350,000	0.05 U	0.05 U	0.05 U	0.05 U	0.05 U
Tetrachloroethene (PCE) in mg/kg	21,000	0.025 U	0.025 U	0.025 U	0.025 U	0.025 U
Toluene in mg/kg	280,000	0.05 U	0.05 U	0.05 U	0.05 U	0.05 U
trans-1,2-Dichloroethene in mg/kg	70,000	0.05 U	0.05 U	0.05 U	0.05 U	0.05 U
trans-1,3-Dichloropropene in mg/kg		0.05 U	0.05 U	0.05 U	0.05 U	0.05 U
Trichloroethene (TCE) in mg/kg	1,800	0.03 U	0.03 U	0.03 U	0.03 U	0.03 U
Trichlorofluoromethane in mg/kg	1,100,000	0.5 U	0.5 U	0.5 U	0.5 U	0.5 U
Vinyl chloride in mg/kg	88	0.05 U	0.05 U	0.05 U	0.05 U	0.05 U
m,p-Xylenes in mg/kg	49	0.1 U	0.1 U	0.1 U	0.1 U	0.1 U
o-Xylene in mg/kg	80	0.05 U	0.05 U	0.05 U	0.05 U	0.05 U
Polychlorinated Biphenyls (PCBs)						
Aroclor 1016 in mg/kg		0.1 U	0.1 U	0.1 U	0.1 U	0.1 U
Aroclor 1221 in mg/kg		0.1 U	0.1 U	0.1 U	0.1 U	0.1 U
Aroclor 1232 in mg/kg		0.1 U	0.1 U	0.1 U	0.1 U	0.1 U
Aroclor 1242 in mg/kg		0.1 U	0.1 U	0.1 U	0.1 U	0.1 U
Aroclor 1248 in mg/kg		0.1 U	0.1 U	0.1 U	0.1 U	0.1 U
Aroclor 1254 in mg/kg		0.1 U	0.1 U	0.1 U	0.1 U	0.1 U
Aroclor 1260 in mg/kg		0.1 U	0.1 U	0.1 U	0.1 U	0.1 U
Total PCBs (Sum of Aroclors) in mg/kg	10	ND	ND	ND	ND	ND

Notes

All soils in this excavation are unsaturated. Concentrations shaded and bolded indicate value exceeds Interim Action Cleanup Level - Unsaturated Soil.

J = Analyte was positively identified. The reported result is an estimate.

U = Analyte was not detected at or above the reported result.

UJ = Analyte was not detected at or above the reported estimate.

Table 11 - Excavation Verification Soil Quality Data for Hydraulic Barker Vault Interim Action Area

K-C Worldwide Site Upland Area 110207

			Bottom Samples in Place		Sidewall Samples in Place				Pre-Ex Character-ization
Chemical Name	Interim Action Cleanup Level - Saturated Soil	Interim Action Cleanup Level - Unsaturated Soil	BV-B01 1/17/14 (8 ft) SAT	BV-B02 1/17/14 (8 ft) SAT	BV-S01 1/17/14 (6 ft)	BV-S02 1/17/14 (6 ft)	BV-S03 1/17/14 (6 ft)	BV-S04 1/17/14 (6 ft)	XY Area Vt-TP1 9/3/13 (2 ft) OverEx
Total Petroleum Hydrocarbons (TPH)									
Diesel Range Hydrocarbons in mg/kg	2,000	2,000	73	50 U	50 U	50 U	50 U	50 U	750 x
Oil Range Hydrocarbons in mg/kg	2,000	2,000	250 U	250 U	250 U	250 U	250 U	450	**7,900**
Total TPHs in mg/kg	2,000	2,000	198	ND	ND	ND	ND	475	**8,650**
Metals									
Arsenic in mg/kg	20	20		2.12					1.53
Barium in mg/kg	700,000	700,000							25.1
Cadmium in mg/kg	3,500	3,500		1 U					1 U
Chromium (Total) in mg/kg	5,300,000	5,300,000							10.2
Copper in mg/kg	36	36		18.7					16.1
Lead in mg/kg	81	1,000		9.37					3.28
Mercury in mg/kg	0.1	0.1		0.1 U					0.1 U
Nickel in mg/kg	48	48		18.5					25.5
Zinc in mg/kg	85	100		33.9 J					40.5
Polycyclic Aromatic Hydrocarbons (PAHs)									
Acenaphthene in mg/kg	210,000	210,000	0.01 U	0.01 U	0.024	0.01 U	0.01 U	0.039	
Acenaphthylene in mg/kg			0.01 U	0.01 U	0.01 U	0.01 U	0.01 U	0.01 U	
Anthracene in mg/kg	1,100,000	1,100,000	0.01 U	0.01 U	0.044	0.01 U	0.01 U	0.057	
Benzo(g,h,i)perylene in mg/kg			0.01 U	0.01	0.027	0.01 U	0.01 U	0.027	
Fluoranthene in mg/kg	140,000	140,000	0.033	0.03	0.16	0.013	0.01 U	0.36	
Fluorene in mg/kg	140,000	140,000	0.01 U	0.01 U	0.021	0.01 U	0.01 U	0.04	
Phenanthrene in mg/kg			0.021 J	0.016	0.18	0.01 U	0.01 U	0.21	
Pyrene in mg/kg	110,000	110,000	0.031	0.03	0.17	0.015	0.01 U	0.31	
Naphthalene in mg/kg	70,000	70,000	0.01 U	0.01 U	0.021	0.01 U	0.01 U	0.019	
Benz(a)anthracene in mg/kg			0.01 U	0.012	0.066	0.01 U	0.01 U	0.065	
Benzo(a)pyrene in mg/kg			0.01 U	0.013	0.051	0.01 U	0.01 U	0.052	
Benzo(b)fluoranthene in mg/kg			0.013	0.016	0.055	0.01 U	0.01 U	0.062	
Benzo(k)fluoranthene in mg/kg			0.01 U	0.01 U	0.026	0.01 U	0.01 U	0.02	
Chrysene in mg/kg			0.012	0.015	0.081	0.01 U	0.01 U	0.08	
Dibenzo(a,h)anthracene in mg/kg			0.01 U	0.01 U	0.01 U	0.01 U	0.01 U	0.01 U	
Indeno(1,2,3-cd)pyrene in mg/kg			0.01 U	0.01 U	0.019 J	0.01 U	0.01 U	0.031 J	
Total cPAHs TEQ in mg/kg	0.4	7.9	0.00842	0.0175	0.0689	ND	ND	0.0711	
Polychlorinated Biphenyls (PCBs)									
Aroclor 1016 in mg/kg									0.1 U
Aroclor 1221 in mg/kg									0.1 U
Aroclor 1232 in mg/kg									0.1 U
Aroclor 1242 in mg/kg									0.1 U
Aroclor 1248 in mg/kg									0.1 U
Aroclor 1254 in mg/kg									0.1 U
Aroclor 1260 in mg/kg									0.1 U
Total PCBs (Sum of Aroclors) in mg/kg	10	10							ND

Notes

Concentrations in shaded cells indicate value exceeds Interim Action Cleanup Level - Saturated Soil.

Concentrations in bold text indicate value exceeds Interim Action Cleanup Level - Unsaturated Soil.

SAT = Sample of saturated soil; samples without this designation are unsaturated soil.

J = Analyte was positively identified. The reported result is an estimate.

U = Analyte was not detected at or above the reported result.

x = The sample chromatographic pattern does not resemble the fuel standard used for quantitation.

Table 12 - Excavation Verification Soil Quality Data for Naval Reserve Parcel UST Interim Action Area

K-C Worldwide Site Upland Area 110207

			Bottom Samples in Place						Sidewall Samples in Place													
Chemical Name	Interim Action Cleanup Level - Saturated Soil	Interim Action Cleanup Level - Unsaturated Soil	NRU-B01 1/22/14 (14 ft) SAT	NRU-B02 1/22/14 (14 ft) SAT	NRU-B03 1/23/14 (14 ft) SAT	NRU-B04 1/24/14 (14 ft) SAT	NRU-B06 1/30/14 (14 ft) SAT	NRU-B07 1/30/14 (14 ft) SAT	NRU-S01 1/23/14 (4 ft)	NRU-S02 1/23/14 (8 ft)	NRU-S03 1/22/14 (12 ft) SAT	NRU-S04 1/24/14 (4 ft)	NRU-S04 FD 1/24/14 (4 ft)	NRU-S05 1/24/14 (8 ft)	NRU-S06 1/23/14 (12 ft) SAT	NRU-S07 1/23/14 (4 ft)	NRU-S08 1/23/14 (8 ft)	NRU-S09 1/22/14 (12 ft) SAT	NRU-S10 1/24/14 (4 ft)	NRU-S11 1/24/14 (8 ft)	NRU-S12 1/22/14 (12 ft) SAT	NRU-S13 1/23/14 (4 ft)
Total Petroleum Hydrocarbons (TPH)																						
Gasoline Range Hydrocarbons in mg/kg	100	100					2 U	2 U														
Diesel Range Hydrocarbons in mg/kg	2,000	2,000	50 U	50 U	50 U	50 U	50 U	50 U	50 U	50 U	100	50 U	50 U	50 U	150	50 U	50 U	50 U	50 U	50 U	72	50 U
Oil Range Hydrocarbons in mg/kg	2,000	2,000	250 U	250 U	250 U	250 U	250 U	250 U	250 U	250 U	250 U	250 U	250 U	250 U	250 U	250 U	250 U	250 U	300	250 U	250 U	250 U
Total TPHs in mg/kg	2,000	2,000	ND	ND	ND	ND	ND	ND	ND	ND	225	ND	ND	ND	275	ND	ND	ND	325	ND	197	ND
Polycyclic Aromatic Hydrocarbons (PAHs)																						
Acenaphthene in mg/kg	210,000	210,000	0.082	0.076	0.087	0.01 U	0.04 U	0.01 U	0.057	0.019	0.17	0.01 UJ	0.85 J	0.027	0.17	0.046	0.01 U	0.3	0.01 U	0.018	0.096	0.017
Acenaphthylene in mg/kg			0.01 U	0.01 U	0.01 U	0.01 U	0.04 U	0.01 U	0.01 U	0.01 U	0.01 U	0.01 U	0.01 U	0.01 U	0.01 U	0.014	0.01 U	0.01 U	0.01 U	0.01 U	0.01 U	0.01 U
Anthracene in mg/kg	1,100,000	1,100,000	0.01 U	0.036	0.01 U	0.01 U	0.04 U	0.01 U	0.035	0.011	0.082	0.012 J	0.32 J	0.031	0.084	0.055	0.01 U	0.02	0.01 U	0.011	0.038	0.019
Benzo(g,h,i)perylene in mg/kg			0.01 U	0.03	0.017	0.016	0.12	0.02	0.065	0.038	0.014	0.038	0.056	0.1 J	0.24 J	0.17	0.01 U	0.01 U	0.027	0.035	0.019	0.038
Dibenzofuran in mg/kg	3,500	3,500																				
Fluoranthene in mg/kg	140,000	140,000	0.054	0.12	0.072	0.057	0.24	0.051	0.21	0.14	0.11	0.15 J	0.57 J	0.31 J	0.53 J	0.36	0.01 U	0.051	0.05	0.09	0.097	0.11
Fluorene in mg/kg	140,000	140,000	0.01 U	0.096	0.077	0.01 U	0.04 U	0.01 U	0.04	0.01 U	0.17	0.01 UJ	0.49 J	0.017	0.1	0.034	0.01 U	0.11	0.01 U	0.01 U	0.057	0.018
Phenanthrene in mg/kg			0.031	0.23	0.06	0.042	0.15	0.027	0.14	0.027	0.036	0.043 J	0.084 J	0.09	0.24 J	0.23	0.01 U	0.018	0.022	0.032	0.036	0.048
Pyrene in mg/kg	110,000	110,000	0.052	0.11	0.069	0.054	0.26	0.056	0.22	0.13	0.14	0.17 J	0.62 J	0.3 J	0.57 J	0.39	0.01 U	0.049	0.054	0.098	0.11	0.13
2-Methylnaphthalene in mg/kg	14,000	14,000																				
Naphthalene in mg/kg	70,000	70,000	0.029	0.033	0.016	0.025	0.045	0.016	0.025	0.047	0.033	0.01 UJ	0.061 J	0.018	0.033	0.045	0.01 U	0.02	0.01 U	0.01 U	0.02	0.018
Benz(a)anthracene in mg/kg			0.01 U	0.04	0.018	0.014	0.11	0.017	0.083	0.041	0.029	0.064 J	0.18 J	0.13 J	0.28 J	0.16	0.01 U	0.012	0.024	0.032	0.033	0.046
Benzo(a)pyrene in mg/kg			0.01 U	0.044	0.023	0.019	0.2	0.02	0.099	0.055	0.021	0.062 J	0.12 J	0.16 J	0.4 J	0.23	0.01 U	0.01 U	0.035	0.047	0.028	0.057
Benzo(b)fluoranthene in mg/kg			0.01	0.054	0.031	0.026	0.25	0.029	0.12	0.063	0.023	0.08 J	0.14 J	0.18 J	0.44 J	0.3	0.01 U	0.01 U	0.045	0.053	0.031	0.065
Benzo(k)fluoranthene in mg/kg			0.01 U	0.02	0.011	0.01 U	0.081	0.01 U	0.04	0.021	0.01 U	0.03	0.037	0.068 J	0.19 J	0.089	0.01 U	0.01 U	0.013	0.016	0.011	0.024
Chrysene in mg/kg			0.013	0.051	0.027	0.02	0.24	0.022	0.11	0.046	0.042	0.073 J	0.22 J	0.16 J	0.36 J	0.22	0.01 U	0.015	0.031	0.041	0.048	0.066
Dibenzo(a,h)anthracene in mg/kg			0.01 U	0.01 U	0.01 U	0.01 U	0.04 U	0.01 U	0.019	0.01 U	0.01 U	0.011	0.015	0.017 J	0.06	0.04	0.01 U	0.01 U	0.01 U	0.01 U	0.01 U	0.01 U
Indeno(1,2,3-cd)pyrene in mg/kg			0.01 U	0.029	0.017	0.014	0.12	0.016	0.065	0.039	0.011	0.038	0.038	0.1 J	0.26 J	0.17	0.01 U	0.01 U	0.026	0.033	0.015	0.033
Total cPAHs TEQ in mg/kg	0.4	7.9	0.00813	0.0593	0.0315	0.0256	0.261	0.0274	0.133	0.0724	0.0287	0.085	0.163	0.211	0.527	0.308	ND	0.00835	0.0466	0.0613	0.038	0.075
Volatile Organic Compounds (VOC)																						
1,1,1,2-Tetrachloroethane in mg/kg	5,000	5,000					0.2 U	0.05 U														
1,1,1-Trichloroethane in mg/kg	7,000,000	7,000,000					0.2 U	0.05 U														
1,1,2,2-Tetrachloroethane in mg/kg	660	660					0.2 U	0.05 U														
1,1,2-Trichloroethane in mg/kg	2,300	2,300					0.2 U	0.05 U														
1,1-Dichloroethane in mg/kg	23,000	23,000					0.2 U	0.05 U														
1,1-Dichloroethene in mg/kg	180,000	180,000					0.2 U	0.05 U														
1,1-Dichloropropene in mg/kg							0.2 U	0.05 U														
1,2,3-Trichlorobenzene in mg/kg							1 U	0.25 U														
1,2,3-Trichloropropane in mg/kg	4.4	4.4					0.2 U	0.05 U														
1,2,4-Trichlorobenzene in mg/kg	4,500	4,500					1 U	0.25 U														
1,2,4-Trimethylbenzene in mg/kg							0.2 U	0.05 U														
1,2-Dibromo-3-chloropropane in mg/kg	160	160					2 U	0.5 U														
1,2-Dibromoethane (EDB) in mg/kg	66	66					0.2 U	0.05 U														
1,2-Dichlorobenzene in mg/kg	320,000	320,000					0.2 U	0.05 U														
1,2-Dichloroethane (EDC) in mg/kg	1,400	1,400					0.2 U	0.05 U														
1,2-Dichloropropane in mg/kg	3,600	3,600					0.2 U	0.05 U														
1,3,5-Trimethylbenzene in mg/kg	35,000	35,000					0.2 U	0.05 U														
1,3-Dichlorobenzene in mg/kg							0.2 U	0.05 U														
1,3-Dichloropropane in mg/kg							0.2 U	0.05 U														
1,4-Dichlorobenzene in mg/kg	24,000	24,000					0.2 U	0.05 U														
2,2-Dichloropropane in mg/kg							0.2 U	0.05 U														
2-Butanone in mg/kg	2,100,000	2,100,000					2 U	0.5 U														
2-Chlorotoluene in mg/kg	70,000	70,000					0.2 U	0.05 U														
2-Hexanone in mg/kg							2 U	0.5 U														
4-Chlorotoluene in mg/kg							0.2 U	0.05 U														
4-Methyl-2-pentanone in mg/kg	280,000	280,000					2 U	0.5 U														
Acetone in mg/kg	3,200,000	3,200,000					2 U	0.5 U														
Benzene in mg/kg	2,400	2,400					0.12 U	0.03 U														
Bromobenzene in mg/kg							0.2 U	0.05 U														

Table 12 - Excavation Verification Soil Quality Data for Naval Reserve Parcel UST Interim Action Area

K-C Worldwide Site Upland Area 110207

			Bottom Samples in Place						Sidewall Samples in Place													
Chemical Name	Interim Action Cleanup Level - Saturated Soil	Interim Action Cleanup Level - Unsaturated Soil	NRU-B01 1/22/14 (14 ft) SAT	NRU-B02 1/22/14 (14 ft) SAT	NRU-B03 1/23/14 (14 ft) SAT	NRU-B04 1/24/14 (14 ft) SAT	NRU-B06 1/30/14 (14 ft) SAT	NRU-B07 1/30/14 (14 ft) SAT	NRU-S01 1/23/14 (4 ft)	NRU-S02 1/23/14 (8 ft)	NRU-S03 1/22/14 (12 ft) SAT	NRU-S04 1/24/14 (4 ft)	NRU-S04 FD 1/24/14 (4 ft)	NRU-S05 1/24/14 (8 ft)	NRU-S06 1/23/14 (12 ft) SAT	NRU-S07 1/23/14 (4 ft)	NRU-S08 1/23/14 (8 ft)	NRU-S09 1/22/14 (12 ft) SAT	NRU-S10 1/24/14 (4 ft)	NRU-S11 1/24/14 (8 ft)	NRU-S12 1/22/14 (12 ft) SAT	NRU-S13 1/23/14 (4 ft)
Bromodichloromethane in mg/kg	2,100	2,100					0.2 U	0.05 U														
Bromoform in mg/kg	17,000	17,000					0.2 U	0.05 U														
Bromomethane in mg/kg	4,900	4,900					2 U	0.5 U														
Carbon tetrachloride in mg/kg	1,900	1,900					0.2 U	0.05 U														
Chlorobenzene in mg/kg	70,000	70,000					0.2 U	0.05 U														
Chloroethane in mg/kg							2 U	0.5 U														
Chloroform in mg/kg	4,200	4,200					0.2 U	0.05 U														
Chloromethane in mg/kg							2 U	0.5 U														
cis-1,2-Dichloroethene (DCE) in mg/kg	7,000	7,000					0.2 U	0.05 U														
cis-1,3-Dichloropropene in mg/kg							0.2 U	0.05 U														
Dibromochloromethane in mg/kg	1,600	1,600					0.2 U	0.05 U														
Dibromomethane in mg/kg	35,000	35,000					0.2 U	0.05 U														
Dichlorodifluoromethane in mg/kg	700,000	700,000					2 U	0.5 U														
Ethylbenzene in mg/kg	350,000	350,000					0.2 U	0.05 U														
Hexachlorobutadiene in mg/kg	1,700	1,700					1 U	0.25 U														
Isopropylbenzene in mg/kg	350,000	350,000					0.2 U	0.05 U														
Methyl tert-butyl ether (MTBE) in mg/kg	73,000	73,000					0.2 U	0.05 U														
Methylene chloride in mg/kg	21,000	21,000					2 U	0.5 U														
n-Propylbenzene in mg/kg	350,000	350,000					0.2 U	0.05 U														
p-Isopropyltoluene in mg/kg							0.2 U	0.05 U														
sec-Butylbenzene in mg/kg	350,000	350,000					0.2 U	0.05 U														
Styrene in mg/kg	700,000	700,000					0.2 U	0.05 U														
tert-Butylbenzene in mg/kg	350,000	350,000					0.2 U	0.05 U														
Tetrachloroethene (PCE) in mg/kg	21,000	21,000					0.1 U	0.025 U														
Toluene in mg/kg	280,000	280,000					0.2 U	0.05 U														
trans-1,2-Dichloroethene in mg/kg	70,000	70,000					0.2 U	0.05 U														
trans-1,3-Dichloropropene in mg/kg							0.2 U	0.05 U														
Trichloroethene (TCE) in mg/kg	1,800	1,800					0.12 U	0.03 U														
Trichlorofluoromethane in mg/kg	1,100,000	1,100,000					2 U	0.5 U														
Vinyl chloride in mg/kg	88	88					0.2 U	0.05 U														
m,p-Xylenes in mg/kg	49	2.5					0.4 U	0.1 U														
o-Xylene in mg/kg	80	4.1					0.2 U	0.05 U														
Naphthalene in mg/kg	70,000	70,000																				

Notes

Concentrations in shaded cells indicate value exceeds Interim Action Cleanup Level - Saturated Soil.

Concentrations in bold text indicate value exceeds Interim Action Cleanup Level - Unsaturated Soil.

SAT = Sample of saturated soil; samples without this designation are unsaturated soil.

J = Analyte was positively identified. The reported result is an estimate.

U = Analyte was not detected at or above the reported result.

UJ = Analyte was not detected at or above the reported estimate.

x = The sample chromatographic pattern does not resemble the fuel standard used for quantitation.

Table 12 - Excavation Verification Soil Quality Data for Naval Reserve Parcel UST Interim Action Area

K-C Worldwide Site Upland Area 110207

			Sidewall Samples in Place																Overexcavated Samples		
Chemical Name	Interim Action Cleanup Level - Saturated Soil	Interim Action Cleanup Level - Unsaturated Soil	NRU-S16 1/24/14 (12 ft) SAT	NRU-S17 1/24/14 (8 ft)	NRU-S18 1/24/14 (4 ft)	NRU-S19 1/24/14 (8 ft)	NRU-S20 1/24/14 (12 ft) SAT	NRU-S20 FD 1/24/14 (12 ft) SAT	NRU-S21 1/24/14 (4 ft)	NRU-S22 1/24/14 (8 ft)	NRU-S23 1/24/14 (12 ft) SAT	NRU-S24 1/30/14 (4 ft)	NRU-S25 1/30/14 (8 ft) SAT	NRU-S26 1/30/14 (12 ft) SAT	NRU-S27 1/30/14 (4 ft)	NRU-S27 FD 1/30/14 (4 ft)	NRU-S28 1/30/14 (8 ft) SAT	NRU-S29 1/30/14 (12 ft) SAT	NRU-B05 1/27/14 (16 ft) OverEx SAT	NRU-S14 1/23/14 (8 ft) OverEx	NRU-S15 1/23/14 (12 ft) OverEx SAT
Total Petroleum Hydrocarbons (TPH)																					
Gasoline Range Hydrocarbons in mg/kg	100	100										2 U	2 U	2 U	2 U	2 U	2 U	2 U	**130**		
Diesel Range Hydrocarbons in mg/kg	2,000	2,000	50 U	50 U	50 U	320	50 U	65	50 U	50 U	50 U	50 U	50 U	50 U	50 U		50 U	50 U	1,300	**8,000**	**2,800**
Oil Range Hydrocarbons in mg/kg	2,000	2,000	250 U	250 U	250 U	250 U	250 U	250 U	250 U	250 U	250 U	250 U	250 U	250 U	250 U		250 U	250 U	770	**4,900**	1,600
Total TPHs in mg/kg	2,000	2,000	ND	ND	ND	445	ND	190	ND	ND	ND	ND	ND	ND	ND		ND	ND	**2,070**	**12,900**	**4,400**
Polycyclic Aromatic Hydrocarbons (PAHs)																					
Acenaphthene in mg/kg	210,000	210,000	0.063	0.09	0.01 U	0.04	0.025	0.035	0.01 U	0.012	0.021	0.01 U	0.01 U	0.01 U	0.01 U		0.01 U	0.01 U	1.3	7.9	2.9
Acenaphthylene in mg/kg			0.01 U	0.01 U	0.01 U	0.01 U	0.01 U	0.01 U	0.01 U	0.01 U	0.01 U	0.01 U	0.01 U	0.01 U	0.01 U		0.01 U	0.01 U	0.1 U	0.1 U	0.1 U
Anthracene in mg/kg	1,100,000	1,100,000	0.011	0.031	0.01 U	0.041	0.02	0.035	0.01 U	0.023	0.013	0.01 U	0.01 U	0.01 U	0.01 U		0.01 U	0.01 U	1.1	6.5	1.8
Benzo(g,h,i)perylene in mg/kg			0.029	0.022	0.01 U	0.077	0.018	0.02	0.01 U	0.044	0.017	0.01 U	0.01 U	0.01 U	0.01 U		0.01 U	0.01 U	0.15	0.84	0.28
Dibenzofuran in mg/kg	3,500	3,500																			
Fluoranthene in mg/kg	140,000	140,000	0.11	0.089	0.013	0.25	0.05 J	0.089 J	0.014	0.12	0.075	0.01 U	0.013	0.039	0.01 U		0.01	0.01 U	0.38	1.9	2
Fluorene in mg/kg	140,000	140,000	0.018	0.05	0.01 U	0.026	0.019	0.032	0.01 U	0.01	0.017	0.01 U	0.01 U	0.01	0.01 U		0.01 U	0.01 U	1.6	8.7	2.7
Phenanthrene in mg/kg			0.089	0.047	0.01 U	0.17	0.038	0.052	0.011	0.096	0.068	0.01 U	0.01 U	0.036	0.01 U		0.01 U	0.01 U	4	6.4	6.8
Pyrene in mg/kg	110,000	110,000	0.095	0.098	0.015	0.27	0.07 J	0.12 J	0.016	0.13	0.069	0.01 U	0.015	0.04	0.01 U		0.011	0.01 U	1.5	8	2.9
2-Methylnaphthalene in mg/kg	14,000	14,000																			
Naphthalene in mg/kg	70,000	70,000	0.01 U	0.074	0.01 U	0.025	0.012	0.024	0.01 U	0.01 U	0.033	0.01 U	0.01 U	0.02	0.01 U		0.01 U	0.01 U	0.1 U	0.1 U	0.1 U
Benz(a)anthracene in mg/kg			0.032	0.028	0.01 U	0.098	0.023	0.037	0.01 U	0.06	0.023	0.01 U	0.01 U	0.014	0.01 U		0.01 U	0.01 U	0.56	3	0.99
Benzo(a)pyrene in mg/kg			0.044	0.035	0.01 U	0.13	0.023	0.032	0.01 U	0.073	0.024	0.01 U	0.01 U	0.012	0.01 U		0.01 U	0.01 U	0.3	1.6	0.59
Benzo(b)fluoranthene in mg/kg			0.058	0.056	0.011	0.16	0.025	0.039	0.011	0.087	0.033	0.01 U	0.01 U	0.015	0.01 U		0.01 U	0.01 U	0.18	0.86	0.56
Benzo(k)fluoranthene in mg/kg			0.017	0.017	0.01 U	0.055	0.01 U	0.012	0.01 U	0.027	0.011	0.01 U	0.01 U	0.01 U	0.01 U		0.01 U	0.01 U	0.1 U	0.12	0.15
Chrysene in mg/kg			0.047	0.031	0.01 U	0.14	0.032	0.05	0.01	0.082	0.03	0.01 U	0.01 U	0.016	0.01 U		0.01 U	0.01 U	0.84	4.5	1.2
Dibenzo(a,h)anthracene in mg/kg			0.01 U	0.01 U	0.01 U	0.021	0.01 U	0.01 U	0.01 U	0.014	0.01 U	0.01 U	0.01 U	0.01 U	0.01 U		0.01 U	0.01 U	0.1 U	0.26	0.1 U
Indeno(1,2,3-cd)pyrene in mg/kg			0.03	0.021	0.01 U	0.079	0.012	0.016	0.01 U	0.043	0.016	0.01 U	0.01 U	0.01 U	0.01 U		0.01 U	0.01 U	0.1 U	0.25	0.16
Total cPAHs TEQ in mg/kg	0.4	7.9	0.0587	0.048	0.00815	0.173	0.0303	0.0434	0.0082	0.0969	0.0331	ND	ND	0.0166	ND		ND	ND	0.397	2.09	0.793
Volatile Organic Compounds (VOC)																					
1,1,1,2-Tetrachloroethane in mg/kg	5,000	5,000										0.05 U	0.05 U	0.05 U	0.05 U	0.05 U	0.05 U	0.05 U			
1,1,1-Trichloroethane in mg/kg	7,000,000	7,000,000										0.05 U	0.05 U	0.05 U	0.05 U	0.05 U	0.05 U	0.05 U			
1,1,2,2-Tetrachloroethane in mg/kg	660	660										0.05 U	0.05 U	0.05 U	0.05 U	0.05 U	0.05 U	0.05 U			
1,1,2-Trichloroethane in mg/kg	2,300	2,300										0.05 U	0.05 U	0.05 U	0.05 U	0.05 U	0.05 U	0.05 U			
1,1-Dichloroethane in mg/kg	23,000	23,000										0.05 U	0.05 U	0.05 U	0.05 U	0.05 U	0.05 U	0.05 U			
1,1-Dichloroethene in mg/kg	180,000	180,000										0.05 U	0.05 U	0.05 U	0.05 U	0.05 U	0.05 U	0.05 U			
1,1-Dichloropropene in mg/kg												0.05 U	0.05 U	0.05 U	0.05 U	0.05 U	0.05 U	0.05 U			
1,2,3-Trichlorobenzene in mg/kg												0.25 U	0.25 U	0.25 U	0.25 U	0.25 U	0.25 U	0.25 U			
1,2,3-Trichloropropane in mg/kg	4.4	4.4										0.05 U	0.05 U	0.05 U	0.05 U	0.05 U	0.05 U	0.05 U			
1,2,4-Trichlorobenzene in mg/kg	4,500	4,500										0.25 U	0.25 U	0.25 U	0.25 U	0.25 U	0.25 U	0.25 U			
1,2,4-Trimethylbenzene in mg/kg												0.05 U	0.05 U	0.05 U	0.05 U	0.05 U	0.05 U	0.05 U			
1,2-Dibromo-3-chloropropane in mg/kg	160	160										0.5 U	0.5 U	0.5 U	0.5 U	0.5 U	0.5 U	0.5 U			
1,2-Dibromoethane (EDB) in mg/kg	66	66										0.05 U	0.05 U	0.05 U	0.05 U	0.05 U	0.05 U	0.05 U			
1,2-Dichlorobenzene in mg/kg	320,000	320,000										0.05 U	0.05 U	0.05 U	0.05 U	0.05 U	0.05 U	0.05 U			
1,2-Dichloroethane (EDC) in mg/kg	1,400	1,400										0.05 U	0.05 U	0.05 U	0.05 U	0.05 U	0.05 U	0.05 U			
1,2-Dichloropropane in mg/kg	3,600	3,600										0.05 U	0.05 U	0.05 U	0.05 U	0.05 U	0.05 U	0.05 U			
1,3,5-Trimethylbenzene in mg/kg	35,000	35,000										0.05 U	0.05 U	0.05 U	0.05 U	0.05 U	0.05 U	0.05 U			
1,3-Dichlorobenzene in mg/kg												0.05 U	0.05 U	0.05 U	0.05 U	0.05 U	0.05 U	0.05 U			
1,3-Dichloropropane in mg/kg												0.05 U	0.05 U	0.05 U	0.05 U	0.05 U	0.05 U	0.05 U			
1,4-Dichlorobenzene in mg/kg	24,000	24,000										0.05 U	0.05 U	0.05 U	0.05 U	0.05 U	0.05 U	0.05 U			
2,2-Dichloropropane in mg/kg												0.05 U	0.05 U	0.05 U	0.05 U	0.05 U	0.05 U	0.05 U			
2-Butanone in mg/kg	2,100,000	2,100,000										0.5 U	0.5 U	0.5 U	0.5 U	0.5 U	0.5 U	0.5 U			
2-Chlorotoluene in mg/kg	70,000	70,000										0.05 U	0.05 U	0.05 U	0.05 U	0.05 U	0.05 U	0.05 U			
2-Hexanone in mg/kg												0.5 U	0.5 U	0.5 U	0.5 U	0.5 U	0.5 U	0.5 U			
4-Chlorotoluene in mg/kg												0.05 U	0.05 U	0.05 U	0.05 U	0.05 U	0.05 U	0.05 U			
4-Methyl-2-pentanone in mg/kg	280,000	280,000										0.5 U	0.5 U	0.5 U	0.5 U	0.5 U	0.5 U	0.5 U			
Acetone in mg/kg	3,200,000	3,200,000										0.5 U	0.5 U	0.5 U	0.5 U	0.5 U	0.5 U	0.5 U			
Benzene in mg/kg	2,400	2,400										0.03 U	0.03 U	0.03 U	0.03 U	0.03 U	0.03 U	0.03 U	0.02 U		
Bromobenzene in mg/kg												0.05 U	0.05 U	0.05 U	0.05 U	0.05 U	0.05 U	0.05 U			

Table 12 - Excavation Verification Soil Quality Data for Naval Reserve Parcel UST Interim Action Area

K-C Worldwide Site Upland Area 110207

			Sidewall Samples in Place															Overexcavated Samples		
Chemical Name	Interim Action Cleanup Level - Saturated Soil	Interim Action Cleanup Level - Unsaturated Soil	NRU-S16 1/24/14 (12 ft) SAT	NRU-S17 1/24/14 (8 ft)	NRU-S18 1/24/14 (4 ft)	NRU-S19 1/24/14 (8 ft)	NRU-S20 1/24/14 (12 ft) SAT	NRU-S20 FD 1/24/14 (12 ft) SAT	NRU-S21 1/24/14 (4 ft)	NRU-S22 1/24/14 (8 ft)	NRU-S23 1/24/14 (12 ft) SAT	NRU-S24 1/30/14 (4 ft)	NRU-S25 1/30/14 (8 ft) SAT	NRU-S26 1/30/14 (12 ft) SAT	NRU-S27 1/30/14 (4 ft)	NRU-S27 FD 1/30/14 (4 ft)	NRU-S28 1/30/14 (8 ft) SAT	NRU-S29 1/30/14 (12 ft) SAT	NRU-B05 1/27/14 (16 ft) OverEx SAT	NRU-S14 1/23/14 (8 ft) OverEx	NRU-S15 1/23/14 (12 ft) OverEx SAT
Bromodichloromethane in mg/kg	2,100	2,100										0.05 U	0.05 U	0.05 U	0.05 U	0.05 U	0.05 U	0.05 U			
Bromoform in mg/kg	17,000	17,000										0.05 U	0.05 U	0.05 U	0.05 U	0.05 U	0.05 U	0.05 U			
Bromomethane in mg/kg	4,900	4,900										0.5 U	0.5 U	0.5 U	0.5 U	0.5 U	0.5 U	0.5 U			
Carbon tetrachloride in mg/kg	1,900	1,900										0.05 U	0.05 U	0.05 U	0.05 U	0.05 U	0.05 U	0.05 U			
Chlorobenzene in mg/kg	70,000	70,000										0.05 U	0.05 U	0.05 U	0.05 U	0.05 U	0.05 U	0.05 U			
Chloroethane in mg/kg												0.5 U	0.5 U	0.5 U	0.5 U	0.5 U	0.5 U	0.5 U			
Chloroform in mg/kg	4,200	4,200										0.05 U	0.05 U	0.05 U	0.05 U	0.05 U	0.05 U	0.05 U			
Chloromethane in mg/kg												0.5 U	0.5 U	0.5 U	0.5 U	0.5 U	0.5 U	0.5 U			
cis-1,2-Dichloroethene (DCE) in mg/kg	7,000	7,000										0.05 U	0.05 U	0.05 U	0.05 U	0.05 U	0.05 U	0.05 U			
cis-1,3-Dichloropropene in mg/kg												0.05 U	0.05 U	0.05 U	0.05 U	0.05 U	0.05 U	0.05 U			
Dibromochloromethane in mg/kg	1,600	1,600										0.05 U	0.05 U	0.05 U	0.05 U	0.05 U	0.05 U	0.05 U			
Dibromomethane in mg/kg	35,000	35,000										0.05 U	0.05 U	0.05 U	0.05 U	0.05 U	0.05 U	0.05 U			
Dichlorodifluoromethane in mg/kg	700,000	700,000										0.5 U	0.5 U	0.5 U	0.5 U	0.5 U	0.5 U	0.5 U			
Ethylbenzene in mg/kg	350,000	350,000										0.05 U	0.05 U	0.05 U	0.05 U	0.05 U	0.05 U	0.05 U	0.08		
Hexachlorobutadiene in mg/kg	1,700	1,700										0.25 U	0.25 U	0.25 U	0.25 U	0.25 U	0.25 U	0.25 U			
Isopropylbenzene in mg/kg	350,000	350,000										0.05 U	0.05 U	0.05 U	0.05 U	0.05 U	0.05 U	0.05 U			
Methyl tert-butyl ether (MTBE) in mg/kg	73,000	73,000										0.05 U	0.05 U	0.05 U	0.05 U	0.05 U	0.05 U	0.05 U			
Methylene chloride in mg/kg	21,000	21,000										0.5 U	0.5 U	0.5 U	0.5 U	0.5 U	0.5 U	0.5 U			
n-Propylbenzene in mg/kg	350,000	350,000										0.05 U	0.05 U	0.05 U	0.05 U	0.05 U	0.05 U	0.05 U			
p-Isopropyltoluene in mg/kg												0.05 U	0.05 U	0.05 U	0.05 U	0.05 U	0.05 U	0.05 U			
sec-Butylbenzene in mg/kg	350,000	350,000										0.05 U	0.05 U	0.05 U	0.05 U	0.05 U	0.05 U	0.05 U			
Styrene in mg/kg	700,000	700,000										0.05 U	0.05 U	0.05 U	0.05 U	0.05 U	0.05 U	0.05 U			
tert-Butylbenzene in mg/kg	350,000	350,000										0.05 U	0.05 U	0.05 U	0.05 U	0.05 U	0.05 U	0.05 U			
Tetrachloroethene (PCE) in mg/kg	21,000	21,000										0.025 U	0.025 U	0.025 U	0.025 U	0.025 U	0.025 U	0.025 U			
Toluene in mg/kg	280,000	280,000										0.05 U	0.05 U	0.05 U	0.05 U	0.05 U	0.05 U	0.05 U	0.02 U		
trans-1,2-Dichloroethene in mg/kg	70,000	70,000										0.05 U	0.05 U	0.05 U	0.05 U	0.05 U	0.05 U	0.05 U			
trans-1,3-Dichloropropene in mg/kg												0.05 U	0.05 U	0.05 U	0.05 U	0.05 U	0.05 U	0.05 U			
Trichloroethene (TCE) in mg/kg	1,800	1,800										0.03 U	0.03 U	0.03 U	0.03 U	0.03 U	0.03 U	0.03 U			
Trichlorofluoromethane in mg/kg	1,100,000	1,100,000										0.5 U	0.5 U	0.5 U	0.5 U	0.5 U	0.5 U	0.5 U			
Vinyl chloride in mg/kg	88	88										0.05 U	0.05 U	0.05 U	0.05 U	0.05 U	0.05 U	0.05 U			
m,p-Xylenes in mg/kg	49	2.5										0.1 U	0.1 U	0.1 U	0.1 U	0.1 U	0.1 U	0.1 U			
o-Xylene in mg/kg	80	4.1										0.05 U	0.05 U	0.05 U	0.05 U	0.05 U	0.05 U	0.05 U			
Naphthalene in mg/kg	70,000	70,000														0.05 U					

Notes

Concentrations in shaded cells indicate value exceeds Interim Action Cleanup Level - Saturated Soil.

Concentrations in bold text indicate value exceeds Interim Action Cleanup Level - Unsaturated Soil.

SAT = Sample of saturated soil; samples without this designation are unsaturated soil.

J = Analyte was positively identified. The reported result is an estimate.

U = Analyte was not detected at or above the reported result.

UJ = Analyte was not detected at or above the reported estimate.

x = The sample chromatographic pattern does not resemble the fuel standard used for quantitation.

Table 13 - Excavation Verification Soil Quality Data for Naval Reserve Parcel South Interim Action Area

K-C Worldwide Site Upland Area 110207

			Bottom Samples in Place										Sidewall Samples in Place											
Chemical Name	Interim Action Cleanup Level - Saturated Soil	Interim Action Cleanup Level - Unsaturated Soil	NRS-B01 2/12/14 (13 ft) SAT	NRS-B01 FD 2/12/14 (13 ft) SAT	NRS-B02 2/12/14 (13 ft) SAT	NRS-B03 2/12/14 (13 ft) SAT	NRS-B04 2/12/14 (13 ft) SAT	NRS-B05 2/12/14 (13 ft) SAT	NRS-B06 2/12/14 (13 ft) SAT	NRS-B07 2/12/14 (13 ft) SAT	NRS-B08 2/12/14 (13 ft) SAT	NRS-B09 2/18/14 (10 ft) SAT	NRS-S01 2/11/14 (8 ft)	NRS-S02 2/11/14 (11 ft) SAT	NRS-S03 2/11/14 (8 ft)	NRS-S04 2/11/14 (11 ft) SAT	NRS-S05 2/11/14 (8 ft)	NRS-S06 2/11/14 (11 ft) SAT	NRS-S09 2/11/14 (8 ft)	NRS-S10 2/11/14 (11 ft) SAT	NRS-S11 2/11/14 (8 ft) SAT	NRS-S12 2/11/14 (11 ft) SAT	NRS-S13 2/12/14 (8 ft) SAT	NRS-S14 2/12/14 (11 ft) SAT
Total Petroleum Hydrocarbons (TPH)																								
Gasoline Range Hydrocarbons in mg/kg	100	100	2 U	2 U	2 U	34	2 U	2 U	2 U	2 U	2 U	2 U	2 U	4.1	2 U	2 U	2 U	2 U	2 U	2 U	2 U	2 U	2 U	2 U
Diesel Range Hydrocarbons in mg/kg	2,000	2,000	50 U	50 U	50 U	50 U	50 U	50 U	50 U	50 U	50 U	50 U	50 U	50 U	50 U	50 U	50 U	50 U	50 U	50 U	50 U	50 U	50 U	50 U
Oil Range Hydrocarbons in mg/kg	2,000	2,000	250 U	250 U	250 U	250 U	250 U	250 U	250 U	250 U	250 U	250 U	250 U	250 U	250 U	250 U	250 U	250 U	250 U	250 U	250 U	250 U	250 U	250 U
Bunker C in mg/kg	2,000	2,000																						
Total TPHs in mg/kg	2,000	2,000	ND	ND	ND	ND	ND	ND	ND	ND	ND	ND	ND	ND	ND	ND	ND	ND	ND	ND	ND	ND	ND	ND
Metals																								
Arsenic in mg/kg	20	20	4.74						3.72								14.5			4.18				
Cadmium in mg/kg	3,500	3,500	1 U						1 U								1 U			1 U				
Copper in mg/kg	36	36	17.8						8.72								15.5			11.4				
Lead in mg/kg	81	1,000	3.8						2.36								3.48			2.61				
Mercury in mg/kg	0.1	0.1	0.1 U						0.1 U								0.1 U			0.1 U				
Nickel in mg/kg	48	48	17						12.5								23.9			13.8				
Zinc in mg/kg	85	100	27.2						14.9								30.7			17.8				
Polycyclic Aromatic Hydrocarbons (PAHs)																								
Acenaphthene in mg/kg	210,000	210,000	0.01 U	0.01 U	0.011	0.074	0.049	0.01 U	0.01 U	0.01 U	3.3	0.01 U	0.044	0.28	0.01 U	0.016	0.01 U	0.045	0.01 U	0.01 U	0.01 U	0.01 U	0.01 U	0.01 U
Acenaphthylene in mg/kg			0.01 U	0.01 U	0.016	0.01 U	0.01 U	0.01 U	0.01 U	0.01 U	0.01 U	0.013	0.01 U	0.01 U	0.01 U	0.01 U	0.01 U	0.01 U	0.01 U	0.01 U	0.01 U	0.01 U	0.01 U	0.01 U
Anthracene in mg/kg	1,100,000	1,100,000	0.01 U	0.01 U	0.013	0.012	0.011	0.01 U	0.01 U	0.01 U	0.13	0.015	0.01 U	0.01 U	0.01 U	0.01 U	0.01 U	0.01 U	0.01 U	0.01 U	0.01 U	0.01 U	0.01 U	0.01 U
Benzo(g,h,i)perylene in mg/kg			0.01 U	0.01 U	0.021	0.01 U	0.01 U	0.01 U	0.01 U	0.01 U	0.01 U	0.044	0.01 U	0.01 U	0.01 U	0.01 U	0.01 U	0.01 U	0.01 U	0.01 U	0.01 U	0.01 U	0.01 U	0.01 U
Fluoranthene in mg/kg	140,000	140,000	0.024	0.035	0.068	0.078	0.035	0.017	0.016	0.05	0.12	0.12	0.023	0.01 U	0.01 U	0.01 U	0.01 U	0.01 U	0.01 U	0.033	0.01 U	0.01 U	0.01 U	0.01 U
Fluorene in mg/kg	140,000	140,000	0.01 U	0.01 U	0.012	0.033	0.049	0.01 U	0.01 U	0.01 U	1.4	0.011	0.012	0.21	0.01 U	0.023	0.01 U	0.026	0.01 U	0.01 U	0.01 U	0.01 U	0.01 U	0.01 U
Phenanthrene in mg/kg			0.016	0.024	0.058	0.016	0.089	0.013	0.021	0.04	1.5	0.069	0.01 U	0.14	0.01 U	0.019	0.01 U	0.01 U	0.01 U	0.025	0.01 U	0.01 U	0.01 U	0.01 U
Pyrene in mg/kg	110,000	110,000	0.024	0.035	0.077	0.07	0.029	0.016	0.015	0.05	0.078	0.11	0.024	0.01 U	0.01 U	0.01 U	0.01 U	0.01 U	0.01 U	0.035	0.01 U	0.01 U	0.01 U	0.01 U
Naphthalene in mg/kg	70,000	70,000	0.02	0.029	0.11	0.029	0.053	0.015	0.013	0.046	0.5	0.051	0.011	0.01 U	0.01 U	0.01 U	0.01 U	0.01 U	0.01 U	0.034	0.01 U	0.01 U	0.01 U	0.01 U
Benz(a)anthracene in mg/kg			0.01 U	0.01 U	0.018	0.017	0.01 U	0.01 U	0.01 U	0.011	0.014	0.038	0.01	0.01 U	0.01 U	0.01 U	0.01 U	0.01 U	0.01 U	0.015	0.01 U	0.01 U	0.01 U	0.01 U
Benzo(a)pyrene in mg/kg			0.01 U	0.01 U	0.025	0.01 U	0.01 U	0.01 U	0.01 U	0.011	0.012	0.056	0.01 U	0.01 U	0.01 U	0.01 U	0.01 U	0.01 U	0.01 U	0.013	0.01 U	0.01 U	0.01 U	0.01 U
Benzo(b)fluoranthene in mg/kg			0.01 U	0.01 U	0.028	0.015	0.01 U	0.01 U	0.01 U	0.015	0.016	0.074	0.01 U	0.01 U	0.01 U	0.01 U	0.01 U	0.01 U	0.01 U	0.016	0.01 U	0.01 U	0.01 U	0.01 U
Benzo(k)fluoranthene in mg/kg			0.01 U	0.01 U	0.011	0.01 U	0.01 U	0.01 U	0.01 U	0.01 U	0.01 U	0.022	0.01 U	0.01 U	0.01 U	0.01 U	0.01 U	0.01 U	0.01 U	0.01 U	0.01 U	0.01 U	0.01 U	0.01 U
Chrysene in mg/kg			0.01 U	0.01 U	0.027	0.014	0.01 U	0.01 U	0.01 U	0.013	0.014	0.058	0.01 U	0.01 U	0.01 U	0.01 U	0.01 U	0.01 U	0.01 U	0.02	0.01 U	0.01 U	0.01 U	0.01 U
Dibenzo(a,h)anthracene in mg/kg			0.01 U	0.01 U	0.01 U	0.01 U	0.01 U	0.01 U	0.01 U	0.01 U	0.01 U	0.01 U	0.01 U	0.01 U	0.01 U	0.01 U	0.01 U	0.01 U	0.01 U	0.01 U	0.01 U	0.01 U	0.01 U	0.01 U
Indeno(1,2,3-cd)pyrene in mg/kg			0.01 U	0.01 U	0.017	0.01 U	0.01 U	0.01 U	0.01 U	0.01 U	0.01 U	0.050 J	0.01 U	0.01 U	0.01 U	0.01 U	0.01 U	0.01 U	0.01 U	0.01 U	0.01 U	0.01 U	0.01 U	0.01 U
Total cPAHs TEQ in mg/kg	0.4	7.9	ND	ND	0.0332	0.00984	ND	ND	ND	0.0152	0.0166	0.0755	0.00805	ND	ND	ND	ND	ND	ND	0.0178	ND	ND	ND	ND
Volatile Organic Compounds (VOC)																								
1,1,1,2-Tetrachloroethane in mg/kg	5,000	5,000	0.05 U	0.05 U	0.05 U	0.05 U	0.05 U	0.05 U	0.05 U	0.05 U	0.05 U	0.05 U	0.05 U	0.05 U	0.05 U	0.05 U	0.05 U	0.05 U	0.05 U	0.05 U	0.05 U	0.05 U	0.05 U	0.05 U
1,1,1-Trichloroethane in mg/kg	7,000,000	7,000,000	0.05 U	0.05 U	0.05 U	0.05 U	0.05 U	0.05 U	0.05 U	0.05 U	0.05 U	0.05 U	0.05 U	0.05 U	0.05 U	0.05 U	0.05 U	0.05 U	0.05 U	0.05 U	0.05 U	0.05 U	0.05 U	0.05 U
1,1,2,2-Tetrachloroethane in mg/kg	660	660	0.05 U	0.05 U	0.05 U	0.05 U	0.05 U	0.05 U	0.05 U	0.05 U	0.05 U	0.05 U	0.05 U	0.05 U	0.05 U	0.05 U	0.05 U	0.05 U	0.05 U	0.05 U	0.05 U	0.05 U	0.05 U	0.05 U
1,1,2-Trichloroethane in mg/kg	2,300	2,300	0.05 U	0.05 U	0.05 U	0.05 U	0.05 U	0.05 U	0.05 U	0.05 U	0.05 U	0.05 U	0.05 U	0.05 U	0.05 U	0.05 U	0.05 U	0.05 U	0.05 U	0.05 U	0.05 U	0.05 U	0.05 U	0.05 U
1,1-Dichloroethane in mg/kg	23,000	23,000	0.05 U	0.05 U	0.05 U	0.05 U	0.05 U	0.05 U	0.05 U	0.05 U	0.05 U	0.05 U	0.05 U	0.05 U	0.05 U	0.05 U	0.05 U	0.05 U	0.05 U	0.05 U	0.05 U	0.05 U	0.05 U	0.05 U
1,1-Dichloroethene in mg/kg	180,000	180,000	0.05 U	0.05 U	0.05 U	0.05 U	0.05 U	0.05 U	0.05 U	0.05 U	0.05 U	0.05 U	0.05 U	0.05 U	0.05 U	0.05 U	0.05 U	0.05 U	0.05 U	0.05 U	0.05 U	0.05 U	0.05 U	0.05 U
1,1-Dichloropropene in mg/kg			0.05 U	0.05 U	0.05 U	0.05 U	0.05 U	0.05 U	0.05 U	0.05 U	0.05 U	0.05 U	0.05 U	0.05 U	0.05 U	0.05 U	0.05 U	0.05 U	0.05 U	0.05 U	0.05 U	0.05 U	0.05 U	0.05 U
1,2,3-Trichlorobenzene in mg/kg			0.25 U	0.25 U	0.25 U	0.25 U	0.25 U	0.25 U	0.25 U	0.25 U	0.25 U	0.25 U	0.25 U	0.25 U	0.25 U	0.25 U	0.25 U	0.25 U	0.25 U	0.25 U	0.25 U	0.25 U	0.25 U	0.25 U
1,2,3-Trichloropropane in mg/kg	4.4	4.4	0.05 U	0.05 U	0.05 U	0.05 U	0.05 U	0.05 U	0.05 U	0.05 U	0.05 U	0.05 U	0.05 U	0.05 U	0.05 U	0.05 U	0.05 U	0.05 U	0.05 U	0.05 U	0.05 U	0.05 U	0.05 U	0.05 U
1,2,4-Trichlorobenzene in mg/kg	4,500	4,500	0.25 U	0.25 U	0.25 U	0.25 U	0.25 U	0.25 U	0.25 U	0.25 U	0.25 U	0.25 U	0.25 U	0.25 U	0.25 U	0.25 U	0.25 U	0.25 U	0.25 U	0.25 U	0.25 U	0.25 U	0.25 U	0.25 U
1,2,4-Trimethylbenzene in mg/kg			0.05 U	0.05 U	0.05 U	0.05 U	0.05 U	0.05 U	0.05 U	0.05 U	0.05 U	0.05 U	0.05 U	0.05 U	0.05 U	0.05 U	0.05 U	0.05 U	0.05 U	0.05 U	0.05 U	0.05 U	0.05 U	0.05 U
1,2-Dibromo-3-chloropropane in mg/kg	160	160	0.5 U	0.5 U	0.5 U	0.5 U	0.5 U	0.5 U	0.5 U	0.5 U	0.5 U	0.5 U	0.5 U	0.5 U	0.5 U	0.5 U	0.5 U	0.5 U	0.5 U	0.5 U	0.5 U	0.5 U	0.5 U	0.5 U
1,2-Dibromoethane (EDB) in mg/kg	66	66	0.05 U	0.05 U	0.05 U	0.05 U	0.05 U	0.05 U	0.05 U	0.05 U	0.05 U	0.05 U	0.05 U	0.05 U	0.05 U	0.05 U	0.05 U	0.05 U	0.05 U	0.05 U	0.05 U	0.05 U	0.05 U	0.05 U
1,2-Dichlorobenzene in mg/kg	320,000	320,000	0.05 U	0.05 U	0.05 U	0.05 U	0.05 U	0.05 U	0.05 U	0.05 U	0.05 U	0.05 U	0.05 U	0.05 U	0.05 U	0.05 U	0.05 U	0.05 U	0.05 U	0.05 U	0.05 U	0.05 U	0.05 U	0.05 U
1,2-Dichloroethane (EDC) in mg/kg	1,400	1,400	0.05 U	0.05 U	0.05 U	0.05 U	0.05 U	0.05 U	0.05 U	0.05 U	0.05 U	0.05 U	0.05 U	0.05 U	0.05 U	0.05 U	0.05 U	0.05 U	0.05 U	0.05 U	0.05 U	0.05 U	0.05 U	0.05 U
1,2-Dichloropropane in mg/kg	3,600	3,600	0.05 U	0.05 U	0.05 U	0.05 U	0.05 U	0.05 U	0.05 U	0.05 U	0.05 U	0.05 U	0.05 U	0.05 U	0.05 U	0.05 U	0.05 U	0.05 U	0.05 U	0.05 U	0.05 U	0.05 U	0.05 U	0.05 U
1,3,5-Trimethylbenzene in mg/kg	35,000	35,000	0.05 U	0.05 U	0.05 U	0.05 U	0.05 U	0.05 U	0.05 U	0.05 U	0.05 U	0.05 U	0.05 U	0.05 U	0.05 U	0.05 U	0.05 U	0.05 U	0.05 U	0.05 U	0.05 U	0.05 U	0.05 U	0.05 U
1,3-Dichlorobenzene in mg/kg			0.05 U	0.05 U	0.05 U	0.05 U	0.05 U	0.05 U	0.05 U	0.05 U	0.05 U	0.05 U	0.05 U	0.05 U	0.05 U	0.05 U	0.05 U	0.05 U	0.05 U	0.05 U	0.05 U	0.05 U	0.05 U	0.05 U
1,3-Dichloropropane in mg/kg			0.05 U	0.05 U	0.05 U	0.05 U	0.05 U	0.05 U	0.05 U	0.05 U	0.05 U	0.05 U	0.05 U	0.05 U	0.05 U	0.05 U	0.05 U	0.05 U	0.05 U	0.05 U	0.05 U	0.05 U	0.05 U	0.05 U
1,4-Dichlorobenzene in mg/kg	24,000	24,000	0.05 U	0.05 U	0.05 U	0.05 U	0.05 U	0.05 U	0.05 U	0.05 U	0.05 U	0.05 U	0.05 U	0.05 U	0.05 U	0.05 U	0.05 U	0.05 U	0.05 U	0.05 U	0.05 U	0.05 U	0.05 U	0.05 U
2,2-Dichloropropane in mg/kg			0.05 U	0.05 U	0.05 U	0.05 U	0.05 U	0.05 U	0.05 U	0.05 U	0.05 U	0.05 U	0.05 U	0.05 U	0.05 U	0.05 U	0.05 U	0.05 U	0.05 U	0.05 U	0.05 U	0.05 U	0.05 U	0.05 U
2-Butanone in mg/kg	2,100,000	2,100,000	0.5 U	0.5 U	0.5 U	0.5 U	0.5 U	0.5 U	0.5 U	0.5 U	0.5 U	0.5 U	0.5 U	0.5 U	0.5 U	0.5 U	0.5 U	0.5 U	0.5 U	0.5 U	0.5 U	0.5 U	0.5 U	0.5 U
2-Chlorotoluene in mg/kg	70,000	70,000	0.05 U	0.05 U	0.05 U	0.05 U	0.05 U	0.05 U	0.05 U	0.05 U	0.05 U	0.05 U	0.05 U	0.05 U	0.05 U	0.05 U	0.05 U	0.05 U	0.05 U	0.05 U	0.05 U	0.05 U	0.05 U	0.05 U
2-Hexanone in mg/kg			0.5 U	0.5 U	0.5 U	0.5 U	0.5 U	0.5 U	0.5 U	0.5 U	0.5 U	0.5 U	0.5 U	0.5 U	0.5 U	0.5 U	0.5 U	0.5 U	0.5 U	0.5 U	0.5 U	0.5 U	0.5 U	0.5 U
4-Chlorotoluene in mg/kg			0.05 U	0.05 U	0.05 U	0.05 U	0.05 U	0.05 U	0.05 U	0.05 U	0.05 U	0.05 U	0.05 U	0.05 U	0.05 U	0.05 U	0.05 U	0.05 U	0.05 U	0.05 U	0.05 U	0.05 U	0.05 U	0.05 U
4-Methyl-2-pentanone in mg/kg	280,000	280,000	0.5 U	0.5 U	0.5 U	0.5 U	0.5 U	0.5 U	0.5 U	0.5 U	0.5 U	0.5 U	0.5 U	0.5 U	0.5 U	0.5 U	0.5 U	0.5 U	0.5 U	0.5 U	0.5 U	0.5 U	0.5 U	0.5 U
Acetone in mg/kg	3,200,000	3,200,000	0.5 U	0.5 U	0.5 U	0.5 U	0.5 U	0.5 U	0.5 U	0.5 U	0.5 U	0.5 U	0.5 U	0.5 U	0.5 U	0.5 U	0.5 U	0.5 U	0.5 U	0.5 U	0.5 U	0.5 U	0.5 U	0.5 U

Table 13 - Excavation Verification Soil Quality Data for Naval Reserve Parcel South Interim Action Area

K-C Worldwide Site Upland Area 110207

			Bottom Samples in Place										Sidewall Samples in Place											
Chemical Name	Interim Action Cleanup Level - Saturated Soil	Interim Action Cleanup Level - Unsaturated Soil	NRS-B01 2/12/14 (13 ft) SAT	NRS-B01 FD 2/12/14 (13 ft) SAT	NRS-B02 2/12/14 (13 ft) SAT	NRS-B03 2/12/14 (13 ft) SAT	NRS-B04 2/12/14 (13 ft) SAT	NRS-B05 2/12/14 (13 ft) SAT	NRS-B06 2/12/14 (13 ft) SAT	NRS-B07 2/12/14 (13 ft) SAT	NRS-B08 2/12/14 (13 ft) SAT	NRS-B09 2/18/14 (10 ft) SAT	NRS-S01 2/11/14 (8 ft)	NRS-S02 2/11/14 (11 ft) SAT	NRS-S03 2/11/14 (8 ft)	NRS-S04 2/11/14 (11 ft) SAT	NRS-S05 2/11/14 (8 ft)	NRS-S06 2/11/14 (11 ft) SAT	NRS-S09 2/11/14 (8 ft)	NRS-S10 2/11/14 (11 ft) SAT	NRS-S11 2/11/14 (8 ft) SAT	NRS-S12 2/11/14 (11 ft) SAT	NRS-S13 2/12/14 (8 ft) SAT	NRS-S14 2/12/14 (11 ft) SAT
Benzene in mg/kg	2,400	2,400	0.03 U	0.03 U	0.03 U	0.03 U	0.03 U	0.03 U	0.03 U	0.03 U	0.03 U	0.03 U	0.03 U	0.03 U	0.03 U	0.03 U	0.03 U	0.03 U	0.03 U	0.03 U	0.03 U	0.03 U	0.03 U	0.03 U
Bromobenzene in mg/kg			0.05 U	0.05 U	0.05 U	0.05 U	0.05 U	0.05 U	0.05 U	0.05 U	0.05 U	0.05 U	0.05 U	0.05 U	0.05 U	0.05 U	0.05 U	0.05 U	0.05 U	0.05 U	0.05 U	0.05 U	0.05 U	0.05 U
Bromodichloromethane in mg/kg	2,100	2,100	0.05 U	0.05 U	0.05 U	0.05 U	0.05 U	0.05 U	0.05 U	0.05 U	0.05 U	0.05 U	0.05 U	0.05 U	0.05 U	0.05 U	0.05 U	0.05 U	0.05 U	0.05 U	0.05 U	0.05 U	0.05 U	0.05 U
Bromoform in mg/kg	17,000	17,000	0.05 U	0.05 U	0.05 U	0.05 U	0.05 U	0.05 U	0.05 U	0.05 U	0.05 U	0.05 U	0.05 U	0.05 U	0.05 U	0.05 U	0.05 U	0.05 U	0.05 U	0.05 U	0.05 U	0.05 U	0.05 U	0.05 U
Bromomethane in mg/kg	4,900	4,900	0.5 U	0.5 U	0.5 U	0.5 U	0.5 U	0.5 U	0.5 U	0.5 U	0.5 U	0.5 U	0.5 U	0.5 U	0.5 U	0.5 U	0.5 U	0.5 U	0.5 U	0.5 U	0.5 U	0.5 U	0.5 U	0.5 U
Carbon tetrachloride in mg/kg	1,900	1,900	0.05 U	0.05 U	0.05 U	0.05 U	0.05 U	0.05 U	0.05 U	0.05 U	0.05 U	0.05 U	0.05 U	0.05 U	0.05 U	0.05 U	0.05 U	0.05 U	0.05 U	0.05 U	0.05 U	0.05 U	0.05 U	0.05 U
Chlorobenzene in mg/kg	70,000	70,000	0.05 U	0.05 U	0.05 U	0.05 U	0.05 U	0.05 U	0.05 U	0.05 U	0.05 U	0.05 U	0.05 U	0.05 U	0.05 U	0.05 U	0.05 U	0.05 U	0.05 U	0.05 U	0.05 U	0.05 U	0.05 U	0.05 U
Chloroethane in mg/kg			0.5 U	0.5 U	0.5 U	0.5 U	0.5 U	0.5 U	0.5 U	0.5 U	0.5 U	0.5 U	0.5 U	0.5 U	0.5 U	0.5 U	0.5 U	0.5 U	0.5 U	0.5 U	0.5 U	0.5 U	0.5 U	0.5 U
Chloroform in mg/kg	4,200	4,200	0.05 U	0.05 U	0.05 U	0.05 U	0.05 U	0.05 U	0.05 U	0.05 U	0.05 U	0.05 U	0.05 U	0.05 U	0.05 U	0.05 U	0.05 U	0.05 U	0.05 U	0.05 U	0.05 U	0.05 U	0.05 U	0.05 U
Chloromethane in mg/kg			0.5 U	0.5 U	0.5 U	0.5 U	0.5 U	0.5 U	0.5 U	0.5 U	0.5 U	0.5 U	0.5 U	0.5 U	0.5 U	0.5 U	0.5 U	0.5 U	0.5 U	0.5 U	0.5 U	0.5 U	0.5 U	0.5 U
cis-1,2-Dichloroethene (DCE) in mg/kg	7,000	7,000	0.05 U	0.05 U	0.05 U	0.05 U	0.05 U	0.05 U	0.05 U	0.05 U	0.05 U	0.05 U	0.05 U	0.05 U	0.05 U	0.05 U	0.05 U	0.05 U	0.05 U	0.05 U	0.05 U	0.05 U	0.05 U	0.05 U
cis-1,3-Dichloropropene in mg/kg			0.05 U	0.05 U	0.05 U	0.05 U	0.05 U	0.05 U	0.05 U	0.05 U	0.05 U	0.05 UJ	0.05 U	0.05 U	0.05 U	0.05 U	0.05 U	0.05 U	0.05 U	0.05 U	0.05 U	0.05 U	0.05 U	0.05 U
Dibromochloromethane in mg/kg	1,600	1,600	0.05 U	0.05 U	0.05 U	0.05 U	0.05 U	0.05 U	0.05 U	0.05 U	0.05 U	0.05 UJ	0.05 U	0.05 U	0.05 U	0.05 U	0.05 U	0.05 U	0.05 U	0.05 U	0.05 U	0.05 U	0.05 U	0.05 U
Dibromomethane in mg/kg	35,000	35,000	0.05 U	0.05 U	0.05 U	0.05 U	0.05 U	0.05 U	0.05 U	0.05 U	0.05 U	0.05 U	0.05 U	0.05 U	0.05 U	0.05 U	0.05 U	0.05 U	0.05 U	0.05 U	0.05 U	0.05 U	0.05 U	0.05 U
Dichlorodifluoromethane in mg/kg	700,000	700,000	0.5 U	0.5 U	0.5 U	0.5 U	0.5 U	0.5 U	0.5 U	0.5 U	0.5 U	0.5 U	0.5 U	0.5 U	0.5 U	0.5 U	0.5 U	0.5 U	0.5 U	0.5 U	0.5 U	0.5 U	0.5 U	0.5 U
Ethylbenzene in mg/kg	350,000	350,000	0.05 U	0.05 U	0.05 U	0.05 U	0.05 U	0.05 U	0.05 U	0.05 U	0.05 U	0.05 U	0.05 U	0.05 U	0.05 U	0.05 U	0.05 U	0.05 U	0.05 U	0.05 U	0.05 U	0.05 U	0.05 U	0.05 U
Hexachlorobutadiene in mg/kg	1,700	1,700	0.25 U	0.25 U	0.25 U	0.25 U	0.25 U	0.25 U	0.25 U	0.25 U	0.25 U	0.25 U	0.25 U	0.25 U	0.25 U	0.25 U	0.25 U	0.25 U	0.25 U	0.25 U	0.25 U	0.25 U	0.25 U	0.25 U
Isopropylbenzene in mg/kg	350,000	350,000	0.05 U	0.05 U	0.05 U	0.05 U	0.05 U	0.05 U	0.05 U	0.05 U	0.05 U	0.05 U	0.05 U	0.05 U	0.05 U	0.05 U	0.05 U	0.05 U	0.05 U	0.05 U	0.05 U	0.05 U	0.05 U	0.05 U
Methyl tert-butyl ether (MTBE) in mg/kg	73,000	73,000	0.05 U	0.05 U	0.05 U	0.05 U	0.05 U	0.05 U	0.05 U	0.05 U	0.05 U	0.05 U	0.05 U	0.05 U	0.05 U	0.05 U	0.05 U	0.05 U	0.05 U	0.05 U	0.05 U	0.05 U	0.05 U	0.05 U
Methylene chloride in mg/kg	21,000	21,000	0.5 U	0.5 U	0.5 U	0.5 U	0.5 U	0.5 U	0.5 U	0.5 U	0.5 U	0.5 U	0.5 U	0.5 U	0.5 U	0.5 U	0.5 U	0.5 U	0.5 U	0.5 U	0.5 U	0.5 U	0.5 U	0.5 U
n-Propylbenzene in mg/kg	350,000	350,000	0.05 U	0.05 U	0.05 U	0.05 U	0.05 U	0.05 U	0.05 U	0.05 U	0.05 U	0.05 U	0.05 U	0.05 U	0.05 U	0.05 U	0.05 U	0.05 U	0.05 U	0.05 U	0.05 U	0.05 U	0.05 U	0.05 U
p-Isopropyltoluene in mg/kg			0.05 U	0.05 U	0.05 U	0.05 U	0.05 U	0.05 U	0.05 U	0.05 U	0.05 U	0.05 U	0.05 U	0.05 U	0.05 U	0.05 U	0.05 U	0.05 U	0.05 U	0.05 U	0.05 U	0.05 U	0.05 U	0.05 U
sec-Butylbenzene in mg/kg	350,000	350,000	0.05 U	0.05 U	0.05 U	0.05 U	0.05 U	0.05 U	0.05 U	0.05 U	0.05 U	0.05 U	0.05 U	0.05 U	0.05 U	0.05 U	0.05 U	0.05 U	0.05 U	0.05 U	0.05 U	0.05 U	0.05 U	0.05 U
Styrene in mg/kg	700,000	700,000	0.05 U	0.05 U	0.05 U	0.05 U	0.05 U	0.05 U	0.05 U	0.05 U	0.05 U	0.05 U	0.05 U	0.05 U	0.05 U	0.05 U	0.05 U	0.05 U	0.05 U	0.05 U	0.05 U	0.05 U	0.05 U	0.05 U
tert-Butylbenzene in mg/kg	350,000	350,000	0.05 U	0.05 U	0.05 U	0.05 U	0.05 U	0.05 U	0.05 U	0.05 U	0.05 U	0.05 U	0.05 U	0.05 U	0.05 U	0.05 U	0.05 U	0.05 U	0.05 U	0.05 U	0.05 U	0.05 U	0.05 U	0.05 U
Tetrachloroethene (PCE) in mg/kg	21,000	21,000	0.025 U	0.025 U	0.025 U	0.025 U	0.025 U	0.025 U	0.025 U	0.025 U	0.025 U	0.025 U	0.025 U	0.025 U	0.025 U	0.025 U	0.025 U	0.025 U	0.025 U	0.025 U	0.025 U	0.025 U	0.025 U	0.025 U
Toluene in mg/kg	280,000	280,000	0.05 U	0.05 U	0.05 U	0.05 U	0.05 U	0.05 U	0.05 U	0.05 U	0.05 U	0.05 U	0.05 U	0.05 U	0.05 U	0.05 U	0.05 U	0.05 U	0.05 U	0.05 U	0.05 U	0.05 U	0.05 U	0.05 U
trans-1,2-Dichloroethene in mg/kg	70,000	70,000	0.05 U	0.05 U	0.05 U	0.05 U	0.05 U	0.05 U	0.05 U	0.05 U	0.05 U	0.05 U	0.05 U	0.05 U	0.05 U	0.05 U	0.05 U	0.05 U	0.05 U	0.05 U	0.05 U	0.05 U	0.05 U	0.05 U
trans-1,3-Dichloropropene in mg/kg			0.05 U	0.05 U	0.05 U	0.05 U	0.05 U	0.05 U	0.05 U	0.05 U	0.05 U	0.05 UJ	0.05 U	0.05 U	0.05 U	0.05 U	0.05 U	0.05 U	0.05 U	0.05 U	0.05 U	0.05 U	0.05 U	0.05 U
Trichloroethene (TCE) in mg/kg	1,800	1,800	0.03 U	0.03 U	0.03 U	0.03 U	0.03 U	0.03 U	0.03 U	0.03 U	0.03 U	0.03 U	0.03 U	0.03 U	0.03 U	0.03 U	0.03 U	0.03 U	0.03 U	0.03 U	0.03 U	0.03 U	0.03 U	0.03 U
Trichlorofluoromethane in mg/kg	1,100,000	1,100,000	0.5 U	0.5 U	0.5 U	0.5 U	0.5 U	0.5 U	0.5 U	0.5 U	0.5 U	0.5 U	0.5 U	0.5 U	0.5 U	0.5 U	0.5 U	0.5 U	0.5 U	0.5 U	0.5 U	0.5 U	0.5 U	0.5 U
Vinyl chloride in mg/kg	88	88	0.05 U	0.05 U	0.05 U	0.05 U	0.05 U	0.05 U	0.05 U	0.05 U	0.05 U	0.05 U	0.05 U	0.05 U	0.05 U	0.05 U	0.05 U	0.05 U	0.05 U	0.05 U	0.05 U	0.05 U	0.05 U	0.05 U
m,p-Xylenes in mg/kg	49	2.5	0.1 U	0.1 U	0.1 U	0.1 U	0.1 U	0.1 U	0.1 U	0.1 U	0.1 U	0.1 U	0.1 U	0.1 U	0.1 U	0.1 U	0.1 U	0.1 U	0.1 U	0.1 U	0.1 U	0.1 U	0.1 U	0.1 U
o-Xylene in mg/kg	80	4.1	0.05 U	0.05 U	0.05 U	0.05 U	0.05 U	0.05 U	0.05 U	0.05 U	0.05 U	0.05 U	0.05 U	0.05 U	0.05 U	0.05 U	0.05 U	0.05 U	0.05 U	0.05 U	0.05 U	0.05 U	0.05 U	0.05 U
Naphthalene in mg/kg	70,000	70,000	0.05 U	0.05 U	0.05 U	0.05 U	0.05 U	0.05 U	0.05 U	0.05 U	0.098	0.05 U	0.05 U	0.05 U	0.05 U	0.05 U	0.05 U	0.05 U	0.05 U	0.05 U	0.05 U	0.05 U	0.05 U	0.05 U
Polychlorinated Biphenyls (PCBs)																								
Aroclor 1016 in mg/kg																								
Aroclor 1221 in mg/kg																								
Aroclor 1232 in mg/kg																								
Aroclor 1242 in mg/kg																								
Aroclor 1248 in mg/kg																								
Aroclor 1254 in mg/kg																								
Aroclor 1260 in mg/kg																								
Total PCBs (Sum of Aroclors) in mg/kg	10	10																						

Notes

Concentrations in shaded cells indicate value exceeds Interim Action Cleanup Level - Saturated Soil.

Concentrations in bold text indicate value exceeds Interim Action Cleanup Level - Unsaturated Soil.

SAT - Sample of saturated soil; samples without this designation are unsaturated soil.

J = Analyte was positively identified. The reported result is an estimate.

U = Analyte was not detected at or above the reported result.

UJ = Analyte was not detected at or above the reported estimate.

x = The sample chromatographic pattern does not resemble the fuel standard used for quantitation.

Table 13 - Excavation Verification Soil Quality Data for Naval Reserve Parcel South Interim Action Area

K-C Worldwide Site Upland Area 110207

			Sidewall Samples in Place														Overexcavated Samples						
Chemical Name	Interim Action Cleanup Level - Saturated Soil	Interim Action Cleanup Level - Unsaturated Soil	NRS-S15 2/12/14 (8 ft) SAT	NRS-S16 2/12/14 (11 ft) SAT	NRS-S17 2/12/14 (8 ft) SAT	NRS-S17 FD 2/12/14 (8 ft) SAT	NRS-S18 2/12/14 (11 ft) SAT	NRS-S19 2/12/14 (8 ft) SAT	NRS-S20 2/12/14 (11 ft) SAT	NRS-S23 2/12/14 (8 ft) SAT	NRS-S24 2/12/14 (11 ft) SAT	NRS-S25 2/12/14 (8 ft) SAT	NRS-S26 2/12/14 (11 ft) SAT	NRS-S27 2/18/14 (8 ft) SAT	NRS-S28 2/18/14 (8 ft) SAT	NRS-S29 2/19/14 (8 ft)	NRA1-PC1 1/6/14 (12 ft) OverEx	NRA1-PC2 1/6/14 (8 ft) OverEx	NRA1-PC3 1/6/14 (8 ft) OverEx	NRS-S07 2/11/14 (8 ft) OverEx	NRS-S08 2/11/14 (11 ft) OverEx SAT	NRS-S21 2/12/14 (8 ft) OverEx SAT	NRS-S22 2/12/14 (11 ft) OverEx SAT
Total Petroleum Hydrocarbons (TPH)																							
Gasoline Range Hydrocarbons in mg/kg	100	100	2 U	2 U	2 U	2 U	2 U	2 U	2 U	2 U	2.7	2 U	2 U	2 U	2 U	2 U	6.3	3.9	2 U	**240**	2 U	2 U	2 U
Diesel Range Hydrocarbons in mg/kg	2,000	2,000	50 U	50 U	50 U	50 U	50 U	50 U	50 U	50 U	50 U	50 U	50 U	50 U	50 U	50 U		50 U	50 U	58 x	50 U	50 U	50 U
Oil Range Hydrocarbons in mg/kg	2,000	2,000	250 U	250 U	250 U	250 U	250 U	250 U	250 U	250 U	250 U	250 U	250 U	250 U	250 U	250 U		250 U	250 U	320	250 U	250 U	250 U
Bunker C in mg/kg	2,000	2,000															2,000						
Total TPHs in mg/kg	2,000	2,000	ND	ND	ND	ND	ND	ND	ND	ND	ND	ND	ND	ND	ND	ND	2,000	ND	ND	378	ND	ND	ND
Metals																							
Arsenic in mg/kg	20	20			3.92	2.79											11	4.04	4.78				6.26
Cadmium in mg/kg	3,500	3,500			1 U	1 U											1 U	1 U	1 U				1 U
Copper in mg/kg	36	36			7	6.32											21.6	9.36	14.7				27
Lead in mg/kg	81	1,000			2.45	1.86											23.7	1.93	2.57				8.07
Mercury in mg/kg	0.1	0.1			0.1 U	0.1 U											0.1 U	0.1 U	0.1 U				0.1 U
Nickel in mg/kg	48	48			11.2	10.7											16	11	13.9				21.2
Zinc in mg/kg	85	100			13.6	11.9											82.3	15.4 J	25.4				36.7
Polycyclic Aromatic Hydrocarbons (PAHs)																							
Acenaphthene in mg/kg	210,000	210,000	0.01 U	0.01 U	0.01 U	0.01 U	0.01 U	0.01 U	0.01 U	0.01 U	0.01 U	0.01 U	0.01 U	0.01 U	0.01 U	0.01 U	0.49	0.013	0.01 U	0.01 U	0.01 U	0.072	0.01 U
Acenaphthylene in mg/kg			0.01 U	0.01 U	0.01 U	0.01 U	0.01 U	0.01 U	0.01 U	0.01 U	0.01 U	0.01 U	0.01 U	0.01 U	0.01 U	0.01 U	0.01 U	0.01 U	0.01 U	0.01 U	0.01 U	0.01 U	0.01 U
Anthracene in mg/kg	1,100,000	1,100,000	0.01 U	0.01 U	0.01 U	0.01 U	0.01 U	0.01 U	0.01 U	0.01 U	0.01 U	0.01 U	0.01 U	0.01 U	0.01 U	0.01 U	0.26	0.01 U	0.01 U	0.01 U	0.01 U	0.018	0.01 U
Benzo(g,h,i)perylene in mg/kg			0.01 U	0.01 U	0.01 U	0.01 U	0.01 U	0.01 U	0.01 U	0.01 U	0.01 U	0.01 U	0.01 U	0.01 U	0.01 U	0.01 U	0.056	0.01 U	0.01 U	0.01 U	0.01 U	0.01 U	0.01 U
Fluoranthene in mg/kg	140,000	140,000	0.01 U	0.01 U	0.01 U	0.01 U	0.016	0.019	0.055	0.01 U	0.014	0.01 U	0.018	0.01 U	0.01 U	0.01 U	0.28	0.032	0.01 U	0.01 U	0.01 U	0.12	0.036
Fluorene in mg/kg	140,000	140,000	0.01 U	0.01 U	0.01 U	0.01 U	0.01 U	0.01 U	0.01 U	0.01 U	0.01 U	0.01 U	0.01 U	0.01 U	0.01 U	0.01 U	0.45	0.01 U	0.01 U	0.01 U	0.01 U	0.048	0.01 U
Phenanthrene in mg/kg			0.01 U	0.01 U	0.01 U	0.01 U	0.01	0.018	0.041	0.01 U	0.016	0.01 U	0.01 U	0.01 U	0.01 U	0.01 U	0.87	0.01 U	0.01 U	0.01 U	0.01 U	0.16	0.023
Pyrene in mg/kg	110,000	110,000	0.01 U	0.01 U	0.01 U	0.01 U	0.017	0.018	0.06	0.01 U	0.014	0.01 U	0.02	0.01 U	0.01 U	0.01 U	0.45	0.029	0.01 U	0.01 U	0.01 U	0.091	0.035
Naphthalene in mg/kg	70,000	70,000	0.01 U	0.01 U	0.01 U	0.01 U	0.011	0.01 U	0.076	0.01 U	0.026	0.01 U	0.01 U	0.019	0.01 U	0.01 U	0.01 U	0.023	0.01 U	0.01 U	0.01 U	0.15	0.015
Benz(a)anthracene in mg/kg			0.01 U	0.01 U	0.01 U	0.01 U	0.01 U	0.01 U	0.011	0.01 U	0.01 U	0.01 U	0.01 U	0.01 U	0.01 U	0.01 U	0.16	0.011	0.01 U	0.01 U	0.01 U	0.01	0.011
Benzo(a)pyrene in mg/kg			0.01 U	0.01 U	0.01 U	0.01 U	0.01 U	0.01 U	0.01	0.01 U	0.01 U	0.01 U	0.01 U	0.01 U	0.01 U	0.01 U	0.098	0.01 U	0.01 U	0.01 U	0.01 U	0.01 U	0.01 U
Benzo(b)fluoranthene in mg/kg			0.01 U	0.01 U	0.01 U	0.01 U	0.01 U	0.01 U	0.013	0.01 U	0.01 U	0.01 U	0.01 U	0.01 U	0.01 U	0.01 U	0.081	0.01 U	0.01 U	0.01 U	0.01 U	0.011	0.013
Benzo(k)fluoranthene in mg/kg			0.01 U	0.01 U	0.01 U	0.01 U	0.01 U	0.01 U	0.01 U	0.01 U	0.01 U	0.01 U	0.01 U	0.01 U	0.01 U	0.01 U	0.025	0.01 U	0.01 U	0.01 U	0.01 U	0.01 U	0.01 U
Chrysene in mg/kg			0.01 U	0.01 U	0.01 U	0.01 U	0.01 U	0.01 U	0.014	0.01 U	0.01 U	0.01 U	0.01 U	0.01 U	0.01 U	0.01 U	0.27	0.012	0.01 U	0.01 U	0.01 U	0.01 U	0.015
Dibenzo(a,h)anthracene in mg/kg			0.01 U	0.01 U	0.01 U	0.01 U	0.01 U	0.01 U	0.01 U	0.01 U	0.01 U	0.01 U	0.01 U	0.01 U	0.01 U	0.01 U	0.017	0.01 U	0.01 U	0.01 U	0.01 U	0.01 U	0.01 U
Indeno(1,2,3-cd)pyrene in mg/kg			0.01 U	0.01 U	0.01 U	0.01 U	0.01 U	0.01 U	0.01 U	0.01 U	0.01 U	0.01 U	0.01 U	0.01 U	0.01 U	0.01 U	0.036	0.01 U	0.01 U	0.01 U	0.01 U	0.01 U	0.01 U
Total cPAHs TEQ in mg/kg	0.4	7.9	ND	ND	ND	ND	ND	ND	0.014	ND	ND	ND	ND	ND	ND	ND	0.133	0.00822	ND	ND	ND	0.00865	0.00905
Volatile Organic Compounds (VOC)																							
1,1,1,2-Tetrachloroethane in mg/kg	5,000	5,000	0.05 U	0.05 U	0.05 U	0.05 U	0.05 U	0.05 U	0.05 U	0.05 U	0.05 U	0.05 U	0.05 U	0.05 U	0.05 U	0.05 U				0.05 U	0.05 U	0.05 U	0.05 U
1,1,1-Trichloroethane in mg/kg	7,000,000	7,000,000	0.05 U	0.05 U	0.05 U	0.05 U	0.05 U	0.05 U	0.05 U	0.05 U	0.05 U	0.05 U	0.05 U	0.05 U	0.05 U	0.05 U				0.05 U	0.05 U	0.05 U	0.05 U
1,1,2,2-Tetrachloroethane in mg/kg	660	660	0.05 U	0.05 U	0.05 U	0.05 U	0.05 U	0.05 U	0.05 U	0.05 U	0.05 U	0.05 U	0.05 U	0.05 U	0.05 U	0.05 U				0.05 U	0.05 U	0.05 U	0.05 U
1,1,2-Trichloroethane in mg/kg	2,300	2,300	0.05 U	0.05 U	0.05 U	0.05 U	0.05 U	0.05 U	0.05 U	0.05 U	0.05 U	0.05 U	0.05 U	0.05 U	0.05 U	0.05 U				0.05 U	0.05 U	0.05 U	0.05 U
1,1-Dichloroethane in mg/kg	23,000	23,000	0.05 U	0.05 U	0.05 U	0.05 U	0.05 U	0.05 U	0.05 U	0.05 U	0.05 U	0.05 U	0.05 U	0.05 U	0.05 U	0.05 U				0.05 U	0.05 U	0.05 U	0.05 U
1,1-Dichloroethene in mg/kg	180,000	180,000	0.05 U	0.05 U	0.05 U	0.05 U	0.05 U	0.05 U	0.05 U	0.05 U	0.05 U	0.05 U	0.05 U	0.05 U	0.05 U	0.05 U				0.05 U	0.05 U	0.05 U	0.05 U
1,1-Dichloropropene in mg/kg			0.05 U	0.05 U	0.05 U	0.05 U	0.05 U	0.05 U	0.05 U	0.05 U	0.05 U	0.05 U	0.05 U	0.05 U	0.05 U	0.05 U				0.05 U	0.05 U	0.05 U	0.05 U
1,2,3-Trichlorobenzene in mg/kg			0.25 U	0.25 U	0.25 U	0.25 U	0.25 U	0.25 U	0.25 U	0.25 U	0.25 U	0.25 U	0.25 U	0.25 U	0.25 U	0.25 U				0.25 U	0.25 U	0.25 U	0.25 U
1,2,3-Trichloropropane in mg/kg	4.4	4.4	0.05 U	0.05 U	0.05 U	0.05 U	0.05 U	0.05 U	0.05 U	0.05 U	0.05 U	0.05 U	0.05 U	0.05 U	0.05 U	0.05 U				0.05 U	0.05 U	0.05 U	0.05 U
1,2,4-Trichlorobenzene in mg/kg	4,500	4,500	0.25 U	0.25 U	0.25 U	0.25 U	0.25 U	0.25 U	0.25 U	0.25 U	0.25 U	0.25 U	0.25 U	0.25 U	0.25 U	0.25 U				0.25 U	0.25 U	0.25 U	0.25 U
1,2,4-Trimethylbenzene in mg/kg			0.05 U	0.05 U	0.05 U	0.05 U	0.05 U	0.05 U	0.05 U	0.05 U	0.05 U	0.05 U	0.05 U	0.05 U	0.05 U	0.05 U				0.05 U	0.05 U	0.05 U	0.05 U
1,2-Dibromo-3-chloropropane in mg/kg	160	160	0.5 U	0.5 U	0.5 U	0.5 U	0.5 U	0.5 U	0.5 U	0.5 U	0.5 U	0.5 U	0.5 U	0.5 U	0.5 U	0.5 U				0.5 U	0.5 U	0.5 U	0.5 U
1,2-Dibromoethane (EDB) in mg/kg	66	66	0.05 U	0.05 U	0.05 U	0.05 U	0.05 U	0.05 U	0.05 U	0.05 U	0.05 U	0.05 U	0.05 U	0.05 U	0.05 U	0.05 U				0.05 U	0.05 U	0.05 U	0.05 U
1,2-Dichlorobenzene in mg/kg	320,000	320,000	0.05 U	0.05 U	0.05 U	0.05 U	0.05 U	0.05 U	0.05 U	0.05 U	0.05 U	0.05 U	0.05 U	0.05 U	0.05 U	0.05 U				0.05 U	0.05 U	0.05 U	0.05 U
1,2-Dichloroethane (EDC) in mg/kg	1,400	1,400	0.05 U	0.05 U	0.05 U	0.05 U	0.05 U	0.05 U	0.05 U	0.05 U	0.05 U	0.05 U	0.05 U	0.05 U	0.05 U	0.05 U				0.05 U	0.05 U	0.05 U	0.05 U
1,2-Dichloropropane in mg/kg	3,600	3,600	0.05 U	0.05 U	0.05 U	0.05 U	0.05 U	0.05 U	0.05 U	0.05 U	0.05 U	0.05 U	0.05 U	0.05 U	0.05 U	0.05 U				0.05 U	0.05 U	0.05 U	0.05 U
1,3,5-Trimethylbenzene in mg/kg	35,000	35,000	0.05 U	0.05 U	0.05 U	0.05 U	0.05 U	0.05 U	0.05 U	0.05 U	0.05 U	0.05 U	0.05 U	0.05 U	0.05 U	0.05 U				0.05 U	0.05 U	0.05 U	0.05 U
1,3-Dichlorobenzene in mg/kg			0.05 U	0.05 U	0.05 U	0.05 U	0.05 U	0.05 U	0.05 U	0.05 U	0.05 U	0.05 U	0.05 U	0.05 U	0.05 U	0.05 U				0.05 U	0.05 U	0.05 U	0.05 U
1,3-Dichloropropane in mg/kg			0.05 U	0.05 U	0.05 U	0.05 U	0.05 U	0.05 U	0.05 U	0.05 U	0.05 U	0.05 U	0.05 U	0.05 U	0.05 U	0.05 U				0.05 U	0.05 U	0.05 U	0.05 U
1,4-Dichlorobenzene in mg/kg	24,000	24,000	0.05 U	0.05 U	0.05 U	0.05 U	0.05 U	0.05 U	0.05 U	0.05 U	0.05 U	0.05 U	0.05 U	0.05 U	0.05 U	0.05 U				0.05 U	0.05 U	0.05 U	0.05 U
2,2-Dichloropropane in mg/kg			0.05 U	0.05 U	0.05 U	0.05 U	0.05 U	0.05 U	0.05 U	0.05 U	0.05 U	0.05 U	0.05 U	0.05 U	0.05 U	0.05 U				0.05 U	0.05 U	0.05 U	0.05 U
2-Butanone in mg/kg	2,100,000	2,100,000	0.5 U	0.5 U	0.5 U	0.5 U	0.5 U	0.5 U	0.5 U	0.5 U	0.5 U	0.5 U	0.5 U	0.5 U	0.5 U	0.5 U				0.5 U	0.5 U	0.5 U	0.5 U
2-Chlorotoluene in mg/kg	70,000	70,000	0.05 U	0.05 U	0.05 U	0.05 U	0.05 U	0.05 U	0.05 U	0.05 U	0.05 U	0.05 U	0.05 U	0.05 U	0.05 U	0.05 U				0.05 U	0.05 U	0.05 U	0.05 U
2-Hexanone in mg/kg			0.5 U	0.5 U	0.5 U	0.5 U	0.5 U	0.5 U	0.5 U	0.5 U	0.5 U	0.5 U	0.5 U	0.5 U	0.5 U	0.5 U				0.5 U	0.5 U	0.5 U	0.5 U
4-Chlorotoluene in mg/kg			0.05 U	0.05 U	0.05 U	0.05 U	0.05 U	0.05 U	0.05 U	0.05 U	0.05 U	0.05 U	0.05 U	0.05 U	0.05 U	0.05 U				0.05 U	0.05 U	0.05 U	0.05 U
4-Methyl-2-pentanone in mg/kg	280,000	280,000	0.5 U	0.5 U	0.5 U	0.5 U	0.5 U	0.5 U	0.5 U	0.5 U	0.5 U	0.5 U	0.5 U	0.5 U	0.5 U	0.5 U				0.5 U	0.5 U	0.5 U	0.5 U
Acetone in mg/kg	3,200,000	3,200,000	0.5 U	0.5 U	0.5 U	0.5 U	0.5 U	0.5 U	0.5 U	0.5 U	0.5 U	0.5 U	0.5 U	0.5 U	0.5 U	0.5 U				0.5 U	0.5 U	0.5 U	0.5 U

Table 13 - Excavation Verification Soil Quality Data for Naval Reserve Parcel South Interim Action Area

K-C Worldwide Site Upland Area 110207

			Sidewall Samples in Place														Overexcavated Samples						
Chemical Name	Interim Action Cleanup Level - Saturated Soil	Interim Action Cleanup Level - Unsaturated Soil	NRS-S15 2/12/14 (8 ft) SAT	NRS-S16 2/12/14 (11 ft) SAT	NRS-S17 2/12/14 (8 ft) SAT	NRS-S17 FD 2/12/14 (8 ft) SAT	NRS-S18 2/12/14 (11 ft) SAT	NRS-S19 2/12/14 (8 ft) SAT	NRS-S20 2/12/14 (11 ft) SAT	NRS-S23 2/12/14 (8 ft) SAT	NRS-S24 2/12/14 (11 ft) SAT	NRS-S25 2/12/14 (8 ft) SAT	NRS-S26 2/12/14 (11 ft) SAT	NRS-S27 2/18/14 (8 ft) SAT	NRS-S28 2/18/14 (8 ft) SAT	NRS-S29 2/19/14 (8 ft)	NRA1-PC1 1/6/14 (12 ft) OverEx	NRA1-PC2 1/6/14 (8 ft) OverEx	NRA1-PC3 1/6/14 (8 ft) OverEx	NRS-S07 2/11/14 (8 ft) OverEx	NRS-S08 2/11/14 (11 ft) OverEx SAT	NRS-S21 2/12/14 (8 ft) OverEx SAT	NRS-S22 2/12/14 (11 ft) OverEx SAT
Benzene in mg/kg	2,400	2,400	0.03 U	0.03 U	0.03 U	0.03 U	0.03 U	0.03 U	0.03 U	0.03 U	0.03 U	0.03 U	0.03 U	0.03 U	0.03 U	0.03 U	0.02 U	0.02 U	0.02 U	0.03 U	0.03 U	0.03 U	0.03 U
Bromobenzene in mg/kg			0.05 U	0.05 U	0.05 U	0.05 U	0.05 U	0.05 U	0.05 U	0.05 U	0.05 U	0.05 U	0.05 U	0.05 U	0.05 U	0.05 U				0.05 U	0.05 U	0.05 U	0.05 U
Bromodichloromethane in mg/kg	2,100	2,100	0.05 U	0.05 U	0.05 U	0.05 U	0.05 U	0.05 U	0.05 U	0.05 U	0.05 U	0.05 U	0.05 U	0.05 U	0.05 U	0.05 U				0.05 U	0.05 U	0.05 U	0.05 U
Bromoform in mg/kg	17,000	17,000	0.05 U	0.05 U	0.05 U	0.05 U	0.05 U	0.05 U	0.05 U	0.05 U	0.05 U	0.05 U	0.05 U	0.05 U	0.05 U	0.05 U				0.05 U	0.05 U	0.05 U	0.05 U
Bromomethane in mg/kg	4,900	4,900	0.5 U	0.5 U	0.5 U	0.5 U	0.5 U	0.5 U	0.5 U	0.5 U	0.5 U	0.5 U	0.5 U	0.5 U	0.5 U	0.5 U				0.5 U	0.5 U	0.5 U	0.5 U
Carbon tetrachloride in mg/kg	1,900	1,900	0.05 U	0.05 U	0.05 U	0.05 U	0.05 U	0.05 U	0.05 U	0.05 U	0.05 U	0.05 U	0.05 U	0.05 U	0.05 U	0.05 U				0.05 U	0.05 U	0.05 U	0.05 U
Chlorobenzene in mg/kg	70,000	70,000	0.05 U	0.05 U	0.05 U	0.05 U	0.05 U	0.05 U	0.05 U	0.05 U	0.05 U	0.05 U	0.05 U	0.05 U	0.05 U	0.05 U				0.05 U	0.05 U	0.05 U	0.05 U
Chloroethane in mg/kg			0.5 U	0.5 U	0.5 U	0.5 U	0.5 U	0.5 U	0.5 U	0.5 U	0.5 U	0.5 U	0.5 U	0.5 U	0.5 U	0.5 U				0.5 U	0.5 U	0.5 U	0.5 U
Chloroform in mg/kg	4,200	4,200	0.05 U	0.05 U	0.05 U	0.05 U	0.05 U	0.05 U	0.05 U	0.05 U	0.05 U	0.05 U	0.05 U	0.05 U	0.05 U	0.05 U				0.05 U	0.05 U	0.05 U	0.05 U
Chloromethane in mg/kg			0.5 U	0.5 U	0.5 U	0.5 U	0.5 U	0.5 U	0.5 U	0.5 U	0.5 U	0.5 U	0.5 U	0.5 U	0.5 U	0.5 U				0.5 U	0.5 U	0.5 U	0.5 U
cis-1,2-Dichloroethene (DCE) in mg/kg	7,000	7,000	0.05 U	0.05 U	0.05 U	0.05 U	0.05 U	0.05 U	0.05 U	0.05 U	0.05 U	0.05 U	0.05 U	0.05 U	0.05 U	0.05 U				0.05 U	0.05 U	0.05 U	0.05 U
cis-1,3-Dichloropropene in mg/kg			0.05 U	0.05 U	0.05 U	0.05 U	0.05 U	0.05 U	0.05 U	0.05 U	0.05 U	0.05 U	0.05 U	0.05 UJ	0.05 UJ	0.05 UJ				0.05 U	0.05 U	0.05 U	0.05 U
Dibromochloromethane in mg/kg	1,600	1,600	0.05 U	0.05 U	0.05 U	0.05 U	0.05 U	0.05 U	0.05 U	0.05 U	0.05 U	0.05 U	0.05 U	0.05 UJ	0.05 UJ	0.05 UJ				0.05 U	0.05 U	0.05 U	0.05 U
Dibromomethane in mg/kg	35,000	35,000	0.05 U	0.05 U	0.05 U	0.05 U	0.05 U	0.05 U	0.05 U	0.05 U	0.05 U	0.05 U	0.05 U	0.05 U	0.05 U	0.05 U				0.05 U	0.05 U	0.05 U	0.05 U
Dichlorodifluoromethane in mg/kg	700,000	700,000	0.5 U	0.5 U	0.5 U	0.5 U	0.5 U	0.5 U	0.5 U	0.5 U	0.5 U	0.5 U	0.5 U	0.5 U	0.5 U	0.5 U				0.5 U	0.5 U	0.5 U	0.5 U
Ethylbenzene in mg/kg	350,000	350,000	0.05 U	0.05 U	0.05 U	0.05 U	0.05 U	0.05 U	0.05 U	0.05 U	0.05 U	0.05 U	0.05 U	0.05 U	0.05 U	0.05 U	0.02 U	0.02 U	0.02 U	0.05 U	0.05 U	0.05 U	0.05 U
Hexachlorobutadiene in mg/kg	1,700	1,700	0.25 U	0.25 U	0.25 U	0.25 U	0.25 U	0.25 U	0.25 U	0.25 U	0.25 U	0.25 U	0.25 U	0.25 U	0.25 U	0.25 U				0.25 U	0.25 U	0.25 U	0.25 U
Isopropylbenzene in mg/kg	350,000	350,000	0.05 U	0.05 U	0.05 U	0.05 U	0.05 U	0.05 U	0.05 U	0.05 U	0.05 U	0.05 U	0.05 U	0.05 U	0.05 U	0.05 U				0.05 U	0.05 U	0.05 U	0.05 U
Methyl tert-butyl ether (MTBE) in mg/kg	73,000	73,000	0.05 U	0.05 U	0.05 U	0.05 U	0.05 U	0.05 U	0.05 U	0.05 U	0.05 U	0.05 U	0.05 U	0.05 U	0.05 U	0.05 U				0.05 U	0.05 U	0.05 U	0.05 U
Methylene chloride in mg/kg	21,000	21,000	0.5 U	0.5 U	0.5 U	0.5 U	0.5 U	0.5 U	0.5 U	0.5 U	0.5 U	0.5 U	0.5 U	0.5 U	0.5 U	0.5 U				0.5 U	0.5 U	0.5 U	0.5 U
n-Propylbenzene in mg/kg	350,000	350,000	0.05 U	0.05 U	0.05 U	0.05 U	0.05 U	0.05 U	0.05 U	0.05 U	0.05 U	0.05 U	0.05 U	0.05 U	0.05 U	0.05 U				0.05 U	0.05 U	0.05 U	0.05 U
p-Isopropyltoluene in mg/kg			0.05 U	0.05 U	0.05 U	0.05 U	0.05 U	0.05 U	0.05 U	0.05 U	0.05 U	0.05 U	0.05 U	0.05 U	0.05 U	0.05 U				0.05 U	0.05 U	0.05 U	0.05 U
sec-Butylbenzene in mg/kg	350,000	350,000	0.05 U	0.05 U	0.05 U	0.05 U	0.05 U	0.05 U	0.05 U	0.05 U	0.05 U	0.05 U	0.05 U	0.05 U	0.05 U	0.05 U				0.077	0.05 U	0.05 U	0.05 U
Styrene in mg/kg	700,000	700,000	0.05 U	0.05 U	0.05 U	0.05 U	0.05 U	0.05 U	0.05 U	0.05 U	0.05 U	0.05 U	0.05 U	0.05 U	0.05 U	0.05 U				0.05 U	0.05 U	0.05 U	0.05 U
tert-Butylbenzene in mg/kg	350,000	350,000	0.05 U	0.05 U	0.05 U	0.05 U	0.05 U	0.05 U	0.05 U	0.05 U	0.05 U	0.05 U	0.05 U	0.05 U	0.05 U	0.05 U				0.058	0.05 U	0.05 U	0.05 U
Tetrachloroethene (PCE) in mg/kg	21,000	21,000	0.025 U	0.025 U	0.025 U	0.025 U	0.025 U	0.025 U	0.025 U	0.025 U	0.025 U	0.025 U	0.025 U	0.025 U	0.025 U	0.025 U				0.025 U	0.025 U	0.025 U	0.025 U
Toluene in mg/kg	280,000	280,000	0.05 U	0.05 U	0.05 U	0.05 U	0.05 U	0.05 U	0.05 U	0.05 U	0.05 U	0.05 U	0.05 U	0.05 U	0.05 U	0.05 U	0.02 U	0.02 U	0.02 U	0.05 U	0.05 U	0.05 U	0.05 U
trans-1,2-Dichloroethene in mg/kg	70,000	70,000	0.05 U	0.05 U	0.05 U	0.05 U	0.05 U	0.05 U	0.05 U	0.05 U	0.05 U	0.05 U	0.05 U	0.05 U	0.05 U	0.05 U				0.05 U	0.05 U	0.05 U	0.05 U
trans-1,3-Dichloropropene in mg/kg			0.05 U	0.05 U	0.05 U	0.05 U	0.05 U	0.05 U	0.05 U	0.05 U	0.05 U	0.05 U	0.05 U	0.05 UJ	0.05 UJ	0.05 UJ				0.05 U	0.05 U	0.05 U	0.05 U
Trichloroethene (TCE) in mg/kg	1,800	1,800	0.03 U	0.03 U	0.03 U	0.03 U	0.03 U	0.03 U	0.03 U	0.03 U	0.03 U	0.03 U	0.03 U	0.03 U	0.03 U	0.03 U				0.03 U	0.03 U	0.03 U	0.03 U
Trichlorofluoromethane in mg/kg	1,100,000	1,100,000	0.5 U	0.5 U	0.5 U	0.5 U	0.5 U	0.5 U	0.5 U	0.5 U	0.5 U	0.5 U	0.5 U	0.5 U	0.5 U	0.5 U				0.5 U	0.5 U	0.5 U	0.5 U
Vinyl chloride in mg/kg	88	88	0.05 U	0.05 U	0.05 U	0.05 U	0.05 U	0.05 U	0.05 U	0.05 U	0.05 U	0.05 U	0.05 U	0.05 U	0.05 U	0.05 U				0.05 U	0.05 U	0.05 U	0.05 U
m,p-Xylenes in mg/kg	49	2.5	0.1 U	0.1 U	0.1 U	0.1 U	0.1 U	0.1 U	0.1 U	0.1 U	0.1 U	0.1 U	0.1 U	0.1 U	0.1 U	0.1 U				0.1 U	0.1 U	0.1 U	0.1 U
o-Xylene in mg/kg	80	4.1	0.05 U	0.05 U	0.05 U	0.05 U	0.05 U	0.05 U	0.05 U	0.05 U	0.05 U	0.05 U	0.05 U	0.05 U	0.05 U	0.05 U				0.05 U	0.05 U	0.05 U	0.05 U
Naphthalene in mg/kg	70,000	70,000	0.05 U	0.05 U	0.05 U	0.05 U	0.05 U	0.05 U	0.05 U	0.05 U	0.05 U	0.05 U	0.05 U	0.05 U	0.05 U	0.05 U				0.05 U	0.05 U	0.05 U	0.05 U
Polychlorinated Biphenyls (PCBs)																							
Aroclor 1016 in mg/kg																	0.02 U	0.02 U	0.02 U				
Aroclor 1221 in mg/kg																	0.02 U	0.02 U	0.02 U				
Aroclor 1232 in mg/kg																	0.02 U	0.02 U	0.02 U				
Aroclor 1242 in mg/kg																	0.02 U	0.02 U	0.02 U				
Aroclor 1248 in mg/kg																	0.02 U	0.02 U	0.02 U				
Aroclor 1254 in mg/kg																	0.02 U	0.02 U	0.02 U				
Aroclor 1260 in mg/kg																	0.02 U	0.02 U	0.02 U				
Total PCBs (Sum of Aroclors) in mg/kg	10	10															ND	ND	ND				

Notes

Concentrations in shaded cells indicate value exceeds Interim Action Cleanup Level - Saturated Soil.
Concentrations in bold text indicate value exceeds Interim Action Cleanup Level - Unsaturated Soil.
SAT - Sample of saturated soil; samples without this designation are unsaturated soil.
J = Analyte was positively identified. The reported result is an estimate.
U = Analyte was not detected at or above the reported result.
UJ = Analyte was not detected at or above the reported estimate.
x = The sample chromatographic pattern does not resemble the fuel standard used for quantitation.

Table 14 - Excavation Verification Soil Quality Data for Rail Car Dumper Interim Action Area

K-C Worldwide Site Upland Area 110207

			Bottom Samples in Place			Sidewall Samples in Place							Overexcavated Samples				
Chemical Name	Interim Action Cleanup Level - Saturated Soil	Interim Action Cleanup Level - Unsaturated Soil	RCD-B01 9/30/13 (3 ft)	RCD-B02A 10/4/13 (6 ft)	RCD-B03 9/30/13 (2 ft)	RCD-S01 9/30/13 (1.5 ft)	RCD-S02 9/30/13 (2 ft)	RCD-S02 9/30/13 (4 ft)	RCD-S03 9/30/13 (1 ft)	RCD-S03 FD 9/30/13 (1 ft)	RCD-S07 10/4/13 (1.5 ft)	RCD-S09 10/11/13 (2 ft)	RCD-B02 9/30/13 (4 ft) OverEx	RCD-S04 9/30/13 (1.5 ft) OverEx	RCD-S05 9/30/13 (2 ft) OverEx	RCD-S08 10/4/13 (2 ft) OverEx	RCD-SLAG-1 10/8/13 OverEx
Total Petroleum Hydrocarbons (TPH)																	
Diesel Range Hydrocarbons in mg/kg	2,000	2,000	50 U	50 U	50 U	50 U	50 U	50 U	50 U	50 U	50 U	50 U	50 U	50 U	50 U	50 U	
Oil Range Hydrocarbons in mg/kg	2,000	2,000	250 U	250 U	1,700	250 U	250 U	250 U	250 U	1,400	250 U	250 U	**7,500**	420	250 U	250 U	
Total TPHs in mg/kg	2,000	2,000	ND	ND	1,720	ND	ND	ND	ND	1,420	ND	ND	**7,520**	445	ND	ND	
Metals																	
Arsenic in mg/kg	20	20	1.55	1.68	2.26	4.32	1.83	2.33	2.25	2.94	3.62	1.65	1.9	8.29	**24.4**	4.58	10.3
Barium in mg/kg	700,000	700,000															391
Cadmium in mg/kg	3,500	3,500	1 U	1 U	1 U	1 U	1 U	1 U	1 U	1 U	1 U	1 U	1 U	1 U	1 U	1 U	1 U
Chromium (Total) in mg/kg	5,300,000	5,300,000															24.4
Copper in mg/kg	36	36	10.7	11.5	11.6	16	10.8	9.89	12.7	16.1	23.7	8.27 J	10.1	27.5	**60**	**103**	**116**
Lead in mg/kg	81	1,000	1.86	1.98	4.25	43	6.47	9.22	10.2	14.1	16.2	1.62 J	2.62	19.2	54.3	47.4	485
Mercury in mg/kg	0.1	0.1	0.1 U	0.1 U	0.1 U	0.1 U	0.1 U	0.1 U	0.1 U	0.1 U	0.1 U	0.1 U	0.1 U	**6**	**0.12**	**2.2**	0.1 U
Mercury in mg/L	0.1	0.1															0.1 U
Nickel in mg/kg	48	48	20.7	35.7	20.4	16.9	19.2	16.9	17.1	20.3	25.9	15.2	22.6	20.4	34.7	**50.5**	35.4
Selenium in mg/kg	18,000	18,000															1 U
Silver in mg/kg	18,000	18,000															1 U
Zinc in mg/kg	85	100	11.4	22.8	18.7	34.9	15.2	16.1	24.1	34.2	44.4	8.75	17.3	**157**	**118**	**144**	**118**
SPLP Metals																	
Barium in mg/L																	0.00915
Copper in mg/L																	0.005 U
Lead in mg/L																	0.005 U
Zinc in mg/L																	0.005 U
TCLP Metals																	
Arsenic in mg/L																	1 U
Barium in mg/L																	1 U
Cadmium in mg/L																	1 U
Chromium (Total) in mg/L																	1 U
Lead in mg/L																	1 U
Selenium in mg/L																	1 U
Silver in mg/L																	1 U
Polycyclic Aromatic Hydrocarbons (PAHs)																	
Acenaphthene in mg/kg	210,000	210,000	0.01 U	0.01 U	0.01 U	0.01 U	0.01 U	0.01 U	0.01 U	0.01 U	0.01 U	0.01 U	0.01 U	0.011	0.01 U	0.01 U	
Acenaphthylene in mg/kg			0.01 U	0.01 U	0.01 U	0.01 U	0.01 U	0.01 U	0.01 U	0.01 U	0.01 U	0.01 U	0.01 U	0.01 U	0.01 U	0.01 U	
Anthracene in mg/kg	1,100,000	1,100,000	0.01 U	0.01 U	0.01 U	0.022	0.01 U	0.01 U	0.01 U	0.011	0.01 U	0.01 U	0.01 U	0.012	0.01 U	0.01 U	
Benzo(g,h,i)perylene in mg/kg			0.01 U	0.01 U	0.01 U	0.025	0.01 U	0.01 U	0.01 U	0.012	0.01 U	0.01 U	0.01 U	0.017	0.02	0.01 U	
Fluoranthene in mg/kg	140,000	140,000	0.01 U	0.01 U	0.012	0.039 J	0.01 U	0.01 U	0.01 U	0.032	0.01 U	0.01 U	0.01 U	0.067	0.023	0.01 U	
Fluorene in mg/kg	140,000	140,000	0.01 U	0.01 U	0.01 U	0.01 U	0.01 U	0.01 U	0.01 U	0.01 U	0.01 U	0.01 U	0.01 U	0.01 U	0.01 U	0.01 U	
Phenanthrene in mg/kg			0.01 U	0.01 U	0.015	0.012	0.01 U	0.01 U	0.01 U	0.018	0.01 U	0.01 U	0.01 U	0.043	0.01 U	0.01 U	
Pyrene in mg/kg	110,000	110,000	0.01 U	0.01 U	0.018	0.044	0.01 U	0.01 U	0.01 U	0.031	0.01 U	0.01 U	0.01 U	0.057	0.025	0.01 U	
Naphthalene in mg/kg	70,000	70,000	0.01 U	0.01 U	0.01 U	0.01 U	0.01 U	0.01 U	0.01 U	0.01 U	0.01 U	0.01 U	0.01 U	0.01 U	0.01 U	0.01 U	
Benz(a)anthracene in mg/kg			0.01 U	0.01 U	0.01 U	0.022	0.01 U	0.01 U	0.01 U	0.013	0.01 U	0.01 U	0.01 U	0.022	0.013	0.01 U	
Benzo(a)pyrene in mg/kg			0.01 U	0.01 U	0.01 U	0.021	0.01 U	0.01 U	0.01 U	0.012	0.01 U	0.01 U	0.01 U	0.019	0.015	0.01 U	
Benzo(b)fluoranthene in mg/kg			0.01 U	0.01 U	0.014	0.054 J	0.01 U	0.01 U	0.01 U	0.024	0.01 U	0.01 U	0.01 U	0.04	0.025	0.01 U	
Benzo(k)fluoranthene in mg/kg			0.01 U	0.01 U	0.01 U	0.017	0.01 U	0.01 U	0.01 U	0.01 U	0.01 U	0.01 U	0.01 U	0.012	0.01 U	0.01 U	
Chrysene in mg/kg			0.01 U	0.01 U	0.013	0.04	0.01 U	0.01 U	0.01 U	0.02	0.01 U	0.01 U	0.013	0.038	0.017	0.01 U	
Dibenzo(a,h)anthracene in mg/kg			0.01 U	0.01 U	0.01 U	0.01 U	0.01 U	0.01 U	0.01 U	0.01 U	0.01 U	0.01 U	0.01 U	0.01 U	0.01 U	0.01 U	
Indeno(1,2,3-cd)pyrene in mg/kg			0.01 U	0.01 U	0.01 U	0.027	0.01 U	0.01 U	0.01 U	0.012	0.01 U	0.01 U	0.01 U	0.018	0.017	0.01 U	
Total cPAHs TEQ in mg/kg	0.4	7.9	ND	ND	0.00853	0.0339	ND	ND	ND	0.0181	ND	ND	0.00763	0.0291	0.0217	ND	
Polychlorinated Biphenyls (PCBs)																	
Aroclor 1016 in mg/kg			0.1 U	0.02 U	0.1 U	0.1 U	0.1 U	0.1 U	0.1 U	0.1 U	0.02 U	0.019 U	0.1 U	0.1 U	0.1 U	0.02 U	
Aroclor 1221 in mg/kg			0.1 U	0.02 U	0.1 U	0.1 U	0.1 U	0.1 U	0.1 U	0.1 U	0.02 U	0.019 U	0.1 U	0.1 U	0.1 U	0.02 U	
Aroclor 1232 in mg/kg			0.1 U	0.02 U	0.1 U	0.1 U	0.1 U	0.1 U	0.1 U	0.1 U	0.02 U	0.019 U	0.1 U	0.1 U	0.1 U	0.02 U	
Aroclor 1242 in mg/kg			0.1 U	0.02 U	0.1 U	0.1 U	0.1 U	0.1 U	0.1 U	0.1 U	0.02 U	0.019 U	0.1 U	0.1 U	0.1 U	0.02 U	
Aroclor 1248 in mg/kg			0.1 U	0.02 U	0.1 U	0.1 U	0.1 U	0.1 U	0.1 U	0.1 U	0.02 U	0.019 U	0.1 U	0.1 U	0.1 U	0.02 U	
Aroclor 1254 in mg/kg			0.1 U	0.02 U	0.1 U	0.1 U	0.13	0.1 U	0.1 U	0.1 U	0.02 U	0.019 U	0.15	0.1 U	0.1 U	0.02 U	
Aroclor 1260 in mg/kg			0.1 U	0.02 U	0.1 U	0.1 U	0.1 U	0.1 U	0.1 U	0.1 U	0.02 U	0.019 U	0.1 U	0.1 U	0.1 U	0.02 U	
Total PCBs (Sum of Aroclors) in mg/kg	10	10	ND	ND	ND	ND	0.43	ND	ND	ND	ND	ND	0.45	ND	ND	ND	

Notes

Concentrations in shaded cells indicate value exceeds Interim Action Cleanup Level - Saturated Soil.

Concentrations in bold text indicate value exceeds Interim Action Cleanup Level - Unsaturated Soil.

SAT = Sample of saturated soil; samples without this designation are unsaturated soil.

J = Analyte was positively identified. The reported result is an estimate.

U = Analyte was not detected at or above the reported result.

Table 15 - Excavation Verification Soil Quality Data for Proposed Confirmational Monitoring Wells, REC2-MW-5 (near Diesel AST) Interim Action Area

K-C Worldwide Site Upland Area 110207

			Bottom Samples in Place							Sidewall Samples in Place										Overexcavated Samples				
Chemical Name	Interim Action Cleanup Level - Saturated Soil	Interim Action Cleanup Level - Unsaturated Soil	DAST-B01 9/27/13 (3 ft) SAT	DAST-B02 9/27/13 (3 ft) SAT	DAST-B04 9/27/13 (3 ft) SAT	DAST-B05 9/27/13 (3 ft) SAT	DAST-B06 9/27/13 (3 ft) SAT	DAST-B07 9/27/13 (3 ft) SAT	DAST-B10 10/11/13 (4 ft) SAT	DAST-S01 9/27/13 (2 ft)	DAST-S03 9/27/13 (2 ft) SAT	DAST-S04 9/27/13 (2 ft) SAT	DAST-S05 9/27/13 (2 ft)	DAST-S06 9/27/13 (2 ft)	DAST-S07 9/27/13 (2 ft)	DAST-S08 9/27/13 (2 ft)	DAST-S09 9/27/13 (2 ft)	DAST-S10 9/27/13 (2 ft)	DAST-S11 10/11/13 (2 ft)	DAST-B03 9/27/13 (3 ft) OverEx SAT	DAST-B08 9/27/13 (3 ft) OverEx SAT	FD 9/27/13 (3 ft) OverEx SAT	DAST-S02 9/27/13 (2 ft) OverEx SAT	D-AST-TP1 8/30/13 (1 ft) OverEx
Total Petroleum Hydrocarbons (TPH)																								
Diesel Range Hydrocarbons in mg/kg	2,000	2,000	50 U	50 U	50 U	50 U	50 U	50 U	50 U	50 U	50 U	50 U	50 U	50 U	50 U	50 U	50 U	50 U	50 U	50 U	50 U	50 U	50 U	
Oil Range Hydrocarbons in mg/kg	2,000	2,000	250 U	250 U	890	290	250 U	250 U	250 U	250 U	250 U	250 U	250 U	250 U	250 U	250 U	250 U	790	250 U	710	250 U	250 U	250 U	
Bunker C in mg/kg	2,000	2,000																						250 U
Total TPHs in mg/kg	2,000	2,000	ND	ND	915	315	ND	ND	ND	ND	ND	ND	ND	ND	ND	ND	ND	815	ND	735	ND	ND	ND	250 U
Metals																								
Arsenic in mg/kg	20	20	9.25	4.17	3.43	3.07	4.27	6.23	8.39	5.28	3.57	3.51	7.39	7.4	3.53	4.96	7.29	4.92	6.12	14.7	8.49 J	13.7 J	6.3	1.74
Cadmium in mg/kg	3,500	3,500	1 U	1 U	1 U	1 U	1 U	1 U	1 U	1 U	1 U	1 U	1 U	1 U	1 U	1 U	1 U	1 U	1 U	1 U	2.05	2.19	1 U	1 U
Chromium (Total) in mg/kg	5,300,000	5,300,000																						9.95
Copper in mg/kg	36	36	30.9	20.7	**43.3**	31	**41.6**	**56.9**	35.3 J	**39.3**	15.5	**43.7**	**42.8**	32.2	31.4	**47.7**	29.2	**36.1**	28.9 J	**72.6**	**55.7**	**64.4**	**50**	14.7
Lead in mg/kg	81	1,000	8.32	12.1	31.9	39.7	35.5	34	26.9 J	27.9	8.5	14.9	45.9	24	10.3	21	24.1	64.5	84.6 J	94.5	28.1	39.1	61.5	7.35
Mercury in mg/kg	0.1	0.1	0.1 U	0.1 U	0.1 U	**0.14**	**0.17**	0.1 U	0.1 U	0.1 U	0.1 U	0.1 U	**0.31**	0.1 U	0.1 U	0.1 U	0.1 U	0.1 U	**0.25**	**0.17**	0.1	0.1	**0.17**	0.1 U
Nickel in mg/kg	48	48	28.1	23.2	18.1	14.5	18.4	25.1	16.8	22.6	14.1	18.5	19.3	26.1	24.1	43.5	23.8	15.6	5.12	23.2	21.4	21.5	20.7	14.1
Zinc in mg/kg	85	100	43.9 J	**99** J	70.9 J	45.3 J	43.7 J	**525** J	62.7	94.1 J	23.1 J	54.4 J	63.8 J	89.8 J	**104** J	**456** J	46.6 J	78.9 J	19.7	**144** J	91	**110**	74.5 J	26.4
Polycyclic Aromatic Hydrocarbons (PAHs)																								
Acenaphthene in mg/kg	210,000	210,000	0.01 U	0.01 U	0.01 U	0.01 U	0.028	0.01 U	0.01 U	0.011	0.01 U	0.01 U	0.1	0.12	0.089	0.01 U	0.017	0.043	0.071	0.1 U	0.01 UJ	0.026 J	0.03	
Acenaphthylene in mg/kg			0.01 U	0.01 U	0.01 U	0.018	0.022	0.01 U	0.01 U	0.01 U	0.01 U	0.01 U	0.01 U	0.1 U	0.01 U	0.01 U	0.012	0.042	0.026	0.1 U	0.01 U	0.01	0.015	
Anthracene in mg/kg	1,100,000	1,100,000	0.01 U	0.01 U	0.017	0.013	0.026	0.011	0.01 U	0.018	0.01 U	0.01 U	0.19	0.2	0.01 U	0.01 U	0.039	0.11	0.058	0.1 U	0.01 UJ	0.074 J	0.04	
Benzo(g,h,i)perylene in mg/kg			0.01 U	0.01 U	0.18	0.05	0.094	0.059	0.01 U	0.021	0.013	0.01 U	0.1	0.37	0.01	0.019	0.11	0.13	0.21	0.1	0.031 J	0.19 J	0.092	
Fluoranthene in mg/kg	140,000	140,000	0.015	0.01 U	0.039	0.065	0.14	0.025	0.017	0.056	0.012	0.01 U	0.51	0.99	0.016	0.035	0.11	0.34	0.18	0.1 U	0.037 J	0.76 J	0.16	
Fluorene in mg/kg	140,000	140,000	0.01 U	0.01 U	0.01 U	0.01 U	0.014	0.01 U	0.01 U	0.01 U	0.01 U	0.01 U	0.16	0.13	0.02	0.01 U	0.014	0.051	0.058	0.1 U	0.01 UJ	0.024 J	0.026	
Phenanthrene in mg/kg			0.01 U	0.014	0.019	0.037	0.08	0.027	0.016	0.064	0.01 U	0.01 U	0.63	0.9	0.012	0.03	0.12	0.099	0.098	0.1 U	0.019 J	0.32 J	0.13	
Pyrene in mg/kg	110,000	110,000	0.017	0.01 U	0.039	0.072	0.15	0.024	0.018	0.056	0.012	0.01 U	0.41	1.2	0.017	0.03	0.11	0.29	0.16	0.14	0.036 J	0.69 J	0.16	
Naphthalene in mg/kg	70,000	70,000	0.01 U	0.012	0.01 U	0.018	0.028	0.01 U	0.012	0.01 U	0.01 U	0.01 U	0.091	0.11	0.97	0.017	0.01 U	0.024	0.027	0.1 U	0.011	0.017	0.016	
Benz(a)anthracene in mg/kg			0.01 U	0.01 U	0.02	0.034	0.066	0.016	0.01 U	0.023	0.01 U	0.01 U	0.22	0.58	0.012	0.016	0.046	0.098	0.059	0.1 U	0.031 J	0.52 J	0.08	
Benzo(a)pyrene in mg/kg			0.01 U	0.01 U	0.039	0.034	0.063	0.018	0.01 U	0.019	0.01 U	0.01 U	0.16	0.62	0.013	0.018	0.04	0.088	0.053	0.11	0.04 J	0.38 J	0.087	
Benzo(b)fluoranthene in mg/kg			0.01 U	0.01 U	0.096	0.08	0.17	0.046	0.011	0.027	0.016	0.01 U	0.22	0.67	0.018	0.029	0.057	0.22	0.21	0.15	0.089 J	0.63 J	0.13	
Benzo(k)fluoranthene in mg/kg			0.01 U	0.01 U	0.023	0.026	0.044	0.01	0.01 U	0.011	0.01 U	0.01 U	0.098	0.24	0.01 U	0.01 U	0.022	0.21	0.061	0.1 U	0.021 J	0.19 J	0.038	
Chrysene in mg/kg			0.01 U	0.01 U	0.038	0.059	0.12	0.023	0.01 U	0.029	0.01	0.01 U	0.23	0.74	0.013	0.024	0.067	0.17	0.11	0.1 U	0.048 J	0.64 J	0.11	
Dibenzo(a,h)anthracene in mg/kg			0.01 U	0.01 U	0.023	0.012	0.024	0.01	0.01 U	0.01 U	0.01 U	0.01 U	0.029	0.1 U	0.01 U	0.01 U	0.01	0.023	0.045	0.1 U	0.01 UJ	0.073 J	0.021	
Indeno(1,2,3-cd)pyrene in mg/kg			0.01 U	0.01 U	0.12	0.051	0.099	0.049	0.01 U	0.018	0.012	0.01 U	0.12	0.39	0.01	0.018	0.054	0.12	0.18	0.1 U	0.028 J	0.23 J	0.093	
Total cPAHs TEQ in mg/kg	0.4	7.9	ND	ND	0.0676	0.0549	0.105	0.0313	0.00815	0.0277	0.0094	ND	0.231	0.82	0.0181	0.0255	0.0596	0.157	0.11	0.146	0.0579	0.551	0.124	
Polychlorinated Biphenyls (PCBs)																								
Aroclor 1016 in mg/kg			0.1 U	0.1 U	0.1 U	1 U	10 U	0.1 U	0.019 U	1 U	0.02 U	0.1 U	0.1 U	0.1 U	0.1 U	0.1 U	0.1 U	1 U	0.019 U	0.1 U	0.1	0.1	1 U	0.1 U
Aroclor 1221 in mg/kg			0.1 U	0.1 U	0.1 U	1 U	10 U	0.1 U	0.019 U	1 U	0.02 U	0.1 U	0.1 U	0.1 U	0.1 U	0.1 U	0.1 U	1 U	0.019 U	0.1 U	0.1	0.1	1 U	0.1 U
Aroclor 1232 in mg/kg			0.1 U	0.1 U	0.1 U	1 U	10 U	0.1 U	0.019 U	1 U	0.02 U	0.1 U	0.1 U	0.1 U	0.1 U	0.1 U	0.1 U	1 U	0.019 U	0.1 U	0.1	0.1	1 U	0.1 U
Aroclor 1242 in mg/kg			0.1 U	0.1 U	0.1 U	1 U	10 U	0.1 U	0.019 U	1 U	0.02 U	0.1 U	0.1 U	0.1 U	0.1 U	0.1 U	0.1 U	1 U	0.019 U	0.1 U	0.1	0.1	1 U	0.1 U
Aroclor 1248 in mg/kg			0.1 U	0.1 U	0.1 U	1 U	10 U	0.1 U	0.019 U	1 U	0.02 U	0.1 U	0.1 U	0.1 U	0.1 U	0.1 U	0.1 U	1 U	0.019 U	0.1 U	0.1	0.1	1 U	0.1 U
Aroclor 1254 in mg/kg			0.1 U	0.1 U	0.11	1.1	0.97	1.1	0.04	1.2	0.02 U	0.24	0.77	0.1 U	0.1 U	0.1 U	0.11	1.7	0.59	3.9	0.29	0.4	6.3	0.1 U
Aroclor 1260 in mg/kg			0.1 U	0.1 U	0.15	1.5	1.1	0.79	0.074	1.4	0.02 U	0.26	0.78	0.1 U	0.1 U	0.1 U	0.1 U	2	0.6	4.2	0.31	0.34	6.5	0.1 U
Total PCBs (Sum of Aroclors) in mg/kg	10	10	ND	ND	0.51	2.6	2.07	2.14	0.161	5.1	ND	0.75	1.8	ND	ND	ND	0.41	6.2	1.24	8.35	0.85	0.99	**15.3**	ND

Notes

Concentrations in shaded cells indicate value exceeds Interim Action Cleanup Level - Saturated Soil.

Concentrations in bold text indicate value exceeds Interim Action Cleanup Level - Unsaturated Soil.

SAT = Sample of saturated soil; samples without this designation are unsaturated soil.

J = Analyte was positively identified. The reported result is an estimate.

U = Analyte was not detected at or above the reported result.

UJ = Analyte was not detected at or above the reported estimate.

Table 16 - Excavation Verification Soil Quality Data for SHB-MW-1 Interim Action Area

K-C Worldwide Site Upland Area 110207

			Bottom Samples in Place				Sidewall Samples in Place						Overexcavated		Pre-Excavation Characterization Samples		
Chemical Name	Interim Action Cleanup Level - Saturated Soil	Interim Action Cleanup Level - Unsaturated Soil	SHB-B01 3/6/14 (5 ft)	SHB-B01 FD 3/6/14 (5 ft)	SHB-B02 3/6/14 (5 ft)	SHB-B03 3/6/14 (5 ft)	SHB-S01 3/6/14 (3 ft)	SHB-S02 3/6/14 (3 ft)	SHB-S04 3/6/14 (3 ft)	SHB-S05 3/6/14 (3 ft)	SHB-S06 3/6/14 (3 ft)	SHB-S07 3/11/14 (3 ft)	SHB-1N 1/15/14 (2.5-3.5 ft) OverEx	SHB-S03 3/6/14 (3 ft) OverEx	SHB-1E 1/15/14 (2.5-3.5 ft)	SHB-1S 1/15/14 (2.5-3.5 ft)	SHB-1W 1/15/14 (2.5-3.5 ft)
Total Petroleum Hydrocarbons (TPH)																	
Gasoline Range Hydrocarbons in mg/kg	100	100	2 U	2 U	2 U	2 U	2 U	2 U	2 U	2 U	2 U			2 U			
Diesel Range Hydrocarbons in mg/kg	2,000	2,000	50 U	50 U	50 U	50 U	87	50 U	50 U	50 U	50 U	50 U	50 U	50 U	50 U	50 U	50 U
Oil Range Hydrocarbons in mg/kg	2,000	2,000	250 U	250 U	250 U	250 U	250 U	250 U	250 U	250 U	250 U	300	530	**4,300**	250 U	250 U	250 U
Total TPHs in mg/kg	2,000	2,000	ND	ND	ND	ND	212	ND	ND	ND	ND	325	555	**4,320**	ND	ND	ND
Metals																	
Arsenic in mg/kg	20	20	4.37	5.6	12.7	5.33	8.74	2.95	9.13	7.94	6.47			10.2			
Cadmium in mg/kg	3,500	3,500	1 U	1 U	1 U	1 U	1 U	1 U	1 U	1 U	1 U			1 U			
Copper in mg/kg	36	36	12.7	20	10	12.1	16.7	**58.7**	**45.4**	**65.1**	15.4	28	**562**	**50.7**	8.86	21.4	16.9
Lead in mg/kg	81	1,000	3.37 J	5.54 J	9.41	3.7	6.45	45	22.8	25.7	13.6			138			
Mercury in mg/kg	0.1	0.1	0.1 U	0.1 U	0.1 U	0.1 U	0.1 U	**0.12**	0.1 U	0.1 U	0.1 U			**1.5**			
Nickel in mg/kg	48	48	11.6	13.9	11.9	9.76	10.2	19.7	24.8	23.5	18.1			23.5			
Zinc in mg/kg	85	100	77.8	85.6	18.3	30.2	52.8	**186**	90.2	86.7	**229**			92.6			
Polycyclic Aromatic Hydrocarbons (PAHs)																	
Acenaphthene in mg/kg	210,000	210,000	0.01 U	0.01 U	0.01 U	0.01 U	0.01 U	0.01	0.01 U	0.01 U	0.01 U			0.01 U			
Acenaphthylene in mg/kg			0.01 U	0.01 U	0.01 U	0.01 U	0.01 U	0.096	0.01 U	0.01 U	0.01 U			0.011			
Anthracene in mg/kg	1,100,000	1,100,000	0.01 U	0.01 U	0.01 U	0.01 U	0.01 U	0.18	0.01 U	0.015	0.01 U			0.01			
Benzo(g,h,i)perylene in mg/kg			0.014	0.01 U	0.01 U	0.01 U	0.024	0.37	0.055	0.044	0.012			0.039			
Fluoranthene in mg/kg	140,000	140,000	0.034 J	0.011 J	0.01 U	0.01 U	0.01	0.72	0.11	0.15	0.011			0.033			
Fluorene in mg/kg	140,000	140,000	0.01 U	0.01 U	0.01 U	0.01 U	0.01 U	0.07	0.01 U	0.01 U	0.01 U			0.01 U			
Phenanthrene in mg/kg			0.019	0.01 U	0.01 U	0.01 U	0.01 U	0.65	0.049	0.068	0.01 U			0.026			
Pyrene in mg/kg	110,000	110,000	0.04 J	0.011 J	0.01 U	0.01 U	0.01	0.67	0.1	0.12	0.012			0.038			
Naphthalene in mg/kg	70,000	70,000	0.01 U	0.01 U	0.01 U	0.01 U	0.01 U	0.024	0.01 U	0.01 U	0.01 U			0.063			
Benz(a)anthracene in mg/kg			0.011	0.01 U	0.01 U	0.01 U	0.011	0.37	0.044	0.059	0.01 U			0.025			
Benzo(a)pyrene in mg/kg			0.016	0.01 U	0.01 U	0.01 U	0.016	0.44	0.064	0.066	0.012			0.01 U			
Benzo(b)fluoranthene in mg/kg			0.018	0.011	0.01 U	0.01 U	0.02	0.61	0.11	0.085	0.016			0.01 U			
Benzo(k)fluoranthene in mg/kg			0.01 U	0.01 U	0.01 U	0.01 U	0.01 U	0.23	0.03	0.034	0.01 U			0.01 U			
Chrysene in mg/kg			0.014	0.01 U	0.01 U	0.01 U	0.027	0.52	0.076	0.07	0.011			0.03			
Dibenzo(a,h)anthracene in mg/kg			0.01 U	0.01 U	0.01 U	0.01 U	0.01 U	0.082	0.011	0.01 U	0.01 U			0.01 U			
Indeno(1,2,3-cd)pyrene in mg/kg			0.013	0.01 U	0.01 U	0.01 U	0.019	0.39	0.056	0.045	0.012			0.01 U			
Total cPAHs TEQ in mg/kg	0.4	7.9	0.0213	0.00815	ND	ND	0.0223	0.613	0.0899	0.0895	0.0164			0.0098			
Volatile Organic Compounds (VOC)																	
1,1,1,2-Tetrachloroethane in mg/kg	5,000	5,000	0.05 U	0.05 U	0.05 U	0.05 U	0.05 U	0.05 U	0.05 U	0.05 U	0.05 U			0.05 U			
1,1,1-Trichloroethane in mg/kg	7,000,000	7,000,000	0.05 U	0.05 U	0.05 U	0.05 U	0.05 U	0.05 U	0.05 U	0.05 U	0.05 U			0.05 U			
1,1,2,2-Tetrachloroethane in mg/kg	660	660	0.05 U	0.05 U	0.05 U	0.05 U	0.05 U	0.05 U	0.05 U	0.05 U	0.05 U			0.05 U			
1,1,2-Trichloroethane in mg/kg	2,300	2,300	0.05 U	0.05 U	0.05 U	0.05 U	0.05 U	0.05 U	0.05 U	0.05 U	0.05 U			0.05 U			
1,1-Dichloroethane in mg/kg	23,000	23,000	0.05 U	0.05 U	0.05 U	0.05 U	0.05 U	0.05 U	0.05 U	0.05 U	0.05 U			0.05 U			
1,1-Dichloroethene in mg/kg	180,000	180,000	0.05 U	0.05 U	0.05 U	0.05 U	0.05 U	0.05 U	0.05 U	0.05 U	0.05 U			0.05 U			
1,1-Dichloropropene in mg/kg			0.05 U	0.05 U	0.05 U	0.05 U	0.05 U	0.05 U	0.05 U	0.05 U	0.05 U			0.05 U			
1,2,3-Trichlorobenzene in mg/kg			0.25 U	0.25 U	0.25 U	0.25 U	0.25 U	0.25 U	0.25 U	0.25 U	0.25 U			0.25 U			
1,2,3-Trichloropropane in mg/kg	4.4	4.4	0.05 U	0.05 U	0.05 U	0.05 U	0.05 U	0.05 U	0.05 U	0.05 U	0.05 U			0.05 U			
1,2,4-Trichlorobenzene in mg/kg	4,500	4,500	0.25 U	0.25 U	0.25 U	0.25 U	0.25 U	0.25 U	0.25 U	0.25 U	0.25 U			0.25 U			
1,2,4-Trimethylbenzene in mg/kg			0.05 U	0.05 U	0.05 U	0.05 U	0.05 U	0.05 U	0.05 U	0.05 U	0.05 U			0.05 U			
1,2-Dibromo-3-chloropropane in mg/kg	160	160	0.5 U	0.5 U	0.5 U	0.5 U	0.5 U	0.5 U	0.5 U	0.5 U	0.5 U			0.5 U			
1,2-Dibromoethane (EDB) in mg/kg	66	66	0.05 U	0.05 U	0.05 U	0.05 U	0.05 U	0.05 U	0.05 U	0.05 U	0.05 U			0.05 U			
1,2-Dichlorobenzene in mg/kg	320,000	320,000	0.05 U	0.05 U	0.05 U	0.05 U	0.05 U	0.05 U	0.05 U	0.05 U	0.05 U			0.05 U			
1,2-Dichloroethane (EDC) in mg/kg	1,400	1,400	0.05 U	0.05 U	0.05 U	0.05 U	0.05 U	0.05 U	0.05 U	0.05 U	0.05 U			0.05 U			
1,2-Dichloropropane in mg/kg	3,600	3,600	0.05 U	0.05 U	0.05 U	0.05 U	0.05 U	0.05 U	0.05 U	0.05 U	0.05 U			0.05 U			
1,3,5-Trimethylbenzene in mg/kg	35,000	35,000	0.05 U	0.05 U	0.05 U	0.05 U	0.05 U	0.05 U	0.05 U	0.05 U	0.05 U			0.05 U			
1,3-Dichlorobenzene in mg/kg			0.05 U	0.05 U	0.05 U	0.05 U	0.05 U	0.05 U	0.05 U	0.05 U	0.05 U			0.05 U			
1,3-Dichloropropane in mg/kg			0.05 U	0.05 U	0.05 U	0.05 U	0.05 U	0.05 U	0.05 U	0.05 U	0.05 U			0.05 U			
1,4-Dichlorobenzene in mg/kg	24,000	24,000	0.05 U	0.05 U	0.05 U	0.05 U	0.05 U	0.05 U	0.05 U	0.05 U	0.05 U			0.05 U			
2,2-Dichloropropane in mg/kg			0.05 U	0.05 U	0.05 U	0.05 U	0.05 U	0.05 U	0.05 U	0.05 U	0.05 U			0.05 U			
2-Butanone in mg/kg	2,100,000	2,100,000	0.5 U	0.5 U	0.5 U	0.5 U	0.5 U	0.5 U	0.5 U	0.5 U	0.5 U			0.5 U			

Table 16 - Excavation Verification Soil Quality Data for SHB-MW-1 Interim Action Area

K-C Worldwide Site Upland Area 110207

			Bottom Samples in Place				Sidewall Samples in Place						Overexcavated		Pre-Excavation Characterization Samples		
Chemical Name	Interim Action Cleanup Level - Saturated Soil	Interim Action Cleanup Level - Unsaturated Soil	SHB-B01 3/6/14 (5 ft)	SHB-B01 FD 3/6/14 (5 ft)	SHB-B02 3/6/14 (5 ft)	SHB-B03 3/6/14 (5 ft)	SHB-S01 3/6/14 (3 ft)	SHB-S02 3/6/14 (3 ft)	SHB-S04 3/6/14 (3 ft)	SHB-S05 3/6/14 (3 ft)	SHB-S06 3/6/14 (3 ft)	SHB-S07 3/11/14 (3 ft)	SHB-1N 1/15/14 (2.5-3.5 ft) OverEx	SHB-S03 3/6/14 (3 ft) OverEx	SHB-1E 1/15/14 (2.5-3.5 ft)	SHB-1S 1/15/14 (2.5-3.5 ft)	SHB-1W 1/15/14 (2.5-3.5 ft)
2-Chlorotoluene in mg/kg	70,000	70,000	0.05 U	0.05 U	0.05 U	0.05 U	0.05 U	0.05 U	0.05 U	0.05 U	0.05 U			0.05 U			
2-Hexanone in mg/kg			0.5 U	0.5 U	0.5 U	0.5 U	0.5 U	0.5 U	0.5 U	0.5 U	0.5 U			0.5 U			
4-Chlorotoluene in mg/kg			0.05 U	0.05 U	0.05 U	0.05 U	0.05 U	0.05 U	0.05 U	0.05 U	0.05 U			0.05 U			
4-Methyl-2-pentanone in mg/kg	280,000	280,000	0.5 U	0.5 U	0.5 U	0.5 U	0.5 U	0.5 U	0.5 U	0.5 U	0.5 U			0.5 U			
Acetone in mg/kg	3,200,000	3,200,000	0.5 U	0.5 U	0.5 U	0.5 U	0.5 U	0.5 U	0.5 U	0.5 U	0.5 U			0.5 U			
Benzene in mg/kg	2,400	2,400	0.03 U	0.03 U	0.03 U	0.03 U	0.03 U	0.03 U	0.03 U	0.03 U	0.03 U			0.03 U			
Bromobenzene in mg/kg			0.05 U	0.05 U	0.05 U	0.05 U	0.05 U	0.05 U	0.05 U	0.05 U	0.05 U			0.05 U			
Bromodichloromethane in mg/kg	2,100	2,100	0.05 U	0.05 U	0.05 U	0.05 U	0.05 U	0.05 U	0.05 U	0.05 U	0.05 U			0.05 U			
Bromoform in mg/kg	17,000	17,000	0.05 U	0.05 U	0.05 U	0.05 U	0.05 U	0.05 U	0.05 U	0.05 U	0.05 U			0.05 U			
Bromomethane in mg/kg	4,900	4,900	0.5 UJ	0.5 UJ	0.5 UJ	0.5 UJ	0.5 U	0.5 U	0.5 UJ	0.5 UJ	0.5 UJ			0.5 UJ			
Carbon tetrachloride in mg/kg	1,900	1,900	0.05 U	0.05 U	0.05 U	0.05 U	0.05 U	0.05 U	0.05 U	0.05 U	0.05 U			0.05 U			
Chlorobenzene in mg/kg	70,000	70,000	0.05 U	0.05 U	0.05 U	0.05 U	0.05 U	0.05 U	0.05 U	0.05 U	0.05 U			0.05 U			
Chloroethane in mg/kg			0.5 U	0.5 U	0.5 U	0.5 U	0.5 U	0.5 U	0.5 U	0.5 U	0.5 U			0.5 U			
Chloroform in mg/kg	4,200	4,200	0.05 U	0.05 U	0.05 U	0.05 U	0.05 U	0.05 U	0.05 U	0.05 U	0.05 U			0.05 U			
Chloromethane in mg/kg			0.5 U	0.5 U	0.5 U	0.5 U	0.5 U	0.5 U	0.5 U	0.5 U	0.5 U			0.5 U			
cis-1,2-Dichloroethene (DCE) in mg/kg	7,000	7,000	0.05 U	0.05 U	0.05 U	0.05 U	0.05 U	0.05 U	0.05 U	0.05 U	0.05 U			0.05 U			
cis-1,3-Dichloropropene in mg/kg			0.05 U	0.05 U	0.05 U	0.05 U	0.05 U	0.05 U	0.05 U	0.05 U	0.05 U			0.05 U			
Dibromochloromethane in mg/kg	1,600	1,600	0.05 U	0.05 U	0.05 U	0.05 U	0.05 U	0.05 U	0.05 U	0.05 U	0.05 U			0.05 U			
Dibromomethane in mg/kg	35,000	35,000	0.05 U	0.05 U	0.05 U	0.05 U	0.05 U	0.05 U	0.05 U	0.05 U	0.05 U			0.05 U			
Dichlorodifluoromethane in mg/kg	700,000	700,000	0.5 U	0.5 U	0.5 U	0.5 U	0.5 U	0.5 U	0.5 U	0.5 U	0.5 U			0.5 U			
Ethylbenzene in mg/kg	350,000	350,000	0.05 U	0.05 U	0.05 U	0.05 U	0.05 U	0.05 U	0.05 U	0.05 U	0.05 U			0.05 U			
Hexachlorobutadiene in mg/kg	1,700	1,700	0.25 U	0.25 U	0.25 U	0.25 U	0.25 U	0.25 U	0.25 U	0.25 U	0.25 U			0.25 U			
Isopropylbenzene in mg/kg	350,000	350,000	0.05 U	0.05 U	0.05 U	0.05 U	0.05 U	0.05 U	0.05 U	0.05 U	0.05 U			0.05 U			
Methyl tert-butyl ether (MTBE) in mg/kg	73,000	73,000	0.05 U	0.05 U	0.05 U	0.05 U	0.05 U	0.05 U	0.05 U	0.05 U	0.05 U			0.05 U			
Methylene chloride in mg/kg	21,000	21,000	0.5 U	0.5 U	0.5 U	0.5 U	0.5 U	0.5 U	0.5 U	0.5 U	0.5 U			0.5 U			
n-Propylbenzene in mg/kg	350,000	350,000	0.05 U	0.05 U	0.05 U	0.05 U	0.05 U	0.05 U	0.05 U	0.05 U	0.05 U			0.05 U			
p-Isopropyltoluene in mg/kg			0.05 U	0.05 U	0.05 U	0.05 U	0.05 U	0.05 U	0.05 U	0.05 U	0.05 U			0.05 U			
sec-Butylbenzene in mg/kg	350,000	350,000	0.05 U	0.05 U	0.05 U	0.05 U	0.05 U	0.05 U	0.05 U	0.05 U	0.05 U			0.05 U			
Styrene in mg/kg	700,000	700,000	0.05 U	0.05 U	0.05 U	0.05 U	0.05 U	0.05 U	0.05 U	0.05 U	0.05 U			0.05 U			
tert-Butylbenzene in mg/kg	350,000	350,000	0.05 U	0.05 U	0.05 U	0.05 U	0.05 U	0.05 U	0.05 U	0.05 U	0.05 U			0.05 U			
Tetrachloroethene (PCE) in mg/kg	21,000	21,000	0.025 U	0.025 U	0.025 U	0.025 U	0.025 U	0.025 U	0.025 U	0.025 U	0.025 U			0.025 U			
Toluene in mg/kg	280,000	280,000	0.05 U	0.05 U	0.05 U	0.05 U	0.05 U	0.05 U	0.05 U	0.05 U	0.05 U			0.05 U			
trans-1,2-Dichloroethene in mg/kg	70,000	70,000	0.05 U	0.05 U	0.05 U	0.05 U	0.05 U	0.05 U	0.05 U	0.05 U	0.05 U			0.05 U			
trans-1,3-Dichloropropene in mg/kg			0.05 U	0.05 U	0.05 U	0.05 U	0.05 U	0.05 U	0.05 U	0.05 U	0.05 U			0.05 U			
Trichloroethene (TCE) in mg/kg	1,800	1,800	0.03 U	0.03 U	0.03 U	0.03 U	0.03 U	0.03 U	0.03 U	0.03 U	0.03 U			0.03 U			
Trichlorofluoromethane in mg/kg	1,100,000	1,100,000	0.5 U	0.5 U	0.5 U	0.5 U	0.5 U	0.5 U	0.5 U	0.5 U	0.5 U			0.5 U			
Vinyl chloride in mg/kg	88	88	0.05 U	0.05 U	0.05 U	0.05 U	0.05 U	0.05 U	0.05 U	0.05 U	0.05 U			0.05 U			
m,p-Xylenes in mg/kg	49	2.5	0.1 U	0.1 U	0.1 U	0.1 U	0.1 U	0.1 U	0.1 U	0.1 U	0.1 U			0.1 U			
o-Xylene in mg/kg	80	4.1	0.05 U	0.05 U	0.05 U	0.05 U	0.05 U	0.05 U	0.05 U	0.05 U	0.05 U			0.05 U			
Naphthalene in mg/kg	70,000	70,000	0.05 U	0.05 U	0.05 U	0.05 U	0.05 U	0.05 U	0.05 U	0.05 U	0.05 U			0.05 U			

Notes

Concentrations in shaded cells indicate value exceeds Interim Action Cleanup Level - Saturated Soil.

Concentrations in bold text indicate value exceeds Interim Action Cleanup Level - Unsaturated Soil.

SAT = Sample of saturated soil; samples without this designation are unsaturated soil.

J = Analyte was positively identified. The reported result is an estimate.

U = Analyte was not detected at or above the reported result.

UJ = Analyte was not detected at or above the reported estimate.

Table 17 - Excavation Verification Soil Quality Data for UST 29/Latex Spill Interim Action Area

K-C Worldwide Site Upland Area 110207

			Bottom Samples in Place															Sidewall Samples in Place						
Chemical Name	Interim Action Cleanup Level - Saturated Soil	Interim Action Cleanup Level - Unsaturated Soil	UST29-B01 12/23/13 (5 ft)	UST29-B02 12/23/13 (5 ft)	UST29-B03 12/23/13 (5 ft)	UST29-B04 12/23/13 (5 ft)	UST29-B05 12/23/13 (5 ft)	UST29-B06 12/23/13 (5 ft)	UST29-B06 FD 12/23/13 (5 ft)	UST29-B08 1/2/14 (15 ft) SAT	UST29-B10 1/3/14 (15 ft) SAT	UST29-B12 1/6/14 (17 ft) SAT	UST29-B13 1/7/14 (16 ft) SAT	UST29-B14 1/8/14 (17 ft) SAT	UST29-B15 1/8/14 (17 ft) SAT	UST29-B15 FD 1/8/14 (17 ft) SAT	UST29-B16 1/8/14 (17 ft) SAT	UST29-S01 12/23/13 (3 ft)	UST29-S01 FD 12/23/13 (3 ft)	UST29-S02 12/23/13 (3 ft)	UST29-S03 12/23/13 (3 ft)	UST29-S04 12/23/13 (3 ft)	UST29-S05 12/23/13 (3 ft)	UST29-S06 12/23/13 (3 ft)
Total Petroleum Hydrocarbons (TPH)																								
Gasoline Range Hydrocarbons in mg/kg	100	100	2.6	2 U	2 U	2 U	2 U	2 U	2 U	4.7	2 U	2 U	2 U	2 U	7.4 J	2 UJ	2 U	2 U	2 U	2 U	2 U	2 U	2 U	2 U
Diesel Range Hydrocarbons in mg/kg	2,000	2,000	50 U	50 U	50 U	50 U	50 U	50 U	50 U	50 U	50 U	50 U	50 U	50 U	50 U	50 U	82 x	50 U	91	73 x	50 U	50 U	50 U	50 U
Oil Range Hydrocarbons in mg/kg	2,000	2,000	250 U	250 U	250 U	250 U	250 U	250 U	250 U	250 U	250 U	250 U	250 U	250 U	250 U	250 U	250 U	250 U	250 U	250 U	250 U	250 U	250 U	250 U
Total TPHs in mg/kg	2,000	2,000	ND	ND	ND	ND	ND	ND	ND	ND	ND	ND	ND	ND	ND	ND	207	ND	216	198	ND	ND	ND	ND
Metals																								
Arsenic in mg/kg	20	20		2.4				1.94		4.76								4.84	3.74					4.24
Cadmium in mg/kg	3,500	3,500		1 U				1 U		1 U								1 U	1 U					1 U
Chromium (Total) in mg/kg	5,300,000	5,300,000																						
Copper in mg/kg	36	36		9.8				10		12.8								9.87 J	5.59 J					17.3
Lead in mg/kg	81	1,000		2.99				2.29		5.16								7.79 J	2.08 J					13.7
Mercury in mg/kg	0.1	0.1		0.1 U				0.1 U		0.1 U								0.1 U	0.1 U					0.1 U
Nickel in mg/kg	48	48		17.2				23		13.2								14.1	12.6					15.1
Selenium in mg/kg	18,000	18,000																						
Silver in mg/kg	18,000	18,000																						
Zinc in mg/kg	85	100		14				17.8		18.9								24.9 J	8.57 J					49
TCLP Metals																								
Arsenic in mg/L																								
Barium in mg/L																								
Cadmium in mg/L																								
Chromium (Total) in mg/L																								
Lead in mg/L																								
Mercury in mg/L																								
Selenium in mg/L																								
Silver in mg/L																								
Conventional Chemistry Parameters																								
Formaldehyde in mg/kg	700,000	700,000	2.6 U	2.2 U	0.94 J	2.4 U	2.5 U	2.6	2.3 J	3.7	5.2	2.7						2.2 U	2.2 U	2.4 U	2.4 U	1.3 J	2.4 U	2.5 U
Total Solids in percent			78	89.9	79.1	83	80.3	87.7	86.3	78.8	82.2	78.2						91.1	91.5	83.5	83.7	88.3	83.7	80.4
Polycyclic Aromatic Hydrocarbons (PAHs)																								
Acenaphthene in mg/kg	210,000	210,000	0.01 U	0.01 U	0.017	0.01 U	0.01 U	0.026	0.018	0.013	0.01 U	0.01 U	0.01 U	0.014	0.04	0.01 U	0.043	0.018 J	0.01 U	0.66	0.01	0.01 U	0.028	0.01 U
Acenaphthylene in mg/kg			0.01 U	0.01 U	0.01 U	0.01 U	0.01 U	0.01 U	0.01 U	0.01 U	0.01 U	0.01 U	0.01 U	0.01 U	0.01 U	0.01 U	0.01 U	0.01 U	0.01 U	0.1 U	0.01 U	0.01 U	0.01 U	0.01 U
Anthracene in mg/kg	1,100,000	1,100,000	0.01 U	0.019	0.013	0.01 U	0.01 U	0.01 U	0.01 U	0.027	0.01 U	0.01 U	0.01 U	0.01	0.01 U	0.01 U	0.01 U	0.052 J	0.01 UJ	1.4	0.05	0.01 U	0.071	0.01 U
Benzo(g,h,i)perylene in mg/kg			0.01 U	0.012	0.024	0.01 U	0.012	0.01 U	0.01 U	0.01 U	0.01 U	0.01 U	0.01 U	0.023	0.011	0.01	0.021	0.048 J	0.01 UJ	0.86	0.11	0.01 U	0.052	0.018
Fluoranthene in mg/kg	140,000	140,000	0.01 U	0.074	0.044	0.01 U	0.038	0.021 J	0.01 UJ	0.085 J	0.01 U	0.01 U	0.027	0.1	0.075	0.053	0.098	0.24 J	0.031 J	4.2	0.15	0.01 U	0.23	0.03
Fluorene in mg/kg	140,000	140,000	0.01 U	0.01 U	0.013	0.01 U	0.01 U	0.011	0.01 U	0.01 U	0.01 U	0.01 U	0.01 U	0.011	0.019	0.01 U	0.045	0.021 J	0.01 UJ	0.65	0.016	0.01 U	0.031	0.01 U
Phenanthrene in mg/kg			0.01 U	0.052	0.034	0.01 U	0.018	0.014	0.01	0.051 J	0.01 U	0.01 U	0.014	0.077	0.044 J	0.021 J	0.059	0.22 J	0.025 J	5.5	0.16	0.01 U	0.22	0.014
Pyrene in mg/kg	110,000	110,000	0.01	0.071	0.049	0.01 U	0.029	0.017	0.01 U	0.087 J	0.01 U	0.01 U	0.028	0.1	0.078	0.055	0.1	0.28 J	0.036 J	5.5	0.17	0.01 U	0.22	0.031
Naphthalene in mg/kg	70,000	70,000	0.01 U	0.017	0.01 U	0.01 U	0.01 U	0.049 J	0.01 J	0.06	0.019	0.01 U	0.01 U	0.062	0.067 J	0.023 J	0.026	0.014 J	0.01 UJ	0.43	0.013	0.01 U	0.01 U	0.01 U
Benz(a)anthracene in mg/kg			0.01 U	0.031	0.023	0.01 U	0.018	0.01 U	0.01 U	0.01 J	0.01 U	0.01 U	0.012	0.023	0.015	0.014	0.029	0.14 J	0.018 J	2.3	0.042	0.01 U	0.096	0.022
Benzo(a)pyrene in mg/kg			0.01 U	0.022	0.021	0.01 U	0.01 U	0.01 U	0.01 U	0.01 U	0.01 U	0.01 U	0.012	0.024	0.01	0.01 U	0.025	0.1 J	0.011 J	1.8	0.06	0.01 U	0.083	0.023
Benzo(b)fluoranthene in mg/kg			0.013	0.029	0.039	0.01 U	0.024	0.01 U	0.01 U	0.01 U	0.01 U	0.01 U	0.015	0.034	0.014	0.014	0.028	0.14 J	0.014 J	2.1	0.067	0.01 U	0.1	0.037
Benzo(k)fluoranthene in mg/kg			0.01 U	0.01 U	0.011	0.01 U	0.01 U	0.01 U	0.01 U	0.01 U	0.01 U	0.01 U	0.01 U	0.01 U	0.01 U	0.01 U	0.01 U	0.044 J	0.01 UJ	0.64	0.018	0.01 U	0.032	0.013
Chrysene in mg/kg			0.01 U	0.036	0.032	0.01 U	0.035	0.01 U	0.01 U	0.01 J	0.01 U	0.01 U	0.017	0.036	0.016	0.014	0.043	0.15 J	0.018 J	2.8	0.072	0.01 U	0.11	0.027
Dibenzo(a,h)anthracene in mg/kg			0.01 U	0.01 U	0.01 U	0.01 U	0.01 U	0.01 U	0.01 U	0.01 U	0.01 U	0.01 U	0.01 U	0.01 U	0.01 U	0.01 U	0.01 U	0.014 J	0.01 UJ	0.24	0.015	0.01 U	0.013	0.01 U
Indeno(1,2,3-cd)pyrene in mg/kg			0.01 U	0.012	0.022	0.01 U	0.011	0.01 U	0.01 U	0.01 U	0.01 U	0.01 U	0.01 U	0.018	0.01 U	0.01 U	0.02	0.055 J	0.01 UJ	0.93	0.098	0.01 U	0.053	0.016
Total cPAHs TEQ in mg/kg	0.4	7.9	0.00835	0.0306	0.0313	ND	0.0117	ND	ND	0.0081	ND	ND	0.0164	0.0329	0.0146	0.00944	0.0341	0.141	0.0159	2.45	0.0847	ND	0.114	0.0326
Volatile Organic Compounds (VOC)																								
1,1,1,2-Tetrachloroethane in mg/kg	5,000	5,000	0.05 U	0.05 U	0.05 U	0.05 U	0.05 U	0.05 U	0.05 U	0.05 U	0.05 U	0.05 U	0.05 U	0.05 U	0.05 U	0.05 U	0.05 U	0.05 U	0.05 U	0.05 U	0.05 U	0.05 U	0.05 U	0.05 U
1,1,1-Trichloroethane in mg/kg	7,000,000	7,000,000	0.05 U	0.05 U	0.05 U	0.05 U	0.05 U	0.05 U	0.05 U	0.05 U	0.05 U	0.05 U	0.05 U	0.05 U	0.05 U	0.05 U	0.05 U	0.05 U	0.05 U	0.05 U	0.05 U	0.05 U	0.05 U	0.05 U
1,1,2,2-Tetrachloroethane in mg/kg	660	660	0.05 U	0.05 U	0.05 U	0.05 U	0.05 U	0.05 U	0.05 U	0.05 U	0.05 U	0.05 U	0.05 U	0.05 U	0.05 U	0.05 U	0.05 U	0.05 U	0.05 U	0.05 U	0.05 U	0.05 U	0.05 U	0.05 U
1,1,2-Trichloroethane in mg/kg	2,300	2,300	0.05 U	0.05 U	0.05 U	0.05 U	0.05 U	0.05 U	0.05 U	0.05 U	0.05 U	0.05 U	0.05 U	0.05 U	0.05 U	0.05 U	0.05 U	0.05 U	0.05 U	0.05 U	0.05 U	0.05 U	0.05 U	0.05 U
1,1-Dichloroethane in mg/kg	23,000	23,000	0.05 U	0.05 U	0.05 U	0.05 U	0.05 U	0.05 U	0.05 U	0.05 U	0.05 U	0.05 U	0.05 U	0.05 U	0.05 U	0.05 U	0.05 U	0.05 U	0.05 U	0.05 U	0.05 U	0.05 U	0.05 U	0.05 U
1,1-Dichloroethene in mg/kg	180,000	180,000	0.05 U	0.05 U	0.05 U	0.05 U	0.05 U	0.05 U	0.05 U	0.05 U	0.05 U	0.05 U	0.05 U	0.05 U	0.05 U	0.05 U	0.05 U	0.05 U	0.05 U	0.05 U	0.05 U	0.05 U	0.05 U	0.05 U
1,1-Dichloropropene in mg/kg			0.05 U	0.05 U	0.05 U	0.05 U	0.05 U	0.05 U	0.05 U	0.05 U	0.05 U	0.05 U	0.05 U	0.05 U	0.05 U	0.05 U	0.05 U	0.05 U	0.05 U	0.05 U	0.05 U	0.05 U	0.05 U	0.05 U
1,2,3-Trichlorobenzene in mg/kg			0.25 U	0.25 U	0.25 U	0.25 U	0.25 U	0.25 U	0.25 U	0.25 U	0.25 U	0.25 U	0.25 U	0.25 U	0.25 U	0.25 U	0.25 U	0.25 U	0.25 U	0.25 U	0.25 U	0.25 U	0.25 U	0.25 U
1,2,3-Trichloropropane in mg/kg	4.4	4.4	0.05 U	0.05 U	0.05 U	0.05 U	0.05 U	0.05 U	0.05 U	0.05 U	0.05 U	0.05 U	0.05 U	0.05 U	0.05 U	0.05 U	0.05 U	0.05 U	0.05 U	0.05 U	0.05 U	0.05 U	0.05 U	0.05 U
1,2,4-Trichlorobenzene in mg/kg	4,500	4,500	0.25 U	0.25 U	0.25 U	0.25 U	0.25 U	0.25 U	0.25 U	0.25 U	0.25 U	0.25 U	0.25 U	0.25 U	0.25 U	0.25 U	0.25 U	0.25 U	0.25 U	0.25 U	0.25 U	0.25 U	0.25 U	0.25 U
1,2,4-Trimethylbenzene in mg/kg			0.05 U	0.05 U	0.05 U	0.05 U	0.05 U	0.05 U	0.05 U	0.05 U	0.05 U	0.05 U	0.05 U	0.05 U	0.05 U	0.05 U	0.089	0.05 U	0.05 U	0.05 U	0.05 U	0.05 U	0.05 U	0.05 U
1,2-Dibromo-3-chloropropane in mg/kg	160	160	0.5 U	0.5 U	0.5 U	0.5 U	0.5 U	0.5 U	0.5 U	0.5 U	0.5 U	0.5 U	0.5 U	0.5 U	0.5 U	0.5 U	0.5 U	0.5 U	0.5 U	0.5 U	0.5 U	0.5 U	0.5 U	0.5 U
1,2-Dibromoethane (EDB) in mg/kg	66	66	0.05 U	0.05 U	0.05 U	0.05 U	0.05 U	0.05 U	0.05 U	0.05 U	0.05 U	0.05 U	0.05 U	0.05 U	0.05 U	0.05 U	0.05 U	0.05 U	0.05 U	0.05 U	0.05 U	0.05 U	0.05 U	0.05 U
1,2-Dichlorobenzene in mg/kg	320,000	320,000	0.05 U	0.05 U	0.05 U	0.05 U	0.05 U	0.05 U	0.05 U	0.05 U	0.05 U	0.05 U	0.05 U	0.05 U	0.05 U	0.05 U	0.05 U	0.05 U	0.05 U	0.05 U	0.05 U	0.05 U	0.05 U	0.05 U
1,2-Dichloroethane (EDC) in mg/kg	1,400	1,400	0.05 U	0.05 U	0.05 U	0.05 U	0.05 U	0.05 U	0.05 U	0.05 U	0.05 U	0.05 U	0.05 U	0.05 U	0.05 U	0.05 U	0.05 U	0.05 U	0.05 U	0.05 U	0.05 U	0.05 U	0.05 U	0.05 U
1,2-Dichloropropane in mg/kg	3,600	3,600	0.05 U	0.05 U	0.05 U	0.05 U	0.05 U	0.05 U	0.05 U	0.05 U	0.05 U	0.05 U	0.05 U	0.05 U	0.05 U	0.05 U	0.05 U	0.05 U	0.05 U	0.05 U	0.05 U	0.05 U	0.05 U	0.05 U

Table 17 - Excavation Verification Soil Quality Data for UST 29/Latex Spill Interim Action Area

K-C Worldwide Site Upland Area 110207

			Bottom Samples in Place															Sidewall Samples in Place						
Chemical Name	Interim Action Cleanup Level - Saturated Soil	Interim Action Cleanup Level - Unsaturated Soil	UST29-B01 12/23/13 (5 ft)	UST29-B02 12/23/13 (5 ft)	UST29-B03 12/23/13 (5 ft)	UST29-B04 12/23/13 (5 ft)	UST29-B05 12/23/13 (5 ft)	UST29-B06 12/23/13 (5 ft)	UST29-B06 FD 12/23/13 (5 ft)	UST29-B08 1/2/14 (15 ft) SAT	UST29-B10 1/3/14 (15 ft) SAT	UST29-B12 1/6/14 (17 ft) SAT	UST29-B13 1/7/14 (16 ft) SAT	UST29-B14 1/8/14 (17 ft) SAT	UST29-B15 1/8/14 (17 ft) SAT	UST29-B15 FD 1/8/14 (17 ft) SAT	UST29-B16 1/8/14 (17 ft) SAT	UST29-S01 12/23/13 (3 ft)	UST29-S01 FD 12/23/13 (3 ft)	UST29-S02 12/23/13 (3 ft)	UST29-S03 12/23/13 (3 ft)	UST29-S04 12/23/13 (3 ft)	UST29-S05 12/23/13 (3 ft)	UST29-S06 12/23/13 (3 ft)
1,3,5-Trimethylbenzene in mg/kg	35,000	35,000	0.05 U	0.05 U	0.05 U	0.05 U	0.05 U	0.05 U	0.05 U	0.05 U	0.05 U	0.05 U	0.05 U	0.05 U	0.05 U	0.05 U	0.05 U	0.05 U	0.05 U	0.05 U	0.05 U	0.05 U	0.05 U	0.05 U
1,3-Dichlorobenzene in mg/kg			0.05 U	0.05 U	0.05 U	0.05 U	0.05 U	0.05 U	0.05 U	0.05 U	0.05 U	0.05 U	0.05 U	0.05 U	0.05 U	0.05 U	0.05 U	0.05 U	0.05 U	0.05 U	0.05 U	0.05 U	0.05 U	0.05 U
1,3-Dichloropropane in mg/kg			0.05 U	0.05 U	0.05 U	0.05 U	0.05 U	0.05 U	0.05 U	0.05 U	0.05 U	0.05 U	0.05 U	0.05 U	0.05 U	0.05 U	0.05 U	0.05 U	0.05 U	0.05 U	0.05 U	0.05 U	0.05 U	0.05 U
1,4-Dichlorobenzene in mg/kg	24,000	24,000	0.05 U	0.05 U	0.05 U	0.05 U	0.05 U	0.05 U	0.05 U	0.05 U	0.05 U	0.05 U	0.05 U	0.05 U	0.05 U	0.05 U	0.05 U	0.05 U	0.05 U	0.05 U	0.05 U	0.05 U	0.05 U	0.05 U
1,4-Dioxane in mg/kg	1312	1312	0.5 UJ	0.5 UJ	0.5 UJ	0.5 UJ	0.5 UJ	0.5 UJ	0.5 UJ	0.5 UJ	0.5 UJ	0.5 UJ	0.5 UJ	0.5 UJ	0.5 UJ	0.5 UJ	0.5 UJ	0.5 UJ	0.5 UJ	0.5 UJ	0.5 UJ	0.5 UJ	0.5 UJ	0.5 UJ
2,2-Dichloropropane in mg/kg			0.05 U	0.05 U	0.05 U	0.05 U	0.05 U	0.05 U	0.05 U	0.05 U	0.05 U	0.05 U	0.05 U	0.05 U	0.05 U	0.05 U	0.05 U	0.05 U	0.05 U	0.05 U	0.05 U	0.05 U	0.05 U	0.05 U
2-Butanone in mg/kg	2,100,000	2,100,000	0.5 U	0.5 U	0.5 U	0.5 U	0.5 U	0.5 U	0.5 U	0.5 U	0.5 U	0.5 U	0.5 U	0.5 U	0.5 U	0.5 U	0.5 U	0.5 U	0.5 U	0.5 U	0.5 U	0.5 U	0.5 U	0.5 U
2-Chlorotoluene in mg/kg	70,000	70,000	0.05 U	0.05 U	0.05 U	0.05 U	0.05 U	0.05 U	0.05 U	0.05 U	0.05 U	0.05 U	0.05 U	0.05 U	0.05 U	0.05 U	0.05 U	0.05 U	0.05 U	0.05 U	0.05 U	0.05 U	0.05 U	0.05 U
2-Hexanone in mg/kg			0.5 U	0.5 U	0.5 U	0.5 U	0.5 U	0.5 U	0.5 U	0.5 U	0.5 U	0.5 U	0.5 U	0.5 U	0.5 U	0.5 U	0.5 U	0.5 U	0.5 U	0.5 U	0.5 U	0.5 U	0.5 U	0.5 U
4-Chlorotoluene in mg/kg			0.05 U	0.05 U	0.05 U	0.05 U	0.05 U	0.05 U	0.05 U	0.05 U	0.05 U	0.05 U	0.05 U	0.05 U	0.05 U	0.05 U	0.05 U	0.05 U	0.05 U	0.05 U	0.05 U	0.05 U	0.05 U	0.05 U
4-Methyl-2-pentanone in mg/kg	280,000	280,000	0.5 U	0.5 U	0.5 U	0.5 U	0.5 U	0.5 U	0.5 U	0.5 U	0.5 U	0.5 U	0.5 U	0.5 U	0.5 U	0.5 U	0.5 U	0.5 U	0.5 U	0.5 U	0.5 U	0.5 U	0.5 U	0.5 U
Acetone in mg/kg	3,200,000	3,200,000	0.5 U	0.5 U	0.5 U	0.5 U	0.5 U	0.5 U	0.5 U	0.5 U	0.5 U	0.5 U	0.5 U	0.5 U	0.5 U	0.5 U	0.5 U	0.5 U	0.5 U	0.5 U	0.5 U	0.5 U	0.5 U	0.5 U
Benzene in mg/kg	2,400	2,400	0.03 U	0.03 U	0.03 U	0.03 U	0.03 U	0.03 U	0.03 U	0.03 U	0.03 U	0.03 U	0.03 U	0.03 U	0.03 U	0.03 U	0.03 U	0.03 U	0.03 U	0.03 U	0.03 U	0.03 U	0.03 U	0.03 U
Bromobenzene in mg/kg			0.05 U	0.05 U	0.05 U	0.05 U	0.05 U	0.05 U	0.05 U	0.05 U	0.05 U	0.05 U	0.05 U	0.05 U	0.05 U	0.05 U	0.05 U	0.05 U	0.05 U	0.05 U	0.05 U	0.05 U	0.05 U	0.05 U
Bromodichloromethane in mg/kg	2,100	2,100	0.05 U	0.05 U	0.05 U	0.05 U	0.05 U	0.05 U	0.05 U	0.05 U	0.05 U	0.05 U	0.05 U	0.05 U	0.05 U	0.05 U	0.05 U	0.05 U	0.05 U	0.05 U	0.05 U	0.05 U	0.05 U	0.05 U
Bromoform in mg/kg	17,000	17,000	0.05 U	0.05 U	0.05 U	0.05 U	0.05 U	0.05 U	0.05 U	0.05 U	0.05 U	0.05 U	0.05 U	0.05 U	0.05 U	0.05 U	0.05 U	0.05 U	0.05 U	0.05 U	0.05 U	0.05 U	0.05 U	0.05 U
Bromomethane in mg/kg	4,900	4,900	0.5 U	0.5 U	0.5 U	0.5 U	0.5 U	0.5 U	0.5 U	0.5 U	0.5 U	0.5 U	0.5 U	0.5 U	0.5 U	0.5 U	0.5 U	0.5 U	0.5 U	0.5 U	0.5 U	0.5 U	0.5 U	0.5 U
Carbon tetrachloride in mg/kg	1,900	1,900	0.05 U	0.05 U	0.05 U	0.05 U	0.05 U	0.05 U	0.05 U	0.05 U	0.05 U	0.05 U	0.05 U	0.05 U	0.05 U	0.05 U	0.05 U	0.05 U	0.05 U	0.05 U	0.05 U	0.05 U	0.05 U	0.05 U
Chlorobenzene in mg/kg	70,000	70,000	0.05 U	0.05 U	0.05 U	0.05 U	0.05 U	0.05 U	0.05 U	0.05 U	0.05 U	0.05 U	0.05 U	0.05 U	0.05 U	0.05 U	0.05 U	0.05 U	0.05 U	0.05 U	0.05 U	0.05 U	0.05 U	0.05 U
Chloroethane in mg/kg			0.5 U	0.5 U	0.5 U	0.5 U	0.5 U	0.5 U	0.5 U	0.5 U	0.5 U	0.5 U	0.5 U	0.5 U	0.5 U	0.5 U	0.5 U	0.5 U	0.5 U	0.5 U	0.5 U	0.5 U	0.5 U	0.5 U
Chloroform in mg/kg	4,200	4,200	0.05 U	0.05 U	0.05 U	0.05 U	0.05 U	0.05 U	0.05 U	0.05 U	0.05 U	0.05 U	0.05 U	0.05 U	0.05 U	0.05 U	0.05 U	0.05 U	0.05 U	0.05 U	0.05 U	0.05 U	0.05 U	0.05 U
Chloromethane in mg/kg			0.5 U	0.5 U	0.5 U	0.5 U	0.5 U	0.5 U	0.5 U	0.5 U	0.5 U	0.5 U	0.5 U	0.5 U	0.5 U	0.5 U	0.5 U	0.5 U	0.5 U	0.5 U	0.5 U	0.5 U	0.5 U	0.5 U
cis-1,2-Dichloroethene (DCE) in mg/kg	7,000	7,000	0.05 U	0.05 U	0.05 U	0.05 U	0.05 U	0.05 U	0.05 U	0.05 U	0.05 U	0.05 U	0.05 U	0.05 U	0.05 U	0.05 U	0.05 U	0.05 U	0.05 U	0.05 U	0.05 U	0.05 U	0.05 U	0.05 U
cis-1,3-Dichloropropene in mg/kg			0.05 U	0.05 U	0.05 U	0.05 U	0.05 U	0.05 U	0.05 U	0.05 U	0.05 U	0.05 U	0.05 U	0.05 U	0.05 U	0.05 U	0.05 U	0.05 U	0.05 U	0.05 U	0.05 U	0.05 U	0.05 U	0.05 U
Dibromochloromethane in mg/kg	1,600	1,600	0.05 U	0.05 U	0.05 U	0.05 U	0.05 U	0.05 U	0.05 U	0.05 U	0.05 U	0.05 U	0.05 U	0.05 U	0.05 U	0.05 U	0.05 U	0.05 U	0.05 U	0.05 U	0.05 U	0.05 U	0.05 U	0.05 U
Dibromomethane in mg/kg	35,000	35,000	0.05 U	0.05 U	0.05 U	0.05 U	0.05 U	0.05 U	0.05 U	0.05 U	0.05 U	0.05 U	0.05 U	0.05 U	0.05 U	0.05 U	0.05 U	0.05 U	0.05 U	0.05 U	0.05 U	0.05 U	0.05 U	0.05 U
Dichlorodifluoromethane in mg/kg	700,000	700,000	0.5 U	0.5 U	0.5 U	0.5 U	0.5 U	0.5 U	0.5 U	0.5 U	0.5 U	0.5 U	0.5 U	0.5 U	0.5 U	0.5 U	0.5 U	0.5 U	0.5 U	0.5 U	0.5 U	0.5 U	0.5 U	0.5 U
Ethylbenzene in mg/kg	350,000	350,000	0.05 U	0.05 U	0.05 U	0.05 U	0.05 U	0.05 U	0.05 U	0.05 U	0.05 U	0.05 U	0.05 U	0.05 U	0.05 U	0.05 U	0.28	0.05 U	0.05 U	0.05 U	0.05 U	0.05 U	0.05 U	0.05 U
Hexachlorobutadiene in mg/kg	1,700	1,700	0.25 U	0.25 U	0.25 U	0.25 U	0.25 U	0.25 U	0.25 U	0.25 U	0.25 U	0.25 U	0.25 U	0.25 U	0.25 U	0.25 U	0.25 U	0.25 U	0.25 U	0.25 U	0.25 U	0.25 U	0.25 U	0.25 U
Isopropylbenzene in mg/kg	350,000	350,000	0.05 U	0.05 U	0.05 U	0.05 U	0.05 U	0.05 U	0.05 U	0.05 U	0.05 U	0.05 U	0.05 U	0.05 U	0.05 U	0.05 U	0.05 U	0.05 U	0.05 U	0.05 U	0.05 U	0.05 U	0.05 U	0.05 U
Methyl tert-butyl ether (MTBE) in mg/kg	73,000	73,000	0.05 U	0.05 U	0.05 U	0.05 U	0.05 U	0.05 U	0.05 U	0.05 U	0.05 U	0.05 U	0.05 U	0.05 U	0.05 U	0.05 U	0.05 U	0.05 U	0.05 U	0.05 U	0.05 U	0.05 U	0.05 U	0.05 U
Methylene chloride in mg/kg	21,000	21,000	0.5 U	0.5 U	0.5 U	0.5 U	0.5 U	0.5 U	0.5 U	0.5 U	0.5 U	0.5 U	0.5 UJ	0.5 UJ	0.5 UJ	0.5 UJ	0.5 UJ	1.2 UJ	0.97 UJ	1.2 U	1.2 U	0.91 U	0.95 U	1.2 U
n-Propylbenzene in mg/kg	350,000	350,000	0.05 U	0.05 U	0.05 U	0.05 U	0.05 U	0.05 U	0.05 U	0.05 U	0.05 U	0.05 U	0.05 U	0.05 U	0.05 U	0.05 U	0.05 U	0.05 U	0.05 U	0.05 U	0.05 U	0.05 U	0.05 U	0.05 U
p-Isopropyltoluene in mg/kg			0.05 U	0.05 U	0.05 U	0.05 U	0.05 U	0.05 U	0.05 U	0.05 U	0.05 U	0.05 U	0.05 U	0.05 U	0.05 U	0.05 U	0.05 U	0.05 U	0.05 U	0.05 U	0.05 U	0.05 U	0.05 U	0.05 U
sec-Butylbenzene in mg/kg	350,000	350,000	0.05 U	0.05 U	0.05 U	0.05 U	0.05 U	0.05 U	0.05 U	0.05 U	0.05 U	0.05 U	0.05 U	0.05 U	0.05 U	0.05 U	0.05 U	0.05 U	0.05 U	0.05 U	0.05 U	0.05 U	0.05 U	0.05 U
Styrene in mg/kg	700,000	700,000	0.05 U	0.05 U	0.05 U	0.05 U	0.05 U	0.05 U	0.05 U	0.05 U	0.05 U	0.05 U	0.05 U	0.05 U	0.05 U	0.05 U	0.05 U	0.05 U	0.05 U	0.05 U	0.05 U	0.05 U	0.05 U	0.05 U
tert-Butylbenzene in mg/kg	350,000	350,000	0.05 U	0.05 U	0.05 U	0.05 U	0.05 U	0.05 U	0.05 U	0.05 U	0.05 U	0.05 U	0.05 U	0.05 U	0.05 U	0.05 U	0.05 U	0.05 U	0.05 U	0.05 U	0.05 U	0.05 U	0.05 U	0.05 U
Tetrachloroethene (PCE) in mg/kg	21,000	21,000	0.025 U	0.025 U	0.025 U	0.025 U	0.025 U	0.025 U	0.025 U	0.025 U	0.025 U	0.025 U	0.025 U	0.025 U	0.025 U	0.025 U	0.025 U	0.025 U	0.025 U	0.025 U	0.025 U	0.025 U	0.025 U	0.025 U
Toluene in mg/kg	280,000	280,000	0.05 U	0.05 U	0.05 U	0.05 U	0.05 U	0.05 U	0.05 U	0.05 U	0.05 U	0.05 U	0.05 U	0.05 U	0.05 U	0.05 U	0.05 U	0.05 U	0.05 U	0.05 U	0.05 U	0.05 U	0.05 U	0.05 U
trans-1,2-Dichloroethene in mg/kg	70,000	70,000	0.05 U	0.05 U	0.05 U	0.05 U	0.05 U	0.05 U	0.05 U	0.05 U	0.05 U	0.05 U	0.05 U	0.05 U	0.05 U	0.05 U	0.05 U	0.05 U	0.05 U	0.05 U	0.05 U	0.05 U	0.05 U	0.05 U
trans-1,3-Dichloropropene in mg/kg			0.05 U	0.05 U	0.05 U	0.05 U	0.05 U	0.05 U	0.05 U	0.05 U	0.05 U	0.05 U	0.05 U	0.05 U	0.05 U	0.05 U	0.05 U	0.05 U	0.05 U	0.05 U	0.05 U	0.05 U	0.05 U	0.05 U
Trichloroethene (TCE) in mg/kg	1,800	1,800	0.03 U	0.03 U	0.03 U	0.03 U	0.03 U	0.03 U	0.03 U	0.03 U	0.03 U	0.03 U	0.03 U	0.03 U	0.03 U	0.03 U	0.03 U	0.03 U	0.03 U	0.03 U	0.03 U	0.03 U	0.03 U	0.03 U
Trichlorofluoromethane in mg/kg	1,100,000	1,100,000	0.5 U	0.5 U	0.5 U	0.5 U	0.5 U	0.5 U	0.5 U	0.5 U	0.5 U	0.5 U	0.5 U	0.5 U	0.5 U	0.5 U	0.5 U	0.5 U	0.5 U	0.5 U	0.5 U	0.5 U	0.5 U	0.5 U
Vinyl acetate in mg/kg	3,500,000	3,500,000	0.5 UJ	0.5 UJ	0.5 UJ	0.5 UJ	0.5 UJ	0.5 UJ	0.5 UJ	0.5 UJ	0.5 UJ	0.5 UJ	0.5 UJ	0.5 UJ	0.5 UJ	0.5 UJ	0.5 UJ	0.5 UJ	0.5 UJ	0.5 UJ	0.5 UJ	0.5 UJ	0.5 UJ	0.5 UJ
Vinyl chloride in mg/kg	88	88	0.05 U	0.05 U	0.05 U	0.05 U	0.05 U	0.05 U	0.05 U	0.05 U	0.05 U	0.05 U	0.05 U	0.05 U	0.05 U	0.05 U	0.05 U	0.05 U	0.05 U	0.05 U	0.05 U	0.05 U	0.05 U	0.05 U
m,p-Xylenes in mg/kg	2.5	49	0.1 U	0.1 U	0.1 U	0.1 U	0.1 U	0.1 U	0.1 U	0.66	0.1 U	0.1 U	0.1 U	0.1 U	0.1 U	0.1 U	1.8	0.1 U	0.1 U	0.1 U	0.1 U	0.1 U	0.1 U	0.1 U
o-Xylene in mg/kg	4.1	80	0.05 U	0.05 U	0.05 U	0.05 U	0.05 U	0.05 U	0.05 U	0.05 U	0.05 U	0.05 U	0.05 U	0.05 U	0.05 U	0.05 U	0.2	0.05 U	0.05 U	0.05 U	0.05 U	0.05 U	0.05 U	0.05 U
Naphthalene in mg/kg	70,000	70,000																						
Polychlorinated Biphenyls (PCBs)																								
Aroclor 1016 in mg/kg																								
Aroclor 1221 in mg/kg																								
Aroclor 1232 in mg/kg																								
Aroclor 1242 in mg/kg																								
Aroclor 1248 in mg/kg																								
Aroclor 1254 in mg/kg																								
Aroclor 1260 in mg/kg																								
Total PCBs (Sum of Aroclors) in mg/kg	10	10																						

Notes

Concentrations in shaded cells indicate value exceeds Interim Action Cleanup Level - Saturated Soil. Concentrations in bold text indicate value exceeds Interim Action Cleanup Level - Unsaturated Soil. SAT = Sample of saturated soil; samples without this designation are unsaturated soil.

J = Analyte was positively identified. The reported result is an estimate. U = Analyte was not detected at or above the reported result. UJ = Analyte was not detected at or above the reported estimate. x = The sample chromatographic pattern does not resemble the fuel standard used for quantitation.

Table 17 - Excavation Verification Soil Quality Data for UST 29/Latex Spill Interim Action Area

K-C Worldwide Site Upland Area 110207

			Sidewall Samples in Place																					
Chemical Name	Interim Action Cleanup Level - Saturated Soil	Interim Action Cleanup Level - Unsaturated Soil	UST29-S07 12/23/13 (3 ft)	UST29-S08 12/30/13 (8 ft) SAT	UST29-S09 12/30/13 (8 ft) SAT	UST29-S10 12/30/13 (8 ft) SAT	UST29-S11 12/30/13 (8 ft) SAT	UST29-S12 1/3/14 (3 ft)	UST29-S13 1/3/14 (6 ft) SAT	UST29-S15 1/3/14 (3 ft)	UST29-S16 1/3/14 (6 ft) SAT	UST29-S17 1/3/14 (9 ft) SAT	UST29-S18 1/3/14 (3 ft)	UST29-S19 1/3/14 (6 ft) SAT	UST29-S20 1/3/14 (9 ft) SAT	UST29-S21 1/3/14 (3 ft)	UST29-S22 1/7/14 (9 ft) SAT	UST29-S29 1/8/14 (9 ft) SAT	UST29-S30 1/8/14 (6 ft) SAT	UST29-S31 1/8/14 (3 ft)	UST29-S32 1/8/14 (9 ft) SAT	UST29-S33 1/8/14 (6 ft) SAT	UST29-S34 1/8/14 (3 ft)	UST29-S37 1/9/14 (6 ft) SAT
Total Petroleum Hydrocarbons (TPH)																								
Gasoline Range Hydrocarbons in mg/kg	100	100	2 U	2 U	2 U	2 U	2 U	2 U	2 U	2 U	2 U	2 U	2 U	2.5	4.8	81	2 U	2 U	2 U	2 U	2 U	2 U	2 U	2 U
Diesel Range Hydrocarbons in mg/kg	2,000	2,000	50 U	50 U	50 U	50 U	50 U	50 U	50 U	50 U	50 U	50 U	50 U	50 U	50 U	50 U	50 U	50 U	150 x	50 U	50 U	50 U	50 U	50 U
Oil Range Hydrocarbons in mg/kg	2,000	2,000	250 U	250 U	250 U	250 U	250 U	250 U	250 U	250 U	250 U	250 U	250 U	250 U	250 U	250 U	250 U	250 U	250 U	250 U	250 U	250 U	250 U	250 U
Total TPHs in mg/kg	2,000	2,000	ND	ND	ND	ND	ND	ND	ND	ND	ND	ND	ND	ND	ND	ND	ND	ND	275	ND	ND	ND	ND	ND
Metals																								
Arsenic in mg/kg	20	20		3.85							1.93					1.33	6.65			9.68				5.43
Cadmium in mg/kg	3,500	3,500		1 U							1 U					1 U	1 U			1 U				1 U
Chromium (Total) in mg/kg	5,300,000	5,300,000																						
Copper in mg/kg	36	36		22							11.2					5.47	27			20				5.66
Lead in mg/kg	81	1,000		21.9							4.3					1.47	7.22			10.5				1.94
Mercury in mg/kg	0.1	0.1		0.1 U							0.1 U					0.1 U	0.1 U			0.1 U				0.1 U
Nickel in mg/kg	48	48		20.6							11.9					8.34	19.5			12.9				11.5
Selenium in mg/kg	18,000	18,000																						
Silver in mg/kg	18,000	18,000																						
Zinc in mg/kg	85	100		64.8							18.6					13.3	32.5			28.8				9.84
TCLP Metals																								
Arsenic in mg/L																								
Barium in mg/L																								
Cadmium in mg/L																								
Chromium (Total) in mg/L																								
Lead in mg/L																								
Mercury in mg/L																								
Selenium in mg/L																								
Silver in mg/L																								
Conventional Chemistry Parameters																								
Formaldehyde in mg/kg	700,000	700,000	2.5 U	12	2.2 J	10	4.7	3.4	2.8	0.68 J	0.75 J	2.6	5.5	4.8	3.3	5.0								6.7
Total Solids in percent			79.8	79.9	81.1	81.3	80.5	87.5	80.3	89.4	89.6	79.2	80.5	78.2	87.0	94.0								83.5
Polycyclic Aromatic Hydrocarbons (PAHs)																								
Acenaphthene in mg/kg	210,000	210,000	0.01 U	0.1	0.01 U	0.01 U	0.01 U	0.01 U	0.01 U	0.01 U	0.01 U	0.01 U	0.01 U	0.01 U	0.01 U	0.01 U	0.01 U	0.01 U	0.01 U	0.01 U	0.058	0.016	0.07	0.01 U
Acenaphthylene in mg/kg			0.01 U	0.01 U	0.01 U	0.01 U	0.01 U	0.01 U	0.01 U	0.01 U	0.01 U	0.01 U	0.01 U	0.01 U	0.01 U	0.01 U	0.01 U	0.01 U	0.01 U	0.054	0.01 U	0.01 U	0.01 U	0.01 U
Anthracene in mg/kg	1,100,000	1,100,000	0.01 U	0.046	0.01 U	0.01 U	0.01 U	0.01 U	0.01 U	0.01 U	0.01 U	0.01 U	0.01 U	0.01 U	0.01 U	0.01 U	0.01 U	0.01 U	0.01 U	0.029	0.012	0.01 U	0.11	0.01 U
Benzo(g,h,i)perylene in mg/kg			0.015	0.012	0.01	0.01	0.014	0.01 U	0.01	0.029	0.01 U	0.01 U	0.01 U	0.01 U	0.01 U	0.01 U	0.01 U	0.01 U	0.01 U	0.021	0.011	0.01 U	0.065	0.01 U
Fluoranthene in mg/kg	140,000	140,000	0.036	0.094	0.01 U	0.017	0.017	0.02	0.027	0.072	0.016	0.022	0.026	0.019	0.044	0.01 U	0.016	0.01 U	0.037	0.01 U	0.084	0.011	0.31	0.01 U
Fluorene in mg/kg	140,000	140,000	0.01 U	0.085	0.01 U	0.01 U	0.01 U	0.01 U	0.01 U	0.01 U	0.01 U	0.01 U	0.01 U	0.01 U	0.01 U	0.01 U	0.01 U	0.01 U	0.01 U	0.01 U	0.042	0.01 U	0.064	0.01 U
Phenanthrene in mg/kg			0.016	0.26	0.01 U	0.01 U	0.01 U	0.023	0.019	0.027	0.012	0.01 U	0.01	0.01 U	0.017	0.01 U	0.01 U	0.01 U	0.01 U	0.01 U	0.078	0.01 U	0.48	0.01 U
Pyrene in mg/kg	110,000	110,000	0.037	0.097	0.011	0.017	0.017	0.027	0.028	0.069	0.015	0.02	0.024	0.017	0.044	0.01 U	0.017	0.01 U	0.034	0.01 U	0.077	0.01 U	0.38	0.01 U
Naphthalene in mg/kg	70,000	70,000	0.01 U	0.044	0.01 U	0.01 U	0.01 U	0.01 U	0.01 U	0.01 U	0.014	0.01 U	0.01 U	0.01 U	0.01 U	0.01 U	0.01 U	0.01 U	0.01 U	0.01 U	0.01 U	0.01	0.047	0.01 U
Benz(a)anthracene in mg/kg			0.019	0.023	0.01 U	0.012	0.013	0.01 U	0.012	0.046	0.01 U	0.01 U	0.01 U	0.01 U	0.017	0.01 U	0.01 U	0.01 U	0.018	0.011	0.028	0.01 U	0.15	0.01 U
Benzo(a)pyrene in mg/kg			0.019	0.018	0.01 U	0.013	0.016	0.01 U	0.012	0.046	0.01 U	0.01 U	0.01 U	0.01 U	0.01 U	0.01 U	0.01 U	0.01 U	0.012	0.01 U	0.02	0.01 U	0.11	0.01 U
Benzo(b)fluoranthene in mg/kg			0.026	0.022	0.012	0.017	0.02	0.011	0.015	0.061	0.01 U	0.01 U	0.01 U	0.01 U	0.014	0.01 U	0.01 U	0.01 U	0.016	0.01 U	0.026	0.01 U	0.12	0.01 U
Benzo(k)fluoranthene in mg/kg			0.01 U	0.01 U	0.01 U	0.01 U	0.01 U	0.01 U	0.01 U	0.02	0.01 U	0.01 U	0.01 U	0.01 U	0.01 U	0.01 U	0.01 U	0.01 U	0.01 U	0.01 U	0.01	0.043	0.01 U
Chrysene in mg/kg			0.021	0.028	0.01 U	0.011	0.011	0.016	0.014	0.059	0.01 U	0.01 U	0.01 U	0.01 U	0.016	0.01 U	0.01 U	0.01 U	0.017	0.01 U	0.034	0.01 U	0.2	0.01 U
Dibenzo(a,h)anthracene in mg/kg			0.01 U	0.01 U	0.01 U	0.01 U	0.01 U	0.01 U	0.01 U	0.01 U	0.01 U	0.01 U	0.01 U	0.01 U	0.01 U	0.01 U	0.01 U	0.01 U	0.01 U	0.01 U	0.01 U	0.01 U	0.019	0.01 U
Indeno(1,2,3-cd)pyrene in mg/kg			0.013	0.01 U	0.01 U	0.011	0.016	0.01 U	0.01 U	0.027	0.01 U	0.01 U	0.01 U	0.01 U	0.01 U	0.01 U	0.01 U	0.01 U	0.01 U	0.011	0.01	0.01 U	0.065	0.01 UJ
Total cPAHs TEQ in mg/kg	0.4	7.9	0.026	0.0243	0.00825	0.0181	0.022	0.00826	0.0163	0.0625	ND	ND	ND	ND	0.00976	ND	ND	ND	0.0171	0.00875	0.0282	ND	0.152	ND
Volatile Organic Compounds (VOC)																								
1,1,1,2-Tetrachloroethane in mg/kg	5,000	5,000	0.05 U	0.05 U	0.05 U	0.05 U	0.05 U	0.05 U	0.05 U	0.05 U	0.05 U	0.05 U	0.05 U	0.05 U	0.05 U	0.05 U	0.05 U	0.05 U	0.05 U	0.05 U	0.05 U	0.05 U	0.05 U	0.05 U
1,1,1-Trichloroethane in mg/kg	7,000,000	7,000,000	0.05 U	0.05 U	0.05 U	0.05 U	0.05 U	0.05 U	0.05 U	0.05 U	0.05 U	0.05 U	0.05 U	0.05 U	0.05 U	0.05 U	0.05 U	0.05 U	0.05 U	0.05 U	0.05 U	0.05 U	0.05 U	0.05 U
1,1,2,2-Tetrachloroethane in mg/kg	660	660	0.05 U	0.05 U	0.05 U	0.05 U	0.05 U	0.05 U	0.05 U	0.05 U	0.05 U	0.05 U	0.05 U	0.05 U	0.05 U	0.05 U	0.05 U	0.05 U	0.05 U	0.05 U	0.05 U	0.05 U	0.05 U	0.05 U
1,1,2-Trichloroethane in mg/kg	2,300	2,300	0.05 U	0.05 U	0.05 U	0.05 U	0.05 U	0.05 U	0.05 U	0.05 U	0.05 U	0.05 U	0.05 U	0.05 U	0.05 U	0.05 U	0.05 U	0.05 U	0.05 U	0.05 U	0.05 U	0.05 U	0.05 U	0.05 U
1,1-Dichloroethane in mg/kg	23,000	23,000	0.05 U	0.05 U	0.05 U	0.05 U	0.05 U	0.05 U	0.05 U	0.05 U	0.05 U	0.05 U	0.05 U	0.05 U	0.05 U	0.05 U	0.05 U	0.05 U	0.05 U	0.05 U	0.05 U	0.05 U	0.05 U	0.05 U
1,1-Dichloroethene in mg/kg	180,000	180,000	0.05 U	0.05 U	0.05 U	0.05 U	0.05 U	0.05 U	0.05 U	0.05 U	0.05 U	0.05 U	0.05 U	0.05 U	0.05 U	0.05 U	0.05 U	0.05 U	0.05 U	0.05 U	0.05 U	0.05 U	0.05 U	0.05 U
1,1-Dichloropropene in mg/kg			0.05 U	0.05 U	0.05 U	0.05 U	0.05 U	0.05 U	0.05 U	0.05 U	0.05 U	0.05 U	0.05 U	0.05 U	0.05 U	0.05 U	0.05 U	0.05 U	0.05 U	0.05 U	0.05 U	0.05 U	0.05 U	0.05 U
1,2,3-Trichlorobenzene in mg/kg			0.25 U	0.25 U	0.25 U	0.25 U	0.25 U	0.25 U	0.25 U	0.25 U	0.25 U	0.25 U	0.25 U	0.25 U	0.25 U	0.25 U	0.25 U	0.25 U	0.25 U	0.25 U	0.25 U	0.25 U	0.25 U	0.25 U
1,2,3-Trichloropropane in mg/kg	4.4	4.4	0.05 U	0.05 U	0.05 U	0.05 U	0.05 U	0.05 U	0.05 U	0.05 U	0.05 U	0.05 U	0.05 U	0.05 U	0.05 U	0.05 U	0.05 U	0.05 U	0.05 U	0.05 U	0.05 U	0.05 U	0.05 U	0.05 U
1,2,4-Trichlorobenzene in mg/kg	4,500	4,500	0.25 U	0.25 U	0.25 U	0.25 U	0.25 U	0.25 U	0.25 U	0.25 U	0.25 U	0.25 U	0.25 U	0.25 U	0.25 U	0.25 U	0.25 U	0.25 U	0.25 U	0.25 U	0.25 U	0.25 U	0.25 U	0.25 U
1,2,4-Trimethylbenzene in mg/kg			0.05 U	0.05 U	0.05 U	0.05 U	0.05 U	0.05 U	0.05 U	0.05 U	0.05 U	0.05 U	0.05 U	0.05 U	0.05 U	0.05 U	0.05 U	0.05 U	0.05 U	0.05 U	0.05 U	0.05 U	0.05 U	0.05 U
1,2-Dibromo-3-chloropropane in mg/kg	160	160	0.5 U	0.5 U	0.5 U	0.5 U	0.5 U	0.5 U	0.5 U	0.5 U	0.5 U	0.5 U	0.5 U	0.5 U	0.5 U	0.5 U	0.5 U	0.5 U	0.5 U	0.5 U	0.5 U	0.5 U	0.5 U	0.5 U
1,2-Dibromoethane (EDB) in mg/kg	66	66	0.05 U	0.05 U	0.05 U	0.05 U	0.05 U	0.05 U	0.05 U	0.05 U	0.05 U	0.05 U	0.05 U	0.05 U	0.05 U	0.05 U	0.05 U	0.05 U	0.05 U	0.05 U	0.05 U	0.05 U	0.05 U	0.05 U
1,2-Dichlorobenzene in mg/kg	320,000	320,000	0.05 U	0.05 U	0.05 U	0.05 U	0.05 U	0.05 U	0.05 U	0.05 U	0.05 U	0.05 U	0.05 U	0.05 U	0.05 U	0.05 U	0.05 U	0.05 U	0.05 U	0.05 U	0.05 U	0.05 U	0.05 U	0.05 U
1,2-Dichloroethane (EDC) in mg/kg	1,400	1,400	0.05 U	0.05 U	0.05 U	0.05 U	0.05 U	0.05 U	0.05 U	0.05 U	0.05 U	0.05 U	0.05 U	0.05 U	0.05 U	0.05 U	0.05 U	0.05 U	0.05 U	0.05 U	0.05 U	0.05 U	0.05 U	0.05 U
1,2-Dichloropropane in mg/kg	3,600	3,600	0.05 U	0.05 U	0.05 U	0.05 U	0.05 U	0.05 U	0.05 U	0.05 U	0.05 U	0.05 U	0.05 U	0.05 U	0.05 U	0.05 U	0.05 U	0.05 U	0.05 U	0.05 U	0.05 U	0.05 U	0.05 U	0.05 U

Table 17 - Excavation Verification Soil Quality Data for UST 29/Latex Spill Interim Action Area

K-C Worldwide Site Upland Area 110207

			Sidewall Samples in Place																					
Chemical Name	Interim Action Cleanup Level - Saturated Soil	Interim Action Cleanup Level - Unsaturated Soil	UST29-S07 12/23/13 (3 ft)	UST29-S08 12/30/13 (8 ft) SAT	UST29-S09 12/30/13 (8 ft) SAT	UST29-S10 12/30/13 (8 ft) SAT	UST29-S11 12/30/13 (8 ft) SAT	UST29-S12 1/3/14 (3 ft)	UST29-S13 1/3/14 (6 ft) SAT	UST29-S15 1/3/14 (3 ft)	UST29-S16 1/3/14 (6 ft) SAT	UST29-S17 1/3/14 (9 ft) SAT	UST29-S18 1/3/14 (3 ft)	UST29-S19 1/3/14 (6 ft) SAT	UST29-S20 1/3/14 (9 ft) SAT	UST29-S21 1/3/14 (3 ft)	UST29-S22 1/7/14 (9 ft) SAT	UST29-S29 1/8/14 (9 ft) SAT	UST29-S30 1/8/14 (6 ft) SAT	UST29-S31 1/8/14 (3 ft)	UST29-S32 1/8/14 (9 ft) SAT	UST29-S33 1/8/14 (6 ft) SAT	UST29-S34 1/8/14 (3 ft)	UST29-S37 1/9/14 (6 ft) SAT
1,3,5-Trimethylbenzene in mg/kg	35,000	35,000	0.05 U	0.05 U	0.05 U	0.05 U	0.05 U	0.05 U	0.05 U	0.05 U	0.05 U	0.05 U	0.05 U	0.05 U	0.05 U	0.05 U	0.05 U	0.05 U	0.05 U	0.05 U	0.05 U	0.05 U	0.05 U	0.05 U
1,3-Dichlorobenzene in mg/kg			0.05 U	0.05 U	0.05 U	0.05 U	0.05 U	0.05 U	0.05 U	0.05 U	0.05 U	0.05 U	0.05 U	0.05 U	0.05 U	0.05 U	0.05 U	0.05 U	0.05 U	0.05 U	0.05 U	0.05 U	0.05 U	0.05 U
1,3-Dichloropropane in mg/kg			0.05 U	0.05 U	0.05 U	0.05 U	0.05 U	0.05 U	0.05 U	0.05 U	0.05 U	0.05 U	0.05 U	0.05 U	0.05 U	0.05 U	0.05 U	0.05 U	0.05 U	0.05 U	0.05 U	0.05 U	0.05 U	0.05 U
1,4-Dichlorobenzene in mg/kg	24,000	24,000	0.05 U	0.05 U	0.05 U	0.05 U	0.05 U	0.05 U	0.05 U	0.05 U	0.05 U	0.05 U	0.05 U	0.05 U	0.05 U	0.05 U	0.05 U	0.05 U	0.05 U	0.05 U	0.05 U	0.05 U	0.05 U	0.05 U
1,4-Dioxane in mg/kg	1312	1312	0.5 UJ	0.5 UJ	0.5 UJ	0.5 UJ	0.5 UJ	0.5 UJ	0.5 UJ	0.5 UJ	0.5 UJ	0.5 UJ	0.5 UJ	0.5 UJ	0.5 UJ	0.5 UJ	0.5 UJ	0.5 UJ	0.5 UJ	0.5 UJ	0.5 UJ	0.5 UJ	0.5 UJ	0.5 UJ
2,2-Dichloropropane in mg/kg			0.05 U	0.05 U	0.05 U	0.05 U	0.05 U	0.05 U	0.05 U	0.05 U	0.05 U	0.05 U	0.05 U	0.05 U	0.05 U	0.05 U	0.05 U	0.05 U	0.05 U	0.05 U	0.05 U	0.05 U	0.05 U	0.05 U
2-Butanone in mg/kg	2,100,000	2,100,000	0.5 U	0.5 U	0.5 U	0.5 U	0.5 U	0.5 U	0.5 U	0.5 U	0.5 U	0.5 U	0.5 U	0.5 U	0.5 U	0.5 U	0.5 U	0.5 U	0.5 U	0.5 U	0.5 U	0.5 U	0.5 U	0.5 U
2-Chlorotoluene in mg/kg	70,000	70,000	0.05 U	0.05 U	0.05 U	0.05 U	0.05 U	0.05 U	0.05 U	0.05 U	0.05 U	0.05 U	0.05 U	0.05 U	0.05 U	0.05 U	0.05 U	0.05 U	0.05 U	0.05 U	0.05 U	0.05 U	0.05 U	0.05 U
2-Hexanone in mg/kg			0.5 U	0.5 U	0.5 U	0.5 U	0.5 U	0.5 U	0.5 U	0.5 U	0.5 U	0.5 U	0.5 U	0.5 U	0.5 U	0.5 U	0.5 U	0.5 U	0.5 U	0.5 U	0.5 U	0.5 U	0.5 U	0.5 U
4-Chlorotoluene in mg/kg			0.05 U	0.05 U	0.05 U	0.05 U	0.05 U	0.05 U	0.05 U	0.05 U	0.05 U	0.05 U	0.05 U	0.05 U	0.05 U	0.05 U	0.05 U	0.05 U	0.05 U	0.05 U	0.05 U	0.05 U	0.05 U	0.05 U
4-Methyl-2-pentanone in mg/kg	280,000	280,000	0.5 U	0.5 U	0.5 U	0.5 U	0.5 U	0.5 U	0.5 U	0.5 U	0.5 U	0.5 U	0.5 U	0.5 U	0.5 U	0.5 U	0.5 U	0.5 U	0.5 U	0.5 U	0.5 U	0.5 U	0.5 U	0.5 U
Acetone in mg/kg	3,200,000	3,200,000	0.5 U	0.5 U	0.5 U	0.5 U	0.5 U	0.5 U	0.5 U	0.5 U	0.5 U	0.5 U	0.5 U	0.5 U	0.5 U	0.5 U	0.5 U	0.5 U	0.5 U	0.5 U	0.5 U	0.5 U	0.5 U	0.5 U
Benzene in mg/kg	2,400	2,400	0.03 U	0.03 U	0.03 U	0.03 U	0.03 U	0.03 U	0.03 U	0.03 U	0.03 U	0.03 U	0.03 U	0.03 U	0.03 U	0.03 U	0.03 U	0.03 U	0.03 U	0.03 U	0.03 U	0.03 U	0.03 U	0.03 U
Bromobenzene in mg/kg			0.05 U	0.05 U	0.05 U	0.05 U	0.05 U	0.05 U	0.05 U	0.05 U	0.05 U	0.05 U	0.05 U	0.05 U	0.05 U	0.05 U	0.05 U	0.05 U	0.05 U	0.05 U	0.05 U	0.05 U	0.05 U	0.05 U
Bromodichloromethane in mg/kg	2,100	2,100	0.05 U	0.05 U	0.05 U	0.05 U	0.05 U	0.05 U	0.05 U	0.05 U	0.05 U	0.05 U	0.05 U	0.05 U	0.05 U	0.05 U	0.05 U	0.05 U	0.05 U	0.05 U	0.05 U	0.05 U	0.05 U	0.05 U
Bromoform in mg/kg	17,000	17,000	0.05 U	0.05 U	0.05 U	0.05 U	0.05 U	0.05 U	0.05 U	0.05 U	0.05 U	0.05 U	0.05 U	0.05 U	0.05 U	0.05 U	0.05 U	0.05 U	0.05 U	0.05 U	0.05 U	0.05 U	0.05 U	0.05 U
Bromomethane in mg/kg	4,900	4,900	0.5 U	0.5 U	0.5 U	0.5 U	0.5 U	0.5 U	0.5 U	0.5 U	0.5 U	0.5 U	0.5 U	0.5 U	0.5 U	0.5 U	0.5 U	0.5 U	0.5 U	0.5 U	0.5 U	0.5 U	0.5 U	0.5 UJ
Carbon tetrachloride in mg/kg	1,900	1,900	0.05 U	0.05 U	0.05 U	0.05 U	0.05 U	0.05 U	0.05 U	0.05 U	0.05 U	0.05 U	0.05 U	0.05 U	0.05 U	0.05 U	0.05 U	0.05 U	0.05 U	0.05 U	0.05 U	0.05 U	0.05 U	0.05 U
Chlorobenzene in mg/kg	70,000	70,000	0.05 U	0.05 U	0.05 U	0.05 U	0.05 U	0.05 U	0.05 U	0.05 U	0.05 U	0.05 U	0.05 U	0.05 U	0.05 U	0.05 U	0.05 U	0.05 U	0.05 U	0.05 U	0.05 U	0.05 U	0.05 U	0.05 U
Chloroethane in mg/kg			0.5 U	0.5 U	0.5 U	0.5 U	0.5 U	0.5 U	0.5 U	0.5 U	0.5 U	0.5 U	0.5 U	0.5 U	0.5 U	0.5 U	0.5 U	0.5 U	0.5 U	0.5 U	0.5 U	0.5 U	0.5 U	0.5 U
Chloroform in mg/kg	4,200	4,200	0.05 U	0.05 U	0.05 U	0.05 U	0.05 U	0.05 U	0.05 U	0.05 U	0.05 U	0.05 U	0.05 U	0.05 U	0.05 U	0.05 U	0.05 U	0.05 U	0.05 U	0.05 U	0.05 U	0.05 U	0.05 U	0.05 U
Chloromethane in mg/kg			0.5 U	0.5 U	0.5 U	0.5 U	0.5 U	0.5 U	0.5 U	0.5 U	0.5 U	0.5 U	0.5 U	0.5 U	0.5 U	0.5 U	0.5 U	0.5 U	0.5 U	0.5 U	0.5 U	0.5 U	0.5 U	0.5 U
cis-1,2-Dichloroethene (DCE) in mg/kg	7,000	7,000	0.05 U	0.05 U	0.05 U	0.05 U	0.05 U	0.05 U	0.05 U	0.05 U	0.05 U	0.05 U	0.05 U	0.05 U	0.05 U	0.05 U	0.05 U	0.05 U	0.05 U	0.05 U	0.05 U	0.05 U	0.05 U	0.05 U
cis-1,3-Dichloropropene in mg/kg			0.05 U	0.05 U	0.05 U	0.05 U	0.05 U	0.05 U	0.05 U	0.05 U	0.05 U	0.05 U	0.05 U	0.05 U	0.05 U	0.05 U	0.05 U	0.05 U	0.05 U	0.05 U	0.05 U	0.05 U	0.05 U	0.05 U
Dibromochloromethane in mg/kg	1,600	1,600	0.05 U	0.05 U	0.05 U	0.05 U	0.05 U	0.05 U	0.05 U	0.05 U	0.05 U	0.05 U	0.05 U	0.05 U	0.05 U	0.05 U	0.05 U	0.05 U	0.05 U	0.05 U	0.05 U	0.05 U	0.05 U	0.05 U
Dibromomethane in mg/kg	35,000	35,000	0.05 U	0.05 U	0.05 U	0.05 U	0.05 U	0.05 U	0.05 U	0.05 U	0.05 U	0.05 U	0.05 U	0.05 U	0.05 U	0.05 U	0.05 U	0.05 U	0.05 U	0.05 U	0.05 U	0.05 U	0.05 U	0.05 U
Dichlorodifluoromethane in mg/kg	700,000	700,000	0.5 U	0.5 U	0.5 U	0.5 U	0.5 U	0.5 U	0.5 U	0.5 U	0.5 U	0.5 U	0.5 U	0.5 U	0.5 U	0.5 U	0.5 U	0.5 U	0.5 U	0.5 U	0.5 U	0.5 U	0.5 U	0.5 U
Ethylbenzene in mg/kg	350,000	350,000	0.05 U	0.05 U	0.05 U	0.05 U	0.05 U	0.05 U	0.05 U	0.05 U	0.05 U	0.05 U	0.05 U	0.05 U	0.05 U	0.05 U	0.05 U	0.05 U	0.05 U	0.05 U	0.05 U	0.05 U	0.05 U	0.05 U
Hexachlorobutadiene in mg/kg	1,700	1,700	0.25 U	0.25 U	0.25 U	0.25 U	0.25 U	0.25 U	0.25 U	0.25 U	0.25 U	0.25 U	0.25 U	0.25 U	0.25 U	0.25 U	0.25 U	0.25 U	0.25 U	0.25 U	0.25 U	0.25 U	0.25 U	0.25 U
Isopropylbenzene in mg/kg	350,000	350,000	0.05 U	0.05 U	0.05 U	0.05 U	0.05 U	0.05 U	0.05 U	0.05 U	0.05 U	0.05 U	0.05 U	0.05 U	0.05 U	0.05 U	0.05 U	0.05 U	0.05 U	0.05 U	0.05 U	0.05 U	0.05 U	0.05 U
Methyl tert-butyl ether (MTBE) in mg/kg	73,000	73,000	0.05 U	0.05 U	0.05 U	0.05 U	0.05 U	0.05 U	0.05 U	0.05 U	0.05 U	0.05 U	0.05 U	0.05 U	0.05 U	0.05 U	0.05 U	0.05 U	0.05 U	0.05 U	0.05 U	0.05 U	0.05 U	0.05 U
Methylene chloride in mg/kg	21,000	21,000	1.3 U	0.5 U	0.5 U	0.5 U	0.5 U	0.5 U	0.5 U	0.5 U	0.5 U	0.5 U	0.5 U	0.5 U	0.5 U	0.5 U	0.5 UJ	0.5 UJ	0.5 UJ	0.5 UJ	0.5 UJ	0.5 UJ	0.5 U	
n-Propylbenzene in mg/kg	350,000	350,000	0.05 U	0.05 U	0.05 U	0.05 U	0.05 U	0.05 U	0.05 U	0.05 U	0.05 U	0.05 U	0.05 U	0.05 U	0.05 U	0.05 U	0.05 U	0.05 U	0.05 U	0.05 U	0.05 U	0.05 U	0.05 U	0.05 U
p-Isopropyltoluene in mg/kg			0.05 U	0.05 U	0.05 U	0.05 U	0.05 U	0.05 U	0.05 U	0.05 U	0.05 U	0.05 U	0.05 U	0.05 U	0.05 U	0.05 U	0.05 U	0.05 U	0.05 U	0.05 U	0.05 U	0.05 U	0.05 U	0.05 U
sec-Butylbenzene in mg/kg	350,000	350,000	0.05 U	0.05 U	0.05 U	0.05 U	0.05 U	0.05 U	0.05 U	0.05 U	0.05 U	0.05 U	0.05 U	0.05 U	0.05 U	0.05 U	0.05 U	0.05 U	0.05 U	0.05 U	0.05 U	0.05 U	0.05 U	0.05 U
Styrene in mg/kg	700,000	700,000	0.05 U	0.05 U	0.05 U	0.05 U	0.05 U	0.05 U	0.05 U	0.05 U	0.05 U	0.05 U	0.05 U	0.05 U	0.05 U	0.05 U	0.05 U	0.05 U	0.05 U	0.05 U	0.05 U	0.05 U	0.05 U	0.05 U
tert-Butylbenzene in mg/kg	350,000	350,000	0.05 U	0.05 U	0.05 U	0.05 U	0.05 U	0.05 U	0.05 U	0.05 U	0.05 U	0.05 U	0.05 U	0.05 U	0.05 U	0.05 U	0.05 U	0.05 U	0.05 U	0.05 U	0.05 U	0.05 U	0.05 U	0.05 U
Tetrachloroethene (PCE) in mg/kg	21,000	21,000	0.025 U	0.025 U	0.025 U	0.025 U	0.025 U	0.025 U	0.025 U	0.025 U	0.025 U	0.025 U	0.025 U	0.025 U	0.025 U	0.025 U	0.025 U	0.025 U	0.025 U	0.025 U	0.025 U	0.025 U	0.025 U	0.025 U
Toluene in mg/kg	280,000	280,000	0.05 U	0.05 U	0.05 U	0.05 U	0.05 U	0.05 U	0.05 U	0.05 U	0.05 U	0.05 U	0.05 U	0.05 U	0.05 U	0.05 U	0.05 U	0.05 U	0.05 U	0.05 U	0.05 U	0.05 U	0.05 U	0.05 U
trans-1,2-Dichloroethene in mg/kg	70,000	70,000	0.05 U	0.05 U	0.05 U	0.05 U	0.05 U	0.05 U	0.05 U	0.05 U	0.05 U	0.05 U	0.05 U	0.05 U	0.05 U	0.05 U	0.05 U	0.05 U	0.05 U	0.05 U	0.05 U	0.05 U	0.05 U	0.05 U
trans-1,3-Dichloropropene in mg/kg			0.05 U	0.05 U	0.05 U	0.05 U	0.05 U	0.05 U	0.05 U	0.05 U	0.05 U	0.05 U	0.05 U	0.05 U	0.05 U	0.05 U	0.05 U	0.05 U	0.05 U	0.05 U	0.05 U	0.05 U	0.05 U	0.05 U
Trichloroethene (TCE) in mg/kg	1,800	1,800	0.03 U	0.03 U	0.03 U	0.03 U	0.03 U	0.03 U	0.03 U	0.03 U	0.03 U	0.03 U	0.03 U	0.03 U	0.03 U	0.03 U	0.03 U	0.03 U	0.03 U	0.03 U	0.03 U	0.03 U	0.03 U	0.03 U
Trichlorofluoromethane in mg/kg	1,100,000	1,100,000	0.5 U	0.5 U	0.5 U	0.5 U	0.5 U	0.5 U	0.5 U	0.5 U	0.5 U	0.5 U	0.5 U	0.5 U	0.5 U	0.5 U	0.5 U	0.5 U	0.5 U	0.5 U	0.5 U	0.5 U	0.5 U	0.5 U
Vinyl acetate in mg/kg	3,500,000	3,500,000	0.5 UJ	0.5 UJ	0.5 UJ	0.5 UJ	0.5 UJ	0.5 UJ	0.5 UJ	0.5 UJ	0.5 UJ	0.5 UJ	0.5 UJ	0.5 UJ	0.5 UJ	0.5 UJ	0.5 UJ	0.5 UJ	0.5 UJ	0.5 UJ	0.5 UJ	0.5 UJ	0.5 UJ	0.5 UJ
Vinyl chloride in mg/kg	88	88	0.05 U	0.05 U	0.05 U	0.05 U	0.05 U	0.05 U	0.05 U	0.05 U	0.05 U	0.05 U	0.05 U	0.05 U	0.05 U	0.05 U	0.05 U	0.05 U	0.05 U	0.05 U	0.05 U	0.05 U	0.05 U	0.05 U
m,p-Xylenes in mg/kg	2.5	49	0.1 U	0.1 U	0.1 U	0.1 U	0.1 U	0.1 U	0.1 U	0.1 U	0.1 U	0.1 U	0.1 U	0.1 U	0.1 U	0.23	0.1 U	0.1 U	0.1 U	0.1 U	0.1 U	0.1 U	0.1 U	0.1 U
o-Xylene in mg/kg	4.1	80	0.05 U	0.05 U	0.05 U	0.05 U	0.05 U	0.05 U	0.05 U	0.05 U	0.05 U	0.05 U	0.05 U	0.05 U	0.05 U	0.05 U	0.05 U	0.05 U	0.05 U	0.05 U	0.05 U	0.05 U	0.05 U	0.05 U
Naphthalene in mg/kg	70,000	70,000																						
Polychlorinated Biphenyls (PCBs)																								
Aroclor 1016 in mg/kg																								
Aroclor 1221 in mg/kg																								
Aroclor 1232 in mg/kg																								
Aroclor 1242 in mg/kg																								
Aroclor 1248 in mg/kg																								
Aroclor 1254 in mg/kg																								
Aroclor 1260 in mg/kg																								
Total PCBs (Sum of Aroclors) in mg/kg	10	10																						

Notes

Concentrations in shaded cells indicate value exceeds Interim Action Cleanup Level - Saturated Soil. Concentrations in bold text indicate value exceeds Interim Action Cleanup Level - Unsaturated Soil. SAT = Sample of saturated soil; samples without this designation are unsaturated soil.

J = Analyte was positively identified. The reported result is an estimate. U = Analyte was not detected at or above the reported result. UJ = Analyte was not detected at or above the reported estimate. x = The sample chromatographic pattern does not resemble the fuel standard used for quantitation.

Table 17 - Excavation Verification Soil Quality Data for UST 29/Latex Spill Interim Action Area

K-C Worldwide Site Upland Area 110207

			Sidewall Samples in Place				Overexcavated Samples												
Chemical Name	Interim Action Cleanup Level - Saturated Soil	Interim Action Cleanup Level - Unsaturated Soil	UST29-S38 1/9/14 (6 ft) SAT	UST29-S39 1/9/14 (9 ft) SAT	UST29-S40 1/9/14 (9 ft) SAT	UST29-S41 1/10/14 (6 ft) SAT	UST29-B07 12/30/13 (18 ft) OverEx SAT	UST29-B09 1/3/14 (15 ft) OverEx SAT	UST29-B11 1/3/14 (15 ft) OverEx SAT	UST29-S14 1/3/14 (9 ft) OverEx SAT	UST29-S23 1/7/14 (12 ft) OverEx SAT	UST29-S24 1/8/14 (3 ft) OverEx	UST29-S25 1/8/14 (6 ft) OverEx SAT	UST29-S26 1/8/14 (9 ft) OverEx SAT	UST29-S27 1/8/14 (6 ft) OverEx SAT	UST29-S28 1/8/14 (3 ft) OverEx	UST29-S35 1/8/14 (6 ft) OverEx SAT	UST29-S36 1/8/14 (3 ft) OverEx	XY-TPSW2 9/10/13 (8 ft) OverEx
Total Petroleum Hydrocarbons (TPH)																			
Gasoline Range Hydrocarbons in mg/kg	100	100	2 U	2 U	5.6	55	**1,000**	**110**	**150**	**190**	23	2 U	**27,000**	2 U	**1,100**	2 U	28	2 U	
Diesel Range Hydrocarbons in mg/kg	2,000	2,000	50 U	50 U	260	50 U	830	50 U	50 U	160	1,100 x	50 U	610 x	50 U	50 U	50 U	**2,100** x	50 U	
Oil Range Hydrocarbons in mg/kg	2,000	2,000	250 U	250 U	380	250 U	250 U	250 U	250 U	250 U	250 U	250 U	250 U	250 U	250 U	250 U	250 U	250 U	
Total TPHs in mg/kg	2,000	2,000	ND	ND	640	ND	955	ND	ND	285	1,220	ND	735	ND	ND	ND	**2,220**	ND	
Metals																			
Arsenic in mg/kg	20	20												5.01			4.07		2.94
Cadmium in mg/kg	3,500	3,500												1 U			1 U		1 U
Chromium (Total) in mg/kg	5,300,000	5,300,000																	14.5
Copper in mg/kg	36	36												11.5			7.67		
Lead in mg/kg	81	1,000												2.53			1.88		9.59
Mercury in mg/kg	0.1	0.1												0.1 U			0.1 U		0.1 U
Nickel in mg/kg	48	48												16.8			11.8		
Selenium in mg/kg	18,000	18,000																	1 U
Silver in mg/kg	18,000	18,000																	1 U
Zinc in mg/kg	85	100												18.6			11		
TCLP Metals																			
Arsenic in mg/L																			1 U
Barium in mg/L																			1 U
Cadmium in mg/L																			1 U
Chromium (Total) in mg/L																			1 U
Lead in mg/L																			1 U
Mercury in mg/L																			0.1 U
Selenium in mg/L																			1 U
Silver in mg/L																			1 U
Conventional Chemistry Parameters																			
Formaldehyde in mg/kg	700,000	700,000	3.6	4.5	10	2.2	0.86 J	14	6.6	2.2 J									
Total Solids in percent			72.8	79.4	83.4	90.8	85.7	83.3	82.2	76.6									
Polycyclic Aromatic Hydrocarbons (PAHs)																			
Acenaphthene in mg/kg	210,000	210,000	0.01 U	0.04	0.52	0.011	0.27	0.01 U	0.01 U	0.01 U	0.46	0.01 U	0.025	0.01 U	0.01 U	0.01 U	0.64	0.022	
Acenaphthylene in mg/kg			0.01 U	0.024	0.011	0.01	0.01 U	0.01 U	0.01 U	0.01 U	0.01 U	0.01 U	0.01 U	0.01 U	0.01 U	0.01 U	0.01 U	0.01 U	
Anthracene in mg/kg	1,100,000	1,100,000	0.01 U	0.025	0.14	0.022	0.28	0.01 U	0.01 U	0.01 U	2.4	0.01 U	0.01 U	0.01 U	0.017	0.01 U	0.26	0.05	
Benzo(g,h,i)perylene in mg/kg			0.01 U	0.079	0.039	0.053	0.16	0.01 U	0.01 U	0.017	1.2	0.01 U	0.01 U	0.01 U	0.016	0.01 U	0.075	0.066	
Fluoranthene in mg/kg	140,000	140,000	0.01 U	0.33	0.8	0.089	1.5	0.01 U	0.01 U	0.048	14	0.01 U	0.033	0.01 U	0.14	0.01 U	0.73	0.17	
Fluorene in mg/kg	140,000	140,000	0.01 U	0.029	0.26	0.011	0.22	0.01 U	0.01 U	0.01 U	0.38	0.01 U	0.038	0.01 U	0.014	0.01 U	0.57	0.022	
Phenanthrene in mg/kg			0.01 U	0.37	0.43	0.079	1.1	0.01 U	0.01 U	0.047	5.3	0.01 U	0.052	0.01 U	0.045	0.01 U	1.1	0.21	
Pyrene in mg/kg	110,000	110,000	0.01 U	0.31	0.75	0.11	1.2	0.01 U	0.01 U	0.048	12 J	0.01 U	0.03	0.01 U	0.13	0.01 U	0.63	0.22	
Naphthalene in mg/kg	70,000	70,000	0.01 U	0.049	0.024	0.019	0.01 U	0.022	0.027	0.01 U	0.01 U	0.01 U	0.49	0.01 U	0.01 U	0.01 U	0.01 U	0.025	
Benz(a)anthracene in mg/kg			0.01 U	0.076	0.21	0.062	0.57	0.01 U	0.01 U	0.021	6.6 J	0.01 U	0.012	0.01 U	0.055	0.01 U	0.28	0.1	
Benzo(a)pyrene in mg/kg			0.01 U	0.1	0.08	0.062	0.43	0.01 U	0.01 U	0.022	4.2	0.01 U	0.01 U	0.01 U	0.035	0.01 U	0.17	0.098	
Benzo(b)fluoranthene in mg/kg			0.01 U	0.13	0.085	0.068	0.59	0.01 U	0.01 U	0.026	5.4	0.01 U	0.01 U	0.01 U	0.05	0.01 U	0.24	0.11	
Benzo(k)fluoranthene in mg/kg			0.01 U	0.05	0.023	0.02	0.19	0.01 U	0.01 U	0.01 U	1.5	0.01 U	0.01 U	0.01 U	0.018	0.01 U	0.084	0.033	
Chrysene in mg/kg			0.01 U	0.15	0.25	0.083	0.49	0.01 U	0.01 U	0.026	6.7 J	0.01 U	0.012	0.01 U	0.067	0.01 U	0.31	0.14	
Dibenzo(a,h)anthracene in mg/kg			0.01 U	0.012	0.013	0.012	0.043	0.01 U	0.01 U	0.01 U	0.4	0.01 U	0.01 U	0.01 U	0.01 U	0.01 U	0.022	0.016	
Indeno(1,2,3-cd)pyrene in mg/kg			0.01 U	0.071	0.026	0.05	0.22	0.01 U	0.01 U	0.015	1.4	0.01 U	0.01 U	0.01 U	0.017	0.01 U	0.087	0.071	
Total cPAHs TEQ in mg/kg	0.4	7.9	ND	0.135	0.118	0.084	0.596	ND	ND	0.0295	5.8 J	ND	0.00832	ND	0.0502	ND	0.244	0.132	
Volatile Organic Compounds (VOC)																			
1,1,1,2-Tetrachloroethane in mg/kg	5,000	5,000	0.05 U	0.05 U	0.05 U	0.05 U	0.05 U	0.05 U	0.05 U	0.05 U	0.05 U	0.05 U	2.5 U	0.05 U	0.05 U	0.05 U	0.05 U	0.05 U	0.05 U
1,1,1-Trichloroethane in mg/kg	7,000,000	7,000,000	0.05 U	0.05 U	0.05 U	0.05 U	0.05 U	0.05 U	0.05 U	0.05 U	0.05 U	0.05 U	2.5 U	0.05 U	0.05 U	0.05 U	0.05 U	0.05 U	0.05 U
1,1,2,2-Tetrachloroethane in mg/kg	660	660	0.05 U	0.05 U	0.05 U	0.05 U	0.05 U	0.05 U	0.05 U	0.05 U	0.05 U	0.05 U	2.5 U	0.05 U	0.05 U	0.05 U	0.05 U	0.05 U	0.05 U
1,1,2-Trichloroethane in mg/kg	2,300	2,300	0.05 U	0.05 U	0.05 U	0.05 U	0.05 U	0.05 U	0.05 U	0.05 U	0.05 U	0.05 U	2.5 U	0.05 U	0.05 U	0.05 U	0.05 U	0.05 U	0.05 U
1,1-Dichloroethane in mg/kg	23,000	23,000	0.05 U	0.05 U	0.05 U	0.05 U	0.05 U	0.05 U	0.05 U	0.05 U	0.05 U	0.05 U	2.5 U	0.05 U	0.05 U	0.05 U	0.05 U	0.05 U	0.05 U
1,1-Dichloroethene in mg/kg	180,000	180,000	0.05 U	0.05 U	0.05 U	0.05 U	0.05 U	0.05 U	0.05 U	0.05 U	0.05 U	0.05 U	2.5 U	0.05 U	0.05 U	0.05 U	0.05 U	0.05 U	0.05 U
1,1-Dichloropropene in mg/kg			0.05 U	0.05 U	0.05 U	0.05 U	0.05 U	0.05 U	0.05 U	0.05 U	0.05 U	0.05 U	2.5 U	0.05 U	0.05 U	0.05 U	0.05 U	0.05 U	0.05 U
1,2,3-Trichlorobenzene in mg/kg			0.25 U	0.25 U	0.25 U	0.25 U	0.25 U	0.25 U	0.25 U	0.25 U	0.25 U	0.25 U	12 U	0.25 U	0.25 U	0.25 U	0.25 U	0.25 U	0.25 UJ
1,2,3-Trichloropropane in mg/kg	4.4	4.4	0.05 U	0.05 U	0.05 U	0.05 U	0.05 U	0.05 U	0.05 U	0.05 U	0.05 U	0.05 U	2.5 U	0.05 U	0.05 U	0.05 U	0.05 U	0.05 U	0.05 U
1,2,4-Trichlorobenzene in mg/kg	4,500	4,500	0.25 U	0.25 U	0.25 U	0.25 U	0.25 U	0.25 U	0.25 U	0.25 U	0.25 U	0.25 U	12 U	0.25 U	0.25 U	0.25 U	0.25 U	0.25 U	0.25 U
1,2,4-Trimethylbenzene in mg/kg			0.05 U	0.05 U	0.05 U	0.05 U	0.28	0.27	0.2	0.05 U	0.05 U	0.05 U	20	0.05 U	0.05 U	0.05 U	0.05 U	0.05 U	0.05 U
1,2-Dibromo-3-chloropropane in mg/kg	160	160	0.5 U	0.5 U	0.5 U	0.5 U	0.5 U	0.5 U	0.5 U	0.5 U	0.5 U	0.5 U	25 U	0.5 U	0.5 U	0.5 U	0.5 U	0.5 U	0.5 U
1,2-Dibromoethane (EDB) in mg/kg	66	66	0.05 U	0.05 U	0.05 U	0.05 U	0.05 U	0.05 U	0.05 U	0.05 U	0.05 U	0.05 U	2.5 U	0.05 U	0.05 U	0.05 U	0.05 U	0.05 U	0.05 U
1,2-Dichlorobenzene in mg/kg	320,000	320,000	0.05 U	0.05 U	0.05 U	0.05 U	0.05 U	0.05 U	0.05 U	0.05 U	0.05 U	0.05 U	2.5 U	0.05 U	0.05 U	0.05 U	0.05 U	0.05 U	0.05 U
1,2-Dichloroethane (EDC) in mg/kg	1,400	1,400	0.05 U	0.05 U	0.05 U	0.05 U	0.05 U	0.05 U	0.05 U	0.05 U	0.05 U	0.05 U	2.5 U	0.05 U	0.05 U	0.05 U	0.05 U	0.05 U	0.05 U
1,2-Dichloropropane in mg/kg	3,600	3,600	0.05 U	0.05 U	0.05 U	0.05 U	0.05 U	0.05 U	0.05 U	0.05 U	0.05 U	0.05 U	2.5 U	0.05 U	0.05 U	0.05 U	0.05 U	0.05 U	0.05 U

Table 17 - Excavation Verification Soil Quality Data for UST 29/Latex Spill Interim Action Area

K-C Worldwide Site Upland Area 110207

			Sidewall Samples in Place				Overexcavated Samples												
Chemical Name	Interim Action Cleanup Level - Saturated Soil	Interim Action Cleanup Level - Unsaturated Soil	UST29-S38 1/9/14 (6 ft) SAT	UST29-S39 1/9/14 (9 ft) SAT	UST29-S40 1/9/14 (9 ft) SAT	UST29-S41 1/10/14 (6 ft) SAT	UST29-B07 12/30/13 (18 ft) OverEx SAT	UST29-B09 1/3/14 (15 ft) OverEx SAT	UST29-B11 1/3/14 (15 ft) OverEx SAT	UST29-S14 1/3/14 (9 ft) OverEx SAT	UST29-S23 1/7/14 (12 ft) OverEx SAT	UST29-S24 1/8/14 (3 ft) OverEx	UST29-S25 1/8/14 (6 ft) OverEx SAT	UST29-S26 1/8/14 (9 ft) OverEx SAT	UST29-S27 1/8/14 (6 ft) OverEx SAT	UST29-S28 1/8/14 (3 ft) OverEx	UST29-S35 1/8/14 (6 ft) OverEx SAT	UST29-S36 1/8/14 (3 ft) OverEx	XY-TPSW2 9/10/13 (8 ft) OverEx
1,3,5-Trimethylbenzene in mg/kg	35,000	35,000	0.05 U	0.05 U	0.05 U	0.05 U	0.05 U	0.07	0.06	0.05 U	0.05 U	0.05 U	6.3	0.05 U	0.05 U	0.05 U	0.05 U	0.05 U	0.05 U
1,3-Dichlorobenzene in mg/kg			0.05 U	0.05 U	0.05 U	0.05 U	0.05 U	0.05 U	0.05 U	0.05 U	0.05 U	0.05 U	2.5 U	0.05 U	0.05 U	0.05 U	0.05 U	0.05 U	0.05 U
1,3-Dichloropropane in mg/kg			0.05 U	0.05 U	0.05 U	0.05 U	0.05 U	0.05 U	0.05 U	0.05 U	0.05 U	0.05 U	2.5 U	0.05 U	0.05 U	0.05 U	0.05 U	0.05 U	0.05 U
1,4-Dichlorobenzene in mg/kg	24,000	24,000	0.05 U	0.05 U	0.05 U	0.05 U	0.05 U	0.05 U	0.05 U	0.05 U	0.05 U	0.05 U	2.5 U	0.05 U	0.05 U	0.05 U	0.05 U	0.05 U	0.05 U
1,4-Dioxane in mg/kg	1312	1312	0.5 UJ	0.5 UJ	0.5 UJ	0.5 UJ	0.5 UJ	0.5 UJ	0.5 UJ	0.5 UJ	0.5 UJ	0.5 UJ	25 UJ	0.5 UJ	0.5 UJ	0.5 UJ	0.5 UJ	0.5 UJ	
2,2-Dichloropropane in mg/kg			0.05 U	0.05 U	0.05 U	0.05 U	0.05 U	0.05 U	0.05 U	0.05 U	0.05 U	0.05 U	2.5 U	0.05 U	0.05 U	0.05 U	0.05 U	0.05 U	0.05 U
2-Butanone in mg/kg	2,100,000	2,100,000	0.5 U	0.5 U	0.5 U	0.5 U	0.5 U	0.5 U	0.5 U	0.5 U	0.5 U	0.5 U	25 U	0.5 U	0.5 U	0.5 U	0.5 U	0.5 U	0.5 U
2-Chlorotoluene in mg/kg	70,000	70,000	0.05 U	0.05 U	0.05 U	0.05 U	0.05 U	0.05 U	0.05 U	0.05 U	0.05 U	0.05 U	2.5 U	0.05 U	0.05 U	0.05 U	0.05 U	0.05 U	0.05 U
2-Hexanone in mg/kg			0.5 U	0.5 U	0.5 U	0.5 U	0.5 U	0.5 U	0.5 U	0.5 U	0.5 U	0.5 U	25 U	0.5 U	0.5 U	0.5 U	0.5 U	0.5 U	0.5 U
4-Chlorotoluene in mg/kg			0.05 U	0.05 U	0.05 U	0.05 U	0.05 U	0.05 U	0.05 U	0.05 U	0.05 U	0.05 U	2.5 U	0.05 U	0.05 U	0.05 U	0.05 U	0.05 U	0.05 U
4-Methyl-2-pentanone in mg/kg	280,000	280,000	0.5 U	0.5 U	0.5 U	0.5 U	0.5 U	0.5 U	0.5 U	0.5 U	0.5 U	0.5 U	25 U	0.5 U	0.5 U	0.5 U	0.5 U	0.5 U	0.5 U
Acetone in mg/kg	3,200,000	3,200,000	0.5 U	0.5 U	0.5 U	0.5 U	0.5 U	0.5 U	0.5 U	0.5 U	0.5 U	0.5 U	25 U	0.5 U	0.5 U	0.5 U	0.5 U	0.5 U	0.5 U
Benzene in mg/kg	2,400	2,400	0.03 U	0.03 U	0.03 U	0.03 U	0.03 U	0.03 U	0.03 U	0.03 U	0.03 U	0.03 U	1.5 U	0.03 U	0.03 U	0.03 U	0.03 U	0.03 U	0.03 U
Bromobenzene in mg/kg			0.05 U	0.05 U	0.05 U	0.05 U	0.05 U	0.05 U	0.05 U	0.05 U	0.05 U	0.05 U	2.5 U	0.05 U	0.05 U	0.05 U	0.05 U	0.05 U	0.05 U
Bromodichloromethane in mg/kg	2,100	2,100	0.05 U	0.05 U	0.05 U	0.05 U	0.05 U	0.05 U	0.05 U	0.05 U	0.05 U	0.05 U	2.5 U	0.05 U	0.05 U	0.05 U	0.05 U	0.05 U	0.05 U
Bromoform in mg/kg	17,000	17,000	0.05 U	0.05 U	0.05 U	0.05 U	0.05 U	0.05 U	0.05 U	0.05 U	0.05 U	0.05 U	2.5 U	0.05 U	0.05 U	0.05 U	0.05 U	0.05 U	0.05 U
Bromomethane in mg/kg	4,900	4,900	0.5 UJ	0.5 UJ	0.5 UJ	0.5 UJ	0.5 U	0.5 U	0.5 U	0.5 U	0.5 U	0.5 U	25 U	0.5 U	0.5 U	0.5 U	0.5 U	0.5 U	0.5 U
Carbon tetrachloride in mg/kg	1,900	1,900	0.05 U	0.05 U	0.05 U	0.05 U	0.05 U	0.05 U	0.05 U	0.05 U	0.05 U	0.05 U	2.5 U	0.05 U	0.05 U	0.05 U	0.05 U	0.05 U	0.05 U
Chlorobenzene in mg/kg	70,000	70,000	0.05 U	0.05 U	0.05 U	0.05 U	0.05 U	0.05 U	0.05 U	0.05 U	0.05 U	0.05 U	2.5 U	0.05 U	0.05 U	0.05 U	0.05 U	0.05 U	0.05 U
Chloroethane in mg/kg			0.5 U	0.5 U	0.5 U	0.5 U	0.5 U	0.5 U	0.5 U	0.5 U	0.5 U	0.5 U	25 U	0.5 U	0.5 U	0.5 U	0.5 U	0.5 U	0.5 U
Chloroform in mg/kg	4,200	4,200	0.05 U	0.05 U	0.05 U	0.05 U	0.05 U	0.05 U	0.05 U	0.05 U	0.05 U	0.05 U	2.5 U	0.05 U	0.05 U	0.05 U	0.05 U	0.05 U	0.05 U
Chloromethane in mg/kg			0.5 U	0.5 U	0.5 U	0.5 U	0.5 U	0.5 U	0.5 U	0.5 U	0.5 U	0.5 U	25 U	0.5 U	0.5 U	0.5 U	0.5 U	0.5 U	0.5 U
cis-1,2-Dichloroethene (DCE) in mg/kg	7,000	7,000	0.05 U	0.05 U	0.05 U	0.05 U	0.05 U	0.05 U	0.05 U	0.05 U	0.05 U	0.05 U	2.5 U	0.05 U	0.05 U	0.05 U	0.05 U	0.05 U	0.05 U
cis-1,3-Dichloropropene in mg/kg			0.05 U	0.05 U	0.05 U	0.05 U	0.05 U	0.05 U	0.05 U	0.05 U	0.05 U	0.05 U	2.5 U	0.05 U	0.05 U	0.05 U	0.05 U	0.05 U	0.05 U
Dibromochloromethane in mg/kg	1,600	1,600	0.05 U	0.05 U	0.05 U	0.05 U	0.05 U	0.05 U	0.05 U	0.05 U	0.05 U	0.05 U	2.5 U	0.05 U	0.05 U	0.05 U	0.05 U	0.05 U	0.05 U
Dibromomethane in mg/kg	35,000	35,000	0.05 U	0.05 U	0.05 U	0.05 U	0.05 U	0.05 U	0.05 U	0.05 U	0.05 U	0.05 U	2.5 U	0.05 U	0.05 U	0.05 U	0.05 U	0.05 U	0.05 U
Dichlorodifluoromethane in mg/kg	700,000	700,000	0.5 U	0.5 U	0.5 U	0.5 U	0.5 U	0.5 U	0.5 U	0.5 U	0.5 U	0.5 U	25 U	0.5 U	0.5 U	0.5 U	0.5 U	0.5 U	0.5 U
Ethylbenzene in mg/kg	350,000	350,000	0.05 U	0.05 U	0.05 U	0.05 U	3	19	15	0.05 U	0.05 U	0.05 U	1,000	0.05 U	0.05 U	0.05 U	0.05 U	0.05 U	0.05 U
Hexachlorobutadiene in mg/kg	1,700	1,700	0.25 U	0.25 U	0.25 U	0.25 U	0.25 U	0.25 U	0.25 U	0.25 U	0.25 U	0.25 U	12 U	0.25 U	0.25 U	0.25 U	0.25 U	0.25 U	0.25 U
Isopropylbenzene in mg/kg	350,000	350,000	0.05 U	0.05 U	0.05 U	0.05 U	12	0.05 U	0.056	0.05 U	0.05 U	0.05 U	4.8	0.05 U	0.89	0.05 U	0.11	0.05 U	0.05 U
Methyl tert-butyl ether (MTBE) in mg/kg	73,000	73,000	0.05 U	0.05 U	0.05 U	0.05 U	0.05 U	0.05 U	0.05 U	0.05 U	0.05 U	0.05 U	2.5 U	0.05 U	0.05 U	0.05 U	0.05 U	0.05 U	0.05 U
Methylene chloride in mg/kg	21,000	21,000	0.5 U	0.5 U	0.5 U	0.5 U	0.5 U	0.5 U	0.5 U	0.5 U	0.5 UJ	0.5 UJ	25 U	0.5 UJ	0.5 UJ	0.5 UJ	0.5 UJ	0.5 UJ	0.5 U
n-Propylbenzene in mg/kg	350,000	350,000	0.05 U	0.05 U	0.05 U	0.05 U	7.7	0.05 U	0.05 U	0.05 U	0.05 U	0.05 U	3.9	0.05 U	0.81	0.05 U	0.24	0.05 U	0.05 U
p-Isopropyltoluene in mg/kg			0.05 U	0.05 U	0.05 U	0.05 U	0.05 U	0.05 U	0.062	0.05 U	0.05 U	0.05 U	2.5 U	0.05 U	0.05 U	0.05 U	0.05 U	0.05 U	0.05 U
sec-Butylbenzene in mg/kg	350,000	350,000	0.05 U	0.05 U	0.05 U	0.05 U	0.54	0.05 U	0.05 U	0.05 U	0.05 U	0.05 U	2.5 U	0.05 U	0.41	0.05 U	0.05 U	0.05 U	0.063
Styrene in mg/kg	700,000	700,000	0.05 U	0.05 U	0.05 U	0.05 U	0.05 U	0.05 U	0.05 U	0.05 U	0.05 U	0.05 U	2.5 U	0.05 U	0.05 U	0.05 U	0.05 U	0.05 U	0.05 U
tert-Butylbenzene in mg/kg	350,000	350,000	0.05 U	0.05 U	0.05 U	0.05 U	0.05 U	0.05 U	0.05 U	0.05 U	0.05 U	0.05 U	2.5 U	0.05 U	0.05 U	0.05 U	0.05 U	0.05 U	0.05 U
Tetrachloroethene (PCE) in mg/kg	21,000	21,000	0.025 U	0.025 U	0.025 U	0.025 U	0.025 U	0.025 U	0.025 U	0.025 U	0.025 U	0.025 U	1.2 U	0.025 U	0.025 U	0.025 U	0.025 U	0.025 U	0.025 U
Toluene in mg/kg	280,000	280,000	0.05 U	0.05 U	0.05 U	0.05 U	0.05 U	0.05 U	0.05 U	0.05 U	0.05 U	0.05 U	12	0.05 U	0.05 U	0.05 U	0.05 U	0.05 U	0.05 U
trans-1,2-Dichloroethene in mg/kg	70,000	70,000	0.05 U	0.05 U	0.05 U	0.05 U	0.05 U	0.05 U	0.05 U	0.05 U	0.05 U	0.05 U	2.5 U	0.05 U	0.05 U	0.05 U	0.05 U	0.05 U	0.05 U
trans-1,3-Dichloropropene in mg/kg			0.05 U	0.05 U	0.05 U	0.05 U	0.05 U	0.05 U	0.05 U	0.05 U	0.05 U	0.05 U	2.5 U	0.05 U	0.05 U	0.05 U	0.05 U	0.05 U	0.05 U
Trichloroethene (TCE) in mg/kg	1,800	1,800	0.03 U	0.03 U	0.03 U	0.03 U	0.03 U	0.03 U	0.03 U	0.03 U	0.03 U	0.03 U	1.5 U	0.03 U	0.03 U	0.03 U	0.03 U	0.03 U	0.03 U
Trichlorofluoromethane in mg/kg	1,100,000	1,100,000	0.5 U	0.5 U	0.5 U	0.5 U	0.5 U	0.5 U	0.5 U	0.5 U	0.5 U	0.5 U	25 U	0.5 U	0.5 U	0.5 U	0.5 U	0.5 U	0.5 U
Vinyl acetate in mg/kg	3,500,000	3,500,000	0.5 UJ	0.5 UJ	0.5 UJ	0.5 UJ	0.5 UJ	0.5 UJ	0.5 UJ	0.5 UJ	0.5 UJ	0.5 UJ	25 UJ	0.5 UJ	0.5 UJ	0.5 UJ	0.5 UJ	0.5 UJ	
Vinyl chloride in mg/kg	88	88	0.05 U	0.05 U	0.05 U	0.05 U	0.05 U	0.05 U	0.05 U	0.05 U	0.05 U	0.05 U	2.5 U	0.05 U	0.05 U	0.05 U	0.05 U	0.05 U	0.05 U
m,p-Xylenes in mg/kg	2.5	49	0.1 U	0.1 U	0.1 U	0.1 U	10	46	53	0.1 U	0.1 U	0.1 U	2,900	0.1 U	0.1 U	0.1 U	0.1 U	0.1 U	0.1 U
o-Xylene in mg/kg	4.1	80	0.05 U	0.05 U	0.05 U	0.05 U	1.5	12	12	0.05 U	0.05 U	0.05 U	690	0.05 U	0.05 U	0.05 U	0.05 U	0.05 U	0.05 U
Naphthalene in mg/kg	70,000	70,000																	0.05 U
Polychlorinated Biphenyls (PCBs)																			
Aroclor 1016 in mg/kg																			0.1 U
Aroclor 1221 in mg/kg																			0.1 U
Aroclor 1232 in mg/kg																			0.1 U
Aroclor 1242 in mg/kg																			0.1 U
Aroclor 1248 in mg/kg																			0.1 U
Aroclor 1254 in mg/kg																			0.1 U
Aroclor 1260 in mg/kg																			0.1 U
Total PCBs (Sum of Aroclors) in mg/kg	10	10																	ND

Notes

Concentrations in shaded cells indicate value exceeds Interim Action Cleanup Level - Saturated Soil. Concentrations in bold text indicate value exceeds Interim Action Cleanup Level - Unsaturated Soil. SAT = Sample of saturated soil; samples without this designation are unsaturated soil.

J = Analyte was positively identified. The reported result is an estimate. U = Analyte was not detected at or above the reported result. UJ = Analyte was not detected at or above the reported estimate. x = The sample chromatographic pattern does not resemble the fuel standard used for quantitation.

Table 18 - Excavation Verification Soil Quality Data for UST 70 Interim Action Area Verification Samples and Residual Exceedances

K-C Worldwide Site Upland Area 110207

			Bottom Samples in Place					Sidewall Samples in Place																
Chemical Name	Interim Action Cleanup Level - Saturated Soil	Interim Action Cleanup Level - Unsaturated Soil	UST70-B01 11/21/13 (11 ft) SAT	UST70-B02 11/21/13 (11 ft) SAT	UST70-B03 11/21/13 (11 ft) SAT	UST70-B04 11/21/13 (11 ft) SAT	UST70-B05 11/21/13 (11 ft) SAT	UST70-S01 11/21/13 (4 ft)	UST70-S02 11/21/13 (8 ft)	UST70-S03 11/21/13 (4 ft)	UST70-S04 11/21/13 (8 ft)	UST70-S05 11/21/13 (4 ft)	UST70-S06 11/21/13 (8 ft)	UST70-S11 11/21/13 (4 ft)	UST70-S12 11/21/13 (8 ft)	UST70-S13 11/21/13 (4 ft)	UST70-S13 FD 11/21/13 (4 ft)	UST70-S14 11/21/13 (8 ft)	UST70-S15 11/21/13 (4 ft)	UST70-S16 11/21/13 (8 ft)	UST70-S16 FD 11/21/13 (8 ft)	UST70-S20 1/3/14 (4 ft)	UST70-S22 1/6/14 (8 ft)	UST70-S22 FD 1/6/14 (8 ft)
Total Petroleum Hydrocarbons (TPH)																								
Diesel Range Hydrocarbons in mg/kg	2,000	2,000	50 U	50 U	50 U	50 U	76 x	50 U	50 U	570	50 U	50 U	50 U	50 U	50 U	50 U	50 U	50 U	50 U	50 U	580	50 U	50 U
Oil Range Hydrocarbons in mg/kg	2,000	2,000	250 U	250 U	250 U	250 U	250 U	250 U	250 U	250 U	250 U	250 U	250 U	250 U	250 U	250 U	250 U	250 U	250 U	250 U	250 U	250 U	250 U	250 U
Total TPHs in mg/kg	2,000	2,000	ND	ND	ND	ND	201	ND	ND	695	ND	ND	ND	ND	ND	ND	ND	ND	ND	ND	ND	705	ND	ND
Metals																								
Arsenic in mg/kg	20	20					3.66	3.48					3.14	8.92						5.36	5.97			
Cadmium in mg/kg	3,500	3,500					1 U	1 U					1 U	1 U						1 U	1 U			
Chromium (Total) in mg/kg	5,300,000	5,300,000																						
Copper in mg/kg	36	36					14.3	12.6					12.9	20.4						11.6	11.9			
Lead in mg/kg	81	1,000					23.4	8.67					7.14	49.4						10.2	9.83			
Mercury in mg/kg	0.1	0.1					0.1 U	0.1 U					0.1 U	0.1 U						0.1 U	0.1 U			
Nickel in mg/kg	48	48					11.7	12.7					11	15.3						14.3	14.8			
Zinc in mg/kg	85	100					27	36.4					22.2	52.9						21.6	24.4			
Polycyclic Aromatic Hydrocarbons (PAHs)																								
Acenaphthene in mg/kg	210,000	210,000	0.01 U	0.018	0.016	0.01 U	0.038	0.01 U	0.01 U	0.13	0.01 U	0.01 U	0.01 U	0.012	0.14	0.01 U	0.01 U	0.01 U	0.01 U	0.01 U	0.01 U		0.01 U	0.01 U
Acenaphthylene in mg/kg			0.01 U	0.01 U	0.01 U	0.01 U	0.01 U	0.01 U	0.01 U	0.01 U	0.01 U	0.01 U	0.02	0.01 U	0.01 U	0.01 U	0.01 U	0.01 U	0.01 U	0.01 U	0.01 U		0.01 U	0.01 U
Anthracene in mg/kg	1,100,000	1,100,000	0.01 U	0.01 U	0.01 U	0.01 U	0.011	0.01 U	0.01 U	0.01 UJ	0.01 U	0.01 U	0.01 U	0.01 U	0.036	0.01 U	0.01 U	0.01 U	0.01 U	0.01 U	0.01 U		0.01 U	0.01 U
Benzo(g,h,i)perylene in mg/kg			0.01 U	0.011	0.01 U	0.012	0.01 U	0.01	0.011	0.01 UJ	0.017	0.01 U	0.058	0.01 U	0.01 U	0.01 U	0.011	0.01 U	0.01 U	0.01 UJ	0.023 J		0.01 U	0.01 U
Fluoranthene in mg/kg	140,000	140,000	0.027	0.065	0.029	0.019	0.064	0.01	0.017	0.023 J	0.044	0.01 U	0.21	0.014	0.18	0.01 U	0.016	0.01 U	0.01 U	0.01 UJ	0.04 J		0.01 U	0.01 U
Fluorene in mg/kg	140,000	140,000	0.01 U	0.01 U	0.01 U	0.01 U	0.026	0.01 U	0.01 U	0.16	0.01 U	0.01 U	0.01 U	0.01 U	0.11	0.01 U	0.01 U	0.01 U	0.01 U	0.01 U	0.01 U		0.01 U	0.01 U
Phenanthrene in mg/kg			0.01 U	0.019	0.01 U	0.011	0.045	0.01 U	0.01 U		0.031	0.01 U	0.19	0.011	0.14	0.01 U	0.01 U	0.01 U	0.01 U	0.01 U	0.01 U		0.01 U	0.01 U
Pyrene in mg/kg	110,000	110,000	0.027	0.063	0.044	0.03	0.078	0.013	0.021	0.035 J	0.071	0.01 U	0.28	0.018	0.13	0.014	0.021	0.01 U	0.01 U	0.01 J	0.05 J		0.01 U	0.01 U
Naphthalene in mg/kg	70,000	70,000	0.01 U	0.011	0.01 U	0.01 U	0.032	0.01 U	0.01 U	0.023	0.01 U	0.01 U	0.01 U	0.022	0.17	0.01 U	0.01 U	0.01 U	0.01 U	0.01 U	0.01 U		0.14	0.14
Benz(a)anthracene in mg/kg			0.01 U	0.023	0.013	0.014	0.016	0.01 U	0.01 U	0.01 UJ	0.026	0.01 U	0.091	0.01 U	0.016	0.01 U	0.01 U	0.01 U	0.01 U	0.01 UJ	0.037 J		0.01 U	0.01 U
Benzo(a)pyrene in mg/kg			0.01 U	0.018	0.01 U	0.016	0.012	0.011	0.013	0.01 UJ	0.029	0.01 U	0.1	0.01 U	0.01 U	0.01 U	0.013	0.01 U	0.01 U	0.01 UJ	0.036 J		0.01 U	0.01 U
Benzo(b)fluoranthene in mg/kg			0.01 U	0.023	0.01 U	0.02	0.018	0.016	0.017	0.016 J	0.03	0.01 U	0.13	0.01 U	0.014	0.012	0.016	0.01 U	0.01	0.01 UJ	0.049 J		0.01 U	0.01 U
Benzo(k)fluoranthene in mg/kg			0.01 U	0.01 U	0.01 U	0.01 U	0.01 U	0.01 U	0.01 U	0.01 UJ	0.01 U	0.01 U	0.046	0.01 U	0.01 U	0.01 U	0.01 U	0.01 U	0.01 U	0.01 UJ	0.019 J		0.01 U	0.01 U
Chrysene in mg/kg			0.01 U	0.021	0.01 U	0.018	0.023	0.01	0.012	0.014 J	0.037	0.01 U	0.16	0.01 U	0.018	0.01 U	0.012	0.01 U	0.01 U	0.01 UJ	0.039 J		0.01 U	0.01 U
Dibenzo(a,h)anthracene in mg/kg			0.01 U	0.01 U	0.01 U	0.01 U	0.01 U	0.01 U	0.01 U	0.01 UJ	0.01 U	0.01 U	0.013	0.01 U	0.01 U	0.01 U	0.01 U	0.01 U	0.01 U	0.01 U	0.01 U		0.01 U	0.01 U
Indeno(1,2,3-cd)pyrene in mg/kg			0.01 U	0.011	0.01 U	0.011	0.01 U	0.011	0.011	0.01 UJ	0.015	0.01 U	0.059	0.01 U	0.01 U	0.01 U	0.01 U	0.01 U	0.01 U	0.01 UJ	0.024 J		0.01 U	0.01 U
Total cPAHs TEQ in mg/kg	0.4	7.9	ND	0.0249	0.00835	0.0217	0.0171	0.0153	0.0174	0.00874 J	0.0375	ND	0.136	ND	0.00968	0.00825	0.0167	ND	0.00805	ND	0.0498		ND	ND
Polychlorinated Biphenyls (PCBs)																								
Aroclor 1016 in mg/kg																								
Aroclor 1221 in mg/kg																								
Aroclor 1232 in mg/kg																								
Aroclor 1242 in mg/kg																								
Aroclor 1248 in mg/kg																								
Aroclor 1254 in mg/kg																								
Aroclor 1260 in mg/kg																								
Total PCBs (Sum of Aroclors) in mg/kg	10	10																						

Notes

Concentrations in shaded cells indicate value exceeds Interim Action Cleanup Level - Saturated Soil.

Concentrations in bold text indicate value exceeds Interim Action Cleanup Level - Unsaturated Soil.

SAT = Sample of saturated soil; samples without this designation are unsaturated soil.

J = Analyte was positively identified. The reported result is an estimate.

U = Analyte was not detected at or above the reported result.

UJ = Analyte was not detected at or above the reported estimate.

x = The sample chromatographic pattern does not resemble the fuel standard used for quantitation.

Table 18 - Excavation Verification Soil Quality Data for UST 70 Interim Action Area Verification Samples and Residual Exceedances

K-C Worldwide Site Upland Area 110207

Chemical Name	Interim Action Cleanup Level - Saturated Soil	Interim Action Cleanup Level - Unsaturated Soil	Overexcavated Samples								
			UST70-S07 11/21/13 (4 ft) OverEx	UST70-S08 11/21/13 (8 ft) OverEx	UST70-S09 11/21/13 (4 ft) OverEx	UST70-S10 11/21/13 (8 ft) OverEx	UST70-S17 12/19/13 (4 ft) OverEx	UST70-S18 12/19/13 (8 ft) OverEx	UST70-S19 12/19/13 (8 ft) OverEx	UST70-S21 1/3/14 (8 ft) OverEx	UST70-TP1 8/30/13 (7 ft) OverEx
Total Petroleum Hydrocarbons (TPH)											
Diesel Range Hydrocarbons in mg/kg	2,000	2,000	**29,000**	**15,000**	50 U	**4,100**	50 U	**2,100**	**5,000**	**2,800**	250
Oil Range Hydrocarbons in mg/kg	2,000	2,000	1,000 x	250 U	250 U	250 U	250 U	250 U	910 x	250 U	250 U
Total TPHs in mg/kg	2,000	2,000	**30,000**	**15,100**	ND	**4,220**	ND	**2,220**	**5,910**	**2,920**	375
Metals											
Arsenic in mg/kg	20	20									4.77
Cadmium in mg/kg	3,500	3,500									1 U
Chromium (Total) in mg/kg	5,300,000	5,300,000									7.59
Copper in mg/kg	36	36									21.3
Lead in mg/kg	81	1,000									29
Mercury in mg/kg	0.1	0.1									0.1 U
Nickel in mg/kg	48	48									13
Zinc in mg/kg	85	100									55.4
Polycyclic Aromatic Hydrocarbons (PAHs)											
Acenaphthene in mg/kg	210,000	210,000	11	7.1	0.01 U	1.1	0.01 U	0.38	0.01 U		
Acenaphthylene in mg/kg			0.1 U	0.1 U	0.01 U	0.1 U	0.01 U	0.01 U	0.01 U		
Anthracene in mg/kg	1,100,000	1,100,000	0.1 U	0.1 U	0.01 U	0.1 U	0.01 U	0.01 U	0.01 U		
Benzo(g,h,i)perylene in mg/kg			0.1 U	0.1 U	0.01 U	0.1 U	0.016	0.01 U	0.026		
Fluoranthene in mg/kg	140,000	140,000	0.6	0.43	0.014	0.44	0.017	0.061	0.01 U		
Fluorene in mg/kg	140,000	140,000	11	6.6	0.01 U	1.2	0.01 U	0.14	0.01 U		
Phenanthrene in mg/kg			9.8	6.7	0.01 U	1.2	0.013	0.16	0.01 U		
Pyrene in mg/kg	110,000	110,000	1	0.56	0.025	0.4	0.021	0.092	0.093		
Naphthalene in mg/kg	70,000	70,000	0.1 U	0.1 U	0.01 U	0.1 U	0.014	0.01 U	0.01 U		
Benz(a)anthracene in mg/kg			0.14	0.1	0.01 U	0.11	0.01	0.02	0.01 U		
Benzo(a)pyrene in mg/kg			0.1 U	0.1 U	0.01 U	0.1 U	0.016	0.01	0.024		
Benzo(b)fluoranthene in mg/kg			0.1 U	0.1 U	0.011	0.1 U	0.023	0.019	0.036		
Benzo(k)fluoranthene in mg/kg			0.1 U	0.1 U	0.01 U	0.1 U	0.01 U	0.01 U	0.01 U		
Chrysene in mg/kg			0.22	0.14	0.01 U	0.11	0.015	0.027	0.035		
Dibenzo(a,h)anthracene in mg/kg			0.1 U	0.1 U	0.01 U	0.1 U	0.01 U	0.01 U	0.01 U		
Indeno(1,2,3-cd)pyrene in mg/kg			0.1 U	0.1 U	0.01 U	0.1 U	0.014	0.01 U	0.019		
Total cPAHs TEQ in mg/kg	0.4	7.9	0.0862	0.0814	0.00815	0.0821	0.0219	0.0157	0.0314		
Polychlorinated Biphenyls (PCBs)											
Aroclor 1016 in mg/kg											0.1 U
Aroclor 1221 in mg/kg											0.1 U
Aroclor 1232 in mg/kg											0.1 U
Aroclor 1242 in mg/kg											0.1 U
Aroclor 1248 in mg/kg											0.1 U
Aroclor 1254 in mg/kg											0.1 U
Aroclor 1260 in mg/kg											0.1 U
Total PCBs (Sum of Aroclors) in mg/kg	10	10									ND

Notes

Concentrations in shaded cells indicate value exceeds Interim Action Cleanup Level - Saturated Soil.
Concentrations in bold text indicate value exceeds Interim Action Cleanup Level - Unsaturated Soil.
SAT = Sample of saturated soil; samples without this designation are unsaturated soil.
J = Analyte was positively identified. The reported result is an estimate.
U = Analyte was not detected at or above the reported result.
UJ = Analyte was not detected at or above the reported estimate.
x = The sample chromatographic pattern does not resemble the fuel standard used for quantitation.

Table 19 - Excavation Verification Soil Quality Data for USTs 71, 72, 73 Interim Action Area

K-C Worldwide Site Upland Area 110207

Chemical Name	Interim Action Cleanup Level - Saturated Soil	Interim Action Cleanup Level - Unsaturated Soil	Bottom Samples in Place																		
			BUST-B01 11/7/13 (8 ft)	BUST-B02 11/7/13 (8 ft)	BUST-B03 11/7/13 (16 ft) SAT	BUST-B04 11/7/13 (16 ft) SAT	BUST-B05 11/8/13 (18 ft) SAT	BUST-B06 11/8/13 (18 ft) SAT	BUST-B07 11/8/13 (19 ft) SAT	BUST-B08 11/8/13 (19 ft) SAT	BUST-B09 11/8/13 (21 ft) SAT	BUST-B10 11/8/13 (19 ft) SAT	BUST-B11 11/8/13 (19 ft) SAT	BUST-B20 11/12/13 (6 ft)	BUST-B21 11/13/13 (18 ft) SAT	BUST-B22 11/15/13 (5 ft)	BUST-B24 11/15/13 (4 ft)	BUST-B26 11/15/13 (6 ft)	BUST-B29 11/19/13 (12 ft) SAT	BUST-B30 11/19/13 (12 ft) SAT	BUST-B31 11/19/13 (12 ft) SAT	BUST-B32 11/19/13 (12 ft) SAT
Total Petroleum Hydrocarbons (TPH)																					
Bunker C in mg/kg	2,000	2,000	420	250 U	250 U	250 U	250 U	250 U	250 U	1,200	250 U	250 U	250 U	250 U	250 U	250 U	250 U	250 U	250 U	250 U	250 U
Metals																					
Antimony in mg/kg	1,400	1,400														1 U	1 U	1 U	1 U	1 U	1 U
Arsenic in mg/kg	20	20	4.3						2.8							3.81	2.23	3.99	1.53	2.85	2.1	1.86
Cadmium in mg/kg	3,500	3,500	1 U						1 U							1 U	1 U	1 U	1 U	1 U	1 U	1 U
Chromium (Total) in mg/kg	5,300,000	5,300,000																				
Copper in mg/kg	36	36	12.6						4.2							12.5	18.5	14.2	3.29	3.8	5.48	4.19
Lead in mg/kg	81	1,000	1.96						1.23							2.07	8.66	2.14	1 U	1 U	6.64	1.36
Mercury in mg/kg	0.1	0.1	0.1 U						0.1 U							0.1 U	**0.11**	0.1 U	0.1 U	0.1 U	0.1 U	0.1 U
Nickel in mg/kg	48	48	15.1						10.2							18.8	11	17.9	9.67	11.1	10.6	11.4
Zinc in mg/kg	85	100	18.8						8.06							26.4	21.5	24.2	3.92 J	6.09 J	10.1 J	7.72 J
Polycyclic Aromatic Hydrocarbons (PAHs)																					
Acenaphthene in mg/kg	210,000	210,000	0.01 U	0.01 U	0.01 U	0.01 U	0.01 U	0.01 U	0.01 U	0.46	0.01 U	0.01 U	0.01 U	0.01 U	0.01 U	0.01 U	0.01 U	0.01 U	0.01 U	0.01 U	0.01 U	0.01 U
Acenaphthylene in mg/kg			0.01 U	0.01 U	0.01 U	0.01 U	0.01 U	0.01 U	0.01 U	0.2 U	0.01 U	0.01 U	0.01 U	0.01 U	0.01 U	0.01 U	0.01 U	0.01 U	0.01 U	0.01 U	0.01 U	0.01 U
Anthracene in mg/kg	1,100,000	1,100,000	0.01 U	0.01 U	0.01 U	0.01 U	0.01 U	0.01 U	0.01 U	0.7	0.013	0.011	0.01 U	0.01 U	0.01 U	0.01 U	0.01 U	0.01 U	0.01 U	0.01 U	0.01 U	0.01 U
Benzo(g,h,i)perylene in mg/kg			0.01 U	0.01 U	0.01 U	0.01 U	0.01 U	0.01 U	0.01 U	0.2 U	0.01 U	0.014	0.01 U	0.01 U	0.01 U	0.01 U	0.01 U	0.01 U	0.01 U	0.01 U	0.01 U	0.01 U
Fluoranthene in mg/kg	140,000	140,000	0.01 U	0.01 U	0.01 U	0.01 U	0.01 U	0.01 U	0.01 U	0.2 U	0.01 U	0.01 U	0.01 U	0.01 U	0.01 U	0.01 U	0.01 U	0.01 U	0.01 U	0.01 U	0.01 U	0.01 U
Fluorene in mg/kg	140,000	140,000	0.01 U	0.01 U	0.01 U	0.01 U	0.01 U	0.01 U	0.01 U	0.25	0.01 U	0.01 U	0.01 U	0.01 U	0.01 U	0.01 U	0.01 U	0.01 U	0.01 U	0.01 U	0.01 U	0.01 U
Phenanthrene in mg/kg			0.01 U	0.01 U	0.01 U	0.01 U	0.01 U	0.01 U	0.01 U	0.95	0.013	0.01 U	0.01 U	0.01 U	0.01 U	0.01 U	0.01 U	0.01 U	0.01 U	0.01 U	0.01 U	0.01 U
Pyrene in mg/kg	110,000	110,000	0.01 U	0.01 U	0.01 U	0.011	0.01	0.01 U	0.01 U	1.2	0.023	0.019	0.01 U	0.01 U	0.01 U	0.01 U	0.01 U	0.01 U	0.01 U	0.01 U	0.022	0.01 U
Naphthalene in mg/kg	70,000	70,000	0.01 U	0.01 U	0.01 U	0.01 U	0.01 U	0.01 U	0.01 U	0.2 U	0.01 U	0.01 U	0.01 U	0.01 U	0.01 U	0.01 U	0.01 U	0.01 U	0.01 U	0.01 U	0.01 U	0.01 U
Benz(a)anthracene in mg/kg			0.01 U	0.01 U	0.01 U	0.01 U	0.01 U	0.01 U	0.01 U	0.46	0.01 U	0.01 U	0.01 U	0.01 U	0.01 U	0.01 U	0.01 U	0.01 U	0.01 U	0.01 U	0.01 U	0.01 U
Benzo(a)pyrene in mg/kg			0.01 U	0.01 U	0.01 U	0.01 U	0.01 U	0.01 U	0.01 U	0.22	0.01 U	0.011	0.01 U	0.01 U	0.01 U	0.01 U	0.01 U	0.01 U	0.01 U	0.01 U	0.01 U	0.01 U
Benzo(b)fluoranthene in mg/kg			0.01 U	0.01 U	0.01 U	0.01 U	0.01 U	0.01 U	0.01 U	0.2 U	0.01 U	0.01 U	0.01 U	0.01 U	0.01 U	0.01 U	0.01 U	0.01 U	0.01 U	0.01 U	0.01 U	0.01 U
Benzo(k)fluoranthene in mg/kg			0.01 U	0.01 U	0.01 U	0.01 U	0.01 U	0.01 U	0.01 U	0.2 U	0.01 U	0.01 U	0.01 U	0.01 U	0.01 U	0.01 U	0.01 U	0.01 U	0.01 U	0.01 U	0.01 U	0.01 U
Chrysene in mg/kg			0.01 U	0.01 U	0.01 U	0.01 U	0.01 U	0.01 U	0.01 U	0.52	0.01 U	0.011	0.01 U	0.01 U	0.01 U	0.01 U	0.01 U	0.01 U	0.01 U	0.01 U	0.017	0.01 U
Dibenzo(a,h)anthracene in mg/kg			0.01 U	0.01 U	0.01 U	0.01 U	0.01 U	0.01 U	0.01 U	0.2 U	0.01 U	0.01 U	0.01 U	0.01 U	0.01 U	0.01 U	0.01 U	0.01 U	0.01 U	0.01 U	0.01 U	0.01 U
Indeno(1,2,3-cd)pyrene in mg/kg			0.01 U	0.01 U	0.01 U	0.01 U	0.01 U	0.01 U	0.01 U	0.2 U	0.01 U	0.011	0.01 U	0.01 U	0.01 U	0.01 U	0.01 U	0.01 U	0.01 U	0.01 U	0.01 U	0.01 U
Total cPAHs TEQ in mg/kg	0.4	7.9	ND	ND	ND	ND	ND	ND	ND	0.311	ND	0.0142	ND	ND	ND	ND	ND	ND	ND	ND	0.00767	ND
Polychlorinated Biphenyls (PCBs)																						
Aroclor 1016 in mg/kg																						
Aroclor 1221 in mg/kg																						
Aroclor 1232 in mg/kg																						
Aroclor 1242 in mg/kg																						
Aroclor 1248 in mg/kg																						
Aroclor 1254 in mg/kg																						
Aroclor 1260 in mg/kg																						
Total PCBs (Sum of Aroclors) in mg/kg	10	10																				

Notes

Concentrations in shaded cells indicate value exceeds Interim Action Cleanup Level - Saturated Soil.

Concentrations in bold text indicate value exceeds Interim Action Cleanup Level - Unsaturated Soil.

SAT = Sample of saturated soil; samples without this designation are unsaturated soil.

J = Analyte was positively identified. The reported result is an estimate.

U = Analyte was not detected at or above the reported result.

UJ = Analyte was not detected at or above the reported estimate.

Table 19 - Excavation Verification Soil Quality Data for USTs 71, 72, 73 Interim Action Area

K-C Worldwide Site Upland Area 110207

			Bottom Samples in Place							Sidewall Samples in Place												
Chemical Name	Interim Action Cleanup Level - Saturated Soil	Interim Action Cleanup Level - Unsaturated Soil	BUST-B33 11/19/13 (12 ft) SAT	BUST-B34 11/21/13 (12 ft) SAT	BUST-B35 11/21/13 (12 ft) SAT	BUST-B37 11/21/13 (10 ft) SAT	BUST-B38 11/21/13 (8 ft)	BUST-B40 12/3/13 (12 ft) SAT	BUST-B41 12/3/13 (12 ft) SAT	BUST-S04 11/7/13 (10 ft) SAT	BUST-S05 11/7/13 (7 ft)	BUST-S05 FD 11/7/13 (7 ft)	BUST-S06 11/7/13 (8 ft)	BUST-S07 11/7/13 (4 ft)	BUST-S08 11/7/13 (10 ft) SAT	BUST-S09 11/7/13 (5 ft)	BUST-S10 11/7/13 (10 ft) SAT	BUST-S11 11/7/13 (5 ft)	BUST-S12 11/7/13 (10 ft) SAT	BUST-S13 11/7/13 (5 ft)	BUST-S14 11/7/13 (9 ft) SAT	BUST-S15 11/7/13 (5 ft)
Total Petroleum Hydrocarbons (TPH)																						
Bunker C in mg/kg	2,000	2,000	250 U	250 U	250 U	1,700	250 U	250 U	250 U	250 U	250 U	250 U	250 U	250 U	380	250 U	250 U	710	250 U	250 U	250 U	250 U
Metals																						
Antimony in mg/kg	1,400	1,400	1 U	1 U	1 U	1 U	1 U	1 U	1 U													
Arsenic in mg/kg	20	20	2.87	4.19	6.12	4.54	3.42	1 U	1 U		1 U	1 U	1 U					3.79				
Cadmium in mg/kg	3,500	3,500	1 U	1 U	1 U	1 U	1 U	1 U	1 U		1 U	1 U	1 U					1 U				
Chromium (Total) in mg/kg	5,300,000	5,300,000																				
Copper in mg/kg	36	36	3.92	16.6	21	26.5	9.28	5.36	4.5		5.23	5.09	5.17					12.2				
Lead in mg/kg	81	1,000	1.33	2.23	3.49	21.2	1.53	1.65	1.76		4.58	4.85	2.38					2.12				
Mercury in mg/kg	0.1	0.1	0.1 U	0.1 U	0.1 U	**0.17**	0.1 U	0.1 U	**0.11**		0.1 U	0.1 U	0.1 U					0.1 U				
Nickel in mg/kg	48	48	10.5	20.3	20.1	20.4	15.8	16.4	9.93		7.98	9.09	11.3					12.6				
Zinc in mg/kg	85	100	6.73	33.4	32.8	43.9	26.8	13.9	7.63		11.3	11.4	31.4					18.4				
Polycyclic Aromatic Hydrocarbons (PAHs)																						
Acenaphthene in mg/kg	210,000	210,000	0.01 U	0.01 U	0.01 U	0.1	0.01 U	0.01 U	0.01 U	0.01 U	0.01 U	0.01 U	0.01 U	0.01 U	0.017	0.01 U	0.01 U	0.063	0.01 U	0.01 U	0.01 U	0.01 U
Acenaphthylene in mg/kg			0.01 U	0.01 U	0.01 U	0.01 U	0.01 U	0.01 U	0.01 U	0.01 U	0.01 U	0.01 U	0.01 U	0.01 U	0.01 U	0.01 U	0.01 U	0.01 U	0.01 U	0.01 U	0.01 U	0.01 U
Anthracene in mg/kg	1,100,000	1,100,000	0.01 U	0.01 U	0.01 U	0.088	0.01 U	0.01 U	0.01 U	0.01 U	0.01 U	0.01 U	0.01 U	0.01 U	0.021	0.01 U	0.01 U	0.09	0.01 U	0.01 U	0.01 U	0.01 U
Benzo(g,h,i)perylene in mg/kg			0.01 U	0.01 U	0.01 U	0.045	0.01 U	0.01 U	0.01 U	0.01 U	0.01 U	0.01 U	0.01 U	0.01 U	0.01 U	0.01 U	0.01 U	0.023	0.01 U	0.01 U	0.01 U	0.01 U
Fluoranthene in mg/kg	140,000	140,000	0.01 U	0.03	0.01 U	0.12	0.01 U	0.01 U	0.01 U	0.018	0.01 U	0.01 U	0.01 U	0.01 U	0.01 U	0.01 U	0.01 U	0.043	0.01 U	0.019	0.01 U	0.01 U
Fluorene in mg/kg	140,000	140,000	0.01 U	0.01 U	0.01 U	0.058	0.01 U	0.01 U	0.01 U	0.01 U	0.01 U	0.01 U	0.01 U	0.01 U	0.01 U	0.01 U	0.01 U	0.068	0.01 U	0.01 U	0.01 U	0.01 U
Phenanthrene in mg/kg			0.01 U	0.026	0.01 U	0.15	0.01 U	0.01 U	0.01 U	0.01 U	0.01 U	0.01 U	0.01 U	0.01 U	0.01 U	0.01 U	0.01 U	0.28	0.01 U	0.011	0.01 U	0.01 U
Pyrene in mg/kg	110,000	110,000	0.01 U	0.03	0.01 U	0.35	0.01 U	0.01 U	0.01 U	0.023	0.01 U	0.01 U	0.01 U	0.01 U	0.034	0.014	0.01 U	0.2	0.01 U	0.025	0.015	0.01 U
Naphthalene in mg/kg	70,000	70,000	0.01 U	0.01 U	0.01 U	0.01 U	0.01 U	0.01 U	0.01 U	0.01 U	0.01 U	0.01 U	0.01 U	0.01 U	0.01 U	0.01 U	0.01 U	0.01 U	0.01 U	0.01 U	0.01 U	0.01 U
Benz(a)anthracene in mg/kg			0.01 U	0.015	0.01 U	0.11	0.01 U	0.01 U	0.01 U	0.01 U	0.01 U	0.01 U	0.01 U	0.01 U	0.011	0.01 U	0.01 U	0.077	0.01 U	0.01 U	0.01 U	0.01 U
Benzo(a)pyrene in mg/kg			0.01 U	0.012	0.01 U	0.064	0.01 U	0.01 U	0.01 U	0.01 U	0.01 U	0.01 U	0.01 U	0.01 U	0.01 U	0.01 U	0.01 U	0.038	0.01 U	0.01 U	0.01 U	0.01 U
Benzo(b)fluoranthene in mg/kg			0.01 U	0.016	0.01 U	0.062	0.01 U	0.01 U	0.01 U	0.01 U	0.01 U	0.01 U	0.01 U	0.01 U	0.01 U	0.01 U	0.01 U	0.017	0.01 U	0.01 U	0.01 U	0.01 U
Benzo(k)fluoranthene in mg/kg			0.01 U	0.01 U	0.01 U	0.012	0.01 U	0.01 U	0.01 U	0.01 U	0.01 U	0.01 U	0.01 U	0.01 U	0.01 U	0.01 U	0.01 U	0.01 U	0.01 U	0.01 U	0.01 U	0.01 U
Chrysene in mg/kg			0.01 U	0.016	0.01 U	0.13	0.01 U	0.01 U	0.01 U	0.01 U	0.01 U	0.01 U	0.01 U	0.01 U	0.018	0.01 U	0.01 U	0.11	0.01 U	0.01 U	0.01 U	0.01 U
Dibenzo(a,h)anthracene in mg/kg			0.01 U	0.01 U	0.01 U	0.01 U	0.01 U	0.01 U	0.01 U	0.01 U	0.01 U	0.01 U	0.01 U	0.01 U	0.01 U	0.01 U	0.01 U	0.01 U	0.01 U	0.01 U	0.01 U	0.01 U
Indeno(1,2,3-cd)pyrene in mg/kg			0.01 U	0.01 U	0.01 U	0.025	0.01 U	0.01 U	0.01 U	0.01 U	0.01 U	0.01 U	0.01 U	0.01 U	0.01 U	0.01 U	0.01 U	0.01 U	0.01 U	0.01 U	0.01 U	0.01 U
Total cPAHs TEQ in mg/kg	0.4	7.9	ND	0.0168	ND	0.0867	ND	ND	ND	ND	ND	ND	ND	ND	0.00828	ND	ND	0.05	ND	ND	ND	ND
Polychlorinated Biphenyls (PCBs)																						
Aroclor 1016 in mg/kg																						
Aroclor 1221 in mg/kg																						
Aroclor 1232 in mg/kg																						
Aroclor 1242 in mg/kg																						
Aroclor 1248 in mg/kg																						
Aroclor 1254 in mg/kg																						
Aroclor 1260 in mg/kg																						
Total PCBs (Sum of Aroclors) in mg/kg	10	10																				

Notes

Concentrations in shaded cells indicate value exceeds Interim Action Cleanup Level - Saturated Soil.

Concentrations in bold text indicate value exceeds Interim Action Cleanup Level - Unsaturated Soil.

SAT = Sample of saturated soil; samples without this designation are unsaturated soil.

J = Analyte was positively identified. The reported result is an estimate.

U = Analyte was not detected at or above the reported result.

UJ = Analyte was not detected at or above the reported estimate.

Table 19 - Excavation Verification Soil Quality Data for USTs 71, 72, 73 Interim Action Area

K-C Worldwide Site Upland Area 110207

Chemical Name	Interim Action Cleanup Level - Saturated Soil	Interim Action Cleanup Level - Unsaturated Soil	Sidewall Samples in Place																		
			BUST-S18 11/12/13 (8 ft)	BUST-S19 11/12/13 (5 ft)	BUST-S20 11/12/13 (8 ft)	BUST-S24 11/15/13 (3 ft)	BUST-S30 11/15/13 (3 ft)	BUST-S31 11/15/13 (3 ft)	BUST-S32 11/21/13 (8 ft) SAT	BUST-S33 11/21/13 (12 ft) SAT	BUST-S34 11/21/13 (4 ft)	BUST-S35 11/21/13 (8 ft) SAT	BUST-S36 11/21/13 (12 ft) SAT	BUST-S37 11/19/13 (4 ft)	BUST-S38 11/19/13 (8 ft) SAT	BUST-S39 11/19/13 (12 ft) SAT	BUST-S40 11/19/13 (4 ft)	BUST-S41 11/19/13 (8 ft) SAT	BUST-S42 11/19/13 (12 ft) SAT	BUST-S43 11/19/13 (4 ft)	BUST-S43 FD 11/19/13 (4 ft)	BUST-S44 11/19/13 (8 ft)
Total Petroleum Hydrocarbons (TPH)																					
Bunker C in mg/kg	2,000	2,000	250 U	250 U	250 U	250 U	250 U	1,400	560	1,200	250 U	250 U	250 U	250 U	250 U	250 U	250 U	250 U	250 U	250 U	250 U
Metals																					
Antimony in mg/kg	1,400	1,400				1.16	1 U	1.43	1 U	1 U	1 U	1 U	1 U	1 U	1 U	1 U	1 U	1 U	1 U	1 U	1 U
Arsenic in mg/kg	20	20				1.47	6.01	8.34	5.13	7.97	5.98	4.67	4.53	1.22	1 U	1 U	1 U	1 U	2.88	1 UJ	2.44 J	1 U
Cadmium in mg/kg	3,500	3,500				1 U	1 U	1 U	1 U	1 U	1 U	1 U	1 U	1 U	1 U	1 U	1 U	1 U	1 U	1 U	1 U	1 U
Chromium (Total) in mg/kg	5,300,000	5,300,000																			
Copper in mg/kg	36	36				9.82	23.6	33.3	17.8	**74.5**	**36.9**	**62.5**	16.1	7.9	4.76	8.23	2.44	3.12	7.8	19.1 J	3.62 J	6.01
Lead in mg/kg	81	1,000				1.46	17.3	26.5	3.62	32.6	6.39	2.28	2.39	3.04	1.91	1.68	1.51	1 U	7.59	6.16 J	1 UJ	1.94
Mercury in mg/kg	0.1	0.1				0.1 U	**0.19**	**0.21**	0.1 U	**0.13**	0.1 U	0.1 U	0.1 U	0.1 U	**0.17**	**0.22**	0.1 U	0.1 U	**0.17**	0.1 U	0.1 U	0.1 U
Nickel in mg/kg	48	48				20.9	12	15	46.1	19.2	15.3	14.6	16.4	5.21	6.03	6.9	5.99	7.97	15.5	22.3 J	10.4 J	7.65
Zinc in mg/kg	85	100				13.3	30	45.2	46.1	71.4	27.1	27.4	24.3	5.92	5.03	6.78	3 J	3.98 J	18 J	25.6 J	6.46 J	7.22 J
Polycyclic Aromatic Hydrocarbons (PAHs)																					
Acenaphthene in mg/kg	210,000	210,000	0.01 U	0.01 U	0.01 U	0.01 U	0.01 U	0.1 U	0.01 U	0.1 U	0.01 U	0.01 U	0.01 U	0.01 U	0.01 U	0.01 U	0.01 U	0.01 U	0.01 U	0.01 U	0.01 U	0.01 U
Acenaphthylene in mg/kg			0.01 U	0.01 U	0.01 U	0.01 U	0.01 U	0.1 U	0.01 U	0.1 U	0.01 U	0.01 U	0.01 U	0.01 U	0.01 U	0.01 U	0.01 U	0.01 U	0.01	0.01 U	0.01 U	0.01 U
Anthracene in mg/kg	1,100,000	1,100,000	0.01 U	0.01 U	0.01 U	0.01 U	0.011	0.1	0.01 U	0.1 U	0.01 U	0.01 U	0.01 U	0.01 U	0.01 U	0.01 U	0.01 U	0.01 U	0.01 U	0.01 U	0.01 U	0.01 U
Benzo(g,h,i)perylene in mg/kg			0.01 U	0.01 U	0.01 U	0.01 U	0.029	0.37	0.012	0.26	0.01 U	0.01 U	0.01 U	0.01 U	0.01 U	0.01 U	0.01 U	0.01 U	0.023	0.01 U	0.01 U	0.01 U
Fluoranthene in mg/kg	140,000	140,000	0.01 U	0.012	0.01 U	0.01 U	0.057	0.81	0.035	0.34	0.01 U	0.01 U	0.01 U	0.01 U	0.01 U	0.01 U	0.01 U	0.01 U	0.038	0.01 U	0.01 U	0.01 U
Fluorene in mg/kg	140,000	140,000	0.01 U	0.01 U	0.01 U	0.01 U	0.01 U	0.1 U	0.01 U	0.1 U	0.01 U	0.01 U	0.01 U	0.01 U	0.01 U	0.01 U	0.01 U	0.01 U	0.01 U	0.01 U	0.01 U	0.01 U
Phenanthrene in mg/kg			0.01 U	0.01 U	0.01 U	0.01 U	0.05	0.74	0.01 U	0.2	0.01 U	0.01 U	0.01 U	0.01 U	0.01 U	0.01 U	0.01 U	0.01 U	0.013	0.01 U	0.01 U	0.01 U
Pyrene in mg/kg	110,000	110,000	0.01 U	0.023	0.01 U	0.01 U	0.074	1.4	0.049	0.31	0.01 U	0.01 U	0.01 U	0.01 U	0.01 U	0.027	0.01 U	0.01 U	0.053	0.01 U	0.01 U	0.01 U
Naphthalene in mg/kg	70,000	70,000	0.01 U	0.011	0.01 U	0.01 U	0.029	0.1 U	0.01 U	0.1 U	0.01 U	0.01 U	0.01 U	0.01 U	0.01 U	0.01 U	0.01 U	0.01 U	0.01 U	0.01 U	0.01 U	0.01 U
Benz(a)anthracene in mg/kg			0.01 U	0.01 U	0.01 U	0.01 U	0.024	0.35	0.022	0.17	0.01 U	0.01 U	0.01 U	0.01 U	0.01 U	0.01 U	0.01 U	0.01 U	0.023	0.01 U	0.01 U	0.01 U
Benzo(a)pyrene in mg/kg			0.01 U	0.01 U	0.01 U	0.01 U	0.026	0.47	0.018	0.18	0.01 U	0.01 U	0.01 U	0.01 U	0.01 U	0.01 U	0.01 U	0.01 U	0.022	0.01 U	0.01 U	0.01 U
Benzo(b)fluoranthene in mg/kg			0.01 U	0.01 U	0.01 U	0.01 U	0.04	0.41	0.024	0.22	0.01 U	0.01 U	0.01 U	0.01 U	0.01 U	0.01 U	0.01 U	0.01 U	0.037	0.01 U	0.01 U	0.01 U
Benzo(k)fluoranthene in mg/kg			0.01 U	0.01 U	0.01 U	0.01 U	0.01 U	0.12	0.01 U	0.1 U	0.01 U	0.01 U	0.01 U	0.01 U	0.01 U	0.01 U	0.01 U	0.01 U	0.01 U	0.01 U	0.01 U	0.01 U
Chrysene in mg/kg			0.01 U	0.01 U	0.01 U	0.01 U	0.043	0.6	0.023	0.18	0.01 U	0.01 U	0.01 U	0.01 U	0.01 U	0.01 U	0.01 U	0.01 U	0.032	0.01 U	0.01 U	0.01 U
Dibenzo(a,h)anthracene in mg/kg			0.01 U	0.01 U	0.01 U	0.01 U	0.01 U	0.1 U	0.01 U	0.1 U	0.01 U	0.01 U	0.01 U	0.01 U	0.01 U	0.01 U	0.01 U	0.01 U	0.01 U	0.01 U	0.01 U	0.01 U
Indeno(1,2,3-cd)pyrene in mg/kg			0.01 U	0.01 U	0.01 U	0.01 U	0.022	0.24	0.01	0.14	0.01 U	0.01 U	0.01 U	0.01 U	0.01 U	0.01 U	0.01 U	0.01 U	0.018	0.01 U	0.01 U	0.01 U
Total cPAHs TEQ in mg/kg	0.4	7.9	ND	ND	ND	ND	0.036	0.593	0.0248	0.245	ND	ND	ND	ND	ND	ND	ND	ND	0.0311	ND	ND	ND
Polychlorinated Biphenyls (PCBs)																					
Aroclor 1016 in mg/kg																					
Aroclor 1221 in mg/kg																					
Aroclor 1232 in mg/kg																					
Aroclor 1242 in mg/kg																					
Aroclor 1248 in mg/kg																					
Aroclor 1254 in mg/kg																					
Aroclor 1260 in mg/kg																					
Total PCBs (Sum of Aroclors) in mg/kg	10	10																			

Notes

Concentrations in shaded cells indicate value exceeds Interim Action Cleanup Level - Saturated Soil.

Concentrations in bold text indicate value exceeds Interim Action Cleanup Level - Unsaturated Soil.

SAT = Sample of saturated soil; samples without this designation are unsaturated soil.

J = Analyte was positively identified. The reported result is an estimate.

U = Analyte was not detected at or above the reported result.

UJ = Analyte was not detected at or above the reported estimate.

Table 19 - Excavation Verification Soil Quality Data for USTs 71, 72, 73 Interim Action Area

K-C Worldwide Site Upland Area 110207

			Sidewall Samples in Place																		
Chemical Name	Interim Action Cleanup Level - Saturated Soil	Interim Action Cleanup Level - Unsaturated Soil	BUST-S46 11/19/13 (4 ft)	BUST-S46A 11/19/13 (8 ft)	BUST-S47 11/19/13 (12 ft) SAT	BUST-S48 11/19/13 (4 ft)	BUST-S49 11/19/13 (8 ft)	BUST-S50 11/19/13 (12 ft) SAT	BUST-S51 11/19/13 (4 ft)	BUST-S52 11/19/13 (8 ft)	BUST-S53 11/19/13 (12 ft) SAT	BUST-S54 11/20/13 (8 ft) SAT	BUST-S55 11/20/13 (12 ft) SAT	BUST-S56 11/20/13 (8 ft) SAT	BUST-S57 11/20/13 (12 ft) SAT	BUST-S59 12/3/13 (12 ft) SAT	BUST-S60 12/3/13 (6 ft)	BUST-S61 12/3/13 (12 ft) SAT	BUST-S63 12/12/13 (3 ft)	BUST-S64 12/12/13 (6 ft)	BUST-S65 12/12/13 (9 ft) SAT	BUST-S66 12/12/13 (3 ft)
Total Petroleum Hydrocarbons (TPH)																					
Bunker C in mg/kg	2,000	2,000	250 U	250 U	250 U	250 U	250 U	250 U	250 U	250 U	250 U	250 U	250 U	250 U	250 U	250 U	250 U	250 U	250 U	250 U	550
Metals																					
Antimony in mg/kg	1,400	1,400	1 U	1 U	1 U	1 U	1 U	1 U	1 U	1 U	1 U	1 U	1 U	1 U	1 U	1 U	1 U	1 U	1 U	1 U	1 U
Arsenic in mg/kg	20	20	2.65	1.55	1.55	7.65	1.75	1 U	1 U	1.05	1 U	6.77	4.15	3.36	1.7	1 U	1 U	1 U	3.46	3.97	3.35	4.54
Cadmium in mg/kg	3,500	3,500	1 U	1 U	1 U	1 U	1 U	1 U	1 U	1 U	1 U	1 U	1 U	1 U	1 U	1 U	1 U	1 U	1 U	1 U	1 U	1 U
Chromium (Total) in mg/kg	5,300,000	5,300,000																				
Copper in mg/kg	36	36	9.71	7.06	4.73	10	4.33	4.22	3.91	4.46	3.43	20	6.36	14.1	4.98	5.05	3.62	6.71	25.3	12.8	8.85	34.1
Lead in mg/kg	81	1,000	7.4	1.98	1 U	2.09	1 U	1 U	1.81	1.11	1 U	2.24	1 U	3.76	1.22	1.37	1.13 J	2.76	2.66	2.21	1.62	9.95
Mercury in mg/kg	0.1	0.1	**0.11**	0.1 U	0.1 U	0.1 U	0.1 U	0.1 U	0.1 U	0.1 U	0.1 U	0.1 U	0.1 U	0.1 U	0.1 U	0.1 U	0.1 U	0.1 U	0.1 U	0.1 U	0.1 U	0.1 U
Nickel in mg/kg	48	48	10.4	7.59	17	11.2	7.77	7.06	7.1	7.7	6.57	18.8	15.2	20.4	10.9	9.71	7.65	11	11.3	17.3	16.5	22.7
Zinc in mg/kg	85	100	86 J	6.8 J	7.2 J	16	7.09	10.8	7.14	5.74	5.89	30.3	10.3	39.1	9.21	6.13	5.08	10.6	90.7	21.8	21	36.5
Polycyclic Aromatic Hydrocarbons (PAHs)																					
Acenaphthene in mg/kg	210,000	210,000	0.25	0.01 U	0.01 U	0.01 U	0.01 U	0.01 U	0.01 U	0.01 U	0.01 U	0.011	0.01 U	0.01 U	0.01 U	0.01 U	0.01 U	0.01 U	0.01 U	0.01 U	0.01 U	0.01 U
Acenaphthylene in mg/kg			0.01 U	0.01 U	0.01 U	0.01 U	0.01 U	0.01 U	0.01 U	0.01 U	0.01 U	0.01 U	0.01 U	0.01 U	0.01 U	0.01 U	0.01 U	0.01 U	0.01 U	0.01 U	0.01 U	0.01 U
Anthracene in mg/kg	1,100,000	1,100,000	0.2	0.01 U	0.01 U	0.01 U	0.01 U	0.01 U	0.01 U	0.01 U	0.01 U	0.014	0.01 U	0.01 U	0.01 U	0.01 U	0.01 U	0.01 U	0.01 U	0.01 U	0.01 U	0.02
Benzo(g,h,i)perylene in mg/kg			0.048	0.01 U	0.01 U	0.01 U	0.01 U	0.01 U	0.01 U	0.01 U	0.01 U	0.01 U	0.01 U	0.01 U	0.01 U	0.01 U	0.01 U	0.01 U	0.01 U	0.01 U	0.01 U	0.044
Fluoranthene in mg/kg	140,000	140,000	0.32	0.012	0.01 U	0.01 U	0.01 U	0.01 U	0.01 U	0.01 U	0.01 U	0.01 U	0.01 U	0.01 U	0.01 U	0.01 U	0.01 U	0.01 U	0.018	0.01 U	0.01 U	0.11
Fluorene in mg/kg	140,000	140,000	0.17	0.01 U	0.01 U	0.01 U	0.01 U	0.01 U	0.01 U	0.01 U	0.01 U	0.021	0.01 U	0.01 U	0.01 U	0.01 U	0.01 U	0.01 U	0.01 U	0.01 U	0.01 U	0.01 U
Phenanthrene in mg/kg			0.72	0.011	0.01 U	0.01 U	0.01 U	0.01 U	0.01 U	0.01 U	0.01 U	0.063	0.01 U	0.01 U	0.01 U	0.01 U	0.01 U	0.01 U	0.014	0.01 U	0.01 U	0.065
Pyrene in mg/kg	110,000	110,000	0.3	0.012	0.01 U	0.01 U	0.01 U	0.01 U	0.01 U	0.01 U	0.01 U	0.027	0.01 U	0.01 U	0.01 U	0.01 U	0.01 U	0.01 U	0.018	0.01 U	0.01 U	0.28
Naphthalene in mg/kg	70,000	70,000	0.12	0.01 U	0.01 U	0.01 U	0.01 U	0.01 U	0.01 U	0.01 U	0.01 U	0.01 U	0.01 U	0.01 U	0.01 U	0.01 U	0.01 U	0.01 U	0.01 U	0.01 U	0.01 U	0.084
Benz(a)anthracene in mg/kg			0.11	0.01 U	0.01 U	0.01 U	0.01 U	0.01 U	0.01 U	0.01 U	0.01 U	0.01 U	0.01 U	0.01 U	0.01 U	0.01 U	0.01 U	0.01 U	0.01 U	0.01 U	0.01 U	0.075
Benzo(a)pyrene in mg/kg			0.089	0.01 U	0.01 U	0.01 U	0.01 U	0.01 U	0.01 U	0.01 U	0.01 U	0.01 U	0.01 U	0.01 U	0.01 U	0.01 U	0.01 U	0.01 U	0.01 U	0.01 U	0.01 U	0.062
Benzo(b)fluoranthene in mg/kg			0.11	0.01 U	0.01 U	0.01 U	0.01 U	0.01 U	0.01 U	0.01 U	0.01 U	0.01 U	0.01 U	0.01 U	0.01 U	0.01 U	0.01 U	0.01 U	0.01 U	0.01 U	0.01 U	0.059
Benzo(k)fluoranthene in mg/kg			0.035	0.01 U	0.01 U	0.01 U	0.01 U	0.01 U	0.01 U	0.01 U	0.01 U	0.01 U	0.01 U	0.01 U	0.01 U	0.01 U	0.01 U	0.01 U	0.01 U	0.01 U	0.01 U	0.025
Chrysene in mg/kg			0.13	0.01 U	0.01 U	0.01 U	0.01 U	0.01 U	0.01 U	0.01 U	0.01 U	0.02	0.01 U	0.01 U	0.01 U	0.01 U	0.01 U	0.01 U	0.01 U	0.01 U	0.01 U	0.12
Dibenzo(a,h)anthracene in mg/kg			0.013	0.01 U	0.01 U	0.01 U	0.01 U	0.01 U	0.01 U	0.01 U	0.01 U	0.01 U	0.01 U	0.01 U	0.01 U	0.01 U	0.01 U	0.01 U	0.01 U	0.01 U	0.01 U	0.01 U
Indeno(1,2,3-cd)pyrene in mg/kg			0.05	0.01 U	0.01 U	0.01 U	0.01 U	0.01 U	0.01 U	0.01 U	0.01 U	0.01 U	0.01 U	0.01 U	0.01 U	0.01 U	0.01 U	0.01 U	0.01 U	0.01 U	0.01 U	0.028
Total cPAHs TEQ in mg/kg	0.4	7.9	0.122	ND	ND	ND	ND	ND	ND	ND	ND	0.0077	ND	ND	ND	ND	ND	ND	ND	ND	ND	0.0824
Polychlorinated Biphenyls (PCBs)																					
Aroclor 1016 in mg/kg																					
Aroclor 1221 in mg/kg																					
Aroclor 1232 in mg/kg																					
Aroclor 1242 in mg/kg																					
Aroclor 1248 in mg/kg																					
Aroclor 1254 in mg/kg																					
Aroclor 1260 in mg/kg																					
Total PCBs (Sum of Aroclors) in mg/kg	10	10																			

Notes

Concentrations in shaded cells indicate value exceeds Interim Action Cleanup Level - Saturated Soil.

Concentrations in bold text indicate value exceeds Interim Action Cleanup Level - Unsaturated Soil.

SAT = Sample of saturated soil; samples without this designation are unsaturated soil.

J = Analyte was positively identified. The reported result is an estimate.

U = Analyte was not detected at or above the reported result.

UJ = Analyte was not detected at or above the reported estimate.

Table 19 - Excavation Verification Soil Quality Data for USTs 71, 72, 73 Interim Action Area

K-C Worldwide Site Upland Area 110207

			Sidewall Samples in Place		Soils Beneath Monolith Foundations							Overexcavated Samples									
Chemical Name	Interim Action Cleanup Level - Saturated Soil	Interim Action Cleanup Level - Unsaturated Soil	BUST-S68 12/19/13 (3 ft)	BUST-S69 1/3/14 (3 ft)	BUST-B39 12/3/13 (12 ft) SAT	BUST-S16 11/12/13 (8 ft)	BUST-S16 FD 11/12/13 (8 ft)	BUST-S17 11/12/13 (8 ft)	BUST-S21 11/12/13 (10 ft) SAT	BUST-S22 11/12/13 (10 ft) SAT	BUST-S58 12/3/13 (12 ft) SAT	BUST-B23 11/15/13 (6 ft) OverEx	BUST-B23 FD 11/15/13 (6 ft) OverEx	BUST-B25 11/15/13 (4 ft) OverEx	BUST-B27 11/15/13 (6 ft) OverEx	BUST-B36 11/21/13 (6 ft) OverEx	BUST-S01 11/7/13 (6 ft) OverEx	BUST-S02 11/7/13 (10 ft) OverEx SAT	BUST-S03 11/7/13 (10 ft) OverEx SAT	BUST-S23 11/13/13 (16 ft) OverEx SAT	BUST-S25 11/15/13 (3 ft) OverEx	BUST-S26 11/15/13 (5 ft) OverEx
Total Petroleum Hydrocarbons (TPH)																						
Bunker C in mg/kg	2,000	2,000	500	250 U	**17,000**	**8,400**	**8,600**	**6,400**	**3,800**	250 U	**28,000**	250 U	380	**4,200**	250 U	**8,000**	250 U	250 U	670	250 U	**2,200**	**7,100**
Metals																						
Antimony in mg/kg	1,400	1,400	1.6		1 U	1 U	1 U			1 U	1 U	1 U	1 U	1 U	1 U	1 U				1 U	2.33	1 U
Arsenic in mg/kg	20	20	7.05		1 U	3.62	4.37			4.8	1 U	3.29	3.6	6.46	4.6	5.01				2.98	6.71	5.2
Cadmium in mg/kg	3,500	3,500	1 U		1 U	1 U	1 U			1 U	1 U	1 U	1 U	1 U	1 U	1 U				1 U	1 U	1 U
Chromium (Total) in mg/kg	5,300,000	5,300,000																				
Copper in mg/kg	36	36	**54** J		5.07	8.35	9.96			16.6	3.44	9.71	10.4	35.2	**194**	27.7				7.51	**36.1**	27
Lead in mg/kg	81	1,000	29.5		2.17	2.26	3.42			3.42	1.58	1.79	1.91	39.9	1.92	43.8				1.73	58.4	30.4
Mercury in mg/kg	0.1	0.1	**0.14**		**0.11**	0.1 U	0.1 U			0.1 U	0.1 U	0.1 U	0.1 U	**0.3**	0.1 U	**0.18**				0.1 U	**0.69**	**0.3**
Nickel in mg/kg	48	48	13.1		13.4	16.3	17.6			20	8.78	14.2	16.1	20.2	16.2	19				11.4	17.7	17.7
Zinc in mg/kg	85	100	47.4		12.3	18.5	22.4			40.7	7.99	18.2	22.6	55.8	31.3	77				13.1	**118**	43.6
Polycyclic Aromatic Hydrocarbons (PAHs)																						
Acenaphthene in mg/kg	210,000	210,000	0.023		0.2 U	0.76	0.59	0.77	0.21	0.01 U	0.5 U	0.067 J	0.01 UJ	0.039	0.01 U	0.077	0.01 U	0.011	0.14	0.01 U	0.24	0.18
Acenaphthylene in mg/kg			0.012		0.2 U	0.1 U	0.1 U	0.1 U	0.01 U	0.01 U	0.5 U	0.01 UJ	0.01 UJ	0.023	0.01 U	0.01 U	0.01 U	0.01 U	0.01 U	0.01 U	0.1 U	0.01 U
Anthracene in mg/kg	1,100,000	1,100,000	0.033		0.2 U	1.2	1.1	1.2	0.24	0.01 U	1.8	0.11 J	0.01 UJ	0.091	0.01 U	0.01 U	0.01 U	0.01 U	0.19	0.01 U	0.43	0.11
Benzo(g,h,i)perylene in mg/kg			0.032		0.28	0.28	0.26	0.25	0.083	0.01 U	0.52	0.038 J	0.01 UJ	0.088	0.01 U	0.11	0.01 U	0.01 U	0.053	0.01 U	0.3	0.07
Fluoranthene in mg/kg	140,000	140,000	0.049		0.24	0.36	0.35	0.38	0.21	0.01 U	0.86	0.29 J	0.01 UJ	0.15	0.01 U	0.22	0.01 U	0.01 U	0.083	0.01 U	1.4	0.12
Fluorene in mg/kg	140,000	140,000	0.01 U		0.2 U	0.59 J	0.37 J	0.54	0.01 U	0.01 U	0.5 U	0.057 J	0.01 UJ	0.026	0.01 U	0.019	0.01 U	0.01 U	0.17	0.01 U	0.19	0.018
Phenanthrene in mg/kg			0.022		0.2 U	1.8 J	1 J	1.9	0.01 U	0.01 U	3	0.35 J	0.01 UJ	0.081	0.01 U	0.01 U	0.012	0.01 U	0.59	0.01 U	1.5	0.057
Pyrene in mg/kg	110,000	110,000	0.099		1.7	2.2	2.1	2.1	0.97	0.01 U	5.9	0.27 J	0.01 UJ	0.44	0.01 U	0.8	0.01 U	0.015	0.44	0.01 U	1.6	0.4
Naphthalene in mg/kg	70,000	70,000	0.01 U		0.2 U	0.12	0.1 U	0.1 U	0.01 U	0.01 U	0.5 U	0.026 J	0.01 UJ	0.047	0.01 U	0.038	0.01 U	0.01 U	0.013	0.01 U	0.18	0.07
Benz(a)anthracene in mg/kg			0.046		1.1	0.99	0.86	0.84	0.28	0.01 U	2.1	0.11 J	0.01 UJ	0.18	0.01 U	0.28	0.01 U	0.01 U	0.15	0.01 U	0.56	0.16
Benzo(a)pyrene in mg/kg			0.044		0.51	0.52	0.48	0.47	0.17	0.01 U	0.86	0.087 J	0.01 UJ	0.1	0.01 U	0.17	0.01 U	0.01 U	0.09	0.01 U	0.49	0.095
Benzo(b)fluoranthene in mg/kg			0.059		0.4	0.17	0.16	0.17	0.03	0.01 U	0.7	0.097 J	0.01 UJ	0.079	0.01 U	0.12	0.01 U	0.01 U	0.035	0.01 U	0.55	0.067
Benzo(k)fluoranthene in mg/kg			0.012		0.2 U	0.1 U	0.1 U	0.1 U	0.085	0.01 U	0.5 U	0.043 J	0.01 UJ	0.017	0.01 U	0.023	0.01 U	0.01 U	0.039	0.01 U	0.21	0.012
Chrysene in mg/kg			0.078		1.9	1.7 J	1 J	1	0.69	0.01 U	4.5	0.12 J	0.01 UJ	0.33	0.01 U	0.2	0.01 U	0.01 U	0.19	0.01 U	0.68	0.25
Dibenzo(a,h)anthracene in mg/kg			0.01 U		0.2 U	0.1 U	0.1 U	0.1 U	0.051	0.01 U	0.5 U	0.01 UJ	0.01 UJ	0.016	0.01 U	0.01 U	0.01 U	0.01 U	0.016	0.01 U	0.1 U	0.021
Indeno(1,2,3-cd)pyrene in mg/kg			0.027		0.2 U	0.1 U	0.1 U	0.1 U	0.043	0.01 U	0.5 U	0.041 J	0.01 UJ	0.052	0.01 U	0.06	0.01 U	0.01 U	0.018	0.01 U	0.28	0.044
Total cPAHs TEQ in mg/kg	0.4	7.9	0.0597		0.709	0.668	0.607	0.596	0.226	ND	1.26	0.118	ND	0.138	ND	0.221	ND	ND	0.118	ND	0.662	0.128
Polychlorinated Biphenyls (PCBs)																						
Aroclor 1016 in mg/kg																						
Aroclor 1221 in mg/kg																						
Aroclor 1232 in mg/kg																						
Aroclor 1242 in mg/kg																						
Aroclor 1248 in mg/kg																						
Aroclor 1254 in mg/kg																						
Aroclor 1260 in mg/kg																						
Total PCBs (Sum of Aroclors) in mg/kg	10	10																				

Notes

Concentrations in shaded cells indicate value exceeds Interim Action Cleanup Level - Saturated Soil.

Concentrations in bold text indicate value exceeds Interim Action Cleanup Level - Unsaturated Soil.

SAT = Sample of saturated soil; samples without this designation are unsaturated soil.

J = Analyte was positively identified. The reported result is an estimate.

U = Analyte was not detected at or above the reported result.

UJ = Analyte was not detected at or above the reported estimate.

Table 19 - Excavation Verification Soil Quality Data for USTs 71, 72, 73 Interim Action Area

K-C Worldwide Site Upland Area 110207

			Overexcavated Samples							
Chemical Name	Interim Action Cleanup Level - Saturated Soil	Interim Action Cleanup Level - Unsaturated Soil	BUST-S27 11/15/13 (5 ft) OverEx	BUST-S28 11/15/13 (3 ft) OverEx	BUST-S29 11/15/13 (5 ft) OverEx	BUST-S45 11/19/13 (12 ft) OverEx SAT	BUST-S62 12/12/13 (3 ft) OverEx	BUST-S62 FD 12/12/13 (3 ft) OverEx	BUST-S67 12/12/13 (3 ft) OverEx	UST71-H06TP7 8/30/13 (1 ft) OverEx
Total Petroleum Hydrocarbons (TPH)										
Bunker C in mg/kg	2,000	2,000	470	250 U	250 U	**37,000**	**3,100**	**7,100**	**82,000** J	1,800
Metals										
Antimony in mg/kg	1,400	1,400	1 U	1 U	1 U	1 U	1 U	1 U	1 U	
Arsenic in mg/kg	20	20	4.29	3.59	2.07	1.25	2.57	3.14	1.82	1 U
Cadmium in mg/kg	3,500	3,500	1 U	1 U	1 U	1 U	1 U	1 U	1 U	1 U
Chromium (Total) in mg/kg	5,300,000	5,300,000								8.2
Copper in mg/kg	36	36	**40.7**	35.9	**40.4**	5.21	18.6	15.7	9.66	9.63
Lead in mg/kg	81	1,000	34.2	3.82	3.03	4.79	35.5	27	3.55	3.68
Mercury in mg/kg	0.1	0.1	**0.13**	0.1 U	0.1 U	0.1 U	0.1 U	**0.13**	0.1 U	0.1 U
Nickel in mg/kg	48	48	25.1	22	16.7	8.72	18.1	16.6	9.33	11.7
Zinc in mg/kg	85	100	**134**	38.1	30.9	12.9 J	46.5	62.4	22	13.9
Polycyclic Aromatic Hydrocarbons (PAHs)										
Acenaphthene in mg/kg	210,000	210,000	0.059	0.01 U	0.01 U	0.45	0.053 J	0.14 J	0.1 U	
Acenaphthylene in mg/kg			0.016	0.01 U	0.01 U	0.1 U	0.01 U	0.01 U	0.1 U	
Anthracene in mg/kg	1,100,000	1,100,000	0.03	0.01 U	0.01 U	0.1 U	0.068 J	0.13 J	0.1 U	
Benzo(g,h,i)perylene in mg/kg			0.1	0.01 U	0.01 U	0.35	0.059 J		0.1 U	
Fluoranthene in mg/kg	140,000	140,000	0.15	0.01 U	0.01 U	0.61	0.12 J	0.29 J	0.1 U	
Fluorene in mg/kg	140,000	140,000	0.013	0.01 U	0.01 U	0.72	0.01 U	0.01 U	0.1 U	
Phenanthrene in mg/kg			0.1	0.01 U	0.01 U	0.89	0.077 J	0.2 J	0.18	
Pyrene in mg/kg	110,000	110,000	0.3	0.01 U	0.01 U	3.6	0.33 J	0.7 J	0.1 U	
Naphthalene in mg/kg	70,000	70,000	0.026	0.01 U	0.01 U	0.1 U	0.012 J	0.033 J	0.86	
Benz(a)anthracene in mg/kg			0.1	0.01 U	0.01 U	1.4	0.11 J	0.26 J	0.1 U	
Benzo(a)pyrene in mg/kg			0.11	0.01 U	0.01 U	0.4	0.08 J		0.1 U	
Benzo(b)fluoranthene in mg/kg			0.14	0.01 U	0.01 U	0.46	0.083 J		0.1 U	
Benzo(k)fluoranthene in mg/kg			0.031	0.01 U	0.01 U	0.1 U	0.019	0.015 J	0.1 U	
Chrysene in mg/kg			0.17	0.01 U	0.01 U	3.4	0.21 J	0.43 J	0.1 U	
Dibenzo(a,h)anthracene in mg/kg			0.021	0.01 U	0.01 U	0.12	0.014	0.017 J	0.1 U	
Indeno(1,2,3-cd)pyrene in mg/kg			0.078	0.01 U	0.01 U	0.12	0.037 J	0.075 J	0.1 U	
Total cPAHs TEQ in mg/kg	0.4	7.9	0.149	ND	ND	0.649	0.108	0.214	ND	
Polychlorinated Biphenyls (PCBs)										
Aroclor 1016 in mg/kg										0.1 U
Aroclor 1221 in mg/kg										0.1 U
Aroclor 1232 in mg/kg										0.1 U
Aroclor 1242 in mg/kg										0.1 U
Aroclor 1248 in mg/kg										0.1 U
Aroclor 1254 in mg/kg										0.1 U
Aroclor 1260 in mg/kg										0.1 U
Total PCBs (Sum of Aroclors) in mg/kg	10	10								ND

Notes

Concentrations in shaded cells indicate value exceeds Interim Action Cleanup Level - Saturated Soil.

Concentrations in bold text indicate value exceeds Interim Action Cleanup Level - Unsaturated Soil.

SAT = Sample of saturated soil; samples without this designation are unsaturated soil.

J = Analyte was positively identified. The reported result is an estimate.

U = Analyte was not detected at or above the reported result.

UJ = Analyte was not detected at or above the reported estimate.

Table 20 - Excavation Verification Extractable and Volatile Petroleum Hydrocarbons (EPH/VPH) Soil Quality Data for All Areas

K-C Worldwide Site Upland Area 110207

			Soil Beneath Warehouse			Bottom Sample in Place	Sidewall Samples in Place				Overexcavated Samples		
Chemical Name	Interim Action Cleanup Level - Unsaturated Soil	Interim Action Cleanup Level - Saturated Soil	BAST-EPH-03 10/21/13 (2 ft) SAT	BAST-EPH-04 10/21/13 (2 ft) SAT	BAST-S059 1/21/14 (7 ft) SAT	BUST-B39 12/3/13 (12 ft) SAT	BAST-S075 2/17/14 (4 ft)	BUST-S16 11/12/13 (8 ft)	BUST-S17 11/12/13 (8 ft)	BUST-S58 12/3/13 (12 ft) SAT	BAST-EPH-01 10/21/13 (2 ft) OverEx	BAST-EPH-02 10/21/13 (2 ft) OverEx	NRU-B05 1/27/14 (16 ft) OverEx SAT
Extractable Petroleum Hydrocarbons													
Aliphatics C10-C12 (EPH) in mg/kg			123	41.4 J	123	14.6	625	32.2	73.4	19.9	24.6 J	15.3 J	118
Aliphatics C12-C16 (EPH) in mg/kg			450	242	322	385	710	256	756	507	284	175	484
Aliphatics C16-C21 (EPH) in mg/kg			317	217	71.2	666	286	352	1,050	892	418	230	273
Aliphatics C21-C34 (EPH) in mg/kg			477	285	16	753	560	514	1,450	1,050	530	361	329
Aliphatics C8-C10 (EPH) in mg/kg			11.9 J	103 U	18.3 J	1.04 J	181	6.34 U	6.92	1.18 J	97.7 U	111 U	10 J
Aromatics C10-C12 (EPH) in mg/kg			102 U	103 U	5.57	5.63 UJ	50.5 J	6.34 U	5.53 U	5.64 UJ	97.7 U	111 U	32.1
Aromatics C12-C16 (EPH) in mg/kg			95 J	47.2 J	59.3	10.4	285	73.9	161	24.4	12.5 J	26.9 J	342
Aromatics C16-C21 (EPH) in mg/kg			315	276	58.5	422	840	388	870	583	166	181	560
Aromatics C21-C34 (EPH) in mg/kg			382	257	18.2	543	1,620	573	1,250	662	252	212	413
Aromatics C8-C10 (EPH) in mg/kg			5.32 J	103 U	1.06 J	2.85 J	52.5 U	6.34 UJ	5.53 UJ	3.76 J	97.7 U	111 U	5.99 U
Volatile Petroleum Hydrocarbons													
Aliphatics C10-C12 (VPH) in mg/kg					33		20.7						12.2 J
Aliphatics C5-C6 (VPH) in mg/kg					1.2		1.5 U						0.235 U
Aliphatics C6-C8 (VPH) in mg/kg					7.38		1.5 U						0.235 U
Aliphatics C8-C10 (VPH) in mg/kg					10.4		5.21						1.22
Aromatics C10-C12 (VPH) in mg/kg					106		50.4						65.6 J
Aromatics C12-C13 (VPH) in mg/kg					202		106						212
Aromatics C8-C10 (VPH) in mg/kg					18.1		6.98						2.82
Benzene in mg/kg	2,400	2,400			0.212 U		0.374 U						0.235 U
Ethylbenzene in mg/kg	350,000	350,000			0.212 U		0.374 U						0.235 U
m,p-Xylenes in mg/kg	2.5	49			0.212 U		0.374 U						0.235 U
Methyl tert-butyl ether (MTBE) in mg/kg	73,000	73,000			0.212		0.374 U						0.235 U
Naphthalene in mg/kg	70,000	70,000			2.59		0.374 U						3.97
o-Xylene in mg/kg	4.1	80			0.154 J		0.374 U						0.235 U
Toluene in mg/kg	70,000	70,000			0.212 U		0.374 U						0.235 U

Notes

Concentrations in bold text indicate value exceeds Interim Action Cleanup Level - Unsaturated Soil.

Concentrations in shaded cells indicate value exceeds Interim Action Cleanup Level - Saturated Soil.

SAT = Sample of saturated soil; samples without this designation are unsaturated soil.

J = Analyte was positively identified. The reported result is an estimate.

U = Analyte was not detected at or above the reported result.

UJ = Analyte was not detected at or above the reported estimate.

Table 21 - Concentrations of Contaminants Remaining Above IACLs

K-C Worldwide Site Upland Area 110207

	TPH				PAHs		Metals									
	Diesel- + Oil-Range Hydrocarbons		Gasoline-Range Hydrocarbons		Total cPAHs TEQ		Arsenic		Copper		Lead		Mercury		Zinc	
Interim Action Area	Min	Max	Min	Max	Min	Max	Min	Max	Min	Max	Min	Max	Min	Max	Min	Max
Boiler/Baghouse Excavation																
Unsaturated									36.6	96.9			0.12	16	103	328
Bunker C ASTs Excavation																
Unsaturated	2300	6600 w							52.9	52.9			0.11	0.18		
Saturated	2800	9700 w	150	2100 w	0.45	7.8 w			40.4	42.7						
CN-B-2 Excavation																
Unsaturated									37.1	37.1						
Saturated					0.73	6.4	25.2	25.2	36.8	77.6	114	121	0.13	0.15	102	216
GF-11 Excavation																
Unsaturated									36.2	99.2			0.11	0.5	126	126
Heavy Duty Shop Sump Excavation																
Unsaturated															114	114
Naval Reserve Area UST Excavation																
Saturated					0.53	0.53										
REC2-MW-5 Area Excavation (near Diesel AST)																
Unsaturated									36.1	47.7			0.25	0.31	104	456
Saturated									41.6	56.9			0.14	0.17	99	525
SHB-MW-1 Excavation																
Unsaturated									45.4	65.1			0.12	0.12	186	229
USTs 71, 72, and 73 Excavation																
Unsaturated	6400	8600 f							36.9	54			0.11	0.21		
Saturated	3800	28000 f			0.71	1.3 f			62.5	74.5			0.11	0.22		

Notes

Residual soils within the BA-MW-6, Hydraulic Barker Vault, Naval Reserve Parcel South, Rail Car Dumper, and UST 29/Latex Spill, and UST 70 Excavation Areas meet IACLs.
Residual exceedances are segregated by unsaturated vs saturated soil (different IACLs can apply).
IACL = Interim Action Cleanup Level
w = The listed maximum residual hydrocarbon concentrations are in inaccessible soil at or beneath the north edge of the Distribution Warehouse (refer to text).
f = The listed maximum residual hydrocarbon concentrations are in inaccessible soil beneath monolithic foundation elements (refer to text).

Table 22 - Summary of Interim Action by Area

K-C Worldwide Site Upland Area 110207

Interim Action Area	Contaminant Targeted for Removal	Tons of Material Removed During Interim Action	Compliance Monitoring Conducted for Interim Action?	
			Soil	Groundwater
BA-MW-6 Area	Oil-range TPH	100	Yes	Yes (ongoing)
Boiler/Baghouse Area	Lead	2,380	Yes	Yes (ongoing)
Bunker C ASTs Area	Oil-range and gasoline-range TPH, PAHs	9,690	Yes	Yes (ongoing)
CN-B-2 Area	Oil-range TPH	6,560	Yes	Yes (ongoing)
GF-11 Area	Lead	224	Yes	Yes (ongoing)
Heavy Duty Shop Sump Area	Oil-range TPH	0	Yes	No
Hydraulic Barker Vault Area	Oil-range TPH	10	Yes	Yes (ongoing)
Naval Reserve Area UST Area	Diesel-range and gasoline-range TPH	2,280	Yes	Yes (ongoing)
Naval Reserve Area South Area	Oil-range and gasoline-range TPH	1,710	Yes	Yes (ongoing)
Rail Car Dumper Area	Oil-range TPH	140	Yes	Yes (ongoing)
REC2-MW-5 Area Area (near Diesel AST)	Oil-range TPH	510	Yes	Yes (ongoing)
SHB-MW-1 Area	Oil-range and gasoline-range TPH, and copper	210	Yes	Yes (ongoing)
UST 29/Latex Spill Area	Xylenes, latex	5,440	Yes	Yes (ongoing)
UST 70 Area	Diesel-range TPH	1,050	Yes	Yes (ongoing)
USTs 71, 72, and 73 Area	Oil-range TPH	8,150	Yes	Yes (ongoing)
	Total Tons Removed:	**38,454**		

Notes

TPH - Total petroleum hydrocarbons

PAHs - Polycyclic aromatic hydrocarbons

AST - Above-ground storage tank

FIGURES

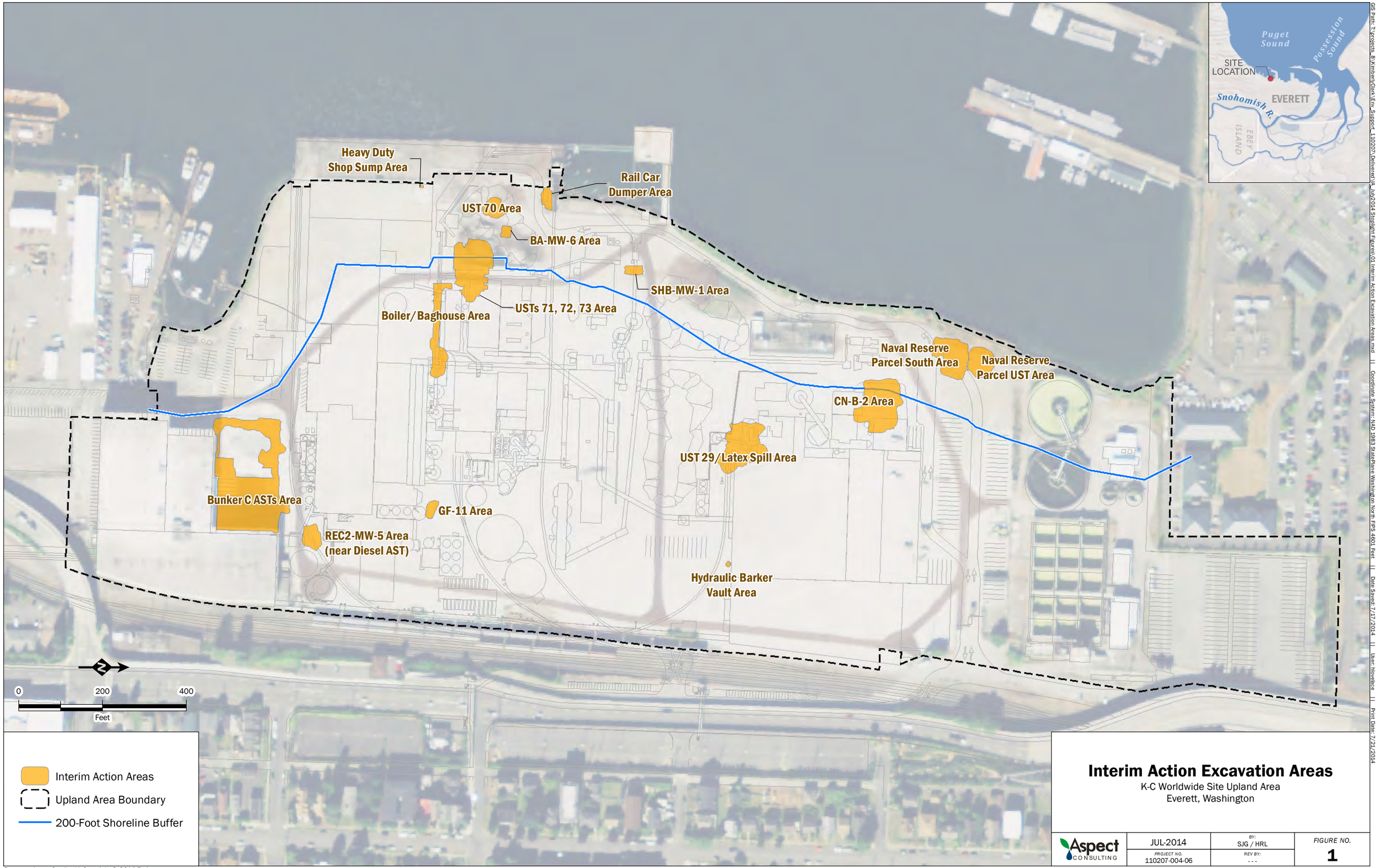

Interim Action Excavation Areas

K-C Worldwide Site Upland Area
Everett, Washington

Aspect CONSULTING	JUL-2014	BY: SJG / HRL	FIGURE NO. 1
	PROJECT NO. 110207-004-06	REV BY: ---	

Basemap Layer Credits || Copyright:© 2014 Esri
Esri, HERE, DeLorme, MapmyIndia, © OpenStreetMap contributors, and the GIS user community

GIS Path: T:\projects_8\Kimberly-Clark\Env_Support_110207\Delivered\IA_Jul2014 Stoplight Figures\01 Interim Action Excavation Areas.mxd || Coordinate System: NAD 1983 StatePlane Washington North FIPS 4601 Feet || Date Saved: 7/17/2014 || User: hlovelace || Print Date: 7/21/2014

TPHs/cPAHs

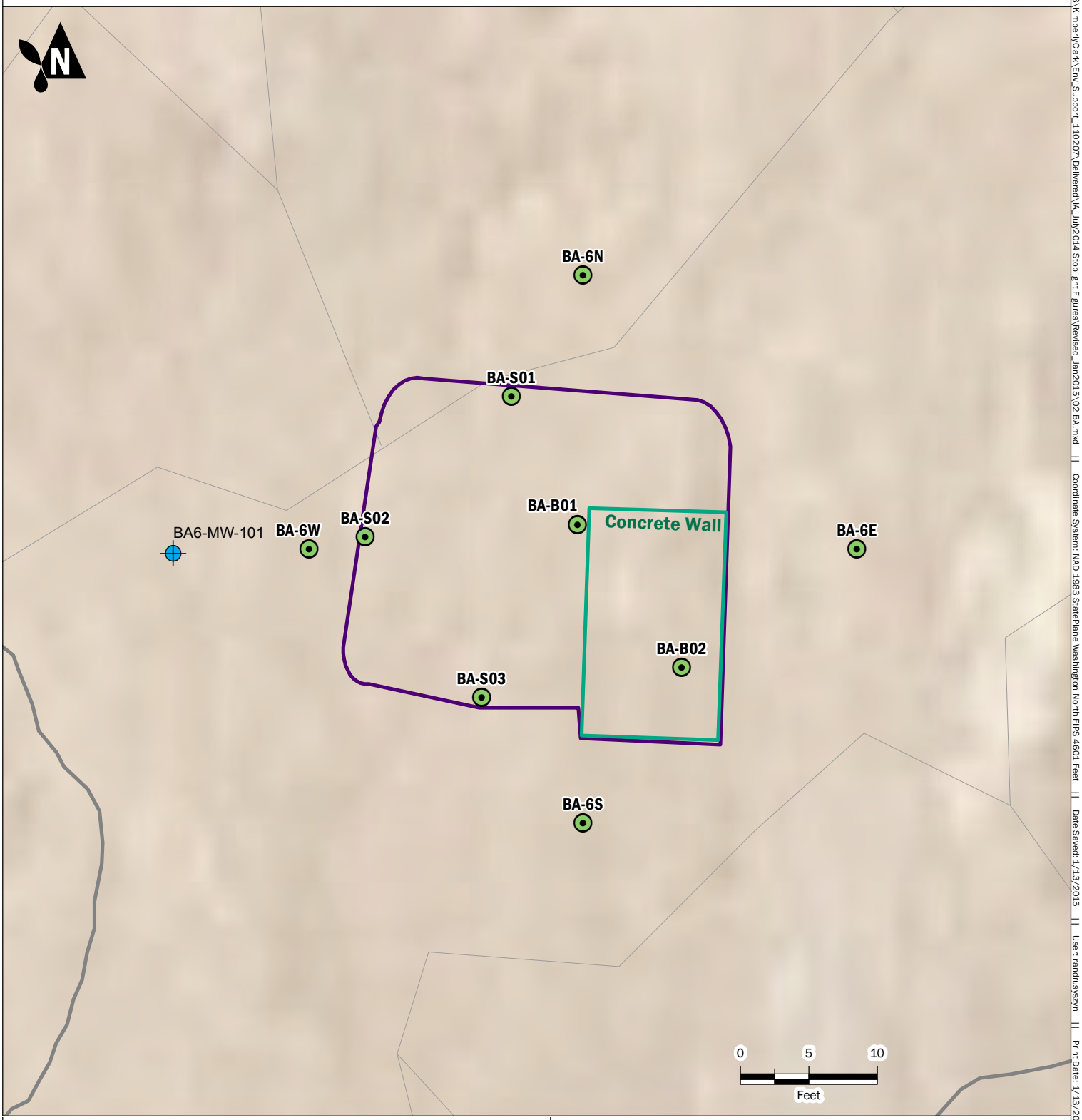

Monitoring Well

BA-MW-6 Excavation Extent

All Other Excavation Extents

Verification Samples

Exceedance Present

At Least One Exceedance

No Exceedance

Note: Pre-excavation characterization samples BA-6N, -6E, -6S, and -6W were analyzed for TPH only.

BA-MW-6 Interim Action Area Verification Samples and Residual Exceedances

K-C Worldwide Site Upland Area Interim Action
Everett, Washington

Aspect CONSULTING	JAN-2015	BY: SJG / HRL	FIGURE NO. 2
	PROJECT NO. 110207	REVISED BY: ---	

GIS Path: T:\projects_8\KimberlyClark\Env Support_110207\Delivered\IA_July2014 Stoplight Figures\Revised_Jan2015\02 BA.mxd || Coordinate System: NAD 1983 StatePlane Washington North FIPS 4601 Feet || Date Saved: 1/13/2015 || User: randrusyszyn || Print Date: 1/13/2015

cPAHs

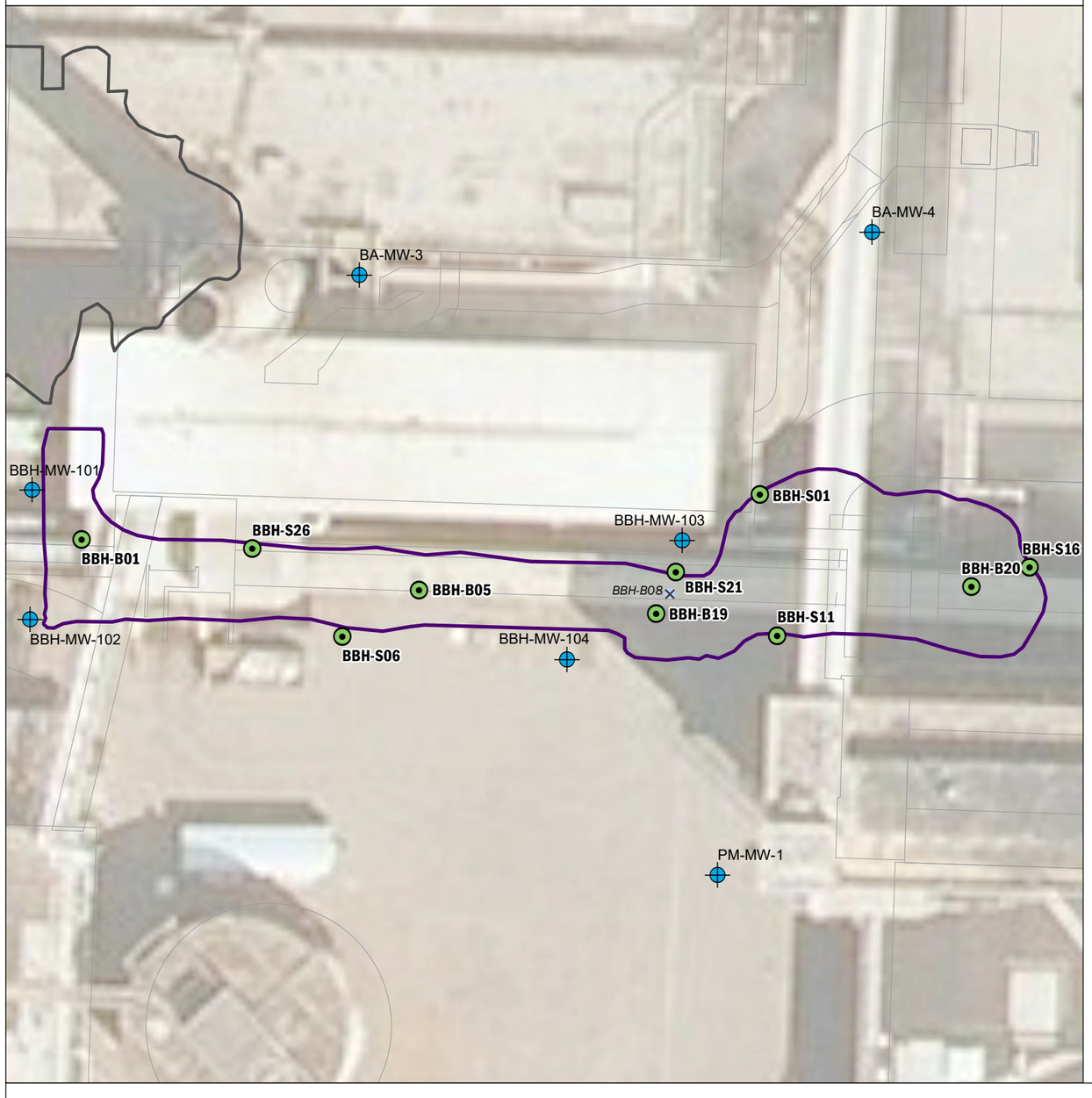

Metals

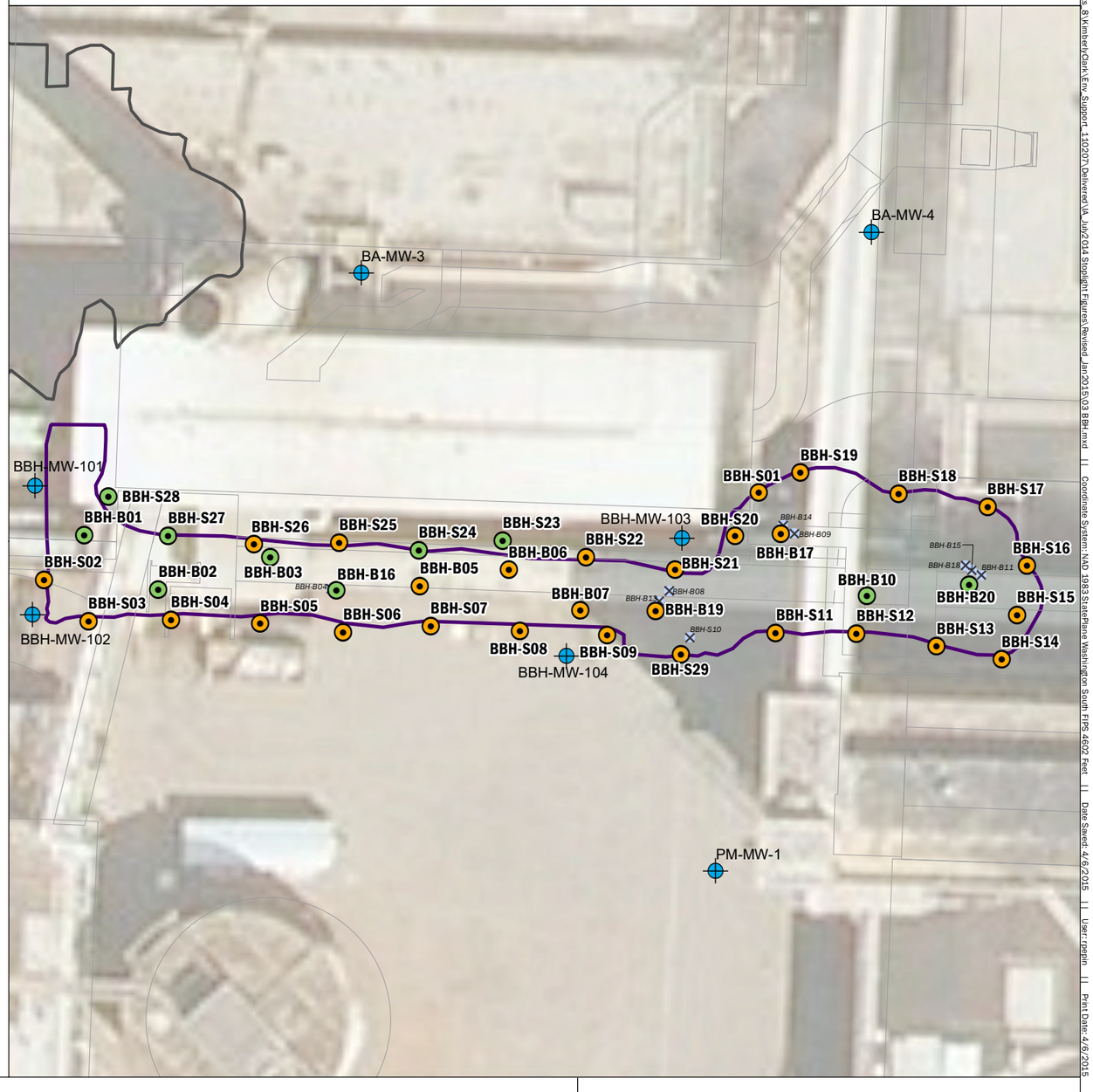

Monitoring Well

Boiler Baghouse Excavation Extent

Bunker C USTs 71, 72, 73 Excavation Extent

Verification Samples

Exceedance Present

At Least One Exceedance

No Exceedance

Over Excavated Sample Locations

Count of residual metals exceedances in verification soil samples:
21 copper, 29 mercury, 11 zinc; refer to Table 5 for full data.

N

0 15 30

Feet

Boiler/Baghouse Interim Action Area Verification Samples and Residual Exceedances

K-C Worldwide Site Upland Area Interim Action
Everett, Washington

Aspect Consulting	APR-2015	BY: SJG / HRL	FIGURE NO. 3
	PROJECT NO. 110207	REVISED BY: RAP	

GIS Path: T:\projects_8\Kimberly\Clark\Env_Support_110207\Delivered\JA_Jun2014 Stoplight Figures\Revised_Jan2015\03 BBH.mxd || Coordinate System: NAD 1983 StatePlane Washington South FIPS 4602 Feet || Date Saved: 4/6/2015 || User: rpepin || Print Date: 4/6/2015

TPHs/cPAHs

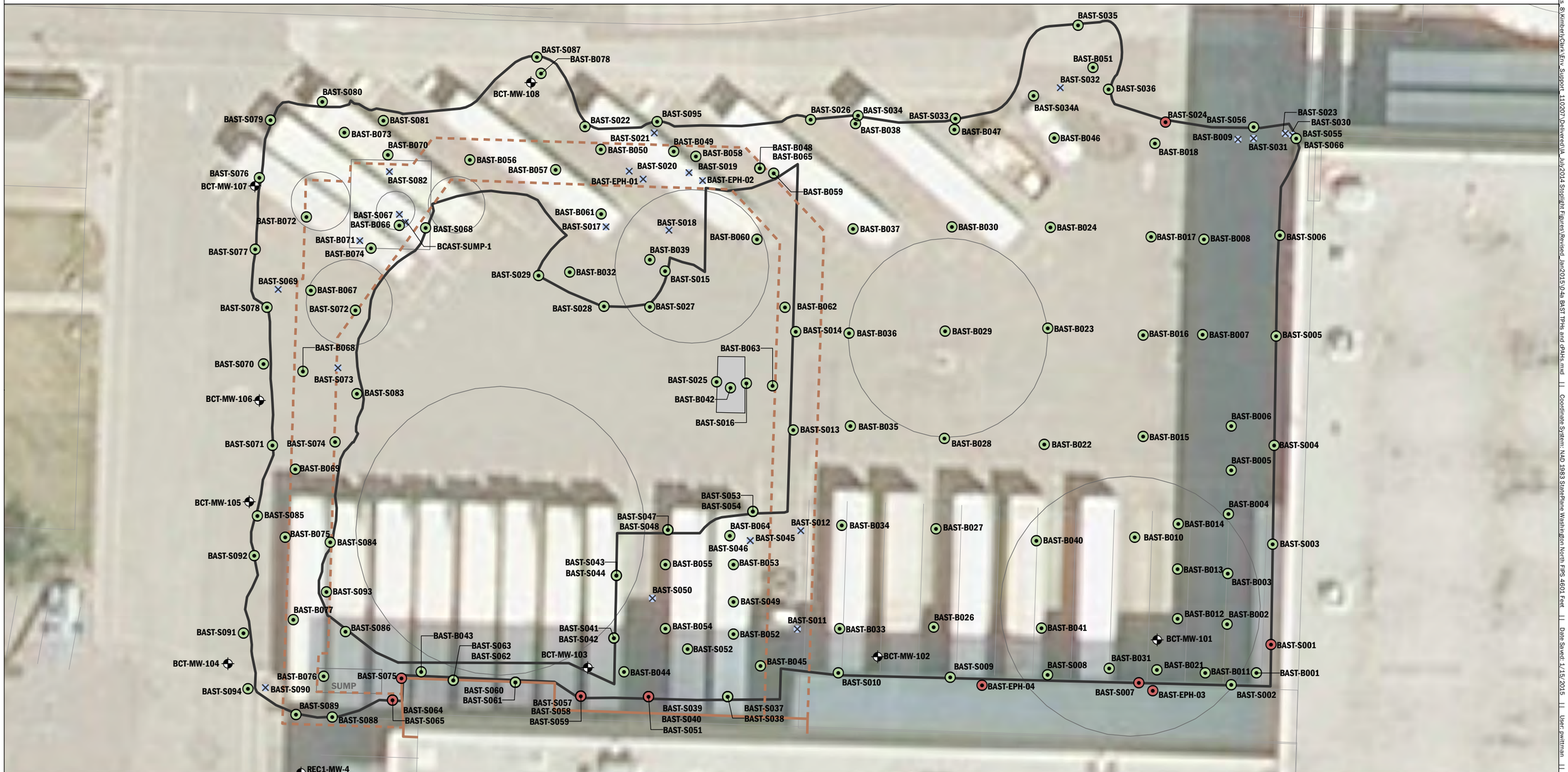

Monitoring Well

Footer for Tank Farm Enclosure Wall

(dashed where removed during interim action)

Above-Ground Storage Tanks (composite of historical configurations)

Test Pit

Bunker C AST Excavation Extent

Verification Samples

Exceedance Present

At Least One Exceedance

No Exceedance

Over Excavated Sample Locations

N

0 12.5 25

Feet

Bunker C ASTs Interim Action Area Verification Samples and TPHs/cPAHs Residual Exceedances

K-C Worldwide Site Upland Area Interim Action
Everett, Washington

Aspect Consulting	JAN-2015	BY: SJG / HRL	FIGURE NO. 4a
	PROJECT NO. 110207	REV BY: EAC	

GIS Path: T:\projects_8\Kimberly\Clark\Env_Support_110207\Delivered\A_Jul2014 Stoplight Figures\Revised_Jan2015\04a BAST TPHs and cPAHs.mxd || Coordinate System: NAD 1983 StatePlane Washington North FIPS 4601 Feet || Date Saved: 1/15/2015 || User: pwittman || Print Date: 1/15/2015

Metals

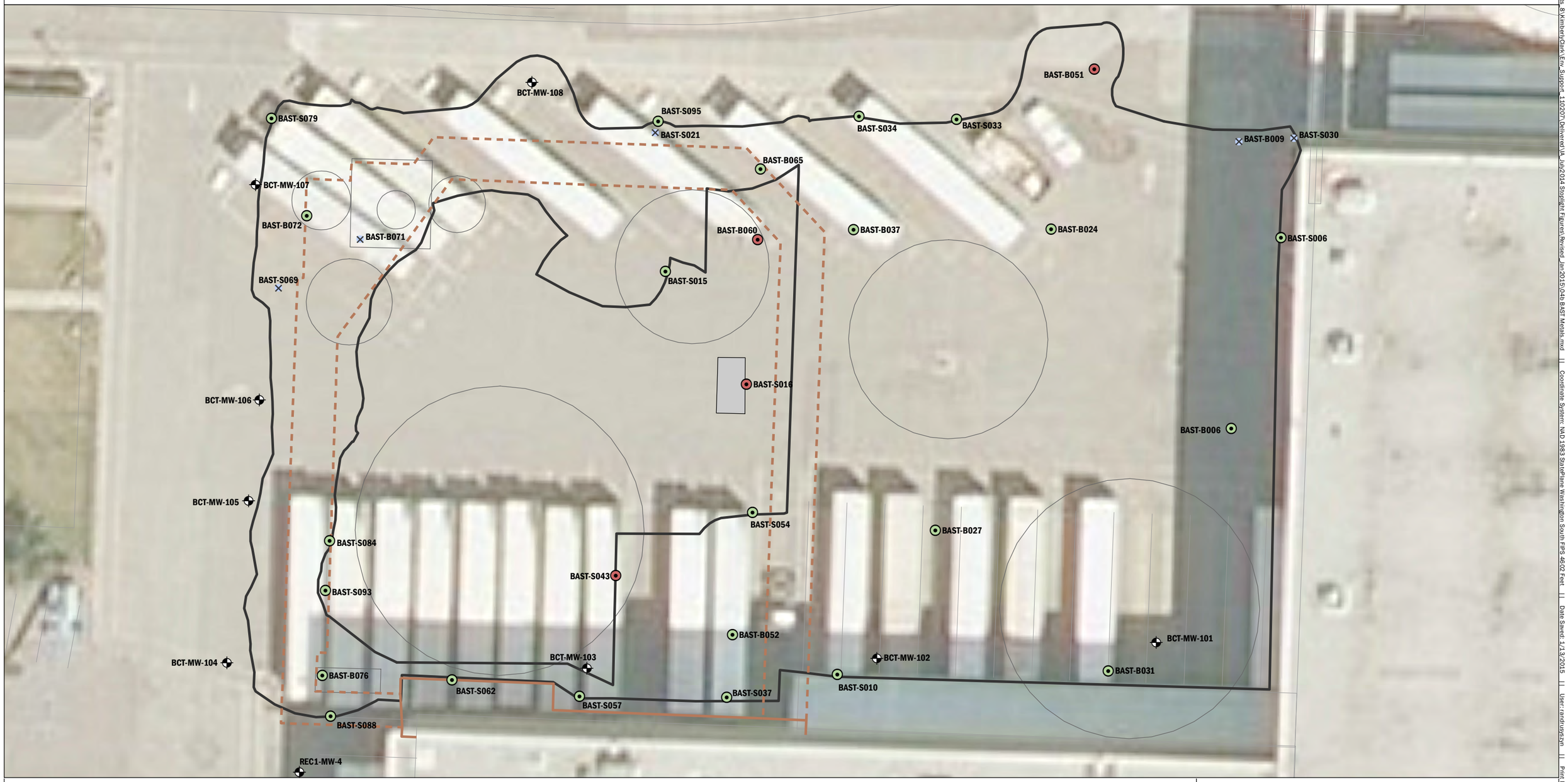

Monitoring Well

Footer for Tank Farm Enclosure Wall

(dashed where removed during interim action)

Above-Ground Storage Tanks (composite of historical configurations)

Test Pit

Bunker C AST Excavation Extent

Metals Exceedances

Exceedance Present

Exceedance

No Exceedance

Over Excavated Sample Locations

Count of residual metals exceedances in verification soil samples: 3 copper, 3 mercury; refer to Table 6 for full data.

N

0 12.5 25

Feet

Bunker C ASTs Interim Action Area Verification Samples and Metals Residual Exceedances

K-C Worldwide Site Upland Area Interim Action
Everett, Washington

Aspect CONSULTING	JAN-2015	BY: SJG / HRL	FIGURE NO. 4b
	PROJECT NO. 110207	REV BY: EAC	

GIS Path: T:\projects_8\Kimberly-Clark\Env_Support_110207\Deliverable\JA_Jun2014 Stoplight Figures\Revised_Jan2015\04b BAST Metals.mxd | | Coordinate System: NAD 1983 StatePlane Washington South FIPS 4602 Feet | | Date Saved: 1/13/2015 | | User: randruswyn | | Print Date: 1/13/2015

TPHs/cPAHs

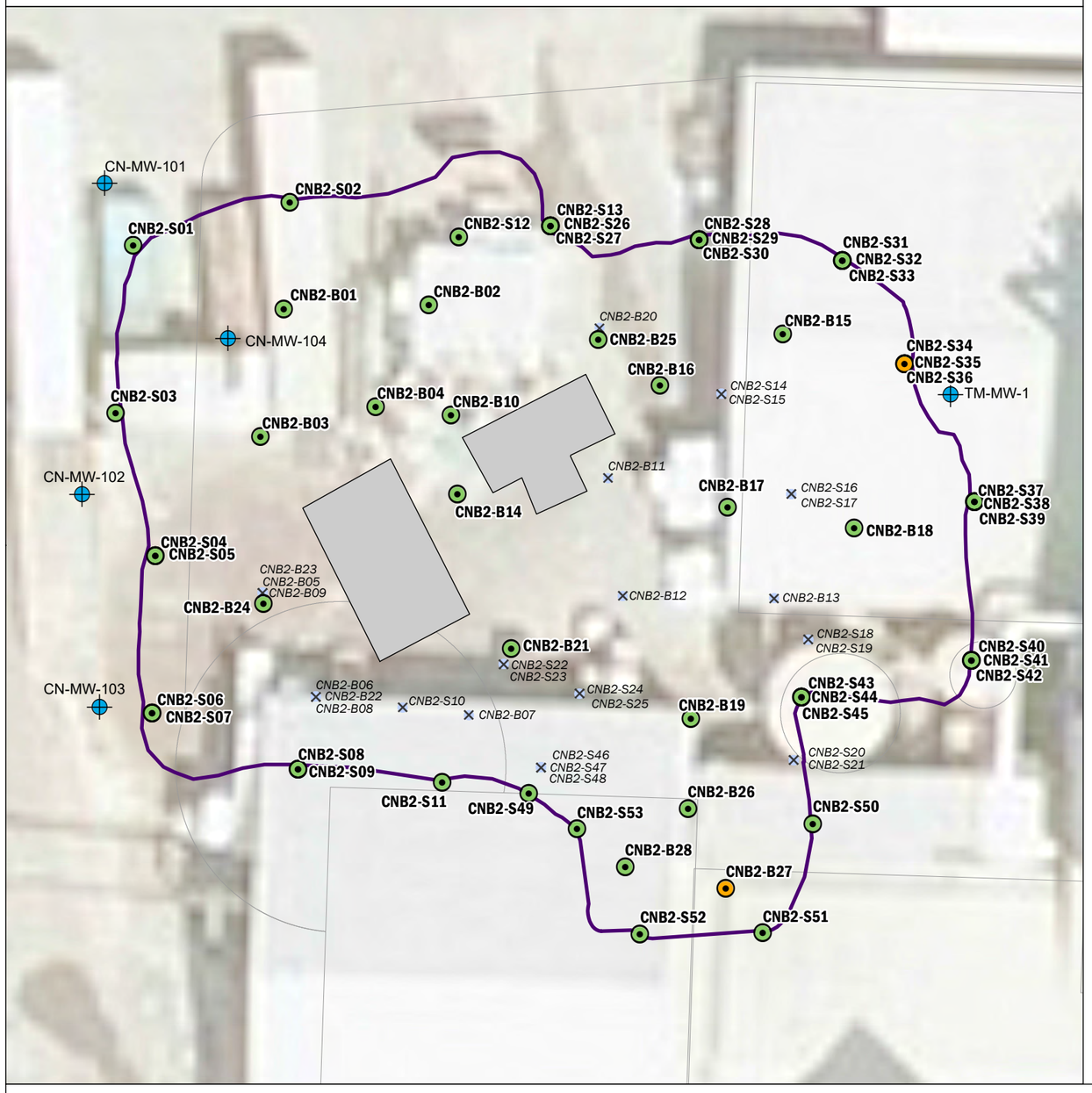

Metals

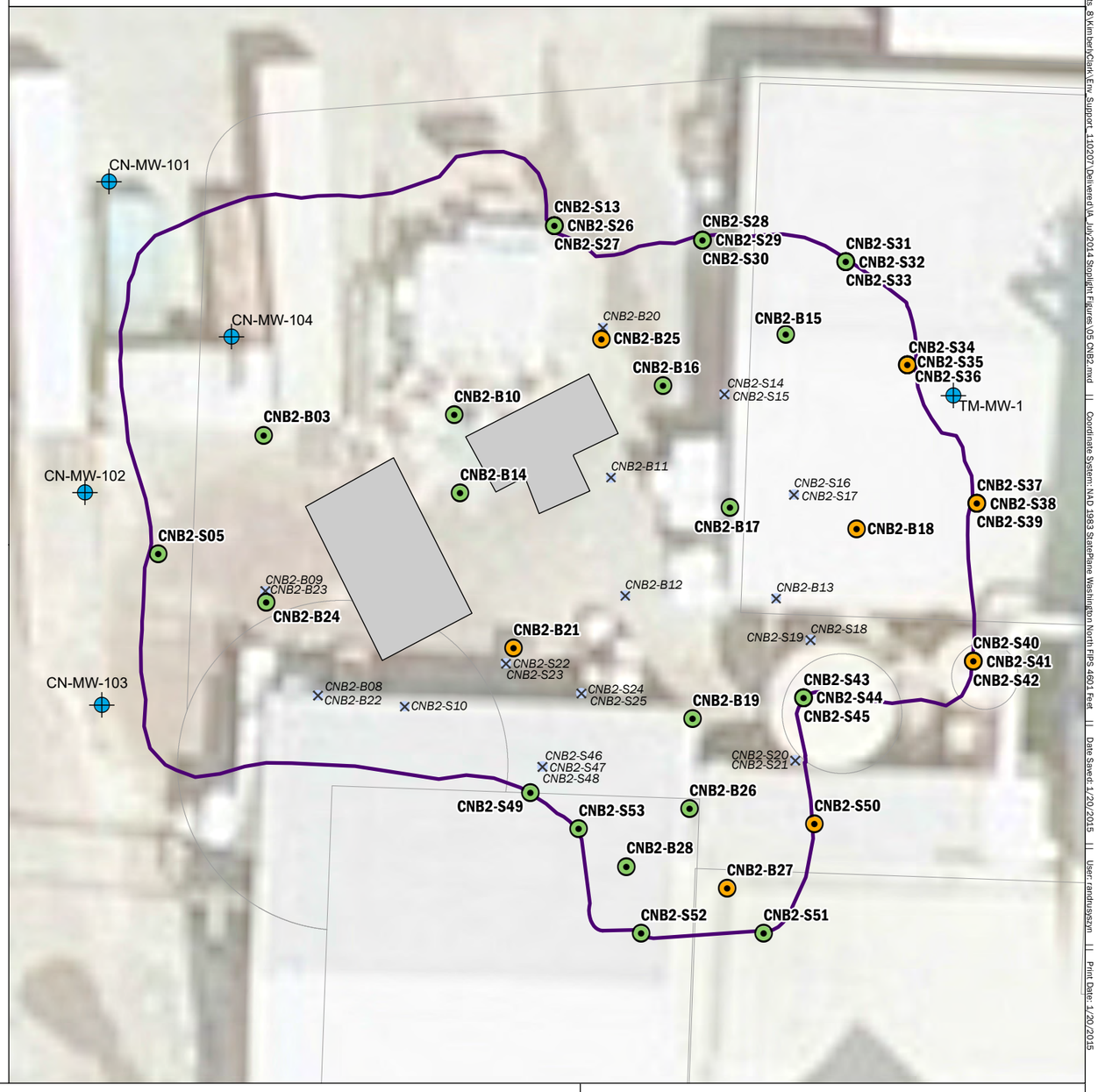

- Monitoring Well
- Concrete Block
- CN-B-2 Excavation Extent

Verification Samples

Exceedance Present

- At Least One Exceedance
- No Exceedance
- Over Excavated Sample Locations

Count of residual metals exceedances in verification soil samples:
1 arsenic, 4 copper, 2 lead, 2 mercury, 3 zinc; refer to Table 7 for full data.

N

0 10 20

Feet

CN-B-2 Interim Action Area Verification Samples and Residual Exceedances

K-C Worldwide Site Upland Area Interim Action
Everett, Washington

Aspect Consulting	JAN-2015	BY: SJG / HRL	FIGURE NO. 5
	PROJECT NO. 110207	REV BY: ---	

GIS Path: T:\projects_8\Kimberly-Clark\Env_Support_110207\Deliverable\JA_Jul-2014 Spotlight Figures\05 CNB2.mxd || Coordinate System: NAD 1983 StatePlane Washington North FIPS 4601 Feet || Date Saved: 1/20/2015 || User: randussi$zm || Print Date: 1/20/2015

cPAHs

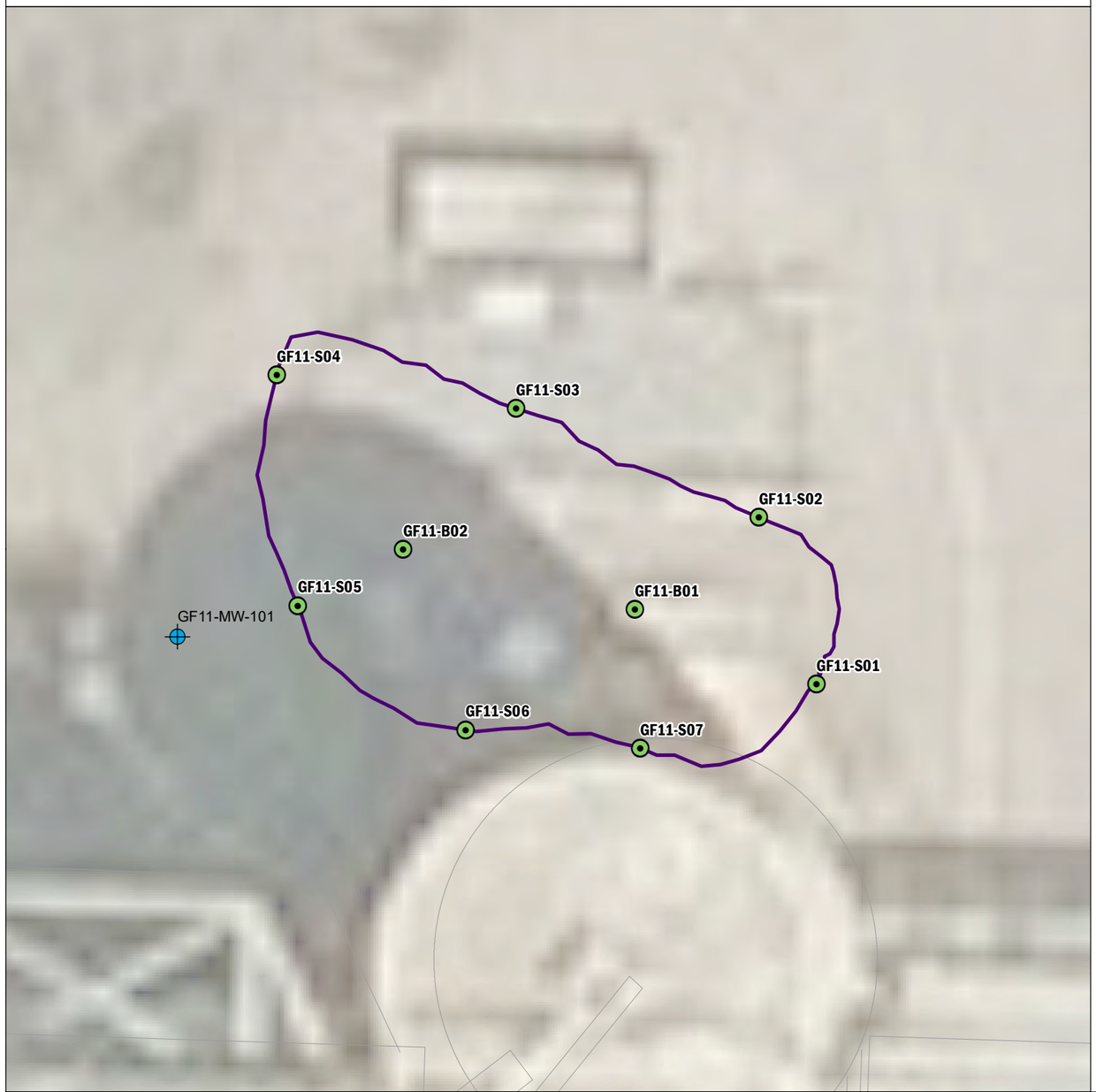

Metals



Monitoring Well

CN-B-2 Excavation Extent

Verification Samples

Exceedance Present

At Least One Exceedance

No Exceedance

Count of residual metals exceedances in verification soil samples:
5 copper, 11 mercury, 1 zinc; refer to Table 8 for full data.

N

0 5 10

Feet

GF-11 Interim Action Area Verification Samples and Residual Exceedances

K-C Worldwide Site Upland Area Interim Action
Everett, Washington

Aspect CONSULTING	JAN-2015	BY: SJG / HRL	FIGURE NO. 6
	PROJECT NO. 110207	REV BY: ---	

GIS Path: T:\projects_8\Kimberly\Task\Env_Support_110207\Delivered\IA_Jun2014 Stoplight Figures\Revised_Jan2015\06 GF11.mxd || Coordinate System: NAD 1983 StatePlane Washington South FIPS 4602 Feet || Date Saved: 1/13/2015 || User: randrusyszyn || Print Date: 1/13/2015

TPHs/cPAHs

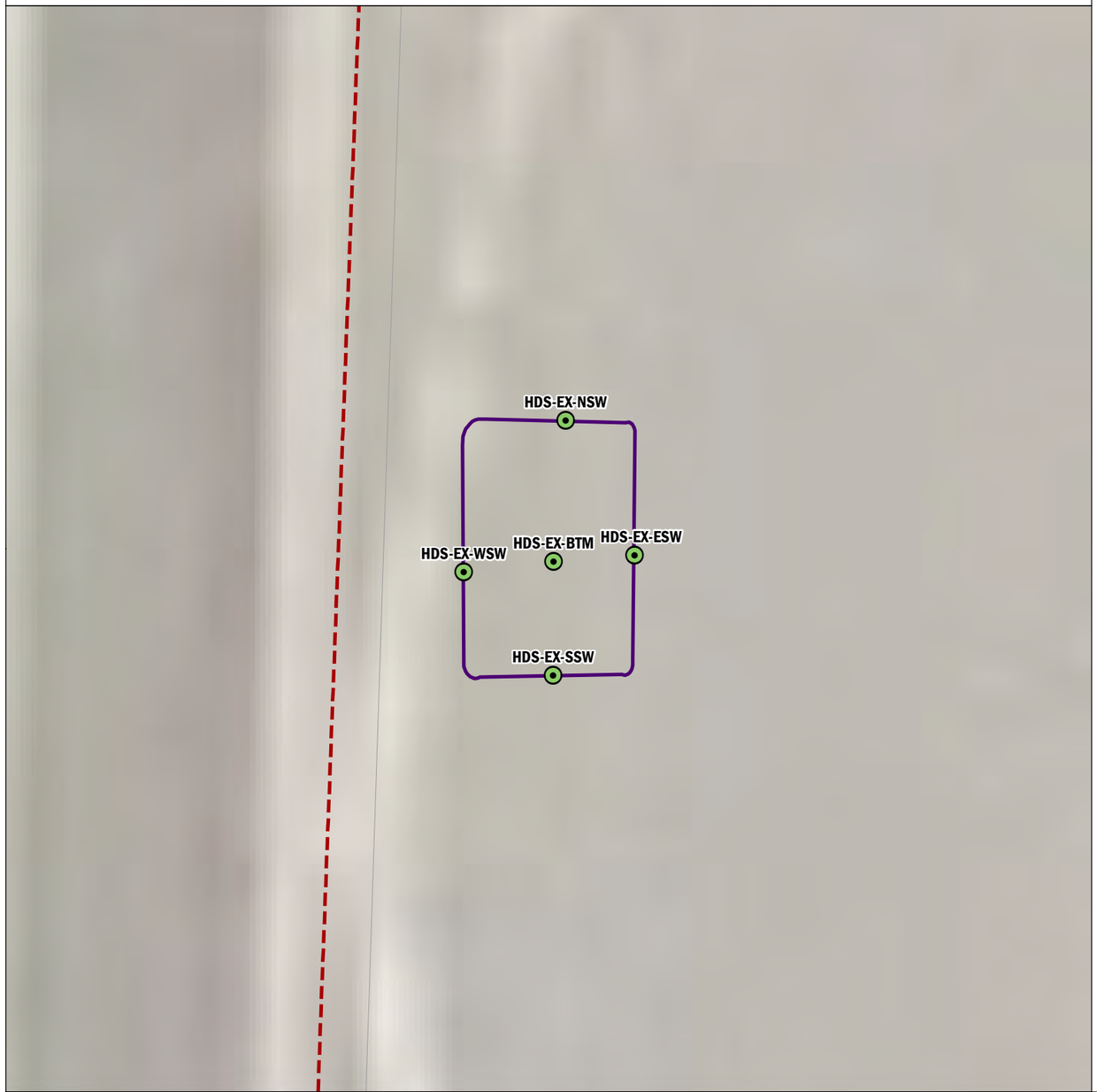

Metals



Monitoring Well

Upland Area Boundary

Heavy Duty Shop Sump Excavation Extent

Verification Samples

Exceedance Present

At Least One Exceedance

No Exceedance

Count of residual metals exceedance in verification soil samples:
1 zinc; refer to Table 9 for full data.

N

0 2.5 5

Feet

Heavy Duty Shop Sump Interim Action Area Verification Samples and Residual Exceedances

K-C Worldwide Site Upland Area Interim Action
Everett, Washington

Aspect CONSULTING	JUL-2014	BY: SJG / HRL	FIGURE NO. 7
	PROJECT NO. 110207	REV BY: ---	

GIS Path: T:\projects_8\Kimberly\Task\Env_Support_110207\Delivered\IA_Jun2014 Stoplight Figures\07 HDSSExcSamp.mxd || Coordinate System: NAD 1983 StatePlane Washington South FIPS 4602 Feet || Date Saved: 7/17/2014 || User: hlovelace || Print Date: 7/21/2014

TPHs/cPAHs

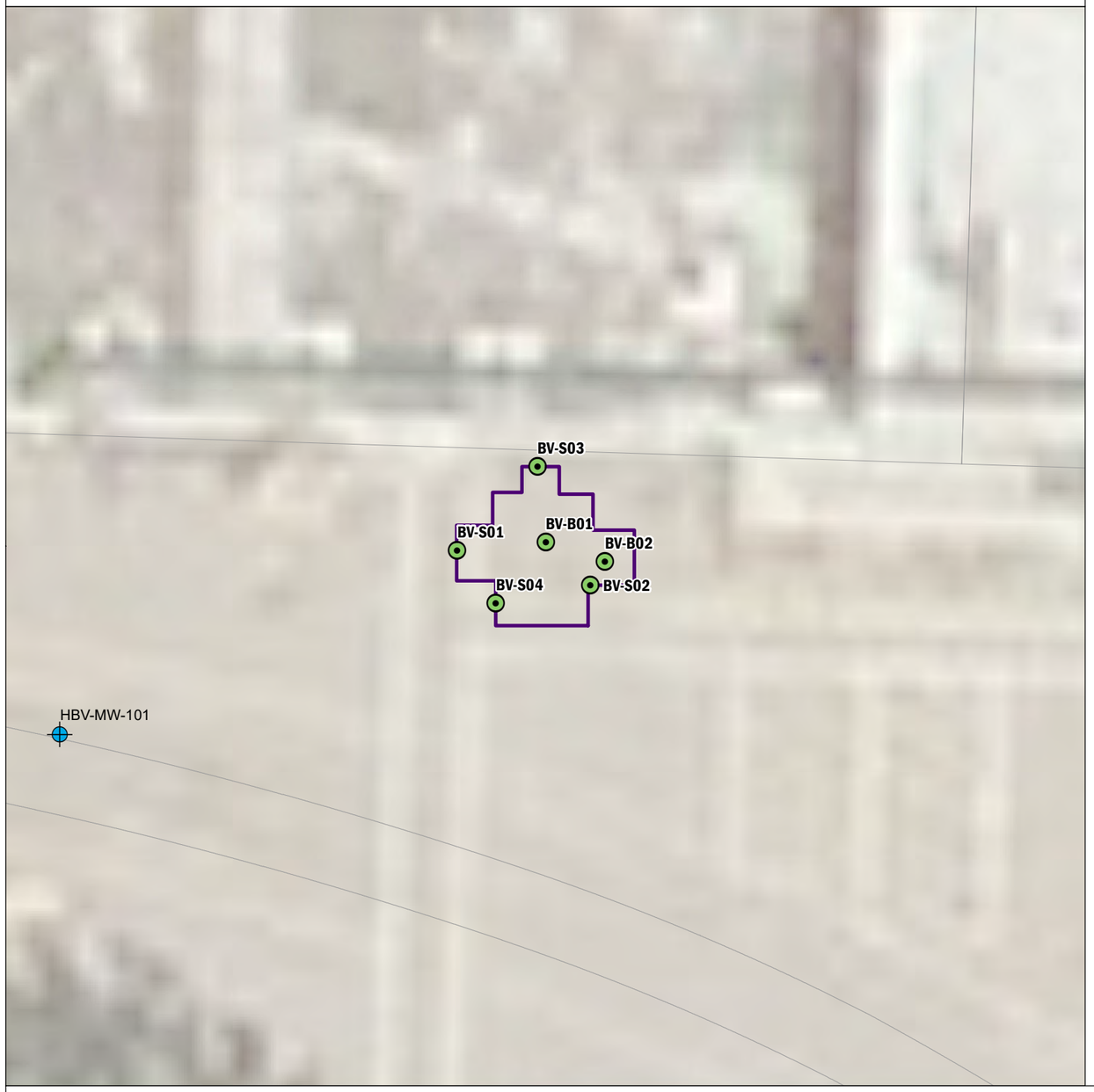

Metals

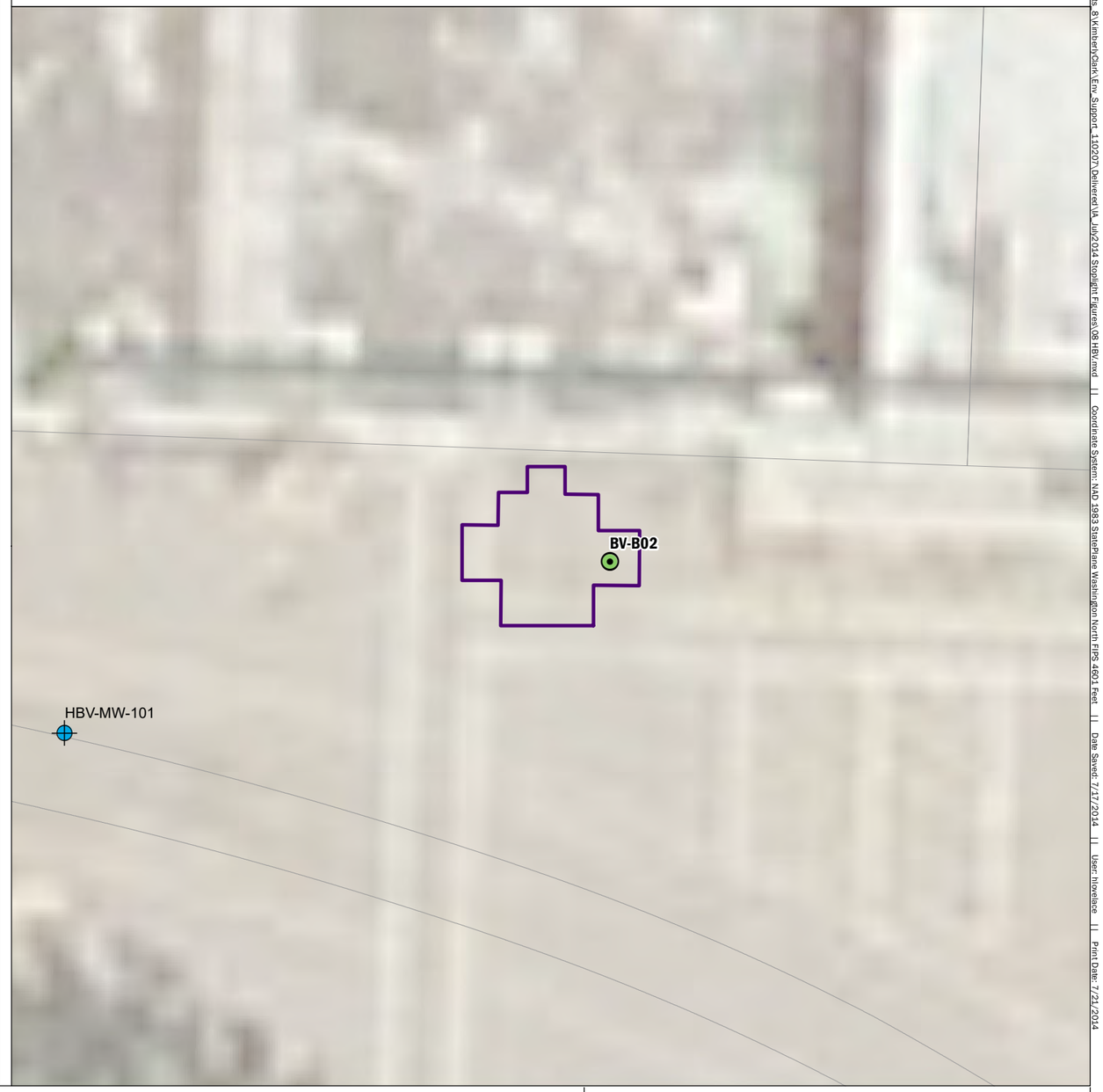

Monitoring Well

Heavy Duty Shop Sump Excavation Extent

Verification Samples

Exceedance Present

At Least One Exceedance

No Exceedance

N

0 5 10

Feet

Hydraulic Barker Vault Interim Action Area Verification Samples and Residual Exceedances

K-C Worldwide Site Upland Area Interim Action
Everett, Washington

Aspect CONSULTING	JUL-2014	BY: SJG / HRL	FIGURE NO. 8
	PROJECT NO. 110207	REV BY: ---	

GIS Path: T:\projects_8\Kimberly\Clark\Env_Support_110207\Delivered\IA_Jul2014 Stoplight Figures\08 HBV.mxd || Coordinate System: NAD 1983 StatePlane Washington North FIPS 4601 Feet || Date Saved: 7/17/2014 || User: hlovelace || Print Date: 7/21/2014

TPHs/cPAHs

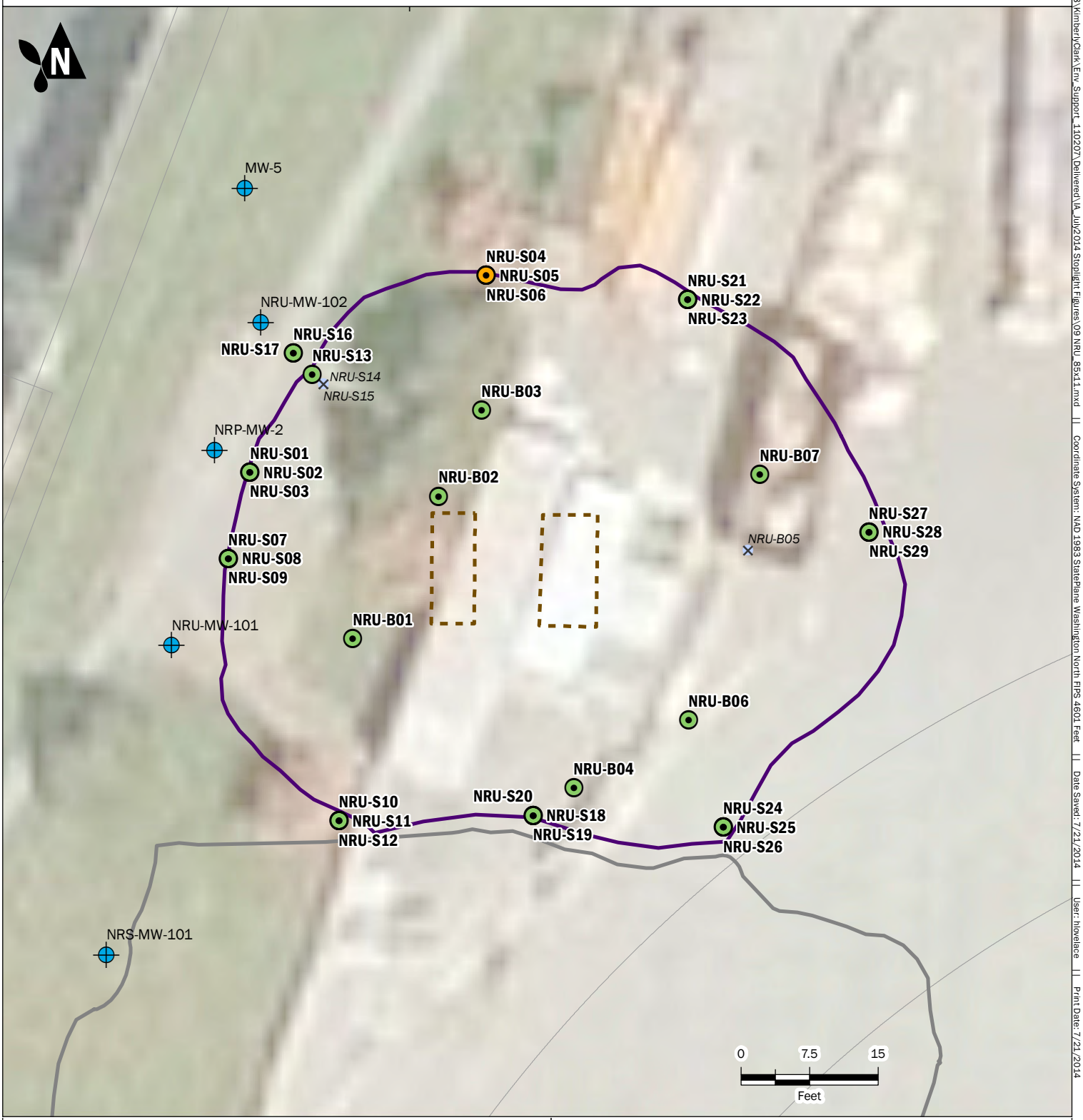

Monitoring Well

Approximate Former USTs

Naval Reserve Parcel UST Excavation Outline

Naval Reserve Parcel South Excavation Outline

Verification Samples

Exceedance Present

At Least One Exceedance

No Exceedance

Over Excavated Sample Locations

Naval Reserve Parcel UST Interim Action Area Verification Samples and Residual Exceedances

K-C Worldwide Site Upland Area Interim Action
Everett, Washington

Aspect CONSULTING	JUL-2014	BY: SJG / HRL	FIGURE NO. 9
	PROJECT NO. 110207	REVISED BY: ---	

GIS Path: T:\projects_8\KimberlyClark\Env Support_110207\Delivered\IA_July2014 Stoplight Figures\09 NRU_85x11.mxd || Coordinate System: NAD 1983 StatePlane Washington North FIPS 4601 Feet || Date Saved: 7/21/2014 || User: hlovelace || Print Date: 7/21/2014

TPHs/cPAHs

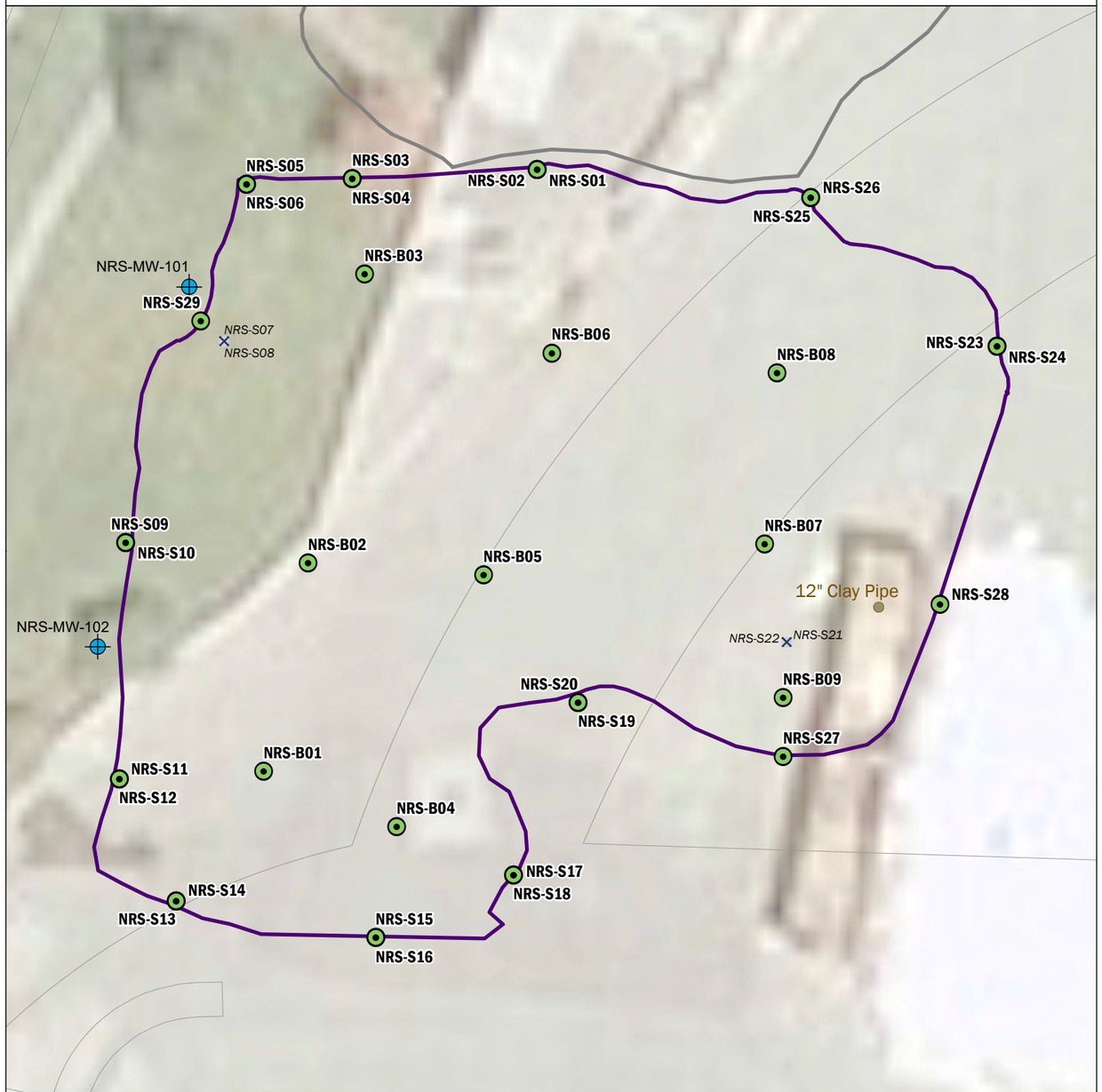

Metals



Monitoring Well

Over Excavated Sample Locations

12-inch Clay Pipe

Naval Reserve Parcel South Excavation Outline

Naval Reserve Parcel UST Excavation Outline

Verification Samples

Exceedance Present

At Least One Exceedance

No Exceedance

N

0 7.5 15

Feet

Naval Reserve Parcel South Interim Action Area Verification Samples and Residual Exceedances

K-C Worldwide Site Upland Area Interim Action
Everett, Washington

Aspect CONSULTING	JAN-2015	BY: SJG / HRL	FIGURE NO. 10
	PROJECT NO. 110207	REV BY: ---	

GIS Path: T:\projects_8\KimberlyClark\Env_Support_110207\Deliverc\JA_Jul2014 Spotlight Figures\10 NRS.mxd | | Coordinate System: NAD 1983 StatePlane Washington South FIPS 4602 Feet | | Date Saved: 1/20/2015 | | User: randruwyszyn | | Print Date: 1/20/2015

TPHs/cPAHs

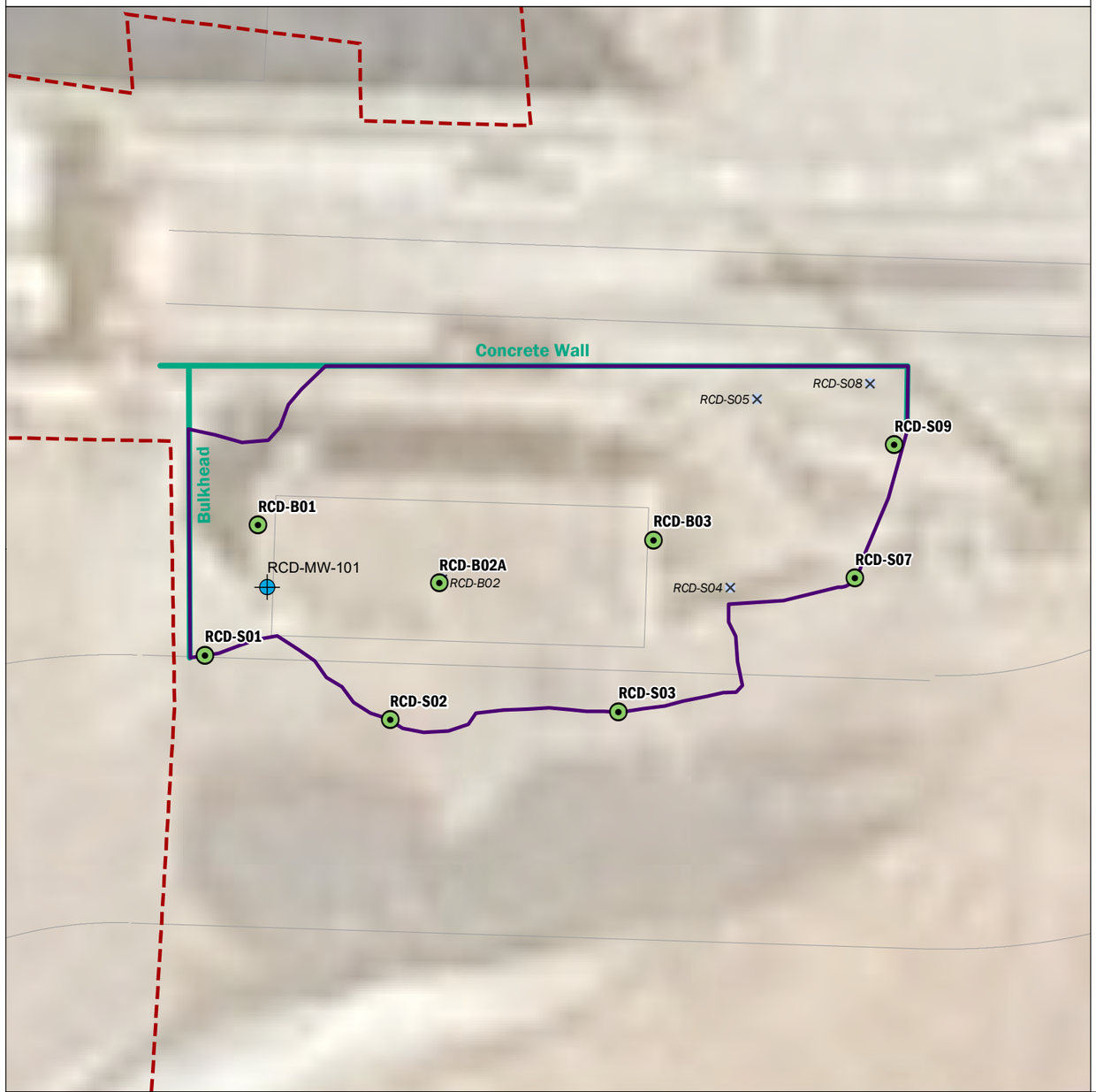

Metals

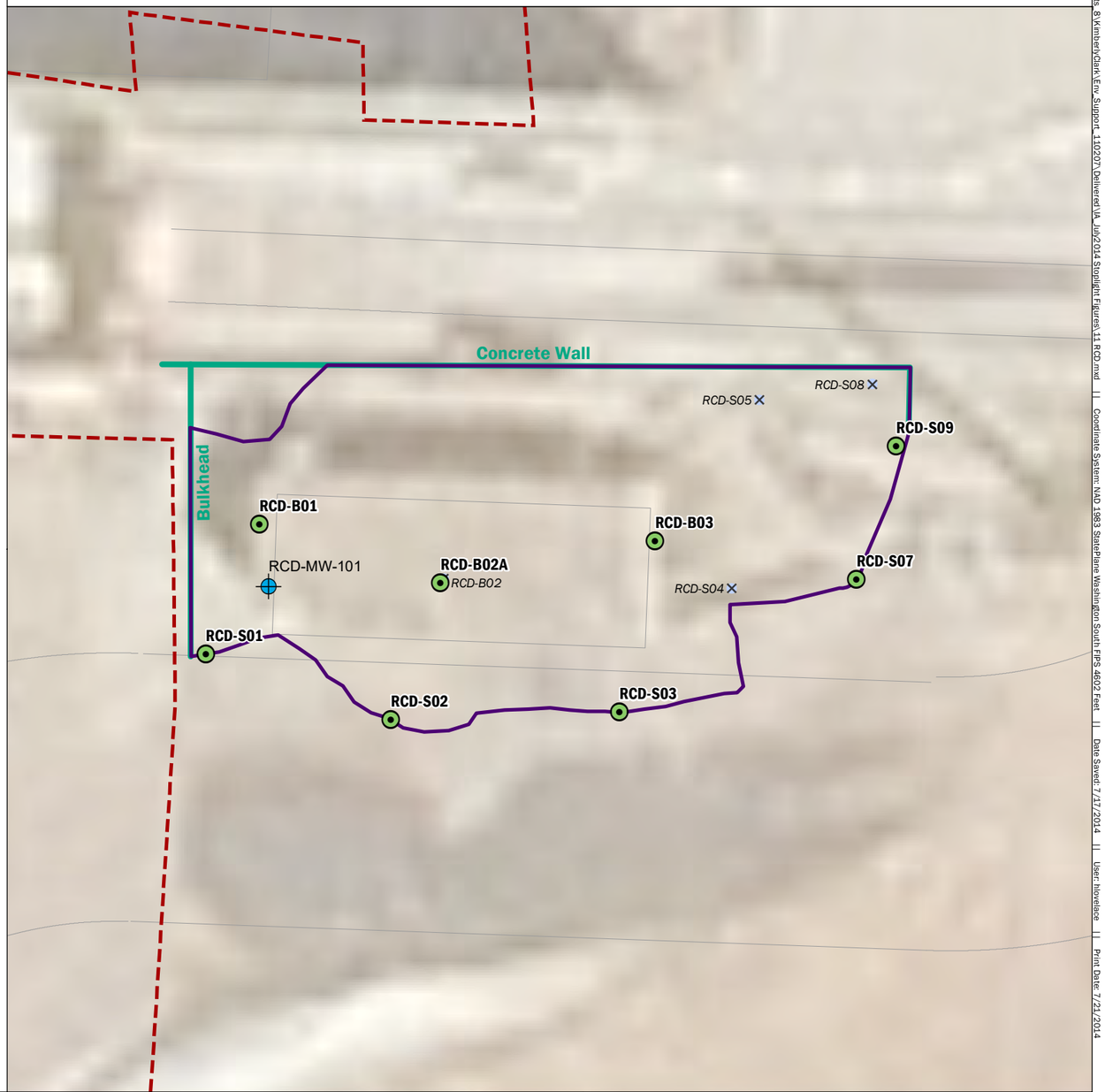

Monitoring Well

Upland Area Boundary

Rail Car Dumper Excavation Extent

Verification Samples

Exceedance Present

At Least One Exceedance

No Exceedance

Over Excavated Sample Locations

N

0 5 10

Feet

Rail Car Dumper Interim Action Area Verification Samples and Residual Exceedances

K-C Worldwide Site Upland Area Interim Action
Everett, Washington

Aspect CONSULTING	JUL-2014	BY: SJG / HRL	FIGURE NO. 11
	PROJECT NO. 110207	REV BY: ---	

GIS Path: T:\projects_8\Kimberly\Task\Env_Support_110207\Delivered\JA_Jul2014 Stoplight Figures\11 RCD.mxd | | Coordinate System: NAD 1983 StatePlane Washington South FIPS 4602 Feet | | Date Saved: 7/17/2014 | | User: Novelace | | Print Date: 7/21/2014

TPHs/cPAHs



Metals



Monitoring Well

REC2-MW-5 Excavation Extent

Verification Samples

Exceedance Present

At Least One Exceedance

No Exceedance

Over Excavated Sample Locations

Count of residual metals exceedances in verification soil samples: 8 copper, 4 mercury, 4 zinc; refer to Table 14 for full data.

N

0 5 10

Feet

REC2-MW-5 (near Diesel AST) Interim Action Area Verification Samples and Residual Exceedances

K-C Worldwide Site Upland Area Interim Action
Everett, Washington

Aspect Consulting	JUL-2014	BY: SJG / HRL	FIGURE NO. 12
	PROJECT NO. 110207	REV BY: ---	

GIS Path: T:\projects_8\Kimberly\Data\Env_Support_110207\Delivered\IA_Jul2014 Stoplight Figures\12_REC2-MW-5.mxd || Coordinate System: NAD 1983 StatePlane Washington North FIPS 4601 Feet || Date Saved: 7/17/2014 || User: hlovelace || Print Date: 7/21/2014

TPHs/cPAHs

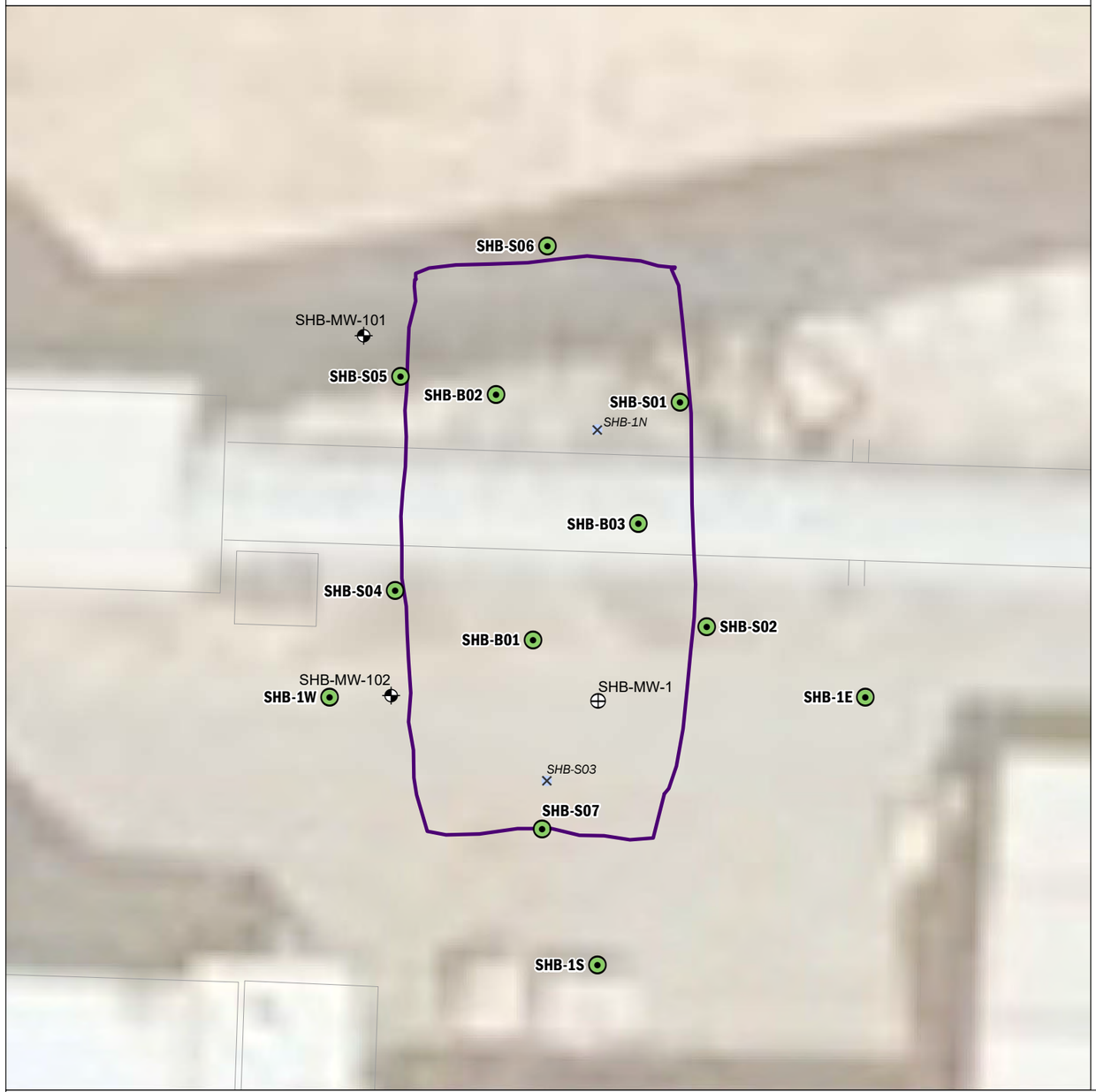

Metals

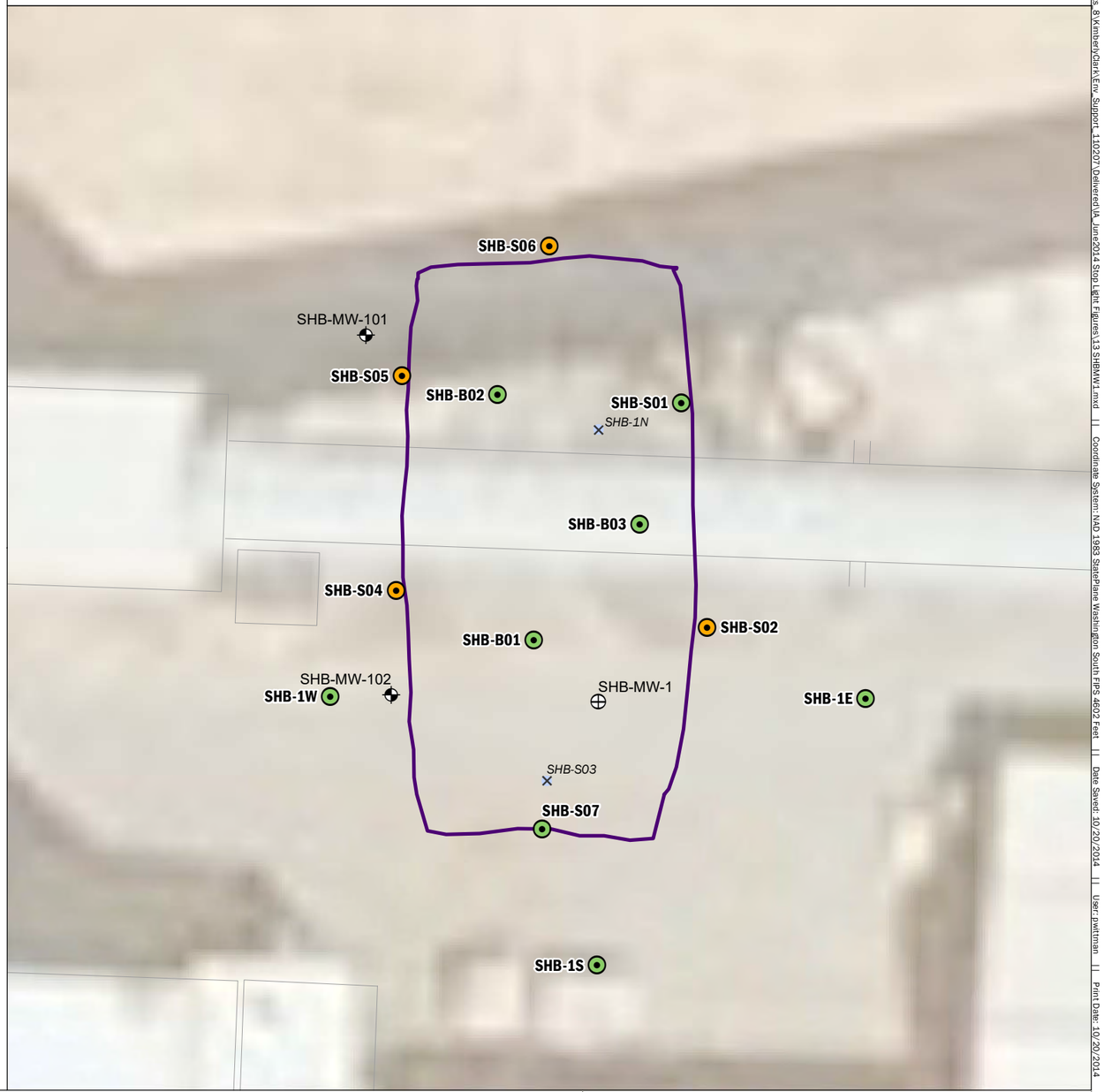

- Decommisioned Monitoring Well
- Monitoring Well
- SHB-MW-1 Excavation Extent

Verification Samples

Exceedance Present

- At Least One Exceedance
- No Exceedance
- Over Excavated Sample Locations

Count of residual metals exceedances in verification soil samples:
3 copper, 1 mercury, 2 zinc; refer to Table 15 for full data.

N

0 5 10

Feet

SHB-MW-1 Interim Action Area Verification Samples and Residual Exceedances

K-C Worldwide Site Upland Area Interim Action
Everett, Washington

Aspect CONSULTING	OCT-2014	BY: SJG / HRL	FIGURE NO. 13
	PROJECT NO. 110207	REV BY: - - -	

GIS Path: T:\projects_8\Kimberly\Dark\Env_Support_110207\Delivered\IA_June2014 StopLight Figures\13 SHBMW1.mxd | | Coordinate System: NAD 1983 StatePlane Washington South FIPS 4602 Feet | | Date Saved: 10/20/2014 | | User: pwittman | | Print Date: 10/20/2014

TPHs/cPAHs

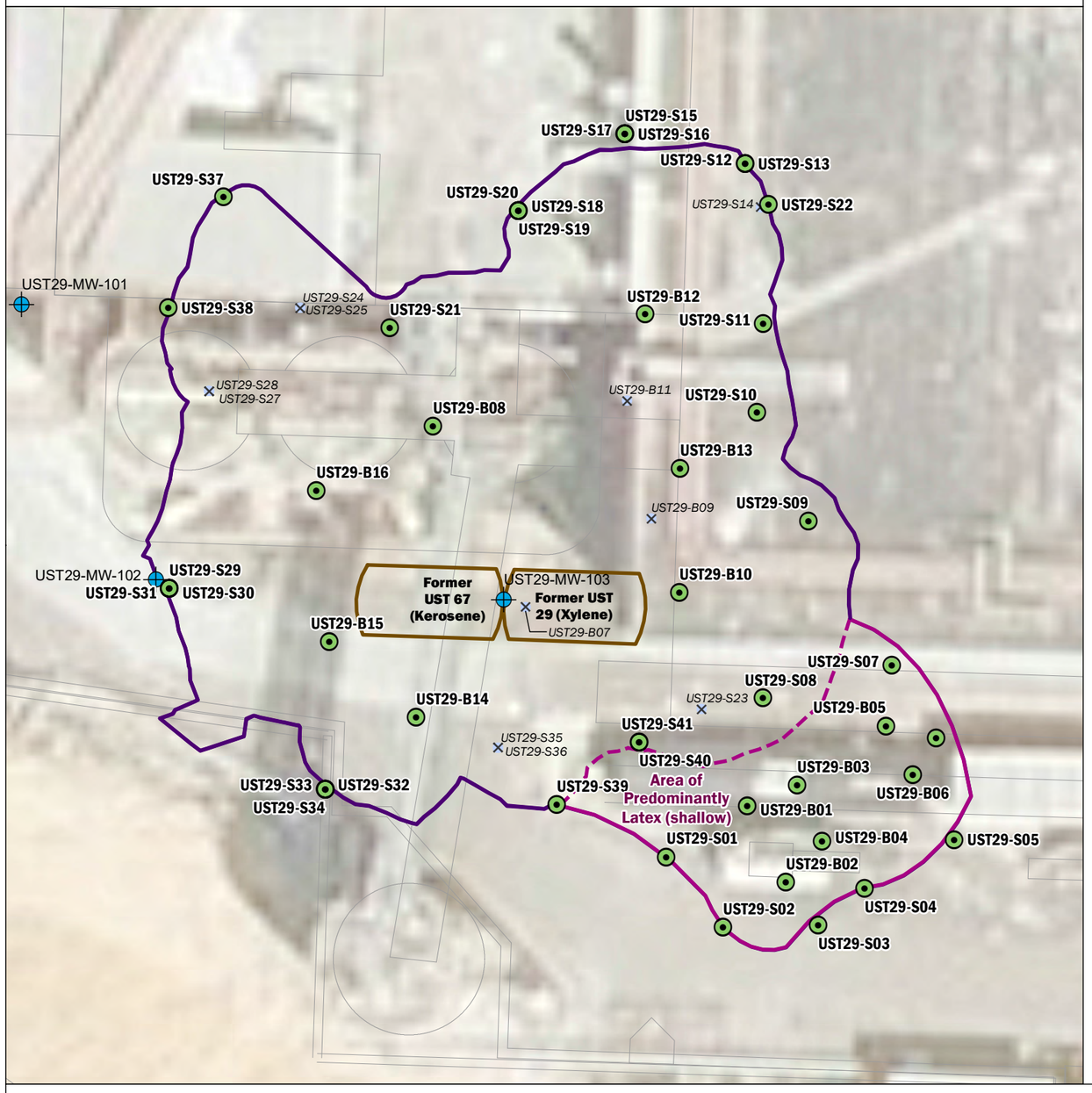

Metals

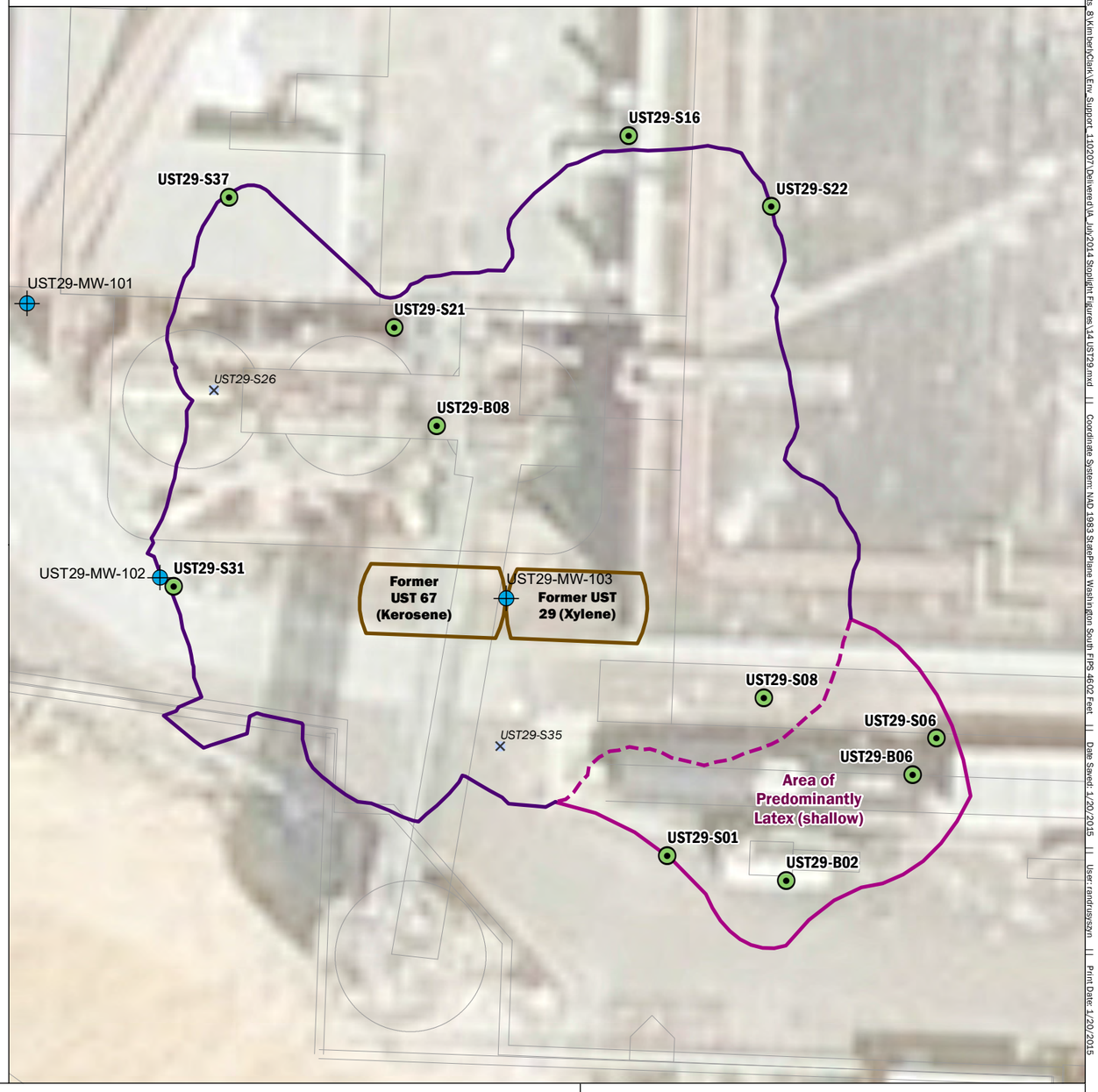

Monitoring Well

Former USTs

UST 29/Latex Spill Excavation Extent

Verification Samples

Exceedance Present

At Least One Exceedance

No Exceedance

Over Excavated Sample Locations

N

0 10 20

Feet

UST 29/Latex Spill Interim Action Area Verification Samples and Residual Exceedances

K-C Worldwide Site Upland Area Interim Action
Everett, Washington

Aspect CONSULTING	JAN-2015	BY: SJG / HRL	FIGURE NO. 14
	PROJECT NO. 110207	REV BY: ---	

GIS Path: T:\projects_8\KimberlyClark\Env_Support_110207\Deliverable\JA_July2014 Spotlight Figures\14_UST29.mxd | | Coordinate System: NAD_1983_StatePlane_Washington_South_FIPS_4602_Feet | | Date Saved: 1/20/2015 | | User: randruskyn | | Print Date: 1/20/2015

TPHs/cPAHs

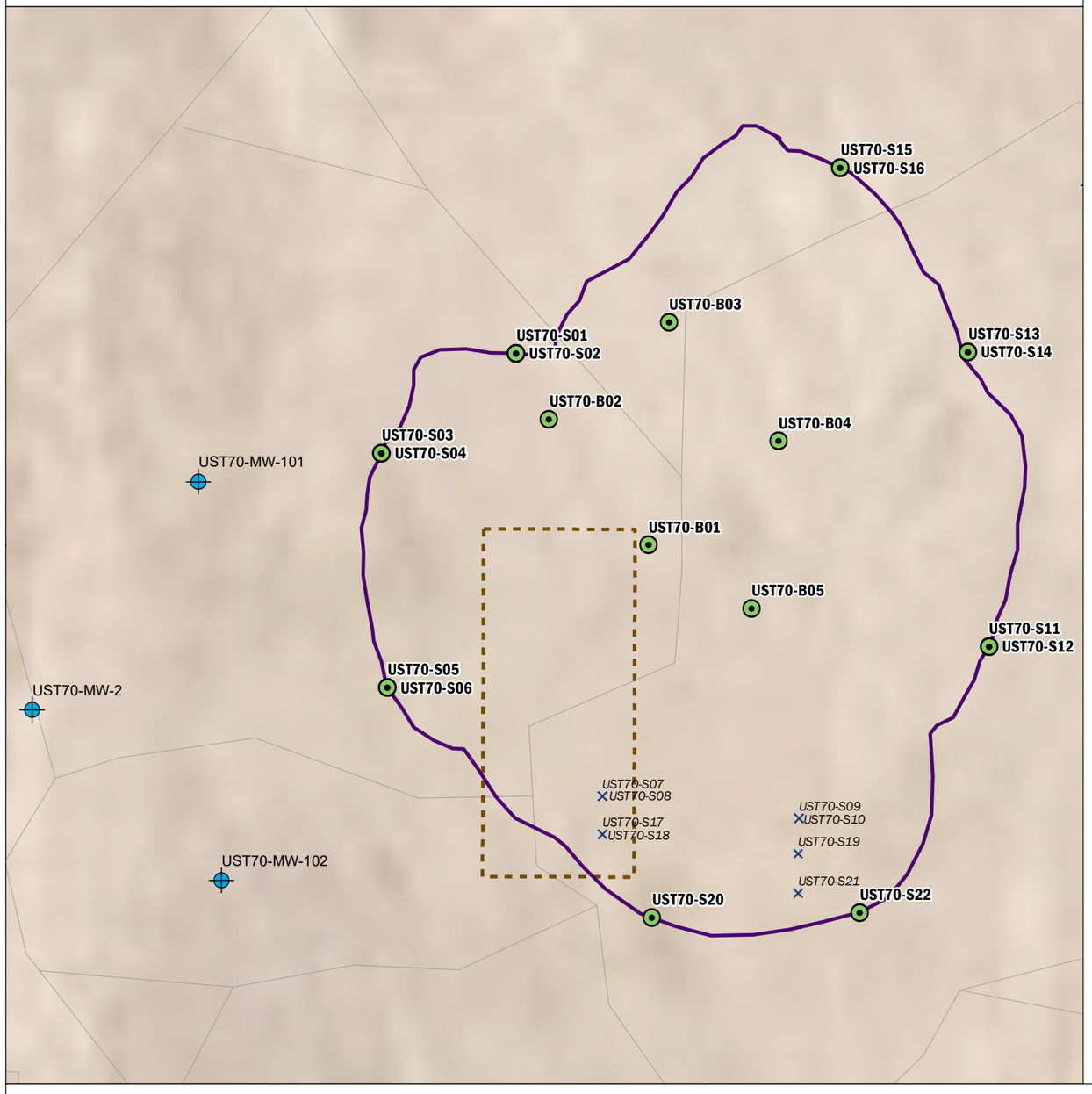

Metals

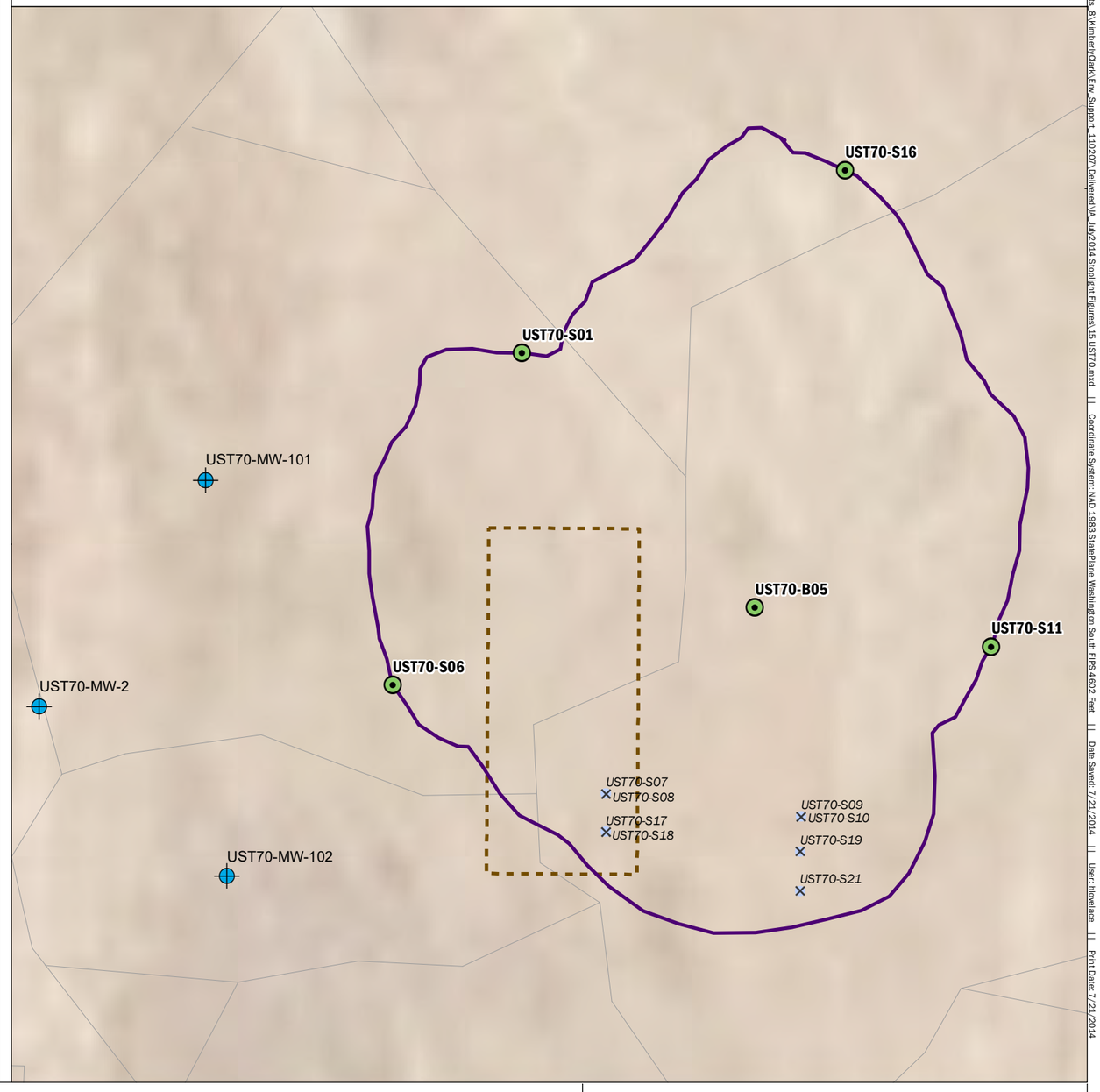

Monitoring Well

Approximate Location of UST 70

UST 70 Excavation Extent

Verification Samples

Exceedance Present

At Least One Exceedance

No Exceedance

Over Excavated Sample Locations

N

0 5 10

Feet

UST 70 Interim Action Area Verification Samples and Residual Exceedances

K-C Worldwide Site Upland Area Interim Action
Everett, Washington

Aspect CONSULTING	JUL-2014	BY: SJG / HRL	FIGURE NO. 15
	PROJECT NO. 110207	REV BY: ---	

GIS Path: T:\projects_8\Kimberly\Task\Env_Support_110207\Delivered\JA_Jul\2014 Stoplight Figures\15 UST70.mxd | | Coordinate System: NAD 1983 StatePlane Washington South FIPS 4602 Feet | | Date Saved: 7/21/2014 | | User: hlovelace | | Print Date: 7/21/2014

TPHs/cPAHs

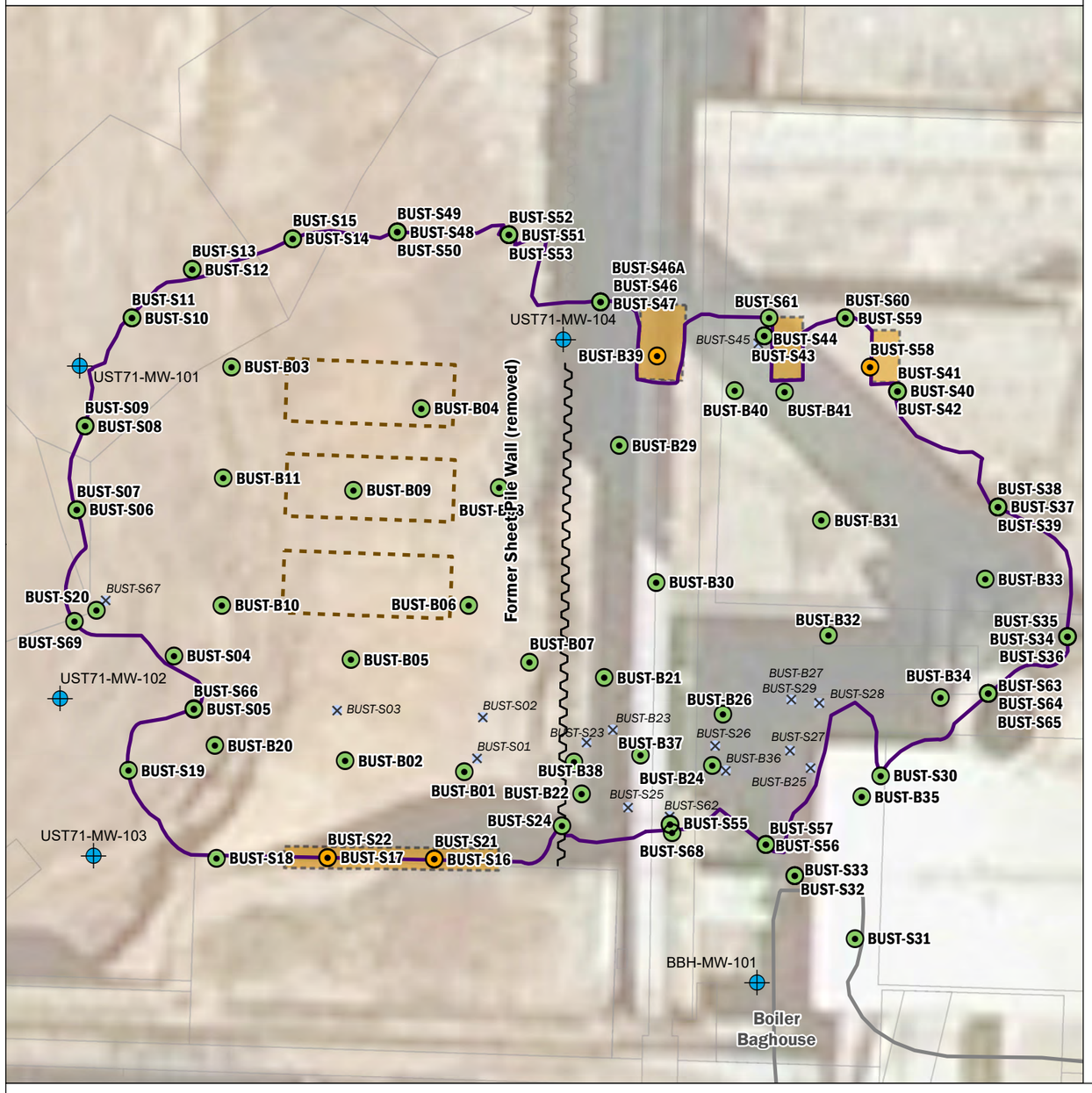

Metals

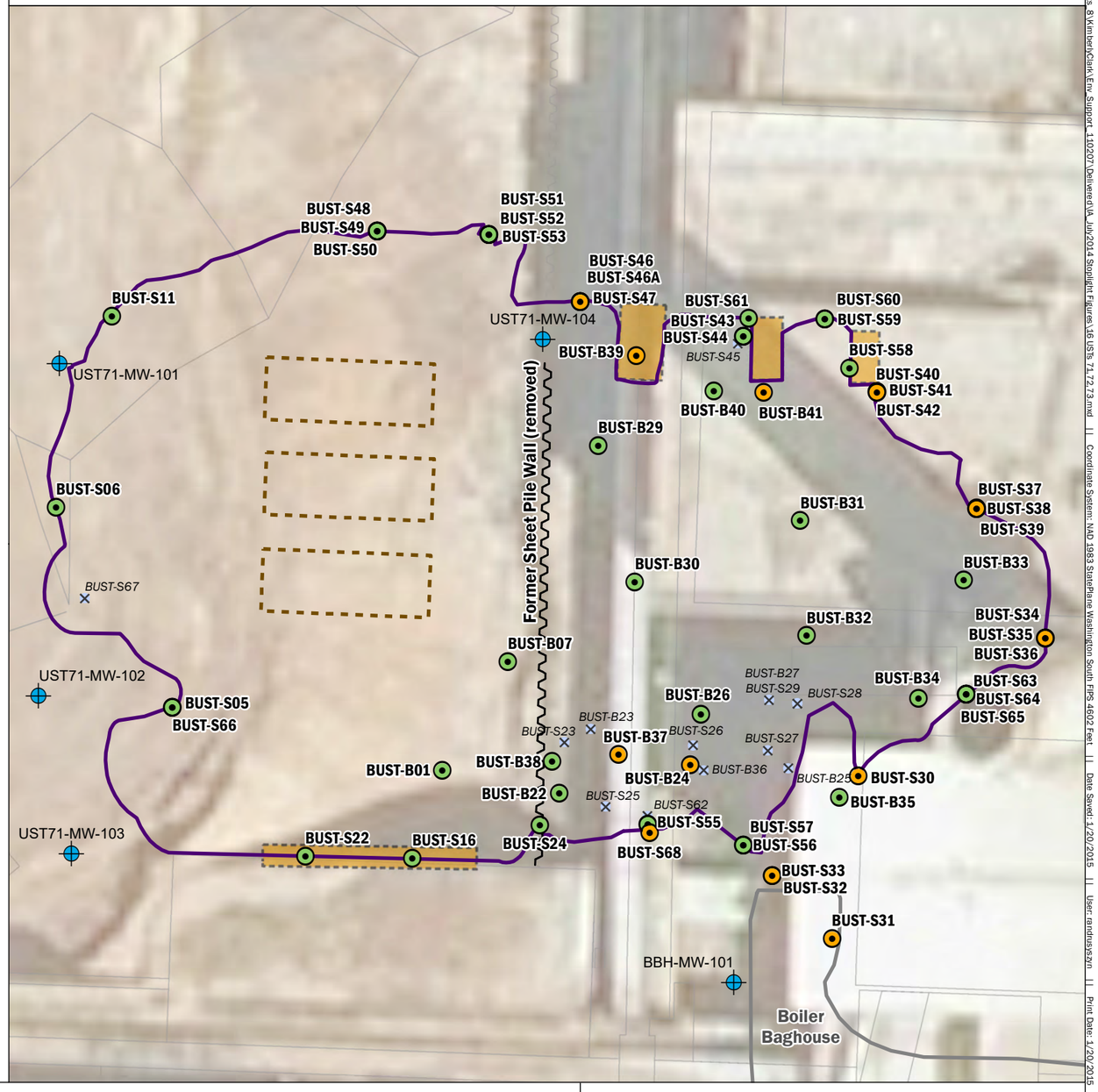

Monitoring Well

Former Sheet Pile Wall (Removed)

Residual petroleum-impacted soil beneath monolithic foundation

Boiler Baghouse Excavation Outline

Bunker C UST Excavation Outline

Verification Samples

Exceedance Present

At Least One Exceedance

No Exceedance

Over Excavated Sample Locations

Count of residual metals exceedances in verification soil samples: Copper 4, Mercury 12; refer to Table 18 for full data.

N

0 10 20

Feet

USTs 71, 72, 73 Interim Action Area Verification Samples and Residual Exceedances

K-C Worldwide Site Upland Area Interim Action
Everett, Washington

Aspect CONSULTING	JAN-2015	BY: SJG / HRL	FIGURE NO. 16
	PROJECT NO. 110207	REV BY: ---	

GIS Path: T:\projects_8\Kimberly\Clark\Env_Support_110207\Deliverable\JA_Jul2014 Spotlight Figures\16 USTs 71,72,73.mxd | | Coordinate System: NAD 1983 StatePlane Washington South FIPS 4602 Feet | | Date Saved: 1/20/2015 | | User: randrusyszyn | | Print Date: 1/20/2015

APPENDIX A

Waste Disposal Records

Certificates of Disposal and Manifests for Hazardous Waste Soil Disposed at Chemical Waste Management Subtitle C Landfill

WASTE MANAGEMENT
17629 Cedar Springs Lane
Arlington, OR 97812

APR 07 2014
By

KIMBERLY CLARK CORP
WAD009250820
2600 FEDERAL AVE
EVERETT WA 98201-3409

CERTIFICATE OF DISPOSAL

Chemical Waste Management of the Northwest, Inc., ORD089452353, has received the following waste material:

GENERATOR:	KIMBERLY CLARK CORP
MANIFEST #:	001823392JJK
CWM TRACKING ID:	431138-01
PROFILE #:	OR321512
LINE ITEM:	9b.1
QUANTITY:	1 DT
RECEIVED DATE:	11/25/13
DISPOSAL PROCESS(ES):	STABILIZATION FOLLOWED BY LANDFILL
FINAL DISPOSAL LOCATION:	LANDFILL 14
DISPOSAL DATE:	11/27/13

I certify, on behalf of the above listed treatment facility, that to the best of my knowledge, the above-described waste material was managed in compliance with all applicable laws, regulations, permits and licenses on the date listed above.

Becky Sumner

CWMNW RECORDS DEPARTMENT
Date: 01/09/14

WASTE MANAGEMENT
17629 Cedar Springs Lane
Arlington, OR 97812

APR 07 2014

KIMBERLY CLARK CORP
WAD009250820
2600 FEDERAL AVE
EVERETT WA 98201-3409

CERTIFICATE OF DISPOSAL

Chemical Waste Management of the Northwest, Inc., ORD089452353, has received the following waste material:

GENERATOR:	KIMBERLY CLARK CORP
MANIFEST #:	001823390JJK
CWM TRACKING ID:	431137-01
PROFILE #:	OR321512
LINE ITEM:	9b.1
QUANTITY:	1 DT
RECEIVED DATE:	11/25/13
DISPOSAL PROCESS(ES):	STABILIZATION FOLLOWED BY LANDFILL
FINAL DISPOSAL LOCATION:	LANDFILL 14
DISPOSAL DATE:	11/27/13

I certify, on behalf of the above listed treatment facility, that to the best of my knowledge, the above-described waste material was managed in compliance with all applicable laws, regulations, permits and licenses on the date listed above.

Becky Sumner

CWMNW RECORDS DEPARTMENT
Date: 01/09/14

APR 07 2014

WASTE MANAGEMENT
17629 Cedar Springs Lane
Arlington, OR 97812

KIMBERLY CLARK CORP
WAD009250820
2600 FEDERAL AVE
EVERETT WA 98201-3409

CERTIFICATE OF DISPOSAL

Chemical Waste Management of the Northwest, Inc., ORD089452353, has received the following waste material:

GENERATOR:	KIMBERLY CLARK CORP
MANIFEST #:	001823391JJK
CWM TRACKING ID:	431136-01
PROFILE #:	OR321512
LINE ITEM:	9b.1
QUANTITY:	1 DT
RECEIVED DATE:	11/25/13
DISPOSAL PROCESS(ES):	STABILIZATION FOLLOWED BY LANDFILL
FINAL DISPOSAL LOCATION:	LANDFILL 14
DISPOSAL DATE:	11/27/13

I certify, on behalf of the above listed treatment facility, that to the best of my knowledge, the above-described waste material was managed in compliance with all applicable laws, regulations, permits and licenses on the date listed above.

Becky Sumner

CWMNW RECORDS DEPARTMENT
Date: 01/09/14

WASTE MANAGEMENT
17629 Cedar Springs Lane
Arlington, OR 97812

APR 07 2014

KIMBERLY CLARK CORP
WAD009250820
2600 FEDERAL AVE
EVERETT WA 98201-3409

CERTIFICATE OF DISPOSAL

Chemical Waste Management of the Northwest, Inc., ORD089452353, has received the following waste material:

GENERATOR:	KIMBERLY CLARK CORP
MANIFEST #:	001823389JJK
CWM TRACKING ID:	431304-01
PROFILE #:	OR321512
LINE ITEM:	9b.1
QUANTITY:	1 DT
RECEIVED DATE:	12/02/13
DISPOSAL PROCESS(ES):	STABILIZATION FOLLOWED BY LANDFILL
FINAL DISPOSAL LOCATION:	LANDFILL 14
DISPOSAL DATE:	12/03/13

I certify, on behalf of the above listed treatment facility, that to the best of my knowledge, the above-described waste material was managed in compliance with all applicable laws, regulations, permits and licenses on the date listed above.

Becky Sumner

CWMNW RECORDS DEPARTMENT
Date: 01/13/14

WASTE MANAGEMENT
17629 Cedar Springs Lane
Arlington, OR 97812

APR 07 2014

KIMBERLY CLARK CORP
WAD009250820
2600 FEDERAL AVE
EVERETT WA 98201-3409

CERTIFICATE OF DISPOSAL

Chemical Waste Management of the Northwest, Inc., ORD089452353, has received the following waste material:

GENERATOR:	KIMBERLY CLARK CORP
MANIFEST #:	001823395JJK
CWM TRACKING ID:	431308-01
PROFILE #:	OR321512
LINE ITEM:	9b.1
QUANTITY:	1 DT
RECEIVED DATE:	12/02/13
DISPOSAL PROCESS(ES):	STABILIZATION FOLLOWED BY LANDFILL
FINAL DISPOSAL LOCATION:	LANDFILL 14
DISPOSAL DATE:	12/03/13

I certify, on behalf of the above listed treatment facility, that to the best of my knowledge, the above-described waste material was managed in compliance with all applicable laws, regulations, permits and licenses on the date listed above.

Becky Sumner

CWMNW RECORDS DEPARTMENT
Date: 01/13/14

WASTE MANAGEMENT

APR 07 2014

WASTE MANAGEMENT
17629 Cedar Springs Lane
Arlington, OR 97812

KIMBERLY CLARK CORP
WAD009250820
2600 FEDERAL AVE
EVERETT WA 98201-3409

CERTIFICATE OF DISPOSAL

Chemical Waste Management of the Northwest, Inc., ORD089452353, has received the following waste material:

GENERATOR:	KIMBERLY CLARK CORP
MANIFEST #:	001823394JJK
CWM TRACKING ID:	431309-01
PROFILE #:	OR321512
LINE ITEM:	9b.1
QUANTITY:	1 DT
RECEIVED DATE:	12/02/13
DISPOSAL PROCESS(ES):	STABILIZATION FOLLOWED BY LANDFILL
FINAL DISPOSAL LOCATION:	LANDFILL 14
DISPOSAL DATE:	12/03/13

I certify, on behalf of the above listed treatment facility, that to the best of my knowledge, the above-described waste material was managed in compliance with all applicable laws, regulations, permits and licenses on the date listed above.

Becky Sumner

CWMNW RECORDS DEPARTMENT
Date: 01/13/14

WASTE MANAGEMENT
17629 Cedar Springs Lane
Arlington, OR 97812

APR 07 2014
By

KIMBERLY CLARK CORP
WAD009250820
2600 FEDERAL AVE
EVERETT WA 98201-3409

CERTIFICATE OF DISPOSAL

Chemical Waste Management of the Northwest, Inc., ORD089452353, has received the following waste material:

GENERATOR:	KIMBERLY CLARK CORP
MANIFEST #:	001823393JJK
CWM TRACKING ID:	431358-01
PROFILE #:	OR321512
LINE ITEM:	9b.1
QUANTITY:	1 DT
RECEIVED DATE:	12/03/13
DISPOSAL PROCESS(ES):	STABILIZATION FOLLOWED BY LANDFILL
FINAL DISPOSAL LOCATION:	LANDFILL 14
DISPOSAL DATE:	12/04/13

I certify, on behalf of the above listed treatment facility, that to the best of my knowledge, the above-described waste material was managed in compliance with all applicable laws, regulations, permits and licenses on the date listed above.

Becky Sumner

CWMNW RECORDS DEPARTMENT
Date: 01/13/14

431304 213061 CWMI

Please print or type. (Form designed for use on elite (12-pitch) typewriter.) Form Approved. OMB No. 2050-0039

UNIFORM HAZARDOUS WASTE MANIFEST	1. Generator ID Number	2. Page 1 of	3. Emergency Response Phone	4. Manifest Tracking Number
	WAD009250820	1	(800)424-9300	001823389 JJK

5. Generator's Name and Mailing Address
KIMBERLY CLARK CORP
2600 FEDERAL AVE
EVERETT WA 98201-3409
Generator's Phone: (206) 259-7393

Generator's Site Address (if different than mailing address)

6. Transporter 1 Company Name: STEVE FORLER 208 342 3145 — U.S. EPA ID Number: WAR000010263

7. Transporter 2 Company Name — U.S. EPA ID Number

8. Designated Facility Name and Site Address
CHEMICAL WASTE MANAGEMENT, INC
17629 CEDAR SPRINGS LANE
ARLINGTON OR 97812-9709
Facility's Phone: (541)454-2843
U.S. EPA ID Number: ORD089452353

9a. HM	9b. U.S. DOT Description (including Proper Shipping Name, Hazard Class, ID Number, and Packing Group (if any))	10. Containers No.	10. Containers Type	11. Total Quantity	12. Unit Wt./Vol.	13. Waste Codes
X	1. RQ, NA3077, WASTE HAZARDOUS WASTE, SOLID, N.O.S., 9, III (LEAD SOIL WITH <10% DEMO DEBRIS)	1	DT	63000	P	D008
	2.					
	3.					
	4.					

14. Special Handling Instructions and Additional Information
1. OR321512 LEAD CONTAMINATED SOIL WITH DEMOLITION DEBRIS; ERG# 171 (RQ = 10 LBS)
(176.4LB)

15. **GENERATOR'S/OFFEROR'S CERTIFICATION:** I hereby declare that the contents of this consignment are fully and accurately described above by the proper shipping name, and are classified, packaged, marked and labeled/placarded, and are in all respects in proper condition for transport according to applicable international and national governmental regulations. If export shipment and I am the Primary Exporter, I certify that the contents of this consignment conform to the terms of the attached EPA Acknowledgment of Consent.
I certify that the waste minimization statement identified in 40 CFR 262.27(a) (if I am a large quantity generator) or (b) (if I am a small quantity generator) is true.

Generator's/Offeror's Printed/Typed Name: Robert R. HANFORD Agent for Kimberly Clark Corp. — Signature: Robert R Hanford — Month 12 Day 02 Year 13

INT'L

16. International Shipments ☐ Import to U.S. ☐ Export from U.S. Port of entry/exit:
Transporter signature (for exports only): Date leaving U.S.:

TRANSPORTER

17. Transporter Acknowledgment of Receipt of Materials
Transporter 1 Printed/Typed Name: Shannon Lykins — Signature — Month 12 Day 2 Year 13
Transporter 2 Printed/Typed Name — Signature — Month Day Year

DESIGNATED FACILITY

18. Discrepancy
18a. Discrepancy Indication Space ☐ Quantity ☐ Type ☐ Residue ☐ Partial Rejection ☐ Full Rejection
Manifest Reference Number:
18b. Alternate Facility (or Generator) — U.S. EPA ID Number
Facility's Phone:
18c. Signature of Alternate Facility (or Generator) — Month Day Year

19. Hazardous Waste Report Management Method Codes (i.e., codes for hazardous waste treatment, disposal, and recycling systems)

1.	2.	3.	4.
H110			

20. Designated Facility Owner or Operator: Certification of receipt of hazardous materials covered by the manifest except as noted in Item 18a
Printed/Typed Name: Bobby McGavin — Signature: Bobby McGavin — Month 12 Day 2 Year 13

EPA Form 8700-22 (Rev. 3-05) Previous editions are obsolete.

DESIGNATED FACILITY TO GENERATOR

BMS

213061

CWMI

11-25-13 433 431137

Please print or type. (Form designed for use on elite (12-pitch) typewriter)

Form Approved. OMB No. 2050-0039

UNIFORM HAZARDOUS WASTE MANIFEST	1. Generator ID Number	2. Page 1 of	3. Emergency Response Phone	4. Manifest Tracking Number
	WA D 0 0 9 2 5 0 8 2 0	1	(800) 424-9300	001823390 JJK

5. Generator's Name and Mailing Address
KIMBERLY CLARK CORP
2600 FEDERAL AVE
EVERETT WA 98201-3409
Generator's Phone: (206) 259-7393

Generator's Site Address (if different than mailing address)

6. Transporter 1 Company Name: STEVE FOWLER Trucking 208-342-2145 — U.S. EPA ID Number: WAR000001263

7. Transporter 2 Company Name — U.S. EPA ID Number

8. Designated Facility Name and Site Address
CHEMICAL WASTE MANAGEMENT, INC.
17629 CEDAR SPRINGS LANE
ARLINGTON OR 97812-9709
Facility's Phone: (541) 454-2643
U.S. EPA ID Number: ORD089452353

	9a. HM	9b. U.S. DOT Description (including Proper Shipping Name, Hazard Class, ID Number, and Packing Group (if any))	10. Containers No.	10. Containers Type	11. Total Quantity	12. Unit Wt./Vol.	13. Waste Codes		
GENERATOR	X	1. RQ, NA3077, WASTE HAZARDOUS WASTE, SOLID, N.O.S., 9, III LEAD SOIL WITH <10% DEMO DEBRIS	1	DT	63,000		D008		
		2.							
		3.							
		4.							

14. Special Handling Instructions and Additional Information
1. OR321512: LEAD CONTAMINATED SOIL WITH DEMOLITION DEBRIS; ERG# 171 (RQ = 10 LBS)
58800 P.

15. GENERATOR'S/OFFEROR'S CERTIFICATION: I hereby declare that the contents of this consignment are fully and accurately described above by the proper shipping name, and are classified, packaged, marked and labeled/placarded, and are in all respects in proper condition for transport according to applicable international and national governmental regulations. If export shipment and I am the Primary Exporter, I certify that the contents of this consignment conform to the terms of the attached EPA Acknowledgment of Consent.
I certify that the waste minimization statement identified in 40 CFR 262.27(a) (if I am a large quantity generator) or (b) (if I am a small quantity generator) is true.

Generator's/Offeror's Printed/Typed Name: Robert R. HANFORD Agent for Kimberly Clark Corp — Signature: [signature] — Month 11 Day 25 Year 2013

INTL
16. International Shipments ☐ Import to U.S. ☐ Export from U.S. Port of entry/exit:
Transporter signature (for exports only): Date leaving U.S.:

TRANSPORTER
17. Transporter Acknowledgment of Receipt of Materials
Transporter 1 Printed/Typed Name: Shannon Lyons — Signature: [signature] — Month 11 Day 25 Year 13
Transporter 2 Printed/Typed Name — Signature — Month Day Year

DESIGNATED FACILITY
18. Discrepancy
18a. Discrepancy Indication Space ☐ Quantity ☐ Type ☐ Residue ☐ Partial Rejection ☐ Full Rejection
Manifest Reference Number:
18b. Alternate Facility (or Generator) — U.S. EPA ID Number
Facility's Phone:
18c. Signature of Alternate Facility (or Generator) — Month Day Year

19. Hazardous Waste Report Management Method Codes (i.e., codes for hazardous waste treatment, disposal, and recycling systems)

1.	2.	3.	4.
H110			

20. Designated Facility Owner or Operator: Certification of receipt of hazardous materials covered by the manifest except as noted in Item 18a
Printed/Typed Name: Sue McAlren — Signature: [signature] — Month 11 Day 25 Year 13

EPA Form 8700-22 (Rev. 3-05) Previous editions are obsolete.

DESIGNATED FACILITY TO DESTINATION STATE (IF REQUIRED)

129

2130 61

CWMI

Please print or type. (Form designed for use on elite (12-pitch) typewriter.)

43136

Form Approved. OMB No. 2050-0039

UNIFORM HAZARDOUS WASTE MANIFEST

1. Generator ID Number: WAD009250820
2. Page 1 of: 1
3. Emergency Response Phone: (800) 424-9300
4. Manifest Tracking Number: 001823391 JJK

5. Generator's Name and Mailing Address
KIMBERLY CLARK CORP
2600 FEDERAL AVE
EVERETT WA 98201-3409
Generator's Phone: (206) 259-7303

Generator's Site Address (if different than mailing address)

6. Transporter 1 Company Name: STEVE FORIER TRUCKING (208)-342-2145
U.S. EPA ID Number: WAR000001263

7. Transporter 2 Company Name
U.S. EPA ID Number

8. Designated Facility Name and Site Address
CHEMICAL WASTE MANAGEMENT, INC.
17629 CEDAR SPRINGS LANE
ARLINGTON OR 97812-9709
Facility's Phone: (541)454-2643
U.S. EPA ID Number: ORD089452353

9a. HM	9b. U.S. DOT Description (including Proper Shipping Name, Hazard Class, ID Number, and Packing Group (if any))	10. Containers No.	10. Containers Type	11. Total Quantity	12. Unit Wt./Vol.	13. Waste Codes		
X	1. RQ, NA3077, WASTE HAZARDOUS WASTE, SOLID, N.O.S., 9, III LEAD SOIL WITH ≤10% DEMO DEBRIS	1	DT	63,000	P LB	D008		
	2.							
	3.							
	4.							

14. Special Handling Instructions and Additional Information
1. OR321512: LEAD CONTAMINATED SOIL WITH DEMOLITION DEBRIS; ERG# 171 (RQ = 10 LBS)
64040 P.

15. GENERATOR'S/OFFEROR'S CERTIFICATION: I hereby declare that the contents of this consignment are fully and accurately described above by the proper shipping name, and are classified, packaged, marked and labeled/placarded, and are in all respects in proper condition for transport according to applicable international and national governmental regulations. If export shipment and I am the Primary Exporter, I certify that the contents of this consignment conform to the terms of the attached EPA Acknowledgment of Consent.
I certify that the waste minimization statement identified in 40 CFR 262.27(a) (if I am a large quantity generator) or (b) (if I am a small quantity generator) is true.

Generator's/Offeror's Printed/Typed Name: Robert R Hanford Agent for Kimberly Clark Corp
Signature:
Month: 11 Day: 25 Year: 2013

INT'L
16. International Shipments ☐ Import to U.S. ☐ Export from U.S. Port of entry/exit:
Transporter signature (for exports only): Date leaving U.S.:

TRANSPORTER
17. Transporter Acknowledgment of Receipt of Materials
Transporter 1 Printed/Typed Name: GARY BYERLEY
Signature:
Month: 11 Day: 26 Year: 13
Transporter 2 Printed/Typed Name
Signature
Month Day Year

DESIGNATED FACILITY
18. Discrepancy
18a. Discrepancy Indication Space ☐ Quantity ☐ Type ☐ Residue ☐ Partial Rejection ☐ Full Rejection
Manifest Reference Number:
18b. Alternate Facility (or Generator)
U.S. EPA ID Number
Facility's Phone:
18c. Signature of Alternate Facility (or Generator)
Month Day Year

19. Hazardous Waste Report Management Method Codes (i.e., codes for hazardous waste treatment, disposal, and recycling systems)
1. H110 2. 3. 4.

20. Designated Facility Owner or Operator: Certification of receipt of hazardous materials covered by the manifest except as noted in Item 18a
Printed/Typed Name: Sue McAhren
Signature:
Month: 11 Day: 25 Year: 13

EPA Form 8700-22 (Rev. 3-05) Previous editions are obsolete.

DESIGNATED FACILITY TO DESTINATION STATE (IF REQUIRED)

213061

CWMI

Please print or type. (Form designed for use on elite (12-pitch) typewriter.) 431138

Form Approved. OMB No. 2050-0039

UNIFORM HAZARDOUS WASTE MANIFEST	1. Generator ID Number	2. Page 1 of	3. Emergency Response Phone	4. Manifest Tracking Number
	WA D 0 0 9 2 5 0 8 2 0	1	(800) 424-9300	001823392 JJK

5. Generator's Name and Mailing Address
KIMBERLY CLARK CORP
2600 FEDERAL AVE
EVERETT WA 98201-3409

Generator's Site Address (if different than mailing address)

Generator's Phone: (206) 259-7393

6. Transporter 1 Company Name
STEVE FORLER (208) 342-2145

U.S. EPA ID Number
WAR 000001863

7. Transporter 2 Company Name

U.S. EPA ID Number

8. Designated Facility Name and Site Address
CHEMICAL WASTE MANAGEMENT, INC.
17629 CEDAR SPRINGS LANE
ARLINGTON OR 97812-9709

U.S. EPA ID Number
ORD089452353

Facility's Phone: (541) 454-2643

9a. HM	9b. U.S. DOT Description (including Proper Shipping Name, Hazard Class, ID Number, and Packing Group (if any))	10. Containers No.	10. Containers Type	11. Total Quantity	12. Unit Wt./Vol.	13. Waste Codes
X	1. RQ, NA3077, WASTE HAZARDOUS WASTE, SOLID, N.O.S., 9, III LEAD SOIL WITH <10% DEMO DEBRIS	1	DT	63,000	LB	D009
	2.					
	3.					
	4.					

14. Special Handling Instructions and Additional Information
1. OR321512: LEAD CONTAMINATED SOIL WITH DEMOLITION DEBRIS; ERG# 171 (RQ = 10 LBS) 63580 P.

15. GENERATOR'S/OFFEROR'S CERTIFICATION: I hereby declare that the contents of this consignment are fully and accurately described above by the proper shipping name, and are classified, packaged, marked and labeled/placarded, and are in all respects in proper condition for transport according to applicable international and national governmental regulations. If export shipment and I am the Primary Exporter, I certify that the contents of this consignment conform to the terms of the attached EPA Acknowledgment of Consent.
I certify that the waste minimization statement identified in 40 CFR 262.27(a) (if I am a large quantity generator) or (b) (if I am a small quantity generator) is true.

Generator's/Offeror's Printed/Typed Name: Robert R. Hanford Agent for Kimberly Clark Corp
Signature:
Month 11 Day 25 Year 2013

INT'L
16. International Shipments ☐ Import to U.S. ☐ Export from U.S. Port of entry/exit:
Transporter signature (for exports only): Date leaving U.S.:

TRANSPORTER
17. Transporter Acknowledgment of Receipt of Materials
Transporter 1 Printed/Typed Name: Jason Green
Signature:
Month 11 Day 25 Year 13
Transporter 2 Printed/Typed Name
Signature
Month Day Year

DESIGNATED FACILITY
18. Discrepancy
18a. Discrepancy Indication Space ☐ Quantity ☐ Type ☐ Residue ☐ Partial Rejection ☐ Full Rejection
Manifest Reference Number:
18b. Alternate Facility (or Generator)
U.S. EPA ID Number
Facility's Phone:
18c. Signature of Alternate Facility (or Generator)
Month Day Year
19. Hazardous Waste Report Management Method Codes (i.e., codes for hazardous waste treatment, disposal, and recycling systems)
1. H110 2. 3. 4.
20. Designated Facility Owner or Operator: Certification of receipt of hazardous materials covered by the manifest except as noted in Item 18a
Printed/Typed Name: Sue McAthren
Signature:
Month 11 Day 25 Year 13

EPA Form 8700-22 (Rev. 3-05) Previous editions are obsolete.

DESIGNATED FACILITY TO DESTINATION STATE (IF REQUIRED)

CWMI

431358

Please print or type. (Form designed for use on elite (12-pitch) typewriter.)

Form Approved. OMB No. 2050-0039

UNIFORM HAZARDOUS WASTE MANIFEST	1. Generator ID Number	2. Page 1 of	3. Emergency Response Phone	4. Manifest Tracking Number
	WAD009250820	1	(800)424-9300	001823393 JJK

GENERATOR

5. Generator's Name and Mailing Address
KIMBERLY CLARK CORP
2600 FEDERAL AVE
EVERETT WA 98201-3409
Generator's Phone: (206) 259-7393

Generator's Site Address (if different than mailing address)

JAN 08 2014

6. Transporter 1 Company Name
STEVE FORLER 208 342 3145
U.S. EPA ID Number
WAR 00000 1263

7. Transporter 2 Company Name
U.S. EPA ID Number

8. Designated Facility Name and Site Address
CHEMICAL WASTE MANAGEMENT, INC.
17629 CEDAR SPRINGS LANE
ARLINGTON OR 97812-9709
Facility's Phone: (541) 454-2643
U.S. EPA ID Number
ORD089452353

9a. HM	9b. U.S. DOT Description (including Proper Shipping Name, Hazard Class, ID Number, and Packing Group (if any))	10. Containers No.	10. Containers Type	11. Total Quantity	12. Unit Wt./Vol.	13. Waste Codes		
X	1. RQ, NA3077, WASTE HAZARDOUS WASTE, SOLID, N.O.S., 9, III LEAD SOIL WITH <10% DEMO DEBRIS	1	PT	M.P. ~~53,000~~ 69900	P lbs	D008		
	2.							
	3.							
	4.							

14. Special Handling Instructions and Additional Information
1. OR321512: LEAD CONTAMINATED SOIL WITH DEMOLITION DEBRIS; ERG# 171 (RQ = 10 LBS)
69900 lbs

15. **GENERATOR'S/OFFEROR'S CERTIFICATION:** I hereby declare that the contents of this consignment are fully and accurately described above by the proper shipping name, and are classified, packaged, marked and labeled/placarded, and are in all respects in proper condition for transport according to applicable international and national governmental regulations. If export shipment and I am the Primary Exporter, I certify that the contents of this consignment conform to the terms of the attached EPA Acknowledgment of Consent.
I certify that the waste minimization statement identified in 40 CFR 262.27(a) (if I am a large quantity generator) or (b) (if I am a small quantity generator) is true.

Generator's/Offeror's Printed/Typed Name: Robert R HANFORD Agent for Kimberly Clark Corp
Signature: Robert R Hanford
Month 12 Day 03 Year 13

INT'L

16. International Shipments ☐ Import to U.S. ☐ Export from U.S. Port of entry/exit:
Transporter signature (for exports only): Date leaving U.S.:

TRANSPORTER

17. Transporter Acknowledgment of Receipt of Materials

Transporter 1 Printed/Typed Name: Mike Forler
Signature:
Month 12 Day 3 Year 13

Transporter 2 Printed/Typed Name
Signature
Month Day Year

DESIGNATED FACILITY

18. Discrepancy

18a. Discrepancy Indication Space ☒ Quantity ☐ Type ☐ Residue ☐ Partial Rejection ☐ Full Rejection
Quantity changed by driver sm 12-3-13
Manifest Reference Number:

18b. Alternate Facility (or Generator)
U.S. EPA ID Number
Facility's Phone:

18c. Signature of Alternate Facility (or Generator)
Month Day Year

19. Hazardous Waste Report Management Method Codes (i.e., codes for hazardous waste treatment, disposal, and recycling systems)

1.	2.	3.	4.
H110			

20. Designated Facility Owner or Operator: Certification of receipt of hazardous materials covered by the manifest except as noted in Item 18a

Printed/Typed Name: Sue McAhren
Signature: Sue McAhren
Month 12 Day 03 Year 13

EPA Form 8700-22 (Rev. 3-05). Previous editions are obsolete.

DESIGNATED FACILITY TO GENERATOR

12/14

BMS

CWMI AT

431309

Please print or type. (Form designed for use on elite (12-pitch) typewriter.) Form Approved. OMB No. 2050-0039

UNIFORM HAZARDOUS WASTE MANIFEST

1. Generator ID Number	2. Page 1 of	3. Emergency Response Phone	4. Manifest Tracking Number
WAD009250820	1	(800) 424-9300	001823394 JJK

GENERATOR

5. Generator's Name and Mailing Address
KIMBERLY CLARK CORP
2600 FEDERAL AVE
EVERETT WA 98201-3409
Generator's Phone: (206) 259-7393

Generator's Site Address (if different than mailing address)

6. Transporter 1 Company Name: STEVE FORLER 208 342-3145
U.S. EPA ID Number: WAR000001263

7. Transporter 2 Company Name
U.S. EPA ID Number

8. Designated Facility Name and Site Address
CHEMICAL WASTE MANAGEMENT, INC
17629 CEDAR SPRINGS LANE
ARLINGTON OR 97812-9709
Facility's Phone: (541) 454-2643
U.S. EPA ID Number: ORD089452353

9a. HM	9b. U.S. DOT Description (including Proper Shipping Name, Hazard Class, ID Number, and Packing Group (if any))	10. Containers No.	10. Containers Type	11. Total Quantity	12. Unit Wt./Vol.	13. Waste Codes		
X	1. RQ, NA3077, WASTE HAZARDOUS WASTE, SOLID, N.O.S., 9, III (LEAD SOIL WITH ≤10% DEMO DEBRIS)	1	DT	63,000	P LB	D008		
	2.							
	3.							
	4.							

14. Special Handling Instructions and Additional Information
1. OR321512: LEAD CONTAMINATED SOIL WITH DEMOLITION DEBRIS; ERG# 171 (RQ = 10 LBS)
60,380P

15. **GENERATOR'S/OFFEROR'S CERTIFICATION:** I hereby declare that the contents of this consignment are fully and accurately described above by the proper shipping name, and are classified, packaged, marked and labeled/placarded, and are in all respects in proper condition for transport according to applicable international and national governmental regulations. If export shipment and I am the Primary Exporter, I certify that the contents of this consignment conform to the terms of the attached EPA Acknowledgment of Consent.
I certify that the waste minimization statement identified in 40 CFR 262.27(a) (if I am a large quantity generator) or (b) (if I am a small quantity generator) is true.

Generator's/Offeror's Printed/Typed Name: Robert R. Hanson Agent for Kimberly Clark Corp
Signature: Robert R Hanson
Month 12 Day 02 Year 13

INTL

16. International Shipments ☐ Import to U.S. ☐ Export from U.S. Port of entry/exit:
Transporter signature (for exports only): Date leaving U.S.:

TRANSPORTER

17. Transporter Acknowledgment of Receipt of Materials

Transporter 1 Printed/Typed Name: M. Le Padour
Signature:
Month 12 Day 2 Year 13

Transporter 2 Printed/Typed Name
Signature
Month Day Year

DESIGNATED FACILITY

18. Discrepancy

18a. Discrepancy Indication Space ☐ Quantity ☐ Type ☐ Residue ☐ Partial Rejection ☐ Full Rejection

Manifest Reference Number:

18b. Alternate Facility (or Generator)
U.S. EPA ID Number
Facility's Phone:

18c. Signature of Alternate Facility (or Generator)
Month Day Year

19. Hazardous Waste Report Management Method Codes (i.e., codes for hazardous waste treatment, disposal, and recycling systems)

1.	2.	3.	4.
H110			

20. Designated Facility Owner or Operator: Certification of receipt of hazardous materials covered by the manifest except as noted in Item 18a

Printed/Typed Name: Sue McAhren
Signature: Sue McAhren
Month 12 Day 02 Year 13

EPA Form 8700-22 (Rev. 3-05) Previous editions are obsolete.

DESIGNATED FACILITY TO GENERATOR

BMS

+131308

CWMI

Please print or type. (Form designed for use on elite (12-pitch) typewriter.)

Form Approved. OMB No. 2050-0039

UNIFORM HAZARDOUS WASTE MANIFEST	1. Generator ID Number	2. Page 1 of	3. Emergency Response Phone	4. Manifest Tracking Number
	WAD009250820	1	(800)424-9300	001823395 JJK

5. Generator's Name and Mailing Address
KIMBERLY CLARK CORP
2600 FEDERAL AVE
EVERETT WA 98201-3409
Generator's Phone: (206) 259-7303

Generator's Site Address (if different than mailing address)

6. Transporter 1 Company Name
STEVE FORLER 208 342 3145
U.S. EPA ID Number
WAR 00000 1263

7. Transporter 2 Company Name
U.S. EPA ID Number

8. Designated Facility Name and Site Address
CHEMICAL WASTE MANAGEMENT, INC.
17629 CEDAR SPRINGS LANE
ARLINGTON OR 97812-9709
Facility's Phone: (541) 454-2643
U.S. EPA ID Number
ORD089452353

9a. HM	9b. U.S. DOT Description (including Proper Shipping Name, Hazard Class, ID Number, and Packing Group (if any))	10. Containers No.	10. Containers Type	11. Total Quantity	12. Unit Wt./Vol.	13. Waste Codes		
X	1. RQ, NA3077, WASTE HAZARDOUS WASTE, SOLID, N.O.S., 9, III (LEAD SOIL WITH <10% DEMO DEBRIS)	1	DT	63,000	P	D008		
	2.							
	3.							
	4.							

14. Special Handling Instructions and Additional Information
1. OR321512. LEAD CONTAMINATED SOIL WITH DEMOLITION DEBRIS; ERG# 171 (RQ = 10 LBS)
63,540P

15. **GENERATOR'S/OFFEROR'S CERTIFICATION:** I hereby declare that the contents of this consignment are fully and accurately described above by the proper shipping name, and are classified, packaged, marked and labeled/placarded, and are in all respects in proper condition for transport according to applicable international and national governmental regulations. If export shipment and I am the Primary Exporter, I certify that the contents of this consignment conform to the terms of the attached EPA Acknowledgment of Consent.
I certify that the waste minimization statement identified in 40 CFR 262.27(a) (if I am a large quantity generator) or (b) (if I am a small quantity generator) is true.

Generator's/Offeror's Printed/Typed Name: Robert R. HANFORD Agent for Kimberly Clark Corp
Signature: Robert R Hanford
Month 12 Day 02 Year 13

INT'L
16. International Shipments ☐ Import to U.S. ☐ Export from U.S. Port of entry/exit:
Transporter signature (for exports only): Date leaving U.S.:

TRANSPORTER
17. Transporter Acknowledgment of Receipt of Materials
Transporter 1 Printed/Typed Name: Kurt Cotlers
Signature
Month 12 Day 02 Year 13
Transporter 2 Printed/Typed Name
Signature
Month Day Year

DESIGNATED FACILITY
18. Discrepancy
18a. Discrepancy Indication Space ☐ Quantity ☐ Type ☐ Residue ☐ Partial Rejection ☐ Full Rejection
Manifest Reference Number:
18b. Alternate Facility (or Generator)
U.S. EPA ID Number
Facility's Phone:
18c. Signature of Alternate Facility (or Generator)
Month Day Year

19. Hazardous Waste Report Management Method Codes (i.e., codes for hazardous waste treatment, disposal, and recycling systems)

1.	2.	3.	4.
H116			

20. Designated Facility Owner or Operator: Certification of receipt of hazardous materials covered by the manifest except as noted in Item 18a
Printed/Typed Name: Sue McAhren
Signature: Sue McAhren
Month 12 Day 02 Year 13

EPA Form 8700-22 (Rev. 3-05) Previous editions are obsolete.

DESIGNATED FACILITY TO GENERATOR

BMS

Certificate of Disposal for Non-Hazardous Waste Disposed at CEMEX Soil Remediation Facility, Everett

June 5, 2014

Release of Liability/Certificate of Disposal

CLEARCREEK CONTRACTORS: is released from liability for all petroleum contaminated waste originating from:

Kimberly Clark
Everett, Wa

and transported to:

CEMEX USA-Everett Soil Remediation
6300 Glenwood Avenue
Everett, WA 98203

From 09/13/13 through 03/31/14

A total of 25393.42 tons of petroleum contaminated soil was transported to the above facility. The material was disposed of in the following manner:

Thermal Remediation (21679.69) / Landfill for Reclamation (3713.73)

Disposal of the contaminated soil was performed in accordance with all applicable federal, state, and local laws and regulations.

Signed:

Larry W. Baker
Soil Remediation Operations Manager
CEMEX
Northwest Region
U.S. Operations

Certificates of Disposal for Non-Hazardous Waste Disposed at Republic Services' Roosevelt Regional Landfill

CERTIFICATE OF DESTRUCTION

I, Don Tibbets, of Regional Disposal Company (RSI facility), hereby certify that the entire product described in Section A has been properly and legally disposed of in Roosevelt Regional Landfill on April, 2014 (attach any appropriate documentation).

I understand that due to potential concerns related to such things as health, quality, and loss of goodwill, Clearcreek Contractors (Company) does not want this product to be distributed to consumers, even through so called "distressed merchandise" channels of trade, and I further certify that these items were destroyed in such a manner that it cannot be sold, and that the company has taken every reasonable step to prevent resale of said items.

Name (print): Don Tibbets

Signature: 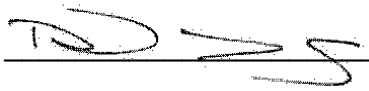

Title: Roosevelt Regional LF General Manager

Date: 6/17/2014

Section A- Products Destroyed (attached additional sheets if needed):

Waste Profile Number (if applicable): 4178137115 / LW-13436A

Description of Product	*Quantity or Weight*
Contaminated Soil w/Debris	856.06 Tons Total Disposed

Detail Contract Activity Report

All Ticket Types | January 01, 2013 to June 09, 2014

History and Waiting | Specific Contract: LW13436A

LW13436A

Ticket Date		Customer	Material	Billing Quantity
04/23/2014	907098	014755 - Clearcreek Contractors	SW-CONT SOIL	29.06 TN
04/23/2014	907107	014755 - Clearcreek Contractors	SW-CONT SOIL	26.34 TN
04/23/2014	907123	014755 - Clearcreek Contractors	SW-CONT SOIL	31.62 TN
04/24/2014	907150	014755 - Clearcreek Contractors	SW-CONT SOIL	33.58 TN
04/24/2014	907151	014755 - Clearcreek Contractors	SW-CONT SOIL	30.84 TN
04/24/2014	907159	014755 - Clearcreek Contractors	SW-CONT SOIL	35.07 TN
04/24/2014	907172	014755 - Clearcreek Contractors	SW-CONT SOIL	28.47 TN
04/25/2014	907223	014755 - Clearcreek Contractors	SW-CONT SOIL	28.25 TN
04/25/2014	907234	014755 - Clearcreek Contractors	SW-CONT SOIL	28.29 TN
04/25/2014	907259	014755 - Clearcreek Contractors	SW-CONT SOIL	26.86 TN
04/28/2014	907321	014755 - Clearcreek Contractors	SW-CONT SOIL	31.47 TN
04/28/2014	907367	014755 - Clearcreek Contractors	SW-CONT SOIL	32.01 TN
04/28/2014	907400	014755 - Clearcreek Contractors	SW-CONT SOIL	34.76 TN
04/28/2014	907409	014755 - Clearcreek Contractors	SW-CONT SOIL	31.31 TN
04/29/2014	907427	014755 - Clearcreek Contractors	SW-CONT SOIL	36.75 TN
04/29/2014	907428	014755 - Clearcreek Contractors	SW-CONT SOIL	34.03 TN
04/29/2014	907455	014755 - Clearcreek Contractors	SW-CONT SOIL	36.98 TN
04/29/2014	907462	014755 - Clearcreek Contractors	SW-CONT SOIL	40.01 TN
04/30/2014	907478	014755 - Clearcreek Contractors	SW-CONT SOIL	38.27 TN
04/30/2014	907506	014755 - Clearcreek Contractors	SW-CONT SOIL	38.02 TN
04/30/2014	907539	014755 - Clearcreek Contractors	SW-CONT SOIL	33.96 TN
05/01/2014	907556	014755 - Clearcreek Contractors	SW-CONT SOIL	36.30 TN
05/01/2014	907560	014755 - Clearcreek Contractors	SW-CONT SOIL	34.87 TN
05/01/2014	907597	014755 - Clearcreek Contractors	SW-CONT SOIL	32.25 TN
05/01/2014	907600	014755 - Clearcreek Contractors	SW-CONT SOIL	32.74 TN
05/02/2014	907661	014755 - Clearcreek Contractors	SW-CONT SOIL	33.95 TN

Tickets | Items Reported: 26

Material	Weight Inbound	Outbound	
VH - SW-CONT	856.06	0.00	T

REPUBLIC SERVICES

CERTIFICATE OF DESTRUCTION

I, Don Tibbets, of Regional Disposal Company (RSI facility), hereby certify that the entire product described in Section A has been properly and legally disposed of in Roosevelt Regional Landfill on January, 2014 (attach any appropriate documentation).

I understand that due to potential concerns related to such things as health, quality, and loss of goodwill, Clearcreek Contractors (Company) does not want this product to be distributed to consumers, even through so called "distressed merchandise" channels of trade, and I further certify that these items were destroyed in such a manner that it cannot be sold, and that the company has taken every reasonable step to prevent resale of said items.

Name (print): Don Tibbets

Signature: 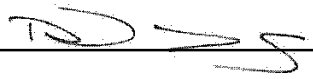

Title: Roosevelt Regional LF General Manager

Date: 6/17/2014

Section A- Products Destroyed (attached additional sheets if needed):

Waste Profile Number (if applicable): 4178137115 / LW-13436

Description of Product	*Quantity or Weight*
Contaminated Soil w/Debris	290.52 Tons Total Disposed

Detail Contract Activity Report

All Ticket Types | January 01, 2013 to June 09, 2014

History and Waiting | Specific Contract: LW-13436

LW-13436

Ticket Date		Customer	Material	Billing Quantity
01/30/2014	903925	014755 - Clearcreek Contractors	SW-CONT SOIL	20.98 TN
01/30/2014	903926	014755 - Clearcreek Contractors	SW-CONT SOIL	25.80 TN
01/30/2014	903934	014755 - Clearcreek Contractors	SW-CONT SOIL	22.01 TN
01/30/2014	903936	014755 - Clearcreek Contractors	SW-CONT SOIL	20.65 TN
01/30/2014	903938	014755 - Clearcreek Contractors	SW-CONT SOIL	18.42 TN
01/30/2014	903939	014755 - Clearcreek Contractors	SW-CONT SOIL	25.39 TN
01/30/2014	903941	014755 - Clearcreek Contractors	SW-CONT SOIL	21.75 TN
01/30/2014	903950	014755 - Clearcreek Contractors	SW-CONT SOIL	30.97 TN
01/30/2014	903951	014755 - Clearcreek Contractors	SW-CONT SOIL	28.02 TN
01/30/2014	903952	014755 - Clearcreek Contractors	SW-CONT SOIL	28.47 TN
01/30/2014	903953	014755 - Clearcreek Contractors	SW-CONT SOIL	22.46 TN
01/30/2014	903954	014755 - Clearcreek Contractors	SW-CONT SOIL	25.60 TN

Tickets | Items Reported: 12

Material	Weight Inbound	Outbound	
VH - SW-CONT	290.52	0.00	T

REPUBLIC SERVICES

CERTIFICATE OF DESTRUCTION

I, Don Tibbets, of Regional Disposal Company (RSI facility), hereby certify that the entire product described in Section A has been properly and legally disposed of in Roosevelt Regional Landfill on March, 2014 (attach any appropriate documentation).

I understand that due to potential concerns related to such things as health, quality, and loss of goodwill, Clearcreek Contractors (Company) does not want this product to be distributed to consumers, even through so called "distressed merchandise" channels of trade, and I further certify that these items were destroyed in such a manner that it cannot be sold, and that the company has taken every reasonable step to prevent resale of said items.

Name (print): Don Tibbets

Signature: 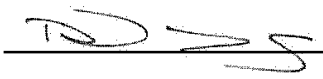

Title: Roosevelt Regional LF General Manager

Date: 6/17/2014

Section A- Products Destroyed (attached additional sheets if needed):

Waste Profile Number (if applicable): 4178137117 / LW-13435

Description of Product	*Quantity or Weight*
Contaminated Soil w/Debris	249.97 Tons Total Disposed

Detail Contract Activity Report

All Ticket Types | January 01, 2013 to June 09, 2014

History and Waiting | Specific Contract: LW-13435

LW-13435

Ticket Date		Customer	Material	Billing Quantity
03/05/2014	191274	014755 - Clearcreek Contractors Inc.	Cont Soil	27.19 TN
03/05/2014	191295	014755 - Clearcreek Contractors Inc.	Cont Soil	29.64 TN
03/05/2014	191299	014755 - Clearcreek Contractors Inc.	Cont Soil	28.86 TN
03/06/2014	191380	014755 - Clearcreek Contractors Inc.	Cont Soil	25.62 TN
03/06/2014	191382	014755 - Clearcreek Contractors Inc.	Cont Soil	30.52 TN
03/07/2014	191509	014755 - Clearcreek Contractors Inc.	Cont Soil	29.00 TN
03/07/2014	191515	014755 - Clearcreek Contractors Inc.	Cont Soil	29.97 TN
03/11/2014	191654	014755 - Clearcreek Contractors Inc.	Cont Soil	23.98 TN
03/11/2014	191655	014755 - Clearcreek Contractors Inc.	Cont Soil	25.19 TN

Tickets | Items Reported: 9

Material	Weight Inbound	Outbound	
66 - Cont Soil	249.97	0.00	T

REPUBLIC SERVICES

CERTIFICATE OF DESTRUCTION

I, Don Tibbets, of Regional Disposal Company (RSI facility), hereby certify that the entire product described in Section A has been properly and legally disposed of in Roosevelt Regional Landfill on 11/24 - 12/6, 2013 (attach any appropriate documentation).

I understand that due to potential concerns related to such things as health, quality, and loss of goodwill, Clearcreek Contractors (Company) does not want this product to be distributed to consumers, even through so called "distressed merchandise" channels of trade, and I further certify that these items were destroyed in such a manner that it cannot be sold, and that the company has taken every reasonable step to prevent resale of said items.

Name (print): Don Tibbets

Signature: 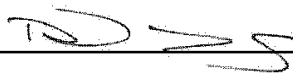

Title: Roosevelt Regional LF General Manager

Date: 6/17/2014

Section A- Products Destroyed (attached additional sheets if needed):

Waste Profile Number (if applicable): 4178137117 / LW-13434

Description of Product	*Quantity or Weight*
Contaminated Soil w/Debris	4,850.99 Tons Total Disposed

Detail Contract Activity Report

All Ticket Types

January 01, 2013 to June 09, 2014

History and Waiting

Specific Contract: LW-13434

LW-13434

Ticket Date		Customer	Material	Billing Quantity
11/26/2013	901663	014755 - Clearcreek Contractors	SW-CONT SOIL	27.49 TN
11/26/2013	901664	014755 - Clearcreek Contractors	SW-CONT SOIL	25.72 TN
11/26/2013	901672	014755 - Clearcreek Contractors	SW-CONT SOIL	30.91 TN
11/26/2013	901673	014755 - Clearcreek Contractors	SW-CONT SOIL	32.33 TN
11/26/2013	901675	014755 - Clearcreek Contractors	SW-CONT SOIL	33.64 TN
11/26/2013	901684	014755 - Clearcreek Contractors	SW-CONT SOIL	30.38 TN
11/26/2013	901686	014755 - Clearcreek Contractors	SW-CONT SOIL	28.78 TN
11/26/2013	901687	014755 - Clearcreek Contractors	SW-CONT SOIL	25.98 TN
11/26/2013	901689	014755 - Clearcreek Contractors	SW-CONT SOIL	27.30 TN
11/26/2013	901694	014755 - Clearcreek Contractors	SW-CONT SOIL	29.28 TN
11/26/2013	901696	014755 - Clearcreek Contractors	SW-CONT SOIL	30.07 TN
11/26/2013	901697	014755 - Clearcreek Contractors	SW-CONT SOIL	26.43 TN
11/27/2013	901702	014755 - Clearcreek Contractors	SW-CONT SOIL	32.06 TN
11/27/2013	901705	014755 - Clearcreek Contractors	SW-CONT SOIL	30.73 TN
11/27/2013	901706	014755 - Clearcreek Contractors	SW-CONT SOIL	35.34 TN
11/27/2013	901710	014755 - Clearcreek Contractors	SW-CONT SOIL	31.66 TN
11/27/2013	901713	014755 - Clearcreek Contractors	SW-CONT SOIL	30.78 TN
11/27/2013	901714	014755 - Clearcreek Contractors	SW-CONT SOIL	33.77 TN
11/27/2013	901715	014755 - Clearcreek Contractors	SW-CONT SOIL	30.74 TN
11/27/2013	901716	014755 - Clearcreek Contractors	SW-CONT SOIL	28.39 TN
11/27/2013	901718	014755 - Clearcreek Contractors	SW-CONT SOIL	29.30 TN
11/27/2013	901719	014755 - Clearcreek Contractors	SW-CONT SOIL	28.94 TN
11/27/2013	901721	014755 - Clearcreek Contractors	SW-CONT SOIL	28.78 TN
11/27/2013	901723	014755 - Clearcreek Contractors	SW-CONT SOIL	27.51 TN
11/27/2013	901724	014755 - Clearcreek Contractors	SW-CONT SOIL	28.63 TN
11/27/2013	901733	014755 - Clearcreek Contractors	SW-CONT SOIL	28.82 TN
11/27/2013	901737	014755 - Clearcreek Contractors	SW-CONT SOIL	27.36 TN
11/27/2013	901738	014755 - Clearcreek Contractors	SW-CONT SOIL	29.24 TN
11/27/2013	901739	014755 - Clearcreek Contractors	SW-CONT SOIL	31.09 TN
11/27/2013	901740	014755 - Clearcreek Contractors	SW-CONT SOIL	28.92 TN
11/29/2013	901745	014755 - Clearcreek Contractors	SW-CONT SOIL	27.98 TN
11/29/2013	901746	014755 - Clearcreek Contractors	SW-CONT SOIL	30.92 TN
11/29/2013	901747	014755 - Clearcreek Contractors	SW-CONT SOIL	30.76 TN
11/29/2013	901749	014755 - Clearcreek Contractors	SW-CONT SOIL	28.58 TN
11/29/2013	901750	014755 - Clearcreek Contractors	SW-CONT SOIL	32.49 TN
11/29/2013	901751	014755 - Clearcreek Contractors	SW-CONT SOIL	26.76 TN

11/29/2013	901752	014755 - Clearcreek Contractors	SW-CONT SOIL	28.91 TN
11/29/2013	901753	014755 - Clearcreek Contractors	SW-CONT SOIL	32.71 TN
11/29/2013	901754	014755 - Clearcreek Contractors	SW-CONT SOIL	28.92 TN
11/29/2013	901757	014755 - Clearcreek Contractors	SW-CONT SOIL	32.79 TN
11/29/2013	901758	014755 - Clearcreek Contractors	SW-CONT SOIL	30.60 TN
11/29/2013	901759	014755 - Clearcreek Contractors	SW-CONT SOIL	31.16 TN
11/29/2013	901761	014755 - Clearcreek Contractors	SW-CONT SOIL	29.35 TN
11/29/2013	901762	014755 - Clearcreek Contractors	SW-CONT SOIL	31.44 TN
11/29/2013	901763	014755 - Clearcreek Contractors	SW-CONT SOIL	32.10 TN
11/29/2013	901764	014755 - Clearcreek Contractors	SW-CONT SOIL	29.48 TN
11/29/2013	901765	014755 - Clearcreek Contractors	SW-CONT SOIL	24.41 TN
11/29/2013	901767	014755 - Clearcreek Contractors	SW-CONT SOIL	31.89 TN
11/29/2013	901769	014755 - Clearcreek Contractors	SW-CONT SOIL	29.95 TN
11/29/2013	901770	014755 - Clearcreek Contractors	SW-CONT SOIL	30.59 TN
11/29/2013	901771	014755 - Clearcreek Contractors	SW-CONT SOIL	31.99 TN
11/29/2013	901773	014755 - Clearcreek Contractors	SW-CONT SOIL	26.47 TN
11/29/2013	901774	014755 - Clearcreek Contractors	SW-CONT SOIL	30.88 TN
11/29/2013	901776	014755 - Clearcreek Contractors	SW-CONT SOIL	29.99 TN
11/29/2013	901777	014755 - Clearcreek Contractors	SW-CONT SOIL	30.06 TN
11/29/2013	901779	014755 - Clearcreek Contractors	SW-CONT SOIL	29.37 TN
11/29/2013	901780	014755 - Clearcreek Contractors	SW-CONT SOIL	28.54 TN
11/29/2013	901782	014755 - Clearcreek Contractors	SW-CONT SOIL	32.07 TN
11/29/2013	901783	014755 - Clearcreek Contractors	SW-CONT SOIL	28.52 TN
11/29/2013	901785	014755 - Clearcreek Contractors	SW-CONT SOIL	29.79 TN
11/29/2013	901786	014755 - Clearcreek Contractors	SW-CONT SOIL	28.01 TN
11/29/2013	901787	014755 - Clearcreek Contractors	SW-CONT SOIL	27.39 TN
11/29/2013	901788	014755 - Clearcreek Contractors	SW-CONT SOIL	26.63 TN
11/29/2013	901791	014755 - Clearcreek Contractors	SW-CONT SOIL	28.90 TN
11/29/2013	901792	014755 - Clearcreek Contractors	SW-CONT SOIL	27.89 TN
11/29/2013	901793	014755 - Clearcreek Contractors	SW-CONT SOIL	32.96 TN
11/29/2013	901795	014755 - Clearcreek Contractors	SW-CONT SOIL	29.12 TN
11/29/2013	901796	014755 - Clearcreek Contractors	SW-CONT SOIL	29.49 TN
11/29/2013	901798	014755 - Clearcreek Contractors	SW-CONT SOIL	30.50 TN
11/29/2013	901799	014755 - Clearcreek Contractors	SW-CONT SOIL	29.70 TN
11/29/2013	901800	014755 - Clearcreek Contractors	SW-CONT SOIL	28.79 TN
11/29/2013	901801	014755 - Clearcreek Contractors	SW-CONT SOIL	28.91 TN
11/29/2013	901803	014755 - Clearcreek Contractors	SW-CONT SOIL	31.82 TN
12/02/2013	901819	014755 - Clearcreek Contractors	SW-CONT SOIL	29.06 TN
12/02/2013	901820	014755 - Clearcreek Contractors	SW-CONT SOIL	29.47 TN
12/02/2013	901821	014755 - Clearcreek Contractors	SW-CONT SOIL	32.41 TN
12/02/2013	901822	014755 - Clearcreek Contractors	SW-CONT SOIL	33.54 TN
12/02/2013	901823	014755 - Clearcreek Contractors	SW-CONT SOIL	29.56 TN
12/02/2013	901826	014755 - Clearcreek Contractors	SW-CONT SOIL	30.40 TN
12/02/2013	901828	014755 - Clearcreek Contractors	SW-CONT SOIL	29.07 TN
12/02/2013	901829	014755 - Clearcreek Contractors	SW-CONT SOIL	28.32 TN
12/02/2013	901831	014755 - Clearcreek Contractors	SW-CONT SOIL	30.89 TN

12/02/2013	901833	014755 - Clearcreek Contractors	SW-CONT SOIL	19.04 TN
12/02/2013	901835	014755 - Clearcreek Contractors	SW-CONT SOIL	28.34 TN
12/02/2013	901837	014755 - Clearcreek Contractors	SW-CONT SOIL	30.20 TN
12/02/2013	901838	014755 - Clearcreek Contractors	SW-CONT SOIL	26.96 TN
12/02/2013	901839	014755 - Clearcreek Contractors	SW-CONT SOIL	25.10 TN
12/02/2013	901840	014755 - Clearcreek Contractors	SW-CONT SOIL	25.13 TN
12/02/2013	901843	014755 - Clearcreek Contractors	SW-CONT SOIL	28.41 TN
12/02/2013	901845	014755 - Clearcreek Contractors	SW-CONT SOIL	32.11 TN
12/02/2013	901846	014755 - Clearcreek Contractors	SW-CONT SOIL	32.55 TN
12/02/2013	901847	014755 - Clearcreek Contractors	SW-CONT SOIL	33.67 TN
12/02/2013	901848	014755 - Clearcreek Contractors	SW-CONT SOIL	28.58 TN
12/02/2013	901849	014755 - Clearcreek Contractors	SW-CONT SOIL	32.92 TN
12/02/2013	901850	014755 - Clearcreek Contractors	SW-CONT SOIL	27.63 TN
12/02/2013	901851	014755 - Clearcreek Contractors	SW-CONT SOIL	28.74 TN
12/02/2013	901852	014755 - Clearcreek Contractors	SW-CONT SOIL	35.98 TN
12/02/2013	901856	014755 - Clearcreek Contractors	SW-CONT SOIL	32.40 TN
12/02/2013	901857	014755 - Clearcreek Contractors	SW-CONT SOIL	29.49 TN
12/02/2013	901859	014755 - Clearcreek Contractors	SW-CONT SOIL	34.28 TN
12/02/2013	901861	014755 - Clearcreek Contractors	SW-CONT SOIL	28.34 TN
12/02/2013	901862	014755 - Clearcreek Contractors	SW-CONT SOIL	32.88 TN
12/02/2013	901863	014755 - Clearcreek Contractors	SW-CONT SOIL	30.73 TN
12/02/2013	901864	014755 - Clearcreek Contractors	SW-CONT SOIL	30.57 TN
12/02/2013	901865	014755 - Clearcreek Contractors	SW-CONT SOIL	31.19 TN
12/02/2013	901866	014755 - Clearcreek Contractors	SW-CONT SOIL	23.30 TN
12/02/2013	901867	014755 - Clearcreek Contractors	SW-CONT SOIL	23.75 TN
12/02/2013	901868	014755 - Clearcreek Contractors	SW-CONT SOIL	23.10 TN
12/02/2013	901869	014755 - Clearcreek Contractors	SW-CONT SOIL	24.12 TN
12/02/2013	901870	014755 - Clearcreek Contractors	SW-CONT SOIL	25.73 TN
12/03/2013	901874	014755 - Clearcreek Contractors	SW-CONT SOIL	31.51 TN
12/03/2013	901875	014755 - Clearcreek Contractors	SW-CONT SOIL	31.78 TN
12/03/2013	901876	014755 - Clearcreek Contractors	SW-CONT SOIL	38.54 TN
12/03/2013	901877	014755 - Clearcreek Contractors	SW-CONT SOIL	28.44 TN
12/03/2013	901878	014755 - Clearcreek Contractors	SW-CONT SOIL	33.92 TN
12/03/2013	901880	014755 - Clearcreek Contractors	SW-CONT SOIL	27.29 TN
12/03/2013	901881	014755 - Clearcreek Contractors	SW-CONT SOIL	24.80 TN
12/03/2013	901883	014755 - Clearcreek Contractors	SW-CONT SOIL	27.79 TN
12/03/2013	901885	014755 - Clearcreek Contractors	SW-CONT SOIL	31.04 TN
12/03/2013	901886	014755 - Clearcreek Contractors	SW-CONT SOIL	28.50 TN
12/03/2013	901887	014755 - Clearcreek Contractors	SW-CONT SOIL	23.20 TN
12/03/2013	901888	014755 - Clearcreek Contractors	SW-CONT SOIL	23.78 TN
12/03/2013	901892	014755 - Clearcreek Contractors	SW-CONT SOIL	26.74 TN
12/03/2013	901894	014755 - Clearcreek Contractors	SW-CONT SOIL	25.89 TN
12/03/2013	901897	014755 - Clearcreek Contractors	SW-CONT SOIL	28.53 TN
12/03/2013	901900	014755 - Clearcreek Contractors	SW-CONT SOIL	30.85 TN
12/03/2013	901901	014755 - Clearcreek Contractors	SW-CONT SOIL	31.18 TN
12/03/2013	901902	014755 - Clearcreek Contractors	SW-CONT SOIL	26.84 TN

12/03/2013	901903	014755 - Clearcreek Contractors	SW-CONT SOIL	27.27 TN
12/03/2013	901905	014755 - Clearcreek Contractors	SW-CONT SOIL	29.42 TN
12/03/2013	901907	014755 - Clearcreek Contractors	SW-CONT SOIL	25.15 TN
12/03/2013	901908	014755 - Clearcreek Contractors	SW-CONT SOIL	3.68 TN
12/03/2013	901909	014755 - Clearcreek Contractors	SW-CONT SOIL	31.28 TN
12/03/2013	901910	014755 - Clearcreek Contractors	SW-CONT SOIL	26.08 TN
12/03/2013	901911	014755 - Clearcreek Contractors	SW-CONT SOIL	35.36 TN
12/03/2013	901912	014755 - Clearcreek Contractors	SW-CONT SOIL	28.69 TN
12/03/2013	901913	014755 - Clearcreek Contractors	SW-CONT SOIL	29.85 TN
12/03/2013	901914	014755 - Clearcreek Contractors	SW-CONT SOIL	29.18 TN
12/04/2013	901917	014755 - Clearcreek Contractors	SW-CONT SOIL	28.38 TN
12/04/2013	901918	014755 - Clearcreek Contractors	SW-CONT SOIL	33.26 TN
12/04/2013	901919	014755 - Clearcreek Contractors	SW-CONT SOIL	27.33 TN
12/04/2013	901920	014755 - Clearcreek Contractors	SW-CONT SOIL	30.92 TN
12/04/2013	901921	014755 - Clearcreek Contractors	SW-CONT SOIL	31.29 TN
12/04/2013	901922	014755 - Clearcreek Contractors	SW-CONT SOIL	33.71 TN
12/04/2013	901928	014755 - Clearcreek Contractors	SW-CONT SOIL	28.10 TN
12/04/2013	901929	014755 - Clearcreek Contractors	SW-CONT SOIL	26.61 TN
12/04/2013	901933	014755 - Clearcreek Contractors	SW-CONT SOIL	29.40 TN
12/04/2013	901934	014755 - Clearcreek Contractors	SW-CONT SOIL	29.93 TN
12/04/2013	901935	014755 - Clearcreek Contractors	SW-CONT SOIL	31.25 TN
12/04/2013	901937	014755 - Clearcreek Contractors	SW-CONT SOIL	31.37 TN
12/04/2013	901938	014755 - Clearcreek Contractors	SW-CONT SOIL	29.99 TN
12/04/2013	901947	014755 - Clearcreek Contractors	SW-CONT SOIL	30.94 TN
12/04/2013	901949	014755 - Clearcreek Contractors	SW-CONT SOIL	30.45 TN
12/04/2013	901951	014755 - Clearcreek Contractors	SW-CONT SOIL	27.88 TN
12/04/2013	901952	014755 - Clearcreek Contractors	SW-CONT SOIL	24.69 TN
12/04/2013	901953	014755 - Clearcreek Contractors	SW-CONT SOIL	23.08 TN
12/04/2013	901956	014755 - Clearcreek Contractors	SW-CONT SOIL	23.92 TN
12/04/2013	901958	014755 - Clearcreek Contractors	SW-CONT SOIL	21.71 TN
12/06/2013	902015	014755 - Clearcreek Contractors	SW-CONT SOIL	25.75 TN
12/06/2013	902017	014755 - Clearcreek Contractors	SW-CONT SOIL	26.40 TN
12/06/2013	902020	014755 - Clearcreek Contractors	SW-CONT SOIL	32.69 TN
12/06/2013	902033	014755 - Clearcreek Contractors	SW-CONT SOIL	33.80 TN
12/06/2013	902035	014755 - Clearcreek Contractors	SW-CONT SOIL	31.15 TN
12/06/2013	902036	014755 - Clearcreek Contractors	SW-CONT SOIL	35.15 TN
12/06/2013	902048	014755 - Clearcreek Contractors	SW-CONT SOIL	30.49 TN
12/06/2013	902050	014755 - Clearcreek Contractors	SW-CONT SOIL	26.86 TN

Tickets Items Reported: 166

Material	Weight Inbound	Outbound	
VG - SW-CONT	4,850.99	0.00	T

REPUBLIC SERVICES

CERTIFICATE OF DESTRUCTION

I, Don Tibbets, of Regional Disposal Company (RSI facility), hereby certify that the entire product described in Section A has been properly and legally disposed of in Roosevelt Regional Landfill on 10/25 - 11/25, 2013 (attach any appropriate documentation).

I understand that due to potential concerns related to such things as health, quality, and loss of goodwill, Clearcreek Contractors (Company) does not want this product to be distributed to consumers, even through so called "distressed merchandise" channels of trade, and I further certify that these items were destroyed in such a manner that it cannot be sold, and that the company has taken every reasonable step to prevent resale of said items.

Name (print): Don Tibbets

Signature: 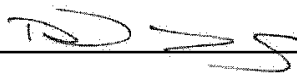

Title: Roosevelt Regional LF General Manager

Date: 6/17/2014

Section A- Products Destroyed (attached additional sheets if needed):

Waste Profile Number (if applicable): 41781315425 / LW-13408A

Description of Product	*Quantity or Weight*
Concrete Rubble	3,504.86 Tons Total Disposed

Detail Contract Activity Report

All Ticket Types | January 01, 2013 to June 09, 2014

History and Waiting | Specific Contract: LW13408A

LW13408A

Ticket Date		Customer	Material	Billing Quantity
10/25/2013	900690	014755 - Clearcreek Contractors	SW-CONT SOIL	29.50 TN
10/25/2013	900691	014755 - Clearcreek Contractors	SW-CONT SOIL	30.69 TN
10/25/2013	900692	014755 - Clearcreek Contractors	SW-CONT SOIL	35.77 TN
10/25/2013	900693	014755 - Clearcreek Contractors	SW-CONT SOIL	31.57 TN
10/25/2013	900695	014755 - Clearcreek Contractors	SW-CONT SOIL	32.41 TN
10/25/2013	900696	014755 - Clearcreek Contractors	SW-CONT SOIL	31.33 TN
10/25/2013	900698	014755 - Clearcreek Contractors	SW-CONT SOIL	30.68 TN
10/25/2013	900699	014755 - Clearcreek Contractors	SW-CONT SOIL	31.34 TN
10/25/2013	900705	014755 - Clearcreek Contractors	SW-CONT SOIL	35.59 TN
10/25/2013	900706	014755 - Clearcreek Contractors	SW-CONT SOIL	34.24 TN
10/25/2013	900707	014755 - Clearcreek Contractors	SW-CONT SOIL	29.82 TN
10/25/2013	900708	014755 - Clearcreek Contractors	SW-CONT SOIL	30.57 TN
10/25/2013	900711	014755 - Clearcreek Contractors	SW-CONT SOIL	29.51 TN
10/25/2013	900712	014755 - Clearcreek Contractors	SW-CONT SOIL	30.48 TN
10/25/2013	900713	014755 - Clearcreek Contractors	SW-CONT SOIL	30.73 TN
10/25/2013	900714	014755 - Clearcreek Contractors	SW-CONT SOIL	28.57 TN
10/25/2013	900717	014755 - Clearcreek Contractors	SW-CONT SOIL	30.10 TN
10/25/2013	900718	014755 - Clearcreek Contractors	SW-CONT SOIL	31.36 TN
10/25/2013	900723	014755 - Clearcreek Contractors	SW-CONT SOIL	32.31 TN
10/25/2013	900724	014755 - Clearcreek Contractors	SW-CONT SOIL	31.98 TN
10/25/2013	900726	014755 - Clearcreek Contractors	SW-CONT SOIL	31.64 TN
10/25/2013	900729	014755 - Clearcreek Contractors	SW-CONT SOIL	33.12 TN
10/25/2013	900730	014755 - Clearcreek Contractors	SW-CONT SOIL	32.34 TN
10/28/2013	900737	014755 - Clearcreek Contractors	SW-CONT SOIL	28.87 TN
10/28/2013	900738	014755 - Clearcreek Contractors	SW-CONT SOIL	29.80 TN
10/28/2013	900740	014755 - Clearcreek Contractors	SW-CONT SOIL	31.71 TN
10/28/2013	900742	014755 - Clearcreek Contractors	SW-CONT SOIL	32.41 TN
10/28/2013	900745	014755 - Clearcreek Contractors	SW-CONT SOIL	32.36 TN
10/28/2013	900746	014755 - Clearcreek Contractors	SW-CONT SOIL	32.82 TN
10/28/2013	900747	014755 - Clearcreek Contractors	SW-CONT SOIL	31.25 TN
10/28/2013	900749	014755 - Clearcreek Contractors	SW-CONT SOIL	31.78 TN
10/28/2013	900750	014755 - Clearcreek Contractors	SW-CONT SOIL	32.90 TN
10/28/2013	900752	014755 - Clearcreek Contractors	SW-CONT SOIL	30.06 TN
10/28/2013	900764	014755 - Clearcreek Contractors	SW-CONT SOIL	32.76 TN
10/28/2013	900766	014755 - Clearcreek Contractors	SW-CONT SOIL	32.67 TN
10/28/2013	900767	014755 - Clearcreek Contractors	SW-CONT SOIL	30.24 TN

10/28/2013	900771	014755 - Clearcreek Contractors	SW-CONT SOIL	29.09 TN
10/28/2013	900774	014755 - Clearcreek Contractors	SW-CONT SOIL	28.32 TN
10/28/2013	900775	014755 - Clearcreek Contractors	SW-CONT SOIL	29.72 TN
10/28/2013	900776	014755 - Clearcreek Contractors	SW-CONT SOIL	32.25 TN
10/28/2013	900778	014755 - Clearcreek Contractors	SW-CONT SOIL	27.74 TN
10/28/2013	900779	014755 - Clearcreek Contractors	SW-CONT SOIL	31.71 TN
10/28/2013	900784	014755 - Clearcreek Contractors	SW-CONT SOIL	29.23 TN
10/28/2013	900787	014755 - Clearcreek Contractors	SW-CONT SOIL	31.02 TN
10/28/2013	900789	014755 - Clearcreek Contractors	SW-CONT SOIL	32.56 TN
10/28/2013	900791	014755 - Clearcreek Contractors	SW-CONT SOIL	32.06 TN
10/28/2013	900795	014755 - Clearcreek Contractors	SW-CONT SOIL	32.34 TN
10/28/2013	900800	014755 - Clearcreek Contractors	SW-CONT SOIL	34.02 TN
10/28/2013	900802	014755 - Clearcreek Contractors	SW-CONT SOIL	32.32 TN
10/28/2013	900804	014755 - Clearcreek Contractors	SW-CONT SOIL	33.67 TN
10/28/2013	900805	014755 - Clearcreek Contractors	SW-CONT SOIL	30.09 TN
10/28/2013	900807	014755 - Clearcreek Contractors	SW-CONT SOIL	33.91 TN
10/29/2013	900814	014755 - Clearcreek Contractors	SW-CONT SOIL	34.55 TN
10/29/2013	900820	014755 - Clearcreek Contractors	SW-CONT SOIL	34.14 TN
10/29/2013	900822	014755 - Clearcreek Contractors	SW-CONT SOIL	31.73 TN
10/29/2013	900824	014755 - Clearcreek Contractors	SW-CONT SOIL	33.93 TN
10/29/2013	900832	014755 - Clearcreek Contractors	SW-CONT SOIL	33.14 TN
10/29/2013	900833	014755 - Clearcreek Contractors	SW-CONT SOIL	32.11 TN
10/29/2013	900834	014755 - Clearcreek Contractors	SW-CONT SOIL	29.37 TN
10/29/2013	900842	014755 - Clearcreek Contractors	SW-CONT SOIL	31.76 TN
10/29/2013	900845	014755 - Clearcreek Contractors	SW-CONT SOIL	32.82 TN
10/29/2013	900847	014755 - Clearcreek Contractors	SW-CONT SOIL	29.48 TN
10/29/2013	900848	014755 - Clearcreek Contractors	SW-CONT SOIL	32.33 TN
10/29/2013	900850	014755 - Clearcreek Contractors	SW-CONT SOIL	32.68 TN
10/29/2013	900851	014755 - Clearcreek Contractors	SW-CONT SOIL	31.35 TN
10/29/2013	900852	014755 - Clearcreek Contractors	SW-CONT SOIL	30.59 TN
11/11/2013	901172	014755 - Clearcreek Contractors	SW-CONT SOIL	26.95 TN
11/11/2013	901173	014755 - Clearcreek Contractors	SW-CONT SOIL	24.04 TN
11/11/2013	901175	014755 - Clearcreek Contractors	SW-CONT SOIL	25.23 TN
11/11/2013	901187	014755 - Clearcreek Contractors	SW-CONT SOIL	27.37 TN
11/11/2013	901188	014755 - Clearcreek Contractors	SW-CONT SOIL	30.19 TN
11/11/2013	901196	014755 - Clearcreek Contractors	SW-CONT SOIL	34.59 TN
11/11/2013	901205	014755 - Clearcreek Contractors	SW-CONT SOIL	28.76 TN
11/11/2013	901206	014755 - Clearcreek Contractors	SW-CONT SOIL	27.60 TN
11/11/2013	901211	014755 - Clearcreek Contractors	SW-CONT SOIL	30.59 TN
11/12/2013	901219	014755 - Clearcreek Contractors	SW-CONT SOIL	31.58 TN
11/12/2013	901220	014755 - Clearcreek Contractors	SW-CONT SOIL	31.90 TN
11/12/2013	901224	014755 - Clearcreek Contractors	SW-CONT SOIL	29.22 TN
11/12/2013	901235	014755 - Clearcreek Contractors	SW-CONT SOIL	30.66 TN
11/12/2013	901236	014755 - Clearcreek Contractors	SW-CONT SOIL	27.00 TN
11/12/2013	901244	014755 - Clearcreek Contractors	SW-CONT SOIL	26.11 TN
11/12/2013	901249	014755 - Clearcreek Contractors	SW-CONT SOIL	30.96 TN

11/12/2013	901250	014755 - Clearcreek Contractors	SW-CONT SOIL	29.16 TN
11/12/2013	901257	014755 - Clearcreek Contractors	SW-CONT SOIL	27.81 TN
11/20/2013	901477	014755 - Clearcreek Contractors	SW-CONT SOIL	31.24 TN
11/20/2013	901478	014755 - Clearcreek Contractors	SW-CONT SOIL	29.10 TN
11/20/2013	901479	014755 - Clearcreek Contractors	SW-CONT SOIL	29.17 TN
11/20/2013	901491	014755 - Clearcreek Contractors	SW-CONT SOIL	33.01 TN
11/20/2013	901493	014755 - Clearcreek Contractors	SW-CONT SOIL	32.08 TN
11/20/2013	901495	014755 - Clearcreek Contractors	SW-CONT SOIL	32.70 TN
11/21/2013	901503	014755 - Clearcreek Contractors	SW-CONT SOIL	33.73 TN
11/21/2013	901504	014755 - Clearcreek Contractors	SW-CONT SOIL	29.76 TN
11/21/2013	901505	014755 - Clearcreek Contractors	SW-CONT SOIL	35.05 TN
11/21/2013	901512	014755 - Clearcreek Contractors	SW-CONT SOIL	28.84 TN
11/21/2013	901513	014755 - Clearcreek Contractors	SW-CONT SOIL	31.96 TN
11/21/2013	901515	014755 - Clearcreek Contractors	SW-CONT SOIL	32.16 TN
11/21/2013	901537	014755 - Clearcreek Contractors	SW-CONT SOIL	28.60 TN
11/21/2013	901539	014755 - Clearcreek Contractors	SW-CONT SOIL	31.31 TN
11/21/2013	901542	014755 - Clearcreek Contractors	SW-CONT SOIL	31.32 TN
11/21/2013	901563	014755 - Clearcreek Contractors	SW-CONT SOIL	32.81 TN
11/21/2013	901565	014755 - Clearcreek Contractors	SW-CONT SOIL	30.58 TN
11/21/2013	901566	014755 - Clearcreek Contractors	SW-CONT SOIL	31.28 TN
11/22/2013	901579	014755 - Clearcreek Contractors	SW-CONT SOIL	29.17 TN
11/22/2013	901580	014755 - Clearcreek Contractors	SW-CONT SOIL	31.51 TN
11/22/2013	901582	014755 - Clearcreek Contractors	SW-CONT SOIL	29.38 TN
11/22/2013	901590	014755 - Clearcreek Contractors	SW-CONT SOIL	34.21 TN
11/22/2013	901593	014755 - Clearcreek Contractors	SW-CONT SOIL	29.75 TN
11/22/2013	901594	014755 - Clearcreek Contractors	SW-CONT SOIL	31.20 TN
11/22/2013	901599	014755 - Clearcreek Contractors	SW-CONT SOIL	30.32 TN
11/22/2013	901602	014755 - Clearcreek Contractors	SW-CONT SOIL	27.75 TN
11/22/2013	901603	014755 - Clearcreek Contractors	SW-CONT SOIL	28.90 TN
11/25/2013	901621	014755 - Clearcreek Contractors	SW-CONT SOIL	32.78 TN
11/25/2013	901623	014755 - Clearcreek Contractors	SW-CONT SOIL	30.16 TN

Tickets Reported: Items Reported: 113

Material Summary	Weight Inbound	Outbound	
VG - SW-CONT	3,504.86	0.00	T

REPUBLIC SERVICES

CERTIFICATE OF DESTRUCTION

I, Don Tibbets, of Regional Disposal Company (RSI facility), hereby certify that the entire product described in Section A has been properly and legally disposed of in Roosevelt Regional Landfill on 9/17/13 - 1/4, 2014 (attach any appropriate documentation).

I understand that due to potential concerns related to such things as health, quality, and loss of goodwill, Clearcreek Contractors (Company) does not want this product to be distributed to consumers, even through so called "distressed merchandise" channels of trade, and I further certify that these items were destroyed in such a manner that it cannot be sold, and that the company has taken every reasonable step to prevent resale of said items.

Name (print): Don Tibbets

Signature: 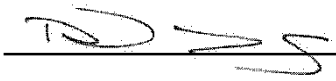

Title: Roosevelt Regional LF General Manager

Date: 6/17/2014

Section A- Products Destroyed (attached additional sheets if needed):

Waste Profile Number (if applicable): 41781314885 / LW-13380

Description of Product	*Quantity or Weight*
Hog Fuel Mixed w/Soil	3874.32 Tons Total Disposed

Detail Contract Activity Report

All Ticket Types | January 01, 2013 to June 09, 2014

History and Waiting | Specific Contract: LW-13380

LW-13380

Ticket Date		Customer	Material	Billing Quantity
10/04/2013	905020	014755 - Clearcreek Contractors Inc.	Cont Soil	27.34 TN
10/04/2013	905023	014755 - Clearcreek Contractors Inc.	Cont Soil	27.60 TN
10/04/2013	905026	014755 - Clearcreek Contractors Inc.	Cont Soil	26.92 TN
10/04/2013	905142	014755 - Clearcreek Contractors Inc.	Cont Soil	28.16 TN
10/04/2013	905146	014755 - Clearcreek Contractors Inc.	Cont Soil	27.87 TN
10/04/2013	905161	014755 - Clearcreek Contractors Inc.	Cont Soil	28.17 TN
10/04/2013	905168	014755 - Clearcreek Contractors Inc.	Cont Soil	28.11 TN
10/05/2013	905301	014755 - Clearcreek Contractors Inc.	Cont Soil	26.03 TN
10/05/2013	905305	014755 - Clearcreek Contractors Inc.	Cont Soil	29.08 TN
10/05/2013	905321	014755 - Clearcreek Contractors Inc.	Cont Soil	23.67 TN
10/05/2013	905327	014755 - Clearcreek Contractors Inc.	Cont Soil	25.79 TN
10/08/2013	905761	014755 - Clearcreek Contractors Inc.	Cont Soil	27.84 TN
10/08/2013	905762	014755 - Clearcreek Contractors Inc.	Cont Soil	29.81 TN
11/01/2013	185381	014755 - Clearcreek Contractors Inc.	Cont Soil	27.92 TN
11/01/2013	185384	014755 - Clearcreek Contractors Inc.	Cont Soil	28.00 TN
11/01/2013	185393	014755 - Clearcreek Contractors Inc.	Cont Soil	27.86 TN
11/01/2013	185403	014755 - Clearcreek Contractors Inc.	Cont Soil	22.21 TN
11/01/2013	185404	014755 - Clearcreek Contractors Inc.	Cont Soil	26.81 TN
11/04/2013	185413	014755 - Clearcreek Contractors Inc.	Cont Soil	26.63 TN
11/04/2013	185429	014755 - Clearcreek Contractors Inc.	Cont Soil	26.60 TN
11/04/2013	185483	014755 - Clearcreek Contractors Inc.	Cont Soil	27.11 TN
11/04/2013	185489	014755 - Clearcreek Contractors Inc.	Cont Soil	28.58 TN
11/04/2013	185490	014755 - Clearcreek Contractors Inc.	Cont Soil	25.20 TN
11/04/2013	185514	014755 - Clearcreek Contractors Inc.	Cont Soil	27.60 TN
11/04/2013	185526	014755 - Clearcreek Contractors Inc.	Cont Soil	25.02 TN
11/05/2013	185551	014755 - Clearcreek Contractors Inc.	Cont Soil	30.85 TN
11/05/2013	185558	014755 - Clearcreek Contractors Inc.	Cont Soil	24.83 TN
11/05/2013	185607	014755 - Clearcreek Contractors Inc.	Cont Soil	26.46 TN
11/05/2013	185632	014755 - Clearcreek Contractors Inc.	Cont Soil	26.61 TN
11/05/2013	185640	014755 - Clearcreek Contractors Inc.	Cont Soil	27.80 TN
11/05/2013	185641	014755 - Clearcreek Contractors Inc.	Cont Soil	25.97 TN
11/05/2013	185643	014755 - Clearcreek Contractors Inc.	Cont Soil	27.04 TN
11/05/2013	185649	014755 - Clearcreek Contractors Inc.	Cont Soil	31.12 TN
11/05/2013	185654	014755 - Clearcreek Contractors Inc.	Cont Soil	27.75 TN
11/05/2013	185655	014755 - Clearcreek Contractors Inc.	Cont Soil	27.17 TN
11/06/2013	185679	014755 - Clearcreek Contractors Inc.	Cont Soil	27.09 TN

11/09/2013	185759	014755 - Clearcreek Contractors Inc.	Cont Soil	27.26 TN
11/09/2013	185760	014755 - Clearcreek Contractors Inc.	Cont Soil	28.37 TN
11/12/2013	185886	014755 - Clearcreek Contractors Inc.	Cont Soil	28.75 TN
11/12/2013	185919	014755 - Clearcreek Contractors Inc.	Cont Soil	25.71 TN
11/12/2013	185935	014755 - Clearcreek Contractors Inc.	Cont Soil	27.22 TN
11/30/2013	186793	014755 - Clearcreek Contractors Inc.	Cont Soil	26.81 TN
11/30/2013	186816	014755 - Clearcreek Contractors Inc.	Cont Soil	27.28 TN
11/30/2013	186826	014755 - Clearcreek Contractors Inc.	Cont Soil	27.01 TN
11/30/2013	186832	014755 - Clearcreek Contractors Inc.	Cont Soil	29.24 TN
11/30/2013	186838	014755 - Clearcreek Contractors Inc.	Cont Soil	23.79 TN
11/30/2013	186845	014755 - Clearcreek Contractors Inc.	Cont Soil	26.87 TN
12/02/2013	186885	014755 - Clearcreek Contractors Inc.	Cont Soil	28.16 TN
12/02/2013	186886	014755 - Clearcreek Contractors Inc.	Cont Soil	27.81 TN
12/02/2013	186890	014755 - Clearcreek Contractors Inc.	Cont Soil	28.39 TN
12/03/2013	186953	014755 - Clearcreek Contractors Inc.	Cont Soil	29.87 TN
12/03/2013	186954	014755 - Clearcreek Contractors Inc.	Cont Soil	27.20 TN
12/04/2013	187019	014755 - Clearcreek Contractors Inc.	Cont Soil	26.22 TN
01/03/2014	188390	014755 - Clearcreek Contractors Inc.	Cont Soil	7.56 TN
01/03/2014	188393	014755 - Clearcreek Contractors Inc.	Cont Soil	11.01 TN
01/04/2014	188415	014755 - Clearcreek Contractors Inc.	Cont Soil	22.83 TN
09/17/2013	666894	014755 - Clearcreek Contractors Inc.	Cont Soil	25.00 TN
09/17/2013	666894	014755 - Clearcreek Contractors Inc.	Cont Soil	4.67 TN
09/17/2013	666894	014755 - Clearcreek Contractors Inc.	Container Chasis	1.00 LD
09/17/2013	666918	014755 - Clearcreek Contractors Inc.	Cont Soil	25.00 TN
09/17/2013	666918	014755 - Clearcreek Contractors Inc.	Cont Soil	0.90 TN
09/17/2013	666918	014755 - Clearcreek Contractors Inc.	Container Chasis	1.00 LD
09/17/2013	666924	014755 - Clearcreek Contractors Inc.	Cont Soil	25.00 TN
09/17/2013	666924	014755 - Clearcreek Contractors Inc.	Cont Soil	5.41 TN
09/17/2013	666924	014755 - Clearcreek Contractors Inc.	Container Chasis	1.00 LD
09/17/2013	666926	014755 - Clearcreek Contractors Inc.	Cont Soil	25.00 TN
09/17/2013	666926	014755 - Clearcreek Contractors Inc.	Cont Soil	4.15 TN
09/17/2013	666926	014755 - Clearcreek Contractors Inc.	Container Chasis	1.00 LD
09/17/2013	666982	014755 - Clearcreek Contractors Inc.	Cont Soil	25.00 TN
09/17/2013	666982	014755 - Clearcreek Contractors Inc.	Cont Soil	2.69 TN
09/17/2013	666982	014755 - Clearcreek Contractors Inc.	Container Chasis	1.00 LD
09/17/2013	666992	014755 - Clearcreek Contractors Inc.	Cont Soil	25.00 TN
09/17/2013	666992	014755 - Clearcreek Contractors Inc.	Cont Soil	4.28 TN
09/17/2013	666992	014755 - Clearcreek Contractors Inc.	Container Chasis	1.00 LD
09/17/2013	667009	014755 - Clearcreek Contractors Inc.	Cont Soil	25.00 TN
09/17/2013	667009	014755 - Clearcreek Contractors Inc.	Cont Soil	1.51 TN
09/17/2013	667009	014755 - Clearcreek Contractors Inc.	Container Chasis	1.00 LD
09/18/2013	667294	014755 - Clearcreek Contractors Inc.	Cont Soil	25.00 TN
09/18/2013	667294	014755 - Clearcreek Contractors Inc.	Cont Soil	1.06 TN
09/18/2013	667294	014755 - Clearcreek Contractors Inc.	Container Chasis	1.00 LD
09/18/2013	667296	014755 - Clearcreek Contractors Inc.	Cont Soil	25.00 TN
09/18/2013	667296	014755 - Clearcreek Contractors Inc.	Cont Soil	1.45 TN

09/18/2013	667296	014755 - Clearcreek Contractors Inc.	Container Chasis	1.00	LD
09/18/2013	667303	014755 - Clearcreek Contractors Inc.	Cont Soil	25.00	TN
09/18/2013	667303	014755 - Clearcreek Contractors Inc.	Cont Soil	0.43	TN
09/18/2013	667303	014755 - Clearcreek Contractors Inc.	Container Chasis	1.00	LD
09/18/2013	667331	014755 - Clearcreek Contractors Inc.	Cont Soil	25.00	TN
09/18/2013	667331	014755 - Clearcreek Contractors Inc.	Cont Soil	0.66	TN
09/18/2013	667331	014755 - Clearcreek Contractors Inc.	Container Chasis	1.00	LD
09/18/2013	667334	014755 - Clearcreek Contractors Inc.	Cont Soil	25.00	TN
09/18/2013	667334	014755 - Clearcreek Contractors Inc.	Cont Soil	1.65	TN
09/18/2013	667334	014755 - Clearcreek Contractors Inc.	Container Chasis	1.00	LD
09/18/2013	667337	014755 - Clearcreek Contractors Inc.	Cont Soil	25.00	TN
09/18/2013	667337	014755 - Clearcreek Contractors Inc.	Cont Soil	1.96	TN
09/18/2013	667337	014755 - Clearcreek Contractors Inc.	Container Chasis	1.00	LD
09/18/2013	667342	014755 - Clearcreek Contractors Inc.	Cont Soil	25.00	TN
09/18/2013	667342	014755 - Clearcreek Contractors Inc.	Cont Soil	2.09	TN
09/18/2013	667342	014755 - Clearcreek Contractors Inc.	Container Chasis	1.00	LD
09/19/2013	667561	014755 - Clearcreek Contractors Inc.	Cont Soil	25.00	TN
09/19/2013	667561	014755 - Clearcreek Contractors Inc.	Cont Soil	3.05	TN
09/19/2013	667561	014755 - Clearcreek Contractors Inc.	Container Chasis	1.00	LD
09/19/2013	667584	014755 - Clearcreek Contractors Inc.	Cont Soil	25.00	TN
09/19/2013	667584	014755 - Clearcreek Contractors Inc.	Cont Soil	2.03	TN
09/19/2013	667584	014755 - Clearcreek Contractors Inc.	Container Chasis	1.00	LD
09/19/2013	667588	014755 - Clearcreek Contractors Inc.	Cont Soil	25.00	TN
09/19/2013	667588	014755 - Clearcreek Contractors Inc.	Cont Soil	1.71	TN
09/19/2013	667588	014755 - Clearcreek Contractors Inc.	Container Chasis	1.00	LD
09/19/2013	667597	014755 - Clearcreek Contractors Inc.	Cont Soil	25.00	TN
09/19/2013	667597	014755 - Clearcreek Contractors Inc.	Cont Soil	1.34	TN
09/19/2013	667597	014755 - Clearcreek Contractors Inc.	Container Chasis	1.00	LD
09/19/2013	667619	014755 - Clearcreek Contractors Inc.	Cont Soil	23.39	TN
09/19/2013	667619	014755 - Clearcreek Contractors Inc.	Container Chasis	1.00	LD
09/19/2013	667620	014755 - Clearcreek Contractors Inc.	Cont Soil	25.00	TN
09/19/2013	667620	014755 - Clearcreek Contractors Inc.	Cont Soil	1.68	TN
09/19/2013	667620	014755 - Clearcreek Contractors Inc.	Container Chasis	1.00	LD
09/19/2013	667628	014755 - Clearcreek Contractors Inc.	Cont Soil	25.00	TN
09/19/2013	667628	014755 - Clearcreek Contractors Inc.	Cont Soil	3.03	TN
09/19/2013	667628	014755 - Clearcreek Contractors Inc.	Container Chasis	1.00	LD
09/19/2013	667653	014755 - Clearcreek Contractors Inc.	Cont Soil	25.00	TN
09/19/2013	667653	014755 - Clearcreek Contractors Inc.	Cont Soil	1.39	TN
09/19/2013	667653	014755 - Clearcreek Contractors Inc.	Container Chasis	1.00	LD
09/20/2013	667931	014755 - Clearcreek Contractors Inc.	Cont Soil	25.00	TN
09/20/2013	667931	014755 - Clearcreek Contractors Inc.	Cont Soil	2.80	TN
09/20/2013	667931	014755 - Clearcreek Contractors Inc.	Container Chasis	1.00	LD
09/20/2013	667935	014755 - Clearcreek Contractors Inc.	Cont Soil	25.00	TN
09/20/2013	667935	014755 - Clearcreek Contractors Inc.	Cont Soil	2.83	TN
09/20/2013	667935	014755 - Clearcreek Contractors Inc.	Container Chasis	1.00	LD
09/21/2013	668211	014755 - Clearcreek Contractors Inc.	Cont Soil	25.00	TN

09/21/2013	668211	014755 - Clearcreek Contractors Inc.	Cont Soil	3.02	TN
09/21/2013	668211	014755 - Clearcreek Contractors Inc.	Container Chasis	1.00	LD
09/21/2013	668255	014755 - Clearcreek Contractors Inc.	Cont Soil	25.00	TN
09/21/2013	668255	014755 - Clearcreek Contractors Inc.	Cont Soil	0.85	TN
09/21/2013	668255	014755 - Clearcreek Contractors Inc.	Container Chasis	1.00	LD
09/21/2013	668258	014755 - Clearcreek Contractors Inc.	Cont Soil	25.00	TN
09/21/2013	668258	014755 - Clearcreek Contractors Inc.	Cont Soil	4.19	TN
09/21/2013	668258	014755 - Clearcreek Contractors Inc.	Container Chasis	1.00	LD
09/21/2013	668285	014755 - Clearcreek Contractors Inc.	Cont Soil	25.00	TN
09/21/2013	668285	014755 - Clearcreek Contractors Inc.	Cont Soil	0.66	TN
09/21/2013	668285	014755 - Clearcreek Contractors Inc.	Container Chasis	1.00	LD
09/21/2013	668287	014755 - Clearcreek Contractors Inc.	Cont Soil	25.00	TN
09/21/2013	668287	014755 - Clearcreek Contractors Inc.	Cont Soil	1.56	TN
09/21/2013	668287	014755 - Clearcreek Contractors Inc.	Container Chasis	1.00	LD
09/21/2013	668289	014755 - Clearcreek Contractors Inc.	Cont Soil	25.00	TN
09/21/2013	668289	014755 - Clearcreek Contractors Inc.	Cont Soil	2.85	TN
09/21/2013	668289	014755 - Clearcreek Contractors Inc.	Container Chasis	1.00	LD
09/24/2013	668767	014755 - Clearcreek Contractors Inc.	Cont Soil	25.00	TN
09/24/2013	668767	014755 - Clearcreek Contractors Inc.	Cont Soil	2.21	TN
09/24/2013	668767	014755 - Clearcreek Contractors Inc.	Container Chasis	1.00	LD
09/24/2013	668768	014755 - Clearcreek Contractors Inc.	Cont Soil	25.00	TN
09/24/2013	668768	014755 - Clearcreek Contractors Inc.	Cont Soil	0.51	TN
09/24/2013	668768	014755 - Clearcreek Contractors Inc.	Container Chasis	1.00	LD
09/24/2013	668769	014755 - Clearcreek Contractors Inc.	Cont Soil	25.00	TN
09/24/2013	668769	014755 - Clearcreek Contractors Inc.	Cont Soil	1.93	TN
09/24/2013	668769	014755 - Clearcreek Contractors Inc.	Container Chasis	1.00	LD
09/24/2013	668771	014755 - Clearcreek Contractors Inc.	Cont Soil	25.00	TN
09/24/2013	668771	014755 - Clearcreek Contractors Inc.	Cont Soil	5.06	TN
09/24/2013	668771	014755 - Clearcreek Contractors Inc.	Container Chasis	1.00	LD
09/24/2013	668772	014755 - Clearcreek Contractors Inc.	Cont Soil	25.00	TN
09/24/2013	668772	014755 - Clearcreek Contractors Inc.	Cont Soil	2.48	TN
09/24/2013	668772	014755 - Clearcreek Contractors Inc.	Container Chasis	1.00	LD
09/24/2013	668777	014755 - Clearcreek Contractors Inc.	Cont Soil	25.00	TN
09/24/2013	668777	014755 - Clearcreek Contractors Inc.	Cont Soil	2.63	TN
09/24/2013	668777	014755 - Clearcreek Contractors Inc.	Container Chasis	1.00	LD
09/24/2013	668780	014755 - Clearcreek Contractors Inc.	Cont Soil	25.00	TN
09/24/2013	668780	014755 - Clearcreek Contractors Inc.	Cont Soil	1.38	TN
09/24/2013	668780	014755 - Clearcreek Contractors Inc.	Container Chasis	1.00	LD
09/24/2013	668789	014755 - Clearcreek Contractors Inc.	Cont Soil	25.00	TN
09/24/2013	668789	014755 - Clearcreek Contractors Inc.	Cont Soil	3.52	TN
09/24/2013	668789	014755 - Clearcreek Contractors Inc.	Container Chasis	1.00	LD
09/25/2013	669157	014755 - Clearcreek Contractors Inc.	Cont Soil	25.00	TN
09/25/2013	669157	014755 - Clearcreek Contractors Inc.	Cont Soil	1.27	TN
09/25/2013	669157	014755 - Clearcreek Contractors Inc.	Container Chasis	1.00	LD
09/25/2013	669158	014755 - Clearcreek Contractors Inc.	Cont Soil	25.00	TN
09/25/2013	669158	014755 - Clearcreek Contractors Inc.	Cont Soil	1.84	TN

09/25/2013	669158	014755 - Clearcreek Contractors Inc.	Container Chasis	1.00	LD
09/25/2013	669164	014755 - Clearcreek Contractors Inc.	Cont Soil	24.21	TN
09/25/2013	669164	014755 - Clearcreek Contractors Inc.	Container Chasis	1.00	LD
09/25/2013	669165	014755 - Clearcreek Contractors Inc.	Cont Soil	25.00	TN
09/25/2013	669165	014755 - Clearcreek Contractors Inc.	Cont Soil	0.95	TN
09/25/2013	669165	014755 - Clearcreek Contractors Inc.	Container Chasis	1.00	LD
11/07/2013	300038	014755 - Clearcreek Contractors Inc.	Cont Soil	25.81	TN
11/09/2013	300234	014755 - Clearcreek Contractors Inc.	Cont Soil	30.41	TN
11/09/2013	300239	014755 - Clearcreek Contractors Inc.	Cont Soil	26.45	TN
11/13/2013	300538	014755 - Clearcreek Contractors Inc.	Cont Soil	27.23	TN
11/02/2013	904315	014755 - Clearcreek Contractors Inc.	Cont Soil	26.13	TN
11/02/2013	904316	014755 - Clearcreek Contractors Inc.	Cont Soil	25.35	TN

Tickets Reported: Items Reported: 186

Material	Weight Inbound	Outbound	
66 - Cont Soil	3,874.32	0.00	T
BK - Container	0.00	0.00	T

REPUBLIC SERVICES

CERTIFICATE OF DESTRUCTION

I, Don Tibbets, of Regional Disposal Company (RSI facility), hereby certify that the entire product described in Section A has been properly and legally disposed of in Roosevelt Regional Landfill on November, 2013 (attach any appropriate documentation).

I understand that due to potential concerns related to such things as health, quality, and loss of goodwill, Clearcreek Contractors (Company) does not want this product to be distributed to consumers, even through so called "distressed merchandise" channels of trade, and I further certify that these items were destroyed in such a manner that it cannot be sold, and that the company has taken every reasonable step to prevent resale of said items.

Name (print): Don Tibbets

Signature: 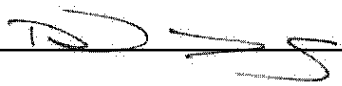

Title: Roosevelt Regional LF General Manager

Date: 6/17/2014

Section A- Products Destroyed (attached additional sheets if needed):

Waste Profile Number (if applicable): 41781314885 / LW-13379

Description of Product	*Quantity or Weight*
Hog Fuel	231.67 Tons Total Disposed

Detail Contract Activity Report

All Ticket Types | January 01, 2013 to June 09, 2014

History and Waiting | Specific Contract: LW-13379

LW-13379

Ticket Date		Customer	Material	Billing Quantity
11/25/2013	901627	014755 - Clearcreek Contractors	SW-CONT SOIL	17.21 TN
11/25/2013	901635	014755 - Clearcreek Contractors	SW-CONT SOIL	22.90 TN
11/25/2013	901637	014755 - Clearcreek Contractors	SW-CONT SOIL	23.98 TN
11/25/2013	901638	014755 - Clearcreek Contractors	SW-CONT SOIL	23.19 TN
11/25/2013	901647	014755 - Clearcreek Contractors	SW-CONT SOIL	23.11 TN
11/25/2013	901648	014755 - Clearcreek Contractors	SW-CONT SOIL	23.87 TN
11/25/2013	901649	014755 - Clearcreek Contractors	SW-CONT SOIL	25.74 TN
11/26/2013	901653	014755 - Clearcreek Contractors	SW-CONT SOIL	27.19 TN
11/26/2013	901659	014755 - Clearcreek Contractors	SW-CONT SOIL	26.54 TN
11/26/2013	901660	014755 - Clearcreek Contractors	SW-CONT SOIL	17.94 TN

Tickets | Items Reported: 10

Material	Weight Inbound	Outbound	
VG - SW-CONT	231.67	0.00	T

Documentation for Disposal of Waste Fluids Disposed by Emerald Services Inc.

CERTIFICATE OF DISPOSAL

On March 25th, 2014 the Emerald Recycling facility located at 1500 Airport Way S., Seattle WA 98134, received a shipment from:

Clear Creek
2600 Federal Ave
Everett, WA

On Manifest Number: 67366

Manifest Line	1A
Profile Number	G00501
Process	Waste Water
Date of Process:	3/26/14

I certify, on behalf of the above listed treatment facility, that to the best of my knowledge, the above described waste or material was managed in compliance with all applicable laws, regulations, permits, and licenses on the date listed above.

		6/13/14
Facility Representative		Date of Issue

CERTIFICATE OF DISPOSAL

On March 27th, 2014 the Emerald Recycling facility located at 1500 Airport Way S., Seattle WA 98134, received a shipment from:

Clear Creek
2600 Federal Ave
Everett, WA

On Manifest Number: 67956

Manifest Line	1A
Profile Number	G00501
Process	Waste Water
Date of Process:	3/28/14

I certify, on behalf of the above listed treatment facility, that to the best of my knowledge, the above described waste or material was managed in compliance with all applicable laws, regulations, permits, and licenses on the date listed above.

		6/13/14
Facility Representative		Date of Issue

CERTIFICATE OF DISPOSAL

On March 31st, 2014 the Emerald Recycling facility located at 1500 Airport Way S., Seattle WA 98134, received a shipment from:

Clear Creek
2600 Federal Ave
Everett, WA

On Manifest Number: 67989

Manifest Line	1A
Profile Number	G00501
Process	Waste Water
Date of Process:	4/1/14

I certify, on behalf of the above listed treatment facility, that to the best of my knowledge, the above described waste or material was managed in compliance with all applicable laws, regulations, permits, and licenses on the date listed above.

		6/13/14
Facility Representative		Date of Issue

CERTIFICATE OF DISPOSAL

On March 28th, 2014 the Emerald Recycling facility located at 1500 Airport Way S., Seattle WA 98134, received a shipment from:

Clear Creek
2600 Federal Ave
Everett, WA

On Manifest Number: 69083

Manifest Line	1A
Profile Number	G00501
Process	Waste Water
Date of Process:	3/29/14

I certify, on behalf of the above listed treatment facility, that to the best of my knowledge, the above described waste or material was managed in compliance with all applicable laws, regulations, permits, and licenses on the date listed above.

		6/13/14
Facility Representative		Date of Issue

EMERALD SERVICES INC
www.emeraldnw.com

7343 E. MARGINAL WAY SOUTH
SEATTLE, WASHINGTON 98108
PH. (206) 832-3000
FAX (206) 832-3030
24 HOUR EMERGENCY PHONE: 1-888-832-3008

67366

213061 (190)

BILL OF LADING AND GALLONAGE TICKET

SHIPPER/GENERATOR Clear Creek.		CONTACT	JOB # 70600
ADDRESS Kimhally Clark.		PHONE#	LOAD # 1
CITY, STATE, ZIP Everett. WA.			DATE 03/25-14
CARRIER Emerald Services.		PHONE#	DOCUMENT #
CONSIGNEE APW.		CONTACT	TRUCK # 788
ADDRESS 1500 Airport Way S.		PHONE#	PRODUCT TYPE LIQ
CITY, STATE, ZIP Seattle WA			EST. GALLONS

HM	ITEM #	U.S. DOT DESCRIPTION	#	TYPE	QTY.
	A	Non Hazardous Liquid.	1	TT	2285
	B	(Oily Water)			
	C				
	D				

A. WPQ # _____ DISP. CODE: G00501

B. WPQ # _____ DISP. CODE: _____

C. WPQ # _____ DISP. CODE: _____

D. WPQ # _____ DISP. CODE: _____

DISPOSAL

DUMP DELAY TIME _____

WASH OUT: YES ( ) NO (✓)

TIME IN _____ TIME OUT _____

E. WATER _____ GALLONS LOCATION _____ TEST _____ DISP. CODE _____

F. SOLIDS _____ GALLONS LOCATION _____ TEST _____ DISP. CODE _____

_____ % SUSPENDED SOLIDS BY CENTRIFUGE + _____ GALS SEDIMENT

G. OIL/DIESEL/GAS _____ GALLONS LOCATION _____ TEST _____ DISP. CODE _____

HOC'S _____ PCB'S _____ B.S.&W. _____ API _____ LAB: Y / N

Shipper's Certification: I hereby declare that the contents of this consignment are fully and accurately described above by proper shipping name and are classified, packed, marked and labeled, and are in all respects in proper condition for transport by highway, vessel and rail according to applicable international and national government regulations and this material is not regulated as a hazardous waste in accordance with WAC 173-303, 40 CFR. Part 261 or 40 CFR Part 761.

X Matt Clayton — SHIPPER (PRINT NAME) — X [signature] — SIGNATURE — DATE: 3-25-2014

X Sothorn — CARRIER - DRIVER 1 (PRINT NAME) — X [signature] — SIGNATURE — DATE: 03/25-14

X _____ — CARRIER - DRIVER 2 (PRINT NAME) — X _____ — SIGNATURE — DATE: _____

X _____ — CONSIGNEE (PRINT NAME) — X _____ — SIGNATURE — DATE: _____

G-2

CUSTOMER

213061

EMERALD SERVICES INC
www.emeraldnw.com

7343 E. MARGINAL WAY SOUTH
SEATTLE, WASHINGTON 98108
PH. (206) 832-3000
FAX (206) 832-3030
24 HOUR EMERGENCY PHONE: 1-888-832-3008

69083

BILL OF LADING AND GALLONAGE TICKET

SHIPPER/GENERATOR Clear Creek Cont.	CONTACT	JOB # 70666
ADDRESS 2600 federal Ave	PHONE#	LOAD # 1
CITY, STATE, ZIP Everett WA		DATE 3/28/14
CARRIER EST	PHONE#	DOCUMENT # 69083
CONSIGNEE Emerald Recycling	CONTACT	TRUCK # 788
ADDRESS 1500 Airport Way S.	PHONE#	PRODUCT TYPE L.Q
CITY, STATE, ZIP Seattle WA 98134		EST. GALLONS

HM	ITEM #	U.S. DOT DESCRIPTION	#	TYPE	QTY.
	A	Non-Regulated Material	1	TT	1500 gal
	B				
	C				
	D				

A. WPQ # 666501 DISP. CODE: _____ C. WPQ # _____ DISP. CODE: _____

B. WPQ # _____ DISP. CODE: _____ D. WPQ # _____ DISP. CODE: _____

DISPOSAL

DUMP DELAY TIME _____

WASH OUT: YES ( ) NO ( ) TIME IN _____ TIME OUT _____

E. WATER _____ GALLONS LOCATION _____ TEST _____ DISP. CODE _____

F. SOLIDS _____ GALLONS LOCATION _____ TEST _____ DISP. CODE _____

_____ % SUSPENDED SOLIDS BY CENTRIFUGE + _____ GALS SEDIMENT

G. OIL/DIESEL/GAS _____ GALLONS LOCATION _____ TEST _____ DISP. CODE _____

HOC'S _____ PCB'S _____ B.S.&W. _____ API _____ LAB: Y / N

Shipper's Certification: I hereby declare that the contents of this consignment are fully and accurately described above by proper shipping name and are classified, packed, marked and labeled, and are in all respects in proper condition for transport by highway, vessel and rail according to applicable international and national government regulations and this material is not regulated as a hazardous waste in accordance with WAC 173-303, 40 CFR. Part 261 or 40 CFR Part 761.

X Jim Burke — SHIPPER (PRINT NAME) — X _____ SIGNATURE — DATE: 3/28/14

X Scott Bubre — CARRIER - DRIVER 1 (PRINT NAME) — X Scott Bubre SIGNATURE — DATE: 3/28/14

X _____ CARRIER - DRIVER 2 (PRINT NAME) — X _____ SIGNATURE — DATE: _____

X _____ CONSIGNEE (PRINT NAME) — X _____ SIGNATURE — DATE: _____

G-2

CUSTOMER

EMERALD SERVICES INC
www.emeraldnw.com

7343 E. MARGINAL WAY SOUTH
SEATTLE, WASHINGTON 98108
PH. (206) 832-3000
FAX (206) 832-3030
24 HOUR EMERGENCY PHONE: 1-888-832-3008

213061.200.200

67956

BILL OF LADING AND GALLONAGE TICKET

SHIPPER/GENERATOR Clear Creek J Kimberly Clark		CONTACT Paul C.	JOB # 30-70600
ADDRESS 2600 Federal Ave.		PHONE#	LOAD # 1
CITY, STATE, ZIP Everett, WA		Scott U.	DATE 3-27-14
CARRIER Emerald Services Inc.		PHONE# (206) 832-3000	DOCUMENT # 67956
CONSIGNEE Emerald Recycling Inc.		CONTACT Hony U.	TRUCK # 788
ADDRESS 1500 Airport Way S.		PHONE# (206) 832-3000	PRODUCT TYPE Liq.
CITY, STATE, ZIP Seattle, WA 98108			EST. GALLONS

HM	ITEM #	U.S. DOT DESCRIPTION	#	TYPE	QTY.
	A	NON-Regulated Materials by D.O.T.	1	TT	1968
	B				
	C				
	D				

A. WPQ # G00501 DISP. CODE: _____ C. WPQ # _____ DISP. CODE: _____

B. WPQ # _____ DISP. CODE: _____ D. WPQ # _____ DISP. CODE: _____

DISPOSAL

DUMP DELAY TIME _____

WASH OUT: YES ( ) NO (✓)

TIME IN _____ TIME OUT _____

E. WATER _____ GALLONS LOCATION _____ TEST _____ DISP. CODE _____

F. SOLIDS _____ GALLONS LOCATION _____ TEST _____ DISP. CODE _____

_____ % SUSPENDED SOLIDS BY CENTRIFUGE + _____ GALS SEDIMENT

G. OIL/DIESEL/GAS _____ GALLONS LOCATION _____ TEST _____ DISP. CODE _____

HOC'S _____ PCB'S _____ B.S.&W. _____ API _____ LAB: Y / N

Shipper's Certification: I hereby declare that the contents of this consignment are fully and accurately described above by proper shipping name and are classified, packed, marked and labeled, and are in all respects in proper condition for transport by highway, vessel and rail according to applicable international and national government regulations and this material is not regulated as a hazardous waste in accordance with WAC 173-303, 40 CFR Part 261 or 40 CFR Part 761.

X _____ SHIPPER (PRINT NAME) X _____ SIGNATURE DATE: _____

X Brian Jackson CARRIER - DRIVER 1 (PRINT NAME) X _____ SIGNATURE DATE: 3-27-14

X _____ CARRIER - DRIVER 2 (PRINT NAME) X _____ SIGNATURE DATE: _____

X _____ CONSIGNEE (PRINT NAME) X _____ SIGNATURE DATE: _____

G-2

CUSTOMER

EMERALD SERVICES INC
www.emeraldnw.com

7343 E. MARGINAL WAY SOUTH
SEATTLE, WASHINGTON 98108
PH. (206) 832-3000
FAX (206) 832-3030
24 HOUR EMERGENCY PHONE: 1-888-832-3008

67989

BILL OF LADING AND GALLONAGE TICKET

SHIPPER/GENERATOR Clear Creek		CONTACT	JOB # 7000
ADDRESS 7000 Federal Ave		PHONE#	LOAD # 1
CITY, STATE, ZIP Everett WA			DATE 3/31/14
CARRIER EST		PHONE#	DOCUMENT # 67989
CONSIGNEE Emerald Recycling		CONTACT	TRUCK # 755
ADDRESS 1500 Airport Way S.		PHONE#	PRODUCT TYPE L & C
CITY, STATE, ZIP Seattle WA 98134			EST. GALLONS

HM	ITEM #	U.S. DOT DESCRIPTION	#	TYPE	QTY.
	A	Non-Regulated Material	1	TT	930
	B				
	C				
	D				

A. WPQ # GCC.SC1 DISP. CODE: _____ C. WPQ # _____ DISP. CODE: _____

B. WPQ # _____ DISP. CODE: _____ D. WPQ # _____ DISP. CODE: _____

DISPOSAL

DUMP DELAY TIME _____

WASH OUT: YES ( ) NO ( ) TIME IN _____ TIME OUT _____

E. WATER _____ GALLONS LOCATION _____ TEST _____ DISP. CODE _____

F. SOLIDS _____ GALLONS LOCATION _____ TEST _____ DISP. CODE _____

_____ % SUSPENDED SOLIDS BY CENTRIFUGE + _____ GALS SEDIMENT

G. OIL/DIESEL/GAS _____ GALLONS LOCATION _____ TEST _____ DISP. CODE _____

HOC'S _____ PCB'S _____ B.S.&W. _____ API _____ LAB: Y / N

Shipper's Certification: I hereby declare that the contents of this consignment are fully and accurately described above by proper shipping name and are classified, packed, marked and labeled, and are in all respects in proper condition for transport by highway, vessel and rail according to applicable international and national government regulations and this material is not regulated as a hazardous waste in accordance with WAC 173-303, 40 CFR. Part 261 or 40 CFR Part 761.

X Tim Curby — SHIPPER (PRINT NAME) — X _____ SIGNATURE — DATE: 3/31/14

X Scott Buh — CARRIER - DRIVER 1 (PRINT NAME) — X Scott Buh SIGNATURE — DATE: 3/31/14

X _____ CARRIER - DRIVER 2 (PRINT NAME) — X _____ SIGNATURE — DATE: _____

X _____ CONSIGNEE (PRINT NAME) — X _____ SIGNATURE — DATE: _____

G-2

CUSTOMER

APPENDIX B

Photographs from Interim Action



Photograph 1 – BA-MW6 Area excavation: backfilling



Photograph 2 – Boiler Baghouse Area excavation: looking east



Photograph 3 – Boiler Baghouse Area excavation: looking east



Photograph 4 – Boiler Baghouse Area excavation: copper wire in east end



Photograph 5 – Bunker C ASTs excavation: bunker oil product



Photograph 6 – Bunker C ASTs excavation: pilings for former ASTs, with bunker oil



Photograph 7 – Bunker C ASTs excavation: east center of excavation looking southwest



Photograph 8 – CN-B2 excavation: looking southeast



Photograph 9 – CN-B2 excavation: looking south



Photograph 10– CN-B2 excavation: concrete foundation monolith and lumber



Photograph 11 – CN-B2 excavation: sawdust from deepest point of excavation



Photograph 12 – Heavy Duty Shop Sump excavation: looking north



Photograph 13 – Hydraulic Barker Vault excavation: oil at vault location



Photograph 14 – Naval Reserve Parcel UST excavation



Photograph 15 - Naval Reserve Parcel UST excavation: lumber in eastern sidewall



Photograph 16 – Naval Reserve South excavation: looking northwest



Photograph 17 – Naval Reserve South excavation: looking southwest



Photograph 18 – Naval Reserve South excavation: looking north



Photograph 19 – Naval Reserve South excavation: S-21/S22 area



Photograph 20 – Rail Car Dumper excavation: looking north



Photograph 21 – REC2-MW-5 excavation: looking east



Photograph 22 – SHB-MW-1 excavation



Photograph 23 – UST 29/Latex excavation: looking north



Photograph 24 – UST 29/Latex excavation: looking west



Photograph 25 – UST 29/Latex excavation: looking northeast



Photograph 26 – UST 29/Latex excavation: looking south



Photograph 27 – UST 70 excavation: looking south



Photograph 28– UST 70 excavation: looking west



Photograph 29 – USTs 71, 72, 73 excavation: looking east across USTs location to north-south-trending sheet pile wall



Photograph 30 – USTs 71, 72, 73 excavation: concrete tank saddles for former railroad car USTs



Photograph 31 – USTs 71, 72, 73 excavation: thin layer of bunker-contaminated soil under southern concrete monolith



Photograph 32 – USTs 71, 72, 73 excavation: bunker-contaminated soil beneath one concrete monolith on northeast side



Photograph 33 – USTs 71, 72, 73 excavation: looking northwest (backfill on left)



Photograph 34 – USTs 71, 72, 73 excavation: CSO pipe bypass and replacement

APPENDIX C

Data Validation Reports

Data Validation Report

Kimberly-Clark Everett, Washington Site
Upland Area Interim Action Soil Sampling
Batch #1 Soil Samples

Prepared for:

Aspect Consulting LLC
401 Second Ave South, Suite 201
Seattle, WA 98014

Prepared by:

Pyron Environmental, Inc.
3530 32nd Way, NW
Olympia, WA 98502

ACRONYMS

%D	percent difference
%D_f	percent drift
%R	percent recovery
%RSD	percent relative standard deviation
AMU	atomic mass unit
CCB	continuing calibration blank
CCC	calibration check compound
CCV	continuing calibration verification
CF	calibration factor
CLP	U.S. EPA Contract Laboratory Program
COC	chain-of-custody
CVAFS	cold vapor atomic fluorescent spectrometry
DFTPP	decafluorotriphenylphosphine
ECD	electron capture detector
EPA	U.S. Environmental Protection Agency
FID	Flame ionization detector
GC/MS	gas chromatograph/mass spectrometer
ICAL	initial calibration
ICB	initial calibration blank
ICP/MS	inductively coupled plasma/ mass spectrometer
ICV	initial calibration verification
LCS	laboratory control sample
LCSD	laboratory control sample duplicate
MDL	method detection limit
µg/kg	microgram per kilogram
mg/kg	milligram per kilogram
MS	matrix spike
MSD	matrix spike duplicate
NFGs	CLP National Functional Guidelines for Data Review (EPA 2008 – Organics; EPA 2010 – Inorganics)
OPR	ongoing precision and recovery
PCBs	polychlorinated biphenyls
QA/QC	quality assurance/quality control
RF	response factor

RL	reporting limit
RPD	relative percent difference
RRT	relative retention time
SDG	sample delivery group
SIM	selective ion monitoring
SVOCs	semi-volatile organic compounds
VOCs	volatile organic compounds

INTRODUCTION

This report presents and discusses findings of the data validation performed on analytical data for soil samples collected during August and September 2013 for the referenced project. The laboratory reports validated herein were submitted by Friedman & Bruya, Inc.

A level III data validation was performed on this laboratory report. The validation followed the procedures specified in USEPA CLP Functional Guidelines ([NFGs], EPA 2008 – Organics; EPA 2010 – Inorganics), with modifications to accommodate project and analytical method requirements. The numerical quality assurance/quality control (QA/QC) criteria applied to the validation were in accordance with those specified in the quality assurance project plans ([QAPPs], Aspect, 2009) and the current performance-based control limits established by the laboratory (laboratory control limits). Instrument calibration, frequency of QC analyses, and analytical sequence requirements were evaluated against the respective analytical methods.

Validation findings are discussed in each section pertinent to the QC parameter for each type of analysis. Qualified data with applied data qualifiers are summarized in the **Summary** section at the end of this report.

Samples and the associated analyses validated herein are summarized as follows:

Field Sample ID	Laboratory Sample ID	Sampling Date	Sample Type	Analysis					
				VOC	SVOC PAHs	PCB	Metals	TPH-Gx	TPH-Dx
FARM-TP-1-10	308310-01	08/20/13	Soil	X			X	X	X
FARM-TP-1-25	308310-02	08/20/13	Soil	X			X		X
FARM-TP-2-15	308310-04	08/20/13	Soil	X				X	X
FARM-TP-3-6	308310-05	08/20/13	Soil	X			X	X	X
FARM-TP-4-12	308310-08	08/20/13	Soil	X			X	X	X
FARM-TP-5-10	308310-10	08/20/13	Soil	X			X	X	X
GF11-TP1-B-3	308371-01	08/22/13	Soil				X(A)		
GF11-TP1-S-0-3	308371-02	08/22/13	Soil				X(A)		
GF11-TP2-B-3	308371-03	08/22/13	Soil				X(A)		
GF11-TP2-S-0-3	308371-04	08/22/13	Soil				X(A)		
GF11-TP3-B-3	308371-05	08/22/13	Soil				X(A)		
GF11-TP3-S-0-3	308371-06	08/22/13	Soil				X(A)		
GF11-TP4-B-3	308371-07	08/22/13	Soil				X(A)		
GF11-TP4-S-0-3	308371-08	08/22/13	Soil				X(A)		
GF11-TP5-B-3	308371-09	08/22/13	Soil				X(A)		
GF11-TP5-S-0-3	308371-10	08/22/13	Soil				X(A)		

Field Sample ID	Laboratory Sample ID	Sampling Date	Sample Type	Analysis					
				VOC	SVOC PAHs	PCB	Metals	TPH-Gx	TPH-Dx
GF11-TP6-B-3	308371-11	08/22/13	Soil				X[(A)]		
GF11-TP6-S-0-3	308371-12	08/22/13	Soil				X[(A)]		
FARM-TP6-12	308386-01	08/23/13	Soil	X	SVOC	X	X	X	X
FARM-STOCKPILE-1	308386-02	08/23/13	Soil	X	SVOC	X	X	X	X
FARM-TP7-14	308386-03	08/23/13	Soil	X	SVOC	X	X	X	X
FARM-TP8-12	308386-04	08/23/13	Soil	X	SVOC	X	X	X	X
FARM-TP9-12	308386-05	08/23/13	Soil	X	SVOC	X	X	X	X
FARM-TP10-12	308386-06	08/23/13	Soil	X	SVOC	X	X	X	X
HA1-2	308474-01	08/29/13	Soil	X	SVOC	X	X	X	X
HA2-2	308474-02	08/29/13	Soil	X	SVOC	X	X	X	X
HA3-2	308474-03	08/29/13	Soil	X	SVOC	X	X	X	X
HA4-2	308474-04	08/29/13	Soil	X	SVOC	X	X	X	X
HA6-2	308474-06	08/29/13	Soil	X	SVOC	X	X	X	X
HA7-2	308474-07	08/29/13	Soil	X	SVOC	X	X	X	X
HA8-2	308474-08	08/29/13	Soil	X	SVOC	X	X	X	X
HA9-2	308474-09	08/29/13	Soil	X	SVOC	X	X	X	X
HDS-ESW-2	309241-01	09/12/13	Soil	X	X	X	X	X	X
HDS-NSW-2	309241-02	09/12/13	Soil	X	X	X	X	X	X
HDS-WSW-2	309241-03	09/12/13	Soil	X	X	X	X	X	X
HDS-SSW-2	309241-04	09/12/13	Soil	X	X	X	X	X	X
HDS-BTM-4	309241-05	09/12/13	Soil	X	X	X	X	X	X
HDS-SP-1	309241-06	09/12/13	Soil	X	X	X	X	X	X
DAST-B08-092713	309537-01	09/27/13	Soil		PAHs				X
DAST-B09-092713	309537-02	09/27/13	Soil		PAHs				X

Notes:

[(A)] - Arsenic, cadmium, chromium, copper, mercury, nickel, and zinc

Metals - Antimony, arsenic, beryllium, cadmium, chromium, copper, lead, mercury, nickel, selenium, silver, thallium, and zinc, unless otherwise noted.

PAHs - Polycyclic aromatic hydrocarbons

PCB - Polychlorinated biphenyl

SVOC - Semivolatile organic compound

T – Total metals

TPH-Dx - Diesel and motor oil range total petroleum hydrocarbon

TPH-G - Gasoline range total petroleum hydrocarbon

VOC - Volatile organic compound

X - The analysis was requested and performed on the sample.

The analytical parameters requested for the samples, the respective analytical methods, and the analytical laboratories are summarized below:

Parameter	Analytical Method	Analytical Laboratory
Volatile Organic Compounds (VOCs)	SW846 Method 8260C	Friedman & Bruya, Inc. (F&BI) Seattle, WA
Semi-volatile Organic Compounds (SVOCs)	SW846 Method 8270D	
Polycyclic Aromatic Hydrocarbons (PAHs)	SW846 Method 8270D-SIM	
PCB Aroclors	SW846 Method 8082A	
TPH - Gasoline Range	NWTPH-Gx	
TPH - Diesel & Motor Oil Range	NWTPH-Dx	
Total Metals	EPA Method 200.8	
Mercury	EPA Method 1631E	

Notes:

1. SW846 - *USEPA Test Methods for Evaluating Solid Waste, Physical/Chemical Methods,* SW-846, Third Edition, December 1996.
2. EPA Methods - *USEPA Methods for Chemical Analysis of Water and Wastes,* EPA–600/4-79-020, March 1983 Revision.
3. EPA Method 1631E - *Mercury in Water by Oxidation, Purge and Trap, and Cold Vapor Atomic Fluorescence Spectrometry,* Office of Water, U.S. Environmental Protection Agency, August 2002, EPA-821-R-02-019.
4. NWTPH Methods – *Washington State Department of Ecology, Analytical Methods for Petroleum Hydrocarbons*, Publication No. ECY 97-602, June 1997.

DATA VALIDATION FINDINGS

1. VOCs by GC/MS (EPA Method SW8260C)

1.1 Sample Management and Holding Time

Samples were received in the laboratory intact and in consistence with the accompanying chain-of-custody (COC) documentation. In some cases where cooler temperature was outside the 4±2°C criteria; samples were hand-delivered to the laboratory the same day of collection. The cooler temperature exceedance had no significant effects on data quality. No other anomalies were identified in relation to sample preservation, handling, and transport.

Soil samples should be preserved at the time of collection. Soil and water samples should be analyzed within 14 days of collection. All samples were analyzed within the required holding times.

Sample HDS-SP-1 was not preserved immediately upon collection as required by the method. Target compounds were not detected in this sample at or above their reporting limits. Since the analysis was performed in a relatively short holding time (4 days) of collection, rather than being rejected, VOCs results for this sample were qualified (UJ) as estimated.

1.2 GC/MS Instrument Performance Check

The method require that (1) gas chromatograph/mass spectrometer (GC/MS) tuning analysis be performed, using bromofluorobenzene (BFB), at the beginning of each 12-hour period prior to any analysis, and (2) specific mass ions meet the criteria provided in the method. All instrument performance checks met the requirements.

1.3 Initial Calibration (ICAL)

The ICAL criteria require that (1) if linear average RFs is chosen as the quantitation option, at least five standards at different concentrations should be analyzed and the percent relative standard deviation (%RSD) of response factors (RFs) be ≤20% for the analyte, (2) if least-square linear regression is chosen for quantitation, the correlation coefficient (r) be >0.995, and (3) if six-point non-linear (quadratic) curve is chosen for quantitation, the coefficient of determination (r^2) be >0.99. ICALs either met the requirements or the outliers had no adverse effects on data usability (*e.g.,* %RSD >20% for a compound not detected in samples).

An initial calibration verification (ICV) standard (second source standard) was analyzed to verify the calibration curve. Percent difference (%D) values were either within ±30%, or

the exceedance had no adverse effects on data usability (*e.g.,* biased high ICV recovery for a compound not detected in samples).

1.4 Calibration Verification (CCV)

The CCV criteria requires that (1) continuing calibrations be analyzed at the beginning of each 12-hour analysis period prior to the analysis of method blank and samples, and (2) the %D value be within ±20%.

Calibration verifications either met the requirements, or the exceedance had no adverse effects on data usability (*e.g.,* biased high CCV recovery for a compound not detected in samples).

1.5 Method Blanks

Method blanks were prepared and analyzed as required. Target compounds were not detected at or above the reporting limits (RLs). Methylene chloride was consistently present in method blanks at levels greater than the method detection limits but less than RLs. Methylene chloride results greater than RLs but less than 10x the levels found in the method blanks were qualified (U) as non-detected at the reported values.

1.6 Laboratory Control Sample (LCS) and LCS Duplicate (LCSD)

LCS and LCSD were prepared and analyzed as required by the method. Percent recovery (%R) and relative percent difference (RPD) values either met the project control limits, or the outliers had no adverse effects on data usability (*e.g.,* biased high recovery for a compound not detected in samples).

1.7 Surrogate Spikes

Surrogate spikes were added to all samples as required by the method. All surrogate spike %R values were within the project control limits.

1.8 Matrix Spike (MS)

MS analyses were performed on project and batch QC samples at the proper frequency (≥5% of the samples analyzed for VOCs). All %R values were within the project control limits, except for the following:

SDG#	Parent Sample ID	Compound	MS %R	MSD %R	Control Limit	Data Qualifier
308474	HA1-2	Dichlorodifluoromethane	8%	8%	10-142%	**R**

1.9 Internal Standards

The method requires that (1) internal standard retention time be within ±30 seconds from that of the associated 12-hour calibration standard, and (2) the area counts of all internal standards be within –50% to +100% of the associated 12-hour calibration standard. All internal standards in the sample and associated QC analyses met the criteria.

1.10 Reporting Limit and Target Compound Quantitation

RLs were supported with adequate initial calibration concentrations. In cases where target compound concentrations exceeded ICAL calibration ranges, proper dilution analyses were performed for definitive quantitation of the compounds. Only affected compounds were to be reported from dilution analyses.

Naphthalene, 1,2,4-trichlorobenzene, 1,2-dichlioriobenzene, 1,3-dichlorobenzene, and 1,4-dichliorobenzene were also reported from SVOCs analysis (Method 8270D). These compounds were to be reported from the SVOCs analysis, in favor of the lower detection limits.

1.11 Field Duplicates

Field duplicates were not submitted for VOCs analyses in these SDGs.

1.12 Overall Assessment of VOCs Data Usability

VOCs data are of known quality and acceptable for use, as qualified.

2. SVOCs by GC/MS (EPA Method SW8270D)

2.1 Sample Management and Holding Times

No anomalies were identified in relation to sample preservation, handling, and transport as discussed in Section 1.1.

Soil samples should be extracted within 14 days and water samples within seven days of collection. Extracts should be analyzed within 40 days of extraction. All samples were extracted and analyzed within the required holding times.

2.2 GC/MS Instrument Performance Check

The method require that a GC/MS tuning analysis be performed using decafluorotriphenylphosphine (DFTPP) at the beginning of each 12-hour period prior to any analysis, and specific mass ions meet the criteria provided in the method. All instrument performance checks met the requirements.

2.3 Initial Calibration (ICAL)

The ICAL criteria require that (1) if linear average RFs is chosen as the quantitation option, at least five standards at different concentrations should be analyzed and the %RSD of RFs be ≤20% for the analyte, (2) if least-square linear regression is chosen for quantitation, the correlation coefficient (r) be >0.995, (3) if six-point non-linear (quadratic) curve is chosen for quantitation, the coefficient of determination (r^2) be >0.99, and (4) the RF be >0.01 for poor response compounds and >0.05 for all other compounds.. All ICALs met the requirements.

An ICV standard (second source standard) was analyzed to verify the calibration curve. %D values were either within ±20%, or the exceedance had no adverse effects on data usability (*e.g.,* biased high ICV recovery for a compound not detected in samples).

2.4 Calibration Verification (CCV)

The CCV criteria require that (1) continuing calibrations be analyzed at the beginning of each 12-hour analysis period prior to the analysis of method blank and samples, (2) the %D be within ±20%, and (3) the RF be >0.01 for poor response compounds and >0.05 for all other compounds.

Calibration verifications were performed at the required frequency. %D values were either within ±20%, or the exceedance had no adverse effects on data usability (*e.g.,* biased high CCV recovery for a compound not detected in samples), with the exceptions as follows:

SDG	CCV ID	Compound	%D	Bias	Affected Sample	Data Qualifier
308310	GCMS8 8/22/13, 8:00	2,4-Dinitrophenol 4,6-Dinitro-2-methylphenol	25.8% 23.8%	Low	FARM-TP-1-25	**UJ**

2.5 Method Blanks

Method blanks were prepared and analyzed as required. Target compounds were not detected at or above the RLs in the method blanks.

2.6 Surrogate Spikes

Surrogate spikes were added to all samples as required by the method. All %R values were within the laboratory control limits.

2.7 Matrix Spike (MS) and MS Duplicate (MSD)

MS/MSD analyses were performed on project samples or batch QC samples at the required frequency. All %R and RPD values were within the laboratory control limits, except for the following:

SDG#	Parent Sample ID	Compound	MS %R	MSD %R	Control Limit	Data Qualifier
308474	HA1-2 HA9-2	Hexachlorocyclopentadiene	23% 14%	- 13%	50-150%	**UJ**
308474	HA9-2	2,4-Dichlorophenol	43%	35%	50-150%	**UJ**
309241	HDS-SP-1	Benzoic Acid	36%	44%	50-150%	**UJ**

2.8 Laboratory Control Sample (LCS) and LCS Duplicate (LCSD)

LCS and LCSD were prepared and analyzed as required by the method. All %R and RPD values either met the laboratory control criteria, or the outliers had no adverse effects on data usability (*e.g.,* biased high %R or RPD value for a compound that was not detected in samples), except for the following:

SDG	Compound	RPD	Control Limit	Affected Sample	Data Qualifier
308474	2,4-Dinitrophenol	24%	20%	HA1-2 HA2-2 HA3-2 HA4-2 HA5-2 HA6-2 HA7-2 HA8-2	**UJ**

2.9 Laboratory Duplicate Analysis

Duplicate analyses were performed on project and batch QC samples at the proper frequency. All RPD or concentration difference values either met the laboratory control criteria or the outlier had no adverse effects on data usability (*e.g.,* high RPD value for a compound that was not detected in samples), except for the following:

SDG	Sample	Compound	Concentration Difference	Control Limit	Data Qualifier
309241	HDS-SSW-2	Benzo(b)fluoranthene	0.0047 µg/kg	0.002 µg/kg	**UJ**

2.10 Internal Standards

The method requires that (1) internal standard retention time be within ±30 seconds from that of the associated 12-hour calibration standard, and (2) the area counts of all internal standards be within –50% to +100% of the associated 12-hour calibration standard. All internal standards in the sample and associated QC analyses met the criteria.

2.11 Reporting Limits and Compound Quantitation

Sample-specific RLs were supported with adequate initial calibration concentrations.

2.12 Field Duplicates

Field duplicates were not submitted for SVOCs analyses in these SDGs.

2.13 Overall Assessment of SVOCs Data Usability

SVOCs data are of known quality and acceptable for use, as qualified.

3. PAHs by GC/MS - SIM (EPA Method SW8270D-SIM)

3.1 Sample Management and Holding Times

No anomalies were identified in relation to sample preservation, handling, and transport as discussed in Section 1.1.

Soil samples should be extracted within 14 days and water within seven days of collection. Extracts should be analyzed within 40 days of extraction. All samples were extracted and analyzed within the required holding times.

3.2 GC/MS Instrument Performance Check

DFTPP tuning was performed within each 12-hour interval. All required ion abundance ratios met the method requirements.

3.3 Initial Calibration (ICAL)

The ICAL criteria require that (1) if linear average RFs is chosen as the quantitation option, at least five standards at different concentrations should be analyzed and the %RSD of RFs be ≤20% for the analyte, (2) if least-square linear regression is chosen for quantitation, the correlation coefficient (r) be >0.995, and (3) if six-point non-linear (quadratic) curve is chosen for quantitation, the coefficient of determination (r^2) be >0.99. All ICALs met the requirements.

An ICV standard (second source standard) was analyzed to verify the calibration curve. %D values were either within ±20%, or the exceedance had no adverse effects on data usability (*e.g.,* biased high ICV recovery for a compound not detected in samples).

3.4 Calibration Verification (CCV)

The analytical method requires that (1) continuing calibration verifications be analyzed at the beginning of each 12-hour analysis period prior to the analysis of method blank and samples, and (2) the %D be within ±20%.

3.5 Method Blanks

Method blanks were prepared and analyzed as required. Target compounds were not detected at or above the RLs in the method blanks.

3.6 Surrogate Spikes

Surrogate spikes were added to all samples as required by the method. All surrogate spike %R values were either within the project control limits or at levels that had no adverse effects on data quality (*e.g.,* biased-high recovery for compounds that were not detected in samples). In some cases surrogate spike %R values were not applicable for data evaluation because the samples contained high levels of target PAHs and required dilution analysis; no data were qualified in these cases.

3.7 Matrix Spike (MS) and MS Duplicate (MSD)

MS and MSD analyses were performed on project and batch QC samples at the proper frequency (≥5% of samples analyzed). All %R and RPD values met the project control criteria.

3.8 Laboratory Control Sample (LCS) and LCS Duplicate (LCSD)

LCS and LCSD analyses were performed as required by the method. All %R and RPD values were within the project control limits.

3.9 Internal Standards

The method requires that (1) internal standard retention time be within ±30 seconds from that of the associated 12-hour calibration standard, and (2) the area counts of all internal standards be within –50% to +100% of the associated 12-hour calibration standard. All internal standards in the sample and associated QC analyses met the criteria.

3.10 Reporting Limits and Target Compound Quantitation

Sample-specific RLs were supported with adequate initial calibration concentrations. In some cases samples required dilution for definitive quantitation of target compounds; the RLs were raised accordingly.

3.11 Field Duplicates

One set of field duplicates were submitted for PAHs analyses. Field duplicate results for detected target compounds, RPD (or concentration difference) values, and data qualification were presented in **Appendix A**.

3.12 Overall Assessment of PAHs Data Usability

PAHs data are of known quality and acceptable for use, as qualified.

4. PCB Aroclors (EPA Method SW8082A)

4.1 Sample Management and Holding Times

No anomalies were identified in relation to sample preservation, handling, and transport as discussed in Section 1.1.

Soil samples should be extracted within 14 days of collection and extracts analyzed within 40 days of extraction. All samples were extracted and analyzed within the required holding times.

4.2 Initial Calibration

The method requires that (1) a minimum of 5-point calibration be performed using the mixture of Aroclor 1016 and 1260, (2) a single-point calibration be performed for the other five Aroclors to establish calibration factors (CFs) and for Aroclor pattern recognition, (3) at least 3 peaks (preferably 5 peaks) must be chosen for each Aroclor for

characterization, (4) the %RSD values of Aroclor 1016 and 1260 CFs must be ≤20%, and (5) if dual column analysis is chosen, both columns should meet the requirements. All ICALs met the requirements.

4.3 Calibration Verification

CCV analyses should be performed for each 12-hour analysis sequence prior to sample analyses, and the %D be within ±20%.

Calibration verifications were performed at the required frequency. All %D values either met the control criteria or biased high for target compounds that were not detected in the associated samples.

4.4 Method Blanks

Method blanks were prepared and analyzed as required. PCB Aroclors were not detected at or above the MDLs in the method blanks.

4.5 Surrogate Spikes

Surrogate spikes were added to all samples as required by the method. All surrogate spike %R values were within the laboratory control limits.

4.6 Matrix Spike and Matrix Spike Duplicate (MS/MSD)

MS/MSD analyses were performed on project samples or batch QC samples at the required frequency. All %R and RPD values were within the laboratory control limits, except that the Aroclor 1260 RPD value (25%) for the MS/MSD analyses performed on sample FARM-STOCKPILE-1 (SDG: 308386) was outside the control criteria (20%). The Aroclor 1260 result for this sample was qualified (J) as estimated.

4.7 Laboratory Control Sample (LCS) and LCS Duplicate (LCSD)

LCS and LCSD analyses were performed as required by the method. All %R and RPD values were within the project control limits.

4.8 Laboratory Duplicate Analysis

Duplicate analyses were performed on project and batch QC samples at the proper frequency. All RPD or concentration difference values met the laboratory control criteria.

4.9 Method Reporting Limits and Target Compound Quantitation

Sample-specific RLs were supported with adequate initial calibration concentrations and achieved the project target quantitation limits.

4.10 Field Duplicates

Field duplicates were not submitted for PCB Aroclors analysis in these SDGs.

4.11 Overall Assessment of PCB Aroclors Data Usability

PCB Aroclor data are of known quality and acceptable for use.

5. TPH-Gasoline by GC/FID (Method NWTPH-Gx)

5.1 Sample Management and Holding Times

No anomalies were identified in relation to sample preservation, handling, and transport as discussed in Section 1.1.

Soil samples should be preserved at the time of collection. Soil and water samples should be analyzed within 14 days of collection. All samples were analyzed within the required holding times.

Sample HDS-SP-1 was not preserved immediately upon collection as required by the method. TPH-Gasoline was not detected in this sample at or above their reporting limits. Since the analysis was performed in a relatively short holding time (4 days) of collection, rather than rejected, TPH-Gasoline result for this sample was qualified (UJ) as estimated.

5.2 Initial Calibration (ICAL)

The method criteria require that (1) if linear average RFs is chosen as the quantitation option, the %RSD of RFs be ≤20% for the analyte, (2) if least-square linear regression is chosen for quantitation, the correlation coefficient (r) be ≥0.995, (3) if six-point non-linear (quadratic) curve is chosen for quantitation, the coefficient of determination (r^2) be ≥0.990, and (4) the back-calculated %D value for each calibration standard be within ±15%. Initial calibration met the criteria for all target compounds.

An ICV (second source) standard was analyzed to verify the calibration curve. %D values were within ±20%.

5.3 Calibration Verification

Continuing calibration verification (CCV) analyses were performed at the required frequency for all analytical sequences as required by the method. The %D values for all CCVs met the method criterion (±20%).

5.4 Method Blanks

Method blanks were prepared and analyzed as required. No target compounds were detected at or above the RLs in the method blanks.

5.5 Surrogate Spikes

Surrogate spikes were added to all samples as required by the method. All surrogate spike %R values were within the project control limits, outside the control limits due to matrix interference, or diluted below quantitation limits due to high analyte concentrations. No data qualifying actions were taken in these cases.

5.6 Matrix Spike and Matrix Spike Duplicate

MS/MSD analyses were not performed for TPH-Gasoline analyses; instead, duplicate and LCS analyses in combination were performed.

5.7 Laboratory Control Sample (LCS)

LCS analyses were performed as required by the method. All %R values were within the laboratory control limits.

5.8 Laboratory Duplicate Analysis

Duplicate analyses were performed on project and batch QC samples at the proper frequency. All RPD and concentration difference values met the laboratory control criteria.

5.9 Reporting Limits and Target Compound Quantitation

Sample-specific RLs were supported with adequate initial calibration concentrations.

5.10 Field Duplicates

Field duplicates were not submitted for TPH-Gasoline analyses in these SDGs.

5.11 Overall Assessment of TPH-Gasoline Data Usability

TPH-Gasoline data are of known quality and acceptable for use, as qualified.

6. TPH-Diesel & Motor Oil by GC/FID (Method NWTPH-Dx)

6.1 Holding Time

No anomalies were identified in relation to sample preservation, handling, and transport as discussed in Section 1.1.

Soil samples should be extracted within 14 days and water should be extracted within seven days of collection. Extracts should be analyzed within 40 days of extraction. All samples were extracted and analyzed within the recommended holding times.

6.2 Initial Calibration

The method criteria require that (1) if linear average RFs is chosen as the quantitation option, the %RSD of RFs be ≤20% for the analyte, (2) if least-square linear regression is chosen for quantitation, the correlation coefficient (r) be ≥0.995, (3) if six-point non-linear (quadratic) curve is chosen for quantitation, the coefficient of determination (r^2) be ≥0.990, and (4) the back-calculated %D value for each calibration standard be within ±15%. Initial calibration met the criteria for all target compounds.

An ICV (second source) standard was analyzed to verify the calibration curve. %D values were within ±20%.

6.3 Calibration Verification

The method requires that (1) a mid-range check standard be analyzed prior to and after each analytical batch, and (2) the percent drift (%D) value be within ±20% of the true value.

Calibration verification was performed at required frequency. The %D values were either within the ±20% criterion or at levels that had no adverse effects on data quality (e.g., high-bias %D value where the target compound was not detected in associated sample).

6.4 Method Blanks

Method blanks were prepared and analyzed as required. Target compounds were not detected at or above the RLs in the method blanks.

6.5 Surrogate Spikes

Surrogate spikes were added to all samples as required by the method. All surrogate spike %R values were within the project control limits, outside the control limits due to matrix interference, or diluted below quantitation limits due to high petroleum hydrocarbon concentrations. No data qualifying actions were taken in these cases.

6.6 Matrix Spike (MS) and MS Duplicate (MSD)

MS and MSD analyses were performed on project and batch QC samples at the proper frequency. The %R and RPD values met the laboratory control criteria.

6.7 Laboratory Control Sample (LCS)

LCS analyses were performed as required. All %R values met the project control limits.

6.8 Target Compound Identification

Selected sample extracts were cleaned up with acid and silica gel treatment to minimize the biogenic interference with target compound identification, as required by the project. The laboratory reported results as diesel #2 (C10 - C25) and motor oil (C25 - C36), as required by the method.

6.9 Reporting Limits and Target Compound Quantitation

The reported RLs were supported with adequate ICAL concentrations.

6.10 Field Duplicates

One set of field duplicates were submitted for TPH-Diesel and TPH-Motor Oil analyses. Field duplicate results, RPD (or concentration difference) values, and data qualification for detected TPH-Diesel or Motor Oil were presented in **Appendix A**.

6.11 Overall Assessment of TPH-Diesel and Motor Oil Data Usability

TPH-Diesel and TPH-Motor Oil data are of known quality and acceptable for use, as qualified.

7. Total Metals by ICP/MS and CVAFS (EPA Methods 200.8 and 1631E)

7.1 Sample Management and Holding Times

No anomalies were identified in relation to sample preservation, handling, and transport, as discussed in Section 1.1.

Soil and water samples should be analyzed within 180 days for metals and 28 days for mercury. Samples were analyzed within the required holding times.

7.2 ICP/MS Tuning

Instrument tuning was performed at the required frequency. The stability check (%RSD <5%), mass calibration (mass difference <0.1 AMU), and resolution check (peak width <1.0 AMU at 5% peak height) met the NFG and method criteria.

7.3 Initial Calibration (ICAL)

The ICP/MS method requires that (1) a blank and one calibration standard be used in establishing the analytical curve, and (2) the average of replicate exposures be reported for all standards, QC, and sample analyses.

The CVAFS method require that (1) a blank and five calibration standards be employed to establish the analytical curve, (2) the linearity of the calibration curve should meet the criteria of correlation coefficient ≥ 0.995 for linear regression, and (3) the %RSD <15% if average response factor approach is employed.

All ICALs met the method requirements.

7.4 Calibration Verification (ICV and CCV)

Initial calibration verifications (ICVs) and continuing calibration verifications (CCVs) for ICP/MS and GFAA and ongoing precision recovery (OPR) were analyzed at the required frequency. The %R values either met the control criteria (90 – 110% for metals, 76 – 123% for mercury) or the exceedance had no adverse effects on data usability (e.g., high-bias %D value where the target compound was not detected in associated sample).

7.5 Blanks

Calibration Blanks: Initial calibration blanks (ICBs) and continuing calibration blanks (CCBs) were not analyzed after calibration verification standards. Target analytes were either not detected at or above the RLs in the ICBs and CCBs, or sample results affected by the ICB/CCB detections were qualified as results of detections in preparation blanks.

Preparation Blanks: Preparation blanks were prepared and analyzed as required. Target analytes were either not detected at or above the RLs in the preparation blanks, or sample results were greater than 10X the detection in the associated blank.

7.6 Laboratory Control Sample (LCS)

LCS analyses were performed as required by the method. All %R values were within the project control limits, or the exceedance had no adverse effects on data usability (e.g., high-bias %R value where the target compound was not detected in associated sample).

7.7 Matrix Spike (MS) and Matrix Spike Duplicate (MSD)

MS and MSD analyses were performed on project and batch QC samples at the adequate frequency (>5% of field sample). The %R and RPD values either met the laboratory control limits or the outliers were not applicable for matrix effect evaluation (e.g. sample concentration >4x spiking level), except for the following:

SDG#	Parent Sample ID	Analyte	MS %R	MSD %R	Control Limit	Affected Sample	Data Qualifier
308474	HA1-2	Nickel	66%	66%	69-112%	HA1-2 HA2-2 HA3-2 HA4-2 HA5-2 HA6-2 HA7-2 HA8-2 HA9-2	**J**
309241	Batch QC	Nickel	128%	121%	69-112%	HDS-ESW-2 HDS-NSW-2 HDS-WSW-2 HDS-SSW-2 HDS-BTM-4 HDS-SP-1	**J**

7.8 Internal Standards

At least three internal standards were added to all field and QC samples for ICP/MS analyses. All percent relative intensity values were within the method criteria (60 - 125%).

7.9 Method Reporting Limits and Analyte Quantitation

Sample-specific RLs were supported with adequate initial calibration concentrations.

7.10 Field Duplicates

Field duplicates were not submitted for metals analyses in these SDGs.

7.11 Overall Assessment of Metals Data Usability

Metal data are of known quality and acceptable for use, as qualified.

SUMMARY

Table I. Data Affected by QC Anomalies:

Laboratory ID	Sample ID	Analyte	Qualifier	Qualified Reason
309241-01 309241-02 309241-03 309241-04 309241-05 309241-06 308474-01 308474-02 308474-03 308474-04 308474-05 308474-06 308474-07 308474-08 308474-09	HDS-ESW-2 HDS-NSW-2 HDS-WSW-2 HDS-SSW-2 HDS-BTM-4 HDS-SP-1 HA1-2 HA2-2 HA3-2 HA4-2 HA5-2 HA6-2 HA7-2 HA8-2 HA9-2	Nickel	**J**	MS/MSD %R values biased high
309241-06	HDS-SP-1	Gasoline Range TPH	**UJ**	Sample was not preserved in methanol upon collection
308386-02	FARM-STOCKPILE-1	Aroclor 1260	**UJ**	MS/MSD RPD value was >20%
308310-01 308310-04 308310-05 308310-08 308310-10 308386-04 308386-05 308386-06	FARM-TP-1-10 FARM-TP-2-15 FARM-TP-3-6 FARM-TP-4-12 FARM-TP-5-10 FARM-TP8-12 FARM-TP9-12 FARM-TP10-12	Methylene chloride	**U**	Laboratory contamination
308474-01	HA1-2	Dichlorodifluoromethane	**R**	MS/MSD %R values were <10%

Laboratory ID	Sample ID	Analyte	Qualifier	Qualified Reason
308310-01 308310-02 308310-04 308310-05 308310-08 308310-10 308386-01 308386-02 308386-03 308386-04 308386-05 308386-06 308474-01 308474-02 308474-03 308474-04 308474-05 308474-06 308474-07 308474-08 308474-09 309241-01 309241-02 309241-03 309241-04 309241-05 309241-06	FARM-TP-1-10 FARM-TP-1-25 FARM-TP-2-15 FARM-TP-3-6 FARM-TP-4-12 FARM-TP-5-10 FARM-TP6-12 FARM-STOCKPILE-1 FARM-TP7-14 FARM-TP8-12 FARM-TP9-12 FARM-TP10-12 HA1-2 HA2-2 HA3-2 HA4-2 HA5-2 HA6-2 HA7-2 HA8-2 HA9-2 HDS-ESW-2 HDS-NSW-2 HDS-WSW-2 HDS-SSW-2 HDS-BTM-4 HDS-SP-1	1,2-Dichlorobenzene 1,3-Dichlorobenzene 1,4-Dichlorobenzene 1,2,4-Trichlorobenzene Hexachlorobutadiene Naphthalene	**DNR**	Report from EPA 8270D analysis for lower detection limit
309241-06	HDS-SP-1	All VOCs	**UJ**	Sample was not preserved in MeOH upon collection
308310-02	FARM-TP-1-25	2,4-Dinitrophenol 4,6-Dinitro-2-methylphenol	**UJ**	CCV recovery biased low
308474-01 308474-02 308474-03 308474-04 308474-05 308474-06 308474-07 308474-08	HA1-2 HA2-2 HA3-2 HA4-2 HA5-2 HA6-2 HA7-2 HA8-2	2,4-Dichlorophenol	**UJ**	LCS/LCSD RPD value was >20%
308474-01	HA1-2	Hexachlorobutadiene	**UJ**	MS %R value biased low
308474-09	HA9-2	Hexachlorobutadiene	**UJ**	MS/MSD %R values biased low
309241-06	HDS-SP-1	Benzoic acid	**UJ**	MS/MSD %R values biased low
308474-09	HA9-2	2,4-Dichlorophenol	**UJ**	MS/MSD %R values biased low; LCS/LCSD RPD value was >20%

Laboratory ID	Sample ID	Analyte	Qualifier	Qualified Reason
309537-01 309537-02	DAST-B08-092713 DAST-B09-092713	Anthracene Pyrene Benzo(g,h,i)perylene Indeno(1,2,3-cd)pyrene Benzo(b)fluoranthene Fluoranthene Benzo(k)fluoranthene Chrysene Benzo(a)pyrene Dibenzo(a,h)anthracene Benz(a)anthracene Acenaphthene Phenanthrene Fluorene	**UJ/J**	Field duplicate result was outside project advisory criteria
309241-04	HDS-SSW-2	Benzo(b)fluoranthene	**J**	Laboratory duplicate analysis concentration difference was >2xRL

Table II. Data Qualifiers are defined as follows:

Data Qualifier	Definition
DNR	Do not report; the result should be reported from an alternative analysis.
J	The analyte was detected above the reported quantitation limit, and the reported concentration was an estimated value.
R	The sample results are unusable due to the quality of the data generated because certain criteria were not met. The analyte may or may not be present in the sample.
U	The analyte was analyzed for, but was considered not detected at the reporting limit or reported value.
UJ	The analyte was analyzed for, and the associated quantitation limit was an estimated value.

Approved By: _____ Date: ***6/23/2014***

Mingta Lin, Senior Project Chemist

REFERENCES

USEPA *Contract Laboratory Program National Functional Guidelines for Inorganic Superfund Data Review,* Office of Superfund Remediation and Technical Innovation, U.S. Environmental Protection Agency, January 2010, USEPA 540/R-10/011

USEPA *Contract Laboratory Program National Functional Guidelines for Superfund Organic Methods Data Review,* Office of Superfund Remediation and Technical Innovation, U.S. Environmental Protection Agency, June 2008, USEPA-540-R-08-01.

USEPA *Method 1631, Revision E: Mercury in Water by Oxidation, Purge and Trap, and Cold Vapor Atomic Fluorescence Spectrometry, Office of Water, U.S. Environmental Protection Agency, August 2002, EPA-821-R-02-019.*

USEPA *Test Methods for Evaluating Solid Waste (SW-846). Third Edition and Revised Update IIIA.* Office of Solid Waste and Emergency Response, Washington, D.C. April 1998.

USEPA *Methods for Chemical Analysis of Water and Wastes,* EPA-600/4-79-020, March 1983 and updates.

Standard Methods for the Examination of Water and Wastewater, American Public Health Association, 20th Edition, 1995.

Ecology (Washington State Department of). 1997. *Analytical Methods for Petroleum Hydrocarbons.* Publication No. ECY 97-602. June 1997.

PSEP *Recommended Guidelines for Measuring Organic Compounds in Puget Sound Water, Sediment and Tissue Samples,* Puget Sound Water Quality Authority, April 1997.

Appendix A

Field duplicate RPD is indicative of field and laboratory precision and sample homogeneity in combination. The CLP National Functional Guidelines or *Work Plan* do not specify criteria for field duplicate evaluation. An advisory criterion of 35% was applied to evaluating the RPD values of field duplicate results that are ≥5xRL. For results that are <5xRL, an advisory criterion of ±2RL was applied to evaluating the concentration differences. The RPD (or concentration difference as applicable) values and data qualification for detected compounds in field duplicates are presented as follows:

Analyte	Units	RL	Parent & Field Duplicate Sample Result		RPD	Delta	Data Qualifier
			DAST-B08-092713	DAST-B09-092713			
Diesel Range TPH	mg/kg	50	ND	ND		0	
Oil Range TPH	mg/kg	250	ND	ND		0	
Anthracene	mg/kg	0.01	ND	0.074		0.074	**UJ/J**
Pyrene	mg/kg	0.01	0.036	0.69		0.654	**J/J**
Benzo(g,h,i)perylene	mg/kg	0.01	0.031	0.19		0.159	**J/J**
Indeno(1,2,3-cd)pyrene	mg/kg	0.01	0.028	0.23		0.202	**J/J**
Benzo(b)fluoranthene	mg/kg	0.01	0.089	0.63	150%		**J/J**
Fluoranthene	mg/kg	0.01	0.037	0.76		0.723	**J/J**
Benzo(k)fluoranthene	mg/kg	0.01	0.021	0.19		0.169	**J/J**
Acenaphthylene	mg/kg	0.01	ND	0.01		0.01	
Chrysene	mg/kg	0.01	0.048	0.64		0.592	**J/J**
Benzo(a)pyrene	mg/kg	0.01	0.04	0.38		0.34	**J/J**
Dibenzo(a,h)anthracene	mg/kg	0.01	ND	0.073		0.073	**UJ/J**
Benz(a)anthracene	mg/kg	0.01	0.031	0.52		0.489	**J/J**
Acenaphthene	mg/kg	0.01	ND	0.026		0.026	**UJ/J**
Phenanthrene	mg/kg	0.01	0.019	0.32		0.301	**J/J**
Fluorene	mg/kg	0.01	ND	0.024		0.024	**UJ/J**
Naphthalene	mg/kg	0.01	0.011	0.017		0.006	

Notes:
Delta – Concentration difference between the parent sample and its field duplicate
mg/kg – milligram per kilogram
ND – The analyte was not detected at or above the RL.
RL – Reporting limit
RPD – Relative percent difference

Data Validation Report

Kimberly-Clark Everett, Washington Site
Upland Area Interim Action Soil Sampling
Batch #2 Soil Samples

Prepared for:

Aspect Consulting LLC
401 Second Ave South, Suite 201
Seattle, WA 98014

Prepared by:

Pyron Environmental, Inc.
3530 32nd Way, NW
Olympia, WA 98502

ACRONYMS

%D	percent difference
%D_f	percent drift
%R	percent recovery
%RSD	percent relative standard deviation
AMU	atomic mass unit
CCB	continuing calibration blank
CCC	calibration check compound
CCV	continuing calibration verification
CDD	chlorinated dibenzo-p-dioxin
CDF	chlorinated dibenzofuran
CF	calibration factor
CLP	U.S. EPA Contract Laboratory Program
COC	chain-of-custody
CVAFS	cold vapor atomic fluorescent spectrometry
DFTPP	decafluorotriphenylphosphine
ECD	electron capture detector
EDL	estimated detection limit
EMPC	estimated maximum possible concentration
EPA	U.S. Environmental Protection Agency
FID	Flame ionization detector
GC/MS	gas chromatograph/mass spectrometer
HRGC	high-resolution gas chromatograph
HRMS	high-resolution mass spectrometer
ICAL	initial calibration
ICB	initial calibration blank
ICP	inductively coupled plasma
ICP/MS	inductively coupled plasma/ mass spectrometer
ICSA	ICP interference check sample solution A
ICV	initial calibration verification
IPR	initial precision and recovery
ISC	isomer specificity check
LCS	laboratory control sample
LCSD	laboratory control sample duplicate
m/z	mass-to-charge ratio

MDL	method detection limit
µg/kg	microgram per kilogram
mg/kg	milligram per kilogram
MS	matrix spike
MSD	matrix spike duplicate
NFGs	CLP National Functional Guidelines for Data Review (EPA 2008 – Organics; EPA 2010 – Inorganics; EPA 2011 – Dioxins/Furans)
OPR	ongoing precision and recovery
pg/g	pictogram per gram
PCBs	polychlorinated biphenyls
PCDD	polychlorinated dibenzo-*p*-dioxin
PCDF	polychlorinated dibenzofuran
PEM	performance evaluation mixture
QA/QC	quality assurance/quality control
QAPP	quality assurance project plan
RF	response factor
RL	reporting limit
RPD	relative percent difference
RRT	relative retention time
S/N	signal-to-noise ratio
SDG	sample delivery group
SICP	selected ion current profile
SIM	selective ion monitoring
SPLP	Synthetic precipitation procedure
WDM	window defining mixture

INTRODUCTION

This report presents and discusses findings of the data validation performed on analytical data for soil samples collected during August and September 2013 for the referenced project. The laboratory reports validated herein were submitted by Friedman & Bruya, Inc and ALS Environmental Services, Inc. in Houston, Texas.

A level III data validation was performed on this laboratory report. The validation followed the procedures specified in USEPA CLP Functional Guidelines ([NFGs], EPA 2008 – Organics; EPA 2010 – Inorganics), with modifications to accommodate project and analytical method requirements. The numerical quality assurance/quality control (QA/QC) criteria applied to the validation were in accordance with those specified in the quality assurance project plans ([QAPPs], Aspect, 2009) and the current performance-based control limits established by the laboratory (laboratory control limits). Instrument calibration, frequency of QC analyses, and analytical sequence requirements were evaluated against the respective analytical methods.

Validation findings are discussed in each section pertinent to the QC parameter for each type of analysis. Qualified data with applied data qualifiers are summarized in the **Summary** section at the end of this report.

Samples and the associated analyses validated herein are summarized as follows:

				Analysis				
Field Sample ID	**Laboratory Sample ID**	**Sampling Date**	**Sample Type**	**PAHs**	**PCBs**	**Metals**	**TPH-Dx**	**Misc.**
DAST-S01-092713	309515-01	09/27/13	Soil	X	X	X	X	
DAST-S02-092713	309515-02	09/27/13	Soil	X	X	X	X	
DAST-S03-092713	309515-03	09/27/13	Soil	X	X	X	X	
DAST-S04-092713	309515-04	09/27/13	Soil	X	X	X	X	
DAST-S05-092713	309515-05	09/27/13	Soil	X	X	X	X	
DAST-S06-092713	309515-06	09/27/13	Soil	X	X	X	X	
DAST-S07-092713	309515-07	09/27/13	Soil	X	X	X	X	
DAST-S08-092713	309515-08	09/27/13	Soil	X	X	X	X	
DAST-S09-092713	309515-09	09/27/13	Soil	X	X	X	X	
DAST-S10-092713	309515-10	09/27/13	Soil	X	X	X	X	
DAST-B01-092713	309515-11	09/27/13	Soil	X	X	X	X	
DAST-B02-092713	309515-12	09/27/13	Soil	X	X	X	X	
DAST-B03-092713	309515-13	09/27/13	Soil	X	X	X	X	SPLP
DAST-B04-092713	309515-14	09/27/13	Soil	X	X	X	X	
DAST-B05-092713	309515-15	09/27/13	Soil	X	X	X	X	

Field Sample ID	Laboratory Sample ID	Sampling Date	Sample Type	Analysis				
				PAHs	PCBs	Metals	TPH-Dx	Misc.
DAST-B06-092713	309515-16	09/27/13	Soil	X	X	X	X	
DAST-B07-092713	309515-17	09/27/13	Soil	X	X	X	X	SPLP
RCD-S01-1.5-093013	309532-01	09/30/13	Soil	X	X	X	X	
RCD-S01-1.5-093013	309532-01	09/30/13	Soil	X	X	X	X	
RCD-S02-2-093013	309532-02	09/30/13	Soil	X	X	X	X	
RCD-S02-4-093013	309532-03	09/30/13	Soil	X	X	X	X	
RCD-S03-1-093013	309532-04	09/30/13	Soil	X	X	X	X	
RCD-S04-1.5-093013	309532-05	09/30/13	Soil	X	X	X	X	
RCD-S05-2-093013	309532-06	09/30/13	Soil	X	X	X	X	
RCD-S06-1-093013	309532-07	09/30/13	Soil	X	X	X	X	
RCD-B01-3-093013	309532-08	09/30/13	Soil	X	X	X	X	
RCD-B02-4-093013	309532-09	09/30/13	Soil	X	X	X	X	
RCD-B03-2-093013	309532-10	09/30/13	Soil	X	X	X	X	
DAST-B08-092713	309537-01	09/27/13	Soil		X	X		
DAST-B09-092713	309537-02	09/27/13	Soil		X	X		
RCD-B02-6-100413	310092-01	10/04/13	Soil	X	X	X	X	
RCD-S07-1.5-100413	310092-02	10/04/13	Soil	X	X	X	X	
RCD-S08-2-100413	310092-03	10/04/13	Soil	X	X	X	X	
GF11-S01-1.5	310229-01	10/11/13	Soil	X		X		
GF11-S02-1.5	310229-02	10/11/13	Soil	X		X		SPLP
GF11-S03-1.5	310229-03	10/11/13	Soil	X		X		
GF11-S04-1.5	310229-04	10/11/13	Soil	X		X		
GF11-S06-1.5	310229-06	10/11/13	Soil	X		X		
GF11-S07-1.5	310229-07	10/11/13	Soil	X		X		
GF11-B01-3	310229-08	10/11/13	Soil	X		X		
GF11-B02-3	310229-09	10/11/13	Soil	X		X		
GF11-B03-3	310229-10	10/11/13	Soil	X		X		
BBH-S01-1.5-101513	310290-01	10/15/13	Soil	X		X[(A)]		
BBH-S02-1.5-101513	310290-02	10/15/13	Soil			X[(A)]		
BBH-S03-1.5-101513	310290-03	10/15/13	Soil			X[(A)]		
BBH-S04-1.5-101513	310290-04	10/15/13	Soil			X[(A)]		
BBH-S05-1.5-101513	310290-05	10/15/13	Soil			X[(A)]		
BBH-S06-1.5-101513	310290-06	10/15/13	Soil	X		X[(A)]		
BBH-S07-1.5-101513	310290-07	10/15/13	Soil			X[(A)]		

Field Sample ID	Laboratory Sample ID	Sampling Date	Sample Type	Analysis				
				PAHs	PCBs	Metals	TPH-Dx	Misc.
BBH-S08-1.5-101513	310290-08	10/15/13	Soil			X[(A)]		
BBH-S09-1.5-101513	310290-09	10/15/13	Soil			X[(A)]		
BBH-S10-1.5-101513	310290-10	10/15/13	Soil			X[(A)]		
BBH-S11-1.5-101513	310290-11	10/15/13	Soil	X		X[(A)]		
BBH-S12-1.5-101513	310290-12	10/15/13	Soil			X[(A)]		
BBH-S13-1.5-101513	310290-13	10/15/13	Soil			X[(A)]		
BBH-S14-1.5-101513	310290-14	10/15/13	Soil			X[(A)]		
BBH-S15-1.5-101513	310290-15	10/15/13	Soil			X[(A)]		
BBH-S16-1.5-101513	310290-16	10/15/13	Soil	X		X[(A)]		
BBH-S17-1.5-101513	310290-17	10/15/13	Soil			X[(A)]		
BBH-S18-1.5-101513	310290-18	10/15/13	Soil			X[(A)]		
BBH-S19-1.5-101513	310290-19	10/15/13	Soil			X[(A)]		
BBH-S20-1.5-101513	310290-20	10/15/13	Soil			X[(A)]		
BBH-S21-1.5-101513	310290-21	10/15/13	Soil	X		X[(A)]		
BBH-S22-1.5-101513	310290-22	10/15/13	Soil			X[(A)]		
BBH-S23-1.5-101513	310290-23	10/15/13	Soil			X[(A)]		
BBH-S24-1.5-101513	310290-24	10/15/13	Soil			X[(A)]		
BBH-S25-1.5-101513	310290-25	10/15/13	Soil			X[(A)]		
BBH-S26-1.5-101513	310290-26	10/15/13	Soil	X		X[(A)]		
BBH-S27-1.5-101513	310290-27	10/15/13	Soil			X[(A)]		
BBH-S28-1.5-101513	310290-28	10/15/13	Soil			X[(A)]		
BBH-S30-1.5-101513	310290-29	10/15/13	Soil	X		X[(A)]		
BBH-S31-1.5-101513	310290-30	10/15/13	Soil			X[(A)]		
BBH-B01-03-101613	310291-01	10/16/13	Soil	X		X[(A)]		
BBH-B02-02-101613	310291-02	10/16/13	Soil			X[(A)]		
BBH-B03-03-101613	310291-03	10/16/13	Soil			X[(A)]		
BBH-B04-02-101613	310291-04	10/16/13	Soil			X[(A)]		
BBH-B05-02-101613	310291-05	10/16/13	Soil	X		X[(A)]		
BBH-B06-03-101613	310291-06	10/16/13	Soil			X[(A)]		
BBH-B07-03-101613	310291-07	10/16/13	Soil			X[(A)]		
BBH-B08-03-101613	310291-08	10/16/13	Soil	X		X[(A)]		
BBH-B09-03-101613	310291-09	10/16/13	Soil			X[(A)]		
BBH-B10-04-101613	310291-10	10/16/13	Soil			X[(A)]		
BBH-B11-03-101613	310291-11	10/16/13	Soil			X[(A)]		

Field Sample ID	Laboratory Sample ID	Sampling Date	Sample Type	Analysis				
				PAHs	PCBs	Metals	TPH-Dx	Misc.
BBH-B12-03-101613	310291-12	10/16/13	Soil	X		X[(A)]		
BBH-B01-03-101613	E1301382-001	10/16/13	Soil					Dioxins
BBH-B04-02-101613	E1301382-002	10/16/13	Soil					Dioxins
BBH-B08-03-101613	E1301382-003	10/16/13	Soil					Dioxins
BBH-B12-03-101613	E1301382-004	10/16/13	Soil					Dioxins

Notes:

Laboratory sample ID prefixed with "E" was a laboratory identity assigned by ALS in Houston, Texas

[(A)] - Antimony, arsenic, cadmium, chromium, copper, mercury, nickel, and zinc

Dioxins - Polychlorinated dioxins and furans

Metals - Arsenic, cadmium, copper, lead, mercury, nickel, and zinc, unless otherwise noted.

Misc. - Miscellaneous

PAHs - Polycyclic aromatic hydrocarbons

PCB - Polychlorinated biphenyl

SPLP - Synthetic precipitation leaching procedure; leachate analyzed for copper, lead, and/or zinc

TPH-Dx - Diesel and motor oil range total petroleum hydrocarbon

TPH-G - Gasoline range total petroleum hydrocarbon

X - The analysis was requested and performed on the sample.

The analytical parameters requested for the samples, the respective analytical methods, and the analytical laboratories are summarized below:

Parameter	Analytical Method	Analytical Laboratory
Polycyclic Aromatic Hydrocarbons (PAHs)	SW846 Method 8270D-SIM	Friedman & Bruya, Inc. (F&BI) Seattle, WA
PCB Aroclors	SW846 Method 8082A	
TPH - Gasoline Range	NWTPH-Gx	
TPH - Diesel & Motor Oil Range	NWTPH-Dx	
Total Metals	EPA Method 200.8	
Mercury	EPA Method 1631E	
Synthetic Precipitation Leaching Procedure	SW846 Method 1312	
Polychlorinated dioxins and Furans	SW846 Method 8290A	ALS Environmental Services, Inc. Houston, Texas

Notes:

1. SW846 - *USEPA Test Methods for Evaluating Solid Waste, Physical/Chemical Methods,* SW-846, Third Edition, December 1996.
2. EPA Methods - *USEPA Methods for Chemical Analysis of Water and Wastes,* EPA–600/4-79-020, March 1983 Revision.
3. EPA Method 1631E - *Mercury in Water by Oxidation, Purge and Trap, and Cold Vapor Atomic Fluorescence Spectrometry,* Office of Water, U.S. Environmental Protection Agency, August 2002, EPA-821-R-02-019.
4. NWTPH Methods – *Washington State Department of Ecology, Analytical Methods for Petroleum Hydrocarbons*, Publication No. ECY 97-602, June 1997.

DATA VALIDATION FINDINGS

1. PAHs by GC/MS - SIM (EPA Method SW8270D-SIM)

1.1 Sample Management and Holding Times

No anomalies were identified in relation to sample preservation, handling, and transport as discussed in Section 1.1.

Soil samples should be extracted within 14 days and water within seven days of collection. Extracts should be analyzed within 40 days of extraction. All samples were extracted and analyzed within the required holding times.

1.2 GC/MS Instrument Performance Check

DFTPP tuning was performed within each 12-hour interval. All required ion abundance ratios met the method requirements.

1.3 Initial Calibration (ICAL)

The ICAL criteria require that (1) if linear average RFs is chosen as the quantitation option, at least five standards at different concentrations should be analyzed and the %RSD of RFs be ≤20% for the analyte, (2) if least-square linear regression is chosen for quantitation, the correlation coefficient (r) be >0.995, and (3) if six-point non-linear (quadratic) curve is chosen for quantitation, the coefficient of determination (r^2) be >0.99. All ICALs met the requirements.

An ICV standard (second source standard) was analyzed to verify the calibration curve. %D values were either within ±20%, or the exceedance had no adverse effects on data usability (*e.g.,* biased high ICV recovery for a compound not detected in samples).

1.4 Calibration Verification (CCV)

The analytical method requires that (1) continuing calibration verifications be analyzed at the beginning of each 12-hour analysis period prior to the analysis of method blank and samples, and (2) the %D be within ±20%.

1.5 Method Blanks

Method blanks were prepared and analyzed as required. Target compounds were not detected at or above the RLs in the method blanks.

1.6 Surrogate Spikes

Surrogate spikes were added to all samples as required by the method. All surrogate spike %R values were either within the project control limits or at levels that had no adverse effects on data quality (*e.g.,* biased-high recovery for compounds that were not detected in samples). In some cases surrogate spike %R values were not applicable for data evaluation because the samples contained high levels of target PAHs and required dilution analysis; no data were qualified in these cases.

1.7 Matrix Spike (MS) and MS Duplicate (MSD)

MS and MSD analyses were performed on project and batch QC samples at the proper frequency (≥5% of samples analyzed). All %R and RPD values met the project control criteria, except for the following:

SDG#	Parent Sample ID	Analyte	MS %R	MSD %R	Control Limit	RPD	Data Qualifier
309532	RCD-S01-1.5-093013	Benzo(b)fluoranthene Fluoranthene	88% 79%	115% 102%	50-125% 31-144%	25% 27%	J

Note: RPD control criterion = ±20%

1.8 Laboratory Control Sample (LCS) and LCS Duplicate (LCSD)

LCS and LCSD analyses were performed as required by the method. All %R and RPD values were within the project control limits.

1.9 Internal Standards

The method requires that (1) internal standard retention time be within ±30 seconds from that of the associated 12-hour calibration standard, and (2) the area counts of all internal standards be within –50% to +100% of the associated 12-hour calibration standard. All internal standards in the sample and associated QC analyses met the criteria.

1.10 Reporting Limits and Target Compound Quantitation

Sample-specific RLs were supported with adequate initial calibration concentrations. In some cases samples required dilution for definitive quantitation of target compounds; the RLs were raised accordingly. Results for remaining (un-diluted) target compounds were to be reported from the initial analysis in favor of the lower detection limits.

1.11 Field Duplicates

Field duplicates were not submitted for polychlorinated dioxins and furans analyses in these SDGs.

1.12 Overall Assessment of PAHs Data Usability

PAHs data are of known quality and acceptable for use, as qualified.

2. PCB Aroclors (EPA Method SW8082A)

2.1 Sample Management and Holding Times

No anomalies were identified in relation to sample preservation, handling, and transport as discussed in Section 1.1.

Soil samples should be extracted within 14 days of collection and extracts analyzed within 40 days of extraction. All samples were extracted and analyzed within the required holding times.

2.2 Initial Calibration

The method requires that (1) a minimum of 5-point calibration be performed using the mixture of Aroclor 1016 and 1260, (2) a single-point calibration be performed for the other five Aroclors to establish calibration factors (CFs) and for Aroclor pattern recognition, (3) at least 3 peaks (preferably 5 peaks) must be chosen for each Aroclor for characterization, (4) the %RSD values of Aroclor 1016 and 1260 CFs must be ≤20%, and (5) if dual column analysis is chosen, both columns should meet the requirements. All ICALs met the requirements.

2.3 Calibration Verification

CCV analyses should be performed for each 12-hour analysis sequence prior to sample analyses, and the %D be within ±20%.

Calibration verifications were performed at the required frequency. All %D values either met the control criteria or biased high for target compounds that were not detected in the associated samples.

2.4 Method Blanks

Method blanks were prepared and analyzed as required. PCB Aroclors were not detected at or above the MDLs in the method blanks.

2.5 Surrogate Spikes

Surrogate spikes were added to all samples as required by the method. All surrogate spike %R values were within the laboratory control limits.

2.6 Matrix Spike and Matrix Spike Duplicate (MS/MSD)

MS/MSD analyses were performed on project samples or batch QC samples at the required frequency. All %R and RPD values were within the laboratory control limits.

2.7 Laboratory Control Sample (LCS) and LCS Duplicate (LCSD)

LCS and LCSD analyses were performed as required by the method. All %R and RPD values were within the project control limits.

2.8 Method Reporting Limits and Target Compound Quantitation

Sample-specific RLs were supported with adequate initial calibration concentrations and achieved the project target quantitation limits.

2.9 Field Duplicates

One set of field duplicates were submitted for PAHs analyses. Field duplicate results for detected target compounds, RPD (or concentration difference) values, and data qualification were presented in **Appendix A**.

2.10 Overall Assessment of PCB Aroclors Data Usability

PCB Aroclor data are of known quality and acceptable for use.

3. TPH-Diesel & Motor Oil by GC/FID (Method NWTPH-Dx)

3.1 Holding Time

No anomalies were identified in relation to sample preservation, handling, and transport as discussed in Section 1.1.

Soil samples should be extracted within 14 days and water should be extracted within seven days of collection. Extracts should be analyzed within 40 days of extraction. All samples were extracted and analyzed within the recommended holding times.

3.2 Initial Calibration

The method criteria require that (1) if linear average RFs is chosen as the quantitation option, the %RSD of RFs be ≤20% for the analyte, (2) if least-square linear regression is chosen for quantitation, the correlation coefficient (r) be ≥0.995, (3) if six-point non-linear (quadratic) curve is chosen for quantitation, the coefficient of determination (r^2) be ≥0.990, and (4) the back-calculated %D value for each calibration standard be within ±15%. Initial calibration met the criteria for all target compounds.

An ICV (second source) standard was analyzed to verify the calibration curve. %D values were within ±20%.

3.3 Calibration Verification

The method requires that (1) a mid-range check standard be analyzed prior to and after each analytical batch, and (2) the percent drift (%D) value be within ±20% of the true value.

Calibration verification was performed at required frequency. The %D values were either within the ±20% criterion or at levels that had no adverse effects on data quality (e.g., high-bias %D value where the target compound was not detected in associated sample).

3.4 Method Blanks

Method blanks were prepared and analyzed as required. Target compounds were not detected at or above the RLs in the method blanks.

3.5 Surrogate Spikes

Surrogate spikes were added to all samples as required by the method. All surrogate spike %R values were within the project control limits, outside the control limits due to matrix interference, or diluted below quantitation limits due to high petroleum hydrocarbon concentrations. No data qualifying actions were taken in these cases.

3.6 Matrix Spike (MS) and MS Duplicate (MSD)

MS and MSD analyses were performed on project and batch QC samples at the proper frequency. The %R and RPD values met the laboratory control criteria.

3.7 Laboratory Control Sample (LCS)

LCS analyses were performed as required. All %R values met the project control limits.

3.8 Target Compound Identification

Selected sample extracts were cleaned up with acid and silica gel treatment to minimize the biogenic interference with target compound identification, as required by the project. The laboratory reported results as diesel #2 (C10 - C25) and motor oil (C25 - C36), as required by the method.

3.9 Reporting Limits and Target Compound Quantitation

The reported RLs were supported with adequate ICAL concentrations.

3.10 Field Duplicates

Field duplicates were not submitted for polychlorinated dioxins and furans analyses in these SDGs.

3.11 Overall Assessment of TPH-Diesel and Motor Oil Data Usability

TPH-Diesel and TPH-Motor Oil data are of known quality and acceptable for use, as qualified.

4. Total & SPLP Metals by ICP/MS and CVAFS (EPA Methods 200.8 and 1631E)

4.1 Sample Management and Holding Times

No anomalies were identified in relation to sample preservation, handling, and transport, as discussed in Section 1.1.

Soil and water samples should be analyzed within 180 days for metals and 28 days for mercury. Samples were analyzed within the required holding times.

4.2 ICP/MS Tuning

Instrument tuning was performed at the required frequency. The stability check (%RSD <5%), mass calibration (mass difference <0.1 AMU), and resolution check (peak width <1.0 AMU at 5% peak height) met the NFG and method criteria.

4.3 Initial Calibration (ICAL)

The ICP/MS method requires that (1) a blank and one calibration standard be used in establishing the analytical curve, and (2) the average of replicate exposures be reported for all standards, QC, and sample analyses.

The CVAFS method require that (1) a blank and five calibration standards be employed to establish the analytical curve, (2) the linearity of the calibration curve should meet the criteria of correlation coefficient ≥ 0.995 for linear regression, and (3) the %RSD <15% if average response factor approach is employed.

All ICALs met the method requirements.

4.4 Calibration Verification (ICV and CCV)

Initial calibration verifications (ICVs) and continuing calibration verifications (CCVs) for ICP/MS and GFAA and ongoing precision recovery (OPR) were analyzed at the required frequency. The %R values either met the control criteria (90 – 110% for metals, 76 – 123% for mercury) or the exceedance had no adverse effects on data usability (e.g., high-bias %D value where the target compound was not detected in associated sample).

4.5 Blanks

Calibration Blanks: Initial calibration blanks (ICBs) and continuing calibration blanks (CCBs) were not analyzed after calibration verification standards. Target analytes were either not detected at or above the RLs in the ICBs and CCBs, or sample results affected by the ICB/CCB detections were qualified as results of detections in preparation blanks.

Preparation Blanks: Preparation blanks were prepared and analyzed as required. Target analytes were either not detected at or above the RLs in the preparation blanks, or sample results were greater than 10X the detection in the associated blank.

4.6 Laboratory Control Sample (LCS)

LCS analyses were performed as required by the method. All %R values were within the project control limits, or the exceedance had no adverse effects on data usability (e.g., high-bias %R value where the target compound was not detected in associated sample).

4.7 Matrix Spike (MS) and Matrix Spike Duplicate (MSD)

MS and MSD analyses were performed on project and batch QC samples at the adequate frequency (>5% of field sample). The %R and RPD values either met the laboratory control limits or the outliers were not applicable for matrix effect evaluation (e.g. sample concentration >4x spiking level), except for the following:

SDG#	Parent Sample ID	Analyte	MS %R	MSD %R	Control Limit	RPD	Affected Sample	Data Qualifier
309515	DAST-S01-092713	Zinc	128%	100%	55-129%	25%	All samples in this SDG	**J**
310229	GF11-S01-1.5	Copper Zinc	108% 140%	167% 269%	57-120% 59-148%	43% 63%	All samples in this SDG	**J**
310229	GF11-S02-1.5	SPLP/Lead	342%	28%	50-150%	170%	GF11-S02-1.5	**J**
310290	BBH-S01-1.5-101513 BBH-S21-1.5-101513	Zinc	135% 114%	105% 63%	55-129%	25% 58%	All samples in this SDG	**J**
310290	BBH-S01-1.5-101513	Mercury	72%	90%	62-140%	22%	BBH-S01-1.5-101513 BBH-S02-1.5-101513 BBH-S03-1.5-101513 BBH-S04-1.5-101513 BBH-S05-1.5-101513 BBH-S06-1.5-101513 BBH-S07-1.5-101513 BBH-S08-1.5-101513 BBH-S09-1.5-101513 BBH-S10-1.5-101513 BBH-S11-1.5-101513 BBH-S12-1.5-101513 BBH-S13-1.5-101513 BBH-S14-1.5-101513 BBH-S15-1.5-101513 BBH-S17-1.5-101513 BBH-S18-1.5-101513 BBH-S19-1.5-101513 BBH-S20-1.5-101513	**J**
310290	BBH-S21-1.5-101513	Antimony	88%	112%	54-116%	24%	BBH-S21-1.5-101513 BBH-S22-1.5-101513 BBH-S31-1.5-101513	**J**
310291	BBH-B12-03-101613	Mercury	95%	134%	62-140%	34%	BBH-B05-02-101613 BBH-B06-03-101613 BBH-B08-03-101613 BBH-B09-03-101613	**J**
310291	BBH-B12-03-101613	Nickel	91%	198%	69-112%	74%	BBH-B01-03-101613 BBH-B02-02-101613 BBH-B03-03-101613 BBH-B04-02-101613 BBH-B05-02-101613 BBH-B06-03-101613 BBH-B07-03-101613 BBH-B08-03-101613 BBH-B09-03-101613 BBH-B10-04-101613 BBH-B11-03-101613 BBH-B12-03-101613	**J**

Note: RPD control criterion = ±20%

4.8 Internal Standards

At least three internal standards were added to all field and QC samples for ICP/MS analyses. All percent relative intensity values were within the method criteria (60 - 125%).

4.9 Method Reporting Limits and Analyte Quantitation

Sample-specific RLs were supported with adequate initial calibration concentrations.

4.10 Field Duplicates

One set of field duplicates were submitted for PAHs analyses. Field duplicate results for detected target compounds, RPD (or concentration difference) values, and data qualification were presented in **Appendix A**.

4.11 Overall Assessment of Metals Data Usability

Metal data are of known quality and acceptable for use, as qualified.

5. Polychlorinated Dioxins/Furans by HRGC/HRMS (EPA Method SW8290)

5.1 Sample Management and Holding Times

No anomalies were identified in relation to sample preservation, handling, and transport, as discussed in Section 1.1.

EPA SW846 Method 8290 recommends a holding time of 30 days for solid samples stored in the dark at 4°C and completely analyzed within 45 days of extraction. All samples were extracted and analyzed within the recommended holding times.

5.2 HRGC/HRMS Instrument Performance Check

The method requires that (1) for mass calibration and resolution, the laboratory must provides evidence of mass spectrometer resolution > 10,000 at the beginning and end of each 12-hour analytical sequence. If mass calibration and resolution tuning are not correctly performed, interferences may degrade chlorinated dibenzo-*p*-dioxin and chlorinated dibenzofuran (CDD/CDF) identification and quantitation; (2) the mass spectrometer selected ion monitoring (SIM) scan descriptor switching times are determined by the analysis of the Window Defining Mixture (WDM) which contains the first and last eluting isomers in each homologue; and (3) chromatographic resolution is verified by analyzing one of two Isomer Specificity Check (ISC) solutions, depending on

the Gas Chromatograph (GC) column used for analysis. All HRGC/HRMS instrument performance checks met the criteria.

5.3 Initial Calibration (ICAL)

The method requires that (1) the chromatographic peak separation between the 2,3,7,8-TCDD peak and the 1,2,3,8-TCDD peak and between the 2,3,7,8-TCDF peak and the 2,3,4,7-TCDF peak and must be resolved with a valley of < 25%; (2) the ion abundance ratio be within a ± 15% window around the theoretical abundance ratio; (3) the retention times (RTs) of the isomers must fall within the appropriate RT windows established by the WDM analysis. In addition, the absolute RT of the internal standard $^{13}C_{12}$-1,2,3,4-TCDD must exceed 25 minutes on the DB-5 (or equivalent) column and 15 minutes on the DB-225 (or equivalent) column; (4) the instrument sensitivity (signal-to-noise [S/N] ratio) must be >10:1; (5) the percent relative standard deviation (%RSD) be <20% for native isomers and < 30% for labeled isomers; (6) all initial calibration standards (CSs) must be analyzed at the correct concentration levels; (7) initial calibrations must be performed when the contract is awarded, whenever significant instrument maintenance is performed (e.g., ion source cleaning, GC column replacement, etc.), or if calibration verification criteria are not met. All ICALs met the method requirements.

5.4 Calibration Verification

The method requires that (1) continuing calibrations be analyzed at the beginning of each 12-hour analysis period prior to the analysis of method blank and samples, (2) the percent difference (%D) be within ±20% for native isomers and be within ±30% for labeled isomers, and (3) the ion abundance ratio, retention times, relative retention times, instrument sensitivity meet the criteria for initial calibrations. All calibration verification analyses met the criteria.

5.5 Method Blanks

Method blanks were prepared and analyzed as required for each preparation batch. Selected target compounds were detected in method blanks. Sample results less than 5x the level found in the associated method blank were qualified (U) as non-detects at the reported values. Qualified data were summarized in **SUAMMRY** section at the end of this report.

5.6 Laboratory Control Samples (LCS)

LCS analyses were performed as required by the method. The recovery met the method control limits for all target and labeled compounds.

5.7 Matrix Spike and Matrix Spike Duplicate (MS/MSD)

MS and MSD analyses were not performed on a project sample in this SDG.

5.8 Labeled Compounds

Nine labeled internal standards and one cleanup recovery standard were added to all samples as required by the method. All %R values for internal standards and cleanup standard met the method requirement.

5.9 Target Compound Identification

All detected target congeners were properly identified. The ion ratios for a number of detection did not meet the method criteria; these results were qualified as non-detected at their reported values, as summarized in **SUMMARY, Table I.**

5.10 Reporting Limits, Estimated Detection Limits (EDLs), and Compound Quantitation

Correct internal standards, quantitation ions, and average RFs were used to quantitate target compound detections. The RLs were supported with adequate ICAL calibration concentrations. Sample-specific EDLs and RLs were adjusted with sample weights, internal standard peak height, and noise levels as required by the method.

Selected target congeners in a number of samples had chlorodiphenyl ether interference present in their retention time region. The affected results were qualified (J) as estimated.

5.11 Second Column Confirmation

All positive detection of 2,3,7,8-TCDF were re-analyzed on the DB-225 column for confirmation and results reported from the second column (DB-225) should be used for data interpretation.

5.12 Field Duplicates

Field duplicates were not submitted for polychlorinated dioxins and furans analyses in these SDGs.

5.13 Overall Assessment of Polychlorinated Dioxins/Furans Data Usability

Polychlorinated dioxins and furans data were of known quality and acceptable for use as qualified.

SUMMARY

Table I. Data Affected by QC Anomalies:

Laboratory ID	Sample ID	Analyte	Qualifier	Qualified Reason
310290-01	BBH-S01-1.5-101513	Mercury	J	MS/MSD RPD value >20%
310290-02	BBH-S02-1.5-101513			
310290-03	BBH-S03-1.5-101513			
310290-04	BBH-S04-1.5-101513			
310290-05	BBH-S05-1.5-101513			
310290-06	BBH-S06-1.5-101513			
310290-07	BBH-S07-1.5-101513			
310290-08	BBH-S08-1.5-101513			
310290-09	BBH-S09-1.5-101513			
310290-10	BBH-S10-1.5-101513			
310290-11	BBH-S11-1.5-101513			
310290-12	BBH-S12-1.5-101513			
310290-13	BBH-S13-1.5-101513			
310290-14	BBH-S14-1.5-101513			
310290-15	BBH-S15-1.5-101513			
310290-17	BBH-S17-1.5-101513			
310290-18	BBH-S18-1.5-101513			
310290-19	BBH-S19-1.5-101513			
310290-20	BBH-S20-1.5-101513			
310291-05	BBH-B05-02-101613			
310291-06	BBH-B06-03-101613			
310291-08	BBH-B08-03-101613			
310291-09	BBH-B09-03-101613			
309537-01	DAST-B08-092713	Arsenic	J	Field duplicate RPD >35%
309537-02	DAST-B09-092713			
310229-01	GF11-S01-1.5	Copper Zinc	J	MS/MSD %R and RPD value outside control criteria
310229-02	GF11-S02-1.5			
310229-03	GF11-S03-1.5			
310229-04	GF11-S04-1.5			
310229-05	GF11-S05-1.5			
310229-06	GF11-S06-1.5			
310229-07	GF11-S07-1.5			
310229-08	GF11-B01-3			
310229-09	GF11-B02-3			
310229-10	GF11-B03-3			
310290-21	BBH-S21-1.5-101513	Antimony	J	MS/MSD RPD value >20%
310290-22	BBH-S22-1.5-101513			
310290-30	BBH-S31-1.5-101513			

Laboratory ID	Sample ID	Analyte	Qualifier	Qualified Reason
310290-01	BBH-S01-1.5-101513	Zinc	J	MS and/or MSD %R and MS/MSD RPD values outside control criteria
310290-02	BBH-S02-1.5-101513			
310290-03	BBH-S03-1.5-101513			
310290-04	BBH-S04-1.5-101513			
310290-05	BBH-S05-1.5-101513			
310290-06	BBH-S06-1.5-101513			
310290-07	BBH-S07-1.5-101513			
310290-08	BBH-S08-1.5-101513			
310290-09	BBH-S09-1.5-101513			
310290-10	BBH-S10-1.5-101513			
310290-11	BBH-S11-1.5-101513			
310290-12	BBH-S12-1.5-101513			
310290-13	BBH-S13-1.5-101513			
310290-14	BBH-S14-1.5-101513			
310290-15	BBH-S15-1.5-101513			
310290-17	BBH-S17-1.5-101513			
310290-18	BBH-S18-1.5-101513			
310290-19	BBH-S19-1.5-101513			
310290-20	BBH-S20-1.5-101513			
310290-21	BBH-S21-1.5-101513			
310290-22	BBH-S22-1.5-101513			
310290-23	BBH-S23-1.5-101513			
310290-27	BBH-S27-1.5-101513			
310290-28	BBH-S28-1.5-101513			
310290-29	BBH-S30-1.5-101513			
310290-30	BBH-S31-1.5-101513			
309515-01	DAST-S01-092713	Zinc	J	MS/MSD RPD value >20%
309515-02	DAST-S02-092713			
309515-03	DAST-S03-092713			
309515-04	DAST-S04-092713			
309515-05	DAST-S05-092713			
309515-06	DAST-S06-092713			
309515-07	DAST-S07-092713			
309515-08	DAST-S08-092713			
309515-09	DAST-S09-092713			
309515-10	DAST-S10-092713			
309515-11	DAST-B01-092713			
309515-12	DAST-B02-092713			
309515-13	DAST-B03-092713			
309515-14	DAST-B04-092713			
309515-15	DAST-B05-092713			
309515-16	DAST-B06-092713			
309515-17	DAST-B07-092713			

Laboratory ID	Sample ID	Analyte	Qualifier	Qualified Reason
310291-01 310291-02 310291-03 310291-04 310291-05 310291-06 310291-07 310291-08 310291-09 310291-10 310291-11 310291-12	BBH-B01-03-101613 BBH-B02-02-101613 BBH-B03-03-101613 BBH-B04-02-101613 BBH-B05-02-101613 BBH-B06-03-101613 BBH-B07-03-101613 BBH-B08-03-101613 BBH-B09-03-101613 BBH-B10-04-101613 BBH-B11-03-101613 BBH-B12-03-101613	Nickel	**J**	MSD %R and RPD values outside control criteria
310229-02	GF11-S02-1.5	SPLP/Lead	**J**	MS/MSD %R and RPD value outside control criteria
309532-01	RCD-S01-1.5-093013	Benzo(b)fluoranthene Fluoranthene	**J**	MS/MSD RPD value >20%
E1301382-002	BBH-B04-02-101613	1,2,3,4,6,7,8-HpCDF	**U**	Concentration <5x the detection in MB
E1301382-002	BBH-B04-02-101613	Total HpCDF	**U**	Concentration <5x the detection in MB
E1301382-003	BBH-B08-03-101613	1,2,3,4,7,8-HxCDF 1,2,3,7,8-PeCDF 2,3,4,6,7,8-HxCDF	**J**	Interference of chlorobiphenyl ether was present
E1301382-001	BBH-B01-03-101613	1,2,3,4,7,8-HxCDD 1,2,3,7,8-PeCDD 2,3,4,6,7,8-HxCDF	**U**	Ion abundance ratio did not meet method requirement
E1301382-002	BBH-B04-02-101613	1,2,3,4,7,8-HxCDF 1,2,3,6,7,8-HxCDF 1,2,3,7,8-PeCDF 2,3,4,6,7,8-HxCDF	**U**	Ion abundance ratio did not meet method requirement
E1301382-003	BBH-B08-03-101613	2,3,4,6,7,8-HxCDF	**U**	Ion abundance ratio did not meet method requirement
E1301382-004	BBH-B12-03-101613	1,2,3,4,7,8-HxCDD 1,2,3,6,7,8-HxCDD 1,2,3,6,7,8-HxCDF 1,2,3,7,8-PeCDD 2,3,4,7,8-PeCDF	**U**	Ion abundance ratio did not meet method requirement

Table II. Data Qualifiers are defined as follows:

Data Qualifier	Definition
J	The analyte was detected above the reported quantitation limit, and the reported concentration was an estimated value.
U	The analyte was analyzed for, but was considered not detected at the reporting limit or reported value.
UJ	The analyte was analyzed for, and the associated quantitation limit was an estimated value.

Approved By:  Date: ***6/23/2014***

Mingta Lin, Senior Project Chemist

REFERENCES

USEPA *Contract Laboratory Program National Functional Guidelines for Inorganic Superfund Data Review,* Office of Superfund Remediation and Technical Innovation, U.S. Environmental Protection Agency, January 2010, USEPA 540/R-10/011

USEPA *Contract Laboratory Program National Functional Guidelines for Superfund Organic Methods Data Review,* Office of Superfund Remediation and Technical Innovation, U.S. Environmental Protection Agency, June 2008, USEPA-540-R-08-01.

USEPA *Method 1631, Revision E: Mercury in Water by Oxidation, Purge and Trap, and Cold Vapor Atomic Fluorescence Spectrometry, Office of Water, U.S. Environmental Protection Agency, August 2002, EPA-821-R-02-019.*

USEPA *Test Methods for Evaluating Solid Waste (SW-846). Third Edition and Revised Update IIIA.* Office of Solid Waste and Emergency Response, Washington, D.C. April 1998.

USEPA *Methods for Chemical Analysis of Water and Wastes,* EPA-600/4-79-020, March 1983 and updates.

Standard Methods for the Examination of Water and Wastewater, American Public Health Association, 20th Edition, 1995.

Ecology (Washington State Department of). 1997. *Analytical Methods for Petroleum Hydrocarbons.* Publication No. ECY 97-602. June 1997.

PSEP *Recommended Guidelines for Measuring Organic Compounds in Puget Sound Water, Sediment and Tissue Samples,* Puget Sound Water Quality Authority, April 1997.

Appendix A

Field duplicate RPD is indicative of field and laboratory precision and sample homogeneity in combination. The CLP National Functional Guidelines or *Work Plan* do not specify criteria for field duplicate evaluation. An advisory criterion of 35% was applied to evaluating the RPD values of field duplicate results that are ≥5xRL. For results that are <5xRL, an advisory criterion of ±2RL was applied to evaluating the concentration differences. The RPD (or concentration difference as applicable) values and data qualification for detected compounds in field duplicates are presented as follows:

Analyte	Units	RL	Parent & Field Duplicate Sample Result		RPD	Delta	Data Qualifier
			DAST-B08-092713	DAST-B09-092713			
Mercury	mg/kg	0.1	ND	0.1		0.1	
Lead	mg/kg	1	28.1	39.1	28%		
Nickel	mg/kg	1	21.4	21.5	0%		
Arsenic	mg/kg	1	8.49	13.7	38%		**J/J**
Cadmium	mg/kg	1	2.05	2.19		0.14	
Copper	mg/kg	1	55.7	64.4	14%		
Zinc	mg/kg	5	91	110	17%		
Aroclor 1260	mg/kg	0.1	0.31	0.34		0.03	
Aroclor 1254	mg/kg	0.1	0.29	0.4		0.11	
Aroclor 1221	mg/kg	0.1	ND	ND		0	
Aroclor 1232	mg/kg	0.1	ND	ND		0	
Aroclor 1248	mg/kg	0.1	ND	ND		0	
Aroclor 1016	mg/kg	0.1	ND	ND		0	
Aroclor 1242	mg/kg	0.1	ND	ND		0	

Notes:
Delta – Concentration difference between the parent sample and its field duplicate
mg/kg – milligram per kilogram
ND – The analyte was not detected at or above the RL.
RL – Reporting limit
RPD – Relative percent difference

Data Validation Report

Kimberly-Clark Everett, Washington Site
Upland Area Interim Action Soil Sampling
Batch #3 Soil Samples

Prepared for:

Aspect Consulting LLC
401 Second Ave South, Suite 201
Seattle, WA 98014

Prepared by:

Pyron Environmental, Inc.
3530 32nd Way, NW
Olympia, WA 98502

ACRONYMS

%D	percent difference
%D_f	percent drift
%R	percent recovery
%RSD	percent relative standard deviation
AMU	atomic mass unit
CCB	continuing calibration blank
CCC	calibration check compound
CCV	continuing calibration verification
CF	calibration factor
CLP	U.S. EPA Contract Laboratory Program
COC	chain-of-custody
CVAFS	cold vapor atomic fluorescent spectrometry
DFTPP	decafluorotriphenylphosphine
ECD	electron capture detector
EPA	U.S. Environmental Protection Agency
FID	Flame ionization detector
GC/MS	gas chromatograph/mass spectrometer
ICAL	initial calibration
ICB	initial calibration blank
ICP/MS	inductively coupled plasma/ mass spectrometer
ICV	initial calibration verification
LCS	laboratory control sample
LCSD	laboratory control sample duplicate
MDL	method detection limit
µg/kg	microgram per kilogram
mg/kg	milligram per kilogram
MS	matrix spike
MSD	matrix spike duplicate
NFGs	CLP National Functional Guidelines for Data Review (EPA 2008 – Organics; EPA 2010 – Inorganics)
OPR	ongoing precision and recovery
PCBs	polychlorinated biphenyls
QA/QC	quality assurance/quality control
RF	response factor

RL	reporting limit
RPD	relative percent difference
RRT	relative retention time
SDG	sample delivery group
SIM	selective ion monitoring
SVOCs	semi-volatile organic compounds
VOCs	volatile organic compounds

INTRODUCTION

This report presents and discusses findings of the data validation performed on analytical data for soil samples collected during October and November 2013 for the referenced project. The laboratory reports validated herein were submitted by Friedman & Bruya, Inc.

A level III data validation was performed on this laboratory report. The validation followed the procedures specified in USEPA CLP Functional Guidelines ([NFGs], EPA 2008 – Organics; EPA 2010 – Inorganics), with modifications to accommodate project and analytical method requirements. The numerical quality assurance/quality control (QA/QC) criteria applied to the validation were in accordance with those specified in the quality assurance project plans ([QAPPs], Aspect, 2009) and the current performance-based control limits established by the laboratory (laboratory control limits). Instrument calibration, frequency of QC analyses, and analytical sequence requirements were evaluated against the respective analytical methods.

Validation findings are discussed in each section pertinent to the QC parameter for each type of analysis. Qualified data with applied data qualifiers are summarized in the **Summary** section at the end of this report.

Samples and the associated analyses validated herein are summarized as follows:

Field Sample ID	Laboratory Sample ID	Sampling Date	Sample Type	Analysis					
				VOC	PAHs	PCBs	Metals	TPH-Gx	TPH-Dx
RCD-S09-2	310226-01	10/11/13	Soil		X	X	X		X
DAST-B10-4	310227-01	10/11/13	Soil		X	X	X		X
DAST-S11-2	310227-02	10/11/13	Soil		X	X	X		X
BAST-B01-3.5	310228-01	10/10/13	Soil		X				X
BAST-S01-2	310228-02	10/10/13	Soil		X				X
BAST-S02-2	310228-03	10/10/13	Soil		X				X
BAST-B002-04-101713	310361-01	10/17/13	Soil		X				X
BAST-B003-05-101713	310361-02	10/17/13	Soil		X				X
BAST-B004-05-101713	310361-03	10/17/13	Soil		X				X
BAST-B005-06-101713	310361-04	10/17/13	Soil		X				X
BAST-B006-06-101713	310361-05	10/17/13	Soil		X		X[(A)]		X
BAST-B011-04-101713	310361-06	10/17/13	Soil		X				X
BAST-B012-04-101713	310361-07	10/17/13	Soil		X				X
BAST-B013-04-101713	310361-08	10/17/13	Soil		X				X
BAST-B014-04-101713	310361-09	10/17/13	Soil		X				X
BAST-B031-04-101713	310361-10	10/17/13	Soil		X				X

Field Sample ID	Laboratory Sample ID	Sampling Date	Sample Type	Analysis					
				VOC	PAHs	PCBs	Metals	TPH-Gx	TPH-Dx
BAST-B021-04-101713	310361-11	10/17/13	Soil		X				X
BAST-B041-3.5-101713	310361-12	10/17/13	Soil		X				X
BAST-B007-05-101713	310361-13	10/17/13	Soil		X				X
BAST-B008-06-101713	310361-14	10/17/13	Soil		X				X
BAST-B009-05-101713	310361-15	10/17/13	Soil		X		X(A)		X
BAST-B009-05-101713	310361-15	10/17/13	Soil		X				X
BAST-B015-05-101713	310361-16	10/17/13	Soil		X				X
BAST-B016-05-101713	310361-17	10/17/13	Soil		X				X
BAST-B017-05-101713	310361-18	10/17/13	Soil		X				X
BAST-B018-05-101713	310361-19	10/17/13	Soil		X				X
BAST-B024-05-101713	310361-20	10/17/13	Soil		X		X(A)		X
BAST-B30-3.5	310361-21	10/17/13	Soil		X				X
BAST-S03-3.5	310361-22	10/17/13	Soil		X				X
BAST-S04-3.5	310361-23	10/17/13	Soil		X				X
BAST-S05-3.5	310361-24	10/17/13	Soil		X				X
BAST-S06-3.5	310361-25	10/17/13	Soil		X		X(A)		X
BAST-S07-3.5	310361-26	10/17/13	Soil		X				X
BAST-B500-3.5	310361-27	10/17/13	Soil		X				X
BAST-S08-3.5	310387-01	10/18/13	Soil		X				X
BAST-S09-3.5	310387-02	10/18/13	Soil		X				X
BAST-B042-06	310387-03	10/18/13	Soil		X				X
BAST-S25-03	310387-04	10/18/13	Soil		X				X
BAST-S16-03	310387-05	10/18/13	Soil		X		X(A)		X
BAST-B010-05	310387-06	10/18/13	Soil		X				X
BAST-B023-04	310387-07	10/18/13	Soil		X				X
BAST-B501-04	310387-08	10/18/13	Soil		X				X
BAST-B036-7.0	310406-01	10/21/13	Soil		X				X
BAST-502-3.2	310406-02	10/21/13	Soil		X				X
BAST-S010-3.5	310406-03	10/21/13	Soil		X		X		X
BAST-S011-3.0	310406-04	10/21/13	Soil		X				X
BAST-S012-3.0	310406-05	10/21/13	Soil		X				X
BAST-S013-3.0	310406-06	10/21/13	Soil		X				X
BAST-S014-3.0	310406-07	10/21/13	Soil		X				X
BAST-S015-3.0	310406-08	10/21/13	Soil		X		X		X

Field Sample ID	Laboratory Sample ID	Sampling Date	Sample Type	Analysis					
				VOC	PAHs	PCBs	Metals	TPH-Gx	TPH-Dx
BAST-B039-3.0	310406-09	10/21/13	Soil		X				X
BAST-S017-3.0	310406-10	10/21/13	Soil		X				X
BAST-S018-3.0	310406-11	10/21/13	Soil		X				X
BAST-B022-7.0	310407-01	10/22/13	Soil		X				X
BAST-B026-6.0	310407-02	10/22/13	Soil		X				X
BAST-B027-7.0	310407-03	10/22/13	Soil		X		X		X
BAST-B028-7.0	310407-04	10/22/13	Soil		X				X
BAST-B029-7.0	310407-05	10/22/13	Soil		X				X
BAST-B034-7.0	310407-06	10/22/13	Soil		X				X
BAST-B035-7.0	310407-07	10/22/13	Soil		X				X
BAST-B037-7.0	310407-08	10/22/13	Soil		X		X		X
BAST-B038-7.0	310407-09	10/22/13	Soil		X				X
BBH-B13-4	310456-01	10/23/13	Soil				X[(A)]		
BBH-B14-4	310456-02	10/23/13	Soil				X[(A)]		
BBH-B15-4	310456-03	10/23/13	Soil				X[(A)]		
BBH-B16-3	310456-04	10/23/13	Soil				X[(A)]		
BBH-S29-1.5	310456-05	10/23/13	Soil				X[(A)]		
BAST-S034-3.0	310457-01	10/23/13	Soil		X		X		X
BAST-S026-3.0	310457-02	10/23/13	Soil		X				X
BAST-S027-3.0	310457-03	10/23/13	Soil	X	X			X	X
BAST-S028-3.0	310457-04	10/23/13	Soil	X	X			X	X
BAST-S029-3.0	310457-05	10/23/13	Soil	X	X			X	X
BAST-B032-3.0	310457-06	10/23/13	Soil	X	X			X	X
BAST-B043-9.0	310486-01	10/24/13	Soil		X				X
BAST-B044-9.0	310486-02	10/24/13	Soil		X				X
BAST-B045-9.0	310486-03	10/24/13	Soil		X				X
BAST-S030-3.0	310510-01	10/25/13	Soil		X		X		X
BAST-S030-3.0	310510-01	10/25/13	Soil						X
BAST-S031-3.0	310510-02	10/25/13	Soil						X
BAST-B046-7.0	310510-03	10/25/13	Soil						X
BAST-S032-3.0	310510-04	10/25/13	Soil						X
BAST-B047-8.0	310510-05	10/25/13	Soil						X
BAST-S033-3.0	310510-06	10/25/13	Soil		X		X		X
BAST-B503-3.0	310605-01	10/30/13	Soil		X				X

Field Sample ID	Laboratory Sample ID	Sampling Date	Sample Type	Analysis					
				VOC	PAHs	PCBs	Metals	TPH-Gx	TPH-Dx
BAST-B048-3.0	310605-02	10/30/13	Soil		X				X
BAST-B049-3.0	310605-03	10/30/13	Soil		X				X
BAST-B050-3.0	310605-04	10/30/13	Soil		X				X
BBH-B19-5-103013	310606-01	10/30/13	Soil		X		X[(A)]		
BBH-B17-5-103013	310606-02	10/30/13	Soil				X[(A)]		
BBH-B18-5-103013	310606-03	10/30/13	Soil				X[(A)]		
BAST-B051-5.0	311028-01	11/01/13	Soil		X		X		X
BAST-B504-5.0	311028-02	11/01/13	Soil		X		X		X
BAST-S034B-3.0	311028-03	11/01/13	Soil		X				X
BAST-S036-3.0	311028-04	11/01/13	Soil		X				X
BAST-S035-3.0	311028-05	11/01/13	Soil		X				X
BUST-B01-8-110713	311165-01	11/07/13	Soil		X		X		X
BUST-B02-8-110713	311165-02	11/07/13	Soil		X				X
BUST-B03-16-110713	311165-03	11/07/13	Soil		X				X
BUST-B04-16-110713	311165-04	11/07/13	Soil		X				X
BUST-500-110713	311165-05	11/07/13	Soil		X		X		X
BUST-S01-6-110713	311165-06	11/07/13	Soil		X				X
BUST-S02-10-110713	311165-07	11/07/13	Soil		X				X
BUST-S03-10-110713	311165-08	11/07/13	Soil		X				X
BUST-S04-10-110713	311165-09	11/07/13	Soil		X				X
BUST-S05-7-110713	311165-10	11/07/13	Soil		X		X		X
BUST-S06-8-110713	311165-11	11/07/13	Soil		X		X		X
BUST-S07-4-110713	311165-12	11/07/13	Soil		X				X
BUST-S08-10-110713	311165-13	11/07/13	Soil		X				X
BUST-S09-5-110713	311165-14	11/07/13	Soil		X				X
BUST-S10-10-110713	311165-15	11/07/13	Soil		X				X
BUST-S11-5-110713	311165-16	11/07/13	Soil		X		X		X
BUST-S12-10-110713	311165-17	11/07/13	Soil		X				X
BUST-S13-5-110713	311165-18	11/07/13	Soil		X				X
BUST-S14-9-110713	311165-19	11/07/13	Soil		X				X
BUST-S15-5-110713	311165-20	11/07/13	Soil		X				X
BUST-B05-18-110813	311184-01	11/08/13	Soil		X				X
BUST-B06-18-110813	311184-02	11/08/13	Soil		X				X
BUST-B07-19-110813	311184-03	11/08/13	Soil		X		X		X

Field Sample ID	Laboratory Sample ID	Sampling Date	Sample Type	Analysis					
				VOC	PAHs	PCBs	Metals	TPH-Gx	TPH-Dx
BUST-B08-19-110813	311184-04	11/08/13	Soil		X				X
BUST-B09-21-110813	311184-05	11/08/13	Soil		X				X
BUST-B10-19-110813	311184-06	11/08/13	Soil		X				X
BUST-B11-19-110813	311184-07	11/08/13	Soil		X				X

Notes:
[(A)] - Antimony, arsenic, cadmium, chromium, copper, mercury, nickel, and zinc
Metals - Arsenic, cadmium, chromium, copper, mercury, nickel, and zinc, unless otherwise noted.
PAHs - Polycyclic aromatic hydrocarbons
PCBs - Polychlorinated biphenyl
TPH-Dx - Diesel and motor oil range total petroleum hydrocarbon
TPH-Gx - Gasoline range total petroleum hydrocarbon
VOC - Volatile organic compound
X - The analysis was requested and performed on the sample.

The analytical parameters requested for the samples, the respective analytical methods, and the analytical laboratories are summarized below:

Parameter	Analytical Method	Analytical Laboratory
Volatile Organic Compounds (VOCs)	SW846 Method 8260C	Friedman & Bruya, Inc. (F&BI) Seattle, WA
Polycyclic Aromatic Hydrocarbons (PAHs)	SW846 Method 8270D-SIM	
PCB Aroclors	SW846 Method 8082A	
TPH - Gasoline Range	NWTPH-Gx	
TPH - Diesel & Motor Oil Range	NWTPH-Dx	
Total Metals	EPA Method 200.8	
Mercury	EPA Method 1631E	

Notes:
1. SW846 - *USEPA Test Methods for Evaluating Solid Waste, Physical/Chemical Methods,* SW-846, Third Edition, December 1996.
2. EPA Methods - *USEPA Methods for Chemical Analysis of Water and Wastes,* EPA–600/4-79-020, March 1983 Revision.
3. EPA Method 1631E - *Mercury in Water by Oxidation, Purge and Trap, and Cold Vapor Atomic Fluorescence Spectrometry,* Office of Water, U.S. Environmental Protection Agency, August 2002, EPA-821-R-02-019.
4. NWTPH Methods – *Washington State Department of Ecology, Analytical Methods for Petroleum Hydrocarbons*, Publication No. ECY 97-602, June 1997.

DATA VALIDATION FINDINGS

1. VOCs by GC/MS (EPA Method SW8260C)

1.1 Sample Management and Holding Time

Samples were received in the laboratory intact and in consistence with the accompanying chain-of-custody (COC) documentation. In some cases where cooler temperature was outside the 4±2°C criteria; samples were hand-delivered to the laboratory the same day of collection. The cooler temperature exceedance had no significant effects on data quality. No other anomalies were identified in relation to sample preservation, handling, and transport.

Soil samples should be preserved at the time of collection. Soil and water samples should be analyzed within 14 days of collection. All samples were analyzed within the required holding times.

1.2 GC/MS Instrument Performance Check

The method require that (1) gas chromatograph/mass spectrometer (GC/MS) tuning analysis be performed, using bromofluorobenzene (BFB), at the beginning of each 12-hour period prior to any analysis, and (2) specific mass ions meet the criteria provided in the method. All instrument performance checks met the requirements.

1.3 Initial Calibration (ICAL)

The ICAL criteria require that (1) if linear average RFs is chosen as the quantitation option, at least five standards at different concentrations should be analyzed and the percent relative standard deviation (%RSD) of response factors (RFs) be ≤20% for the analyte, (2) if least-square linear regression is chosen for quantitation, the correlation coefficient (r) be >0.995, and (3) if six-point non-linear (quadratic) curve is chosen for quantitation, the coefficient of determination (r^2) be >0.99. ICALs either met the requirements or the outliers had no adverse effects on data usability (*e.g.,* %RSD >20% for a compound not detected in samples).

An initial calibration verification (ICV) standard (second source standard) was analyzed to verify the calibration curve. Percent difference (%D) values were either within ±30%, or the exceedance had no adverse effects on data usability (*e.g.,* biased high ICV recovery for a compound not detected in samples).

1.4 Calibration Verification (CCV)

The CCV criteria requires that (1) continuing calibrations be analyzed at the beginning of each 12-hour analysis period prior to the analysis of method blank and samples, and (2) the %D value be within ±20%.

Calibration verifications either met the requirements, or the exceedance had no adverse effects on data usability (*e.g.,* biased high CCV recovery for a compound not detected in samples).

1.5 Method Blanks

Method blanks were prepared and analyzed as required. Target compounds were not detected at or above the reporting limits (RLs).

1.6 Laboratory Control Sample (LCS) and LCS Duplicate (LCSD)

LCS and LCSD were prepared and analyzed as required by the method. Percent recovery (%R) and relative percent difference (RPD) values either met the project control limits, or the outliers had no adverse effects on data usability (*e.g.,* biased high recovery for a compound not detected in samples).

1.7 Surrogate Spikes

Surrogate spikes were added to all samples as required by the method. All surrogate spike %R values were within the project control limits.

1.8 Matrix Spike (MS)

MS analyses were performed on project and batch QC samples at the proper frequency (≥5% of the samples analyzed for VOCs). All %R values were within the project control limits.

1.9 Internal Standards

The method requires that (1) internal standard retention time be within ±30 seconds from that of the associated 12-hour calibration standard, and (2) the area counts of all internal standards be within –50% to +100% of the associated 12-hour calibration standard. All internal standards in the sample and associated QC analyses met the criteria.

1.10 Reporting Limit and Target Compound Quantitation

RLs were supported with adequate initial calibration concentrations. In cases where target compound concentrations exceeded ICAL calibration ranges, proper dilution analyses were performed for definitive quantitation of the compounds. Only affected compounds were to be reported from dilution analyses.

1.11 Field Duplicates

Field duplicates were not submitted for VOCs analyses in these SDGs.

1.12 Overall Assessment of VOCs Data Usability

VOCs data are of known quality and acceptable for use, as qualified.

2. PAHs by GC/MS - SIM (EPA Method SW8270D-SIM)

2.1 Sample Management and Holding Times

No anomalies were identified in relation to sample preservation, handling, and transport as discussed in Section 1.1.

Soil samples should be extracted within 14 days and water within seven days of collection. Extracts should be analyzed within 40 days of extraction. All samples were extracted and analyzed within the required holding times.

2.2 GC/MS Instrument Performance Check

DFTPP tuning was performed within each 12-hour interval. All required ion abundance ratios met the method requirements.

2.3 Initial Calibration (ICAL)

The ICAL criteria require that (1) if linear average RFs is chosen as the quantitation option, at least five standards at different concentrations should be analyzed and the %RSD of RFs be ≤20% for the analyte, (2) if least-square linear regression is chosen for quantitation, the correlation coefficient (r) be >0.995, and (3) if six-point non-linear (quadratic) curve is chosen for quantitation, the coefficient of determination (r^2) be >0.99. All ICALs met the requirements.

An ICV standard (second source standard) was analyzed to verify the calibration curve. %D values were either within ±20%, or the exceedance had no adverse effects on data usability (*e.g.,* biased high ICV recovery for a compound not detected in samples).

2.4 Calibration Verification (CCV)

The analytical method requires that (1) continuing calibration verifications be analyzed at the beginning of each 12-hour analysis period prior to the analysis of method blank and samples, and (2) the %D be within ±20%.

2.5 Method Blanks

Method blanks were prepared and analyzed as required. Target compounds were not detected at or above the RLs in the method blanks.

2.6 Surrogate Spikes

Surrogate spikes were added to all samples as required by the method. All surrogate spike %R values were either within the project control limits or at levels that had no adverse effects on data quality (*e.g.,* biased-high recovery for compounds that were not detected in samples). In some cases surrogate spike %R values were not applicable for data evaluation because the samples contained high levels of target PAHs and required dilution analysis; no data were qualified in these cases.

2.7 Matrix Spike (MS) and MS Duplicate (MSD)

MS and MSD analyses were performed on project and batch QC samples at the proper frequency (≥5% of samples analyzed). All %R and RPD values met the project control criteria.

2.8 Laboratory Control Sample (LCS) and LCS Duplicate (LCSD)

LCS and LCSD analyses were performed as required by the method. All %R and RPD values were within the project control limits.

2.9 Internal Standards

The method requires that (1) internal standard retention time be within ±30 seconds from that of the associated 12-hour calibration standard, and (2) the area counts of all internal standards be within –50% to +100% of the associated 12-hour calibration standard. All internal standards in the sample and associated QC analyses met the criteria.

2.10 Reporting Limits and Target Compound Quantitation

Sample-specific RLs were supported with adequate initial calibration concentrations. In some cases samples required dilution for definitive quantitation of target compounds; the RLs were raised accordingly, and the compounds reported from the dilution analysis. The remaining (un-diluted) target compounds were to be reported from the initial analysis for the lower detection limits.

2.11 Field Duplicates

Six sets of field duplicates were submitted for PAHs analyses. Field duplicate results for detected target compounds, RPD (or concentration difference) values, and data qualification were presented in **Appendix A**.

2.12 Overall Assessment of PAHs Data Usability

PAHs data are of known quality and acceptable for use, as qualified.

3. PCB Aroclors (EPA Method SW8082A)

3.1 Sample Management and Holding Times

No anomalies were identified in relation to sample preservation, handling, and transport as discussed in Section 1.1.

Soil samples should be extracted within 14 days of collection and extracts analyzed within 40 days of extraction. All samples were extracted and analyzed within the required holding times.

3.2 Initial Calibration

The method requires that (1) a minimum of 5-point calibration be performed using the mixture of Aroclor 1016 and 1260, (2) a single-point calibration be performed for the other five Aroclors to establish calibration factors (CFs) and for Aroclor pattern recognition, (3) at least 3 peaks (preferably 5 peaks) must be chosen for each Aroclor for characterization, (4) the %RSD values of Aroclor 1016 and 1260 CFs must be ≤20%, and (5) if dual column analysis is chosen, both columns should meet the requirements. All ICALs met the requirements.

3.3 Calibration Verification

CCV analyses should be performed for each 12-hour analysis sequence prior to sample analyses, and the %D be within ±20%.

Calibration verifications were performed at the required frequency. All %D values either met the control criteria or biased high for target compounds that were not detected in the associated samples.

3.4 Method Blanks

Method blanks were prepared and analyzed as required. PCB Aroclors were not detected at or above the MDLs in the method blanks.

3.5 Surrogate Spikes

Surrogate spikes were added to all samples as required by the method. All surrogate spike %R values were within the laboratory control limits.

3.6 Matrix Spike and Matrix Spike Duplicate (MS/MSD)

MS/MSD analyses were performed on project samples or batch QC samples at the required frequency. All %R and RPD values were within the laboratory control limits.

3.7 Laboratory Control Sample (LCS) and LCS Duplicate (LCSD)

LCS and LCSD analyses were performed as required by the method. All %R and RPD values were within the project control limits.

3.8 Method Reporting Limits and Target Compound Quantitation

Sample-specific RLs were supported with adequate initial calibration concentrations and achieved the project target quantitation limits.

3.9 Field Duplicates

Field duplicates were not submitted for PCB Aroclors analysis in these SDGs.

3.10 Overall Assessment of PCB Aroclors Data Usability

PCB Aroclor data are of known quality and acceptable for use.

4. TPH-Gasoline by GC/FID (Method NWTPH-Gx)

4.1 Sample Management and Holding Times

No anomalies were identified in relation to sample preservation, handling, and transport as discussed in Section 1.1.

Soil samples should be preserved at the time of collection. Soil and water samples should be analyzed within 14 days of collection. All samples were analyzed within the required holding times.

4.2 Initial Calibration (ICAL)

The method criteria require that (1) if linear average RFs is chosen as the quantitation option, the %RSD of RFs be ≤20% for the analyte, (2) if least-square linear regression is chosen for quantitation, the correlation coefficient (r) be ≥0.995, (3) if six-point non-linear (quadratic) curve is chosen for quantitation, the coefficient of determination (r^2) be ≥0.990, and (4) the back-calculated %D value for each calibration standard be within ±15%. Initial calibration met the criteria for all target compounds.

An ICV (second source) standard was analyzed to verify the calibration curve. %D values were within ±20%.

4.3 Calibration Verification

Continuing calibration verification (CCV) analyses were performed at the required frequency for all analytical sequences as required by the method. The %D values for all CCVs met the method criterion (±20%).

4.4 Method Blanks

Method blanks were prepared and analyzed as required. No target compounds were detected at or above the RLs in the method blanks.

4.5 Surrogate Spikes

Surrogate spikes were added to all samples as required by the method. All surrogate spike %R values were within the project control limits, outside the control limits due to matrix interference, or diluted below quantitation limits due to high analyte concentrations. No data qualifying actions were taken in these cases.

4.6 Matrix Spike and Matrix Spike Duplicate

MS/MSD analyses were not performed for TPH-Gasoline analyses; instead, duplicate and LCS analyses in combination were performed.

4.7 Laboratory Control Sample (LCS)

LCS analyses were performed as required by the method. All %R values were within the laboratory control limits.

4.8 Laboratory Duplicate Analysis

Duplicate analyses were performed on project and batch QC samples at the proper frequency. All RPD and concentration difference values met the laboratory control criteria.

4.9 Reporting Limits and Target Compound Quantitation

Sample-specific RLs were supported with adequate initial calibration concentrations.

4.10 Field Duplicates

Field duplicates were not submitted for TPH-Gasoline analyses in these SDGs.

4.11 Overall Assessment of TPH-Gasoline Data Usability

TPH-Gasoline data are of known quality and acceptable for use, as qualified.

5. TPH-Diesel & Motor Oil by GC/FID (Method NWTPH-Dx)

5.1 Holding Time

No anomalies were identified in relation to sample preservation, handling, and transport as discussed in Section 1.1.

Soil samples should be extracted within 14 days and water should be extracted within seven days of collection. Extracts should be analyzed within 40 days of extraction. All samples were extracted and analyzed within the recommended holding times.

5.2 Initial Calibration

The method criteria require that (1) if linear average RFs is chosen as the quantitation option, the %RSD of RFs be ≤20% for the analyte, (2) if least-square linear regression is chosen for quantitation, the correlation coefficient (r) be ≥0.995, (3) if six-point non-linear (quadratic) curve is chosen for quantitation, the coefficient of determination (r^2) be ≥0.990, and (4) the back-calculated %D value for each calibration standard be within ±15%. Initial calibration met the criteria for all target compounds.

An ICV (second source) standard was analyzed to verify the calibration curve. %D values were within ±20%.

5.3 Calibration Verification

The method requires that (1) a mid-range check standard be analyzed prior to and after each analytical batch, and (2) the percent drift (%D) value be within ±20% of the true value.

Calibration verification was performed at required frequency. The %D values were either within the ±20% criterion or at levels that had no adverse effects on data quality (e.g., high-bias %D value where the target compound was not detected in associated sample).

5.4 Method Blanks

Method blanks were prepared and analyzed as required. Target compounds were not detected at or above the RLs in the method blanks.

5.5 Surrogate Spikes

Surrogate spikes were added to all samples as required by the method. All surrogate spike %R values were within the project control limits, outside the control limits due to matrix interference, or diluted below quantitation limits due to high petroleum hydrocarbon concentrations. No data qualifying actions were taken in these cases.

5.6 Matrix Spike (MS) and MS Duplicate (MSD)

MS and MSD analyses were performed on project and batch QC samples at the proper frequency. The %R and RPD values met the laboratory control criteria.

5.7 Laboratory Control Sample (LCS)

LCS analyses were performed as required. All %R values met the project control limits.

5.8 Target Compound Identification

Selected sample extracts were cleaned up with acid and silica gel treatment to minimize the biogenic interference with target compound identification, as required by the project. The laboratory reported results as diesel #2 (C10 - C25) and motor oil (C25 - C36), as required by the method.

5.9 Reporting Limits and Target Compound Quantitation

The reported RLs were supported with adequate ICAL concentrations.

5.10 Field Duplicates

Four sets of field duplicates were submitted for TPH-Diesel and TPH-Motor Oil analyses. Field duplicate results, RPD (or concentration difference) values, and data qualification for detected TPH-Diesel or Motor Oil were presented in **Appendix A**.

5.11 Overall Assessment of TPH-Diesel and Motor Oil Data Usability

TPH-Diesel and TPH-Motor Oil data are of known quality and acceptable for use, as qualified.

6. Total Metals by ICP/MS and CVAFS (EPA Methods 200.8 and 1631E)

6.1 Sample Management and Holding Times

No anomalies were identified in relation to sample preservation, handling, and transport, as discussed in Section 1.1.

Soil and water samples should be analyzed within 180 days for metals and 28 days for mercury. Samples were analyzed within the required holding times.

6.2 ICP/MS Tuning

Instrument tuning was performed at the required frequency. The stability check (%RSD <5%), mass calibration (mass difference <0.1 AMU), and resolution check (peak width <1.0 AMU at 5% peak height) met the NFG and method criteria.

6.3 Initial Calibration (ICAL)

The ICP/MS method requires that (1) a blank and one calibration standard be used in establishing the analytical curve, and (2) the average of replicate exposures be reported for all standards, QC, and sample analyses.

The CVAFS method require that (1) a blank and five calibration standards be employed to establish the analytical curve, (2) the linearity of the calibration curve should meet the criteria of correlation coefficient ≥ 0.995 for linear regression, and (3) the %RSD <15% if average response factor approach is employed.

All ICALs met the method requirements.

6.4 Calibration Verification (ICV and CCV)

Initial calibration verifications (ICVs) and continuing calibration verifications (CCVs) for ICP/MS and GFAA and ongoing precision recovery (OPR) were analyzed at the required frequency. The %R values either met the control criteria (90 – 110% for metals, 76 – 123% for mercury) or the exceedance had no adverse effects on data usability (e.g., high-bias %D value where the target compound was not detected in associated sample).

6.5 Blanks

Calibration Blanks: Initial calibration blanks (ICBs) and continuing calibration blanks (CCBs) were not analyzed after calibration verification standards. Target analytes were either not detected at or above the RLs in the ICBs and CCBs, or sample results affected by the ICB/CCB detections were qualified as results of detections in preparation blanks.

Preparation Blanks: Preparation blanks were prepared and analyzed as required. Target analytes were either not detected at or above the RLs in the preparation blanks, or sample results were greater than 10X the detection in the associated blank, except for the following:

SDG	Blank ID	Analyte	Concentration in Blank (mg/kg)	Affected Sample	Sample Result (mg/kg)	Data Qualifier
311028	I3-748mb	Arsenic	0.358 J	BAST-B051-5.0 BAST-B504-5.0	1.92 1.37	**J**
310510	I3-730mb	Arsenic	0.83 J	BAST-S030-3.0 BAST-S033-3.0	7.31 1.69	**J**

6.6 Laboratory Control Sample (LCS)

LCS analyses were performed as required by the method. All %R values were within the project control limits, or the exceedance had no adverse effects on data usability (e.g., high-bias %R value where the target compound was not detected in associated sample).

6.7 Matrix Spike (MS) and Matrix Spike Duplicate (MSD)

MS and MSD analyses were performed on project and batch QC samples at the adequate frequency (>5% of field sample). The %R and RPD values either met the laboratory control limits or the outliers were not applicable for matrix effect evaluation (e.g. sample concentration >4x spiking level), except for the following:

SDG#	Parent Sample ID	Analyte	MS %R	MSD %R	Control Limit	RPD	Affected Sample	Data Qualifier
310510	Batch QC	Copper Lead	97% 59%	137% 81%	57-120% 59-148%	34% 31%	BAST-S030-3.0 BAST-S033-3.0	**J**
310406 310407	BAST-S015-3.0	Zinc	78%	61%	55-129%	24%	BAST-S010-3.5 BAST-S015-3.0 BAST-B027-7.0 BAST-B037-7.0	**J**
310226 310227	Batch QC	Copper Lead	108% 140%	167% 269%	57-120% 59-148%	43% 63%	RCD-S09-2 DAST-B10-4 DAST-S11-2	**J**

Note: RPD control criteria = ±20%

6.8 Internal Standards

At least three internal standards were added to all field and QC samples for ICP/MS analyses. All percent relative intensity values were within the method criteria (60 - 125%).

6.9 Method Reporting Limits and Analyte Quantitation

Sample-specific RLs were supported with adequate initial calibration concentrations.

6.10 Field Duplicates

Two sets of field duplicates were submitted for metals analyses. Field duplicate results, RPD (or concentration difference) values, and data qualification for detected TPH-Diesel or Motor Oil were presented in **Appendix A**.

6.11 Overall Assessment of Metals Data Usability

Metal data are of known quality and acceptable for use, as qualified.

SUMMARY

Table I. Data Affected by QC Anomalies:

Laboratory ID	Sample ID	Analyte	Qualifier	Qualified Reason
310510-01 310510-06 311028-01 311028-02	BAST-S030-3.0 BAST-S033-3.0 BAST-B051-5.0 BAST-B504-5.0	Arsenic	**J**	Analyte detected in MB and sample was <10x the MB
310226-01 310227-01 310227-02	RCD-S09-2 DAST-B10-4 DAST-S11-2	Copper	**J**	MS/MSD %R and RPD values outside control criteria
310226-01 310227-01 310227-02	RCD-S09-2 DAST-B10-4 DAST-S11-2	Lead	**J**	MS/MSD %R and RPD values outside control criteria
310406-03 310406-08 310407-03 310407-08	BAST-S010-3.5 BAST-S015-3.0 BAST-B027-7.0 BAST-B037-7.0	Zinc	**J**	MS/MSD RPD value >20%
310510-01 310510-06	BAST-S030-3.0 BAST-S033-3.0	Lead	**J**	MS/MSD RPD value outside control criteria
310510-01 310510-06	BAST-S030-3.0 BAST-S033-3.0	Copper	**J**	MSD %R and MS/MSD RPD values outside control criteria
310361-26 310361-27	BAST-S07-3.5 BAST-B500-3.5	Benz(a)anthracene	**J**	Field duplicate RPD >35%

Table II. Data Qualifiers are defined as follows:

Data Qualifier	Definition
J	The analyte was detected above the reported quantitation limit, and the reported concentration was an estimated value.
U	The analyte was analyzed for, but was considered not detected at the reporting limit or reported value.
UJ	The analyte was analyzed for, and the associated quantitation limit was an estimated value.

Approved By:  Date: ***6/23/2014***

Mingta Lin, Senior Project Chemist

REFERENCES

USEPA *Contract Laboratory Program National Functional Guidelines for Inorganic Superfund Data Review,* Office of Superfund Remediation and Technical Innovation, U.S. Environmental Protection Agency, January 2010, USEPA 540/R-10/011

USEPA *Contract Laboratory Program National Functional Guidelines for Superfund Organic Methods Data Review,* Office of Superfund Remediation and Technical Innovation, U.S. Environmental Protection Agency, June 2008, USEPA-540-R-08-01.

USEPA *Method 1631, Revision E: Mercury in Water by Oxidation, Purge and Trap, and Cold Vapor Atomic Fluorescence Spectrometry, Office of Water, U.S. Environmental Protection Agency, August 2002, EPA-821-R-02-019.*

USEPA *Test Methods for Evaluating Solid Waste (SW-846). Third Edition and Revised Update IIIA.* Office of Solid Waste and Emergency Response, Washington, D.C. April 1998.

USEPA *Methods for Chemical Analysis of Water and Wastes,* EPA-600/4-79-020, March 1983 and updates.

Standard Methods for the Examination of Water and Wastewater, American Public Health Association, 20th Edition, 1995.

Ecology (Washington State Department of). 1997. *Analytical Methods for Petroleum Hydrocarbons.* Publication No. ECY 97-602. June 1997.

PSEP *Recommended Guidelines for Measuring Organic Compounds in Puget Sound Water, Sediment and Tissue Samples,* Puget Sound Water Quality Authority, April 1997.

Appendix A

Field duplicate RPD is indicative of field and laboratory precision and sample homogeneity in combination. The CLP National Functional Guidelines or *Work Plan* do not specify criteria for field duplicate evaluation. An advisory criterion of 35% was applied to evaluating the RPD values of field duplicate results that are ≥5xRL. For results that are <5xRL, an advisory criterion of ±2RL was applied to evaluating the concentration differences. The RPD (or concentration difference as applicable) values and data qualification for detected compounds in field duplicates are presented as follows:

Analyte	Units	RL	Parent & Field Duplicate Sample Result		RPD	Delta	Data Qualifier
			BAST-S07-3.5	**BAST-B500-3.5**			
Bunker C	mg/kg	250	9300	9700	4%		
Acenaphthene	mg/kg	0.01	0.63	0.77	20%		
Acenaphthylene	mg/kg	0.01	ND	ND		0	
Anthracene	mg/kg	0.01	0.62	0.64	3%		
Benz(a)anthracene	mg/kg	0.01	0.58	0.85		0.27	**J/J**
Benzo(a)pyrene	mg/kg	0.01	0.35	0.36	3%		
Benzo(b)fluoranthene	mg/kg	0.01	0.17	0.21	21%		
Benzo(g,h,i)perylene	mg/kg	0.01	0.17	0.2	16%	0.03	
Benzo(k)fluoranthene	mg/kg	0.01	0.024	0.028		0.004	
Chrysene	mg/kg	0.01	0.98	1.1	12%		
Dibenzo(a,h)anthracene	mg/kg	0.01	0.061	0.07	14%		
Fluoranthene	mg/kg	0.01	0.25	0.23	8%		
Fluorene	mg/kg	0.01	1.3	1.6	21%	0.3	
Indeno(1,2,3-cd)pyrene	mg/kg	0.01	0.046	0.055		0.009	
Naphthalene	mg/kg	0.01	ND	ND		0	
Phenanthrene	mg/kg	0.01	ND	ND		0	
Pyrene	mg/kg	0.1	2	2.2	10%		
			BAST-B023-04	**BAST-B501-04**			
Bunker C	mg/kg	250	ND	ND		0	
Benzo(a)pyrene	mg/kg	0.01	ND	ND		0	
Dibenzo(a,h)anthracene	mg/kg	0.01	ND	ND		0	
Benz(a)anthracene	mg/kg	0.01	ND	ND		0	
Acenaphthene	mg/kg	0.01	ND	ND		0	
Phenanthrene	mg/kg	0.01	ND	ND		0	
Fluorene	mg/kg	0.01	ND	ND		0	
Benzo(k)fluoranthene	mg/kg	0.01	ND	ND		0	
Naphthalene	mg/kg	0.01	ND	ND		0	

Analyte	Units	RL	Parent & Field Duplicate Sample Result		RPD	Delta	Data Qualifier
Anthracene	mg/kg	0.01	ND	ND		0	
Chrysene	mg/kg	0.01	ND	ND		0	
Acenaphthylene	mg/kg	0.01	ND	ND		0	
Fluoranthene	mg/kg	0.01	ND	ND		0	
Benzo(b)fluoranthene	mg/kg	0.01	ND	ND		0	
Indeno(1,2,3-cd)pyrene	mg/kg	0.01	ND	ND		0	
Benzo(g,h,i)perylene	mg/kg	0.01	ND	ND		0	
Pyrene	mg/kg	0.01	ND	ND		0	
			BAST-S010-3.5	**BAST-502-3.2**			
Acenaphthene	mg/kg	0.01	0.039	0.037		0.002	
Acenaphthylene	mg/kg	0.01	ND	ND		0	
Anthracene	mg/kg	0.01	ND	ND		0	
Benz(a)anthracene	mg/kg	0.01	ND	ND		0	
Benzo(a)pyrene	mg/kg	0.01	ND	ND		0	
Benzo(b)fluoranthene	mg/kg	0.01	ND	ND		0	
Benzo(g,h,i)perylene	mg/kg	0.01	ND	ND		0	
Benzo(k)fluoranthene	mg/kg	0.01	ND	ND		0	
Chrysene	mg/kg	0.01	ND	ND		0	
Dibenzo(a,h)anthracene	mg/kg	0.01	ND	ND		0	
Fluoranthene	mg/kg	0.01	ND	ND		0	
Fluorene	mg/kg	0.01	0.079	0.085	7%		
Indeno(1,2,3-cd)pyrene	mg/kg	0.01	ND	ND		0	
Naphthalene	mg/kg	0.01	ND	ND		0	
Phenanthrene	mg/kg	0.01	0.071	0.077	8%		
Pyrene	mg/kg	0.01	ND	ND		0	
			BAST-B048-3.0	**BAST-B503-3.0**			
Bunker C	mg/kg	250	ND	ND		0	
Acenaphthene	mg/kg	0.01	ND	ND		0	
Acenaphthylene	mg/kg	0.01	ND	ND		0	
Anthracene	mg/kg	0.01	ND	ND		0	
Benz(a)anthracene	mg/kg	0.01	ND	ND		0	
Benzo(a)pyrene	mg/kg	0.01	ND	ND		0	
Benzo(b)fluoranthene	mg/kg	0.01	ND	ND		0	
Benzo(g,h,i)perylene	mg/kg	0.01	ND	ND		0	
Benzo(k)fluoranthene	mg/kg	0.01	ND	ND		0	
Chrysene	mg/kg	0.01	ND	ND		0	

Analyte	Units	RL	Parent & Field Duplicate Sample Result		RPD	Delta	Data Qualifier
Dibenzo(a,h)anthracene	mg/kg	0.01	ND	ND		0	
Fluoranthene	mg/kg	0.01	ND	ND		0	
Fluorene	mg/kg	0.01	ND	ND		0	
Indeno(1,2,3-cd)pyrene	mg/kg	0.01	ND	ND		0	
Naphthalene	mg/kg	0.01	0.014	0.011		0.003	
Phenanthrene	mg/kg	0.01	ND	ND		0	
Pyrene	mg/kg	0.01	ND	ND		0	
			BAST-B051-5.0	**BAST-B504-5.0**			
Mercury	mg/kg	0.1	ND	ND		0	
Nickel	mg/kg	1	9.98	10.1	1%	0.12	
Zinc	mg/kg	1	30.6	23	28%		
Copper	mg/kg	1	42.7	40.4	6%	2.3	
Arsenic	mg/kg	1	1.92	1.37		0.55	
Lead	mg/kg	1	15.8	16.3	3%		
Cadmium	mg/kg	1	ND	ND		0	
Acenaphthene	mg/kg	0.01	1.4	1.1	24%		
Acenaphthylene	mg/kg	0.01	0.01	ND		0	
Anthracene	mg/kg	0.01	0.056	0.051	9%		
Benz(a)anthracene	mg/kg	0.01	0.033	0.031		0.002	
Benzo(a)pyrene	mg/kg	0.01	0.03	0.027		0.003	
Benzo(b)fluoranthene	mg/kg	0.01	0.028	0.027		0.001	
Benzo(g,h,i)perylene	mg/kg	0.01	0.027	0.025		0.002	
Benzo(k)fluoranthene	mg/kg	0.01	ND	0.01		0.01	
Chrysene	mg/kg	0.01	0.053	0.05	6%		
Dibenzo(a,h)anthracene	mg/kg	0.01	ND	ND		0	
Fluoranthene	mg/kg	0.01	0.047	0.041		0.006	
Fluorene	mg/kg	0.1	2.3	1.7	30%		
Indeno(1,2,3-cd)pyrene	mg/kg	0.01	0.019	0.02		0.001	
Naphthalene	mg/kg	0.01	0.11	0.13	17%		
Phenanthrene	mg/kg	0.01	0.63	0.57	10%		
Pyrene	mg/kg	0.01	0.1	0.087	14%		
			BUST-S05-7-110713	**BUST-500-110713**			
Mercury	mg/kg	0.1	ND	ND		0	
Arsenic	mg/kg	1	ND	ND		0	
Cadmium	mg/kg	1	ND	ND		0	
Copper	mg/kg	1	5.23	5.09		0.14	

Analyte	Units	RL	Parent & Field Duplicate Sample Result		RPD	Delta	Data Qualifier
Lead	mg/kg	1	4.58	4.85		0.27	
Nickel	mg/kg	1	7.98	9.09	13%		
Zinc	mg/kg	1	11.3	11.4	1%		
Bunker C	mg/kg	250	ND	ND		0	
Acenaphthylene	mg/kg	0.01	ND	ND		0	
Fluorene	mg/kg	0.01	ND	ND		0	
Phenanthrene	mg/kg	0.01	ND	ND		0	
Acenaphthene	mg/kg	0.01	ND	ND		0	
Benz(a)anthracene	mg/kg	0.01	ND	ND		0	
Dibenzo(a,h)anthracene	mg/kg	0.01	ND	ND		0	
Anthracene	mg/kg	0.01	ND	ND		0	
Chrysene	mg/kg	0.01	ND	ND		0	
Benzo(k)fluoranthene	mg/kg	0.01	ND	ND		0	
Fluoranthene	mg/kg	0.01	ND	ND		0	
Benzo(b)fluoranthene	mg/kg	0.01	ND	ND		0	
Benzo(g,h,i)perylene	mg/kg	0.01	ND	ND		0	
Indeno(1,2,3-cd)pyrene	mg/kg	0.01	ND	ND		0	
Naphthalene	mg/kg	0.01	ND	ND		0	
Benzo(a)pyrene	mg/kg	0.01	ND	ND		0	
Pyrene	mg/kg	0.01	ND	ND		0	

Notes:
Delta – Concentration difference between the parent sample and its field duplicate
mg/kg – milligram per kilogram
ND – The analyte was not detected at or above the RL.
RL – Reporting limit
RPD – Relative percent difference

Data Validation Report

Kimberly-Clark Everett, Washington Site
Upland Area Interim Action Soil Sampling
Batch #4 Soil Samples

Prepared for:

Aspect Consulting LLC
401 Second Ave South, Suite 201
Seattle, WA 98014

Prepared by:

Pyron Environmental, Inc.
3530 32nd Way, NW
Olympia, WA 98502

ACRONYMS

%D	percent difference
%D_f	percent drift
%R	percent recovery
%RSD	percent relative standard deviation
AMU	atomic mass unit
BTEX	benzene, toluene, ethylbenzene, and *m-, p-, & o*-xylenes
CCB	continuing calibration blank
CCC	calibration check compound
CCV	continuing calibration verification
CF	calibration factor
CLP	U.S. EPA Contract Laboratory Program
COC	chain-of-custody
CVAFS	cold vapor atomic fluorescent spectrometry
DFTPP	decafluorotriphenylphosphine
ECD	electron capture detector
EPA	U.S. Environmental Protection Agency
EPH	extractable petroleum hydrocarbon
FID	Flame ionization detector
GC/MS	gas chromatograph/mass spectrometer
ICAL	initial calibration
ICB	initial calibration blank
ICP/MS	inductively coupled plasma/ mass spectrometer
ICV	initial calibration verification
LCS	laboratory control sample
LCSD	laboratory control sample duplicate
MDL	method detection limit
µg/kg	microgram per kilogram
mg/kg	milligram per kilogram
MS	matrix spike
MSD	matrix spike duplicate
NFGs	CLP National Functional Guidelines for Data Review (EPA 2008 – Organics; EPA 2010 – Inorganics)
OPR	ongoing precision and recovery
PCBs	polychlorinated biphenyls

PID	photo-ionization detector
QA/QC	quality assurance/quality control
RF	response factor
RL	reporting limit
RPD	relative percent difference
RRT	relative retention time
SDG	sample delivery group
SIM	selective ion monitoring
SVOCs	semi-volatile organic compounds
VOCs	volatile organic compounds
VPH	volatile petroleum hydrocarbon

INTRODUCTION

This report presents and discusses findings of the data validation performed on analytical data for soil samples collected during September 2013 to January 2014 for the referenced project. The laboratory reports validated herein were submitted by Friedman & Bruya, Inc. and Fremont Aanlytical, Inc. in Seattle, Washington and ALS Environmental Services, Inc. in Kelso, Washington.

A level III data validation was performed on this laboratory report. The validation followed the procedures specified in USEPA CLP Functional Guidelines ([NFGs], EPA 2008 – Organics; EPA 2010 – Inorganics), with modifications to accommodate project and analytical method requirements. The numerical quality assurance/quality control (QA/QC) criteria applied to the validation were in accordance with those specified in the quality assurance project plans ([QAPPs], Aspect, 2009) and the current performance-based control limits established by the laboratory (laboratory control limits). Instrument calibration, frequency of QC analyses, and analytical sequence requirements were evaluated against the respective analytical methods.

Validation findings are discussed in each section pertinent to the QC parameter for each type of analysis. Qualified data with applied data qualifiers are summarized in the **Summary** section at the end of this report.

Samples and the associated analyses validated herein are summarized as follows:

Field Sample ID	Laboratory Sample ID	Sampling Date	Sample Type	Analysis						
				VOC	PAHs	PCBs	Metals	TPH-Gx	TPH-Dx	Misc.
DAST-S01-092713	309515-01	09/27/13	Soil		X	X	X		X	
DAST-S02-092713	309515-02	09/27/13	Soil		X	X	X		X	
DAST-S03-092713	309515-03	09/27/13	Soil		X	X	X		X	
DAST-S04-092713	309515-04	09/27/13	Soil		X	X	X		X	
DAST-S05-092713	309515-05	09/27/13	Soil		X	X	X		X	
DAST-S06-092713	309515-06	09/27/13	Soil		X	X	X		X	
DAST-S07-092713	309515-07	09/27/13	Soil		X	X	X		X	
DAST-S08-092713	309515-08	09/27/13	Soil		X	X	X		X	
DAST-S09-092713	309515-09	09/27/13	Soil		X	X	X		X	
DAST-S10-092713	309515-10	09/27/13	Soil		X	X	X		X	
DAST-B01-092713	309515-11	09/27/13	Soil		X	X	X		X	
DAST-B02-092713	309515-12	09/27/13	Soil		X	X	X		X	
DAST-B03-092713	309515-13	09/27/13	Soil		X	X	X		X	
DAST-B04-092713	309515-14	09/27/13	Soil		X	X	X		X	

Field Sample ID	Laboratory Sample ID	Sampling Date	Sample Type	Analysis						
				VOC	PAHs	PCBs	Metals	TPH-Gx	TPH-Dx	Misc.
DAST-B05-092713	309515-15	09/27/13	Soil		X	X	X		X	
DAST-B06-092713	309515-16	09/27/13	Soil		X	X	X		X	
DAST-B07-092713	309515-17	09/27/13	Soil		X	X	X		X	
BAST-B040-7.0	310430-01	10/22/13	Soil		X				X	
BAST-S019-3.0	310430-02	10/22/13	Soil		X				X	
BAST-S020-3.0	310430-03	10/22/13	Soil		X				X	
BAST-S021-3.0	310430-04	10/22/13	Soil		X		X[(A)]		X	
BAST-S022-3.0	310430-05	10/22/13	Soil		X				X	
BAST-S023-3.0	310430-06	10/22/13	Soil		X				X	
BAST-S024-3.0	310430-07	10/22/13	Soil		X				X	
BAST-B033-7.0	310430-08	10/22/13	Soil		X				X	
BUST-S16-8-111213	311258-01	11/12/13	Soil		X		X[(A)]		X	EPH
BUST-S17-8-111213	311258-02	11/12/13	Soil		X				X	EPH
BUST-S18-8-111213	311258-03	11/12/13	Soil		X				X	
BUST-S19-5-111213	311258-04	11/12/13	Soil		X				X	
BUST-S20-8-111213	311258-05	11/12/13	Soil		X				X	
BUST-501-111213	311258-06	11/12/13	Soil		X		X[(A)]		X	
BUST-S21-10-111213	311258-07	11/12/13	Soil		X				X	
BUST-S22-10-111213	311258-08	11/12/13	Soil		X		X[(A)]		X	
BUST-B20-6-111213	311258-09	11/12/13	Soil		X				X	
BUST-S23-16	311289-01	11/13/13	Soil		X		X[(A)]		X	
BUST-B21-18	311289-02	11/13/13	Soil		X				X	
PM-B2-6.5-111313	311294-18	11/13/13	Soil							SPLP/Cu
BUST-S24-3-111513	311338-01	11/15/13	Soil		X		X		X	
BUST-S25-3-111513	311338-02	11/15/13	Soil		X		X		X	
BUST-S26-5-111513	311338-03	11/15/13	Soil		X		X		X	
BUST-S27-5-111513	311338-04	11/15/13	Soil		X		X		X	
BUST-S28-3-111513	311338-05	11/15/13	Soil		X		X		X	
BUST-S29-5-111513	311338-06	11/15/13	Soil		X		X		X	
BUST-S30-3-111513	311338-07	11/15/13	Soil		X		X		X	
BUST-S31-3-111513	311338-08	11/15/13	Soil		X		X		X	
BUST-B22-5-111513	311338-09	11/15/13	Soil		X		X		X	
BUST-B23-6-111513	311338-10	11/15/13	Soil		X		X		X	
BUST-502-111513	311338-11	11/15/13	Soil		X		X		X	

Field Sample ID	Laboratory Sample ID	Sampling Date	Sample Type	Analysis						
				VOC	PAHs	PCBs	Metals	TPH-Gx	TPH-Dx	Misc.
BUST-B24-4-111513	311338-12	11/15/13	Soil		X		X		X	
BUST-B25-4-111513	311338-13	11/15/13	Soil		X		X		X	
BUST-B26-6-111513	311338-14	11/15/13	Soil		X		X		X	
BUST-B27-6-111513	311338-15	11/15/13	Soil		X		X		X	
BBH-B20-C-111813	311390-01	11/18/13	Soil		X		X			
BUST-S48-4	311391-02	11/19/13	Soil		X		X		X	
BUST-S49-8	311391-02	11/19/13	Soil		X		X		X	
BUST-S50-12	311391-03	11/19/13	Soil		X		X		X	
BUST-S51-4	311391-04	11/19/13	Soil		X		X		X	
BUST-S52-8	311391-05	11/19/13	Soil		X		X		X	
BUST-S53-12	311391-06	11/19/13	Soil		X		X		X	
BUST-S46-4	311391-07	11/19/13	Soil		X		X		X	
BUST-S46A-8	311391-08	11/19/13	Soil		X		X		X	
BUST-S47-12	311391-09	11/19/13	Soil		X		X		X	
BUST-S43-4	311391-10	11/19/13	Soil		X		X		X	
BUST-S44-8	311391-11	11/19/13	Soil		X		X		X	
BUST-S45-12	311391-12	11/19/13	Soil		X		X		X	
BUST-S40-4	311391-13	11/19/13	Soil		X		X		X	
BUST-S40-4	311391-13	11/19/13	Soil		X		X		X	
BUST-S40-4	311391-13	11/19/13	Soil		X		X		X	
BUST-S40-4	311391-13	11/19/13	Soil		X		X		X	
BUST-S41-8	311391-14	11/19/13	Soil		X		X		X	
BUST-S42-12	311391-15	11/19/13	Soil		X		X		X	
BUST-B29-12	311391-16	11/19/13	Soil		X		X		X	
BUST-B30-12	311391-17	11/19/13	Soil		X		X		X	
BUST-B31-12	311391-18	11/19/13	Soil		X		X		X	
BUST-B32-12	311391-19	11/19/13	Soil		X		X		X	
BUST-B503-12	311391-20	11/19/13	Soil		X		X		X	
BUST-B33-12	311391-21	11/19/13	Soil		X		X		X	
BUST-S37-4	311391-22	11/19/13	Soil		X		X		X	
BUST-S38-8	311391-23	11/19/13	Soil		X		X		X	
BUST-S39-12	311391-24	11/19/13	Soil		X		X		X	
UST70-S11-4-112113	311428-01	11/21/13	Soil		X		X[(A)]		X	
UST70-S12-8-112113	311428-02	11/21/13	Soil		X				X	

Field Sample ID	Laboratory Sample ID	Sampling Date	Sample Type	Analysis						
				VOC	PAHs	PCBs	Metals	TPH-Gx	TPH-Dx	Misc.
UST70-S13-4-112113	311428-03	11/21/13	Soil		X				X	
UST70-S14-8-112113	311428-04	11/21/13	Soil		X				X	
UST70-S15-4-112113	311428-05	11/21/13	Soil		X				X	
UST70-S16-8-112113	311428-06	11/21/13	Soil		X		X(A)		X	
UST70-B01-11-112113	311428-07	11/21/13	Soil		X				X	
UST70-B02-11-112113	311428-08	11/21/13	Soil		X				X	
UST70-B03-11-112113	311428-09	11/21/13	Soil		X				X	
UST70-B04-11-112113	311428-10	11/21/13	Soil		X				X	
UST70-S01-4-112113	311428-11	11/21/13	Soil		X		X(A)		X	
UST70-S02-8-112113	311428-12	11/21/13	Soil		X				X	
UST70-S03-4-112113	311428-13	11/21/13	Soil		X				X	
UST70-S04-8-112113	311428-14	11/21/13	Soil		X				X	
UST70-S05-4-112113	311428-15	11/21/13	Soil		X				X	
UST70-S06-8-112113	311428-16	11/21/13	Soil		X		X(A)		X	
UST70-S07-4-112113	311428-17	11/21/13	Soil		X				X	
UST70-S08-8-112113	311428-18	11/21/13	Soil		X				X	
UST70-S09-4-112113	311428-19	11/21/13	Soil		X				X	
UST70-S10-8-112113	311428-20	11/21/13	Soil		X				X	
UST70-B05-11-112113	311428-21	11/21/13	Soil		X		X(A)		X	
UST70-500	311428-22	11/21/13	Soil		X				X	
UST70-501	311428-23	11/21/13	Soil		X		X(A)		X	
BUST-S54-8	311453-01	11/20/13	Soil		X		X		X	
BUST-S55-12	311453-02	11/20/13	Soil		X		X		X	
BUST-S56-8	311453-03	11/20/13	Soil		X		X		X	
BUST-S57-12	311453-04	11/20/13	Soil		X		X		X	
BUST-S34-4	311454-01	11/21/13	Soil		X		X		X	
BUST-S35-8	311454-02	11/21/13	Soil		X		X		X	
BUST-S36-12	311454-03	11/21/13	Soil		X		X		X	
BUST-S32-8	311454-04	11/21/13	Soil		X		X		X	
BUST-S33-12	311454-05	11/21/13	Soil		X		X		X	
BUST-B34-12	311454-06	11/21/13	Soil		X		X		X	
BUST-B35-12	311454-07	11/21/13	Soil		X		X		X	
BUST-B36-6	311454-08	11/21/13	Soil		X		X		X	
BUST-B37-10	311454-09	11/21/13	Soil		X		X		X	

Field Sample ID	Laboratory Sample ID	Sampling Date	Sample Type	Analysis						
				VOC	PAHs	PCBs	Metals	TPH-Gx	TPH-Dx	Misc.
BUST-B38-8	311454-10	11/21/13	Soil		X		X		X	
BUST-B39-12	312058-01	12/03/13	Soil		X		X		X	EPH
BUST-B40-12	312058-02	12/03/13	Soil		X		X		X	
BUST-B41-12	312058-03	12/03/13	Soil		X		X		X	
BUST-S58-12	312058-04	12/03/13	Soil		X		X		X	EPH
BUST-S59-12	312058-05	12/03/13	Soil		X		X		X	
BUST-S60-6	312058-06	12/03/13	Soil		X		X		X	
BUST-S61-12	312058-07	12/03/13	Soil		X		X		X	
BUST-S62-3	312200-01	12/12/13	Soil		X		X		X	
BUST-S63-3	312200-02	12/12/13	Soil		X		X		X	
BUST-S64-6	312200-03	12/12/13	Soil		X		X		X	
BUST-S65-9	312200-04	12/12/13	Soil		X		X		X	
BUST-S66-3	312200-05	12/12/13	Soil		X		X		X	
BUST-S67-3	312200-06	12/12/13	Soil		X		X		X	
BUST-504-FD	312200-07	12/12/13	Soil		X		X		X	
UST70-S17-4	312335-01	12/19/13	Soil		X				X	
UST70-S18-8	312335-02	12/19/13	Soil		X				X	
UST70-S19-8	312335-03	12/19/13	Soil		X				X	
BUST-S68-3	312336-01	12/19/13	Soil		X		X[(A)]		X	
BAST- S038-5	312362-02	12/23/13	Soil		X		X[(A)]		X	
BAST- S039-3	312362-03	12/23/13	Soil		X				X	
BAST- S040-5	312362-04	12/23/13	Soil		X				X	
BAST- S041-3	312362-05	12/23/13	Soil		X				X	
BAST- S042-5	312362-06	12/23/13	Soil		X				X	
BAST-B052-7	312362-07	12/23/13	Soil		X		X[(A)]		X	
BAST-B054-7	312362-08	12/23/13	Soil		X				X	
BAST- 505-FD	312362-09	12/23/13	Soil		X				X	
UST29-S01-3-122313	312363-01	12/23/13	Soil	X	X		X	X	X	FRM
UST29-S02-3-122313	312363-02	12/23/13	Soil	X	X			X	X	FRM
UST29-S03-3-122313	312363-03	12/23/13	Soil	X	X			X	X	FRM
UST29-S04-3-122313	312363-04	12/23/13	Soil	X	X			X	X	FRM
UST29-S05-3-122313	312363-05	12/23/13	Soil	X	X			X	X	FRM
UST29-S06-3-122313	312363-06	12/23/13	Soil	X	X		X	X	X	FRM
UST29-S07-3-122313	312363-07	12/23/13	Soil	X	X			X	X	FRM

Field Sample ID	Laboratory Sample ID	Sampling Date	Sample Type	Analysis						
				VOC	PAHs	PCBs	Metals	TPH-Gx	TPH-Dx	Misc.
UST29-500-122313	312363-08	12/23/13	Soil	X	X		X	X	X	FRM
UST29-B01-5-122313	312363-09	12/23/13	Soil	X	X			X	X	FRM
UST29-B02-5-122313	312363-10	12/23/13	Soil	X	X		X	X	X	FRM
UST29-B03-5-122313	312363-11	12/23/13	Soil	X	X			X	X	FRM
UST29-B04-5-122313	312363-12	12/23/13	Soil	X	X			X	X	FRM
UST29-B05-5-122313	312363-13	12/23/13	Soil	X	X			X	X	FRM
UST29-B06-5-122313	312363-14	12/23/13	Soil	X	X		X	X	X	FRM
UST29-501-122313	312363-15	12/23/13	Soil	X	X			X	X	FRM
UST29-S08-8-123013	312433-01	12/30/13	Soil	X	X		X	X	X	FRM
UST29-S09-8-123013	312433-02	12/30/13	Soil	X	X		X	X	X	FRM
UST29-S10-8-123013	312433-03	12/30/13	Soil	X	X		X	X	X	FRM
UST29-S11-8-123013	312433-04	12/30/13	Soil	X	X		X	X	X	FRM
UST29-B07-18-123013	312433-05	12/30/13	Soil	X	X		X	X	X	FRM
BAST-S43-3-123013	312434-01	12/30/13	Soil	X	X		X	X	X	
BAST-S44-5-123013	312434-02	12/30/13	Soil	X	X			X	X	
BAST-S45-3-123013	312434-03	12/30/13	Soil	X	X			X	X	
BAST-S47-3-123013	312434-05	12/30/13	Soil	X	X			X	X	
BAST-S48-5-123013	312434-06	12/30/13	Soil	X	X			X	X	
UST29-B08-15-010214	401024-01	01/02/14	Soil	X	X		X	X	X	FRM
UST29-S12-3-010314	401024-02	01/03/14	Soil	X	X			X	X	FRM
UST29-S13-6-010314	401024-03	01/03/14	Soil	X	X			X	X	FRM
UST29-S14-9-010314	401024-04	01/03/14	Soil	X	X			X	X	FRM
UST29-S15-3-010314	401024-05	01/03/14	Soil	X	X			X	X	FRM
UST29-S16-6-010314	401024-06	01/03/14	Soil	X	X		X	X	X	FRM
UST29-S17-9-010314	401024-07	01/03/14	Soil	X	X			X	X	FRM
UST29-S18-3-010314	401024-08	01/03/14	Soil	X	X			X	X	FRM
UST29-S19-6-010314	401024-09	01/03/14	Soil	X	X			X	X	FRM
UST29-S20-9-010314	401024-10	01/03/14	Soil	X	X		X	X	X	FRM
UST29-S21-3-010314	401024-11	01/03/14	Soil	X	X			X	X	FRM
UST29-B09-15-010314	401024-12	01/03/14	Soil	X	X			X	X	FRM
UST29-B10-15-010314	401024-13	01/03/14	Soil	X	X			X	X	FRM
UST29-B11-15-010314	401024-14	01/03/14	Soil	X	X			X	X	FRM
UST70-S20-010314	401025-01	01/03/14	Soil						X	
UST70-S21-010314	401025-02	01/03/14	Soil						X	

Field Sample ID	Laboratory Sample ID	Sampling Date	Sample Type	Analysis						
				VOC	PAHs	PCBs	Metals	TPH-Gx	TPH-Dx	Misc.
BAST-B53-10-010214	401026-01	01/02/14	Soil	X	X			X	X	
BAST-B55-10-010214	401026-02	01/02/14	Soil	X	X			X	X	
BAST-S49-8-010214	401026-03	01/02/14	Soil	X	X			X	X	
BAST-S50-8-010314	401026-04	01/03/14	Soil	X	X			X	X	
BUST-S69-3-010314	401027-01	01/03/14	Soil						X	
BAST-S51-8-010714	401054-01	01/07/14	Soil	X	X			X	X	
BAST-S52-8-010714	401054-02	01/07/14	Soil	X	X			X	X	
BAST-S53-5-010714	401054-03	01/07/14	Soil	X	X			X	X	
BAST-S54-8-010714	401054-04	01/07/14	Soil	X	X		X	X	X	
UST70-S22-8-010614	401055-01	01/06/14	Soil		X				X	
UST70-502	401055-02	01/06/14	Soil		X				X	
UST29-B12-17-010614	401057-01	01/06/14	Soil	X	X		X	X	X	FRM
UST29-S22-9-010714	401069-01	01/07/14	Soil	X	X			X	X	
UST29-B13-16-010714	401069-02	01/07/14	Soil	X	X			X	X	
UST29-S23-12-010714	401069-03	01/07/14	Soil	X	X			X	X	
UST29-S24-3-010814	401069-04	01/08/14	Soil	X	X			X	X	
UST29-S25-6-010814	401069-05	01/08/14	Soil	X	X			X	X	
UST29-S26-9-010814	401069-06	01/08/14	Soil	X	X		X	X	X	
UST29-S27-6-010814	401069-07	01/08/14	Soil	X	X			X	X	
UST29-S28-3-010814	401069-08	01/08/14	Soil	X	X			X	X	
UST29-S29-9-010814	401069-09	01/08/14	Soil	X	X			X	X	
UST29-S30-6-010814	401069-10	01/08/14	Soil	X	X			X	X	
UST29-S31-3-010814	401069-11	01/08/14	Soil	X	X		X	X	X	
UST29-S32-9-010814	401069-12	01/08/14	Soil	X	X			X	X	
UST29-S33-6-010814	401069-13	01/08/14	Soil	X	X			X	X	
UST29-S34-3-010814	401069-14	01/08/14	Soil	X	X			X	X	
UST29-B14-17-010814	401069-15	01/08/14	Soil	X	X			X	X	
UST29-S35-6-010814	401069-16	01/08/14	Soil	X	X		X	X	X	
UST29-S36-3-010814	401069-17	01/08/14	Soil	X	X			X	X	
UST29-B15-17-010814	401069-18	01/08/14	Soil	X	X			X	X	
UST29-B502	401069-19	01/08/14	Soil	X	X			X	X	
UST29-B16-17-010814	401069-20	01/08/14	Soil	X	X			X	X	
UST29-S37-6-010914	401108-01	01/09/14	Soil	X	X			X	X	FRM
UST29-S38-6-010914	401108-02	01/09/14	Soil	X	X			X	X	FRM

Field Sample ID	Laboratory Sample ID	Sampling Date	Sample Type	Analysis						
				VOC	PAHs	PCBs	Metals	TPH-Gx	TPH-Dx	Misc.
UST29-S39-9-010914	401108-03	01/09/14	Soil	X	X			X	X	FRM
UST29-S40-9-010914	401108-04	01/09/14	Soil	X	X			X	X	FRM
UST29-S41-6-011014	401108-05	01/10/14	Soil	X	X			X	X	FRM
BAST-S055-3-012014	401211-01	01/20/14	Soil		X				X	
BAST-S056-3-012014	401211-02	01/20/14	Soil		X				X	
BV-S01-6-011714	401212-01	01/17/14	Soil		X		X		X	
BV-B01-8-011714	401212-02	01/17/14	Soil		X		X		X	
BV-S02-6-011714	401212-03	01/17/14	Soil		X		X		X	
BV-S03-6-011714	401212-04	01/17/14	Soil		X		X		X	
BV-S03-6-011714	401212-04	01/17/14	Soil		X		X		X	
BV-B02-8-011714	401212-05	01/17/14	Soil		X		X		X	
BV-S04-6-011714	401212-06	01/17/14	Soil		X				X	
NRU-S03-12-012214	401247-01	01/22/14	Soil		X				X	
NRU-S09-12-012214	401247-02	01/22/14	Soil		X				X	
NRU-S12-12-012214	401247-03	01/22/14	Soil		X				X	
NRU-B01-14-012214	401247-04	01/22/14	Soil		X				X	
NRU-B02-14-012214	401247-05	01/22/14	Soil		X				X	
NRU-S06-12-012314	401292-01	01/23/14	Soil		X				X	
NRU-B03-14-012314	401292-02	01/23/14	Soil		X				X	
NRU-S07-4-012314	401292-03	01/23/14	Soil		X				X	
NRU-S08-8-012314	401292-04	01/23/14	Soil		X				X	
NRU-S01-4-012314	401292-05	01/23/14	Soil		X				X	
NRU-S02-8-012314	401292-06	01/23/14	Soil		X				X	
NRU-S13-4-012314	401292-07	01/23/14	Soil		X				X	
NRU-S14-8-012314	401292-08	01/23/14	Soil		X				X	
NRU-S15-12-012314	401292-09	01/23/14	Soil		X				X	
NRU-S21-4-012414	401292-10	01/24/14	Soil		X				X	
NRU-S22-8-012414	401292-11	01/24/14	Soil		X				X	
NRU-S23-12-012414	401292-12	01/24/14	Soil		X				X	
NRU-S20-12-012414	401292-13	01/24/14	Soil		X				X	
NRU-B04-14-012414	401292-14	01/24/14	Soil		X				X	
NRU-501-012414	401292-15	01/24/14	Soil		X				X	
NRU-S04-4-012414	401293-01	01/24/14	Soil		X				X	
NRU-S05-8-012414	401293-02	01/24/14	Soil		X				X	

Field Sample ID	Laboratory Sample ID	Sampling Date	Sample Type	Analysis						
				VOC	PAHs	PCBs	Metals	TPH-Gx	TPH-Dx	Misc.
NRU-S10-4-012414	401293-03	01/24/14	Soil		X				X	
NRU-S11-8-012414	401293-04	01/24/14	Soil		X				X	
NRU-S16-12-012414	401293-05	01/24/14	Soil		X				X	
NRU-S17-8-012414	401293-06	01/24/14	Soil		X				X	
NRU-S18-4-012414	401293-07	01/24/14	Soil		X				X	
NRU-S19-8-012414	401293-08	01/24/14	Soil		X				X	
NRU-500-012414	401293-09	01/24/14	Soil		X				X	
NRU-SP01-1-012414	401294-01	01/24/14	Soil	X	SVOC	X	pp	X	X	SPLP/As
NRU-SP01-2-012414	401294-02	01/24/14	Soil	X	SVOC	X	pp	X	X	
NRU-SP01-3-012414	401294-03	01/24/14	Soil	X	SVOC	X	pp	X	X	SPLP/As
NRU-SP02-1-012414	401294-04	01/24/14	Soil	X	SVOC	X	pp	X	X	SPLP/As
NRU-SP02-2-012414	401294-05	01/24/14	Soil	X	SVOC	X	pp	X	X	
NRU-SP02-3-012414	401294-06	01/24/14	Soil	X	SVOC	X	pp	X	X	
NRU-SP03-1-012414	401294-07	01/24/14	Soil	X	SVOC	X	pp	X	X	
NRU-SP03-2-012414	401294-08	01/24/14	Soil	X	SVOC	X	pp	X	X	
NRU-SP03-3-012414	401294-09	01/24/14	Soil	X	SVOC	X	pp	X	X	SPLP/Cu
NRU-SP04-1-012414	401294-10	01/24/14	Soil	X	SVOC	X	pp	X	X	
NRU-SP04-2-012414	401294-11	01/24/14	Soil	X	SVOC	X	pp	X	X	
NRU-SP04-3-012414	401294-12	01/24/14	Soil	X	SVOC	X	pp	X	X	
NRU-SP05-1-012414	401294-13	01/24/14	Soil	X	SVOC	X	pp	X	X	
NRU-SP05-2-012414	401294-14	01/24/14	Soil	X	SVOC	X	pp	X	X	
NRU-SP05-3-012414	401294-15	01/24/14	Soil	X	SVOC	X	pp	X	X	SPLP/Cu
NRU-SP06-1-012414	401294-16	01/24/14	Soil	X	SVOC	X	pp	X	X	
NRU-SP06-2-012414	401294-17	01/24/14	Soil	X	SVOC	X	pp	X	X	
NRU-SP06-3-012414	401294-18	01/24/14	Soil	X	SVOC	X	pp	X	X	
NRU-B5-16-012714	401318-01	01/27/14	Soil		X			X	X	BTEX/EPH /VPH
BAST-B66-7-012814	401341-01	01/28/14	Soil	X	X			X	X	
BAST-S67-4-012814	401341-02	01/28/14	Soil	X	X			X	X	
BAST-S68-4-012814	401341-03	01/28/14	Soil	X	X			X	X	
NRU-S24-4-013014	401367-01	01/30/14	Soil	X	X			X	X	
NRU-S25-8-013014	401367-02	01/30/14	Soil	X	X			X	X	
NRU-S26-12-013014	401367-03	01/30/14	Soil	X	X			X	X	
NRU-S27-4-013014	401367-04	01/30/14	Soil	X	X			X	X	
NRU-S28-8-013014	401367-05	01/30/14	Soil	X	X			X	X	

Field Sample ID	Laboratory Sample ID	Sampling Date	Sample Type	Analysis						
				VOC	PAHs	PCBs	Metals	TPH-Gx	TPH-Dx	Misc.
NRU-S29-12-013014	401367-06	01/30/14	Soil	X	X			X	X	
NRU-B06-14-013014	401367-07	01/30/14	Soil	X	X			X	X	
NRU-B07-14-013014	401367-08	01/30/14	Soil	X	X			X	X	
NRU-502-013014	401367-09	01/30/14	Soil	X				X		

Notes:

[(A)] - Arsenic, cadmium, chromium, copper, mercury, nickel, and zinc
EPH - Extractable petroleum hydrocarbon
FMR - Formaldehyde
Metals - Antimony, arsenic, cadmium, chromium, copper, mercury, nickel, and zinc, unless otherwise noted.
Misc. - Miscellaneous
PAHs - Polycyclic aromatic hydrocarbons
PCBs - Polychlorinated biphenyl
pp - Priority pollutant metals, *i.e.,* antimony, arsenic, beryllium, cadmium, chromium, copper, lead, mercury, nickel, selenium, silver, thallium, and zinc
SPLP - Synthetic precipitation leaching procedure; the leachates were analyzed for copper (SPLP/Cu) and/or arsenic (SPLP/As).
TPH-Dx - Diesel and motor oil range total petroleum hydrocarbon
TPH-Gx - Gasoline range total petroleum hydrocarbon
VOC - Volatile organic compound
VPH - Volatile petroleum hydrocarbon
X - The analysis was requested and performed on the sample.

The analytical parameters requested for the samples, the respective analytical methods, and the analytical laboratories are summarized below:

Parameter	Analytical Method	Analytical Laboratory
Volatile Organic Compounds (VOCs)	SW846 Method 8260C	Friedman & Bruya, Inc. (F&BI) Seattle, WA
Polycyclic Aromatic Hydrocarbons (PAHs)	SW846 Method 8270D-SIM	
PCB Aroclors	SW846 Method 8082A	
BTEX	SW846 Method 8021B	
TPH - Gasoline Range	NWTPH-Gx	
TPH - Diesel & Motor Oil Range	NWTPH-Dx	
Total Metals	EPA Method 200.8	
Mercury	EPA Method 1631E	
Extractable Petroleum Hydrocarbon	NWTPH-EPH	Fremont Analytical, Inc. Seattle, WA
Volatile Petroleum Hydrocarbon	NWTPH-VPH	
Formaldehyde	SW846 Method 8315A	ALS Environmental Services, Inc. Kelso, Washington

Notes:

1. SW846 - *USEPA Test Methods for Evaluating Solid Waste, Physical/Chemical Methods,* SW-846, Third Edition, December 1996.
2. EPA Methods - *USEPA Methods for Chemical Analysis of Water and Wastes,* EPA–600/4-79-020, March 1983 Revision.
3. EPA Method 1631E - *Mercury in Water by Oxidation, Purge and Trap, and Cold Vapor Atomic Fluorescence Spectrometry,* Office of Water, U.S. Environmental Protection Agency, August 2002, EPA-821-R-02-019.
4. NWTPH Methods – *Washington State Department of Ecology, Analytical Methods for Petroleum Hydrocarbons*, Publication No. ECY 97-602, June 1997.

DATA VALIDATION FINDINGS

1. VOCs by GC/MS (EPA Method SW8260C)

1.1 Sample Management and Holding Time

Samples were received in the laboratory intact and in consistence with the accompanying chain-of-custody (COC) documentation. In some cases where cooler temperature was outside the 4±2°C criteria; samples were hand-delivered to the laboratory the same day of collection. The cooler temperature exceedance had no significant effects on data quality. No other anomalies were identified in relation to sample preservation, handling, and transport.

All samples in SDG: 401294 were not preserved in methanol upon collection. The analyses were performed within a relatively short period of time (3 days) of collection. VOCs results for these samples, rather than being rejected, were qualified (UJ) for non-detects and (J) for detects as estimated.

Soil samples should be preserved at the time of collection. Soil samples should be analyzed within 14 days of collection. All samples were analyzed within the required holding times.

1.2 GC/MS Instrument Performance Check

The method require that (1) gas chromatograph/mass spectrometer (GC/MS) tuning analysis be performed, using bromofluorobenzene (BFB), at the beginning of each 12-hour period prior to any analysis, and (2) specific mass ions meet the criteria provided in the method. All instrument performance checks met the requirements.

1.3 Initial Calibration (ICAL)

The ICAL criteria require that (1) if linear average RFs is chosen as the quantitation option, at least five standards at different concentrations should be analyzed and the percent relative standard deviation (%RSD) of response factors (RFs) be ≤20% for the analyte, (2) if least-square linear regression is chosen for quantitation, the correlation coefficient (r) be >0.995, and (3) if six-point non-linear (quadratic) curve is chosen for quantitation, the coefficient of determination (r^2) be >0.99. ICALs either met the requirements or the outliers had no adverse effects on data usability (*e.g.,* %RSD >20% for a compound not detected in samples).

An initial calibration verification (ICV) standard (second source standard) was analyzed to verify the calibration curve. Percent difference (%D) values were either within ±30%, or the exceedance had no adverse effects on data usability (*e.g.,* biased high ICV recovery for a compound not detected in samples).

1.4 Calibration Verification (CCV)

The CCV criteria requires that (1) continuing calibrations be analyzed at the beginning of each 12-hour analysis period prior to the analysis of method blank and samples, and (2) the %D value be within ±20%.

Calibration verifications either met the requirements, or the exceedance had no adverse effects on data usability (*e.g.,* biased high CCV recovery for a compound not detected in samples), except for the following:

SDG	CCV ID	Compound	%D	Bias	Affected Sample	Data Qualifier
401108	GCMS9 1/10/14, 11:34	Bromomethane	40.9%	Low	UST29-S37-6-010914 UST29-S38-6-010914 UST29-S39-9-010914 UST29-S40-9-010914 UST29-S41-6-011014	**UJ**

1.5 Method Blanks

Method blanks were prepared and analyzed as required. Target compounds were not detected at or above the reporting limits (RLs). Methylene chloride was detected in selected method blanks at levels greater than their method detection limits but less than the RLs. Methylene chloride results for samples associated with these blanks were evaluated and qualified (U) as non-detected at the reported values, as summarized in **SUMMARY, Table I.**

1.6 Laboratory Control Sample (LCS) and LCS Duplicate (LCSD)

LCS and LCSD were prepared and analyzed as required by the method. Percent recovery (%R) and relative percent difference (RPD) values either met the project control limits, or the outliers had no adverse effects on data usability (*e.g.,* biased high recovery for a compound not detected in samples), except for the following:

SDG#	LCS ID	Analyte	LCS %R	LCSD %R	Control Limit	Affected Sample	Data Qualifier
401069	LCS	Methylene Chloride	56%	-	62-119%	All samples in this SDG	**UJ**

1.7 Surrogate Spikes

Surrogate spikes were added to all samples as required by the method. All surrogate spike %R values were within the project control limits.

1.8 Matrix Spike (MS)

MS analyses were performed on project and batch QC samples at the proper frequency (≥5% of the samples analyzed for VOCs). All %R values were within the project control limits.

1.9 Internal Standards

The method requires that (1) internal standard retention time be within ±30 seconds from that of the associated 12-hour calibration standard, and (2) the area counts of all internal standards be within –50% to +100% of the associated 12-hour calibration standard. All internal standards in the sample and associated QC analyses met the criteria.

1.10 Reporting Limit and Target Compound Quantitation

RLs were supported with adequate initial calibration concentrations.

1,4-dioxane and vinyl acetate were reported from the mass spectrum library search, the reported RLs were considered estimated. These compounds were not detected in any of the field samples; the results were qualified (UJ) to indicate that the RLs were estimated values.

In cases where a sample was analyzed for both VOCs (Method 8260C) and SVOCs (Method 8270D), the results for 1,2-dichlorobenzene, 1,3-dichlorobenzene, 1,4-dichlorobenzene, 1,2,4-trichlorobenzene, hexachlorobutadiene, and naphthalene were to be reported from the SVOCs analysis, in favor of the lower detection limits.

In cases where a sample was analyzed for both VOCs (Method 8260C) and PAHs (Method 8270-SIM), the result for naphthalene was to be reported from the PAHs analysis, in favor of the lower detection limit.

1.11 Field Duplicates

Three sets of field duplicates were submitted for VOCss analyses. VOCs were not detected at or above RLs in these sample; the field precision met the project advisory criteria.

1.12 Overall Assessment of VOCs Data Usability

VOCs data are of known quality and acceptable for use, as qualified.

2. SVOCs and PAHs by GC/MS and GC/MS - SIM (EPA Method SW8270D and SIM)

2.1 Sample Management and Holding Times

No anomalies were identified in relation to sample preservation, handling, and transport as discussed in Section 1.1.

Soil samples should be extracted within 14 days and water within seven days of collection. Extracts should be analyzed within 40 days of extraction. All samples were extracted and analyzed within the required holding times.

2.2 GC/MS Instrument Performance Check

DFTPP tuning was performed within each 12-hour interval. All required ion abundance ratios met the method requirements.

2.3 Initial Calibration (ICAL)

The ICAL criteria require that (1) if linear average RFs is chosen as the quantitation option, at least five standards at different concentrations should be analyzed and the %RSD of RFs be ≤20% for the analyte, (2) if least-square linear regression is chosen for quantitation, the correlation coefficient (r) be >0.995, and (3) if six-point non-linear (quadratic) curve is chosen for quantitation, the coefficient of determination (r^2) be >0.99. All ICALs met the requirements.

An ICV standard (second source standard) was analyzed to verify the calibration curve. %D values were either within ±30%, or the exceedance had no adverse effects on data usability (*e.g.,* biased high ICV recovery for a compound not detected in samples).

2.4 Calibration Verification (CCV)

The analytical method requires that (1) continuing calibration verifications be analyzed at the beginning of each 12-hour analysis period prior to the analysis of method blank and samples, and (2) the %D be within ±20%. The CCVs met the requirements, except for the following:

SDG	CCV ID	Compound	%D	Bias	Affected Sample	Data Qualifier
401108	GCMS6 1/10/14, 23:53	Indeno(1,2,3-cd)perylene	24.3%	Low	UST29-S37-6-010914	**UJ**

2.5 Method Blanks

Method blanks were prepared and analyzed as required. Target compounds were not detected at or above the RLs in the method blanks.

2.6 Surrogate Spikes

Surrogate spikes were added to all samples as required by the method. All surrogate spike %R values were either within the project control limits or at levels that had no adverse effects on data quality (*e.g.,* biased-high recovery for compounds that were not detected in samples). In some cases surrogate spike %R values were not applicable for data evaluation because the samples contained high levels of target PAHs and required dilution analysis; no data were qualified in these cases.

2.7 Matrix Spike (MS) and MS Duplicate (MSD)

MS and MSD analyses were performed on project and batch QC samples at the proper frequency (≥5% of samples analyzed). All %R and RPD values met the project control criteria, except for the following:

SDG#	Parent Sample ID	Analyte	MS %R	MSD %R	Control Limit	RPD	Data Qualifier
312363	UST29-S01-3-122313	Naphthalene	99%	78%	44-129%	24%	J
		Acenaphthene	106%	78%	51-123%	30%	
		Fluorene	109%	82%	37-137%	28%	
		Phenanthrene	150%	1%	45-124%	197%	
		Anthracene	108%	61%	32-124%	56%	
		Fluoranthene	127%	0%	50-125%	217%	
		Pyrene	133%	0%	41-135%	273%	
		Benz(a)anthracene	106%	33%	23-144%	105%	
		Chrysene	103%	21%	45-122%	132%	
		Benzo(b)fluoranthene	122%	45%	31-144%	92%	
		Benzo(k)fluoranthene	94%	64%	45-130%	38%	
		Benzo(a)pyrene	113%	47%	39-128%	82%	
		Indeno(1,2,3-cd)pyrene	111%	73%	28-146%	41%	
		Benzo(g,h,i)perylene	103%	70%	37-133%	38%	
401024	UST29-B08-15-010214	Phenanthrene	96%	153%	45-124%	46%	J
		Fluoranthene	76%	134%	50-125%	55%	
		Pyrene	73%	129%	41-135%	55%	
		Benz(a)anthracene	79%	104%	23-144%	27%	
		Chrysene	83%	121%	45-122%	37%	
401054	BAST-S53-5-010714	Benzo(k)fluoranthene	75%	60%	45-130%	22%	J
401212	BV-B01-8-011714	Phenanthrene	70%	53%	45-124%	28%	J

SDG#	Parent Sample ID	Analyte	MS %R	MSD %R	Control Limit	RPD	Data Qualifier
401292	NRU-S06-12-012314	Phenanthrene	91%	185%	45-124%	68%	J
		Anthracene	86%	112%	32-124%	26%	
		Fluoranthene	117%	302%	50-125%	88%	
		Pyrene	119%	344%	41-135%	97%	
		Benz(a)anthracene	87%	192%	23-144%	75%	
		Chrysene	89%	218%	45-122%	84%	
		Benzo(b)fluoranthene	96%	241%	31-144%	86%	
		Benzo(k)fluoranthene	87%	159%	45-130%	59%	
		Benzo(a)pyrene	95%	237%	39-128%	86%	
		Indeno(1,2,3-cd)pyrene	108%	198%	28-146%	59%	
		Benzo(g,h,i)perylene	95%	177%	37-133%	60%	
401293	NRU-S05-8-012414	Fluoranthene	-	-	-	51%	J
		Pyrene				55%	
		Benz(a)anthracene				24%	
		Chrysene				26%	
		Benzo(b)fluoranthene				73%	
		Benzo(k)fluoranthene				51%	
		Benzo(a)pyrene				69%	
		Indeno(1,2,3-cd)pyrene				45%	
		Dibenz(a,h)anthracene				36%	
		Benzo(g,h,i)perylene				54%	
401294	NRU-SP01-1-012414	2,4-Dinitrophenol	29%	37%	50-150%	24%	UJ
		4,6-Dinitro-2-methylphenol	32%	42%		27%	
		4-Nitrophenol	9%	136%		175%	
		Hexachlorocyclopentadiene	12%	21%		55%	

Note: RPD control criteria = ±20%

2.8 Laboratory Control Sample (LCS) and LCS Duplicate (LCSD)

LCS and LCSD analyses were performed as required by the method. All %R and RPD values were within the project control limits, except for the following:

SDG#	LCS ID	Analyte	LCS %R	LCSD %R	Control Limit	RPD	Affected Sample	Data Qualifier
401212	LCS/LCSD	Indeno(1,2,3-cd)pyrene	77%	60%	62-119%	25%	BV-S01-6-011714 BV-S04-6-011714	UJ

Note: RPD control criteria = ±20%

2.9 Internal Standards

The method requires that (1) internal standard retention time be within ±30 seconds from that of the associated 12-hour calibration standard, and (2) the area counts of all internal standards be within –50% to +100% of the associated 12-hour calibration standard. All internal standards in the sample and associated QC analyses met the criteria, except for the following:

Sample ID	Internal Standard	Sample Response Area	CCV Response Area	Affected Compound	Data Qualifier
UST70-S03-4-112113	Phenanthrene-d_{10} Chrysene-d_{12} Perylene-d_{12}	227614 223106 174616	460769 494494 421270	Benzo(b)fluoranthene Chrysene Fluoranthene Pyrene	**J**
BUST-504-FD	Perylene-d_{12}	279707	126697	Benzo(k)fluoranthene Dibenzo(a,h)anthracene Indeno(1,2,3-cd)pyrene	**J**
UST29-S23-12-010714 (Diluted Analysis)	Chrysene-d_{12}	202737	406511	Benz(a)anthracene Chrysene	**J**

2.10 Reporting Limits and Target Compound Quantitation

Sample-specific RLs were supported with adequate initial calibration concentrations. In some cases samples required dilution for definitive quantitation of target compounds; the RLs were raised accordingly, and the compounds reported from the dilution analysis. The remaining (un-diluted) target compounds were to be reported from the initial analysis for the lower detection limits.

2.11 Field Duplicates

Fourteen sets of field duplicates were submitted for PAHs analyses. Field duplicate results for detected target compounds, RPD (or concentration difference) values, and data qualification were presented in **Appendix A**.

2.12 Overall Assessment of PAHs Data Usability

PAHs data are of known quality and acceptable for use, as qualified.

3. PCB Aroclors (EPA Method SW8082A)

3.1 Sample Management and Holding Times

No anomalies were identified in relation to sample preservation, handling, and transport as discussed in Section 1.1.

Soil samples should be extracted within 14 days of collection and extracts analyzed within 40 days of extraction. All samples were extracted and analyzed within the required holding times.

3.2 Initial Calibration

The method requires that (1) a minimum of 5-point calibration be performed using the mixture of Aroclor 1016 and 1260, (2) a single-point calibration be performed for the other five Aroclors to establish calibration factors (CFs) and for Aroclor pattern recognition, (3) at least 3 peaks (preferably 5 peaks) must be chosen for each Aroclor for characterization, (4) the %RSD values of Aroclor 1016 and 1260 CFs must be ≤20%, and (5) if dual column analysis is chosen, both columns should meet the requirements. All ICALs met the requirements.

3.3 Calibration Verification

CCV analyses should be performed for each 12-hour analysis sequence prior to sample analyses, and the %D be within ±20%.

Calibration verifications were performed at the required frequency. All %D values either met the control criteria or biased high for target compounds that were not detected in the associated samples.

3.4 Method Blanks

Method blanks were prepared and analyzed as required. PCB Aroclors were not detected at or above the MDLs in the method blanks.

3.5 Surrogate Spikes

Surrogate spikes were added to all samples as required by the method. All surrogate spike %R values were within the laboratory control limits.

3.6 Matrix Spike and Matrix Spike Duplicate (MS/MSD)

MS/MSD analyses were performed on project samples or batch QC samples at the required frequency. All %R and RPD values were within the laboratory control limits.

3.7 Laboratory Control Sample (LCS) and LCS Duplicate (LCSD)

LCS and LCSD analyses were performed as required by the method. All %R and RPD values were within the project control limits.

3.8 Method Reporting Limits and Target Compound Quantitation

Sample-specific RLs were supported with adequate initial calibration concentrations and achieved the project target quantitation limits.

3.9 Field Duplicates

Field duplicates were not submitted for PCB Aroclors analysis in these SDGs.

3.10 Overall Assessment of PCB Aroclors Data Usability

PCB Aroclor data are of known quality and acceptable for use.

4. TPH-Gasoline by GC/FID (Method NWTPH-Gx)

4.1 Sample Management and Holding Times

No anomalies were identified in relation to sample preservation, handling, and transport as discussed in Section 1.1.

All samples in SDG: 401294 were not preserved in methanol upon collection. The analyses were performed within a relatively short period of time (3 days) of collection. TPH-Gasoline results for these samples, rather than being rejected, were qualified (UJ) for non-detects and (J) for detects as estimated.

Soil samples should be preserved in methanol at the time of collection. Soil samples should be analyzed within 14 days of collection. All samples were analyzed within the required holding times.

4.2 Initial Calibration (ICAL)

The method criteria require that (1) if linear average RFs is chosen as the quantitation option, the %RSD of RFs be ≤20% for the analyte, (2) if least-square linear regression is chosen for quantitation, the correlation coefficient (r) be ≥0.995, (3) if six-point non-linear (quadratic) curve is chosen for quantitation, the coefficient of determination (r^2) be ≥0.990, and (4) the back-calculated %D value for each calibration standard be within ±15%. Initial calibration met the criteria for all target compounds.

An ICV (second source) standard was analyzed to verify the calibration curve. %D values were within ±20%.

4.3 Calibration Verification

Continuing calibration verification (CCV) analyses were performed at the required frequency for all analytical sequences as required by the method. The %D values for all CCVs met the method criterion (±20%).

4.4 Method Blanks

Method blanks were prepared and analyzed as required. No target compounds were detected at or above the RLs in the method blanks.

4.5 Surrogate Spikes

Surrogate spikes were added to all samples as required by the method. All surrogate spike %R values were either within the project control limits, or outside the control limits due to matrix interference, or diluted below quantitation limits due to high levels of target or non-target compounds in the samples. No data qualifying actions were taken in these cases.

4.6 Matrix Spike and Matrix Spike Duplicate

MS/MSD analyses were not performed for TPH-Gasoline analyses; instead, duplicate and LCS analyses in combination were performed.

4.7 Laboratory Control Sample (LCS)

LCS analyses were performed as required by the method. All %R values were within the laboratory control limits.

4.8 Laboratory Duplicate Analysis

Duplicate analyses were performed on project and batch QC samples at the proper frequency. All RPD and concentration difference values met the laboratory control criteria.

4.9 Reporting Limits and Target Compound Quantitation

Sample-specific RLs were supported with adequate initial calibration concentrations.

4.10 Field Duplicates

Three sets of field duplicates were submitted for PAHs analyses. Field duplicate results for detected target compounds, RPD (or concentration difference) values, and data qualification were presented in **Appendix A**.

4.11 Overall Assessment of TPH-Gasoline Data Usability

TPH-Gasoline data are of known quality and acceptable for use, as qualified.

5. TPH-Diesel & Motor Oil by GC/FID (Method NWTPH-Dx)

5.1 Holding Time

No anomalies were identified in relation to sample preservation, handling, and transport as discussed in Section 1.1.

Soil samples should be extracted within 14 days of collection. Extracts should be analyzed within 40 days of extraction. All samples were extracted and analyzed within the recommended holding times.

5.2 Initial Calibration

The method criteria require that (1) if linear average RFs is chosen as the quantitation option, the %RSD of RFs be ≤20% for the analyte, (2) if least-square linear regression is chosen for quantitation, the correlation coefficient (r) be ≥0.995, (3) if six-point non-linear (quadratic) curve is chosen for quantitation, the coefficient of determination (r^2) be ≥0.990, and (4) the back-calculated %D value for each calibration standard be within ±15%. Initial calibration met the criteria for all target compounds.

An ICV (second source) standard was analyzed to verify the calibration curve. %D values were within ±20%.

5.3 Calibration Verification

The method requires that (1) a mid-range check standard be analyzed prior to and after each analytical batch, and (2) the percent drift (%D) value be within ±20% of the true value.

Calibration verification was performed at required frequency. The %D values were either within the ±20% criterion or at levels that had no adverse effects on data quality (e.g., high-bias %D value where the target compound was not detected in associated sample).

5.4 Method Blanks

Method blanks were prepared and analyzed as required. Target compounds were not detected at or above the RLs in the method blanks.

5.5 Surrogate Spikes

Surrogate spikes were added to all samples as required by the method. All surrogate spike %R values were either within the project control limits, or outside the control limits due to matrix interference, or diluted below quantitation limits due to high levels of target or non-target compounds in the samples. No data qualifying actions were taken in these cases.

5.6 Matrix Spike (MS) and MS Duplicate (MSD)

MS and MSD analyses were performed on project and batch QC samples at the proper frequency. The %R and RPD values met the laboratory control criteria.

5.7 Laboratory Control Sample (LCS)

LCS analyses were performed as required. All %R values met the project control limits.

5.8 Target Compound Identification

Selected sample extracts were cleaned up with acid and silica gel treatment to minimize the biogenic interference with target compound identification, as required by the project. The laboratory reported results as diesel #2 (C10 - C25) and motor oil (C25 - C36), as required by the method. In some cases where sample chromatographic patterns resembled Bunker C fuel, the results were quantitated and reported as Bunker C fuel accordingly. No anomalies were identified relative to target compound identification.

5.9 Reporting Limits and Target Compound Quantitation

The reported RLs were supported with adequate ICAL concentrations.

The Bunker C fuel concentration in sample BUST-S67-3 exceeded instrument calibration range; the result was qualified (J) as estimated.

5.10 Field Duplicates

Fourteen sets of field duplicates were submitted for TPH-Diesel and TPH-Motor Oil analyses. Field duplicate results, RPD (or concentration difference) values, and data qualification for detected TPH-Diesel or Motor Oil were presented in **Appendix A**.

5.11 Overall Assessment of TPH-Diesel and Motor Oil Data Usability

TPH-Diesel and TPH-Motor Oil data are of known quality and acceptable for use, as qualified.

6. Total Metals by ICP/MS and CVAFS (EPA Methods 200.8 and 1631E)

6.1 Sample Management and Holding Times

No anomalies were identified in relation to sample preservation, handling, and transport, as discussed in Section 1.1.

Soil and water samples should be analyzed within 180 days for metals and 28 days for mercury. Samples were analyzed within the required holding times.

6.2 ICP/MS Tuning

Instrument tuning was performed at the required frequency. The stability check (%RSD <5%), mass calibration (mass difference <0.1 AMU), and resolution check (peak width <1.0 AMU at 5% peak height) met the NFG and method criteria.

6.3 Initial Calibration (ICAL)

The ICP/MS method requires that (1) a blank and one calibration standard be used in establishing the analytical curve, and (2) the average of replicate exposures be reported for all standards, QC, and sample analyses.

The CVAFS method require that (1) a blank and five calibration standards be employed to establish the analytical curve, (2) the linearity of the calibration curve should meet the criteria of correlation coefficient ≥ 0.995 for linear regression, and (3) the %RSD <15% if average response factor approach is employed.

All ICALs met the method requirements.

6.4 Calibration Verification (ICV and CCV)

Initial calibration verifications (ICVs) and continuing calibration verifications (CCVs) for ICP/MS and GFAA and ongoing precision recovery (OPR) were analyzed at the required frequency. The %R values either met the control criteria (90 – 110% for metals, 76 – 123% for mercury) or the exceedance had no adverse effects on data usability (e.g., high-bias %D value where the target compound was not detected in associated sample), except for the following:

SDG	CCV ID	Analyte	%R	Affected Sample	Data Qualifier
311391	11/20/13, 15:11	Zinc	111%	BUST-S46-4 BUST-S46A-8 BUST-S47-12 BUST-S44-8	J

SDG	CCV ID	Analyte	%R	Affected Sample	Data Qualifier
				BUST-S45-12 BUST-S40-4 BUST-S41-8 BUST-S42-12 BUST-B29-12 BUST-B30-12 BUST-B31-12 BUST-B32-12	
312058	12/5/2013, 12:02	Lead	112.7%	BUST-S60-6	**J**
401212	1/20/14, 13:26 1/20/14, 13:42	Zinc	112.5% 111.3%	BV-B02-8-011714	**J**

6.5 Blanks

Calibration Blanks: Initial calibration blanks (ICBs) and continuing calibration blanks (CCBs) were not analyzed after calibration verification standards. Target analytes were either not detected at or above the RLs in the ICBs and CCBs, or sample results affected by the ICB/CCB detections were qualified as results of detections in preparation blanks.

Preparation Blanks: Preparation blanks were prepared and analyzed as required. Target analytes were either not detected at or above the RLs in the preparation blanks, or sample results were greater than 10X the detection in the associated blank.

6.6 Laboratory Control Sample (LCS)

LCS analyses were performed as required by the method. All %R values were within the project control limits, or the exceedance had no adverse effects on data usability (e.g., high-bias %R value where the target compound was not detected in associated sample).

6.7 Matrix Spike (MS) and Matrix Spike Duplicate (MSD)

MS and MSD analyses were performed on project and batch QC samples at the adequate frequency (>5% of field sample). The %R and RPD values either met the laboratory control limits or the outliers were not applicable for matrix effect evaluation (e.g. sample concentration >4x spiking level), except for the following:

SDG#	Parent Sample ID	Analyte	MS %R	MSD %R	Control Limit	RPD	Affected Sample	Data Qualifier
312336	BUST-S68-3	Copper	41%	39%	57-120%	5%	BUST-S68-3	**J**

SDG#	Parent Sample ID	Analyte	MS %R	MSD %R	Control Limit	RPD	Affected Sample	Data Qualifier
401294	NRU-SP04-2-012414	Zinc Arsenic	134% 113%	91% 90%	55-129% 70-118%	38% 23%	NRU-SP01-1-012414 NRU-SP01-2-012414 NRU-SP01-3-012414 NRU-SP02-1-012414 NRU-SP02-2-012414 NRU-SP02-3-012414 NRU-SP03-1-012414 NRU-SP03-2-012414 NRU-SP03-3-012414 NRU-SP04-1-012414 NRU-SP04-2-012414 NRU-SP04-3-012414 NRU-SP05-1-012414 NRU-SP05-2-012414 NRU-SP05-3-012414 NRU-SP06-1-012414 NRU-SP06-2-012414 NRU-SP06-3-012414	J

Note: RPD control criteria = ±20%

6.8 Internal Standards

At least three internal standards were added to all field and QC samples for ICP/MS analyses. All percent relative intensity values were within the method criteria (60 - 125%).

6.9 Method Reporting Limits and Analyte Quantitation

Sample-specific RLs were supported with adequate initial calibration concentrations.

6.10 Field Duplicates

Two sets of field duplicates were submitted for metals analyses. Field duplicate results, RPD (or concentration difference) values, and data qualification for detected TPH-Diesel or Motor Oil were presented in **Appendix A**.

6.11 Overall Assessment of Metals Data Usability

Metal data are of known quality and acceptable for use, as qualified.

7. Formaldehyde by HPLC/UV (EPA Method 8315A)

7.1 Sample Management and Holding Time

No anomalies were identified in relation to sample preservation, handling, and transport, as discussed in Section 1.1.

Soil samples should be derivatized and extracted within seven days of sample collection. All derivatized sample extracts should be analyzed within three days after preparation. The sample was prepared and analyzed within the required holding times.

7.2 Instrument Calibration

The method linearity criteria require that (1) if linear average RFs is chosen as the quantitation option, the %RSD of RFs be ≤20% for the analyte, (2) if least-square linear regression is chosen for quantitation, the correlation coefficient (r) be >0.995, and (3) if six-point non-linear (quadratic) curve is chosen for quantitation, the coefficient of determination (r^2) be >0.990. Initial calibration met the criteria for all target compounds.

An ICV (second source) standard was analyzed to verify the calibration curve. %D values were within ±20%.

7.3 Calibration Verification

CCV analyses were performed at the required frequency for all analytical sequences as required by the method. The %D values for all CCVs met the method criterion (±20%).

7.4 Method Blanks

A method blank was prepared and analyzed in each preparation batch as required. Formaldehyde was not detected at or above the RL in method blanks.

7.5 Matrix Spike (MS) and MS Duplicate (MSD)

MS and MSD analyses were performed on project and batch QC samples at the proper frequency. The %R and RPD values met the laboratory control criteria.

7.6 Laboratory Control Samples (LCS)

LCS analyses were performed as required by the methods. The %R values were within the laboratory control limits.

7.7 Field Duplicates

Field duplicates were not submitted for formaldehyde analysis in these SDGs.

7.8 Overall Assessment of Formaldehyde Data Usability

Formaldehyde data are of known quality and acceptable for use, as qualified.

8. Extractable Petroleum Hydrocarbon (EPH) by GC/FID (Method NWTPH-EPH)

8.1 Holding Time

No anomalies were identified in relation to sample preservation, handling, and transport as discussed in Section 1.1.

Soil samples should be extracted within 14 days of collection. Extracts should be analyzed within 40 days of extraction. All samples were extracted and analyzed within the recommended holding times.

8.2 Initial Calibration

The method linearity criteria require that (1) if linear average RFs is chosen as the quantitation option, the %RSD of RFs be ≤20% for the analyte, (2) if least-square linear regression is chosen for quantitation, the correlation coefficient (r) be >0.990, and (3) if six-point non-linear (quadratic) curve is chosen for quantitation, the coefficient of determination (r^2) be >0.990. Initial calibration met the criteria for all target compounds.

Initial calibration information was not submitted for review in these SDGs.

8.3 Calibration Verification

The method requires that (1) a mid-range check standard be analyzed prior to and after each analytical batch, and (2) the percent drift (%D) value be within ±20% of the true value.

Calibration verification was performed at required frequency. The %D values were either within the ±30% criterion or at levels that had no adverse effects on data quality (e.g., high-bias %D value where the target compound was not detected in associated sample).

8.4 Method Blanks

Method blanks were prepared and analyzed as required. Target compounds were not detected at or above the RLs in the method blanks, except for the following:

SDG	Method Blank ID	Compound	MB Conc.	Affected Sample	Original Result	Qualified Result	Unit
312058	6129	Aliphatic C8-C10	0.499 J	BUST-B39-12 BUST-S58-12	1.04 J 1.18 J	**5.63 U** **5.64 U**	**mg/kg**
312058	6129	Aromatic C8-C10	1.0 J	BUST-B39-12 BUST-S58-12	2.65 J 3.76 J	**5.63 U** **5.64 U**	**mg/kg**

8.5 Surrogate Spikes

Surrogate spikes were added to all samples as required by the method. All surrogate spike %R values were either within the project control limits, or outside the control limits due to matrix interference, or diluted below quantitation limits due to high levels of target or non-target compounds in the samples. No data qualifying actions were taken in these cases.

8.6 Matrix Spike (MS)

MS analyses were performed on project and batch QC samples at the proper frequency. The %R values met the laboratory control criteria.

8.7 Laboratory Control Sample (LCS) and LCS Duplicate (LCSD)

LCS and LCSD analyses were performed as required. All %R and RPD values met the project control limits, except for the following:

SDG#	LCS ID	Analyte	LCS %R	LCSD %R	Control Limit	RPD	Affected Sample	Data Qualifier
311258	5838	Aromatic C8-C10	-	67.4%	70-130%	5.25%	BUST-S16-8-111213 BUST-S17-8-111213	**J**
312058	6129	Aromatic C8-C10 Aromatic C10-C12	55.5 33.4	57.5 19.6	70-130%	-	BUST-B39-12 BUST-S58-12	**J**
401318	6467	Aliphatic C8-C10	60.5%	52.1%	70-130%	-	NRU-B5-16-012714	**J**

Note: RPD criteria = ±20%.

8.8 Reporting Limits and Target Compound Quantitation

Sample-specific RLs were adjusted with sample volumes and moisture contents.

8.9 Field Duplicates

Field duplicates were not submitted for EPH analysis in these SDGs.

8.10 Overall Assessment of EPH Data Usability

EPH data are acceptable for use as qualified, based on the information submitted by the laboratory.

9. Volatile Petroleum Hydrocarbon by GC/FID (Method NWTPH-VPH)

9.1 Sample Management and Holding Times

No anomalies were identified in relation to sample preservation, handling, and transport as discussed in Section 1.1.

Soil samples should be preserved with methanol at the time of collection, and analyzed within 14 days of collection. All samples were analyzed within the required holding times.

9.2 Initial Calibration (ICAL)

The method linearity criteria require that (1) if linear average RFs is chosen as the quantitation option, the %RSD of RFs be ≤20%, (2) if least-square linear regression is chosen for quantitation, the correlation coefficient (r) be >0.990, and (3) if six-point non-linear (quadratic) curve is chosen for quantitation, the coefficient of determination (r^2) be >0.990. Initial calibration met the criteria for all target compounds.

Initial calibration information was not submitted for review in these SDGs.

9.3 Calibration Verification

Continuing calibration verification (CCV) analyses were performed at the required frequency for all analytical sequences as required by the method. The %D values for all CCVs met the method criterion (% value within ±20% for the carbon range components and ±15% for individual target compounds).

9.4 Method Blanks

Method blanks were prepared and analyzed as required. No target compounds were detected at or above the RLs in the method blanks.

9.5 Surrogate Spikes

Surrogate spikes were added to all samples as required by the method. All surrogate spike %R values were either within the project control limits, or outside the control limits due to matrix interference, or diluted below quantitation limits due to high levels of target or non-target compounds in the samples. No data qualifying actions were taken in these cases.

9.6 Matrix Spike (MS)

MS analyses were performed on project or batch QC samples at the required frequency. The %R values were within the laboratory control limits, except for the following:

SDG#	Parent Sample ID	Compound	MS %R	Control Limit	Affected Sample	Data Qualifier
401318	NRU-B5-16-012714	Aliphatics C10-C12 Aromatics C10-C12	-18.5% 43.8%	57-120%	NRU-B5-16-012714	J

9.7 Laboratory Control Sample (LCS)

LCS analyses were performed as required by the method. All %R values were within the laboratory control limits.

9.8 Laboratory Duplicate Analysis

Duplicate analyses were performed on project and batch QC samples at the proper frequency. All RPD and concentration difference values met the laboratory control criteria.

9.9 Reporting Limits and Target Compound Quantitation

Sample-specific RLs were consistent with method-recommended practical quantitation limits, and were adjusted with sample volumes and moisture contents.

9.10 Field Duplicates

Field duplicates were not submitted for VPH analysis in these SDGs.

9.11 Overall Assessment of VPH Data Usability

VPH data are acceptable for use as qualified, based on the information submitted by the laboratory.

10. BTEX by GC/PID (EPA Method SW8021B)

10.1 Sample Management and Holding Time

No anomalies were identified in relation to sample preservation, handling, and transport as discussed in Section 1.1.

Soil samples should be preserved in methanol at the time of collection. Soil and water samples should be analyzed within 14 days of collection. All samples were analyzed within the required holding times.

10.2 Initial Calibration (ICAL)

The ICAL criteria require that (1) if linear average RFs is chosen as the quantitation option, at least five standards at different concentrations should be analyzed and the percent relative standard deviation (%RSD) of response factors (RFs) be ≤20% for the analyte, (2) if least-square linear regression is chosen for quantitation, the correlation coefficient (r) be >0.995, and (3) if six-point non-linear (quadratic) curve is chosen for quantitation, the coefficient of determination (r^2) be >0.99. The ICAL met the requirements.

An initial calibration verification (ICV) standard (second source standard) was analyzed to verify the calibration curve. Percent difference (%D) values were either within ±20%, or the exceedance had no adverse effects on data usability (*e.g.,* biased high ICV recovery for a compound not detected in samples).

10.3 Calibration Verification (CCV)

The CCV criteria requires that (1) continuing calibrations be analyzed at the beginning of each 12-hour analysis period prior to the analysis of method blank and samples, and (2) the %D be within ±20. Calibration verifications met the requirements.

10.4 Method Blanks

Method blanks were prepared and analyzed as required. Target compounds were not detected at or above the RLs.

10.5 Laboratory Control Sample (LCS) and LCS Duplicate (LCSD)

LCS and LCSD were prepared and analyzed as required by the method. The %R and RPD values met the project control limits.

10.6 Surrogate Spikes

Surrogate spikes were added to all samples as required by the method. All surrogate spike %R values were within the project control limits.

10.7 Matrix Spike (MS)

MS analyses were performed on project and batch QC samples at the proper frequency. All %R values were within the project control limits.

10.8 Reporting Limit and Target Compound Quantitation

RLs were supported with adequate initial calibration concentrations.

10.9 Field Duplicates

Field duplicates were not submitted for BTEX analysis in these SDGs.

10.10 Overall Assessment of BTEX Data Usability

BTEX data are of known quality and acceptable for use.

SUMMARY

Table I. Data Affected by QC Anomalies:

Laboratory ID	Sample ID	Analyte	Qualifier	Qualified Reason
311391-07 311391-08 311391-09 311391-11 311391-12 311391-13 311391-14 311391-15 311391-16 311391-17 311391-18 311391-19	BUST-S46-4 BUST-S46A-8 BUST-S47-12 BUST-S44-8 BUST-S45-12 BUST-S40-4 BUST-S41-8 BUST-S42-12 BUST-B29-12 BUST-B30-12 BUST-B31-12 BUST-B32-12	Zinc	**J**	CCV %R >UCL
312058-06	BUST-S60-6	Lead	**J**	CCV %R >UCL
401212-05	BV-B02-8-011714	Zinc	**J**	CCV %R >UCL
311391-10	BUST-S43-4	Zinc	**J**	CCV %R >UCL; Field duplicate RPD >50%
311391-20	BUST-B503-12	Zinc	**J**	CCV %R >UCL; Field duplicate RPD >50%
401294-01 401294-02 401294-03 401294-04 401294-05 401294-06 401294-07 401294-08 401294-09 401294-10 401294-11 401294-12 401294-13 401294-14 401294-15 401294-16 401294-17 401294-18	NRU-SP01-1-012414 NRU-SP01-2-012414 NRU-SP01-3-012414 NRU-SP02-1-012414 NRU-SP02-2-012414 NRU-SP02-3-012414 NRU-SP03-1-012414 NRU-SP03-2-012414 NRU-SP03-3-012414 NRU-SP04-1-012414 NRU-SP04-2-012414 NRU-SP04-3-012414 NRU-SP05-1-012414 NRU-SP05-2-012414 NRU-SP05-3-012414 NRU-SP06-1-012414 NRU-SP06-2-012414 NRU-SP06-3-012414	Zinc	**J**	MS %R >UCL; MS/MSD RPD >20%
312336-01	BUST-S68-3	Copper	**J**	MS/MSD %R <LCL

Laboratory ID	Sample ID	Analyte	Qualifier	Qualified Reason
401294-01 401294-02 401294-03 401294-04 401294-05 401294-06 401294-07 401294-08 401294-09 401294-10 401294-11 401294-12 401294-13 401294-14 401294-15 401294-16 401294-17 401294-18	NRU-SP01-1-012414 NRU-SP01-2-012414 NRU-SP01-3-012414 NRU-SP02-1-012414 NRU-SP02-2-012414 NRU-SP02-3-012414 NRU-SP03-1-012414 NRU-SP03-2-012414 NRU-SP03-3-012414 NRU-SP04-1-012414 NRU-SP04-2-012414 NRU-SP04-3-012414 NRU-SP05-1-012414 NRU-SP05-2-012414 NRU-SP05-3-012414 NRU-SP06-1-012414 NRU-SP06-2-012414 NRU-SP06-3-012414	Arsenic	**J**	MS/MSD RPD >20%
311391-10 311391-20	BUST-S43-4 BUST-B503-12	Arsenic Lead	**J/UJ**	Field duplicate difference >2xRL
312363-01 312363-08	UST29-S01-3-122313 UST29-500-122313	Copper Lead Zinc	**J**	Field duplicate RPD >50%
311391-10 311391-20	BUST-S43-4 BUST-B503-12	Copper Nickel	**J**	Field duplicate RPD >50%
NRU-B5-16-012714	NRU-B5-16-012714	Aliphatics C8-C10 (EPH)	**J**	LCS/LCSD %R <LCL
311258-01 311258-02	BUST-S16-8-111213 BUST-S17-8-111213	Aromatics C8-C10 (EPH)	**UJ**	LCSD %R <LCL
NRU-B5-16-012714	NRU-B5-16-012714	Aliphatics C10-C12 (VPH)	**J**	MS %R <LCL
NRU-B5-16-012714	NRU-B5-16-012714	Aromatics C10-C12 (VPH)	**J**	MS %R <LCL
312200-06	BUST-S67-3	Bunker C	**J**	Exceeded calibration range
401069-18 401069-19	UST29-B15-17-010814 UST29-B502	Gasoline Range TPH	**J/UJ**	Field duplicate difference >2xRL
401294-01 401294-02 401294-03 401294-04 401294-05 401294-06 401294-07	NRU-SP01-1-012414 NRU-SP01-2-012414 NRU-SP01-3-012414 NRU-SP02-1-012414 NRU-SP02-2-012414 NRU-SP02-3-012414 NRU-SP03-1-012414	Gasoline Range TPH	**J/UJ**	Sample was not preserved in methanol.

Laboratory ID	Sample ID	Analyte	Qualifier	Qualified Reason
401294-08	NRU-SP03-2-012414	Gasoline Range TPH	**J/UJ**	Sample was not preserved in methanol.
401294-09	NRU-SP03-3-012414			
401294-10	NRU-SP04-1-012414			
401294-11	NRU-SP04-2-012414			
401294-12	NRU-SP04-3-012414			
401294-13	NRU-SP05-1-012414			
401294-14	NRU-SP05-2-012414			
401294-15	NRU-SP05-3-012414			
401294-16	NRU-SP06-1-012414			
401294-17	NRU-SP06-2-012414			
401294-18	NRU-SP06-3-012414			
401294-01	NRU-SP01-1-012414	All VOCs	**J/UJ**	Sample not preserved in MeOH
401294-02	NRU-SP01-2-012414			
401294-03	NRU-SP01-3-012414			
401294-04	NRU-SP02-1-012414			
401294-05	NRU-SP02-2-012414			
401294-06	NRU-SP02-3-012414			
401294-07	NRU-SP03-1-012414			
401294-08	NRU-SP03-2-012414			
401294-09	NRU-SP03-3-012414			
401294-10	NRU-SP04-1-012414			
401294-11	NRU-SP04-2-012414			
401294-12	NRU-SP04-3-012414			
401294-13	NRU-SP05-1-012414			
401294-14	NRU-SP05-2-012414			
401294-15	NRU-SP05-3-012414			
401294-15	NRU-SP05-3-012414			
401294-16	NRU-SP06-1-012414			
401294-17	NRU-SP06-2-012414			
401294-18	NRU-SP06-3-012414			
401108-01	UST29-S37-6-010914	Bromomethane	**UJ**	CCV %D <LCL
401108-02	UST29-S38-6-010914			
401108-03	UST29-S39-9-010914			
401108-04	UST29-S40-9-010914			
401108-05	UST29-S41-6-011014			
312363-02	UST29-S02-3-122313	Methylene chloride	**U**	Detected in MB
312363-03	UST29-S03-3-122313			
312363-04	UST29-S04-3-122313			
312363-05	UST29-S05-3-122313			
312363-06	UST29-S06-3-122313			
312363-07	UST29-S07-3-122313			
312363-08	UST29-500-122313			
312363-01	UST29-S01-3-122313	Methylene chloride	**UJ**	Detected in MB; MS/MSD %R <LCL

Laboratory ID	Sample ID	Analyte	Qualifier	Qualified Reason
401069-01	UST29-S22-9-010714			
401069-02	UST29-B13-16-010714			
401069-03	UST29-S23-12-010714			
401069-04	UST29-S24-3-010814			
401069-06	UST29-S26-9-010814			
401069-07	UST29-S27-6-010814			
401069-08	UST29-S28-3-010814			
401069-09	UST29-S29-9-010814			
401069-10	UST29-S30-6-010814			
401069-11	UST29-S31-3-010814	Methylene chloride	**UJ**	LCS %R <LCL
401069-12	UST29-S32-9-010814			
401069-13	UST29-S33-6-010814			
401069-14	UST29-S34-3-010814			
401069-15	UST29-B14-17-010814			
401069-16	UST29-S35-6-010814			
401069-17	UST29-S36-3-010814			
401069-18	UST29-B15-17-010814			
401069-19	UST29-B502			
401069-20	UST29-B16-17-010814			
312433-01	UST29-S01-3-122313			
312433-02	UST29-S02-3-122313			
312433-03	UST29-S03-3-122313			
312433-04	UST29-S04-3-122313			
312433-05	UST29-S05-3-122313			
401024-01	UST29-S06-3-122313			
401024-02	UST29-S07-3-122313			
401024-03	UST29-500-122313			
401024-04	UST29-B01-5-122313			
401024-05	UST29-B02-5-122313			
401024-06	UST29-B03-5-122313			
401024-07	UST29-B04-5-122313			
401024-08	UST29-B05-5-122313			
401024-09	UST29-B06-5-122313			
401024-10	UST29-501-122313	1,4-Dioxane Vinyl acetate	**UJ**	Based on library search; RL estimated
401024-11	UST29-S08-8-123013			
401024-12	UST29-S09-8-123013			
401024-13	UST29-S10-8-123013			
401024-14	UST29-S11-8-123013			
312363-01	UST29-B07-18-123013			
312363-02	UST29-B08-15-010214			
312363-03	UST29-S12-3-010314			
312363-04	UST29-S13-6-010314			
312363-05	UST29-S14-9-010314			
312363-06	UST29-S15-3-010314			
312363-07	UST29-S16-6-010314			
312363-08	UST29-S17-9-010314			
312363-09	UST29-S18-3-010314			
312363-10	UST29-S19-6-010314			

Laboratory ID	Sample ID	Analyte	Qualifier	Qualified Reason
312363-11 312363-12 312363-13 312363-14 312363-15 401057-01 401069-01 401069-02 401069-03 401069-04 401069-05 401069-06 401069-07 401069-08 401069-09 401069-10 401069-11 401069-12 401069-13 401069-14 401069-15 401069-16 401069-17 401069-18 401069-19 401069-20 401108-01 401108-02 401108-03 401108-04 401108-05	UST29-S20-9-010314 UST29-S21-3-010314 UST29-B09-15-010314 UST29-S24-3-010814 UST29-S25-6-010814 UST29-S26-9-010814 UST29-S27-6-010814 UST29-S28-3-010814 UST29-S29-9-010814 UST29-S30-6-010814 UST29-B10-15-010314 UST29-B11-15-010314 UST29-B12-17-010614 UST29-S22-9-010714 UST29-B13-16-010714 UST29-S23-12-010714 UST29-S31-3-010814 UST29-S32-9-010814 UST29-S33-6-010814 UST29-S34-3-010814 UST29-B14-17-010814 UST29-S35-6-010814 UST29-S36-3-010814 UST29-B15-17-010814 UST29-B502 UST29-B16-17-010814 UST29-S37-6-010914 UST29-S38-6-010914 UST29-S39-9-010914 UST29-S40-9-010914 UST29-S41-6-011014	1,4-Dioxane Vinyl acetate	**UJ**	Based on library search; RL estimated
401294-01	NRU-SP01-1-012414	2,4-Dinitrophenol 4,6-Dinitro-2-methylphenol 4-Nitrophenol Hexachlorocyclopentadiene	**UJ**	MS/MSD %R <LCL
401108-01	UST29-S37-6-010914	Indeno(1,2,3-cd)pyrene	**UJ**	CCV %D <LCL
311258-01	BUST-S16-8-111213	Phenanthrene	**J**	Field duplicate difference >2xRL
311258-06	BUST-501-111213	Fluorene	**J**	Field duplicate difference >2xRL
311428-06 311428-23	UST70-S16-8-112113 UST70-501	Benz(a)anthracene Benzo(a)pyrene Benzo(b)fluoranthene Benzo(g,h,i)perylene Benzo(k)fluoranthene Chrysene Fluoranthene Indeno(1,2,3-cd)pyrene Pyrene	**J/UJ**	Field duplicate difference >2xRL

Laboratory ID	Sample ID	Analyte	Qualifier	Qualified Reason
311338-10 311338-11	BUST-B23-6-111513 BUST-502-111513	Acenaphthene Acenaphthylene Anthracene Benz(a)anthracene Benzo(a)pyrene Benzo(b)fluoranthene Benzo(g,h,i)perylene Benzo(k)fluoranthene Chrysene Dibenzo(a,h)anthracene Fluoranthene Fluorene Indeno(1,2,3-cd)pyrene Naphthalene Phenanthrene Pyrene	**J/UJ**	Field duplicate difference >2xRL
312200-01	BUST-S62-3	Indeno(1,2,3-cd)pyrene	**J**	Field duplicate difference >2xRL
312200-01 312200-07	BUST-S62-3 BUST-504-FD	Naphthalene	**J**	Field duplicate difference >2xRL
312363-08	UST29-500-122313	Anthracene Benzo(g,h,i)perylene Benzo(k)fluoranthene Dibenzo(a,h)anthracene Fluorene Indeno(1,2,3-cd)pyrene Naphthalene	**UJ**	Field duplicate difference >2xRL
312363-14 312363-15	UST29-B06-5-122313 UST29-501-122313	Fluoranthene Naphthalene	**J**	Field duplicate difference >2xRL
401069-18 401069-19	UST29-B15-17-010814 UST29-B502	Naphthalene Phenanthrene	**J**	Field duplicate difference >2xRL
401293-01 401293-09	NRU-S04-4-012414 NRU-500-012414	Acenaphthene Fluorene Naphthalene	**UJ**	Field duplicate difference >2xRL
312200-01	BUST-S62-3	Acenaphthene Anthracene Benz(a)anthracene Benzo(a)pyrene Benzo(b)fluoranthene Benzo(g,h,i)perylene Chrysene Fluoranthene Phenanthrene Pyrene	**J**	Field duplicate RPD >50%

Laboratory ID	Sample ID	Analyte	Qualifier	Qualified Reason
312200-07	BUST-504-FD	Acenaphthene Anthracene Benz(a)anthracene Chrysene Fluoranthene Phenanthrene Pyrene	J	Field duplicate RPD >50%
312363-01	UST29-S01-3-122313	Dibenzo(a,h)anthracene	J	Field duplicate RPD >50%
312363-08	UST29-500-122313	Benz(a)anthracene Benzo(a)pyrene Benzo(b)fluoranthene Chrysene Fluoranthene Phenanthrene Pyrene	J	Field duplicate RPD >50%
401292-13 401292-15	NRU-S20-12-012414 NRU-501-012414	Fluoranthene Pyrene	J	Field duplicate RPD >50%
401293-01 401293-09	NRU-S04-4-012414 NRU-500-012414	Anthracene Benz(a)anthracene Benzo(a)pyrene Benzo(b)fluoranthene Chrysene Fluoranthene Phenanthrene Pyrene	J	Field duplicate RPD >50%
311258-01	BUST-S16-8-111213	Chrysene Fluorene	J	Field duplicate RPD >50%
311258-06	BUST-501-111213	Chrysene Phenanthrene	J	Field duplicate RPD >50%
311428-13	UST70-S03-4-112113	Benzo(b)fluoranthene Chrysene Fluoranthene Pyrene	J	Internal standard recovery high
312200-07	BUST-504-FD	Benzo(k)fluoranthene Dibenzo(a,h)anthracene	J	Internal standard recovery high
312200-07	BUST-504-FD	Indeno(1,2,3-cd)pyrene	J	Internal standard recovery high; Field duplicate Difference >2xRL
401069-03DL	UST29-S23-12-010714	Benz(a)anthracene Chrysene	J	Internal standard recovery low
401212-01 401212-06	BV-S01-6-011714 BV-S04-6-011714	Indeno(1,2,3-cd)pyrene	J	LCS/LCSD RPD >20%
312363-01	UST29-S01-3-122313	Phenanthrene	J	MS/MSD %R & RPD outside criteria; Field duplicate RPD >50%
312363-01	UST29-S01-3-122313	Acenaphthene	J	MS/MSD RPD >20%
401024-01	UST29-B08-15-010214	Benz(a)anthracene Chrysene Pyrene	J	MS/MSD RPD >20%

Laboratory ID	Sample ID	Analyte	Qualifier	Qualified Reason
401054-03	BAST-S53-5-010714	Benzo(k)fluoranthene	**J**	MS/MSD RPD >20%
401212-02	BV-B01-8-011714	Phenanthrene	**J**	MS/MSD RPD >20%
401293-02	NRU-S05-8-012414	Benz(a)anthracene Benzo(b)fluoranthene Benzo(g,h,i)perylene Benzo(k)fluoranthene Chrysene Dibenzo(a,h)anthracene Fluoranthene Indeno(1,2,3-cd)pyrene Pyrene	**J**	MS/MSD RPD >20%
312363-01	UST29-S01-3-122313	Anthracene Benz(a)anthracene Benzo(a)pyrene Benzo(g,h,i)perylene Benzo(k)fluoranthene Fluorene Indeno(1,2,3-cd)pyrene Naphthalene	**J**	MS/MSD RPD >20%; Field duplicate RPD >50%
312363-01	UST29-S01-3-122313	Benzo(b)fluoranthene Chrysene Fluoranthene Pyrene	**J**	MSD %R & MS/MSD RPD outside criteria; Field duplicate RPD >50%
401292-01	NRU-S06-12-012314	Benz(a)anthracene Benzo(a)pyrene Benzo(b)fluoranthene Benzo(g,h,i)perylene Benzo(k)fluoranthene Chrysene Fluoranthene Indeno(1,2,3-cd)pyrene Phenanthrene Pyrene	**J**	MSD %R >UCL; MS/MSD RPD >20%
401024-01	UST29-B08-15-010214	Fluoranthene Phenanthrene	**J**	MSD %R>UCL; MS/MSD RPD >20%
401293-02	NRU-S05-8-012414	Benzo(a)pyrene	**J**	MSD %R>UCL; MS/MSD RPD >20%

Table II. Data Affected by Detections in Method Blank

SDG#	Sample ID	Compound	Original Result	Adjusted Result	Unit	Report Section
312058	BUST-B39-12 BUST-S58-12	Aliphatic C8-C10	1.04 J 1.18 J	**5.63 U** **5.64 U**	mg/kg	**8.4**
312058	BUST-B39-12 BUST-S58-12	Aromatic C8-C10	2.65 J 3.76 J	**5.63 U** **5.64 U**	mg/kg	**8.4**

Table III. Data Qualifiers are defined as follows:

Data Qualifier	Definition
J	The analyte was detected above the reported quantitation limit, and the reported concentration was an estimated value.
U	The analyte was analyzed for, but was considered not detected at the reporting limit or reported value.
UJ	The analyte was analyzed for, and the associated quantitation limit was an estimated value.

Approved By: _____ Date: ***6/23/2014***

Mingta Lin, Senior Project Chemist

REFERENCES

USEPA *Contract Laboratory Program National Functional Guidelines for Inorganic Superfund Data Review,* Office of Superfund Remediation and Technical Innovation, U.S. Environmental Protection Agency, January 2010, USEPA 540/R-10/011

USEPA *Contract Laboratory Program National Functional Guidelines for Superfund Organic Methods Data Review,* Office of Superfund Remediation and Technical Innovation, U.S. Environmental Protection Agency, June 2008, USEPA-540-R-08-01.

USEPA *Method 1631, Revision E: Mercury in Water by Oxidation, Purge and Trap, and Cold Vapor Atomic Fluorescence Spectrometry, Office of Water, U.S. Environmental Protection Agency, August 2002, EPA-821-R-02-019.*

USEPA *Test Methods for Evaluating Solid Waste (SW-846). Third Edition and Revised Update IIIA.* Office of Solid Waste and Emergency Response, Washington, D.C. April 1998.

USEPA *Methods for Chemical Analysis of Water and Wastes,* EPA-600/4-79-020, March 1983 and updates.

Standard Methods for the Examination of Water and Wastewater, American Public Health Association, 20th Edition, 1995.

Ecology (Washington State Department of). 1997. *Analytical Methods for Petroleum Hydrocarbons.* Publication No. ECY 97-602. June 1997.

PSEP *Recommended Guidelines for Measuring Organic Compounds in Puget Sound Water, Sediment and Tissue Samples,* Puget Sound Water Quality Authority, April 1997.

Appendix A

Field duplicate RPD is indicative of field and laboratory precision and sample homogeneity in combination. The CLP National Functional Guidelines or *Work Plan* do not specify criteria for field duplicate evaluation. An advisory criterion of 35% was applied to evaluating the RPD values of field duplicate results that are ≥5xRL. For results that are <5xRL, an advisory criterion of ±2RL was applied to evaluating the concentration differences. The RPD (or concentration difference as applicable) values and data qualification for detected compounds in field duplicates are presented as follows:

Analyte	Units	RL	Parent & Field Duplicate Sample Result		RPD	Delta	Data Qualifier
			BAST-B052-7	BAST- 505-FD			
Mercury	mg/kg	0.1	ND	ND			
Antimony	mg/kg	1	ND	ND			
Arsenic	mg/kg	1	2.99	3.44	0%	0.45	
Cadmium	mg/kg	1	ND	ND		0	
Copper	mg/kg	1	6.32	6.11		0.21	**J/J**
Lead	mg/kg	1	2.22	2.39		0.17	
Nickel	mg/kg	1	12	12.9	7%		
Zinc	mg/kg	1	11.2	11.8	5%		
Diesel Range TPH	mg/kg	50	ND	ND		0	
Oil Range TPH	mg/kg	250	ND	ND		0	
Acenaphthene	mg/kg	0.01	0.027	0.025		0.002	
Acenaphthylene	mg/kg	0.01	ND	ND		0	
Anthracene	mg/kg	0.01	ND	ND		0	
Benz(a)anthracene	mg/kg	0.01	ND	ND		0	
Benzo(a)pyrene	mg/kg	0.01	ND	ND		0	
Benzo(b)fluoranthene	mg/kg	0.01	ND	ND		0	
Benzo(g,h,i)perylene	mg/kg	0.01	ND	ND		0	
Benzo(k)fluoranthene	mg/kg	0.01	ND	ND		0	
Chrysene	mg/kg	0.01	ND	ND		0	
Dibenzo(a,h)anthracene	mg/kg	0.01	ND	ND		0	
Fluoranthene	mg/kg	0.01	ND	ND		0	
Fluorene	mg/kg	0.01	ND	ND		0	
Indeno(1,2,3-cd)pyrene	mg/kg	0.01	ND	ND		0	
Naphthalene	mg/kg	0.01	ND	ND		0	
Phenanthrene	mg/kg	0.01	ND	ND		0	
Pyrene	mg/kg	0.01	ND	ND		0	

Analyte	Units	RL	Parent & Field Duplicate Sample Result		RPD	Delta	Data Qualifier
			BUST-S16-8-111213	**BUST-501-111213**			
Mercury	mg/kg	0.1	ND	ND			
Antimony	mg/kg	1	ND	ND			
Arsenic	mg/kg	1	3.62	4.37		0.75	
Cadmium	mg/kg	1	ND	ND		0	
Copper	mg/kg	1	8.35	9.96	18%		
Lead	mg/kg	1	2.26	3.42		1.16	
Nickel	mg/kg	1	16.3	17.6	8%		
Zinc	mg/kg	1	18.5	22.4	19%		
Bunker C	mg/kg	50	8400	8600	2%		
Acenaphthene	mg/kg	0.1	0.76	0.59	25%		
Acenaphthylene	mg/kg	0.1	ND	ND		0	
Anthracene	mg/kg	0.1	1.2	1.1	9%		
Benz(a)anthracene	mg/kg	0.1	0.99	0.86	14%		
Benzo(a)pyrene	mg/kg	0.1	0.52	0.48		0.04	
Benzo(b)fluoranthene	mg/kg	0.1	0.17	0.16		0.01	
Benzo(g,h,i)perylene	mg/kg	0.1	0.28	0.26		0.02	
Benzo(k)fluoranthene	mg/kg	0.1	ND	ND		0	
Chrysene	mg/kg	0.1	1.7	1	52%		**J/J**
Dibenzo(a,h)anthracene	mg/kg	0.1	ND	ND		0	
Fluoranthene	mg/kg	0.1	0.36	0.35		0.01	
Fluorene	mg/kg	0.1	0.59	0.37		0.22	**J/J**
Indeno(1,2,3-cd)pyrene	mg/kg	0.1	ND	ND		0	
Naphthalene	mg/kg	0.1	0.12	ND		0	
Phenanthrene	mg/kg	0.1	1.8	1	57%		**J/J**
Pyrene	mg/kg	0.1	2.2	2.1	5%		
			BUST-B23-6-111513	**BUST-502-111513**			
Mercury	mg/kg	0.1	ND	ND			
Antimony	mg/kg	1	ND	ND			
Arsenic	mg/kg	1	3.29	3.6	9%	0.31	
Cadmium	mg/kg	1	1	ND		1	
Copper	mg/kg	1	9.71	10.4	7%		
Lead	mg/kg	1	1.79	1.91		0.12	
Nickel	mg/kg	1	14.2	16.1	13%		
Zinc	mg/kg	1	18.2	22.6	22%		
Bunker C	mg/kg	250	ND	380		380	

Analyte	Units	RL	Parent & Field Duplicate Sample Result		RPD	Delta	Data Qualifier
Acenaphthene	mg/kg	0.01	0.067	ND		0.067	**J/UJ**
Acenaphthylene	mg/kg	0.01	ND	ND		0	**J/UJ**
Anthracene	mg/kg	0.01	0.11	ND		0.11	**J/UJ**
Benz(a)anthracene	mg/kg	0.01	0.11	ND		0.11	**J/UJ**
Benzo(a)pyrene	mg/kg	0.01	0.087	ND		0.087	**J/UJ**
Benzo(b)fluoranthene	mg/kg	0.01	0.097	ND		0.097	**J/UJ**
Benzo(g,h,i)perylene	mg/kg	0.01	0.038	ND		0.038	**J/UJ**
Benzo(k)fluoranthene	mg/kg	0.01	0.043	ND		0.043	**J/UJ**
Chrysene	mg/kg	0.01	0.12	ND		0.12	**J/UJ**
Dibenzo(a,h)anthracene	mg/kg	0.01	ND	ND		0	**J/UJ**
Fluoranthene	mg/kg	0.01	0.29	ND		0.29	**J/UJ**
Fluorene	mg/kg	0.01	0.057	ND		0.057	**J/UJ**
Indeno(1,2,3-cd)pyrene	mg/kg	0.01	0.041	ND		0.041	**J/UJ**
Naphthalene	mg/kg	0.01	0.026	ND		0.026	**J/UJ**
Phenanthrene	mg/kg	0.01	0.35	ND		0.35	**J/UJ**
Pyrene	mg/kg	0.01	0.27	ND		0.27	**J/UJ**
			BUST-S62-3	**BUST-504-FD**			
Mercury	mg/kg	0.1	0	0.13		0.13	
Antimony	mg/kg	1	0	0		0	
Arsenic	mg/kg	1	2.57	3.14		0.57	
Cadmium	mg/kg	1	0	0		0	
Copper	mg/kg	1	18.6	15.7	17%		
Lead	mg/kg	1	35.5	27	27%		
Nickel	mg/kg	1	18.1	16.6	9%		
Zinc	mg/kg	1	46.5	62.4	29%		
Bunker C	mg/kg	250	3100	7100	78%		**J/J**
Acenaphthene	mg/kg	0.01	0.053	0.14	90%		**J/J**
Acenaphthylene	mg/kg	0.01	0	0		0	
Anthracene	mg/kg	0.01	0.068	0.13	63%		**J/J**
Benz(a)anthracene	mg/kg	0.01	0.11	0.26	81%		**J/J**
Benzo(a)pyrene	mg/kg	0.01	0.08	0.17	72%		**J/J**
Benzo(b)fluoranthene	mg/kg	0.01	0.083	0.16	63%		**J/J**
Benzo(g,h,i)perylene	mg/kg	0.01	0.059	0.11	60%		**J/J**
Benzo(k)fluoranthene	mg/kg	0.01	0.019	0.015		0.004	
Chrysene	mg/kg	0.01	0.21	0.43	69%		**J/J**
Dibenzo(a,h)anthracene	mg/kg	0.01	0.014	0.017		0.003	

Analyte	Units	RL	Parent & Field Duplicate Sample Result		RPD	Delta	Data Qualifier
Fluoranthene	mg/kg	0.01	0.12	0.29	83%		**J/J**
Fluorene	mg/kg	0.01	0	0		0	
Indeno(1,2,3-cd)pyrene	mg/kg	0.01	0.037	0.075		0.038	**J/J**
Naphthalene	mg/kg	0.01	0.012	0.033		0.021	**J/J**
Phenanthrene	mg/kg	0.01	0.077	0.2	89%		**J/J**
Pyrene	mg/kg	0.01	0.33	0.82	85%		**J/J**
			BUST-S43-4	**BUST-B503-12**			
Mercury	mg/kg	0.1	ND	ND		0	
Antimony	mg/kg	1	ND	ND		0	
Arsenic	mg/kg	1	ND	2.44	#VALUE!		**UJ/J**
Cadmium	mg/kg	1	ND	ND		0	
Copper	mg/kg	1	19.1	3.62	136%		**J/J**
Lead	mg/kg	1	6.16	ND		6.16	**J/UJ**
Nickel	mg/kg	1	22.3	10.4	73%		**J/J**
Zinc	mg/kg	1	25.6	6.46	119%		**J/J**
Bunker C	mg/kg	250	ND	ND		0	
Acenaphthene	mg/kg	0.01	ND	ND		0	
Acenaphthylene	mg/kg	0.01	ND	ND		0	
Anthracene	mg/kg	0.01	ND	ND		0	
Benz(a)anthracene	mg/kg	0.01	ND	ND		0	
Benzo(a)pyrene	mg/kg	0.01	ND	ND		0	
Benzo(b)fluoranthene	mg/kg	0.01	ND	ND		0	
Benzo(g,h,i)perylene	mg/kg	0.01	ND	ND		0	
Benzo(k)fluoranthene	mg/kg	0.01	ND	ND		0	
Chrysene	mg/kg	0.01	ND	ND		0	
Dibenzo(a,h)anthracene	mg/kg	0.01	ND	ND		0	
Fluoranthene	mg/kg	0.01	ND	ND		0	
Fluorene	mg/kg	0.01	ND	ND		0	
Indeno(1,2,3-cd)pyrene	mg/kg	0.01	ND	ND		0	
Naphthalene	mg/kg	0.01	ND	ND		0	
Phenanthrene	mg/kg	0.01	ND	ND		0	
Pyrene	mg/kg	0.01	ND	ND		0	
			NRU-S04-4-012414	**NRU-500-012414**			
Diesel Range TPH	mg/kg	50	ND	ND		0	
Oil Range TPH	mg/kg	250	ND	ND		0	

Analyte	Units	RL	Parent & Field Duplicate Sample Result		RPD	Delta	Data Qualifier
Acenaphthene	mg/kg	0.01	ND	0.85		0.85	**UJ/J**
Acenaphthylene	mg/kg	0.01	ND	ND		0	
Anthracene	mg/kg	0.01	0.012	0.32		0.308	**J/J**
Benz(a)anthracene	mg/kg	0.01	0.064	0.18	95%		**J/J**
Benzo(a)pyrene	mg/kg	0.01	0.062	0.12	64%		**J/J**
Benzo(b)fluoranthene	mg/kg	0.01	0.08	0.14	55%		**J/J**
Benzo(g,h,i)perylene	mg/kg	0.01	0.038	0.056		0.018	
Benzo(k)fluoranthene	mg/kg	0.01	0.03	0.037		0.007	
Chrysene	mg/kg	0.01	0.073	0.22	100%		**J/J**
Dibenzo(a,h)anthracene	mg/kg	0.01	0.011	0.015		0.004	
Fluoranthene	mg/kg	0.01	0.15	0.57	117%		**J/J**
Fluorene	mg/kg	0.01	ND	0.49		0.49	**UJ/J**
Indeno(1,2,3-cd)pyrene	mg/kg	0.01	0.038	0.038		0	
Naphthalene	mg/kg	0.01	ND	0.061		0.061	**UJ/J**
Phenanthrene	mg/kg	0.01	0.043	0.084		0.041	**J/J**
Pyrene	mg/kg	0.01	0.17	0.62	114%		**J/J**
			NRU-S20-12-012414	**NRU-501-012414**			
Diesel Range TPH	mg/kg	50	ND	65		65	
Oil Range TPH	mg/kg	250	ND	ND		0	
Acenaphthene	mg/kg	0.01	0.025	0.035		0.01	
Acenaphthylene	mg/kg	0.01	ND	ND		0	
Anthracene	mg/kg	0.01	0.02	0.035		0.015	
Benz(a)anthracene	mg/kg	0.01	0.023	0.037		0.014	
Benzo(a)pyrene	mg/kg	0.01	0.023	0.032		0.009	
Benzo(b)fluoranthene	mg/kg	0.01	0.025	0.039		0.014	
Benzo(g,h,i)perylene	mg/kg	0.01	0.018	0.02		0.002	
Benzo(k)fluoranthene	mg/kg	0.01	ND	0.012		0.012	
Chrysene	mg/kg	0.01	0.032	0.05		0.018	
Dibenzo(a,h)anthracene	mg/kg	0.01	ND	ND		0	
Fluoranthene	mg/kg	0.01	0.05	0.089	56%		**J/J**
Fluorene	mg/kg	0.01	0.019	0.032		0.013	
Indeno(1,2,3-cd)pyrene	mg/kg	0.01	0.012	0.016		0.004	
Naphthalene	mg/kg	0.01	0.012	0.024		0.012	
Phenanthrene	mg/kg	0.01	0.038	0.052		0.014	
Pyrene	mg/kg	0.01	0.07	0.12	53%		**J/J**

Analyte	Units	RL	Parent & Field Duplicate Sample Result		RPD	Delta	Data Qualifier
			UST29-S01-3-122313	**UST29-500-122313**			
Mercury	mg/kg	0.1	ND	ND		0	
Arsenic	mg/kg	1	4.84	3.74		1.1	
Cadmium	mg/kg	1	ND	ND		0	
Copper	mg/kg	1	9.87	5.59	55%		**J/J**
Lead	mg/kg	1	7.79	2.08	116%		**J/J**
Nickel	mg/kg	1	14.1	12.6	11%		
Zinc	mg/kg	1	24.9	8.57	98%		**J/J**
Diesel Range TPH	mg/kg	50	ND	91		0	
Oil Range TPH	mg/kg	250	ND	ND		0	
Gasoline Range TPH	mg/kg	2	ND	ND		0	
Methylene chloride	mg/kg	0.5	1.2	0.97	21%		
Acenaphthene	mg/kg	0.01	0.018	ND		0.018	
Acenaphthylene	mg/kg	0.01	ND	ND		0	
Anthracene	mg/kg	0.01	0.052	0		0.052	**J/UJ**
Benz(a)anthracene	mg/kg	0.01	0.14	0.018		0.122	**J/J**
Benzo(a)pyrene	mg/kg	0.01	0.1	0.011		0.089	**J/J**
Benzo(b)fluoranthene	mg/kg	0.01	0.14	0.014		0.126	**J/J**
Benzo(g,h,i)perylene	mg/kg	0.01	0.048	ND		0.048	**J/UJ**
Benzo(k)fluoranthene	mg/kg	0.01	0.044	ND		0.044	**J/UJ**
Chrysene	mg/kg	0.01	0.15	0.018		0.132	**J/J**
Dibenzo(a,h)anthracene	mg/kg	0.01	0.014	ND		0.014	**J/UJ**
Fluoranthene	mg/kg	0.01	0.24	0.031		0.209	**J/J**
Fluorene	mg/kg	0.01	0.021	ND		0.021	**J/UJ**
Indeno(1,2,3-cd)pyrene	mg/kg	0.01	0.055	ND		0.055	**J/UJ**
Naphthalene	mg/kg	0.01	0.014	ND		0.014	**J/UJ**
Phenanthrene	mg/kg	0.01	0.22	0.025		0.195	**J/J**
Pyrene	mg/kg	0.01	0.28	0.036		0.244	**J/J**
			UST29-B15-17-010814	**UST29-B502**			
Diesel Range TPH	mg/kg	50	ND	ND		0	
Oil Range TPH	mg/kg	250	ND	ND		0	
Gasoline Range TPH	mg/kg	2	7.4	ND		7.4	**J/UJ**
Acenaphthene	mg/kg	0.01	0.04	ND		0.04	
Acenaphthylene	mg/kg	0.01	ND	ND		0	
Anthracene	mg/kg	0.01	ND	ND		0	

Analyte	Units	RL	Parent & Field Duplicate Sample Result		RPD	Delta	Data Qualifier
Benz(a)anthracene	mg/kg	0.01	0.015	0.014		0.001	
Benzo(a)pyrene	mg/kg	0.01	0.01	ND		0.01	
Benzo(b)fluoranthene	mg/kg	0.01	0.014	0.014		0	
Benzo(g,h,i)perylene	mg/kg	0.01	0.011	0.01		0.001	
Benzo(k)fluoranthene	mg/kg	0.01	ND	ND		0	
Chrysene	mg/kg	0.01	0.016	0.014		0.002	
Dibenzo(a,h)anthracene	mg/kg	0.01	0	ND		0	
Fluoranthene	mg/kg	0.01	0.075	0.053	34%		
Fluorene	mg/kg	0.01	0.019	ND		0.019	
Indeno(1,2,3-cd)pyrene	mg/kg	0.01	ND	ND		0	
Naphthalene	mg/kg	0.01	0.067	0.023		0.044	**J/J**
Phenanthrene	mg/kg	0.01	0.044	0.021		0.023	**J/J**
Pyrene	mg/kg	0.01	0.078	0.055	35%		
			UST70-S13-4-112113	**UST70-500**			
Diesel Range TPH	mg/kg	50	ND	ND		0	
Oil Range TPH	mg/kg	250	ND	ND		0	
Acenaphthene	mg/kg	0.01	ND	ND		0	
Acenaphthylene	mg/kg	0.01	ND	ND		0	
Anthracene	mg/kg	0.01	ND	ND		0	
Benz(a)anthracene	mg/kg	0.01	ND	ND		0	
Benzo(a)pyrene	mg/kg	0.01	ND	0.013		0.013	
Benzo(b)fluoranthene	mg/kg	0.01	0.012	0.016		0.004	
Benzo(g,h,i)perylene	mg/kg	0.01	ND	0.011		0.011	
Benzo(k)fluoranthene	mg/kg	0.01	ND	ND		0	
Chrysene	mg/kg	0.01	ND	0.012		0.012	
Dibenzo(a,h)anthracene	mg/kg	0.01	ND	0.01		0.01	
Fluoranthene	mg/kg	0.01	ND	0.016		0.016	
Fluorene	mg/kg	0.01	ND	ND		0	
Indeno(1,2,3-cd)pyrene	mg/kg	0.01	ND	ND		0	
Naphthalene	mg/kg	0.01	ND	ND		0	
Phenanthrene	mg/kg	0.01	ND	ND		0	
Pyrene	mg/kg	0.01	0.014	0.021		0.007	
			UST70-S16-8-112113	**UST70-501**			
Mercury	mg/kg	0.1	ND	ND		0	
Arsenic	mg/kg	1	5.36	5.97	11%		

Analyte	Units	RL	Parent & Field Duplicate Sample Result		RPD	Delta	Data Qualifier
Cadmium	mg/kg	1	ND	ND		0	
Copper	mg/kg	1	11.6	11.9	3%		
Lead	mg/kg	1	10.2	9.83	4%		
Nickel	mg/kg	1	14.3	14.8	3%		
Zinc	mg/kg	1	21.6	24.4	12%		
Diesel Range TPH	mg/kg	50	ND	ND		0	
Oil Range TPH	mg/kg	250	ND	ND		0	
Acenaphthene	mg/kg	0.01	ND	ND		0	
Acenaphthylene	mg/kg	0.01	ND	ND		0	
Anthracene	mg/kg	0.01	ND	ND		0	
Benz(a)anthracene	mg/kg	0.01	ND	0.037		0.037	**UJ/J**
Benzo(a)pyrene	mg/kg	0.01	ND	0.036		0.036	**UJ/J**
Benzo(b)fluoranthene	mg/kg	0.01	ND	0.049		0.049	**UJ/J**
Benzo(g,h,i)perylene	mg/kg	0.01	ND	0.023		0.023	**UJ/J**
Benzo(k)fluoranthene	mg/kg	0.01	ND	0.019		0.019	**UJ/J**
Chrysene	mg/kg	0.01	ND	0.039		0.039	**UJ/J**
Dibenzo(a,h)anthracene	mg/kg	0.01	ND	0		0	
Fluoranthene	mg/kg	0.01	ND	0.04		0.04	**UJ/J**
Fluorene	mg/kg	0.01	ND	0		0	
Indeno(1,2,3-cd)pyrene	mg/kg	0.01	ND	0.024		0.024	**UJ/J**
Naphthalene	mg/kg	0.01	ND	0		0	
Phenanthrene	mg/kg	0.01	ND	0		0	
Pyrene	mg/kg	0.01	0.01	0.05		0.04	**UJ/J**
			UST70-S22-8-010614	**UST70-502**			
Diesel RangeTPH	mg/kg	50	ND	ND		0	
Oil Range TPH	mg/kg	250	ND	ND		0	
Acenaphthene	mg/kg	0.01	ND	ND		0	
Acenaphthylene	mg/kg	0.01	ND	ND		0	
Anthracene	mg/kg	0.01	ND	ND		0	
Benz(a)anthracene	mg/kg	0.01	ND	ND		0	
Benzo(a)pyrene	mg/kg	0.01	ND	ND		0	
Benzo(b)fluoranthene	mg/kg	0.01	ND	ND		0	
Benzo(g,h,i)perylene	mg/kg	0.01	ND	ND		0	
Benzo(k)fluoranthene	mg/kg	0.01	ND	ND		0	
Chrysene	mg/kg	0.01	ND	ND		0	

Analyte	Units	RL	Parent & Field Duplicate Sample Result		RPD	Delta	Data Qualifier
Dibenzo(a,h)anthracene	mg/kg	0.01	ND	ND		0	
Fluoranthene	mg/kg	0.01	ND	ND		0	
Fluorene	mg/kg	0.01	ND	ND		0	
Indeno(1,2,3-cd)pyrene	mg/kg	0.01	ND	ND		0	
Naphthalene	mg/kg	0.01	0.14	0.14	0%		
Phenanthrene	mg/kg	0.01	ND	ND		0	
Pyrene	mg/kg	0.01	ND	ND		0	

Notes:

Delta – Concentration difference between the parent sample and its field duplicate
mg/kg – milligram per kilogram
ND – The analyte was not detected at or above the RL.
RL – Reporting limit
RPD – Relative percent difference

Data Validation Report

Kimberly-Clark Everett, Washington Site
Upland Area Interim Action Soil Sampling
Batch #5 Soil Samples

Prepared for:

Aspect Consulting LLC
401 Second Ave South, Suite 201
Seattle, WA 98014

Prepared by:

Pyron Environmental, Inc.
3530 32nd Way, NW
Olympia, WA 98502

ACRONYMS

%D	percent difference
%D_f	percent drift
%R	percent recovery
%RSD	percent relative standard deviation
AMU	atomic mass unit
BTEX	benzene, toluene, ethylbenzene, and *m-, p-, & o*-xylenes
CCB	continuing calibration blank
CCC	calibration check compound
CCV	continuing calibration verification
CF	calibration factor
CLP	U.S. EPA Contract Laboratory Program
COC	chain-of-custody
CVAFS	cold vapor atomic fluorescent spectrometry
DFTPP	decafluorotriphenylphosphine
ECD	electron capture detector
EPA	U.S. Environmental Protection Agency
EPH	extractable petroleum hydrocarbon
FID	Flame ionization detector
GC/MS	gas chromatograph/mass spectrometer
ICAL	initial calibration
ICB	initial calibration blank
ICP/MS	inductively coupled plasma/ mass spectrometer
ICV	initial calibration verification
LCS	laboratory control sample
LCSD	laboratory control sample duplicate
MDL	method detection limit
µg/kg	microgram per kilogram
mg/kg	milligram per kilogram
MS	matrix spike
MSD	matrix spike duplicate
NFGs	CLP National Functional Guidelines for Data Review (EPA 2008 – Organics; EPA 2010 – Inorganics)
OPR	ongoing precision and recovery
PCBs	polychlorinated biphenyls

PID	photo-ionization detector
QA/QC	quality assurance/quality control
RF	response factor
RL	reporting limit
RPD	relative percent difference
RRT	relative retention time
SDG	sample delivery group
SIM	selective ion monitoring
SVOCs	semi-volatile organic compounds
VOCs	volatile organic compounds
VPH	volatile petroleum hydrocarbon

INTRODUCTION

This report presents and discusses findings of the data validation performed on analytical data for soil samples collected during October 2013 to March 2014 for the referenced project. The laboratory reports validated herein were submitted by Friedman & Bruya, Inc. and Fremont Aanlytical, Inc. in Seattle, Washington and ALS Environmental Services, Inc. in Kelso, Washington.

A level III data validation was performed on this laboratory report. The validation followed the procedures specified in USEPA CLP Functional Guidelines ([NFGs], EPA 2008 – Organics; EPA 2010 – Inorganics), with modifications to accommodate project and analytical method requirements. The numerical quality assurance/quality control (QA/QC) criteria applied to the validation were in accordance with those specified in the quality assurance project plans ([QAPPs], Aspect, 2009) and the current performance-based control limits established by the laboratory (laboratory control limits). Instrument calibration, frequency of QC analyses, and analytical sequence requirements were evaluated against the respective analytical methods.

Validation findings are discussed in each section pertinent to the QC parameter for each type of analysis. Qualified data with applied data qualifiers are summarized in the **Summary** section at the end of this report.

Samples and the associated analyses validated herein are summarized as follows:

				Analysis						
Field Sample ID	**Laboratory Sample ID**	**Sampling Date**	**Sample Type**	**VOC**	**PAHs**	**PCBs**	**Metals**	**TPH -Gx**	**TPH-Dx**	**Misc.**
BAST-EPH-01	310408-01	10/21/13	Soil		X					EPH
BAST-EPH-02	310408-02	10/21/13	Soil		X					EPH
BAST-EPH-03	310408-03	10/21/13	Soil		X					EPH
BAST-EPH-04	310408-04	10/21/13	Soil		X					EPH
CONC-SP-01-102313	310458-01	10/23/13	Soil	X	SVOC	X	pp	X	X	
CONC-SP-02-102313	310458-02	10/23/13	Soil	X	SVOC	X	pp	X	X	
CONC-SP-03-102313	310458-03	10/23/13	Soil	X	SVOC	X	pp	X	X	
CONC-SP-04-102313	310458-04	10/23/13	Soil	X	SVOC	X	pp	X	X	
CONC-SP-05-102313	310458-05	10/23/13	Soil	X	SVOC	X	pp	X	X	
CONC-SP-06-102313	310458-06	10/23/13	Soil	X	SVOC	X	pp	X	X	
CONC-SP-07-102313	310458-07	10/23/13	Soil	X	SVOC	X	pp	X	X	
CONC-SP-01-102313 Agg	310458-08	10/23/13	Soil	X	SVOC	X	pp	X	X	
CONC-SP-02-102313 Agg	310458-09	10/23/13	Soil	X	SVOC	X	pp	X	X	
CONC-SP-03-102313 Agg	310458-10	10/23/13	Soil	X	SVOC	X	pp	X	X	

Field Sample ID	Laboratory Sample ID	Sampling Date	Sample Type	Analysis						
				VOC	PAHs	PCBs	Metals	TPH -Gx	TPH-Dx	Misc.
CONC-SP-04-102313 Agg	310458-11	10/23/13	Soil	X	SVOC	X	pp	X	X	
CONC-SP-05-102313 Agg	310458-12	10/23/13	Soil	X	SVOC	X	pp	X	X	
CONC-SP-06-102313 Agg	310458-13	10/23/13	Soil	X	SVOC	X	pp	X	X	
CONC-SP-07-102313 Agg	310458-14	10/23/13	Soil	X	SVOC	X	pp	X	X	
BAST-B051-5.0	311028-01	11/01/13	Soil		X		X		X	
BAST-B504-5.0	311028-02	11/01/13	Soil		X		X		X	
BAST-S034B-3.0	311028-03	11/01/13	Soil		X				X	
BAST-S036-3.0	311028-04	11/01/13	Soil		X				X	
BAST-S035-3.0	311028-05	11/01/13	Soil		X				X	
STIL-G1-120513	312089-01	12/05/13	Soil	X	SVOC	X	pp	X	X	
STIL-G2-120513	312089-02	12/05/13	Soil	X	SVOC	X	pp	X	X	
STIL-G3-120513	312089-03	12/05/13	Soil	X	SVOC	X	pp	X	X	
STIL-G4-120513	312089-04	12/05/13	Soil	X	SVOC	X	pp	X	X	
STIL-G5-120513	312089-05	12/05/13	Soil	X	SVOC	X	pp	X	X	
STIL-G7-120513	312089-06	12/05/13	Soil	X	SVOC	X	pp	X	X	
STIL-G8-120513	312089-07	12/05/13	Soil	X	SVOC	X	pp	X	X	
STIL-G6-120513	312089-08	12/05/13	Soil	X	SVOC	X	pp	X	X	
NRA1-PC1-12-010614	401056-01	01/06/14	Soil		X	X	X	X	X	BTEX
NRA2-PC2-8-010614	401056-02	01/06/14	Soil		X	X	X	X	X	BTEX
NRA2-PC3-8-010614	401056-03	01/06/14	Soil		X	X	X	X	X	BTEX
Cemex-QS-011014	401111-01	01/10/14	Soil				pp			
STIL-G9-011414	401174-01	01/14/14	Soil	X	SVOC	X	pp	X	X	
STIL-G10-011414	401174-02	01/14/14	Soil	X	SVOC	X	pp	X	X	
STIL-G11-011414	401174-03	01/14/14	Soil	X	SVOC	X	pp	X	X	
STIL-G12-011414	401174-04	01/14/14	Soil	X	SVOC	X	pp	X	X	
BAST-S57-5-012114	401241-01	01/21/14	Soil	X	X		X	X	X	
BAST-S58-8-012114	401241-02	01/21/14	Soil	X	X			X	X	
BAST-S59-7-012114	401241-03	01/21/14	Soil	X	X			X	X	EPH/VPH
BAST-S60-8-012114	401241-04	01/21/14	Soil	X	X			X	X	
BAST-S61-5-012114	401241-05	01/21/14	Soil	X	X			X	X	
BAST-S62-8-012114	401241-06	01/21/14	Soil	X	X		X	X	X	
BAST-S63-9-012114	401241-07	01/21/14	Soil	X	X			X	X	
BAST-S64-6-012114	401241-08	01/21/14	Soil	X	X			X	X	
BAST-S65-8-012114	401241-09	01/21/14	Soil	X	X			X	X	

Field Sample ID	Laboratory Sample ID	Sampling Date	Sample Type	Analysis						
				VOC	PAHs	PCBs	Metals	TPH -Gx	TPH-Dx	Misc.
BAST-S66-3-012114	401241-10	01/21/14	Soil	X	X			X	X	
BAST-B56-4-012714	401317-01	01/27/14	Soil		X				X	
BAST-B57-7-012714	401317-02	01/27/14	Soil		X				X	
BAST-B58-4-012714	401317-03	01/27/14	Soil		X				X	
BAST-B59-4-012714	401317-04	01/27/14	Soil		X				X	
BAST-B60-4-012714	401317-05	01/27/14	Soil		X		X		X	
BAST-B61-4-012714	401317-06	01/27/14	Soil		X				X	
BAST-B62-4-012714	401317-07	01/27/14	Soil		X				X	
BAST-B63-4-012714	401317-08	01/27/14	Soil		X				X	
BAST-B64-4-012714	401317-09	01/27/14	Soil		X				X	
BAST-B65-3.5-012714	401317-10	01/27/14	Soil		X		X		X	
BAST-506-012714	401317-11	01/27/14	Soil		X		X		X	
NRS-SP01-1-021014	402099-01	02/10/14	Soil	X	SVOC	X	pp	X	X	
NRS-SP01-2-021014	402099-02	02/10/14	Soil	X	SVOC	X	pp	X	X	
NRS-SP01-3-021014	402099-03	02/10/14	Soil	X	SVOC	X	pp	X	X	
NRS-SP02-1-021014	402099-04	02/10/14	Soil	X	SVOC	X	pp	X	X	
NRS-SP02-2-021014	402099-05	02/10/14	Soil	X	SVOC	X	pp	X	X	
NRS-SP02-3-021014	402099-06	02/10/14	Soil	X	SVOC	X	pp	X	X	
NRS-SP03-1-021014	402099-07	02/10/14	Soil	X	SVOC	X	pp	X	X	
NRS-SP03-2-021014	402099-08	02/10/14	Soil	X	SVOC	X	pp	X	X	
NRS-SP03-3-021014	402099-09	02/10/14	Soil	X	SVOC	X	pp	X	X	
NRS-SP04-1-021014	402099-10	02/10/14	Soil	X	SVOC	X	pp	X	X	
NRS-SP04-2-021014	402099-11	02/10/14	Soil	X	SVOC	X	pp	X	X	
NRS-SP04-3-021014	402099-12	02/10/14	Soil	X	SVOC	X	pp	X	X	
NRS-SP05-1-021014	402099-13	02/10/14	Soil	X	SVOC	X	pp	X	X	
NRS-SP05-2-021014	402099-14	02/10/14	Soil	X	SVOC	X	pp	X	X	
NRS-SP05-3-021014	402099-15	02/10/14	Soil	X	SVOC	X	pp	X	X	
NRS-SP06-1-021014	402099-16	02/10/14	Soil	X	SVOC	X	pp	X	X	
NRS-SP06-2-021014	402099-17	02/10/14	Soil	X	SVOC	X	pp	X	X	
NRS-SP06-3-021014	402099-18	02/10/14	Soil	X	SVOC	X	pp	X	X	
NRS-SP07-1-021014	402099-19	02/10/14	Soil	X	SVOC	X	pp	X	X	
NRS-SP07-2-021014	402099-20	02/10/14	Soil	X	SVOC	X	pp	X	X	
NRS-SP07-3-021014	402099-21	02/10/14	Soil	X	SVOC	X	pp	X	X	
BAST-B067-5-021114	402128-01	02/11/14	Soil	X	X			X	X	

Field Sample ID	Laboratory Sample ID	Sampling Date	Sample Type	Analysis						
				VOC	PAHs	PCBs	Metals	TPH -Gx	TPH-Dx	Misc.
BAST-B068-5-021114	402128-02	02/11/14	Soil	X	X			X	X	
BAST-B069-5-021114	402128-03	02/11/14	Soil	X	X			X	X	
BAST-S069-3-021114	402128-04	02/11/14	Soil	X	X		X	X	X	
BAST-S070-3-021114	402128-05	02/11/14	Soil	X	X			X	X	
BAST-S071-3-021114	402128-06	02/11/14	Soil	X	X			X	X	
BAST-507	402128-07	02/11/14	Soil	X	X		X	X	X	
NRS-S01-8-021114	402129-01	02/11/14	Soil	X	X			X	X	
NRS-S02-11-021114	402129-02	02/11/14	Soil	X	X			X	X	
NRS-S03-8-021114	402129-03	02/11/14	Soil	X	X			X	X	
NRS-S04-11-021114	402129-04	02/11/14	Soil	X	X			X	X	
NRS-S05-8-021114	402129-05	02/11/14	Soil	X	X		X	X	X	
NRS-S06-11-021114	402129-06	02/11/14	Soil	X	X			X	X	
NRS-S07-8-021114	402129-07	02/11/14	Soil	X	X			X	X	
NRS-S08-11-021114	402129-08	02/11/14	Soil	X	X			X	X	
NRS-S09-8-021114	402129-09	02/11/14	Soil	X	X			X	X	
NRS-S10-11-021114	402129-10	02/11/14	Soil	X	X		X	X	X	
NRS-S11-8-021114	402129-11	02/11/14	Soil	X	X			X	X	
NRS-S12-11-021114	402129-12	02/11/14	Soil	X	X			X	X	
NRS-S13-8-021214	402161-01	02/12/14	Soil	X	X			X	X	
NRS-S14-11-021214	402161-02	02/12/14	Soil	X	X			X	X	
NRS-S15-8-021214	402161-03	02/12/14	Soil	X	X			X	X	
NRS-S16-11-021214	402161-04	02/12/14	Soil	X	X			X	X	
NRS-S17-8-021214	402161-05	02/12/14	Soil	X	X		X	X	X	
NRS-S18-11-021214	402161-06	02/12/14	Soil	X	X			X	X	
NRS-S19-8-021214	402161-07	02/12/14	Soil	X	X			X	X	
NRS-S20-11-021214	402161-08	02/12/14	Soil	X	X			X	X	
NRS-S21-8-021214	402161-09	02/12/14	Soil	X	X			X	X	
NRS-S22-11-021214	402161-10	02/12/14	Soil	X	X		X	X	X	
NRS-S23-8-021214	402161-11	02/12/14	Soil	X	X			X	X	
NRS-S24-11-021214	402161-12	02/12/14	Soil	X	X			X	X	
NRS-S25-8-021214	402161-13	02/12/14	Soil	X	X			X	X	
NRS-S26-11-021214	402161-14	02/12/14	Soil	X	X			X	X	
NRS-B01-13-021214	402161-15	02/12/14	Soil	X	X		X	X	X	
NRS-B02-13-021214	402161-16	02/12/14	Soil	X	X			X	X	

Field Sample ID	Laboratory Sample ID	Sampling Date	Sample Type	Analysis						
				VOC	PAHs	PCBs	Metals	TPH -Gx	TPH-Dx	Misc.
NRS-B03-13-021214	402161-17	02/12/14	Soil	X	X			X	X	
NRS-B04-13-021214	402161-18	02/12/14	Soil	X	X			X	X	
NRS-B05-13-021214	402161-19	02/12/14	Soil	X	X			X	X	
NRS-B06-13-021214	402161-20	02/12/14	Soil	X	X		X	X	X	
NRS-B07-13-021214	402161-21	02/12/14	Soil	X	X			X	X	
NRS-B08-13-021214	402161-22	02/12/14	Soil	X	X			X	X	
NRS-500-021214	402161-23	02/12/14	Soil	X	X			X	X	
NRS-501-021214	402161-24	02/12/14	Soil	X	X		X	X	X	
BAST-S72-3-021314	402183-01	02/13/14	Soil	X	X			X	X	
BAST-S73-3-021314	402183-02	02/13/14	Soil	X	X			X	X	
BAST-S74-3-021314	402183-03	02/13/14	Soil	X	X			X	X	
BAST-B70-4-021314	402183-04	02/13/14	Soil	X	X			X	X	
BAST-B71-4-021314	402183-05	02/13/14	Soil	X	X		X	X	X	
BAST-S075-4-021714	402219-01	02/17/14	Soil	X	X			X	X	EPH/VPH
BAST-SP01-1-021714	402220-01	02/17/14	Soil	X	SVOC	X	pp	X	X	
BAST-SP01-2-021714	402220-02	02/17/14	Soil	X	SVOC	X	pp	X	X	
BAST-SP01-3-021714	402220-03	02/17/14	Soil	X	SVOC	X	pp	X	X	
NRS-S27-8-021814	402263-01	02/18/14	Soil	X	X			X	X	
NRS-S28-8-021814	402263-02	02/18/14	Soil	X	X			X	X	
NRS-B09-10-021814	402263-03	02/18/14	Soil	X	X			X	X	
NRS-S29-8-021914	402263-04	02/19/14	Soil	X	X			X	X	
STIL-G-13-021914	402264-01	02/19/14	Soil	X	SVOC	X	pp	X	X	
STIL-G-14-021914	402264-02	02/19/14	Soil	X	SVOC	X	pp	X	X	
STIL-G-15-021914	402264-03	02/19/14	Soil	X	SVOC	X	pp	X	X	
STIL-G-16-021914	402264-04	02/19/14	Soil	X	SVOC	X	pp	X	X	
NRS-SP08-1-021914	402265-01	02/19/14	Soil	X	SVOC	X	pp	X	X	
NRS-SP08-2-021914	402265-02	02/19/14	Soil	X	SVOC	X	pp	X	X	
NRS-SP08-3-021914	402265-03	02/19/14	Soil	X	SVOC	X	pp	X	X	
NRS-SP09-1-021914	402265-04	02/19/14	Soil	X	SVOC	X	pp	X	X	
NRS-SP09-2-021914	402265-05	02/19/14	Soil	X	SVOC	X	pp	X	X	
NRS-SP09-3-021914	402265-06	02/19/14	Soil	X	SVOC	X	pp	X	X	
NRS-SP10-1-021914	402265-07	02/19/14	Soil	X	SVOC	X	pp	X	X	
NRS-SP10-2-021914	402265-08	02/19/14	Soil	X	SVOC	X	pp	X	X	
NRS-SP10-3-021914	402265-09	02/19/14	Soil	X	SVOC	X	pp	X	X	

Field Sample ID	Laboratory Sample ID	Sampling Date	Sample Type	Analysis						
				VOC	PAHs	PCBs	Metals	TPH -Gx	TPH-Dx	Misc.
BAST-B72-6-022014	402314-01	02/20/14	Soil	X	SVOC		pp	X	X	
BAST-S76-4-022014	402314-02	02/20/14	Soil	X	SVOC		pp	X	X	
BAST-S77-4-022014	402314-03	02/20/14	Soil	X	SVOC		pp	X	X	
BAST-S78-4-022014	402314-04	02/20/14	Soil	X	SVOC		pp	X	X	
BAST-B73-7-022014	402314-05	02/20/14	Soil	X	SVOC		pp	X	X	
BAST-S79-4-022114	402314-06	02/21/14	Soil	X	SVOC		pp	X	X	
BAST-S80-4-022114	402314-07	02/21/14	Soil	X	SVOC		pp	X	X	
BAST-S81-4-022114	402314-08	02/21/14	Soil	X	SVOC		pp	X	X	
BAST-B77-8-022114	402314-09	02/21/14	Soil	X	SVOC		pp	X	X	
BAST-S82-4-022114	402314-10	02/21/14	Soil	X	SVOC		pp	X	X	
BAST-S83-4-022114	402314-11	02/21/14	Soil	X	SVOC		pp	X	X	
BAST-S84-4-022114	402314-12	02/21/14	Soil	X	SVOC		pp	X	X	
BAST-S85-4-022114	402314-13	02/21/14	Soil	X	SVOC		pp	X	X	
BAST-S86-4-022114	402314-14	02/21/14	Soil	X	SVOC		pp	X	X	
BAST-B74-7-022114	402314-15	02/21/14	Soil	X	SVOC		pp	X	X	
BAST-B75-7-022114	402314-16	02/21/14	Soil	X	SVOC		pp	X	X	
BAST-B76-7-022114	402314-17	02/21/14	Soil	X	SVOC		pp	X	X	
BAST-508-022014	402314-18	02/20/14	Soil	X	SVOC		pp	X	X	
BAST-B78-4-022414	402347-01	02/24/14	Soil	X	X		X	X	X	
BAST-S87-2-022414	402347-02	02/24/14	Soil	X	X		X	X	X	
BAST-S88-4-022514	402347-03	02/25/14	Soil	X	X		X	X	X	
BAST-S89-4-022514	402347-04	02/25/14	Soil	X	X		X	X	X	
BAST-S90-4-022514	402347-05	02/25/14	Soil	X	X		X	X	X	
BAST-S91-4-022514	402347-06	02/25/14	Soil	X	X		X	X	X	
BAST-S92-4-022514	402347-07	02/25/14	Soil	X	X		X	X	X	
BAST-S93-4-022514	402347-08	02/25/14	Soil	X	X		X	X	X	
BAST-509	402347-09	02/25/14	Soil	X	X		X	X	X	
CN-S01-3-030314	403027-01	03/03/14	Soil		X				X	
CN-S02-3-030314	403027-02	03/03/14	Soil		X				X	
CN-S03-4-030314	403027-03	03/03/14	Soil		X				X	
CN-S04-3-030314	403027-04	03/03/14	Soil		X				X	
CN-S05-6-030314	403027-05	03/03/14	Soil		X		X		X	
CN-S06-3-030314	403027-06	03/03/14	Soil		X				X	
CN-S07-6-030314	403027-07	03/03/14	Soil		X				X	

Field Sample ID	Laboratory Sample ID	Sampling Date	Sample Type	Analysis						
				VOC	PAHs	PCBs	Metals	TPH -Gx	TPH-Dx	Misc.
CN-S08-3-030314	403027-08	03/03/14	Soil		X				X	
CN-S09-6-030314	403027-09	03/03/14	Soil		X				X	
CN-S10-6-030314	403027-10	03/03/14	Soil		X	X	X		X	
CN-S11-3-030314	403027-11	03/03/14	Soil		X				X	
CN-S12-3-030314	403027-12	03/03/14	Soil		X				X	
CN-B01-4-030314	403027-13	03/03/14	Soil		X				X	
CN-B02-4-030314	403027-14	03/03/14	Soil		X				X	
CN-B03-8-030314	403027-15	03/03/14	Soil		X		X		X	
CN-B04-8-030314	403027-16	03/03/14	Soil		X				X	
CN-B05-7-030314	403027-17	03/03/14	Soil		X				X	
CN-B06-7-030314	403027-18	03/03/14	Soil		X				X	
CN-B07-4-030314	403027-19	03/03/14	Soil		X				X	
CN-500-030314	403027-20	03/03/14	Soil		X		X		X	
BAST-S94-4-030414	403052-01	03/04/14	Soil		X				X	
BAST-S95-4-030414	403052-02	03/04/14	Soil				Pb		X	
BA-S01-4-030514	403053-01	03/05/14	Soil						X	
BA-S02-4-030514	403053-02	03/05/14	Soil						X	
BA-S03-4-030514	403053-03	03/05/14	Soil						X	
BA-B01-5-030514	403053-04	03/05/14	Soil						X	
BA-B02-6-030514	403053-05	03/05/14	Soil						X	
BA-500-030514	403053-06	03/05/14	Soil						X	
CN-S14-6-030714	403089-01	03/07/14	Soil		X		X		X	
CN-S15-10-030714	403089-02	03/07/14	Soil		X		X		X	
CN-S16-6-030714	403089-03	03/07/14	Soil		X		X		X	
CN-S17-10-030714	403089-04	03/07/14	Soil		X		X		X	
CN-S18-6-030714	403089-05	03/07/14	Soil		X		X		X	
CN-S19-10-030714	403089-06	03/07/14	Soil		X		X		X	
CN-S20-6-030714	403089-07	03/07/14	Soil		X		X		X	
CN-S21-10-030714	403089-08	03/07/14	Soil		X		X		X	
CN-S22-6-030714	403089-09	03/07/14	Soil		X		X		X	
CN-S23-10-030714	403089-10	03/07/14	Soil		X		X		X	
CN-S24-6-030714	403089-11	03/07/14	Soil		X		X		X	
CN-S25-10-030714	403089-12	03/07/14	Soil		X		X		X	
SHB-S01-3-030614	403091-01	03/06/14	Soil	X	X		X	X	X	

Field Sample ID	Laboratory Sample ID	Sampling Date	Sample Type	Analysis						
				VOC	PAHs	PCBs	Metals	TPH -Gx	TPH-Dx	Misc.
SHB-S02-3-030614	403091-02	03/06/14	Soil	X	X		X	X	X	
SHB-S03-3-030614	403091-03	03/06/14	Soil	X	X		X	X	X	
SHB-S04-3-030614	403091-04	03/06/14	Soil	X	X		X	X	X	
SHB-S05-3-030614	403091-05	03/06/14	Soil	X	X		X	X	X	
SHB-S06-3-030614	403091-06	03/06/14	Soil	X	X		X	X	X	
SHB-B01-5-030614	403091-07	03/06/14	Soil	X	X		X	X	X	
SHB-B02-5-030614	403091-08	03/06/14	Soil	X	X		X	X	X	
SHB-B03-5-030614	403091-09	03/06/14	Soil	X	X		X	X	X	
SHB-500	403091-10	03/06/14	Soil	X	X		X	X	X	
CN-B08-12-030714	403101-01	03/07/14	Soil		X		X		X	
CN-B09-11-030714	403101-02	03/07/14	Soil		X		X		X	
CN-B10-11-030714	403101-03	03/07/14	Soil		X		X		X	
CN-B11-11-030714	403101-04	03/07/14	Soil		X		X		X	
CN-B12-11-030714	403101-05	03/07/14	Soil		X		X		X	
CN-B13-11-030714	403101-06	03/07/14	Soil		X		X		X	
CN-501	403101-07	03/07/14	Soil		X		X		X	
SHB-S07-3-031114	403133-01	03/11/14	Soil				Cu		X	
CN-B14-15-031414	403201-01	03/14/14	Soil		X		X		X	
CN-S13-4-031514	403201-02	03/15/14	Soil		X		X		X	
CN-S26-8-031514	403201-03	03/15/14	Soil		X		X		X	
CN-S27-12-031514	403201-04	03/15/14	Soil		X		X		X	
CN-S28-4-031514	403201-05	03/15/14	Soil		X		X		X	
CN-S29-8-031514	403201-06	03/15/14	Soil		X		X		X	
CN-S30-12-031514	403201-07	03/15/14	Soil		X		X		X	
CN-S31-4-031514	403201-08	03/15/14	Soil		X		X		X	
CN-S32-8-031514	403201-09	03/15/14	Soil		X		X		X	
CN-S33-12-031514	403201-10	03/15/14	Soil		X		X		X	
CN-S34-4-031514	403201-11	03/15/14	Soil		X		X		X	
CN-B15-18-031514	403201-12	03/15/14	Soil		X		X		X	
CN-B16-18-031514	403201-13	03/15/14	Soil		X		X		X	
CN-B17-18-031514	403201-14	03/15/14	Soil		X		X		X	
CN-B18-18-031514	403201-15	03/15/14	Soil		X		X		X	
CN-B19-18-031514	403201-16	03/15/14	Soil		X		X		X	
CN-B20-16-031514	403201-17	03/15/14	Soil		X		X		X	

Field Sample ID	Laboratory Sample ID	Sampling Date	Sample Type	Analysis						
				VOC	PAHs	PCBs	Metals	TPH -Gx	TPH-Dx	Misc.
CN-B21-16-031514	403201-18	03/15/14	Soil		X		X		X	
CN-B22-14-031514	403201-19	03/15/14	Soil		X		X		X	
CN-502-031514	403201-20	03/15/14	Soil		X		X		X	
CN-S35-8-031514	403201-21	03/15/14	Soil		X		X		X	
CN-S36-12-031514	403201-22	03/15/14	Soil		X		X		X	
CN-S37-4-031514	403201-23	03/15/14	Soil		X		X		X	
CN-S38-8-031514	403201-24	03/15/14	Soil		X		X		X	
CN-S39-12-031514	403201-25	03/15/14	Soil		X		X		X	
CN-S40-4-031514	403201-26	03/15/14	Soil		X		X		X	
CN-S41-8-031514	403201-27	03/15/14	Soil		X		X		X	
CN-S42-12-031514	403201-28	03/15/14	Soil		X		X		X	
CN-S43-4-031514	403201-29	03/15/14	Soil		X		X		X	
CN-S44-8-031514	403201-30	03/15/14	Soil		X		X		X	
CN-B23-14-031514	403201-31	03/15/14	Soil		X		X		X	
CN-S45-12-031514	403201-32	03/15/14	Soil		X		X		X	
CN-S46-4-031514	403201-33	03/15/14	Soil		X		X		X	
CN-S47-8-031514	403201-34	03/15/14	Soil		X		X		X	
CN-S48-12-031514	403201-35	03/15/14	Soil		X		X		X	
CN-B25-18-031914	403267-01	03/19/14	Soil		X		X		X	
CN-B24-16-031914	403267-02	03/19/14	Soil		X		X		X	
CN-S49-12-031914	403267-03	03/19/14	Soil		X		X		X	
CN-503	403267-04	03/19/14	Soil		X		X		X	
CN-S50-3-032014	403267-05	03/20/14	Soil		X		X		X	
CN-S51-3-032014	403267-06	03/20/14	Soil		X		X		X	
CN-S52-3-032014	403267-07	03/20/14	Soil		X		X		X	
CN-S53-3-032014	403267-08	03/20/14	Soil		X		X		X	
CN-B26-4-032014	403267-09	03/20/14	Soil		X		X		X	
CN-B27-4-032014	403267-10	03/20/14	Soil		X		X		X	
CN-B28-4-032014	403267-11	03/20/14	Soil		X		X		X	
UST29-B01-5-122313	K1313944-009	12/23/13	Soil							FRM
UST29-B02-5-122313	K1313944-010	12/23/13	Soil							FRM
UST29-B03-5-122313	K1313944-011	12/23/13	Soil							FRM
UST29-B04-5-122313	K1313944-012	12/23/13	Soil							FRM
UST29-B05-5-122313	K1313944-013	12/23/13	Soil							FRM

Field Sample ID	Laboratory Sample ID	Sampling Date	Sample Type	Analysis						
				VOC	PAHs	PCBs	Metals	TPH -Gx	TPH-Dx	Misc.
UST29-B06-5-122313	K1313944-014	12/23/13	Soil							FRM
UST29-S01-3-122313	K1313944-001	12/23/13	Soil							FRM
UST29-S02-3-122313	K1313944-002	12/23/13	Soil							FRM
UST29-S03-3-122313	K1313944-003	12/23/13	Soil							FRM
UST29-S04-3-122313	K1313944-004	12/23/13	Soil							FRM
UST29-S05-3-122313	K1313944-005	12/23/13	Soil							FRM
UST29-S06-3-122313	K1313944-006	12/23/13	Soil							FRM
UST29-S07-3-122313	K1313944-007	12/23/13	Soil							FRM

Notes:

[(A)] - Arsenic, cadmium, chromium, copper, mercury, nickel, and zinc

Cu - Sample was analyzed for copper only

EPH - Extractable petroleum hydrocarbon

FMR - Formaldehyde

Metals - Antimony, arsenic, cadmium, chromium, copper, mercury, nickel, and zinc, unless otherwise noted.

Misc. - Miscellaneous

PAHs - Polycyclic aromatic hydrocarbons

Pb - Sample was analyzed for lead only

PCBs - Polychlorinated biphenyl

pp - Priority pollutant metals, *i.e.,* antimony, arsenic, beryllium, cadmium, chromium, copper, lead, mercury, nickel, selenium, silver, thallium, and zinc

SPLP - Synthetic precipitation leaching procedure; the leachates were analyzed for copper (SPLP/Cu) and/or arsenic (SPLP/As).

TPH-Dx - Diesel and motor oil range total petroleum hydrocarbon

TPH-Gx - Gasoline range total petroleum hydrocarbon

VOC - Volatile organic compound

VPH - Volatile petroleum hydrocarbon

X - The analysis was requested and performed on the sample.

The analytical parameters requested for the samples, the respective analytical methods, and the analytical laboratories are summarized below:

Parameter	Analytical Method	Analytical Laboratory
Volatile Organic Compounds (VOCs)	SW846 Method 8260C	Friedman & Bruya, Inc. (F&BI) Seattle, WA
Polycyclic Aromatic Hydrocarbons (PAHs)	SW846 Method 8270D-SIM	
PCB Aroclors	SW846 Method 8082A	
BTEX	SW846 Method 8021B	
TPH - Gasoline Range	NWTPH-Gx	
TPH - Diesel & Motor Oil Range	NWTPH-Dx	
Total Metals	EPA Method 200.8	
Mercury	EPA Method 1631E	
Extractable Petroleum Hydrocarbon	NWTPH-EPH	Fremont Analytical, Inc. Seattle, WA
Volatile Petroleum Hydrocarbon	NWTPH-VPH	
Formaldehyde	SW846 Method 8315A	ALS Environmental Services, Inc. Kelso, Washington

Notes:

1. SW846 - *USEPA Test Methods for Evaluating Solid Waste, Physical/Chemical Methods,* SW-846, Third Edition, December 1996.
2. EPA Methods - *USEPA Methods for Chemical Analysis of Water and Wastes,* EPA–600/4-79-020, March 1983 Revision.
3. EPA Method 1631E - *Mercury in Water by Oxidation, Purge and Trap, and Cold Vapor Atomic Fluorescence Spectrometry,* Office of Water, U.S. Environmental Protection Agency, August 2002, EPA-821-R-02-019.
4. NWTPH Methods – *Washington State Department of Ecology, Analytical Methods for Petroleum Hydrocarbons*, Publication No. ECY 97-602, June 1997.

DATA VALIDATION FINDINGS

1. VOCs by GC/MS (EPA Method SW8260C)

1.1 Sample Management and Holding Time

Samples were received in the laboratory intact and in consistence with the accompanying chain-of-custody (COC) documentation. In some cases where cooler temperature was outside the 4±2°C criteria; samples were hand-delivered to the laboratory the same day of collection. The cooler temperature exceedance had no significant effects on data quality. No other anomalies were identified in relation to sample preservation, handling, and transport.

All samples in SDGs: 402099, 402220, and 402265 were not preserved in methanol upon collection. The analyses were performed within a relatively short period of time (less than seven days) of collection. VOCs results for these samples, rather than being rejected, were qualified (UJ) for non-detects and (J) for detects as estimated.

Soil samples should be preserved at the time of collection. Soil samples should be analyzed within 14 days of collection. All samples were analyzed within the required holding times.

1.2 GC/MS Instrument Performance Check

The method require that (1) gas chromatograph/mass spectrometer (GC/MS) tuning analysis be performed, using bromofluorobenzene (BFB), at the beginning of each 12-hour period prior to any analysis, and (2) specific mass ions meet the criteria provided in the method. All instrument performance checks met the requirements.

1.3 Initial Calibration (ICAL)

The ICAL criteria require that (1) if linear average RFs is chosen as the quantitation option, at least five standards at different concentrations should be analyzed and the percent relative standard deviation (%RSD) of response factors (RFs) be ≤20% for the analyte, (2) if least-square linear regression is chosen for quantitation, the correlation coefficient (r) be >0.995, and (3) if six-point non-linear (quadratic) curve is chosen for quantitation, the coefficient of determination (r^2) be >0.99. ICALs either met the requirements or the outliers had no adverse effects on data usability (*e.g.,* %RSD >20% for a compound not detected in samples).

An initial calibration verification (ICV) standard (second source standard) was analyzed to verify the calibration curve. Percent difference (%D) values were either within ±30%, or the exceedance had no adverse effects on data usability (*e.g.,* biased high ICV recovery for a compound not detected in samples).

1.4 Calibration Verification (CCV)

The CCV criteria requires that (1) continuing calibrations be analyzed at the beginning of each 12-hour analysis period prior to the analysis of method blank and samples, and (2) the %D value be within ±20%.

Calibration verifications either met the requirements, or the exceedance had no adverse effects on data usability (*e.g.,* biased high CCV recovery for a compound not detected in samples), except for the following:

SDG	CCV ID	Compound	%D	Bias	Affected Sample	Data Qualifier
403091	GCMS4 3/7/14, 14:00	Bromomethane	25.6%	Low	SHB-S03-3-030614 SHB-S04-3-030614 SHB-S05-3-030614 SHB-S06-3-030614 SHB-B01-5-030614 SHB-B02-5-030614 SHB-B03-5-030614 SHB-500	**UJ**

1.5 Method Blanks

Method blanks were prepared and analyzed as required. Target compounds were not detected at or above the reporting limits (RLs).

1.6 Laboratory Control Sample (LCS) and LCS Duplicate (LCSD)

LCS and LCSD were prepared and analyzed as required by the method. Percent recovery (%R) and relative percent difference (RPD) values either met the project control limits, or the outliers had no adverse effects on data usability (*e.g.,* biased high recovery for a compound not detected in samples).

1.7 Surrogate Spikes

Surrogate spikes were added to all samples as required by the method. All surrogate spike %R values were within the project control limits.

1.8 Matrix Spike (MS)

MS analyses were performed on project and batch QC samples at the proper frequency (≥5% of the samples analyzed for VOCs). All %R values were within the project control limits, except for the following:

SDG#	Parent Sample ID	Analyte	MS %R	MSD %R	Control Limit	RPD	Data Qualifier
310458	CONC-SP-01-102313	1,1,2,2-tetrachloroethane	21%	13%	28-140%	47%	**UJ**

Note that the %R values for the lower-boiling-point VOCs in the MSD analyses performed on samples NRS-500-021214 (SDG: 402161) and NRS-SP08-1-021914 (SDG: 402265) appeared to be a result of mishandling of the MSD samples, rather than matrix effects. Data were not qualified on this basis.

1.9 Internal Standards

The method requires that (1) internal standard retention time be within ±30 seconds from that of the associated 12-hour calibration standard, and (2) the area counts of all internal standards be within –50% to +100% of the associated 12-hour calibration standard. All internal standards in the sample and associated QC analyses met the criteria.

1.10 Reporting Limit and Target Compound Quantitation

RLs were supported with adequate initial calibration concentrations.

1,4-dioxane and vinyl acetate were reported from the mass spectrum library search, the reported RLs were considered estimated. These compounds were not detected in any of the field samples; the results were qualified (UJ) to indicate that the RLs were estimated values.

In cases where a sample was analyzed for both VOCs (Method 8260C) and SVOCs (Method 8270D), the results for 1,2-dichlorobenzene, 1,3-dichlorobenzene, 1,4-dichlorobenzene, 1,2,4-trichlorobenzene, hexachlorobutadiene, and naphthalene were to be reported from the SVOCs analysis, in favor of the lower detection limits.

In cases where a sample was analyzed for both VOCs (Method 8260C) and PAHs (Method 8270-SIM), the result for naphthalene was to be reported from the PAHs analysis, in favor of the lower detection limit.

1.11 Field Duplicates

Five sets of field duplicates were submitted for VOCss analyses. VOCs were not detected at or above RLs in these sample; the field precision met the project advisory criteria.

1.12 Overall Assessment of VOCs Data Usability

VOCs data are of known quality and acceptable for use, as qualified.

2. SVOCs and PAHs by GC/MS and GC/MS - SIM (EPA Method SW8270D and SIM)

2.1 Sample Management and Holding Times

No anomalies were identified in relation to sample preservation, handling, and transport as discussed in Section 1.1.

Soil samples should be extracted within 14 days and water within seven days of collection. Extracts should be analyzed within 40 days of extraction. All samples were extracted and analyzed within the required holding times.

2.2 GC/MS Instrument Performance Check

DFTPP tuning was performed within each 12-hour interval. All required ion abundance ratios met the method requirements.

2.3 Initial Calibration (ICAL)

The ICAL criteria require that (1) if linear average RFs is chosen as the quantitation option, at least five standards at different concentrations should be analyzed and the %RSD of RFs be ≤20% for the analyte, (2) if least-square linear regression is chosen for quantitation, the correlation coefficient (r) be >0.995, and (3) if six-point non-linear (quadratic) curve is chosen for quantitation, the coefficient of determination (r^2) be >0.99. All ICALs met the requirements.

An ICV standard (second source standard) was analyzed to verify the calibration curve. %D values were either within ±30%, or the exceedance had no adverse effects on data usability (*e.g.,* biased high ICV recovery for a compound not detected in samples).

2.4 Calibration Verification (CCV)

The analytical method requires that (1) continuing calibration verifications be analyzed at the beginning of each 12-hour analysis period prior to the analysis of method blank and samples, and (2) the %D be within ±20%. The CCVs met the requirements, except for the following:

SDG	CCV ID	Compound	%D	Bias	Affected Sample	Data Qualifier
401174	GCMS8 1/21/14, 12:29	Benzoic Acid	27.8%	Low	STIL-G9-011414 STIL-G10-011414 STIL-G11-011414 STIL-G12-011414	**UJ**

SDG	CCV ID	Compound	%D	Bias	Affected Sample	Data Qualifier
401299	GCMS8 2/13/14, 7:04	Benzoic Acid	42.0%	Low	NRS-SP01-2-021014 NRS-SP01-3-021014 NRS-SP02-3-021014 NRS-SP04-1-021014	**UJ**
401299	GCMS8 2/13/14, 17:43	2,4-Dinitrophenol 4,6-Dinitro-2-methylphenol	36.7% 34.4%	Low	NRS-SP01-1-021014 NRS-SP02-1-021014 NRS-SP02-2-021014 NRS-SP03-2-021014 NRS-SP05-2-021014 NRS-SP05-3-021014 NRS-SP06-1-021014 NRS-SP06-2-021014 NRS-SP06-3-021014 NRS-SP07-1-021014	**UJ**
402220	GCMS8 2/20/14, 17:38	Benzoic Acid	38.2%	Low	BAST-SP01-2-021714	**UJ**
402263	GCMS6 2/20/14, 8:21	Indeno(1,2,3-cd)pyrene	34.2%	Low	NRS-B09-10-021814	**UJ**
402264	GCMS8 2/24/14, 7:44	1,3-Dichlorobenzene Benzoic Acid 2,4-Dinitrophenol 4,6-Dinitro-2-methylphenol	42.4% 28.9% 27.9% 23.0%	Low	NRS-SP08-2-021914 NRS-SP10-2-021914 NRS-SP10-3-021914	**UJ**
402264	GCMS8 2/22/14, 17:12	Benzoic Acid	46.3%	Low	NRS-SP08-3-021914 NRS-SP09-1-021914 NRS-SP09-2-021914 NRS-SP09-3-021914 NRS-SP10-1-021914	**UJ**
402347	GCMS6 2/27/14, 7:07 2/27/14, 17:03	Indeno(1,2,3-cd)pyrene	-27.0% -24.6%	High	BAST-B78-4-022414 BAST-S87-2-022414 BAST-S90-4-022514	**UJ**

2.5 Method Blanks

Method blanks were prepared and analyzed as required. Target compounds were not detected at or above the RLs in the method blanks. 1,4-Dichlorobenzene was detected at a level greater than the method detection limit but less than the RL in the method blank associated with samples in SDGs 402099 and 402220. 1,4-Dichlorobenzene detections in these samples were less than 10x the level found in the method blank and were qualified (U) as non-detects at the reported values, as summarized in **SUMMARY, Table I**.

2.6 Surrogate Spikes

Surrogate spikes were added to all samples as required by the method. All surrogate spike %R values were either within the project control limits or at levels that had no adverse effects on data quality (*e.g.,* biased-high recovery for compounds that were not detected in samples). In some cases surrogate spike %R values were not applicable for

data evaluation because the samples contained high levels of target PAHs and required dilution analysis; no data were qualified in these cases.

2.7 Matrix Spike (MS) and MS Duplicate (MSD)

MS and MSD analyses were performed on project and batch QC samples at the proper frequency (≥5% of samples analyzed). All %R and RPD values met the project control criteria, except for the following:

SDG#	Parent Sample ID	Analyte	MS %R	MSD %R	Control Limit	RPD	Data Qualifier
402099	NRS-SP01-1-021014	Hexachlorocyclopentadiene	29%	15%		64%	**UJ**
		2,4-Dinitrophenol	81%	47%	50-150%	53%	**UJ**
		Pyrene	114%	143%		23%	**J**
402099	NRS-SP07-3-021014	Hexachlorocyclopentadiene	16%	8%		67%	
		2,4-Dinitrophenol	30%	24%	50-150%	22%	**UJ**
		4,6-Dinitro-2-methylphenol	37%	32%		14%	
403027	CN-S01-3-030314	Benz(a)anthracene	84%	150%	23-144%	56%	
		Benzo(a)pyrene	87%	138%	39-128%	45%	**J**
		Benzo(b)fluoranthene	94%	164%	31-144%	54%	
		Chrysene	87%	186%	45-122%	73%	

Note: RPD control criteria = ±20%

2.8 Laboratory Control Sample (LCS) and LCS Duplicate (LCSD)

LCS and LCSD analyses were performed as required by the method. All %R and RPD values were within the project control limits, except for the following:

SDG#	LCS ID	Analyte	LCS %R	LCSD %R	Control Limit	RPD	Affected Sample	Data Qualifier
401212	LCS/LCSD	Indeno(1,2,3-cd)pyrene	77%	60%	62-119%	25%	BV-S01-6-011714 BV-S04-6-011714	**UJ**
402263	LCS/LCSD	*cis*-1,3-Dichloropropene	71%	-	75-136%	-	NRS-S27-8-021814 NRS-S28-8-021814 NRS-B09-10-021814 NRS-S29-8-021914	**UJ**
		Dibromochloromethane	64%		72-132%			
		trans-1,3-Dichloropropene	72%		74-125%			

Note: RPD control criteria = ±20%

2.9 Internal Standards

The method requires that (1) internal standard retention time be within ±30 seconds from that of the associated 12-hour calibration standard, and (2) the area counts of all internal standards be within –50% to +100% of the associated 12-hour calibration standard. All internal standards in the sample and associated QC analyses met the criteria, except for the following:

SDG#	Sample ID	Internal Standard	Sample Response Area	CCV Response Area	Affected Compound	Data Qualifier
310458	CONC-SP-01-102313	Chrysene-d_{12} Perylene-d_{12}	505384 371993	1522710 881878	Benz(a)anthracene Benzo(a)pyrene Benzo(b)fluoranthene Benzo(g,h,i)perylene Benzo(k)fluoranthene Benzyl butyl phthalate *bis*(2-ethylhexyl) phthalate Chrysene Dibenzo(a,h)anthracene Di-n-octyl phthalate Indeno(1,2,3-cd)pyrene Pyrene	**J** **J** **J** **J** **J** **UJ** **UJ** **J** **J** **UJ** **J** **J**
310458	CONC-SP-02-102313	Chrysene-d_{12} Perylene-d_{12}	535966 339158	1522710 881878	Benz(a)anthracene Benzo(a)pyrene Benzo(b)fluoranthene Benzo(g,h,i)perylene Benzo(k)fluoranthene Benzyl butyl phthalate *bis*(2-ethylhexyl) phthalate Chrysene Dibenzo(a,h)anthracene Di-n-octyl phthalate Indeno(1,2,3-cd)pyrene Pyrene	**J** **J** **J** **J** **J** **UJ** **UJ** **J** **J** **UJ** **J** **J**
310458	CONC-SP-05-102313	Chrysene-d_{12}	600742	1522710	Benz(a)anthracene Benzyl butyl phthalate *bis*(2-ethylhexyl) phthalate Chrysene Pyrene	**J**
310458	CONC-SP-06-102313	Chrysene-d_{12} Perylene-d_{12}	587148 403106	1522710 881878	Benz(a)anthracene Benzo(a)pyrene Benzo(b)fluoranthene Benzo(g,h,i)perylene Benzo(k)fluoranthene Benzyl butyl phthalate *bis*(2-ethylhexyl) phthalate Chrysene Dibenzo(a,h)anthracene Di-n-octyl phthalate Indeno(1,2,3-cd)pyrene Pyrene	**J** **J** **J** **J** **J** **UJ** **UJ** **J** **UJ** **UJ** **J** **J**
402099	NRS-SP02-3-021014	Chrysene-d_{12}	1064719	2390680	Benz(a)anthracene Benzyl butyl phthalate *bis*(2-ethylhexyl) phthalate Chrysene Pyrene	**J**
403089	CN-S24-6-030714	Perylene-d_{12}	272282	130766	Benzo(a)pyrene Benzo(b)fluoranthene Benzo(g,h,i)perylene Dibenzo(a,h)anthracene Indeno(1,2,3-cd)pyrene	**J**

Note that samples listed above were also analyzed at dilutions to confirm the presence and effects of sample matrices on internal standard quantitation. The initial analyses provided optimal data usability. Therefore, the PAHs/SVOCs results were to be reported from the initial analyses as qualified above, and the dilution analyses discarded.

2.10 Reporting Limits and Target Compound Quantitation

Sample-specific RLs were supported with adequate initial calibration concentrations. In some cases samples required dilution for definitive quantitation of target compounds; the RLs were raised accordingly, and the compounds reported from the dilution analysis. The remaining (un-diluted) target compounds were to be reported from the initial analysis for the lower detection limits.

2.11 Field Duplicates

Eleven sets of field duplicates were submitted for PAHs analyses. Field duplicate results for detected target compounds, RPD (or concentration difference) values, and data qualification were presented in **Appendix A**.

2.12 Overall Assessment of PAHs Data Usability

PAHs data are of known quality and acceptable for use, as qualified.

3. PCB Aroclors (EPA Method SW8082A)

3.1 Sample Management and Holding Times

No anomalies were identified in relation to sample preservation, handling, and transport as discussed in Section 1.1.

Soil samples should be extracted within 14 days of collection and extracts analyzed within 40 days of extraction. All samples were extracted and analyzed within the required holding times.

3.2 Initial Calibration

The method requires that (1) a minimum of 5-point calibration be performed using the mixture of Aroclor 1016 and 1260, (2) a single-point calibration be performed for the other five Aroclors to establish calibration factors (CFs) and for Aroclor pattern recognition, (3) at least 3 peaks (preferably 5 peaks) must be chosen for each Aroclor for characterization, (4) the %RSD values of Aroclor 1016 and 1260 CFs must be ≤20%, and

(5) if dual column analysis is chosen, both columns should meet the requirements. All ICALs met the requirements.

3.3 Calibration Verification

CCV analyses should be performed for each 12-hour analysis sequence prior to sample analyses, and the %D be within ±20%. Calibration verifications were performed at the required frequency. All %D values either met the control criteria or biased high for target compounds that were not detected in the associated samples.

3.4 Method Blanks

Method blanks were prepared and analyzed as required. PCB Aroclors were not detected at or above the MDLs in the method blanks.

3.5 Surrogate Spikes

Surrogate spikes were added to all samples as required by the method. All surrogate spike %R values were within the laboratory control limits.

3.6 Matrix Spike and Matrix Spike Duplicate (MS/MSD)

MS/MSD analyses were performed on project samples or batch QC samples at the required frequency. All %R and RPD values were within the laboratory control limits.

3.7 Laboratory Control Sample (LCS) and LCS Duplicate (LCSD)

LCS and LCSD analyses were performed as required by the method. All %R and RPD values were within the project control limits.

3.8 Method Reporting Limits and Target Compound Quantitation

Sample-specific RLs were supported with adequate initial calibration concentrations and achieved the project target quantitation limits.

3.9 Field Duplicates

Field duplicates were not submitted for PCB Aroclors analysis in these SDGs.

3.10 Overall Assessment of PCB Aroclors Data Usability

PCB Aroclor data are of known quality and acceptable for use.

4. TPH-Gasoline by GC/FID (Method NWTPH-Gx)

4.1 Sample Management and Holding Times

No anomalies were identified in relation to sample preservation, handling, and transport as discussed in Section 1.1.

All samples in SDGs: 402099, 402220, and 402265 were not preserved in methanol upon collection. The analyses were performed within a relatively short period of time (less than seven days) of collection. TPH-Gasoline results for these samples, rather than being rejected, were qualified (UJ) for non-detects and (J) for detects as estimated.

Soil samples should be preserved in methanol at the time of collection. Soil samples should be analyzed within 14 days of collection. All samples were analyzed within the required holding times.

4.2 Initial Calibration (ICAL)

The method criteria require that (1) if linear average RFs is chosen as the quantitation option, the %RSD of RFs be ≤20% for the analyte, (2) if least-square linear regression is chosen for quantitation, the correlation coefficient (r) be ≥0.995, (3) if six-point non-linear (quadratic) curve is chosen for quantitation, the coefficient of determination (r^2) be ≥0.990, and (4) the back-calculated %D value for each calibration standard be within ±15%. Initial calibration met the criteria for all target compounds.

An ICV (second source) standard was analyzed to verify the calibration curve. %D values were within ±20%.

4.3 Calibration Verification

Continuing calibration verification (CCV) analyses were performed at the required frequency for all analytical sequences as required by the method. The %D values for all CCVs met the method criterion (±20%).

4.4 Method Blanks

Method blanks were prepared and analyzed as required. No target compounds were detected at or above the RLs in the method blanks.

4.5 Surrogate Spikes

Surrogate spikes were added to all samples as required by the method. All surrogate spike %R values were either within the project control limits, or outside the control limits due to matrix interference, or diluted below quantitation limits due to high levels of target or non-target compounds in the samples. No data qualifying actions were taken in these cases.

4.6 Matrix Spike and Matrix Spike Duplicate

MS/MSD analyses were not performed for TPH-Gasoline analyses; instead, duplicate and LCS analyses in combination were performed.

4.7 Laboratory Control Sample (LCS)

LCS analyses were performed as required by the method. All %R values were within the laboratory control limits.

4.8 Laboratory Duplicate Analysis

Duplicate analyses were performed on project and batch QC samples at the proper frequency. All RPD and concentration difference values met the laboratory control criteria.

4.9 Reporting Limits and Target Compound Quantitation

Sample-specific RLs were supported with adequate initial calibration concentrations.

4.10 Field Duplicates

Five sets of field duplicates were submitted for PAHs analyses. Field duplicate results for detected target compounds, RPD (or concentration difference) values, and data qualification were presented in **Appendix A**.

4.11 Overall Assessment of TPH-Gasoline Data Usability

TPH-Gasoline data are of known quality and acceptable for use, as qualified.

5. TPH-Diesel & Motor Oil by GC/FID (Method NWTPH-Dx)

5.1 Holding Time

No anomalies were identified in relation to sample preservation, handling, and transport as discussed in Section 1.1.

Soil samples should be extracted within 14 days of collection. Extracts should be analyzed within 40 days of extraction. All samples were extracted and analyzed within the recommended holding times.

5.2 Initial Calibration

The method criteria require that (1) if linear average RFs is chosen as the quantitation option, the %RSD of RFs be ≤20% for the analyte, (2) if least-square linear regression is chosen for quantitation, the correlation coefficient (r) be ≥0.995, (3) if six-point non-linear (quadratic) curve is chosen for quantitation, the coefficient of determination (r^2) be ≥0.990, and (4) the back-calculated %D value for each calibration standard be within ±15%. Initial calibration met the criteria for all target compounds.

An ICV (second source) standard was analyzed to verify the calibration curve. %D values were within ±20%.

5.3 Calibration Verification

The method requires that (1) a mid-range check standard be analyzed prior to and after each analytical batch, and (2) the percent drift (%D) value be within ±20% of the true value.

Calibration verification was performed at required frequency. The %D values were either within the ±20% criterion or at levels that had no adverse effects on data quality (e.g., high-bias %D value where the target compound was not detected in associated sample).

5.4 Method Blanks

Method blanks were prepared and analyzed as required. Target compounds were not detected at or above the RLs in the method blanks.

5.5 Surrogate Spikes

Surrogate spikes were added to all samples as required by the method. All surrogate spike %R values were either within the project control limits, or outside the control limits due to matrix interference, or diluted below quantitation limits due to high levels of

target or non-target compounds in the samples. No data qualifying actions were taken in these cases.

5.6 Matrix Spike (MS) and MS Duplicate (MSD)

MS and MSD analyses were performed on project and batch QC samples at the proper frequency. The %R and RPD values met the laboratory control criteria.

5.7 Laboratory Control Sample (LCS)

LCS analyses were performed as required. All %R values met the project control limits.

5.8 Target Compound Identification

Selected sample extracts were cleaned up with acid and silica gel treatment to minimize the biogenic interference with target compound identification, as required by the project. The laboratory reported results as diesel #2 (C10 - C25) and motor oil (C25 - C36), as required by the method. In some cases where sample chromatographic patterns resembled Bunker C fuel, the results were quantitated and reported as Bunker C fuel accordingly. No anomalies were identified relative to target compound identification.

5.9 Reporting Limits and Target Compound Quantitation

The reported RLs were supported with adequate ICAL concentrations.

The Bunker C fuel concentration in sample BUST-S67-3 exceeded instrument calibration range; the result was qualified (J) as estimated.

5.10 Field Duplicates

Fourteen sets of field duplicates were submitted for TPH-Diesel and TPH-Motor Oil analyses. Field duplicate results, RPD (or concentration difference) values, and data qualification for detected TPH-Diesel or Motor Oil were presented in **Appendix A**.

5.11 Overall Assessment of TPH-Diesel and Motor Oil Data Usability

TPH-Diesel and TPH-Motor Oil data are of known quality and acceptable for use, as qualified.

6. Total Metals by ICP/MS and CVAFS (EPA Methods 200.8 and 1631E)

6.1 Sample Management and Holding Times

No anomalies were identified in relation to sample preservation, handling, and transport, as discussed in Section 1.1.

Soil and water samples should be analyzed within 180 days for metals and 28 days for mercury. Samples were analyzed within the required holding times.

6.2 ICP/MS Tuning

Instrument tuning was performed at the required frequency. The stability check (%RSD <5%), mass calibration (mass difference <0.1 AMU), and resolution check (peak width <1.0 AMU at 5% peak height) met the NFG and method criteria.

6.3 Initial Calibration (ICAL)

The ICP/MS method requires that (1) a blank and one calibration standard be used in establishing the analytical curve, and (2) the average of replicate exposures be reported for all standards, QC, and sample analyses.

The CVAFS method require that (1) a blank and five calibration standards be employed to establish the analytical curve, (2) the linearity of the calibration curve should meet the criteria of correlation coefficient ≥ 0.995 for linear regression, and (3) the %RSD <15% if average response factor approach is employed.

All ICALs met the method requirements.

6.4 Calibration Verification (ICV and CCV)

Initial calibration verifications (ICVs) and continuing calibration verifications (CCVs) for ICP/MS and GFAA and ongoing precision recovery (OPR) were analyzed at the required frequency. The %R values either met the control criteria (90 – 110% for metals, 76 – 123% for mercury) or the exceedance had no adverse effects on data usability (e.g., high-bias %D value where the target compound was not detected in associated sample).

6.5 Blanks

Calibration Blanks: Initial calibration blanks (ICBs) and continuing calibration blanks (CCBs) were not analyzed after calibration verification standards. Target analytes were either not detected at or above the RLs in the ICBs and CCBs, or sample results affected by the ICB/CCB detections were qualified as results of detections in preparation blanks.

Preparation Blanks: Preparation blanks were prepared and analyzed as required. Target analytes were either not detected at or above the RLs in the preparation blanks, or sample results were greater than 10X the detection in the associated blank, except for the following:

SDG	Method Blank ID	Compound	MB (µg/L)	Affected Sample	Original Result	Qualified Result	Unit
311028	I3-748	Arsenic	0.358 J	BAST-B051-5.0 BAST-B504-5.0	1.92 1.37	1.92 J 1.37 J	**mg/kg**
401056	I4-010	Zinc	-1.502	NRA2-PC2-8-010614	15.4	15.4 J	**mg/kg**
402220	I4-096	Antimony	0.105	BAST-SP01-1-021714	3.09	3.09 J	**mg/kg**
402347	I4-0121	Zinc	-1.179	BAST-S88-4-022514	8.709	8.709 J	**mg/kg**
403027	I4-139	Zinc	-1.764	CN-S05-6-030314 CN-S10-6-030314 CN-500-030314	8.137 10.89 12.29	8.137 J 10.89 J 12.29 J	**mg/kg**
403201	I4-164	Nickel	0.405	CN-502-031514 CN-S36-12-031514 CN-S42-12-031514	7.52 9.45 11.2	7.52 J 9.45 J 11.2 J	**mg/kg**
403201	I4-164	Zinc	-0.749	CN-502-031514 CN-S42-12-031514	8.48 17.0	8.48 J 17.0 J	**mg/kg**
403201	I4-164	Arsenic	-0.1556	CN-502-031514 CN-S36-12-031514	6.95 5.21	6.95 J 5.21 J	**mg/kg**
403267	I4-174	Zinc	-1.23	CN-B24-16-031914 CN-S49-12-031914 CN-S51-3-032014 CN-S53-3-032014 CN-B26-4-032014 CN-B28-4-032014	10.02 3.696 11.92 3.904 10.41 10.96	10.02 J 3.696 J 11.92 J 3.904 J 10.41 J 10.96 J	**mg/kg**

6.6 Laboratory Control Sample (LCS)

LCS analyses were performed as required by the method. All %R values were within the project control limits, or the exceedance had no adverse effects on data usability (e.g., high-bias %R value where the target compound was not detected in associated sample).

6.7 Matrix Spike (MS) and Matrix Spike Duplicate (MSD)

MS and MSD analyses were performed on project and batch QC samples at the adequate frequency (>5% of field sample). The %R and RPD values either met the laboratory control limits or the outliers were not applicable for matrix effect evaluation (e.g. sample concentration >4x spiking level), except for the following:

SDG#	Parent Sample ID	Analyte	MS %R	MSD %R	Control Limit	RPD	Affected Sample	Data Qualifier
401111	Cemex-QS-011014	Zinc	39%	45%	50-150%	14%	BUST-S68-3	**J**
402099	NRS-SP01-1-021014	Mercury	54%	64%	62-140%	17%	NRS-SP01-1-021014	**J**
402128	BAST-S069-3-021114	Mercury	56%	32%	62-140%	55%	BAST-S069-3-021114 BAST-507	**J**

Note: RPD control criteria = ±20%

6.8 Internal Standards

At least three internal standards were added to all field and QC samples for ICP/MS analyses. All percent relative intensity values were within the method criteria (60 - 125%).

6.9 Method Reporting Limits and Analyte Quantitation

Sample-specific RLs were supported with adequate initial calibration concentrations.

6.10 Field Duplicates

Seven sets of field duplicates were submitted for metals analyses. Field duplicate results, RPD (or concentration difference) values, and data qualification for detected TPH-Diesel or Motor Oil were presented in **Appendix A**.

6.11 Overall Assessment of Metals Data Usability

Metal data are of known quality and acceptable for use, as qualified.

7. Formaldehyde by HPLC/UV (EPA Method 8315A)

7.1 Sample Management and Holding Time

No anomalies were identified in relation to sample preservation, handling, and transport, as discussed in Section 1.1.

Soil samples should be derivatized and extracted within seven days of sample collection. All derivatized sample extracts should be analyzed within three days after preparation. The sample was prepared and analyzed within the required holding times.

7.2 Instrument Calibration

The method linearity criteria require that (1) if linear average RFs is chosen as the quantitation option, the %RSD of RFs be ≤20% for the analyte, (2) if least-square linear regression is chosen for quantitation, the correlation coefficient (r) be >0.995, and (3) if six-point non-linear (quadratic) curve is chosen for quantitation, the coefficient of determination (r^2) be >0.990. Initial calibration met the criteria for all target compounds.

An ICV (second source) standard was analyzed to verify the calibration curve. %D values were within ±20%.

7.3 Calibration Verification

CCV analyses were performed at the required frequency for all analytical sequences as required by the method. The %D values for all CCVs met the method criterion (±20%).

7.4 Method Blanks

A method blank was prepared and analyzed in each preparation batch as required. Formaldehyde was not detected at or above the RL in method blanks.

7.5 Matrix Spike (MS) and MS Duplicate (MSD)

MS and MSD analyses were performed on project and batch QC samples at the proper frequency. The %R and RPD values met the laboratory control criteria.

7.6 Laboratory Control Samples (LCS)

LCS analyses were performed as required by the methods. The %R values were within the laboratory control limits.

7.7 Field Duplicates

Two sets of field duplicates were submitted for metals analyses. Field duplicate results, RPD (or concentration difference) values, and data qualification for detected TPH-Diesel or Motor Oil were presented in **Appendix A**.

7.8 Overall Assessment of Formaldehyde Data Usability

Formaldehyde data are of known quality and acceptable for use, as qualified.

8. Extractable Petroleum Hydrocarbon (EPH) by GC/FID (Method NWTPH-EPH)

8.1 Holding Time

No anomalies were identified in relation to sample preservation, handling, and transport as discussed in Section 1.1.

Soil samples should be extracted within 14 days of collection. Extracts should be analyzed within 40 days of extraction. All samples were extracted and analyzed within the recommended holding times.

8.2 Initial Calibration

The method linearity criteria require that (1) if linear average RFs is chosen as the quantitation option, the %RSD of RFs be ≤20% for the analyte, (2) if least-square linear regression is chosen for quantitation, the correlation coefficient (r) be >0.990, and (3) if six-point non-linear (quadratic) curve is chosen for quantitation, the coefficient of determination (r^2) be >0.990. Initial calibration met the criteria for all target compounds.

Initial calibration information was not submitted for review in these SDGs.

8.3 Calibration Verification

The method requires that (1) a mid-range check standard be analyzed prior to and after each analytical batch, and (2) the percent drift (%D) value be within ±20% of the true value.

Calibration verification was performed at required frequency. The %D values were either within the ±30% criterion or at levels that had no adverse effects on data quality (e.g., high-bias %D value where the target compound was not detected in associated sample).

8.4 Method Blanks

Method blanks were prepared and analyzed as required. Target compounds were not detected at or above the RLs in the method blanks, except for the following:

SDG	Method Blank ID	Compound	MB Conc.	Affected Sample	Original Result	Qualified Result	Unit
401241	**6467**	Aromatic C8-C10	0.992 J	BAST-S59-7-012114	1.06	**5.19 U**	**mg/kg**
402219	**6751**	Aromatic C8-C10	1.96 J	BAST-S075-4-021714	14.0 J	**52.5 U**	**mg/kg**

8.5 Surrogate Spikes

Surrogate spikes were added to all samples as required by the method. All surrogate spike %R values were either within the project control limits, or outside the control limits due to matrix interference, or diluted below quantitation limits due to high levels of target or non-target compounds in the samples. No data qualifying actions were taken in these cases.

8.6 Matrix Spike (MS)

MS analyses were performed on project and batch QC samples at the proper frequency. The %R values met the laboratory control criteria.

8.7 Laboratory Control Sample (LCS) and LCS Duplicate (LCSD)

LCS and LCSD analyses were performed as required. All %R and RPD values met the project control limits, except for the following:

SDG#	LCS ID	Analyte	LCS %R	LCSD %R	Control Limit	RPD	Affected Sample	Data Qualifier
402219	6751	Aromatic C8-C10 Aromatic C10-C12	47.0% 28.2%	55.0% 34.8%	70-130%	-	BAST-S59-7-012114	**J**

Note: RPD criteria = ±20%.

8.8 Reporting Limits and Target Compound Quantitation

Sample-specific RLs were consistent with method-recommended pratical quantitation limits and were adjusted with sample volumes and moisture contents.

8.9 Field Duplicates

Field duplicates were not submitted for EPH analysis in these SDGs.

8.10 Overall Assessment of EPH Data Usability

EPH data are acceptable for use as qualified, based on the information submitted by the laboratory.

9. Volatile Petroleum Hydrocarbon by GC/FID (Method NWTPH-VPH)

9.1 Sample Management and Holding Times

No anomalies were identified in relation to sample preservation, handling, and transport as discussed in Section 1.1.

Soil samples should be preserved with methanol at the time of collection, and analyzed within 14 days of collection. All samples were analyzed within the required holding times.

9.2 Initial Calibration (ICAL)

The method linearity criteria require that (1) if linear average RFs is chosen as the quantitation option, the %RSD of RFs be ≤20%, (2) if least-square linear regression is chosen for quantitation, the correlation coefficient (r) be >0.990, and (3) if six-point non-linear (quadratic) curve is chosen for quantitation, the coefficient of determination (r^2) be >0.990. Initial calibration met the criteria for all target compounds.

Initial calibration information was not submitted for review in these SDGs.

9.3 Calibration Verification

Continuing calibration verification (CCV) analyses were performed at the required frequency for all analytical sequences as required by the method. The %D values for all CCVs met the method criterion (% value within ±20% for the carbon range components and ±15% for individual target compounds), except for the following:

SDG	CCV ID	Compound	%D	Bias	Affected Sample	Data Qualifier
401241	6483A	Methyl-*tert*-butyl ether	23.9%	Low	BAST-S59-7-012114	**UJ**

9.4 Method Blanks

Method blanks were prepared and analyzed as required. No target compounds were detected at or above the RLs in the method blanks.

9.5 Surrogate Spikes

Surrogate spikes were added to all samples as required by the method. All surrogate spike %R values were either within the project control limits, or outside the control limits due to matrix interference, or diluted below quantitation limits due to high levels of target or non-target compounds in the samples. No data qualifying actions were taken in these cases.

9.6 Matrix Spike (MS)

MS analyses were performed on project or batch QC samples at the required frequency. The %R values were within the laboratory control limits, except for the following:

SDG#	Parent Sample ID	Compound	MS %R	Control Limit	Affected Sample	Data Qualifier
401318	NRU-B5-16-012714	Aliphatics C10-C12 Aromatics C10-C12	-18.5% 43.8%	57-120%	NRU-B5-16-012714	**J**

9.7 Laboratory Control Sample (LCS)

LCS analyses were performed as required by the method. All %R values were within the laboratory control limits.

9.8 Laboratory Duplicate Analysis

Duplicate analyses were performed on project and batch QC samples at the proper frequency. All RPD and concentration difference values met the laboratory control criteria.

9.9 Reporting Limits and Target Compound Quantitation

Sample-specific RLs were consistent with method-recommended practical quantitation limits, and were adjusted with sample volumes and moisture contents.

9.10 Field Duplicates

Field duplicates were not submitted for VPH analysis in these SDGs.

9.11 Overall Assessment of VPH Data Usability

VPH data are acceptable for use as qualified, based on the information submitted by the laboratory.

10. BTEX by GC/PID (EPA Method SW8021B)

10.1 Sample Management and Holding Time

No anomalies were identified in relation to sample preservation, handling, and transport as discussed in Section 1.1.

Soil samples should be preserved in methanol at the time of collection. Soil and water samples should be analyzed within 14 days of collection. All samples were analyzed within the required holding times.

10.2 Initial Calibration (ICAL)

The ICAL criteria require that (1) if linear average RFs is chosen as the quantitation option, at least five standards at different concentrations should be analyzed and the percent relative standard deviation (%RSD) of response factors (RFs) be ≤20% for the analyte, (2) if least-square linear regression is chosen for quantitation, the correlation coefficient (r) be >0.995, and (3) if six-point non-linear (quadratic) curve is chosen for quantitation, the coefficient of determination (r^2) be >0.99. The ICAL met the requirements.

An initial calibration verification (ICV) standard (second source standard) was analyzed to verify the calibration curve. Percent difference (%D) values were either within ±20%, or the exceedance had no adverse effects on data usability (*e.g.,* biased high ICV recovery for a compound not detected in samples).

10.3 Calibration Verification (CCV)

The CCV criteria requires that (1) continuing calibrations be analyzed at the beginning of each 12-hour analysis period prior to the analysis of method blank and samples, and (2) the %D be within ±20. Calibration verifications met the requirements.

10.4 Method Blanks

Method blanks were prepared and analyzed as required. Target compounds were not detected at or above the RLs.

10.5 Laboratory Control Sample (LCS) and LCS Duplicate (LCSD)

LCS and LCSD were prepared and analyzed as required by the method. The %R and RPD values met the project control limits.

10.6 Surrogate Spikes

Surrogate spikes were added to all samples as required by the method. All surrogate spike %R values were within the project control limits.

10.7 Matrix Spike (MS)

MS analyses were performed on project and batch QC samples at the proper frequency. All %R values were within the project control limits.

10.8 Reporting Limit and Target Compound Quantitation

RLs were supported with adequate initial calibration concentrations.

10.9 Field Duplicates

Field duplicates were not submitted for BTEX analysis in these SDGs.

10.10 Overall Assessment of BTEX Data Usability

BTEX data are of known quality and acceptable for use.

SUMMARY

Table I. Data Affected by QC Anomalies:

Laboratory ID	Sample ID	Analyte	Qualifier	Qualified Reason
402099-01 402128-04 402128-07	NRS-SP01-1-021014 BAST-S069-3-021114 BAST-507	Mercury	**J** **J** **UJ**	MS/MSD %R values were <LCL
402220-01	BAST-SP01-1-021714	Antimony	**J**	Analyte was detected in MB
403201-22	CN-S36-12-031514	Arsenic	**J**	Analyte was detected in MB
403201-20 403201-22 403201-28	CN-502-031514 CN-S36-12-031514 CN-S42-12-031514	Nickel	**J**	Analyte was detected in MB
403201-28	CN-S42-12-031514	Zinc	**J**	Analyte was detected in MB
403201-20	CN-502-031514	Arsenic Zinc	**J**	FD RPD value was >35%; analyte was detected in MB
401056-02 402347-03 403027-05 403027-10 403027-20 403267-02 403267-03 403267-06 403267-08 403267-09 403267-11	NRA2-PC2-8-010614 BAST-S88-4-022514 CN-S05-6-030314 CN-S10-6-030314 CN-500-030314 CN-B24-16-031914 CN-S49-12-031914 CN-S51-3-032014 CN-S53-3-032014 CN-B26-4-032014 CN-B28-4-032014	Zinc	**J**	Result was affected by negative detection in MB
401111-01	Cemex-QS-011014	Zinc	**J**	MS/MSD %R values were <LCL
401241-03	BAST-S59-7-012114	Aliphatic C8-C10 (EPH)	**J**	LCS/LCSD %R values were <LCL
402219-01	BAST-S075-4-021714	Aromatics C10-C12 (EPH)	**J**	LCS/LCSD %R values were <LCL
401241-03	BAST-S59-7-012114	Methyl-tert-butyl ether	**UJ**	CCV %D value was <LCL

Laboratory ID	Sample ID	Analyte	Qualifier	Qualified Reason
402099-01	NRS-SP01-1-021014	Gasoline Range TPH VOCs	**J/UJ**	Sample was not preserved per method requirements
402099-02	NRS-SP01-2-021014			
402099-03	NRS-SP01-3-021014			
402099-04	NRS-SP02-1-021014			
402099-05	NRS-SP02-2-021014			
402099-06	NRS-SP02-3-021014			
402099-07	NRS-SP03-1-021014			
402099-08	NRS-SP03-2-021014			
402099-09	NRS-SP03-3-021014			
402099-10	NRS-SP04-1-021014			
402099-11	NRS-SP04-2-021014			
402099-12	NRS-SP04-3-021014			
402099-13	NRS-SP05-1-021014			
402099-14	NRS-SP05-2-021014			
402099-15	NRS-SP05-3-021014			
402099-16	NRS-SP06-1-021014			
402099-17	NRS-SP06-2-021014			
402099-18	NRS-SP06-3-021014			
402099-19	NRS-SP07-1-021014			
402099-20	NRS-SP07-2-021014			
402099-21	NRS-SP07-3-021014			
402220-01	BAST-SP01-1-021714			
402220-02	BAST-SP01-2-021714			
402220-03	BAST-SP01-3-021714			
402265-01	NRS-SP08-1-021914			
402265-02	NRS-SP08-2-021914			
402265-03	NRS-SP08-3-021914			
402265-04	NRS-SP09-1-021914			
402265-05	NRS-SP09-2-021914			
402265-06	NRS-SP09-3-021914			
402265-07	NRS-SP10-1-021914			
402265-08	NRS-SP10-2-021914			
402265-09	NRS-SP10-3-021914			
403091-03	SHB-S03-3-030614	Bromomethane	**UJ**	CCV %D value was <LCL
403091-04	SHB-S04-3-030614			
403091-05	SHB-S05-3-030614			
403091-06	SHB-S06-3-030614			
403091-07	SHB-B01-5-030614			
403091-08	SHB-B02-5-030614			
403091-09	SHB-B03-5-030614			
403091-10	SHB-500			
402263-01	NRS-S27-8-021814	*cis*-1,3-Dichloropropene Dibromochloromethane *trans*-1,3-Dichloropropene	**UJ**	LCS %R value was <LCL
402263-02	NRS-S28-8-021814			
402263-03	NRS-B09-10-021814			
402263-04	NRS-S29-8-021914			
310458-01	CONC-SP-01-102313	1,1,2,2-Tetrachloroethane	**UJ**	MS/MSD %R values were <LCL

Laboratory ID	Sample ID	Analyte	Qualifier	Qualified Reason
402099-01 402099-02 402099-03 402099-13 402099-18 402220-03	NRS-SP01-1-021014 NRS-SP01-2-021014 NRS-SP01-3-021014 NRS-SP05-1-021014 NRS-SP06-3-021014 BAST-SP01-3-021714	1,4-Dichlorobenzene	**U**	Analyte was detected in MB
402265-02	NRS-SP08-2-021914	1,3-Dichlorobenzene	**UJ**	CCV %D value was <LCL
401174-01 401174-02 401174-03 401174-04	STIL-G9-011414 STIL-G10-011414 STIL-G11-011414 STIL-G12-011414	Benzoic acid	**UJ**	CCV %D value was <LCL
402099-01	NRS-SP01-1-021014	4,6-Dinitro-2-methylphenol	**UJ**	CCV %D value was <LCL
402099-02 402099-03 402099-06 402099-10	NRS-SP01-2-021014 NRS-SP01-3-021014 NRS-SP02-3-021014 NRS-SP04-1-021014	Benzoic acid	**UJ**	CCV %D value was <LCL
402220-02	BAST-SP01-2-021714	Benzoic acid	**UJ**	CCV %D value was <LCL
402099-04 402099-05 402099-08 402099-14 402099-15 402099-16 402099-17 402099-18 402099-19	NRS-SP02-1-021014 NRS-SP02-2-021014 NRS-SP03-2-021014 NRS-SP05-2-021014 NRS-SP05-3-021014 NRS-SP06-1-021014 NRS-SP06-2-021014 NRS-SP06-3-021014 NRS-SP07-1-021014	2,4-Dinitrophenol 4,6-Dinitro-2-methylphenol	**UJ**	CCV %D value was <LCL
402265-02	NRS-SP08-2-021914	2,4-Dinitrophenol 4,6-Dinitro-2-methylphenol Benzoic acid	**UJ**	CCV %D value was <LCL
402265-03 402265-04 402265-05 402265-06 402265-07	NRS-SP08-3-021914 NRS-SP09-1-021914 NRS-SP09-2-021914 NRS-SP09-3-021914 NRS-SP10-1-021914	Benzoic acid	**UJ**	CCV %D value was <LCL
402265-08 402265-09	NRS-SP10-2-021914 NRS-SP10-3-021914	1,3-Dichlorobenzene 2,4-Dinitrophenol 4,6-Dinitro-2-methylphenol Benzoic acid	**UJ**	CCV %D value was <LCL
402099-01	NRS-SP01-1-021014	2,4-Dinitrophenol	**UJ**	CCV %D value was <LCL; MSD %R value was <LCL

Laboratory ID	Sample ID	Analyte	Qualifier	Qualified Reason
310458-01	CONC-SP-01-102313	Benz(a)anthracene Benzo(a)pyrene Benzo(b)fluoranthene Benzo(g,h,i)perylene Benzo(k)fluoranthene Benzyl butyl phthalate *bis*(2-ethylhexyl) phthalate Chrysene Dibenzo(a,h)anthracene Di-n-octyl phthalate Indeno(1,2,3-cd)pyrene Pyrene	**J** **J** **J** **J** **J** **UJ** **UJ** **J** **J** **UJ** **J** **J**	Internal standard recovery was <LCL
310458-02	CONC-SP-02-102313	Benz(a)anthracene Benzo(a)pyrene Benzo(b)fluoranthene Benzo(g,h,i)perylene Benzo(k)fluoranthene Benzyl butyl phthalate *bis*(2-ethylhexyl) phthalate Chrysene Dibenzo(a,h)anthracene Di-n-octyl phthalate Indeno(1,2,3-cd)pyrene Pyrene	**J** **J** **J** **J** **J** **UJ** **UJ** **J** **J** **UJ** **J** **J**	Internal standard recovery was <LCL
310458-05	CONC-SP-05-102313	Benz(a)anthracene Benzyl butyl phthalate *bis*(2-ethylhexyl) phthalate Chrysene Pyrene	**J**	Internal standard recovery was <LCL
310458-06	CONC-SP-06-102313	Benz(a)anthracene Benzo(a)pyrene Benzo(b)fluoranthene Benzo(g,h,i)perylene Benzo(k)fluoranthene Benzyl butyl phthalate *bis*(2-ethylhexyl) phthalate Chrysene Dibenzo(a,h)anthracene Di-n-octyl phthalate Indeno(1,2,3-cd)pyrene Pyrene	**J** **J** **J** **J** **J** **UJ** **UJ** **J** **UJ** **UJ** **J** **J**	Internal standard recovery was <LCL
402099-06	NRS-SP02-3-021014	Benz(a)anthracene Benzyl butyl phthalate *bis*(2-ethylhexyl) phthalate Chrysene Pyrene	**J** **UJ** **UJ** **J** **J**	Internal standard recovery was <LCL
402099-21	NRS-SP07-3-021014	2,4-Dinitrophenol 4,6-Dinitro-2-methylphenol Hexachlorocyclopentadiene	**UJ**	MS/MSD %R values were <LCL

Laboratory ID	Sample ID	Analyte	Qualifier	Qualified Reason
402099-01	NRS-SP01-1-021014	Hexachlorocyclopentadiene Pyrene	**UJ** **J**	MS/MSD %R values were <LCL
310458-01DL 310458-02DL 310458-05DL 310458-06DL 310458-09DL	CONC-SP-01-102313 CONC-SP-02-102313 CONC-SP-05-102313 CONC-SP-06-102313 CONC-SP-02-102313 Agg	SVOCs	**DNR**	Report from initial analysis
402263-03 402347-01 402347-02 402347-05	NRS-B09-10-021814 BAST-B78-4-022414 BAST-S87-2-022414 BAST-S90-4-022514	Indeno(1,2,3-cd)pyrene	**J**	CCV %D value was >UCL
403089-11	CN-S24-6-030714	Benzo(a)pyrene Benzo(b)fluoranthene Benzo(g,h,i)perylene Dibenzo(a,h)anthracene Indeno(1,2,3-cd)pyrene	**J**	Internal standard recovery was >UCL
403027-01	CN-S01-3-030314	Benz(a)anthracene Benzo(a)pyrene Benzo(b)fluoranthene Chrysene	**J**	MS/MSD RPD & MSD %R values were >UCL
311028-01 311028-02	BAST-B051-5.0 BAST-B504-5.0	Bunker C	**J** **UJ**	FD difference >2XRL
401317-10	BAST-B65-3.5-012714	Anthracene Benz(a)anthracene Chrysene Phenanthrene Pyrene	**UJ** **UJ** **UJ** **J** **UJ**	FD difference >2xRL
401317-11	BAST-506-012714	Anthracene Benz(a)anthracene Chrysene Phenanthrene Pyrene	**J**	FD difference >2xRL
403091-07 403091-10	SHB-B01-5-030614 SHB-500	Lead Fluoranthene Pyrene	**J**	FD difference >2xRL
403101-03 403101-07	CN-B10-11-030714 CN-501	Benzo(a)pyrene Benzo(b)fluoranthene Chrysene Fluoranthene Naphthalene Phenanthrene Pyrene	**J**	FD difference >2xRL
403201-17	CN-B20-16-031514	Arsenic Zinc	**J**	FD RPD value >35%

Notes:
%R - Percent recovery
CCV - Continuing calibration verification
DL - Dilution analysis
FD - Field duplicate

LCL - Lower control limit
LCS - Laboratory control sample
LCSD - Laboratory control sample duplicate
MB - Method blank
MS - Matrix spike
MSD - Matrix spike duplicate
RPD - Relative percent difference
UCL - Upper control limit

Table II. Data Affected by Detections in Method Blank

SDG#	Sample ID	Compound	Original Result	Adjusted Result	Unit	Report Section
401241	BAST-S59-7-012114	Aromatics C8-C10 (EPH)	1.06 J	**5.19 U**	mg/kg	**8.4**
402219	BAST-S075-4-021714	Aromatics C8-C10 (EPH)	14.0 J	**52.5 U**	mg/kg	**8.4**

Table III. Data Qualifiers are defined as follows:

Data Qualifier	Definition
DNR	The result should be reported from an alternative analysis.
J	The analyte was detected above the reported quantitation limit, and the reported concentration was an estimated value.
U	The analyte was analyzed for, but was considered not detected at the reporting limit or reported value.
UJ	The analyte was analyzed for, and the associated quantitation limit was an estimated value.

Approved By: _____ Date: ***6/23/2014***
Mingta Lin, Senior Project Chemist

REFERENCES

USEPA *Contract Laboratory Program National Functional Guidelines for Inorganic Superfund Data Review,* Office of Superfund Remediation and Technical Innovation, U.S. Environmental Protection Agency, January 2010, USEPA 540/R-10/011

USEPA *Contract Laboratory Program National Functional Guidelines for Superfund Organic Methods Data Review,* Office of Superfund Remediation and Technical Innovation, U.S. Environmental Protection Agency, June 2008, USEPA-540-R-08-01.

USEPA *Method 1631, Revision E: Mercury in Water by Oxidation, Purge and Trap, and Cold Vapor Atomic Fluorescence Spectrometry, Office of Water, U.S. Environmental Protection Agency, August 2002, EPA-821-R-02-019.*

USEPA *Test Methods for Evaluating Solid Waste (SW-846). Third Edition and Revised Update IIIA.* Office of Solid Waste and Emergency Response, Washington, D.C. April 1998.

USEPA *Methods for Chemical Analysis of Water and Wastes,* EPA-600/4-79-020, March 1983 and updates.

Standard Methods for the Examination of Water and Wastewater, American Public Health Association, 20th Edition, 1995.

Ecology (Washington State Department of). 1997. *Analytical Methods for Petroleum Hydrocarbons.* Publication No. ECY 97-602. June 1997.

PSEP *Recommended Guidelines for Measuring Organic Compounds in Puget Sound Water, Sediment and Tissue Samples,* Puget Sound Water Quality Authority, April 1997.

Appendix A

Field duplicate RPD is indicative of field and laboratory precision and sample homogeneity in combination. The CLP National Functional Guidelines or *Work Plan* do not specify criteria for field duplicate evaluation. An advisory criterion of 35% was applied to evaluating the RPD values of field duplicate results that are ≥5xRL. For results that are <5xRL, an advisory criterion of ±2RL was applied to evaluating the concentration differences. The RPD (or concentration difference as applicable) values and data qualification for detected compounds in field duplicates are presented as follows:

Analyte	Units	RL	Parent & Field Duplicate Sample Result		RPD	Delta	Data Qualifier
			BAST-S010-3.5	**BAST-502-3.2**			
Bunker C	mg/kg	0.1	ND	ND			
			BAST-B051-5.0	**BAST-B504-5.0**			
Bunker C	mg/kg	250	1000	ND		1000	**J**
			BAST-B65-3.5-012714	**BAST-506-012714**			
Arsenic	mg/kg	1	ND	ND		0	
Cadmium	mg/kg	1	ND	ND		0	
Copper	mg/kg	1	15.6	14.9	5%		
Lead	mg/kg	1	3.22	2.47	26%		
Mercury	mg/kg	0.1	ND	ND		0	
Nickel	mg/kg	1	11.5	11.3	2%		
Zinc	mg/kg	1	71.6	66.7	7%		
Bunker C	mg/kg	250	ND	ND		0	
Acenaphthene	mg/kg	0.01	ND	0.011		0.011	
Anthracene	mg/kg	0.01	ND	0.025		0.025	**UJ/J**
Benz(a)anthracene	mg/kg	0.01	ND	0.029		0.029	**UJ/J**
Benzo(a)pyrene	mg/kg	0.01	ND	0.017		0.017	
Chrysene	mg/kg	0.01	ND	0.034		0.034	**UJ/J**
Fluorene	mg/kg	0.01	ND	0.016		0.016	
Phenanthrene	mg/kg	0.01	0.018	0.084		0.066	**UJ/J**
Pyrene	mg/kg	0.01	ND	0.06		0.06	**UJ/J**
			BAST-S069-3-021114	**BAST-507**			
Mercury	mg/kg	0.1	0.11	ND		0.11	
Arsenic	mg/kg	1	2.06	10	132%	7.94	**J/J**
Cadmium	mg/kg	1	ND	ND		0	
Copper	mg/kg	1	22.3	40.1	57%		**J/J**
Lead	mg/kg	1	4.62	7.56		2.94	**J/J**

Analyte	Units	RL	Parent & Field Duplicate Sample Result		RPD	Delta	Data Qualifier
Nickel	mg/kg	1	19.4	28.7	39%		**J/J**
Zinc	mg/kg	1	86.2	45.9	61%		**J/J**
Diesel Range TPH	mg/kg	50	ND	ND		0	
Oil Range TPH	mg/kg	250	ND	ND		0	
Gasoline Range TPH	mg/kg	2	ND	ND		0	
			NRS-B01-13-021214	**NRS-500-021214**			
Diesel Range TPH	mg/kg	50	ND	ND		0	
Oil Range TPH	mg/kg	250	ND	ND		0	
Gasoline Range TPH	mg/kg	2	ND	ND		0	
Fluoranthene	mg/kg	0.01	0.024	0.035		0.011	
Naphthalene	mg/kg	0.01	0.02	0.029		0.009	
Phenanthrene	mg/kg	0.01	0.016	0.024		0.008	
Pyrene	mg/kg	0.01	0.024	0.035		0.011	
			NRS-S17-8-021214	**NRS-501-021214**			
Mercury	mg/kg	0.1	ND	ND			
Arsenic	mg/kg	1	3.92	2.79		1.13	
Cadmium	mg/kg	1	ND	ND			
Copper	mg/kg	1	7	6.32	10%		
Lead	mg/kg	1	2.45	1.86		0.59	
Nickel	mg/kg	1	11.2	10.7	5%		
Zinc	mg/kg	1	13.6	11.9	13%		
Diesel Range TPH	mg/kg	50	ND	ND		0	
Oil Range TPH	mg/kg	250	ND	ND		0	**J/J**
Gasoline Range TPH	mg/kg	2	ND	ND		0	**J/J**
			BAST-B72-6-022014	**BAST-508-022014**			
Mercury	mg/kg	0.1	ND	ND			
Arsenic	mg/kg	1	4.93	4.62		0.31	
Cadmium	mg/kg	1	ND	ND		0	**UJ/J**
Copper	mg/kg	1	6.4	5.94	7%		
Lead	mg/kg	1	1.79	1.75		0.04	**J/J**
Nickel	mg/kg	1	9.75	9.27	5%		**J/UJ**
Zinc	mg/kg	5	10.9	10.1	8%		**J/J**
Diesel Range TPH	mg/kg	50	ND	ND		0	**J/J**
Oil Range TPH	mg/kg	250	ND	ND		0	
Gasoline Range TPH	mg/kg	2	ND	ND		0	
			CN-B03-8-030314	**CN-500-030314**			

Analyte	Units	RL	Parent & Field Duplicate Sample Result		RPD	Delta	Data Qualifier
Mercury	mg/kg	0.1	ND	ND		0	
Arsenic	mg/kg	1	3.61	3.36		0.25	
Cadmium	mg/kg	1	ND	ND		0	**UJ/J**
Copper	mg/kg	1	7.57	6.83	10%		
Lead	mg/kg	1	3.57	2.12		1.45	**J/J**
Nickel	mg/kg	1	11.1	11.3	2%		**J/J**
Zinc	mg/kg	5	14.3	15.8	10%		**J/J**
Diesel Range TPH	mg/kg	50	ND	ND		0	**J/J**
Oil Range TPH	mg/kg	250	ND	ND		0	
			SHB-B01-5-030614	**SHB-500**			
Mercury	mg/kg	0.1	ND	ND		0	
Arsenic	mg/kg	1	4.37	5.6		1.23	
Cadmium	mg/kg	1	ND	ND		0	
Copper	mg/kg	1	12.7	20	45%		
Lead	mg/kg	1	3.37	5.54		2.17	**J/J**
Nickel	mg/kg	1	11.6	13.9	18%		
Zinc	mg/kg	1	77.8	85.6	10%		
Diesel Range TPH	mg/kg	50	ND	ND		0	
Oil Range TPH	mg/kg	250	ND	ND		0	
Gasoline Range TPH	mg/kg	2	ND	ND		0	
Acenaphthene	mg/kg	0.01	ND	ND		0	
Acenaphthylene	mg/kg	0.01	ND	ND		0	
Anthracene	mg/kg	0.01	ND	ND		0	
Benz(a)anthracene	mg/kg	0.01	0.011	ND		0	
Benzo(a)pyrene	mg/kg	0.01	0.016	ND		0	
Benzo(b)fluoranthene	mg/kg	0.01	0.018	0.011		0.007	
Benzo(g,h,i)perylene	mg/kg	0.01	0.014	ND		0	
Benzo(k)fluoranthene	mg/kg	0.01	ND	ND		0	
Chrysene	mg/kg	0.01	0.014	ND		0	
Dibenzo(a,h)anthracene	mg/kg	0.01	ND	ND		0	
Fluoranthene	mg/kg	0.01	0.034	0.011		0.023	J/J
Fluorene	mg/kg	0.01	ND	ND			
Indeno(1,2,3-cd)pyrene	mg/kg	0.01	0.013	ND			
Naphthalene	mg/kg	0.01	ND	ND			
Phenanthrene	mg/kg	0.01	0.019	ND			
Pyrene	mg/kg	0.01	0.04	0.011		0.029	J/J

Analyte	Units	RL	Parent & Field Duplicate Sample Result		RPD	Delta	Data Qualifier
			CN-B10-11-030714	**CN-501**			
Mercury	mg/kg	0.1	ND	ND			
Arsenic	mg/kg	1	3.94	5.04		1.1	
Cadmium	mg/kg	1	ND	ND			
Copper	mg/kg	1	16	17.2	7%		
Lead	mg/kg	1	5.19	5.68	9%		
Nickel	mg/kg	1	16.1	17.6	9%		
Zinc	mg/kg	1	27.4	28.7	5%		
Diesel Range TPH	mg/kg	50	ND	ND			
Oil Range TPH	mg/kg	250	ND	ND			
Acenaphthene	mg/kg	0.01	0.011	0.021		0.01	
Acenaphthylene	mg/kg	0.01	ND	ND		0	
Anthracene	mg/kg	0.01	0.01	0.019		0.009	
Benz(a)anthracene	mg/kg	0.01	0.026	0.045		0.019	
Benzo(a)pyrene	mg/kg	0.01	0.021	0.044		0.023	**J/J**
Benzo(b)fluoranthene	mg/kg	0.01	0.027	0.055		0.028	**J/J**
Benzo(g,h,i)perylene	mg/kg	0.01	0.012	0.03		0.018	
Benzo(k)fluoranthene	mg/kg	0.01	ND	0.02		0.02	
Chrysene	mg/kg	0.01	0.029	0.055		0.026	**J/J**
Dibenzo(a,h)anthracene	mg/kg	0.01	ND	ND		0	
Fluoranthene	mg/kg	0.01	0.052	0.086	49%		**J/J**
Fluorene	mg/kg	0.01	ND	0.017		0.017	
Indeno(1,2,3-cd)pyrene	mg/kg	0.01	0.012	0.032		0.02	
Naphthalene	mg/kg	0.01	0.019	0.049		0.03	**J/J**
Phenanthrene	mg/kg	0.01	0.038	0.085		0.047	**J/J**
Pyrene	mg/kg	0.01	0.057	0.11	63%		**J/J**
			CN-B20-16-031514	**CN-502-031514**			
Mercury	mg/kg	0.1	0.13	0.14		0.01	
Arsenic	mg/kg	1	10.5	6.95	41%		J/J
Cadmium	mg/kg	1	ND	ND		0	
Copper	mg/kg	1	123	136	10%		
Lead	mg/kg	1	156	152	3%		
Nickel	mg/kg	1	7.85	7.52	4%		
Zinc	mg/kg	1	5.4	8.48	44%		J/J
Diesel Range TPH	mg/kg	200	ND	ND		0	
Oil Range TPH	mg/kg	1000	ND	ND		0	

Analyte	Units	RL	Parent & Field Duplicate Sample Result		RPD	Delta	Data Qualifier
			CN-B24-16-031914	**CN-503**			
Mercury	mg/kg	0.1	ND	ND		0	
Arsenic	mg/kg	1	ND	ND		0	
Cadmium	mg/kg	1	ND	ND		0	
Copper	mg/kg	1	ND	ND		0	
Lead	mg/kg	1	27.6	20.6	29%		
Nickel	mg/kg	1	9.12	7.83	15%		
Zinc	mg/kg	5	40	55.8	33%		
Diesel Range TPH	mg/kg	250	ND	ND		0	
Oil Range TPH	mg/kg	1250	ND	ND		0	
			UST29-S01-3-122313	**UST29-500-122313**			
Formaldehyde	mg/kg	50	ND	ND		0	
			UST29-B06-5-122313	**UST29-501-122313**			
Formaldehyde	mg/kg	2.3	2.6	2.3		0.3	

Notes:
Delta – Concentration difference between the parent sample and its field duplicate
mg/kg – milligram per kilogram
ND – The analyte was not detected at or above the RL.
RL – Reporting limit
RPD – Relative percent difference

REPORT FOR SECOND INTERIM ACTION

Kimberly-Clark Worldwide Site Upland Area
Everett, Washington

Prepared for: Kimberly-Clark Worldwide, Inc.

Project No. 110207-010-04 • March 3, 2021 • Final

Aspect CONSULTING

earth + water

REPORT FOR SECOND INTERIM ACTION

Kimberly-Clark Worldwide Site Upland Area
Everett, Washington

Prepared for: Kimberly-Clark Worldwide, Inc.

Project No. 110207-010-04 • March 3, 2021 • Final

Aspect Consulting, LLC



March 3, 2021

Carla Brock, LHG
Sr. Associate Geologist
cbrock@aspectconsulting.com

Steve Germiat, LHG
Principal Hydrogeologist
sgermiat@aspectconsulting.com

V:\110207 KC Everett Mill\Deliverables\Interim Action Report 2020\Final\Final IA Report_March 2021.docx

Contents

Executive Summary **ES-1**

1 Introduction **1**

2 Interim Action Overview **3**

3 Plugging Shoreline Pipes **4**

3.1 General Procedures 4
3.2 Pipe A: Active Storm Drain 5
3.3 Pipes B1, B2, B3: Catch Basins with 8-Inch Steel Pipes 5
3.4 Pipe C: 36-Inch Wood Stave (Outfall 002) 6
3.5 Pipe D: 4-Inch Steel beneath Pier 6
3.6 Pipe E: 8-Inch Steel beneath Pier 6
3.7 Pipe F: 54-Inch Wood Stave beneath Pier (Outfall 003) 6
3.8 Pipe G: 4-Inch Steel beneath Pier 7
3.9 Pipe H: 8-Inch PVC beneath Pier 7
3.10 Pipe J: 4-Inch Steel beneath Pier 7
3.11 Pipe K: 15-Inch Concrete beneath Pier 8
3.12 Pipe L: 8-Inch PVC beneath Pier 9
3.13 Pipe M: 12-Inch PVC/18-Inch Wood Stave 9
3.14 Small-Diameter Pipes at Former Navy Wooden Bulkhead (N, P, and Q Series) 10

4 General Approach for Soil Removal **11**

4.1 Interim Action Soil Cleanup Areas 11
4.2 Soil Cleanup Levels for Interim Action 11
4.3 Erosion, Sediment, and Dust Controls 12
4.3.1 Dust Controls and Monitoring 12
4.4 Excavation Dewatering and Management of Water 13
4.4.1 Water Treatment System Overflow Event 14
4.5 Materials Excavation and Management 15
4.5.1 Crushed Material 15
4.5.2 Overburden (Backfill from Prior Excavation) 15
4.5.3 Contaminated Materials 16
4.6 Performance Monitoring and Overexcavation 16
4.7 Archaeological Monitoring 17
4.8 Off-Site Disposal of Excavated Material 18

4.9 Excavation Backfill 18
4.9.1 Validation of Analytical Data from Interim Action 20
5 Soil Cleanup by Area 21
5.1 BA-MW-7 Area 22
5.2 Boiler/Baghouse Area 23
5.3 Central Maintenance Shop Area 24
5.3.1 Bunker-Fuel Pipes within CMS Area 25
5.4 Clark Nickerson Area 26
5.5 Digesters Trench Area 27
5.6 GFB12 Area 29
5.7 Hydraulic Barker Area 30
5.7.1 Record Sample Data for Hydraulic Barker Area 31
5.8 Log Pond Chip Conveyor Area 33
5.9 Old Machine Shop Area 34
5.10 PM-B-6 Area 34
5.11 REC5-MW-1 Area 36
5.12 Fuel-Oil Line West of Warehouse 36
6 Conclusions 38
7 References 39
Limitations 40

List of Tables

1 Interim Action Cleanup Levels for Soil
2 Data Table Footnotes and Abbreviations
3 Overburden Soil Quality Data for Clark Nickerson Area
4 Soil Quality Data for Parcel O Sand (Import Backfill)
5 Excavation Verification Soil Data for BA-MW-7 Area
6 Excavation Verification Soil Data for Boiler/Baghouse (BBH) Area
7 Excavation Verification Soil Data for Central Maintenance Shop (CMS) Area
8 Excavation Verification Soil Data for Bunker Oil Fuel Pipes Removal in CMS Area

9 Excavation Verification Soil Data for Clark Nickerson Area
10 Excavation Verification Soil Data for Digesters Trench Area
11 Excavation Verification Soil Data for GFB12 Area
12 Excavation Verification Soil Data for Hydraulic Barker Area
13 Excavation Verification Soil Data for Log Pond Chip Conveyor Area
14 Excavation Verification Soil Data for Old Machine Shop (OMS) Area
15 Excavation Verification Soil Data for PM-B-6 Area
16 Excavation Verification Soil Data for REC5-MW-1 Area
17 Excavation Verification Soil Data for Fuel Line West of Warehouse

List of Figures

1 Site Location Map
2 Map of Shoreline Pipes Plugged during Interim Action
3 Overview of Second Interim Action Soil Excavation Areas
4 Parcel O Exploration Map
5 Soil Cleanup Results for BA-MW-7 Area
6 Soil Cleanup Results for Boiler/Baghouse Area
7 Soil Cleanup Results for Central Maintenance Shop Area
8 Soil Cleanup Results for Clark Nickerson Area
9 Soil Cleanup Results for Digesters Trench Area
10 Soil Cleanup Results for GFB12 Area
11 Soil Cleanup Results for Hydraulic Barker Area
12 Soil Cleanup Results for Log Pond Chip Conveyor Area
13 Soil Cleanup Results for Old Machine Shop Area
14 Soil Cleanup Results for PM-B-6 Area
15 Soil Cleanup Results for REC5-MW-1 Area
16 Soil Cleanup Results for Fuel Line W Area

List of Appendices

A Photographs from Pipe Plugging Activities

B Photographs from Soil Removal Activities

C Data Validation Reports

D Report of Archaeological Monitoring (Perteet Inc.)

E Statistical Calculation Results for Area-Specific Compliance Evaluations

F Groundwater pH Monitoring Data Collected during CM Removal

G Tabulation of Dust Monitoring Data/Observations and Controls Implemented

H Waste Disposal Records

I City of Everett Documentation for PS04 Outfall Decommissioning

Acronyms

ACM	asbestos-containing materials
Aspect	Aspect Consulting, LLC
AST	aboveground storage tank
bgs	below ground surface
BBH	Boiler/Baghouse
BMP	best management practice
CDF	controlled density fill
City	City of Everett
CLP	Contract Laboratory Program
CM	crushed material
CMS	Central Maintenance Shop
CN	Clark Nickerson
COC	contaminants of concern
Corps	U.S. Army Corps of Engineers
cPAH	carcinogenic polycyclic aromatic hydrocarbon
CSO	combined sewer outfall
CWS	Clear Water Services Inc.
DA	discharge authorization
DAHP	Department of Archaeological and Historical Preservation
DMMU	Dredged Material Management Units
DNR	Washington State Department of Natural Resources
Ecology	Washington State Department of Ecology
EPA	U.S. Environmental Protection Agency
EPH	Extractable Petroleum Hydrocarbon
ERTS	Environmental Report Tracking System
FS	feasibility study
gpm	gallons per minute
IA	interim action
ICI	Interwest Construction Inc.

K-C	Kimberly-Clark Worldwide, Inc.
µg/L	micrograms per liter
mg/kg	milligrams per kilogram
mg/m^3	milligrams per cubic meter
MTCA	Washington State Model Toxics Control Act
Navy	United States Navy
NPDES	National Pollutant Discharge Elimination System
OMS	Old Machine Shop
PAH	polycyclic aromatic hydrocarbon
PAS	Performance Abatement Services
PCB	polychlorinated biphenyl
PCL	preliminary cleanup levels
PID	photoionization detector
Port	Port of Everett
POTW	publicly owned treatment works
ppm	parts per million
PQL	practical quantitation limits
PSCAA	Puget Sound Clean Air Agency
PVC	polyvinyl chloride
RI	remedial investigation
SVOC	semivolatile organic compound
SWPPP	stormwater pollution prevention plan
TEQ	toxic equivalency factor
TPH	total petroleum hydrocarbon
TSI	TSI Incorporated
UCL	upper confidence limit
UST	underground storage tank
VOC	volatile organic compound
WAC	Washington Administrative Code

Executive Summary

Aspect Consulting, LLC (Aspect) has prepared this Interim Action Report on behalf of Kimberly-Clark Worldwide, Inc. (K-C), to document completion of the second interim action (IA) within the Upland Area of the Kimberly-Clark Worldwide Site (Site; Figure 1). The interim action was conducted in accordance with the "Work Plan for Second Interim Action" (Work Plan; Aspect, 2019), which was included as Exhibit G to the First Amendment to Agreed Order No. ED 9476 (Order) between Washington State Department of Ecology (Ecology) and K-C. The First Amendment to the Order went through Ecology's public comment process in March–April 2019 and was then executed in November 2019. By that time, K-C had sold the property in two transactions, the wastewater treatment plant portion at the north to the City of Everett in July 2019, and the balance to the Port of Everett (Port). The interim action was limited solely to the Upland Area (bounded on the west by the mean higher high-water elevation) and did not include any work in the In-Water area of the Site as defined in Section IV of the Order.

The second IA proactively removed contaminated soils and associated groundwater identified from the Upland Area Remedial Investigation (RI) sampling and analysis, with a primary goal to control sources of leachable contaminants to groundwater while the rest of the Upland Area Model Toxics Control Act (MTCA) process proceeds.

In addition to the soil removal, inactive pipes discharging to the East Waterway were plugged to prevent them from serving as a potential pathway for discharge of Upland Area groundwater to the adjacent East Waterway. The second IA accomplished permanent removal of contaminated soil and groundwater from the Upland Area and eliminated potential conduits for groundwater discharge; as such, it does not conflict with or eliminate reasonable alternatives for the final Upland Area cleanup action in accordance with MTCA.

Concurrent with the second IA, removal and off-Site disposition of the crushed demolition debris (termed crushed material; CM) was completed as a separate project, outside of the Order, in accordance with the "Plan of Operations for Crushed Material Removal" (Plan for CM Removal; K-C, 2018). The second IA included monitoring of groundwater pH throughout the CM removal project to assess whether the action created an increase in groundwater pH that posed a risk of migration to the East Waterway.

The second IA achieved permanent removal of approximately 17,610 tons of contaminated material from the Upland Area and, to the extent practicable, met industrial-based soil PCLs for the contaminants targeted for removal. In some excavation areas, Ecology concurred that further excavation to remove additional exceedances was not practicable, as described in Section 5 of this report. In addition, approximately 2.28 million gallons of groundwater were removed from the collective excavation areas for treatment, providing additional removal of contamination (in dissolved phase) from within the source areas.

K-C completed the second IA in close consultation with Ecology and the action fulfilled the requirements of the Work Plan. Once this report is finalized and approved by Ecology, K-C requests from Ecology written confirmation that all requirements for the second IA have been fulfilled and completed.

1 Introduction

Aspect Consulting, LLC (Aspect) has prepared this Interim Action Report on behalf of Kimberly-Clark Worldwide, Inc. (K-C), to document completion of the second interim action (IA) within the Upland Area of the Kimberly-Clark Worldwide Site (Site; Figure 1). The interim action was conducted in accordance with the "Work Plan for Second Interim Action" (Work Plan; Aspect, 2019), which was included as Exhibit G to the First Amendment to Agreed Order No. ED 9476 (Order) between Washington State Department of Ecology (Ecology) and K-C. The First Amendment to the Order went through Ecology's public comment process in March–April 2019 and was then executed in November 2019. By that time, K-C had sold the property in two transactions, the wastewater treatment plant portion at the north to the City of Everett in July 2019, and the balance to the Port of Everett (Port) (see Figure 3). The interim action was limited solely to the Upland Area (bounded on the west by the mean higher high-water elevation) and did not include any work in the In-Water area of the Site as defined in Section IV of the Order.

The second IA proactively removed contaminated soils and associated groundwater identified from the Upland Area Remedial Investigation (RI) sampling and analysis, with a primary goal to control sources of leachable contaminants to groundwater while the rest of the Upland Area Model Toxics Control Act (MTCA) process proceeds. In addition to the soil excavations, inactive pipes discharging to the East Waterway were plugged to prevent them from serving as a potential pathway for discharge of Upland Area groundwater to the adjacent East Waterway. The second IA accomplished permanent removal of contaminated soil and groundwater from the Upland Area, and eliminated potential conduits for groundwater discharge; as such, it does not conflict with or eliminate reasonable alternatives for the final Upland Area cleanup action in accordance with Washington Administrative Code (WAC) 173-340-430(3)(b).

Concurrent with the second IA, removal and off-Site disposition of the crushed demolition debris (termed crushed material; CM) was completed as a separate project, outside of the Order, in accordance with the "Plan of Operations for Crushed Material Removal" (Plan for CM Removal; K-C, 2018) and under jurisdiction of the local solid waste authority, Snohomish Health District. The second IA included monitoring of groundwater pH throughout the CM removal project to assess whether the action created an increase in groundwater pH that posed a risk of migration to the East Waterway. The monitoring data document that there was no migration of high-pH groundwater generated from the CM removal activities. Appendix F provides a tabulation and discussion of the groundwater pH monitoring data collected.

The following sections of this report are as follows:

- **Section 2—Interim Action Overview** describes the contractors performing the second IA work under contract to K-C, and the overall schedule for completing the work.

- **Section 3—Plugging of Shoreline Pipes** describes the activities used to clean and plug 21 pipes formerly open at the East Waterway shoreline, and clean and preserve one operating stormwater pipe.
- **Section 4—General Approach for Soil Removal** describes the generalized soil removal activities including the areas excavated, soil cleanup levels applied, erosion, sediment, and dust controls, dewatering and water management, materials excavation and handling, performance monitoring, archaeological monitoring in selected excavations, off-Site disposition of excavated materials, and excavation backfilling.
- **Section 5—Interim Action Soil Cleanup by Area** describes the removal of contaminated material completed for each of the soil cleanup areas included in the second IA.
- **Section 6—Conclusions** briefly summarizes the second IA results relative to the Work Plan requirements.
- **Section 7—References** lists the documents cited in this report.

This report also includes the following appendices:

- Appendices A and B include photographs from the pipe plugging and soil removal activities, respectively.
- Appendix C includes data quality assurance validation reports for excavation soil samples analytical data collected during this interim action.
- Appendix D presents an archaeological monitoring report prepared by Perteet Inc.
- Appendix E provides statistical calculations that assisted with decision making for terminating excavation in selected soil cleanup areas.
- Appendix F describes and tabulates the groundwater pH monitoring data collected during the CM removal project as required by the Work Plan.
- Appendix G includes a tabulation of dust monitoring data, observations, and dust control measures implemented during the combined interim action and CM removal projects.
- Appendix H provides records documenting quantities of contaminated soils landfilled during this interim action.
- Appendix I provides documentation from City of Everett's decommissioning of their PS04 outfall.

2 Interim Action Overview

Through a competitive bid process, K-C selected Interwest Construction Inc. (ICI) of Burlington, Washington, as the construction Contractor for the second IA. ICI was also selected to conduct removal of CM from the Site, a project conducted outside of the Order and under jurisdiction of Snohomish Health District. K-C also selected Clear Water Services Inc. (CWS) to receive water generated from dewatering of excavations to remove contaminated soil (second IA) and CM (CM removal project) present beneath groundwater, pretreat the water on Site, and discharge it to City of Everett's (City) combined sewer.

ICI and CWS began mobilization to the Site in February 2020, including mobilizing equipment, establishing a wheel wash and other erosion-control best management practices (BMPs), and beginning to install an on-Site truck scale. Also prior to start of construction, Aspect directed a licensed well driller's decommissioning of all monitoring wells within footprints of the second IA soil cleanup areas. Start of the IA activities was then delayed for approximately 2 months due to the state's restrictions addressing the COVID-19 pandemic. Once the state allowed essential construction work, including environmental cleanup, to resume, and ICI put in place a COVID-19 exposure prevention plan for all on-Site workers, second IA work began in earnest on May 6, 2020. The pipe plugging activities were performed primarily between May 6 and June 15, 2020, with one final pipe video-survey and catch basin cleanout on October 29, 2020. The soil removal activities were completed primarily between May 28 and November 4, 2020. Final off-Site transport of excavated material and backfill and compaction of interim action excavations was substantively complete by November 12, 2020.

Aspect was the engineering firm responsible for overseeing, monitoring, and reporting the second IA activities on behalf of K-C (termed the Engineer in this report). Aspect consulted with Ecology throughout the duration of the second IA activities, including weekly teleconferences with a broad stakeholder group, including Ecology, the Port, Snohomish Health District, K-C, and the contractors ICI and CWS.

3 Plugging Shoreline Pipes

Plugging open pipes at the shoreline was conducted between May 6 and June 15, 2020, in general accordance with procedures outlined in Appendix C to the Work Plan (Aspect, 2019). Video survey of Pipe A, which is to be reused and thus not plugged, was completed on October 29, 2020, following placement and grading of backfill in that general area. The plugging approach was modified for some pipes with Ecology concurrence, as described in the following subsections. Appendix C to the Work Plan included plugging of the City's combined sewer outfall (CSO) pipe that traversed the Upland Area and discharged to the East Waterway via outfall PS04 beneath K-C's pier in the southwest portion of the Site. The City decommissioned their CSO line in September 2019. The City's documentation of that decommissioning is provided in Appendix I.

3.1 General Procedures

In accordance with Appendix C to the Work Plan, all the cutting and filling of pipes was completed by excavation in the upland, east of the bulkhead with an emphasis on avoiding impacts to the shoreline from equipment and materials handling, and avoiding impacts to the East Waterway. The general approach involved excavating to expose, breaching (cutting), and then filling with controlled density fill (CDF) the pipe adjacent to the bulkhead and also 75 feet inland, if present. In some cases, the entire pipe was removed to tens of feet inland instead of plugging it 75 feet inland. Segments of pipe left in place, within 75 feet of the bulkhead, were video surveyed using a downhole motorized camera, and then accessible accumulated solids removed by vacuum methods from the breach location(s). Solids removed from the interior of pipes and segments of pipe removed were disposed of at a Subtitle D landfill.

For excavations extending beneath groundwater, temporary dewatering was conducted using sumps, and temporary shoring was used in the excavation for Pipe K to safely conduct the work. Two sets of tie backs, oriented north-south and east-west, for the bulkhead were observed in the Pipe K excavation, but they were not damaged during the pipe excavation and plugging activities. All water extracted during dewatering was conveyed to the on-Site water treatment system for treatment and discharge to the City combined sewer in accordance with the City's discharge authorization (DA) issued to K-C for the project (discussed in Section 4.4). Throughout the upland excavations, erosion and spill prevention control BMPs were implemented to ensure no discharges to the East Waterway.

During excavation to expose pipes, field screening for evidence of contamination was conducted using visual/olfactory methods and a photoionization detector (PID). No evidence of contaminated soils was observed, except during removal of an abandoned fuel-oil pipe encountered adjacent to the one of the pipes being plugged, as described in Section 3.3. In addition, no coarse granular materials representing pipe bedding were observed in excavation of any of the pipes.

The specific pipe-plugging activities conducted for the individual shoreline pipes are described below. Figure 2 depicts the locations of the pipes. Photographs from the pipe-plugging activities are included in Appendix A.

3.2 Pipe A: Active Storm Drain

Pipe A is an active storm drain that drains the roof and the western side of the Warehouse structure in the southeastern corner of the Site, which drains to the East Waterway (Figure 2). At the time of the second IA, the storm drain is planned to remain operational when the Warehouse is repurposed, so the infrastructure was maintained and only cleaned, in accordance with the Work Plan.

Three catch basins (designated A, B, and C from south to north) and a manhole (designated D) north of the catch basins all connect to the common storm drain. Negligible solids were observed within the pipes, but the small volumes of solids accumulated in each catch basin were removed.

The pipe segment between manhole D and the catch basins was video surveyed from manhole D for a distance of approximately 82 feet south where an eastward bend in the pipe[1] prevented the video crawler from proceeding further. Minor accumulations of sediment were observed in the pipe at two pipe joints (at 55 and 63 feet south of manhole D). The pipe segment east of manhole D, extending under the Warehouse structure, was video surveyed for a distance of approximately 70 feet, with only minor sediment or encrustation observed on the pipe bottom. The pipe segment west of manhole D was also video-surveyed for a distance of approximately 155 feet, at which point, the video crawler could not proceed further west due to reported "encrustation blockage,"; although, the distance also approximately corresponds to a northward bend in the pipe.

3.3 Pipes B1, B2, B3: Catch Basins with 8-Inch Steel Pipes

Pipes B1, B2, and B3 were the eastern, central, and western steel catch basins, respectively, each draining to 8-inch steel pipes.

The pipe from B1 joined the pipe from B2, which runs west to join Pipe A. Both catch basins, the pipe joining B1 and B2, and approximately 6 feet of pipe downstream of the B2 catch basin were fully removed. The remaining downstream portion of the B2 pipe was then filled with CDF to approximately five times its diameter.

The pipe from B3 was not connected to B1 or B2. The B3 catch basin and its pipe were removed up to the ecology blocks located approximately 15 feet inland from shoreline. At that location, the remaining B3 pipe was plugged with CDF to approximately five times its diameter.

The excavated material during pipe removal included surficial CM around the B2 catch basin (stockpiled for later removal) underlain by dredge sand with no odor, staining, or PID readings.

A fuel-oil pipeline encountered during removal of the B1 catch basin was removed with sampling of residual soils, consistent with the Work Plan procedures and in consultation with Ecology, as detailed in Section 5.12.

[1] Between catch basins A and B.

3.4 Pipe C: 36-Inch Wood Stave (Outfall 002)

The Contractor, ICI, excavated and exposed Pipe C at Stations 10+98 and downstream 11+31, as identified in Appendix C to the Work Plan. A manhole was present adjacent to Station 10+98, which allowed visual observation of the pipe interior. ICI breached the top of the 36-inch wood stave pipe upstream of Station 10+98 and downstream of Station 11+31 and constructed a sandbag berm at each location to contain CDF placed in the approximately 33-foot length of pipe between them. The pipe was video surveyed, and then accessible accumulated solids were removed by vactor. ICI then poured stiff CDF on the sandbag berms to seal the ends, and the next day poured a CDF plug to completely fill the pipe between the berms. CDF was also placed surrounding the two access points to create a seal around the pipe exterior, although no pipe bedding was observed. The soil excavated to accomplish the plugging was dredge sand with no odor, staining, or PID readings, and no CM was observed.

3.5 Pipe D: 4-Inch Steel beneath Pier

A trench was initially excavated to a depth of 5 feet below ground surface (bgs) along the east side of the ecology block wall adjacent to the bulkhead where Pipe D is present beneath the pier. No sign of pipe or bedding material was observed in the excavation. Inspection of the 4-inch steel Pipe D underneath the pier demonstrated it was plugged approximately 18 inches east of the bulkhead, at a depth of about 4 feet bgs. The water table is more than 8 feet bgs in this area; therefore, no further action was warranted for Pipe D. Soil excavated from the trench was dredge sand with no odors, staining, or PID readings, and no CM was observed.

3.6 Pipe E: 8-Inch Steel beneath Pier

A trench was initially excavated to a depth of 5 feet bgs along the east side of the ecology block wall adjacent to the bulkhead where Pipe E is present beneath the pier. In the trench, a block of CDF was present just below surface that extends 12 feet east, where the 8-inch pipe was again observed 3 feet bgs. The Contractor cut the pipe at 7 feet from bulkhead and placed a CDF plug to five times its diameter within the remaining downstream end of it. ICI exposed the eastern portion of the pipe to a point approximately 45 feet east of the bulkhead where it forms a “T,” running both north and south (part of the mill’s historical fire suppression system). The pipe was fully removed from the 12-foot edge of the preexisting CDF plug to points 6 feet north and 6 feet south of the T, where the north and south open pipe ends were plugged to five times their diameters with CDF. The steel water pipe removed contained negligible solids and was transported to a permitted metals recycling facility (Schnitzer Steel in Woodinville) for recycling. The excavated material at all locations was dredge sand with no odors, staining, or PID readings observed. No CM was observed.

3.7 Pipe F: 54-Inch Wood Stave beneath Pier (Outfall 003)

The 54-inch-diameter wood stave pipe was initially exposed at a depth of approximately 7 feet bgs at the bulkhead, where it was encased in concrete. No bedding material was visible surrounding pipe. A void was present around the pipe beneath the bulkhead wall. ICI placed a woven fabric and 2- to 4-inch crushed rock on the inland side of the fabric to

stabilize the void area beneath the bulkhead. Subsequently, ICI excavated and exposed the pipe 75 feet east of bulkhead at a depth of about 8 feet bgs (ground surface approximately 1.5 feet higher than at bulkhead). The pipe at the 75-foot location was similarly encased in concrete, with no bedding material visible, as observed at the bulkhead. The soil excavated from both locations was dredge fill with no apparent odor, staining, or PID readings, and no CM was observed at either location.

Approximately 15 feet east of bulkhead, ICI cut through 16-inch-thick concrete to expose and breach the wood stave pipe. A pneumatic plug was installed and inflated at the bulkhead downstream of the breach. At the 75-foot inland location, ICI cut through 8 inches of concrete surrounding the wood pipe to expose and breach it. A sandbag wall was installed adjacent to the pneumatic plug (at bulkhead) and at the 75-feet breach location, and then CDF was placed over two days to completely fill the pipe from the bulkhead to 75 feet.

Following plugging, a trickle of water remained discharging from the pipe outfall structure under the pier. Given the robust plug installed, the discharge appears to be primarily if not entirely tide water entering the pipe downstream of the plug. Ecology concurred that the plugging of Pipe F was sufficient, and no further action was needed.

3.8 Pipe G: 4-Inch Steel beneath Pier

The 4-inch steel Pipe G was present approximately 5 feet bgs and was fully removed from the east side of the ecology block wall to where it ended, approximately 78 feet east of the bulkhead. No evidence of an eastern extension of the pipe was observed. The remaining segment of pipe west of the ecology block wall was plugged to five times its diameter with CDF at the ecology blocks. The soil excavated during pipe removal was dredge sand with no apparent odor, staining, or PID reading. No CM was observed.

3.9 Pipe H: 8-Inch PVC[2] beneath Pier

Immediately east of the ecology block wall, the former catch basin for Pipe H was excavated and exposed. The 8-inch PVC pipe extending west from the catch basin had been previously plugged with a thermos cap, and no other pipes were observed in the catch basin. The catch basin was completely removed, and the resulting void was filled with CDF to fully cover Pipe H's eastern end (with thermos plug). The soil excavated during pipe removal was dredge sand with no apparent odor, staining, or PID reading. No CM was observed.

3.10 Pipe J: 4-Inch Steel beneath Pier

A trench was initially excavated to a depth of 5 feet bgs along the east side of the ecology block wall adjacent to the bulkhead where Pipe J is present beneath the pier. No sign of pipe or bedding material was observed in the excavation. Inspection of the 4-inch steel pipe underneath the pier demonstrated it was plugged approximately 16 inches east of the bulkhead, at a depth of about 4 feet bgs. The water table is more than 8 feet bgs in this area; therefore, no further action was warranted for Pipe J. Material excavated from the

[2] PVC = Polyvinyl chloride.

trench was gravelly sand with a thin asphalt layer at 1 foot bgs and 1 foot of crushed rock, with no odors, staining, or PID readings. No CM was observed.

3.11 Pipe K: 15-Inch Concrete beneath Pier

Pipe K is a 15-inch concrete pipe, with a steel liner at its mouth, that is open beneath the pier. The Port requested that this pipe be plugged at the bulkhead using a removable rubber plug, not CDF, to make it available for their potential reuse in their future terminal redevelopment project.

While excavation was occurring east of the bulkhead, ICI installed a temporary pneumatic plug in the pipe end under the pier to prevent potential discharges to the Waterway. The 15-inch concrete pipe was exposed approximately 12 feet inland of the bulkhead at a depth of about 11 feet bgs. At that location, Pipe K was below groundwater that is tidally influenced, which limited the work window duration for plugging it. ICI used temporary shoring to allow work on the pipe and dewatering from a temporary sump to maintain a dry excavation for work at low tide stages. Even with dewatering, subgrade soils in the excavation adjacent to the bulkhead were quite soft. Two sets of bulkhead tie backs, one oriented east-west and another oriented north-south were encountered, but not damaged, while excavating and plugging the pipe.

Pipe K was cut cleanly in the excavation approximately 12 feet east of the bulkhead. The visible portion of the concrete pipe was observed to be in decent condition. Accumulated solids (including a piece of driftwood) were removed from the accessible segment of pipe by vactor. Given the rising tide, the removable plug (rubber and PVC) was attached to the cut end and then secured with an ecology block in the excavation to resist tidal pressure. David Evans and Associates' survey crew surveyed the cut pipe end, on behalf of the Port, for location in the future.

The Contractor then fully removed the pipe from the installed cap to a preexisting CDF mass present in the pipe path at approximately 70 feet inland from the bulkhead. The segment of removed pipe and solids within it were disposed of at a Subtitle D landfill. The excavation was backfilled and compacted, and a vertical-standing 2-by-4 board extending just above finish grade was placed in the backfill at the pipe end location. The material excavated to plug and remove Pipe K was dredge sand with no odor, staining, or PID readings. No CM was observed.

Video of the downstream segment of pipe revealed an apparent offset in the concrete pipe within or next to the bulkhead, and a small trickle of water draining out. There was no visible indication of water coming through top or sides of pipe, and it may have been infiltrating through the bottom of the pipe

Following the plugging, a small trickle of water (less than 1 gallon per minute [gpm]) remained discharging from the pipe under the pier at lower low tide stages. The discharge appeared to be primarily if not entirely tide water entering the pipe downstream of the plug. Ecology concurred that the pipe plugging was sufficient, and no further action was needed for Pipe K.

3.12 Pipe L: 8-Inch PVC beneath Pier

A trench was initially excavated to a depth of 5 feet bgs along the east side of the ecology block wall adjacent to the bulkhead where Pipe L is present beneath the pier. The excavation encountered a broken concrete catch basin and, immediately west of it, a broken 8-inch PVC pipe with preexisting thermos plug approximately 2 feet bgs. No pipe was observed east of the catch basin. The catch basin and pipe fragments were completely removed, and the resulting void was filled with CDF to fully cover Pipe L's eastern end (with thermos plug). The excavated material was dredge sand with fragments of the former concrete catch basin with no apparent odor, staining, or PID readings. No CM was observed.

3.13 Pipe M: 12-Inch PVC/18-Inch Wood Stave

Pipe M is a 12-inch PVC pipe that emerges from the rip rap shoreline north of the pier and is capped on the intertidal beach west of the rip rap. The Work Plan approach for Pipe M was to plug it with a removable rubber cap 75 feet inland from the bulkhead to leave the pipe available for potential reuse as part of redevelopment.

ICI initially excavated 75 feet east of the bulkhead with the intent to install a removable rubber cap, as per the Work Plan. At that location, Pipe M was an 18-inch-diameter wood stave pipe encased in concrete at approximately 6 feet bgs. When the pipe was breached at that location, it was observed to be largely filled with sediment. Approximately 10 feet inland from the bulkhead, exploratory excavation exposed a 9-foot deep concrete vault within which the wood stave pipe enters from the east and exits to the west. The junction of the PVC pipe on the beach to the wood pipe at the vault was not observed and is inferred to be within the shoreline rip rap.

ICI conducted a video survey and vacuumed accumulated solids from the accessible lengths of the wood pipe 5 to 6 feet upstream and downstream of the vault. The Contractor then constructed plugs in the wood pipe upstream and downstream of the vault using fast-setting ("jet set") concrete. Sandbags were then placed in the bottom of the vault to wall off the northern part of vault where the inlet/outlet pipe ends exist, thus allowing CDF placement there to cover the pipe ends without filling the entire bottom of the vault. CDF was then placed in the northern part of vault bottom to cover the inlet/outlet pipe ends. Once the CDF was set, the rest of vault was backfilled to grade with Parcel O dredge sand, instead of CDF, to allow the Port to access the pipe at the vault location for potential future rehabilitation and reuse, as agreed to with Ecology and the Port. Then, ICI fully removed the rest of Pipe M to 75 feet inland and plugged its upstream end to five times its diameter with CDF. The wood pipe, concrete, and associated sediment removed were disposed of at a Subtitle D landfill. In total, approximately 109 tons of material generated during removal of Pipes K and M were disposed of at the Subtitle D landfill. The capped PVC pipe on the beach was not touched during the plugging work.

Material excavated to expose and remove Pipe M was primarily dredge sand with no apparent odor, staining, or PID readings. A thin layer of apparent CM material was present adjacent to the vault, which was left for removal as part of the CM removal project.

3.14 Small-Diameter Pipes at Former Navy Wooden Bulkhead (N, P, and Q Series)

Eight pipes, constructed of both steel and PVC and ranging in diameter from 1 to 8 inches, protrude from the west side of the former Naval Reserve Area wooden bulkhead along the northern portion of the shoreline (Pipes N, P, Q, Q1, Q2, Q3, Q4, and Q5; Figure 2). A trench was excavated along the length of wooden bulkhead approximately 7 feet inland, due to structural stability/safety concerns of attempting to work closer to the bulkhead. The trench was excavated to a depth of 5 to 6 feet bgs, which was below the depths of all pipes visible extending from the bulkhead. No pipes were encountered. No visible odor, staining, or PID readings were noted in excavated material.

This area was excavated by the United States Navy (Navy) in 1998 for removal of two underground storage tanks (USTs) and associated infrastructure (Foster Wheeler, 1998), and again by Aspect in 2014 for removal of residual contaminated soil (NRU and NRS excavations described in Aspect, 2015). During Aspect's 2014 excavations, a 12-inch clay pipe was observed on east side of the southern (NRS) excavation, but no pipes were observed on the west sides of the two excavations or extending across them. The information indicates that the inland portions of the pipes visible on the west side of the wooden bulkhead were removed by the Navy at the time of their UST-system removal and decommissioning of the former Naval Reserve facility. Ecology concurred that no further action was warranted for these pipes.

4 General Approach for Soil Removal

This section describes the generalized activities involved with removal of contaminated soil, including erosion, sediment, and dust controls, dewatering and water management, materials excavation and handling, stockpile management, off-Site disposition of excavated materials, and excavation backfilling.

4.1 Interim Action Soil Cleanup Areas

The Work Plan described the planned removal of contaminated soil from nine areas listed alphabetically below (Figure 3):

1. BA-MW-7 area
2. Boiler/Baghouse (BBH) area
3. Central Maintenance Shop (CMS) area
4. Clark Nickerson (CN) area
5. Hydraulic Barker area
6. Log Pond Chip Conveyor area
7. Old Machine Shop (OMS) area
8. PM-B-6 area
9. REC5-MW-1 area

During completion of the concurrent second IA and CM removal projects, three additional areas were identified and addressed following the approach and methodology described in the Work Plan and in consultation with Ecology. The added areas are as follows (Figure 3):

1. Fuel-Oil Line west of the Warehouse
2. GFB12 area
3. Digesters Trench area

Each area has different contaminants of concern (COCs) and different dimensions as described in more detail in Section 5.

4.2 Soil Cleanup Levels for Interim Action

The soil cleanup levels for the second IA are consistent with soil preliminary cleanup levels (PCLs) developed in the draft RI for the Upland Area (Aspect, 2016a), but updated based on more recent changes to applicable regulatory criteria. The soil PCLs are protective of direct human contact under industrial use and leaching to groundwater, with adjustments for Puget Sound-region natural background concentrations and analytical practical quantitation limits (PQL) in accordance with MTCA. For the COCs targeted in

the second IA, soil concentrations protective of leaching are more stringent than those based on industrial direct contact, and the PCLs are therefore based on the leaching pathway. In accordance with MTCA, the leaching-based soil PCLs are different for soils above the water table (unsaturated soil) versus those below the water table (saturated soil) except where they default to natural background or the PQL. Table 1 presents the soil PCLs for the COCs targeted for removal in the second IA. The PCLs are also included in the verification soil sample data tables for each excavation area.

4.3 Erosion, Sediment, and Dust Controls

ICI implemented construction stormwater BMPs described in the project-specific stormwater pollution prevention plan (SWPPP included as Appendix D to the Work Plan) during second IA earthwork activities, including soil excavation (for contaminated soil removal and exposing shoreline pipes to plug), stockpiling, loading, and transportation off-Site. This included installation and operation of a wheel wash for trucks leaving the Site and covering loads of contaminated material leaving the Site. Truck traffic for the project complied with ICI's traffic control plan that was approved by the City prior to the start of project earthwork. When contaminated materials were temporarily stockpiled on the Site pending loading, the stockpiles were underlain and covered with visqueen when not in use.

4.3.1 Dust Controls and Monitoring

ICI used water trucks on the Site, often continuously throughout the workday, for dust suppression, largely focused on the on-Site travel ways. The dust control measures were successful in preventing off-Site migration of visible fugitive dust.

From late May through late October 2020, Aspect conducted quantitative monitoring for airborne particulate (dust) of diameter 10 microns and smaller in size (PM_{10}) along the east side of the Site, in accordance with the March 2020 dust monitoring plan submitted to Ecology and Puget Sound Clean Air Agency (PSCAA; Aspect, 2020b). The dust monitoring was conducted[3] on days when dust control measures were conducted or it was otherwise not raining, foggy, or smoky due to wildfires. Table G-1 in Appendix G presents Aspect's daily dust monitoring data and, starting July 22, visual observations of dust and a brief description of ICI's dust-control measures implemented.

Although the dust monitor was intended to measure only dust generated by on-Site earthwork activities, the instrument recorded both high humidity[4] and smoke as particulate matter, which prevented accurate measurement of dust generated by Site activities on some days. As noted in Table G-1, for more than a week in mid-September, the Site was enveloped in smoke from regional wildfires that created an air quality index exceeding 200 ("very unhealthy") on several of those days. The smoke-derived particulate matter was evident by an order-of-magnitude increase in recorded daily-

[3] Using a TSI Inc. Dusttrak™ II model 8530 desktop aerosol monitor with data logging capabilities and PM-10 inlet, mounted on a tripod roughly 4 feet above grade.

[4] High humidity and especially fog can cause high bias in the dust monitor's readings due to "water-uptake and resulting hygroscopic growth of the aerosol particles, causing them to scatter more light and generate higher apparent mass concentration readings by the photometric instrument " (TSI Inc., 2014).

average PM_{10} concentrations on September 8, 9, and 10. Because dust could not be distinguished from smoke in the readings, the dust monitoring was suspended for the rest of the wildfire smoke event (through September 18). High-biased readings were also recorded from October 1 through 6, when the Site was enveloped in fog for much or all of the workday. Figure G1 in Appendix G depicts the daily average PM_{10} concentrations measured inside the eastern Site boundary over the project duration. The effects of wildfire smoke, fog, and outside sources of airborne particulate (e.g., locomotive idling just outside the eastern fence line all day on July 27) are annotated for reference on the figure.

Over the 5-month period of monitoring, excluding days with substantial smoke or fog on the Site, the highest daily-average PM_{10} concentration was 0.029 milligrams per cubic meter (mg/m^3), less than one-fifth of the state Ambient Air Quality Standard of 0.15 mg/m^3 (WAC 173-476-100).[5] Consistent with the quantitative measurements, Aspect's visual observations confirmed a lack of visible dust along the eastern property boundary throughout the project (Table G-1).

4.4 Excavation Dewatering and Management of Water

Throughout the second IA, ICI conducted excavation dewatering using sumps adjacent to and/or within the excavation, as needed, to facilitate excavation/handling of soil and Aspect's excavation verification soil sampling (performance monitoring). In accordance with the Work Plan, water produced during dewatering was treated on the Site, using a temporary water treatment system, prior to discharge of the treated water to the City's combined sewer, in accordance with Discharge Authorization (DA) No. M-33-2020 dated February 5, 2020. The DA covered discharge of dewatering water generated during the second IA and the concurrent CM removal project, which occurred from early June through early December 2020. The water treatment system was staged on asphalt pavement by the Site's north gate. The water pretreated on the Site was conveyed via the combined sewer system to the City's publicly owned treatment works (POTW) for additional treatment and then discharge in accordance with the City's National Pollutant Discharge Elimination system (NPDES) permit for the POTW.

CWS' temporary water treatment system consisted of a 21,000-gallon chambered weir tank providing removal of floating free-phase petroleum product, if present, and settling of settleable solids. Water from the first weir tank was pumped to three additional 21,000-gallon chitosan-enhanced sand filter tanks providing additional removal of suspended solids and dissolved metals prior to discharge to an on-Site sewer manhole as specified by the City. The treatment system also included the ability to provide pH neutralization. Water discharged to sewer was further treated in the City's POTW.

In accordance with the DA, samples of treated water were collected monthly throughout the period of water discharge. The sampling data confirm that there were no exceedances of the DA effluent criteria over the 7 months of discharge. As required by the DA, K-C provided the City the quantity and analytical data for water discharged to sewer under the

[5] The standard is based on a 24-hour average and occurring no more than one time per year on a 3-year average.

DA. Approximately 2.28 million gallons of water were treated and discharged to the City POTW over the duration of the second IA and CM removal projects, the vast majority of which was generated by dewatering of the second IA excavations.

4.4.1 Water Treatment System Overflow Event

On the morning of June 10, 2020, an estimated 400 to 500 gallons of untreated water overflowed from the treatment system's first weir tank as a result of a system programming error with respect to the weir tank's high tank alarm level. The untreated water was groundwater produced by dewatering of the Hydraulic Barker area soil excavation (described in Section 5.7). Dewatering was ceased and CWS was immediately notified. CWS promptly rectified their system and began discharging treated water to the sanitary sewer to create capacity in their system.

The water overflowed onto the surrounding asphalt pavement and went across the northern property line into a catch basin on the City's north-adjacent property. Water from the City's catch basin flowed to a pump vault several feet to the west, from where it was pumped to the eastern clarifier, all on City property. No water was discharged from the clarifier to sewer during the overflow event. Upon observing water entering the City system, K-C immediately notified City Public Works and a City technician came to the Site and turned off the pump in the vault.

At K-C direction, ICI pumped water from the vault and the clarifier back to CWS' weir tank. Prior to doing so, Aspect collected samples of water from the (1) north chamber of the weir tank from where the overflow occurred, (2) the vault into which the water drained, and (3) the eastern clarifier into which water was pumped from the vault. The water samples were analyzed for diesel- and oil-range total petroleum hydrocarbons (TPH), total metals (arsenic, copper, lead, mercury, nickel, zinc), polycyclic aromatic hydrocarbons (PAHs), and polychlorinated biphenyls (PCBs)—constituents potentially present in groundwater from the Hydraulic Barker excavation that was the source of the overflow water. Concentrations in each of the three water samples were less than the effluent standards in the City's DA for the project.

That same day, Aspect notified, via email, Ecology's Site manager regarding the overflow event and actions taken, who in turn notified Ecology's stormwater inspector/compliance specialist assigned to the Site. CWS provided K-C with an incident report providing their analysis for the cause of the overflow and actions they had undertaken to ensure it would not occur again. Subsequently, Aspect transmitted the incident report and water sample analytical results to Ecology on June 15, 2020. As requested by Ecology, on June 17, 2020, Aspect reported the overflow event to Ecology's online Environmental Report Tracking System, and it was assigned tracking number ERTS 698835.

The overflow water was contained within the City's combined sewer infrastructure, and the vast majority of it was ultimately recovered, treated, and discharged to the City combined sewer. The overflow did not discharge to the City's stormwater system, nor did it discharge to waters of the state.

4.5 Materials Excavation and Management

The second IA involved excavation and management of the following material types, listed from ground surface down:

- Surficial veneer of CM, which was removed from the Site as a separate non-MTCA project with the Snohomish Health District as the lead agency
- Imported aggregate that complied with PCLs when it was previously placed as excavation backfill during the 2013–2014 IA (termed overburden)
- Contaminated materials (soil mixed with debris)

Each material type did not occur in each excavation area. The following subsections describe the handling and disposition of each material type.

4.5.1 Crushed Material

Within each second IA excavation area where surficial CM was present (all except the OMS and BA-MW-7 areas), the CM was removed and temporarily stockpiled adjacent to the excavation for subsequent loading and transport to a preapproved recycling facility in accordance with the Plan of Operations for CM Removal (K-C, 2018) overseen by the Snohomish Health District. Once the bulk of CM was removed from an IA excavation area, the residual CM that could not be practically removed without mixing with underlying soil was excavated and disposed of as contaminated material.

4.5.2 Overburden (Backfill from Prior Excavation)

Overburden, consisting of clean sand and gravel aggregate, occurred in portions of the CMS, BBH, and CN excavation areas. The overburden sand was visually distinct from the darker-colored dredge fill soils and could generally be visually distinguished in the excavations. The overburden was previously determined to meet PCLs and be geotechnically suitable for use as backfill (Aspect, 2015). Therefore, the Work Plan intent was to excavate it to the extent it could be cleanly segregated from underlying contaminated soil, temporarily stockpile it for verification chemical testing, and, if meeting PCLs, reuse it as backfill in the new excavation.

Per the Work Plan, three discrete samples of soil were collected and analyzed for each 100 cubic yards of overburden that was removed and stockpiled for reuse.

Approximately 12 loose cubic yards of overburden were excavated, stockpiled, confirmed by sampling and analysis as acceptable for reuse[6], and then reused as backfill in the western CN excavation. Table 3 presents the analytical results for samples of the overburden reused in the CN excavation area.

[6] One of three samples had a nickel concentration of 48.3 milligram per kilogram (mg/kg) relative to a 48 mg/kg PCL that is based on natural background soil quality. The nickel concentrations in the other two samples were very similar (46.5 and 47.3 mg/kg; Table 3) suggesting the concentrations are attributable to the sand's natural mineral content. Based on the collective data, the overburden was considered to be acceptable for reuse.

In the CMS and BBH excavations, the high water table and loose soil conditions greatly complicated segregation of overburden from adjacent and underlying contaminated soils; therefore, the overburden from both areas was removed and disposed of as contaminated material.

4.5.3 Contaminated Materials

The second IA cleanup involved conventional excavation and off-Site disposal of contaminated materials. The initial lateral and vertical extents of the excavation base (bottom) were defined in the Work Plan, based on the extents of contaminated soil estimated from prior data. Aspect staked in the field the predefined lateral extents of each excavation base, and ICI excavated to the predefined lateral and vertical limits prior to Aspect starting excavation performance monitoring. ICI sloped the excavation sidewalls to the minimum extent needed to accomplish excavation to the depths required. The dewatering was generally successful in allowing excavation of unsaturated materials. However, in some locations, saturated soil was temporarily placed within the confines of the excavation, on sloped plastic sheeting, to allow drainage of water back into the excavation prior to loading that material into trucks. To the extent practical, contaminated material that had been drained to an unsaturated condition was direct loaded into waiting intermodal containers or dump trucks for transport to the landfill, rather than stockpiled temporarily on-Site. When contaminated materials had to be temporarily stockpiled outside of the excavation footprint, the stockpiles were underlain and covered with visqueen when not in use, in accordance with the Work Plan.

At the predefined limits of each excavation, the Engineer made a determination of whether or not the soils being excavated were likely to meet PCLs, or not, based on field screening, including visual and olfactory observations, petroleum sheen tests, and use of a PID. However, field screening is not effective in determining low-level concentrations of metals, which were COCs targeted for removal in the majority of the excavation areas. Section 4.6 presents the protocols for performance monitoring (verification soil sampling) in the excavations and expansion of the excavation (overexcavation) based on the verification sample results.

4.6 Performance Monitoring and Overexcavation

Throughout the second IA, Aspect collected verification soil samples for chemical analysis from the sidewalls and base of each excavation to assess compliance with PCLs. Excavation bottom verification samples were collected, generally using the excavator bucket, on a systematic 20-foot grid (i.e., one sample per 20-foot by 20-foot square), with a minimum of three samples collected from the base of each excavation. However, in the very large CMS excavation area, Ecology agreed to a 25-foot square sample spacing on the excavation base. Excavation sidewall verification samples were collected at a horizontal spacing of approximately 20 feet and at approximately 3-foot depth intervals across the full depth of excavation (excluding surficial CM removed prior), with a minimum of two verification samples collected from each depth interval on each sidewall.

For each second-IA area, excavation verification soil samples were analyzed for the area-specific COCs listed in the Work Plan. In addition, for the Hydraulic Barker area, once soils at the excavation extents achieved PCLs for PCBs (COC targeted for removal) and

did not have substantial petroleum contamination as indicated by field screening, the verification samples were analyzed for additional constituents[7] to document their residual concentrations (termed "record samples" in the Work Plan).

In locations where a verification soil sample did not comply with PCLs, the excavation was expanded to remove additional soil to meet PCLs, to the extent practicable, using the following decision process outlined in the Work Plan:

1. Where an excavation sidewall sample exceeded a soil PCL, the length of sidewall represented by that sample was overexcavated laterally approximately 1 foot, followed by collection of a new sidewall verification sample in that location.
2. Where an excavation base sample exceeded a soil PCL, the soil represented by the base sample was overexcavated approximately 1 foot deeper, followed by collection of a new base verification soil sample at that location.
3. If, after the first overexcavation, the new sidewall or base verification sample at that location still exceeded the soil PCL, overexcavation by 1 foot further and then resampling of that location was repeated. In some excavation areas, the first overexcavation included 2 feet of additional removal to get to this decision point, as discussed by area in Section 5.
4. After overexcavating 2 feet at a location, the excavation was stopped at that location if the verification sample contained concentrations not greater than two times the PCL in consultation with Ecology. When the verification sample exceeded a PCL by more than two-fold, Aspect consulted with Ecology regarding whether or not to continue excavation at that location, based on the collective sample data and information on subsurface conditions.

Aspect communicated verification sample results from each excavation area to Ecology for discussion and agreement prior to backfilling each excavation in accordance with the Work Plan. Specifics of the excavation efforts and data for each soil removal area are described in Section 5.

4.7 Archaeological Monitoring

In accordance with the Site-specific Cultural Resources Monitoring and Discovery Plan (SWCA, 2013), archaeological monitoring was conducted by an archaeologist from Perteet Inc., under subcontract to Aspect, in the two easternmost excavations—Hydraulic Barker and CMS areas. Given proximity to the historical (prefilling) shoreline, these two eastern excavations had the highest probability for encountering native soil beneath the fill unit. Perteet monitored the entire Hydraulic Barker excavation, to a depth of about 13 feet bgs. For the much-larger CMS area, their monitoring was discontinued after excavating roughly the southern half of the area and observing that the fill extended beyond the excavation base with no visual evidence of native soil. When Perteet was not on the Site, Aspect's geologist was watching for evidence of native soil, but it was not observed during excavation in any of the excavation areas. Perteet generated a report of their on-Site monitoring activities that concluded no historical artifacts were encountered.

[7] Diesel-/oil-range TPH, copper, mercury, and zinc.

Perteet submitted the report to the state Department of Archaeological and Historical Preservation (DAHP), who reviewed it and provided a letter agreeing with Perteet's conclusions. Appendix D includes Perteet's report and DAHP's letter.

4.8 Off-Site Disposal of Excavated Material

ICI transported all contaminated material generated during the second IA to Republic Services' intermodal facility in northeast Everett, or to their Third and Lander facility in Seattle, where it was loaded for rail transport to Republic's Roosevelt Regional Subtitle D landfill in Roosevelt, Washington. Loads of contaminated material transported from the Site were covered from the time they left the Site until they off-loaded at the intermodal facility.

In total, approximately 17,610 tons of contaminated materials were removed from the Upland Area and properly disposed of off the Site during the second IA. This includes 17,501 tons of contaminated material excavated from twelve areas discussed in Section 5 plus 109 tons of material generated during removal of portions of Pipes K and M described in Section 2. In addition, 18 tons of inert debris (large concrete pieces without visible evidence of contamination) that were removed to access contaminated soil or accomplish pipe plugging were disposed of at the United Recycling and Container facility in Snohomish, Washington.

Quantities of contaminated material removed from each soil cleanup area are described in Section 5. Appendix H provides Republic Services' certificate of disposal for the contaminated materials landfilled.

4.9 Excavation Backfill

The completed second-IA excavations were backfilled with uncontaminated dredge sand made available to K-C by the Port. As outlined in "Analytical Data for Parcel O Dredge Sand as Backfill for Interim Action" (Aspect, 2020a), the U.S. Army Corps of Engineers (Corps) generated the sand from navigational dredging of the Snohomish River, and then stockpiled it on the City's Parcel O located on the Snohomish River, approximately 2 miles east of the Site, under agreement with the City. The dredged material is owned by the State of Washington. The Washington State Department of Natural Resources (DNR) gave permission to the Port to use the Parcel O dredge sand. As an element of the K-C and Port's purchase-and-sale agreement for the Upland Area property, the Port made available the Parcel O dredge sand for K-C's use as backfill for the Upland Area second IA and CM removal projects.

The Work Plan requires that ICI provide to K-C documentation of the land use and operational history of the property from which imported backfill material is sourced, as well as representative analytical testing data for the fill material, to demonstrate it is not contaminated. The representative analytical testing includes a sampling frequency of five samples for the first 1,000 cubic yards of material, and one additional sample for every additional 1,000 cubic yards of material, with analysis of the samples for the following constituents:

- Gasoline-range petroleum hydrocarbons
- Diesel-/oil-range petroleum hydrocarbons

- Six metals (arsenic, copper, lead, mercury, nickel, zinc)
- Polycyclic aromatic hydrocarbons (PAHs)
- Polychlorinated biphenyls (PCBs)

At the time of the Work Plan, roughly 10,000 cubic yards was the estimated quantity of backfill required for the second IA. Ecology also extended the sampling requirements to the estimated 55,000 cubic yards of backfill material planned for use for Site-wide grading following completion of the CM removal project. As described in Aspect's report (2020a), prior to starting their dredging of the Snohomish River, the Corps conducted composite chemical testing in defined Dredged Material Management Units (DMMUs) to determine suitability of the material to be dredged for unconfined open-water disposal. The sampling of the Parcel O sand documented its suitability for open-water disposal, and compliance with the second IA soil PCLs; however, the Corps collected a limited number of samples and they were not analyzed for TPH or nickel, as required by the Work Plan. Therefore, Ecology required supplemental testing of the first 20,000 cubic yards of Parcel O dredge sand to be placed on the Site, with analysis of the samples for the complete list of analytes required by the Work Plan.

In late February 2020, Aspect collected 24 samples representing approximately 20,000 cubic yards of the Parcel O sand, as shown on Figure 4. On that figure, the initial approximately 1,000 cubic yards of material is represented by the red stippled pattern and the remaining approximately 19,000 cubic yards is represented by the orange lined pattern. The sample locations are shown in yellow. The soils to be used as backfill were to be taken from the current working face of the stockpile in a radial pattern; the sample locations were spatially located to reflect this approach. At each sample location, the top 6 inches of soil was removed, and a sample of freshly exposed soil was collected directly into laboratory-prepared and -supplied sample jars.

All constituent concentrations in 24 of 24 samples of the Parcel O dredge sand were below soil PCLs, consistent with data from the Corps' prior sampling of the material. Table 4 presents the Parcel O sand analytical data collected by Aspect. Based on the testing data, Ecology concurred that the Parcel O dredge sand was acceptable for use as backfill on the Site.

Approximately 12,520 tons of Parcel O sand were used to backfill excavations during the second IA. In addition, approximately 12 cubic yards of uncontaminated overburden were reused as backfill in the CN-west excavation (see Section 4.4.2).

The backfill in each second-IA excavation was placed in lifts of approximately 1 foot and compacted. The upper surface of the compacted backfill in each excavation was tested by ICI's geotechnical testing consultant, MTC Incorporated. Subsequent testing at depth was conducted by excavating test pits within the interior of the backfilled excavations. The testing confirmed that the compaction achieved 92 percent of the modified-Proctor maximum dry density as required by the purchase-and-sale agreement between the Port and K-C.

At the close of the combined second IA and CM removal projects, ICI re-established the sand containment berm around the stockpiled dredge sand on Parcel O to the satisfaction

of the Corps, Port, and City, as determined during a final inspection of Parcel O by those parties, ICI, and K-C on December 17, 2020.

4.9.1 Validation of Analytical Data from Interim Action

Laboratory Data Consultants, under subcontract to Aspect, completed independent Level 2b data quality validation of the analytical data generated during the second IA, following procedures specified in U.S. Environmental Protection Agency (EPA) Contract Laboratory Program (CLP) functional guidelines. Based on the validation, the data were of acceptable quality for their intended purposes. Data qualifiers after the validation are included in the data tables in this report. Appendix C provides the data validation reports for data collected during this second IA.

5 Soil Cleanup by Area

This section describes the interim action activities completed for each soil cleanup area. Appendix B includes photographs of the excavation activities in each soil cleanup area.

The table of soil analytical data for each cleanup area includes samples representing in-place soil, as well as overexcavated samples (at the end of the table) that represent soil removed from the Site. In each table, a sample with a designation of "SAT" in the header represents saturated soil; a sample without that designation in the header represents unsaturated soil. The PCLs for saturated and unsaturated soil are also presented in the tables. The segregation of soil samples into unsaturated soil (above water table) versus saturated soil (below water table) is based on seasonally high groundwater elevations measured in May 2014, consistent with the approach applied for the draft RI (Aspect, 2016).

It should be noted that all the excavation verification sample location names for the second IA have been modified to include an "X" to represent them as excavation samples. This modification was made because there were a number of duplicate sample locations, primarily for excavation verification sample locations from the 2013–2014 IA at the BBH area, but also for RI boring locations around the CMS area (CMS-B-01, for example). The data tables and figures included herein, as well as the project database, have been revised to include the X designation for the 2020 second-IA verification sample locations; however, the laboratory analytical reports for the 2020 data include the field-assigned sample location names, without the X.

The figure(s) for each IA area depict final excavation limits and the locations of all verification samples collected during the second IA, including those that were subsequently overexcavated. The confirmation soil sample data depicted on each are for the primary COCs that had PCL exceedances before excavation (metals, TPH, etc.). Sample locations representing in-place soil are colored either green or orange to indicate compliance with the soil PCL or an exceedance of the soil PCL, respectively. For sidewall samples, one symbol may represent two or more vertical intervals from where excavation verification samples were collected, and the data tables should be referenced for more information. The figures depict the sample data for all confirmation samples for each constituent with a symbol indicating whether the data are for an in-place sample (circle symbol) or an overexcavated sample (X symbol). In some cases, verification samples met the soil PCL for one constituent, but were overexcavated for another constituent. In those cases, the step-out samples after overexcavation were only analyzed for the constituent for which the overexcavation occurred. Where an overexcavated sample was used to determine compliance with the soil PCLs, the X symbol for that sample is shaded green.

All depths stated in this report are relative to the pre-IA/CM removal grade that existed since 2013—consistent with depth designations in the Work Plan (Aspect, 2019). Backfilling and grading to complete the CM removal project has established new grade elevations across the 32-acre CM removal area. Depths of samples representing in-place soil after the second IA will need to be adjusted for the new grade elevations as part of

the subsequent revision to the Upland Area Remedial Investigation/Feasibility Study (RI/FS).

5.1 BA-MW-7 Area

The BA-MW-7 area was identified as an IA area because of concentrations of total carcinogenic PAHs (cPAH) (TEQ[8]) above the cleanup levels in groundwater at RI well BA-MW-7, located immediately adjacent to the bulkhead (Figure 5). Well BA-MW-7 is the single Upland Area shoreline well with cPAH exceedances in groundwater (up to 0.036 micrograms per liter [µg/L]). A cPAH exceedance (0.92 milligrams per kilogram [mg/kg]) was also detected in soil at a depth of 12.5 feet, within the well's screened interval, at this location. Based on the groundwater data, the COC targeted for removal in the BA-MW-7 Area was cPAH in soil.

The BA-MW-7 area was excavated to its initial lateral limits and a depth of 6 feet bgs (above the water table) on October 5, 2020. The excavation was bound to the north by shallow concrete and deeper wood pilings of the bulkhead and to the east by a concrete wall (see photolog for BA-MW-7 in Appendix B), so that sidewall verification samples were only collected from the west and south sidewalls (Figure 5). Concentrations of cPAHs were below the soil PCL in all the sidewall verification samples (Table 5).

The excavation was deepened to approximately 9 feet bgs on October 12, 2020. Quarry spalls, gravel, and a geogrid fabric were observed at depths below 7 feet bgs; these conditions are similar to those observed beneath the pier to the west of the excavation and are assumed to be part of the bulkhead (Figure 5). During this deeper excavation, a creosote-treated wood piling was observed to be next to, and in contact with, the well screen of decommissioned well BA-MW-7, as shown in the photolog in Appendix B. Because the source of cPAHs to groundwater at well BA-MW-7 was likely the creosote-treated wood piling, and further excavation could have compromised the integrity of the bulkhead, the BA-MW-7 Area excavation was stopped at these limits after consultation with Ecology. Base verification samples were not collected from within the quarry spalls.

The final lateral extent of the BA-MW-7 excavation is shown on Figure 5, which also shows the relative locations of the concrete wall and bulkhead. The excavation area reached final depths of approximately 9 feet bgs. A total of four sidewall samples are representative of the final limits of the excavation (Figure 5). Concentrations of cPAHs are below the soil PCL in all verification samples (Table 5).

The interim action for the BA-MW-7 area included excavation and proper off-Site disposal of approximately 59 tons of soil. The excavation was backfilled with Parcel O sand and compacted. The excavation has been completed to meet the objectives of the IA for the BA-MW-7 Area.

[8] Total toxic equivalent concentration of benzo(a)pyrene calculated in accordance with MTCA (WAC 173-340-708[8][e]). **Hereafter in this report, any reference to cPAH concentrations refers to total cPAH (TEQ).**

5.2 Boiler/Baghouse Area

The BBH area was identified as an IA area because of concentrations of metals above the soil cleanup levels at the limits of the 2013–2014 IA, which removed approximately 2,380 tons of metals-contaminated soil, including lead concentrations exceeding 1,800 mg/kg (Aspect, 2015). At that time, mercury had not been identified as COC in groundwater; therefore, the first IA's soil cleanup level for mercury (24 mg/kg based on unrestricted direct contact) was much higher than the 0.1 mg/kg mercury PCL subsequently applied for the second IA. During compliance groundwater sampling at downgradient monitoring wells following the 2013–2014 IA, dissolved arsenic, copper, mercury, and zinc were reported above the groundwater cleanup levels (Aspect, 2019). Therefore, the second IA at the BBH area was designed to remove soil with metals exceedances that remain within and around the prior BBH excavation area. The COCs targeted for removal from the BBH area during the second IA were copper, mercury and zinc. The depth to water in the BBH area has been measured at depths of 5 to 9 feet bgs; therefore, verification soil samples collected above 5 feet bgs are compared to the soil PCLs for unsaturated soil and those collected deeper are compared to the soil PCLs for saturated soil.

Approximately 2 feet of CM was removed from the BBH area and stockpiled nearby prior to soil removal. During excavation, large-scale subsurface concrete structures were encountered throughout the BBH area, which prevented or limited the collection of verification sidewall soil samples. The approximate locations of these features are depicted on Figure 6. Photographs depicting the conditions of the sidewalls at the final limits of the BBH area excavation are included in Appendix B. A portion of the BBH area excavation was expanded to the south, where it eventually connected with the GFB12 area excavation (discussed in Section 5.6), to remove soil that contained abundant debris (primarily concrete rubble; Figure 6). This extension was bound by concrete structures on the east and west sidewalls and at the base; therefore, verification soil samples were not collected in those locations (Figure 6).

The results of field screening did not identify odors, staining, sheen, or elevated PID readings in any portion of the BBH area excavation. The final lateral extent of the BBH excavation is depicted on Figure 6. The excavation area reached final depths ranging from 10 to 12 feet bgs. A total of 68 sidewall and 35 base samples are representative of the final limits of the excavation (not including field duplicate results; Table 6). The results are as follows:

- Concentrations of copper are below the soil PCL of 36 mg/kg in all but 7 of the final verification samples, where concentrations range from 37.1 to 58.3 mg/kg. A statistical evaluation of the copper data from the final limits of the BBH area excavation was completed using ProUCL 5.1[9] to calculate the 95 percent upper confidence limit (UCL) on the arithmetic mean concentration (95UCL), which is a key parameter for evaluating compliance with cleanup levels under MTCA (WAC 173-340-740(7)(d)). The evaluation included 84 verification results, of

[9] EPA's statistical software package for analysis of environmental data sets (https://www.epa.gov/land-research/proucl-software).

which 3 were nondetect. Based on the ProUCL output, the data do not follow a discernable statistical distribution; using normal critical values and other nonparametric UCLs with consideration of nondetect results (using Kaplan-Meier estimator), the 95UCL soil copper concentration is 19 mg/kg (ProUCL output in Appendix E).

- Concentrations of mercury are below the soil PCL of 0.1 mg/kg in all but 20 of the final verification samples, where concentrations range from 0.11 to 0.78 mg/kg (Table 6). Because the BBH area excavation merged in two locations with the GFB12 area excavation that also removed mercury-impacted soils, a statistical evaluation of the mercury data from the final limits of the combined excavations was completed using ProUCL 5.1 to calculate the 95UCL soil mercury concentration for the collective area. The evaluation included 113 verification results, of which 93 were nondetect at the reporting limit of 0.1 mg/kg. Based on the ProUCL output, the data do not follow a discernable distribution; using normal critical values and other nonparametric UCLs with consideration of nondetect results (using Kaplan-Meier estimator), the 95UCL soil mercury concentration is 0.19 mg/kg (ProUCL output in Appendix E).
- Concentrations of zinc are below the soil PCL of 85/100 mg/kg (for saturated/unsaturated soil) in all but one final verification sample, which contains zinc at 220 mg/kg. A statistical evaluation of the zinc data from the final limits of the BBH area excavation was completed using ProUCL 5.1 to calculate the 95UCL soil zinc concentration. The evaluation included 75 verification results, all of which were reported concentrations above the detection limits. Based on the ProUCL output, the data do not follow a discernable distribution. The 95UCL soil zinc concentration is 40 mg/kg assuming a normal distribution (ProUCL output in Appendix E).

Based on these data and results of the statistical evaluation, Ecology agreed that the interim action for the BBH area was complete. The second IA for the BBH area included excavation and proper off-Site disposal of approximately 7,533 tons of soil. The excavation was backfilled with Parcel O sand and compacted. The excavation has been completed to meet the objectives of the second IA for the BBH area.

5.3 Central Maintenance Shop Area

The CMS Area was identified as an IA area encompassing soils with elevated PCB concentrations, both where PCB-containing transformers were historically located and at the limits of a 2013–2014 IA excavation that removed petroleum-contaminated soil[10], and encompassing monitoring wells CMS-MW-1R and DAST-MW-101 where elevated PCB concentrations were detected in groundwater[11] (Aspect, 2019). In addition, groundwater concentrations of naphthalene at well CMS-MW-1, in this area, exceeded the PCL based on vapor intrusion when sampled in 2012 (Aspect, 2019). Therefore, the COCs targeted for removal in the CMS area were PCBs and naphthalene. The depth to

[10] REC2-MW-5 area as described in Aspect (2015).

[11] PCBs were not a COC identified in groundwater until sampling conducted in March 2017; therefore, the 2013-14 IA soil cleanup level for PCBs was based on direct contact—less stringent than the current soil PCL based on leaching to groundwater.

water in the CMS area has been measured at depths of 1 to 3 feet bgs; therefore, all verification samples collected from this area are compared to the soil PCLs for saturated soil.

Approximately 2 feet of CM was removed from the CMS area and stockpiled nearby prior to soil removal. During excavation, considerable large-scale structure was observed in the southern portion of the CMS area excavation, including concrete foundation elements and piping. Bunker-oil fuel pipes encountered in the southern portion and northwest corner of the CMS area excavation are discussed in the following subsection. Concrete structures comprised much of the western sidewall of the CMS area excavation and prevented collection of verification sidewall samples in that location.

During excavation, field screening identified petroleum-like odors and elevated PID readings in soil, and a heavy sheen on groundwater, along the southern portion of the excavation's western sidewall. Base verification samples collected from a depth of 6 feet bgs at the initial limits of excavation in these locations contained cPAH concentrations above the soil PCL (sample locations B-28, B-29, and B-30; Table 7). Overexcavation at these locations reached total depths ranging from 7 to 9 feet bgs, where cPAH concentrations were below the soil PCL (Table 7). The results of field screening did not identify odors, staining, sheen, or elevated PID readings in any other areas of the CMS excavation.

The final lateral extent of the CMS area excavation is depicted on Figure 7. The excavation area reached final depths ranging from 6 to 9 feet bgs. A total of 31 sidewall and 37 base samples are representative of the final limits of the excavation (Figure 7). Concentrations of naphthalene and cPAHs were below the soil PCL in all the final verification samples. Concentrations of total PCBs are below the soil PCL of 0.12 mg/kg in 66 of the 68 confirmation samples but remain above the soil PCL in two sidewall samples (0.2 and 0.3 mg/kg), following three overexcavations at each location (Table 7).

A statistical evaluation of the total PCB data from the final limits of the CMS area excavation was completed using ProUCL 5.1 to calculate the 95UCL. For PCBs, the evaluation included 68 verification results (not including field duplicate results), of which 59 were nondetect at the reporting limit of 0.02 mg/kg. Based on the ProUCL output, the data appear to best match a lognormal statistical distribution; with consideration of nondetect results (using the Kaplan-Meier estimator), the 95UCL soil PCB concentration is 0.029 mg/kg based on a gamma distribution (ProUCL output sheet provided in Appendix E).

Based on these data and results of the statistical evaluation, Ecology agreed that the interim action at the CMS area was complete. The excavation was backfilled with Parcel O sand and compacted. The interim action for the CMS area included excavation and proper off-Site disposal of 6,733 tons of soil. The excavation has been completed to meet the objectives of the second IA for the CMS Area.

5.3.1 Bunker-Fuel Pipes within CMS Area

During excavation of the CMS area, historical pipes that were used for distribution of fuel oil (probable Bunker C oil) were encountered in the southern portion and the northwest corner of the excavation (Figure 7).

The pipe encountered in the northwest corner of the CMS area excavation was a single, 5-inch-diameter steel pipe that was observed at a depth of approximately 4 feet bgs. It was observed next to a steel steam pipe. The pipes ran along the northwest sidewall of the CMS area excavation and extended approximately 5 feet beyond the northwest corner of the excavation where they had been previously cut. Both pipes contained a fibrous coating that was suspected to be asbestos-containing material (ACM). There was no field screening evidence of petroleum contamination along this pipe alignment. ICI subcontracted with Performance Abatement Services (PAS) of Woodinville, Washington, to abate and remove the ACM and pipes on August 19, 2020, for disposal at Wasco County landfill in The Dalles, Oregon. The entire observed lengths of both pipes were removed.

The pipes encountered in the south end of the CMS area excavation included two 5-inch-diameter steel fuel pipes and two 2-inch steam pipes, all of which were located within a degraded wooden conduit. The pipes ran beyond the south edge of the CMS area excavation for approximately 35 feet before they turned and ran another 20 feet to the east, where they had been previously cut (Figure 7). Heavy sheen and petroleum odors were apparent upon exposing the wooden conduit within the CMS excavation; those field screening indications diminished toward the south and were absent at the limits of the pipe excavation. The four pipes contained a fibrous coating that was suspected, tested, and confirmed to be ACM. PAS completed abatement and removal of the ACM and pipes on August 18 and 19, 2020. Copies of the record documenting disposal of the ACM are included in Appendix H.

The excavations beneath the pipes extended to a depth of 6 feet bgs or to a depth where field screening results no longer indicated the presence of petroleum contamination, whichever was deeper. The excavation in the northwest corner of the CMS area was completed to a depth of 7 to 7.5 feet bgs while the excavation in the south end of the CMS area was completed to a depth of 6 feet bgs (Table 8). Soil samples were collected from the base and sidewalls of the fuel pipe excavations. Samples of the in-place soil on the trench sidewalls and base were collected at 20-foot intervals for analysis of diesel- and oil-range TPH. The base samples were also analyzed for PAHs. Concentrations of TPH and PAHs were below the soil PCLs in all the verification samples collected from the sidewalls and base of both fuel pipe excavations (Table 8). The pipe excavations were backfilled concurrently with backfill of the CMS area. The quantity of contaminated material excavated from the two fuel line excavations was relatively small and not segregated from the larger CMS excavation quantity.

5.4 Clark Nickerson Area

The COC targeted for removal in the CN area (both excavations) is cPAH. A high cPAH concentration of 6.4 mg/kg was detected at two soil sample locations near the southeast corner of the CNB2 excavation from the 2013-2014 IA: the 5-foot sample at boring CN-B-4 and excavation verification sample CNB2-B27 at a depth of 4 feet bgs (Figure 8). cPAH was not detected in the 8-foot soil sample from boring CN-B-4, nor in excavation verification sample CNB2-S51 located between that boring and CNB2-B27. Because there is a clean sample between the two exceedance samples, the CN area was addressed through two discrete excavations, identified as CN West and CN East (Figure 8). The depth to water in the CN area has been measured at depths of approximately 2 and 5 feet

bgs; therefore, all verification samples collected from this area are compared to PCLs for saturated soil.

In the CN East area, approximately 1.5 feet of CM was removed prior to soil removal. The CN East area was excavated to its initial limits, including a total depth of 6 feet bgs, on June 24, 2020. A total of eight sidewall samples and three base samples were collected as verification samples at the initial limits of the CN East area excavation and submitted for laboratory analysis of cPAH. The results for all CN East verification samples were below the saturated soil cPAH PCL of 0.16 mg/kg (Table 9).

In the CN West area, approximately 2 feet of CM and 1.5 feet of clean overburden was removed and stored in separate stockpiles for disposal and testing for potential reuse, respectively. The CN West area was excavated to its initial limits, including a total depth of 6 feet bgs, on June 23, 2020. A total of eight sidewall samples and three base samples were collected as verification samples at the initial limits of the CN West area excavation and submitted for laboratory analysis of cPAH. The results for all verification samples were below the saturated soil cPAH PCL of 0.16 mg/kg, except for a single base sample, which contained cPAH at a concentration of 0.292 mg/kg (Table 9). The soil represented by this sample was overexcavated and a deeper base sample, collected from 7 feet bgs, contained cPAH at 0.361 mg/kg (Table 9).

The CN area excavations filled quickly with groundwater once dewatering was turned off and the CN West area contained a large amount of timber fragments. During overexcavation of the deeper base sample described above, brick was encountered at the base of the excavation, suggesting the presence of a buried brick structure although its exact nature was obscured given the quantity of water entering the excavation at that depth.

Because the soil hotspot of cPAH that the IA was designed to address had been removed, the difficulty in further vertical excavation posed by buried debris, an apparent buried structure, and substantial dewatering requirements, and the single residual low-level exceedance of the cPAH PCL, Ecology agreed that additional excavation was not practicable or necessary in CN West to meet the objectives of the IA.

Chemical testing of the approximately 12 cubic yards of overburden removed from the CN West excavation confirmed that it met PCLs (Table 3) and was therefore suitable for reuse as backfill in the excavation in accordance with the Work Plan. The rest of the excavation was backfilled with Parcel O sand.

The interim action for the CN area included excavation and proper off-Site disposal of approximately 187 tons of contaminated material. The excavation has been completed to meet the objectives of the second IA for the CN area.

5.5 Digesters Trench Area

During CM removal, black, oily, sludge-like material was encountered in a long, narrow space located between two linear concrete structures, assumed to be foundations for the former Digesters Building and immediately adjacent Blow Pit Building (Figure 9). To characterize the oily material for disposal, a sample of it was collected and submitted for laboratory analysis of diesel- and oil-range TPH, PCBs, semivolatile organic compounds

(SVOCs), RCRA 8 metals plus copper and zinc, and sulfate (B2-01; Table 10). The results indicated that the oily material was predominantly oil-range TPH (29,900 mg/kg), but also contained elevated concentrations of copper, lead, and zinc (Table 10). Based on the presence and chemical composition of the oily material, the Digesters Trench area was identified as a new IA area, with the objective of removing the oily material from the length of the east-west-oriented "trench." As approved by Ecology, verification samples from the Digesters Trench area were collected at 40-foot intervals along the length of the trench base and were analyzed for diesel-range TPH, copper, lead, mercury, and zinc (Table 10). The trench sidewalls were concrete structure so no verification soil samples could be collected.

Once the CM had been removed, the trench was approximately 2 feet wide at the surface and narrowed with depth to approximately 11 inches at the base. The oily material was observed to extend within the easternmost approximately 200 feet of the trench. Once the oily material was removed from the trench, samples of soil from the base of the trench were collected at a depth of approximately 8 feet bgs (Figure 9). The western end of the Digesters Trench Area was defined by the absence of oily material in the trench, where soil was observed, and a sample of soil from that western sidewall was collected at a depth of 4 feet bgs (sample DTX-S-01-4; Figure 9).

A total of six base and one sidewall verification soil samples were collected from the final limits of the Digesters Trench area (Figure 9). The results for TPH, lead, and zinc were below the soil PCLs in all verification samples, demonstrating effective removal of the oily material itself (Table 10). Concentrations of copper and mercury were reported slightly exceeding the soil PCLs in three of the base samples and in the single sidewall sample (Table 10). However, additional soil excavation would have required removal of massive amounts of underground concrete structure to allow for access to the soil, which was impracticable.

Monitoring well PM-MW-1 was located near the western (hydraulically downgradient) end of the Digesters Trench area (Figure 9). During groundwater sampling of well PM-MW-1 as part of the RI, the only exceedances of the groundwater PCLs were dissolved mercury, nickel, and zinc, and none of those exceedances were reproduced in both samples collected from the well (Aspect, 2016). Given the very high TPH concentration in the oily material, the lack of TPH detections or PAH exceedances in the groundwater samples from that immediately downgradient well demonstrates very limited leachability from the material.

Because the copper and mercury concentrations reported above the soil PCLs were all at or below two times the soil PCL, deeper excavation was not practicable, and groundwater data indicated that the oily materials and underlying soil had not leached to cause exceedances of the groundwater PCLs, Ecology agreed that additional excavation was not practicable or necessary to meet the source control objectives of the second IA.

The trench was backfilled with Parcel O sand and compacted. The interim action for the Digesters Trench area included excavation and proper off-Site disposal of 140 tons of oily material and associated soil. The excavation has been completed to meet the objectives of the second IA for the Digesters Trench area.

5.6 GFB12 Area

The Work Plan included a stipulation for soil sampling around the 2012 boring GF-B-12 to assess whether its low-level mercury exceedance (0.21 mg/kg) was an isolated occurrence (Aspect, 2019). On August 11, 2020, ICI excavated three test pits, each at distances of 10 feet from boring GF-B-12, to a total depth of 5 feet bgs (Figure 10). Soil samples were collected from each at a depth of approximately 4 feet bgs and analyzed for mercury; the results are summarized on Table 11. Mercury was detected in the three samples at concentrations ranging from 0.33 to 0.48 mg/kg, slightly higher than that reported in the soil sample collected from GF-B-12. Based on this data, removal of mercury-impacted soils from the GFB12 area was added to the second IA after consultation with Ecology. The soil PCL for mercury is the same for saturated and unsaturated soil (0.1 mg/kg).

The GFB12 area was excavated to its initial limits, which were established based on the data as 20 feet wide (east-west) by 20 feet long (north-south) and 6 feet deep, on October 15, 2020. A total of eight sidewall and two base samples were collected from the initial excavation limits and submitted for laboratory analysis of mercury. A large concrete structure was encountered at depth in the northern half of the GFB12 area and prevented the collection of base verification samples there. The results of field screening indicated no odors, no sheen, and no elevated PID measurements.

Concentrations of mercury were above the soil PCL in most of the initial verification samples.

The excavation was therefore expanded laterally and vertically by 2 feet to remove soil with mercury above the soil PCLs. The samples collected at the limits of the overexcavation contained mercury near/below 2 times the soil PCL except for a single eastern sidewall sample at 0.5 mg/kg. Because that portion of the eastern sidewall was observed to contain an abundance of debris intermixed with soil, it was expanded laterally roughly 15 feet to connect with the south leg of the BBH area to remove that material (Figure 10).

A total of eight sidewall and three base samples were collected as verification samples from the final limits of the GFB12 area (Figure 10). Mercury was detected above the soil PCL in 7 of the 11 verification samples, at concentrations ranging from 0.11 to 0.75 mg/kg, although all but one of the samples contained mercury at/near two times the soil PCL (Table 11).

Given that the BBH area and GFB12 area excavations became one, a statistical evaluation of the mercury data from the final limits of the combined excavations was completed using ProUCL 5.1 to calculate the 95UCL soil mercury concentration for the collective area. The evaluation included 113 verification results, of which 93 were nondetect at the reporting limit of 0.1 mg/kg. Based on the ProUCL output, the data do not follow a discernable distribution; using normal critical values and other nonparametric UCLs with consideration of nondetect results (using Kaplan-Meier estimator), the 95UCL soil mercury concentration is 0.19 mg/kg (ProUCL output in Appendix E).

Based on these data and results of the statistical evaluation, Ecology agreed that the interim action for the combined GFB12 and BBH areas was complete.

The GFB12 area excavation was backfilled with Parcel O sand and compacted. The interim action for the GFB12 area included excavation and proper off-Site disposal of approximately 433 tons of contaminated material. The excavation has been completed to meet the objectives of the IA for the GFB12 Area.

5.7 Hydraulic Barker Area

The COC targeted for removal in the Hydraulic Barker area was PCBs, based on the PCB concentration reported in groundwater from well HB-MW-1R, which was the highest detected in Upland Area groundwater. However, soil concentrations of diesel-range TPH, copper, mercury, and zinc also exceeded leaching-based soil cleanup levels in this area. Therefore, once PCBs met PCLs in the excavation, the final excavation verification soil samples were also analyzed for diesel-/oil-range TPH, copper, mercury, and zinc to document residual in-place soil concentrations of these constituents (record samples); although, the excavation would not be expanded based on those results, in accordance with the Work Plan. Unlike the PCB analyses that were analyzed with 24-hour laboratory turnaround time to guide excavation, the supplemental record sample analyses were run on normal turnaround time. The depth to water in the Hydraulic Barker area has been measured at depths ranging from 6 to 9 feet bgs; therefore, all verification samples from this area are compared to PCLs for saturated soil.

Approximately 6 feet of CM was removed from the Hydraulic Barker area and stockpiled nearby prior to soil removal. The Hydraulic Barker area was excavated to its initial limits, including a total depth of 13 feet bgs, between May 28 and June 4, 2020. Large concrete structures were encountered in the northwest corner of the excavation, extending from approximately 6 feet bgs to the total depth of the excavation, and on the east sidewall, extending from approximately 9.5 feet bgs to the total depth of the excavation.

A total of 15 sidewall and 3 base samples were collected from the initial excavation limits and submitted for laboratory analysis of PCBs (Figure 11). The results of field screening indicated no soil staining, a localized area with a slight petroleum-like odor, PID measurement of 1.1 parts per million (ppm; at base verification sample location HBX-B-02), and a slight sheen on water coming into a pit dug to 15 feet bgs in the southwest corner as a sump for dewatering the excavation. Record sample data discussed further in Section 5.71.

The laboratory results of the initial 18 verification samples indicated total PCB concentrations below the saturated soil PCL of 0.12 mg/kg, except for the two shallow sidewall samples collected from the north sidewall (samples HBX-S-01 and -05; Table 12). As a result, the shallow portion of the north sidewall was extended by 1 foot laterally to remove the two PCB exceedances, in accordance with the Work Plan methodology. On the eastern side of the north sidewall, the aforementioned concrete structure was encountered during this overexcavation. All soil was removed up to the structure.

The results for 14 sidewall and 3 base verification samples collected from the final limits of the Hydraulic Barker area indicate concentrations of total PCBs below the saturated

soil PCL (Table 12). Based on the data, Ecology concurred to backfill the excavation, which was then backfilled with Parcel O sand and compacted.

The interim action for the Hydraulic Barker area included excavation and proper off-Site disposal of approximately 268 tons of soil. The excavation has been completed to meet the objectives of the second IA for the Hydraulic Barker area.

5.7.1 Record Sample Data for Hydraulic Barker Area

In accordance with the Work Plan, final excavation verification samples were analyzed to document residual concentrations of TPH and metals for purposes of the forthcoming RI/FS, but the IA excavation was not expanded based on the record sample results. The record sample data are described below.

5.7.1.1 TPH

The results for the 18 record samples included a total TPH (D+O) concentration exceeding the soil PCL in one base sample (HBX-B-02), corresponding to the area where field screening results identified a slight odor and slightly elevated PID measurement. None of the other samples contained TPH above the soil PCL (Table 12). The HBX-B-02 record sample contained a reported total TPH (D+O) concentration of 19,100 mg/kg (using the NWTPH-Dx analysis without silica gel cleanup[12]), which is well above the 2,000 mg/kg PCL that is based on accumulation of free-phase petroleum product on groundwater. Mild petroleum sheen was observed on water in the Hydraulic Barker excavation while it was being advanced and dewatered, but no sheen was observed in the HBX-B-02 sample location, and no free product accumulation was observed anywhere in the excavation.

Prior to the second IA, TPH (D+O) concentrations up to 7,710 mg/kg were detected in soil from the HB-MW-1R boring (located within 2 feet of the HBX-B-2 sample; Figure 11), using the NWTPH-Dx analysis with silica gel cleanup (Aspect, 2019). As described in Appendix B to the draft RI (Aspect, 2016), a more accurate and detailed measure of TPH in soil in this area was obtained by analyzing the maximum-TPH concentration soil sample[13] using the Extractable Petroleum Hydrocarbon (EPH) analytical method in accordance with MTCA. The TPH concentration detected by that method was 4,210 mg/kg, 54 percent of the 7,710 mg/kg TPH concentration measured by the NWTPH-Dx analysis. This discrepancy was typical of NWTPH vs EPH results collected elsewhere in the Upland Area, and indicates that the NWTPH analysis, even with silica gel cleanup, can substantially overstate actual petroleum hydrocarbon concentrations. The EPH analysis quantifies concentrations of aromatic and aliphatic hydrocarbons in specific carbon ranges covering the diesel and oil ranges. These fractional hydrocarbon data can then be used to calculate risk-based TPH soil cleanup levels based on both human direct contact and leachability to groundwater using Ecology's MTCATPH software, which was done for the Hydraulic Barker area in Aspect (2016). The analysis was updated in response to Ecology comments (Aspect, 2017), although the revision has not been further

[12] Because the NWTPH-DX analytical method is not specific to petroleum hydrocarbons, the silica gel cleanup is an optional pretreatment step intended to remove polar nonhydrocarbon compounds (some naturally occurring) from being quantified in the TPH analysis.
[13] The 12-foot soil sample from the HB-MW-1R monitoring well boring.

discussed with Ecology. Based on the hydrocarbon composition ratios identified in the EPH sample at HB-MW-1R:

- The residual 19,000 mg/kg TPH detection by NWTPH-Dx analysis is an order of magnitude below a soil concentration protective of direct contact for the future industrial (marine terminal) land use, at a hazard index of 1.
- That concentration is also well below a concentration predicted by MTCATPH to leach hydrocarbons at concentrations exceeding groundwater PCLs[14]. Most importantly, the model prediction is consistent with the empirical data showing no exceedances of TPH or detections of PAHs in groundwater from wells HB-MW-1 and HB-MW-1R during sampling in 2012-2014 (Aspect, 2016). This is despite the fact that the soil containing 7,710 mg/kg TPH was located within the well-screen depth interval of the HB-MW-1R boring, and 19,000 mg/kg TPH was present in soil a couple feet from that well, and the TPH had been there for at least three decades prior to the groundwater sampling.[15] The data demonstrate that the TPH in this area is heavily weathered and thus no longer leaching petroleum hydrocarbons at concentrations of concern.
- After the very long period since the petroleum release(s) occurred, the lack of free product accumulation observed in the Hydraulic Barker area excavation, and in the HB-MW-1 and HB-MW-1R monitoring wells, provides a high level of confidence that the pre-IA and residual soil TPH concentrations in this area are below residual saturation concentrations in accordance with WAC 173-340-747(10)(c)), especially when coupled with the lack of dissolved-phase hydrocarbons in groundwater.[16]

In short, the residual soil TPH concentrations in the Hydraulic Barker area do not appear to pose a risk to human health or the environment by any exposure pathway.

5.7.1.2 Metals

Concentrations of copper, mercury, and/or zinc were detected above the soil PCLs for saturated soil in nine of the record samples (Table 12). A statistical evaluation of the metals data from the record samples was completed using ProUCL 5.1 to calculate the 95UCL for the Hydraulic Barker area excavation. The results are as follows:

- All 18 samples contained copper above the detection limit, ranging in concentration from 9.64 to 64.4 mg/kg, with seven exceeding the PCL. The copper data have a normal distribution and the 95UCL is 41 mg/kg, which is only slightly above the soil PCL of 36 mg/kg. In addition, no individual sample has a concentration of copper that is more than two times the soil PCL.
- The evaluation included 18 results for mercury, of which 10 were nondetect. Detected concentrations ranged from 0.076 mg/kg to 0.34 mg/kg, with five

[14] Model-predicted concentration of 100 percent non-aqueous phase liquid, greater than 72,000 mg/kg.
[15] Operations of the Hydraulic Barker Building in this area ceased by 1982 when the log pond was filled and the mill transitioned from de-barking and chipping imported logs to importing wood chips (Aspect, 2016). Therefore, a petroleum release(s) in this area occurred prior to 1982.
[16] Lack of elevated dissolved-phase hydrocarbon concentrations is a very strong indicator that free product is not present on groundwater.

exceeding the PCL. The mercury data have a normal distribution; with consideration of nondetect results (using Kaplan-Meier), the 95UCL is 0.14 mg/kg, which is only slightly above the soil PCL of 0.1 mg/kg.

- All 18 samples contained zinc above the detection limit, ranging in concentration from 17.4 mg/kg to 145 mg/kg, with three exceeding the PCL. The zinc data have a normal distribution and the 95UCL is 76 mg/kg, which is below the soil PCL of 85 mg/kg. No individual sample has a concentration of zinc that is more than two times the soil PCL.

5.8 Log Pond Chip Conveyor Area

The Log Pond Chip Conveyor area was identified as an IA area because of concentrations of TPH, cPAHs, and mercury detected above their respective PCLs in soil samples collected from exploratory trenches excavated on the east side of the concrete foundation for the former chip reclaim conveyor (Aspect, 2019). The COCs targeted for removal in the Chip Conveyor area were gasoline-range TPH, diesel-/oil-range TPH, cPAHs, and mercury. The depth to water in the area has been measured at depths of 2 to 5 feet bgs; therefore, all verification samples collected from this area are compared to the soil PCLs for saturated soil.

Approximately 4 feet of CM was removed from the Chip Conveyor area and stockpiled nearby prior to soil removal. The chip conveyor foundation, a 1.5-foot-thick reinforced concrete slab, was encountered just below the CM and comprised the entire western sidewall of the excavation. In addition, a footing of the foundation extended across the southwestern corner of the excavation (see photographs in Appendix B).

The results for verification samples collected at the initial limits of the excavation did not contain TPH above the soil PCL; however, both cPAHs and mercury were detected above the soil PCLs in several of the initial verification samples. The excavation was expanded both laterally and vertically, as practicable given the limitations attributed to the concrete foundation, in accordance with the methodology described in the Work Plan. The overexcavation included removing soils from beneath the southern portion of the concrete foundation slab.

The final lateral extent of the excavation is depicted on Figure 12, which also shows the location of the concrete foundation. The excavation area reached final depths ranging from 8 to 10 feet bgs. A total of 10 sidewall samples and 3 base samples are representative of the final limits of the excavation (Figure 12). Following two overexcavations, concentrations of the COCs for the Chip Conveyor area were below the soil PCLs except for mercury in four locations and cPAHs in two locations, all of which are less than two times the PCL (Table 13). Based on the data, Ecology concurred to backfill the excavation, which was then backfilled with Parcel O sand and compacted.

The interim action for the Chip Conveyor area included excavation and proper off-Site disposal of approximately 403 tons of soil. The excavation has been completed to meet the objectives of the second IA for the Chip Conveyor area.

5.9 Old Machine Shop Area

The OMS area, located on the shoreline of the slip at the south end of the Upland Area (Figure 13), was identified as an IA area because of concentrations of copper, mercury, and PCBs detected above their respective PCLs in soil samples collected from three RI borings (Aspect, 2019). The depth to water in the OMS area has been measured at depths of 7 to 10 feet bgs and groundwater was not encountered in the excavation during the interim action. Verification samples from the OMS area were collected at depths of 2.5 to 5 feet bgs and are compared to the soil PCLs for unsaturated soil. No CM was observed to be present at the OMS area.

The results for verification samples collected at the initial limits of the excavation documented copper, mercury, and/or total PCBs concentrations above the soil PCLs at one west sidewall sample, one north sidewall sample, and all of the samples collected from the south sidewall. The excavation was expanded laterally at these locations, in accordance with the methodology described in the Work Plan. To the south, the extent of excavation was limited by the steep shoreline bank and the 36-inch-diameter wood stave Pipe C (described in Section 3.4) that is located within the upper portion of that bank.

The final lateral extent of the excavation is depicted on Figure 13. The excavation area reached a final depth of 5 feet bgs. A total of 12 sidewall samples and 9 base samples are representative of the final limits of the excavation (Figure 13). Concentrations of the COCs in the final verification samples were below the soil PCLs except at two locations along the south sidewall: OMSX-S-16 where the concentration of mercury (0.2 mg/kg) was equal to two times the PCL, and OMSX-S-20, in the southeasternmost portion of the excavation, where copper (52.6 mg/kg) slightly exceeded the PCL and total PCBs (24 mg/kg) greatly exceeded the PCL (Table 14).

At the southeasternmost OMSX-S-20 location, the OMS excavation was advanced in three overexcavation events to remove all soil up to Pipe C, which was inferred to help stabilize the adjacent shoreline bank. K-C proposed and Ecology agreed that further excavation—south of the pipe—at that location was not practicable without potentially compromising the stability of the bank and risking slope failure into the East Waterway, whether at the time of excavation or after it. The OMS photolog (in Appendix B) shows the steep shoreline bank along that southeasternmost portion of the excavation, along with the decrepit wooden structure that exists within the bank. The configuration and construction of that very old wooden structure is unknown, and its structural stability is questionable, particularly if the ground around it were subjected to substantial disturbance. Following considerable discussion with Ecology regarding the data and the physical constraints of the OMSX-S-20 location, Ecology concurred to backfill the OMS excavation, which was backfilled with Parcel O sand and compacted.

The interim action for the OMS area included excavation and proper off-Site disposal of approximately 1,079 tons of soil. The excavation has been completed to meet the objectives of the second IA for the OMS area.

5.10 PM-B-6 Area

Boring PM-B-6, advanced within the eastern end of the former pulp mill (Figure 3) during the RI, had a very high soil copper concentration (278 mg/kg) at a depth of 6

feet,[17] and was identified as a hot spot in Ecology's (2017) statistical analysis of Upland Area soil data. There were no other soil sample data within 100 feet of PM-B-6, so the extent of the elevated copper in soil surrounding the boring was poorly defined (Figure 14). PM-B-6 also had soils containing mercury concentrations exceeding two times the PCL. Therefore, the COCs targeted for removal in the PM-B-6 area were copper and mercury in soil. The historical depth to groundwater in the PM-B-6 area ranges from 6 to 9 feet bgs; however, for copper and mercury, the soil PCLs are the same for saturated and unsaturated soil, so the classification of sample saturation is irrelevant for the COCs in this area.

Approximately 3 feet of CM was removed from the PM-B-6 area prior to the soil removal. Excavation of the PM-B-6 area was complicated by significant subsurface structures and features. A 4-foot-diameter wood stave pipe[18] extended east-west along the north sidewall of the excavation, at a depth of approximately 7 feet bgs. A vertical concrete wall, also running east-west, split the excavation approximately in half. Vertical timbers and previously plugged and cut pipes were observed in the western sidewall to the north of the concrete wall. In addition, a concrete structure comprised the upper 7 feet of the south sidewall. These structures and features are depicted on Figure 14 and shown in the PM-B-6 photographs in Appendix B.

Overexcavation of the PM-B-6 area was completed up to three times vertically and laterally to the east and south and five times laterally to the west, removing the targeted copper hot spot plus significantly more soil than was planned in the Work Plan. The IA for this area included excavation and proper off-Site disposal of approximately 307 tons of soil. The final lateral extent of the excavation is depicted on Figure 14, which also shows the subsurface structures and features. The excavation reached final depths ranging from 10 to 12 feet bgs. A total of 15 excavation verification samples (12 sidewall and 3 base samples) represent the final limits of the PM-B-6 area excavation (Table 15).

Concentrations of copper are below the soil PCL in all final verification samples, except for a single location where copper was reported at 37.2 mg/kg, slightly above the soil PCL of 36 mg/kg.

Concentrations of mercury in final verification samples range from nondetect at the soil PCL of 0.1 mg/kg to 0.33 mg/kg (Table 15). The soil PCL for mercury is based on the protection of groundwater discharging to surface water, based on a conservative partitioning calculation for soil leaching to groundwater and the assumption that groundwater travels more than 600 feet from the PM-B-6 area and then discharges to surface water with no attenuation. Empirical groundwater data from monitoring wells located downgradient of the PM-B-6 area indicate that the soil mercury concentrations prior to the second IA were not a source of leachable mercury to groundwater. Prior to placement of the CM, which created elevated groundwater pH and resulted in the mobilization of certain metals including mercury, concentrations of mercury were not reported above the groundwater PCL in the two nearest downgradient wells to the PM-B-6 area (wells PM-MW-2 and PM-MW-5; see locator map at bottom of Figure 14), except

[17] The boring hit refusal at that depth and no deeper soil sample could be collected.
[18] Upstream portion of Pipe F described in Section 3.7.

for a single, marginal exceedance in one well that was not reproduced in repeated sampling.

Based on the collective information for this area, Ecology concurred to backfill the PM-B-6 excavation, which was then backfilled with Parcel O sand and compacted. The interim action for the PM-B-6 area included excavation and proper off-Site disposal of approximately 308 tons of soil. The PM-B-6 excavation has been completed to meet the objectives of the second IA.

5.11 REC5-MW-1 Area

The REC5-MW-1 area was identified as a necessary part of the second IA to address high concentrations of metals—primarily arsenic—in groundwater at that location. No elevated soil metals concentrations were detected in the area around wells REC5-MW-1/-1R; however, based on the high metals concentrations in groundwater, it was inferred that highly localized metals source material existed in their vicinity (Aspect, 2019). Based on the groundwater data, the COCs targeted for removal in the REC5-MW-1 area were arsenic, copper, and lead. The historical depth to groundwater in the REC5-MW-1 area ranged from 7 to 9 feet bgs. Therefore, verification samples collected at 7 feet and above are compared to the unsaturated soil PCLs; deeper samples are compared to the saturated soil PCLs.

Approximately 2 feet of CM was removed from the REC5-MW-1 area prior to soil removal. The REC5-MW-1 area was excavated to its initial lateral limits, depicted on Figure 15, and a total depth of 12 feet bgs. A total of 21 verification samples (18 sidewall and 3 base samples) were collected from the initial excavation limits and submitted for laboratory analysis of arsenic, copper, and lead.

The reported concentrations of arsenic, copper, and lead were below the soil PCLs in all of the initial verification samples (Table 16). Based on the data, Ecology concurred that no further excavation was required, and the excavation was then backfilled with Parcel O sand and compacted. The interim action for the REC5-MW-1 area included excavation and proper off-Site disposal of approximately 368 tons of soil. The excavation has been completed to meet the objectives of the second IA for the REC5-MW-1 area.

5.12 Fuel-Oil Line West of Warehouse

As stated in Section 3.3, during excavation and removal of the B1 catch basin, Aspect observed a deeper 4-inch steel pipe approximately 4 feet bgs and aligned generally east-west. The pipe was capped beneath the B1 catch basin and it was determined to extend no farther west. Upon removing the cap to inspect the pipe, a petroleum odor was noted. It was determined that the pipe was an abandoned fuel-oil line that historically was connected to the former petroleum bulk storage area on the north side of the Warehouse (Bunker C aboveground storage tanks [ASTs] area that was remediated during the first IA; Aspect, 2015); the pipe was not observed during that 2014 soil excavation.

That same day, the entire approximately 60-foot length of fuel pipe was removed east of the B1 catch basin. The pipe was empty of product and was in poor condition (cracks/holes present). Approximately 2 cubic yards (3 tons) of soil were removed from the trench where water leaked from the pipe during its removal. The impacted soil was

temporarily stockpiled and then transported off the Site for disposal at the Subtitle D landfill. Other water in the pipe was contained and conveyed to the on-Site water treatment system for treatment and disposal.

After removal of the pipe and impacted soil, there was no field screening evidence of petroleum in the remaining trench soil. Following discussion with Ecology, the in-place soil on the trench sidewalls and base was sampled at 20-foot intervals for analysis of diesel- and oil-range TPH (Figure 16). The base samples were also analyzed for PAHs. Each of the 12 samples contained concentrations below respective PCLs (Table 17) consistent with field screening indications. Based on the data, Ecology concurred that no further excavation was needed. The trench was backfilled with Parcel O dredge sand and compacted.

6 Conclusions

The second IA achieved permanent removal of approximately 17,610 tons of contaminated material from the Upland Area and, to the extent practicable, met industrial-based soil PCLs for the contaminants targeted for removal. The quantity removed includes 17,501 tons of material excavated from twelve areas discussed in Section 5 plus 109 tons of material generated during removal of Pipes K and M described in Section 2. In some excavation areas, Ecology concurred that further excavation to remove additional exceedances was not practicable, as described in the Section 5 area-specific discussions. In addition, approximately 2.28 million gallons of groundwater were removed from the collective excavation areas for treatment, providing additional removal of contamination (in dissolved phase) from within the source areas.

All of the second IA sampling data representing in-place soil (i.e., representing current conditions) will be incorporated into the forthcoming revised draft RI/FS for the Upland Area. Residual soils with exceedances of PCLs, both within and outside of the areas addressed in the first and second IAs, will be addressed as part of the RI/FS and Cleanup Action Plan for the Upland Area.

K-C completed the second IA in close consultation with Ecology and the action fulfilled the requirements of the Work Plan. Once this report is finalized and approved by Ecology, K-C requests from Ecology written confirmation that all requirements for the second IA have been fulfilled and completed.

7 References

Aspect Consulting (Aspect), 2015, Interim Action Report, Kimberly-Clark Worldwide Site Upland Area, Everett, Washington, April 8, 2015.

Aspect Consulting (Aspect), 2016, Draft Remedial Investigation/Feasibility Study, Kimberly-Clark Worldwide Site Upland Area, Everett, Washington, March 16, 2016.

Aspect Consulting, LLC (Aspect), 2017a, Data from March 2017 Wet Season Groundwater Monitoring, and July and September 2017 Groundwater pH Monitoring, October 6, 2017.

Aspect Consulting, LLC (Aspect), 2017b, Email from Steve Germiat (Aspect) to Andy Kallus et al (Ecology) regarding KC Upland Area draft RI: redlined draft Appendix B, area-specific soil TPH cleanup levels, December 28, 2017.

Aspect Consulting, LLC (Aspect), 2019, Work Plan for Second Interim Action, Kimberly-Clark Worldwide Site Upland Area, Everett, Washington, December 13, 2019.

Aspect Consulting (Aspect), 2020a, Analytical Data for Parcel O Dredge Sand as Backfill for Interim Action, Kimberly-Clark Worldwide Site Upland Area, Everett, Washington, January 15, 2020.

Aspect Consulting (Aspect), 2020b, Plan for Monitoring Airborne Particulate Matter During the Interim Action and CM Removal Projects, Kimberly-Clark Former Mill Property, Everett, Washington, March 9, 2020.

Foster Wheeler, 1998, Independent Remedial Action Closure Report, Old Naval Reserve Center, Everett, Washington, December 16, 1998.

Kimberly-Clark Worldwide, Inc. (K-C), 2018, Plan of Operations, Crushed Material Removal, Kimberly-Clark Former Mill Property, Everett, Washington, July 10, 2018.

SWCA, 2013, Cultural Resources Monitoring and Discovery Plan for the Kimberly-Clark Worldwide Site upland Area, Everett, Snohomish County, Washington, August 16, 2013.

Washington State Department of Ecology (Ecology), 2017, K-C Upland Area – Metals Compliance Statistics, transmitted via email October 13, 2017.

Limitations

Work for this project was performed for Kimberly-Clark Worldwide, Inc. (Client), and this report was prepared in accordance with generally accepted professional practices for the nature and conditions of work completed in the same or similar localities, at the time the work was performed. This report does not represent a legal opinion. No other warranty, expressed or implied, is made.

All reports prepared by Aspect Consulting for the Client apply only to the services described in the Agreement(s) with the Client. Any use or reuse by any party other than the Client is at the sole risk of that party, and without liability to Aspect Consulting. Aspect Consulting's original files/reports shall govern in the event of any dispute regarding the content of electronic documents furnished to others.

TABLES

Table 1. Interim Action Cleanup Levels for Soil

Project No. 110207, K-C Worldwide Site Upland Area, Everett, Washington

Analyte (By Group)	Soil Preliminary Cleanup Level (mg/kg)	
	Unsaturated Soil	Saturated Soil
Total Petroleum Hydrocarbons (TPH)		
Gasoline-Range Hydrocarbons	100	100
Diesel-Range Hydrocarbons	2,000	2,000
Oil-Range Hydrocarbons	2,000	2,000
Metals		
Arsenic	20	20
Copper	36	36
Lead	1,000	81
Mercury	0.1	0.1
Nickel	48	48
Zinc	100	85
Polycyclic Aromatic Hydrocarbons (PAHs)		
Acenaphthene	23	1.2
Acenaphthylene	210,000	210,000
Anthracene	1,100,000	1,100,000
Benzo(g,h,i)perylene	110,000	110,000
Fluoranthene	140,000	140,000
Fluorene	140,000	140,000
Phenanthrene	1,100,000	1,100,000
Pyrene	110,000	110,000
1-Methylnaphthalene	4,500	4,500
2-Methylnaphthalene	13	0.63
Naphthalene	17	0.86
Carcinogenic PAHs (cPAHs)		
Total cPAHs TEQ	3.2	0.16
Polychlorinated Biphenyls (PCBs)		
Total PCBs (sum of aroclors)	2.4	0.12

Notes:

Refer to Work Plan (Aspect, 2019) for derivation of soil Preliminary Cleanup Levels (PCLs). The PCLs for total PCBs were incorrect in the Work Plan, but were corrected during implementaiton of the interim action and correct in this table.

Table 2. Data Table Footnotes and Abbreviations

Project No. 110207, K-C Worldwide Site Upland Area, Everett, WA

Notes

"--" indicates data not available

Concentrations in shaded cells indicate value exceeds the Soil Preliminary Cleanup Level (PCL) - Saturated Soil.

Concentrations shown in bold indicate value exceeds the Soil PCL - Unsaturated Soil

Soil PCLs for the interim action are shown In Table 1. Development of the PCLs is provided in the Interim Action Work Plan (Aspect, 2019)

Total cPAH benzo(a)pyrene toxic equivalent (TEQ) calcualted using compound-specific potency factors using one-half the report limit for nondetects (U=1/2) when any individual constituent is detected.

Total PCBs is sum of detected concentrations of individual Aroclors.

Table 5: [a]See laboratory analytical report in Appendix C for complete sample results, including full list semivolatile organic compounds (SVOCs) and polychlorinated biphenyls (PCBs).

Data Qualifiers

J - Analyte was positiviely identified, but the reported concentration is an estimate.

U - Analyte was not detected at or above the reported concentration.

UJ - Analyte was not detected at or above the reported estiamted detection limit.

x - For TPH analysis, the sample chromatographic pattern does not resemble the fuel standard used for quantitation.

Abbreviations

cPAHs = carcinogenic polycyclic aromatic hydrocarbons

FD = field duplicate

ft = identifies depth of sample collected in feet (ft) below ground surface

mg/kg = milligram per kilogram

ND = indicates individual constituents not detected above reported concentration so total concentration not calculated

OverEx = overexcavated

PAHs = polycyclic aromatic hydrocarbons

PCBs = polychlorinated biphenyls

SAT = indicates saturated soil sample; samples without this designation are unsaturated soil.

TPH = total petroleum hydrocarbons

Table 3. Overburden Soil Quality Data for Clark Nickerson Area

Project No. 110207, K-C Worldwide Site Upland Area, Everett, WA

Analyte (By Group)	Soil Preliminary Cleanup Level - Saturated Soil	Confirmation Samples (In Place)		
		Overburden Samples		
		CNX-W-OB-01 6/23/20	CNX-W-OB-02 6/23/20	CNX-W-OB-03 6/23/20
Metals				
Arsenic in mg/kg	20	2.57	2.77	2.32
Copper in mg/kg	36	15.9	16	15.6
Lead in mg/kg	81	3.21	2.71	2.78
Mercury in mg/kg	0.1	0.1 U	0.1 U	0.1 U
Nickel in mg/kg	48	46.5	48.3	47.3
Zinc in mg/kg	85	24.3	23.3	22.7
Polycyclic Aromatic Hydrocarbons (PAHs)				
Acenaphthene in mg/kg	1.2	0.01 U	0.01 U	0.01 U
Acenaphthylene in mg/kg	210,000	0.01 U	0.01 U	0.01 U
Anthracene in mg/kg	1,100,000	0.01 U	0.01 U	0.01 U
Benzo(g,h,i)perylene in mg/kg	110,000	0.01 U	0.01 U	0.01 U
Fluoranthene in mg/kg	140,000	0.019	0.01 U	0.011
Fluorene in mg/kg	140,000	0.01 U	0.01 U	0.01 U
Phenanthrene in mg/kg	1,100,000	0.013	0.01 U	0.01 U
Pyrene in mg/kg	110,000	0.028	0.012	0.016
Naphthalene in mg/kg	0.86	0.01 U	0.01 U	0.01 U
Carcinogenic PAHs (cPAHs)				
Benz(a)anthracene in mg/kg	--	0.016	0.01 U	0.01 U
Benzo(a)pyrene in mg/kg	--	0.014	0.01 U	0.01 U
Benzo(b)fluoranthene in mg/kg	--	0.015	0.01 U	0.01 U
Benzo(k)fluoranthene in mg/kg	--	0.01 U	0.01 U	0.01 U
Chrysene in mg/kg	--	0.016	0.01 U	0.01 U
Dibenzo(a,h)anthracene in mg/kg	--	0.01 U	0.01 U	0.01 U
Indeno(1,2,3-cd)pyrene in mg/kg	--	0.01 U	0.01 U	0.01 U
Total cPAHs TEQ in mg/kg	0.16	0.0188	ND	ND
Polychlorinated Biphenyls (PCBs)				
Aroclor 1016 in mg/kg	--	0.02 U	0.02 U	0.02 U
Aroclor 1221 in mg/kg	--	0.02 U	0.02 U	0.02 U
Aroclor 1232 in mg/kg	--	0.02 U	0.02 U	0.02 U
Aroclor 1242 in mg/kg	--	0.02 U	0.02 U	0.02 U
Aroclor 1248 in mg/kg	--	0.02 U	0.02 U	0.02 U
Aroclor 1254 in mg/kg	--	0.02 U	0.02 U	0.02 U
Aroclor 1260 in mg/kg	--	0.02 U	0.02 U	0.02 U
Aroclor 1262 in mg/kg	--	0.02 U	0.02 U	0.02 U
Aroclor 1268 in mg/kg	--	0.02 U	0.02 U	0.02 U
Total PCBs (Sum of Aroclors) in mg/kg	0.12	ND	ND	ND

Refer to Table 2 for notes and abbreviation definitions.

Table 4. Soil Quality Data for Parcel O Sand (Import Backfill)

Project No. 110207, K-C Worldwide Site Upland Area, Everett, WA

Analyte (By Group)	Soil Preliminary Cleanup Level - Unsaturated Soil	Confirmation Samples (In Place)																						
		PO-01 2/20/20	PO-02 2/20/20	PO-03 2/20/20	PO-04 2/20/20	PO-05 2/20/20	PO-06 2/20/20	PO-07 2/20/20	PO-08 2/20/20	PO-09 2/20/20	PO-10 2/20/20	PO-11 2/20/20	PO-12 2/20/20	PO-13 2/20/20	PO-14 2/20/20	PO-15 2/20/20	PO-16 2/20/20	PO-17 2/20/20	PO-18 2/20/20	PO-19 2/20/20	PO-20 2/20/20	PO-21 2/20/20	PO-22 2/20/20	PO-23 2/20/20	PO-24 2/20/20
Total Petroleum Hydrocarbons (TPH)																								
Gasoline-Range Hydrocarbons in mg/kg	100	5 U	5 U	5 U	5 U	5 U	5 U	5 U	5 U	5 U	5 U	5 U	5 U	5 U	5 U	5 U	5 U	5 U	5 U	5 U	5 U	5 U	5 U	5 U
Diesel-ange Hydrocarbons in mg/kg	2,000	50 U	50 U	50 U	50 U	50 U	50 U	50 U	50 U	50 U	50 U	50 U	50 U	50 U	50 U	50 U	50 U	50 U	50 U	50 U	50 U	50 U	50 U	50 U
Residual (Oil)-Range Hydrocarbons in mg/kg	2,000	250 U	250 U	250 U	250 U	250 U	250 U	250 U	250 U	250 U	250 U	250 U	250 U	250 U	250 U	250 U	250 U	250 U	250 U	250 U	250 U	250 U	250 U	250 U
Total TPHs in mg/kg	2,000	ND	ND	ND	ND	ND	ND	ND	ND	ND	ND	ND	ND	ND	ND	ND	ND	ND	ND	ND	ND	ND	ND	ND
Metals																								
Arsenic in mg/kg	20	5.73	4.44	4.29	5.11	4.1	4.38	4.1	4.73	4.81	4.99	4.36	4.88	4.57	3.68	4.35	4	4.19	4.93	4.85	4.22	5.05	4.44	4.45	5.01
Copper in mg/kg	36	13.9	11.9	13.1	13.5	11.3	12.3	11.8	12.5	12.2	13.2	12.1	11.7	12	9.62	13.9	12.8	11.2	13.1	12.5	12.4	12.6	12.2	12.1	12.8
Lead in mg/kg	1,000	3.07	2.61	2.71	2.81	2.54	2.55	2.53	2.57	2.5	2.78	2.82	2.65	3.78	2.06	2.47	2.56	2.37	2.75	2.7	2.62	2.6	2.71	2.59	2.94
Mercury in mg/kg	0.1	0.1 U	0.1 U	0.1 U	0.1 U	0.1 U	0.1 U	0.1 U	0.1 U	0.1 U	0.1 U	0.1 U	0.1 U	0.1 U	0.1 U	0.1 U	0.1 U	0.1 U	0.1 U	0.1 U	0.1 U	0.1 U	0.1 U	0.1 U	0.1 U
Nickel in mg/kg	48	17.2	15.2	16.2	18	14.5	15.1	15.1	17.3	15.2	16.2	14.4	15.5	16.5	12.6	16.3	16	14.4	16.4	15.2	16.3	16.3	15.6	14.5	15.6
Zinc in mg/kg	100	28.9	24.8	26.9	28.1	24.1	25.1	26.1	25	25.1	26.8	24.4	25.1	25.2	22	26.4	26.4	23	27.2	25.9	25.7	28	25.1	23.8	26.8
Polycyclic Aromatic Hydrocarbons (PAHs)																								
Acenaphthene in mg/kg	23	0.01 U	0.01 U	0.01 U	0.01 U	0.01 U	0.01 U	0.01 U	0.01 U	0.01 U	0.01 U	0.01 U	0.01 U	0.01 U	0.01 U	0.01 U	0.01 U	0.01 U	0.01 U	0.01 U	0.01 U	0.01 U	0.01 U	0.01 U	0.01 U
Acenaphthylene in mg/kg	210,000	0.01 U	0.01 U	0.01 U	0.01 U	0.01 U	0.01 U	0.01 U	0.01 U	0.01 U	0.01 U	0.01 U	0.01 U	0.01 U	0.01 U	0.01 U	0.01 U	0.01 U	0.01 U	0.01 U	0.01 U	0.01 U	0.01 U	0.01 U	0.01 U
Anthracene in mg/kg	1,100,000	0.01 U	0.01 U	0.01 U	0.01 U	0.01 U	0.01 U	0.01 U	0.01 U	0.01 U	0.01 U	0.01 U	0.01 U	0.01 U	0.01 U	0.01 U	0.01 U	0.01 U	0.01 U	0.01 U	0.01 U	0.01 U	0.01 U	0.01 U	0.01 U
Benzo(g,h,i)perylene in mg/kg	110,000	0.01 U	0.01 U	0.01 U	0.01 U	0.01 U	0.01 U	0.01 U	0.01 U	0.01 U	0.01 U	0.01 U	0.01 U	0.01 U	0.01 U	0.01 U	0.01 U	0.01 U	0.01 U	0.01 U	0.01 U	0.01 U	0.01 U	0.01 U	0.01 U
Fluoranthene in mg/kg	140,000	0.01 U	0.01 U	0.01 U	0.01 U	0.01 U	0.01 U	0.01 U	0.01 U	0.01 U	0.01 U	0.01 U	0.01 U	0.01 U	0.01 U	0.01 U	0.01 U	0.01 U	0.01 U	0.01 U	0.01 U	0.01 U	0.01 U	0.01 U	0.01 U
Fluorene in mg/kg	140,000	0.01 U	0.01 U	0.01 U	0.01 U	0.01 U	0.01 U	0.01 U	0.01 U	0.01 U	0.01 U	0.01 U	0.01 U	0.01 U	0.01 U	0.01 U	0.01 U	0.01 U	0.01 U	0.01 U	0.01 U	0.01 U	0.01 U	0.01 U	0.01 U
Phenanthrene in mg/kg	1,100,000	0.01 U	0.01 U	0.01 U	0.01 U	0.01 U	0.01 U	0.01 U	0.01 U	0.01 U	0.01 U	0.01 U	0.01 U	0.01 U	0.01 U	0.01 U	0.01 U	0.01 U	0.01 U	0.01 U	0.01 U	0.01 U	0.01 U	0.01 U	0.01 U
Pyrene in mg/kg	110,000	0.01 U	0.01 U	0.01 U	0.01 U	0.01 U	0.01 U	0.01 U	0.01 U	0.01 U	0.01 U	0.01 U	0.01 U	0.01 U	0.01 U	0.01 U	0.01 U	0.01 U	0.01 U	0.01 U	0.01 U	0.01 U	0.01 U	0.01 U	0.01 U
Naphthalene in mg/kg	17	0.01 U	0.01 U	0.01 U	0.01 U	0.01 U	0.01 U	0.01 U	0.01 U	0.01 U	0.01 U	0.01 U	0.01 U	0.01 U	0.01 U	0.01 U	0.01 U	0.01 U	0.01 U	0.01 U	0.01 U	0.01 U	0.01 U	0.01 U	0.01 U
Carcinogenic PAHs (cPAHs)																								
Benz(a)anthracene in mg/kg	--	0.01 U	0.01 U	0.01 U	0.01 U	0.01 U	0.01 U	0.01 U	0.01 U	0.01 U	0.01 U	0.01 U	0.01 U	0.01 U	0.01 U	0.01 U	0.01 U	0.01 U	0.01 U	0.01 U	0.01 U	0.01 U	0.01 U	0.01 U	0.01 U
Benzo(a)pyrene in mg/kg	--	0.01 U	0.01 U	0.01 U	0.01 U	0.01 U	0.01 U	0.01 U	0.01 U	0.01 U	0.01 U	0.01 U	0.01 U	0.01 U	0.01 U	0.01 U	0.01 U	0.01 U	0.01 U	0.01 U	0.01 U	0.01 U	0.01 U	0.01 U	0.01 U
Benzo(b)fluoranthene in mg/kg	--	0.01 U	0.01 U	0.01 U	0.01 U	0.01 U	0.01 U	0.01 U	0.01 U	0.01 U	0.01 U	0.01 U	0.01 U	0.01 U	0.01 U	0.01 U	0.01 U	0.01 U	0.01 U	0.01 U	0.01 U	0.01 U	0.01 U	0.01 U	0.01 U
Benzo(k)fluoranthene in mg/kg	--	0.01 U	0.01 U	0.01 U	0.01 U	0.01 U	0.01 U	0.01 U	0.01 U	0.01 U	0.01 U	0.01 U	0.01 U	0.01 U	0.01 U	0.01 U	0.01 U	0.01 U	0.01 U	0.01 U	0.01 U	0.01 U	0.01 U	0.01 U	0.01 U
Chrysene in mg/kg	--	0.01 U	0.01 U	0.01 U	0.01 U	0.01 U	0.01 U	0.01 U	0.01 U	0.01 U	0.01 U	0.01 U	0.01 U	0.01 U	0.01 U	0.01 U	0.01 U	0.01 U	0.01 U	0.01 U	0.01 U	0.01 U	0.01 U	0.01 U	0.01 U
Dibenzo(a,h)anthracene in mg/kg	--	0.01 U	0.01 U	0.01 U	0.01 U	0.01 U	0.01 U	0.01 U	0.01 U	0.01 U	0.01 U	0.01 U	0.01 U	0.01 U	0.01 U	0.01 U	0.01 U	0.01 U	0.01 U	0.01 U	0.01 U	0.01 U	0.01 U	0.01 U	0.01 U
Indeno(1,2,3-cd)pyrene in mg/kg	--	0.01 U	0.01 U	0.01 U	0.01 U	0.01 U	0.01 U	0.01 U	0.01 U	0.01 U	0.01 U	0.01 U	0.01 U	0.01 U	0.01 U	0.01 U	0.01 U	0.01 U	0.01 U	0.01 U	0.01 U	0.01 U	0.01 U	0.01 U	0.01 U
Total cPAHs TEQ in mg/kg	3.2	ND	ND	ND	ND	ND	ND	ND	ND	ND	ND	ND	ND	ND	ND	ND	ND	ND	ND	ND	ND	ND	ND	ND	ND
Polychlorinated Biphenyls (PCBs)																								
Aroclor 1016 in mg/kg	--	0.02 U	0.02 U	0.02 U	0.02 U	0.02 U	0.02 U	0.02 U	0.02 U	0.02 U	0.02 U	0.02 U	0.02 U	0.02 U	0.02 U	0.02 U	0.02 U	0.02 U	0.02 U	0.02 U	0.02 U	0.02 U	0.02 U	0.02 U	0.02 U
Aroclor 1221 in mg/kg	--	0.02 U	0.02 U	0.02 U	0.02 U	0.02 U	0.02 U	0.02 U	0.02 U	0.02 U	0.02 U	0.02 U	0.02 U	0.02 U	0.02 U	0.02 U	0.02 U	0.02 U	0.02 U	0.02 U	0.02 U	0.02 U	0.02 U	0.02 U	0.02 U
Aroclor 1232 in mg/kg	--	0.02 U	0.02 U	0.02 U	0.02 U	0.02 U	0.02 U	0.02 U	0.02 U	0.02 U	0.02 U	0.02 U	0.02 U	0.02 U	0.02 U	0.02 U	0.02 U	0.02 U	0.02 U	0.02 U	0.02 U	0.02 U	0.02 U	0.02 U	0.02 U
Aroclor 1242 in mg/kg	--	0.02 U	0.02 U	0.02 U	0.02 U	0.02 U	0.02 U	0.02 U	0.02 U	0.02 U	0.02 U	0.02 U	0.02 U	0.02 U	0.02 U	0.02 U	0.02 U	0.02 U	0.02 U	0.02 U	0.02 U	0.02 U	0.02 U	0.02 U	0.02 U
Aroclor 1248 in mg/kg	--	0.02 U	0.02 U	0.02 U	0.02 U	0.02 U	0.02 U	0.02 U	0.02 U	0.02 U	0.02 U	0.02 U	0.02 U	0.02 U	0.02 U	0.02 U	0.02 U	0.02 U	0.02 U	0.02 U	0.02 U	0.02 U	0.02 U	0.02 U	0.02 U
Aroclor 1254 in mg/kg	--	0.02 U	0.02 U	0.02 U	0.02 U	0.02 U	0.02 U	0.02 U	0.02 U	0.02 U	0.02 U	0.02 U	0.02 U	0.02 U	0.02 U	0.02 U	0.02 U	0.02 U	0.02 U	0.02 U	0.02 U	0.02 U	0.02 U	0.02 U	0.02 U
Aroclor 1260 in mg/kg	--	0.02 U	0.02 U	0.02 U	0.02 U	0.02 U	0.02 U	0.02 U	0.02 U	0.02 U	0.02 U	0.02 U	0.02 U	0.02 U	0.02 U	0.02 U	0.02 U	0.02 U	0.02 U	0.02 U	0.02 U	0.02 U	0.02 U	0.02 U	0.02 U
Aroclor 1262 in mg/kg	--	0.02 U	0.02 U	0.02 U	0.02 U	0.02 U	0.02 U	0.02 U	0.02 U	0.02 U	0.02 U	0.02 U	0.02 U	0.02 U	0.02 U	0.02 U	0.02 U	0.02 U	0.02 U	0.02 U	0.02 U	0.02 U	0.02 U	0.02 U	0.02 U
Aroclor 1268 in mg/kg	--	0.02 U	0.02 U	0.02 U	0.02 U	0.02 U	0.02 U	0.02 U	0.02 U	0.02 U	0.02 U	0.02 U	0.02 U	0.02 U	0.02 U	0.02 U	0.02 U	0.02 U	0.02 U	0.02 U	0.02 U	0.02 U	0.02 U	0.02 U	0.02 U
Total PCBs (Sum of Aroclors) in mg/kg	2.4	ND	ND	ND	ND	ND	ND	ND	ND	ND	ND	ND	ND	ND	ND	ND	ND	ND	ND	ND	ND	ND	ND	ND	ND

Refer to Table 2 for notes and abbreviation definitions.

Table 5. Excavation Verification Soil Data for BA-MW-7 Area

Project No. 110207, K-C Worldwide Site Upland Area, Everett, WA

Analyte (By Group)	Soil Preliminary Cleanup Level - Unsaturated Soil	Confirmation Samples (In Place)			
		Sidewall Samples			
		BA-MW7X-S-01 10/5/20 (3 ft)	BA-MW7X-S-01 10/5/20 (6 ft)	BA-MW7X-S-02 10/5/20 (3 ft)	BA-MW7X-S-02 10/5/20 (6 ft)
Polycyclic Aromatic Hydrocarbons (PAHs)					
Acenaphthene in mg/kg	23	0.01 U	0.01 U	0.01 U	0.05 U
Acenaphthylene in mg/kg	210,000	0.01 U	0.01 U	0.01 U	0.05 U
Anthracene in mg/kg	1,100,000	0.01 U	0.01 U	0.01 U	0.05 U
Benzo(g,h,i)perylene in mg/kg	110,000	0.01 U	0.01 U	0.01 U	0.05 U
Fluoranthene in mg/kg	140,000	0.01 U	0.01 U	0.01 U	0.05 U
Fluorene in mg/kg	140,000	0.01 U	0.01 U	0.01 U	0.05 U
Phenanthrene in mg/kg	1,100,000	0.01 U	0.01 U	0.01 U	0.05 U
Pyrene in mg/kg	110,000	0.01 U	0.01 U	0.01 U	0.05 U
1-Methylnaphthalene in mg/kg	4,500	0.01 U	0.01 U	0.01 U	0.05 U
2-Methylnaphthalene in mg/kg	13	0.01 U	0.01 U	0.01 U	0.05 U
Naphthalene in mg/kg	17	0.01 U	0.01 U	0.01 U	0.05 U
Carcinogenic PAHs (cPAHs)					
Benz(a)anthracene in mg/kg	--	0.01 U	0.01 U	0.01 U	0.05 U
Benzo(a)pyrene in mg/kg	--	0.01 U	0.01 U	0.01 U	0.05 U
Benzo(b)fluoranthene in mg/kg	--	0.01 U	0.01 U	0.01 U	0.05 U
Benzo(k)fluoranthene in mg/kg	--	0.01 U	0.01 U	0.01 U	0.05 U
Chrysene in mg/kg	--	0.01 U	0.01 U	0.01 U	0.05 U
Dibenzo(a,h)anthracene in mg/kg	--	0.01 U	0.01 U	0.01 U	0.05 U
Indeno(1,2,3-cd)pyrene in mg/kg	--	0.01 U	0.01 U	0.01 U	0.05 U
Total cPAHs TEQ in mg/kg	3.2	ND	ND	ND	ND

Refer to Table 2 for notes and abbreviation definitions.

Table 6. Excavation Verification Soil Data for Boiler/Baghouse (BBH) Area

Project No. 110207, K-C Worldwide Site Upland Area, Everett, WA

Analyte	Soil Preliminary Cleanup Level - Saturated Soil	Soil Preliminary Cleanup Level - Unsaturated Soil	Confirmation Samples (In Place)												
			Base Samples												
			BBHX-B-1 10/6/20 (10 ft) SAT	BBHX-B-2 10/16/20 (11 ft) SAT	BBHX-B-3 10/9/20 (10 ft) SAT	BBHX-B-4 10/15/20 (11 ft) SAT	BBHX-B-5 10/16/20 (11 ft) SAT	BBHX-B-6 10/9/20 (10 ft) SAT	BBHX-B-7 10/6/20 (10 ft) SAT	BBHX-B-8 10/15/20 (11 ft) SAT	BBHX-B-9 10/8/20 (10 ft) SAT	BBHX-B-10 10/6/20 (10 ft) SAT	BBHX-B-11 10/8/20 (10 ft) SAT	BBHX-B-12 10/8/20 (10 ft) SAT	BBHX-B-13 9/30/20 (10 ft) SAT
Metals															
Copper in mg/kg	36	36	16.5 J		19.2 J			12.9 J	12.2 J	17.1 J	25 U	12.8 J	15.9	14.4	13.5 J
Mercury in mg/kg	0.1	0.1	0.1 U	0.1 U	0.1 UJ	0.1 U	0.1 U	0.1 UJ	0.1 U	0.1 U	0.1 U	0.1 U	0.1 U	0.1 U	0.1 U
Zinc in mg/kg	85	100	52.4		40.5 J			27.2 J	33.7		44	30.6	49.3	29.9	29.7 J

Analyte	Soil Preliminary Cleanup Level - Saturated Soil	Soil Preliminary Cleanup Level - Unsaturated Soil	Confirmation Samples (In Place)												
			Base Samples												
			BBHX-B-15 10/14/20 (12 ft) SAT	BBHX-B-16 9/18/20 (10 ft) SAT	BBHX-B-17 10/2/20 (10 ft) SAT	BBHX-B-18 10/9/20 (10 ft) SAT	BBHX-B-19 10/1/20 (10 ft) SAT	BBHX-B-20 10/15/20 (11 ft) SAT	BBHX-B-21 9/21/20 (10 ft) SAT	BBHX-B-22 9/17/20 (10 ft) SAT	BBHX-B-23 10/14/20 (11 ft) SAT	BBHX-B-24 10/2/20 (11 ft) SAT	BBHX-B-25a 9/16/20 (10 ft) SAT	BBHX-B-25a 9/17/20 (10 ft) FD SAT	BBHX-B-26 9/21/20 (10 ft) SAT
Metals															
Copper in mg/kg	36	36	51.2	9.35	11.7	13.4 J	11.8	13.7	11.3	43.6	19.9 J	11.9	9.12	12	12
Mercury in mg/kg	0.1	0.1	0.3	0.1 U	0.1 U	0.1 UJ	0.1 U	0.1 U	0.1 U	0.1 UJ	0.11		0.1 U	0.1 UJ	0.1 U
Zinc in mg/kg	85	100		22.6	25.3	27.6 J	23.9		33.9	74.5			43.6	51.2	25.9

Analyte	Soil Preliminary Cleanup Level - Saturated Soil	Soil Preliminary Cleanup Level - Unsaturated Soil	Confirmation Samples (In Place)												
			Base Samples											Sidewall Samples	
			BBHX-B-27 9/18/20 (10 ft) SAT	BBHX-B-28 10/15/20 (11 ft) SAT	BBHX-B-29 10/7/20 (10 ft) SAT	BBHX-B-30 9/10/20 (10 ft) SAT	BBHX-B-31 9/10/20 (10 ft) SAT	BBHX-B-32 10/6/20 (10 ft) SAT	BBHX-B-33 10/7/20 (10 ft) FD SAT	BBHX-B-33 10/7/20 (10 ft) SAT	BBHX-B-34 10/5/20 (10 ft) SAT	BBHX-B-35 10/8/20 (10 ft) SAT	BBHX-B-36 9/10/20 (10 ft) SAT	BBHX-S-4 9/1/20 (4 ft)	BBHX-S-4 9/21/20 (8 ft) SAT
Metals															
Copper in mg/kg	36	36	18.9		8.74	8.89	11.4 J	18 J	11.7	9.09	25 U	11.2	19.8	23.2 J	14
Mercury in mg/kg	0.1	0.1	0.1 U	0.1 U	0.1 U	0.1 U	0.1 U	0.1 U	0.1 U	0.1 U	0.1 U	0.1 U	0.1 U	0.1 U	0.1 U
Zinc in mg/kg	85	100	37.3		29.5	24.3	27.3 J	31.5	28.5	22.7	30.9	20.5	39.3	28.4	34.2

Analyte	Soil Preliminary Cleanup Level - Saturated Soil	Soil Preliminary Cleanup Level - Unsaturated Soil	Confirmation Samples (In Place)												
			Sidewall Samples												
			BBHX-S-6 9/1/20 (4 ft)	BBHX-S-6 9/21/20 (8 ft) SAT	BBHX-S-13 9/2/20 (4 ft)	BBHX-S-13 9/17/20 (8 ft) SAT	BBHX-S-14 9/2/20 (4 ft)	BBHX-S-14 9/17/20 (8 ft) SAT	BBHX-S-15 9/2/20 (4 ft)	BBHX-S-15 9/17/20 (8 ft) SAT	BBHX-S-16 9/2/20 (4 ft)	BBHX-S-16 9/16/20 (8 ft) SAT	BBHX-S-17 9/17/20 (8 ft) SAT	BBHX-S-18 9/17/20 (8 ft) SAT	BBHX-S-20 9/17/20 (8 ft) SAT
Metals															
Copper in mg/kg	36	36	15.2 J	37.1	15.2	20.1	12.8	10.7	13.7	35.6	13 J	10.1	10.6	8.37	11.8
Mercury in mg/kg	0.1	0.1	0.1 U	0.1 U	0.1 U	0.1 UJ	0.1 U	0.1 UJ	0.1 U	0.1 UJ	0.1 U	0.1 U	0.1 UJ	0.1 UJ	0.1 UJ
Zinc in mg/kg	85	100	34.3	62.8	19.9	38.6	21.4	32.3	19.5	59.1	22.4 J	29.9	23.4	19.2	50.9

Analyte	Soil Preliminary Cleanup Level - Saturated Soil	Soil Preliminary Cleanup Level - Unsaturated Soil	Confirmation Samples (In Place)												
			Sidewall Samples												
			BBHX-S-21 9/8/20 (4 ft)	BBHX-S-21 9/17/20 (8 ft) SAT	BBHX-S-22 9/8/20 (4 ft)	BBHX-S-22 9/17/20 (8 ft) SAT	BBHX-S-23 9/9/20 (4 ft)	BBHX-S-23 9/18/20 (8 ft) SAT	BBHX-S-24 9/9/20 (4 ft)	BBHX-S-24 9/18/20 (8 ft) SAT	BBHX-S-26 9/9/20 (4 ft)	BBHX-S-27 9/10/20 (8 ft) SAT	BBHX-S-28 9/10/20 (8 ft) SAT	BBHX-S-30 9/10/20 (8 ft) SAT	BBHX-S-31 9/10/20 (8 ft) SAT
Metals															
Copper in mg/kg	36	36	6.87	17.1	7.97	10.9	22.8	14.3	13.4	21.2	12.2	21.1	12	8.71	16.5
Mercury in mg/kg	0.1	0.1	0.1 U	0.1 UJ	0.1 U	0.1 UJ	0.1 U	0.1 U	0.1 U	0.1 U	0.1 U	0.1 U	0.1 U	0.1 U	0.1 U
Zinc in mg/kg	85	100	21.8	46.1	18.1	41.5	29.5	31.4	23.8	59.8	24.5	25.6	38.9	17	18.2

Refer to Table 2 for notes and abbreviation definitions.

Table 6. Excavation Verification Soil Data for Boiler/Baghouse (BBH) Area

Project No. 110207, K-C Worldwide Site Upland Area, Everett, WA

Analyte	Soil Preliminary Cleanup Level - Saturated Soil	Soil Preliminary Cleanup Level - Unsaturated Soil	Confirmation Samples (In Place) Sidewall Samples: BBHX-S-35 9/14/20 (4 ft)	BBHX-S-38 9/14/20 (4 ft)	BBHX-S-41 10/13/20 (8 ft) SAT	BBHX-S-44 9/16/20 (4 ft)	BBHX-S-46 9/16/20 (4 ft)	BBHX-S-47 9/21/20 (4 ft)	BBHX-S-48 9/21/20 (4 ft)	BBHX-S-49 9/21/20 (8 ft) SAT	BBHX-S-52 9/21/20 (8 ft) SAT	BBHX-S-53 9/21/20 (4 ft)	BBHX-S-54 9/21/20 (4 ft)	BBHX-S-55 9/21/20 (4 ft)	BBHX-S-56 9/21/20 (4 ft)
Metals															
Copper in mg/kg	36	36	21.7					6.81	7.87	20.5	9.89	12.1	17.8	24	37.8
Mercury in mg/kg	0.1	0.1	0.1 U	0.1 U		0.1 U	0.1 U	0.1 U	0.1 U	0.1 U	0.1 U	0.1 U	0.1 U	0.1 U	0.15
Zinc in mg/kg	85	100			66.3			19.3	20	43	71.3	32.2	21	29.9	34.4

Analyte	Soil Preliminary Cleanup Level - Saturated Soil	Soil Preliminary Cleanup Level - Unsaturated Soil	Confirmation Samples (In Place) Sidewall Samples: BBHX-S-57 9/22/20 (4 ft)	BBHX-S-57 10/13/20 (8 ft) SAT	BBHX-S-65 10/13/20 (8 ft) SAT	BBHX-S-73 10/8/20 (4 ft)	BBHX-S-73 10/8/20 (8 ft) SAT	BBHX-S-74 10/8/20 (4 ft)	BBHX-S-74 10/8/20 (8 ft) SAT	BBHX-S-77 10/9/20 (8 ft) SAT	BBHX-S-78 10/9/20 (8 ft) SAT	BBHX-S-79 10/9/20 (8 ft) SAT	BBHX-S-80 10/9/20 (4 ft)	BBHX-S-80 10/9/20 (8 ft) SAT	BBHX-S-81 10/12/20 (4 ft)
Metals															
Copper in mg/kg	36	36	58.3		19.2 J	5 U	16	12.6	16.2		17.8 J	11.8 J	20.1 J	12.6 J	5 JJ
Mercury in mg/kg	0.1	0.1	0.15 J	0.17	0.14	0.1 U	0.1 U	0.1 U	0.1 U	0.1 JJ	0.1 JJ	0.1 JJ	0.1 JJ	0.1 JJ	0.21
Zinc in mg/kg	85	100	13.5			12.2	53.8	19.7	41.2		26 J	19.6 J	17.4 J	33.3 J	

Analyte	Soil Preliminary Cleanup Level - Saturated Soil	Soil Preliminary Cleanup Level - Unsaturated Soil	Confirmation Samples (In Place) Sidewall Samples: BBHX-S-83 10/13/20 (4 ft)	BBHX-S-84 10/13/20 (4 ft)	BBHX-S-85 10/13/20 (4 ft)	BBHX-S-85 10/13/20 (8 ft) SAT	BBHX-S-88 10/14/20 (8 ft) SAT	BBHX-S-89 10/15/20 (4 ft)	BBHX-S-90 10/15/20 (8 ft) SAT	BBHX-S-93 10/16/20 (8 ft) SAT	BBHX-S-100 10/20/20 (4 ft)	BBHX-S-101 10/21/20 (4 ft)	BBHX-S-104 10/22/20 (4 ft)	BBHX-S-105 10/22/20 (8 ft) SAT	BBHX-S-106 10/27/20 (4 ft)
Metals															
Copper in mg/kg	36	36	51.3 J		34.9 J		45.4								
Mercury in mg/kg	0.1	0.1	0.49	0.76	0.59	0.1 U		0.1 U	0.78	0.1 U	0.1 U	0.1 U	0.1 U	0.1 U	0.19 J
Zinc in mg/kg	85	100	220												

Analyte	Soil Preliminary Cleanup Level - Saturated Soil	Soil Preliminary Cleanup Level - Unsaturated Soil	Confirmation Samples (In Place) Sidewall Samples: BBHX-S-107 10/27/20 (4 ft)	Confirmation Samples (In Place) Base Samples: BBHX-B-2 10/7/20 (10 ft) OverEx SAT	BBHX-B-4 10/1/20 (10 ft) OverEx SAT	BBHX-B-5 10/7/20 (10 ft) OverEx SAT	BBHX-B-8 10/7/20 (10 ft) OverEx SAT	BBHX-B-15 9/23/20 (10 ft) OverEx SAT	BBHX-B-15 10/6/20 (11 ft) OverEx SAT	BBHX-B-20 10/1/20 (10 ft) OverEx SAT	Compliance Samples (Overexcavated) BBHX-B-23 9/17/20 (10 ft) FD OverEx SAT	BBHX-B-23 9/17/20 (10 ft) OverEx SAT	BBHX-B-24 9/22/20 (10 ft) OverEx SAT	BBHX-B-28 10/6/20 (10 ft) OverEx SAT	Compliance Samples (Overexcavated) Sidewall Samples: BBHX-S-1 9/1/20 (4 ft) OverEx
Metals															
Copper in mg/kg	36	36		15.8	15.9	19	36.2	127	262 J	144	32.5	49.2	291	27.5 J	82.4 J
Mercury in mg/kg	0.1	0.1	0.44 J	0.11	0.16	0.14	0.21	0.47 J	0.72	0.65	0.1 JJ	0.13 J	0.1 U	0.12	0.36 J
Zinc in mg/kg	85	100		22.3	5 U	36.8	42.6	5 U	5 U	5 U	60.2	86.3	29.8	22.3	42.5

Analyte	Soil Preliminary Cleanup Level - Saturated Soil	Soil Preliminary Cleanup Level - Unsaturated Soil	Compliance Samples (Overexcavated) Sidewall Samples: BBHX-S-2 9/1/20 (4 ft) OverEx	BBHX-S-3 9/1/20 (4 ft) OverEx	BBHX-S-5 9/1/20 (4 ft) OverEx	BBHX-S-5 9/21/20 (8 ft) OverEx SAT	BBHX-S-7 9/1/20 (4 ft) OverEx	BBHX-S-7 9/22/20 (8 ft) OverEx SAT	BBHX-S-8 9/1/20 (4 ft) OverEx	BBHX-S-8 9/21/20 (8 ft) OverEx SAT	BBHX-S-9 9/2/20 (4 ft) OverEx	BBHX-S-9 9/23/20 (8 ft) OverEx SAT	BBHX-S-10 9/2/20 (4 ft) OverEx	BBHX-S-10 9/23/20 (8 ft) OverEx SAT	BBHX-S-11 9/2/20 (4 ft) OverEx
Metals															
Copper in mg/kg	36	36	52 J	50.3 J	22 J	656	7.27 J	428	45.6 J	29.7	28.9	5 U	31.4	24.7	12.9
Mercury in mg/kg	0.1	0.1	0.35 J	0.19 J	0.13 J	0.23	0.1 U	0.2 J	0.25 J	0.1 U	0.48	0.67 J	0.34	0.11 J	1.3
Zinc in mg/kg	85	100	58.1	31.3	26.8	68.6	5 U	22.6	61.2	144	5.31	5 U	7.25	56.5	5 U

Refer to Table 2 for notes and abbreviation definitions.

Table 6. Excavation Verification Soil Data for Boiler/Baghouse (BBH) Area

Project No. 110207, K-C Worldwide Site Upland Area, Everett, WA

Analyte	Soil Preliminary Cleanup Level - Saturated Soil	Soil Preliminary Cleanup Level - Unsaturated Soil	Compliance Samples (Overexcavated) Sidewall Samples												
			BBHX-S-12 9/2/20 (4 ft) OverEx	BBHX-S-12 9/30/20 (8 ft) OverEx SAT	BBHX-S-17 9/8/20 (4 ft) OverEx	BBHX-S-18 9/8/20 (4 ft) OverEx	BBHX-S-19 9/8/20 (4 ft) OverEx	BBHX-S-19 9/17/20 (8 ft) OverEx SAT	BBHX-S-20 9/8/20 (4 ft) FD OverEx	BBHX-S-20 9/8/20 (4 ft) OverEx	BBHX-S-25 9/9/20 (4 ft) OverEx	BBHX-S-27 9/9/20 (4 ft) OverEx	BBHX-S-28 9/9/20 (4 ft) OverEx	BBHX-S-29 9/10/20 (4 ft) OverEx	BBHX-S-29 9/10/20 (8 ft) OverEx SAT
Metals															
Copper in mg/kg	36	36	10.5	96.9 J	20.6 J	19.7	17.8 J	48.9	23.4	28.7	53	21.6	38.3	64.8	81.4
Mercury in mg/kg	0.1	0.1	2.5	1.3	0.18	0.11	0.1 U	0.1 JJ	0.37	0.3	0.19	0.36	0.19	0.42	0.3
Zinc in mg/kg	85	100	5 U	34.4 J	50.1	59.8	32.3	73.5	44.5	50.6	51.6	26.2	133	123	31.8

Analyte	Soil Preliminary Cleanup Level - Saturated Soil	Soil Preliminary Cleanup Level - Unsaturated Soil	Compliance Samples (Overexcavated) Sidewall Samples												
			BBHX-S-30 9/10/20 (4 ft) OverEx	BBHX-S-31 9/10/20 (4 ft) OverEx	BBHX-S-32 9/10/20 (4 ft) OverEx	BBHX-S-32 9/10/20 (8 ft) FD OverEx SAT	BBHX-S-32 9/10/20 (8 ft) OverEx SAT	BBHX-S-33 9/10/20 (4 ft) OverEx	BBHX-S-33 9/16/20 (8 ft) OverEx SAT	BBHX-S-34 9/10/20 (4 ft) OverEx	BBHX-S-34 9/10/20 (8 ft) OverEx SAT	BBHX-S-36 9/14/20 (4 ft) OverEx	BBHX-S-37 9/14/20 (4 ft) OverEx	BBHX-S-39 9/14/20 (4 ft) OverEx	BBHX-S-39 10/12/20 (8 ft) FD OverEx SAT
Metals															
Copper in mg/kg	36	36	25.6	27.7	6.66	44.6	32	15.3 J	20.5	69.1	78.8 J	25.9	46.4		
Mercury in mg/kg	0.1	0.1	0.5	0.47	0.1 U	0.1 U	0.1 U	0.86 J	0.57	1.3	0.1 U	0.11	0.14	6.6	1.1
Zinc in mg/kg	85	100	69.4	110	12.5	75.2	101	34.9 J	54.3	189	74.4 J				

Analyte	Soil Preliminary Cleanup Level - Saturated Soil	Soil Preliminary Cleanup Level - Unsaturated Soil	Compliance Samples (Overexcavated) Sidewall Samples												
			BBHX-S-39 10/12/20 (8 ft) OverEx SAT	BBHX-S-40 9/14/20 (4 ft) OverEx	BBHX-S-41 9/14/20 (4 ft) OverEx	BBHX-S-42 9/14/20 (4 ft) OverEx	BBHX-S-42 10/1/20 (8 ft) OverEx SAT	BBHX-S-43 9/16/20 (4 ft) OverEx	BBHX-S-45 9/16/20 (4 ft) OverEx	BBHX-S-49 9/21/20 (4 ft) OverEx	BBHX-S-49 9/21/20 (8 ft) FD OverEx SAT	BBHX-S-50 9/21/20 (4 ft) OverEx	BBHX-S-51 9/21/20 (4 ft) OverEx	BBHX-S-51 9/21/20 (8 ft) OverEx SAT	BBHX-S-58 9/23/20 (4 ft) OverEx
Metals															
Copper in mg/kg	36	36			25.3			45.7		51.6	18.7	20.4	40.1	5.96	158
Mercury in mg/kg	0.1	0.1	0.94	2.2	0.13	0.24	0.11	0.58	0.5	0.18	0.1 U	0.66	0.58	0.14	9 J
Zinc in mg/kg	85	100								114	42.4	21.3	103	12.2	120

Analyte	Soil Preliminary Cleanup Level - Saturated Soil	Soil Preliminary Cleanup Level - Unsaturated Soil	Compliance Samples (Overexcavated) Sidewall Samples												
			BBHX-S-59 9/23/20 (4 ft) OverEx	BBHX-S-60 9/30/20 (4 ft) FD OverEx	BBHX-S-60 9/30/20 (4 ft) OverEx	BBHX-S-60 9/30/20 (8 ft) OverEx SAT	BBHX-S-61 9/30/20 (4 ft) OverEx	BBHX-S-61 9/30/20 (8 ft) OverEx SAT	BBHX-S-62 9/30/20 (4 ft) OverEx	BBHX-S-63 9/30/20 (4 ft) OverEx	BBHX-S-64 9/30/20 (4 ft) OverEx	BBHX-S-65 10/1/20 (4 ft) OverEx	BBHX-S-66 10/1/20 (4 ft) OverEx	BBHX-S-67 10/1/20 (8 ft) OverEx SAT	BBHX-S-68 10/2/20 (8 ft) OverEx SAT
Metals															
Copper in mg/kg	36	36	89.5				42.5 J			38.5 J	52.7 J		10.6	11.5	214
Mercury in mg/kg	0.1	0.1	0.61 J	1.5	1.9	1	0.3	2	0.44	1.2	0.83	0.69	8.5	1.7	2
Zinc in mg/kg	85	100	59.1				77.7 J			112 J			5 U	5.02	

Analyte	Soil Preliminary Cleanup Level - Saturated Soil	Soil Preliminary Cleanup Level - Unsaturated Soil	Compliance Samples (Overexcavated) Sidewall Samples												
			BBHX-S-69 10/2/20 (4 ft) OverEx	BBHX-S-70 10/7/20 (4 ft) OverEx	BBHX-S-70 10/7/20 (8 ft) OverEx SAT	BBHX-S-71 10/7/20 (4 ft) OverEx	BBHX-S-71 10/7/20 (8 ft) OverEx SAT	BBHX-S-72 10/7/20 (4 ft) OverEx	BBHX-S-72 10/7/20 (8 ft) OverEx SAT	BBHX-S-75 10/8/20 (4 ft) OverEx	BBHX-S-75 10/9/20 (8 ft) OverEx SAT	BBHX-S-76 10/9/20 (4 ft) OverEx	BBHX-S-76 10/9/20 (8 ft) OverEx SAT	BBHX-S-78 10/9/20 (4 ft) OverEx	BBHX-S-79 10/9/20 (4 ft) OverEx
Metals															
Copper in mg/kg	36	36	26.3	33.2	25.5	82.3	17.7	45	10.1	26.5	52.4 J	29.6 J	38.5 J	24.9 J	25.1 J
Mercury in mg/kg	0.1	0.1	0.1 U	0.13	0.14	0.22	0.11	0.19	0.15	0.1 U	0.2 J	1.3 J	0.32 J	1.5 J	0.64 J
Zinc in mg/kg	85	100	27.3	62.9	53.8	35.2	124	148	10.3	34.7	86.9 J	58.3 J	68.7 J	54.2 J	53.8 J

Refer to Table 2 for notes and abbreviation definitions.

Table 6. Excavation Verification Soil Data for Boiler/Baghouse (BBH) Area

Project No. 110207, K-C Worldwide Site Upland Area, Everett, WA

Analyte	Soil Preliminary Cleanup Level - Saturated Soil	Soil Preliminary Cleanup Level - Unsaturated Soil	Compliance Samples (Overexcavated) Sidewall BBHX-S-82 10/12/20 (4 ft) OverEx	BBHX-S-86 10/13/20 (4 ft) OverEx	BBHX-S-87 10/14/20 (4 ft) OverEx	BBHX-S-91 10/16/20 (4 ft) OverEx	BBHX-S-91 10/16/20 (8 ft) OverEx SAT	BBHX-S-92 10/16/20 (4 ft) OverEx	BBHX-S-92 10/16/20 (8 ft) OverEx SAT	BBHX-S-94 10/16/20 (4 ft) OverEx	BBHX-S-94 10/16/20 (8 ft) FD OverEx SAT	BBHX-S-94 10/16/20 (8 ft) OverEx SAT	BBHX-S-95 10/16/20 (4 ft) OverEx	BBHX-S-96 10/16/20 (4 ft) OverEx	BBHX-S-97 10/16/20 (8 ft) OverEx SAT
Metals															
Copper in mg/kg	36	36	109 J			107 J					19.8 J	18.4 J			88.8 J
Mercury in mg/kg	0.1	0.1	1.7	1.7	1.1	0.64	0.13	0.42	0.2	2	0.83	0.78	2.6	0.64	0.27
Zinc in mg/kg	85	100					83.6								81.8

Analyte	Soil Preliminary Cleanup Level - Saturated Soil	Soil Preliminary Cleanup Level - Unsaturated Soil	Compliance Samples (Overexcavated) Sidewall Samples BBHX-S-98 10/20/20 (4 ft) OverEx	BBHX-S-99 10/20/20 (8 ft) OverEx SAT	BBHX-S-102 10/22/20 (4 ft) OverEx	BBHX-S-102 10/22/20 (8 ft) OverEx SAT	BBHX-S-103 10/22/20 (4 ft) OverEx	BBHX-S-108 10/27/20 (4 ft) OverEx	BBHX-S-109 10/28/20 (4 ft) OverEx
Metals									
Copper in mg/kg	36	36	12.5						
Mercury in mg/kg	0.1	0.1	1.3	0.4	2.1	0.1 U	0.61	12 J	5.3
Zinc in mg/kg	85	100							

Analyte	Soil Preliminary Cleanup Level - Saturated Soil	Soil Preliminary Cleanup Level - Unsaturated Soil
Metals		
Copper in mg/kg	36	36
Mercury in mg/kg	0.1	0.1
Zinc in mg/kg	85	100

Analyte	Soil Preliminary Cleanup Level - Saturated Soil	Soil Preliminary Cleanup Level - Unsaturated Soil
Metals		
Copper in mg/kg	36	36
Mercury in mg/kg	0.1	0.1
Zinc in mg/kg	85	100

Analyte	Soil Preliminary Cleanup Level - Saturated Soil	Soil Preliminary Cleanup Level - Unsaturated Soil
Metals		
Copper in mg/kg	36	36
Mercury in mg/kg	0.1	0.1
Zinc in mg/kg	85	100

Refer to Table 2 for notes and abbreviation definitions.

Table 7. Excavation Verification Soil Data for Central Maintenance Shop (CMS) Area

Project No. 110207, K-C Worldwide Site Upland Area, Everett, WA

Analyte (By Group)	Soil Preliminary Cleanup Level - Saturated Soil	Confirmation Samples (In Place)										
		Base Samples										
		CMSX-B-01 8/3/20 (6 ft) SAT	CMSX-B-02 7/30/20 (6 ft) SAT	CMSX-B-03 8/14/20 (7 ft) SAT	CMSX-B-04 7/29/20 (6 ft) SAT	CMSX-B-05 8/14/20 (7 ft) SAT	CMSX-B-06 7/28/20 (6 ft) SAT	CMSX-B-07 8/4/20 (6 ft) SAT	CMSX-B-08 8/3/20 (6 ft) SAT	CMSX-B-09 7/28/20 (6 ft) SAT	CMSX-B-10 7/28/20 (6 ft) SAT	CMSX-B-11 7/28/20 (6 ft) SAT
Polycyclic Aromatic Hydrocarbons (PAHs)												
Acenaphthene in mg/kg	1.2	0.011	0.01 U	--	0.01 U	--	0.01 U	0.01 U	0.01 U	0.01 U	0.01 U	0.01 U
Acenaphthylene in mg/kg	210,000	0.01 U	0.01 U	--	0.01 U	--	0.01 U	0.01 U	0.01 U	0.01 U	0.01 U	0.01 U
Anthracene in mg/kg	1,100,000	0.01 U	0.01 U	--	0.01 U	--	0.01 U	0.01 U	0.01 U	0.01 U	0.01 U	0.01 U
Benzo(g,h,i)perylene in mg/kg	110,000	0.01 U	0.01 U	--	0.01 U	--	0.017	0.01 U	0.01 U	0.012	0.01 U	0.01 U
Fluoranthene in mg/kg	140,000	0.01 U	0.01 U	--	0.01 U	--	0.047	0.01 U	0.01 U	0.01 U	0.01 U	0.01 U
Fluorene in mg/kg	140,000	0.01 U	0.01 U	--	0.01 U	--	0.01 U	0.01 U	0.01 U	0.01 U	0.01 U	0.01 U
Phenanthrene in mg/kg	1,100,000	0.01 U	0.01 U	--	0.01 U	--	0.026	0.01 U	0.01 U	0.01 U	0.01 U	0.01 U
Pyrene in mg/kg	110,000	0.01 U	0.01	--	0.01 U	--	0.049	0.01 U	0.01 U	0.01 U	0.01 U	0.01 U
Naphthalene in mg/kg	0.86	0.01 U	0.01 U	--	0.01 U	--	0.011	0.01 U	0.01 U	0.01 U	0.01 U	0.01 U
Carcinogenic PAHs (cPAHs)												
Benz(a)anthracene in mg/kg	--	0.01 U	0.01 U	--	0.01 U	--	0.026	0.01 U	0.01 U	0.01 U	0.01 U	0.01 U
Benzo(a)pyrene in mg/kg	--	0.01 U	0.01 U	--	0.01 U	--	0.024	0.01 U	0.01 U	0.01 U	0.01 U	0.01 U
Benzo(b)fluoranthene in mg/kg	--	0.01 U	0.01 U	--	0.01 U	--	0.029	0.01 U	0.01 U	0.01 U	0.01 U	0.01 U
Benzo(k)fluoranthene in mg/kg	--	0.01 U	0.01 U	--	0.01 U	--	0.01 U	0.01 U	0.01 U	0.01 U	0.01 U	0.01 U
Chrysene in mg/kg	--	0.01 U	0.01 U	--	0.01 U	--	0.035	0.01 U	0.01 U	0.01 U	0.01 U	0.01 U
Dibenzo(a,h)anthracene in mg/kg	--	0.01 U	0.01 U	--	0.01 U	--	0.01 U	0.01 U	0.01 U	0.01 U	0.01 U	0.01 U
Indeno(1,2,3-cd)pyrene in mg/kg	--	0.01 U	0.01 U	--	0.01 U	--	0.015	0.01 U	0.01 U	0.01	0.01 U	0.01 U
Total cPAHs TEQ in mg/kg	0.16	ND	ND	--	ND	--	0.0324	ND	ND	0.00805	ND	ND
Polychlorinated Biphenyls (PCBs)												
Aroclor 1016 in mg/kg	--	0.02 U	0.02 U	0.02 U	0.02 U	0.02 U	0.02 U	0.02 U	0.02 U	0.02 U	0.02 U	0.02 U
Aroclor 1221 in mg/kg	--	0.02 U	0.02 U	0.02 U	0.02 U	0.02 U	0.02 U	0.02 U	0.02 U	0.02 U	0.02 U	0.02 U
Aroclor 1232 in mg/kg	--	0.02 U	0.02 U	0.02 U	0.02 U	0.02 U	0.02 U	0.02 U	0.02 U	0.02 U	0.02 U	0.02 U
Aroclor 1242 in mg/kg	--	0.02 U	0.02 U	0.02 U	0.02 U	0.02 U	0.02 U	0.02 U	0.02 U	0.02 U	0.02 U	0.02 U
Aroclor 1248 in mg/kg	--	0.02 U	0.02 U	0.02 U	0.02 U	0.02 U	0.02 U	0.02 U	0.02 U	0.02 U	0.02 U	0.02 U
Aroclor 1254 in mg/kg	--	0.02 U	0.02 U	0.02 U	0.027	0.02 U	0.02 U	0.02 U	0.02 U	0.02 U	0.02 U	0.02 U
Aroclor 1260 in mg/kg	--	0.02 U	0.02 U	0.02 U	0.02 U	0.02 U	0.02 U	0.02 U	0.02 U	0.02 U	0.02 U	0.02 U
Aroclor 1262 in mg/kg	--	0.02 U	0.02 U	0.02 U	0.02 U	0.02 U	0.02 U	0.02 U	0.02 U	0.02 U	0.02 U	0.02 U
Aroclor 1268 in mg/kg	--	0.02 U	0.02 U	0.02 U	0.02 U	0.02 U	0.02 U	0.02 U	0.02 U	0.02 U	0.02 U	0.02 U
Total PCBs (Sum of Aroclors) in mg/kg	0.12	ND	ND	ND	0.027	ND	ND	ND	ND	ND	ND	ND

Refer to Table 2 for notes and abbreviation definitions

Table 7. Excavation Verification Soil Data for Central Maintenance Shop (CMS) Area

Project No. 110207, K-C Worldwide Site Upland Area, Everett, WA

Analyte (By Group)	Soil Preliminary Cleanup Level - Saturated Soil	Confirmation Samples (In Place)											
		Base Samples											
		CMSX-B-12 7/27/20 (6 ft) SAT	CMSX-B-13 7/28/20 (6 ft) SAT	CMSX-B-14 8/12/20 (7 ft) SAT	CMSX-B-15 7/28/20 (6 ft) SAT	CMSX-B-16 8/12/20 (7 ft) SAT	CMSX-B-17 7/27/20 (6 ft) SAT	CMSX-B-18 7/17/20 (6 ft) SAT	CMSX-B-19 8/12/20 (7 ft) SAT	CMSX-B-20 8/12/20 (7 ft) SAT	CMSX-B-21 7/17/20 (6 ft) SAT	CMSX-B-22 7/17/20 (6 ft) SAT	CMSX-B-23 8/11/20 (6 ft) SAT
Polycyclic Aromatic Hydrocarbons (PAHs)													
Acenaphthene in mg/kg	1.2	0.01 U	0.01 U	--	0.01 U	--	0.01 U	0.01 U	--	--	0.01 U	0.01 U	0.01 U
Acenaphthylene in mg/kg	210,000	0.01 U	0.01 U	--	0.01 U	--	0.01 U	0.01 U	--	--	0.01 U	0.01 U	0.01 U
Anthracene in mg/kg	1,100,000	0.01 U	0.01 U	--	0.01 U	--	0.01 U	0.01 U	--	--	0.01 U	0.01 U	0.01 U
Benzo(g,h,i)perylene in mg/kg	110,000	0.01 U	0.01 U	--	0.011	--	0.01 U	0.01 U	--	--	0.01 U	0.01 U	0.01 U
Fluoranthene in mg/kg	140,000	0.01 U	0.01 U	--	0.026	--	0.01 U	0.01 U	--	--	0.01 U	0.01 U	0.014
Fluorene in mg/kg	140,000	0.01 U	0.01 U	--	0.01 U	--	0.01 U	0.01 U	--	--	0.01 U	0.01 U	0.01 U
Phenanthrene in mg/kg	1,100,000	0.01 U	0.01 U	--	0.013	--	0.01 U	0.01 U	--	--	0.01 U	0.01 U	0.01 U
Pyrene in mg/kg	110,000	0.01 U	0.01 U	--	0.023	--	0.016	0.01 U	--	--	0.01 U	0.01 U	0.017
Naphthalene in mg/kg	0.86	0.01 U	0.01 U	--	0.01 U	--	0.01 U	0.01 U	--	--	0.01 U	0.01 U	0.01 U
Carcinogenic PAHs (cPAHs)													
Benz(a)anthracene in mg/kg	--	0.01 U	0.01 U	--	0.013	--	0.011	0.01 U	--	--	0.01 U	0.01 U	0.01 U
Benzo(a)pyrene in mg/kg	--	0.01 U	0.01 U	--	0.016	--	0.012	0.01 U	--	--	0.01 U	0.01 U	0.012
Benzo(b)fluoranthene in mg/kg	--	0.01 U	0.01 U	--	0.02	--	0.012	0.01 U	--	--	0.01 U	0.01 U	0.013
Benzo(k)fluoranthene in mg/kg	--	0.01 U	0.01 U	--	0.01 U	--	0.01 U	0.01 U	--	--	0.01 U	0.01 U	0.01 U
Chrysene in mg/kg	--	0.01 U	0.01 U	--	0.019	--	0.015	0.01 U	--	--	0.01 U	0.01 U	0.012
Dibenzo(a,h)anthracene in mg/kg	--	0.01 U	0.01 U	--	0.01 U	--	0.01 U	0.01 U	--	--	0.01 U	0.01 U	0.01 U
Indeno(1,2,3-cd)pyrene in mg/kg	--	0.01 U	0.01 U	--	0.011	--	0.01 U	0.01 U	--	--	0.01 U	0.01 U	0.01 U
Total cPAHs TEQ in mg/kg	0.16	ND	ND	--	0.0216	--	0.016	ND	--	--	ND	ND	0.0154
Polychlorinated Biphenyls (PCBs)													
Aroclor 1016 in mg/kg	--	0.02 U	0.02 U	0.02 U	0.02 U	0.02 U	0.02 U	0.02 U	0.02 U	0.02 U	0.02 U	0.02 U	0.02 U
Aroclor 1221 in mg/kg	--	0.02 U	0.02 U	0.02 U	0.02 U	0.02 U	0.02 U	0.02 U	0.02 U	0.02 U	0.02 U	0.02 U	0.02 U
Aroclor 1232 in mg/kg	--	0.02 U	0.02 U	0.02 U	0.02 U	0.02 U	0.02 U	0.02 U	0.02 U	0.02 U	0.02 U	0.02 U	0.02 U
Aroclor 1242 in mg/kg	--	0.02 U	0.02 U	0.02 U	0.02 U	0.02 U	0.02 U	0.02 U	0.02 U	0.02 U	0.02 U	0.02 U	0.02 U
Aroclor 1248 in mg/kg	--	0.02 U	0.02 U	0.02 U	0.02 U	0.02 U	0.02 U	0.02 U	0.02 U	0.02 U	0.02 U	0.02 U	0.02 U
Aroclor 1254 in mg/kg	--	0.02 U	0.02 U	0.02 U	0.02 U	0.02 U	0.02 U	0.02 U	0.02 U	0.02 U	0.02 U	0.02 U	0.02 U
Aroclor 1260 in mg/kg	--	0.02 U	0.02 U	0.02 U	0.02 U	0.02 U	0.02 U	0.02 U	0.02 U	0.02 U	0.02 U	0.02 U	0.02 U
Aroclor 1262 in mg/kg	--	0.02 U	0.02 U	0.02 U	0.02 U	0.02 U	0.02 U	0.02 U	0.02 U	0.02 U	0.02 U	0.02 U	0.02 U
Aroclor 1268 in mg/kg	--	0.02 U	0.02 U	0.02 U	0.02 U	0.02 U	0.02 U	0.02 U	0.02 U	0.02 U	0.02 U	0.02 U	0.02 U
Total PCBs (Sum of Aroclors) in mg/kg	0.12	ND	ND	ND	ND	ND	ND	ND	ND	ND	ND	ND	ND

Refer to Table 2 for notes and abbreviation definitions

Table 7. Excavation Verification Soil Data for Central Maintenance Shop (CMS) Area

Project No. 110207, K-C Worldwide Site Upland Area, Everett, WA

Analyte (By Group)	Soil Preliminary Cleanup Level - Saturated Soil	Confirmation Samples (In Place)											
		Base Samples											
		CMSX-B-24 8/13/20 (7 ft) SAT	CMSX-B-25 7/16/20 (6 ft) SAT	CMSX-B-26 7/13/20 (6 ft) SAT	CMSX-B-27 8/25/20 (8 ft) SAT	CMSX-B-28 8/25/20 (9 ft) SAT	CMSX-B-29 8/13/20 (7 ft) SAT	CMSX-B-30 8/25/20 (8 ft) SAT	CMSX-B-31 8/4/20 (7 ft) SAT	CMSX-B-32 7/14/20 (6 ft) SAT	CMSX-B-33 8/13/20 (7 ft) SAT	CMSX-B-34 7/10/20 (6 ft) SAT	CMSX-B-35 7/9/20 (6 ft) SAT
Polycyclic Aromatic Hydrocarbons (PAHs)													
Acenaphthene in mg/kg	1.2	--	0.01 U	0.01	--	0.053	0.12	0.01 U	--	0.01 U	--	0.01 U	0.41
Acenaphthylene in mg/kg	210,000	--	0.01 U	0.01	--	0.01 U	0.05 U	0.01 U	--	0.01 U	--	0.01 U	0.05 U
Anthracene in mg/kg	1,100,000	--	0.01 U	0.01	--	0.044	0.05 U	0.01 U	--	0.01 U	--	0.01 U	0.05 U
Benzo(g,h,i)perylene in mg/kg	110,000	--	0.01 U	0.01	--	0.01 U	0.05 U	0.01 U	--	0.01 U	--	0.01 U	0.05 U
Fluoranthene in mg/kg	140,000	--	0.01 U	0.01	--	0.016	0.05 U	0.01 U	--	0.01 U	--	0.01 U	0.074
Fluorene in mg/kg	140,000	--	0.01 U	0.01	--	0.04	0.05 U	0.01 U	--	0.01 U	--	0.01 U	0.077
Phenanthrene in mg/kg	1,100,000	--	0.01 U	0.01	--	0.045	0.055	0.01 U	--	0.01 U	--	0.01 U	0.05 U
Pyrene in mg/kg	110,000	--	0.01 U	0.01	--	0.073	0.14	0.01 U	--	0.01 U	--	0.01 U	0.07
Naphthalene in mg/kg	0.86	--	0.01 U	0.01	--	0.01 U	0.05 U	0.01 U	--	0.01 U	--	0.01 U	0.05 U
Carcinogenic PAHs (cPAHs)													
Benz(a)anthracene in mg/kg	--	--	0.01 U	0.01	--	0.01 U	0.05 U	0.01 U	--	0.01 U	--	0.01 U	0.05 U
Benzo(a)pyrene in mg/kg	--	--	0.01 U	0.01	--	0.01 U	0.05 U	0.01 U	--	0.01 U	--	0.01 U	0.05 U
Benzo(b)fluoranthene in mg/kg	--	--	0.01 U	0.01	--	0.01 U	0.05 U	0.01 U	--	0.01 U	--	0.01 U	0.05 U
Benzo(k)fluoranthene in mg/kg	--	--	0.01 U	0.01	--	0.01 U	0.05 U	0.01 U	--	0.01 U	--	0.01 U	0.05 U
Chrysene in mg/kg	--	--	0.01 U	0.01	--	0.01 U	0.051	0.01 U	--	0.01 U	--	0.01 U	0.05 U
Dibenzo(a,h)anthracene in mg/kg	--	--	0.01 U	0.01	--	0.01 U	0.05 U	0.01 U	--	0.01 U	--	0.01 U	0.05 U
Indeno(1,2,3-cd)pyrene in mg/kg	--	--	0.01 U	0.01	--	0.01 U	0.05 U	0.01 U	--	0.01 U	--	0.01 U	0.05 U
Total cPAHs TEQ in mg/kg	0.16	--	ND	0.0151	--	ND	0.038	ND	--	ND	--	ND	ND
Polychlorinated Biphenyls (PCBs)													
Aroclor 1016 in mg/kg	--	0.02 U	0.02 U	0.02 U	0.02 U	0.02 U	0.02 U	0.02 U	0.02 U	0.02 U	0.02 U	0.02 U	0.02 U
Aroclor 1221 in mg/kg	--	0.02 U	0.02 U	0.02 U	0.02 U	0.02 U	0.02 U	0.02 U	0.02 U	0.02 U	0.02 U	0.02 U	0.02 U
Aroclor 1232 in mg/kg	--	0.02 U	0.02 U	0.02 U	0.02 U	0.02 U	0.02 U	0.02 U	0.02 U	0.02 U	0.02 U	0.02 U	0.02 U
Aroclor 1242 in mg/kg	--	0.02 U	0.02 U	0.02 U	0.02 U	0.02 U	0.02 U	0.02 U	0.02 U	0.02 U	0.02 U	0.02 U	0.02 U
Aroclor 1248 in mg/kg	--	0.02 U	0.02 U	0.02 U	0.02 U	0.02 U	0.02 U	0.02 U	0.02 U	0.02 U	0.02 U	0.02 U	0.02 U
Aroclor 1254 in mg/kg	--	0.02 U	0.02 U	0.02 U	0.02 U	0.02 U	0.024	0.02 U	0.02 U	0.02 U	0.035	0.02 U	0.02 U
Aroclor 1260 in mg/kg	--	0.02 U	0.02 U	0.02 U	0.02 U	0.02 U	0.02 U	0.02 U	0.02 U	0.02 U	0.028	0.02 U	0.02 U
Aroclor 1262 in mg/kg	--	0.02 U	0.02 U	0.02 U	0.02 U	0.02 U	0.02 U	0.02 U	0.02 U	0.02 U	0.02 U	0.02 U	0.02 U
Aroclor 1268 in mg/kg	--	0.02 U	0.02 U	0.02 U	0.02 U	0.02 U	0.02 U	0.02 U	0.02 U	0.02 U	0.02 U	0.02 U	0.02 U
Total PCBs (Sum of Aroclors) in mg/kg	0.12	ND	ND	ND	ND	ND	0.024	ND	ND	ND	0.063	ND	ND

Refer to Table 2 for notes and abbreviation definitions

Table 7. Excavation Verification Soil Data for Central Maintenance Shop (CMS) Area

Project No. 110207, K-C Worldwide Site Upland Area, Everett, WA

Analyte (By Group)	Soil Preliminary Cleanup Level - Saturated Soil	Confirmation Samples (In Place)											
		Base Samples		Sidewall Samples									
		CMSX-B-37 7/10/20 (6 ft) SAT	CMSX-B-38 8/25/20 (7 ft) SAT	CMSX-S-02 7/9/20 (4 ft) SAT	CMSX-S-03 7/9/20 (4 ft) SAT	CMSX-S-05 7/9/20 (4 ft) SAT	CMSX-S-06 7/10/20 (4 ft) SAT	CMSX-S-07 7/10/20 (4 ft) FD SAT	CMSX-S-07 7/10/20 (4 ft) SAT	CMSX-S-12 7/17/20 (4 ft) SAT	CMSX-S-13 7/27/20 (4 ft) SAT	CMSX-S-14 7/27/20 (4 ft) SAT	CMSX-S-15 7/27/20 (4 ft) SAT
Polycyclic Aromatic Hydrocarbons (PAHs)													
Acenaphthene in mg/kg	1.2	0.01 U	--	0.02	0.01 U	0.012	0.01 U	0.01 U	0.01 U	0.01 U	0.01 U	0.01 U	0.01 U
Acenaphthylene in mg/kg	210,000	0.01 U	--	0.01 U	0.01 U	0.01 U	0.01 U	0.01 U	0.01 U	0.01 U	0.01 U	0.01 U	0.01 U
Anthracene in mg/kg	1,100,000	0.01 U	--	0.01 U	0.01 U	0.026	0.01 U	0.01 U	0.01 U	0.01 U	0.01 U	0.01 U	0.01 U
Benzo(g,h,i)perylene in mg/kg	110,000	0.01 U	--	0.016	0.01 U	0.029	0.01 U	0.01 U	0.01 U	0.01 U	0.01 U	0.01 U	0.01 U
Fluoranthene in mg/kg	140,000	0.01 U	--	0.025	0.01 U	0.13	0.014	0.01 U	0.01 U	0.011	0.01 U	0.01 U	0.01 U
Fluorene in mg/kg	140,000	0.01 U	--	0.01 U	0.01 U	0.01	0.01 U	0.01 U	0.01 U	0.01 U	0.01 U	0.01 U	0.01 U
Phenanthrene in mg/kg	1,100,000	0.01 U	--	0.014	0.01 U	0.1	0.012	0.01 U	0.01 U	0.01 U	0.01 U	0.01 U	0.01 U
Pyrene in mg/kg	110,000	0.01 U	--	0.022	0.01 U	0.13	0.011	0.01 U	0.01 U	0.016	0.01 U	0.01 U	0.01 U
Naphthalene in mg/kg	0.86	0.01 U	--	0.01 U	0.01 U	0.01 U	0.01 U	0.01 U	0.01 U	0.01 U	0.01 U	0.01 U	0.01 U
Carcinogenic PAHs (cPAHs)													
Benz(a)anthracene in mg/kg	--	0.01 U	--	0.01 U	0.01 U	0.056	0.01 U	0.01 U	0.01 U	0.011	0.01 U	0.01 U	0.01 U
Benzo(a)pyrene in mg/kg	--	0.01 U	--	0.011	0.01 U	0.053	0.01 U	0.01 U	0.01 U	0.014	0.01 U	0.01 U	0.01 U
Benzo(b)fluoranthene in mg/kg	--	0.01 U	--	0.019	0.01 U	0.064	0.01 U	0.01 U	0.01 U	0.014	0.01 U	0.01 U	0.01 U
Benzo(k)fluoranthene in mg/kg	--	0.01 U	--	0.01 U	0.01 U	0.026	0.01 U	0.01 U	0.01 U	0.01 U	0.01 U	0.01 U	0.01 U
Chrysene in mg/kg	--	0.01 U	--	0.013	0.01 U	0.062	0.01 U	0.01 U	0.01 U	0.011	0.01 U	0.01 U	0.01 U
Dibenzo(a,h)anthracene in mg/kg	--	0.01 U	--	0.01 U	0.01 U	0.01 U	0.01 U	0.01 U	0.01 U	0.01 U	0.01 U	0.01 U	0.01 U
Indeno(1,2,3-cd)pyrene in mg/kg	--	0.01 U	--	0.014	0.01 U	0.033	0.01 U	0.01 U	0.01 U	0.01 U	0.01 U	0.01 U	0.01 U
Total cPAHs TEQ in mg/kg	0.16	ND	--	0.0159	ND	0.072	ND	ND	ND	0.0181	ND	ND	ND
Polychlorinated Biphenyls (PCBs)													
Aroclor 1016 in mg/kg	--	0.02 U	0.02 U	0.02 U	0.02 U	0.02 U	0.02 U	0.02 U	0.02 U	0.02 U	0.02 U	0.02 U	0.02 U
Aroclor 1221 in mg/kg	--	0.02 U	0.02 U	0.02 U	0.02 U	0.02 U	0.02 U	0.02 U	0.02 U	0.02 U	0.02 U	0.02 U	0.02 U
Aroclor 1232 in mg/kg	--	0.02 U	0.02 U	0.02 U	0.02 U	0.02 U	0.02 U	0.02 U	0.02 U	0.02 U	0.02 U	0.02 U	0.02 U
Aroclor 1242 in mg/kg	--	0.02 U	0.02 U	0.02 U	0.02 U	0.02 U	0.02 U	0.02 U	0.02 U	0.02 U	0.02 U	0.02 U	0.02 U
Aroclor 1248 in mg/kg	--	0.02 U	0.02 U	0.02 U	0.02 U	0.02 U	0.02 U	0.02 U	0.02 U	0.02 U	0.02 U	0.02 U	0.02 U
Aroclor 1254 in mg/kg	--	0.02 U	0.02 U	0.02 U	0.02 U	0.02 U	0.02 U	0.02 U	0.02 U	0.02 U	0.02 U	0.02 U	0.02 U
Aroclor 1260 in mg/kg	--	0.02 U	0.02 U	0.02 U	0.02 U	0.02 U	0.02 U	0.02 U	0.02 U	0.02 U	0.02 U	0.02 U	0.02 U
Aroclor 1262 in mg/kg	--	0.02 U	0.02 U	0.02 U	0.02 U	0.02 U	0.02 U	0.02 U	0.02 U	0.02 U	0.02 U	0.02 U	0.02 U
Aroclor 1268 in mg/kg	--	0.02 U	0.02 U	0.02 U	0.02 U	0.02 U	0.02 U	0.02 U	0.02 U	0.02 U	0.02 U	0.02 U	0.02 U
Total PCBs (Sum of Aroclors) in mg/kg	0.12	ND	ND	ND	ND	ND	ND	ND	ND	ND	ND	ND	ND

Refer to Table 2 for notes and abbreviation definitions

Table 7. Excavation Verification Soil Data for Central Maintenance Shop (CMS) Area

Project No. 110207, K-C Worldwide Site Upland Area, Everett, WA

Analyte (By Group)	Soil Preliminary Cleanup Level - Saturated Soil	Confirmation Samples (In Place)											
		Sidewall Samples											
		CMSX-S-16 7/27/20 (4 ft) FD SAT	CMSX-S-16 7/27/20 (4 ft) SAT	CMSX-S-17 7/27/20 (4 ft) SAT	CMSX-S-18 7/27/20 (4 ft) SAT	CMSX-S-19 7/27/20 (4 ft) SAT	CMSX-S-20 7/27/20 (4 ft) SAT	CMSX-S-21 7/28/20 (4 ft) SAT	CMSX-S-22 7/28/20 (4 ft) SAT	CMSX-S-23 7/28/20 (4 ft) SAT	CMSX-S-24 7/29/20 (4 ft) SAT	CMSX-S-25 7/30/20 (4 ft) SAT	CMSX-S-26 8/3/20 (4 ft) SAT
Polycyclic Aromatic Hydrocarbons (PAHs)													
Acenaphthene in mg/kg	1.2	0.01 U	0.01 U	0.01 U	0.01 U	0.01 U	0.01 U	0.01 U	0.01 U	0.01 U	0.01 U	0.01 U	0.01 U
Acenaphthylene in mg/kg	210,000	0.01 U	0.01 U	0.01 U	0.01 U	0.01 U	0.01 U	0.01 U	0.01 U	0.01 U	0.01 U	0.01 U	0.01 U
Anthracene in mg/kg	1,100,000	0.01 U	0.01 U	0.01 U	0.01 U	0.01 U	0.01 U	0.01 U	0.01 U	0.01 U	0.01 U	0.01 U	0.01 U
Benzo(g,h,i)perylene in mg/kg	110,000	0.01 U	0.01 U	0.01 U	0.01 U	0.01 U	0.01 U	0.01 U	0.01 U	0.01 U	0.01 U	0.01 U	0.01 U
Fluoranthene in mg/kg	140,000	0.01 U	0.01 U	0.01 U	0.013	0.01 U	0.01 U	0.01 U	0.01 U	0.01 U	0.01 U	0.01 U	0.01 U
Fluorene in mg/kg	140,000	0.01 U	0.01 U	0.01 U	0.01 U	0.01 U	0.01 U	0.01 U	0.01 U	0.01 U	0.01 U	0.01 U	0.01 U
Phenanthrene in mg/kg	1,100,000	0.01 U	0.01 U	0.01 U	0.01 U	0.01 U	0.01 U	0.01 U	0.01 U	0.01 U	0.01 U	0.01 U	0.01 U
Pyrene in mg/kg	110,000	0.01 U	0.01 U	0.01 U	0.01 U	0.01 U	0.01 U	0.01 U	0.01 U	0.01 U	0.01 U	0.01 U	0.01 U
Naphthalene in mg/kg	0.86	0.01 U	0.01 U	0.01 U	0.01 U	0.01 U	0.01 U	0.01 U	0.01 U	0.01 U	0.01 U	0.01 U	0.01 U
Carcinogenic PAHs (cPAHs)													
Benz(a)anthracene in mg/kg	--	0.01 U	0.01 U	0.01 U	0.01 U	0.01 U	0.01 U	0.01 U	0.01 U	0.01 U	0.01 U	0.01 U	0.01 U
Benzo(a)pyrene in mg/kg	--	0.01 U	0.01 U	0.01 U	0.01 U	0.01 U	0.01 U	0.01 U	0.01 U	0.01 U	0.01 U	0.01 U	0.01 U
Benzo(b)fluoranthene in mg/kg	--	0.01 U	0.01 U	0.01 U	0.01 U	0.01 U	0.01 U	0.01 U	0.01 U	0.01 U	0.01 U	0.01 U	0.01 U
Benzo(k)fluoranthene in mg/kg	--	0.01 U	0.01 U	0.01 U	0.01 U	0.01 U	0.01 U	0.01 U	0.01 U	0.01 U	0.01 U	0.01 U	0.01 U
Chrysene in mg/kg	--	0.01 U	0.01 U	0.01 U	0.01 U	0.01 U	0.01 U	0.01 U	0.01 U	0.01 U	0.01 U	0.01 U	0.01 U
Dibenzo(a,h)anthracene in mg/kg	--	0.01 U	0.01 U	0.01 U	0.01 U	0.01 U	0.01 U	0.01 U	0.01 U	0.01 U	0.01 U	0.01 U	0.01 U
Indeno(1,2,3-cd)pyrene in mg/kg	--	0.01 U	0.01 U	0.01 U	0.01 U	0.01 U	0.01 U	0.01 U	0.01 U	0.01 U	0.01 U	0.01 U	0.01 U
Total cPAHs TEQ in mg/kg	0.16	ND	ND	ND	ND	ND	ND	ND	ND	ND	ND	ND	ND
Polychlorinated Biphenyls (PCBs)													
Aroclor 1016 in mg/kg	--	0.02 U	0.02 U	0.02 U	0.02 U	0.02 U	0.02 U	0.02 U	0.02 U	0.02 U	0.02 U	0.02 U	0.02 U
Aroclor 1221 in mg/kg	--	0.02 U	0.02 U	0.02 U	0.02 U	0.02 U	0.02 U	0.02 U	0.02 U	0.02 U	0.02 U	0.02 U	0.02 U
Aroclor 1232 in mg/kg	--	0.02 U	0.02 U	0.02 U	0.02 U	0.02 U	0.02 U	0.02 U	0.02 U	0.02 U	0.02 U	0.02 U	0.02 U
Aroclor 1242 in mg/kg	--	0.02 U	0.02 U	0.02 U	0.02 U	0.02 U	0.02 U	0.02 U	0.02 U	0.02 U	0.02 U	0.02 U	0.02 U
Aroclor 1248 in mg/kg	--	0.02 U	0.02 U	0.02 U	0.02 U	0.02 U	0.02 U	0.02 U	0.02 U	0.02 U	0.02 U	0.02 U	0.02 U
Aroclor 1254 in mg/kg	--	0.02 U	0.02 U	0.02 U	0.02 U	0.02 U	0.02 U	0.02 U	0.02 U	0.033	0.028	0.03	0.02 U
Aroclor 1260 in mg/kg	--	0.02 U	0.02 U	0.02 U	0.02 U	0.02 U	0.02 U	0.02 U	0.02 U	0.021	0.02 U	0.02 U	0.02 U
Aroclor 1262 in mg/kg	--	0.02 U	0.02 U	0.02 U	0.02 U	0.02 U	0.02 U	0.02 U	0.02 U	0.02 U	0.02 U	0.02 U	0.02 U
Aroclor 1268 in mg/kg	--	0.02 U	0.02 U	0.02 U	0.02 U	0.02 U	0.02 U	0.02 U	0.02 U	0.02 U	0.02 U	0.02 U	0.02 U
Total PCBs (Sum of Aroclors) in mg/kg	0.12	ND	ND	ND	ND	ND	ND	ND	ND	0.054	0.028	0.03	ND

Refer to Table 2 for notes and abbreviation definitions

Table 7. Excavation Verification Soil Data for Central Maintenance Shop (CMS) Area

Project No. 110207, K-C Worldwide Site Upland Area, Everett, WA

Analyte (By Group)	Soil Preliminary Cleanup Level - Saturated Soil	Confirmation Samples (In Place)											
		Sidewall Samples											
		CMSX-S-27 8/3/20 (4 ft) SAT	CMSX-S-32 8/11/20 (4 ft) SAT	CMSX-S-35 8/11/20 (4 ft) SAT	CMSX-S-36 8/19/20 (4 ft) SAT	CMSX-S-43 8/25/20 (4 ft) SAT	CMSX-S-44 8/25/20 (4 ft) SAT	CMSX-S-46 8/26/20 (4 ft) SAT	CMSX-S-47 8/26/20 (4 ft) SAT	CMSX-S-48 8/31/20 (4 ft) SAT	CMSX-S-49 8/31/20 (4 ft) SAT	CMSX-S-50 8/31/20 (4 ft) FD SAT	CMSX-S-50 8/31/20 (4 ft) SAT
Polycyclic Aromatic Hydrocarbons (PAHs)													
Acenaphthene in mg/kg	1.2	0.05 U	--	--	--	--	--	--	--	--	--	--	--
Acenaphthylene in mg/kg	210,000	0.05 U	--	--	--	--	--	--	--	--	--	--	--
Anthracene in mg/kg	1,100,000	0.05 U	--	--	--	--	--	--	--	--	--	--	--
Benzo(g,h,i)perylene in mg/kg	110,000	0.05 U	--	--	--	--	--	--	--	--	--	--	--
Fluoranthene in mg/kg	140,000	0.05 U	--	--	--	--	--	--	--	--	--	--	--
Fluorene in mg/kg	140,000	0.05 U	--	--	--	--	--	--	--	--	--	--	--
Phenanthrene in mg/kg	1,100,000	0.05 U	--	--	--	--	--	--	--	--	--	--	--
Pyrene in mg/kg	110,000	0.05 U	--	--	--	--	--	--	--	--	--	--	--
Naphthalene in mg/kg	0.86	0.05 U	--	--	--	--	--	--	--	--	--	--	--
Carcinogenic PAHs (cPAHs)													
Benz(a)anthracene in mg/kg	--	0.05 U	--	--	--	--	--	--	--	--	--	--	--
Benzo(a)pyrene in mg/kg	--	0.05 U	--	--	--	--	--	--	--	--	--	--	--
Benzo(b)fluoranthene in mg/kg	--	0.05 U	--	--	--	--	--	--	--	--	--	--	--
Benzo(k)fluoranthene in mg/kg	--	0.05 U	--	--	--	--	--	--	--	--	--	--	--
Chrysene in mg/kg	--	0.05 U	--	--	--	--	--	--	--	--	--	--	--
Dibenzo(a,h)anthracene in mg/kg	--	0.05 U	--	--	--	--	--	--	--	--	--	--	--
Indeno(1,2,3-cd)pyrene in mg/kg	--	0.05 U	--	--	--	--	--	--	--	--	--	--	--
Total cPAHs TEQ in mg/kg	0.16	ND	--	--	--	--	--	--	--	--	--	--	--
Polychlorinated Biphenyls (PCBs)													
Aroclor 1016 in mg/kg	--	0.02 U	0.02 U	0.02 U	0.02 U	0.02 U	0.02 U	0.02 U	0.02 U	0.02 U	0.02 U	0.02 U	0.02 U
Aroclor 1221 in mg/kg	--	0.02 U	0.02 U	0.02 U	0.02 U	0.02 U	0.02 U	0.02 U	0.02 U	0.02 U	0.02 U	0.02 U	0.02 U
Aroclor 1232 in mg/kg	--	0.02 U	0.02 U	0.02 U	0.02 U	0.02 U	0.02 U	0.02 U	0.02 U	0.02 U	0.02 U	0.02 U	0.02 U
Aroclor 1242 in mg/kg	--	0.02 U	0.02 U	0.02 U	0.02 U	0.02 U	0.02 U	0.02 U	0.02 U	0.02 U	0.02 U	0.02 U	0.02 U
Aroclor 1248 in mg/kg	--	0.02 U	0.02 U	0.02 U	0.02 U	0.02 U	0.02 U	0.02 U	0.02 U	0.02 U	0.02 U	0.02 U	0.02 U
Aroclor 1254 in mg/kg	--	0.02 U	0.02 U	0.02 U	0.02 U	0.02 U	0.043	0.02 U	0.02 U	0.2	0.14	0.02 U	0.02 U
Aroclor 1260 in mg/kg	--	0.02 U	0.02 U	0.02 U	0.02 U	0.02 U	0.026	0.02 U	0.02 U	0.02 U	0.16	0.02 U	0.02 U
Aroclor 1262 in mg/kg	--	0.02 U	0.02 U	0.02 U	0.02 U	0.02 U	0.02 U	0.02 U	0.02 U	0.02 U	0.02 U	0.02 U	0.02 U
Aroclor 1268 in mg/kg	--	0.02 U	0.02 U	0.02 U	0.02 U	0.02 U	0.02 U	0.02 U	0.02 U	0.02 U	0.02 U	0.02 U	0.02 U
Total PCBs (Sum of Aroclors) in mg/kg	0.12	ND	ND	ND	ND	ND	0.069	ND	ND	0.2	0.3	ND	ND

Refer to Table 2 for notes and abbreviation definitions

Table 7. Excavation Verification Soil Data for Central Maintenance Shop (CMS) Area

Project No. 110207, K-C Worldwide Site Upland Area, Everett, WA

Analyte (By Group)	Soil Preliminary Cleanup Level - Saturated Soil	Compliance Samples (Overexcavated)											
		Base Samples											
		CMSX-B-03 7/29/20 (6 ft) OverEx SAT	CMSX-B-05 7/28/20 (6 ft) OverEx SAT	CMSX-B-14 7/28/20 (6 ft) OverEx SAT	CMSX-B-16 7/27/20 (6 ft) OverEx SAT	CMSX-B-19 7/17/20 (6 ft) OverEx SAT	CMSX-B-20 7/17/20 (6 ft) OverEx SAT	CMSX-B-23 8/11/20 (6 ft) FD OverEx SAT	CMSX-B-24 7/16/20 (6 ft) OverEx SAT	CMSX-B-27 7/13/20 (6 ft) OverEx SAT	CMSX-B-27 8/11/20 OverEx (7 ft) SAT	CMSX-B-28 7/14/20 (6 ft) OverEx SAT	CMSX-B-29 7/14/20 (6 ft) OverEx SAT
Polycyclic Aromatic Hydrocarbons (PAHs)													
Acenaphthene in mg/kg	1.2	0.05 U	0.01 U	0.01 U	0.05 U	0.01 U	0.01 U	0.01 U	0.05 U	0.01	--	5.7	0.28
Acenaphthylene in mg/kg	210,000	0.05 U	0.01 U	0.01 U	0.05 U	0.01 U	0.01 U	0.01 U	0.05 U	0.01	--	1 U	0.05 U
Anthracene in mg/kg	1,100,000	0.05 U	0.01 U	0.01 U	0.05 U	0.01 U	0.01 U	0.01 U	0.05 U	0.01	--	12	0.43
Benzo(g,h,i)perylene in mg/kg	110,000	0.05 U	0.025	0.01 U	0.05 U	0.01 U	0.015	0.01 U	0.05 U	0.01	--	2	0.13
Fluoranthene in mg/kg	140,000	0.076	0.059	0.023	0.05 U	0.01 U	0.013	0.01 U	0.14	0.01	--	3.6	0.3
Fluorene in mg/kg	140,000	0.05 U	0.01 U	0.01 U	0.05 U	0.01 U	0.01 U	0.01 U	0.05 U	0.01	--	8.9	0.36
Phenanthrene in mg/kg	1,100,000	0.05 U	0.029	0.017	0.05 U	0.01 U	0.01 U	0.01 U	0.12	0.01	--	41	1.5
Pyrene in mg/kg	110,000	0.078	0.071	0.021	0.05 U	0.01 U	0.021	0.01 U	0.19	0.01	--	29	1.4
Naphthalene in mg/kg	0.86	0.05 U	0.01 U	0.01 U	0.05 U	0.01 U	0.01 U	0.01 U	0.05 U	0.01	--	1.4	0.05 U
Carcinogenic PAHs (cPAHs)													
Benz(a)anthracene in mg/kg	--	0.05 U	0.035	0.01 U	0.05 U	0.01 U	0.017	0.01 U	0.091	0.01	--	8.1	0.41
Benzo(a)pyrene in mg/kg	--	0.05 U	0.038	0.011	0.05 U	0.01 U	0.023	0.01 U	0.08	0.01	--	5.1	0.28
Benzo(b)fluoranthene in mg/kg	--	0.05 U	0.047	0.016	0.05 U	0.01 U	0.026	0.01 U	0.081	0.01	--	1.8	0.15
Benzo(k)fluoranthene in mg/kg	--	0.05 U	0.015	0.01 U	0.05 U	0.01 U	0.01 U	0.01 U	0.05 U	0.01	--	1 U	0.05 U
Chrysene in mg/kg	--	0.05 U	0.04	0.013	0.05 U	0.01 U	0.023	0.01 U	0.11	0.01	--	11	0.56
Dibenzo(a,h)anthracene in mg/kg	--	0.05 U	0.01 U	0.01 U	0.05 U	0.01 U	0.01 U	0.01 U	0.05 U	0.01	--	1 U	0.05 U
Indeno(1,2,3-cd)pyrene in mg/kg	--	0.05 U	0.025	0.01 U	0.05 U	0.01 U	0.014	0.01 U	0.05 U	0.01	--	1 U	0.053
Total cPAHs TEQ in mg/kg	0.16	ND	0.0511	0.0147	ND	ND	0.0299	ND	0.106	0.0151	--	6.35	0.352
Polychlorinated Biphenyls (PCBs)													
Aroclor 1016 in mg/kg	--	0.02 U	0.02 U	0.02 U	0.02 U	0.02 U	0.02 U	0.02 U	0.02 U	0.02	0.02 U	0.02 U	0.02 U
Aroclor 1221 in mg/kg	--	0.02 U	0.02 U	0.02 U	0.02 U	0.02 U	0.02 U	0.02 U	0.02 U	0.02	0.02 U	0.02 U	0.02 U
Aroclor 1232 in mg/kg	--	0.02 U	0.02 U	0.02 U	0.02 U	0.02 U	0.02 U	0.02 U	0.02 U	0.02	0.02 U	0.02 U	0.02 U
Aroclor 1242 in mg/kg	--	0.02 U	0.02 U	0.02 U	0.02 U	0.02 U	0.02 U	0.02 U	0.02 U	0.02	0.02 U	0.02 U	0.02 U
Aroclor 1248 in mg/kg	--	0.02 U	0.02 U	0.02 U	0.02 U	0.02 U	0.02 U	0.02 U	0.02 U	0.02	0.02 U	0.02 U	0.02 U
Aroclor 1254 in mg/kg	--	0.38	0.16	0.51	0.18	0.19	0.13	0.02 U	0.33	0.25	0.18	0.53	0.069
Aroclor 1260 in mg/kg	--	0.22	0.061	0.32	0.11	0.19	0.13	0.02 U	0.25 J	0.27	0.13	0.31	0.039
Aroclor 1262 in mg/kg	--	0.02 U	0.02 U	0.02 U	0.02 U	0.02 U	0.02 U	0.02 U	0.02 U	0.02	0.02 U	0.02 U	0.02 U
Aroclor 1268 in mg/kg	--	0.02 U	0.02 U	0.02 U	0.02 U	0.02 U	0.02 U	0.02 U	0.02 U	0.02	0.02 U	0.02 U	0.02 U
Total PCBs (Sum of Aroclors) in mg/kg	0.12	0.6	0.221	0.83	0.29	0.38	0.26	ND	0.58	0.66	0.31	0.84	0.108

Refer to Table 2 for notes and abbreviation definitions

Table 7. Excavation Verification Soil Data for Central Maintenance Shop (CMS) Area

Project No. 110207, K-C Worldwide Site Upland Area, Everett, WA

Analyte (By Group)	Soil Preliminary Cleanup Level - Saturated Soil	Compliance Samples (Overexcavated)											
		Base Samples							Sidewall Samples				
		CMSX-B-30 7/14/20 (6 ft) OverEx SAT	CMSX-B-30 8/4/20 (7 ft) OverEx FD SAT	CMSX-B-30 8/4/20 OverEx (7 ft) SAT	CMSX-B-31 7/13/20 (6 ft) OverEx SAT	CMSX-B-33 7/14/20 (6 ft) OverEx SAT	CMSX-B-36 7/9/20 (6 ft) OverEx SAT	CMSX-B-38 7/9/20 (6 ft) OverEx SAT	CMSX-S-01 7/9/20 (4 ft) OverEx SAT	CMSX-S-04 7/9/20 (4 ft) OverEx SAT	CMSX-S-08 7/10/20 (4 ft) OverEx SAT	CMSX-S-09 7/13/20 (4 ft) OverEx SAT	CMSX-S-10 7/13/20 (4 ft) OverEx SAT
Polycyclic Aromatic Hydrocarbons (PAHs)													
Acenaphthene in mg/kg	1.2	0.077	0.12	0.028	0.05	0.05 U	0.05 U	0.01 U	0.05 U	0.05 U	0.01 U	0.01	0.01
Acenaphthylene in mg/kg	210,000	0.05 U	0.01 U	0.01 U	0.05	0.05 U	0.05 U	0.01 U	0.05 U	0.05 U	0.01 U	0.01	0.01
Anthracene in mg/kg	1,100,000	0.15	1.6	0.042	0.05	0.05 U	0.05 U	0.01 U	0.05 U	0.05 U	0.01 U	0.01	0.01
Benzo(g,h,i)perylene in mg/kg	110,000	0.21	0.17	0.05	0.05	0.073	0.05 U	0.021	0.05 U	0.05 U	0.011	0.023	0.012
Fluoranthene in mg/kg	140,000	0.68	0.83	0.26	0.05	0.21	0.061	0.044	0.077	0.098	0.022	0.061	0.014
Fluorene in mg/kg	140,000	0.097	0.6	0.027	0.05	0.05 U	0.05 U	0.01 U	0.05 U	0.05 U	0.01 U	0.01	0.01
Phenanthrene in mg/kg	1,100,000	0.61	1.5	0.12	0.05	0.16	0.05 U	0.035	0.05 U	0.05 U	0.01 U	0.038	0.01
Pyrene in mg/kg	110,000	0.73	0.84	0.24	0.05	0.17	0.064	0.055	0.073	0.091	0.025	0.054	0.017
Naphthalene in mg/kg	0.86	0.11	0.13	0.021	0.05	0.05 U	0.05 U	0.011	0.05 U	0.05 U	0.01 U	0.012	0.01
Carcinogenic PAHs (cPAHs)													
Benz(a)anthracene in mg/kg	--	0.39	0.52	0.1	0.05	0.091	0.05 U	0.019	0.05 U	0.057	0.017	0.028	0.012
Benzo(a)pyrene in mg/kg	--	0.37	0.45	0.096	0.05	0.071	0.05 U	0.018	0.05 U	0.052	0.017	0.03	0.014
Benzo(b)fluoranthene in mg/kg	--	0.39	0.48	0.11	0.05	0.11	0.055	0.036	0.061	0.095	0.02	0.043	0.018
Benzo(k)fluoranthene in mg/kg	--	0.13	0.17	0.044	0.05	0.05 U	0.05 U	0.013	0.05 U	0.05 U	0.01 U	0.014	0.01
Chrysene in mg/kg	--	0.47	0.81	0.12	0.05	0.11	0.05 U	0.031	0.05 U	0.071	0.018	0.037	0.014
Dibenzo(a,h)anthracene in mg/kg	--	0.061	0.06	0.013	0.05	0.05 U	0.05 U	0.01 U	0.05 U	0.05 U	0.01 U	0.01	0.01
Indeno(1,2,3-cd)pyrene in mg/kg	--	0.22	0.2	0.051	0.05	0.058	0.05 U	0.02	0.05 U	0.05 U	0.011	0.022	0.011
Total cPAHs TEQ in mg/kg	0.16	0.494	0.601	0.129	0.0755	0.103	0.0408	0.0276	0.0414	0.0754	0.023	0.0421	0.0202
Polychlorinated Biphenyls (PCBs)													
Aroclor 1016 in mg/kg	--	0.02 U	0.02 U	0.02 U	0.02	0.02 U	0.02 U	0.02 U	0.02 U	0.02 U	0.02 U	0.02	0.02
Aroclor 1221 in mg/kg	--	0.02 U	0.02 U	0.02 U	0.02	0.02 U	0.02 U	0.02 U	0.02 U	0.02 U	0.02 U	0.02	0.02
Aroclor 1232 in mg/kg	--	0.02 U	0.02 U	0.02 U	0.02	0.02 U	0.02 U	0.02 U	0.02 U	0.02 U	0.02 U	0.02	0.02
Aroclor 1242 in mg/kg	--	0.02 U	0.02 U	0.02 U	0.02	0.02 U	0.02 U	0.02 U	0.02 U	0.02 U	0.02 U	0.02	0.02
Aroclor 1248 in mg/kg	--	0.02 U	0.02 U	0.02 U	0.02	0.02 U	0.02 U	0.02 U	0.02 U	0.02 U	0.02 U	0.02	0.02
Aroclor 1254 in mg/kg	--	0.03	0.12	0.042	0.61	0.49	9	0.44	0.08	0.16	0.25	2	0.11
Aroclor 1260 in mg/kg	--	0.02 U	0.12	0.025	0.59	0.28	6	0.24	0.053 J	0.069	0.17	1.8	0.11
Aroclor 1262 in mg/kg	--	0.02 U	0.02 U	0.02 U	0.02	0.02 U	0.02 U	0.02 U	0.02 U	0.02 U	0.02 U	0.02	0.02
Aroclor 1268 in mg/kg	--	0.02 U	0.02 U	0.02 U	0.02	0.02 U	0.02 U	0.02 U	0.02 U	0.02 U	0.02 U	0.02	0.02
Total PCBs (Sum of Aroclors) in mg/kg	0.12	0.03	0.24	0.067	1.34	0.77	15.0	0.68	0.133	0.229	0.42	3.94	0.36

Refer to Table 2 for notes and abbreviation definitions

Table 7. Excavation Verification Soil Data for Central Maintenance Shop (CMS) Area

Project No. 110207, K-C Worldwide Site Upland Area, Everett, WA

Analyte (By Group)	Soil Preliminary Cleanup Level - Saturated Soil	Compliance Samples (Overexcavated)											
		Sidewall Samples											
		CMSX-S-11 7/17/20 (4 ft) OverEx SAT	CMSX-S-28 8/3/20 (4 ft) OverEx SAT	CMSX-S-29 8/4/20 (4 ft) OverEx SAT	CMSX-S-30 8/5/20 (4 ft) OverEx SAT	CMSX-S-31 8/5/20 (4 ft) OverEx SAT	CMSX-S-33 8/11/20 (4 ft) OverEx SAT	CMSX-S-34 8/11/20 (4 ft) OverEx SAT	CMSX-S-37 8/19/20 (4 ft) OverEx SAT	CMSX-S-38 8/19/20 (4 ft) OverEx SAT	CMSX-S-39 8/19/20 (4 ft) OverEx SAT	CMSX-S-40 8/20/20 (4 ft) OverEx SAT	CMSX-S-41 8/25/20 (4 ft) FD OverEx SAT
Polycyclic Aromatic Hydrocarbons (PAHs)													
Acenaphthene in mg/kg	1.2	0.01 U	0.05 U	0.05 U	0.01 U	0.01 U	--	--	--	--	--	--	--
Acenaphthylene in mg/kg	210,000	0.01 U	0.05 U	0.05 U	0.01 U	0.01 U	--	--	--	--	--	--	--
Anthracene in mg/kg	1,100,000	0.01 U	0.05 U	0.05 U	0.01 U	0.013	--	--	--	--	--	--	--
Benzo(g,h,i)perylene in mg/kg	110,000	0.012	0.05 U	0.05 U	0.012	0.026	--	--	--	--	--	--	--
Fluoranthene in mg/kg	140,000	0.023	0.05 U	0.096	0.022	0.088	--	--	--	--	--	--	--
Fluorene in mg/kg	140,000	0.01 U	0.05 U	0.05 U	0.01 U	0.01 U	--	--	--	--	--	--	--
Phenanthrene in mg/kg	1,100,000	0.016	0.05 U	0.05 U	0.028	0.05	--	--	--	--	--	--	--
Pyrene in mg/kg	110,000	0.026	0.061	0.09	0.031	0.1	--	--	--	--	--	--	--
Naphthalene in mg/kg	0.86	0.01 U	0.05 U	0.05 U	0.01 U	0.01 U	--	--	--	--	--	--	--
Carcinogenic PAHs (cPAHs)													
Benz(a)anthracene in mg/kg	--	0.017	0.05 U	0.051	0.015	0.052	--	--	--	--	--	--	--
Benzo(a)pyrene in mg/kg	--	0.017	0.05	0.053	0.02	0.055	--	--	--	--	--	--	--
Benzo(b)fluoranthene in mg/kg	--	0.022	0.058	0.077	0.022	0.064	--	--	--	--	--	--	--
Benzo(k)fluoranthene in mg/kg	--	0.01 U	0.05 U	0.05 U	0.01 U	0.022	--	--	--	--	--	--	--
Chrysene in mg/kg	--	0.025	0.066	0.073	0.025	0.062	--	--	--	--	--	--	--
Dibenzo(a,h)anthracene in mg/kg	--	0.01 U	0.05 U	0.05 U	0.01 U	0.01 U	--	--	--	--	--	--	--
Indeno(1,2,3-cd)pyrene in mg/kg	--	0.011	0.05 U	0.05 U	0.012	0.029	--	--	--	--	--	--	--
Total cPAHs TEQ in mg/kg	0.16	0.0233	0.0665	0.074	0.0262	0.0728	--	--	--	--	--	--	--
Polychlorinated Biphenyls (PCBs)													
Aroclor 1016 in mg/kg	--	0.02 U	0.02 U	0.02 U	0.02 U	0.02 U	0.02 U	0.02 U	0.02 U	0.02 U	0.02 U	0.02 U	0.02 U
Aroclor 1221 in mg/kg	--	0.02 U	0.02 U	0.02 U	0.02 U	0.02 U	0.02 U	0.02 U	0.02 U	0.02 U	0.02 U	0.02 U	0.02 U
Aroclor 1232 in mg/kg	--	0.02 U	0.02 U	0.02 U	0.02 U	0.02 U	0.02 U	0.02 U	0.02 U	0.02 U	0.02 U	0.02 U	0.02 U
Aroclor 1242 in mg/kg	--	0.02 U	0.02 U	0.02 U	0.02 U	0.02 U	0.02 U	0.02 U	0.02 U	0.02 U	0.02 U	0.02 U	0.02 U
Aroclor 1248 in mg/kg	--	0.02 U	0.02 U	0.02 U	0.02 U	0.02 U	0.02 U	0.02 U	0.02 U	0.02 U	0.02 U	0.02 U	0.02 U
Aroclor 1254 in mg/kg	--	0.086	0.2	0.43	0.13	0.078	0.087	0.38	0.29	0.13	0.098	0.17	0.17
Aroclor 1260 in mg/kg	--	0.09	0.17	0.29	0.1	0.077	0.069	0.33	0.26	0.081	0.075	0.14	0.18
Aroclor 1262 in mg/kg	--	0.02 U	0.02 U	0.02 U	0.02 U	0.02 U	0.02 U	0.02 U	0.02 U	0.02 U	0.02 U	0.02 U	0.02 U
Aroclor 1268 in mg/kg	--	0.02 U	0.02 U	0.02 U	0.02 U	0.02 U	0.02 U	0.02 U	0.02 U	0.02 U	0.02 U	0.02 U	0.02 U
Total PCBs (Sum of Aroclors) in mg/kg	0.12	0.176	0.37	0.72	0.23	0.155	0.156	0.71	0.55	0.211	0.173	0.31	0.35

Refer to Table 2 for notes and abbreviation definitions

Table 7. Excavation Verification Soil Data for Central Maintenance Shop (CMS) Area

Project No. 110207, K-C Worldwide Site Upland Area, Everett, WA

Analyte (By Group)	Soil Preliminary Cleanup Level - Saturated Soil	Compliance Samples (Overexcavated) Sidewall Samples		
		CMSX-S-41 8/25/20 (4 ft) OverEx SAT	CMSX-S-42 8/25/20 (4 ft) OverEx SAT	CMSX-S-45 8/26/20 (4 ft) OverEx SAT
Polycyclic Aromatic Hydrocarbons (PAHs)				
Acenaphthene in mg/kg	1.2	--	--	--
Acenaphthylene in mg/kg	210,000	--	--	--
Anthracene in mg/kg	1,100,000	--	--	--
Benzo(g,h,i)perylene in mg/kg	110,000	--	--	--
Fluoranthene in mg/kg	140,000	--	--	--
Fluorene in mg/kg	140,000	--	--	--
Phenanthrene in mg/kg	1,100,000	--	--	--
Pyrene in mg/kg	110,000	--	--	--
Naphthalene in mg/kg	0.86	--	--	--
Carcinogenic PAHs (cPAHs)				
Benz(a)anthracene in mg/kg	--	--	--	--
Benzo(a)pyrene in mg/kg	--	--	--	--
Benzo(b)fluoranthene in mg/kg	--	--	--	--
Benzo(k)fluoranthene in mg/kg	--	--	--	--
Chrysene in mg/kg	--	--	--	--
Dibenzo(a,h)anthracene in mg/kg	--	--	--	--
Indeno(1,2,3-cd)pyrene in mg/kg	--	--	--	--
Total cPAHs TEQ in mg/kg	0.16	--	--	--
Polychlorinated Biphenyls (PCBs)				
Aroclor 1016 in mg/kg	--	0.02 U	0.02 U	0.02 U
Aroclor 1221 in mg/kg	--	0.02 U	0.02 U	0.02 U
Aroclor 1232 in mg/kg	--	0.02 U	0.02 U	0.02 U
Aroclor 1242 in mg/kg	--	0.02 U	0.02 U	0.02 U
Aroclor 1248 in mg/kg	--	0.02 U	0.02 U	0.02 U
Aroclor 1254 in mg/kg	--	0.21	4.7	0.64
Aroclor 1260 in mg/kg	--	0.23	5.3	0.66
Aroclor 1262 in mg/kg	--	0.02 U	0.02 U	0.02 U
Aroclor 1268 in mg/kg	--	0.02 U	0.02 U	0.02 U
Total PCBs (Sum of Aroclors) in mg/kg	0.12	0.44	10.0	1.3

Refer to Table 2 for notes and abbreviation definitions

Table 8. Excavation Verification Soil Data for Bunker Oil Fuel Pipes Removal in CMS Area

Project No. 110207, K-C Worldwide Site Upland Area, Everett, WA

			Confirmation Samples (In Place)											
			Base Samples					Sidewall Samples						
Analyte (By Group)	Soil Preliminary Cleanup Level - Saturated Soil	Soil Preliminary Cleanup Level - Unsaturated Soil	CMSB1X-B-01 8/26/20 (6 ft) SAT	CMSB1X-B-02 8/27/20 (6 ft) SAT	CMSB1X-B-03 8/27/20 (6 ft) SAT	CMSB2X-B-01 8/20/20 (7 ft) SAT	CMSB2X-B-02 8/20/20 (7.5 ft) SAT	CMSB1X-S-01 8/26/20 (4 ft) SAT	CMSB1X-S-02 8/26/20 (4 ft) SAT	CMSB1X-S-03 8/27/20 (4 ft) SAT	CMSB1X-S-04 8/27/20 (4 ft) SAT	CMSB1X-S-05 8/27/20 (4 ft) SAT	CMSB2X-S-01 8/19/20 (4 ft) SAT	CMSB2X-S-02 8/19/20 (4 ft) SAT
Total Petroleum Hydrocarbons (TPH)														
Diesel-Range Hydrocarbons in mg/kg	2,000	2,000	50 U	50 U	50 U	50 U	50 U	50 U	50 U	50 U	50 U	50 U	50 U	50 U
Residual (Oil)-Range Hydrocarbons in mg/kg	2,000	2,000	250 U	250 U	250 U	250 U	250 U	250 U	250 U	250 U	250 U	250 U	250 U	250 U
Total TPH in mg/kg	2,000	2,000	ND	ND	ND	ND	ND	ND	ND	ND	ND	ND	ND	ND
Polycyclic Aromatic Hydrocarbons (PAHs)														
Acenaphthene in mg/kg	1.2	23	0.017	0.084	0.01 U	0.011	0.03	--	--	--	--	--	--	--
Acenaphthylene in mg/kg	210,000	210,000	0.01 U	0.01 U	0.01 U	0.01 U	0.01 U	--	--	--	--	--	--	--
Anthracene in mg/kg	1,100,000	1,100,000	0.01 U	0.01 U	0.01 U	0.01 U	0.01 U	--	--	--	--	--	--	--
Benzo(g,h,i)perylene in mg/kg	110,000	110,000	0.01 U	0.011	0.01 U	0.01 U	0.01 U	--	--	--	--	--	--	--
Fluoranthene in mg/kg	140,000	140,000	0.017	0.042	0.01 U	0.01 U	0.01 U	--	--	--	--	--	--	--
Fluorene in mg/kg	140,000	140,000	0.01 U	0.014	0.01 U	0.01 U	0.01 U	--	--	--	--	--	--	--
Phenanthrene in mg/kg	1,100,000	1,100,000	0.01 U	0.019	0.01 U	0.01 U	0.01 U	--	--	--	--	--	--	--
Pyrene in mg/kg	110,000	110,000	0.014	0.044	0.01 U	0.01 U	0.01 U	--	--	--	--	--	--	--
Naphthalene in mg/kg	0.86	17	0.01 U	0.01 U	0.01 U	0.01 U	0.01 U	--	--	--	--	--	--	--
Carcinogenic PAHs (cPAHs)														
Benz(a)anthracene in mg/kg	--	--	0.01 U	0.015	0.01 U	0.01 U	0.01 U	--	--	--	--	--	--	--
Benzo(a)pyrene in mg/kg	--	--	0.01 U	0.016	0.01 U	0.01 U	0.01 U	--	--	--	--	--	--	--
Benzo(b)fluoranthene in mg/kg	--	--	0.01 U	0.02	0.01 U	0.01 U	0.01 U	--	--	--	--	--	--	--
Benzo(k)fluoranthene in mg/kg	--	--	0.01 U	0.01 U	0.01 U	0.01 U	0.01 U	--	--	--	--	--	--	--
Chrysene in mg/kg	--	--	0.01 U	0.014	0.01 U	0.01 U	0.01 U	--	--	--	--	--	--	--
Dibenzo(a,h)anthracene in mg/kg	--	--	0.01 U	0.01 U	0.01 U	0.01 U	0.01 U	--	--	--	--	--	--	--
Indeno(1,2,3-cd)pyrene in mg/kg	--	--	0.01 U	0.011	0.01 U	0.01 U	0.01 U	--	--	--	--	--	--	--
Total cPAHs TEQ in mg/kg	0.16	3.2	ND	0.0217	ND	ND	ND	--	--	--	--	--	--	--

Refer to Table 2 for notes and abbreviation definitions.

Table 9. Excavation Verification Soil Data for Clark Nickerson Area

Project No. 110207, K-C Worldwide Site Upland Area, Everett, WA

Clark Nickerson Area: East

		Confirmation Samples (In Place)										
		Base Samples			Sidewall Samples							
Analyte (By Group)	Soil Preliminary Cleanup Level - Saturated Soil	CNX-E-B-01 6/24/20 (6 ft) SAT	CNX-E-B-02 6/24/20 (6 ft) SAT	CNX-E-B-03 6/24/20 (6 ft) SAT	CNX-E-S-01 6/24/20 (3 ft) SAT	CNX-E-S-02 6/24/20 (3 ft) SAT	CNX-E-S-03 6/24/20 (3 ft) SAT	CNX-E-S-04 6/24/20 (3 ft) SAT	CNX-E-S-05 6/24/20 (3 ft) SAT	CNX-E-S-06 6/24/20 (3 ft) SAT	CNX-E-S-07 6/24/20 (3 ft) SAT	CNX-E-S-08 6/24/20 (3 ft) SAT
Polycyclic Aromatic Hydrocarbons (PAHs)												
Acenaphthene in mg/kg	1.2	0.28	0.01 U	0.01 U	0.01 U	0.01 U	0.01 U	0.01 U	0.01 U	0.01 U	0.01 U	0.01 U
Acenaphthylene in mg/kg	210,000	0.01 U	0.01 U	0.01 U	0.01 U	0.01 U	0.01 U	0.01 U	0.01 U	0.01 U	0.01 U	0.01 U
Anthracene in mg/kg	1,100,000	0.011	0.01 U	0.01 U	0.01 U	0.01 U	0.01 U	0.01 U	0.01 U	0.01 U	0.01 U	0.01 U
Benzo(g,h,i)perylene in mg/kg	110,000	0.01 U	0.01 U	0.01 U	0.01 U	0.036	0.015	0.01 U	0.01 U	0.01 U	0.01 U	0.01 U
Fluoranthene in mg/kg	140,000	0.07	0.019	0.016	0.012	0.12	0.055	0.01 U	0.011	0.01 U	0.01 U	0.028
Fluorene in mg/kg	140,000	0.14	0.01 U	0.01 U	0.01 U	0.01 U	0.01 U	0.01 U	0.01 U	0.01 U	0.01 U	0.01 U
Phenanthrene in mg/kg	1,100,000	0.072	0.011	0.01 U	0.01 U	0.044	0.019	0.01 U	0.01 U	0.01 U	0.01 U	0.01 U
Pyrene in mg/kg	110,000	0.059	0.018	0.013	0.011	0.12	0.051	0.01 U	0.011	0.01 U	0.01 U	0.026
Naphthalene in mg/kg	0.86	0.27	0.022	0.01 U	0.01 U	0.01 U	0.01 U	0.01 U	0.01 U	0.01 U	0.01 U	0.01 U
Carcinogenic PAHs (cPAHs)												
Benz(a)anthracene in mg/kg	--	0.012	0.01 U	0.01 U	0.01 U	0.057	0.029	0.01 U	0.01 U	0.01 U	0.01 U	0.014
Benzo(a)pyrene in mg/kg	--	0.011	0.01 U	0.01 U	0.01 U	0.065	0.032	0.01 U	0.01 U	0.01 U	0.01 U	0.011
Benzo(b)fluoranthene in mg/kg	--	0.012	0.01 U	0.01 U	0.01 U	0.081	0.037	0.01 U	0.01 U	0.01 U	0.01 U	0.011
Benzo(k)fluoranthene in mg/kg	--	0.01 U	0.01 U	0.01 U	0.01 U	0.026	0.012	0.01 U	0.01 U	0.01 U	0.01 U	0.01 U
Chrysene in mg/kg	--	0.012	0.01 U	0.01 U	0.01 U	0.069	0.031	0.01 U	0.01 U	0.01 U	0.01 U	0.013
Dibenzo(a,h)anthracene in mg/kg	--	0.01 U	0.01 U	0.01 U	0.01 U	0.01 U	0.01 U	0.01 U	0.01 U	0.01 U	0.01 U	0.01 U
Indeno(1,2,3-cd)pyrene in mg/kg	--	0.01 U	0.01 U	0.01 U	0.01 U	0.042	0.019	0.01 U	0.01 U	0.01 U	0.01 U	0.01 U
Total cPAHs TEQ in mg/kg	0.16	0.015	ND	ND	ND	0.0868	0.0425	ND	ND	ND	ND	0.0151

Clark Nickerson Area: West

		Confirmation Samples (In Place)												Confirmation Sample (Overexcavated)
		Base Samples			Sidewall Samples									Base Sample
Analyte (By Group)	Soil Preliminary Cleanup Level - Saturated Soil	CNX-W-B-01 6/23/20 (6 ft) SAT	CNX-W-B-02 6/23/20 (6 ft) SAT	CNX-W-B-03 6/29/20 (7 ft) SAT	CNX-W-S-01 6/23/20 (5 ft) SAT	CNX-W-S-02 6/23/20 (5 ft) SAT	CNX-W-S-03 6/23/20 (5 ft) FD SAT	CNX-W-S-03 6/23/20 (5 ft) SAT	CNX-W-S-04 6/23/20 (5 ft) SAT	CNX-W-S-05 6/23/20 (5 ft) SAT	CNX-W-S-06 6/23/20 (5 ft) SAT	CNX-W-S-07 6/23/20 (5 ft) SAT	CNX-W-S-08 6/23/20 (5 ft) SAT	CNX-W-B-03 6/23/20 (6 ft) OverEx SAT
Polycyclic Aromatic Hydrocarbons (PAHs)														
Acenaphthene in mg/kg	1.2	0.01 U	0.01 U	0.012	0.01 U	0.01 U	0.01 U	0.01 U	0.01 U	0.01 U	0.01 U	0.01 U	0.01 U	0.01 U
Acenaphthylene in mg/kg	210,000	0.01 U	0.01 U	0.01 U	0.01 U	0.01 U	0.01 U	0.01 U	0.01 U	0.01 U	0.01 U	0.01 U	0.01 U	0.012
Anthracene in mg/kg	1,100,000	0.01 U	0.01 U	0.027	0.01 U	0.01 U	0.01 U	0.01 U	0.01 U	0.01 U	0.01 U	0.01 U	0.01 U	0.026
Benzo(g,h,i)perylene in mg/kg	110,000	0.01 U	0.01 U	0.12	0.01 U	0.01 U	0.01 U	0.01 U	0.01 U	0.01 U	0.01 U	0.01 U	0.01 U	0.15
Fluoranthene in mg/kg	140,000	0.019	0.01 U	0.32	0.01 U	0.01 U	0.022	0.01 U	0.01 U	0.01 U	0.01 U	0.01 U	0.01 U	0.35
Fluorene in mg/kg	140,000	0.01 U	0.01 U	0.013	0.01 U	0.01 U	0.01 U	0.01 U	0.01 U	0.01 U	0.01 U	0.01 U	0.01 U	0.01
Phenanthrene in mg/kg	1,100,000	0.01 U	0.01 U	0.13	0.01 U	0.01 U	0.019	0.01 U	0.01 U	0.01 U	0.01 U	0.01 U	0.01 U	0.16
Pyrene in mg/kg	110,000	0.022	0.011	0.32	0.01 U	0.01 U	0.025	0.01 U	0.01 U	0.01 U	0.01 U	0.01 U	0.01 U	0.38
Naphthalene in mg/kg	0.86	0.01 U	0.01 U	0.011	0.01 U	0.01 U	0.01 U	0.01 U	0.01 U	0.01 U	0.01 U	0.01 U	0.01 U	0.01 U
Carcinogenic PAHs (cPAHs)														
Benz(a)anthracene in mg/kg	--	0.01	0.01 U	0.17	0.01 U	0.01 U	0.016	0.01 U	0.01 U	0.01 U	0.01 U	0.01 U	0.01 U	0.16
Benzo(a)pyrene in mg/kg	--	0.012	0.01 U	0.28	0.01 U	0.01 U	0.013	0.01 U	0.01 U	0.01 U	0.01 U	0.01 U	0.01 U	0.22
Benzo(b)fluoranthene in mg/kg	--	0.013	0.01 U	0.34	0.01 U	0.01 U	0.014	0.01 U	0.01 U	0.01 U	0.01 U	0.01 U	0.01 U	0.27
Benzo(k)fluoranthene in mg/kg	--	0.01 U	0.01 U	0.098	0.01 U	0.01 U	0.01 U	0.01 U	0.01 U	0.01 U	0.01 U	0.01 U	0.01 U	0.076
Chrysene in mg/kg	--	0.012	0.01 U	0.2	0.01 U	0.01 U	0.014	0.01 U	0.01 U	0.01 U	0.01 U	0.01 U	0.01 U	0.19
Dibenzo(a,h)anthracene in mg/kg	--	0.01 U	0.01 U	0.027	0.01 U	0.01 U	0.01 U	0.01 U	0.01 U	0.01 U	0.01 U	0.01 U	0.01 U	0.03
Indeno(1,2,3-cd)pyrene in mg/kg	--	0.01 U	0.01 U	0.15	0.01 U	0.01 U	0.01 U	0.01 U	0.01 U	0.01 U	0.01 U	0.01 U	0.01 U	0.16
Total cPAHs TEQ in mg/kg	0.16	0.0159	ND	0.361	ND	ND	0.0176	ND	ND	ND	ND	ND	ND	0.292

Refer to Table 2 for notes and abbreviation definitions.

Table 10. Excavation Verification Soil Quality Data for Digester Trench Excavation

Project No. 110207, K-C Worldwide Site Upland Area, Everett, WA

Analyte (By Group)	Soil Preliminary Cleanup Level - Saturated Soil	Soil Preliminary Cleanup Level - Unsaturated Soil	Excavated Oily Material	Confirmation Samples (In Place)							
				Base Samples							Sidewall Sample
			B2-01[a] 9/1/20 (N/A) SAT	DTX-B-02 10/2/20 (8 ft) SAT	DTX-B-03 10/2/20 (8 ft) SAT	DTX-B-04 10/2/20 (8 ft) SAT	DTX-B-05 10/2/20 (8 ft) FD SAT	DTX-B-05 10/2/20 (8 ft) SAT	DTX-B-06 10/28/20 (8 ft)	DTX-B2-Trench-01 9/25/20 (8 ft) SAT	DTX-S-01 10/28/20 (4 ft)
Total Petroleum Hydrocarbons (TPH)											
Diesel-Range Hydrocarbons in mg/kg	2,000	2,000	5,900 x	50 U	50 U	50 U	50 U	50 U	50 U	50 U	50 U
Residual (Oil)-Range Hydrocarbons in mg/kg	2,000	2,000	24,000	250 U	250 U	250 U	250 U	250 U	250 U	250 U	250 U
Total TPHs in mg/kg	2,000	2,000	29,900	ND	ND	ND	ND	ND	--	ND	--
Metals											
Arsenic in mg/kg	20	20	4.64	--	--	--	--	--	--	--	--
Barium in mg/kg	--	--	59.3	--	--	--	--	--	--	--	--
Cadmium in mg/kg	--	--	2.33	--	--	--	--	--	--	--	--
Copper in mg/kg	36	36	267	25 U	39.6	26.8	51	45.2	25 U	40.1	48.2
Lead in mg/kg	1,000	1,000	304	7.47	11.4	31.2	13.7	12.7	5.66	19.4	8.6
TCLP Lead in mg/L	--	--	1 U	--	--	--	--	--	--	--	--
Mercury in mg/kg	0.1	0.1	3.9	0.1 U	0.16	0.1 U	0.2	0.14	0.1 U	0.12	0.15
Selenium in mg/kg	--	--	2 U	--	--	--	--	--	--	--	--
Silver in mg/kg	--	--	2 U	--	--	--	--	--	--	--	--
Zinc in mg/kg	100	100	317	44.4	52.9	46.7	65.5	55.4	43.2	61.8	25 U

Refer to Table 2 for notes and abbreviation definitions.

Table 11. Excavation Verification Soil Data for GFB12 Area

Project No. 110207, K-C Worldwide Site Upland Area, Everett, WA

			Confirmation Samples (In Place)											
			Base Samples			Sidewall Samples								
Analyte (By Group)	Soil Preliminary Cleanup Level - Saturated Soil	Soil Preliminary Cleanup Level - Unsaturated Soil	GFB12X-B-01 10/20/20 (8 ft) SAT	GFB12X-B-02 10/21/20 (8 ft) SAT	GFB12X-B-03 10/21/20 (8 ft) SAT	GFB12X-S-03 10/15/20 (4 ft)	GFB12X-S-09 10/20/20 (4 ft)	GFB12X-S-10 10/20/20 (4 ft)	GFB12X-S-11 10/20/20 (4 ft)	GFB12X-S-12 10/20/20 (4 ft)	GFB12X-S-13 10/21/20 (4 ft)	GFB12X-S-14 10/21/20 (4 ft)	GFB12X-S-18 11/4/20 (4 ft)
Metals														
Mercury in mg/kg	0.1	0.1	0.1 U	0.12	0.2	0.1 U	**0.19**	0.1 U	0.1 U	**0.11**	**0.19**	**0.22**	**0.75**

			Compliance Samples (Overexcavated)												Compliance Samples (Overexcavated)		
			Base Samples		Sidewall Samples										Precharacterization Test Pit Samples		
Analyte (By Group)	Soil Preliminary Cleanup Level - Saturated Soil	Soil Preliminary Cleanup Level - Unsaturated Soil	GFB12X-B-01 10/15/20 (6 ft) OverEx	GFB12X-B-02 10/15/20 (6 ft) OverEx	GFB12X-S-01 10/15/20 (4 ft) OverEx	GFB12X-S-02 10/15/20 (4 ft) OverEx	GFB12X-S-04 10/15/20 (4 ft) OverEx	GFB12X-S-05 10/15/20 (4 ft) OverEx	GFB12X-S-06 10/15/20 (4 ft) FD OverEx	GFB12X-S-06 10/15/20 (4 ft) OverEx	GFB12X-S-07 10/15/20 (4 ft) OverEx	GFB12X-S-08 10/15/20 (4 ft) OverEx	GFB12X-S-15 10/21/20 (4 ft) OverEx	GFB12X-S-16 10/29/20 (4 ft) OverEx	GFB12X-S-17 11/3/20 (4 ft) OverEx	GFB12X-TP-01 8/11/20 (5 ft) OverEx	GFB12X-TP-02 8/11/20 (5 ft) OverEx	GFB12X-TP-03 8/11/20 (5 ft) OverEx
Metals																		
Mercury in mg/kg	0.1	0.1	**0.26**	**1.5**	**6.1**	**1.2**	**0.28**	**0.27**	**1.3**	**1.2**	**0.35**	**0.2**	**0.5**	**1.2**	**1.1**	**0.33** J	**0.43** J	**0.48** J

Refer to Table 2 for notes and abbreviation definitions.

Table 12. Excavation Verification Soil Data for Hydraulic Barker Area

Project No. 110207, K-C Worldwide Site Upland Area, Everett, WA

		Confirmation Samples (In Place)																		Compliance Samples (Overexcavation)	
		Base Samples			Sidewall Samples															Sidewall Samples	
Analyte (By Group)	Soil Preliminary Cleanup Level - Saturated Soil	HBX-B-01 5/29/20 (13 ft) SAT	HBX-B-02 5/29/20 (13 ft) SAT	HBX-B-03 5/29/20 (13 ft) SAT	HBX-S-02 5/28/20 (9 ft) SAT	HBX-S-02 5/29/20 (12 ft) SAT	HBX-S-03 5/28/20 (9 ft) FD SAT	HBX-S-03 5/28/20 (9 ft) SAT	HBX-S-03 5/29/20 (12 ft) SAT	HBX-S-04 5/28/20 (9 ft) SAT	HBX-S-04 5/29/20 (12 ft) SAT	HBX-S-05 5/29/20 (12 ft) SAT	HBX-S-06 6/4/20 (9 ft) SAT	HBX-S-06 5/29/20 (12 ft) SAT	HBX-S-07 6/4/20 (9 ft) SAT	HBX-S-07 5/29/20 (12 ft) SAT	HBX-S-08 6/4/20 (9 ft) SAT	HBX-S-08 5/29/20 (12 ft) SAT	HBX-S-09 6/4/20 (9 ft) SAT	HBX-S-01 5/28/20 (9 ft) OverEx SAT	HBX-S-05 6/4/20 (9 ft) OverEx SAT
Total Petroleum Hydrocarbons (TPH)																					
Diesel-Range Hydrocarbons in mg/kg	2,000	50 U	18,000	1,600	50 U	50 U	50 U	50 U	520 x	50 U	50 U	50 U	50 U	50 U	50 U	50 U	400 x	50 U	50 U	--	--
Residual (Oil)-Range Hydrocarbons in mg/kg	2,000	250 U	1,100 x	250 U	250 U	250 U	250 U	250 U	810	250 U	250 U	250 U	250 U	250 U	250 U	250 U	360	250 U	250 U	--	--
Total TPHs in mg/kg	2,000	ND	19,100 x	1,720	ND	ND	ND	ND	1,330	ND	ND	ND	ND	ND	ND	ND	760	ND	ND	--	--
Metals																					
Copper in mg/kg	36	26.5	47.4	64.4	29.3	35.7	28.8	45.2	10.8	29.9	11 J	52.2	19.4	39.6	63.8	9.64	57.4	9.89	24.1	--	--
Mercury in mg/kg	0.1	0.2	0.34	0.15	0.07 U	0.07 U	0.07 U	0.076	0.07 U	0.086	0.07 U	0.07 U	0.07 U	0.08	0.19	0.07 U	0.2	0.07 U	0.07 U	--	--
Zinc in mg/kg	85	70.9 J	145 J	48.4 J	62.1	60.8 J	43.4	49.1	18.3 J	72.8	19.4 J	65.4 J	48.2	75.9 J	94.5	17.6 J	62.4	17.4 J	130	--	--
Polychlorinated Biphenyls (PCBs)																					
Aroclor 1016 in mg/kg	--	0.02 U	0.02 U	0.02 U	0.02 U	0.02 U	0.02 U	0.02 U	0.02 U	0.02 U	0.02 U	0.02 U	0.02 U	0.02 U	0.02 U	0.02 U	0.02 U	0.02 U	0.02 U	0.02 U	0.02 U
Aroclor 1221 in mg/kg	--	0.02 U	0.02 U	0.02 U	0.02 U	0.02 U	0.02 U	0.02 U	0.02 U	0.02 U	0.02 U	0.02 U	0.02 U	0.02 U	0.02 U	0.02 U	0.02 U	0.02 U	0.02 U	0.02 U	0.02 U
Aroclor 1232 in mg/kg	--	0.02 U	0.02 U	0.02 U	0.02 U	0.02 U	0.02 U	0.02 U	0.02 U	0.02 U	0.02 U	0.02 U	0.02 U	0.02 U	0.02 U	0.02 U	0.02 U	0.02 U	0.02 U	0.02 U	0.02 U
Aroclor 1242 in mg/kg	--	0.02 U	0.02 U	0.02 U	0.02 U	0.02 U	0.02 U	0.02 U	0.02 U	0.02 U	0.02 U	0.02 U	0.02 U	0.02 U	0.02 U	0.02 U	0.02 U	0.02 U	0.02 U	0.02 U	0.02 U
Aroclor 1248 in mg/kg	--	0.02 U	0.02 U	0.02 U	0.02 U	0.02 U	0.02 U	0.02 U	0.02 U	0.02 U	0.02 U	0.02 U	0.02 U	0.02 U	0.02 U	0.02 U	0.02 U	0.02 U	0.02 U	0.02 U	0.02 U
Aroclor 1254 in mg/kg	--	0.02 U	0.02 U	0.02 U	0.054	0.02 U	0.02 U	0.02 U	0.02 U	0.02 U	0.02 U	0.02 U	0.02 U	0.02 U	0.02 U	0.02 U	0.02 U	0.02 U	0.02 U	0.023	0.036
Aroclor 1260 in mg/kg	--	0.02 U	0.02 U	0.02 U	0.02 U	0.02 U	0.02 U	0.02 U	0.02 U	0.02 U	0.02 U	0.02 U	0.02 U	0.02 U	0.02 U	0.02 U	0.02 U	0.02 U	0.12	0.02 U	0.02 U
Aroclor 1262 in mg/kg	--	0.02 U	0.02 U	0.02 U	0.02 U	0.02 U	0.057	0.04	0.02 U	0.02 U	0.02 U	0.02 U	0.02 U	0.02 U	0.02 U	0.02 U	0.02 U	0.02 U	0.02 U	0.02 U	0.02 U
Aroclor 1268 in mg/kg	--	0.02 U	0.02 U	0.02 U	0.02 U	0.02 U	0.02 U	0.02 U	0.02 U	0.02 U	0.02 U	0.02 U	0.02 U	0.02 U	0.02 U	0.02 U	0.02 U	0.02 U	0.02 U	0.51	0.59
Total PCBs (Sum of Aroclors) in mg/kg	0.12	ND	ND	ND	0.054	ND	0.057	0.04	ND	ND	ND	ND	ND	ND	ND	ND	ND	ND	0.12	0.533	0.626

Refer to Table 2 for notes and abbreviation definitions.

Table 13. Excavation Verification Soil Data for Log Pond Chip Conveyor Area

Project No. 110207, K-C Worldwide Site Upland Area, Everett, WA

			Confirmation Samples (In Place)												
			Base Samples			Sidewall Samples									
Analyte (By Group)	Soil Preliminary Cleanup Level - Saturated Soil	Soil Preliminary Cleanup Level - Unsaturated Soil	LPX-B-01 6/17/20 (8 ft) SAT	LPX-B-02 6/18/20 (8 ft) SAT	LPX-B-03 6/29/20 (10 ft) SAT	LPX-S-01 6/17/20 (6.5 ft) SAT	LPX-S-02 6/17/20 (6.5 ft) SAT	LPX-S-03 6/17/20 (6.5 ft) SAT	LPX-S-04 6/18/20 (6.5 ft) SAT	LPX-S-14 6/23/20 (6.5 ft) SAT	LPX-S-15 6/23/20 (6.5 ft) SAT	LPX-S-18 6/29/20 (6.5 ft) SAT	LPX-S-19 6/29/20 (6.5 ft) SAT	LPX-S-20 6/29/20 (6.5 ft) SAT	LPX-S-21 6/29/20 (6.5 ft) SAT
Total Petroleum Hydrocarbons (TPH)															
Gasoline-Range Hydrocarbons in mg/kg	100	100	5 U	5 U	--	5 U	5 U	9.8	5 U	--	--	--	--	--	--
Diesel-Range Hydrocarbons in mg/kg	2,000	2,000	50 U	50 U	--	50 U	50 U	50 U	66	--	--	--	--	--	--
Residual (Oil)-Range Hydrocarbons in mg/kg	2,000	2,000	250 U	250 U	--	250 U	250 U	250 U	250 U	--	--	--	--	--	--
Total TPHs in mg/kg	2,000	2,000	ND	ND	--	ND	ND	ND	191	--	--	--	--	--	--
Metals															
Mercury in mg/kg	0.1	0.1	0.1 U	0.1 U	0.14	0.1 U	0.1 U	0.1 U	0.1 U	0.1 U	0.1 U	0.11	0.17	0.1 U	0.13
Carcinogenic Polycyclic Aromatic Hydrocarbons (cPAHs)															
Benz(a)anthracene in mg/kg	--	--	0.087	0.022	0.064	0.043	0.01 U	0.01 U	0.053	0.087	0.051	0.13	0.013	0.11	0.045
Benzo(a)pyrene in mg/kg	--	--	0.11	0.023	0.095	0.043	0.01 U	0.01 U	0.063	0.088	0.042	0.13	0.019	0.14	0.043
Benzo(b)fluoranthene in mg/kg	--	--	0.12	0.024	0.11	0.049	0.01 U	0.012	0.062	0.1	0.054	0.12	0.023	0.15	0.064
Benzo(k)fluoranthene in mg/kg	--	--	0.045	0.01	0.036	0.016	0.01 U	0.01 U	0.05 U	0.038	0.015	0.041	0.01 U	0.049	0.015
Chrysene in mg/kg	--	--	0.098	0.023	0.082	0.034	0.01 U	0.012	0.062	0.09	0.052	0.12	0.017	0.14	0.05
Dibenzo(a,h)anthracene in mg/kg	--	--	0.011	0.01 U	0.01 U	0.01 U	0.01 U	0.01 U	0.05 U	0.011	0.01 U	0.012	0.01 U	0.014	0.01 U
Indeno(1,2,3-cd)pyrene in mg/kg	--	--	0.053	0.013	0.036	0.022	0.01 U	0.01 U	0.05 U	0.051	0.023	0.054	0.014	0.084	0.018
Total cPAHs TEQ in mg/kg	0.16	3.2	0.143	0.0306	0.121	0.0568	ND	0.0083	0.0826	0.118	0.0573	0.167	0.0252	0.182	0.0582

Refer to Table 2 for notes and abbreviation definitions.

Table 13. Excavation Verification Soil Data for Log Pond Chip Conveyor Area

Project No. 110207, K-C Worldwide Site Upland Area, Everett, WA

			Compliance Samples (Overexcavated)												
			Base Samples			Sidewall Samples									
Analyte (By Group)	Soil Preliminary Cleanup Level - Saturated Soil	Soil Preliminary Cleanup Level - Unsaturated Soil	LPX-B-01 6/17/20 (8 ft) FD OverEx SAT	LPX-B-03 6/18/20 (8 ft) OverEx SAT	LPX-B-03 6/23/20 (9 ft) OverEx SAT	LPX-S-05 6/18/20 (6.5 ft) OverEx SAT	LPX-S-06 6/18/20 (6.5 ft) OverEx SAT	LPX-S-07 6/18/20 (6.5 ft) OverEx SAT	LPX-S-08 6/18/20 (6.5 ft) OverEx SAT	LPX-S-09 6/18/20 (6.5 ft) OverEx SAT	LPX-S-10 6/17/20 (6.5 ft) OverEx SAT	LPX-S-11 6/23/20 (6.5 ft) OverEx SAT	LPX-S-12 6/23/20 (6.5 ft) OverEx SAT	LPX-S-13 6/23/20 (6.5 ft) OverEx SAT	LPX-S-17 6/23/20 (6.5 ft) OverEx SAT
Total Petroleum Hydrocarbons (TPH)															
Gasoline-Range Hydrocarbons in mg/kg	100	100	5 U	5 U	--	5 U	5 U	5 U	5 U	5 U	5 U	--	--	--	--
Diesel-Range Hydrocarbons in mg/kg	2,000	2,000	50 U	50 U		50 U	50 U	50 U	50 U	50 U	50 U	--	--	--	--
Residual (Oil)-Range Hydrocarbons in mg/kg	2,000	2,000	250 U	250 U		250 U	250 U	250 U	250 U	250 U	250 U	--	--	--	--
Total TPHs in mg/kg	2,000	2,000	ND	ND		ND	ND	ND	ND	ND	ND	--	--	--	--
Metals															
Mercury in mg/kg	0.1	0.1	0.1 U	0.24	0.14	0.21	0.21	0.31	0.34	0.1 U	0.1 U	0.27	0.13	0.16	0.14
Carcinogenic Polycyclic Aromatic Hydrocarbons (cPAHs)															
Benz(a)anthracene in mg/kg	--	--	0.064	0.019	0.064	0.16	0.05 U	0.01 U	0.72	0.14 J	0.3	0.05 U	0.041	0.18	1
Benzo(a)pyrene in mg/kg	--	--	0.08	0.026	0.081	0.18	0.05 U	0.01 U	0.56	0.15 J	0.25	0.05 U	0.034	0.16	0.63
Benzo(b)fluoranthene in mg/kg	--	--	0.086	0.034	0.085	0.21	0.05 U	0.01 U	0.75	0.2 J	0.25	0.05 U	0.038	0.19	0.98
Benzo(k)fluoranthene in mg/kg	--	--	0.034	0.01 U	0.05 U	0.078	0.05 U	0.01 U	0.25	0.058 J	0.098	0.05 U	0.014	0.056	0.34
Chrysene in mg/kg	--	--	0.079	0.027	0.07	0.18	0.05 U	0.01 U	0.76	0.15 J	0.28	0.05 U	0.04	0.19	1.2
Dibenzo(a,h)anthracene in mg/kg	--	--	0.01 U	0.01 U	0.05 U	0.05 U	0.05 U	0.01 U	0.058	0.01 J	0.05 U	0.05 U	0.01 U	0.018	0.064
Indeno(1,2,3-cd)pyrene in mg/kg	--	--	0.04	0.014	0.053 ca	0.066	0.05 U	0.01 U	0.17	0.047 J	0.1	0.05 U	0.019	0.091	0.23
Total cPAHs TEQ in mg/kg	0.16	3.2	0.104	0.034	0.107	0.236	ND	ND	0.762	0.197 J	0.33	ND	0.0461	0.215	0.903

Refer to Table 2 for notes and abbreviation definitions.

Table 14. Excavation Verification Soil Data for Old Machine Shop (OMS) Area

Project No. 110207, K-C Worldwide Site Upland Area, Everett, WA

		Confirmation Samples (In Place)													
		Base Samples										Sidewall Samples			
Analyte (By Group)	Soil Preliminary Cleanup Level - Unsaturated Soil	OMSX-B-01 6/26/20 (5 ft)	OMSX-B-02 6/26/20 (5 ft)	OMSX-B-03 6/26/20 (5 ft)	OMSX-B-04 6/26/20 (5 ft)	OMSX-B-04 6/26/20 (5 ft) FD	OMSX-B-05 6/26/20 (5 ft)	OMSX-B-06 6/26/20 (5 ft)	OMSX-B-07 6/29/20 (5 ft)	OMSX-B-08 6/29/20 (5 ft)	OMSX-B-09 6/29/20 (5 ft)	OMSX-S-06 6/26/20 (2.5 ft)	OMSX-S-07 6/26/20 (2.5 ft)	OMSX-S-08 6/29/20 (2.5 ft)	OMSX-S-09 6/29/20 (2.5 ft)
Metals															
Copper in mg/kg	36	6.41 J	6.71 J	5 JJ	5 JJ	5.11 J	17.4 J	6.81 J	28.3	7.26	5.14	5.78 J	8.45 J	16.6	15.3
Mercury in mg/kg	0.1	0.1 U	0.1 U	0.1 U	0.1 U	0.1 U	0.1 U	0.1 U	0.1 U	0.1 U	0.1 U	0.1 U	0.1 U	0.1 U	0.1 U
Polychlorinated Biphenyls (PCBs)															
Aroclor 1016 in mg/kg	--	0.02 U	0.02 U	0.02 U	0.02 U	0.02 U	0.02 U	0.02 U	0.02 U	0.02 U	0.02 U	0.02 U	0.02 U	0.02 U	0.02 U
Aroclor 1221 in mg/kg	--	0.02 U	0.02 U	0.02 U	0.02 U	0.02 U	0.02 U	0.02 U	0.02 U	0.02 U	0.02 U	0.02 U	0.02 U	0.02 U	0.02 U
Aroclor 1232 in mg/kg	--	0.02 U	0.02 U	0.02 U	0.02 U	0.02 U	0.02 U	0.02 U	0.02 U	0.02 U	0.02 U	0.02 U	0.02 U	0.02 U	0.02 U
Aroclor 1242 in mg/kg	--	0.02 U	0.02 U	0.02 U	0.02 U	0.02 U	0.02 U	0.02 U	0.02 U	0.02 U	0.02 U	0.02 U	0.02 U	0.02 U	0.02 U
Aroclor 1248 in mg/kg	--	0.02 U	0.02 U	0.02 U	0.02 U	0.02 U	0.02 U	0.02 U	0.02 U	0.02 U	0.02 U	0.02 U	0.02 U	0.02 U	0.02 U
Aroclor 1254 in mg/kg	--	0.02 U	0.02 U	0.02 U	0.02 U	0.02 U	0.03	0.02 U	0.13	0.02 U	0.02 U	0.02 U	0.02 U	0.02 U	0.02 U
Aroclor 1260 in mg/kg	--	0.02 U	0.02 U	0.02 U	0.02 U	0.02 U	0.02 U	0.02 U	0.02 U	0.02 U	0.02 U	0.02 U	0.02 U	0.02 U	0.02 U
Aroclor 1262 in mg/kg	--	0.02 U	0.02 U	0.02 U	0.02 U	0.02 U	0.02 U	0.02 U	0.02 U	0.02 U	0.02 U	0.02 U	0.02 U	0.02 U	0.02 U
Aroclor 1268 in mg/kg	--	0.02 U	0.02 U	0.02 U	0.02 U	0.02 U	0.02 U	0.02 U	0.02 U	0.02 U	0.02 U	0.02 U	0.02 U	0.02 U	0.02 U
Total PCBs (Sum of Aroclors) in mg/kg	2.4	ND	ND	ND	ND	ND	0.03	ND	0.13	ND	ND	ND	ND	ND	ND

Refer to Table 2 for notes and abbreviation definitions.

Table 14. Excavation Verification Soil Data for Old Machine Shop (OMS) Area

Project No. 110207, K-C Worldwide Site Upland Area, Everett, WA

		Confirmation Samples (In Place)								Compliance Samples (Overexcavated)				
		Sidewall Samples								Sidewall Samples				
Analyte (By Group)	**Soil Preliminary Cleanup Level - Unsaturated Soil**	**OMSX-S-11 6/26/20 (2.5 ft)**	**OMSX-S-12 6/26/20 (2.5 ft)**	**OMSX-S-16 7/6/20 (2.5 ft)**	**OMSX-S-17a 7/6/20 (2.5 ft)**	**OMSX-S-18a 7/6/20 (2.5 ft)**	**OMSX-S-18b 7/15/20 (2.5 ft)**	**OMSX-S-19 7/15/20 (2.5 ft)**	**OMSX-S-20 8/27/20 (2.5 ft)**	**OMSX-S-01 6/26/20 (2.5 ft) OverEx**	**OMSX-S-02 6/26/20 (2.5 ft) OverEx**	**OMSX-S-03 6/26/20 (2.5 ft) OverEx**	**OMSX-S-04 6/26/20 (2.5 ft) OverEx**	**OMSX-S-05 6/26/20 (2.5 ft) OverEx**
Metals														
Copper in mg/kg	36	7.22 J	11.6 J	21.6 J	8.22 J	20.8 J	20.1 J	12.4 J	**52.6**	**54.4 J**	**159 J**	**116 J**	**162 J**	20.1 J
Mercury in mg/kg	0.1	0.1 U	0.1 U	**0.2 J**	0.1 UJ	0.1 UJ	0.1 U	0.1 U	0.1 U	**0.13**	**0.55**	**0.19**	**0.73**	**0.64**
Polychlorinated Biphenyls (PCBs)														
Aroclor 1016 in mg/kg	--	0.02 U	0.02 U	0.02 U	0.02 U	0.02 U	0.02 U	0.02 U	0.02 U	0.02 U	0.02 U	0.02 U	0.02 U	0.02 U
Aroclor 1221 in mg/kg	--	0.02 U	0.02 U	0.02 U	0.02 U	0.02 U	0.02 U	0.02 U	0.02 U	0.02 U	0.02 U	0.02 U	0.02 U	0.02 U
Aroclor 1232 in mg/kg	--	0.02 U	0.02 U	0.02 U	0.02 U	0.02 U	0.02 U	0.02 U	0.02 U	0.02 U	0.02 U	0.02 U	0.02 U	0.02 U
Aroclor 1242 in mg/kg	--	0.02 U	0.02 U	0.02 U	0.02 U	0.02 U	0.02 U	0.02 U	0.02 U	0.02 U	0.02 U	0.02 U	0.02 U	0.02 U
Aroclor 1248 in mg/kg	--	0.02 U	0.02 U	0.02 U	0.02 U	0.02 U	0.02 U	0.02 U	0.02 U	0.02 U	0.02 U	0.02 U	0.02 U	0.02 U
Aroclor 1254 in mg/kg	--	0.02 U	0.02 U	0.02 U	0.02 U	0.025	0.035	0.02 U	24	0.062	1.5	0.44	0.39	0.02 U
Aroclor 1260 in mg/kg	--	0.02 U	0.02 U	0.02 U	0.02 U	0.02 U	0.02 U	0.02 U	0.02 U	0.026	0.62	0.12	0.11	0.02 U
Aroclor 1262 in mg/kg	--	0.02 U	0.02 U	0.02 U	0.02 U	0.02 U	0.02 U	0.02 U	0.02 U	0.02 U	0.02 U	0.02 U	0.02 U	0.02 U
Aroclor 1268 in mg/kg	--	0.02 U	0.02 U	0.02 U	0.02 U	0.02 U	0.02 U	0.02 U	0.02 U	0.02 U	0.02 U	0.02 U	0.02 U	0.02 U
Total PCBs (Sum of Aroclors) in mg/kg	2.4	ND	ND	ND	ND	0.025	0.035	ND	**24**	0.088	2.12	0.56	0.5	ND

Refer to Table 2 for notes and abbreviation definitions.

Table 14. Excavation Verification Soil Data for Old Machine Shop (OMS) Area

Project No. 110207, K-C Worldwide Site Upland Area, Everett, WA

		Compliance Samples (Overexcavated)					
		Sidewall Samples					
Analyte (By Group)	**Soil Preliminary Cleanup Level - Unsaturated Soil**	**OMSX-S-10 6/29/20 (2.5 ft) OverEx**	**OMSX-S-13 7/6/20 (2.5 ft) OverEx**	**OMSX-S-14 7/6/20 (2.5 ft) OverEx**	**OMSX-S-15 7/6/20 (2.5 ft) OverEx**	**OMSX-S-17b 7/15/20 (2.5 ft) FD OverEx**	**OMSX-S-17b 7/15/20 (2.5 ft) OverEx**
Metals							
Copper in mg/kg	36	**46.4**	**639 J**	**91.5 J**	**79.8 J**	**81.9 J**	**66.2 J**
Mercury in mg/kg	0.1	0.1 U	**2.4 J**	**7.1 J**	**0.43 J**	**0.13 J**	**0.12 J**
Polychlorinated Biphenyls (PCBs)							
Aroclor 1016 in mg/kg	--	0.02 U	0.02 U	0.02 U	0.02 U	0.02 U	0.02 U
Aroclor 1221 in mg/kg	--	0.02 U	0.02 U	0.02 U	0.02 U	0.02 U	0.02 U
Aroclor 1232 in mg/kg	--	0.02 U	0.02 U	0.02 U	0.02 U	0.02 U	0.02 U
Aroclor 1242 in mg/kg	--	0.02 U	0.02 U	0.02 U	0.02 U	0.02 U	0.02 U
Aroclor 1248 in mg/kg	--	0.02 U	0.02 U	0.02 U	0.02 U	0.02 U	0.02 U
Aroclor 1254 in mg/kg	--	0.81	12	8.6	0.65	8	20
Aroclor 1260 in mg/kg	--	0.02 U	0.02 U	0.02 U	0.02 U	0.02 U	0.02 U
Aroclor 1262 in mg/kg	--	0.02 U	0.02 U	0.02 U	0.02 U	0.02 U	0.02 U
Aroclor 1268 in mg/kg	--	0.02 U	0.02 U	0.02 U	0.02 U	0.02 U	0.02 U
Total PCBs (Sum of Aroclors) in mg/kg	2.4	0.81	**12**	**8.6**	0.65	**8**	**20**

Refer to Table 2 for notes and abbreviation definitions.

Table 15. Excavation Verification Soil Data for PM-B-6 Area

Project No. 110207, K-C Worldwide Site Upland Area, Everett, WA

Analyte (By Group)	Soil Preliminary Cleanup Level - Saturated Soil	Soil Preliminary Cleanup Level - Unsaturated Soil	Confirmation Samples (In Place)											
			Base Samples			Sidewall Samples								
			PM-B6X-B-01 6/16/20 (10 ft) SAT	PM-B6X-B-02 6/24/20 (12 ft) SAT	PM-B6X-B-03 6/22/20 (11 ft) SAT	PM-B6X-S-07 6/16/20 (9 ft) SAT	PM-B6X-S-08 6/16/20 (6 ft) SAT	PM-B6X-S-11 6/22/20 (9 ft) SAT	PM-B6X-S-19 6/24/20 (6 ft) SAT	PM-B6X-S-19 6/24/20 (9 ft) SAT	PM-B6X-S-20 6/24/20 (9 ft) SAT	PM-B6X-S-21 6/24/20 (9 ft) SAT	PM-B6X-S-23 7/6/20 (6 ft) SAT	PM-B6X-S-24 7/6/20 (4 ft)
Metals														
Copper in mg/kg	36	36	9.59	24.9	24	25.3	37.2	24.2	23.8	25.1	34.5	25.9	--	--
Mercury in mg/kg	0.1	0.1	0.1 JJ	0.1 JJ	0.1 JJ	0.1 JJ	0.19 J	0.1 JJ	0.21 J	0.1 JJ	0.33 J	0.23 J	0.2 J	**0.2 J**

Analyte (By Group)	Soil Preliminary Cleanup Level - Saturated Soil	Soil Preliminary Cleanup Level - Unsaturated Soil	Confirmation Samples (In Place)				Compliance Samples (Overexcavated)							
			Sidewall Samples				Base Samples			Sidewall Samples				
			PM-B6X-S-24 7/6/20 (4 ft) FD	PM-B6X-S-24 7/6/20 (6 ft) SAT	PM-B6X-S-25 7/6/20 (6 ft) SAT	PM-B6X-S-28 7/22/20 (6 ft) SAT	PM-B6X-B-02 6/16/20 (10 ft) OverEx SAT	PM-B6X-B-02 6/22/20 (11 ft) OverEx SAT	PM-B6X-B-03 6/16/20 (10 ft) OverEx SAT	PM-B6X-S-01 6/16/20 (4 ft) OverEx	PM-B6X-S-01 6/16/20 (6 ft) OverEx SAT	PM-B6X-S-02 6/16/20 (4 ft) OverEx	PM-B6X-S-02 6/16/20 (6 ft) OverEx SAT	PM-B6X-S-03 6/16/20 (6 ft) OverEx SAT
Metals														
Copper in mg/kg	36	36	--	--	--	--	28.1	49.2	41.3	**44**	53.9	**50.9**	41.1	39.7
Mercury in mg/kg	0.1	0.1	**0.28 J**	0.2 J	0.22 J	0.16	0.92 J	0.1 JJ	0.1 JJ	**0.26 J**	0.4 J	**0.22 J**	0.25 J	0.32 J

Analyte (By Group)	Soil Preliminary Cleanup Level - Saturated Soil	Soil Preliminary Cleanup Level - Unsaturated Soil	Compliance Samples (Overexcavated)											
			Sidewall Samples											
			PM-B6X-S-03 6/16/20 (9 ft) OverEx SAT	PM-B6X-S-04 6/16/20 (6 ft) OverEx SAT	PM-B6X-S-04 6/16/20 (9 ft) OverEx SAT	PM-B6X-S-05 6/16/20 (6 ft) OverEx SAT	PM-B6X-S-05 6/16/20 (9 ft) OverEx SAT	PM-B6X-S-06 6/16/20 (6 ft) FD OverEx SAT	PM-B6X-S-06 6/16/20 (6 ft) OverEx SAT	PM-B6X-S-06 6/16/20 (9 ft) OverEx SAT	PM-B6X-S-07 6/16/20 (6 ft) OverEx SAT	PM-B6X-S-09 6/22/20 (4 ft) OverEx	PM-B6X-S-09 6/22/20 (6 ft) OverEx SAT	PM-B6X-S-10 6/22/20 (4 ft) OverEx
Metals														
Copper in mg/kg	36	36	33.1	43.9	27	23.7	24.7	33.6	39.9	36.7	45.4	**37.6**	56.7	35.7
Mercury in mg/kg	0.1	0.1	0.14 J	0.51 J	0.93 J	1.1 J	0.14 J	2.5 J	4.4 J	0.1 JJ	1.4 J	**0.27 J**	0.35 J	**0.26 J**

Analyte (By Group)	Soil Preliminary Cleanup Level - Saturated Soil	Soil Preliminary Cleanup Level - Unsaturated Soil	Compliance Samples (Overexcavated)											
			Sidewall Samples											
			PM-B6X-S-10 6/22/20 (6 ft) OverEx SAT	PM-B6X-S-11 6/22/20 (6 ft) OverEx SAT	PM-B6X-S-12 6/22/20 (6 ft) OverEx SAT	PM-B6X-S-12 6/22/20 (9 ft) OverEx SAT	PM-B6X-S-13 6/22/20 (6 ft) OverEx SAT	PM-B6X-S-13 6/22/20 (9 ft) OverEx SAT	PM-B6X-S-14 6/22/20 (6 ft) FD OverEx SAT	PM-B6X-S-14 6/22/20 (6 ft) OverEx SAT	PM-B6X-S-14 6/22/20 (9 ft) OverEx SAT	PM-B6X-S-15 6/22/20 (6 ft) OverEx SAT	PM-B6X-S-16 6/24/20 (4 ft) FD OverEx	PM-B6X-S-16 6/24/20 (4 ft) OverEx
Metals														
Copper in mg/kg	36	36	63.2	27.4	32.8	34.6	29.5	109	42.7	31.7	40.4	37.9	33.7	43.5
Mercury in mg/kg	0.1	0.1	0.4 J	0.22 J	0.76 J	0.85 J	3.7 J	0.72 J	7.2 J	3.1 J	0.75 J	1.3 J	**0.24 J**	0.31 J

Analyte (By Group)	Soil Preliminary Cleanup Level - Saturated Soil	Soil Preliminary Cleanup Level - Unsaturated Soil	Compliance Samples (Overexcavated)						
			Sidewall Samples						
			PM-B6X-S-16 6/24/20 (6 ft) OverEx SAT	PM-B6X-S-17 6/24/20 (4 ft) OverEx	PM-B6X-S-17 6/24/20 (6 ft) OverEx SAT	PM-B6X-S-18 6/24/20 (6 ft) OverEx SAT	PM-B6X-S-22 6/24/20 (6 ft) OverEx SAT	PM-B6X-S-26 7/6/20 (6 ft) OverEx SAT	PM-B6X-S-27 7/15/20 (6 ft) OverEx SAT
Metals									
Copper in mg/kg	36	36	30.5	11.1	50.6	65.5	38.2	--	--
Mercury in mg/kg	0.1	0.1	0.36 J	0.1 JJ	0.57 J	0.66 J	20 J	1.1 J	12 J

Refer to Table 2 for notes and abbreviation definitions.

Table 16. Excavation Verification Soil Data for REC5-MW-1 Area

Project No. 110207, K-C Worldwide Site Upland Area, Everett, WA

			Confirmation Samples (In Place)												
			Base Samples				Sidewall Samples								
Analyte (By Group)	Soil Preliminary Cleanup Level - Saturated Soil	Soil Preliminary Cleanup Level - Unsaturated Soil	REC5X-B-01 8/28/20 (12 ft) FD SAT	REC5X-B-01 8/28/20 (12 ft) SAT	REC5X-B-02 8/28/20 (12 ft) SAT	REC5X-B-03 8/28/20 (12 ft) SAT	REC5X-S-01 8/28/20 (4 ft)	REC5X-S-01 8/28/20 (7 ft)	REC5X-S-01 8/28/20 (10 ft) SAT	REC5X-S-02 8/28/20 (4 ft)	REC5X-S-02 8/28/20 (7 ft)	REC5X-S-02 8/28/20 (10 ft) SAT	REC5X-S-03 8/28/20 (4 ft)	REC5X-S-03 8/28/20 (7 ft)	REC5X-S-03 8/28/20 (10 ft) SAT
Metals															
Arsenic in mg/kg	20	20	6.51	4.75	7.23	7.67	2.1	2.43	1.45	2.32	1 U	1.58	3.55	2.42	1.81
Copper in mg/kg	36	36	19.9 J	17.7	27.6 J	29.8 J	12.9	6.08	5.7	17.2	5 U	6.6	16.3	7.54	5.21
Lead in mg/kg	81	1000	3.17	2.59	10.9	7.69	3.74	2.11	1.79	10.4	1.28	2.05	13.2	4.25	1.52

Refer to Table 2 for notes and abbreviation definitions.

Table 16. Excavation Verification Soil Data for REC5-MW-1 Area

Project No. 110207, K-C Worldwide Site Upland Area, Everett, WA

			Confirmation Samples (In Place)								
			Sidewall Samples								
Analyte (By Group)	Soil Preliminary Cleanup Level - Saturated Soil	Soil Preliminary Cleanup Level - Unsaturated Soil	REC5X-S-04 8/28/20 (4 ft)	REC5X-S-04 8/28/20 (7 ft)	REC5X-S-04 8/28/20 (10 ft) SAT	REC5X-S-05 8/28/20 (4 ft)	REC5X-S-05 8/28/20 (7 ft)	REC5X-S-05 8/28/20 (10 ft) SAT	REC5X-S-06 8/28/20 (4 ft)	REC5X-S-06 8/28/20 (7 ft)	REC5X-S-06 8/28/20 (10 ft) SAT
Metals											
Arsenic in mg/kg	20	20	1 U	3.66 J	5.03 J	2.71	2.54	9.09	1 U	1.47	6
Copper in mg/kg	36	36	7.91	25.4 J	17	13.2	12.9	28.9 J	10.5	8.96	20.2 J
Lead in mg/kg	81	1000	1.88	4.59	2.38	2.04	4.26	7.69	3.35	2.17	4.65

Refer to Table 2 for notes and abbreviation definitions.

Table 17. Excavation Verification Soil Data for Fuel Line West of Warehouse

Project No. 110207, K-C Worldwide Site Upland Area, Everett, WA

Analyte (By Group)	Soil Preliminary Cleanup Level - Unsaturated Soil	Confirmation Samples (In Place)											
		Bottom Sample	Sidewall Samples		Bottom Sample	Sidewall Samples		Bottom Sample	Sidewall Samples		Bottom Sample	Sidewall Samples	
		BP-1-Bottom 5/15/20 (4 ft)	BP-1-NSW 5/15/20 (4 ft)	BP-1-SSW 5/15/20 (4 ft)	BP-2-Bottom 5/15/20 (4.5 ft)	BP-2-NSW 5/15/20 (4.5 ft)	BP-2-SSW 5/15/20 (4.5 ft)	BP-3-Bottom 5/15/20 (5 ft)	BP-3-NSW 5/15/20 (5 ft)	BP-3-SSW 5/15/20 (5 ft)	BP-4-Bottom 5/15/20 (4.5 ft)	BP-4-NSW 5/15/20 (4.5 ft)	BP-4-SSW 5/15/20 (4.5 ft)
Total Petroleum Hydrocarbons (TPH)													
Diesel-Range Hydrocarbons in mg/kg	2,000	50 U	50 U	50 U	50 U	50 U	50 U	50 U	50 U	50 U	50 U	50 U	50 U
Residual (Oil)-Range Hydrocarbons in mg/kg	2,000	250 U	250 U	250 U	250 U	250 U	250 U	250 U	250 U	250 U	250 U	250 U	250 U
Total TPHs in mg/kg	2,000	ND	ND	ND	ND	ND	ND	ND	ND	ND	ND	ND	ND
Polycyclic Aromatic Hydrocarbons (PAHs)													
Acenaphthene in mg/kg	23	0.01 U	--	--	0.01 U	--	--	0.01 U	--	--	0.063	--	--
Acenaphthylene in mg/kg	210,000	0.01 U	--	--	0.01 U	--	--	0.01 U	--	--	0.05 U	--	--
Anthracene in mg/kg	1,100,000	0.01 U	--	--	0.01 U	--	--	0.01 U	--	--	0.15	--	--
Benzo(g,h,i)perylene in mg/kg	110,000	0.01 JJ	--	--	0.01 JJ	--	--	0.01 JJ	--	--	0.088	--	--
Fluoranthene in mg/kg	140,000	0.013	--	--	0.01 U	--	--	0.01 U	--	--	0.69	--	--
Fluorene in mg/kg	140,000	0.01 U	--	--	0.01 U	--	--	0.01 U	--	--	0.053	--	--
Phenanthrene in mg/kg	1,100,000	0.01 U	--	--	0.01 U	--	--	0.01 U	--	--	0.65	--	--
Pyrene in mg/kg	110,000	0.016	--	--	0.01 U	--	--	0.01 U	--	--	0.82	--	--
Naphthalene in mg/kg	17	0.01 U	--	--	0.01 U	--	--	0.01 U	--	--	0.05 U	--	--
Carcinogenic PAHs (cPAHs)													
Benz(a)anthracene in mg/kg	--	0.01 U	--	--	0.01 U	--	--	0.01 U	--	--	0.41	--	--
Benzo(a)pyrene in mg/kg	--	0.01 U	--	--	0.01 U	--	--	0.01 U	--	--	0.36	--	--
Benzo(b)fluoranthene in mg/kg	--	0.01 U	--	--	0.01 U	--	--	0.01 U	--	--	0.41	--	--
Benzo(k)fluoranthene in mg/kg	--	0.01 U	--	--	0.01 U	--	--	0.01 U	--	--	0.15	--	--
Chrysene in mg/kg	--	0.011	--	--	0.01 U	--	--	0.01 U	--	--	0.48	--	--
Dibenzo(a,h)anthracene in mg/kg	--	0.01 U	--	--	0.01 U	--	--	0.01 U	--	--	0.05 U	--	--
Indeno(1,2,3-cd)pyrene in mg/kg	--	0.01 U	--	--	0.01 U	--	--	0.01 U	--	--	0.12	--	--
Total cPAHs TEQ in mg/kg	3.2	0.00761	--	--	ND	--	--	ND	--	--	0.476	--	--

Refer to Table 2 for notes and abbreviation definitions.

FIGURES

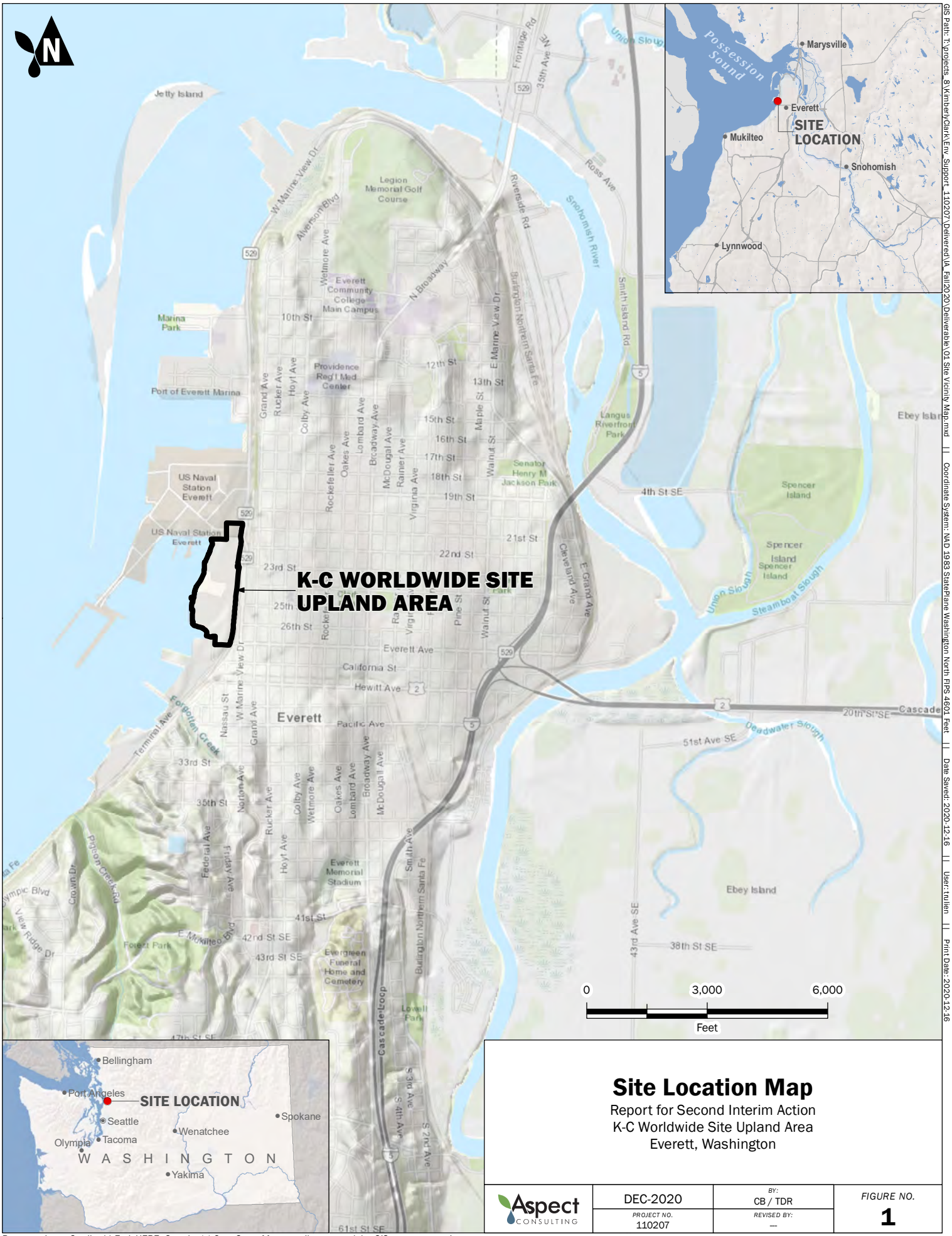

Site Location Map

Report for Second Interim Action
K-C Worldwide Site Upland Area
Everett, Washington

Aspect CONSULTING	DEC-2020	BY: CB / TDR	FIGURE NO. 1
	PROJECT NO. 110207	REVISED BY: ---	

GIS Path: T:\projects_8\Kimberly-Clark\Env_Support_110207\Delivered\IA_Fall2020\Deliverable\01 Site Vicinity Map.mxd || Coordinate System: NAD 1983 StatePlane Washington North FIPS 4601 Feet || Date Saved: 2020-12-16 || User: tnolen || Print Date: 2020-12-16

Basemap Layer Credits | | Esri, HERE, Garmin, (c) OpenStreetMap contributors, and the GIS user community
Sources: Esri, HERE, Garmin, Intermap, increment P Corp., GEBCO, USGS, FAO, NPS, NRCAN, GeoBase, IGN, Kadaster NL, Ordnance Survey, Esri Japan, METI, Esri China (Hong Kong), (c) OpenStreetMap contributors, and the GIS User Community

East Waterway

E: Pipe E plugged at bulkhead, removed to 45' east of bulkhead, & plugged at that location

D: Pipe D plugged at bulkhead & does not exist east of bulkhead

F: Pipe F plugged at bulkhead & at 75' east of bulkhead

G: Pipe G plugged at bulkhead & removed east of bulkhead

H: Pipe H plugged at bulkhead & does not exist east of bulkhead

J: Pipe J was previously plugged within bulkhead & does not exist east of bulkhead

L: Pipe L plugged at bulkhead & does not exist east of bulkhead

K: Pipe K Plugged at cap, removed 75' inland, & plugged

M: Pipe plugged at vault & pipe removed from vault to 75' inland and plugged ar 75'

N-Q5: Pipes do not exist east of the bulkhead

C: Pipe C plugged from point 10+98 to point 11+31

B3: Catch basin removed and pipe plugged 31 feet west of catch basin

B1, B2: Catch basins removed and pipe plugged five feet west of catch basin

A: Pipe A video surveyed only

Manhole D

CB C

CB B

CB A

529

Storm Catch Basin

Storm Manhole

Inactive Catch Basin

Active Stormwater Line

Historical Sewer or Stormwater Line

Upland Area Boundary

Notes:
1) Information from Layout Plan, Underground Utilities (K-C dwg. no. C277-L-8), communications with K-C, and site reconnaissance beneath the pier.
2) Inland portions of lines are not shown except for the active stormwater lines.

0 200 400

Feet

Map of Shoreline Pipes Plugged during Interim Action

Report for Second Interim Action
K-C Worldwide Site Upland Area
Everett, Washington

Aspect Consulting	DEC-2020	BY: SJG / HRL	FIGURE NO. 2
	PROJECT NO. 110207-004-06	REV BY: ---	

GIS Path: T:\projects_8\Kimberly\Clark\Env_Support_110207\Deliverable\A_Fall2020\Deliverable\02 Map of Shoreline Pipes Plugged During Interim Action V2.mxd || Coordinate System: NAD 1983 StatePlane Washington North FIPS 4601 Feet || Date Saved: 2020-12-17 || User: truiken || Print Date: 2020-12-17

East Waterway

BA-MW-7 Excavation

Old Machine Shop Excavation

REC5-MW-1 Excavation

Upland Area Boundary

Boiler/Baghouse Excavation

GF-B-12 Excavation

Log Pond (Chip Conveyor) Excavation

Fuel Line W Excavation

Port of Everett Ownership

Clark Nickerson Excavation (West)

Digester Trench Excavation

Clark Nickerson Excavation (East)

CMS South Bunker Line Excavation

PM-B-6 Excavation

CMS North Bunker Line Excavation

Hydraulic Barker Excavation

CMS Area Excavation

City of Everett Ownership

529

Upland Area Boundary

2nd Interim Action Excavation Extents

Previous Interim Action Excavation Extents

Former Crushed Material Boundary

0 200

Feet

N

Note: Property boundaries from David Evans and Assoc. survey.

Overview of Second Interim Action Soil Excavation Areas

Report for Second Interim Action
K-C Worldwide Site Upland Area
Everett, Washington

Aspect Consulting	DEC-2020	BY: SJG / HRL	FIGURE NO. 3
	PROJECT NO. 110207-004-06	REV BY: ---	

GIS Path: T:\projects_8\Kimberly\Clark\Env_Support_110207\Delivered\IA_Fall2020\Deliverable\03 Overview of Second Interim Action Areas.mxd || Coordinate System: NAD 1983 StatePlane Washington North FIPS 4601 Feet || Date Saved: 2020-12-17 || User: trullen || Print Date: 2020-12-17

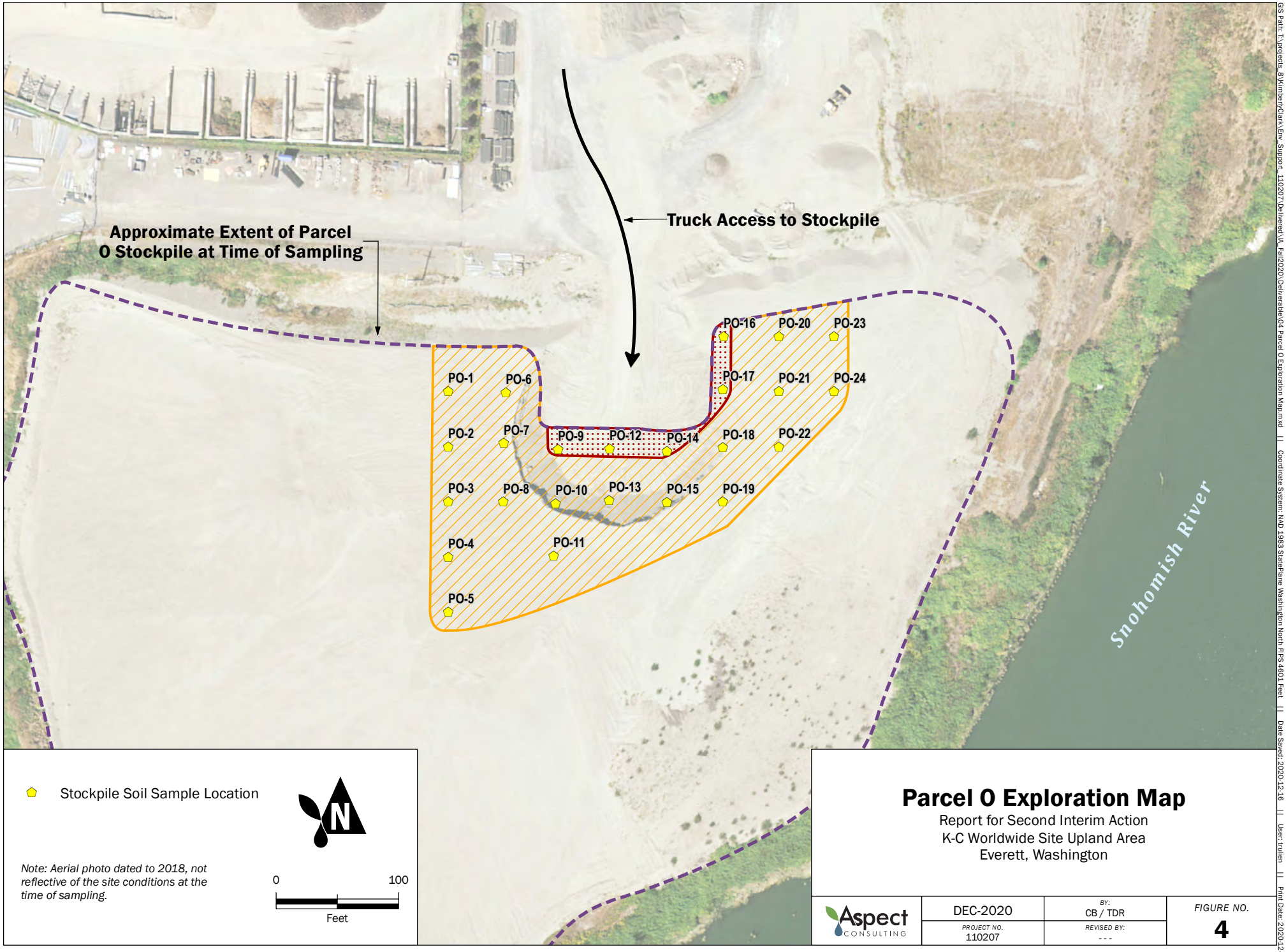

Parcel O Exploration Map

Report for Second Interim Action
K-C Worldwide Site Upland Area
Everett, Washington

Aspect Consulting	DEC-2020	BY: CB / TDR	FIGURE NO. 4
	PROJECT NO. 110207	REVISED BY: ---	

GIS Path: T:\projects_8\KimberlyClark\Env_Support_110207\Delivered\IA_Fall2020\Deliverable\04 Parcel O Exploration Map.mxd || Coordinate System: NAD 1983 StatePlane Washington North FIPS 4601 Feet || Date Saved: 2020-12-16 || User: trulen || Print Date: 2020-12-16

cPAH

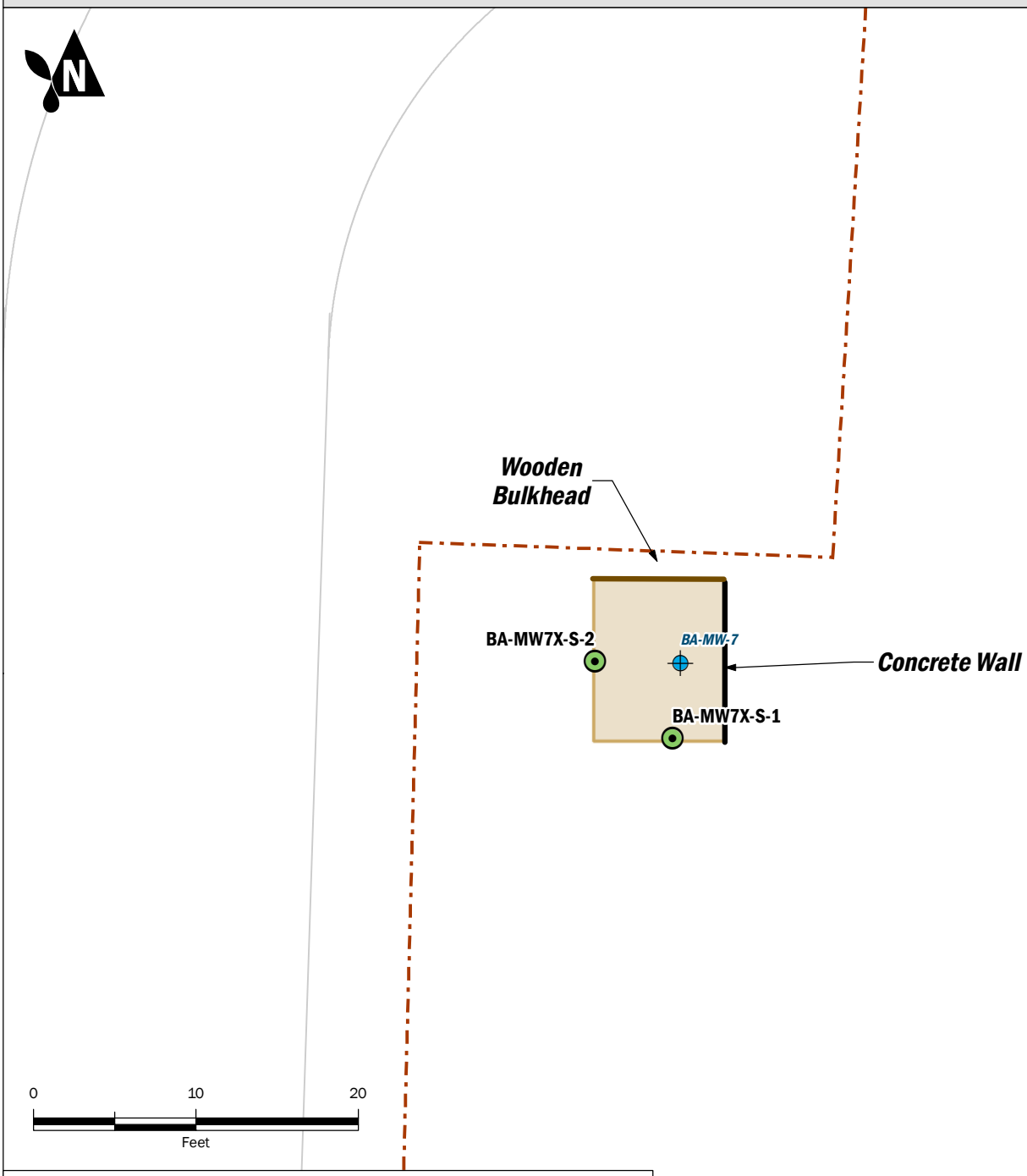

Verification Sample Data

- Identifies in-situ soil sample location with no exceedance of soil preliminary cleanup level (PCL) for figure COC
- Identifies in-situ soil sample location with exceedance of soil PCL for figure COC
- Identifies overexcavated soil sample location with no exceedance of soil PCL for figure COC
- Identifies overexcavated soil sample location

Former Monitoring Well

BA-MW-7 Excavation Extent

Upland Area Boundary

Note: Historical site feature locations are approximate.

COC = contaminant of concern

Soil Cleanup Results for BA-MW-7 Area

Report for Second Interim Action
K-C Worldwide Site Upland Area
Everett, Washington

Aspect Consulting	JAN-2021	BY: SJG / HRL	FIGURE NO. 5
	PROJECT NO. 110207	REVISED BY: ---	

GIS Path: T:\projects_8\KimberlyClark\Env_Support_110207\Delivered\IA_Fall2020\Deliverable\05 BA-MW-7 Area.mxd || Coordinate System: NAD 1983 StatePlane Washington North FIPS 4601 Feet || Date Saved: 2021-01-15 || User: tnullen || Print Date: 2021-01-15

Copper

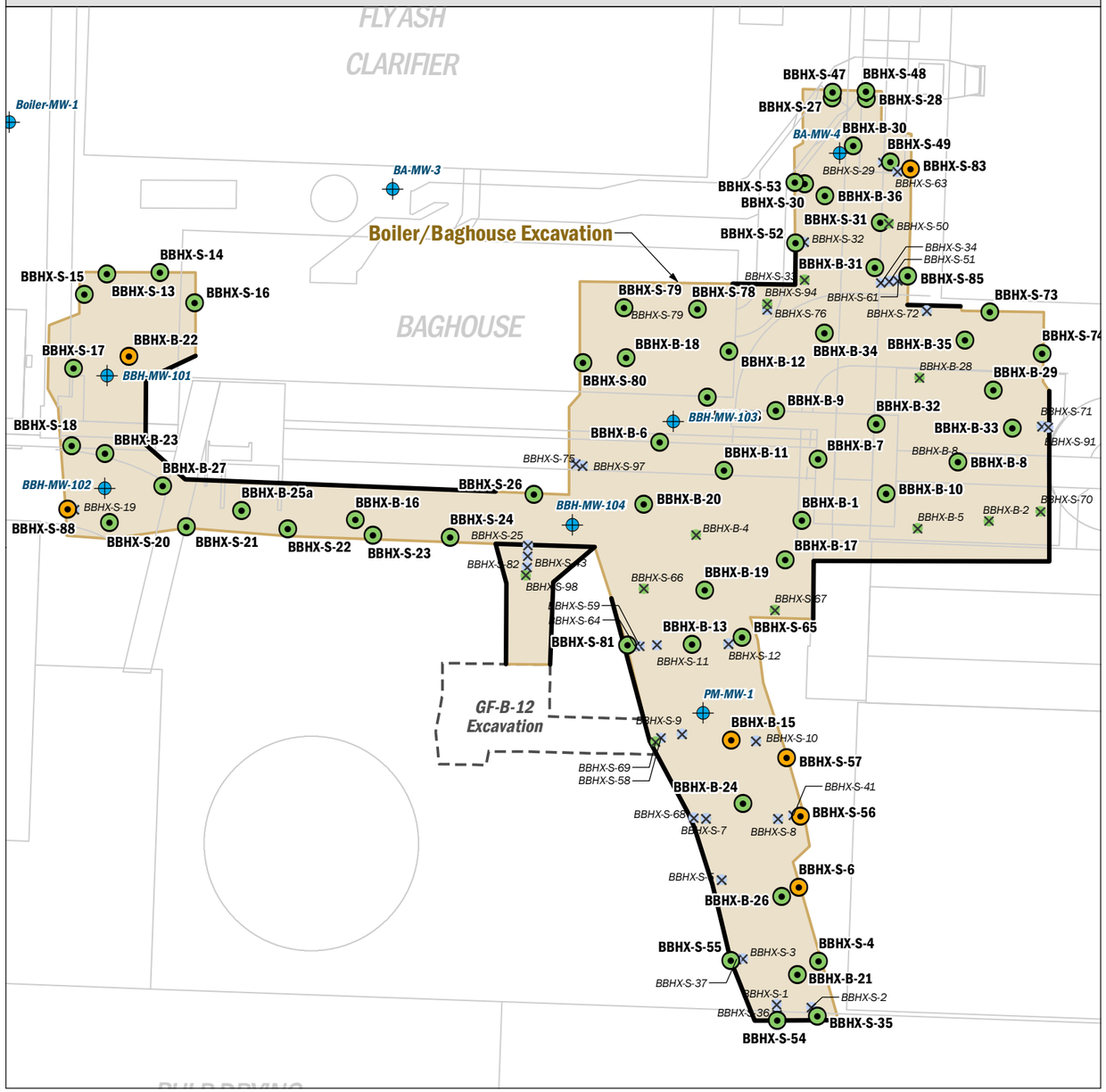

Mercury

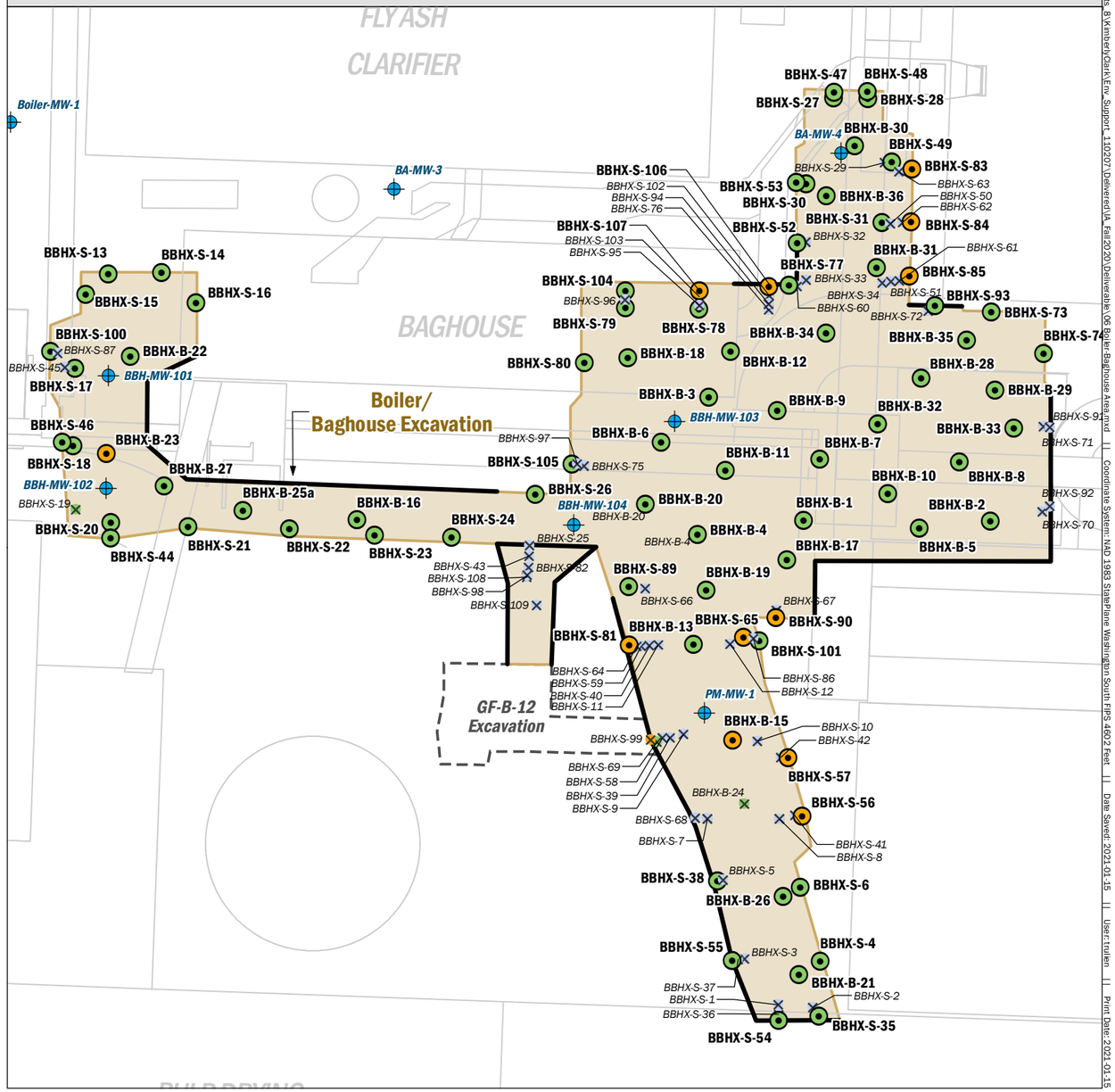

Verification Sample Data

- Identifies in-situ soil sample location with no exceedance of soil preliminary cleanup level (PCL) for figure COC
- Identifies in-situ soil sample location with exceedance of soil PCL for figure COC
- Identifies overexcavated soil sample location with no exceedance of soil PCL for figure COC
- Identifies overexcavated soil sample location

- Former Monitoring Well
- Boiler/Baghouse Excavation Extents
- Other Interim Action Excavation Extents

COC = contaminant of concern

Indicates the presence of concrete structure that limited or prevented verification soil sample collection from excavation sidewalls.

Note: Historical site feature locations are approximate.

N

0 35 70

Feet

Soil Cleanup Results for Boiler/Baghouse Area

Report for Second Interim Action
K-C Worldwide Site Upland Area
Everett, Washington

Aspect Consulting	JAN-2021	BY: CB / TDR	FIGURE NO. 6
	PROJECT NO. 110207	REVISED BY: RAP	

GIS Path: T:\projects_8\Kimberly\Data\Env_Support_110207\Deliverable\IA_Fall2020\Deliverable\06 Boiler-Baghouse Area.mxd || Coordinate System: NAD 1983 StatePlane Washington South FIPS 4602 Feet || Date Saved: 2021-01-15 || User: tnullen || Print Date: 2021-01-15

PCBs

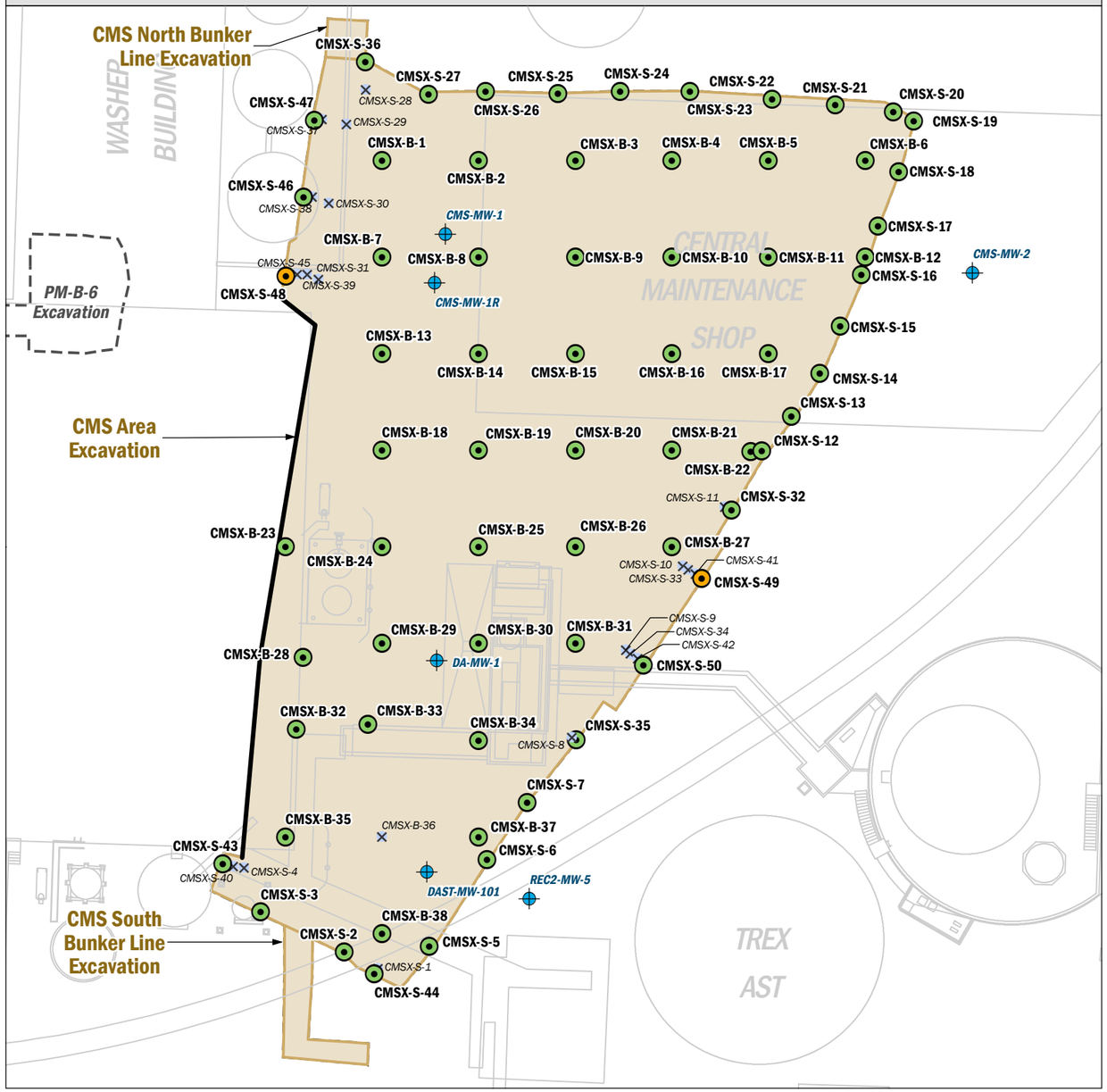

cPAH and Naphthalene

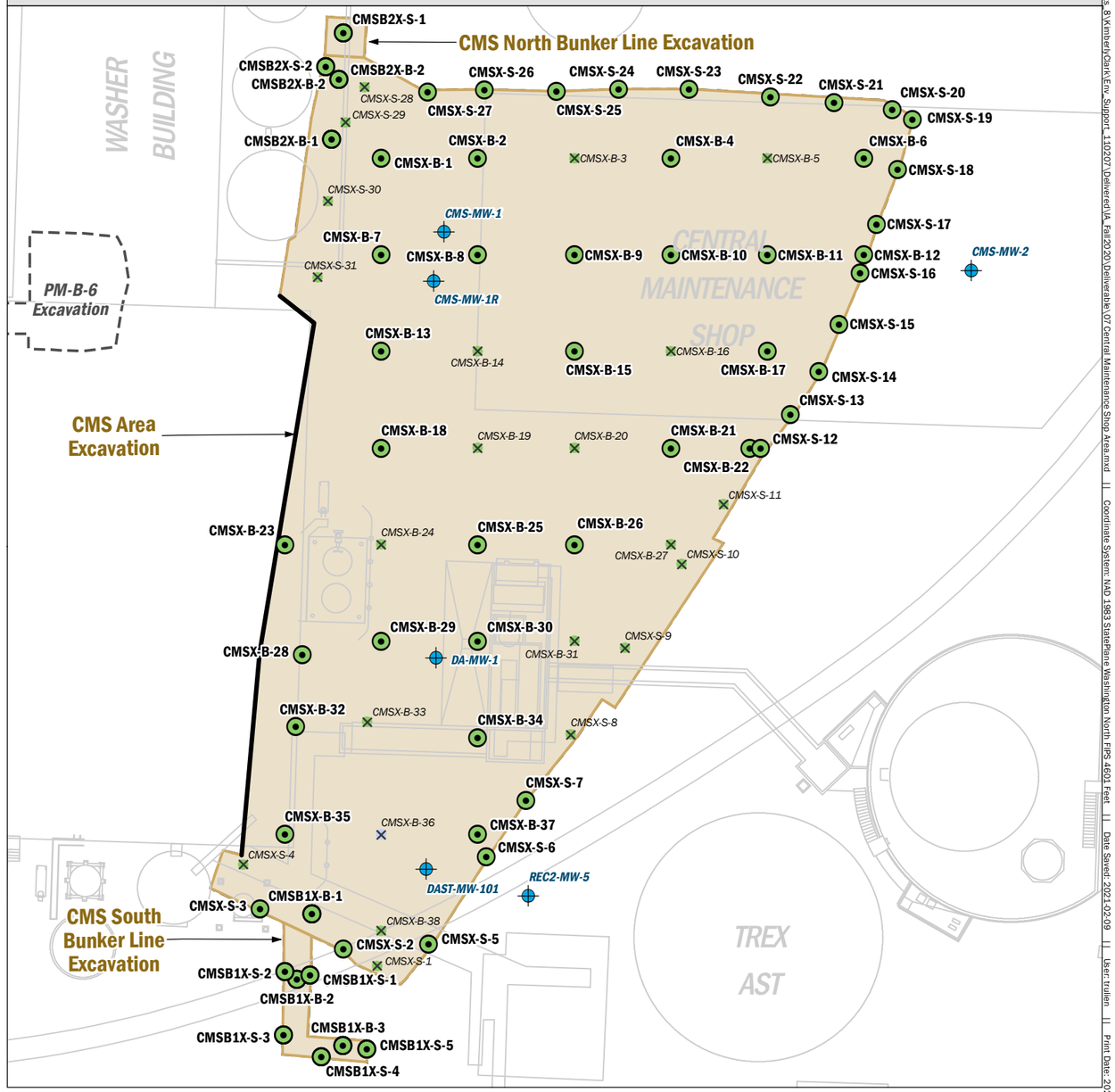

Verification Sample Data

- Identifies in-situ soil sample location with no exceedance of soil preliminary cleanup level (PCL) for figure COC
- Identifies in-situ soil sample location with exceedance of soil PCL for figure COC
- Identifies overexcavated soil sample location with no exceedance of soil PCL for figure COC
- Identifies overexcavated soil sample location

- Former Monitoring Well
- Central Maintenance Shop Excavation Extents
- Other Interim Action Excavation Extents

COC = contaminant of concern

Indicates the presence of concrete structure that limited or prevented verification soil sample collection from excavation sidewalls.

Note: Historical site feature locations are approximate.

N

0 35 70

Feet

Soil Cleanup Results for Central Maintenance Shop Area

Report for Second Interim Action
K-C Worldwide Site Upland Area
Everett, Washington

Aspect Consulting	FEB-2021	BY: CB / TDR	FIGURE NO. 7
	PROJECT NO. 110207	REVISED BY: RAP	

GIS Path: T:\projects_8\Kimberly\Dark\Env_Support_110207\Deliverable\A_Fall2020\Deliverable\07 Central Maintenance Shop Area.mxd || Coordinate System: NAD 1983 StatePlane Washington North FIPS 4601 Feet || Date Saved: 2021-02-09 || User: trullen || Print Date: 2021-02-09

cPAH

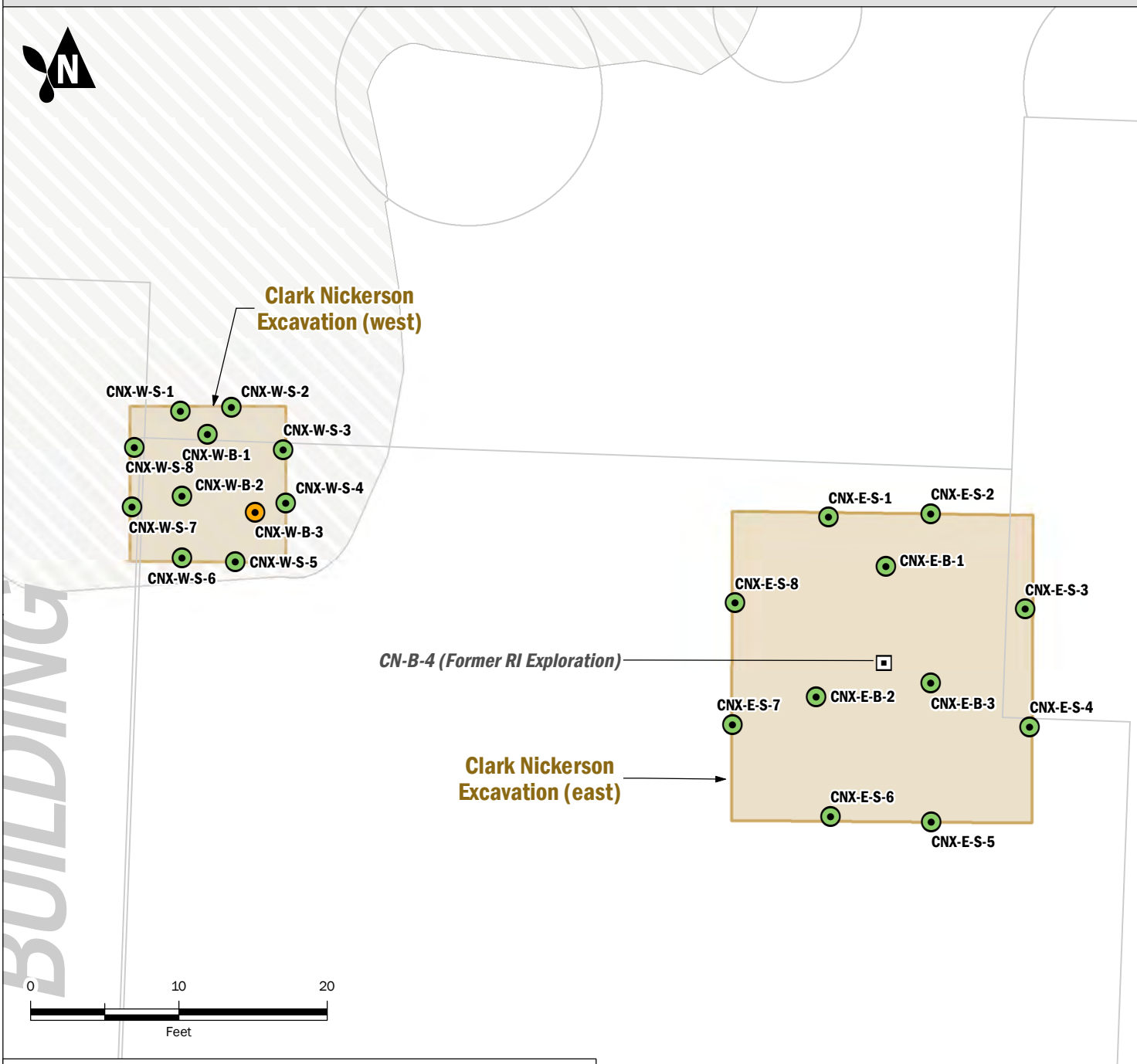

Verification Sample Data

- Identifies in-situ soil sample location with no exceedance of soil preliminary cleanup level (PCL) for figure COC
- Identifies in-situ soil sample location with exceedance of soil PCL for figure COC
- Identifies overexcavated soil sample location with no exceedance of soil PCL for figure COC
- Identifies overexcavated soil sample location
- Former Monitoring Well
- Clark Nickerson Excavation Extent
- 2013 CN-B-2 Interim Action Excavation Limits

Note: Historical site feature locations are approximate.

COC = contaminant of concern

Soil Cleanup Results for Clark Nickerson Area

Report for Second Interim Action
K-C Worldwide Site Upland Area
Everett, Washington

Aspect Consulting	JAN-2021	BY: SJG / HRL	FIGURE NO. 8
	PROJECT NO. 110207	REVISED BY: ---	

S:\Kimberly-Clark\Env_Support_110207\Delivered\IA_Fall2020\Deliverable\08 Clark Nickerson Area.mxd || Coordinate System: NAD 1983 StatePlane Washington South FIPS 4602 Feet || Date Saved: 2021-01-15 || User: ttullen || Print Date: 2021-01-15

Metals (Copper, Lead, Mercury, & Zinc)

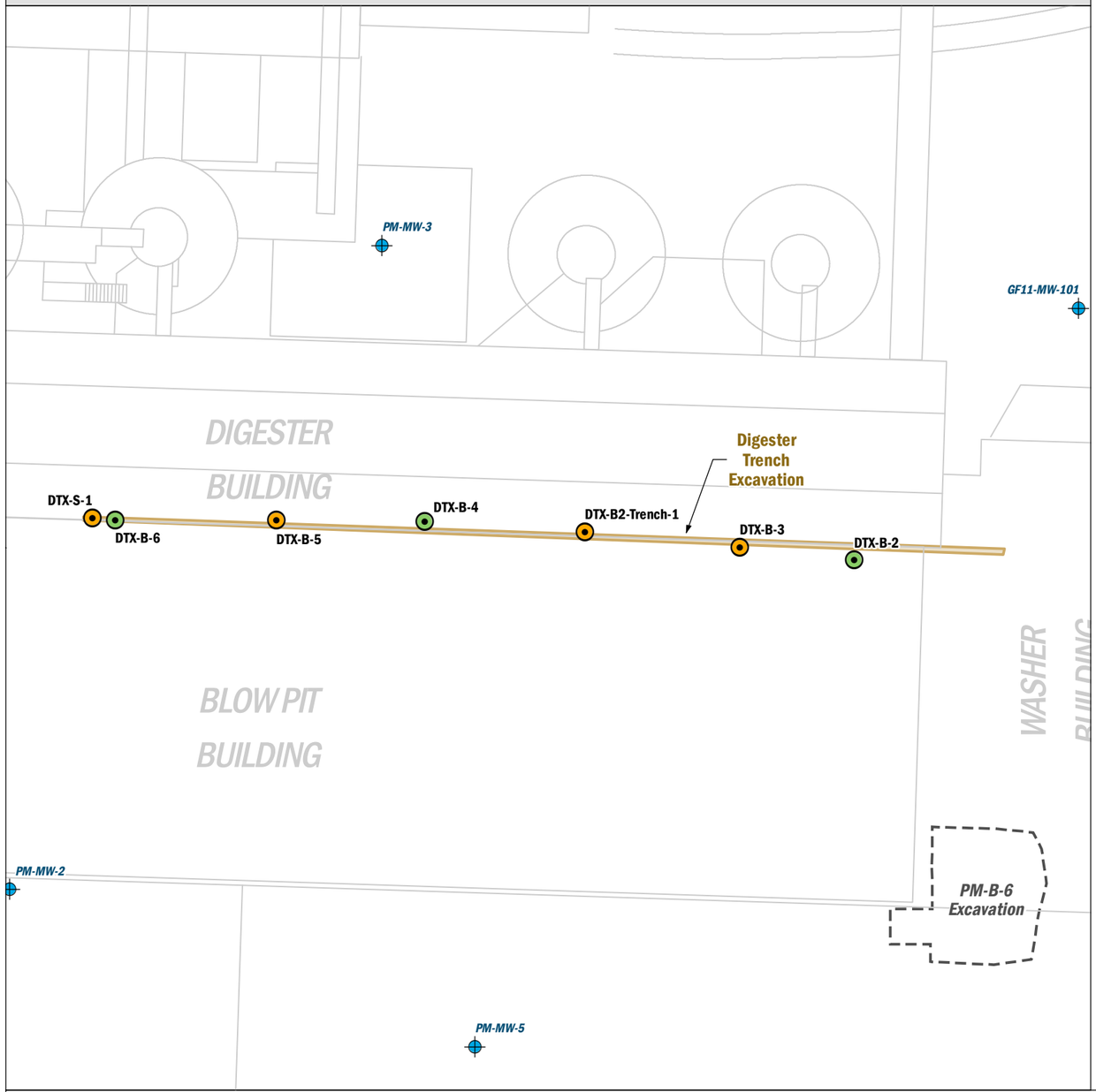

TPH-cPAH

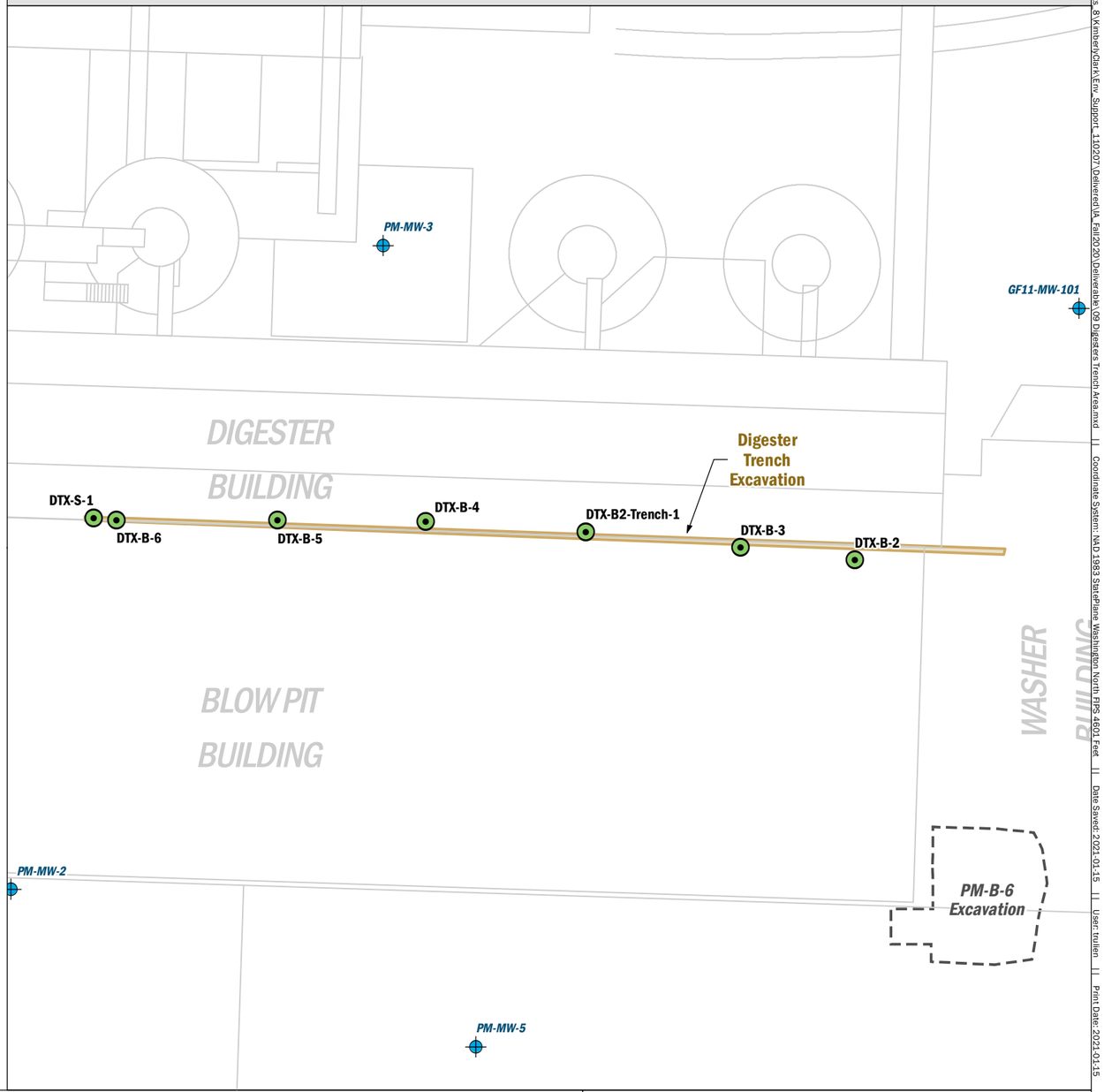

Verification Sample Data

- Identifies in-situ soil sample location with no exceedance of soil preliminary cleanup level (PCL) for figure COC
- Identifies in-situ soil sample location with exceedance of soil PCL for figure COC
- Identifies overexcavated soil sample location with no exceedance of soil PCL for figure COC
- Identifies overexcavated soil sample location

- Former Monitoring Well
- Digesters Trench Excavation Extents
- Other Interim Action Excavation Extents

COC = contaminant of concern

Note: Historical site feature locations are approximate.

N

0 30 60

Feet

Soil Cleanup Results for Digesters Trench Area

Report for Second Interim Action
K-C Worldwide Site Upland Area
Everett, Washington

Aspect CONSULTING	JAN-2021	BY: CB / TDR	FIGURE NO. 9
	PROJECT NO. 110207	REVISED BY: RAP	

GIS Path: T:\projects_8\Kimberly\Clark\Env_Support_110207\Deliverer\JA_Fall2020\Deliverable\09 Digesters Trench Area.mxd || Coordinate System: NAD 1983 StatePlane Washington North FIPS 4601 Feet || Date Saved: 2021-01-15 || User: tcullen || Print Date: 2021-01-15

Mercury

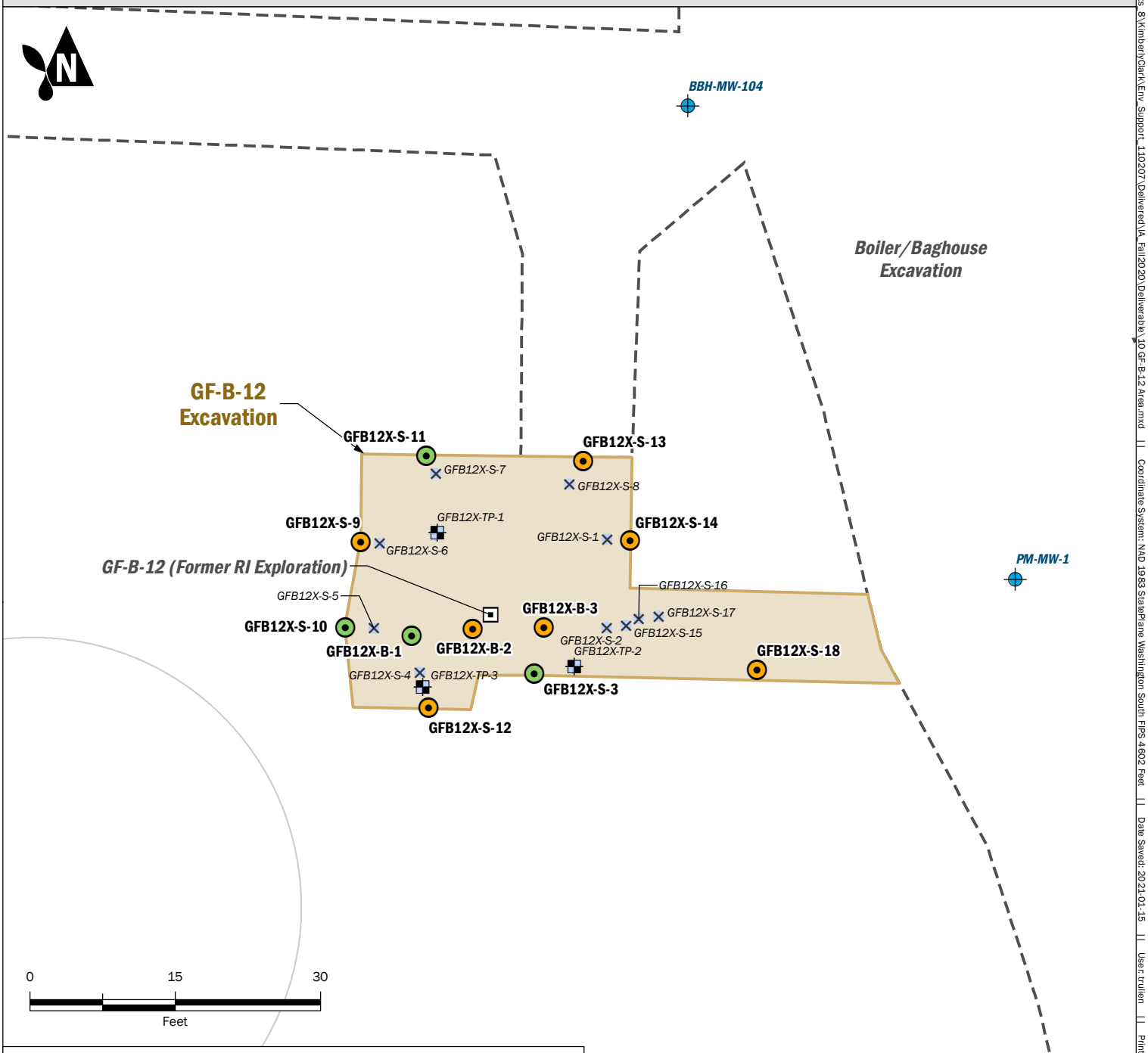

Verification Sample Data

- Identifies in-situ soil sample location with no exceedance of soil preliminary cleanup level (PCL) for figure COC
- Identifies in-situ soil sample location with exceedance of soil PCL for figure COC
- Identifies overexcavated soil sample location with no exceedance of soil PCL for figure COC
- Identifies overexcavated soil sample location
- Former Monitoring Well
- Test Pit
- GF-B-12 Excavation Extent

Note: Historical site feature locations are approximate.

COC = contaminant of concern

Soil Cleanup Results for GF-B-12 Area

Report for Second Interim Action
K-C Worldwide Site Upland Area
Everett, Washington

Aspect Consulting	JAN-2021	BY: SJG / HRL	FIGURE NO. 10
	PROJECT NO. 110207	REVISED BY: ---	

GIS Path: T:\projects_8\Kimberly\Clark\Env_Support_110207\Delivered\IA_Fall2020\Deliverable\10 GF-B-12 Area.mxd || Coordinate System: NAD 1983 StatePlane Washington South FIPS 4602 Feet || Date Saved: 2021-01-15 || User: trullen || Print Date: 2021-01-15

PCBs

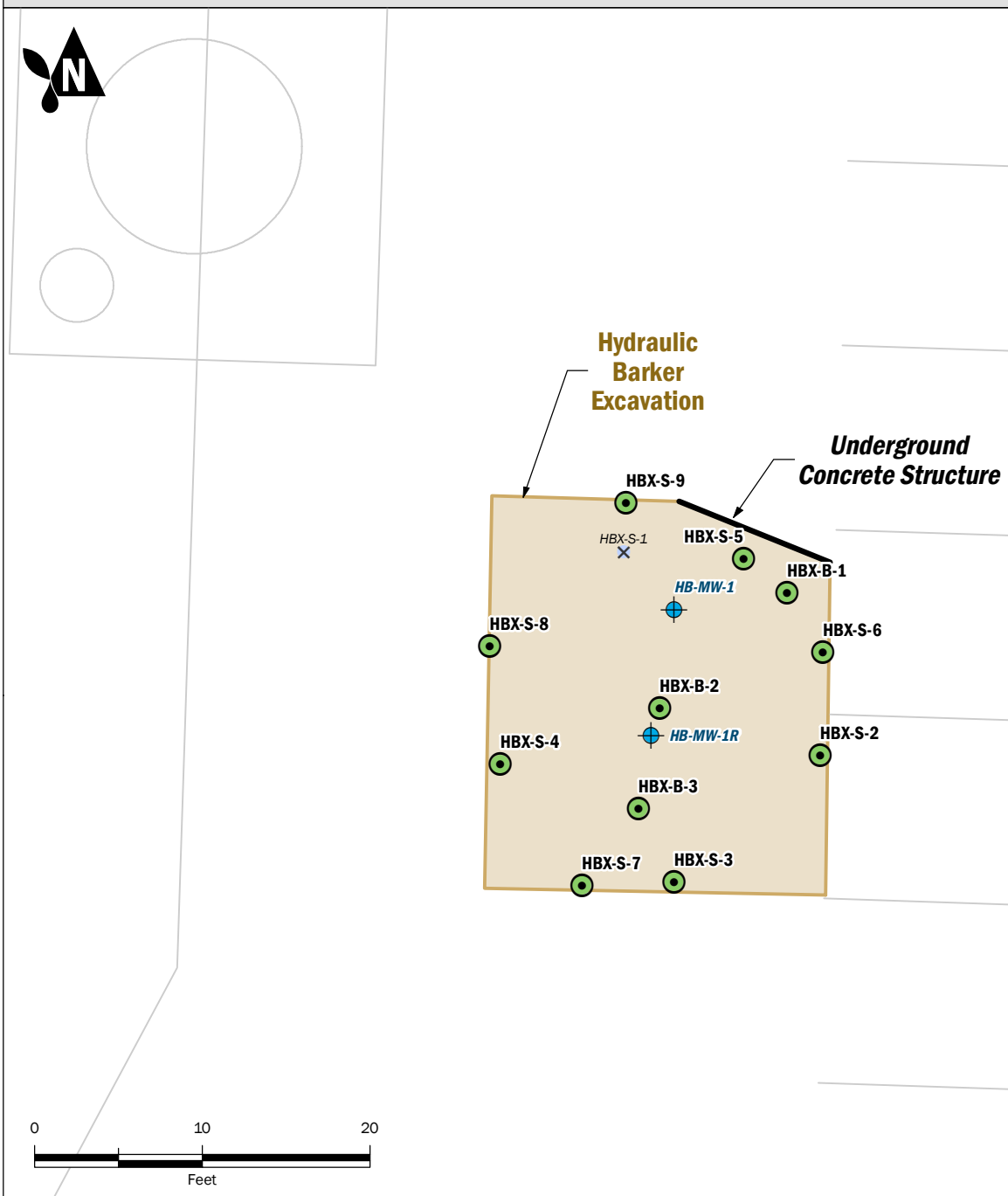

Verification Sample Data

- Identifies in-situ soil sample location with no exceedance of soil preliminary cleanup level (PCL) for figure COC
- Identifies in-situ soil sample location with exceedance of soil PCL for figure COC
- Identifies overexcavated soil sample location with no exceedance of soil PCL for figure COC
- Identifies overexcavated soil sample location
- Former Monitoring Well
- Hydraulic Barker Excavation Extents

Note: Historical site feature locations are approximate.

COC = contaminant of concern

Soil Cleanup Results for Hydraulic Barker Area

Report for Second Interim Action
K-C Worldwide Site Upland Area
Everett, Washington

Aspect Consulting	JAN-2021	BY: SJG / HRL	FIGURE NO. 11
	PROJECT NO. 110207	REVISED BY: ---	

GIS Path: T:\projects_8\KimberlyClark\Env_Support_110207\Delivered\IA_Fall2020\Deliverable\11 Hydraulic Barker Area.mxd || Coordinate System: NAD 1983 StatePlane Washington North FIPS 4601 Feet || Date Saved: 2021-01-15 || User: tnullen || Print Date: 2021-01-15

TPH-cPAH

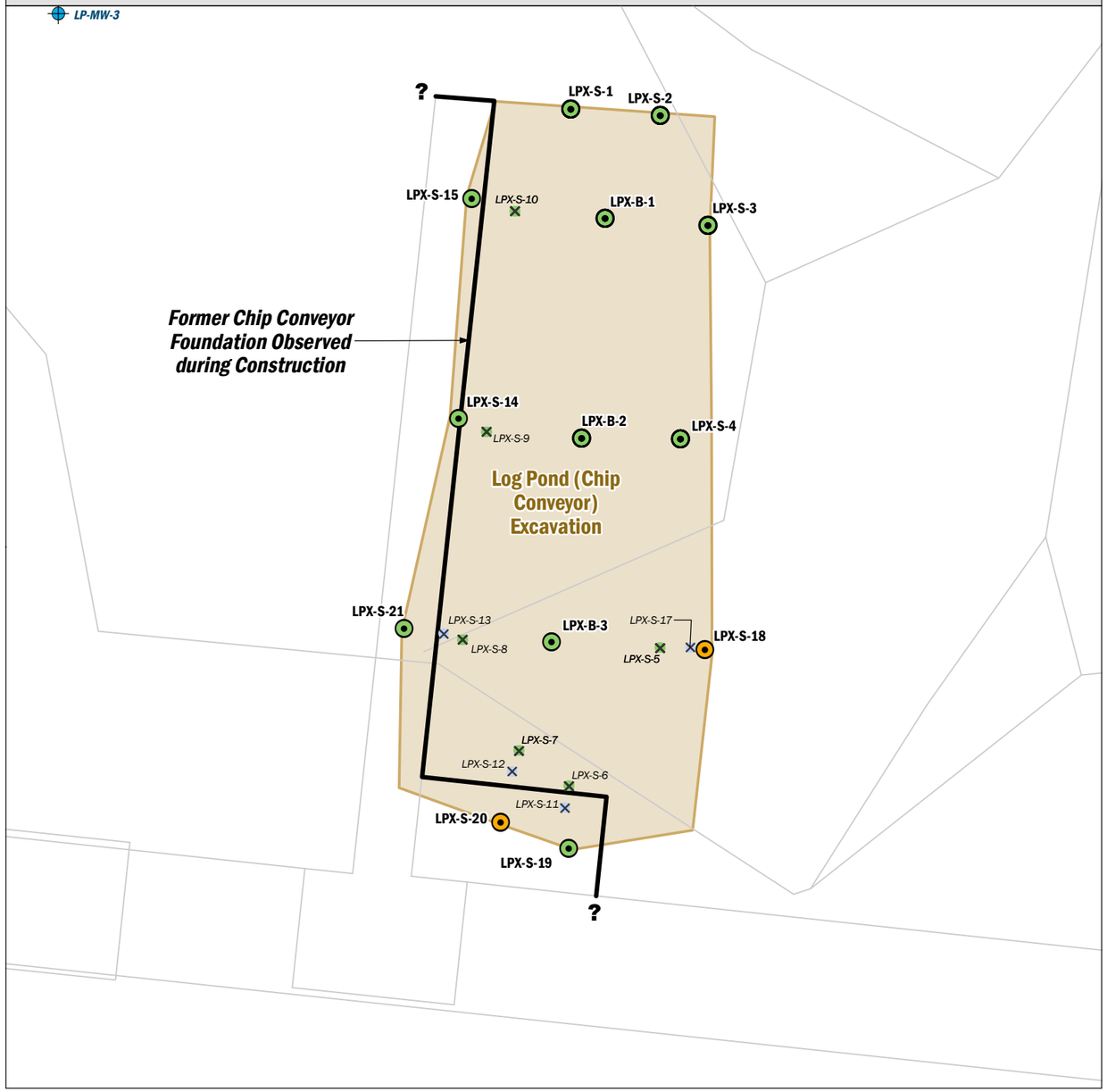

Mercury

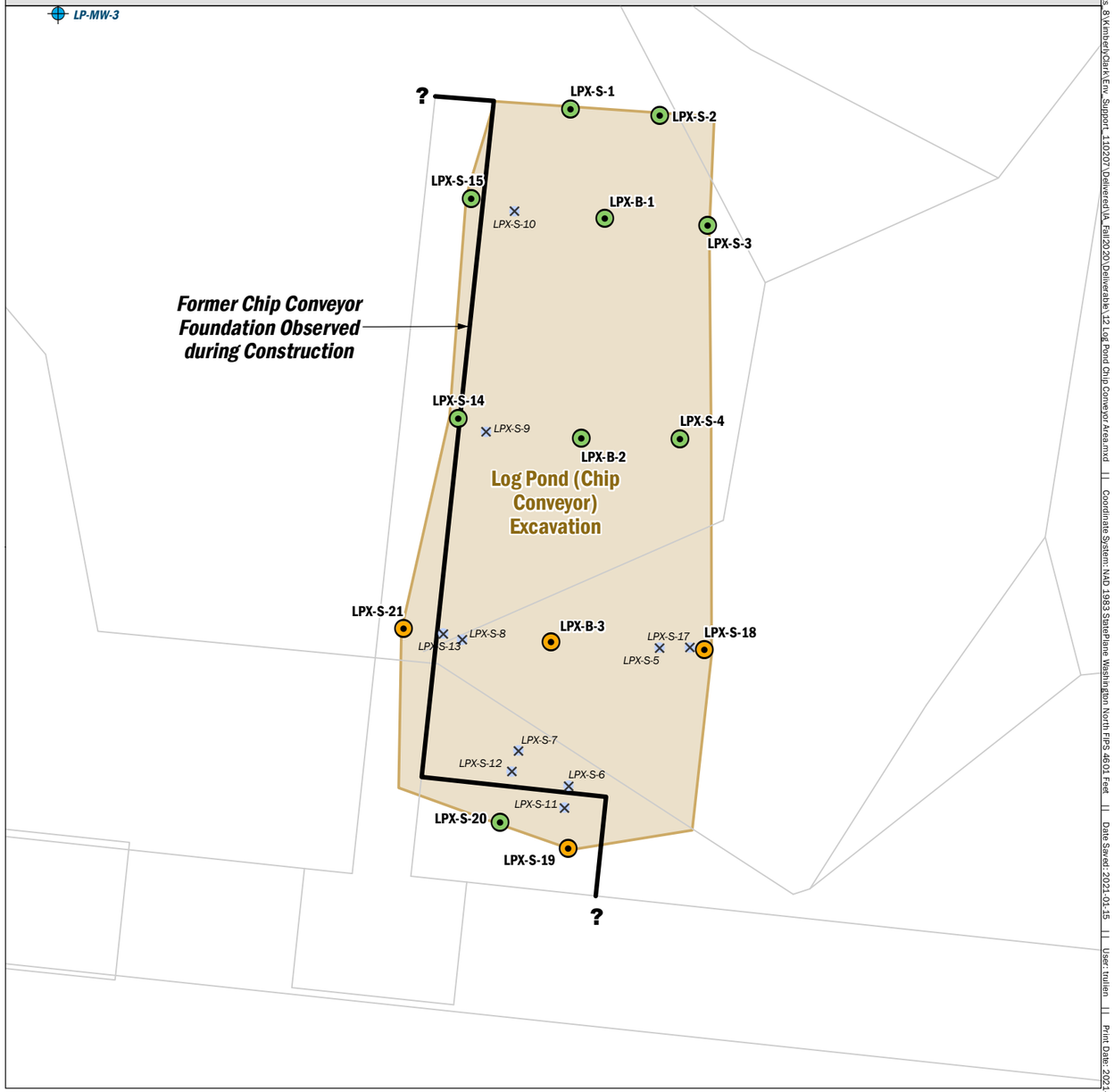

Verification Sample Data

- Identifies in-situ soil sample location with no exceedance of soil preliminary cleanup level (PCL) for figure COC
- Identifies in-situ soil sample location with exceedance of soil PCL for figure COC
- Identifies overexcavated soil sample location with no exceedance of soil PCL for figure COC
- Identifies overexcavated soil sample location

- Former Monitoring Well
- Log Pond Ship Conveyor Excavation Extents
- Other Interim Action Excavation Extents

COC = contaminant of concern

Note: Historical site feature locations are approximate.

N

0 10 20

Feet

Soil Cleanup Results for Log Pond Ship Conveyor Area

Report for Second Interim Action
K-C Worldwide Site Upland Area
Everett, Washington

Aspect Consulting	JAN-2021	BY: CB / TDR	FIGURE NO. 12
	PROJECT NO. 110207	REVISED BY: RAP	

GIS Path: T:\projects_8\Kimberly\Clark\Env_Support_110207\Deliverec\IA_Fall2020\Deliverables\12 Log Pond Chip Conveyor Area.mxd || Coordinate System: NAD 1983 StatePlane Washington North FIPS 4601 Feet || Date Saved: 2021-01-15 || User: trullen || Print Date: 2021-01-15

Copper

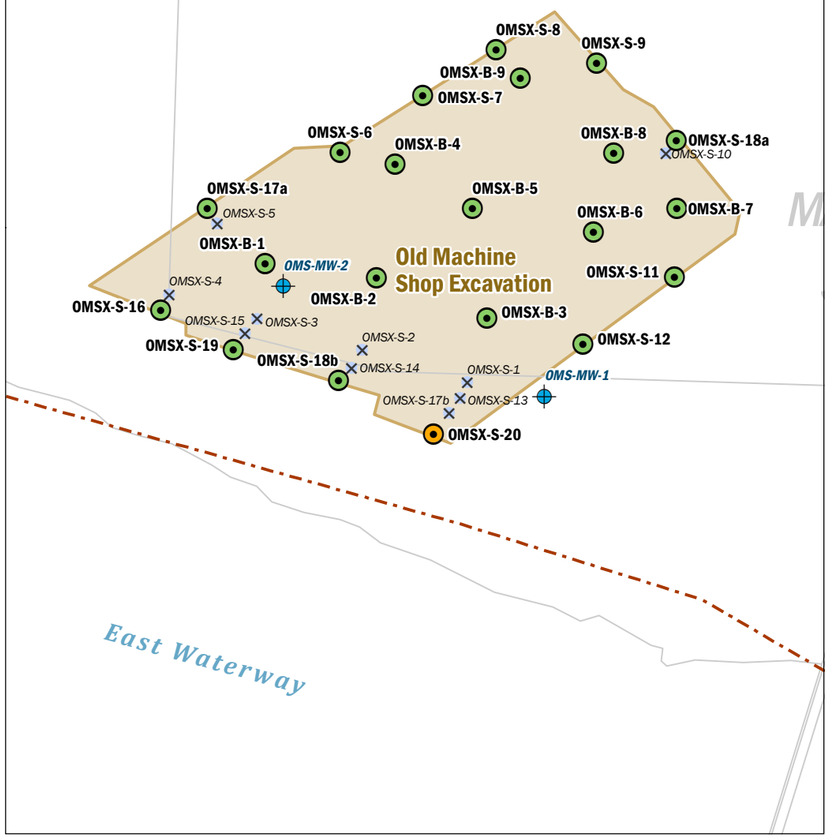

Mercury

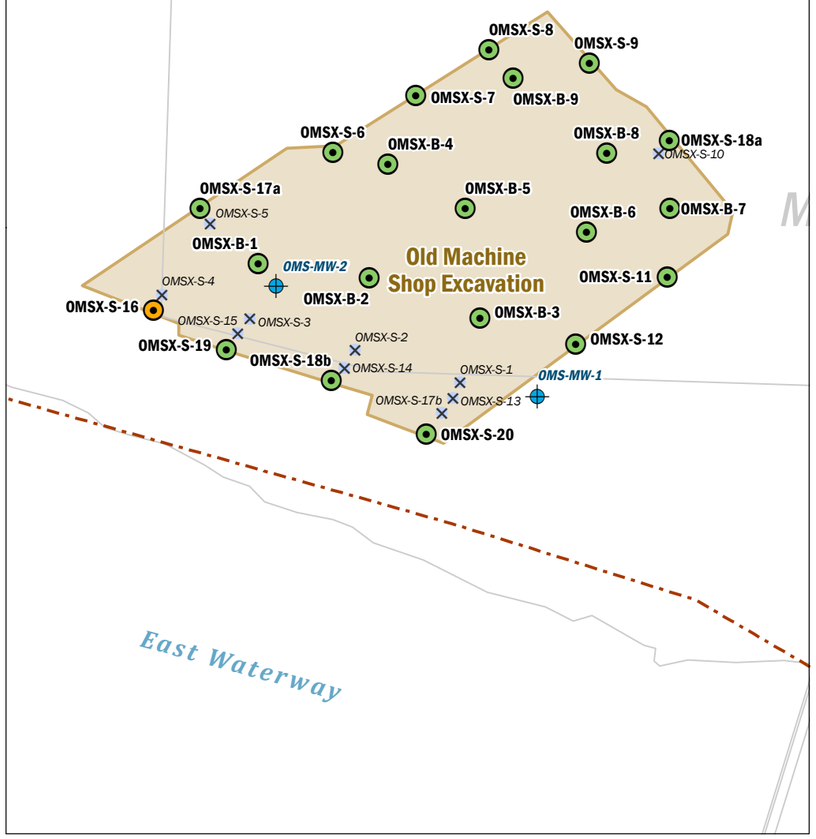

PCBs

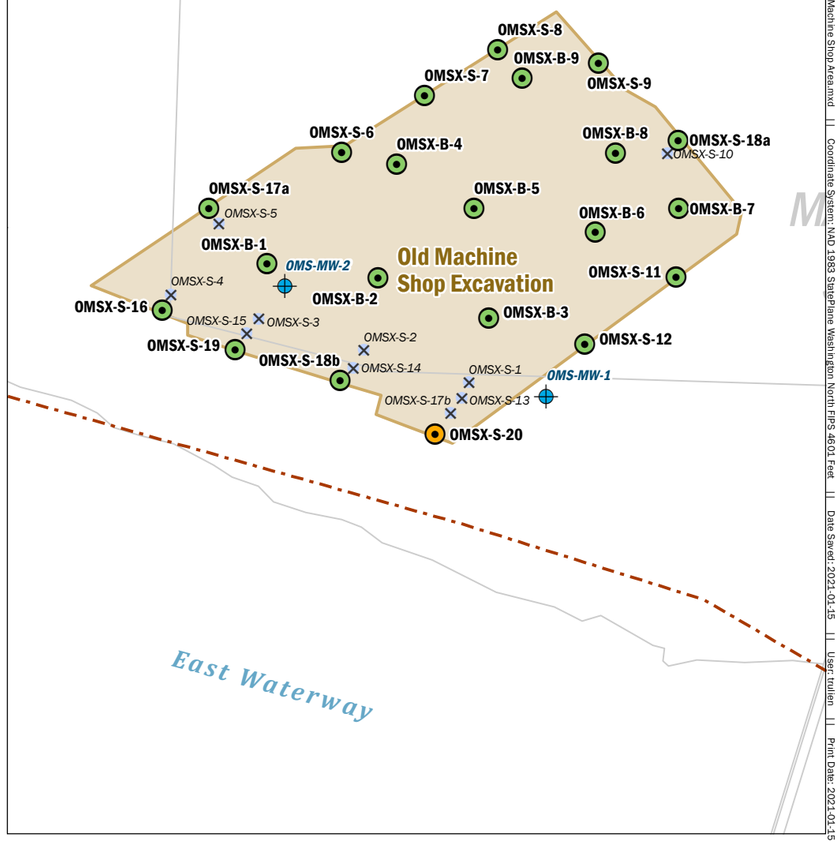

Verification Sample Data

- Identifies in-situ soil sample location with no exceedance of soil preliminary cleanup level (PCL) for figure COC
- Identifies in-situ soil sample location with exceedance of soil PCL for figure COC
- Identifies overexcavated soil sample location with no exceedance of soil PCL for figure COC
- Identifies overexcavated soil sample location

Former Monitoring Well

Old Machine Shop Excavation Extents

Other Interim Action Excavation Extents

Upland Area Boundary

COC = contaminant of concern

Note: Historical site feature locations are approximate.

N

0 25 50

Feet

Soil Cleanup Results for Old Machine Shop Area

Report for Second Interim Action
K-C Worldwide Site Upland Area
Everett, Washington

Aspect CONSULTING

JAN-2021	BY: CB / TDR	FIGURE NO. 13
PROJECT NO. 110207	REVISED BY: RAP	

GIS Path: T:\projects_8\Kimberly\Clark\Env_Support_110207\Deliverer\JA_Fall2020\Deliverable\13 Old Machine Shop Area.mxd || Coordinate System: NAD 1983 StatePlane Washington North FIPS 4601 Feet || Date Saved: 2021-01-15 || User: trullen || Print Date: 2021-01-15

Copper

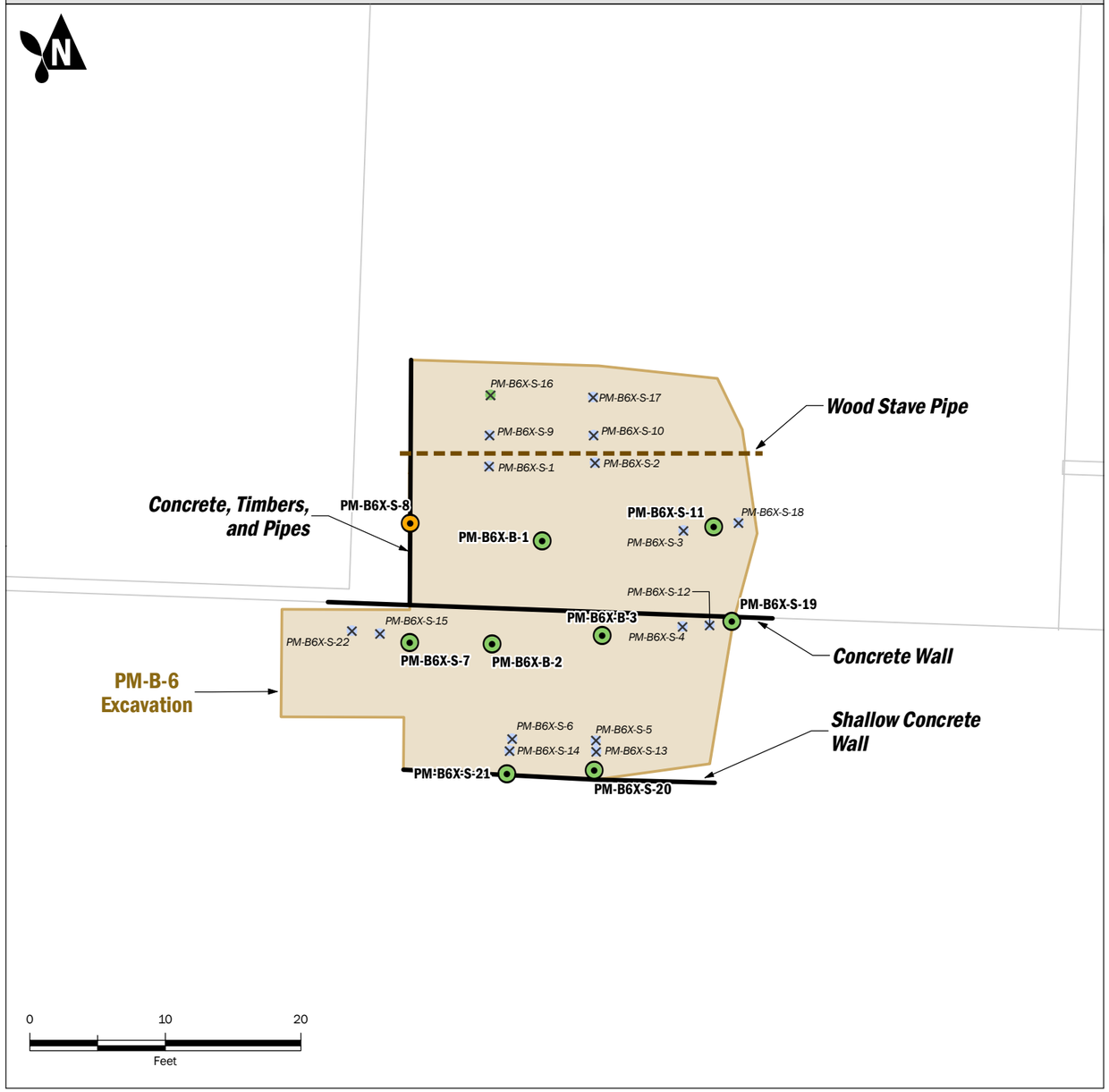

Mercury

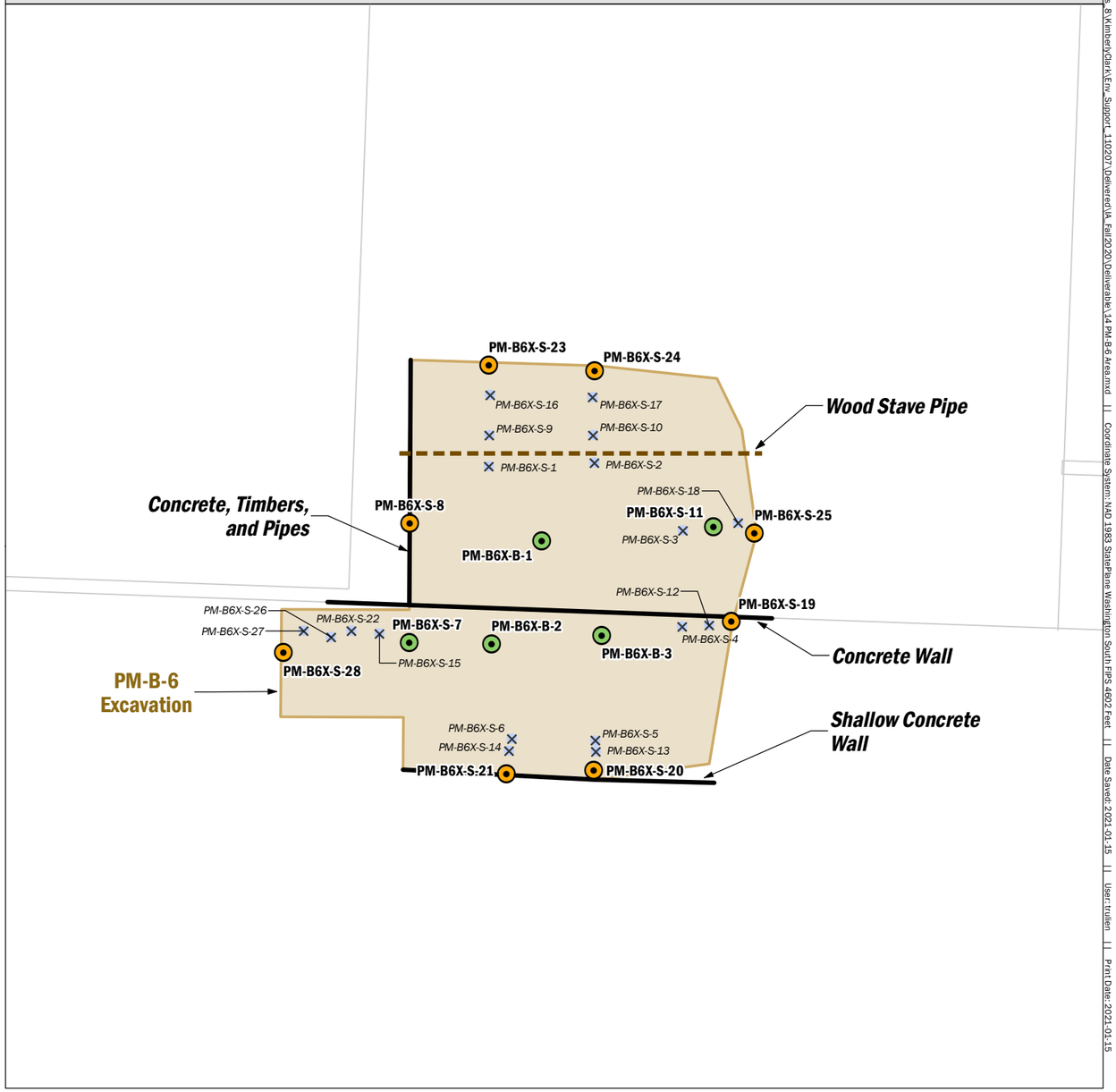

Verification Sample Data

- Identifies in-situ soil sample location with no exceedance of soil preliminary cleanup level (PCL) for figure COC
- Identifies in-situ soil sample location with exceedance of soil PCL for figure COC
- Identifies overexcavated soil sample location with no exceedance of soil PCL for figure COC
- Identifies overexcavated soil sample location

- Former Monitoring Well
- PM-B-6 Excavation Extents
- Other Interim Action Excavation Extents

Note: Historical site feature locations are approximate.

COC = contaminant of concern

Locator Map

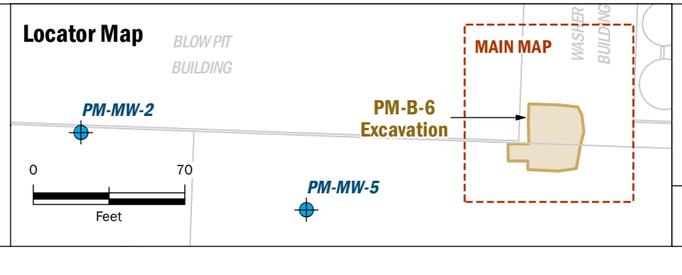

Soil Cleanup Results for PM-B-6 Area

Report for Second Interim Action
K-C Worldwide Site Upland Area
Everett, Washington

Aspect Consulting	JAN-2021	BY: CB / TDR	FIGURE NO. 14
	PROJECT NO. 110207	REVISED BY: RAP	

GIS Path: T:\projects_8\Kimberly\Clark\Env_Support_110207\Deliverec\IA_Fall2020\Deliverable\14 PM-B-6 Area.mxd | | Coordinate System: NAD 1983 StatePlane Washington South FIPS 4602 Feet | | Date Saved: 2021-01-15 | | User: trullen | | Print Date: 2021-01-15

Metals (Arsenic, Copper, & Lead)

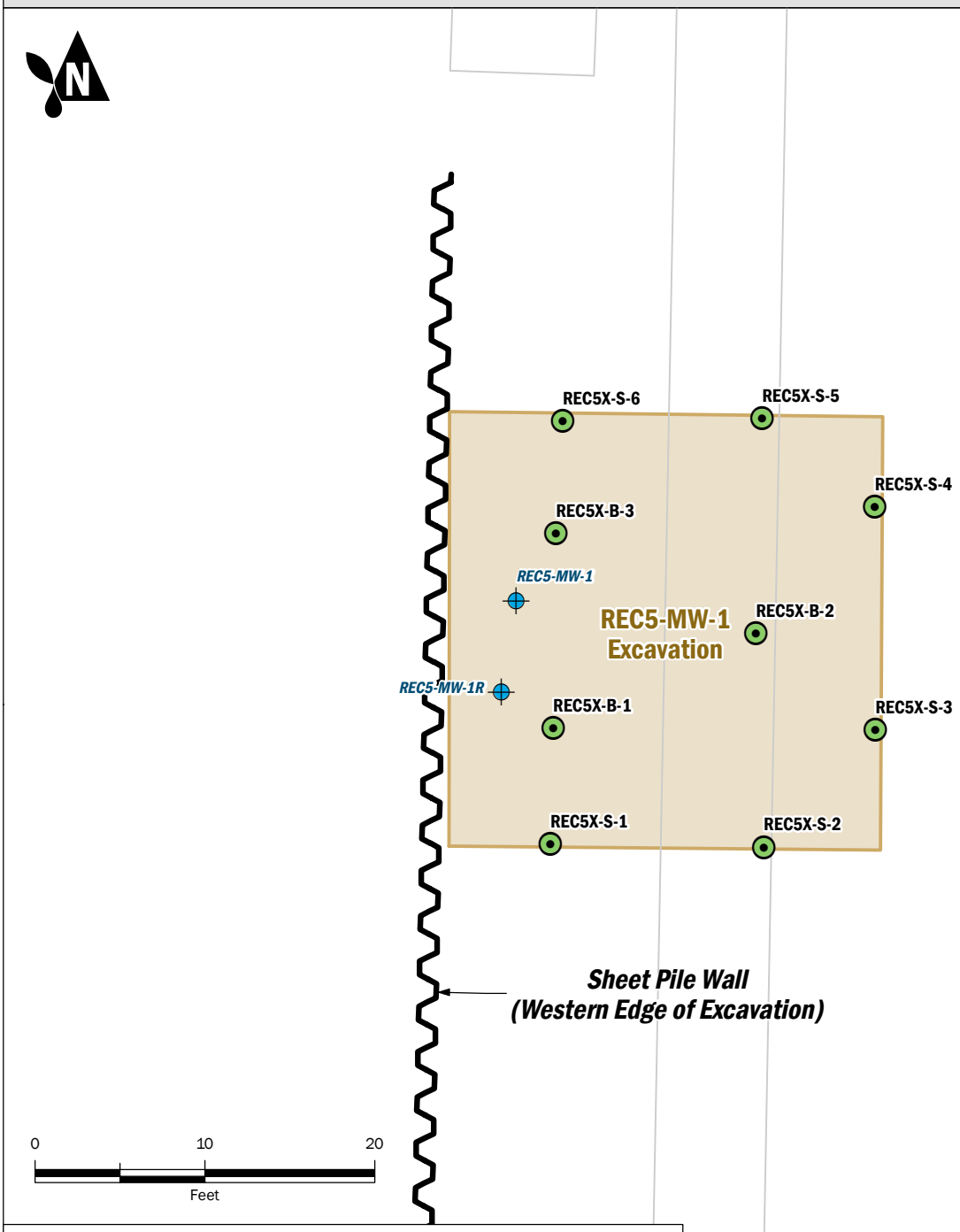

Verification Sample Data

- Identifies in-situ soil sample location with no exceedance of soil preliminary cleanup level (PCL) for figure COC
- Identifies in-situ soil sample location with exceedance of soil PCL for figure COC
- Identifies overexcavated soil sample location with no exceedance of soil PCL for figure COC
- Identifies overexcavated soil sample location
- Former Monitoring Well
- REC5-MW-1 Excavation Extents

Note: Historical site feature locations are approximate.

COC = contaminant of concern

Soil Cleanup Results for REC5-MW-1 Area

Report for Second Interim Action
K-C Worldwide Site Upland Area
Everett, Washington

Aspect Consulting	JAN-2021	BY: SJG / HRL	FIGURE NO. 15
	PROJECT NO. 110207	REVISED BY: ---	

GIS Path: T:\projects_8\KimberlyClark\Env_Support_110207\Delivered\IA_Fall2020\Deliverable\15 REC5-MW-1 Area.mxd || Coordinate System: NAD 1983 StatePlane Washington South FIPS 4602 Feet || Date Saved: 2021-01-15 || User: trullen || Print Date: 2021-01-15

TPH-cPAH

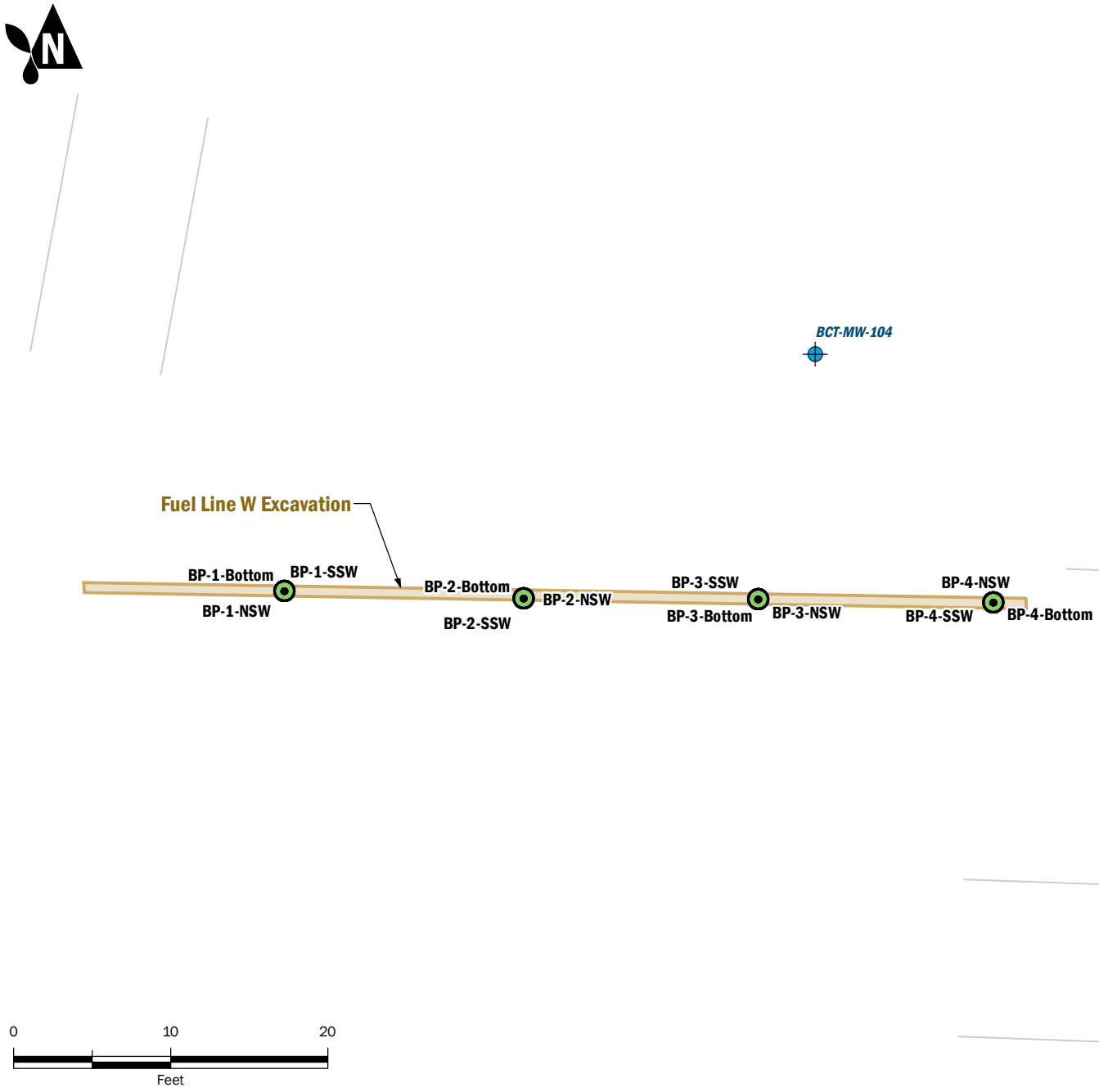

Verification Sample Data

- Identifies in-situ soil sample location with no exceedance of soil preliminary cleanup level (PCL) for figure COC
- Identifies in-situ soil sample location with exceedance of soil PCL for figure COC
- Identifies overexcavated soil sample location with no exceedance of soil PCL for figure COC
- Identifies overexcavated soil sample location
- Former Monitoring Well
- Fuel Line W Excavation Extents

Note: Historical site feature locations are approximate.

COC = contaminant of concern

Soil Cleanup Results for Fuel Line W Area

Report for Second Interim Action
K-C Worldwide Site Upland Area
Everett, Washington

Aspect Consulting	JAN-2021	BY: SJG / HRL	FIGURE NO. 16
	PROJECT NO. 110207	REVISED BY: ---	

GIS Path: T:\projects_8\Kimberly\Clark\Env_Support_110207\Delivered\IA_Fall2020\Deliverable\16 Fuel Line W Area.mxd || Coordinate System: NAD 1983 StatePlane Washington South FIPS 4602 Feet || Date Saved: 2021-01-15 || User: trullen || Print Date: 2021-01-15

APPENDIX A

Photographs from Pipe Plugging Activities



Photograph 1. Manhole D in foreground, Catch Basins C and B, respectively, in background, looking south.



Photograph 2. Catch Basin B in foreground, Catch Basin C in background, looking north.



Photograph 3. Catch Basin A in foreground, Catch Basins B and C, respectively, in background, looking north.



Photograph 1. Catch basins for B1 (background) and B2 (foreground), with downstream B2 pipe initially exposed.



Photograph 2. B1 pipe at B2 catch basin excavation. B1 pipe was fully removed up to B2 catch basin, which was also removed.



Photograph 3. Downstream Pipe B2 exposed, preplugging.



Photograph 4. Pipe B2 pipe CDF plug ~6 feet downstream of its former catch basin location.



Photograph 5. B3 catch basin preexcavation. Thin veneer of CM adjacent to catch basin was removed and stockpiled.



Photograph 6: Pipe B3 downstream of former catch basin, before being plugged.

Photograph 6. 2020.05.15: Pipe B3 after plugging with CDF.





Photograph 1. Pipe C manhole adjacent to station 10+98.



Photograph 2. Open Pipe C manhole (adjacent to station 10+98).



Photograph 3. Pipe C after vactor cleaning (1).



Photograph 4. Pipe C after vactor cleaning (2).



Photograph 5. One Pipe C sandbag dam prior to placing CDF between dams.



Photograph 6. Pipe C CDF plug at station 10+98.



Photograph 7. Pipe C CDF plug at station 11+31.



Photograph 1. Pipe D not observed at west end of ecology block wall, adjacent to bulkhead (it is plugged 18 inches east of bulkhead)



Photograph 2. Same as Photograph 1.



Photograph 1. Pipe E, uncovered. T-junction at ~45 feet inland shown.



Photograph 2. Trench after removal of pipe E.



Photograph 3. Section of pipe E left in ground, preplugging.



Photograph 4. Pipe E plugged with CDF ~7 feet east of bulkhead.



Photograph 5. Pipe E T-joint (at 45 feet) plugged on both ends with CDF.



Photograph 1. Exposing top of Pipe F, east side of the bulkhead.



Photograph 2. Pipe F, looking east from under wharf at void in bulkhead around pipe.



Photograph 3. Pipe F at bulkhead, fabric and quarry spalls placed to stabilize materials around void.



Photograph 4. Top of Pipe F exposed 75 feet east of bulkhead.



Photograph 5. Saw cutting 16+ inches of concrete 15 feet east of bulkhead.



Photograph 6. Pipe F breached 15 feet east of bulkhead.



Photograph 7. Pipe F breached 75 feet east of bulkhead.



Photograph 8. Interior of Pipe F near 15-foot breach.



Photograph 9. Tide gate in Pipe F approx. 80 feet inland from bulkhead.



Photograph 10. Pneumatic plug in place at bulkhead.



Photograph 11. Sandbag wall in place at 15-foot breach. Air line and cable for pneumatic plug visible.



Photograph 12. Top of CDF plug at bulkhead.



Photograph 13. Top of CDF plug at 75 feet inland. CDF plug is continuous from bulkhead to 75 feet.



Photograph 1. Pipe G exposed near bulkhead, preplugging.



Photograph 2. Trench after Pipe G removal to ~78 feet inland.



Photograph 3. Pipe G after being removed.



Photograph 4. Pipe G CDF plug at bulkhead .



Photograph 1. Pipe H catch basin near bulkhead before excavation.



Photograph 2. Pipe H catch basin and pipe through bulkhead with thermos plug installed.



Photograph 3. Pipe H catch basin plugged with CDF.



Photograph 1. Pipe J not present on west side of ecology block wall adjacent to bulkhead. Pipe plugged 16 feet east of bulkhead.



Photograph 2. Pipe J location excavated to 4.5 feet on west side of ecology block wall.



Photograph 1. Pipe K outfall under wharf with temporary pneumatic plug.



Photograph 2. Pipe K cut ~12 feet east of bulkhead, within shored excavation with active dewatering from sump. Tieback on right side was not damaged during excavation.



Photograph 3. Pipe K with “Fernco” removable plug attached.



Photograph 4. Pipe K with “Fernco” plug and ecology block to brace the plug against tidal pressure.



Photograph 5. Pipe K excavation backfilled, view west. A vertical 2-x-4 protruding from the backfill marks the location of the “Fernco” plug at depth.



Photograph 1. Pipe L, with thermos plug installed, on west side of ecology block wall adjacent to bulkhead.



Photograph 2. Pipe L plugged with CDF adjacent to bulkhead.



Photograph 1. Pipe M exposed 75 feet inland; concrete covering encountered on the wood stave pipe was partially intact.



Photograph 2. Pipe M exposed 75 feet inland; concrete covering completely removed to expose wood stave pipe.



Photograph 3. Pipe M entering/exiting vault near shoreline.



Photograph 4. Jet set concrete in Pipe M placed downstream of vault.



Photograph 5. Sandbags placed to confine area of CDF placement around sealed pipe entry/exit points, and, thus avoid, filling entire vault bottom with CDF.



Photograph 6. CDF plug placed in bottom of vault covering pipe entry/exit points.



Photograph 7. Vault backfilled with Parcel O sand.



Photograph 8. Backfilled trench from removed pipe inland from vault.



Photograph 1. Pipe N not present 7 feet east of bulkhead.



Photograph 1. Pipe P not present 7 feet east of bulkhead.

Q-Series Pipes (Q and Q1 through Q5)



Photograph 1. Excavation for pipe Q, ~7 feet east of bulkhead, no pipe found.



Photograph 2. Excavation for pipes Q1 and Q2 (collocated), ~7 feet east of bulkhead, no pipes found.



Photograph 3. Excavation for pipes Q3, Q4, and Q5, ~7 feet east of bulkhead, no pipes found.

APPENDIX B

Photographs from Soil Removal Activities



Photograph 1. Initial excavation above water table, 10/5/2020, view looking east-northeast.



Photograph 2. Eastern wall in initial excavation, 10/5/2020, view looking east. Note treated timbers in north sidewall (left side of photo)



Photograph 3. Initial excavation, 10/5/2020, view looking southwest.



Photograph 4. Excavation bottom at ~ 9 feet, 10/12/2020. Note lower portion of BA-MW-7 well casing next to creosote-treated wood piling, quarry spalls across entire base.



Photograph 5. View beneath wharf just west of BA-MW-7 excavation, looking east at concrete bulkhead. Black geotextile containing quarry spalls visible beneath bulkhead—same materials as in BA-MW-7 excavation immediately east of bulkhead, 10/12/2020.



Photograph 6. BA-MW-7 excavation backfilled, 10/13/2020.



Photograph 1. Southern leg of BBH Area excavation, view looking north towards yet-to-be-excavated main excavation.

BOILER BAGHOUSE AREA EXCAVATION



Photograph 2. Western end of western extension of BBH Area excavation, view looking north.



Photograph 3. Eastern end of western extension of BBH Area excavation, view looking east.



Photograph 4. Western extension of BBH Area excavation, view looking west from main excavation area.



Photograph 5. Northern leg of BBH Area excavation, view looking north.



Photograph 6. Concrete slab in south sidewall of western excavation extension, beneath sidewall sample S-25 at approximately 5 feet bgs.



Photograph 7. Concrete slab in north sidewall of western excavation extension, beneath sidewall sample S-26 at approximately 5 feet bgs.



Photograph 8. Southern leg of BBH Area excavation, view looking north towards yet to be excavated main excavation.



Photograph 9. Southern sidewall of main BBH Area excavation, showing concrete in upper 6 feet above sample S-67.



Photograph 10. Final limits of southern leg of BBH Area excavation, view looking southwest.



Photograph 11. Final limits of southern leg of BBH Area excavation, northern portion of west sidewall, view looking west.



Photograph 12. View from NE corner of north leg, looking south into main part of BBH Area excavation. Concrete in eastern portion of south sidewall is evident in background.



Photograph 13. View from west leg of BBH Area looking at connector segment to GFB12 Area in the background, looking south. Concrete on both sidewalls and base.



Photograph 14. View across main BBH Area, looking southwest towards the south leg of the excavation area.

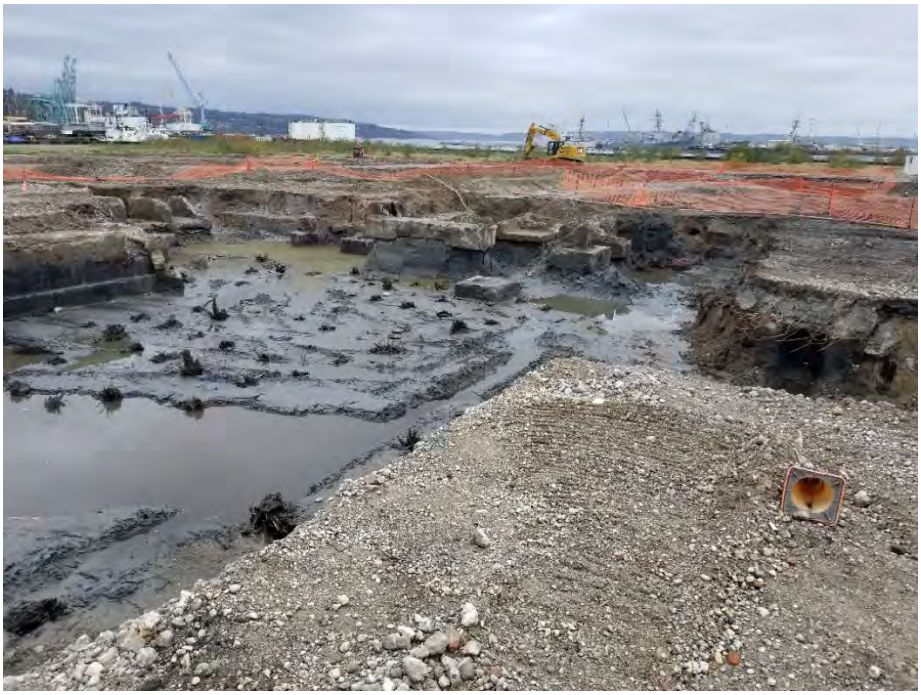

Photograph 15. View across main BBH Area to the west-southwest, with south leg to the left, west leg in the middle, and north leg on the right.



Photograph 16. View across main BBH Area, looking east.



Photograph 17. View of south leg, looking south-southeast.



Photograph 1. South end of excavation, looking east. North-south-trending wooden utilidor on west side of concrete foundation elements.



Photograph 2. South end of excavation, looking west. Concrete-encased wood stave pipe in foreground.



Photograph 3. Eastern side of south end of excavation, looking south. Concrete-encased wood stave pipe in center of photo, runs through/beneath east-west-trending concrete foundation structure.



Photograph 4. Same as Photograph 3, but looking north. East-west-trending sheet pile wall in foreground.



Photograph 5. Initial observation of Bunker C fuel pipe and utility pipe near south end of excavation.



Photograph 6. Asbestos-containing material insulation on pipes.



Photograph 7. One Bunker C fuel pipe encountered within wooden conduit, looking north.



Photograph 8. Utilidor covered pending asbestos abatement (left side), dewatering in process, view north.



Photograph 9. South end of excavation, looking south.



Photograph 10. Open excavation extent on 7/30/2020, view looking southwest.



Photograph 11. Open excavation extent on 7/30/2020, view looking southeast.



Photograph 12. Open excavation prior to dewatering on 8/10/2020, view looking northeast.



Photograph 13. Aerial view of excavation taken on 8/12/2020, view looking north.



Photograph 14. Initial observation of fuel pipes near northwest corner of excavation.



Photograph 15. Northwest corner of excavation on 8/18/2020.



Photograph 16. Limits of excavation on 8/20/2020 for removal of NW bunker fuel pipes.



Photograph 17. Concrete slab and structures at base of CMS excavation at B-36 sample location, view looking west.



Photograph 1. Stockpiled overburden from CN-West excavation.



Photograph 2. CN-West initial excavation, dewatering turned off.



Photograph 3. CN-East excavation, dewatering turned off.

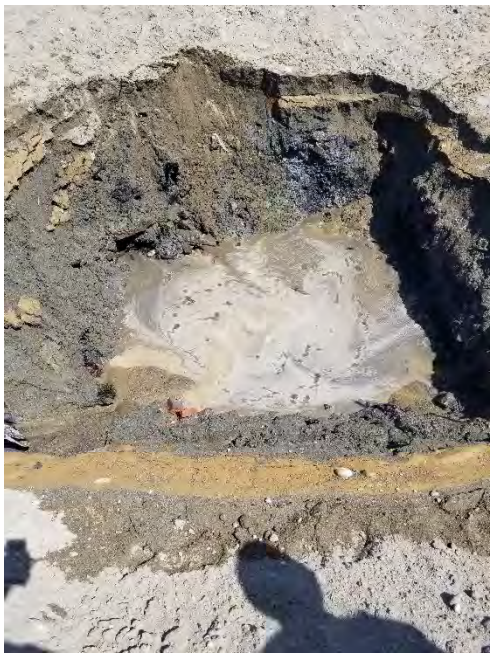

Photograph 4. CN-West after overexcavation of base, dewatering turned off.



Photograph 5. CN-East excavation backfilled.



Photograph 6. CN-West excavation backfilled.



Photograph 1. Initial excavation limits, view to the southeast.



Photograph 2. Initial excavation limits, looking northeast.



Photograph 3. Limits after first overexcavation, view looking north.



Photograph 4. Limits after first overexcavation, view looking northwest.



Photograph 5. Excavation extension between south leg of BBH Area (in foreground) and GFB12 Area (in background), view looking west, concrete structure comprising north sidewall evident in upper righthand corner of photo.



Photograph 6. North sidewall of extension between south leg of BBH Area and GFB12 Area, view looking north.



Photograph 7. South sidewall of extension between east sidewall of GFB12 Area and south leg of BBH Area, view looking south.



Photograph 8. Excavation extension between south leg of BBH Area (in background) and GFB12 Area (in foreground), view looking east, concrete structure comprising north sidewall evident in lefthand side of photo.



Photograph 1. South wall of excavation at 12-foot depth prior to installing dewatering sump.



Photograph 2. Excavation after first overexcavation of north sidewall with dewatering turned off, view west. Soil on visqueen is staged awaiting loading for off-site disposal.

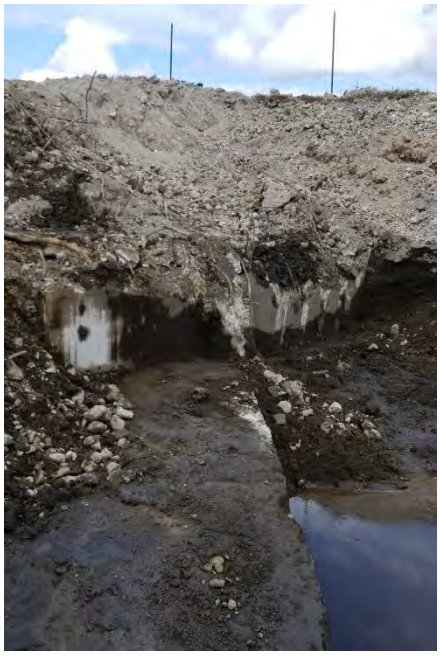

Photograph 3. East side of north sidewall of excavation after second overexcavation encounters large concrete structure.



Photograph 4. Hydraulic Barker excavation backfilled to surrounding soil grade (beneath adjacent CM awaiting removal).



Photograph 1. Initial dewatered excavation, conveyor foundation on right, looking south.



Photograph 2. Initial dewatered excavation, conveyor foundation on left, looking north.



Photograph 3. West sidewall beneath foundation after second overexcavation, looking west.



Photograph 4. Looking south in excavation after second overexcavation.



Photograph 5. Log Pond Chip Conveyor excavation being backfilled, 7/14/2020.



Photograph 1. Large concrete foundation elements extending beneath excavation base, looking west.



Photograph 2. Excavation looking east prior to overexcavation.

OLD MACHINE SHOP AREA EXCAVATION



Photograph 3. South sidewall, start of excavation, looking east.



Photograph 4. Excavation looking east after first overexcavation.



Photograph 5. South sidewall after ecology blocks moved back and first overexcavation performed.



Photograph 6. South sidewall following removal of ecology blocks and second overexcavation.



Photograph 7. Southern sidewall showing backfill placed immediately after second overexcavation to protect bank stability.



Photograph 8. Southern sidewall showing top of shoreline bank after second overexcavation, looking west.



Photograph 9. Southern sidewall showing top of shoreline bank after second overexcavation, looking east.



Photograph 10. Eastern corner of southern sidewall showing third overexcavation to wood stave Pipe C on 8/27/2020, looking southwest.



Photograph 11. Close up of wood stave Pipe C in southeasternmost sidewall.



Photograph 12. Southern sidewall and shoreline bank, including remnants of wooden bulkhead, after third overexcavation on 8/27/2020.



Photograph 13. Southern shoreline bank, including remnants of wooden bulkhead, after third overexcavation on 8/27/2020.



Photograph 14. Excavation backfilled, looking south, 9/14/2020.



Photograph 1. Approximately 3 feet of CM overlying soil at the PM-B-6 Area, view looking east.



Photograph 2. Excavation showing mid-excavation concrete wall and wood stave pipe on north sidewall, view looking west.



Photograph 3. Extensive structures and little soil on west sidewall north of concrete wall, view looking west.



Photograph 4. North and east sidewalls on north side of concrete wall, view looking east.



Photograph 5. West sidewall on south side of concrete wall, view looking west.



Photograph 6. South sidewall with concrete wall in the foreground, view looking east.



Photograph 7. East sidewall on south side of concrete wall, view looking east.



Photograph 8. Western overexcavation of west sidewall, on the south side of the concrete wall, view looking south.



Photograph 9. PM-B-6 Area excavation backfilled.



Photograph 1. Initial excavation limits on 8/28/2020, view looking northeast.



Photograph 2. Initial excavation limits on 8/28/2020 with sheet pile wall on west sidewall, view looking west.



Photograph 3. Final excavation limits on 8/28/2020, view looking southwest.



Photograph 4. Excavation backfilled, 9/16/2020, view looking west.



Photograph 1. Fuel oil pipe exposed, in place.



Photograph 2. Fuel oil pipe trench, after pipe removal.



Photograph 3. Fuel oil pipe staged in visqueen pending off-site disposal.



Photograph 4. Impacted soil removed from fuel oil pipe trench, stockpiled pending off-site disposal.

APPENDIX C

Data Validation Reports

LABORATORY DATA CONSULTANTS, INC.
2701 Loker Ave. West, Suite 220, Carlsbad, CA 92010 Bus: 760-827-1100 Fax: 760-827-1099

Aspect Consulting LLC
701 Second Ave., Suite 550
Seattle, WA 98104
ATTN: Carla Brock, LHG
cbrock@aspectconsulting.com

August 19, 2020

SUBJECT: Kimberly-Clark Upland Area, Data Validation

Dear Ms. Brock,

Enclosed are the final validation reports for the fractions listed below. These SDGs were received on July 27, 2020. Attachment 1 is a summary of the samples that were reviewed for each analysis.

LDC Project #48734:

SDG #	Fraction
005373,005398,006082 006251,006275,006294 006358,006387,006419 006466,006498	Polynuclear Aromatic Hydrocarbons, Polychlorinated Biphenyls, Metals, TPH as Gasoline, TPH as Extractables

The data validation was performed under Stage 2A guidelines. The analyses were validated using the following documents, as applicable to each method:

- USEPA National Functional Guidelines for Organic Superfund Methods Data Review, January 2017
- USEPA National Functional Guidelines for Inorganic Superfund Methods Data Review; January 2017
- EPA SW 846, Third Edition, Test Methods for Evaluating Solid Waste, update 1, July 1992; update IIA, August 1993; update II, September 1994; update IIB, January 1995; update III, December 1996; update IIIA, April 1998; IIIB, November 2004; update IV, February 2007; update V, July 2014

Please feel free to contact us if you have any questions.

Sincerely,

Christina Rink

Christina Rink
crink@lab-data.com
Project Manager/Senior Chemist

371 pages-ADV

Attachment 1

Stage 2A EDD **LDC #48734 (Aspect Consulting, LLC - Seattle, WA / Kimberly-Clark Upland Area 2020 Interm Action)**

LDC	SDG#	DATE REC'D	(3) DATE DUE	(16) PAH (8270E -SIM)		(7) PAHs (8270E -SIM)		PCBs (8082A)		(5) Metals (6020B)		Cu (6020B)		Cu,Zn (6020B)		Hg (1631E)		TPH-G (NWTPH -Gx)		TPH-E (NWTPH -Dx)																	
Matrix:	Water/Soil			W	S	W	S	W	S	W	S	W	S	W	S	W	S	W	S	W	S	W	S	W	S	W	S	W	S	W	S	W	S	W	S	W	S
A	005373	07/27/20	08/17/20	-	-	-	-	0	5	-	-	-	-	0	4	0	4	-	-	0	4																
B	005398	07/27/20	08/17/20	-	-	-	-	0	10	-	-	-	-	0	11	0	10	-	-	0	10																
C	006082	07/27/20	08/17/20	-	-	-	-	0	5	-	-	-	-	0	4	0	4	-	-	0	4																
D	006251	07/27/20	08/17/20	-	-	-	-	-	-	-	-	0	19	-	-	0	19	-	-	-	-																
E	006275	07/27/20	08/17/20	-	-	0	6	-	-	-	-	-	-	-	-	0	6	0	6	0	6																
F	006294	07/27/20	08/17/20	-	-	0	8	-	-	-	-	-	-	-	-	0	8	0	8	0	8																
G	006358	07/27/20	08/17/20	-	-	-	-	-	-	-	-	0	16	-	-	0	16	-	-	-	-																
H	006387	07/27/20	08/17/20	0	15	0	7	0	3	0	3	-	-	-	-	0	10	-	-	-	-																
I	006419	07/27/20	08/17/20	0	11	-	-	-	-	-	-	0	12	-	-	0	12	-	-	-	-																
J	006466	07/27/20	08/17/20	-	-	-	-	0	17	-	-	0	16	-	-	0	16	-	-	-	-																
K	006498	07/27/20	08/17/20	-	-	0	6	0	7	-	-	0	6	-	-	0	11	-	-	-	-																
Total	T/CR			0	26	0	27	0	47	0	3	0	69	0	19	0	116	0	14	0	32	0	0	0	0	0	0	0	0	0	0	0	0	0	0	0	353

Shaded cells indicate Stage 4 validation (all other cells are Stage 2A validation). These sample counts do not include MS, MSD, or DUP's.

L:\Aspect Consulting\Kimberly Clark\48734ST.wpd

Laboratory Data Consultants, Inc.
Data Validation Report

Project/Site Name: Kimberly-Clark Upland Area

LDC Report Date: August 17, 2020

Parameters: Polychlorinated Biphenyls

Validation Level: Stage 2A

Laboratory: Friedman & Bruya, Inc.

Sample Delivery Group (SDG): 005373

Sample Identification	Laboratory Sample Identification	Matrix	Collection Date
HB-S-01-9-052820	005373-01	Soil	05/28/20
HB-S-02-9-052820	005373-02	Soil	05/28/20
HB-S-03-9-052820	005373-03	Soil	05/28/20
HB-S-04-9-052820	005373-04	Soil	05/28/20
HB-501-052820	005373-05	Soil	05/28/20
HB-S-01-9-052820MS	005373-01MS	Soil	05/28/20
HB-S-01-9-052820MSD	005373-01MSD	Soil	05/28/20

Introduction

This Data Validation Report (DVR) presents data validation findings and results for the associated samples listed on the cover page. Data validation was performed in accordance with a modified outline of the USEPA National Functional Guidelines (NFG) for Organic Superfund Methods Data Review (January 2017). Where specific guidance was not available, the data has been evaluated in a conservative manner consistent with industry standards using professional experience.

The analyses were performed by the following method:

Polychlorinated Biphenyls (PCBs) by Environmental Protection Agency (EPA) SW 846 Method 8082A

All sample results were subjected to Stage 2A data validation, which comprises an evaluation of quality control (QC) summary results.

The following are definitions of the data qualifiers utilized during data validation:

J (Estimated): The compound or analyte was analyzed for and positively identified by the laboratory; however the reported concentration is estimated due to non-conformances discovered during data validation.

U (Non-detected): The compound or analyte was analyzed for and positively identified by the laboratory; however the compound or analyte should be considered non-detected at the reported concentration due to the presence of contaminants detected in the associated blank(s).

UJ (Non-detected estimated): The compound or analyte was reported as not detected by the laboratory; however the reported quantitation/detection limit is estimated due to non-conformances discovered during data validation.

R (Rejected): The sample results were rejected due to gross non-conformances discovered during data validation. Data qualified as rejected is not usable.

NA (Not Applicable): The non-conformance discovered during data validation demonstrates a high bias, while the affected compound or analyte in the associated sample(s) was reported as not detected by the laboratory and did not warrant the qualification of the data.

A qualification summary table is provided at the end of this report if data has been qualified. Flags are classified as P (protocol) or A (advisory) to indicate whether the flag is due to a laboratory deviation from a specified protocol or is of technical advisory nature.

I. Sample Receipt and Technical Holding Times

All samples were received in good condition and cooler temperatures upon receipt met validation criteria.

All technical holding time requirements were met.

II. Initial Calibration and Initial Calibration Verification

Initial calibration data were not reviewed for Stage 2A validation.

III. Continuing Calibration

Continuing calibration data were not reviewed for Stage 2A validation.

IV. Laboratory Blanks

Laboratory blanks were analyzed as required by the method. No contaminants were found in the laboratory blanks.

V. Field Blanks

No field blanks were identified in this SDG.

VI. Surrogates

Surrogates were added to all samples as required by the method. All surrogate recoveries (%R) were within QC limits.

VII. Matrix Spike/Matrix Spike Duplicates

Matrix spike (MS) and matrix spike duplicate (MSD) sample analysis was performed on an associated project sample. Percent recoveries (%R) were within QC limits with the following exceptions:

Spike ID (Associated Samples)	Compound	MS (%R) (Limits)	MSD (%R) (Limits)	Flag	A or P
HB-S-01-9-052820MS/MSD (HB-S-01-9-052820)	Aroclor-1260	200 (38-124)	172 (38-124)	NA	-

Relative percent differences (RPD) were within QC limits.

VIII. Laboratory Control Samples

Laboratory control samples (LCS) were analyzed as required by the method. Percent recoveries (%R) were within QC limits.

IX. Field Duplicates

Samples HB-S-03-9-052820 and HB-501-052820 were identified as field duplicates. No results were detected in any of the samples with the following exceptions:

Compound	Concentration (mg/Kg)		RPD
	HB-S-03-9-052820	HB-501-052820	
Aroclor-1262	0.04	0.057	35

X. Compound Quantitation

Raw data were not reviewed for Stage 2A validation.

XI. Target Compound Identification

Raw data were not reviewed for Stage 2A validation.

XII. Overall Assessment of Data

The analysis was conducted within all specifications of the method. No results were rejected in this SDG.

Kimberly-Clark Upland Area
Polychlorinated Biphenyls - Data Qualification Summary - SDG 005373

No Sample Data Qualified in this SDG

Kimberly-Clark Upland Area
Polychlorinated Biphenyls - Laboratory Blank Data Qualification Summary - SDG 005373

No Sample Data Qualified in this SDG

Kimberly-Clark Upland Area
Polychlorinated Biphenyls - Field Blank Data Qualification Summary - SDG 005373

No Sample Data Qualified in this SDG

LDC #: 48734A3b
SDG #: 005373
Laboratory: Friedman & Bruya, Inc.

VALIDATION COMPLETENESS WORKSHEET
Stage 2A

Date: 8/13/20
Page: 1 of 1
Reviewer: LT
2nd Reviewer:

METHOD: GC Polychlorinated Biphenyls (EPA SW846 Method 8082A)

The samples listed below were reviewed for each of the following validation areas. Validation findings are noted in attached validation findings worksheets.

	Validation Area		Comments
I.	Sample receipt/Technical holding times	A/A	
II.	Initial calibration/ICV	N/N	
III.	Continuing calibration	N	
IV.	Laboratory Blanks	A	
V.	Field blanks	N	
VI.	Surrogate spikes	A	
VII.	Matrix spike/Matrix spike duplicates	SW	(6,7)
VIII.	Laboratory control samples	A	LCS
IX.	Field duplicates	SW	D = 3+5
X.	Compound quantitation/RL/LOQ/LODs	N	Dry weight basis
XI.	Target compound identification	N	
XII.	Overall assessment of data	A	

Note: A = Acceptable; N = Not provided/applicable; SW = See worksheet; ND = No compounds detected; R = Rinsate; FB = Field blank; D = Duplicate; TB = Trip blank; EB = Equipment blank; SB=Source blank; OTHER:

	Client ID		Lab ID	Matrix	Date
1	HB-S-01-9-052820		005373-01	Soil	05/28/20
2	HB-S-02-9-052820		005373-02	Soil	05/28/20
3	HB-S-03-9-052820	D	005373-03	Soil	05/28/20
4	HB-S-04-9-052820		005373-04	Soil	05/28/20
5	HB-501-052820	D	005373-05	Soil	05/28/20
6	HB-S-01-9-052820MS		005373-01MS	Soil	05/28/20
7	HB-S-01-9-052820MSD		005373-01MSD	Soil	05/28/20
8					
9					
10					
11					
12					
13					

Notes:

1	00-B20 MB 1/6						

LDC #: 48734A3b

VALIDATION FINDINGS WORKSHEET
Matrix Spike/Matrix Spike Duplicates

Reviewer: LT
2nd Reviewer:

METHOD: X **GC** ___ **HPLC**

Please see qualifications below for all questions answered "N". Not applicable questions are identified as "N/A".

Y x N___ N/A ___ Were a matrix spike (MS) and matrix spike duplicate (MSD) analyzed for each matrix in this SDG?

Y x N___ N/A___ Was an MS/MSD analyzed every 20 samples for each matrix or whenever a sample extraction was performed?

Y___ N x N/A___ Were the MS/MSD percent recoveries (%R) and relative percent differences (RPD) within QC limits?

#	MS/MSD ID	Compound	MS %R (Limits)	MSD %R (Limits)	RPD (Limits)	Associated Samples	Qualifications
	6/7	Aroclor 1260	200 (38 - 124)	172 (38 - 124)		1 (ND)	J/A dets

LDC#:48734A3b **VALIDATION FINDINGS WORKSHEET**
Field Duplicates

Reviewer:__LT__
2nd Reviewer:__

METHOD: GC PCBs (EPA SW846 Method 8082A)

Compound	Concentration (mg/kg)		RPD
	3	5	
Aroclor 1262	0.04	0.057	35

Laboratory Data Consultants, Inc.
Data Validation Report

Project/Site Name: Kimberly-Clark Upland Area

LDC Report Date: August 13, 2020

Parameters: Metals

Validation Level: Stage 2A

Laboratory: Friedman & Bruya, Inc.

Sample Delivery Group (SDG): 005373

Sample Identification	Laboratory Sample Identification	Matrix	Collection Date
HB-S-02-9-052820	005373-02	Soil	05/28/20
HB-S-03-9-052820	005373-03	Soil	05/28/20
HB-S-04-9-052820	005373-04	Soil	05/28/20
HB-501-052820	005373-05	Soil	05/28/20

Introduction

This Data Validation Report (DVR) presents data validation findings and results for the associated samples listed on the cover page. Data validation was performed in accordance with a modified outline of the USEPA National Functional Guidelines (NFG) for Inorganic Superfund Methods Data Review (January 2017). Where specific guidance was not available, the data has been evaluated in a conservative manner consistent with industry standards using professional experience.

The analyses were performed by the following methods:

Copper and Zinc by Environmental Protection Agency (EPA) SW 846 Method 6020B
Mercury by EPA Method 1631E

All sample results were subjected to Stage 2A data validation, which comprises an evaluation of quality control (QC) summary results.

The following are definitions of the data qualifiers utilized during data validation:

J (Estimated): The compound or analyte was analyzed for and positively identified by the laboratory; however the reported concentration is estimated due to non-conformances discovered during data validation.

U (Non-detected): The compound or analyte was analyzed for and positively identified by the laboratory; however the compound or analyte should be considered non-detected at the reported concentration due to the presence of contaminants detected in the associated blank(s).

UJ (Non-detected estimated): The compound or analyte was reported as not detected by the laboratory; however the reported quantitation/detection limit is estimated due to non-conformances discovered during data validation.

R (Rejected): The sample results were rejected due to gross non-conformances discovered during data validation. Data qualified as rejected is not usable.

NA (Not Applicable): The non-conformance discovered during data validation demonstrates a high bias, while the affected compound or analyte in the associated sample(s) was reported as not detected by the laboratory and did not warrant the qualification of the data.

A qualification summary table is provided at the end of this report if data has been qualified. Flags are classified as P (protocol) or A (advisory) to indicate whether the flag is due to a laboratory deviation from a specified protocol or is of technical advisory nature.

I. Sample Receipt and Technical Holding Times

All samples were received in good condition.

All technical holding time requirements were met.

II. ICPMS Tune

ICP-MS tune data were not reviewed for Stage 2A validation.

III. Instrument Calibration

Instrument calibration data were not reviewed for Stage 2A validation.

IV. ICP Interference Check Sample Analysis

ICP Interference check sample (ICS) analysis data were not reviewed for Stage 2A validation.

V. Laboratory Blanks

Laboratory blanks were analyzed as required by the methods. No contaminants were found in the laboratory blanks.

VI. Field Blanks

No field blanks were identified in this SDG.

VII. Matrix Spike/Matrix Spike Duplicates

The laboratory has indicated that there were no matrix spike (MS) and matrix spike duplicate (MSD) analyses specified for the samples in this SDG, and therefore matrix spike and matrix spike duplicate analyses were not performed for this SDG.

VIII. Duplicate Sample Analysis

The laboratory has indicated that there were no duplicate (DUP) analyses specified for the samples in this SDG, and therefore duplicate analyses were not performed for this SDG.

IX. Serial Dilution

Serial dilution was not performed for this SDG.

X. Laboratory Control Samples

Laboratory control samples (LCS) were analyzed as required by the methods. Percent recoveries (%R) were within QC limits.

XI. Field Duplicates

Samples HB-S-03-9-052820 and HB-501-052820 were identified as field duplicates. No results were detected in any of the samples with the following exceptions:

Analyte	Concentration (mg/Kg)		RPD
	HB-S-03-9-052820	HB-501-052820	
Copper	45.2	28.8	44
Zinc	49.1	43.4	12
Mercury	0.076	0.07U	Not calculable

XII. Internal Standards (ICP-MS)

Internal standards data were not reviewed for Stage 2A validation.

XIII. Sample Result Verification

Raw data were not reviewed for Stage 2A validation.

XIV. Overall Assessment of Data

The analysis was conducted within all specifications of the methods. No results were rejected in this SDG.

Kimberly-Clark Upland Area
Metals - Data Qualification Summary - SDG 005373

No Sample Data Qualified in this SDG

Kimberly-Clark Upland Area
Metals - Laboratory Blank Data Qualification Summary - SDG 005373

No Sample Data Qualified in this SDG

Kimberly-Clark Upland Area
Metals - Field Blank Data Qualification Summary - SDG 005373

No Sample Data Qualified in this SDG

LDC #: 48734A4a
SDG #: 005373
Laboratory: Friedman & Bruya, Inc.

VALIDATION COMPLETENESS WORKSHEET
Stage 2A

Date: 8/12/2020
Page: 1 of 1
Reviewer: DM
2nd Reviewer:

METHOD: Metals (EPA SW 846 Method 6020B/EPA Method 1631E)

The samples listed below were reviewed for each of the following validation areas. Validation findings are noted in attached validation findings worksheets.

	Validation Area		Comments
I.	Sample receipt/Technical holding times	A / A	
II.	ICP/MS Tune	N	
III.	Instrument Calibration	N	
IV.	ICP Interference Check Sample (ICS) Analysis	N	
V.	Laboratory Blanks	A	
VI.	Field Blanks	N	
VII.	Matrix Spike/Matrix Spike Duplicates	N	
VIII.	Duplicate sample analysis	N	
IX.	Serial Dilution	N	
X.	Laboratory control samples	A	LCS
XI.	Field Duplicates	N	(2,4)
XII.	Internal Standard (ICP-MS)	N	
XIII.	Sample Result Verification	N	
XIV	Overall Assessment of Data	A	

Note: A = Acceptable; N = Not provided/applicable; SW = See worksheet; ND = No compounds detected; R = Rinsate; FB = Field blank; D = Duplicate; TB = Trip blank; EB = Equipment blank; SB=Source blank; OTHER:

	Client ID	Lab ID	Matrix	Date
1	HB-S-02-9-052820	005373-02	Soil	05/28/20
2	HB-S-03-9-052820	005373-03	Soil	05/28/20
3	HB-S-04-9-052820	005373-04	Soil	05/28/20
4	HB-501-052820	005373-05	Soil	05/28/20
5				
6				
7				
8				
9				
10				
11				
12				
13				

Notes:

LDC #: 49731A49

VALIDATION FINDINGS WORKSHEET
Sample Specific Element Reference

Reviewer: DTM
2nd reviewer:

All circled elements are applicable to each sample.

Sample ID	Matrix	Target Analyte List (TAL)
All	S	Al, Sb, As, Ba, Be, B, Cd, Ca, Cr, Co, (Cu), Fe, Pb, Li, Mg, Mo, Mn, (Hg), Ni, K, Se, Ag, Na, Sr, Tl, Sn, Ti, W, U, V, (Zn)
		Al, Sb, As, Ba, Be, B, Cd, Ca, Cr, Co, Cu, Fe, Pb, Li, Mg, Mo, Mn, Hg, Ni, K, Se, Ag, Na, Sr, Tl, Sn, Ti, W, U, V, Zn
		Al, Sb, As, Ba, Be, B, Cd, Ca, Cr, Co, Cu, Fe, Pb, Li, Mg, Mo, Mn, Hg, Ni, K, Se, Ag, Na, Sr, Tl, Sn, Ti, W, U, V, Zn
		Al, Sb, As, Ba, Be, B, Cd, Ca, Cr, Co, Cu, Fe, Pb, Li, Mg, Mo, Mn, Hg, Ni, K, Se, Ag, Na, Sr, Tl, Sn, Ti, W, U, V, Zn
		Al, Sb, As, Ba, Be, B, Cd, Ca, Cr, Co, Cu, Fe, Pb, Li, Mg, Mo, Mn, Hg, Ni, K, Se, Ag, Na, Sr, Tl, Sn, Ti, W, U, V, Zn
		Al, Sb, As, Ba, Be, B, Cd, Ca, Cr, Co, Cu, Fe, Pb, Li, Mg, Mo, Mn, Hg, Ni, K, Se, Ag, Na, Sr, Tl, Sn, Ti, W, U, V, Zn
		Al, Sb, As, Ba, Be, B, Cd, Ca, Cr, Co, Cu, Fe, Pb, Li, Mg, Mo, Mn, Hg, Ni, K, Se, Ag, Na, Sr, Tl, Sn, Ti, W, U, V, Zn
		Al, Sb, As, Ba, Be, B, Cd, Ca, Cr, Co, Cu, Fe, Pb, Li, Mg, Mo, Mn, Hg, Ni, K, Se, Ag, Na, Sr, Tl, Sn, Ti, W, U, V, Zn
		Al, Sb, As, Ba, Be, B, Cd, Ca, Cr, Co, Cu, Fe, Pb, Li, Mg, Mo, Mn, Hg, Ni, K, Se, Ag, Na, Sr, Tl, Sn, Ti, W, U, V, Zn
		Al, Sb, As, Ba, Be, B, Cd, Ca, Cr, Co, Cu, Fe, Pb, Li, Mg, Mo, Mn, Hg, Ni, K, Se, Ag, Na, Sr, Tl, Sn, Ti, W, U, V, Zn
		Al, Sb, As, Ba, Be, B, Cd, Ca, Cr, Co, Cu, Fe, Pb, Li, Mg, Mo, Mn, Hg, Ni, K, Se, Ag, Na, Sr, Tl, Sn, Ti, W, U, V, Zn
		Al, Sb, As, Ba, Be, B, Cd, Ca, Cr, Co, Cu, Fe, Pb, Li, Mg, Mo, Mn, Hg, Ni, K, Se, Ag, Na, Sr, Tl, Sn, Ti, W, U, V, Zn
		Al, Sb, As, Ba, Be, B, Cd, Ca, Cr, Co, Cu, Fe, Pb, Li, Mg, Mo, Mn, Hg, Ni, K, Se, Ag, Na, Sr, Tl, Sn, Ti, W, U, V, Zn
		Al, Sb, As, Ba, Be, B, Cd, Ca, Cr, Co, Cu, Fe, Pb, Li, Mg, Mo, Mn, Hg, Ni, K, Se, Ag, Na, Sr, Tl, Sn, Ti, W, U, V, Zn
		Al, Sb, As, Ba, Be, B, Cd, Ca, Cr, Co, Cu, Fe, Pb, Li, Mg, Mo, Mn, Hg, Ni, K, Se, Ag, Na, Sr, Tl, Sn, Ti, W, U, V, Zn
		Al, Sb, As, Ba, Be, B, Cd, Ca, Cr, Co, Cu, Fe, Pb, Li, Mg, Mo, Mn, Hg, Ni, K, Se, Ag, Na, Sr, Tl, Sn, Ti, W, U, V, Zn
		Al, Sb, As, Ba, Be, B, Cd, Ca, Cr, Co, Cu, Fe, Pb, Li, Mg, Mo, Mn, Hg, Ni, K, Se, Ag, Na, Sr, Tl, Sn, Ti, W, U, V, Zn
		Al, Sb, As, Ba, Be, B, Cd, Ca, Cr, Co, Cu, Fe, Pb, Li, Mg, Mo, Mn, Hg, Ni, K, Se, Ag, Na, Sr, Tl, Sn, Ti, W, U, V, Zn
Analysis Method		
ICP		Al, Sb, As, Ba, Be, B, Cd, Ca, Cr, Co, Cu, Fe, Pb, Li, Mg, Mo, Mn, Hg, Ni, K, Se, Ag, Na, Sr, Tl, Sn, Ti, W, U, V, Zn
ICP-MS		Al, Sb, As, Ba, Be, B, Cd, Ca, Cr, Co, Cu, Fe, Pb, Li, Mg, Mo, Mn, Hg, Ni, K, Se, Ag, Na, Sr, Tl, Sn, Ti, W, U, V, Zn
GFAA		Al, Sb, As, Ba, Be, B, Cd, Ca, Cr, Co, Cu, Fe, Pb, Li, Mg, Mo, Mn, Hg, Ni, K, Se, Ag, Na, Sr, Tl, Sn, Ti, W, U, V, Zn

Comments: Mercury by CVAA if performed

LDC#: 48734A4a

VALIDATION FINDINGS WORKSHEET

Field Duplicates

Reviewer: DTM
2nd Reviewer:

METHOD: Metals (EPA Method 6010/6020/7000)

Analyte	Concentration (mg/Kg)		RPD
	2	4	
Copper	45.2	28.8	44
Zinc	49.1	43.4	12
Mercury	0.076	0.07U	NC

V:\Darionna\FIELD DUPLICATES\Field Duplicates\FD_inorganic\2020\48734A4a.wpd

Laboratory Data Consultants, Inc.
Data Validation Report

Project/Site Name: Kimberly-Clark Upland Area

LDC Report Date: August 17, 2020

Parameters: Total Petroleum Hydrocarbons as Extractables

Validation Level: Stage 2A

Laboratory: Friedman & Bruya, Inc.

Sample Delivery Group (SDG): 005373

Sample Identification	Laboratory Sample Identification	Matrix	Collection Date
HB-S-02-9-052820	005373-02	Soil	05/28/20
HB-S-03-9-052820	005373-03	Soil	05/28/20
HB-S-04-9-052820	005373-04	Soil	05/28/20
HB-501-052820	005373-05	Soil	05/28/20

Introduction

This Data Validation Report (DVR) presents data validation findings and results for the associated samples listed on the cover page. Data validation was performed in accordance with a modified outline of the USEPA National Functional Guidelines (NFG) for Organic Superfund Methods Data Review (January 2017). Where specific guidance was not available, the data has been evaluated in a conservative manner consistent with industry standards using professional experience.

The analyses were performed by the following method:

Total Petroleum Hydrocarbons (TPH) as Extractables by NWTPH-Dx

All sample results were subjected to Stage 2A data validation, which comprises an evaluation of quality control (QC) summary results.

The following are definitions of the data qualifiers utilized during data validation:

J (Estimated): The compound or analyte was analyzed for and positively identified by the laboratory; however the reported concentration is estimated due to non-conformances discovered during data validation.

U (Non-detected): The compound or analyte was analyzed for and positively identified by the laboratory; however the compound or analyte should be considered not detected at the reported concentration due to the presence of contaminants detected in the associated blank(s).

UJ (Non-detected estimated): The compound or analyte was reported as not detected by the laboratory; however the reported quantitation/detection limit is estimated due to non-conformances discovered during data validation.

R (Rejected): The sample results were rejected due to gross non-conformances discovered during data validation. Data qualified as rejected is not usable.

NA (Not Applicable): The non-conformance discovered during data validation demonstrates a high bias, while the affected compound or analyte in the associated sample(s) was reported as not detected by the laboratory and did not warrant the qualification of the data.

A qualification summary table is provided at the end of this report if data has been qualified. Flags are classified as P (protocol) or A (advisory) to indicate whether the flag is due to a laboratory deviation from a specified protocol or is of technical advisory nature.

I. Sample Receipt and Technical Holding Times

All samples were received in good condition and cooler temperatures upon receipt met validation criteria.

All technical holding time requirements were met.

II. Initial Calibration and Initial Calibration Verification

Initial calibration data were not reviewed for Stage 2A validation.

III. Continuing Calibration

Continuing calibration data were not reviewed for Stage 2A validation.

IV. Laboratory Blanks

Laboratory blanks were analyzed as required by the method. No contaminants were found in the laboratory blanks.

V. Field Blanks

No field blanks were identified in this SDG.

VI. Surrogates

Surrogates were added to all samples as required by the method. All surrogate recoveries (%R) were within QC limits.

VII. Matrix Spike/Matrix Spike Duplicates

The laboratory has indicated that there were no matrix spike (MS) and matrix spike duplicate (MSD) analyses specified for the samples in this SDG, and therefore matrix spike and matrix spike duplicate analyses were not performed for this SDG.

VIII. Laboratory Control Samples

Laboratory control samples (LCS) were analyzed as required by the method. Percent recoveries (%R) were within QC limits.

IX. Field Duplicates

Samples HB-S-03-9-052820 and HB-501-052820 were identified as field duplicates. No results were detected in any of the samples.

X. Compound Quantitation

Raw data were not reviewed for Stage 2A validation.

XI. Target Compound Identifications

Raw data were not reviewed for Stage 2A validation.

XII. Overall Assessment of Data

The analysis was conducted within all specifications of the method. No results were rejected in this SDG.

Kimberly-Clark Upland Area
Total Petroleum Hydrocarbons as Extractables - Data Qualification Summary - SDG 005373

No Sample Data Qualified in this SDG

Kimberly-Clark Upland Area
Total Petroleum Hydrocarbons as Extractables - Laboratory Blank Data Qualification Summary - SDG 005373

No Sample Data Qualified in this SDG

Kimberly-Clark Upland Area
Total Petroleum Hydrocarbons as Extractables - Field Blank Data Qualification Summary - SDG 005373

No Sample Data Qualified in this SDG

LDC #: 48734A8 **VALIDATION COMPLETENESS WORKSHEET** Date: 08/13/20
SDG #: 005373 Stage 2A Page: 1 of 1
Laboratory: Friedman & Bruya, Inc. Reviewer: LF
2nd Reviewer:

METHOD: GC TPH as Extractables (NWTPH-Dx)

The samples listed below were reviewed for each of the following validation areas. Validation findings are noted in attached validation findings worksheets.

	Validation Area		Comments
I.	Sample receipt/Technical holding times	A, A	
II.	Initial calibration/ICV	N/N	
III.	Continuing calibration	N	
IV.	Laboratory Blanks	A	
V.	Field blanks	N	
VI.	Surrogate spikes	A	
VII.	Matrix spike/Matrix spike duplicates	N	Non client
VIII.	Laboratory control samples	A	LCS
IX.	Field duplicates	ND	D= 2+4
X.	Compound quantitation RL/LOQ/LODs	N	Dry weight basis
XI.	Target compound identification	N	
XII.	Overall assessment of data	A	

Note: A = Acceptable; N = Not provided/applicable; SW = See worksheet; ND = No compounds detected; R = Rinsate; FB = Field blank; D = Duplicate; TB = Trip blank; EB = Equipment blank; SB=Source blank; OTHER:

	Client ID		Lab ID	Matrix	Date
1	HB-S-02-9-052820		005373-02	Soil	05/28/20
2	HB-S-03-9-052820	D	005373-03	Soil	05/28/20
3	HB-S-04-9-052820		005373-04	Soil	05/28/20
4	HB-501-052820	D	005373-05	Soil	05/28/20
5					
6					
7					
8					
9					
10					
11					
12					

Notes:

1	DD-1198 MB2						

Laboratory Data Consultants, Inc.
Data Validation Report

Project/Site Name: Kimberly-Clark Upland Area

LDC Report Date: August 17, 2020

Parameters: Polychlorinated Biphenyls

Validation Level: Stage 2A

Laboratory: Friedman & Bruya, Inc.

Sample Delivery Group (SDG): 005398

Sample Identification	Laboratory Sample Identification	Matrix	Collection Date
HB-B-01-13-052920	005398-01	Soil	05/29/20
HB-B-02-13-052920	005398-02	Soil	05/29/20
HB-B-03-13-052920	005398-03	Soil	05/29/20
HB-S-02-12-052920	005398-04	Soil	05/29/20
HB-S-03-12-052920	005398-05	Soil	05/29/20
HB-S-04-12-052920	005398-06	Soil	05/29/20
HB-S-05-12-052920	005398-07	Soil	05/29/20
HB-S-06-12-052920	005398-08	Soil	05/29/20
HB-S-07-12-052920	005398-09	Soil	05/29/20
HB-S-08-12-052920	005398-10	Soil	05/29/20
HB-B-01-13-052920MS	005398-01MS	Soil	05/29/20
HB-B-01-13-052920MSD	005398-01MSD	Soil	05/29/20

Introduction

This Data Validation Report (DVR) presents data validation findings and results for the associated samples listed on the cover page. Data validation was performed in accordance with a modified outline of the USEPA National Functional Guidelines (NFG) for Organic Superfund Methods Data Review (January 2017). Where specific guidance was not available, the data has been evaluated in a conservative manner consistent with industry standards using professional experience.

The analyses were performed by the following method:

Polychlorinated Biphenyls (PCBs) by Environmental Protection Agency (EPA) SW 846 Method 8082A

All sample results were subjected to Stage 2A data validation, which comprises an evaluation of quality control (QC) summary results.

The following are definitions of the data qualifiers utilized during data validation:

J (Estimated): The compound or analyte was analyzed for and positively identified by the laboratory; however the reported concentration is estimated due to non-conformances discovered during data validation.

U (Non-detected): The compound or analyte was analyzed for and positively identified by the laboratory; however the compound or analyte should be considered non-detected at the reported concentration due to the presence of contaminants detected in the associated blank(s).

UJ (Non-detected estimated): The compound or analyte was reported as not detected by the laboratory; however the reported quantitation/detection limit is estimated due to non-conformances discovered during data validation.

R (Rejected): The sample results were rejected due to gross non-conformances discovered during data validation. Data qualified as rejected is not usable.

NA (Not Applicable): The non-conformance discovered during data validation demonstrates a high bias, while the affected compound or analyte in the associated sample(s) was reported as not detected by the laboratory and did not warrant the qualification of the data.

A qualification summary table is provided at the end of this report if data has been qualified. Flags are classified as P (protocol) or A (advisory) to indicate whether the flag is due to a laboratory deviation from a specified protocol or is of technical advisory nature.

I. Sample Receipt and Technical Holding Times

All samples were received in good condition and cooler temperatures upon receipt met validation criteria.

All technical holding time requirements were met.

II. Initial Calibration and Initial Calibration Verification

Initial calibration data were not reviewed for Stage 2A validation.

III. Continuing Calibration

Continuing calibration data were not reviewed for Stage 2A validation.

IV. Laboratory Blanks

Laboratory blanks were analyzed as required by the method. No contaminants were found in the laboratory blanks.

V. Field Blanks

No field blanks were identified in this SDG.

VI. Surrogates

Surrogates were added to all samples as required by the method. All surrogate recoveries (%R) were within QC limits.

VII. Matrix Spike/Matrix Spike Duplicates

Matrix spike (MS) and matrix spike duplicate (MSD) sample analysis was performed on an associated project sample. Percent recoveries (%R) were within QC limits.

Relative percent differences (RPD) were within QC limits with the following exceptions:

Spike ID (Associated Samples)	Compound	RPD (Limits)	Flag	A or P
HB-B-01-13-052920MS/MSD (HB-B-01-13-052920)	Aroclor-1016 Aroclor-1260	34 (≤20) 26 (≤20)	NA	-

VIII. Laboratory Control Samples

Laboratory control samples (LCS) were analyzed as required by the method. Percent recoveries (%R) were within QC limits.

IX. Field Duplicates

No field duplicates were identified in this SDG.

X. Compound Quantitation

Raw data were not reviewed for Stage 2A validation.

XI. Target Compound Identification

Raw data were not reviewed for Stage 2A validation.

XII. Overall Assessment of Data

The analysis was conducted within all specifications of the method. No results were rejected in this SDG.

Kimberly-Clark Upland Area
Polychlorinated Biphenyls - Data Qualification Summary - SDG 005398

No Sample Data Qualified in this SDG

Kimberly-Clark Upland Area
Polychlorinated Biphenyls - Laboratory Blank Data Qualification Summary - SDG 005398

No Sample Data Qualified in this SDG

Kimberly-Clark Upland Area
Polychlorinated Biphenyls - Field Blank Data Qualification Summary - SDG 005398

No Sample Data Qualified in this SDG

LDC #: 48734B3b
SDG #: 005398
Laboratory: Friedman & Bruya, Inc.

VALIDATION COMPLETENESS WORKSHEET
Stage 2A

Date: 08/13/20
Page: 1 of 1
Reviewer: LS
2nd Reviewer:

METHOD: GC Polychlorinated Biphenyls (EPA SW846 Method 8082A)

The samples listed below were reviewed for each of the following validation areas. Validation findings are noted in attached validation findings worksheets.

	Validation Area		Comments
I.	Sample receipt/Technical holding times	A / A	
II.	Initial calibration/ICV	N/N	
III.	Continuing calibration	N	
IV.	Laboratory Blanks	A	
V.	Field blanks	N	
VI.	Surrogate spikes	A	
VII.	Matrix spike/Matrix spike duplicates	SW	(11,12)
VIII.	Laboratory control samples	A	LCS
IX.	Field duplicates	N	
X.	Compound quantitation/RL/LOQ/LODs	N	Dry weight basis
XI.	Target compound identification	N	
XII.	Overall assessment of data	A	

Note: A = Acceptable
N = Not provided/applicable
SW = See worksheet
ND = No compounds detected
R = Rinsate
FB = Field blank
D = Duplicate
TB = Trip blank
EB = Equipment blank
SB=Source blank
OTHER:

	Client ID	Lab ID	Matrix	Date
1	HB-B-01-13-052920	005398-01	Soil	05/29/20
2	HB-B-02-13-052920	005398-02	Soil	05/29/20
3	HB-B-03-13-052920	005398-03	Soil	05/29/20
4	HB-S-02-12-052920	005398-04	Soil	05/29/20
5	HB-S-03-12-052920	005398-05	Soil	05/29/20
6	HB-S-04-12-052920	005398-06	Soil	05/29/20
7	HB-S-05-12-052920	005398-07	Soil	05/29/20
8	HB-S-06-12-052920	005398-08	Soil	05/29/20
9	HB-S-07-12-052920	005398-09	Soil	05/29/20
10	HB-S-08-12-052920	005398-10	Soil	05/29/20
11	HB-B-01-13-052920MS	005398-01MS	Soil	05/29/20
12	HB-B-01-13-052920MSD	005398-01MSD	Soil	05/29/20
13				
14				

Notes:

1	00-1212MB 1/6						

LDC #: 48734B3b

VALIDATION FINDINGS WORKSHEET
Matrix Spike/Matrix Spike Duplicates

Reviewer: LT
2nd Reviewer:

METHOD: _X_ **GC** ___ **HPLC**

Please see qualifications below for all questions answered "N". Not applicable questions are identified as "N/A".

Y**x** N___ N/A ___ Were a matrix spike (MS) and matrix spike duplicate (MSD) analyzed for each matrix in this SDG?

Y**x** N___ N/A___ Was an MS/MSD analyzed every 20 samples for each matrix or whenever a sample extraction was performed?

Y___ N**x** N/A___ Were the MS/MSD percent recoveries (%R) and relative percent differences (RPD) within QC limits?

#	MS/MSD ID	Compound	MS %R (Limits)	MSD %R (Limits)	RPD (Limits)	Associated Samples	Qualifications
	11/12	Aroclor 1016			34 (≤20)	1 (ND)	J/A dets
		Aroclor 1260			26 (≤20)	↓	↓

Laboratory Data Consultants, Inc.
Data Validation Report

Project/Site Name: Kimberly-Clark Upland Area

LDC Report Date: August 13, 2020

Parameters: Metals

Validation Level: Stage 2A

Laboratory: Friedman & Bruya, Inc.

Sample Delivery Group (SDG): 005398

Sample Identification	Laboratory Sample Identification	Matrix	Collection Date
HB-B-01-13-052920	005398-01	Soil	05/29/20
HB-B-02-13-052920	005398-02	Soil	05/29/20
HB-B-03-13-052920	005398-03	Soil	05/29/20
HB-S-02-12-052920	005398-04	Soil	05/29/20
HB-S-03-12-052920	005398-05	Soil	05/29/20
HB-S-04-12-052920	005398-06	Soil	05/29/20
HB-S-04-12-052920DL	005398-06DL	Soil	05/29/20
HB-S-05-12-052920	005398-07	Soil	05/29/20
HB-S-06-12-052920	005398-08	Soil	05/29/20
HB-S-07-12-052920	005398-09	Soil	05/29/20
HB-S-08-12-052920	005398-10	Soil	05/29/20
HB-B-01-13-052920MS	005398-01MS	Soil	05/29/20
HB-B-01-13-052920MSD	005398-01MSD	Soil	05/29/20

Introduction

This Data Validation Report (DVR) presents data validation findings and results for the associated samples listed on the cover page. Data validation was performed in accordance with a modified outline of the USEPA National Functional Guidelines (NFG) for Inorganic Superfund Methods Data Review (January 2017). Where specific guidance was not available, the data has been evaluated in a conservative manner consistent with industry standards using professional experience.

The analyses were performed by the following methods:

Copper and Zinc by Environmental Protection Agency (EPA) SW 846 Method 6020B
Mercury by EPA Method 1631E

All sample results were subjected to Stage 2A data validation, which comprises an evaluation of quality control (QC) summary results.

The following are definitions of the data qualifiers utilized during data validation:

J (Estimated): The compound or analyte was analyzed for and positively identified by the laboratory; however the reported concentration is estimated due to non-conformances discovered during data validation.

U (Non-detected): The compound or analyte was analyzed for and positively identified by the laboratory; however the compound or analyte should be considered non-detected at the reported concentration due to the presence of contaminants detected in the associated blank(s).

UJ (Non-detected estimated): The compound or analyte was reported as not detected by the laboratory; however the reported quantitation/detection limit is estimated due to non-conformances discovered during data validation.

DNR Do not report from this analysis; the result for this analyte is to be reported from an alternative analysis.

R (Rejected): The sample results were rejected due to gross non-conformances discovered during data validation. Data qualified as rejected is not usable.

NA (Not Applicable): The non-conformance discovered during data validation demonstrates a high bias, while the affected compound or analyte in the associated sample(s) was reported as not detected by the laboratory and did not warrant the qualification of the data.

A qualification summary table is provided at the end of this report if data has been qualified. Flags are classified as P (protocol) or A (advisory) to indicate whether the flag is due to a laboratory deviation from a specified protocol or is of technical advisory nature.

I. Sample Receipt and Technical Holding Times

All samples were received in good condition.

All technical holding time requirements were met.

II. ICPMS Tune

ICP-MS tune data were not reviewed for Stage 2A validation.

III. Instrument Calibration

Instrument calibration data were not reviewed for Stage 2A validation.

IV. ICP Interference Check Sample Analysis

ICP Interference check sample (ICS) analysis data were not reviewed for Stage 2A validation.

V. Laboratory Blanks

Laboratory blanks were analyzed as required by the methods. No contaminants were found in the laboratory blanks.

VI. Field Blanks

No field blanks were identified in this SDG.

VII. Matrix Spike/Matrix Spike Duplicates

Matrix spike (MS) and matrix spike duplicate (MSD) sample analysis was performed on an associated project sample. Percent recoveries (%R) were within QC limits with the following exceptions:

Spike ID (Associated Samples)	Analyte	MS (%R) (Limits)	MSD (%R) (Limits)	Flag	A or P
HB-B-01-13-052920MS/MSD (All samples in SDG 005398)	Zinc	61 (75-125)	70 (75-125)	J (all detects) UJ (all non-detects)	A

Relative percent differences (RPD) were within QC limits.

VIII. Duplicate Sample Analysis

The laboratory has indicated that there were no duplicate (DUP) analyses specified for the samples in this SDG, and therefore duplicate analyses were not performed for this SDG.

IX. Serial Dilution

Serial dilution was not performed for this SDG.

X. Laboratory Control Samples

Laboratory control samples (LCS) were analyzed as required by the methods. Percent recoveries (%R) were within QC limits.

XI. Field Duplicates

No field duplicates were identified in this SDG.

XII. Internal Standards (ICP-MS)

Internal standards data were not reviewed for Stage 2A validation.

XIII. Sample Result Verification

Raw data were not reviewed for Stage 2A validation.

XIV. Overall Assessment of Data

The analysis was conducted within all specifications of the methods.

In the case where more than one result was reported for an individual sample, the least technically acceptable results were deemed not reportable as follows:

Sample	Analyte	Reason	Flag	A or P
HB-S-04-12-052920DL	Copper Zinc	Diluted results were non-detect.	DNR	A

Due to MS/MSD %R, data were qualified as estimated in ten samples.

No results were rejected in this SDG.

Kimberly-Clark Upland Area
Metals - Data Qualification Summary - SDG 005398

Sample	Analyte	Flag	A or P	Reason
HB-B-01-13-052920 HB-B-02-13-052920 HB-B-03-13-052920 HB-S-02-12-052920 HB-S-03-12-052920 HB-S-04-12-052920 HB-S-05-12-052920 HB-S-06-12-052920 HB-S-07-12-052920 HB-S-08-12-052920	Zinc	J (all detects) UJ (all non-detects)	A	Matrix spike/Matrix spike duplicate (%R)
HB-S-04-12-052920DL	Copper Zinc	DNR	A	Overall assessment of data

Kimberly-Clark Upland Area
Metals - Laboratory Blank Data Qualification Summary - SDG 005398

No Sample Data Qualified in this SDG

Kimberly-Clark Upland Area
Metals - Field Blank Data Qualification Summary - SDG 005398

No Sample Data Qualified in this SDG

LDC #: 48734B4a
SDG #: 005398
Laboratory: Friedman & Bruya, Inc.

VALIDATION COMPLETENESS WORKSHEET
Stage 2A

Date: 8/12/2020
Page: 1 of 1
Reviewer: DTM
2nd Reviewer:

METHOD: Metals (EPA SW 846 Method 6020B/EPA Method 1631E)

The samples listed below were reviewed for each of the following validation areas. Validation findings are noted in attached validation findings worksheets.

	Validation Area		Comments
I.	Sample receipt/Technical holding times	A / A	
II.	ICP/MS Tune	N	
III.	Instrument Calibration	N	
IV.	ICP Interference Check Sample (ICS) Analysis	N	
V.	Laboratory Blanks	A	
VI.	Field Blanks	N	
VII.	Matrix Spike/Matrix Spike Duplicates	SW	
VIII.	Duplicate sample analysis	N	
IX.	Serial Dilution	N	
X.	Laboratory control samples	A	LCS
XI.	Field Duplicates	N	
XII.	Internal Standard (ICP-MS)	N	
XIII.	Sample Result Verification	N	
XIV	Overall Assessment of Data	ASW	

Note: A = Acceptable; N = Not provided/applicable; SW = See worksheet; ND = No compounds detected; R = Rinsate; FB = Field blank; D = Duplicate; TB = Trip blank; EB = Equipment blank; SB=Source blank; OTHER:

	Client ID	Lab ID	Matrix	Date
1	HB-B-01-13-052920	005398-01	Soil	05/29/20
2	HB-B-02-13-052920	005398-02	Soil	05/29/20
3	HB-B-03-13-052920	005398-03	Soil	05/29/20
4	HB-S-02-12-052920	005398-04	Soil	05/29/20
5	HB-S-03-12-052920	005398-05	Soil	05/29/20
6	HB-S-04-12-052920	005398-06	Soil	05/29/20
7	HB-S-04-12-052920DL	005398-06DL	Soil	05/29/20
8	HB-S-05-12-052920	005398-07	Soil	05/29/20
9	HB-S-06-12-052920	005398-08	Soil	05/29/20
10	HB-S-07-12-052920	005398-09	Soil	05/29/20
11	HB-S-08-12-052920	005398-10	Soil	05/29/20
12	HB-B-01-13-052920MS	005398-01MS	Soil	05/29/20
13	HB-B-01-13-052920MSD	005398-01MSD	Soil	05/29/20
14				
15				

Notes:

LDC #: 49784B49

VALIDATION FINDINGS WORKSHEET
Sample Specific Element Reference

Reviewer: DTM
2nd reviewer:

All circled elements are applicable to each sample.

Sample ID	Matrix	Target Analyte List (TAL)
16,8-11	S	Al, Sb, As, Ba, Be, B, Cd, Ca, Cr, Co, (Cu), Fe, Pb, Li, Mg, Mo, Mn, (Hg), Ni, K, Se, Ag, Na, Sr, Tl, Sn, Ti, W, U, V, (Zn)
		Al, Sb, As, Ba, Be, B, Cd, Ca, Cr, Co, Cu, Fe, Pb, Li, Mg, Mo, Mn, Hg, Ni, K, Se, Ag, Na, Sr, Tl, Sn, Ti, W, U, V, Zn
7	S	Al, Sb, As, Ba, Be, B, Cd, Ca, Cr, Co, (Cu), Fe, Pb, Li, Mg, Mo, Mn, Hg, Ni, K, Se, Ag, Na, Sr, Tl, Sn, Ti, W, U, V, (Zn)
		Al, Sb, As, Ba, Be, B, Cd, Ca, Cr, Co, Cu, Fe, Pb, Li, Mg, Mo, Mn, Hg, Ni, K, Se, Ag, Na, Sr, Tl, Sn, Ti, W, U, V, Zn
QC123	S	Al, Sb, As, Ba, Be, B, Cd, Ca, Cr, Co, (Cu), Fe, Pb, Li, Mg, Mo, Mn, (Hg), Ni, K, Se, Ag, Na, Sr, Tl, Sn, Ti, W, U, V, (Zn)
		Al, Sb, As, Ba, Be, B, Cd, Ca, Cr, Co, Cu, Fe, Pb, Li, Mg, Mo, Mn, Hg, Ni, K, Se, Ag, Na, Sr, Tl, Sn, Ti, W, U, V, Zn
		Al, Sb, As, Ba, Be, B, Cd, Ca, Cr, Co, Cu, Fe, Pb, Li, Mg, Mo, Mn, Hg, Ni, K, Se, Ag, Na, Sr, Tl, Sn, Ti, W, U, V, Zn
		Al, Sb, As, Ba, Be, B, Cd, Ca, Cr, Co, Cu, Fe, Pb, Li, Mg, Mo, Mn, Hg, Ni, K, Se, Ag, Na, Sr, Tl, Sn, Ti, W, U, V, Zn
		Al, Sb, As, Ba, Be, B, Cd, Ca, Cr, Co, Cu, Fe, Pb, Li, Mg, Mo, Mn, Hg, Ni, K, Se, Ag, Na, Sr, Tl, Sn, Ti, W, U, V, Zn
		Al, Sb, As, Ba, Be, B, Cd, Ca, Cr, Co, Cu, Fe, Pb, Li, Mg, Mo, Mn, Hg, Ni, K, Se, Ag, Na, Sr, Tl, Sn, Ti, W, U, V, Zn
		Al, Sb, As, Ba, Be, B, Cd, Ca, Cr, Co, Cu, Fe, Pb, Li, Mg, Mo, Mn, Hg, Ni, K, Se, Ag, Na, Sr, Tl, Sn, Ti, W, U, V, Zn
		Al, Sb, As, Ba, Be, B, Cd, Ca, Cr, Co, Cu, Fe, Pb, Li, Mg, Mo, Mn, Hg, Ni, K, Se, Ag, Na, Sr, Tl, Sn, Ti, W, U, V, Zn
		Al, Sb, As, Ba, Be, B, Cd, Ca, Cr, Co, Cu, Fe, Pb, Li, Mg, Mo, Mn, Hg, Ni, K, Se, Ag, Na, Sr, Tl, Sn, Ti, W, U, V, Zn
		Al, Sb, As, Ba, Be, B, Cd, Ca, Cr, Co, Cu, Fe, Pb, Li, Mg, Mo, Mn, Hg, Ni, K, Se, Ag, Na, Sr, Tl, Sn, Ti, W, U, V, Zn
		Al, Sb, As, Ba, Be, B, Cd, Ca, Cr, Co, Cu, Fe, Pb, Li, Mg, Mo, Mn, Hg, Ni, K, Se, Ag, Na, Sr, Tl, Sn, Ti, W, U, V, Zn
		Al, Sb, As, Ba, Be, B, Cd, Ca, Cr, Co, Cu, Fe, Pb, Li, Mg, Mo, Mn, Hg, Ni, K, Se, Ag, Na, Sr, Tl, Sn, Ti, W, U, V, Zn
		Al, Sb, As, Ba, Be, B, Cd, Ca, Cr, Co, Cu, Fe, Pb, Li, Mg, Mo, Mn, Hg, Ni, K, Se, Ag, Na, Sr, Tl, Sn, Ti, W, U, V, Zn
		Al, Sb, As, Ba, Be, B, Cd, Ca, Cr, Co, Cu, Fe, Pb, Li, Mg, Mo, Mn, Hg, Ni, K, Se, Ag, Na, Sr, Tl, Sn, Ti, W, U, V, Zn
		Al, Sb, As, Ba, Be, B, Cd, Ca, Cr, Co, Cu, Fe, Pb, Li, Mg, Mo, Mn, Hg, Ni, K, Se, Ag, Na, Sr, Tl, Sn, Ti, W, U, V, Zn
		Al, Sb, As, Ba, Be, B, Cd, Ca, Cr, Co, Cu, Fe, Pb, Li, Mg, Mo, Mn, Hg, Ni, K, Se, Ag, Na, Sr, Tl, Sn, Ti, W, U, V, Zn
		Al, Sb, As, Ba, Be, B, Cd, Ca, Cr, Co, Cu, Fe, Pb, Li, Mg, Mo, Mn, Hg, Ni, K, Se, Ag, Na, Sr, Tl, Sn, Ti, W, U, V, Zn
		Al, Sb, As, Ba, Be, B, Cd, Ca, Cr, Co, Cu, Fe, Pb, Li, Mg, Mo, Mn, Hg, Ni, K, Se, Ag, Na, Sr, Tl, Sn, Ti, W, U, V, Zn
Analysis Method		
ICP		Al, Sb, As, Ba, Be, B, Cd, Ca, Cr, Co, Cu, Fe, Pb, Li, Mg, Mo, Mn, Hg, Ni, K, Se, Ag, Na, Sr, Tl, Sn, Ti, W, U, V, Zn
ICP-MS		Al, Sb, As, Ba, Be, B, Cd, Ca, Cr, Co, Cu, Fe, Pb, Li, Mg, Mo, Mn, Hg, Ni, K, Se, Ag, Na, Sr, Tl, Sn, Ti, W, U, V, Zn
GFAA		Al, Sb, As, Ba, Be, B, Cd, Ca, Cr, Co, Cu, Fe, Pb, Li, Mg, Mo, Mn, Hg, Ni, K, Se, Ag, Na, Sr, Tl, Sn, Ti, W, U, V, Zn

Comments: Mercury by CVAA if performed

LDC #: 48734B4a

VALIDATION FINDINGS WORKSHEET
Matrix Spike/Matrix Spike Duplicates

Reviewer: DTM
2nd Reviewer:

METHOD: Trace metals (EPA SW 846 Method 6020/6010/7470)

Please see qualifications below for all questions answered "N". Not applicable questions are identified as "N/A".

(Y) N N/A Was a matrix spike analyzed for each matrix in this SDG?

Y (N) N/A Were matrix spike percent recoveries (%R) within the control limits of 75-125? If the sample concentration exceeded the spike concentration by a factor of 4 or more, no action was taken.

(Y) N N/A Were all duplicate sample relative percent differences (RPD) ≤ 20% for samples?

LEVEL IV ONLY:

Y N N/A Were recalculated results acceptable? See Level IV Recalculation Worksheet for recalculations.

#	MS/MSD ID	Matrix	Analyte	MS %Recovery	MSD %Recovery	RPD (Limits)	Associated Samples	Qualifications
	12/13	S	Zn	61	70		ALL	J/UJ/A (det,ND)

Comments:

LDC #: 48734B4a

VALIDATION FINDINGS WORKSHEET
Overall Assessment of Data

Reviewer: DTM
2nd Reviewer:

METHOD: Trace Metals (EPA SW 846 Method 6010/6020/7000)

Please see qualifications below for all questions answered "N". Not applicable questions are identified as "N/A".

All available information pertaining to the data were reviewed using professional judgement to compliment the determination of the overall quality of the data.

Y N N/A Was the overall quality and usability of the data acceptable?

#	Date	Sample ID	Analyte	Finding	Qualification
		~~6~~ 7	Cu,Zn	Sample was re-~~analyzed~~ with a ~~dilution~~ due to internal standard failure.	(J) NR
				Dilutedto ND	

Comments: _____

Laboratory Data Consultants, Inc.
Data Validation Report

Project/Site Name: Kimberly-Clark Upland Area

LDC Report Date: August 17, 2020

Parameters: Total Petroleum Hydrocarbons as Extractables

Validation Level: Stage 2A

Laboratory: Friedman & Bruya, Inc.

Sample Delivery Group (SDG): 005398

Sample Identification	Laboratory Sample Identification	Matrix	Collection Date
HB-B-01-13-052920	005398-01	Soil	05/29/20
HB-B-02-13-052920	005398-02	Soil	05/29/20
HB-B-03-13-052920	005398-03	Soil	05/29/20
HB-S-02-12-052920	005398-04	Soil	05/29/20
HB-S-03-12-052920	005398-05	Soil	05/29/20
HB-S-04-12-052920	005398-06	Soil	05/29/20
HB-S-05-12-052920	005398-07	Soil	05/29/20
HB-S-06-12-052920	005398-08	Soil	05/29/20
HB-S-07-12-052920	005398-09	Soil	05/29/20
HB-S-08-12-052920	005398-10	Soil	05/29/20

Introduction

This Data Validation Report (DVR) presents data validation findings and results for the associated samples listed on the cover page. Data validation was performed in accordance with a modified outline of the USEPA National Functional Guidelines (NFG) for Organic Superfund Methods Data Review (January 2017). Where specific guidance was not available, the data has been evaluated in a conservative manner consistent with industry standards using professional experience.

The analyses were performed by the following method:

Total Petroleum Hydrocarbons (TPH) as Extractables by NWTPH-Dx

All sample results were subjected to Stage 2A data validation, which comprises an evaluation of quality control (QC) summary results.

The following are definitions of the data qualifiers utilized during data validation:

J (Estimated): The compound or analyte was analyzed for and positively identified by the laboratory; however the reported concentration is estimated due to non-conformances discovered during data validation.

U (Non-detected): The compound or analyte was analyzed for and positively identified by the laboratory; however the compound or analyte should be considered not detected at the reported concentration due to the presence of contaminants detected in the associated blank(s).

UJ (Non-detected estimated): The compound or analyte was reported as not detected by the laboratory; however the reported quantitation/detection limit is estimated due to non-conformances discovered during data validation.

R (Rejected): The sample results were rejected due to gross non-conformances discovered during data validation. Data qualified as rejected is not usable.

NA (Not Applicable): The non-conformance discovered during data validation demonstrates a high bias, while the affected compound or analyte in the associated sample(s) was reported as not detected by the laboratory and did not warrant the qualification of the data.

A qualification summary table is provided at the end of this report if data has been qualified. Flags are classified as P (protocol) or A (advisory) to indicate whether the flag is due to a laboratory deviation from a specified protocol or is of technical advisory nature.

I. Sample Receipt and Technical Holding Times

All samples were received in good condition and cooler temperatures upon receipt met validation criteria.

All technical holding time requirements were met.

II. Initial Calibration and Initial Calibration Verification

Initial calibration data were not reviewed for Stage 2A validation.

III. Continuing Calibration

Continuing calibration data were not reviewed for Stage 2A validation.

IV. Laboratory Blanks

Laboratory blanks were analyzed as required by the method. No contaminants were found in the laboratory blanks.

V. Field Blanks

No field blanks were identified in this SDG.

VI. Surrogates

Surrogates were added to all samples as required by the method. All surrogate recoveries (%R) were within QC limits.

VII. Matrix Spike/Matrix Spike Duplicates

The laboratory has indicated that there were no matrix spike (MS) and matrix spike duplicate (MSD) analyses specified for the samples in this SDG, and therefore matrix spike and matrix spike duplicate analyses were not performed for this SDG.

VIII. Laboratory Control Samples

Laboratory control samples (LCS) were analyzed as required by the method. Percent recoveries (%R) were within QC limits.

IX. Field Duplicates

No field duplicates were identified in this SDG.

X. Compound Quantitation

Raw data were not reviewed for Stage 2A validation.

XI. Target Compound Identifications

Raw data were not reviewed for Stage 2A validation.

XII. Overall Assessment of Data

The analysis was conducted within all specifications of the method. No results were rejected in this SDG.

Kimberly-Clark Upland Area
Total Petroleum Hydrocarbons as Extractables - Data Qualification Summary - SDG 005398

No Sample Data Qualified in this SDG

Kimberly-Clark Upland Area
Total Petroleum Hydrocarbons as Extractables - Laboratory Blank Data Qualification Summary - SDG 005398

No Sample Data Qualified in this SDG

Kimberly-Clark Upland Area
Total Petroleum Hydrocarbons as Extractables - Field Blank Data Qualification Summary - SDG 005398

No Sample Data Qualified in this SDG

LDC #: 48734B8 **VALIDATION COMPLETENESS WORKSHEET** Date: 08/13/20
SDG #: 005398 Stage 2A Page: 1 of 1
Laboratory: Friedman & Bruya, Inc. Reviewer: KT
2nd Reviewer:

METHOD: GC TPH as Extractables (NWTPH-Dx)

The samples listed below were reviewed for each of the following validation areas. Validation findings are noted in attached validation findings worksheets.

	Validation Area		Comments
I.	Sample receipt/Technical holding times	A, A	
II.	Initial calibration/ICV	N/N	
III.	Continuing calibration	N	
IV.	Laboratory Blanks	A	
V.	Field blanks	N	
VI.	Surrogate spikes	A	
VII.	Matrix spike/Matrix spike duplicates	N	Non client
VIII.	Laboratory control samples	A	& LCS
IX.	Field duplicates	N	
X.	Compound quantitation RL/LOQ/LODs	N	Dry weight basis
XI.	Target compound identification	N	
XII.	Overall assessment of data	A	

Note: A = Acceptable ND = No compounds detected D = Duplicate SB=Source blank
N = Not provided/applicable R = Rinsate TB = Trip blank OTHER:
SW = See worksheet FB = Field blank EB = Equipment blank

	Client ID	Lab ID	Matrix	Date
1	HB-B-01-13-052920	005398-01	Soil	05/29/20
2	HB-B-02-13-052920	005398-02	Soil	05/29/20
3	HB-B-03-13-052920	005398-03	Soil	05/29/20
4	HB-S-02-12-052920	005398-04	Soil	05/29/20
5	HB-S-03-12-052920	005398-05	Soil	05/29/20
6	HB-S-04-12-052920	005398-06	Soil	05/29/20
7	HB-S-05-12-052920	005398-07	Soil	05/29/20
8	HB-S-06-12-052920	005398-08	Soil	05/29/20
9	HB-S-07-12-052920	005398-09	Soil	05/29/20
10	HB-S-08-12-052920	005398-10	Soil	05/29/20
11				
12				

Notes:

1	00-1243 MB						

Laboratory Data Consultants, Inc.
Data Validation Report

Project/Site Name: Kimberly-Clark Upland Area

LDC Report Date: August 17, 2020

Parameters: Polychlorinated Biphenyls

Validation Level: Stage 2A

Laboratory: Friedman & Bruya, Inc.

Sample Delivery Group (SDG): 006082

Sample Identification	Laboratory Sample Identification	Matrix	Collection Date
HB-S-05-9-060420	006082-01	Soil	06/04/20
HB-S-06-9-060420	006082-02	Soil	06/04/20
HB-S-07-9-060420	006082-03	Soil	06/04/20
HB-S-08-9-060420	006082-04	Soil	06/04/20
HB-S-09-9-060420	006082-05	Soil	06/04/20

Introduction

This Data Validation Report (DVR) presents data validation findings and results for the associated samples listed on the cover page. Data validation was performed in accordance with a modified outline of the USEPA National Functional Guidelines (NFG) for Organic Superfund Methods Data Review (January 2017). Where specific guidance was not available, the data has been evaluated in a conservative manner consistent with industry standards using professional experience.

The analyses were performed by the following method:

Polychlorinated Biphenyls (PCBs) by Environmental Protection Agency (EPA) SW 846 Method 8082A

All sample results were subjected to Stage 2A data validation, which comprises an evaluation of quality control (QC) summary results.

The following are definitions of the data qualifiers utilized during data validation:

J (Estimated): The compound or analyte was analyzed for and positively identified by the laboratory; however the reported concentration is estimated due to non-conformances discovered during data validation.

U (Non-detected): The compound or analyte was analyzed for and positively identified by the laboratory; however the compound or analyte should be considered non-detected at the reported concentration due to the presence of contaminants detected in the associated blank(s).

UJ (Non-detected estimated): The compound or analyte was reported as not detected by the laboratory; however the reported quantitation/detection limit is estimated due to non-conformances discovered during data validation.

R (Rejected): The sample results were rejected due to gross non-conformances discovered during data validation. Data qualified as rejected is not usable.

NA (Not Applicable): The non-conformance discovered during data validation demonstrates a high bias, while the affected compound or analyte in the associated sample(s) was reported as not detected by the laboratory and did not warrant the qualification of the data.

A qualification summary table is provided at the end of this report if data has been qualified. Flags are classified as P (protocol) or A (advisory) to indicate whether the flag is due to a laboratory deviation from a specified protocol or is of technical advisory nature.

I. Sample Receipt and Technical Holding Times

All samples were received in good condition and cooler temperatures upon receipt met validation criteria.

All technical holding time requirements were met.

II. Initial Calibration and Initial Calibration Verification

Initial calibration data were not reviewed for Stage 2A validation.

III. Continuing Calibration

Continuing calibration data were not reviewed for Stage 2A validation.

IV. Laboratory Blanks

Laboratory blanks were analyzed as required by the method. No contaminants were found in the laboratory blanks.

V. Field Blanks

No field blanks were identified in this SDG.

VI. Surrogates

Surrogates were added to all samples as required by the method. All surrogate recoveries (%R) were within QC limits.

VII. Matrix Spike/Matrix Spike Duplicates

The laboratory has indicated that there were no matrix spike (MS) and matrix spike duplicate (MSD) analyses specified for the samples in this SDG, and therefore matrix spike and matrix spike duplicate analyses were not performed for this SDG.

VIII. Laboratory Control Samples

Laboratory control samples (LCS) were analyzed as required by the method. Percent recoveries (%R) were within QC limits.

IX. Field Duplicates

No field duplicates were identified in this SDG.

X. Compound Quantitation

Raw data were not reviewed for Stage 2A validation.

XI. Target Compound Identification

Raw data were not reviewed for Stage 2A validation.

XII. Overall Assessment of Data

The analysis was conducted within all specifications of the method. No results were rejected in this SDG.

Kimberly-Clark Upland Area
Polychlorinated Biphenyls - Data Qualification Summary - SDG 006082

No Sample Data Qualified in this SDG

Kimberly-Clark Upland Area
Polychlorinated Biphenyls - Laboratory Blank Data Qualification Summary - SDG 006082

No Sample Data Qualified in this SDG

Kimberly-Clark Upland Area
Polychlorinated Biphenyls - Field Blank Data Qualification Summary - SDG 006082

No Sample Data Qualified in this SDG

LDC #: 48734C3b
SDG #: 006082
Laboratory: Friedman & Bruya, Inc.

VALIDATION COMPLETENESS WORKSHEET
Stage 2A

Date: 08/13/20
Page: 1 of 1
Reviewer: LT
2nd Reviewer:

METHOD: GC Polychlorinated Biphenyls (EPA SW846 Method 8082A)

The samples listed below were reviewed for each of the following validation areas. Validation findings are noted in attached validation findings worksheets.

	Validation Area		Comments
I.	Sample receipt/Technical holding times	A/A	
II.	Initial calibration/ICV	N/N	
III.	Continuing calibration	N	
IV.	Laboratory Blanks	A	
V.	Field blanks	N	
VI.	Surrogate spikes	A	
VII.	Matrix spike/Matrix spike duplicates	N	Non Client
VIII.	Laboratory control samples	A	LCS
IX.	Field duplicates	N	
X.	Compound quantitation/RL/LOQ/LODs	N	Dry weight basis
XI.	Target compound identification	N	
XII.	Overall assessment of data	A	

Note: A = Acceptable; N = Not provided/applicable; SW = See worksheet; ND = No compounds detected; R = Rinsate; FB = Field blank; D = Duplicate; TB = Trip blank; EB = Equipment blank; SB=Source blank; OTHER:

	Client ID	Lab ID	Matrix	Date
1	HB-S-05-9-060420	006082-01	Soil	06/04/20
2	HB-S-06-060420	006082-02	Soil	06/04/20
3	HB-S-07-060420	006082-03	Soil	06/04/20
4	HB-S-08-060420	006082-04	Soil	06/04/20
5	HB-S-09-060420	006082-05	Soil	06/04/20
6				
7				
8				
9				
10				
11				
12				
13				

Notes:

1	00-1246 MB 1/6							

Laboratory Data Consultants, Inc.
Data Validation Report

Project/Site Name: Kimberly-Clark Upland Area

LDC Report Date: August 13, 2020

Parameters: Metals

Validation Level: Stage 2A

Laboratory: Friedman & Bruya, Inc.

Sample Delivery Group (SDG): 006082

Sample Identification	Laboratory Sample Identification	Matrix	Collection Date
HB-S-06-9-060420	006082-02	Soil	06/04/20
HB-S-07-9-060420	006082-03	Soil	06/04/20
HB-S-08-9-060420	006082-04	Soil	06/04/20
HB-S-09-9-060420	006082-05	Soil	06/04/20

Introduction

This Data Validation Report (DVR) presents data validation findings and results for the associated samples listed on the cover page. Data validation was performed in accordance with a modified outline of the USEPA National Functional Guidelines (NFG) for Inorganic Superfund Methods Data Review (January 2017). Where specific guidance was not available, the data has been evaluated in a conservative manner consistent with industry standards using professional experience.

The analyses were performed by the following methods:

Copper and Zinc by Environmental Protection Agency (EPA) SW 846 Method 6020B
Mercury by EPA Method 1631E

All sample results were subjected to Stage 2A data validation, which comprises an evaluation of quality control (QC) summary results.

The following are definitions of the data qualifiers utilized during data validation:

J (Estimated): The compound or analyte was analyzed for and positively identified by the laboratory; however the reported concentration is estimated due to non-conformances discovered during data validation.

U (Non-detected): The compound or analyte was analyzed for and positively identified by the laboratory; however the compound or analyte should be considered non-detected at the reported concentration due to the presence of contaminants detected in the associated blank(s).

UJ (Non-detected estimated): The compound or analyte was reported as not detected by the laboratory; however the reported quantitation/detection limit is estimated due to non-conformances discovered during data validation.

R (Rejected): The sample results were rejected due to gross non-conformances discovered during data validation. Data qualified as rejected is not usable.

NA (Not Applicable): The non-conformance discovered during data validation demonstrates a high bias, while the affected compound or analyte in the associated sample(s) was reported as not detected by the laboratory and did not warrant the qualification of the data.

A qualification summary table is provided at the end of this report if data has been qualified. Flags are classified as P (protocol) or A (advisory) to indicate whether the flag is due to a laboratory deviation from a specified protocol or is of technical advisory nature.

I. Sample Receipt and Technical Holding Times

All samples were received in good condition.

All technical holding time requirements were met.

II. ICPMS Tune

ICP-MS tune data were not reviewed for Stage 2A validation.

III. Instrument Calibration

Instrument calibration data were not reviewed for Stage 2A validation.

IV. ICP Interference Check Sample Analysis

ICP Interference check sample (ICS) analysis data were not reviewed for Stage 2A validation.

V. Laboratory Blanks

Laboratory blanks were analyzed as required by the methods. No contaminants were found in the laboratory blanks.

VI. Field Blanks

No field blanks were identified in this SDG.

VII. Matrix Spike/Matrix Spike Duplicates

The laboratory has indicated that there were no matrix spike (MS) and matrix spike duplicate (MSD) analyses specified for the samples in this SDG, and therefore matrix spike and matrix spike duplicate analyses were not performed for this SDG.

VIII. Duplicate Sample Analysis

The laboratory has indicated that there were no duplicate (DUP) analyses specified for the samples in this SDG, and therefore duplicate analyses were not performed for this SDG.

IX. Serial Dilution

Serial dilution was not performed for this SDG.

X. Laboratory Control Samples

Laboratory control samples (LCS) were analyzed as required by the methods. Percent recoveries (%R) were within QC limits.

XI. Field Duplicates

No field duplicates were identified in this SDG.

XII. Internal Standards (ICP-MS)

Internal standards data were not reviewed for Stage 2A validation.

XIII. Sample Result Verification

Raw data were not reviewed for Stage 2A validation.

XIV. Overall Assessment of Data

The analysis was conducted within all specifications of the methods. No results were rejected in this SDG.

Kimberly-Clark Upland Area
Metals - Data Qualification Summary - SDG 006082

No Sample Data Qualified in this SDG

Kimberly-Clark Upland Area
Metals - Laboratory Blank Data Qualification Summary - SDG 006082

No Sample Data Qualified in this SDG

Kimberly-Clark Upland Area
Metals - Field Blank Data Qualification Summary - SDG 006082

No Sample Data Qualified in this SDG

LDC #: 48734C4a
SDG #: 006082
Laboratory: Friedman & Bruya, Inc.

VALIDATION COMPLETENESS WORKSHEET
Stage 2A

Date: 9/12/2020
Page: 1 of 1
Reviewer: ORM
2nd Reviewer:

METHOD: Metals (EPA SW 846 Method 6020B/EPA Method 1631E)

The samples listed below were reviewed for each of the following validation areas. Validation findings are noted in attached validation findings worksheets.

	Validation Area		Comments
I.	Sample receipt/Technical holding times	A / A	
II.	ICP/MS Tune	N	
III.	Instrument Calibration	N	
IV.	ICP Interference Check Sample (ICS) Analysis	N	
V.	Laboratory Blanks	A	
VI.	Field Blanks	N	
VII.	Matrix Spike/Matrix Spike Duplicates	N	
VIII.	Duplicate sample analysis	N	
IX.	Serial Dilution	N	
X.	Laboratory control samples	A	LCS
XI.	Field Duplicates	N	
XII.	Internal Standard (ICP-MS)	N	
XIII.	Sample Result Verification	N	
XIV	Overall Assessment of Data	A	

Note: A = Acceptable
N = Not provided/applicable
SW = See worksheet
ND = No compounds detected
R = Rinsate
FB = Field blank
D = Duplicate
TB = Trip blank
EB = Equipment blank
SB=Source blank
OTHER:

	Client ID	Lab ID	Matrix	Date
1	~~HB-S-06-060420~~ HB-S-06-9-060420	006082-02	Soil	06/04/20
2	~~HB-S-07-060420~~ -07-9-	006082-03	Soil	06/04/20
3	~~HB-S-08-060420~~ -08-9-	006082-04	Soil	06/04/20
4	~~HB-S-09-060420~~ -09-9-	006082-05	Soil	06/04/20
5				
6				
7				
8				
9				
10				
11				
12				
13				

Notes:

LDC #: 49734C4G

VALIDATION FINDINGS WORKSHEET
Sample Specific Element Reference

Reviewer: DTM
2nd reviewer:

All circled elements are applicable to each sample.

Sample ID	Matrix	Target Analyte List (TAL)
All	S	Al, Sb, As, Ba, Be, B, Cd, Ca, Cr, Co, (Cu) Fe, Pb, Li, Mg, Mo, Mn, (Hg) Ni, K, Se, Ag, Na, Sr, Tl, Sn, Ti, W, U, V, (Zn)
		Al, Sb, As, Ba, Be, B, Cd, Ca, Cr, Co, Cu, Fe, Pb, Li, Mg, Mo, Mn, Hg, Ni, K, Se, Ag, Na, Sr, Tl, Sn, Ti, W, U, V, Zn
		Al, Sb, As, Ba, Be, B, Cd, Ca, Cr, Co, Cu, Fe, Pb, Li, Mg, Mo, Mn, Hg, Ni, K, Se, Ag, Na, Sr, Tl, Sn, Ti, W, U, V, Zn
		Al, Sb, As, Ba, Be, B, Cd, Ca, Cr, Co, Cu, Fe, Pb, Li, Mg, Mo, Mn, Hg, Ni, K, Se, Ag, Na, Sr, Tl, Sn, Ti, W, U, V, Zn
		Al, Sb, As, Ba, Be, B, Cd, Ca, Cr, Co, Cu, Fe, Pb, Li, Mg, Mo, Mn, Hg, Ni, K, Se, Ag, Na, Sr, Tl, Sn, Ti, W, U, V, Zn
		Al, Sb, As, Ba, Be, B, Cd, Ca, Cr, Co, Cu, Fe, Pb, Li, Mg, Mo, Mn, Hg, Ni, K, Se, Ag, Na, Sr, Tl, Sn, Ti, W, U, V, Zn
		Al, Sb, As, Ba, Be, B, Cd, Ca, Cr, Co, Cu, Fe, Pb, Li, Mg, Mo, Mn, Hg, Ni, K, Se, Ag, Na, Sr, Tl, Sn, Ti, W, U, V, Zn
		Al, Sb, As, Ba, Be, B, Cd, Ca, Cr, Co, Cu, Fe, Pb, Li, Mg, Mo, Mn, Hg, Ni, K, Se, Ag, Na, Sr, Tl, Sn, Ti, W, U, V, Zn
		Al, Sb, As, Ba, Be, B, Cd, Ca, Cr, Co, Cu, Fe, Pb, Li, Mg, Mo, Mn, Hg, Ni, K, Se, Ag, Na, Sr, Tl, Sn, Ti, W, U, V, Zn
		Al, Sb, As, Ba, Be, B, Cd, Ca, Cr, Co, Cu, Fe, Pb, Li, Mg, Mo, Mn, Hg, Ni, K, Se, Ag, Na, Sr, Tl, Sn, Ti, W, U, V, Zn
		Al, Sb, As, Ba, Be, B, Cd, Ca, Cr, Co, Cu, Fe, Pb, Li, Mg, Mo, Mn, Hg, Ni, K, Se, Ag, Na, Sr, Tl, Sn, Ti, W, U, V, Zn
		Al, Sb, As, Ba, Be, B, Cd, Ca, Cr, Co, Cu, Fe, Pb, Li, Mg, Mo, Mn, Hg, Ni, K, Se, Ag, Na, Sr, Tl, Sn, Ti, W, U, V, Zn
		Al, Sb, As, Ba, Be, B, Cd, Ca, Cr, Co, Cu, Fe, Pb, Li, Mg, Mo, Mn, Hg, Ni, K, Se, Ag, Na, Sr, Tl, Sn, Ti, W, U, V, Zn
		Al, Sb, As, Ba, Be, B, Cd, Ca, Cr, Co, Cu, Fe, Pb, Li, Mg, Mo, Mn, Hg, Ni, K, Se, Ag, Na, Sr, Tl, Sn, Ti, W, U, V, Zn
		Al, Sb, As, Ba, Be, B, Cd, Ca, Cr, Co, Cu, Fe, Pb, Li, Mg, Mo, Mn, Hg, Ni, K, Se, Ag, Na, Sr, Tl, Sn, Ti, W, U, V, Zn
		Al, Sb, As, Ba, Be, B, Cd, Ca, Cr, Co, Cu, Fe, Pb, Li, Mg, Mo, Mn, Hg, Ni, K, Se, Ag, Na, Sr, Tl, Sn, Ti, W, U, V, Zn
		Al, Sb, As, Ba, Be, B, Cd, Ca, Cr, Co, Cu, Fe, Pb, Li, Mg, Mo, Mn, Hg, Ni, K, Se, Ag, Na, Sr, Tl, Sn, Ti, W, U, V, Zn
		Al, Sb, As, Ba, Be, B, Cd, Ca, Cr, Co, Cu, Fe, Pb, Li, Mg, Mo, Mn, Hg, Ni, K, Se, Ag, Na, Sr, Tl, Sn, Ti, W, U, V, Zn
		Al, Sb, As, Ba, Be, B, Cd, Ca, Cr, Co, Cu, Fe, Pb, Li, Mg, Mo, Mn, Hg, Ni, K, Se, Ag, Na, Sr, Tl, Sn, Ti, W, U, V, Zn
		Al, Sb, As, Ba, Be, B, Cd, Ca, Cr, Co, Cu, Fe, Pb, Li, Mg, Mo, Mn, Hg, Ni, K, Se, Ag, Na, Sr, Tl, Sn, Ti, W, U, V, Zn
		Al, Sb, As, Ba, Be, B, Cd, Ca, Cr, Co, Cu, Fe, Pb, Li, Mg, Mo, Mn, Hg, Ni, K, Se, Ag, Na, Sr, Tl, Sn, Ti, W, U, V, Zn
Analysis Method		
ICP		Al, Sb, As, Ba, Be, B, Cd, Ca, Cr, Co, Cu, Fe, Pb, Li, Mg, Mo, Mn, Hg, Ni, K, Se, Ag, Na, Sr, Tl, Sn, Ti, W, U, V, Zn
ICP-MS		Al, Sb, As, Ba, Be, B, Cd, Ca, Cr, Co, Cu, Fe, Pb, Li, Mg, Mo, Mn, Hg, Ni, K, Se, Ag, Na, Sr, Tl, Sn, Ti, W, U, V, Zn
GFAA		Al, Sb, As, Ba, Be, B, Cd, Ca, Cr, Co, Cu, Fe, Pb, Li, Mg, Mo, Mn, Hg, Ni, K, Se, Ag, Na, Sr, Tl, Sn, Ti, W, U, V, Zn

Comments: Mercury by CVAA if performed

Laboratory Data Consultants, Inc.
Data Validation Report

Project/Site Name: Kimberly-Clark Upland Area

LDC Report Date: August 17, 2020

Parameters: Total Petroleum Hydrocarbons as Extractables

Validation Level: Stage 2A

Laboratory: Friedman & Bruya, Inc.

Sample Delivery Group (SDG): 006082

Sample Identification	Laboratory Sample Identification	Matrix	Collection Date
HB-S-06-9-060420	006082-02	Soil	06/04/20
HB-S-07-9-060420	006082-03	Soil	06/04/20
HB-S-08-9-060420	006082-04	Soil	06/04/20
HB-S-09-9-060420	006082-05	Soil	06/04/20

Introduction

This Data Validation Report (DVR) presents data validation findings and results for the associated samples listed on the cover page. Data validation was performed in accordance with a modified outline of the USEPA National Functional Guidelines (NFG) for Organic Superfund Methods Data Review (January 2017). Where specific guidance was not available, the data has been evaluated in a conservative manner consistent with industry standards using professional experience.

The analyses were performed by the following method:

Total Petroleum Hydrocarbons (TPH) as Extractables by NWTPH-Dx

All sample results were subjected to Stage 2A data validation, which comprises an evaluation of quality control (QC) summary results.

The following are definitions of the data qualifiers utilized during data validation:

J (Estimated): The compound or analyte was analyzed for and positively identified by the laboratory; however the reported concentration is estimated due to non-conformances discovered during data validation.

U (Non-detected): The compound or analyte was analyzed for and positively identified by the laboratory; however the compound or analyte should be considered not detected at the reported concentration due to the presence of contaminants detected in the associated blank(s).

UJ (Non-detected estimated): The compound or analyte was reported as not detected by the laboratory; however the reported quantitation/detection limit is estimated due to non-conformances discovered during data validation.

R (Rejected): The sample results were rejected due to gross non-conformances discovered during data validation. Data qualified as rejected is not usable.

NA (Not Applicable): The non-conformance discovered during data validation demonstrates a high bias, while the affected compound or analyte in the associated sample(s) was reported as not detected by the laboratory and did not warrant the qualification of the data.

A qualification summary table is provided at the end of this report if data has been qualified. Flags are classified as P (protocol) or A (advisory) to indicate whether the flag is due to a laboratory deviation from a specified protocol or is of technical advisory nature.

I. Sample Receipt and Technical Holding Times

All samples were received in good condition and cooler temperatures upon receipt met validation criteria.

All technical holding time requirements were met.

II. Initial Calibration and Initial Calibration Verification

Initial calibration data were not reviewed for Stage 2A validation.

III. Continuing Calibration

Continuing calibration data were not reviewed for Stage 2A validation.

IV. Laboratory Blanks

Laboratory blanks were analyzed as required by the method. No contaminants were found in the laboratory blanks.

V. Field Blanks

No field blanks were identified in this SDG.

VI. Surrogates

Surrogates were added to all samples as required by the method. All surrogate recoveries (%R) were within QC limits.

VII. Matrix Spike/Matrix Spike Duplicates

The laboratory has indicated that there were no matrix spike (MS) and matrix spike duplicate (MSD) analyses specified for the samples in this SDG, and therefore matrix spike and matrix spike duplicate analyses were not performed for this SDG.

VIII. Laboratory Control Samples

Laboratory control samples (LCS) were analyzed as required by the method. Percent recoveries (%R) were within QC limits.

IX. Field Duplicates

No field duplicates were identified in this SDG.

X. Compound Quantitation

Raw data were not reviewed for Stage 2A validation.

XI. Target Compound Identifications

Raw data were not reviewed for Stage 2A validation.

XII. Overall Assessment of Data

The analysis was conducted within all specifications of the method. No results were rejected in this SDG.

Kimberly-Clark Upland Area
Total Petroleum Hydrocarbons as Extractables - Data Qualification Summary - SDG 006082

No Sample Data Qualified in this SDG

Kimberly-Clark Upland Area
Total Petroleum Hydrocarbons as Extractables - Laboratory Blank Data Qualification Summary - SDG 006082

No Sample Data Qualified in this SDG

Kimberly-Clark Upland Area
Total Petroleum Hydrocarbons as Extractables - Field Blank Data Qualification Summary - SDG 006082

No Sample Data Qualified in this SDG

LDC #: 48734C8 **VALIDATION COMPLETENESS WORKSHEET** Date: 08/13/20
SDG #: 006082 Stage 2A Page: 1 of 1
Laboratory: Friedman & Bruya, Inc. Reviewer: LT
2nd Reviewer:

METHOD: GC TPH as Extractables (NWTPH-Dx)

The samples listed below were reviewed for each of the following validation areas. Validation findings are noted in attached validation findings worksheets.

	Validation Area		Comments
I.	Sample receipt/Technical holding times	A/A	
II.	Initial calibration/ICV	N/N	
III.	Continuing calibration	N	
IV.	Laboratory Blanks	A	
V.	Field blanks	N	
VI.	Surrogate spikes	A	
VII.	Matrix spike/Matrix spike duplicates	N	Non client
VIII.	Laboratory control samples	A	LCS
IX.	Field duplicates	N	
X.	Compound quantitation RL/LOQ/LODs	N	Dry weight basis
XI.	Target compound identification	N	
XII.	Overall assessment of data	A	

Note: A = Acceptable; N = Not provided/applicable; SW = See worksheet; ND = No compounds detected; R = Rinsate; FB = Field blank; D = Duplicate; TB = Trip blank; EB = Equipment blank; SB=Source blank; OTHER:

	Client ID	Lab ID	Matrix	Date
1	HB-S-06-060420	006082-02	Soil	06/04/20
2	HB-S-07-060420	006082-03	Soil	06/04/20
3	HB-S-08-060420	006082-04	Soil	06/04/20
4	HB-S-09-060420	006082-05	Soil	06/04/20
5				
6				
7				
8				
9				
10				
11				
12				

Notes:

1	00-1259 MB2							

Laboratory Data Consultants, Inc.
Data Validation Report

Project/Site Name: Kimberly-Clark Upland Area

LDC Report Date: August 13, 2020

Parameters: Metals

Validation Level: Stage 2A

Laboratory: Friedman & Bruya, Inc.

Sample Delivery Group (SDG): 006251

Sample Identification	Laboratory Sample Identification	Matrix	Collection Date
PM-B-6-S-06-6	006251-01	Soil	06/16/20
PM-B-6-S-07-6	006251-02	Soil	06/16/20
PM-B-6-S-08-6	006251-03	Soil	06/16/20
PM-B-6-502	006251-04	Soil	06/16/20
PM-B-6-S-05-6	006251-05	Soil	06/16/20
PM-B-6-S-05-9	006251-06	Soil	06/16/20
PM-B-6-S-06-9	006251-07	Soil	06/16/20
PM-B-6-S-07-9	006251-08	Soil	06/16/20
PM-B-6-S-01-6	006251-09	Soil	06/16/20
PM-B-6-S-02-6	006251-10	Soil	06/16/20
PM-B-6-B-01-10	006251-11	Soil	06/16/20
PM-B-6-B-02-10	006251-12	Soil	06/16/20
PM-B-6-B-03-10	006251-13	Soil	06/16/20
PM-B-6-S-01-4	006251-14	Soil	06/16/20
PM-B-6-S-02-4	006251-15	Soil	06/16/20
PM-B-6-S-03-6	006251-16	Soil	06/16/20
PM-B-6-S-03-9	006251-17	Soil	06/16/20
PM-B-6-S-04-6	006251-18	Soil	06/16/20
PM-B-6-S-04-9	006251-19	Soil	06/16/20
PM-B-6-S-06-6MS	006251-01MS	Soil	06/16/20
PM-B-6-S-06-6MSD	006251-01MSD	Soil	06/16/20

Introduction

This Data Validation Report (DVR) presents data validation findings and results for the associated samples listed on the cover page. Data validation was performed in accordance with a modified outline of the USEPA National Functional Guidelines (NFG) for Inorganic Superfund Methods Data Review (January 2017). Where specific guidance was not available, the data has been evaluated in a conservative manner consistent with industry standards using professional experience.

The analyses were performed by the following methods:

Copper by Environmental Protection Agency (EPA) SW 846 Method 6020B
Mercury by EPA Method 1631E

All sample results were subjected to Stage 2A data validation, which comprises an evaluation of quality control (QC) summary results.

The following are definitions of the data qualifiers utilized during data validation:

J (Estimated): The compound or analyte was analyzed for and positively identified by the laboratory; however the reported concentration is estimated due to non-conformances discovered during data validation.

U (Non-detected): The compound or analyte was analyzed for and positively identified by the laboratory; however the compound or analyte should be considered non-detected at the reported concentration due to the presence of contaminants detected in the associated blank(s).

UJ (Non-detected estimated): The compound or analyte was reported as not detected by the laboratory; however the reported quantitation/detection limit is estimated due to non-conformances discovered during data validation.

R (Rejected): The sample results were rejected due to gross non-conformances discovered during data validation. Data qualified as rejected is not usable.

NA (Not Applicable): The non-conformance discovered during data validation demonstrates a high bias, while the affected compound or analyte in the associated sample(s) was reported as not detected by the laboratory and did not warrant the qualification of the data.

A qualification summary table is provided at the end of this report if data has been qualified. Flags are classified as P (protocol) or A (advisory) to indicate whether the flag is due to a laboratory deviation from a specified protocol or is of technical advisory nature.

I. Sample Receipt and Technical Holding Times

All samples were received in good condition.

All technical holding time requirements were met.

II. ICPMS Tune

ICP-MS tune data were not reviewed for Stage 2A validation.

III. Instrument Calibration

Instrument calibration data were not reviewed for Stage 2A validation.

IV. ICP Interference Check Sample Analysis

ICP Interference check sample (ICS) analysis data were not reviewed for Stage 2A validation.

V. Laboratory Blanks

Laboratory blanks were analyzed as required by the methods. No contaminants were found in the laboratory blanks.

VI. Field Blanks

No field blanks were identified in this SDG.

VII. Matrix Spike/Matrix Spike Duplicates

Matrix spike (MS) and matrix spike duplicate (MSD) sample analysis was performed on an associated project sample. Percent recoveries (%R) were within QC limits with the following exceptions:

Spike ID (Associated Samples)	Analyte	MS (%R) (Limits)	MSD (%R) (Limits)	Flag	A or P
PM-B-6-S-06-6MS/MSD (PM-B-6-S-06-6 PM-B-6-S-07-6 PM-B-6-S-08-6 PM-B-6-502 PM-B-6-S-05-6 PM-B-6-S-05-9 PM-B-6-S-01-6 PM-B-6-S-02-6 PM-B-6-B-02-10 PM-B-6-S-01-4 PM-B-6-S-02-4 PM-B-6-S-03-6 PM-B-6-S-03-9 PM-B-6-S-04-6 PM-B-6-S-04-9)	Mercury	185 (75-125)	118 (75-125)	J (all detects)	A

Spike ID (Associated Samples)	Analyte	MS (%R) (Limits)	MSD (%R) (Limits)	Flag	A or P
PM-B-6-S-06-6MS/MSD (PM-B-6-S-06-9 PM-B-6-S-07-9 PM-B-6-B-01-10 PM-B-6-B-03-10)	Mercury	185 (75-125)	118 (75-125)	NA	-

Relative percent differences (RPD) were within QC limits with the following exceptions:

Spike ID (Associated Samples)	Analyte	RPD (Limits)	Flag	A or P
PM-B-6-S-06-6MS/MSD (All samples in SDG 006251)	Mercury	44 (≤20)	J (all detects) UJ (all non-detects)	A

VIII. Duplicate Sample Analysis

The laboratory has indicated that there were no duplicate (DUP) analyses specified for the samples in this SDG, and therefore duplicate analyses were not performed for this SDG.

IX. Serial Dilution

Serial dilution was not performed for this SDG.

X. Laboratory Control Samples

Laboratory control samples (LCS) were analyzed as required by the methods. Percent recoveries (%R) were within QC limits.

XI. Field Duplicates

Samples PM-B-6-S-06-6 and PM-B-6-502 were identified as field duplicates. No results were detected in any of the samples with the following exceptions:

Analyte	Concentration (mg/Kg)		RPD
	PM-B-6-S-06-6	PM-B-6-502	
Copper	39.9	33.6	17
Mercury	4.4	2.5	55

XII. Internal Standards (ICP-MS)

Internal standards data were not reviewed for Stage 2A validation.

XIII. Sample Result Verification

Raw data were not reviewed for Stage 2A validation.

XIV. Overall Assessment of Data

The analysis was conducted within all specifications of the methods.

Due to MS/MSD %R and RPD, data were qualified as estimated in nineteen samples.

No results were rejected in this SDG.

Kimberly-Clark Upland Area
Metals - Data Qualification Summary - SDG 006251

Sample	Analyte	Flag	A or P	Reason
PM-B-6-S-06-6 PM-B-6-S-07-6 PM-B-6-S-08-6 PM-B-6-502 PM-B-6-S-05-6 PM-B-6-S-05-9 PM-B-6-S-01-6 PM-B-6-S-02-6 PM-B-6-B-02-10 PM-B-6-S-01-4 PM-B-6-S-02-4 PM-B-6-S-03-6 PM-B-6-S-03-9 PM-B-6-S-04-6 PM-B-6-S-04-9	Mercury	J (all detects)	A	Matrix spike/Matrix spike duplicate (%R)
PM-B-6-S-06-6 PM-B-6-S-07-6 PM-B-6-S-08-6 PM-B-6-502 PM-B-6-S-05-6 PM-B-6-S-05-9 PM-B-6-S-06-9 PM-B-6-S-07-9 PM-B-6-S-01-6 PM-B-6-S-02-6 PM-B-6-B-01-10 PM-B-6-B-02-10 PM-B-6-B-03-10 PM-B-6-S-01-4 PM-B-6-S-02-4 PM-B-6-S-03-6 PM-B-6-S-03-9 PM-B-6-S-04-6 PM-B-6-S-04-9	Mercury	J (all detects) UJ (all non-detects)	A	Matrix spike/Matrix spike duplicate (RPD)

Kimberly-Clark Upland Area
Metals - Laboratory Blank Data Qualification Summary - SDG 006251

No Sample Data Qualified in this SDG

Kimberly-Clark Upland Area
Metals - Field Blank Data Qualification Summary - SDG 006251

No Sample Data Qualified in this SDG

LDC #: 48734D4a
SDG #: 006251
Laboratory: Friedman & Bruya, Inc.

VALIDATION COMPLETENESS WORKSHEET
Stage 2A

Date: 8/12/2020
Page: 1 of 2
Reviewer: DM
2nd Reviewer:

METHOD: Cr, Hg (EPA SW 846 Method 6020B/EPA Method 1631E)

The samples listed below were reviewed for each of the following validation areas. Validation findings are noted in attached validation findings worksheets.

	Validation Area		Comments
I.	Sample receipt/Technical holding times	A / A	
II.	ICP/MS Tune	N	
III.	Instrument Calibration	N	
IV.	ICP Interference Check Sample (ICS) Analysis	N	
V.	Laboratory Blanks	A	
VI.	Field Blanks	N	
VII.	Matrix Spike/Matrix Spike Duplicates	SW	
VIII.	Duplicate sample analysis	N	
IX.	Serial Dilution	N	
X.	Laboratory control samples	A	LCS
XI.	Field Duplicates	NOW	(1, 4)
XII.	Internal Standard (ICP-MS)	N	
XIII.	Sample Result Verification	N	
XIV	Overall Assessment of Data	A	

Note: A = Acceptable
N = Not provided/applicable
SW = See worksheet
ND = No compounds detected
R = Rinsate
FB = Field blank
D = Duplicate
TB = Trip blank
EB = Equipment blank
SB=Source blank
OTHER:

	Client ID	Lab ID	Matrix	Date
1	PM-B-6-S-06-6	006251-01	Soil	06/16/20
2	PM-B-6-S-07-6	006251-02	Soil	06/16/20
3	PM-B-6-S-08-6	006251-03	Soil	06/16/20
4	PM-B-6-502	006251-04	Soil	06/16/20
5	PM-B-6-S-05-6	006251-05	Soil	06/16/20
6	PM-B-6-S-05-9	006251-06	Soil	06/16/20
7	PM-B-6-S-06-9	006251-07	Soil	06/16/20
8	PM-B-6-S-07-9	006251-08	Soil	06/16/20
9	PM-B-6-S-01-6	006251-09	Soil	06/16/20
10	PM-B-6-S-02-6	006251-10	Soil	06/16/20
11	PM-B-6-B-01-10	006251-11	Soil	06/16/20
12	PM-B-6-B-02-10	006251-12	Soil	06/16/20
13	PM-B-6-B-03-10	006251-13	Soil	06/16/20
14	PM-B-6-S-01-4	006251-14	Soil	06/16/20
15	PM-B-6-S-02-4	006251-15	Soil	06/16/20

LDC #: 48734D4a

SDG #: 006251

Laboratory: Friedman & Bruya, Inc.

VALIDATION COMPLETENESS WORKSHEET

Stage 2A

Date: 9/12/2020

Reviewer: DM

2nd Reviewer:

METHOD: Cr, Hg (EPA SW 846 Method 6020B/EPA Method 1631E)

	Client ID	Lab ID	Matrix	Date
16	PM-B-6-S-03-6	006251-16	Soil	06/16/20
17	PM-B-6-S-03-9	006251-17	Soil	06/16/20
18	PM-B-6-S-04-6	006251-18	Soil	06/16/20
19	PM-B-6-S-04-9	006251-19	Soil	06/16/20
20	PM-B-6-S-06-6MS	006251-01MS	Soil	06/16/20
21	PM-B-6-S-06-6MSD	006251-01MSD	Soil	06/16/20
22				
23				
24				

Notes:

LDC #: 49734D4a

VALIDATION FINDINGS WORKSHEET
Sample Specific Element Reference

Reviewer: DTM
2nd reviewer:

All circled elements are applicable to each sample.

Sample ID	Matrix	Target Analyte List (TAL)
1-19	S	Al, Sb, As, Ba, Be, B, Cd, Ca, Cr, Co, (Cu), Fe, Pb, Li, Mg, Mo, Mn, (Hg), Ni, K, Se, Ag, Na, Sr, Tl, Sn, Ti, W, U, V, Zn
		Al, Sb, As, Ba, Be, B, Cd, Ca, Cr, Co, Cu, Fe, Pb, Li, Mg, Mo, Mn, Hg, Ni, K, Se, Ag, Na, Sr, Tl, Sn, Ti, W, U, V, Zn
QC20-21	S	Al, Sb, As, Ba, Be, B, Cd, Ca, Cr, Co, (Cu), Fe, Pb, Li, Mg, Mo, Mn, (Hg), Ni, K, Se, Ag, Na, Sr, Tl, Sn, Ti, W, U, V, Zn
		Al, Sb, As, Ba, Be, B, Cd, Ca, Cr, Co, Cu, Fe, Pb, Li, Mg, Mo, Mn, Hg, Ni, K, Se, Ag, Na, Sr, Tl, Sn, Ti, W, U, V, Zn
		Al, Sb, As, Ba, Be, B, Cd, Ca, Cr, Co, Cu, Fe, Pb, Li, Mg, Mo, Mn, Hg, Ni, K, Se, Ag, Na, Sr, Tl, Sn, Ti, W, U, V, Zn
		Al, Sb, As, Ba, Be, B, Cd, Ca, Cr, Co, Cu, Fe, Pb, Li, Mg, Mo, Mn, Hg, Ni, K, Se, Ag, Na, Sr, Tl, Sn, Ti, W, U, V, Zn
		Al, Sb, As, Ba, Be, B, Cd, Ca, Cr, Co, Cu, Fe, Pb, Li, Mg, Mo, Mn, Hg, Ni, K, Se, Ag, Na, Sr, Tl, Sn, Ti, W, U, V, Zn
		Al, Sb, As, Ba, Be, B, Cd, Ca, Cr, Co, Cu, Fe, Pb, Li, Mg, Mo, Mn, Hg, Ni, K, Se, Ag, Na, Sr, Tl, Sn, Ti, W, U, V, Zn
		Al, Sb, As, Ba, Be, B, Cd, Ca, Cr, Co, Cu, Fe, Pb, Li, Mg, Mo, Mn, Hg, Ni, K, Se, Ag, Na, Sr, Tl, Sn, Ti, W, U, V, Zn
		Al, Sb, As, Ba, Be, B, Cd, Ca, Cr, Co, Cu, Fe, Pb, Li, Mg, Mo, Mn, Hg, Ni, K, Se, Ag, Na, Sr, Tl, Sn, Ti, W, U, V, Zn
		Al, Sb, As, Ba, Be, B, Cd, Ca, Cr, Co, Cu, Fe, Pb, Li, Mg, Mo, Mn, Hg, Ni, K, Se, Ag, Na, Sr, Tl, Sn, Ti, W, U, V, Zn
		Al, Sb, As, Ba, Be, B, Cd, Ca, Cr, Co, Cu, Fe, Pb, Li, Mg, Mo, Mn, Hg, Ni, K, Se, Ag, Na, Sr, Tl, Sn, Ti, W, U, V, Zn
		Al, Sb, As, Ba, Be, B, Cd, Ca, Cr, Co, Cu, Fe, Pb, Li, Mg, Mo, Mn, Hg, Ni, K, Se, Ag, Na, Sr, Tl, Sn, Ti, W, U, V, Zn
		Al, Sb, As, Ba, Be, B, Cd, Ca, Cr, Co, Cu, Fe, Pb, Li, Mg, Mo, Mn, Hg, Ni, K, Se, Ag, Na, Sr, Tl, Sn, Ti, W, U, V, Zn
		Al, Sb, As, Ba, Be, B, Cd, Ca, Cr, Co, Cu, Fe, Pb, Li, Mg, Mo, Mn, Hg, Ni, K, Se, Ag, Na, Sr, Tl, Sn, Ti, W, U, V, Zn
		Al, Sb, As, Ba, Be, B, Cd, Ca, Cr, Co, Cu, Fe, Pb, Li, Mg, Mo, Mn, Hg, Ni, K, Se, Ag, Na, Sr, Tl, Sn, Ti, W, U, V, Zn
		Al, Sb, As, Ba, Be, B, Cd, Ca, Cr, Co, Cu, Fe, Pb, Li, Mg, Mo, Mn, Hg, Ni, K, Se, Ag, Na, Sr, Tl, Sn, Ti, W, U, V, Zn
		Al, Sb, As, Ba, Be, B, Cd, Ca, Cr, Co, Cu, Fe, Pb, Li, Mg, Mo, Mn, Hg, Ni, K, Se, Ag, Na, Sr, Tl, Sn, Ti, W, U, V, Zn
		Al, Sb, As, Ba, Be, B, Cd, Ca, Cr, Co, Cu, Fe, Pb, Li, Mg, Mo, Mn, Hg, Ni, K, Se, Ag, Na, Sr, Tl, Sn, Ti, W, U, V, Zn
		Al, Sb, As, Ba, Be, B, Cd, Ca, Cr, Co, Cu, Fe, Pb, Li, Mg, Mo, Mn, Hg, Ni, K, Se, Ag, Na, Sr, Tl, Sn, Ti, W, U, V, Zn
		Al, Sb, As, Ba, Be, B, Cd, Ca, Cr, Co, Cu, Fe, Pb, Li, Mg, Mo, Mn, Hg, Ni, K, Se, Ag, Na, Sr, Tl, Sn, Ti, W, U, V, Zn
Analysis Method		
ICP		Al, Sb, As, Ba, Be, B, Cd, Ca, Cr, Co, Cu, Fe, Pb, Li, Mg, Mo, Mn, Hg, Ni, K, Se, Ag, Na, Sr, Tl, Sn, Ti, W, U, V, Zn
ICP-MS		Al, Sb, As, Ba, Be, B, Cd, Ca, Cr, Co, Cu, Fe, Pb, Li, Mg, Mo, Mn, Hg, Ni, K, Se, Ag, Na, Sr, Tl, Sn, Ti, W, U, V, Zn
GFAA		Al, Sb, As, Ba, Be, B, Cd, Ca, Cr, Co, Cu, Fe, Pb, Li, Mg, Mo, Mn, Hg, Ni, K, Se, Ag, Na, Sr, Tl, Sn, Ti, W, U, V, Zn

Comments: Mercury by CVAA if performed

LDC #: 48734D4a

VALIDATION FINDINGS WORKSHEET
Matrix Spike/Matrix Spike Duplicates

Reviewer: DTM
2nd Reviewer:

METHOD: Trace metals (EPA SW 846 Method 6020/6010/7470)

Please see qualifications below for all questions answered "N". Not applicable questions are identified as "N/A".

Y N N/A Was a matrix spike analyzed for each matrix in this SDG?

Y N N/A Were matrix spike percent recoveries (%R) within the control limits of 75-125? If the sample concentration exceeded the spike concentration by a factor of 4 or more, no action was taken.

Y N N/A Were all duplicate sample relative percent differences (RPD) ≤ 20% for samples?

LEVEL IV ONLY:

Y N N/A Were recalculated results acceptable? See Level IV Recalculation Worksheet for recalculations.

#	MS/MSD ID	Matrix	Analyte	MS %Recovery	MSD %Recovery	RPD (Limits)	Associated Samples	Qualifications
	20/21	S	Hg	185	118		ALL	J/A (det) NO NO=7,8,11,13
			Hg			44	ALL	J/UJ/A (det) NO

Comments:

LDC#: 48734D4a

VALIDATION FINDINGS WORKSHEET

Field Duplicates

Reviewer: DTM

2nd Reviewer:

METHOD: Metals (EPA Method 6010/6020/7000)

Analyte	Concentration (mg/Kg)		RPD
	1	4	
Copper	39.9	33.6	17
Mercury	4.4	2.5	55

V:\Darionna\FIELD DUPLICATES\Field Duplicates\FD_inorganic\2020\48734D4a.wpd

Laboratory Data Consultants, Inc.
Data Validation Report

Project/Site Name: Kimberly-Clark Upland Area

LDC Report Date: August 17, 2020

Parameters: Polynuclear Aromatic Hydrocarbons

Validation Level: Stage 2A

Laboratory: Friedman & Bruya, Inc.

Sample Delivery Group (SDG): 006275

Sample Identification	Laboratory Sample Identification	Matrix	Collection Date
LP-S-01-6.5	006275-01	Soil	06/17/20
LP-S-02-6.5	006275-02	Soil	06/17/20
LP-S-03-6.5	006275-03	Soil	06/17/20
LP-B-01-8	006275-04	Soil	06/17/20
LP-S-10-6.5	006275-05	Soil	06/17/20
LP-503	006275-06	Soil	06/17/20

Introduction

This Data Validation Report (DVR) presents data validation findings and results for the associated samples listed on the cover page. Data validation was performed in accordance with a modified outline of the USEPA National Functional Guidelines (NFG) for Organic Superfund Methods Data Review (January 2017). Where specific guidance was not available, the data has been evaluated in a conservative manner consistent with industry standards using professional experience.

The analyses were performed by the following method:

Polynuclear Aromatic Hydrocarbons (PAHs) by Environmental Protection Agency (EPA) SW 846 Method 8270E in Selected Ion Monitoring (SIM) mode

All sample results were subjected to Stage 2A data validation, which comprises an evaluation of quality control (QC) summary results.

The following are definitions of the data qualifiers utilized during data validation:

J (Estimated): The compound or analyte was analyzed for and positively identified by the laboratory; however the reported concentration is estimated due to non-conformances discovered during data validation.

U (Non-detected): The compound or analyte was analyzed for and positively identified by the laboratory; however the compound or analyte should be considered non-detected at the reported concentration due to the presence of contaminants detected in the associated blank(s).

UJ (Non-detected estimated): The compound or analyte was reported as not detected by the laboratory; however the reported quantitation/detection limit is estimated due to non-conformances discovered during data validation.

R (Rejected): The sample results were rejected due to gross non-conformances discovered during data validation. Data qualified as rejected is not usable.

NA (Not Applicable): The non-conformance discovered during data validation demonstrates a high bias, while the affected compound or analyte in the associated sample(s) was reported as not detected by the laboratory and did not warrant the qualification of the data.

A qualification summary table is provided at the end of this report if data has been qualified. Flags are classified as P (protocol) or A (advisory) to indicate whether the flag is due to a laboratory deviation from a specified protocol or is of technical advisory nature.

I. Sample Receipt and Technical Holding Times

All samples were received in good condition and cooler temperatures upon receipt met validation criteria.

All technical holding time requirements were met.

II. GC/MS Instrument Performance Check

Instrument performance check data were not reviewed for Stage 2A validation.

III. Initial Calibration and Initial Calibration Verification

Initial calibration data were not reviewed for Stage 2A validation.

IV. Continuing Calibration

Continuing calibration data were not reviewed for Stage 2A validation.

V. Laboratory Blanks

Laboratory blanks were analyzed as required by the method. No contaminants were found in the laboratory blanks.

VI. Field Blanks

No field blanks were identified in this SDG.

VII. Surrogates

Surrogates were added to all samples as required by the method. All surrogate recoveries (%R) were within QC limits.

VIII. Matrix Spike/Matrix Spike Duplicates

The laboratory has indicated that there were no matrix spike (MS) and matrix spike duplicate (MSD) analyses specified for the samples in this SDG, and therefore matrix spike and matrix spike duplicate analyses were not performed for this SDG.

IX. Laboratory Control Samples

Laboratory control samples (LCS) were analyzed as required by the method. Percent recoveries (%R) were within QC limits.

X. Field Duplicates

Samples LP-B-01-8 and LP-503 were identified as field duplicates. No results were detected in any of the samples with the following exceptions:

Compound	Concentration (mg/Kg)		RPD
	LP-B-01-8	LP-503	
Benzo(a)anthracene	0.087	0.064	30
Chrysene	0.098	0.079	21
Benzo(a)pyrene	0.11	0.080	32
Benzo(b)fluoranthene	0.12	0.086	33
Benzo(k)fluoranthene	0.045	0.034	28
Indeno(1,2,3-cd)pyrene	0.053	0.040	28
Dibenzo(a,h)anthracene	0.011	0.01U	Not calculable

XI. Internal Standards

Internal standards data were not reviewed for Stage 2A validation.

XII. Compound Quantitation

Raw data were not reviewed for Stage 2A validation.

XIII. Target Compound Identifications

Raw data were not reviewed for Stage 2A validation.

XIV. System Performance

Raw data were not reviewed for Stage 2A validation.

XV. Overall Assessment of Data

The analysis was conducted within all specifications of the method. No results were rejected in this SDG.

Kimberly-Clark Upland Area
Polynuclear Aromatic Hydrocarbons - Data Qualification Summary - SDG 006275

No Sample Data Qualified in this SDG

Kimberly-Clark Upland Area
Polynuclear Aromatic Hydrocarbons - Laboratory Blank Data Qualification Summary - SDG 006275

No Sample Data Qualified in this SDG

Kimberly-Clark Upland Area
Polynuclear Aromatic Hydrocarbons - Field Blank Data Qualification Summary - SDG 006275

No Sample Data Qualified in this SDG

LDC #: 48734E2b
SDG #: 006275
Laboratory: Friedman & Bruya, Inc.

VALIDATION COMPLETENESS WORKSHEET
Stage 2A

Date: 08/13/20
Page: 1 of 1
Reviewer: VT
2nd Reviewer:

METHOD: GC/MS Polynuclear Aromatic Hydrocarbons (EPA SW 846 Method 8270E-SIM)

The samples listed below were reviewed for each of the following validation areas. Validation findings are noted in attached validation findings worksheets.

	Validation Area		Comments
I.	Sample receipt/Technical holding times	A/A	
II.	GC/MS Instrument performance check	N	
III.	Initial calibration/ICV	N/N	
IV.	Continuing calibration	N	
V.	Laboratory Blanks	A	
VI.	Field blanks	N	
VII.	Surrogate spikes	A	
VIII.	Matrix spike/Matrix spike duplicates	N	Non client
IX.	Laboratory control samples	A	LCS
X.	Field duplicates	SW	D= 4+6
XI.	Internal standards	N	
XII.	Compound quantitation RL/LOQ/LODs	N	Dry weight basis
XIII.	Target compound identification	N	
XIV.	System performance	N	
XV.	Overall assessment of data	A	

Note: A = Acceptable; N = Not provided/applicable; SW = See worksheet; ND = No compounds detected; R = Rinsate; FB = Field blank; D = Duplicate; TB = Trip blank; EB = Equipment blank; SB=Source blank; OTHER:

	Client ID		Lab ID	Matrix	Date
1	LP-S-01-6.5		006275-01	Soil	06/17/20
2	LP-S-02-6.5		006275-02	Soil	06/17/20
3	LP-S-03-6.5		006275-03	Soil	06/17/20
4	LP-B-01-8	D	006275-04	Soil	06/17/20
5	LP-S-10-6.5		006275-05	Soil	06/17/20
6	LP-503	D	006275-06	Soil	06/17/20
7					
8					
9					

Notes:

1	00-1408MB2/15							

VALIDATION FINDINGS WORKSHEET

METHOD: GC/MS SVOA

A. Phenol	CC. Dimethylphthalate	EEE. Bis(2-ethylhexyl)phthalate	GGGG. C30-Hopane	I1. Methyl methanesulfonate
B. Bis (2-chloroethyl) ether	DD. Acenaphthylene	FFF. Di-n-octylphthalate	HHHH. 1-Methylphenanthrene	J1. Ethyl methanesulfonate
C. 2-Chlorophenol	EE. 2,6-Dinitrotoluene	GGG. Benzo(b)fluoranthene	IIII. 1,4-Dioxane	K1. o,o',o''-Triethylphosphorothioate
D. 1,3-Dichlorobenzene	FF. 3-Nitroaniline	HHH. Benzo(k)fluoranthene	JJJJ. Acetophenone	L1. n-Phenylene diamine
E. 1,4-Dichlorobenzene	GG. Acenaphthene	III. Benzo(a)pyrene	KKKK. Atrazine	M1. 1,4-Naphthoquinone
F. 1,2-Dichlorobenzene	HH. 2,4-Dinitrophenol	JJJ. Indeno(1,2,3-cd)pyrene	LLLL. Benzaldehyde	N1. N-Nitro-o-toluidine
G. 2-Methylphenol	II. 4-Nitrophenol	KKK. Dibenz(a,h)anthracene	MMMM. Caprolactam	O1. 1,3,5-Trinitrobenzene
H. 2,2'-Oxybis(1-chloropropane)	JJ. Dibenzofuran	LLL. Benzo(g,h,i)perylene	NNNN. 2,6-Dichlorophenol	P1. Pentachlorobenzene
I. 4-Methylphenol	KK. 2,4-Dinitrotoluene	MMM. Bis(2-Chloroisopropyl)ether	OOOO. 1,2-Diphenylhydrazine	Q1. 4-Aminobiphenyl
J. N-Nitroso-di-n-propylamine	LL. Diethylphthalate	NNN. Aniline	PPPP. 3-Methylphenol	R1. 2-Naphthylamine
K. Hexachloroethane	MM. 4-Chlorophenyl-phenyl ether	OOO. N-Nitrosodimethylamine	QQQQ. 3&4-Methylphenol	S1. Triphenylene
L. Nitrobenzene	NN. Fluorene	PPP. Benzoic Acid	RRRR. 4-Dimethyldibenzothiophene (4MDT)	T1. Octachlorostyrene
M. Isophorone	OO. 4-Nitroaniline	QQQ. Benzyl alcohol	SSSS. 2/3-Dimethyldibenzothiophene (4MDT)	U1. Famphur
N. 2-Nitrophenol	PP. 4,6-Dinitro-2-methylphenol	RRR. Pyridine	TTTT. 1-Methyldibenzothiophene (1MDT)	V1. 1,4-phenylenediamine
O. 2,4-Dimethylphenol	QQ. N-Nitrosodiphenylamine	SSS. Benzidine	UUUU.. 2,3,4,6-Tetrachlorophenol	W1. Methapyrilene
P. Bis(2-chloroethoxy)methane	RR. 4-Bromophenyl-phenylether	TTT. 1-Methylnaphthalene	VVVV. 1,2,4,5-Tetrachlorobenzene	X1. Pentachloroethane
Q. 2,4-Dichlorophenol	SS. Hexachlorobenzene	UUU.Benzo(b)thiophene	WWWW.. 2-Picoline	Y1. 3,3'-Dimethylbenzidine
R. 1,2,4-Trichlorobenzene	TT. Pentachlorophenol	VVV.Benzonaphthothiophene	XXXX. 3-Methylcholanthrene	Z1. o-Toluidine
S. Naphthalene	UU. Phenanthrene	WWW.Benzo(e)pyrene	YYYY. a,a-Dimethylphenethylamine	A2. 1-Naphthylamine
T. 4-Chloroaniline	VV. Anthracene	XXX. 2,6-Dimethylnaphthalene	ZZZZ. Hexachloropropene	B2. 4-Aminobiphenyl
U. Hexachlorobutadiene	WW. Carbazole	YYY. 2,3,5-Trimethylnaphthalene	A1. N-Nitrosodiethylamine	C2. 4-Nitroquinoline-1-oxide
V. 4-Chloro-3-methylphenol	XX. Di-n-butylphthalate	ZZZ. Perylene	B1. N-Nitrosodi-n-butylamine	D2. Hexachloropene
W. 2-Methylnaphthalene	YY. Fluoranthene	AAAA. Dibenzothiophene	C1. N-Nitrosomethylethylamine	E2. Bis (2-chloro-1-methylethyl) ether
X. Hexachlorocyclopentadiene	ZZ. Pyrene	BBBB. Benzo(a)fluoranthene	D1. N-Nitrosomorpholine	F2. Bifenthrin
Y. 2,4,6-Trichlorophenol	AAA. Butylbenzylphthalate	CCCC. Benzo(b)fluorene	E1. N-Nitrosopyrrolidine	G2. Cyfluthrin
Z. 2,4,5-Trichlorophenol	BBB. 3,3'-Dichlorobenzidine	DDDD. cis/trans-Decalin	F1. Phenacetin	H2. Cypermethrin
AA. 2-Chloronaphthalene	CCC. Benzo(a)anthracene	EEEE. 1,1'-Biphenyl	G1. 2-Acetylaminofluorene	I2. Permethrin (cis/trans)
BB. 2-Nitroaniline	DDD. Chrysene	FFFF. Retene	H1. Pronamide	J2. 5-Nitro-o-toluidine

LDC#:48734E2b **VALIDATION FINDINGS WORKSHEET** Page:_1_of_1_
Field Duplicates Reviewer:__LT____
2nd Reviewer:

METHOD: GC/MS PAHs (EPA SW846 Method 8270E SIM)

Compound	Concentration (mg/kg)		RPD
	4	6	
CCC	0.087	0.064	30
DDD	0.098	0.079	21
III	0.11	0.080	32
GGG	0.12	0.086	33
HHH	0.045	0.034	28
JJJ	0.053	0.040	28
KKK	0.011	0.01U	NC

Laboratory Data Consultants, Inc.
Data Validation Report

Project/Site Name: Kimberly-Clark Upland Area

LDC Report Date: August 13, 2020

Parameters: Mercury

Validation Level: Stage 2A

Laboratory: Friedman & Bruya, Inc.

Sample Delivery Group (SDG): 006275

Sample Identification	Laboratory Sample Identification	Matrix	Collection Date
LP-S-01-6.5	006275-01	Soil	06/17/20
LP-S-02-6.5	006275-02	Soil	06/17/20
LP-S-03-6.5	006275-03	Soil	06/17/20
LP-B-01-8	006275-04	Soil	06/17/20
LP-S-10-6.5	006275-05	Soil	06/17/20
LP-503	006275-06	Soil	06/17/20
LP-503MS	006275-06MS	Soil	06/17/20
LP-503MSD	006275-06MSD	Soil	06/17/20

Introduction

This Data Validation Report (DVR) presents data validation findings and results for the associated samples listed on the cover page. Data validation was performed in accordance with a modified outline of the USEPA National Functional Guidelines (NFG) for Inorganic Superfund Methods Data Review (January 2017). Where specific guidance was not available, the data has been evaluated in a conservative manner consistent with industry standards using professional experience.

The analyses were performed by the following method:

Mercury by Environmental Protection Agency (EPA) Method 1631E

All sample results were subjected to Stage 2A data validation, which comprises an evaluation of quality control (QC) summary results.

The following are definitions of the data qualifiers utilized during data validation:

J (Estimated): The compound or analyte was analyzed for and positively identified by the laboratory; however the reported concentration is estimated due to non-conformances discovered during data validation.

U (Non-detected): The compound or analyte was analyzed for and positively identified by the laboratory; however the compound or analyte should be considered non-detected at the reported concentration due to the presence of contaminants detected in the associated blank(s).

UJ (Non-detected estimated): The compound or analyte was reported as not detected by the laboratory; however the reported quantitation/detection limit is estimated due to non-conformances discovered during data validation.

R (Rejected): The sample results were rejected due to gross non-conformances discovered during data validation. Data qualified as rejected is not usable.

NA (Not Applicable): The non-conformance discovered during data validation demonstrates a high bias, while the affected compound or analyte in the associated sample(s) was reported as not detected by the laboratory and did not warrant the qualification of the data.

A qualification summary table is provided at the end of this report if data has been qualified. Flags are classified as P (protocol) or A (advisory) to indicate whether the flag is due to a laboratory deviation from a specified protocol or is of technical advisory nature.

I. Sample Receipt and Technical Holding Times

All samples were received in good condition.

All technical holding time requirements were met.

II. Instrument Calibration

Instrument calibration data were not reviewed for Stage 2A validation.

III. Laboratory Blanks

Laboratory blanks were analyzed as required by the method. No contaminants were found in the laboratory blanks.

IV. Field Blanks

No field blanks were identified in this SDG.

V. Matrix Spike/Matrix Spike Duplicates

Matrix spike (MS) and matrix spike duplicate (MSD) sample analysis was performed on an associated project sample. Percent recoveries (%R) were within QC limits. Relative percent differences (RPD) were within QC limits.

VI. Duplicate Sample Analysis

The laboratory has indicated that there were no duplicate (DUP) analyses specified for the samples in this SDG, and therefore duplicate analyses were not performed for this SDG.

VII. Laboratory Control Samples

Laboratory control samples (LCS) were analyzed as required by the method. Percent recoveries (%R) were within QC limits.

VIII. Field Duplicates

Samples LP-B-01-8 and LP-503 were identified as field duplicates. No results were detected in any of the samples.

IX. Sample Result Verification

Raw data were not reviewed for Stage 2A validation.

X. Overall Assessment of Data

The analysis was conducted within all specifications of the method. No results were rejected in this SDG.

Kimberly-Clark Upland Area
Mercury - Data Qualification Summary - SDG 006275

No Sample Data Qualified in this SDG

Kimberly-Clark Upland Area
Mercury - Laboratory Blank Data Qualification Summary - SDG 006275

No Sample Data Qualified in this SDG

Kimberly-Clark Upland Area
Mercury - Field Blank Data Qualification Summary - SDG 006275

No Sample Data Qualified in this SDG

LDC #: 48734E4c
SDG #: 006275
Laboratory: Friedman & Bruya, Inc.

VALIDATION COMPLETENESS WORKSHEET
Stage 2A

Date: 8/12/2020
Page: 1 of 1
Reviewer: DM
2nd Reviewer:

METHOD: Mercury (EPA Method 1631E)

The samples listed below were reviewed for each of the following validation areas. Validation findings are noted in attached validation findings worksheets.

	Validation Area		Comments
I.	Sample receipt/Technical holding times	A / A	
II.	Instrument Calibration	N	
III.	Laboratory Blanks	A	
IV.	Field Blanks	N	
V.	Matrix Spike/Matrix Spike Duplicates	A	
VI.	Duplicate sample analysis	N	
VII.	Laboratory control samples	A	LCS
VIII.	Field Duplicates	ND	(4,6)
IX.	Sample Result Verification	N	
X.	Overall Assessment of Data	A	

Note: A = Acceptable; N = Not provided/applicable; SW = See worksheet; ND = No compounds detected; R = Rinsate; FB = Field blank; D = Duplicate; TB = Trip blank; EB = Equipment blank; SB=Source blank; OTHER:

	Client ID	Lab ID	Matrix	Date
1	LP-S-01-6.5	006275-01	Soil	06/17/20
2	LP-S-02-6.5	006275-02	Soil	06/17/20
3	LP-S-03-6.5	006275-03	Soil	06/17/20
4	LP-B-01-8	006275-04	Soil	06/17/20
5	LP-S-10-6.5	006275-05	Soil	06/17/20
6	LP-503	006275-06	Soil	06/17/20
7	LP-503MS	006275-06MS	Soil	06/17/20
8	LP-503MSD	006275-06MSD	Soil	06/17/20
9				
10				
11				
12				
13				
14				
15				
16				
17				

Notes:

Laboratory Data Consultants, Inc.
Data Validation Report

Project/Site Name: Kimberly-Clark Upland Area

LDC Report Date: August 17, 2020

Parameters: Total Petroleum Hydrocarbons as Gasoline

Validation Level: Stage 2A

Laboratory: Friedman & Bruya, Inc.

Sample Delivery Group (SDG): 006275

Sample Identification	Laboratory Sample Identification	Matrix	Collection Date
LP-S-01-6.5	006275-01	Soil	06/17/20
LP-S-02-6.5	006275-02	Soil	06/17/20
LP-S-03-6.5	006275-03	Soil	06/17/20
LP-B-01-8	006275-04	Soil	06/17/20
LP-S-10-6.5	006275-05	Soil	06/17/20
LP-503	006275-06	Soil	06/17/20

Introduction

This Data Validation Report (DVR) presents data validation findings and results for the associated samples listed on the cover page. Data validation was performed in accordance with a modified outline of the USEPA National Functional Guidelines (NFG) for Organic Superfund Methods Data Review (January 2017). Where specific guidance was not available, the data has been evaluated in a conservative manner consistent with industry standards using professional experience.

The analyses were performed by the following method:

Total Petroleum Hydrocarbons (TPH) as Gasoline by NWTPH-Gx

All sample results were subjected to Stage 2A data validation, which comprises an evaluation of quality control (QC) summary results.

The following are definitions of the data qualifiers utilized during data validation:

J (Estimated): The compound or analyte was analyzed for and positively identified by the laboratory; however the reported concentration is estimated due to non-conformances discovered during data validation.

U (Non-detected): The compound or analyte was analyzed for and positively identified by the laboratory; however the compound or analyte should be considered not detected at the reported concentration due to the presence of contaminants detected in the associated blank(s).

UJ (Non-detected estimated): The compound or analyte was reported as not detected by the laboratory; however the reported quantitation/detection limit is estimated due to non-conformances discovered during data validation.

R (Rejected): The sample results were rejected due to gross non-conformances discovered during data validation. Data qualified as rejected is not usable.

NA (Not Applicable): The non-conformance discovered during data validation demonstrates a high bias, while the affected compound or analyte in the associated sample(s) was reported as not detected by the laboratory and did not warrant the qualification of the data.

A qualification summary table is provided at the end of this report if data has been qualified. Flags are classified as P (protocol) or A (advisory) to indicate whether the flag is due to a laboratory deviation from a specified protocol or is of technical advisory nature.

I. Sample Receipt and Technical Holding Times

All samples were received in good condition and cooler temperatures upon receipt met validation criteria.

All technical holding time requirements were met.

II. Initial Calibration and Initial Calibration Verification

Initial calibration data were not reviewed for Stage 2A validation.

III. Continuing Calibration

Continuing calibration data were not reviewed for Stage 2A validation.

IV. Laboratory Blanks

Laboratory blanks were analyzed as required by the method. No contaminants were found in the laboratory blanks.

V. Field Blanks

No field blanks were identified in this SDG.

VI. Surrogates

Surrogates were added to all samples as required by the method. All surrogate recoveries (%R) were within QC limits.

VII. Matrix Spike/Matrix Spike Duplicates

The laboratory has indicated that there were no matrix spike (MS) and matrix spike duplicate (MSD) analyses specified for the samples in this SDG, and therefore matrix spike and matrix spike duplicate analyses were not performed for this SDG.

VIII. Laboratory Control Samples

Laboratory control samples (LCS) were analyzed as required by the method. Percent recoveries (%R) were within QC limits.

IX. Field Duplicates

Samples LP-B-01-8 and LP-503 were identified as field duplicates. No results were detected in any of the samples.

X. Compound Quantitation

Raw data were not reviewed for Stage 2A validation.

XI. Target Compound Identifications

Raw data were not reviewed for Stage 2A validation.

XII. Overall Assessment of Data

The analysis was conducted within all specifications of the method. No results were rejected in this SDG.

Kimberly-Clark Upland Area
Total Petroleum Hydrocarbons as Gasoline - Data Qualification Summary - SDG 006275

No Sample Data Qualified in this SDG

Kimberly-Clark Upland Area
Total Petroleum Hydrocarbons as Gasoline - Laboratory Blank Data Qualification Summary - SDG 006275

No Sample Data Qualified in this SDG

Kimberly-Clark Upland Area
Total Petroleum Hydrocarbons as Gasoline - Field Blank Data Qualification Summary - SDG 006275

No Sample Data Qualified in this SDG

LDC #: 48734E7 **VALIDATION COMPLETENESS WORKSHEET** Date: 8/13/20
SDG #: 006275 Stage 2A Page: 1 of 1
Laboratory: Friedman & Bruya, Inc. Reviewer: LT
2nd Reviewer:

METHOD: GC TPH as Gasoline (NWTPH-Gx)

The samples listed below were reviewed for each of the following validation areas. Validation findings are noted in attached validation findings worksheets.

	Validation Area		Comments
I.	Sample receipt/Technical holding times	A, A	
II.	Initial calibration/ICV	N/N	
III.	Continuing calibration	N	
IV.	Laboratory Blanks	A	
V.	Field blanks	N	
VI.	Surrogate spikes	A	
VII.	Matrix spike/Matrix spike duplicates	N	Non client
VIII.	Laboratory control samples	A	LCS
IX.	Field duplicates	MD	D = 4+6
X.	Compound quantitation RL/LOQ/LODs	N	Dry weight basis
XI.	Target compound identification	N	
XII.	Overall assessment of data	A	

Note: A = Acceptable; N = Not provided/applicable; SW = See worksheet; ND = No compounds detected; R = Rinsate; FB = Field blank; D = Duplicate; TB = Trip blank; EB = Equipment blank; SB=Source blank; OTHER:

	Client ID		Lab ID	Matrix	Date
1	LP-S-01-6.5		006275-01	Soil	06/17/20
2	LP-S-02-6.5		006275-02	Soil	06/17/20
3	LP-S-03-6.5		006275-03	Soil	06/17/20
4	LP-B-01-8	D	006275-04	Soil	06/17/20
5	LP-S-10-6.5		006275-05	Soil	06/17/20
6	LP-503	D	006275-06	Soil	06/17/20
7					
8					
9					
10					
11					
12					

Notes:

1	00-B12MB2						

Laboratory Data Consultants, Inc.
Data Validation Report

Project/Site Name: Kimberly-Clark Upland Area

LDC Report Date: August 17, 2020

Parameters: Total Petroleum Hydrocarbons as Extractables

Validation Level: Stage 2A

Laboratory: Friedman & Bruya, Inc.

Sample Delivery Group (SDG): 006275

Sample Identification	Laboratory Sample Identification	Matrix	Collection Date
LP-S-01-6.5	006275-01	Soil	06/17/20
LP-S-02-6.5	006275-02	Soil	06/17/20
LP-S-03-6.5	006275-03	Soil	06/17/20
LP-B-01-8	006275-04	Soil	06/17/20
LP-S-10-6.5	006275-05	Soil	06/17/20
LP-503	006275-06	Soil	06/17/20
LP-S-01-6.5MS	006275-01MS	Soil	06/17/20
LP-S-01-6.5MSD	006275-01MSD	Soil	06/17/20

Introduction

This Data Validation Report (DVR) presents data validation findings and results for the associated samples listed on the cover page. Data validation was performed in accordance with a modified outline of the USEPA National Functional Guidelines (NFG) for Organic Superfund Methods Data Review (January 2017). Where specific guidance was not available, the data has been evaluated in a conservative manner consistent with industry standards using professional experience.

The analyses were performed by the following method:

Total Petroleum Hydrocarbons (TPH) as Extractables by NWTPH-Dx

All sample results were subjected to Stage 2A data validation, which comprises an evaluation of quality control (QC) summary results.

The following are definitions of the data qualifiers utilized during data validation:

J (Estimated): The compound or analyte was analyzed for and positively identified by the laboratory; however the reported concentration is estimated due to non-conformances discovered during data validation.

U (Non-detected): The compound or analyte was analyzed for and positively identified by the laboratory; however the compound or analyte should be considered not detected at the reported concentration due to the presence of contaminants detected in the associated blank(s).

UJ (Non-detected estimated): The compound or analyte was reported as not detected by the laboratory; however the reported quantitation/detection limit is estimated due to non-conformances discovered during data validation.

R (Rejected): The sample results were rejected due to gross non-conformances discovered during data validation. Data qualified as rejected is not usable.

NA (Not Applicable): The non-conformance discovered during data validation demonstrates a high bias, while the affected compound or analyte in the associated sample(s) was reported as not detected by the laboratory and did not warrant the qualification of the data.

A qualification summary table is provided at the end of this report if data has been qualified. Flags are classified as P (protocol) or A (advisory) to indicate whether the flag is due to a laboratory deviation from a specified protocol or is of technical advisory nature.

I. Sample Receipt and Technical Holding Times

All samples were received in good condition and cooler temperatures upon receipt met validation criteria.

All technical holding time requirements were met.

II. Initial Calibration and Initial Calibration Verification

Initial calibration data were not reviewed for Stage 2A validation.

III. Continuing Calibration

Continuing calibration data were not reviewed for Stage 2A validation.

IV. Laboratory Blanks

Laboratory blanks were analyzed as required by the method. No contaminants were found in the laboratory blanks.

V. Field Blanks

No field blanks were identified in this SDG.

VI. Surrogates

Surrogates were added to all samples as required by the method. All surrogate recoveries (%R) were within QC limits.

VII. Matrix Spike/Matrix Spike Duplicates

Matrix spike (MS) and matrix spike duplicate (MSD) sample analysis was performed on an associated project sample. Percent recoveries (%R) were within QC limits. Relative percent differences (RPD) were within QC limits.

VIII. Laboratory Control Samples

Laboratory control samples (LCS) were analyzed as required by the method. Percent recoveries (%R) were within QC limits.

IX. Field Duplicates

Samples LP-B-01-8 and LP-503 were identified as field duplicates. No results were detected in any of the samples.

X. Compound Quantitation

Raw data were not reviewed for Stage 2A validation.

XI. Target Compound Identifications

Raw data were not reviewed for Stage 2A validation.

XII. Overall Assessment of Data

The analysis was conducted within all specifications of the method. No results were rejected in this SDG.

Kimberly-Clark Upland Area
Total Petroleum Hydrocarbons as Extractables - Data Qualification Summary - SDG 006275

No Sample Data Qualified in this SDG

Kimberly-Clark Upland Area
Total Petroleum Hydrocarbons as Extractables - Laboratory Blank Data Qualification Summary - SDG 006275

No Sample Data Qualified in this SDG

Kimberly-Clark Upland Area
Total Petroleum Hydrocarbons as Extractables - Field Blank Data Qualification Summary - SDG 006275

No Sample Data Qualified in this SDG

LDC #: 48734E8
SDG #: 006275
Laboratory: Friedman & Bruya, Inc.

VALIDATION COMPLETENESS WORKSHEET
Stage 2A

Date: 08/13/20
Page: 1 of 1
Reviewer: VP
2nd Reviewer:

METHOD: GC TPH as Extractables (NWTPH-Dx)

The samples listed below were reviewed for each of the following validation areas. Validation findings are noted in attached validation findings worksheets.

	Validation Area		Comments
I.	Sample receipt/Technical holding times	A/A	
II.	Initial calibration/ICV	N/N	
III.	Continuing calibration	N	
IV.	Laboratory Blanks	A	
V.	Field blanks	N	
VI.	Surrogate spikes	A	
VII.	Matrix spike/Matrix spike duplicates	A	(7,8)
VIII.	Laboratory control samples	A	LCS
IX.	Field duplicates	ND	D = 4+6
X.	Compound quantitation RL/LOQ/LODs	N	Dry weight basis
XI.	Target compound identification	N	
XII	Overall assessment of data	A	

Note: A = Acceptable; N = Not provided/applicable; SW = See worksheet; ND = No compounds detected; R = Rinsate; FB = Field blank; D = Duplicate; TB = Trip blank; EB = Equipment blank; SB=Source blank; OTHER:

	Client ID		Lab ID	Matrix	Date
1	LP-S-01-6.5		006275-01	Soil	06/17/20
2	LP-S-02-6.5		006275-02	Soil	06/17/20
3	LP-S-03-6.5		006275-03	Soil	06/17/20
4	LP-B-01-8	D	006275-04	Soil	06/17/20
5	LP-S-10-6.5		006275-05	Soil	06/17/20
6	LP-503	D	006275-06	Soil	06/17/20
7	LP-S-01-6.5MS		006275-01MS	Soil	06/17/20
8	LP-S-01-6.5MSD		006275-01MSD	Soil	06/17/20
9					
10					
11					
12					

Notes:

1	00-1413 MB							

Laboratory Data Consultants, Inc.
Data Validation Report

Project/Site Name: Kimberly-Clark Upland Area

LDC Report Date: August 17, 2020

Parameters: Polynuclear Aromatic Hydrocarbons

Validation Level: Stage 2A

Laboratory: Friedman & Bruya, Inc.

Sample Delivery Group (SDG): 006294

Sample Identification	Laboratory Sample Identification	Matrix	Collection Date
LP-S-09-6.5	006294-01	Soil	06/18/20
LP-B-02-8	006294-02	Soil	06/18/20
LP-S-04-6.5	006294-03	Soil	06/18/20
LP-S-08-6.5	006294-04	Soil	06/18/20
LP-S-06-6.5	006294-05	Soil	06/18/20
LP-B-03-8	006294-06	Soil	06/18/20
LP-S-05-6.5	006294-07	Soil	06/18/20
LP-S-07-6.5	006294-08	Soil	06/18/20
LP-S-09-6.5MS	006294-01MS	Soil	06/18/20
LP-S-09-6.5MSD	006294-01MSD	Soil	06/18/20

Introduction

This Data Validation Report (DVR) presents data validation findings and results for the associated samples listed on the cover page. Data validation was performed in accordance with a modified outline of the USEPA National Functional Guidelines (NFG) for Organic Superfund Methods Data Review (January 2017). Where specific guidance was not available, the data has been evaluated in a conservative manner consistent with industry standards using professional experience.

The analyses were performed by the following method:

Polynuclear Aromatic Hydrocarbons (PAHs) by Environmental Protection Agency (EPA) SW 846 Method 8270E in Selected Ion Monitoring (SIM) mode

All sample results were subjected to Stage 2A data validation, which comprises an evaluation of quality control (QC) summary results.

The following are definitions of the data qualifiers utilized during data validation:

J (Estimated): The compound or analyte was analyzed for and positively identified by the laboratory; however the reported concentration is estimated due to non-conformances discovered during data validation.

U (Non-detected): The compound or analyte was analyzed for and positively identified by the laboratory; however the compound or analyte should be considered non-detected at the reported concentration due to the presence of contaminants detected in the associated blank(s).

UJ (Non-detected estimated): The compound or analyte was reported as not detected by the laboratory; however the reported quantitation/detection limit is estimated due to non-conformances discovered during data validation.

R (Rejected): The sample results were rejected due to gross non-conformances discovered during data validation. Data qualified as rejected is not usable.

NA (Not Applicable): The non-conformance discovered during data validation demonstrates a high bias, while the affected compound or analyte in the associated sample(s) was reported as not detected by the laboratory and did not warrant the qualification of the data.

A qualification summary table is provided at the end of this report if data has been qualified. Flags are classified as P (protocol) or A (advisory) to indicate whether the flag is due to a laboratory deviation from a specified protocol or is of technical advisory nature.

I. Sample Receipt and Technical Holding Times

All samples were received in good condition and cooler temperatures upon receipt met validation criteria.

All technical holding time requirements were met.

II. GC/MS Instrument Performance Check

Instrument performance check data were not reviewed for Stage 2A validation.

III. Initial Calibration and Initial Calibration Verification

Initial calibration data were not reviewed for Stage 2A validation.

IV. Continuing Calibration

Continuing calibration data were not reviewed for Stage 2A validation.

V. Laboratory Blanks

Laboratory blanks were analyzed as required by the method. No contaminants were found in the laboratory blanks.

VI. Field Blanks

No field blanks were identified in this SDG.

VII. Surrogates

Surrogates were added to all samples as required by the method. All surrogate recoveries (%R) were within QC limits.

VIII. Matrix Spike/Matrix Spike Duplicates

Matrix spike (MS) and matrix spike duplicate (MSD) sample analysis was performed on an associated project sample. Percent recoveries (%R) were within QC limits with the following exceptions:

Spike ID (Associated Samples)	Compound	MS (%R) (Limits)	MSD (%R) (Limits)	Flag	A or P
LP-S-09-6.5MS/MSD (LP-S-09-6.5)	Indeno(1,2,3-cd)pyrene Dibenzo(a,h)anthracene	16 (23-170) 20 (31-146)	14 (23-170) 18 (31-146)	J (all detects) J (all detects)	A

Relative percent differences (RPD) were within QC limits with the following exceptions:

Spike ID (Associated Samples)	Compound	RPD (Limits)	Flag	A or P
LP-S-09-6.5MS/MSD (LP-S-09-6.5)	Benzo(a)anthracene	41 (≤20)	J (all detects)	A
	Chrysene	55 (≤20)	J (all detects)	
	Benzo(b)fluoranthene	91 (≤20)	J (all detects)	
	Benzo(k)fluoranthene	43 (≤20)	J (all detects)	
	Benzo(a)pyrene	69 (≤20)	J (all detects)	

IX. Laboratory Control Samples

Laboratory control samples (LCS) were analyzed as required by the method. Percent recoveries (%R) were within QC limits.

X. Field Duplicates

No field duplicates were identified in this SDG.

XI. Internal Standards

Internal standards data were not reviewed for Stage 2A validation.

XII. Compound Quantitation

Raw data were not reviewed for Stage 2A validation.

XIII. Target Compound Identifications

Raw data were not reviewed for Stage 2A validation.

XIV. System Performance

Raw data were not reviewed for Stage 2A validation.

XV. Overall Assessment of Data

The analysis was conducted within all specifications of the method.

Due to MS/MSD %R and RPD, data were qualified as estimated in one sample.

No results were rejected in this SDG.

Kimberly-Clark Upland Area
Polynuclear Aromatic Hydrocarbons - Data Qualification Summary - SDG 006294

Sample	Compound	Flag	A or P	Reason
LP-S-09-6.5	Indeno(1,2,3-cd)pyrene Dibenzo(a,h)anthracene	J (all detects) J (all detects)	A	Matrix spike/Matrix spike duplicate (%R)
LP-S-09-6.5	Benzo(a)anthracene Chrysene Benzo(b)fluoranthene Benzo(k)fluoranthene Benzo(a)pyrene	J (all detects) J (all detects) J (all detects) J (all detects) J (all detects)	A	Matrix spike/Matrix spike duplicate (RPD)

Kimberly-Clark Upland Area
Polynuclear Aromatic Hydrocarbons - Laboratory Blank Data Qualification Summary - SDG 006294

No Sample Data Qualified in this SDG

Kimberly-Clark Upland Area
Polynuclear Aromatic Hydrocarbons - Field Blank Data Qualification Summary - SDG 006294

No Sample Data Qualified in this SDG

LDC #: 48734F2b

SDG #: 006294

Laboratory: Friedman & Bruya, Inc.

VALIDATION COMPLETENESS WORKSHEET

Stage 2A

Date: 8/13/20

Page: 1 of 1

Reviewer: LC

2nd Reviewer:

METHOD: GC/MS Polynuclear Aromatic Hydrocarbons (EPA SW 846 Method 8270E-SIM)

The samples listed below were reviewed for each of the following validation areas. Validation findings are noted in attached validation findings worksheets.

	Validation Area		Comments
I.	Sample receipt/Technical holding times	A/A	
II.	GC/MS Instrument performance check	N	
III.	Initial calibration/ICV	N/N	
IV.	Continuing calibration	N	
V.	Laboratory Blanks	A	
VI.	Field blanks	N	
VII.	Surrogate spikes	A	
VIII.	Matrix spike/Matrix spike duplicates	SW	(9,10)
IX.	Laboratory control samples	A	LCS
X.	Field duplicates	N	
XI.	Internal standards	N	
XII.	Compound quantitation RL/LOQ/LODs	N	Dry weight basis
XIII.	Target compound identification	N	
XIV.	System performance	N	
XV.	Overall assessment of data	A	

Note: A = Acceptable; N = Not provided/applicable; SW = See worksheet; ND = No compounds detected; R = Rinsate; FB = Field blank; D = Duplicate; TB = Trip blank; EB = Equipment blank; SB=Source blank; OTHER:

	Client ID	Lab ID	Matrix	Date
1	LP-S-09-6.5	006294-01	Soil	06/18/20
2	LP-B-02-8	006294-02	Soil	06/18/20
3	LP-S-04-6.5	006294-03	Soil	06/18/20
4	LP-S-08-6.5	006294-04	Soil	06/18/20
5	LP-S-06-6.5	006294-05	Soil	06/18/20
6	LP-B-03-8	006294-06	Soil	06/18/20
7	LP-S-05-6.5	006294-07	Soil	06/18/20
8	LP-S-07-6.5	006294-08	Soil	06/18/20
9	LP-S-09-6.5MS	006294-01MS	Soil	06/18/20
10	LP-S-09-6.5MSD	006294-01MSD	Soil	06/18/20
11				

Notes:

1	00-146MB						

VALIDATION FINDINGS WORKSHEET

METHOD: GC/MS SVOA

A. Phenol	CC. Dimethylphthalate	EEE. Bis(2-ethylhexyl)phthalate	GGGG. C30-Hopane	I1. Methyl methanesulfonate
B. Bis (2-chloroethyl) ether	DD. Acenaphthylene	FFF. Di-n-octylphthalate	HHHH. 1-Methylphenanthrene	J1. Ethyl methanesulfonate
C. 2-Chlorophenol	EE. 2,6-Dinitrotoluene	GGG. Benzo(b)fluoranthene	IIII. 1,4-Dioxane	K1. o,o',o''-Triethylphosphorothioate
D. 1,3-Dichlorobenzene	FF. 3-Nitroaniline	HHH. Benzo(k)fluoranthene	JJJJ. Acetophenone	L1. n-Phenylene diamine
E. 1,4-Dichlorobenzene	GG. Acenaphthene	III. Benzo(a)pyrene	KKKK. Atrazine	M1. 1,4-Naphthoquinone
F. 1,2-Dichlorobenzene	HH. 2,4-Dinitrophenol	JJJ. Indeno(1,2,3-cd)pyrene	LLLL. Benzaldehyde	N1. N-Nitro-o-toluidine
G. 2-Methylphenol	II. 4-Nitrophenol	KKK. Dibenz(a,h)anthracene	MMMM. Caprolactam	O1. 1,3,5-Trinitrobenzene
H. 2,2'-Oxybis(1-chloropropane)	JJ. Dibenzofuran	LLL. Benzo(g,h,i)perylene	NNNN. 2,6-Dichlorophenol	P1. Pentachlorobenzene
I. 4-Methylphenol	KK. 2,4-Dinitrotoluene	MMM. Bis(2-Chloroisopropyl)ether	OOOO. 1,2-Diphenylhydrazine	Q1. 4-Aminobiphenyl
J. N-Nitroso-di-n-propylamine	LL. Diethylphthalate	NNN. Aniline	PPPP. 3-Methylphenol	R1. 2-Naphthylamine
K. Hexachloroethane	MM. 4-Chlorophenyl-phenyl ether	OOO. N-Nitrosodimethylamine	QQQQ. 3&4-Methylphenol	S1. Triphenylene
L. Nitrobenzene	NN. Fluorene	PPP. Benzoic Acid	RRRR. 4-Dimethyldibenzothiophene (4MDT)	T1. Octachlorostyrene
M. Isophorone	OO. 4-Nitroaniline	QQQ. Benzyl alcohol	SSSS. 2/3-Dimethyldibenzothiophene (4MDT)	U1. Famphur
N. 2-Nitrophenol	PP. 4,6-Dinitro-2-methylphenol	RRR. Pyridine	TTTT. 1-Methyldibenzothiophene (1MDT)	V1. 1,4-phenylenediamine
O. 2,4-Dimethylphenol	QQ. N-Nitrosodiphenylamine	SSS. Benzidine	UUUU.. 2,3,4,6-Tetrachlorophenol	W1. Methapyrilene
P. Bis(2-chloroethoxy)methane	RR. 4-Bromophenyl-phenylether	TTT. 1-Methylnaphthalene	VVVV. 1,2,4,5-Tetrachlorobenzene	X1. Pentachloroethane
Q. 2,4-Dichlorophenol	SS. Hexachlorobenzene	UUU.Benzo(b)thiophene	WWWW.. 2-Picoline	Y1. 3,3'-Dimethylbenzidine
R. 1,2,4-Trichlorobenzene	TT. Pentachlorophenol	VVV.Benzonaphthothiophene	XXXX. 3-Methylcholanthrene	Z1. o-Toluidine
S. Naphthalene	UU. Phenanthrene	WWW.Benzo(e)pyrene	YYYY. a,a-Dimethylphenethylamine	A2. 1-Naphthylamine
T. 4-Chloroaniline	VV. Anthracene	XXX. 2,6-Dimethylnaphthalene	ZZZZ. Hexachloropropene	B2. 4-Aminobiphenyl
U. Hexachlorobutadiene	WW. Carbazole	YYY. 2,3,5-Trimethylnaphthalene	A1. N-Nitrosodiethylamine	C2. 4-Nitroquinoline-1-oxide
V. 4-Chloro-3-methylphenol	XX. Di-n-butylphthalate	ZZZ. Perylene	B1. N-Nitrosodi-n-butylamine	D2. Hexachloropene
W. 2-Methylnaphthalene	YY. Fluoranthene	AAAA. Dibenzothiophene	C1. N-Nitrosomethylethylamine	E2. Bis (2-chloro-1-methylethyl) ether
X. Hexachlorocyclopentadiene	ZZ. Pyrene	BBBB. Benzo(a)fluoranthene	D1. N-Nitrosomorpholine	F2. Bifenthrin
Y. 2,4,6-Trichlorophenol	AAA. Butylbenzylphthalate	CCCC. Benzo(b)fluorene	E1. N-Nitrosopyrrolidine	G2. Cyfluthrin
Z. 2,4,5-Trichlorophenol	BBB. 3,3'-Dichlorobenzidine	DDDD. cis/trans-Decalin	F1. Phenacetin	H2. Cypermethrin
AA. 2-Chloronaphthalene	CCC. Benzo(a)anthracene	EEEE. 1,1'-Biphenyl	G1. 2-Acetylaminofluorene	I2. Permethrin (cis/trans)
BB. 2-Nitroaniline	DDD. Chrysene	FFFF. Retene	H1. Pronamide	J2. 5-Nitro-o-toluidine

LDC #: 48734F2b

VALIDATION FINDINGS WORKSHEET
Matrix Spike/Matrix Spike Duplicates

Reviewer: LT
2nd Reviewer:

METHOD: GC/MS PAHs (EPA SW 846 Method 8270E SIM)

Please see qualifications below for all questions answered "N". Not applicable questions are identified as "N/A".

Y x N__ N/A__ Were a matrix spike (MS) and matrix spike duplicate (MSD) or duplicate sample analyzed for each matrix in this SDG?

Y x N__ N/A__ Was a MS/MSD analyzed every 20 samples of each matrix?

Y__ N x N/A__ Were the MS/MSD percent recoveries (%R) and the relative percent differences (RPD) within the QC limits?

#	Date	MS/MSD ID	Compound	MS %R (Limits)	MSD %R (Limits)	RPD (Limits)	Associated Samples	Qualifications
		9/10	JJJ	16 (23 - 170)	14 (23 - 170)		1 (DET)	J/UJ/A
			KKK	20 (31 -146)	18 (31 -146)		↓	↓
			CCC			41 (≤20)	↓	J/A DETS
			DDD			55 (≤20)	↓	↓
			GGG			91 (≤20)	↓	↓
			HHH			43 (≤20)	↓	↓
			III			69 (≤20)	↓	↓

Laboratory Data Consultants, Inc.
Data Validation Report

Project/Site Name: Kimberly-Clark Upland Area

LDC Report Date: August 13, 2020

Parameters: Mercury

Validation Level: Stage 2A

Laboratory: Friedman & Bruya, Inc.

Sample Delivery Group (SDG): 006294

Sample Identification	Laboratory Sample Identification	Matrix	Collection Date
LP-S-09-6.5	006294-01	Soil	06/18/20
LP-B-02-8	006294-02	Soil	06/18/20
LP-S-04-6.5	006294-03	Soil	06/18/20
LP-S-08-6.5	006294-04	Soil	06/18/20
LP-S-06-6.5	006294-05	Soil	06/18/20
LP-B-03-8	006294-06	Soil	06/18/20
LP-S-05-6.5	006294-07	Soil	06/18/20
LP-S-07-6.5	006294-08	Soil	06/18/20

Introduction

This Data Validation Report (DVR) presents data validation findings and results for the associated samples listed on the cover page. Data validation was performed in accordance with a modified outline of the USEPA National Functional Guidelines (NFG) for Inorganic Superfund Methods Data Review (January 2017). Where specific guidance was not available, the data has been evaluated in a conservative manner consistent with industry standards using professional experience.

The analyses were performed by the following method:

Mercury by Environmental Protection Agency (EPA) Method 1631E

All sample results were subjected to Stage 2A data validation, which comprises an evaluation of quality control (QC) summary results.

The following are definitions of the data qualifiers utilized during data validation:

J (Estimated): The compound or analyte was analyzed for and positively identified by the laboratory; however the reported concentration is estimated due to non-conformances discovered during data validation.

U (Non-detected): The compound or analyte was analyzed for and positively identified by the laboratory; however the compound or analyte should be considered non-detected at the reported concentration due to the presence of contaminants detected in the associated blank(s).

UJ (Non-detected estimated): The compound or analyte was reported as not detected by the laboratory; however the reported quantitation/detection limit is estimated due to non-conformances discovered during data validation.

R (Rejected): The sample results were rejected due to gross non-conformances discovered during data validation. Data qualified as rejected is not usable.

NA (Not Applicable): The non-conformance discovered during data validation demonstrates a high bias, while the affected compound or analyte in the associated sample(s) was reported as not detected by the laboratory and did not warrant the qualification of the data.

A qualification summary table is provided at the end of this report if data has been qualified. Flags are classified as P (protocol) or A (advisory) to indicate whether the flag is due to a laboratory deviation from a specified protocol or is of technical advisory nature.

I. Sample Receipt and Technical Holding Times

All samples were received in good condition.

All technical holding time requirements were met.

II. Instrument Calibration

Instrument calibration data were not reviewed for Stage 2A validation.

III. Laboratory Blanks

Laboratory blanks were analyzed as required by the method. No contaminants were found in the laboratory blanks.

IV. Field Blanks

No field blanks were identified in this SDG.

V. Matrix Spike/Matrix Spike Duplicates

The laboratory has indicated that there were no matrix spike (MS) and matrix spike duplicate (MSD) analyses specified for the samples in this SDG, and therefore matrix spike and matrix spike duplicate analyses were not performed for this SDG.

VI. Duplicate Sample Analysis

The laboratory has indicated that there were no duplicate (DUP) analyses specified for the samples in this SDG, and therefore duplicate analyses were not performed for this SDG.

VII. Laboratory Control Samples

Laboratory control samples (LCS) were analyzed as required by the method. Percent recoveries (%R) were within QC limits.

VIII. Field Duplicates

No field duplicates were identified in this SDG.

IX. Sample Result Verification

Raw data were not reviewed for Stage 2A validation.

X. Overall Assessment of Data

The analysis was conducted within all specifications of the method. No results were rejected in this SDG.

Kimberly-Clark Upland Area
Mercury - Data Qualification Summary - SDG 006294

No Sample Data Qualified in this SDG

Kimberly-Clark Upland Area
Mercury - Laboratory Blank Data Qualification Summary - SDG 006294

No Sample Data Qualified in this SDG

Kimberly-Clark Upland Area
Mercury - Field Blank Data Qualification Summary - SDG 006294

No Sample Data Qualified in this SDG

LDC #: 48734F4c
SDG #: 006294
Laboratory: Friedman & Bruya, Inc.

VALIDATION COMPLETENESS WORKSHEET
Stage 2A

Date: 9/12/2020
Page: 1 of 1
Reviewer: DM
2nd Reviewer:

METHOD: Mercury (EPA Method 1631E)

The samples listed below were reviewed for each of the following validation areas. Validation findings are noted in attached validation findings worksheets.

	Validation Area		Comments
I.	Sample receipt/Technical holding times	A /A	
II.	Instrument Calibration	N	
III.	Laboratory Blanks	A	
IV.	Field Blanks	N	
V.	Matrix Spike/Matrix Spike Duplicates	N	
VI.	Duplicate sample analysis	N	
VII.	Laboratory control samples	A	LCS
VIII.	Field Duplicates	N	
IX.	Sample Result Verification	N	
X.	Overall Assessment of Data	A	

Note: A = Acceptable; N = Not provided/applicable; SW = See worksheet; ND = No compounds detected; R = Rinsate; FB = Field blank; D = Duplicate; TB = Trip blank; EB = Equipment blank; SB=Source blank; OTHER:

	Client ID	Lab ID	Matrix	Date
1	LP-S-09-6.5	006294-01	Soil	06/18/20
2	LP-B-02-8	006294-02	Soil	06/18/20
3	LP-S-04-6.5	006294-03	Soil	06/18/20
4	LP-S-08-6.5	006294-04	Soil	06/18/20
5	LP-S-06-6.5	006294-05	Soil	06/18/20
6	LP-B-03-8	006294-06	Soil	06/18/20
7	LP-S-05-6.5	006294-07	Soil	06/18/20
8	LP-S-07-6.5	006294-08	Soil	06/18/20
9				
10				
11				
12				
13				
14				
15				
16				
17				

Notes:

Laboratory Data Consultants, Inc.
Data Validation Report

Project/Site Name: Kimberly-Clark Upland Area

LDC Report Date: August 17, 2020

Parameters: Total Petroleum Hydrocarbons as Gasoline

Validation Level: Stage 2A

Laboratory: Friedman & Bruya, Inc.

Sample Delivery Group (SDG): 006294

Sample Identification	Laboratory Sample Identification	Matrix	Collection Date
LP-S-09-6.5	006294-01	Soil	06/18/20
LP-B-02-8	006294-02	Soil	06/18/20
LP-S-04-6.5	006294-03	Soil	06/18/20
LP-S-08-6.5	006294-04	Soil	06/18/20
LP-S-06-6.5	006294-05	Soil	06/18/20
LP-B-03-8	006294-06	Soil	06/18/20
LP-S-05-6.5	006294-07	Soil	06/18/20
LP-S-07-6.5	006294-08	Soil	06/18/20

Introduction

This Data Validation Report (DVR) presents data validation findings and results for the associated samples listed on the cover page. Data validation was performed in accordance with a modified outline of the USEPA National Functional Guidelines (NFG) for Organic Superfund Methods Data Review (January 2017). Where specific guidance was not available, the data has been evaluated in a conservative manner consistent with industry standards using professional experience.

The analyses were performed by the following method:

Total Petroleum Hydrocarbons (TPH) as Gasoline by NWTPH-Gx

All sample results were subjected to Stage 2A data validation, which comprises an evaluation of quality control (QC) summary results.

The following are definitions of the data qualifiers utilized during data validation:

J (Estimated): The compound or analyte was analyzed for and positively identified by the laboratory; however the reported concentration is estimated due to non-conformances discovered during data validation.

U (Non-detected): The compound or analyte was analyzed for and positively identified by the laboratory; however the compound or analyte should be considered not detected at the reported concentration due to the presence of contaminants detected in the associated blank(s).

UJ (Non-detected estimated): The compound or analyte was reported as not detected by the laboratory; however the reported quantitation/detection limit is estimated due to non-conformances discovered during data validation.

R (Rejected): The sample results were rejected due to gross non-conformances discovered during data validation. Data qualified as rejected is not usable.

NA (Not Applicable): The non-conformance discovered during data validation demonstrates a high bias, while the affected compound or analyte in the associated sample(s) was reported as not detected by the laboratory and did not warrant the qualification of the data.

A qualification summary table is provided at the end of this report if data has been qualified. Flags are classified as P (protocol) or A (advisory) to indicate whether the flag is due to a laboratory deviation from a specified protocol or is of technical advisory nature.

I. Sample Receipt and Technical Holding Times

All samples were received in good condition and cooler temperatures upon receipt met validation criteria.

All technical holding time requirements were met.

II. Initial Calibration and Initial Calibration Verification

Initial calibration data were not reviewed for Stage 2A validation.

III. Continuing Calibration

Continuing calibration data were not reviewed for Stage 2A validation.

IV. Laboratory Blanks

Laboratory blanks were analyzed as required by the method. No contaminants were found in the laboratory blanks.

V. Field Blanks

No field blanks were identified in this SDG.

VI. Surrogates

Surrogates were added to all samples as required by the method. All surrogate recoveries (%R) were within QC limits.

VII. Matrix Spike/Matrix Spike Duplicates

The laboratory has indicated that there were no matrix spike (MS) and matrix spike duplicate (MSD) analyses specified for the samples in this SDG, and therefore matrix spike and matrix spike duplicate analyses were not performed for this SDG.

VIII. Laboratory Control Samples

Laboratory control samples (LCS) were analyzed as required by the method. Percent recoveries (%R) were within QC limits.

IX. Field Duplicates

No field duplicates were identified in this SDG.

X. Compound Quantitation

Raw data were not reviewed for Stage 2A validation.

XI. Target Compound Identifications

Raw data were not reviewed for Stage 2A validation.

XII. Overall Assessment of Data

The analysis was conducted within all specifications of the method. No results were rejected in this SDG.

Kimberly-Clark Upland Area
Total Petroleum Hydrocarbons as Gasoline - Data Qualification Summary - SDG 006294

No Sample Data Qualified in this SDG

Kimberly-Clark Upland Area
Total Petroleum Hydrocarbons as Gasoline - Laboratory Blank Data Qualification Summary - SDG 006294

No Sample Data Qualified in this SDG

Kimberly-Clark Upland Area
Total Petroleum Hydrocarbons as Gasoline - Field Blank Data Qualification Summary - SDG 006294

No Sample Data Qualified in this SDG

LDC #: 48734F7 **VALIDATION COMPLETENESS WORKSHEET** Date: 08/04/20
SDG #: 006294 Stage 2A Page: 1 of 1
Laboratory: Friedman & Bruya, Inc. Reviewer: LT
2nd Reviewer:

METHOD: GC TPH as Gasoline (NWTPH-Gx)

The samples listed below were reviewed for each of the following validation areas. Validation findings are noted in attached validation findings worksheets.

	Validation Area		Comments
I.	Sample receipt/Technical holding times	A/A	
II.	Initial calibration/ICV	N/N	
III.	Continuing calibration	N	
IV.	Laboratory Blanks	A	
V.	Field blanks	N	
VI.	Surrogate spikes	A	
VII.	Matrix spike/Matrix spike duplicates	N	Non client LCS
VIII.	Laboratory control samples	A	
IX.	Field duplicates	N	
X.	Compound quantitation RL/LOQ/LODs	N	Dry weight basis
XI.	Target compound identification	N	
XII	Overall assessment of data	A	

Note: A = Acceptable; N = Not provided/applicable; SW = See worksheet; ND = No compounds detected; R = Rinsate; FB = Field blank; D = Duplicate; TB = Trip blank; EB = Equipment blank; SB=Source blank; OTHER:

	Client ID	Lab ID	Matrix	Date
1	LP-S-09-6.5	006294-01	Soil	06/18/20
2	LP-B-02-8	006294-02	Soil	06/18/20
3	LP-S-04-6.5	006294-03	Soil	06/18/20
4	LP-S-08-6.5	006294-04	Soil	06/18/20
5	LP-S-06-6.5	006294-05	Soil	06/18/20
6	LP-B-03-8	006294-06	Soil	06/18/20
7	LP-S-05-6.5	006294-07	Soil	06/18/20
8	LP-S-07-6.5	006294-08	Soil	06/18/20
9				
10				
11				
12				

Notes:

1	00-1312 MB2						

Laboratory Data Consultants, Inc.
Data Validation Report

Project/Site Name: Kimberly-Clark Upland Area

LDC Report Date: August 17, 2020

Parameters: Total Petroleum Hydrocarbons as Extractables

Validation Level: Stage 2A

Laboratory: Friedman & Bruya, Inc.

Sample Delivery Group (SDG): 006294

Sample Identification	Laboratory Sample Identification	Matrix	Collection Date
LP-S-09-6.5	006294-01	Soil	06/18/20
LP-B-02-8	006294-02	Soil	06/18/20
LP-S-04-6.5	006294-03	Soil	06/18/20
LP-S-08-6.5	006294-04	Soil	06/18/20
LP-S-06-6.5	006294-05	Soil	06/18/20
LP-B-03-8	006294-06	Soil	06/18/20
LP-S-05-6.5	006294-07	Soil	06/18/20
LP-S-07-6.5	006294-08	Soil	06/18/20
LP-S-09-6.5MS	006294-01MS	Soil	06/18/20
LP-S-09-6.5MSD	006294-01MSD	Soil	06/18/20

Introduction

This Data Validation Report (DVR) presents data validation findings and results for the associated samples listed on the cover page. Data validation was performed in accordance with a modified outline of the USEPA National Functional Guidelines (NFG) for Organic Superfund Methods Data Review (January 2017). Where specific guidance was not available, the data has been evaluated in a conservative manner consistent with industry standards using professional experience.

The analyses were performed by the following method:

Total Petroleum Hydrocarbons (TPH) as Extractables by NWTPH-Dx

All sample results were subjected to Stage 2A data validation, which comprises an evaluation of quality control (QC) summary results.

The following are definitions of the data qualifiers utilized during data validation:

J (Estimated): The compound or analyte was analyzed for and positively identified by the laboratory; however the reported concentration is estimated due to non-conformances discovered during data validation.

U (Non-detected): The compound or analyte was analyzed for and positively identified by the laboratory; however the compound or analyte should be considered not detected at the reported concentration due to the presence of contaminants detected in the associated blank(s).

UJ (Non-detected estimated): The compound or analyte was reported as not detected by the laboratory; however the reported quantitation/detection limit is estimated due to non-conformances discovered during data validation.

R (Rejected): The sample results were rejected due to gross non-conformances discovered during data validation. Data qualified as rejected is not usable.

NA (Not Applicable): The non-conformance discovered during data validation demonstrates a high bias, while the affected compound or analyte in the associated sample(s) was reported as not detected by the laboratory and did not warrant the qualification of the data.

A qualification summary table is provided at the end of this report if data has been qualified. Flags are classified as P (protocol) or A (advisory) to indicate whether the flag is due to a laboratory deviation from a specified protocol or is of technical advisory nature.

I. Sample Receipt and Technical Holding Times

All samples were received in good condition and cooler temperatures upon receipt met validation criteria.

All technical holding time requirements were met.

II. Initial Calibration and Initial Calibration Verification

Initial calibration data were not reviewed for Stage 2A validation.

III. Continuing Calibration

Continuing calibration data were not reviewed for Stage 2A validation.

IV. Laboratory Blanks

Laboratory blanks were analyzed as required by the method. No contaminants were found in the laboratory blanks.

V. Field Blanks

No field blanks were identified in this SDG.

VI. Surrogates

Surrogates were added to all samples as required by the method. All surrogate recoveries (%R) were within QC limits.

VII. Matrix Spike/Matrix Spike Duplicates

Matrix spike (MS) and matrix spike duplicate (MSD) sample analysis was performed on an associated project sample. Percent recoveries (%R) were within QC limits. Relative percent differences (RPD) were within QC limits.

VIII. Laboratory Control Samples

Laboratory control samples (LCS) were analyzed as required by the method. Percent recoveries (%R) were within QC limits.

IX. Field Duplicates

No field duplicates were identified in this SDG.

X. Compound Quantitation

Raw data were not reviewed for Stage 2A validation.

XI. Target Compound Identifications

Raw data were not reviewed for Stage 2A validation.

XII. Overall Assessment of Data

The analysis was conducted within all specifications of the method. No results were rejected in this SDG.

Kimberly-Clark Upland Area
Total Petroleum Hydrocarbons as Extractables - Data Qualification Summary - SDG 006294

No Sample Data Qualified in this SDG

Kimberly-Clark Upland Area
Total Petroleum Hydrocarbons as Extractables - Laboratory Blank Data Qualification Summary - SDG 006294

No Sample Data Qualified in this SDG

Kimberly-Clark Upland Area
Total Petroleum Hydrocarbons as Extractables - Field Blank Data Qualification Summary - SDG 006294

No Sample Data Qualified in this SDG

LDC #: 48734F8 **VALIDATION COMPLETENESS WORKSHEET** Date: 08/13/20
SDG #: 006294 Stage 2A Page: 1 of 1
Laboratory: Friedman & Bruya, Inc. Reviewer: LC
2nd Reviewer:

METHOD: GC TPH as Extractables (NWTPH-Dx)

The samples listed below were reviewed for each of the following validation areas. Validation findings are noted in attached validation findings worksheets.

	Validation Area		Comments
I.	Sample receipt/Technical holding times	A / A	
II.	Initial calibration/ICV	N/N	
III.	Continuing calibration	N	
IV.	Laboratory Blanks	A	
V.	Field blanks	N	
VI.	Surrogate spikes	A	
VII.	Matrix spike/Matrix spike duplicates	A	(9,10)
VIII.	Laboratory control samples	A	LCS
IX.	Field duplicates	N	
X.	Compound quantitation RL/LOQ/LODs	N	Dry weight basis
XI.	Target compound identification	N	
XII.	Overall assessment of data	A	

Note: A = Acceptable
N = Not provided/applicable
SW = See worksheet
ND = No compounds detected
R = Rinsate
FB = Field blank
D = Duplicate
TB = Trip blank
EB = Equipment blank
SB=Source blank
OTHER:

	Client ID	Lab ID	Matrix	Date
1	LP-S-09-6.5	006294-01	Soil	06/18/20
2	LP-B-02-8	006294-02	Soil	06/18/20
3	LP-S-04-6.5	006294-03	Soil	06/18/20
4	LP-S-08-6.5	006294-04	Soil	06/18/20
5	LP-S-06-6.5	006294-05	Soil	06/18/20
6	LP-B-03-8	006294-06	Soil	06/18/20
7	LP-S-05-6.5	006294-07	Soil	06/18/20
8	LP-S-07-6.5	006294-08	Soil	06/18/20
9	LP-S-09-6.5MS	006294-01MS	Soil	06/18/20
10	LP-S-09-6.5MSD	006294-01MSD	Soil	06/18/20
11				
12				

Notes:

Laboratory Data Consultants, Inc.
Data Validation Report

Project/Site Name: Kimberly-Clark Upland Area

LDC Report Date: August 13, 2020

Parameters: Metals

Validation Level: Stage 2A

Laboratory: Friedman & Bruya, Inc.

Sample Delivery Group (SDG): 006358

Sample Identification	Laboratory Sample Identification	Matrix	Collection Date
PB-B-6-S-09-6-062220	006358-01	Soil	06/22/20
PB-B-6-S-09-4-062220	006358-02	Soil	06/22/20
PB-B-6-S-10-6-062220	006358-03	Soil	06/22/20
PB-B-6-S-10-4-062220	006358-04	Soil	06/22/20
PB-B-6-S-11-6-062220	006358-05	Soil	06/22/20
PB-B-6-S-11-9-062220	006358-06	Soil	06/22/20
PB-B-6-S-15-6-062220	006358-07	Soil	06/22/20
PB-B-6-B-02-11-062220	006358-08	Soil	06/22/20
PB-B-6-B-03-11-062220	006358-09	Soil	06/22/20
PB-B-6-S-12-6-062220	006358-10	Soil	06/22/20
PB-B-6-S-12-9-062220	006358-11	Soil	06/22/20
PB-B-6-S-13-6-062220	006358-12	Soil	06/22/20
PB-B-6-S-13-9-062220	006358-13	Soil	06/22/20
PB-B-6-S-14-6-062220	006358-14	Soil	06/22/20
PB-B-6-S03-062220	006358-15	Soil	06/22/20
PB-B-6-S-14-9-062220	006358-16	Soil	06/22/20
PB-B-6-S-09-9-062220MS	006358-01MS	Soil	06/22/20
PB-B-6-S-09-9-062220MSD	006358-01MSD	Soil	06/22/20

Introduction

This Data Validation Report (DVR) presents data validation findings and results for the associated samples listed on the cover page. Data validation was performed in accordance with a modified outline of the USEPA National Functional Guidelines (NFG) for Inorganic Superfund Methods Data Review (January 2017). Where specific guidance was not available, the data has been evaluated in a conservative manner consistent with industry standards using professional experience.

The analyses were performed by the following methods:

Copper by Environmental Protection Agency (EPA) SW 846 Method 6020B
Mercury by EPA Method 1631E

All sample results were subjected to Stage 2A data validation, which comprises an evaluation of quality control (QC) summary results.

The following are definitions of the data qualifiers utilized during data validation:

J (Estimated): The compound or analyte was analyzed for and positively identified by the laboratory; however the reported concentration is estimated due to non-conformances discovered during data validation.

U (Non-detected): The compound or analyte was analyzed for and positively identified by the laboratory; however the compound or analyte should be considered non-detected at the reported concentration due to the presence of contaminants detected in the associated blank(s).

UJ (Non-detected estimated): The compound or analyte was reported as not detected by the laboratory; however the reported quantitation/detection limit is estimated due to non-conformances discovered during data validation.

R (Rejected): The sample results were rejected due to gross non-conformances discovered during data validation. Data qualified as rejected is not usable.

NA (Not Applicable): The non-conformance discovered during data validation demonstrates a high bias, while the affected compound or analyte in the associated sample(s) was reported as not detected by the laboratory and did not warrant the qualification of the data.

A qualification summary table is provided at the end of this report if data has been qualified. Flags are classified as P (protocol) or A (advisory) to indicate whether the flag is due to a laboratory deviation from a specified protocol or is of technical advisory nature.

I. Sample Receipt and Technical Holding Times

All samples were received in good condition.

All technical holding time requirements were met.

II. ICPMS Tune

ICP-MS tune data were not reviewed for Stage 2A validation.

III. Instrument Calibration

Instrument calibration data were not reviewed for Stage 2A validation.

IV. ICP Interference Check Sample Analysis

ICP Interference check sample (ICS) analysis data were not reviewed for Stage 2A validation.

V. Laboratory Blanks

Laboratory blanks were analyzed as required by the methods. No contaminants were found in the laboratory blanks.

VI. Field Blanks

No field blanks were identified in this SDG.

VII. Matrix Spike/Matrix Spike Duplicates

Matrix spike (MS) and matrix spike duplicate (MSD) sample analysis was performed on an associated project sample. Percent recoveries (%R) were within QC limits.

Relative percent differences (RPD) were within QC limits with the following exceptions:

Spike ID (Associated Samples)	Analyte	RPD (Limits)	Flag	A or P
PB-B-6-S-09-9-062220MS/MSD (All samples in SDG 006358)	Mercury	36 (≤20)	J (all detects) UJ (all non-detects)	A

VIII. Duplicate Sample Analysis

The laboratory has indicated that there were no duplicate (DUP) analyses specified for the samples in this SDG, and therefore duplicate analyses were not performed for this SDG.

IX. Serial Dilution

Serial dilution was not performed for this SDG.

X. Laboratory Control Samples

Laboratory control samples (LCS) were analyzed as required by the methods. Percent recoveries (%R) were within QC limits.

XI. Field Duplicates

Samples PB-B-6-S-14-6-062220 and PB-B-6-S03-062220 were identified as field duplicates. No results were detected in any of the samples with the following exceptions:

Analyte	Concentration (mg/Kg)		RPD
	PB-B-6-S-14-6-062220	PB-B-6-S03-062220	
Copper	31.7	42.7	30
Mercury	3.1	7.2	80

XII. Internal Standards (ICP-MS)

Internal standards data were not reviewed for Stage 2A validation.

XIII. Sample Result Verification

Raw data were not reviewed for Stage 2A validation.

XIV. Overall Assessment of Data

The analysis was conducted within all specifications of the methods.

Due to MS/MSD RPD, data were qualified as estimated in sixteen samples.

No results were rejected in this SDG.

Kimberly-Clark Upland Area
Metals - Data Qualification Summary - SDG 006358

Sample	Analyte	Flag	A or P	Reason
PB-B-6-S-09-6-062220 PB-B-6-S-09-4-062220 PB-B-6-S-10-6-062220 PB-B-6-S-10-4-062220 PB-B-6-S-11-6-062220 PB-B-6-S-11-9-062220 PB-B-6-S-15-6-062220 PB-B-6-B-02-11-062220 PB-B-6-B-03-11-062220 PB-B-6-S-12-6-062220 PB-B-6-S-12-9-062220 PB-B-6-S-13-6-062220 PB-B-6-S-13-9-062220 PB-B-6-S-14-6-062220 PB-B-6-S03-062220 PB-B-6-S-14-9-062220	Mercury	J (all detects) UJ (all non-detects)	A	Matrix spike/Matrix spike duplicate (RPD)

Kimberly-Clark Upland Area
Metals - Laboratory Blank Data Qualification Summary - SDG 006358

No Sample Data Qualified in this SDG

Kimberly-Clark Upland Area
Metals - Field Blank Data Qualification Summary - SDG 006358

No Sample Data Qualified in this SDG

LDC #: 48734G4a
SDG #: 006358
Laboratory: Friedman & Bruya, Inc.

VALIDATION COMPLETENESS WORKSHEET
Stage 2A

Date: 8/12/2020
Page: 1 of 2
Reviewer: DM
2nd Reviewer:

METHOD: Cr, Hg (EPA SW 846 Method 6020B/EPA Method 1631E)

The samples listed below were reviewed for each of the following validation areas. Validation findings are noted in attached validation findings worksheets.

	Validation Area		Comments
I.	Sample receipt/Technical holding times	A/A	
II.	ICP/MS Tune	N	
III.	Instrument Calibration	N	
IV.	ICP Interference Check Sample (ICS) Analysis	N	
V.	Laboratory Blanks	A	
VI.	Field Blanks	N	
VII.	Matrix Spike/Matrix Spike Duplicates	SW N	
VIII.	Duplicate sample analysis	N	
IX.	Serial Dilution	N	
X.	Laboratory control samples	A	LCS
XI.	Field Duplicates	NSW	(14,15)
XII.	Internal Standard (ICP-MS)	N	
XIII.	Sample Result Verification	N	
XIV	Overall Assessment of Data	A	

Note: A = Acceptable; N = Not provided/applicable; SW = See worksheet; ND = No compounds detected; R = Rinsate; FB = Field blank; D = Duplicate; TB = Trip blank; EB = Equipment blank; SB=Source blank; OTHER:

	Client ID	Lab ID	Matrix	Date
1	PB-B-6-S-09-6-062220	006358-01	Soil	06/22/20
2	PB-B-6-S-09-4-062220	006358-02	Soil	06/22/20
3	PB-B-6-S-10-6-062220	006358-03	Soil	06/22/20
4	PB-B-6-S-10-4-062220	006358-04	Soil	06/22/20
5	PB-B-6-S-11-6-062220	006358-05	Soil	06/22/20
6	PB-B-6-S-11-9-062220	006358-06	Soil	06/22/20
7	PB-B-6-S-15-6-062220	006358-07	Soil	06/22/20
8	PB-B-6-B-02-11-062220	006358-08	Soil	06/22/20
9	PB-B-6-B-03-11-062220	006358-09	Soil	06/22/20
10	PB-B-6-S-12-6-062220	006358-10	Soil	06/22/20
11	PB-B-6-S-12-9-062220	006358-11	Soil	06/22/20
12	PB-B-6-S-13-6-062220	006358-12	Soil	06/22/20
13	PB-B-6-S-13-9-062220	006358-13	Soil	06/22/20
14	PB-B-6-S-14-6-062220	006358-14	Soil	06/22/20
15	PB-B-6-S03-062220	006358-15	Soil	06/22/20

LDC #: 48734G4a

SDG #: 006358

Laboratory: Friedman & Bruya, Inc.

VALIDATION COMPLETENESS WORKSHEET

Stage 2A

Date: 8/12/2020

Page: 1 of 1

Reviewer: DTM

2nd Reviewer:

METHOD: Cr, Hg (EPA SW 846 Method 6020B/EPA Method 1631E)

	Client ID	Lab ID	Matrix	Date
16	PB-B-6-S-14-9-062220	006358-16	Soil	06/22/20
17	PB-B-6-S-09-9-062220MS	006358-01MS	Soil	06/22/20
18	PB-B-6-S-09-9-062220MSD	006358-01MSD	Soil	06/22/20
19				
20				
21				

Notes:

LDC #: 48734G4G

VALIDATION FINDINGS WORKSHEET
Sample Specific Element Reference

Reviewer: DTM
2nd reviewer:

All circled elements are applicable to each sample.

Sample ID	Matrix	Target Analyte List (TAL)
1-116	S	Al, Sb, As, Ba, Be, B, Cd, Ca, Cr, Co, (Cu), Fe, Pb, Li, Mg, Mo, Mn, (Hg), Ni, K, Se, Ag, Na, Sr, Tl, Sn, Ti, W, U, V, Zn
		Al, Sb, As, Ba, Be, B, Cd, Ca, Cr, Co, Cu, Fe, Pb, Li, Mg, Mo, Mn, Hg, Ni, K, Se, Ag, Na, Sr, Tl, Sn, Ti, W, U, V, Zn
OCT-1B	S	Al, Sb, As, Ba, Be, B, Cd, Ca, Cr, Co, (Cu), Fe, Pb, Li, Mg, Mo, Mn, (Hg), Ni, K, Se, Ag, Na, Sr, Tl, Sn, Ti, W, U, V, Zn
		Al, Sb, As, Ba, Be, B, Cd, Ca, Cr, Co, Cu, Fe, Pb, Li, Mg, Mo, Mn, Hg, Ni, K, Se, Ag, Na, Sr, Tl, Sn, Ti, W, U, V, Zn
		Al, Sb, As, Ba, Be, B, Cd, Ca, Cr, Co, Cu, Fe, Pb, Li, Mg, Mo, Mn, Hg, Ni, K, Se, Ag, Na, Sr, Tl, Sn, Ti, W, U, V, Zn
		Al, Sb, As, Ba, Be, B, Cd, Ca, Cr, Co, Cu, Fe, Pb, Li, Mg, Mo, Mn, Hg, Ni, K, Se, Ag, Na, Sr, Tl, Sn, Ti, W, U, V, Zn
		Al, Sb, As, Ba, Be, B, Cd, Ca, Cr, Co, Cu, Fe, Pb, Li, Mg, Mo, Mn, Hg, Ni, K, Se, Ag, Na, Sr, Tl, Sn, Ti, W, U, V, Zn
		Al, Sb, As, Ba, Be, B, Cd, Ca, Cr, Co, Cu, Fe, Pb, Li, Mg, Mo, Mn, Hg, Ni, K, Se, Ag, Na, Sr, Tl, Sn, Ti, W, U, V, Zn
		Al, Sb, As, Ba, Be, B, Cd, Ca, Cr, Co, Cu, Fe, Pb, Li, Mg, Mo, Mn, Hg, Ni, K, Se, Ag, Na, Sr, Tl, Sn, Ti, W, U, V, Zn
		Al, Sb, As, Ba, Be, B, Cd, Ca, Cr, Co, Cu, Fe, Pb, Li, Mg, Mo, Mn, Hg, Ni, K, Se, Ag, Na, Sr, Tl, Sn, Ti, W, U, V, Zn
		Al, Sb, As, Ba, Be, B, Cd, Ca, Cr, Co, Cu, Fe, Pb, Li, Mg, Mo, Mn, Hg, Ni, K, Se, Ag, Na, Sr, Tl, Sn, Ti, W, U, V, Zn
		Al, Sb, As, Ba, Be, B, Cd, Ca, Cr, Co, Cu, Fe, Pb, Li, Mg, Mo, Mn, Hg, Ni, K, Se, Ag, Na, Sr, Tl, Sn, Ti, W, U, V, Zn
		Al, Sb, As, Ba, Be, B, Cd, Ca, Cr, Co, Cu, Fe, Pb, Li, Mg, Mo, Mn, Hg, Ni, K, Se, Ag, Na, Sr, Tl, Sn, Ti, W, U, V, Zn
		Al, Sb, As, Ba, Be, B, Cd, Ca, Cr, Co, Cu, Fe, Pb, Li, Mg, Mo, Mn, Hg, Ni, K, Se, Ag, Na, Sr, Tl, Sn, Ti, W, U, V, Zn
		Al, Sb, As, Ba, Be, B, Cd, Ca, Cr, Co, Cu, Fe, Pb, Li, Mg, Mo, Mn, Hg, Ni, K, Se, Ag, Na, Sr, Tl, Sn, Ti, W, U, V, Zn
		Al, Sb, As, Ba, Be, B, Cd, Ca, Cr, Co, Cu, Fe, Pb, Li, Mg, Mo, Mn, Hg, Ni, K, Se, Ag, Na, Sr, Tl, Sn, Ti, W, U, V, Zn
		Al, Sb, As, Ba, Be, B, Cd, Ca, Cr, Co, Cu, Fe, Pb, Li, Mg, Mo, Mn, Hg, Ni, K, Se, Ag, Na, Sr, Tl, Sn, Ti, W, U, V, Zn
		Al, Sb, As, Ba, Be, B, Cd, Ca, Cr, Co, Cu, Fe, Pb, Li, Mg, Mo, Mn, Hg, Ni, K, Se, Ag, Na, Sr, Tl, Sn, Ti, W, U, V, Zn
		Al, Sb, As, Ba, Be, B, Cd, Ca, Cr, Co, Cu, Fe, Pb, Li, Mg, Mo, Mn, Hg, Ni, K, Se, Ag, Na, Sr, Tl, Sn, Ti, W, U, V, Zn
		Al, Sb, As, Ba, Be, B, Cd, Ca, Cr, Co, Cu, Fe, Pb, Li, Mg, Mo, Mn, Hg, Ni, K, Se, Ag, Na, Sr, Tl, Sn, Ti, W, U, V, Zn
Analysis Method		
ICP		Al, Sb, As, Ba, Be, B, Cd, Ca, Cr, Co, Cu, Fe, Pb, Li, Mg, Mo, Mn, Hg, Ni, K, Se, Ag, Na, Sr, Tl, Sn, Ti, W, U, V, Zn
ICP-MS		Al, Sb, As, Ba, Be, B, Cd, Ca, Cr, Co, Cu, Fe, Pb, Li, Mg, Mo, Mn, Hg, Ni, K, Se, Ag, Na, Sr, Tl, Sn, Ti, W, U, V, Zn
GFAA		Al, Sb, As, Ba, Be, B, Cd, Ca, Cr, Co, Cu, Fe, Pb, Li, Mg, Mo, Mn, Hg, Ni, K, Se, Ag, Na, Sr, Tl, Sn, Ti, W, U, V, Zn

Comments: Mercury by CVAA if performed

LDC #: 48734G4a

VALIDATION FINDINGS WORKSHEET
Matrix Spike/Matrix Spike Duplicates

Reviewer: DTM
2nd Reviewer:

METHOD: Trace metals (EPA SW 846 Method 6020/6010/7470)

Please see qualifications below for all questions answered "N". Not applicable questions are identified as "N/A".

Y N N/A Was a matrix spike analyzed for each matrix in this SDG?

Y N N/A Were matrix spike percent recoveries (%R) within the control limits of 75-125? If the sample concentration exceeded the spike concentration by a factor of 4 or more, no action was taken.

Y N N/A Were all duplicate sample relative percent differences (RPD) ≤ 20% for samples?

LEVEL IV ONLY:

Y N N/A Were recalculated results acceptable? See Level IV Recalculation Worksheet for recalculations.

#	MS/MSD ID	Matrix	Analyte	MS %Recovery	MSD %Recovery	RPD (Limits)	Associated Samples	Qualifications
	17/18	S	Hg			36	ALL	J/UJ/A (det)

Comments:

LDC#: 48734G4a

VALIDATION FINDINGS WORKSHEET

Field Duplicates

Reviewer: DTM

2nd Reviewer:

METHOD: Metals (EPA Method 6010/6020/7000)

Analyte	Concentration (mg/Kg)		RPD
	14	26	
Copper	31.7	42.7	30
Mercury	3.1	7.2	80

V:\Darionna\FIELD DUPLICATES\Field Duplicates\FD_inorganic\2020\48734G4a.wpd

Laboratory Data Consultants, Inc.
Data Validation Report

Project/Site Name: Kimberly-Clark Upland Area

LDC Report Date: August 17, 2020

Parameters: Polynuclear Aromatic Hydrocarbons

Validation Level: Stage 2A

Laboratory: Friedman & Bruya, Inc.

Sample Delivery Group (SDG): 006387

Sample Identification	Laboratory Sample Identification	Matrix	Collection Date
LP-S-17-6.5-062320	006387-02	Soil	06/23/20
LP-B-03-9-062320	006387-03	Soil	06/23/20
LP-S-11-6.5-062320	006387-04	Soil	06/23/20
LP-S-12-6.5-062320	006387-05	Soil	06/23/20
LP-S-13-6.5-062320	006387-06	Soil	06/23/20
LP-S-14-6.5-062320	006387-07	Soil	06/23/20
LP-S-15-6.5-062320	006387-08	Soil	06/23/20
CNW-OB-01-062320	006387-09	Soil	06/23/20
CNW-OB-02-062320	006387-10	Soil	06/23/20
CNW-OB-03-062320	006387-11	Soil	06/23/20
CNW-B-01-6-062320	006387-12	Soil	06/23/20
CNW-B-02-6-062320	006387-13	Soil	06/23/20
CNW-B-03-6-062320	006387-14	Soil	06/23/20
CNW-S-01-5-062320	006387-15	Soil	06/23/20
CNW-S-02-5-062320	006387-16	Soil	06/23/20
CNW-S-03-5-062320	006387-17	Soil	06/23/20
CNW-S-04-5-062320	006387-18	Soil	06/23/20
CNW-S04-062320	006387-19	Soil	06/23/20
CNW-S-05-5-062320	006387-20	Soil	06/23/20
CNW-S-06-5-062320	006387-21	Soil	06/23/20
CNW-S-07-5-062320	006387-22	Soil	06/23/20
CNW-S-08-5-062320	006387-23	Soil	06/23/20
CNW-S-01-5-062320MS	006387-15MS	Soil	06/23/20
CNW-S-01-5-062320MSD	006387-15MSD	Soil	06/23/20

Introduction

This Data Validation Report (DVR) presents data validation findings and results for the associated samples listed on the cover page. Data validation was performed in accordance with a modified outline of the USEPA National Functional Guidelines (NFG) for Organic Superfund Methods Data Review (January 2017). Where specific guidance was not available, the data has been evaluated in a conservative manner consistent with industry standards using professional experience.

The analyses were performed by the following method:

Polynuclear Aromatic Hydrocarbons (PAHs) by Environmental Protection Agency (EPA) SW 846 Method 8270E in Selected Ion Monitoring (SIM) mode

All sample results were subjected to Stage 2A data validation, which comprises an evaluation of quality control (QC) summary results.

The following are definitions of the data qualifiers utilized during data validation:

J (Estimated): The compound or analyte was analyzed for and positively identified by the laboratory; however the reported concentration is estimated due to non-conformances discovered during data validation.

U (Non-detected): The compound or analyte was analyzed for and positively identified by the laboratory; however the compound or analyte should be considered non-detected at the reported concentration due to the presence of contaminants detected in the associated blank(s).

UJ (Non-detected estimated): The compound or analyte was reported as not detected by the laboratory; however the reported quantitation/detection limit is estimated due to non-conformances discovered during data validation.

R (Rejected): The sample results were rejected due to gross non-conformances discovered during data validation. Data qualified as rejected is not usable.

NA (Not Applicable): The non-conformance discovered during data validation demonstrates a high bias, while the affected compound or analyte in the associated sample(s) was reported as not detected by the laboratory and did not warrant the qualification of the data.

A qualification summary table is provided at the end of this report if data has been qualified. Flags are classified as P (protocol) or A (advisory) to indicate whether the flag is due to a laboratory deviation from a specified protocol or is of technical advisory nature.

I. Sample Receipt and Technical Holding Times

All samples were received in good condition and cooler temperatures upon receipt met validation criteria.

All technical holding time requirements were met.

II. GC/MS Instrument Performance Check

Instrument performance check data were not reviewed for Stage 2A validation.

III. Initial Calibration and Initial Calibration Verification

Initial calibration data were not reviewed for Stage 2A validation.

IV. Continuing Calibration

Continuing calibration data were not reviewed for Stage 2A validation.

V. Laboratory Blanks

Laboratory blanks were analyzed as required by the method. No contaminants were found in the laboratory blanks.

VI. Field Blanks

No field blanks were identified in this SDG.

VII. Surrogates

Surrogates were added to all samples as required by the method. All surrogate recoveries (%R) were within QC limits.

VIII. Matrix Spike/Matrix Spike Duplicates

Matrix spike (MS) and matrix spike duplicate (MSD) sample analysis was performed on an associated project sample. Percent recoveries (%R) were within QC limits. Relative percent differences (RPD) were within QC limits.

IX. Laboratory Control Samples

Laboratory control samples (LCS) were analyzed as required by the method. Percent recoveries (%R) were within QC limits.

X. Field Duplicates

Samples CNW-S-03-5-062320 and CNW-S04-062320 were identified as field duplicates. No results were detected in any of the samples with the following exceptions:

Compound	Concentration (mg/Kg)		RPD
	CNW-S-03-5-062320	CNW-S04-062320	
Phenanthrene	0.01U	0.019	Not calculable
Fluoranthene	0.01U	0.022	Not calculable
Pyrene	0.01U	0.025	Not calculable
Benzo(a)anthracene	0.01U	0.016	Not calculable
Chrysene	0.01U	0.014	Not calculable
Benzo(a)pyrene	0.01U	0.013	Not calculable
Benzo(b)fluoranthene	0.01U	0.014	Not calculable

XI. Internal Standards

Internal standards data were not reviewed for Stage 2A validation.

XII. Compound Quantitation

Raw data were not reviewed for Stage 2A validation.

XIII. Target Compound Identifications

Raw data were not reviewed for Stage 2A validation.

XIV. System Performance

Raw data were not reviewed for Stage 2A validation.

XV. Overall Assessment of Data

The analysis was conducted within all specifications of the method. No results were rejected in this SDG.

Kimberly-Clark Upland Area
Polynuclear Aromatic Hydrocarbons - Data Qualification Summary - SDG 006387

No Sample Data Qualified in this SDG

Kimberly-Clark Upland Area
Polynuclear Aromatic Hydrocarbons - Laboratory Blank Data Qualification Summary - SDG 006387

No Sample Data Qualified in this SDG

Kimberly-Clark Upland Area
Polynuclear Aromatic Hydrocarbons - Field Blank Data Qualification Summary - SDG 006387

No Sample Data Qualified in this SDG

LDC #: 48734H2b **VALIDATION COMPLETENESS WORKSHEET** Date: 08/13/20
SDG #: 006387 Stage 2A Page: 1 of 2
Laboratory: Friedman & Bruya, Inc. Reviewer: VT
2nd Reviewer:

METHOD: GC/MS Polynuclear Aromatic Hydrocarbons (EPA SW 846 Method 8270E-SIM)

The samples listed below were reviewed for each of the following validation areas. Validation findings are noted in attached validation findings worksheets.

	Validation Area		Comments
I.	Sample receipt/Technical holding times	A, A	
II.	GC/MS Instrument performance check	N	
III.	Initial calibration/ICV	N/N	
IV.	Continuing calibration	N	
V.	Laboratory Blanks	A	
VI.	Field blanks	N	
VII.	Surrogate spikes	A	
VIII.	Matrix spike/Matrix spike duplicates	A	(23,24)
IX.	Laboratory control samples	A	LCS
X.	Field duplicates	SW	D = 16+18
XI.	Internal standards	N	
XII.	Compound quantitation RL/LOQ/LODs	N	Dry weight basis
XIII.	Target compound identification	N	
XIV.	System performance	N	
XV.	Overall assessment of data	A	

Note: A = Acceptable; N = Not provided/applicable; SW = See worksheet; ND = No compounds detected; R = Rinsate; FB = Field blank; D = Duplicate; TB = Trip blank; EB = Equipment blank; SB=Source blank; OTHER:

	Client ID	Lab ID	Matrix	Date
1	LP-S-17-6.5-062320	006387-02	Soil	06/23/20
2	LP-B-03-9-062320	006387-03	Soil	06/23/20
3	LP-S-11-6.5-062320	006387-04	Soil	06/23/20
4	LP-S-12-6.5-062320	006387-05	Soil	06/23/20
5	LP-S-13-6.5-062320	006387-06	Soil	06/23/20
6	LP-S-14-6.5-062320	006387-07	Soil	06/23/20
7	LP-S-15-6.5-062320	006387-08	Soil	06/23/20
8	CNW-OB-01-062320	006387-09	Soil	06/23/20
9	CNW-OB-02-062320	006387-10	Soil	06/23/20
10	CNW-OB-03-062320	006387-11	Soil	06/23/20
11	CNW-B-01-6-062320	006387-12	Soil	06/23/20
12	CNW-B-02-6-062320	006387-13	Soil	06/23/20
13	CNW-B-03-6-062320	006387-14	Soil	06/23/20
14	CNW-S-01-5-062320	006387-15	Soil	06/23/20

LDC #: 48734H2b **VALIDATION COMPLETENESS WORKSHEET** Date: 8/6/20
SDG #: 006387 Stage 2A Page: 2 of 2
Laboratory: Friedman & Bruya, Inc. Reviewer: LM
2nd Reviewer:

METHOD: GC/MS Polynuclear Aromatic Hydrocarbons (EPA SW 846 Method 8270E-SIM)

	Client ID		Lab ID	Matrix	Date
15	CNW-S-02-5-062320		006387-16	Soil	06/23/20
16	CNW-S-03-5-062320	D	006387-17	Soil	06/23/20
17	CNW-S-04-5-062320		006387-18	Soil	06/23/20
18	CNW-S04-062320	D	006387-19	Soil	06/23/20
19	CNW-S-05-5-062320		006387-20	Soil	06/23/20
20	CNW-S-06-5-062320		006387-21	Soil	06/23/20
21	CNW-S-07-5-062320		006387-22	Soil	06/23/20
22	CNW-S-08-5-062320		006387-23	Soil	06/23/20
23	CNW-S-01-5-062320MS		006387-15MS	Soil	06/23/20
24	CNW-S-01-5-062320MSD		006387-15MSD	Soil	06/23/20
25					
26					
27					

Notes:

1	~~M: 00-1455-MB2/5~~							
1 2	00-1455-MB2/5							
2	00-1468-MB1/5							
3	00-1462-MB 1/5							

VALIDATION FINDINGS WORKSHEET

METHOD: GC/MS SVOA

A. Phenol	CC. Dimethylphthalate	EEE. Bis(2-ethylhexyl)phthalate	GGGG. C30-Hopane	I1. Methyl methanesulfonate
B. Bis (2-chloroethyl) ether	DD. Acenaphthylene	FFF. Di-n-octylphthalate	HHHH. 1-Methylphenanthrene	J1. Ethyl methanesulfonate
C. 2-Chlorophenol	EE. 2,6-Dinitrotoluene	GGG. Benzo(b)fluoranthene	IIII. 1,4-Dioxane	K1. o,o',o''-Triethylphosphorothioate
D. 1,3-Dichlorobenzene	FF. 3-Nitroaniline	HHH. Benzo(k)fluoranthene	JJJJ. Acetophenone	L1. n-Phenylene diamine
E. 1,4-Dichlorobenzene	GG. Acenaphthene	III. Benzo(a)pyrene	KKKK. Atrazine	M1. 1,4-Naphthoquinone
F. 1,2-Dichlorobenzene	HH. 2,4-Dinitrophenol	JJJ. Indeno(1,2,3-cd)pyrene	LLLL. Benzaldehyde	N1. N-Nitro-o-toluidine
G. 2-Methylphenol	II. 4-Nitrophenol	KKK. Dibenz(a,h)anthracene	MMMM. Caprolactam	O1. 1,3,5-Trinitrobenzene
H. 2,2'-Oxybis(1-chloropropane)	JJ. Dibenzofuran	LLL. Benzo(g,h,i)perylene	NNNN. 2,6-Dichlorophenol	P1. Pentachlorobenzene
I. 4-Methylphenol	KK. 2,4-Dinitrotoluene	MMM. Bis(2-Chloroisopropyl)ether	OOOO. 1,2-Diphenylhydrazine	Q1. 4-Aminobiphenyl
J. N-Nitroso-di-n-propylamine	LL. Diethylphthalate	NNN. Aniline	PPPP. 3-Methylphenol	R1. 2-Naphthylamine
K. Hexachloroethane	MM. 4-Chlorophenyl-phenyl ether	OOO. N-Nitrosodimethylamine	QQQQ. 3&4-Methylphenol	S1. Triphenylene
L. Nitrobenzene	NN. Fluorene	PPP. Benzoic Acid	RRRR. 4-Dimethyldibenzothiophene (4MDT)	T1. Octachlorostyrene
M. Isophorone	OO. 4-Nitroaniline	QQQ. Benzyl alcohol	SSSS. 2/3-Dimethyldibenzothiophene (4MDT)	U1. Famphur
N. 2-Nitrophenol	PP. 4,6-Dinitro-2-methylphenol	RRR. Pyridine	TTTT. 1-Methyldibenzothiophene (1MDT)	V1. 1,4-phenylenediamine
O. 2,4-Dimethylphenol	QQ. N-Nitrosodiphenylamine	SSS. Benzidine	UUUU.. 2,3,4,6-Tetrachlorophenol	W1. Methapyrilene
P. Bis(2-chloroethoxy)methane	RR. 4-Bromophenyl-phenylether	TTT. 1-Methylnaphthalene	VVVV. 1,2,4,5-Tetrachlorobenzene	X1. Pentachloroethane
Q. 2,4-Dichlorophenol	SS. Hexachlorobenzene	UUU.Benzo(b)thiophene	WWWW.. 2-Picoline	Y1. 3,3'-Dimethylbenzidine
R. 1,2,4-Trichlorobenzene	TT. Pentachlorophenol	VVV.Benzonaphthothiophene	XXXX. 3-Methylcholanthrene	Z1. o-Toluidine
S. Naphthalene	UU. Phenanthrene	WWW.Benzo(e)pyrene	YYYY. a,a-Dimethylphenethylamine	A2. 1-Naphthylamine
T. 4-Chloroaniline	VV. Anthracene	XXX. 2,6-Dimethylnaphthalene	ZZZZ. Hexachloropropene	B2. 4-Aminobiphenyl
U. Hexachlorobutadiene	WW. Carbazole	YYY. 2,3,5-Trimethylnaphthalene	A1. N-Nitrosodiethylamine	C2. 4-Nitroquinoline-1-oxide
V. 4-Chloro-3-methylphenol	XX. Di-n-butylphthalate	ZZZ. Perylene	B1. N-Nitrosodi-n-butylamine	D2. Hexachloropene
W. 2-Methylnaphthalene	YY. Fluoranthene	AAAA. Dibenzothiophene	C1. N-Nitrosomethylethylamine	E2. Bis (2-chloro-1-methylethyl) ether
X. Hexachlorocyclopentadiene	ZZ. Pyrene	BBBB. Benzo(a)fluoranthene	D1. N-Nitrosomorpholine	F2. Bifenthrin
Y. 2,4,6-Trichlorophenol	AAA. Butylbenzylphthalate	CCCC. Benzo(b)fluorene	E1. N-Nitrosopyrrolidine	G2. Cyfluthrin
Z. 2,4,5-Trichlorophenol	BBB. 3,3'-Dichlorobenzidine	DDDD. cis/trans-Decalin	F1. Phenacetin	H2. Cypermethrin
AA. 2-Chloronaphthalene	CCC. Benzo(a)anthracene	EEEE. 1,1'-Biphenyl	G1. 2-Acetylaminofluorene	I2. Permethrin (cis/trans)
BB. 2-Nitroaniline	DDD. Chrysene	FFFF. Retene	H1. Pronamide	J2. 5-Nitro-o-toluidine

LDC#:48734H2b **VALIDATION FINDINGS WORKSHEET** Page:_1_of_1_
Field Duplicates Reviewer:__LT____
2nd Reviewer:_____

METHOD: GC/MS PAHs (EPA SW846 Method 8270E SIM)

Compound	Concentration (mg/kg)		RPD
	16	18	
UU	0.01U	0.019	NC
YY	0.01U	0.022	NC
ZZ	0.01U	0.025	NC
CCC	0.01U	0.016	NC
DDD	0.01U	0.014	NC
III	0.01U	0.013	NC
GGG	0.01U	0.014	NC

Laboratory Data Consultants, Inc.
Data Validation Report

Project/Site Name: Kimberly-Clark Upland Area

LDC Report Date: August 17, 2020

Parameters: Polychlorinated Biphenyls

Validation Level: Stage 2A

Laboratory: Friedman & Bruya, Inc.

Sample Delivery Group (SDG): 006387

Sample Identification	Laboratory Sample Identification	Matrix	Collection Date
CNW-OB-01-062320	006387-09	Soil	06/23/20
CNW-OB-02-062320	006387-10	Soil	06/23/20
CNW-OB-03-062320	006387-11	Soil	06/23/20
CNW-OB-03-062320MS	006387-11MS	Soil	06/23/20
CNW-OB-03-062320MSD	006387-11MSD	Soil	06/23/20

Introduction

This Data Validation Report (DVR) presents data validation findings and results for the associated samples listed on the cover page. Data validation was performed in accordance with a modified outline of the USEPA National Functional Guidelines (NFG) for Organic Superfund Methods Data Review (January 2017). Where specific guidance was not available, the data has been evaluated in a conservative manner consistent with industry standards using professional experience.

The analyses were performed by the following method:

Polychlorinated Biphenyls (PCBs) by Environmental Protection Agency (EPA) SW 846 Method 8082A

All sample results were subjected to Stage 2A data validation, which comprises an evaluation of quality control (QC) summary results.

The following are definitions of the data qualifiers utilized during data validation:

J (Estimated): The compound or analyte was analyzed for and positively identified by the laboratory; however the reported concentration is estimated due to non-conformances discovered during data validation.

U (Non-detected): The compound or analyte was analyzed for and positively identified by the laboratory; however the compound or analyte should be considered non-detected at the reported concentration due to the presence of contaminants detected in the associated blank(s).

UJ (Non-detected estimated): The compound or analyte was reported as not detected by the laboratory; however the reported quantitation/detection limit is estimated due to non-conformances discovered during data validation.

R (Rejected): The sample results were rejected due to gross non-conformances discovered during data validation. Data qualified as rejected is not usable.

NA (Not Applicable): The non-conformance discovered during data validation demonstrates a high bias, while the affected compound or analyte in the associated sample(s) was reported as not detected by the laboratory and did not warrant the qualification of the data.

A qualification summary table is provided at the end of this report if data has been qualified. Flags are classified as P (protocol) or A (advisory) to indicate whether the flag is due to a laboratory deviation from a specified protocol or is of technical advisory nature.

I. Sample Receipt and Technical Holding Times

All samples were received in good condition and cooler temperatures upon receipt met validation criteria.

All technical holding time requirements were met.

II. Initial Calibration and Initial Calibration Verification

Initial calibration data were not reviewed for Stage 2A validation.

III. Continuing Calibration

Continuing calibration data were not reviewed for Stage 2A validation.

IV. Laboratory Blanks

Laboratory blanks were analyzed as required by the method. No contaminants were found in the laboratory blanks.

V. Field Blanks

No field blanks were identified in this SDG.

VI. Surrogates

Surrogates were added to all samples as required by the method. All surrogate recoveries (%R) were within QC limits.

VII. Matrix Spike/Matrix Spike Duplicates

Matrix spike (MS) and matrix spike duplicate (MSD) sample analysis was performed on an associated project sample. Percent recoveries (%R) were within QC limits. Relative percent differences (RPD) were within QC limits.

VIII. Laboratory Control Samples

Laboratory control samples (LCS) were analyzed as required by the method. Percent recoveries (%R) were within QC limits.

IX. Field Duplicates

No field duplicates were identified in this SDG.

X. Compound Quantitation

Raw data were not reviewed for Stage 2A validation.

XI. Target Compound Identification

Raw data were not reviewed for Stage 2A validation.

XII. Overall Assessment of Data

The analysis was conducted within all specifications of the method. No results were rejected in this SDG.

Kimberly-Clark Upland Area
Polychlorinated Biphenyls - Data Qualification Summary - SDG 006387

No Sample Data Qualified in this SDG

Kimberly-Clark Upland Area
Polychlorinated Biphenyls - Laboratory Blank Data Qualification Summary - SDG 006387

No Sample Data Qualified in this SDG

Kimberly-Clark Upland Area
Polychlorinated Biphenyls - Field Blank Data Qualification Summary - SDG 006387

No Sample Data Qualified in this SDG

LDC #: 48734H3b
SDG #: 006387
Laboratory: Friedman & Bruya, Inc.

VALIDATION COMPLETENESS WORKSHEET
Stage 2A

Date: 08/13/20
Page: 1 of 1
Reviewer: LT
2nd Reviewer:

METHOD: GC Polychlorinated Biphenyls (EPA SW846 Method 8082A)

The samples listed below were reviewed for each of the following validation areas. Validation findings are noted in attached validation findings worksheets.

	Validation Area		Comments
I.	Sample receipt/Technical holding times	A/A	
II.	Initial calibration/ICV	N/N	
III.	Continuing calibration	N	
IV.	Laboratory Blanks	A	
V.	Field blanks	N	
VI.	Surrogate spikes	A	
VII.	Matrix spike/Matrix spike duplicates	A	(4,5)
VIII.	Laboratory control samples	A	LCS
IX.	Field duplicates	N	
X.	Compound quantitation/RL/LOQ/LODs	N	Dry weight basis
XI.	Target compound identification	N	
XII.	Overall assessment of data	A	

Note: A = Acceptable; N = Not provided/applicable; SW = See worksheet; ND = No compounds detected; R = Rinsate; FB = Field blank; D = Duplicate; TB = Trip blank; EB = Equipment blank; SB=Source blank; OTHER:

	Client ID	Lab ID	Matrix	Date
1	CNW-OB-01-062320	006387-09	Soil	06/23/20
2	CNW-OB-02-062320	006387-10	Soil	06/23/20
3	CNW-OB-03-062320	006387-11	Soil	06/23/20
4	CNW-OB-03-062320MS	006387-11MS	Soil	06/23/20
5	CNW-OB-03-062320MSD	006387-11MSD	Soil	06/23/20
6				
7				
8				
9				
10				
11				
12				
13				

Notes:

1	00-146 MB 1/6						

Laboratory Data Consultants, Inc.
Data Validation Report

Project/Site Name: Kimberly-Clark Upland Area

LDC Report Date: August 13, 2020

Parameters: Metals

Validation Level: Stage 2A

Laboratory: Friedman & Bruya, Inc.

Sample Delivery Group (SDG): 006387

Sample Identification	Laboratory Sample Identification	Matrix	Collection Date
LP-S-17-6.5-062320	006387-02	Soil	06/23/20
LP-B-03-9-062320	006387-03	Soil	06/23/20
LP-S-11-6.5-062320	006387-04	Soil	06/23/20
LP-S-12-6.5-062320	006387-05	Soil	06/23/20
LP-S-13-6.5-062320	006387-06	Soil	06/23/20
LP-S-14-6.5-062320	006387-07	Soil	06/23/20
LP-S-15-6.5-062320	006387-08	Soil	06/23/20
CNW-OB-01-062320	006387-09	Soil	06/23/20
CNW-OB-02-062320	006387-10	Soil	06/23/20
CNW-OB-03-062320	006387-11	Soil	06/23/20
CNW-OB-01-062320MS	006387-09MS	Soil	06/23/20
CNW-OB-01-062320MSD	006387-09MSD	Soil	06/23/20

Introduction

This Data Validation Report (DVR) presents data validation findings and results for the associated samples listed on the cover page. Data validation was performed in accordance with a modified outline of the USEPA National Functional Guidelines (NFG) for Inorganic Superfund Methods Data Review (January 2017). Where specific guidance was not available, the data has been evaluated in a conservative manner consistent with industry standards using professional experience.

The analyses were performed by the following methods:

Arsenic, Copper, Lead, Nickel, and Zinc by Environmental Protection Agency (EPA) SW 846 Method 6020B
Mercury by EPA Method 1631E

All sample results were subjected to Stage 2A data validation, which comprises an evaluation of quality control (QC) summary results.

The following are definitions of the data qualifiers utilized during data validation:

J (Estimated): The compound or analyte was analyzed for and positively identified by the laboratory; however the reported concentration is estimated due to non-conformances discovered during data validation.

U (Non-detected): The compound or analyte was analyzed for and positively identified by the laboratory; however the compound or analyte should be considered non-detected at the reported concentration due to the presence of contaminants detected in the associated blank(s).

UJ (Non-detected estimated): The compound or analyte was reported as not detected by the laboratory; however the reported quantitation/detection limit is estimated due to non-conformances discovered during data validation.

R (Rejected): The sample results were rejected due to gross non-conformances discovered during data validation. Data qualified as rejected is not usable.

NA (Not Applicable): The non-conformance discovered during data validation demonstrates a high bias, while the affected compound or analyte in the associated sample(s) was reported as not detected by the laboratory and did not warrant the qualification of the data.

A qualification summary table is provided at the end of this report if data has been qualified. Flags are classified as P (protocol) or A (advisory) to indicate whether the flag is due to a laboratory deviation from a specified protocol or is of technical advisory nature.

I. Sample Receipt and Technical Holding Times

All samples were received in good condition.

All technical holding time requirements were met.

II. ICPMS Tune

ICP-MS tune data were not reviewed for Stage 2A validation.

III. Instrument Calibration

Instrument calibration data were not reviewed for Stage 2A validation.

IV. ICP Interference Check Sample Analysis

ICP Interference check sample (ICS) analysis data were not reviewed for Stage 2A validation.

V. Laboratory Blanks

Laboratory blanks were analyzed as required by the methods. No contaminants were found in the laboratory blanks.

VI. Field Blanks

No field blanks were identified in this SDG.

VII. Matrix Spike/Matrix Spike Duplicates

Matrix spike (MS) and matrix spike duplicate (MSD) sample analysis was performed on an associated project sample. Percent recoveries (%R) were within QC limits. Relative percent differences (RPD) were within QC limits.

VIII. Duplicate Sample Analysis

The laboratory has indicated that there were no duplicate (DUP) analyses specified for the samples in this SDG, and therefore duplicate analyses were not performed for this SDG.

IX. Serial Dilution

Serial dilution was not performed for this SDG.

X. Laboratory Control Samples

Laboratory control samples (LCS) were analyzed as required by the methods. Percent recoveries (%R) were within QC limits.

XI. Field Duplicates

No field duplicates were identified in this SDG.

XII. Internal Standards (ICP-MS)

Internal standards data were not reviewed for Stage 2A validation.

XIII. Sample Result Verification

Raw data were not reviewed for Stage 2A validation.

XIV. Overall Assessment of Data

The analysis was conducted within all specifications of the methods. No results were rejected in this SDG.

Kimberly-Clark Upland Area
Metals - Data Qualification Summary - SDG 006387

No Sample Data Qualified in this SDG

Kimberly-Clark Upland Area
Metals - Laboratory Blank Data Qualification Summary - SDG 006387

No Sample Data Qualified in this SDG

Kimberly-Clark Upland Area
Metals - Field Blank Data Qualification Summary - SDG 006387

No Sample Data Qualified in this SDG

LDC #: 48734H4a

SDG #: 006387

Laboratory: Friedman & Bruya, Inc.

VALIDATION COMPLETENESS WORKSHEET

Stage 2A

Date: 8/12/2020

Page: 1 of 1

Reviewer: DTM

2nd Reviewer:

METHOD: Metals (EPA SW 846 Method 6020B/EPA Method 1631E)

The samples listed below were reviewed for each of the following validation areas. Validation findings are noted in attached validation findings worksheets.

	Validation Area		Comments
I.	Sample receipt/Technical holding times	A / A	
II.	ICP/MS Tune	N	
III.	Instrument Calibration	N	
IV.	ICP Interference Check Sample (ICS) Analysis	N	
V.	Laboratory Blanks	A	
VI.	Field Blanks	N	
VII.	Matrix Spike/Matrix Spike Duplicates	A	
VIII.	Duplicate sample analysis	N	
IX.	Serial Dilution	N	
X.	Laboratory control samples	A	LCS
XI.	Field Duplicates	N	
XII.	Internal Standard (ICP-MS)	N	
XIII.	Sample Result Verification	N	
XIV	Overall Assessment of Data	A	

Note: A = Acceptable; N = Not provided/applicable; SW = See worksheet; ND = No compounds detected; R = Rinsate; FB = Field blank; D = Duplicate; TB = Trip blank; EB = Equipment blank; SB=Source blank; OTHER:

	Client ID	Lab ID	Matrix	Date
1	LP-S-17-6.5-062320	006387-02	Soil	06/23/20
2	LP-B-03-9-062320	006387-03	Soil	06/23/20
3	LP-S-11-6.5-062320	006387-04	Soil	06/23/20
4	LP-S-12-6.5-062320	006387-05	Soil	06/23/20
5	LP-S-13-6.5-062320	006387-06	Soil	06/23/20
6	LP-S-14-6.5-062320	006387-07	Soil	06/23/20
7	LP-S-15-6.5-062320	006387-08	Soil	06/23/20
8	CNW-OB-01-062320	006387-09	Soil	06/23/20
9	CNW-OB-02-062320	006387-10	Soil	06/23/20
10	CNW-OB-03-062320	006387-11	Soil	06/23/20
11	CNW-OB-01-062320MS	006387-09MS	Soil	06/23/20
12	CNW-OB-01-062320MSD	006387-09MSD	Soil	06/23/20
13				

Notes:

LDC #: 40734H4a

VALIDATION FINDINGS WORKSHEET
Sample Specific Element Reference

Reviewer: DTM
2nd reviewer:

All circled elements are applicable to each sample.

Sample ID	Matrix	Target Analyte List (TAL)
8-10	S	Al, Sb, (As), Ba, Be, B, Cd, Ca, Cr, Co, (Cu), Fe, (Pb), Li, Mg, Mo, Mn, (Hg), (Ni), K, Se, Ag, Na, Sr, Tl, Sn, Ti, W, U, V, (Zn)
		Al, Sb, As, Ba, Be, B, Cd, Ca, Cr, Co, Cu, Fe, Pb, Li, Mg, Mo, Mn, Hg, Ni, K, Se, Ag, Na, Sr, Tl, Sn, Ti, W, U, V, Zn
1-7	S	Al, Sb, As, Ba, Be, B, Cd, Ca, Cr, Co, Cu, Fe, Pb, Li, Mg, Mo, Mn, (Hg), Ni, K, Se, Ag, Na, Sr, Tl, Sn, Ti, W, U, V, Zn
		Al, Sb, As, Ba, Be, B, Cd, Ca, Cr, Co, Cu, Fe, Pb, Li, Mg, Mo, Mn, Hg, Ni, K, Se, Ag, Na, Sr, Tl, Sn, Ti, W, U, V, Zn
DC 11-12	S	Al, Sb, (As), Ba, Be, B, Cd, Ca, Cr, Co, (Cu), Fe, (Pb), Li, Mg, Mo, Mn, Hg, (Ni), K, Se, Ag, Na, Sr, Tl, Sn, Ti, W, U, V, (Zn)
		Al, Sb, As, Ba, Be, B, Cd, Ca, Cr, Co, Cu, Fe, Pb, Li, Mg, Mo, Mn, Hg, Ni, K, Se, Ag, Na, Sr, Tl, Sn, Ti, W, U, V, Zn
		Al, Sb, As, Ba, Be, B, Cd, Ca, Cr, Co, Cu, Fe, Pb, Li, Mg, Mo, Mn, Hg, Ni, K, Se, Ag, Na, Sr, Tl, Sn, Ti, W, U, V, Zn
		Al, Sb, As, Ba, Be, B, Cd, Ca, Cr, Co, Cu, Fe, Pb, Li, Mg, Mo, Mn, Hg, Ni, K, Se, Ag, Na, Sr, Tl, Sn, Ti, W, U, V, Zn
		Al, Sb, As, Ba, Be, B, Cd, Ca, Cr, Co, Cu, Fe, Pb, Li, Mg, Mo, Mn, Hg, Ni, K, Se, Ag, Na, Sr, Tl, Sn, Ti, W, U, V, Zn
		Al, Sb, As, Ba, Be, B, Cd, Ca, Cr, Co, Cu, Fe, Pb, Li, Mg, Mo, Mn, Hg, Ni, K, Se, Ag, Na, Sr, Tl, Sn, Ti, W, U, V, Zn
		Al, Sb, As, Ba, Be, B, Cd, Ca, Cr, Co, Cu, Fe, Pb, Li, Mg, Mo, Mn, Hg, Ni, K, Se, Ag, Na, Sr, Tl, Sn, Ti, W, U, V, Zn
		Al, Sb, As, Ba, Be, B, Cd, Ca, Cr, Co, Cu, Fe, Pb, Li, Mg, Mo, Mn, Hg, Ni, K, Se, Ag, Na, Sr, Tl, Sn, Ti, W, U, V, Zn
		Al, Sb, As, Ba, Be, B, Cd, Ca, Cr, Co, Cu, Fe, Pb, Li, Mg, Mo, Mn, Hg, Ni, K, Se, Ag, Na, Sr, Tl, Sn, Ti, W, U, V, Zn
		Al, Sb, As, Ba, Be, B, Cd, Ca, Cr, Co, Cu, Fe, Pb, Li, Mg, Mo, Mn, Hg, Ni, K, Se, Ag, Na, Sr, Tl, Sn, Ti, W, U, V, Zn
		Al, Sb, As, Ba, Be, B, Cd, Ca, Cr, Co, Cu, Fe, Pb, Li, Mg, Mo, Mn, Hg, Ni, K, Se, Ag, Na, Sr, Tl, Sn, Ti, W, U, V, Zn
		Al, Sb, As, Ba, Be, B, Cd, Ca, Cr, Co, Cu, Fe, Pb, Li, Mg, Mo, Mn, Hg, Ni, K, Se, Ag, Na, Sr, Tl, Sn, Ti, W, U, V, Zn
		Al, Sb, As, Ba, Be, B, Cd, Ca, Cr, Co, Cu, Fe, Pb, Li, Mg, Mo, Mn, Hg, Ni, K, Se, Ag, Na, Sr, Tl, Sn, Ti, W, U, V, Zn
		Al, Sb, As, Ba, Be, B, Cd, Ca, Cr, Co, Cu, Fe, Pb, Li, Mg, Mo, Mn, Hg, Ni, K, Se, Ag, Na, Sr, Tl, Sn, Ti, W, U, V, Zn
		Al, Sb, As, Ba, Be, B, Cd, Ca, Cr, Co, Cu, Fe, Pb, Li, Mg, Mo, Mn, Hg, Ni, K, Se, Ag, Na, Sr, Tl, Sn, Ti, W, U, V, Zn
		Al, Sb, As, Ba, Be, B, Cd, Ca, Cr, Co, Cu, Fe, Pb, Li, Mg, Mo, Mn, Hg, Ni, K, Se, Ag, Na, Sr, Tl, Sn, Ti, W, U, V, Zn
Analysis Method		
ICP		Al, Sb, As, Ba, Be, B, Cd, Ca, Cr, Co, Cu, Fe, Pb, Li, Mg, Mo, Mn, Hg, Ni, K, Se, Ag, Na, Sr, Tl, Sn, Ti, W, U, V, Zn
ICP-MS		Al, Sb, As, Ba, Be, B, Cd, Ca, Cr, Co, Cu, Fe, Pb, Li, Mg, Mo, Mn, Hg, Ni, K, Se, Ag, Na, Sr, Tl, Sn, Ti, W, U, V, Zn
GFAA		Al, Sb, As, Ba, Be, B, Cd, Ca, Cr, Co, Cu, Fe, Pb, Li, Mg, Mo, Mn, Hg, Ni, K, Se, Ag, Na, Sr, Tl, Sn, Ti, W, U, V, Zn

Comments: Mercury by CVAA if performed

Laboratory Data Consultants, Inc.
Data Validation Report

Project/Site Name: Kimberly-Clark Upland Area

LDC Report Date: August 17, 2020

Parameters: Polynuclear Aromatic Hydrocarbons

Validation Level: Stage 2A

Laboratory: Friedman & Bruya, Inc.

Sample Delivery Group (SDG): 006419

Sample Identification	Laboratory Sample Identification	Matrix	Collection Date
CNE-S-08-3-062420	006419-01	Soil	06/24/20
CNE-S-07-3-062420	006419-02	Soil	06/24/20
CNE-S-05-3-062420	006419-03	Soil	06/24/20
CNE-S-06-3-062420	006419-04	Soil	06/24/20
CNE-B-02-6-062420	006419-05	Soil	06/24/20
CNE-S-01-3-062420	006419-06	Soil	06/24/20
CNE-S-04-3-062420	006419-07	Soil	06/24/20
CNE-B-03-6-062420	006419-08	Soil	06/24/20
CNE-S-02-3-062420	006419-09	Soil	06/24/20
CNE-S-03-3-062420	006419-10	Soil	06/24/20
CNE-B-01-6-062420	006419-11	Soil	06/24/20
CNE-S-08-3-062420MS	006419-01MS	Soil	06/24/20
CNE-S-08-3-062420MSD	006419-01MSD	Soil	06/24/20

Introduction

This Data Validation Report (DVR) presents data validation findings and results for the associated samples listed on the cover page. Data validation was performed in accordance with a modified outline of the USEPA National Functional Guidelines (NFG) for Organic Superfund Methods Data Review (January 2017). Where specific guidance was not available, the data has been evaluated in a conservative manner consistent with industry standards using professional experience.

The analyses were performed by the following method:

Polynuclear Aromatic Hydrocarbons (PAHs) by Environmental Protection Agency (EPA) SW 846 Method 8270E in Selected Ion Monitoring (SIM) mode

All sample results were subjected to Stage 2A data validation, which comprises an evaluation of quality control (QC) summary results.

The following are definitions of the data qualifiers utilized during data validation:

J (Estimated): The compound or analyte was analyzed for and positively identified by the laboratory; however the reported concentration is estimated due to non-conformances discovered during data validation.

U (Non-detected): The compound or analyte was analyzed for and positively identified by the laboratory; however the compound or analyte should be considered non-detected at the reported concentration due to the presence of contaminants detected in the associated blank(s).

UJ (Non-detected estimated): The compound or analyte was reported as not detected by the laboratory; however the reported quantitation/detection limit is estimated due to non-conformances discovered during data validation.

R (Rejected): The sample results were rejected due to gross non-conformances discovered during data validation. Data qualified as rejected is not usable.

NA (Not Applicable): The non-conformance discovered during data validation demonstrates a high bias, while the affected compound or analyte in the associated sample(s) was reported as not detected by the laboratory and did not warrant the qualification of the data.

A qualification summary table is provided at the end of this report if data has been qualified. Flags are classified as P (protocol) or A (advisory) to indicate whether the flag is due to a laboratory deviation from a specified protocol or is of technical advisory nature.

I. Sample Receipt and Technical Holding Times

All samples were received in good condition and cooler temperatures upon receipt met validation criteria.

All technical holding time requirements were met.

II. GC/MS Instrument Performance Check

Instrument performance check data were not reviewed for Stage 2A validation.

III. Initial Calibration and Initial Calibration Verification

Initial calibration data were not reviewed for Stage 2A validation.

IV. Continuing Calibration

Continuing calibration data were not reviewed for Stage 2A validation.

V. Laboratory Blanks

Laboratory blanks were analyzed as required by the method. No contaminants were found in the laboratory blanks.

VI. Field Blanks

No field blanks were identified in this SDG.

VII. Surrogates

Surrogates were added to all samples as required by the method. All surrogate recoveries (%R) were within QC limits.

VIII. Matrix Spike/Matrix Spike Duplicates

Matrix spike (MS) and matrix spike duplicate (MSD) sample analysis was performed on an associated project sample. Percent recoveries (%R) were within QC limits. Relative percent differences (RPD) were within QC limits.

IX. Laboratory Control Samples

Laboratory control samples (LCS) were analyzed as required by the method. Percent recoveries (%R) were within QC limits.

X. Field Duplicates

No field duplicates were identified in this SDG.

XI. Internal Standards

Internal standards data were not reviewed for Stage 2A validation.

XII. Compound Quantitation

Raw data were not reviewed for Stage 2A validation.

XIII. Target Compound Identifications

Raw data were not reviewed for Stage 2A validation.

XIV. System Performance

Raw data were not reviewed for Stage 2A validation.

XV. Overall Assessment of Data

The analysis was conducted within all specifications of the method. No results were rejected in this SDG.

Kimberly-Clark Upland Area
Polynuclear Aromatic Hydrocarbons - Data Qualification Summary - SDG 006419

No Sample Data Qualified in this SDG

Kimberly-Clark Upland Area
Polynuclear Aromatic Hydrocarbons - Laboratory Blank Data Qualification Summary - SDG 006419

No Sample Data Qualified in this SDG

Kimberly-Clark Upland Area
Polynuclear Aromatic Hydrocarbons - Field Blank Data Qualification Summary - SDG 006419

No Sample Data Qualified in this SDG

LDC #: 48734I2b

SDG #: 006419

Laboratory: Friedman & Bruya, Inc.

VALIDATION COMPLETENESS WORKSHEET

Stage 2A

Date: 08/13/20

Page: 1 of 1

Reviewer: LS

2nd Reviewer:

METHOD: GC/MS Polynuclear Aromatic Hydrocarbons (EPA SW 846 Method 8270E-SIM)

The samples listed below were reviewed for each of the following validation areas. Validation findings are noted in attached validation findings worksheets.

	Validation Area		Comments
I.	Sample receipt/Technical holding times	A/A	
II.	GC/MS Instrument performance check	N	
III.	Initial calibration/ICV	N/N	
IV.	Continuing calibration	N	
V.	Laboratory Blanks	A	
VI.	Field blanks	N	
VII.	Surrogate spikes	A	
VIII.	Matrix spike/Matrix spike duplicates	A	(11,12)
IX.	Laboratory control samples	A	LCS
X.	Field duplicates	N	
XI.	Internal standards	N	
XII.	Compound quantitation RL/LOQ/LODs	N	Dry weight basis
XIII.	Target compound identification	N	
XIV.	System performance	N	
XV.	Overall assessment of data	A	

Note: A = Acceptable; N = Not provided/applicable; SW = See worksheet; ND = No compounds detected; R = Rinsate; FB = Field blank; D = Duplicate; TB = Trip blank; EB = Equipment blank; SB=Source blank; OTHER:

	Client ID	Lab ID	Matrix	Date
1	CNE-S-08-3-062420	006419-01	Soil	06/24/20
2	CNE-S-07-3-062420	006419-02	Soil	06/24/20
3	CNE-S-05-3-062420	006419-03	Soil	06/24/20
4	CNE-S-06-3-062420	006419-04	Soil	06/24/20
5	CNE-B-02-6-062420	006419-05	Soil	06/24/20
6	CNE-S-01-3-062420	006419-06	Soil	06/24/20
7	CNE-S-04-3-062420	006419-07	Soil	06/24/20
8	CNE-B-03-6-062420	006419-08	Soil	06/24/20
9	CNE-S-02-3-062420	006419-09	Soil	06/24/20
10	CNE-S-03-3-062420	006419-10	Soil	06/24/20
11	CNE-B-01-6-062420	006419-11	Soil	06/24/20
12	CNE-S-08-3-062420MS	006419-01MS	Soil	06/24/20
13	CNE-S-08-3-062420MSD	006419-01MSD	Soil	06/24/20
14				

1,00-1468 MB 1/5

Laboratory Data Consultants, Inc.
Data Validation Report

Project/Site Name: Kimberly-Clark Upland Area

LDC Report Date: August 13, 2020

Parameters: Metals

Validation Level: Stage 2A

Laboratory: Friedman & Bruya, Inc.

Sample Delivery Group (SDG): 006419

Sample Identification	Laboratory Sample Identification	Matrix	Collection Date
PM-B-6-S-16-4-062420	006419-12	Soil	06/24/20
PM-B-6-S-16-6-062420	006419-13	Soil	06/24/20
PM-B-6-S-17-4-062420	006419-14	Soil	06/24/20
PM-B-6-S-17-6-062420	006419-15	Soil	06/24/20
PM-B-6-S-18-6-062420	006419-16	Soil	06/24/20
PM-B-6-B-02-12-062420	006419-17	Soil	06/24/20
PM-B-6-S-20-9-062420	006419-18	Soil	06/24/20
PM-B-6-S-21-9-062420	006419-19	Soil	06/24/20
PM-B-6-S-22-6-062420	006419-20	Soil	06/24/20
PM-B-6-S-19-6-062420	006419-21	Soil	06/24/20
PM-B-6-S-19-9-062420	006419-22	Soil	06/24/20
PM-B-6-S-505-062420	006419-23	Soil	06/24/20
PM-B-6-S-16-4-062420MS	006419-12MS	Soil	06/24/20
PM-B-6-S-16-4-062420MSD	006419-12MSD	Soil	06/24/20

Introduction

This Data Validation Report (DVR) presents data validation findings and results for the associated samples listed on the cover page. Data validation was performed in accordance with a modified outline of the USEPA National Functional Guidelines (NFG) for Inorganic Superfund Methods Data Review (January 2017). Where specific guidance was not available, the data has been evaluated in a conservative manner consistent with industry standards using professional experience.

The analyses were performed by the following methods:

Copper by Environmental Protection Agency (EPA) SW 846 Method 6020B
Mercury by EPA Method 1631E

All sample results were subjected to Stage 2A data validation, which comprises an evaluation of quality control (QC) summary results.

The following are definitions of the data qualifiers utilized during data validation:

J (Estimated): The compound or analyte was analyzed for and positively identified by the laboratory; however the reported concentration is estimated due to non-conformances discovered during data validation.

U (Non-detected): The compound or analyte was analyzed for and positively identified by the laboratory; however the compound or analyte should be considered non-detected at the reported concentration due to the presence of contaminants detected in the associated blank(s).

UJ (Non-detected estimated): The compound or analyte was reported as not detected by the laboratory; however the reported quantitation/detection limit is estimated due to non-conformances discovered during data validation.

R (Rejected): The sample results were rejected due to gross non-conformances discovered during data validation. Data qualified as rejected is not usable.

NA (Not Applicable): The non-conformance discovered during data validation demonstrates a high bias, while the affected compound or analyte in the associated sample(s) was reported as not detected by the laboratory and did not warrant the qualification of the data.

A qualification summary table is provided at the end of this report if data has been qualified. Flags are classified as P (protocol) or A (advisory) to indicate whether the flag is due to a laboratory deviation from a specified protocol or is of technical advisory nature.

I. Sample Receipt and Technical Holding Times

All samples were received in good condition.

All technical holding time requirements were met.

II. ICPMS Tune

ICP-MS tune data were not reviewed for Stage 2A validation.

III. Instrument Calibration

Instrument calibration data were not reviewed for Stage 2A validation.

IV. ICP Interference Check Sample Analysis

ICP Interference check sample (ICS) analysis data were not reviewed for Stage 2A validation.

V. Laboratory Blanks

Laboratory blanks were analyzed as required by the methods. No contaminants were found in the laboratory blanks.

VI. Field Blanks

No field blanks were identified in this SDG.

VII. Matrix Spike/Matrix Spike Duplicates

Matrix spike (MS) and matrix spike duplicate (MSD) sample analysis was performed on an associated project sample. Percent recoveries (%R) were within QC limits.

Relative percent differences (RPD) were within QC limits with the following exceptions:

Spike ID (Associated Samples)	Analyte	RPD (Limits)	Flag	A or P
PM-B-6-S-16-4-062420MS/MSD (All samples in SDG 006419)	Mercury	36 (≤20)	J (all detects) UJ (all non-detects)	A

VIII. Duplicate Sample Analysis

The laboratory has indicated that there were no duplicate (DUP) analyses specified for the samples in this SDG, and therefore duplicate analyses were not performed for this SDG.

IX. Serial Dilution

Serial dilution was not performed for this SDG.

X. Laboratory Control Samples

Laboratory control samples (LCS) were analyzed as required by the methods. Percent recoveries (%R) were within QC limits.

XI. Field Duplicates

Samples PM-B-6-S-16-4-062420 and PM-B-6-S-505-062420 were identified as field duplicates. No results were detected in any of the samples with the following exceptions:

Analyte	Concentration (mg/Kg)		RPD
	PM-B-6-S-16-4-062420	PM-B-6-S-505-062420	
Copper	43.5	33.7	25
Mercury	0.31	0.24	25

XII. Internal Standards (ICP-MS)

Internal standards data were not reviewed for Stage 2A validation.

XIII. Sample Result Verification

Raw data were not reviewed for Stage 2A validation.

XIV. Overall Assessment of Data

The analysis was conducted within all specifications of the methods.

Due to MS/MSD RPD, data were qualified as estimated in twelve samples.

No results were rejected in this SDG.

Kimberly-Clark Upland Area
Metals - Data Qualification Summary - SDG 006419

Sample	Analyte	Flag	A or P	Reason
PM-B-6-S-16-4-062420 PM-B-6-S-16-6-062420 PM-B-6-S-17-4-062420 PM-B-6-S-17-6-062420 PM-B-6-S-18-6-062420 PM-B-6-B-02-12-062420 PM-B-6-S-20-9-062420 PM-B-6-S-21-9-062420 PM-B-6-S-22-6-062420 PM-B-6-S-19-6-062420 PM-B-6-S-19-9-062420 PM-B-6-S-505-062420	Mercury	J (all detects) UJ (all non-detects)	A	Matrix spike/Matrix spike duplicate (RPD)

Kimberly-Clark Upland Area
Metals - Laboratory Blank Data Qualification Summary - SDG 006419

No Sample Data Qualified in this SDG

Kimberly-Clark Upland Area
Metals - Field Blank Data Qualification Summary - SDG 006419

No Sample Data Qualified in this SDG

LDC #: 48734l4a

VALIDATION COMPLETENESS WORKSHEET

Stage 2A

Date: 8/12/2020

SDG #: 006419

Page: 1 of 1

Laboratory: Friedman & Bruya, Inc.

Reviewer: DM

2nd Reviewer:

METHOD: Cr, Hg (EPA SW 846 Method 6020B/EPA Method 1631E)

The samples listed below were reviewed for each of the following validation areas. Validation findings are noted in attached validation findings worksheets.

	Validation Area		Comments
I.	Sample receipt/Technical holding times	A / A	
II.	ICP/MS Tune	N	
III.	Instrument Calibration	N	
IV.	ICP Interference Check Sample (ICS) Analysis	N	
V.	Laboratory Blanks	A	
VI.	Field Blanks	N	
VII.	Matrix Spike/Matrix Spike Duplicates	SW	
VIII.	Duplicate sample analysis	N	
IX.	Serial Dilution	N	
X.	Laboratory control samples	A	LCS (1,12)
XI.	Field Duplicates	SW	
XII.	Internal Standard (ICP-MS)	N	
XIII.	Sample Result Verification	N	
XIV	Overall Assessment of Data	A	

Note: A = Acceptable; N = Not provided/applicable; SW = See worksheet; ND = No compounds detected; R = Rinsate; FB = Field blank; D = Duplicate; TB = Trip blank; EB = Equipment blank; SB=Source blank; OTHER:

	Client ID	Lab ID	Matrix	Date
1	PM-B-6-S-16-4-062420	006419-12	Soil	06/24/20
2	PM-B-6-S-16-6-062420	006419-13	Soil	06/24/20
3	PM-B-6-S-17-4-062420	006419-14	Soil	06/24/20
4	PM-B-6-S-17-6-062420	006419-15	Soil	06/24/20
5	PM-B-6-S-18-6-062420	006419-16	Soil	06/24/20
6	PM-B-6-B-02-12-062420	006419-17	Soil	06/24/20
7	PM-B-6-S-20-9-062420	006419-18	Soil	06/24/20
8	PM-B-6-S-21-9-062420	006419-19	Soil	06/24/20
9	PM-B-6-S-22-6-062420	006419-20	Soil	06/24/20
10	PM-B-6-S-19-6-062420	006419-21	Soil	06/24/20
11	PM-B-6-S-19-9-062420	006419-22	Soil	06/24/20
12	PM-B-6-S-505-062420	006419-23	Soil	06/24/20
13	PM-B-6-S-16-4-062420MS	006419-12MS	Soil	06/24/20
14	PM-B-6-S-16-4-062420MSD	006419-12MSD	Soil	06/24/20
15				

LDC #: 49734149

VALIDATION FINDINGS WORKSHEET
Sample Specific Element Reference

Reviewer: DTM
2nd reviewer:

All circled elements are applicable to each sample.

Sample ID	Matrix	Target Analyte List (TAL)
1-12	S	Al, Sb, As, Ba, Be, B, Cd, Ca, Cr, Co, (Cu), Fe, Pb, Li, Mg, Mo, Mn, (Hg), Ni, K, Se, Ag, Na, Sr, Tl, Sn, Ti, W, U, V, Zn
		Al, Sb, As, Ba, Be, B, Cd, Ca, Cr, Co, Cu, Fe, Pb, Li, Mg, Mo, Mn, Hg, Ni, K, Se, Ag, Na, Sr, Tl, Sn, Ti, W, U, V, Zn
QC1314	S	Al, Sb, As, Ba, Be, B, Cd, Ca, Cr, Co, (Cu), Fe, Pb, Li, Mg, Mo, Mn, (Hg), Ni, K, Se, Ag, Na, Sr, Tl, Sn, Ti, W, U, V, Zn
		Al, Sb, As, Ba, Be, B, Cd, Ca, Cr, Co, Cu, Fe, Pb, Li, Mg, Mo, Mn, Hg, Ni, K, Se, Ag, Na, Sr, Tl, Sn, Ti, W, U, V, Zn
		Al, Sb, As, Ba, Be, B, Cd, Ca, Cr, Co, Cu, Fe, Pb, Li, Mg, Mo, Mn, Hg, Ni, K, Se, Ag, Na, Sr, Tl, Sn, Ti, W, U, V, Zn
		Al, Sb, As, Ba, Be, B, Cd, Ca, Cr, Co, Cu, Fe, Pb, Li, Mg, Mo, Mn, Hg, Ni, K, Se, Ag, Na, Sr, Tl, Sn, Ti, W, U, V, Zn
		Al, Sb, As, Ba, Be, B, Cd, Ca, Cr, Co, Cu, Fe, Pb, Li, Mg, Mo, Mn, Hg, Ni, K, Se, Ag, Na, Sr, Tl, Sn, Ti, W, U, V, Zn
		Al, Sb, As, Ba, Be, B, Cd, Ca, Cr, Co, Cu, Fe, Pb, Li, Mg, Mo, Mn, Hg, Ni, K, Se, Ag, Na, Sr, Tl, Sn, Ti, W, U, V, Zn
		Al, Sb, As, Ba, Be, B, Cd, Ca, Cr, Co, Cu, Fe, Pb, Li, Mg, Mo, Mn, Hg, Ni, K, Se, Ag, Na, Sr, Tl, Sn, Ti, W, U, V, Zn
		Al, Sb, As, Ba, Be, B, Cd, Ca, Cr, Co, Cu, Fe, Pb, Li, Mg, Mo, Mn, Hg, Ni, K, Se, Ag, Na, Sr, Tl, Sn, Ti, W, U, V, Zn
		Al, Sb, As, Ba, Be, B, Cd, Ca, Cr, Co, Cu, Fe, Pb, Li, Mg, Mo, Mn, Hg, Ni, K, Se, Ag, Na, Sr, Tl, Sn, Ti, W, U, V, Zn
		Al, Sb, As, Ba, Be, B, Cd, Ca, Cr, Co, Cu, Fe, Pb, Li, Mg, Mo, Mn, Hg, Ni, K, Se, Ag, Na, Sr, Tl, Sn, Ti, W, U, V, Zn
		Al, Sb, As, Ba, Be, B, Cd, Ca, Cr, Co, Cu, Fe, Pb, Li, Mg, Mo, Mn, Hg, Ni, K, Se, Ag, Na, Sr, Tl, Sn, Ti, W, U, V, Zn
		Al, Sb, As, Ba, Be, B, Cd, Ca, Cr, Co, Cu, Fe, Pb, Li, Mg, Mo, Mn, Hg, Ni, K, Se, Ag, Na, Sr, Tl, Sn, Ti, W, U, V, Zn
		Al, Sb, As, Ba, Be, B, Cd, Ca, Cr, Co, Cu, Fe, Pb, Li, Mg, Mo, Mn, Hg, Ni, K, Se, Ag, Na, Sr, Tl, Sn, Ti, W, U, V, Zn
		Al, Sb, As, Ba, Be, B, Cd, Ca, Cr, Co, Cu, Fe, Pb, Li, Mg, Mo, Mn, Hg, Ni, K, Se, Ag, Na, Sr, Tl, Sn, Ti, W, U, V, Zn
		Al, Sb, As, Ba, Be, B, Cd, Ca, Cr, Co, Cu, Fe, Pb, Li, Mg, Mo, Mn, Hg, Ni, K, Se, Ag, Na, Sr, Tl, Sn, Ti, W, U, V, Zn
		Al, Sb, As, Ba, Be, B, Cd, Ca, Cr, Co, Cu, Fe, Pb, Li, Mg, Mo, Mn, Hg, Ni, K, Se, Ag, Na, Sr, Tl, Sn, Ti, W, U, V, Zn
		Al, Sb, As, Ba, Be, B, Cd, Ca, Cr, Co, Cu, Fe, Pb, Li, Mg, Mo, Mn, Hg, Ni, K, Se, Ag, Na, Sr, Tl, Sn, Ti, W, U, V, Zn
		Al, Sb, As, Ba, Be, B, Cd, Ca, Cr, Co, Cu, Fe, Pb, Li, Mg, Mo, Mn, Hg, Ni, K, Se, Ag, Na, Sr, Tl, Sn, Ti, W, U, V, Zn
Analysis Method		
ICP		Al, Sb, As, Ba, Be, B, Cd, Ca, Cr, Co, Cu, Fe, Pb, Li, Mg, Mo, Mn, Hg, Ni, K, Se, Ag, Na, Sr, Tl, Sn, Ti, W, U, V, Zn
ICP-MS		Al, Sb, As, Ba, Be, B, Cd, Ca, Cr, Co, Cu, Fe, Pb, Li, Mg, Mo, Mn, Hg, Ni, K, Se, Ag, Na, Sr, Tl, Sn, Ti, W, U, V, Zn
GFAA		Al, Sb, As, Ba, Be, B, Cd, Ca, Cr, Co, Cu, Fe, Pb, Li, Mg, Mo, Mn, Hg, Ni, K, Se, Ag, Na, Sr, Tl, Sn, Ti, W, U, V, Zn

Comments: Mercury by CVAA if performed

LDC #: 48734l4a

VALIDATION FINDINGS WORKSHEET
Matrix Spike/Matrix Spike Duplicates

Reviewer: DTM
2nd Reviewer:

METHOD: Trace metals (EPA SW 846 Method 6020/6010/7470)

Please see qualifications below for all questions answered "N". Not applicable questions are identified as "N/A".

(Y) N N/A Was a matrix spike analyzed for each matrix in this SDG?

(Y) N N/A Were matrix spike percent recoveries (%R) within the control limits of 75-125? If the sample concentration exceeded the spike concentration by a factor of 4 or more, no action was taken.

Y (N) N/A Were all duplicate sample relative percent differences (RPD) ≤ 20% for samples?

LEVEL IV ONLY:

Y N N/A Were recalculated results acceptable? See Level IV Recalculation Worksheet for recalculations.

#	MS/MSD ID	Matrix	Analyte	MS %Recovery	MSD %Recovery	RPD (Limits)	Associated Samples	Qualifications
	13/14	S	Hg			36	ALL	J/UJ/A (det)

Comments:

LDC#: 48734l4a

VALIDATION FINDINGS WORKSHEET

Field Duplicates

Reviewer: DTM

2nd Reviewer:

METHOD: Metals (EPA Method 6010/6020/7000)

Analyte	Concentration (mg/Kg)		RPD
	1	12	
Copper	43.5	33.7	25
Mercury	0.31	0.24	25

V:\Darionna\FIELD DUPLICATES\Field Duplicates\FD_inorganic\2020\48734l4a.wpd

Laboratory Data Consultants, Inc.
Data Validation Report

Project/Site Name: Kimberly-Clark Upland Area

LDC Report Date: August 17, 2020

Parameters: Polychlorinated Biphenyls

Validation Level: Stage 2A

Laboratory: Friedman & Bruya, Inc.

Sample Delivery Group (SDG): 006466

Sample Identification	Laboratory Sample Identification	Matrix	Collection Date
OMS-S-01-2.5-062620	006466-01	Soil	06/26/20
OMS-S-02-2.5-062620	006466-02	Soil	06/26/20
OMS-S-02-2.5-062620DL	006466-02DL	Soil	06/26/20
OMS-S-03-2.5-062620	006466-03	Soil	06/26/20
OMS-S-04-2.5-062620	006466-04	Soil	06/26/20
OMS-B-01-5-062620	006466-05	Soil	06/26/20
OMS-B-02-5-062620	006466-06	Soil	06/26/20
OMS-B-03-5-062620	006466-07	Soil	06/26/20
OMS-S-05-2.5-062620	006466-08	Soil	06/26/20
OMS-S-06-2.5-062620	006466-09	Soil	06/26/20
OMS-B-04-5-062620	006466-10	Soil	06/26/20
OMS-506-062620	006466-11	Soil	06/26/20
OMS-S-07-2.5-062620	006466-12	Soil	06/26/20
OMS-B-05-5-062620	006466-13	Soil	06/26/20
OMS-S-12-2.5-062620	006466-14	Soil	06/26/20
OMS-S-11-2.5-062620	006466-15	Soil	06/26/20
OMS-B-06-5-062620	006466-16	Soil	06/26/20
OMS-S-01-2.5-062620MS	006466-01MS	Soil	06/26/20
OMS-S-01-2.5-062620MSD	006466-01MSD	Soil	06/26/20

Introduction

This Data Validation Report (DVR) presents data validation findings and results for the associated samples listed on the cover page. Data validation was performed in accordance with a modified outline of the USEPA National Functional Guidelines (NFG) for Organic Superfund Methods Data Review (January 2017). Where specific guidance was not available, the data has been evaluated in a conservative manner consistent with industry standards using professional experience.

The analyses were performed by the following method:

Polychlorinated Biphenyls (PCBs) by Environmental Protection Agency (EPA) SW 846 Method 8082A

All sample results were subjected to Stage 2A data validation, which comprises an evaluation of quality control (QC) summary results.

The following are definitions of the data qualifiers utilized during data validation:

J (Estimated): The compound or analyte was analyzed for and positively identified by the laboratory; however the reported concentration is estimated due to non-conformances discovered during data validation.

U (Non-detected): The compound or analyte was analyzed for and positively identified by the laboratory; however the compound or analyte should be considered non-detected at the reported concentration due to the presence of contaminants detected in the associated blank(s).

UJ (Non-detected estimated): The compound or analyte was reported as not detected by the laboratory; however the reported quantitation/detection limit is estimated due to non-conformances discovered during data validation.

DNR Do not report from this analysis; the result for this analyte is to be reported from an alternative analysis.

R (Rejected): The sample results were rejected due to gross non-conformances discovered during data validation. Data qualified as rejected is not usable.

NA (Not Applicable): The non-conformance discovered during data validation demonstrates a high bias, while the affected compound or analyte in the associated sample(s) was reported as not detected by the laboratory and did not warrant the qualification of the data.

A qualification summary table is provided at the end of this report if data has been qualified. Flags are classified as P (protocol) or A (advisory) to indicate whether the flag is due to a laboratory deviation from a specified protocol or is of technical advisory nature.

I. Sample Receipt and Technical Holding Times

All samples were received in good condition and cooler temperatures upon receipt met validation criteria.

All technical holding time requirements were met.

II. Initial Calibration and Initial Calibration Verification

Initial calibration data were not reviewed for Stage 2A validation.

III. Continuing Calibration

Continuing calibration data were not reviewed for Stage 2A validation.

IV. Laboratory Blanks

Laboratory blanks were analyzed as required by the method. No contaminants were found in the laboratory blanks.

V. Field Blanks

No field blanks were identified in this SDG.

VI. Surrogates

Surrogates were added to all samples as required by the method. All surrogate recoveries (%R) were within QC limits.

VII. Matrix Spike/Matrix Spike Duplicates

Matrix spike (MS) and matrix spike duplicate (MSD) sample analysis was performed on an associated project sample. Percent recoveries (%R) were within QC limits. Relative percent differences (RPD) were within QC limits.

VIII. Laboratory Control Samples

Laboratory control samples (LCS) were analyzed as required by the method. Percent recoveries (%R) were within QC limits.

IX. Field Duplicates

Samples OMS-B-04-5-062620 and OMS-506-062620 were identified as field duplicates. No results were detected in any of the samples.

X. Compound Quantitation

Raw data were not reviewed for Stage 2A validation.

XI. Target Compound Identification

Raw data were not reviewed for Stage 2A validation.

XII. Overall Assessment of Data

The analysis was conducted within all specifications of the method.

In the case where more than one result was reported for an individual sample, the least technically acceptable results were deemed not reportable as follows:

Sample	Compound	Reason	Flag	A or P
OMS-S-02-2.5-062620	Aroclor-1254	Results exceeded calibration range.	DNR	A
OMS-S-02-2.5-062620DL	All compounds except Aroclor-1254	Results from undiluted analyses were more usable.	DNR	A

No results were rejected in this SDG.

Kimberly-Clark Upland Area
Polychlorinated Biphenyls - Data Qualification Summary - SDG 006466

Sample	Compound	Flag	A or P	Reason
OMS-S-02-2.5-062620	Aroclor-1254	DNR	A	Overall assessment of data
OMS-S-02-2.5-062620DL	All compounds except Aroclor-1254	DNR	A	Overall assessment of data

Kimberly-Clark Upland Area
Polychlorinated Biphenyls - Laboratory Blank Data Qualification Summary - SDG 006466

No Sample Data Qualified in this SDG

Kimberly-Clark Upland Area
Polychlorinated Biphenyls - Field Blank Data Qualification Summary - SDG 006466

No Sample Data Qualified in this SDG

LDC #: 48734J3b
SDG #: 006466
Laboratory: Friedman & Bruya, Inc.

VALIDATION COMPLETENESS WORKSHEET
Stage 2A

Date: 08/13/20
Page: 1 of 2
Reviewer: LT
2nd Reviewer:

METHOD: GC Polychlorinated Biphenyls (EPA SW846 Method 8082A)

The samples listed below were reviewed for each of the following validation areas. Validation findings are noted in attached validation findings worksheets.

	Validation Area		Comments
I.	Sample receipt/Technical holding times	A/A	
II.	Initial calibration/ICV	N/N	
III.	Continuing calibration	N	
IV.	Laboratory Blanks	A	
V.	Field blanks	N	
VI.	Surrogate spikes	A	
VII.	Matrix spike/Matrix spike duplicates	A	(18,19)
VIII.	Laboratory control samples	A	LCS
IX.	Field duplicates	ND	D= 11+12
X.	Compound quantitation/RL/LOQ/LODs	N	Dry weight basis
XI.	Target compound identification	N	
XII.	Overall assessment of data	SW	

Note: A = Acceptable
N = Not provided/applicable
SW = See worksheet
ND = No compounds detected
R = Rinsate
FB = Field blank
D = Duplicate
TB = Trip blank
EB = Equipment blank
SB=Source blank
OTHER:

	Client ID		Lab ID	Matrix	Date
1	OMS-S-01-2.5-062620		006466-01	Soil	06/26/20
2	OMS-S-02-2.5-062620		006466-02	Soil	06/26/20
3	OMS-S-02-2.5-062620DL		006466-02DL	Soil	06/26/20
4	OMS-S-03-2.5-062620		006466-03	Soil	06/26/20
5	OMS-S-04-2.5-062620		006466-04	Soil	06/26/20
6	OMS-B-01-5-062620		006466-05	Soil	06/26/20
7	OMS-B-02-5-062620		006466-06	Soil	06/26/20
8	OMS-B-03-5-062620		006466-07	Soil	06/26/20
9	OMS-S-05-2.5-062620		006466-08	Soil	06/26/20
10	OMS-S-06-2.5-062620		006466-09	Soil	06/26/20
11	OMS-B-04-5-062620	D	006466-10	Soil	06/26/20
12	OMS-506-062620	D	006466-11	Soil	06/26/20
13	OMS-S-07-2.5-062620		006466-12	Soil	06/26/20
14	OMS-B-05-5-062620		006466-13	Soil	06/26/20
15	OMS-S-12-2.5-062620		006466-14	Soil	06/26/20
16	OMS-S-11-2.5-062620		006466-15	Soil	06/26/20
17	OMS-B-06-5-062620		006466-16	Soil	06/26/20

LDC #: 48734J3b

SDG #: 006466

Laboratory: Friedman & Bruya, Inc.

VALIDATION COMPLETENESS WORKSHEET

Stage 2A

Date: 08/6/20

Page: 2 of 2

Reviewer: [illegible]

2nd Reviewer: [illegible]

METHOD: GC Polychlorinated Biphenyls (EPA SW846 Method 8082A)

	Client ID	Lab ID	Matrix	Date
18	OMS-S-01-2.5-062620MS	006466-01MS	Soil	06/26/20
19	OMS-S-01-2.5-062620MSD	006466-01MSD	Soil	06/26/20
20				
21				
22				

Notes:

1	00-1482MB1/6						

LDC #: 48734J3b

VALIDATION FINDINGS WORKSHEET
Overall Assessment of Data

Reviewer: LT
2nd Reviewer:

METHOD: GC PCBs (EPA SW 846 Method 8082A)

Please see qualifications below for all questions answered "N". Not applicable questions are identified as "N/A".

All available information pertaining to the data were reviewed using professional judgement to compliment the determination of the overall quality of the data.

Yes x No__ N/A__ Was the overall quality and usability of the data acceptable?

#	Date	Sample ID	Compound	Finding	Qualifications
		2	Aroclor 1254	exceed calibration range	DNR
		3	All except Aroclor 1254	diluted	DNR

Comments: _____

Laboratory Data Consultants, Inc.
Data Validation Report

Project/Site Name: Kimberly-Clark Upland Area

LDC Report Date: August 13, 2020

Parameters: Metals

Validation Level: Stage 2A

Laboratory: Friedman & Bruya, Inc.

Sample Delivery Group (SDG): 006466

Sample Identification	Laboratory Sample Identification	Matrix	Collection Date
OMS-S-01-2.5-062620	006466-01	Soil	06/26/20
OMS-S-02-2.5-062620	006466-02	Soil	06/26/20
OMS-S-03-2.5-062620	006466-03	Soil	06/26/20
OMS-S-04-2.5-062620	006466-04	Soil	06/26/20
OMS-B-01-5-062620	006466-05	Soil	06/26/20
OMS-B-02-5-062620	006466-06	Soil	06/26/20
OMS-B-03-5-062620	006466-07	Soil	06/26/20
OMS-S-05-2.5-062620	006466-08	Soil	06/26/20
OMS-S-06-2.5-062620	006466-09	Soil	06/26/20
OMS-B-04-5-062620	006466-10	Soil	06/26/20
OMS-506-062620	006466-11	Soil	06/26/20
OMS-S-07-2.5-062620	006466-12	Soil	06/26/20
OMS-B-05-5-062620	006466-13	Soil	06/26/20
OMS-S-12-2.5-062620	006466-14	Soil	06/26/20
OMS-S-11-2.5-062620	006466-15	Soil	06/26/20
OMS-B-06-5-062620	006466-16	Soil	06/26/20
OMS-S-01-2.5-062620MS	006466-01MS	Soil	06/26/20
OMS-S-01-2.5-062620MSD	006466-01MSD	Soil	06/26/20

Introduction

This Data Validation Report (DVR) presents data validation findings and results for the associated samples listed on the cover page. Data validation was performed in accordance with a modified outline of the USEPA National Functional Guidelines (NFG) for Inorganic Superfund Methods Data Review (January 2017). Where specific guidance was not available, the data has been evaluated in a conservative manner consistent with industry standards using professional experience.

The analyses were performed by the following methods:

Copper by Environmental Protection Agency (EPA) SW 846 Method 6020B
Mercury by EPA Method 1631E

All sample results were subjected to Stage 2A data validation, which comprises an evaluation of quality control (QC) summary results.

The following are definitions of the data qualifiers utilized during data validation:

J (Estimated): The compound or analyte was analyzed for and positively identified by the laboratory; however the reported concentration is estimated due to non-conformances discovered during data validation.

U (Non-detected): The compound or analyte was analyzed for and positively identified by the laboratory; however the compound or analyte should be considered non-detected at the reported concentration due to the presence of contaminants detected in the associated blank(s).

UJ (Non-detected estimated): The compound or analyte was reported as not detected by the laboratory; however the reported quantitation/detection limit is estimated due to non-conformances discovered during data validation.

R (Rejected): The sample results were rejected due to gross non-conformances discovered during data validation. Data qualified as rejected is not usable.

NA (Not Applicable): The non-conformance discovered during data validation demonstrates a high bias, while the affected compound or analyte in the associated sample(s) was reported as not detected by the laboratory and did not warrant the qualification of the data.

A qualification summary table is provided at the end of this report if data has been qualified. Flags are classified as P (protocol) or A (advisory) to indicate whether the flag is due to a laboratory deviation from a specified protocol or is of technical advisory nature.

I. Sample Receipt and Technical Holding Times

All samples were received in good condition.

All technical holding time requirements were met.

II. ICPMS Tune

ICP-MS tune data were not reviewed for Stage 2A validation.

III. Instrument Calibration

Instrument calibration data were not reviewed for Stage 2A validation.

IV. ICP Interference Check Sample Analysis

ICP Interference check sample (ICS) analysis data were not reviewed for Stage 2A validation.

V. Laboratory Blanks

Laboratory blanks were analyzed as required by the methods. No contaminants were found in the laboratory blanks.

VI. Field Blanks

No field blanks were identified in this SDG.

VII. Matrix Spike/Matrix Spike Duplicates

Matrix spike (MS) and matrix spike duplicate (MSD) sample analysis was performed on an associated project sample. Percent recoveries (%R) were within QC limits with the following exceptions:

Spike ID (Associated Samples)	Analyte	MS (%R) (Limits)	MSD (%R) (Limits)	Flag	A or P
OMS-S-01-2.5-062620MS/MSD (OMS-S-01-2.5-062620 OMS-S-02-2.5-062620 OMS-S-03-2.5-062620 OMS-S-04-2.5-062620 OMS-B-01-5-062620 OMS-B-02-5-062620 OMS-S-05-2.5-062620 OMS-S-06-2.5-062620 OMS-506-062620 OMS-S-07-2.5-062620 OMS-B-05-5-062620 OMS-S-12-2.5-062620 OMS-S-11-2.5-062620 OMS-B-06-5-062620)	Copper	-	164 (75-125)	J (all detects)	A

Spike ID (Associated Samples)	Analyte	MS (%R) (Limits)	MSD (%R) (Limits)	Flag	A or P
OMS-S-01-2.5-062620MS/MSD (OMS-B-03-5-062620 OMS-B-04-5-062620)	Copper	-	164 (75-125)	NA	-

Relative percent differences (RPD) were within QC limits with the following exceptions:

Spike ID (Associated Samples)	Analyte	RPD (Limits)	Flag	A or P
OMS-S-01-2.5-062620MS/MSD (All samples in SDG 006466)	Copper	56 (≤20)	J (all detects) UJ (all non-detects)	A

VIII. Duplicate Sample Analysis

The laboratory has indicated that there were no duplicate (DUP) analyses specified for the samples in this SDG, and therefore duplicate analyses were not performed for this SDG.

IX. Serial Dilution

Serial dilution was not performed for this SDG.

X. Laboratory Control Samples

Laboratory control samples (LCS) were analyzed as required by the methods. Percent recoveries (%R) were within QC limits.

XI. Field Duplicates

Samples OMS-B-04-5-062620 and OMS-506-062620 were identified as field duplicates. No results were detected in any of the samples with the following exceptions:

Analyte	Concentration (mg/Kg)		RPD
	OMS-B-04-5-062620	OMS-506-062620	
Copper	5U	5.11	Not calculable

XII. Internal Standards (ICP-MS)

Internal standards data were not reviewed for Stage 2A validation.

XIII. Sample Result Verification

Raw data were not reviewed for Stage 2A validation.

XIV. Overall Assessment of Data

The analysis was conducted within all specifications of the methods.

Due to MS/MSD %R and RPD, data were qualified as estimated in sixteen samples.

No results were rejected in this SDG.

Kimberly-Clark Upland Area
Metals - Data Qualification Summary - SDG 006466

Sample	Analyte	Flag	A or P	Reason
OMS-S-01-2.5-062620 OMS-S-02-2.5-062620 OMS-S-03-2.5-062620 OMS-S-04-2.5-062620 OMS-B-01-5-062620 OMS-B-02-5-062620 OMS-S-05-2.5-062620 OMS-S-06-2.5-062620 OMS-506-062620 OMS-S-07-2.5-062620 OMS-B-05-5-062620 OMS-S-12-2.5-062620 OMS-S-11-2.5-062620 OMS-B-06-5-062620	Copper	J (all detects)	A	Matrix spike/Matrix spike duplicate (%R)
OMS-S-01-2.5-062620 OMS-S-02-2.5-062620 OMS-S-03-2.5-062620 OMS-S-04-2.5-062620 OMS-B-01-5-062620 OMS-B-02-5-062620 OMS-B-03-5-062620 OMS-S-05-2.5-062620 OMS-S-06-2.5-062620 OMS-B-04-5-062620 OMS-506-062620 OMS-S-07-2.5-062620 OMS-B-05-5-062620 OMS-S-12-2.5-062620 OMS-S-11-2.5-062620 OMS-B-06-5-062620	Copper	J (all detects) UJ (all non-detects)	A	Matrix spike/Matrix spike duplicate (RPD)

Kimberly-Clark Upland Area
Metals - Laboratory Blank Data Qualification Summary - SDG 006466

No Sample Data Qualified in this SDG

Kimberly-Clark Upland Area
Metals - Field Blank Data Qualification Summary - SDG 006466

No Sample Data Qualified in this SDG

LDC #: 48734J4a

SDG #: 006466

Laboratory: Friedman & Bruya, Inc.

VALIDATION COMPLETENESS WORKSHEET

Stage 2A

Date: 8/12/2020

Page: 1 of 2

Reviewer: DTM

2nd Reviewer:

METHOD: Cu, Hg (EPA SW 846 Method 6020B/EPA Method 1631E)

The samples listed below were reviewed for each of the following validation areas. Validation findings are noted in attached validation findings worksheets.

	Validation Area		Comments
I.	Sample receipt/Technical holding times	A / A	
II.	ICP/MS Tune	N	
III.	Instrument Calibration	N	
IV.	ICP Interference Check Sample (ICS) Analysis	N	
V.	Laboratory Blanks	A	
VI.	Field Blanks	N	
VII.	Matrix Spike/Matrix Spike Duplicates	SW	
VIII.	Duplicate sample analysis	N	
IX.	Serial Dilution	N	
X.	Laboratory control samples	A	LCS
XI.	Field Duplicates	~~A~~ SW	(10, 11)
XII.	Internal Standard (ICP-MS)	N	
XIII.	Sample Result Verification	N	
XIV	Overall Assessment of Data	A	

Note: A = Acceptable; N = Not provided/applicable; SW = See worksheet; ND = No compounds detected; R = Rinsate; FB = Field blank; D = Duplicate; TB = Trip blank; EB = Equipment blank; SB=Source blank; OTHER:

	Client ID	Lab ID	Matrix	Date
1	OMS-S-01-2.5-062620	006466-01	Soil	06/26/20
2	OMS-S-02-2.5-062620	006466-02	Soil	06/26/20
3	OMS-S-03-2.5-062620	006466-03	Soil	06/26/20
4	OMS-S-04-2.5-062620	006466-04	Soil	06/26/20
5	OMS-B-01-5-062620	006466-05	Soil	06/26/20
6	OMS-B-02-5-062620	006466-06	Soil	06/26/20
7	OMS-B-03-5-062620	006466-07	Soil	06/26/20
8	OMS-S-05-2.5-062620	006466-08	Soil	06/26/20
9	OMS-S-06-2.5-062620	006466-09	Soil	06/26/20
10	OMS-B-04-5-062620	006466-10	Soil	06/26/20
11	OMS-506-062620	006466-11	Soil	06/26/20
12	OMS-S-07-2.5-062620	006466-12	Soil	06/26/20
13	OMS-B-05-5-062620	006466-13	Soil	06/26/20
14	OMS-S-12-2.5-062620	006466-14	Soil	06/26/20
15	OMS-S-11-2.5-062620	006466-15	Soil	06/26/20

LDC #: 48734J4a

SDG #: 006466

Laboratory: Friedman & Bruya, Inc.

VALIDATION COMPLETENESS WORKSHEET

Stage 2A

Date: 8/12/2020

Reviewer: DM

2nd Reviewer:

METHOD: Cu, Hg (EPA SW 846 Method 6020B/EPA Method 1631E)

	Client ID	Lab ID	Matrix	Date
16	OMS-B-06-5-062620	006466-16	Soil	06/26/20
17	OMS-S-01-2.5-062620MS	006466-01MS	Soil	06/26/20
18	OMS-S-01-2.5-062620MSD	006466-01MSD	Soil	06/26/20
19				
20				
21				

Notes:

LDC #: 49734U4q

VALIDATION FINDINGS WORKSHEET
Sample Specific Element Reference

Reviewer: DTM
2nd reviewer:

All circled elements are applicable to each sample.

Sample ID	Matrix	Target Analyte List (TAL)
1-16	S	Al, Sb, As, Ba, Be, B, Cd, Ca, Cr, Co, (Cu) Fe, ~~Pb~~ DTM Li, Mg, Mo, Mn, (Hg) Ni, K, Se, Ag, Na, Sr, Tl, Sn, Ti, W, U, V, Zn
		Al, Sb, As, Ba, Be, B, Cd, Ca, Cr, Co, Cu, Fe, Pb, Li, Mg, Mo, Mn, Hg, Ni, K, Se, Ag, Na, Sr, Tl, Sn, Ti, W, U, V, Zn
GC17-18	S	Al, Sb, As, Ba, Be, B, Cd, Ca, Cr, Co, (Cu) Fe, Pb, Li, Mg, Mo, Mn, (Hg) Ni, K, Se, Ag, Na, Sr, Tl, Sn, Ti, W, U, V, Zn
		Al, Sb, As, Ba, Be, B, Cd, Ca, Cr, Co, Cu, Fe, Pb, Li, Mg, Mo, Mn, Hg, Ni, K, Se, Ag, Na, Sr, Tl, Sn, Ti, W, U, V, Zn
		Al, Sb, As, Ba, Be, B, Cd, Ca, Cr, Co, Cu, Fe, Pb, Li, Mg, Mo, Mn, Hg, Ni, K, Se, Ag, Na, Sr, Tl, Sn, Ti, W, U, V, Zn
		Al, Sb, As, Ba, Be, B, Cd, Ca, Cr, Co, Cu, Fe, Pb, Li, Mg, Mo, Mn, Hg, Ni, K, Se, Ag, Na, Sr, Tl, Sn, Ti, W, U, V, Zn
		Al, Sb, As, Ba, Be, B, Cd, Ca, Cr, Co, Cu, Fe, Pb, Li, Mg, Mo, Mn, Hg, Ni, K, Se, Ag, Na, Sr, Tl, Sn, Ti, W, U, V, Zn
		Al, Sb, As, Ba, Be, B, Cd, Ca, Cr, Co, Cu, Fe, Pb, Li, Mg, Mo, Mn, Hg, Ni, K, Se, Ag, Na, Sr, Tl, Sn, Ti, W, U, V, Zn
		Al, Sb, As, Ba, Be, B, Cd, Ca, Cr, Co, Cu, Fe, Pb, Li, Mg, Mo, Mn, Hg, Ni, K, Se, Ag, Na, Sr, Tl, Sn, Ti, W, U, V, Zn
		Al, Sb, As, Ba, Be, B, Cd, Ca, Cr, Co, Cu, Fe, Pb, Li, Mg, Mo, Mn, Hg, Ni, K, Se, Ag, Na, Sr, Tl, Sn, Ti, W, U, V, Zn
		Al, Sb, As, Ba, Be, B, Cd, Ca, Cr, Co, Cu, Fe, Pb, Li, Mg, Mo, Mn, Hg, Ni, K, Se, Ag, Na, Sr, Tl, Sn, Ti, W, U, V, Zn
		Al, Sb, As, Ba, Be, B, Cd, Ca, Cr, Co, Cu, Fe, Pb, Li, Mg, Mo, Mn, Hg, Ni, K, Se, Ag, Na, Sr, Tl, Sn, Ti, W, U, V, Zn
		Al, Sb, As, Ba, Be, B, Cd, Ca, Cr, Co, Cu, Fe, Pb, Li, Mg, Mo, Mn, Hg, Ni, K, Se, Ag, Na, Sr, Tl, Sn, Ti, W, U, V, Zn
		Al, Sb, As, Ba, Be, B, Cd, Ca, Cr, Co, Cu, Fe, Pb, Li, Mg, Mo, Mn, Hg, Ni, K, Se, Ag, Na, Sr, Tl, Sn, Ti, W, U, V, Zn
		Al, Sb, As, Ba, Be, B, Cd, Ca, Cr, Co, Cu, Fe, Pb, Li, Mg, Mo, Mn, Hg, Ni, K, Se, Ag, Na, Sr, Tl, Sn, Ti, W, U, V, Zn
		Al, Sb, As, Ba, Be, B, Cd, Ca, Cr, Co, Cu, Fe, Pb, Li, Mg, Mo, Mn, Hg, Ni, K, Se, Ag, Na, Sr, Tl, Sn, Ti, W, U, V, Zn
		Al, Sb, As, Ba, Be, B, Cd, Ca, Cr, Co, Cu, Fe, Pb, Li, Mg, Mo, Mn, Hg, Ni, K, Se, Ag, Na, Sr, Tl, Sn, Ti, W, U, V, Zn
		Al, Sb, As, Ba, Be, B, Cd, Ca, Cr, Co, Cu, Fe, Pb, Li, Mg, Mo, Mn, Hg, Ni, K, Se, Ag, Na, Sr, Tl, Sn, Ti, W, U, V, Zn
		Al, Sb, As, Ba, Be, B, Cd, Ca, Cr, Co, Cu, Fe, Pb, Li, Mg, Mo, Mn, Hg, Ni, K, Se, Ag, Na, Sr, Tl, Sn, Ti, W, U, V, Zn
		Al, Sb, As, Ba, Be, B, Cd, Ca, Cr, Co, Cu, Fe, Pb, Li, Mg, Mo, Mn, Hg, Ni, K, Se, Ag, Na, Sr, Tl, Sn, Ti, W, U, V, Zn
Analysis Method		
ICP		Al, Sb, As, Ba, Be, B, Cd, Ca, Cr, Co, Cu, Fe, Pb, Li, Mg, Mo, Mn, Hg, Ni, K, Se, Ag, Na, Sr, Tl, Sn, Ti, W, U, V, Zn
ICP-MS		Al, Sb, As, Ba, Be, B, Cd, Ca, Cr, Co, Cu, Fe, Pb, Li, Mg, Mo, Mn, Hg, Ni, K, Se, Ag, Na, Sr, Tl, Sn, Ti, W, U, V, Zn
GFAA		Al, Sb, As, Ba, Be, B, Cd, Ca, Cr, Co, Cu, Fe, Pb, Li, Mg, Mo, Mn, Hg, Ni, K, Se, Ag, Na, Sr, Tl, Sn, Ti, W, U, V, Zn

Comments: Mercury by CVAA if performed

LDC #: 48734J4a

VALIDATION FINDINGS WORKSHEET
Matrix Spike/Matrix Spike Duplicates

Reviewer: DTM
2nd Reviewer:

METHOD: Trace metals (EPA SW 846 Method 6020/6010/7470)

Please see qualifications below for all questions answered "N". Not applicable questions are identified as "N/A".

Y N N/A Was a matrix spike analyzed for each matrix in this SDG?

Y N N/A Were matrix spike percent recoveries (%R) within the control limits of 75-125? If the sample concentration exceeded the spike concentration by a factor of 4 or more, no action was taken.

Y N N/A Were all duplicate sample relative percent differences (RPD) ≤ 20% for samples?

LEVEL IV ONLY:

Y N N/A Were recalculated results acceptable? See Level IV Recalculation Worksheet for recalculations.

#	MS/MSD ID	Matrix	Analyte	MS %Recovery	MSD %Recovery	RPD (Limits)	Associated Samples	Qualifications
	17/18	S	Cu		164		ALL	J/A (det,ND) 7,10=M
			Cu			56	ALL	J/UJ/A (det,ND)

Comments:

LDC#: 48734J4a

VALIDATION FINDINGS WORKSHEET

Field Duplicates

Reviewer: DTM
2nd Reviewer:

METHOD: Metals (EPA Method 6010/6020/7000)

Analyte	Concentration (mg/Kg)		RPD
	10	11	
Copper	5U	5.11	NC

V:\Darionna\FIELD DUPLICATES\Field Duplicates\FD_inorganic\2020\48734J4a.wpd

Laboratory Data Consultants, Inc.
Data Validation Report

Project/Site Name: Kimberly-Clark Upland Area

LDC Report Date: August 17, 2020

Parameters: Polynuclear Aromatic Hydrocarbons

Validation Level: Stage 2A

Laboratory: Friedman & Bruya, Inc.

Sample Delivery Group (SDG): 006498

Sample Identification	Laboratory Sample Identification	Matrix	Collection Date
LP-S-18-6.5	006498-07	Soil	06/29/20
LP-S-19-6.5	006498-08	Soil	06/29/20
LP-S-20-6.5	006498-09	Soil	06/29/20
LP-S-21-6.5	006498-10	Soil	06/29/20
LP-B-03-10	006498-11	Soil	06/29/20
CNW-B-03-7	006498-12	Soil	06/29/20
LP-S-18-6.5MS	006498-07MS	Soil	06/29/20
LP-S-18-6.5MSD	006498-07MSD	Soil	06/29/20

Introduction

This Data Validation Report (DVR) presents data validation findings and results for the associated samples listed on the cover page. Data validation was performed in accordance with a modified outline of the USEPA National Functional Guidelines (NFG) for Organic Superfund Methods Data Review (January 2017). Where specific guidance was not available, the data has been evaluated in a conservative manner consistent with industry standards using professional experience.

The analyses were performed by the following method:

Polynuclear Aromatic Hydrocarbons (PAHs) by Environmental Protection Agency (EPA) SW 846 Method 8270E in Selected Ion Monitoring (SIM) mode

All sample results were subjected to Stage 2A data validation, which comprises an evaluation of quality control (QC) summary results.

The following are definitions of the data qualifiers utilized during data validation:

J (Estimated): The compound or analyte was analyzed for and positively identified by the laboratory; however the reported concentration is estimated due to non-conformances discovered during data validation.

U (Non-detected): The compound or analyte was analyzed for and positively identified by the laboratory; however the compound or analyte should be considered non-detected at the reported concentration due to the presence of contaminants detected in the associated blank(s).

UJ (Non-detected estimated): The compound or analyte was reported as not detected by the laboratory; however the reported quantitation/detection limit is estimated due to non-conformances discovered during data validation.

R (Rejected): The sample results were rejected due to gross non-conformances discovered during data validation. Data qualified as rejected is not usable.

NA (Not Applicable): The non-conformance discovered during data validation demonstrates a high bias, while the affected compound or analyte in the associated sample(s) was reported as not detected by the laboratory and did not warrant the qualification of the data.

A qualification summary table is provided at the end of this report if data has been qualified. Flags are classified as P (protocol) or A (advisory) to indicate whether the flag is due to a laboratory deviation from a specified protocol or is of technical advisory nature.

I. Sample Receipt and Technical Holding Times

All samples were received in good condition and cooler temperatures upon receipt met validation criteria.

All technical holding time requirements were met.

II. GC/MS Instrument Performance Check

Instrument performance check data were not reviewed for Stage 2A validation.

III. Initial Calibration and Initial Calibration Verification

Initial calibration data were not reviewed for Stage 2A validation.

IV. Continuing Calibration

Continuing calibration data were not reviewed for Stage 2A validation.

V. Laboratory Blanks

Laboratory blanks were analyzed as required by the method. No contaminants were found in the laboratory blanks.

VI. Field Blanks

No field blanks were identified in this SDG.

VII. Surrogates

Surrogates were added to all samples as required by the method. All surrogate recoveries (%R) were within QC limits.

VIII. Matrix Spike/Matrix Spike Duplicates

Matrix spike (MS) and matrix spike duplicate (MSD) sample analysis was performed on an associated project sample. Percent recoveries (%R) were within QC limits. Relative percent differences (RPD) were within QC limits.

IX. Laboratory Control Samples

Laboratory control samples (LCS) were analyzed as required by the method. Percent recoveries (%R) were within QC limits.

X. Field Duplicates

No field duplicates were identified in this SDG.

XI. Internal Standards

Internal standards data were not reviewed for Stage 2A validation.

XII. Compound Quantitation

Raw data were not reviewed for Stage 2A validation.

XIII. Target Compound Identifications

Raw data were not reviewed for Stage 2A validation.

XIV. System Performance

Raw data were not reviewed for Stage 2A validation.

XV. Overall Assessment of Data

The analysis was conducted within all specifications of the method. No results were rejected in this SDG.

Kimberly-Clark Upland Area
Polynuclear Aromatic Hydrocarbons - Data Qualification Summary - SDG 006498

No Sample Data Qualified in this SDG

Kimberly-Clark Upland Area
Polynuclear Aromatic Hydrocarbons - Laboratory Blank Data Qualification Summary - SDG 006498

No Sample Data Qualified in this SDG

Kimberly-Clark Upland Area
Polynuclear Aromatic Hydrocarbons - Field Blank Data Qualification Summary - SDG 006498

No Sample Data Qualified in this SDG

LDC #: 48734K2b **VALIDATION COMPLETENESS WORKSHEET** Date: 08/13/20
SDG #: 006498 Stage 2A Page: 1 of 1
Laboratory: Friedman & Bruya, Inc. Reviewer: VT
2nd Reviewer:

METHOD: GC/MS Polynuclear Aromatic Hydrocarbons (EPA SW 846 Method 8270E-SIM)

The samples listed below were reviewed for each of the following validation areas. Validation findings are noted in attached validation findings worksheets.

	Validation Area		Comments
I.	Sample receipt/Technical holding times	A/A	
II.	GC/MS Instrument performance check	N	
III.	Initial calibration/ICV	N/N	
IV.	Continuing calibration	N	
V.	Laboratory Blanks	A	
VI.	Field blanks	N	
VII.	Surrogate spikes	A	
VIII.	Matrix spike/Matrix spike duplicates	A ~~SW~~	(7,8)
IX.	Laboratory control samples	A	LCS
X.	Field duplicates	N	
XI.	Internal standards	N	
XII.	Compound quantitation RL/LOQ/LODs	N	
XIII.	Target compound identification	N	
XIV.	System performance	N	
XV.	Overall assessment of data	A	

Note: A = Acceptable; N = Not provided/applicable; SW = See worksheet; ND = No compounds detected; R = Rinsate; FB = Field blank; D = Duplicate; TB = Trip blank; EB = Equipment blank; SB=Source blank; OTHER:

	Client ID	Lab ID	Matrix	Date
1	LP-S-18-6.5	006498-07	Soil	06/29/20
2	LP-S-19-6.5	006498-08	Soil	06/29/20
3	LP-S-20-6.5	006498-09	Soil	06/29/20
4	LP-S-21-6.5	006498-10	Soil	06/29/20
5	LP-B-03-10	006498-11	Soil	06/29/20
6	CNW-B-03-7	006498-12	Soil	06/29/20
7	LP-S-18-6.5MS	006498-07MS	Soil	06/29/20
8	LP-S-18-6.5MSD	006498-07MSD	Soil	06/29/20
9				
10				

Notes:

1	00-1529MB LCS						

Laboratory Data Consultants, Inc.
Data Validation Report

Project/Site Name: Kimberly-Clark Upland Area

LDC Report Date: August 17, 2020

Parameters: Polychlorinated Biphenyls

Validation Level: Stage 2A

Laboratory: Friedman & Bruya, Inc.

Sample Delivery Group (SDG): 006498

Sample Identification	Laboratory Sample Identification	Matrix	Collection Date
OMS-B-07-5	006498-01	Soil	06/29/20
OMS-B-08-5	006498-02	Soil	06/29/20
OMS-S-10-2.5	006498-03	Soil	06/29/20
OMS-S-10-2.5DL	006498-03DL	Soil	06/29/20
OMS-S-09-2.5	006498-04	Soil	06/29/20
OMS-S-08-2.5	006498-05	Soil	06/29/20
OMS-B-09-5	006498-06	Soil	06/29/20
OMS-B-07-5MS	006498-01MS	Soil	06/29/20
OMS-B-07-5MSD	006498-01MSD	Soil	06/29/20

Introduction

This Data Validation Report (DVR) presents data validation findings and results for the associated samples listed on the cover page. Data validation was performed in accordance with a modified outline of the USEPA National Functional Guidelines (NFG) for Organic Superfund Methods Data Review (January 2017). Where specific guidance was not available, the data has been evaluated in a conservative manner consistent with industry standards using professional experience.

The analyses were performed by the following method:

Polychlorinated Biphenyls (PCBs) by Environmental Protection Agency (EPA) SW 846 Method 8082A

All sample results were subjected to Stage 2A data validation, which comprises an evaluation of quality control (QC) summary results.

The following are definitions of the data qualifiers utilized during data validation:

J (Estimated): The compound or analyte was analyzed for and positively identified by the laboratory; however the reported concentration is estimated due to non-conformances discovered during data validation.

U (Non-detected): The compound or analyte was analyzed for and positively identified by the laboratory; however the compound or analyte should be considered non-detected at the reported concentration due to the presence of contaminants detected in the associated blank(s).

UJ (Non-detected estimated): The compound or analyte was reported as not detected by the laboratory; however the reported quantitation/detection limit is estimated due to non-conformances discovered during data validation.

DNR Do not report from this analysis; the result for this analyte is to be reported from an alternative analysis.

R (Rejected): The sample results were rejected due to gross non-conformances discovered during data validation. Data qualified as rejected is not usable.

NA (Not Applicable): The non-conformance discovered during data validation demonstrates a high bias, while the affected compound or analyte in the associated sample(s) was reported as not detected by the laboratory and did not warrant the qualification of the data.

A qualification summary table is provided at the end of this report if data has been qualified. Flags are classified as P (protocol) or A (advisory) to indicate whether the flag is due to a laboratory deviation from a specified protocol or is of technical advisory nature.

I. Sample Receipt and Technical Holding Times

All samples were received in good condition and cooler temperatures upon receipt met validation criteria.

All technical holding time requirements were met.

II. Initial Calibration and Initial Calibration Verification

Initial calibration data were not reviewed for Stage 2A validation.

III. Continuing Calibration

Continuing calibration data were not reviewed for Stage 2A validation.

IV. Laboratory Blanks

Laboratory blanks were analyzed as required by the method. No contaminants were found in the laboratory blanks.

V. Field Blanks

No field blanks were identified in this SDG.

VI. Surrogates

Surrogates were added to all samples as required by the method. All surrogate recoveries (%R) were within QC limits.

VII. Matrix Spike/Matrix Spike Duplicates

Matrix spike (MS) and matrix spike duplicate (MSD) sample analysis was performed on an associated project sample. Percent recoveries (%R) were within QC limits. Relative percent differences (RPD) were within QC limits.

VIII. Laboratory Control Samples

Laboratory control samples (LCS) were analyzed as required by the method. Percent recoveries (%R) were within QC limits.

IX. Field Duplicates

No field duplicates were identified in this SDG.

X. Compound Quantitation

Raw data were not reviewed for Stage 2A validation.

XI. Target Compound Identification

Raw data were not reviewed for Stage 2A validation.

XII. Overall Assessment of Data

The analysis was conducted within all specifications of the method.

In the case where more than one result was reported for an individual sample, the least technically acceptable results were deemed not reportable as follows:

Sample	Compound	Reason	Flag	A or P
OMS-S-10-2.5	Aroclor-1254	Results exceeded calibration range.	DNR	A

No results were rejected in this SDG.

Kimberly-Clark Upland Area
Polychlorinated Biphenyls - Data Qualification Summary - SDG 006498

Sample	Compound	Flag	A or P	Reason
OMS-S-10-2.5	Aroclor-1254	DNR	A	Overall assessment of data

Kimberly-Clark Upland Area
Polychlorinated Biphenyls - Laboratory Blank Data Qualification Summary - SDG 006498

No Sample Data Qualified in this SDG

Kimberly-Clark Upland Area
Polychlorinated Biphenyls - Field Blank Data Qualification Summary - SDG 006498

No Sample Data Qualified in this SDG

LDC #: 48734K3b
SDG #: 006498
Laboratory: Friedman & Bruya, Inc.

VALIDATION COMPLETENESS WORKSHEET
Stage 2A

Date: 08/13/20
Page: 1 of 1
Reviewer: LT
2nd Reviewer:

METHOD: GC Polychlorinated Biphenyls (EPA SW846 Method 8082A)

The samples listed below were reviewed for each of the following validation areas. Validation findings are noted in attached validation findings worksheets.

	Validation Area		Comments
I.	Sample receipt/Technical holding times	A/A	
II.	Initial calibration/ICV	N/N	
III.	Continuing calibration	N	
IV.	Laboratory Blanks	A	
V.	Field blanks	N	
VI.	Surrogate spikes	A	
VII.	Matrix spike/Matrix spike duplicates	A	(8,9)
VIII.	Laboratory control samples	A	LCS
IX.	Field duplicates	N	
X.	Compound quantitation/RL/LOQ/LODs	N	
XI.	Target compound identification	N	
XII.	Overall assessment of data	SW	

Note: A = Acceptable; N = Not provided/applicable; SW = See worksheet; ND = No compounds detected; R = Rinsate; FB = Field blank; D = Duplicate; TB = Trip blank; EB = Equipment blank; SB=Source blank; OTHER:

	Client ID	Lab ID	Matrix	Date
1	OMS-B-07-5	006498-01	Soil	06/29/20
2	OMS-B-08-5	006498-02	Soil	06/29/20
3	OMS-S-10-2.5	006498-03	Soil	06/29/20
4	OMS-S-10-2.5DL	006498-03DL	Soil	06/29/20
5	OMS-S-09-2.5	006498-04	Soil	06/29/20
6	OMS-S-08-2.5	006498-05	Soil	06/29/20
7	OMS-B-09-5	006498-06	Soil	06/29/20
8	OMS-B-07-5MS	006498-01MS	Soil	06/29/20
9	OMS-B-07-5MSD	006498-01MSD	Soil	06/29/20
10				
11				
12				
13				

Notes:

1	00-1578-MB 1/6						

LDC #: 48734K3b

VALIDATION FINDINGS WORKSHEET
Overall Assessment of Data

Reviewer: LT
2nd Reviewer:

METHOD: GC PCBs (EPA SW 846 Method 8082A)

Please see qualifications below for all questions answered "N". Not applicable questions are identified as "N/A".

All available information pertaining to the data were reviewed using professional judgement to compliment the determination of the overall quality of the data.

Yes x No__ N/A__ Was the overall quality and usability of the data acceptable?

#	Date	Sample ID	Compound	Finding	Qualifications
		3	Aroclor 1254	exceed calibration range	DNR

Comments: _____

Laboratory Data Consultants, Inc.
Data Validation Report

Project/Site Name: Kimberly-Clark Upland Area

LDC Report Date: August 13, 2020

Parameters: Metals

Validation Level: Stage 2A

Laboratory: Friedman & Bruya, Inc.

Sample Delivery Group (SDG): 006498

Sample Identification	Laboratory Sample Identification	Matrix	Collection Date
OMS-B-07-5	006498-01	Soil	06/29/20
OMS-B-08-5	006498-02	Soil	06/29/20
OMS-S-10-2.5	006498-03	Soil	06/29/20
OMS-S-09-2.5	006498-04	Soil	06/29/20
OMS-S-08-2.5	006498-05	Soil	06/29/20
OMS-B-09-5	006498-06	Soil	06/29/20
LP-S-18-6.5	006498-07	Soil	06/29/20
LP-S-19-6.5	006498-08	Soil	06/29/20
LP-S-20-63.5	006498-09	Soil	06/29/20
LP-S-21-3.5	006498-10	Soil	06/29/20
LP-B-03-10	006498-11	Soil	06/29/20
OMS-B-07-5MS	006498-01MS	Soil	06/29/20
OMS-B-07-5MSD	006498-01MSD	Soil	06/29/20

Introduction

This Data Validation Report (DVR) presents data validation findings and results for the associated samples listed on the cover page. Data validation was performed in accordance with a modified outline of the USEPA National Functional Guidelines (NFG) for Inorganic Superfund Methods Data Review (January 2017). Where specific guidance was not available, the data has been evaluated in a conservative manner consistent with industry standards using professional experience.

The analyses were performed by the following methods:

Copper by Environmental Protection Agency (EPA) SW 846 Method 6020B
Mercury by EPA Method 1631E

All sample results were subjected to Stage 2A data validation, which comprises an evaluation of quality control (QC) summary results.

The following are definitions of the data qualifiers utilized during data validation:

J (Estimated): The compound or analyte was analyzed for and positively identified by the laboratory; however the reported concentration is estimated due to non-conformances discovered during data validation.

U (Non-detected): The compound or analyte was analyzed for and positively identified by the laboratory; however the compound or analyte should be considered non-detected at the reported concentration due to the presence of contaminants detected in the associated blank(s).

UJ (Non-detected estimated): The compound or analyte was reported as not detected by the laboratory; however the reported quantitation/detection limit is estimated due to non-conformances discovered during data validation.

R (Rejected): The sample results were rejected due to gross non-conformances discovered during data validation. Data qualified as rejected is not usable.

NA (Not Applicable): The non-conformance discovered during data validation demonstrates a high bias, while the affected compound or analyte in the associated sample(s) was reported as not detected by the laboratory and did not warrant the qualification of the data.

A qualification summary table is provided at the end of this report if data has been qualified. Flags are classified as P (protocol) or A (advisory) to indicate whether the flag is due to a laboratory deviation from a specified protocol or is of technical advisory nature.

I. Sample Receipt and Technical Holding Times

All samples were received in good condition.

All technical holding time requirements were met.

II. ICPMS Tune

ICP-MS tune data were not reviewed for Stage 2A validation.

III. Instrument Calibration

Instrument calibration data were not reviewed for Stage 2A validation.

IV. ICP Interference Check Sample Analysis

ICP Interference check sample (ICS) analysis data were not reviewed for Stage 2A validation.

V. Laboratory Blanks

Laboratory blanks were analyzed as required by the methods. No contaminants were found in the laboratory blanks.

VI. Field Blanks

No field blanks were identified in this SDG.

VII. Matrix Spike/Matrix Spike Duplicates

Matrix spike (MS) and matrix spike duplicate (MSD) sample analysis was performed on an associated project sample. Percent recoveries (%R) were within QC limits. Relative percent differences (RPD) were within QC limits.

VIII. Duplicate Sample Analysis

The laboratory has indicated that there were no duplicate (DUP) analyses specified for the samples in this SDG, and therefore duplicate analyses were not performed for this SDG.

IX. Serial Dilution

Serial dilution was not performed for this SDG.

X. Laboratory Control Samples

Laboratory control samples (LCS) were analyzed as required by the methods. Percent recoveries (%R) were within QC limits.

XI. Field Duplicates

No field duplicates were identified in this SDG.

XII. Internal Standards (ICP-MS)

Internal standards data were not reviewed for Stage 2A validation.

XIII. Sample Result Verification

Raw data were not reviewed for Stage 2A validation.

XIV. Overall Assessment of Data

The analysis was conducted within all specifications of the methods. No results were rejected in this SDG.

Kimberly-Clark Upland Area
Metals - Data Qualification Summary - SDG 006498

No Sample Data Qualified in this SDG

Kimberly-Clark Upland Area
Metals - Laboratory Blank Data Qualification Summary - SDG 006498

No Sample Data Qualified in this SDG

Kimberly-Clark Upland Area
Metals - Field Blank Data Qualification Summary - SDG 006498

No Sample Data Qualified in this SDG

LDC #: 48734K4a
SDG #: 006498
Laboratory: Friedman & Bruya, Inc.

VALIDATION COMPLETENESS WORKSHEET
Stage 2A

Date: 9/12/2020
Page: 1 of 1
Reviewer: DM
2nd Reviewer:

METHOD: Cu, Hg (EPA SW 846 Method 6020B/EPA Method 1631E)

The samples listed below were reviewed for each of the following validation areas. Validation findings are noted in attached validation findings worksheets.

	Validation Area		Comments
I.	Sample receipt/Technical holding times	A / A	
II.	ICP/MS Tune	N	
III.	Instrument Calibration	N	
IV.	ICP Interference Check Sample (ICS) Analysis	N	
V.	Laboratory Blanks	A	
VI.	Field Blanks	N	
VII.	Matrix Spike/Matrix Spike Duplicates	A	
VIII.	Duplicate sample analysis	N	
IX.	Serial Dilution	N	
X.	Laboratory control samples	A	LCS
XI.	Field Duplicates	N	
XII.	Internal Standard (ICP-MS)	N	
XIII.	Sample Result Verification	N	
XIV.	Overall Assessment of Data	A	

Note: A = Acceptable; N = Not provided/applicable; SW = See worksheet; ND = No compounds detected; R = Rinsate; FB = Field blank; D = Duplicate; TB = Trip blank; EB = Equipment blank; SB=Source blank; OTHER:

	Client ID	Lab ID	Matrix	Date
1	OMS-B-07-5	006498-01	Soil	06/29/20
2	OMS-B-08-5	006498-02	Soil	06/29/20
3	OMS-S-10-2.5	006498-03	Soil	06/29/20
4	OMS-S-09-2.5	006498-04	Soil	06/29/20
5	OMS-S-08-2.5	006498-05	Soil	06/29/20
6	OMS-B-09-5	006498-06	Soil	06/29/20
7	LP-S-18-6.5	006498-07	Soil	06/29/20
8	LP-S-19-6.5	006498-08	Soil	06/29/20
9	LP-S-20-63.5	006498-09	Soil	06/29/20
10	LP-S-21-3.5	006498-10	Soil	06/29/20
11	LP-B-03-10	006498-11	Soil	06/29/20
12	OMS-B-07-5MS	006498-01MS	Soil	06/29/20
13	OMS-B-07-5MSD	006498-01MSD	Soil	06/29/20
14				
15				

LDC #: 48734KNa

VALIDATION FINDINGS WORKSHEET
Sample Specific Element Reference

Reviewer: DTM
2nd reviewer:

All circled elements are applicable to each sample.

Sample ID	Matrix	Target Analyte List (TAL)
1-36	S	Al, Sb, As, Ba, Be, B, Cd, Ca, Cr, Co, (Cu) Fe, Pb, Li, Mg, Mo, Mn, (Hg) Ni, K, Se, Ag, Na, Sr, Tl, Sn, Ti, W, U, V, Zn
		Al, Sb, As, Ba, Be, B, Cd, Ca, Cr, Co, Cu, Fe, Pb, Li, Mg, Mo, Mn, Hg, Ni, K, Se, Ag, Na, Sr, Tl, Sn, Ti, W, U, V, Zn
7-11	S	Al, Sb, As, Ba, Be, B, Cd, Ca, Cr, Co, Cu, Fe, Pb, Li, Mg, Mo, Mn, (Hg) Ni, K, Se, Ag, Na, Sr, Tl, Sn, Ti, W, U, V, Zn
		Al, Sb, As, Ba, Be, B, Cd, Ca, Cr, Co, Cu, Fe, Pb, Li, Mg, Mo, Mn, Hg, Ni, K, Se, Ag, Na, Sr, Tl, Sn, Ti, W, U, V, Zn
QC12-13	S	Al, Sb, As, Ba, Be, B, Cd, Ca, Cr, Co, (Cu) Fe, Pb, Li, Mg, Mo, Mn, (Hg) Ni, K, Se, Ag, Na, Sr, Tl, Sn, Ti, W, U, V, Zn
		Al, Sb, As, Ba, Be, B, Cd, Ca, Cr, Co, Cu, Fe, Pb, Li, Mg, Mo, Mn, Hg, Ni, K, Se, Ag, Na, Sr, Tl, Sn, Ti, W, U, V, Zn
		Al, Sb, As, Ba, Be, B, Cd, Ca, Cr, Co, Cu, Fe, Pb, Li, Mg, Mo, Mn, Hg, Ni, K, Se, Ag, Na, Sr, Tl, Sn, Ti, W, U, V, Zn
		Al, Sb, As, Ba, Be, B, Cd, Ca, Cr, Co, Cu, Fe, Pb, Li, Mg, Mo, Mn, Hg, Ni, K, Se, Ag, Na, Sr, Tl, Sn, Ti, W, U, V, Zn
		Al, Sb, As, Ba, Be, B, Cd, Ca, Cr, Co, Cu, Fe, Pb, Li, Mg, Mo, Mn, Hg, Ni, K, Se, Ag, Na, Sr, Tl, Sn, Ti, W, U, V, Zn
		Al, Sb, As, Ba, Be, B, Cd, Ca, Cr, Co, Cu, Fe, Pb, Li, Mg, Mo, Mn, Hg, Ni, K, Se, Ag, Na, Sr, Tl, Sn, Ti, W, U, V, Zn
		Al, Sb, As, Ba, Be, B, Cd, Ca, Cr, Co, Cu, Fe, Pb, Li, Mg, Mo, Mn, Hg, Ni, K, Se, Ag, Na, Sr, Tl, Sn, Ti, W, U, V, Zn
		Al, Sb, As, Ba, Be, B, Cd, Ca, Cr, Co, Cu, Fe, Pb, Li, Mg, Mo, Mn, Hg, Ni, K, Se, Ag, Na, Sr, Tl, Sn, Ti, W, U, V, Zn
		Al, Sb, As, Ba, Be, B, Cd, Ca, Cr, Co, Cu, Fe, Pb, Li, Mg, Mo, Mn, Hg, Ni, K, Se, Ag, Na, Sr, Tl, Sn, Ti, W, U, V, Zn
		Al, Sb, As, Ba, Be, B, Cd, Ca, Cr, Co, Cu, Fe, Pb, Li, Mg, Mo, Mn, Hg, Ni, K, Se, Ag, Na, Sr, Tl, Sn, Ti, W, U, V, Zn
		Al, Sb, As, Ba, Be, B, Cd, Ca, Cr, Co, Cu, Fe, Pb, Li, Mg, Mo, Mn, Hg, Ni, K, Se, Ag, Na, Sr, Tl, Sn, Ti, W, U, V, Zn
		Al, Sb, As, Ba, Be, B, Cd, Ca, Cr, Co, Cu, Fe, Pb, Li, Mg, Mo, Mn, Hg, Ni, K, Se, Ag, Na, Sr, Tl, Sn, Ti, W, U, V, Zn
		Al, Sb, As, Ba, Be, B, Cd, Ca, Cr, Co, Cu, Fe, Pb, Li, Mg, Mo, Mn, Hg, Ni, K, Se, Ag, Na, Sr, Tl, Sn, Ti, W, U, V, Zn
		Al, Sb, As, Ba, Be, B, Cd, Ca, Cr, Co, Cu, Fe, Pb, Li, Mg, Mo, Mn, Hg, Ni, K, Se, Ag, Na, Sr, Tl, Sn, Ti, W, U, V, Zn
		Al, Sb, As, Ba, Be, B, Cd, Ca, Cr, Co, Cu, Fe, Pb, Li, Mg, Mo, Mn, Hg, Ni, K, Se, Ag, Na, Sr, Tl, Sn, Ti, W, U, V, Zn
		Al, Sb, As, Ba, Be, B, Cd, Ca, Cr, Co, Cu, Fe, Pb, Li, Mg, Mo, Mn, Hg, Ni, K, Se, Ag, Na, Sr, Tl, Sn, Ti, W, U, V, Zn
		Al, Sb, As, Ba, Be, B, Cd, Ca, Cr, Co, Cu, Fe, Pb, Li, Mg, Mo, Mn, Hg, Ni, K, Se, Ag, Na, Sr, Tl, Sn, Ti, W, U, V, Zn
Analysis Method		
ICP		Al, Sb, As, Ba, Be, B, Cd, Ca, Cr, Co, Cu, Fe, Pb, Li, Mg, Mo, Mn, Hg, Ni, K, Se, Ag, Na, Sr, Tl, Sn, Ti, W, U, V, Zn
ICP-MS		Al, Sb, As, Ba, Be, B, Cd, Ca, Cr, Co, Cu, Fe, Pb, Li, Mg, Mo, Mn, Hg, Ni, K, Se, Ag, Na, Sr, Tl, Sn, Ti, W, U, V, Zn
GFAA		Al, Sb, As, Ba, Be, B, Cd, Ca, Cr, Co, Cu, Fe, Pb, Li, Mg, Mo, Mn, Hg, Ni, K, Se, Ag, Na, Sr, Tl, Sn, Ti, W, U, V, Zn

Comments: Mercury by CVAA if performed

LABORATORY DATA CONSULTANTS, INC.
2701 Loker Ave. West, Suite 220, Carlsbad, CA 92010 Bus: 760-827-1100 Fax: 760-827-1099

Aspect Consulting LLC
701 Second Ave., Suite 550
Seattle, WA 98104
ATTN: Carla Brock, LHG
cbrock@aspectconsulting.com

September 11, 2020

SUBJECT: Kimberly-Clark Upland Area, Data Validation

Dear Ms. Brock,

Enclosed are the final validation reports for the fractions listed below. These SDGs were received on August 20, 2020. Attachment 1 is a summary of the samples that were reviewed for each analysis.

LDC Project #48922:

SDG #	Fraction
007064, 007149, 007180, 007206 007234, 007259, 007302, 007347 007450, 007468, 007498, 007525 008016, 008046, 008072, 008170 008214	Polynuclear Aromatic Hydrocarbons, Polychlorinated Biphenyls, Metals, Oil & Grease

The data validation was performed under Stage 2A guidelines. The analyses were validated using the following documents, as applicable to each method:

- USEPA National Functional Guidelines for Organic Superfund Methods Data Review, January 2017
- USEPA National Functional Guidelines for Inorganic Superfund Methods Data Review; January 2017
- EPA SW 846, Third Edition, Test Methods for Evaluating Solid Waste, update 1, July 1992; update IIA, August 1993; update II, September 1994; update IIB, January 1995; update III, December 1996; update IIIA, April 1998; IIIB, November 2004; update IV, February 2007; update V, July 2014

Please feel free to contact us if you have any questions.

Sincerely,

Christina Rink

Christina Rink
crink@lab-data.com
Project Manager/Senior Chemist

Stage 2A EDD

LDC #48922 (Aspect Consulting, LLC - Seattle, WA / Kimberly-Clark Upland Area 2020 Interm Action)

LDC	SDG#	DATE REC'D	(3) DATE DUE	(16) PAH (8270E -SIM)		PCBs (8082A)		(9) Metals (200.8)		Cu (6020B)		Hg (1631E)		O&G (1664)																							
Matrix:	Water/Soil			W	S	W	S	W	S	W	S	W	S	W	S	W	S	W	S	W	S	W	S	W	S	W	S	W	S	W	S	W	S	W	S
A	007064	08/20/20	09/11/20	-	-	0	8	-	-	0	6	0	12	-	-																				
B	007149	08/20/20	09/11/20	0	8	0	9	-	-	-	-	-	-	-	-																				
C	007180	08/20/20	09/11/20	0	6	0	6	-	-	-	-	-	-	-	-																				
D	007206	08/20/20	09/11/20	0	5	0	6	-	-	-	-	-	-	-	-																				
E	007234	08/20/20	09/11/20	0	5	0	5	-	-	-	-	-	-	-	-																				
F	007259	08/20/20	09/11/20	-	-	0	6	-	-	0	4	0	5	-	-																				
G	007302	08/20/20	09/11/20	0	9	0	9	-	-	-	-	-	-	-	-																				
H	007347	08/20/20	09/11/20	-	-	-	-	-	-	-	-	0	1	-	-																				
I	007450	08/20/20	09/11/20	0	12	0	12	-	-	-	-	-	-	-	-																				
J	007468	08/20/20	09/11/20	0	11	0	11	-	-	-	-	-	-	-	-																				
K	007498	08/20/20	09/11/20	0	3	0	3	-	-	-	-	-	-	-	-																				
L	007525	08/20/20	09/11/20	0	2	0	2	-	-	-	-	-	-	-	-																				
M	008016	08/20/20	09/11/20	0	5	0	5	1	0	-	-	-	-	1	0																				
N	008046	08/20/20	09/11/20	0	4	0	5	-	-	-	-	-	-	-	-																				
O	008072	08/20/20	09/11/20	0	2	0	2	-	-	-	-	-	-	-	-																				
P	008170	08/20/20	09/11/20	0	2	0	11	-	-	-	-	0	3	-	-																				
Q	008214	08/20/20	09/11/20	0	1	0	5	-	-	-	-	-	-	-	-																				
Total	T/CR			0	75	0	105	1	0	0	10	0	21	1	0	0	0	0	0	0	0	0	0	0	0	0	0	0	0	0	0	0	0	0	213

Shaded cells indicate Stage 4 validation (all other cells are Stage 2A validation). These sample counts do not include MS, MSD, or DUP's.

Laboratory Data Consultants, Inc.
Data Validation Report

Project/Site Name: Kimberly-Clark Upland Area

LDC Report Date: September 9, 2020

Parameters: Polychlorinated Biphenyls

Validation Level: Stage 2A

Laboratory: Friedman & Bruya, Inc.

Sample Delivery Group (SDG): 007064

Sample Identification	Laboratory Sample Identification	Matrix	Collection Date
OMS-S-13-2.5-070620	007064-07	Soil	07/06/20
OMS-S-13-2.5-070620DL	007064-07DL	Soil	07/06/20
OMS-S-14-2.5-070620	007064-08	Soil	07/06/20
OMS-S-14-2.5-070620DL	007064-08DL	Soil	07/06/20
OMS-S-15-2.5-070620	007064-09	Soil	07/06/20
OMS-S-17-2.5-070620	007064-10	Soil	07/06/20
OMS-S-16-2.5-070620	007064-11	Soil	07/06/20
OMS-S-18-2.5-070620	007064-12	Soil	07/06/20
OMS-S-13-2.5-070620MS	007064-07MS	Soil	07/06/20
OMS-S-13-2.5-070620MSD	007064-07MSD	Soil	07/06/20

Introduction

This Data Validation Report (DVR) presents data validation findings and results for the associated samples listed on the cover page. Data validation was performed in accordance with a modified outline of the USEPA National Functional Guidelines (NFG) for Organic Superfund Methods Data Review (January 2017). Where specific guidance was not available, the data has been evaluated in a conservative manner consistent with industry standards using professional experience.

The analyses were performed by the following method:

Polychlorinated Biphenyls (PCBs) by Environmental Protection Agency (EPA) SW 846 Method 8082A

All sample results were subjected to Stage 2A data validation, which comprises an evaluation of quality control (QC) summary results.

The following are definitions of the data qualifiers utilized during data validation:

J (Estimated): The compound or analyte was analyzed for and positively identified by the laboratory; however the reported concentration is estimated due to non-conformances discovered during data validation.

U (Non-detected): The compound or analyte was analyzed for and positively identified by the laboratory; however the compound or analyte should be considered non-detected at the reported concentration due to the presence of contaminants detected in the associated blank(s).

UJ (Non-detected estimated): The compound or analyte was reported as not detected by the laboratory; however the reported quantitation/detection limit is estimated due to non-conformances discovered during data validation.

DNR Do not report from this analysis; the result for this analyte is to be reported from an alternative analysis.

R (Rejected): The sample results were rejected due to gross non-conformances discovered during data validation. Data qualified as rejected is not usable.

NA (Not Applicable): The non-conformance discovered during data validation demonstrates a high bias, while the affected compound or analyte in the associated sample(s) was reported as not detected by the laboratory and did not warrant the qualification of the data.

A qualification summary table is provided at the end of this report if data has been qualified. Flags are classified as P (protocol) or A (advisory) to indicate whether the flag is due to a laboratory deviation from a specified protocol or is of technical advisory nature.

I. Sample Receipt and Technical Holding Times

All samples were received in good condition and cooler temperatures upon receipt met validation criteria.

All technical holding time requirements were met.

II. Initial Calibration and Initial Calibration Verification

Initial calibration data were not reviewed for Stage 2A validation.

III. Continuing Calibration

Continuing calibration data were not reviewed for Stage 2A validation.

IV. Laboratory Blanks

Laboratory blanks were analyzed as required by the method. No contaminants were found in the laboratory blanks.

V. Field Blanks

No field blanks were identified in this SDG.

VI. Surrogates

Surrogates were added to all samples as required by the method. All surrogate recoveries (%R) were within QC limits.

VII. Matrix Spike/Matrix Spike Duplicates

Matrix spike (MS) and matrix spike duplicate (MSD) sample analysis was performed on an associated project sample. Percent recoveries (%R) were within QC limits with the following exceptions:

Spike ID (Associated Samples)	Compound	MS (%R) (Limits)	MSD (%R) (Limits)	Flag	A or P
OMS-S-13-2.5-070620MS/MSD (OMS-S-13-2.5-070620)	Aroclor-1016 Aroclor-1260	156 (44-107) 10500 (38-124)	- 6460 (38-124)	NA	-

Relative percent differences (RPD) were within QC limits with the following exceptions:

Spike ID (Associated Samples)	Compound	RPD (Limits)	Flag	A or P
OMS-S-13-2.5-070620MS/MSD (OMS-S-13-2.5-070620)	Aroclor-1016 Aroclor-1260	50 (≤20) 48 (≤20)	NA	-

VIII. Laboratory Control Samples

Laboratory control samples (LCS) were analyzed as required by the method. Percent recoveries (%R) were within QC limits.

IX. Field Duplicates

No field duplicates were identified in this SDG.

X. Compound Quantitation

Raw data were not reviewed for Stage 2A validation.

XI. Target Compound Identification

Raw data were not reviewed for Stage 2A validation.

XII. Overall Assessment of Data

The analysis was conducted within all specifications of the method.

In the case where more than one result was reported for an individual sample, the least technically acceptable results were deemed not reportable as follows:

Sample	Compound	Reason	Flag	A or P
OMS-S-13-2.5-070620 OMS-S-14-2.5-070620	Aroclor-1254	Results exceeded calibration range.	DNR	A

No results were rejected in this SDG.

Kimberly-Clark Upland Area
Polychlorinated Biphenyls - Data Qualification Summary - SDG 007064

Sample	Compound	Flag	A or P	Reason
OMS-S-13-2.5-070620 OMS-S-14-2.5-070620	Aroclor-1254	DNR	A	Overall assessment of data

Kimberly-Clark Upland Area
Polychlorinated Biphenyls - Laboratory Blank Data Qualification Summary - SDG 007064

No Sample Data Qualified in this SDG

Kimberly-Clark Upland Area
Polychlorinated Biphenyls - Field Blank Data Qualification Summary - SDG 007064

No Sample Data Qualified in this SDG

LDC #: 48922A3b
SDG #: 007064
Laboratory: Friedman & Bruya, Inc.

VALIDATION COMPLETENESS WORKSHEET
Stage 2A

Date: 09/04/20
Page: 1 of 1
Reviewer: LF
2nd Reviewer: [signature]

METHOD: GC Polychlorinated Biphenyls (EPA SW846 Method 8082A)

The samples listed below were reviewed for each of the following validation areas. Validation findings are noted in attached validation findings worksheets.

	Validation Area		Comments
I.	Sample receipt/Technical holding times	A / A	
II.	Initial calibration/ICV	N/N	
III.	Continuing calibration	N	
IV.	Laboratory Blanks	A	
V.	Field blanks	N	
VI.	Surrogate spikes	A	
VII.	Matrix spike/Matrix spike duplicates	SW	(9,10)
VIII.	Laboratory control samples	A	LCS
IX.	Field duplicates	N	
X.	Compound quantitation/RL/LOQ/LODs	N	Dry weight basis = 1-8
XI.	Target compound identification	N	
XII.	Overall assessment of data	SW	

Note: A = Acceptable; N = Not provided/applicable; SW = See worksheet; ND = No compounds detected; R = Rinsate; FB = Field blank; D = Duplicate; TB = Trip blank; EB = Equipment blank; SB=Source blank; OTHER:

	Client ID	Lab ID	Matrix	Date
1	OMS-S-13-2.5-070620	007064-07	Soil	07/06/20
2	OMS-S-13-2.5-070620DL	007064-07DL	Soil	07/06/20
3	OMS-S-14-2.5-070620	007064-08	Soil	07/06/20
4	OMS-S-14-2.5-070620DL	007064-08DL	Soil	07/06/20
5	OMS-S-15-2.5-070620	007064-09	Soil	07/06/20
6	OMS-S-17-2.5-070620	007064-10	Soil	07/06/20
7	OMS-S-16-2.5-070620	007064-11	Soil	07/06/20
8	OMS-S-18-2.5-070620	007064-12	Soil	07/06/20
9	OMS-S-13-2.5-070620MS	007064-07MS	Soil	07/06/20
10	OMS-S-13-2.5-070620MSD	007064-07MSD	Soil	07/06/20
11				
12				
13				

Notes:

1	00-1561 MB 1/6						

LDC #: 48922A3b

VALIDATION FINDINGS WORKSHEET
Matrix Spike/Matrix Spike Duplicates

Reviewer: LT

METHOD: X **GC** ___ **HPLC**

Please see qualifications below for all questions answered "N". Not applicable questions are identified as "N/A".

Y**x** N___ N/A___ Were a matrix spike (MS) and matrix spike duplicate (MSD) analyzed for each matrix in this SDG?

Y**x** N___ N/A___ Was an MS/MSD analyzed every 20 samples for each matrix or whenever a sample extraction was performed?

Y___ N**x** N/A___ Were the MS/MSD percent recoveries (%R) and relative percent differences (RPD) within QC limits?

#	MS/MSD ID	Compound	MS %R (Limits)	MSD %R (Limits)	RPD (Limits)	Associated Samples	Qualifications
	9/10	Aroclor-1016	156 (44 - 107)			1 (ND)	J/A DETS
		Aroclor-1260	10,500 (38 - 124)	6,460 (38 - 124)		↓	↓
		Aroclor-1016			50 (≤ 20)	↓	↓
		Aroclor-1260			48 (≤ 20)	↓	↓

LDC #: 48922A3b

VALIDATION FINDINGS WORKSHEET
Overall Assessment of Data

Reviewer: LT

METHOD: GC PCBs (EPA SW 846 Method 8082A)

Please see qualifications below for all questions answered "N". Not applicable questions are identified as "N/A".

All available information pertaining to the data were reviewed using professional judgement to compliment the determination of the overall quality of the data.

Yes x No_ N/A_ Was the overall quality and usability of the data acceptable?

#	Date	Sample ID	Compound	Finding	Qualifications
		1,3	Aroclor 1254	exceed calibration range	DNR

Comments: _____

Laboratory Data Consultants, Inc.
Data Validation Report

Project/Site Name: Kimberly-Clark Upland Area

LDC Report Date: August 27, 2020

Parameters: Metals

Validation Level: Stage 2A

Laboratory: Friedman & Bruya, Inc.

Sample Delivery Group (SDG): 007064

Sample Identification	Laboratory Sample Identification	Matrix	Collection Date
PM-B-6-S-26-6-070620	007064-01	Soil	07/06/20
PM-B-6-S-23-6-070620	007064-02	Soil	07/06/20
PM-B-6-S-24-4-070620	007064-03	Soil	07/06/20
PM-B-6-S07-070620	007064-04	Soil	07/06/20
PM-B-6-S-24-6-070620	007064-05	Soil	07/06/20
PM-B-6-S-25-6-070620	007064-06	Soil	07/06/20
OMS-S-13-2.5-070620	007064-07	Soil	07/06/20
OMS-S-14-2.5-070620	007064-08	Soil	07/06/20
OMS-S-15-2.5-070620	007064-09	Soil	07/06/20
OMS-S-17-2.5-070620	007064-10	Soil	07/06/20
OMS-S-16-2.5-070620	007064-11	Soil	07/06/20
OMS-S-18-2.5-070620	007064-12	Soil	07/06/20
OMS-S-13-2.5-070620MS	007064-07MS	Soil	07/06/20
OMS-S-13-2.5-070620MSD	007064-07MSD	Soil	07/06/20

Introduction

This Data Validation Report (DVR) presents data validation findings and results for the associated samples listed on the cover page. Data validation was performed in accordance with a modified outline of the USEPA National Functional Guidelines (NFG) for Inorganic Superfund Methods Data Review (January 2017). Where specific guidance was not available, the data has been evaluated in a conservative manner consistent with industry standards using professional experience.

The analyses were performed by the following methods:

Copper by Environmental Protection Agency (EPA) SW 846 Method 6020B
Mercury by EPA Method 1631E

All sample results were subjected to Stage 2A data validation, which comprises an evaluation of quality control (QC) summary results.

The following are definitions of the data qualifiers utilized during data validation:

J (Estimated): The compound or analyte was analyzed for and positively identified by the laboratory; however the reported concentration is estimated due to non-conformances discovered during data validation.

U (Non-detected): The compound or analyte was analyzed for and positively identified by the laboratory; however the compound or analyte should be considered non-detected at the reported concentration due to the presence of contaminants detected in the associated blank(s).

UJ (Non-detected estimated): The compound or analyte was reported as not detected by the laboratory; however the reported quantitation/detection limit is estimated due to non-conformances discovered during data validation.

R (Rejected): The sample results were rejected due to gross non-conformances discovered during data validation. Data qualified as rejected is not usable.

NA (Not Applicable): The non-conformance discovered during data validation demonstrates a high bias, while the affected compound or analyte in the associated sample(s) was reported as not detected by the laboratory and did not warrant the qualification of the data.

A qualification summary table is provided at the end of this report if data has been qualified. Flags are classified as P (protocol) or A (advisory) to indicate whether the flag is due to a laboratory deviation from a specified protocol or is of technical advisory nature.

I. Sample Receipt and Technical Holding Times

All samples were received in good condition.

All technical holding time requirements were met.

II. ICPMS Tune

ICP-MS tune data were not reviewed for Stage 2A validation.

III. Instrument Calibration

Instrument calibration data were not reviewed for Stage 2A validation.

IV. ICP Interference Check Sample Analysis

ICP Interference check sample (ICS) analysis data were not reviewed for Stage 2A validation.

V. Laboratory Blanks

Laboratory blanks were analyzed as required by the methods. No contaminants were found in the laboratory blanks.

VI. Field Blanks

No field blanks were identified in this SDG.

VII. Matrix Spike/Matrix Spike Duplicates

Matrix spike (MS) and matrix spike duplicate (MSD) sample analysis was performed on an associated project sample.

For OMS-S-13-2.5-070620MS/MSD, no data were qualified for mercury and copper percent recoveries (%R) outside the QC limits since the parent sample results were greater than 4X the spike concentration.

Relative percent differences (RPD) were within QC limits with the following exceptions:

Spike ID (Associated Samples)	Analyte	RPD (Limits)	Flag	A or P
OMS-S-13-2.5-070620MS/MSD (All samples in SDG 007064)	Mercury	200 (≤20)	J (all detects) UJ (all non-detects)	A

Spike ID (Associated Samples)	Analyte	RPD (Limits)	Flag	A or P
OMS-S-13-2.5-070620MS/MSD (OMS-S-13-2.5-070620 OMS-S-14-2.5-070620 OMS-S-15-2.5-070620 OMS-S-17-2.5-070620 OMS-S-16-2.5-070620 OMS-S-18-2.5-070620)	Copper	147 (≤20)	J (all detects)	A

VIII. Duplicate Sample Analysis

The laboratory has indicated that there were no duplicate (DUP) analyses specified for the samples in this SDG, and therefore duplicate analyses were not performed for this SDG.

IX. Serial Dilution

Serial dilution was not performed for this SDG.

X. Laboratory Control Samples

Laboratory control samples (LCS) were analyzed as required by the methods. Percent recoveries (%R) were within QC limits.

XI. Field Duplicates

No field duplicates were identified in this SDG.

XII. Internal Standards (ICP-MS)

Internal standards data were not reviewed for Stage 2A validation.

XIII. Sample Result Verification

Raw data were not reviewed for Stage 2A validation.

XIV. Overall Assessment of Data

The analysis was conducted within all specifications of the methods.

Due to MS/MSD RPD, data were qualified as estimated in twelve samples.

No results were rejected in this SDG.

Kimberly-Clark Upland Area
Metals - Data Qualification Summary - SDG 007064

Sample	Analyte	Flag	A or P	Reason
PM-B-6-S-26-6-070620 PM-B-6-S-23-6-070620 PM-B-6-S-24-4-070620 PM-B-6-S07-070620 PM-B-6-S-24-6-070620 PM-B-6-S-25-6-070620 OMS-S-13-2.5-070620 OMS-S-14-2.5-070620 OMS-S-15-2.5-070620 OMS-S-17-2.5-070620 OMS-S-16-2.5-070620 OMS-S-18-2.5-070620	Mercury	J (all detects) UJ (all non-detects)	A	Matrix spike/Matrix spike duplicate (RPD)
OMS-S-13-2.5-070620 OMS-S-14-2.5-070620 OMS-S-15-2.5-070620 OMS-S-17-2.5-070620 OMS-S-16-2.5-070620 OMS-S-18-2.5-070620	Copper	J (all detects)	A	Matrix spike/Matrix spike duplicate (RPD)

Kimberly-Clark Upland Area
Metals - Laboratory Blank Data Qualification Summary - SDG 007064

No Sample Data Qualified in this SDG

Kimberly-Clark Upland Area
Metals - Field Blank Data Qualification Summary - SDG 007064

No Sample Data Qualified in this SDG

LDC #: 48922A4a
SDG #: 007064
Laboratory: Friedman & Bruya, Inc.

VALIDATION COMPLETENESS WORKSHEET
Stage 2A

Date: 9/29/2020
Page: 1 of 1
Reviewer: DM
2nd Reviewer:

METHOD: ~~Cr~~ CU, Hg (EPA SW 846 Method 6020B/EPA Method 1631E)

The samples listed below were reviewed for each of the following validation areas. Validation findings are noted in attached validation findings worksheets.

	Validation Area		Comments
I.	Sample receipt/Technical holding times	A / A	
II.	ICP/MS Tune	N	
III.	Instrument Calibration	N	
IV.	ICP Interference Check Sample (ICS) Analysis	N	
V.	Laboratory Blanks	A	
VI.	Field Blanks	N	
VII.	Matrix Spike/Matrix Spike Duplicates	SW	
VIII.	Duplicate sample analysis	N	
IX.	Serial Dilution	N	
X.	Laboratory control samples	A	LCS
XI.	Field Duplicates	N	
XII.	Internal Standard (ICP-MS)	N	
XIII.	Sample Result Verification	N	
XIV	Overall Assessment of Data	A	

Note: A = Acceptable
N = Not provided/applicable
SW = See worksheet
ND = No compounds detected
R = Rinsate
FB = Field blank
D = Duplicate
TB = Trip blank
EB = Equipment blank
SB=Source blank
OTHER:

	Client ID	Lab ID	Matrix	Date
1	PM-B-6-S-26-6-070620	007064-01	Soil	07/06/20
2	PM-B-6-S-23-6-070620	007064-02	Soil	07/06/20
3	PM-B-6-S-24-4-070620	007064-03	Soil	07/06/20
4	PM-B-6-S07-070620	007064-04	Soil	07/06/20
5	PM-B-6-S-24-6-070620	007064-05	Soil	07/06/20
6	PM-B-6-S-25-6-070620	007064-06	Soil	07/06/20
7	OMS-S-13-2.5-070620	007064-07	Soil	07/06/20
8	OMS-S-14-2.5-070620	007064-08	Soil	07/06/20
9	OMS-S-15-2.5-070620	007064-09	Soil	07/06/20
10	OMS-S-17-2.5-070620	007064-10	Soil	07/06/20
11	OMS-S-16-2.5-070620	007064-11	Soil	07/06/20
12	OMS-S-18-2.5-070620	007064-12	Soil	07/06/20
13	OMS-S-13-2.5-070620MS	007064-07MS	Soil	07/06/20
14	OMS-S-13-2.5-070620MSD	007064-07MSD	Soil	07/06/20
15				

Notes:

LDC #: 48922A4a

VALIDATION FINDINGS WORKSHEET
Sample Specific Element Reference

Reviewer: DTM

All circled elements are applicable to each sample.

Sample ID	Matrix	Target Analyte List (TAL)
1-6	S	Al, Sb, As, Ba, Be, B, Cd, Ca, Cr, Co, Cu, Fe, Pb, Li, Mg, Mo, Mn, (Hg), Ni, K, Se, Ag, Na, Sr, Tl, Sn, Ti, W, U, V, Zn
		Al, Sb, As, Ba, Be, B, Cd, Ca, Cr, Co, Cu, Fe, Pb, Li, Mg, Mo, Mn, Hg, Ni, K, Se, Ag, Na, Sr, Tl, Sn, Ti, W, U, V, Zn
7-12	S	Al, Sb, As, Ba, Be, B, Cd, Ca, Cr, Co, (Cu), Fe, Pb, Li, Mg, Mo, Mn, (Hg), Ni, K, Se, Ag, Na, Sr, Tl, Sn, Ti, W, U, V, Zn
		Al, Sb, As, Ba, Be, B, Cd, Ca, Cr, Co, Cu, Fe, Pb, Li, Mg, Mo, Mn, Hg, Ni, K, Se, Ag, Na, Sr, Tl, Sn, Ti, W, U, V, Zn
QC13-14	S	Al, Sb, As, Ba, Be, B, Cd, Ca, Cr, Co, (Cu), Fe, Pb, Li, Mg, Mo, Mn, (Hg), Ni, K, Se, Ag, Na, Sr, Tl, Sn, Ti, W, U, V, Zn
		Al, Sb, As, Ba, Be, B, Cd, Ca, Cr, Co, Cu, Fe, Pb, Li, Mg, Mo, Mn, Hg, Ni, K, Se, Ag, Na, Sr, Tl, Sn, Ti, W, U, V, Zn
		Al, Sb, As, Ba, Be, B, Cd, Ca, Cr, Co, Cu, Fe, Pb, Li, Mg, Mo, Mn, Hg, Ni, K, Se, Ag, Na, Sr, Tl, Sn, Ti, W, U, V, Zn
		Al, Sb, As, Ba, Be, B, Cd, Ca, Cr, Co, Cu, Fe, Pb, Li, Mg, Mo, Mn, Hg, Ni, K, Se, Ag, Na, Sr, Tl, Sn, Ti, W, U, V, Zn
		Al, Sb, As, Ba, Be, B, Cd, Ca, Cr, Co, Cu, Fe, Pb, Li, Mg, Mo, Mn, Hg, Ni, K, Se, Ag, Na, Sr, Tl, Sn, Ti, W, U, V, Zn
		Al, Sb, As, Ba, Be, B, Cd, Ca, Cr, Co, Cu, Fe, Pb, Li, Mg, Mo, Mn, Hg, Ni, K, Se, Ag, Na, Sr, Tl, Sn, Ti, W, U, V, Zn
		Al, Sb, As, Ba, Be, B, Cd, Ca, Cr, Co, Cu, Fe, Pb, Li, Mg, Mo, Mn, Hg, Ni, K, Se, Ag, Na, Sr, Tl, Sn, Ti, W, U, V, Zn
		Al, Sb, As, Ba, Be, B, Cd, Ca, Cr, Co, Cu, Fe, Pb, Li, Mg, Mo, Mn, Hg, Ni, K, Se, Ag, Na, Sr, Tl, Sn, Ti, W, U, V, Zn
		Al, Sb, As, Ba, Be, B, Cd, Ca, Cr, Co, Cu, Fe, Pb, Li, Mg, Mo, Mn, Hg, Ni, K, Se, Ag, Na, Sr, Tl, Sn, Ti, W, U, V, Zn
		Al, Sb, As, Ba, Be, B, Cd, Ca, Cr, Co, Cu, Fe, Pb, Li, Mg, Mo, Mn, Hg, Ni, K, Se, Ag, Na, Sr, Tl, Sn, Ti, W, U, V, Zn
		Al, Sb, As, Ba, Be, B, Cd, Ca, Cr, Co, Cu, Fe, Pb, Li, Mg, Mo, Mn, Hg, Ni, K, Se, Ag, Na, Sr, Tl, Sn, Ti, W, U, V, Zn
		Al, Sb, As, Ba, Be, B, Cd, Ca, Cr, Co, Cu, Fe, Pb, Li, Mg, Mo, Mn, Hg, Ni, K, Se, Ag, Na, Sr, Tl, Sn, Ti, W, U, V, Zn
		Al, Sb, As, Ba, Be, B, Cd, Ca, Cr, Co, Cu, Fe, Pb, Li, Mg, Mo, Mn, Hg, Ni, K, Se, Ag, Na, Sr, Tl, Sn, Ti, W, U, V, Zn
		Al, Sb, As, Ba, Be, B, Cd, Ca, Cr, Co, Cu, Fe, Pb, Li, Mg, Mo, Mn, Hg, Ni, K, Se, Ag, Na, Sr, Tl, Sn, Ti, W, U, V, Zn
		Al, Sb, As, Ba, Be, B, Cd, Ca, Cr, Co, Cu, Fe, Pb, Li, Mg, Mo, Mn, Hg, Ni, K, Se, Ag, Na, Sr, Tl, Sn, Ti, W, U, V, Zn
		Al, Sb, As, Ba, Be, B, Cd, Ca, Cr, Co, Cu, Fe, Pb, Li, Mg, Mo, Mn, Hg, Ni, K, Se, Ag, Na, Sr, Tl, Sn, Ti, W, U, V, Zn
		Al, Sb, As, Ba, Be, B, Cd, Ca, Cr, Co, Cu, Fe, Pb, Li, Mg, Mo, Mn, Hg, Ni, K, Se, Ag, Na, Sr, Tl, Sn, Ti, W, U, V, Zn

Analysis Method		
ICP		Al, Sb, As, Ba, Be, B, Cd, Ca, Cr, Co, Cu, Fe, Pb, Li, Mg, Mo, Mn, Hg, Ni, K, Se, Ag, Na, Sr, Tl, Sn, Ti, W, U, V, Zn
ICP-MS		Al, Sb, As, Ba, Be, B, Cd, Ca, Cr, Co, Cu, Fe, Pb, Li, Mg, Mo, Mn, Hg, Ni, K, Se, Ag, Na, Sr, Tl, Sn, Ti, W, U, V, Zn
GFAA		Al, Sb, As, Ba, Be, B, Cd, Ca, Cr, Co, Cu, Fe, Pb, Li, Mg, Mo, Mn, Hg, Ni, K, Se, Ag, Na, Sr, Tl, Sn, Ti, W, U, V, Zn

Comments: Mercury by CVAA if performed

LDC #: 48922A4a

VALIDATION FINDINGS WORKSHEET
Matrix Spike/Matrix Spike Duplicates

METHOD: Trace metals (EPA SW 846 Method 6020/6010/7470)

Please see qualifications below for all questions answered "N". Not applicable questions are identified as "N/A".

Y N N/A Was a matrix spike analyzed for each matrix in this SDG?

Y N N/A Were matrix spike percent recoveries (%R) within the control limits of 75-125? If the sample concentration exceeded the spike concentration by a factor of 4 or more, no action was taken.

Y N N/A Were all duplicate sample relative percent differences (RPD) ≤ 20% for samples?

LEVEL IV ONLY:

Y N N/A Were recalculated results acceptable? See Level IV Recalculation Worksheet for recalculations.

#	MS/MSD ID	Matrix	Analyte	MS %Recovery	MSD %Recovery	RPD (Limits)	Associated Samples	Qualifications
	13/14	S	Hg			200(20)	ALL	J/UJ/A (det/ND)
			Cu			147(20)	ALL	J/UJ/A (det)

Comments: 13/14 Hg, Cu >4xSpike

Laboratory Data Consultants, Inc.
Data Validation Report

Project/Site Name: Kimberly-Clark Upland Area

LDC Report Date: September 9, 2020

Parameters: Polynuclear Aromatic Hydrocarbons

Validation Level: Stage 2A

Laboratory: Friedman & Bruya, Inc.

Sample Delivery Group (SDG): 007149

Sample Identification	Laboratory Sample Identification	Matrix	Collection Date
CMS-S-01-4-070920	007149-01	Soil	07/09/20
CMS-S-02-4-070920	007149-02	Soil	07/09/20
CMS-S-03-4-070920	007149-03	Soil	07/09/20
CMS-S-04-4-070920	007149-04	Soil	07/09/20
CMS-B-35-6-070920	007149-05	Soil	07/09/20
CMS-B-38-6-070920	007149-06	Soil	07/09/20
CMS-B-36-6-070920	007149-07	Soil	07/09/20
CMS-S-05-4-070920	007149-08	Soil	07/09/20

Introduction

This Data Validation Report (DVR) presents data validation findings and results for the associated samples listed on the cover page. Data validation was performed in accordance with a modified outline of the USEPA National Functional Guidelines (NFG) for Organic Superfund Methods Data Review (January 2017). Where specific guidance was not available, the data has been evaluated in a conservative manner consistent with industry standards using professional experience.

The analyses were performed by the following method:

Polynuclear Aromatic Hydrocarbons (PAHs) by Environmental Protection Agency (EPA) SW 846 Method 8270E in Selected Ion Monitoring (SIM) mode

All sample results were subjected to Stage 2A data validation, which comprises an evaluation of quality control (QC) summary results.

The following are definitions of the data qualifiers utilized during data validation:

J (Estimated): The compound or analyte was analyzed for and positively identified by the laboratory; however the reported concentration is estimated due to non-conformances discovered during data validation.

U (Non-detected): The compound or analyte was analyzed for and positively identified by the laboratory; however the compound or analyte should be considered non-detected at the reported concentration due to the presence of contaminants detected in the associated blank(s).

UJ (Non-detected estimated): The compound or analyte was reported as not detected by the laboratory; however the reported quantitation/detection limit is estimated due to non-conformances discovered during data validation.

R (Rejected): The sample results were rejected due to gross non-conformances discovered during data validation. Data qualified as rejected is not usable.

NA (Not Applicable): The non-conformance discovered during data validation demonstrates a high bias, while the affected compound or analyte in the associated sample(s) was reported as not detected by the laboratory and did not warrant the qualification of the data.

A qualification summary table is provided at the end of this report if data has been qualified. Flags are classified as P (protocol) or A (advisory) to indicate whether the flag is due to a laboratory deviation from a specified protocol or is of technical advisory nature.

I. Sample Receipt and Technical Holding Times

All samples were received in good condition and cooler temperatures upon receipt met validation criteria.

All technical holding time requirements were met.

II. GC/MS Instrument Performance Check

Instrument performance check data were not reviewed for Stage 2A validation.

III. Initial Calibration and Initial Calibration Verification

Initial calibration data were not reviewed for Stage 2A validation.

IV. Continuing Calibration

Continuing calibration data were not reviewed for Stage 2A validation.

V. Laboratory Blanks

Laboratory blanks were analyzed as required by the method. No contaminants were found in the laboratory blanks.

VI. Field Blanks

No field blanks were identified in this SDG.

VII. Surrogates

Surrogates were added to all samples as required by the method. All surrogate recoveries (%R) were within QC limits.

VIII. Matrix Spike/Matrix Spike Duplicates

The laboratory has indicated that there were no matrix spike (MS) and matrix spike duplicate (MSD) analyses specified for the samples in this SDG, and therefore matrix spike and matrix spike duplicate analyses were not performed for this SDG.

IX. Laboratory Control Samples

Laboratory control samples (LCS) were analyzed as required by the method. Percent recoveries (%R) were within QC limits.

X. Field Duplicates

No field duplicates were identified in this SDG.

XI. Internal Standards

Internal standards data were not reviewed for Stage 2A validation.

XII. Compound Quantitation

Raw data were not reviewed for Stage 2A validation.

XIII. Target Compound Identifications

Raw data were not reviewed for Stage 2A validation.

XIV. System Performance

Raw data were not reviewed for Stage 2A validation.

XV. Overall Assessment of Data

The analysis was conducted within all specifications of the method. No results were rejected in this SDG.

Kimberly-Clark Upland Area
Polynuclear Aromatic Hydrocarbons - Data Qualification Summary - SDG 007149

No Sample Data Qualified in this SDG

Kimberly-Clark Upland Area
Polynuclear Aromatic Hydrocarbons - Laboratory Blank Data Qualification Summary - SDG 007149

No Sample Data Qualified in this SDG

Kimberly-Clark Upland Area
Polynuclear Aromatic Hydrocarbons - Field Blank Data Qualification Summary - SDG 007149

No Sample Data Qualified in this SDG

LDC #: 48922B2b
SDG #: 007149
Laboratory: Friedman & Bruya, Inc.

VALIDATION COMPLETENESS WORKSHEET
Stage 2A

Date: 09/04/20
Page: 1 of 1
Reviewer: LS
2nd Reviewer:

METHOD: GC/MS Polynuclear Aromatic Hydrocarbons (EPA SW 846 Method 8270E-SIM)

The samples listed below were reviewed for each of the following validation areas. Validation findings are noted in attached validation findings worksheets.

	Validation Area		Comments
I.	Sample receipt/Technical holding times	A / A	
II.	GC/MS Instrument performance check	N	
III.	Initial calibration/ICV	N/N	
IV.	Continuing calibration	N	
V.	Laboratory Blanks	A	
VI.	Field blanks	N	
VII.	Surrogate spikes	A	
VIII.	Matrix spike/Matrix spike duplicates	N	Non client
IX.	Laboratory control samples	A	LCS
X.	Field duplicates	N	
XI.	Internal standards	N	
XII.	Compound quantitation RL/LOQ/LODs	N	Dry weight basis = 1-8
XIII.	Target compound identification	N	
XIV.	System performance	N	
XV.	Overall assessment of data	A	

Note: A = Acceptable; N = Not provided/applicable; SW = See worksheet; ND = No compounds detected; R = Rinsate; FB = Field blank; D = Duplicate; TB = Trip blank; EB = Equipment blank; SB=Source blank; OTHER:

	Client ID	Lab ID	Matrix	Date
1	MS CSM-S-01-4-070920	007149-01	Soil	07/09/20
2	MS CSM-S-02-4-070920	007149-02	Soil	07/09/20
3	MS CSM-S-03-4-070920	007149-03	Soil	07/09/20
4	MS CSM-S-04-4-070920	007149-04	Soil	07/09/20
5	MS CSM-B-35-6-070920	007149-05	Soil	07/09/20
6	MS CSM-B-38-6-070920	007149-06	Soil	07/09/20
7	MS CSM-B-36-6-070920	007149-07	Soil	07/09/20
8	MS CSM-S-05-4-070920	007149-08	Soil	07/09/20
9				

Notes:

1	DD-1576 MB2 1/5						

Laboratory Data Consultants, Inc.
Data Validation Report

Project/Site Name: Kimberly-Clark Upland Area

LDC Report Date: September 9, 2020

Parameters: Polychlorinated Biphenyls

Validation Level: Stage 2A

Laboratory: Friedman & Bruya, Inc.

Sample Delivery Group (SDG): 007149

Sample Identification	Laboratory Sample Identification	Matrix	Collection Date
CMS-S-01-4-070920	007149-01	Soil	07/09/20
CMS-S-02-4-070920	007149-02	Soil	07/09/20
CMS-S-03-4-070920	007149-03	Soil	07/09/20
CMS-S-04-4-070920	007149-04	Soil	07/09/20
CMS-B-35-6-070920	007149-05	Soil	07/09/20
CMS-B-38-6-070920	007149-06	Soil	07/09/20
CMS-B-36-6-070920	007149-07	Soil	07/09/20
CMS-B-36-6-070920DL	007149-07DL	Soil	07/09/20
CMS-S-05-4-070920	007149-08	Soil	07/09/20
CMS-S-01-4-070920MS	007149-01MS	Soil	07/09/20
CMS-S-01-4-070920MSD	007149-01MSD	Soil	07/09/20

Introduction

This Data Validation Report (DVR) presents data validation findings and results for the associated samples listed on the cover page. Data validation was performed in accordance with a modified outline of the USEPA National Functional Guidelines (NFG) for Organic Superfund Methods Data Review (January 2017). Where specific guidance was not available, the data has been evaluated in a conservative manner consistent with industry standards using professional experience.

The analyses were performed by the following method:

Polychlorinated Biphenyls (PCBs) by Environmental Protection Agency (EPA) SW 846 Method 8082A

All sample results were subjected to Stage 2A data validation, which comprises an evaluation of quality control (QC) summary results.

The following are definitions of the data qualifiers utilized during data validation:

J (Estimated): The compound or analyte was analyzed for and positively identified by the laboratory; however the reported concentration is estimated due to non-conformances discovered during data validation.

U (Non-detected): The compound or analyte was analyzed for and positively identified by the laboratory; however the compound or analyte should be considered non-detected at the reported concentration due to the presence of contaminants detected in the associated blank(s).

UJ (Non-detected estimated): The compound or analyte was reported as not detected by the laboratory; however the reported quantitation/detection limit is estimated due to non-conformances discovered during data validation.

DNR Do not report from this analysis; the result for this analyte is to be reported from an alternative analysis.

R (Rejected): The sample results were rejected due to gross non-conformances discovered during data validation. Data qualified as rejected is not usable.

NA (Not Applicable): The non-conformance discovered during data validation demonstrates a high bias, while the affected compound or analyte in the associated sample(s) was reported as not detected by the laboratory and did not warrant the qualification of the data.

A qualification summary table is provided at the end of this report if data has been qualified. Flags are classified as P (protocol) or A (advisory) to indicate whether the flag is due to a laboratory deviation from a specified protocol or is of technical advisory nature.

I. Sample Receipt and Technical Holding Times

All samples were received in good condition and cooler temperatures upon receipt met validation criteria.

All technical holding time requirements were met.

II. Initial Calibration and Initial Calibration Verification

Initial calibration data were not reviewed for Stage 2A validation.

III. Continuing Calibration

Continuing calibration data were not reviewed for Stage 2A validation.

IV. Laboratory Blanks

Laboratory blanks were analyzed as required by the method. No contaminants were found in the laboratory blanks.

V. Field Blanks

No field blanks were identified in this SDG.

VI. Surrogates

Surrogates were added to all samples as required by the method. All surrogate recoveries (%R) were within QC limits.

VII. Matrix Spike/Matrix Spike Duplicates

Matrix spike (MS) and matrix spike duplicate (MSD) sample analysis was performed on an associated project sample. Percent recoveries (%R) were within QC limits with the following exceptions:

Spike ID (Associated Samples)	Compound	MS (%R) (Limits)	MSD (%R) (Limits)	Flag	A or P
CMS-S-01-4-070920MS/MSD (CMS-S-01-4-070920)	Aroclor-1260	-	199 (38-124)	J (all detects)	A

Relative percent differences (RPD) were within QC limits with the following exceptions:

Spike ID (Associated Samples)	Compound	RPD (Limits)	Flag	A or P
CMS-S-01-4-070920MS/MSD (CMS-S-01-4-070920)	Aroclor-1260	74 (≤20)	J (all detects)	A

VIII. Laboratory Control Samples

Laboratory control samples (LCS) were analyzed as required by the method. Percent recoveries (%R) were within QC limits.

IX. Field Duplicates

No field duplicates were identified in this SDG.

X. Compound Quantitation

Raw data were not reviewed for Stage 2A validation.

XI. Target Compound Identification

Raw data were not reviewed for Stage 2A validation.

XII. Overall Assessment of Data

The analysis was conducted within all specifications of the method.

In the case where more than one result was reported for an individual sample, the least technically acceptable results were deemed not reportable as follows:

Sample	Compound	Reason	Flag	A or P
CMS-B-36-6-070920	Aroclor-1254 Aroclor-1260	Results exceeded calibration range.	DNR	A

Due to MS/MSD %R and RPD, data were qualified as estimated in one sample.

No results were rejected in this SDG.

Kimberly-Clark Upland Area
Polychlorinated Biphenyls - Data Qualification Summary - SDG 007149

Sample	Compound	Flag	A or P	Reason
CMS-S-01-4-070920	Aroclor-1260	J (all detects)	A	Matrix spike/Matrix spike duplicate (%R)
CMS-S-01-4-070920	Aroclor-1260	J (all detects)	A	Matrix spike/Matrix spike duplicate (RPD)
CMS-B-36-6-070920	Aroclor-1254 Aroclor-1260	DNR	A	Overall assessment of data

Kimberly-Clark Upland Area
Polychlorinated Biphenyls - Laboratory Blank Data Qualification Summary - SDG 007149

No Sample Data Qualified in this SDG

Kimberly-Clark Upland Area
Polychlorinated Biphenyls - Field Blank Data Qualification Summary - SDG 007149

No Sample Data Qualified in this SDG

LDC #: 48922B3b
SDG #: 007149
Laboratory: Friedman & Bruya, Inc.

VALIDATION COMPLETENESS WORKSHEET
Stage 2A

Date: 01/04/21
Page: 1 of 1
Reviewer: LT
2nd Reviewer:

METHOD: GC Polychlorinated Biphenyls (EPA SW846 Method 8082A)

The samples listed below were reviewed for each of the following validation areas. Validation findings are noted in attached validation findings worksheets.

	Validation Area		Comments
I.	Sample receipt/Technical holding times	A / A	
II.	Initial calibration/ICV	N/N	
III.	Continuing calibration	N	
IV.	Laboratory Blanks	A	
V.	Field blanks	N	
VI.	Surrogate spikes	A	
VII.	Matrix spike/Matrix spike duplicates	SW	(10, 11)
VIII.	Laboratory control samples	A	LCS
IX.	Field duplicates	N	
X.	Compound quantitation/RL/LOQ/LODs	N	Dry weight basis = 1-9
XI.	Target compound identification	N	
XII	Overall assessment of data	SW	

Note: A = Acceptable; N = Not provided/applicable; SW = See worksheet; ND = No compounds detected; R = Rinsate; FB = Field blank; D = Duplicate; TB = Trip blank; EB = Equipment blank; SB=Source blank; OTHER:

	Client ID	Lab ID	Matrix	Date
1	MS CSM-S-01-4-070920	007149-01	Soil	07/09/20
2	MS CSM-S-02-4-070920	007149-02	Soil	07/09/20
3	MS CSM-S-03-4-070920	007149-03	Soil	07/09/20
4	MS CSM-S-04-4-070920	007149-04	Soil	07/09/20
5	MS CSM-B-35-6-070920	007149-05	Soil	07/09/20
6	MS CSM-B-38-6-070920	007149-06	Soil	07/09/20
7	MS CSM-B-36-6-070920	007149-07	Soil	07/09/20
8	MS CSM-B-36-6-070920DL	007149-07DL	Soil	07/09/20
9	MS CSM-S-05-4-070920	007149-08	Soil	07/09/20
10	MS CSM-S-01-4-070920MS	007149-01MS	Soil	07/09/20
11	MS CSM-S-01-4-070920MSD	007149-01MSD	Soil	07/09/20
12				
13				

Notes:

1	00-530 MB 16						

LDC #: 48922B3b

VALIDATION FINDINGS WORKSHEET
Matrix Spike/Matrix Spike Duplicates

Reviewer: LT

METHOD: X **GC** ___ **HPLC**

Please see qualifications below for all questions answered "N". Not applicable questions are identified as "N/A".

Y **x** N___ N/A___ Were a matrix spike (MS) and matrix spike duplicate (MSD) analyzed for each matrix in this SDG?

Y **x** N___ N/A___ Was an MS/MSD analyzed every 20 samples for each matrix or whenever a sample extraction was performed?

Y___ N **x** N/A___ Were the MS/MSD percent recoveries (%R) and relative percent differences (RPD) within QC limits?

#	MS/MSD ID	Compound	MS %R (Limits)	MSD %R (Limits)	RPD (Limits)	Associated Samples	Qualifications
	10/11	Aroclor-1260		199 (38 - 124)		1 (DET)	J/A DETS
		Aroclor-1260			74 (≤ 20)	↓	↓

LDC #: 48922B3b

VALIDATION FINDINGS WORKSHEET
Overall Assessment of Data

Reviewer: LT

METHOD: GC PCBs (EPA SW 846 Method 8082A)

Please see qualifications below for all questions answered "N". Not applicable questions are identified as "N/A".

All available information pertaining to the data were reviewed using professional judgement to compliment the determination of the overall quality of the data.

Yes x No__ N/A__ Was the overall quality and usability of the data acceptable?

#	Date	Sample ID	Compound	Finding	Qualifications
		7	Aroclor 1254 and Aroclor 1260	exceed calibration range	DNR

Comments: _____

Laboratory Data Consultants, Inc.
Data Validation Report

Project/Site Name: Kimberly-Clark Upland Area

LDC Report Date: September 9, 2020

Parameters: Polynuclear Aromatic Hydrocarbons

Validation Level: Stage 2A

Laboratory: Friedman & Bruya, Inc.

Sample Delivery Group (SDG): 007180

Sample Identification	Laboratory Sample Identification	Matrix	Collection Date
CMS-B-37-6-071020	007180-01	Soil	07/10/20
CMS-S-06-4-071020	007180-02	Soil	07/10/20
CMS-S-07-4-071020	007180-03	Soil	07/10/20
CMS-508-071020	007180-04	Soil	07/10/20
CMS-S-08-4-071020	007180-05	Soil	07/10/20
CMS-B-34-6-071020	007180-06	Soil	07/10/20
CMS-B-37-6-071020MS	007180-01MS	Soil	07/10/20
CMS-B-37-6-071020MSD	007180-01MSD	Soil	07/10/20

Introduction

This Data Validation Report (DVR) presents data validation findings and results for the associated samples listed on the cover page. Data validation was performed in accordance with a modified outline of the USEPA National Functional Guidelines (NFG) for Organic Superfund Methods Data Review (January 2017). Where specific guidance was not available, the data has been evaluated in a conservative manner consistent with industry standards using professional experience.

The analyses were performed by the following method:

Polynuclear Aromatic Hydrocarbons (PAHs) by Environmental Protection Agency (EPA) SW 846 Method 8270E in Selected Ion Monitoring (SIM) mode

All sample results were subjected to Stage 2A data validation, which comprises an evaluation of quality control (QC) summary results.

The following are definitions of the data qualifiers utilized during data validation:

J (Estimated): The compound or analyte was analyzed for and positively identified by the laboratory; however the reported concentration is estimated due to non-conformances discovered during data validation.

U (Non-detected): The compound or analyte was analyzed for and positively identified by the laboratory; however the compound or analyte should be considered non-detected at the reported concentration due to the presence of contaminants detected in the associated blank(s).

UJ (Non-detected estimated): The compound or analyte was reported as not detected by the laboratory; however the reported quantitation/detection limit is estimated due to non-conformances discovered during data validation.

R (Rejected): The sample results were rejected due to gross non-conformances discovered during data validation. Data qualified as rejected is not usable.

NA (Not Applicable): The non-conformance discovered during data validation demonstrates a high bias, while the affected compound or analyte in the associated sample(s) was reported as not detected by the laboratory and did not warrant the qualification of the data.

A qualification summary table is provided at the end of this report if data has been qualified. Flags are classified as P (protocol) or A (advisory) to indicate whether the flag is due to a laboratory deviation from a specified protocol or is of technical advisory nature.

I. Sample Receipt and Technical Holding Times

All samples were received in good condition and cooler temperatures upon receipt met validation criteria.

All technical holding time requirements were met.

II. GC/MS Instrument Performance Check

Instrument performance check data were not reviewed for Stage 2A validation.

III. Initial Calibration and Initial Calibration Verification

Initial calibration data were not reviewed for Stage 2A validation.

IV. Continuing Calibration

Continuing calibration data were not reviewed for Stage 2A validation.

V. Laboratory Blanks

Laboratory blanks were analyzed as required by the method. No contaminants were found in the laboratory blanks.

VI. Field Blanks

No field blanks were identified in this SDG.

VII. Surrogates

Surrogates were added to all samples as required by the method. All surrogate recoveries (%R) were within QC limits.

VIII. Matrix Spike/Matrix Spike Duplicates

Matrix spike (MS) and matrix spike duplicate (MSD) sample analysis was performed on an associated project sample. Percent recoveries (%R) were within QC limits. Relative percent differences (RPD) were within QC limits.

IX. Laboratory Control Samples

Laboratory control samples (LCS) were analyzed as required by the method. Percent recoveries (%R) were within QC limits.

X. Field Duplicates

Samples CMS-S-07-4-071020 and CMS-508-071020 were identified as field duplicates. No results were detected in any of the samples.

XI. Internal Standards

Internal standards data were not reviewed for Stage 2A validation.

XII. Compound Quantitation

Raw data were not reviewed for Stage 2A validation.

XIII. Target Compound Identifications

Raw data were not reviewed for Stage 2A validation.

XIV. System Performance

Raw data were not reviewed for Stage 2A validation.

XV. Overall Assessment of Data

The analysis was conducted within all specifications of the method. No results were rejected in this SDG.

Kimberly-Clark Upland Area
Polynuclear Aromatic Hydrocarbons - Data Qualification Summary - SDG 007180

No Sample Data Qualified in this SDG

Kimberly-Clark Upland Area
Polynuclear Aromatic Hydrocarbons - Laboratory Blank Data Qualification Summary - SDG 007180

No Sample Data Qualified in this SDG

Kimberly-Clark Upland Area
Polynuclear Aromatic Hydrocarbons - Field Blank Data Qualification Summary - SDG 007180

No Sample Data Qualified in this SDG

LDC #: 48922C2b

SDG #: 007180

Laboratory: Friedman & Bruya, Inc.

VALIDATION COMPLETENESS WORKSHEET

Stage 2A

Date: 09/04/20

Page: 1 of 1

Reviewer: LT

2nd Reviewer:

METHOD: GC/MS Polynuclear Aromatic Hydrocarbons (EPA SW 846 Method 8270E-SIM)

The samples listed below were reviewed for each of the following validation areas. Validation findings are noted in attached validation findings worksheets.

	Validation Area		Comments
I.	Sample receipt/Technical holding times	A / A	
II.	GC/MS Instrument performance check	N	
III.	Initial calibration/ICV	N/N	
IV.	Continuing calibration	N	
V.	Laboratory Blanks	A	
VI.	Field blanks	N	
VII.	Surrogate spikes	A	
VIII.	Matrix spike/Matrix spike duplicates	A	(7,8)
IX.	Laboratory control samples	A	LCS
X.	Field duplicates	ND	D=3+4
XI.	Internal standards	N	
XII.	Compound quantitation RL/LOQ/LODs	N	Dry weight basis= 1-6
XIII.	Target compound identification	N	
XIV.	System performance	N	
XV.	Overall assessment of data	A	

Note: A = Acceptable; N = Not provided/applicable; SW = See worksheet; ND = No compounds detected; R = Rinsate; FB = Field blank; D = Duplicate; TB = Trip blank; EB = Equipment blank; SB=Source blank; OTHER:

	Client ID		Lab ID	Matrix	Date
1	CMS-B-37-6-071020		007180-01	Soil	07/10/20
2	CMS-S-06-4-071020		007180-02	Soil	07/10/20
3	CMS-S-07-4-071020	D	007180-03	Soil	07/10/20
4	CMS-508-071020	D	007180-04	Soil	07/10/20
5	CMS-S-08-4-071020		007180-05	Soil	07/10/20
6	CMS-B-34-6-071020		007180-06	Soil	07/10/20
7	CMS-B-37-6-071020MS		007180-01MS	Soil	07/10/20
8	CMS-B-37-6-071020MSD		007180-01MSD	Soil	07/10/20
9					

Notes:

1	06-1587 MB 1/5						

Laboratory Data Consultants, Inc.
Data Validation Report

Project/Site Name: Kimberly-Clark Upland Area

LDC Report Date: September 9, 2020

Parameters: Polychlorinated Biphenyls

Validation Level: Stage 2A

Laboratory: Friedman & Bruya, Inc.

Sample Delivery Group (SDG): 007180

Sample Identification	Laboratory Sample Identification	Matrix	Collection Date
CMS-B-37-6-071020	007180-01	Soil	07/10/20
CMS-S-06-4-071020	007180-02	Soil	07/10/20
CMS-S-07-4-071020	007180-03	Soil	07/10/20
CMS-508-071020	007180-04	Soil	07/10/20
CMS-S-08-4-071020	007180-05	Soil	07/10/20
CMS-B-34-6-071020	007180-06	Soil	07/10/20
CMS-B-37-6-071020MS	007180-01MS	Soil	07/10/20
CMS-B-37-6-071020MSD	007180-01MSD	Soil	07/10/20

Introduction

This Data Validation Report (DVR) presents data validation findings and results for the associated samples listed on the cover page. Data validation was performed in accordance with a modified outline of the USEPA National Functional Guidelines (NFG) for Organic Superfund Methods Data Review (January 2017). Where specific guidance was not available, the data has been evaluated in a conservative manner consistent with industry standards using professional experience.

The analyses were performed by the following method:

Polychlorinated Biphenyls (PCBs) by Environmental Protection Agency (EPA) SW 846 Method 8082A

All sample results were subjected to Stage 2A data validation, which comprises an evaluation of quality control (QC) summary results.

The following are definitions of the data qualifiers utilized during data validation:

J (Estimated): The compound or analyte was analyzed for and positively identified by the laboratory; however the reported concentration is estimated due to non-conformances discovered during data validation.

U (Non-detected): The compound or analyte was analyzed for and positively identified by the laboratory; however the compound or analyte should be considered non-detected at the reported concentration due to the presence of contaminants detected in the associated blank(s).

UJ (Non-detected estimated): The compound or analyte was reported as not detected by the laboratory; however the reported quantitation/detection limit is estimated due to non-conformances discovered during data validation.

R (Rejected): The sample results were rejected due to gross non-conformances discovered during data validation. Data qualified as rejected is not usable.

NA (Not Applicable): The non-conformance discovered during data validation demonstrates a high bias, while the affected compound or analyte in the associated sample(s) was reported as not detected by the laboratory and did not warrant the qualification of the data.

A qualification summary table is provided at the end of this report if data has been qualified. Flags are classified as P (protocol) or A (advisory) to indicate whether the flag is due to a laboratory deviation from a specified protocol or is of technical advisory nature.

I. Sample Receipt and Technical Holding Times

All samples were received in good condition and cooler temperatures upon receipt met validation criteria.

All technical holding time requirements were met.

II. Initial Calibration and Initial Calibration Verification

Initial calibration data were not reviewed for Stage 2A validation.

III. Continuing Calibration

Continuing calibration data were not reviewed for Stage 2A validation.

IV. Laboratory Blanks

Laboratory blanks were analyzed as required by the method. No contaminants were found in the laboratory blanks.

V. Field Blanks

No field blanks were identified in this SDG.

VI. Surrogates

Surrogates were added to all samples as required by the method. All surrogate recoveries (%R) were within QC limits.

VII. Matrix Spike/Matrix Spike Duplicates

Matrix spike (MS) and matrix spike duplicate (MSD) sample analysis was performed on an associated project sample. Percent recoveries (%R) were within QC limits.

Relative percent differences (RPD) were within QC limits with the following exceptions:

Spike ID (Associated Samples)	Compound	RPD (Limits)	Flag	A or P
CMS-B-37-6-071020MS/MSD (CMS-B-37-6-071020)	Aroclor-1016 Aroclor-1260	27 (≤20) 29 (≤20)	NA	-

VIII. Laboratory Control Samples

Laboratory control samples (LCS) were analyzed as required by the method. Percent recoveries (%R) were within QC limits.

IX. Field Duplicates

Samples CMS-S-07-4-071020 and CMS-508-071020 were identified as field duplicates. No results were detected in any of the samples.

X. Compound Quantitation

Raw data were not reviewed for Stage 2A validation.

XI. Target Compound Identification

Raw data were not reviewed for Stage 2A validation.

XII. Overall Assessment of Data

The analysis was conducted within all specifications of the method. No results were rejected in this SDG.

Kimberly-Clark Upland Area
Polychlorinated Biphenyls - Data Qualification Summary - SDG 007180

No Sample Data Qualified in this SDG

Kimberly-Clark Upland Area
Polychlorinated Biphenyls - Laboratory Blank Data Qualification Summary - SDG 007180

No Sample Data Qualified in this SDG

Kimberly-Clark Upland Area
Polychlorinated Biphenyls - Field Blank Data Qualification Summary - SDG 007180

No Sample Data Qualified in this SDG

LDC #: 48922C3b
SDG #: 007180
Laboratory: Friedman & Bruya, Inc.

VALIDATION COMPLETENESS WORKSHEET
Stage 2A

Date: 09/04/20
Page: 1 of 1
Reviewer: LT
2nd Reviewer:

METHOD: GC Polychlorinated Biphenyls (EPA SW846 Method 8082A)

The samples listed below were reviewed for each of the following validation areas. Validation findings are noted in attached validation findings worksheets.

	Validation Area		Comments
I.	Sample receipt/Technical holding times	A / A	
II.	Initial calibration/ICV	N/N	
III.	Continuing calibration	N	
IV.	Laboratory Blanks	A	
V.	Field blanks	N	
VI.	Surrogate spikes	A	
VII.	Matrix spike/Matrix spike duplicates	SW	(7,8)
VIII.	Laboratory control samples	A	LCS
IX.	Field duplicates	ND	D=3+4
X.	Compound quantitation/RL/LOQ/LODs	N	Dry weight basis = 1-6
XI.	Target compound identification	N	
XII	Overall assessment of data	A	

Note: A = Acceptable; N = Not provided/applicable; SW = See worksheet; ND = No compounds detected; R = Rinsate; FB = Field blank; D = Duplicate; TB = Trip blank; EB = Equipment blank; SB=Source blank; OTHER:

	Client ID		Lab ID	Matrix	Date
1	CMS-B-37-6-071020		007180-01	Soil	07/10/20
2	CMS-S-06-4-071020		007180-02	Soil	07/10/20
3	CMS-S-07-4-071020	D	007180-03	Soil	07/10/20
4	CMS-508-071020	D	007180-04	Soil	07/10/20
5	CMS-S-08-4-071020		007180-05	Soil	07/10/20
6	CMS-B-34-6-071020		007180-06	Soil	07/10/20
7	CMS-B-37-6-071020MS		007180-01MS	Soil	07/10/20
8	CMS-B-37-6-071020MSD		007180-01MSD	Soil	07/10/20
9					
10					
11					
12					
13					

Notes:

1	60-1587 MB 1/5						

LDC #: 48922C3b

VALIDATION FINDINGS WORKSHEET
Matrix Spike/Matrix Spike Duplicates

Reviewer: LT

METHOD: _X_ **GC** ___ **HPLC**

Please see qualifications below for all questions answered "N". Not applicable questions are identified as "N/A".

Y**x** N___ N/A___ Were a matrix spike (MS) and matrix spike duplicate (MSD) analyzed for each matrix in this SDG?

Y**x** N___ N/A___ Was an MS/MSD analyzed every 20 samples for each matrix or whenever a sample extraction was performed?

Y___ N**x** N/A___ Were the MS/MSD percent recoveries (%R) and relative percent differences (RPD) within QC limits?

#	MS/MSD ID	Compound	MS %R (Limits)	MSD %R (Limits)	RPD (Limits)	Associated Samples	Qualifications
	7/8	Aroclor-1016			27 (≤ 20)	1 (ND)	J/A DETS
		Aroclor-1260			29 (≤ 20)	↓	↓

Laboratory Data Consultants, Inc.
Data Validation Report

Project/Site Name: Kimberly-Clark Upland Area

LDC Report Date: September 9, 2020

Parameters: Polynuclear Aromatic Hydrocarbons

Validation Level: Stage 2A

Laboratory: Friedman & Bruya, Inc.

Sample Delivery Group (SDG): 007206

Sample Identification	Laboratory Sample Identification	Matrix	Collection Date
CMS-B-27-6	007206-01	Soil	07/13/20
CMS-B-26-6	007206-02	Soil	07/13/20
CMS-B-31-6	007206-03	Soil	07/13/20
CMS-S-09-4	007206-04	Soil	07/13/20
CMS-S-10-4	007206-05	Soil	07/13/20

Introduction

This Data Validation Report (DVR) presents data validation findings and results for the associated samples listed on the cover page. Data validation was performed in accordance with a modified outline of the USEPA National Functional Guidelines (NFG) for Organic Superfund Methods Data Review (January 2017). Where specific guidance was not available, the data has been evaluated in a conservative manner consistent with industry standards using professional experience.

The analyses were performed by the following method:

Polynuclear Aromatic Hydrocarbons (PAHs) by Environmental Protection Agency (EPA) SW 846 Method 8270E in Selected Ion Monitoring (SIM) mode

All sample results were subjected to Stage 2A data validation, which comprises an evaluation of quality control (QC) summary results.

The following are definitions of the data qualifiers utilized during data validation:

J (Estimated): The compound or analyte was analyzed for and positively identified by the laboratory; however the reported concentration is estimated due to non-conformances discovered during data validation.

U (Non-detected): The compound or analyte was analyzed for and positively identified by the laboratory; however the compound or analyte should be considered non-detected at the reported concentration due to the presence of contaminants detected in the associated blank(s).

UJ (Non-detected estimated): The compound or analyte was reported as not detected by the laboratory; however the reported quantitation/detection limit is estimated due to non-conformances discovered during data validation.

R (Rejected): The sample results were rejected due to gross non-conformances discovered during data validation. Data qualified as rejected is not usable.

NA (Not Applicable): The non-conformance discovered during data validation demonstrates a high bias, while the affected compound or analyte in the associated sample(s) was reported as not detected by the laboratory and did not warrant the qualification of the data.

A qualification summary table is provided at the end of this report if data has been qualified. Flags are classified as P (protocol) or A (advisory) to indicate whether the flag is due to a laboratory deviation from a specified protocol or is of technical advisory nature.

I. Sample Receipt and Technical Holding Times

All samples were received in good condition and cooler temperatures upon receipt met validation criteria.

All technical holding time requirements were met.

II. GC/MS Instrument Performance Check

Instrument performance check data were not reviewed for Stage 2A validation.

III. Initial Calibration and Initial Calibration Verification

Initial calibration data were not reviewed for Stage 2A validation.

IV. Continuing Calibration

Continuing calibration data were not reviewed for Stage 2A validation.

V. Laboratory Blanks

Laboratory blanks were analyzed as required by the method. No contaminants were found in the laboratory blanks.

VI. Field Blanks

No field blanks were identified in this SDG.

VII. Surrogates

Surrogates were added to all samples as required by the method. All surrogate recoveries (%R) were within QC limits.

VIII. Matrix Spike/Matrix Spike Duplicates

Matrix spike (MS) and matrix spike duplicate (MSD) sample analysis was performed on an associated project sample. Percent recoveries (%R) were within QC limits. Relative percent differences (RPD) were within QC limits.

IX. Laboratory Control Samples

Laboratory control samples (LCS) were analyzed as required by the method. Percent recoveries (%R) were within QC limits.

X. Field Duplicates

No field duplicates were identified in this SDG.

XI. Internal Standards

Internal standards data were not reviewed for Stage 2A validation.

XII. Compound Quantitation

Raw data were not reviewed for Stage 2A validation.

XIII. Target Compound Identifications

Raw data were not reviewed for Stage 2A validation.

XIV. System Performance

Raw data were not reviewed for Stage 2A validation.

XV. Overall Assessment of Data

The analysis was conducted within all specifications of the method. No results were rejected in this SDG.

Kimberly-Clark Upland Area
Polynuclear Aromatic Hydrocarbons - Data Qualification Summary - SDG 007206

No Sample Data Qualified in this SDG

Kimberly-Clark Upland Area
Polynuclear Aromatic Hydrocarbons - Laboratory Blank Data Qualification Summary - SDG 007206

No Sample Data Qualified in this SDG

Kimberly-Clark Upland Area
Polynuclear Aromatic Hydrocarbons - Field Blank Data Qualification Summary - SDG 007206

No Sample Data Qualified in this SDG

LDC #: 48922D2b
SDG #: 007206
Laboratory: Friedman & Bruya, Inc.

VALIDATION COMPLETENESS WORKSHEET
Stage 2A

Date: 09/04/20
Page: 1 of 1
Reviewer: LT
2nd Reviewer:

METHOD: GC/MS Polynuclear Aromatic Hydrocarbons (EPA SW 846 Method 8270E-SIM)

The samples listed below were reviewed for each of the following validation areas. Validation findings are noted in attached validation findings worksheets.

	Validation Area		Comments
I.	Sample receipt/Technical holding times	A/A	
II.	GC/MS Instrument performance check	N	
III.	Initial calibration/ICV	N/N	
IV.	Continuing calibration	N	
V.	Laboratory Blanks	A	
VI.	Field blanks	N	
VII.	Surrogate spikes	A	
VIII.	Matrix spike/Matrix spike duplicates	A	SDG 007180
IX.	Laboratory control samples	A	LCS
X.	Field duplicates	N	
XI.	Internal standards	N	
XII.	Compound quantitation RL/LOQ/LODs	N	Dry weight basis = 1-5
XIII.	Target compound identification	N	
XIV.	System performance	N	
XV.	Overall assessment of data	A	

Note: A = Acceptable; N = Not provided/applicable; SW = See worksheet; ND = No compounds detected; R = Rinsate; FB = Field blank; D = Duplicate; TB = Trip blank; EB = Equipment blank; SB=Source blank; OTHER:

	Client ID	Lab ID	Matrix	Date
1	CMS-B-27-6	007206-01	Soil	07/13/20
2	CMS-B-26-6	007206-02	Soil	07/13/20
3	CMS-B-31-6	007206-03	Soil	07/13/20
4	CMS-S-09-4	007206-04	Soil	07/13/20
5	CMS-S-10-4	007206-05	Soil	07/13/20
6				
7				
8				
9				

Notes:

1	00-158 MB21/5						

Laboratory Data Consultants, Inc.
Data Validation Report

Project/Site Name: Kimberly-Clark Upland Area

LDC Report Date: September 9, 2020

Parameters: Polychlorinated Biphenyls

Validation Level: Stage 2A

Laboratory: Friedman & Bruya, Inc.

Sample Delivery Group (SDG): 007206

Sample Identification	Laboratory Sample Identification	Matrix	Collection Date
CMS-B-27-6	007206-01	Soil	07/13/20
CMS-B-26-6	007206-02	Soil	07/13/20
CMS-B-31-6	007206-03	Soil	07/13/20
CMS-S-09-4	007206-04	Soil	07/13/20
CMS-S-09-4DL	007206-04DL	Soil	07/13/20
CMS-S-10-4	007206-05	Soil	07/13/20

Introduction

This Data Validation Report (DVR) presents data validation findings and results for the associated samples listed on the cover page. Data validation was performed in accordance with a modified outline of the USEPA National Functional Guidelines (NFG) for Organic Superfund Methods Data Review (January 2017). Where specific guidance was not available, the data has been evaluated in a conservative manner consistent with industry standards using professional experience.

The analyses were performed by the following method:

Polychlorinated Biphenyls (PCBs) by Environmental Protection Agency (EPA) SW 846 Method 8082A

All sample results were subjected to Stage 2A data validation, which comprises an evaluation of quality control (QC) summary results.

The following are definitions of the data qualifiers utilized during data validation:

J (Estimated): The compound or analyte was analyzed for and positively identified by the laboratory; however the reported concentration is estimated due to non-conformances discovered during data validation.

U (Non-detected): The compound or analyte was analyzed for and positively identified by the laboratory; however the compound or analyte should be considered non-detected at the reported concentration due to the presence of contaminants detected in the associated blank(s).

UJ (Non-detected estimated): The compound or analyte was reported as not detected by the laboratory; however the reported quantitation/detection limit is estimated due to non-conformances discovered during data validation.

DNR Do not report from this analysis; the result for this analyte is to be reported from an alternative analysis.

R (Rejected): The sample results were rejected due to gross non-conformances discovered during data validation. Data qualified as rejected is not usable.

NA (Not Applicable): The non-conformance discovered during data validation demonstrates a high bias, while the affected compound or analyte in the associated sample(s) was reported as not detected by the laboratory and did not warrant the qualification of the data.

A qualification summary table is provided at the end of this report if data has been qualified. Flags are classified as P (protocol) or A (advisory) to indicate whether the flag is due to a laboratory deviation from a specified protocol or is of technical advisory nature.

I. Sample Receipt and Technical Holding Times

All samples were received in good condition and cooler temperatures upon receipt met validation criteria.

All technical holding time requirements were met.

II. Initial Calibration and Initial Calibration Verification

Initial calibration data were not reviewed for Stage 2A validation.

III. Continuing Calibration

Continuing calibration data were not reviewed for Stage 2A validation.

IV. Laboratory Blanks

Laboratory blanks were analyzed as required by the method. No contaminants were found in the laboratory blanks.

V. Field Blanks

No field blanks were identified in this SDG.

VI. Surrogates

Surrogates were added to all samples as required by the method. All surrogate recoveries (%R) were within QC limits.

VII. Matrix Spike/Matrix Spike Duplicates

Matrix spike (MS) and matrix spike duplicate (MSD) sample analysis was performed on an associated project sample. Percent recoveries (%R) were within QC limits. Relative percent differences (RPD) were not within QC limits. No data were qualified since there were no associated samples in this SDG.

VIII. Laboratory Control Samples

Laboratory control samples (LCS) were analyzed as required by the method. Percent recoveries (%R) were within QC limits.

IX. Field Duplicates

No field duplicates were identified in this SDG.

X. Compound Quantitation

Raw data were not reviewed for Stage 2A validation.

XI. Target Compound Identification

Raw data were not reviewed for Stage 2A validation.

XII. Overall Assessment of Data

The analysis was conducted within all specifications of the method.

In the case where more than one result was reported for an individual sample, the least technically acceptable results were deemed not reportable as follows:

Sample	Compound	Reason	Flag	A or P
CMS-S-09-4	Aroclor-1254 Aroclor-1260	Results exceeded calibration range.	DNR	A

No results were rejected in this SDG.

Kimberly-Clark Upland Area
Polychlorinated Biphenyls - Data Qualification Summary - SDG 007206

Sample	Compound	Flag	A or P	Reason
CMS-S-09-4	Aroclor-1254 Aroclor-1260	DNR	A	Overall assessment of data

Kimberly-Clark Upland Area
Polychlorinated Biphenyls - Laboratory Blank Data Qualification Summary - SDG 007206

No Sample Data Qualified in this SDG

Kimberly-Clark Upland Area
Polychlorinated Biphenyls - Field Blank Data Qualification Summary - SDG 007206

No Sample Data Qualified in this SDG

LDC #: 48922D3b
SDG #: 007206
Laboratory: Friedman & Bruya, Inc.

VALIDATION COMPLETENESS WORKSHEET
Stage 2A

Date: 09/04/20
Page: 1 of 1
Reviewer: CT
2nd Reviewer:

METHOD: GC Polychlorinated Biphenyls (EPA SW846 Method 8082A)

The samples listed below were reviewed for each of the following validation areas. Validation findings are noted in attached validation findings worksheets.

	Validation Area		Comments
I.	Sample receipt/Technical holding times	A / A	
II.	Initial calibration/ICV	N/N	
III.	Continuing calibration	N	
IV.	Laboratory Blanks	A	
V.	Field blanks	N	
VI.	Surrogate spikes	A	
VII.	Matrix spike/Matrix spike duplicates	SW	SDG 007180 RPDs out, not associated
VIII.	Laboratory control samples	A	LCS
IX.	Field duplicates	N	
X.	Compound quantitation/RL/LOQ/LODs	N	Dry weight basis = 1-6
XI.	Target compound identification	N	
XII	Overall assessment of data	SW	

Note: A = Acceptable; N = Not provided/applicable; SW = See worksheet; ND = No compounds detected; R = Rinsate; FB = Field blank; D = Duplicate; TB = Trip blank; EB = Equipment blank; SB=Source blank; OTHER:

	Client ID	Lab ID	Matrix	Date
1	CMS-B-27-6	007206-01	Soil	07/13/20
2	CMS-B-26-6	007206-02	Soil	07/13/20
3	CMS-B-31-6	007206-03	Soil	07/13/20
4	CMS-S-09-4	007206-04	Soil	07/13/20
5	CMS-S-09-4DL	007206-04DL	Soil	07/13/20
6	CMS-S-10-4	007206-05	Soil	07/13/20
7				
8				
9				
10				
11				
12				
13				

Notes:

1	00-1586 MB2 1/6						

LDC #: 48922D3b

VALIDATION FINDINGS WORKSHEET
Overall Assessment of Data

Reviewer: LT

METHOD: GC PCBs (EPA SW 846 Method 8082A)

Please see qualifications below for all questions answered "N". Not applicable questions are identified as "N/A".

All available information pertaining to the data were reviewed using professional judgement to compliment the determination of the overall quality of the data.

Yes x No__ N/A__ Was the overall quality and usability of the data acceptable?

#	Date	Sample ID	Compound	Finding	Qualifications
		4	Aroclor 1254 and Aroclor 1260	exceed calibration range	DNR

Comments: _____

LDC Report# 48922E2b

Laboratory Data Consultants, Inc.
Data Validation Report

Project/Site Name: Kimberly-Clark Upland Area

LDC Report Date: September 9, 2020

Parameters: Polynuclear Aromatic Hydrocarbons

Validation Level: Stage 2A

Laboratory: Friedman & Bruya, Inc.

Sample Delivery Group (SDG): 007234

Sample Identification	Laboratory Sample Identification	Matrix	Collection Date
CMS-B-33-6	007234-01	Soil	07/14/20
CMS-B-32-6	007234-02	Soil	07/14/20
CMS-B-28-6	007234-03	Soil	07/14/20
CMS-B-29-6	007234-04	Soil	07/14/20
CMS-B-30-6	007234-05	Soil	07/14/20

Introduction

This Data Validation Report (DVR) presents data validation findings and results for the associated samples listed on the cover page. Data validation was performed in accordance with a modified outline of the USEPA National Functional Guidelines (NFG) for Organic Superfund Methods Data Review (January 2017). Where specific guidance was not available, the data has been evaluated in a conservative manner consistent with industry standards using professional experience.

The analyses were performed by the following method:

Polynuclear Aromatic Hydrocarbons (PAHs) by Environmental Protection Agency (EPA) SW 846 Method 8270E in Selected Ion Monitoring (SIM) mode

All sample results were subjected to Stage 2A data validation, which comprises an evaluation of quality control (QC) summary results.

The following are definitions of the data qualifiers utilized during data validation:

J (Estimated): The compound or analyte was analyzed for and positively identified by the laboratory; however the reported concentration is estimated due to non-conformances discovered during data validation.

U (Non-detected): The compound or analyte was analyzed for and positively identified by the laboratory; however the compound or analyte should be considered non-detected at the reported concentration due to the presence of contaminants detected in the associated blank(s).

UJ (Non-detected estimated): The compound or analyte was reported as not detected by the laboratory; however the reported quantitation/detection limit is estimated due to non-conformances discovered during data validation.

R (Rejected): The sample results were rejected due to gross non-conformances discovered during data validation. Data qualified as rejected is not usable.

NA (Not Applicable): The non-conformance discovered during data validation demonstrates a high bias, while the affected compound or analyte in the associated sample(s) was reported as not detected by the laboratory and did not warrant the qualification of the data.

A qualification summary table is provided at the end of this report if data has been qualified. Flags are classified as P (protocol) or A (advisory) to indicate whether the flag is due to a laboratory deviation from a specified protocol or is of technical advisory nature.

I. Sample Receipt and Technical Holding Times

All samples were received in good condition and cooler temperatures upon receipt met validation criteria.

All technical holding time requirements were met.

II. GC/MS Instrument Performance Check

Instrument performance check data were not reviewed for Stage 2A validation.

III. Initial Calibration and Initial Calibration Verification

Initial calibration data were not reviewed for Stage 2A validation.

IV. Continuing Calibration

Continuing calibration data were not reviewed for Stage 2A validation.

V. Laboratory Blanks

Laboratory blanks were analyzed as required by the method. No contaminants were found in the laboratory blanks.

VI. Field Blanks

No field blanks were identified in this SDG.

VII. Surrogates

Surrogates were added to all samples as required by the method. Surrogate recoveries (%R) were not within QC limits for sample CMS-B-28-6. Using professional judgment, no data were qualified when one surrogate %R was outside the QC limits and the %R was greater than or equal to 10% or for samples analyzed at greater than or equal to 5X dilution.

VIII. Matrix Spike/Matrix Spike Duplicates

The laboratory has indicated that there were no matrix spike (MS) and matrix spike duplicate (MSD) analyses specified for the samples in this SDG, and therefore matrix spike and matrix spike duplicate analyses were not performed for this SDG.

IX. Laboratory Control Samples

Laboratory control samples (LCS) were analyzed as required by the method. Percent recoveries (%R) were within QC limits.

X. Field Duplicates

No field duplicates were identified in this SDG.

XI. Internal Standards

Internal standards data were not reviewed for Stage 2A validation.

XII. Compound Quantitation

Raw data were not reviewed for Stage 2A validation.

XIII. Target Compound Identifications

Raw data were not reviewed for Stage 2A validation.

XIV. System Performance

Raw data were not reviewed for Stage 2A validation.

XV. Overall Assessment of Data

The analysis was conducted within all specifications of the method. No results were rejected in this SDG.

Kimberly-Clark Upland Area
Polynuclear Aromatic Hydrocarbons - Data Qualification Summary - SDG 007234

No Sample Data Qualified in this SDG

Kimberly-Clark Upland Area
Polynuclear Aromatic Hydrocarbons - Laboratory Blank Data Qualification Summary - SDG 007234

No Sample Data Qualified in this SDG

Kimberly-Clark Upland Area
Polynuclear Aromatic Hydrocarbons - Field Blank Data Qualification Summary - SDG 007234

No Sample Data Qualified in this SDG

LDC #: 48922E2b
SDG #: 007234
Laboratory: Friedman & Bruya, Inc.

VALIDATION COMPLETENESS WORKSHEET
Stage 2A

Date: 09/04/20
Page: 1 of 1
Reviewer: LT
2nd Reviewer:

METHOD: GC/MS Polynuclear Aromatic Hydrocarbons (EPA SW 846 Method 8270E-SIM)

The samples listed below were reviewed for each of the following validation areas. Validation findings are noted in attached validation findings worksheets.

	Validation Area		Comments
I.	Sample receipt/Technical holding times	A/A	
II.	GC/MS Instrument performance check	N	
III.	Initial calibration/ICV	N/N	
IV.	Continuing calibration	N	
V.	Laboratory Blanks	A	
VI.	Field blanks	N	
VII.	Surrogate spikes	SW	3-one out 3 ≥5X dilution = ND
VIII.	Matrix spike/Matrix spike duplicates	N	Non client
IX.	Laboratory control samples	A	LCS
X.	Field duplicates	N	
XI.	Internal standards	N	
XII.	Compound quantitation RL/LOQ/LODs	N	Dry weight basis = 1-5
XIII.	Target compound identification	N	
XIV.	System performance	N	
XV.	Overall assessment of data	A	

Note: A = Acceptable; N = Not provided/applicable; SW = See worksheet; ND = No compounds detected; R = Rinsate; FB = Field blank; D = Duplicate; TB = Trip blank; EB = Equipment blank; SB=Source blank; OTHER:

	Client ID	Lab ID	Matrix	Date
1	CMS-B-33-6	007234-01	Soil	07/14/20
2	CMS-B-32-6	007234-02	Soil	07/14/20
3	CMS-B-28-6	007234-03	Soil	07/14/20
4	CMS-B-29-6	007234-04	Soil	07/14/20
5	CMS-B-30-6	007234-05	Soil	07/14/20
6				
7				
8				
9				

Notes:

1	00-1603MB21/5						

Laboratory Data Consultants, Inc.
Data Validation Report

Project/Site Name: Kimberly-Clark Upland Area

LDC Report Date: September 9, 2020

Parameters: Polychlorinated Biphenyls

Validation Level: Stage 2A

Laboratory: Friedman & Bruya, Inc.

Sample Delivery Group (SDG): 007234

Sample Identification	Laboratory Sample Identification	Matrix	Collection Date
CMS-B-33-6	007234-01	Soil	07/14/20
CMS-B-32-6	007234-02	Soil	07/14/20
CMS-B-28-6	007234-03	Soil	07/14/20
CMS-B-29-6	007234-04	Soil	07/14/20
CMS-B-30-6	007234-05	Soil	07/14/20

Introduction

This Data Validation Report (DVR) presents data validation findings and results for the associated samples listed on the cover page. Data validation was performed in accordance with a modified outline of the USEPA National Functional Guidelines (NFG) for Organic Superfund Methods Data Review (January 2017). Where specific guidance was not available, the data has been evaluated in a conservative manner consistent with industry standards using professional experience.

The analyses were performed by the following method:

Polychlorinated Biphenyls (PCBs) by Environmental Protection Agency (EPA) SW 846 Method 8082A

All sample results were subjected to Stage 2A data validation, which comprises an evaluation of quality control (QC) summary results.

The following are definitions of the data qualifiers utilized during data validation:

J (Estimated): The compound or analyte was analyzed for and positively identified by the laboratory; however the reported concentration is estimated due to non-conformances discovered during data validation.

U (Non-detected): The compound or analyte was analyzed for and positively identified by the laboratory; however the compound or analyte should be considered non-detected at the reported concentration due to the presence of contaminants detected in the associated blank(s).

UJ (Non-detected estimated): The compound or analyte was reported as not detected by the laboratory; however the reported quantitation/detection limit is estimated due to non-conformances discovered during data validation.

R (Rejected): The sample results were rejected due to gross non-conformances discovered during data validation. Data qualified as rejected is not usable.

NA (Not Applicable): The non-conformance discovered during data validation demonstrates a high bias, while the affected compound or analyte in the associated sample(s) was reported as not detected by the laboratory and did not warrant the qualification of the data.

A qualification summary table is provided at the end of this report if data has been qualified. Flags are classified as P (protocol) or A (advisory) to indicate whether the flag is due to a laboratory deviation from a specified protocol or is of technical advisory nature.

I. Sample Receipt and Technical Holding Times

All samples were received in good condition and cooler temperatures upon receipt met validation criteria.

All technical holding time requirements were met.

II. Initial Calibration and Initial Calibration Verification

Initial calibration data were not reviewed for Stage 2A validation.

III. Continuing Calibration

Continuing calibration data were not reviewed for Stage 2A validation.

IV. Laboratory Blanks

Laboratory blanks were analyzed as required by the method. No contaminants were found in the laboratory blanks.

V. Field Blanks

No field blanks were identified in this SDG.

VI. Surrogates

Surrogates were added to all samples as required by the method. All surrogate recoveries (%R) were within QC limits.

VII. Matrix Spike/Matrix Spike Duplicates

The laboratory has indicated that there were no matrix spike (MS) and matrix spike duplicate (MSD) analyses specified for the samples in this SDG, and therefore matrix spike and matrix spike duplicate analyses were not performed for this SDG.

VIII. Laboratory Control Samples

Laboratory control samples (LCS) were analyzed as required by the method. Percent recoveries (%R) were within QC limits.

IX. Field Duplicates

No field duplicates were identified in this SDG.

X. Compound Quantitation

Raw data were not reviewed for Stage 2A validation.

XI. Target Compound Identification

Raw data were not reviewed for Stage 2A validation.

XII. Overall Assessment of Data

The analysis was conducted within all specifications of the method. No results were rejected in this SDG.

Kimberly-Clark Upland Area
Polychlorinated Biphenyls - Data Qualification Summary - SDG 007234

No Sample Data Qualified in this SDG

Kimberly-Clark Upland Area
Polychlorinated Biphenyls - Laboratory Blank Data Qualification Summary - SDG 007234

No Sample Data Qualified in this SDG

Kimberly-Clark Upland Area
Polychlorinated Biphenyls - Field Blank Data Qualification Summary - SDG 007234

No Sample Data Qualified in this SDG

LDC #: 48922E3b
SDG #: 007234
Laboratory: Friedman & Bruya, Inc.

VALIDATION COMPLETENESS WORKSHEET
Stage 2A

Date: 09/04/20
Page: 1 of 1
Reviewer: V
2nd Reviewer:

METHOD: GC Polychlorinated Biphenyls (EPA SW846 Method 8082A)

The samples listed below were reviewed for each of the following validation areas. Validation findings are noted in attached validation findings worksheets.

	Validation Area		Comments
I.	Sample receipt/Technical holding times	A/A	
II.	Initial calibration/ICV	N/N	
III.	Continuing calibration	N	
IV.	Laboratory Blanks	A	
V.	Field blanks	N	
VI.	Surrogate spikes	A	~~3 one out,~~
VII.	Matrix spike/Matrix spike duplicates	N	Non client
VIII.	Laboratory control samples	A	LCS
IX.	Field duplicates	N	
X.	Compound quantitation/RL/LOQ/LODs	N	Dry weight basis = 1-5
XI.	Target compound identification	N	
XII	Overall assessment of data	A	

Note: A = Acceptable; N = Not provided/applicable; SW = See worksheet; ND = No compounds detected; R = Rinsate; FB = Field blank; D = Duplicate; TB = Trip blank; EB = Equipment blank; SB=Source blank; OTHER:

	Client ID	Lab ID	Matrix	Date
1	CMS-B-33-6	007234-01	Soil	07/14/20
2	CMS-B-32-6	007234-02	Soil	07/14/20
3	CMS-B-28-6	007234-03	Soil	07/14/20
4	CMS-B-29-6	007234-04	Soil	07/14/20
5	CMS-B-30-6	007234-05	Soil	07/14/20
6				
7				
8				
9				
10				
11				
12				
13				

Notes:

1	00-1600 MB3 1/6						

Laboratory Data Consultants, Inc.
Data Validation Report

Project/Site Name: Kimberly-Clark Upland Area

LDC Report Date: September 9, 2020

Parameters: Polychlorinated Biphenyls

Validation Level: Stage 2A

Laboratory: Friedman & Bruya, Inc.

Sample Delivery Group (SDG): 007259

Sample Identification	Laboratory Sample Identification	Matrix	Collection Date
OMS-S-17-2.5	007259-01	Soil	07/15/20
OMS-S-17-2.5DL	007259-01DL	Soil	07/15/20
OMS-S-18-2.5	007259-02	Soil	07/15/20
OMS-509	007259-03	Soil	07/15/20
OMS-509DL	007259-03DL	Soil	07/15/20
OMS-S-19-2.5	007259-04	Soil	07/15/20
OMS-S-17-2.5MS	007259-01MS	Soil	07/15/20
OMS-S-17-2.5MSD	007259-01MSD	Soil	07/15/20

Introduction

This Data Validation Report (DVR) presents data validation findings and results for the associated samples listed on the cover page. Data validation was performed in accordance with a modified outline of the USEPA National Functional Guidelines (NFG) for Organic Superfund Methods Data Review (January 2017). Where specific guidance was not available, the data has been evaluated in a conservative manner consistent with industry standards using professional experience.

The analyses were performed by the following method:

Polychlorinated Biphenyls (PCBs) by Environmental Protection Agency (EPA) SW 846 Method 8082A

All sample results were subjected to Stage 2A data validation, which comprises an evaluation of quality control (QC) summary results.

The following are definitions of the data qualifiers utilized during data validation:

J (Estimated): The compound or analyte was analyzed for and positively identified by the laboratory; however the reported concentration is estimated due to non-conformances discovered during data validation.

U (Non-detected): The compound or analyte was analyzed for and positively identified by the laboratory; however the compound or analyte should be considered non-detected at the reported concentration due to the presence of contaminants detected in the associated blank(s).

UJ (Non-detected estimated): The compound or analyte was reported as not detected by the laboratory; however the reported quantitation/detection limit is estimated due to non-conformances discovered during data validation.

DNR Do not report from this analysis; the result for this analyte is to be reported from an alternative analysis.

R (Rejected): The sample results were rejected due to gross non-conformances discovered during data validation. Data qualified as rejected is not usable.

NA (Not Applicable): The non-conformance discovered during data validation demonstrates a high bias, while the affected compound or analyte in the associated sample(s) was reported as not detected by the laboratory and did not warrant the qualification of the data.

A qualification summary table is provided at the end of this report if data has been qualified. Flags are classified as P (protocol) or A (advisory) to indicate whether the flag is due to a laboratory deviation from a specified protocol or is of technical advisory nature.

I. Sample Receipt and Technical Holding Times

All samples were received in good condition and cooler temperatures upon receipt met validation criteria.

All technical holding time requirements were met.

II. Initial Calibration and Initial Calibration Verification

Initial calibration data were not reviewed for Stage 2A validation.

III. Continuing Calibration

Continuing calibration data were not reviewed for Stage 2A validation.

IV. Laboratory Blanks

Laboratory blanks were analyzed as required by the method. No contaminants were found in the laboratory blanks.

V. Field Blanks

No field blanks were identified in this SDG.

VI. Surrogates

Surrogates were added to all samples as required by the method. All surrogate recoveries (%R) were within QC limits.

VII. Matrix Spike/Matrix Spike Duplicates

Matrix spike (MS) and matrix spike duplicate (MSD) sample analysis was performed on an associated project sample. Percent recoveries (%R) were within QC limits with the following exceptions:

Spike ID (Associated Samples)	Compound	MS (%R) (Limits)	MSD (%R) (Limits)	Flag	A or P
OMS-S-17-2.5MS/MSD (OMS-S-17-2.5)	Aroclor-1260	1600 (38-124)	1400 (38-124)	NA	-

Relative percent differences (RPD) were within QC limits.

VIII. Laboratory Control Samples

Laboratory control samples (LCS) were analyzed as required by the method. Percent recoveries (%R) were within QC limits.

IX. Field Duplicates

Samples OMS-S-17-2.5 and OMS-509 and samples OMS-S-17-2.5DL and OMS-509DL were identified as field duplicates. No results were detected in any of the samples with the following exceptions:

Compound	Concentration (mg/Kg)		RPD
	OMS-S-17-2.5DL	OMS-509DL	
Aroclor-1254	20	8.0	86

X. Compound Quantitation

Raw data were not reviewed for Stage 2A validation.

XI. Target Compound Identification

Raw data were not reviewed for Stage 2A validation.

XII. Overall Assessment of Data

The analysis was conducted within all specifications of the method.

In the case where more than one result was reported for an individual sample, the least technically acceptable results were deemed not reportable as follows:

Sample	Compound	Reason	Flag	A or P
OMS-S-17-2.5 OMS-509	Aroclor-1254	Results exceeded calibration range.	DNR	A

No results were rejected in this SDG.

Kimberly-Clark Upland Area
Polychlorinated Biphenyls - Data Qualification Summary - SDG 007259

Sample	Compound	Flag	A or P	Reason
OMS-S-17-2.5 OMS-509	Aroclor-1254	DNR	A	Overall assessment of data

Kimberly-Clark Upland Area
Polychlorinated Biphenyls - Laboratory Blank Data Qualification Summary - SDG 007259

No Sample Data Qualified in this SDG

Kimberly-Clark Upland Area
Polychlorinated Biphenyls - Field Blank Data Qualification Summary - SDG 007259

No Sample Data Qualified in this SDG

LDC #: 48922F3b
SDG #: 007259
Laboratory: Friedman & Bruya, Inc.

VALIDATION COMPLETENESS WORKSHEET
Stage 2A

Date: 09/21/20
Page: 1 of 1
Reviewer: LT
2nd Reviewer:

METHOD: GC Polychlorinated Biphenyls (EPA SW846 Method 8082A)

The samples listed below were reviewed for each of the following validation areas. Validation findings are noted in attached validation findings worksheets.

	Validation Area		Comments
I.	Sample receipt/Technical holding times	A/A	
II.	Initial calibration/ICV	N/N	
III.	Continuing calibration	N	
IV.	Laboratory Blanks	A	
V.	Field blanks	N	
VI.	Surrogate spikes	A	
VII.	Matrix spike/Matrix spike duplicates	SW	(7,8)
VIII.	Laboratory control samples	A	LCS
IX.	Field duplicates	SW	D = 1+4, 2+5
X.	Compound quantitation/RL/LOQ/LODs	N	Dry weight basis = 1-6
XI.	Target compound identification	N	
XII	Overall assessment of data	SW	

Note: A = Acceptable; N = Not provided/applicable; SW = See worksheet; ND = No compounds detected; R = Rinsate; FB = Field blank; D = Duplicate; TB = Trip blank; EB = Equipment blank; SB=Source blank; OTHER:

	Client ID		Lab ID	Matrix	Date
1	OMS-S-17-2.5	D	007259-01	Soil	07/15/20
2	OMS-S-17-2.5DL	D	007259-01DL	Soil	07/15/20
3	OMS-S-18-2.5		007259-02	Soil	07/15/20
4	OMS-509	D	007259-03	Soil	07/15/20
5	OMS-509DL	D	007259-03DL	Soil	07/15/20
6	OMS-S-19-2.5		007259-04	Soil	07/15/20
7	OMS-S-17-2.5MS		007259-01MS	Soil	07/15/20
8	OMS-S-17-2.5MSD		007259-01MSD	Soil	07/15/20
9					
10					
11					
12					
13					

Notes:

1	00-1640MB1/6						

LDC #: 48922F3b

VALIDATION FINDINGS WORKSHEET
Matrix Spike/Matrix Spike Duplicates

METHOD: X **GC** ___ **HPLC**

Please see qualifications below for all questions answered "N". Not applicable questions are identified as "N/A".

Y x N___ N/A___ Were a matrix spike (MS) and matrix spike duplicate (MSD) analyzed for each matrix in this SDG?

Y x N___ N/A___ Was an MS/MSD analyzed every 20 samples for each matrix or whenever a sample extraction was performed?

Y___ N x N/A___ Were the MS/MSD percent recoveries (%R) and relative percent differences (RPD) within QC limits?

#	MS/MSD ID	Compound	MS %R (Limits)	MSD %R (Limits)	RPD (Limits)	Associated Samples	Qualifications
	7/8	Aroclor-1260	1,600 (38 - 124)	1,400 (38 - 124)		1 (ND)	J/A DETS

LDC#:48922F3b **VALIDATION FINDINGS WORKSHEET**
Field Duplicates

Reviewer:__LT_____
2nd Reviewer:_____

METHOD: GC PCBs (EPA SW846 Method 8082A)

Compound	Concentration (mg/kg)		RPD
	2	5	
Aroclor 1254	20	8.0	86

LDC #: 48922F3b

VALIDATION FINDINGS WORKSHEET
Overall Assessment of Data

Reviewer: LT

METHOD: GC PCBs (EPA SW 846 Method 8082A)

Please see qualifications below for all questions answered "N". Not applicable questions are identified as "N/A".

All available information pertaining to the data were reviewed using professional judgement to compliment the determination of the overall quality of the data.

Yes x No__ N/A__ Was the overall quality and usability of the data acceptable?

#	Date	Sample ID	Compound	Finding	Qualifications
		1,4	Aroclor 1254	exceed calibration range	DNR

Comments: _____

Laboratory Data Consultants, Inc.
Data Validation Report

Project/Site Name: Kimberly-Clark Upland Area

LDC Report Date: August 27, 2020

Parameters: Metals

Validation Level: Stage 2A

Laboratory: Friedman & Bruya, Inc.

Sample Delivery Group (SDG): 007259

Sample Identification	Laboratory Sample Identification	Matrix	Collection Date
OMS-S-17-2.5	007259-01	Soil	07/15/20
OMS-S-18-2.5	007259-02	Soil	07/15/20
OMS-509	007259-03	Soil	07/15/20
OMS-S-19-2.5	007259-04	Soil	07/15/20
PM-B-6-S-27-6	007259-05	Soil	07/15/20
OMS-S-17-2.5MS	007259-01MS	Soil	07/15/20
OMS-S-17-2.5MSD	007259-01MSD	Soil	07/15/20

Introduction

This Data Validation Report (DVR) presents data validation findings and results for the associated samples listed on the cover page. Data validation was performed in accordance with a modified outline of the USEPA National Functional Guidelines (NFG) for Inorganic Superfund Methods Data Review (January 2017). Where specific guidance was not available, the data has been evaluated in a conservative manner consistent with industry standards using professional experience.

The analyses were performed by the following methods:

Copper by Environmental Protection Agency (EPA) SW 846 Method 6020B
Mercury by EPA Method 1631E

All sample results were subjected to Stage 2A data validation, which comprises an evaluation of quality control (QC) summary results.

The following are definitions of the data qualifiers utilized during data validation:

J (Estimated): The compound or analyte was analyzed for and positively identified by the laboratory; however the reported concentration is estimated due to non-conformances discovered during data validation.

U (Non-detected): The compound or analyte was analyzed for and positively identified by the laboratory; however the compound or analyte should be considered non-detected at the reported concentration due to the presence of contaminants detected in the associated blank(s).

UJ (Non-detected estimated): The compound or analyte was reported as not detected by the laboratory; however the reported quantitation/detection limit is estimated due to non-conformances discovered during data validation.

R (Rejected): The sample results were rejected due to gross non-conformances discovered during data validation. Data qualified as rejected is not usable.

NA (Not Applicable): The non-conformance discovered during data validation demonstrates a high bias, while the affected compound or analyte in the associated sample(s) was reported as not detected by the laboratory and did not warrant the qualification of the data.

A qualification summary table is provided at the end of this report if data has been qualified. Flags are classified as P (protocol) or A (advisory) to indicate whether the flag is due to a laboratory deviation from a specified protocol or is of technical advisory nature.

I. Sample Receipt and Technical Holding Times

All samples were received in good condition.

All technical holding time requirements were met.

II. ICPMS Tune

ICP-MS tune data were not reviewed for Stage 2A validation.

III. Instrument Calibration

Instrument calibration data were not reviewed for Stage 2A validation.

IV. ICP Interference Check Sample Analysis

ICP Interference check sample (ICS) analysis data were not reviewed for Stage 2A validation.

V. Laboratory Blanks

Laboratory blanks were analyzed as required by the methods. No contaminants were found in the laboratory blanks.

VI. Field Blanks

No field blanks were identified in this SDG.

VII. Matrix Spike/Matrix Spike Duplicates

Matrix spike (MS) and matrix spike duplicate (MSD) sample analysis was performed on an associated project sample. Percent recoveries (%R) were within QC limits with the following exceptions:

Spike ID (Associated Samples)	Analyte	MS (%R) (Limits)	MSD (%R) (Limits)	Flag	A or P
OMS-S-17-2.5MS/MSD (All samples in SDG 007259)	Mercury	134 (71-125)	-	J (all detects) UJ (all non-detects)	A
OMS-S-17-2.5MS/MSD (OMS-S-17-2.5 OMS-S-18-2.5 OMS-509 OMS-S-19-2.5)	Copper	471 (75-125)	66 (75-125)	J (all detects)	A

Relative percent differences (RPD) were within QC limits with the following exceptions:

Spike ID (Associated Samples)	Analyte	RPD (Limits)	Flag	A or P
OMS-S-17-2.5MS/MSD (OMS-S-17-2.5 OMS-S-18-2.5 OMS-509 OMS-S-19-2.5)	Copper	151 (≤20)	J (all detects)	A

VIII. Duplicate Sample Analysis

The laboratory has indicated that there were no duplicate (DUP) analyses specified for the samples in this SDG, and therefore duplicate analyses were not performed for this SDG.

IX. Serial Dilution

Serial dilution was not performed for this SDG.

X. Laboratory Control Samples

Laboratory control samples (LCS) were analyzed as required by the methods. Percent recoveries (%R) were within QC limits.

XI. Field Duplicates

Samples OMS-S-17-2.5 and OMS-509 were identified as field duplicates. No results were detected in any of the samples with the following exceptions:

Analyte	Concentration (mg/Kg)		RPD
	OMS-S-17-2.5	OMS-509	
Copper	66.2	81.9	21
Mercury	0.12	0.13	8

XII. Internal Standards (ICP-MS)

Internal standards data were not reviewed for Stage 2A validation.

XIII. Sample Result Verification

Raw data were not reviewed for Stage 2A validation.

XIV. Overall Assessment of Data

The analysis was conducted within all specifications of the methods.

Due to MS/MSD %R and RPD, data were qualified as estimated in five samples.

No results were rejected in this SDG.

Kimberly-Clark Upland Area
Metals - Data Qualification Summary - SDG 007259

Sample	Analyte	Flag	A or P	Reason
OMS-S-17-2.5 OMS-S-18-2.5 OMS-509 OMS-S-19-2.5 PM-B-6-S-27-6	Mercury	J (all detects) UJ (all non-detects)	A	Matrix spike/Matrix spike duplicate (%R)
OMS-S-17-2.5 OMS-S-18-2.5 OMS-509 OMS-S-19-2.5	Copper	J (all detects)	A	Matrix spike/Matrix spike duplicate (%R)
OMS-S-17-2.5 OMS-S-18-2.5 OMS-509 OMS-S-19-2.5	Copper	J (all detects)	A	Matrix spike/Matrix spike duplicate (RPD)

Kimberly-Clark Upland Area
Metals - Laboratory Blank Data Qualification Summary - SDG 007259

No Sample Data Qualified in this SDG

Kimberly-Clark Upland Area
Metals - Field Blank Data Qualification Summary - SDG 007259

No Sample Data Qualified in this SDG

LDC #: 48922F4a
SDG #: 007259
Laboratory: Friedman & Bruya, Inc.

VALIDATION COMPLETENESS WORKSHEET
Stage 2A

Date: 8/24/2020
Page: 1 of 1
Reviewer: OM
2nd Reviewer:

METHOD: ~~Of~~, Hg (EPA SW 846 Method 6020B/EPA Method 1631E)

The samples (CV) listed below were reviewed for each of the following validation areas. Validation findings are noted in attached validation findings worksheets.

	Validation Area		Comments
I.	Sample receipt/Technical holding times	A / A	
II.	ICP/MS Tune	N	
III.	Instrument Calibration	N	
IV.	ICP Interference Check Sample (ICS) Analysis	N	
V.	Laboratory Blanks	A	
VI.	Field Blanks	N	
VII.	Matrix Spike/Matrix Spike Duplicates	SW	
VIII.	Duplicate sample analysis	N	
IX.	Serial Dilution	N	
X.	Laboratory control samples	A	ICS
XI.	Field Duplicates	SW	(1,3)
XII.	Internal Standard (ICP-MS)	N	
XIII.	Sample Result Verification	N	
XIV.	Overall Assessment of Data	A	

Note: A = Acceptable; N = Not provided/applicable; SW = See worksheet; ND = No compounds detected; R = Rinsate; FB = Field blank; D = Duplicate; TB = Trip blank; EB = Equipment blank; SB=Source blank; OTHER:

	Client ID	Lab ID	Matrix	Date
1	OMS-S-17-2.5	007259-01	Soil	07/15/20
2	OMS-S-18-2.5	007259-02	Soil	07/15/20
3	OMS-509	007259-03	Soil	07/15/20
4	OMS-S-19-2.5	007259-04	Soil	07/15/20
5	PM-B-6-S-27-6	007259-05	Soil	07/15/20
6	OMS-S-17-2.5MS	007259-01MS	Soil	07/15/20
7	OMS-S-17-2.5MSD	007259-01MSD	Soil	07/15/20
8				
9				
10				
11				
12				
13				

Notes:

LDC #: 48922F4a

VALIDATION FINDINGS WORKSHEET
Sample Specific Element Reference

Reviewer: DTM

All circled elements are applicable to each sample.

Sample ID	Matrix	Target Analyte List (TAL)
1-4	S	Al, Sb, As, Ba, Be, B, Cd, Ca, Cr, Co, (Cu), Fe, Pb, Li, Mg, Mo, Mn, (Hg), Ni, K, Se, Ag, Na, Sr, Tl, Sn, Ti, W, U, V, Zn
		Al, Sb, As, Ba, Be, B, Cd, Ca, Cr, Co, Cu, Fe, Pb, Li, Mg, Mo, Mn, Hg, Ni, K, Se, Ag, Na, Sr, Tl, Sn, Ti, W, U, V, Zn
5	S	Al, Sb, As, Ba, Be, B, Cd, Ca, Cr, Co, Cu, Fe, Pb, Li, Mg, Mo, Mn, (Hg), Ni, K, Se, Ag, Na, Sr, Tl, Sn, Ti, W, U, V, Zn
		Al, Sb, As, Ba, Be, B, Cd, Ca, Cr, Co, Cu, Fe, Pb, Li, Mg, Mo, Mn, Hg, Ni, K, Se, Ag, Na, Sr, Tl, Sn, Ti, W, U, V, Zn
DC6-7	S	Al, Sb, As, Ba, Be, B, Cd, Ca, Cr, Co, (Cu), Fe, Pb, Li, Mg, Mo, Mn, (Hg), Ni, K, Se, Ag, Na, Sr, Tl, Sn, Ti, W, U, V, Zn
		Al, Sb, As, Ba, Be, B, Cd, Ca, Cr, Co, Cu, Fe, Pb, Li, Mg, Mo, Mn, Hg, Ni, K, Se, Ag, Na, Sr, Tl, Sn, Ti, W, U, V, Zn
		Al, Sb, As, Ba, Be, B, Cd, Ca, Cr, Co, Cu, Fe, Pb, Li, Mg, Mo, Mn, Hg, Ni, K, Se, Ag, Na, Sr, Tl, Sn, Ti, W, U, V, Zn
		Al, Sb, As, Ba, Be, B, Cd, Ca, Cr, Co, Cu, Fe, Pb, Li, Mg, Mo, Mn, Hg, Ni, K, Se, Ag, Na, Sr, Tl, Sn, Ti, W, U, V, Zn
		Al, Sb, As, Ba, Be, B, Cd, Ca, Cr, Co, Cu, Fe, Pb, Li, Mg, Mo, Mn, Hg, Ni, K, Se, Ag, Na, Sr, Tl, Sn, Ti, W, U, V, Zn
		Al, Sb, As, Ba, Be, B, Cd, Ca, Cr, Co, Cu, Fe, Pb, Li, Mg, Mo, Mn, Hg, Ni, K, Se, Ag, Na, Sr, Tl, Sn, Ti, W, U, V, Zn
		Al, Sb, As, Ba, Be, B, Cd, Ca, Cr, Co, Cu, Fe, Pb, Li, Mg, Mo, Mn, Hg, Ni, K, Se, Ag, Na, Sr, Tl, Sn, Ti, W, U, V, Zn
		Al, Sb, As, Ba, Be, B, Cd, Ca, Cr, Co, Cu, Fe, Pb, Li, Mg, Mo, Mn, Hg, Ni, K, Se, Ag, Na, Sr, Tl, Sn, Ti, W, U, V, Zn
		Al, Sb, As, Ba, Be, B, Cd, Ca, Cr, Co, Cu, Fe, Pb, Li, Mg, Mo, Mn, Hg, Ni, K, Se, Ag, Na, Sr, Tl, Sn, Ti, W, U, V, Zn
		Al, Sb, As, Ba, Be, B, Cd, Ca, Cr, Co, Cu, Fe, Pb, Li, Mg, Mo, Mn, Hg, Ni, K, Se, Ag, Na, Sr, Tl, Sn, Ti, W, U, V, Zn
		Al, Sb, As, Ba, Be, B, Cd, Ca, Cr, Co, Cu, Fe, Pb, Li, Mg, Mo, Mn, Hg, Ni, K, Se, Ag, Na, Sr, Tl, Sn, Ti, W, U, V, Zn
		Al, Sb, As, Ba, Be, B, Cd, Ca, Cr, Co, Cu, Fe, Pb, Li, Mg, Mo, Mn, Hg, Ni, K, Se, Ag, Na, Sr, Tl, Sn, Ti, W, U, V, Zn
		Al, Sb, As, Ba, Be, B, Cd, Ca, Cr, Co, Cu, Fe, Pb, Li, Mg, Mo, Mn, Hg, Ni, K, Se, Ag, Na, Sr, Tl, Sn, Ti, W, U, V, Zn
		Al, Sb, As, Ba, Be, B, Cd, Ca, Cr, Co, Cu, Fe, Pb, Li, Mg, Mo, Mn, Hg, Ni, K, Se, Ag, Na, Sr, Tl, Sn, Ti, W, U, V, Zn
		Al, Sb, As, Ba, Be, B, Cd, Ca, Cr, Co, Cu, Fe, Pb, Li, Mg, Mo, Mn, Hg, Ni, K, Se, Ag, Na, Sr, Tl, Sn, Ti, W, U, V, Zn
		Al, Sb, As, Ba, Be, B, Cd, Ca, Cr, Co, Cu, Fe, Pb, Li, Mg, Mo, Mn, Hg, Ni, K, Se, Ag, Na, Sr, Tl, Sn, Ti, W, U, V, Zn
		Al, Sb, As, Ba, Be, B, Cd, Ca, Cr, Co, Cu, Fe, Pb, Li, Mg, Mo, Mn, Hg, Ni, K, Se, Ag, Na, Sr, Tl, Sn, Ti, W, U, V, Zn
Analysis Method		
ICP		Al, Sb, As, Ba, Be, B, Cd, Ca, Cr, Co, Cu, Fe, Pb, Li, Mg, Mo, Mn, Hg, Ni, K, Se, Ag, Na, Sr, Tl, Sn, Ti, W, U, V, Zn
ICP-MS		Al, Sb, As, Ba, Be, B, Cd, Ca, Cr, Co, Cu, Fe, Pb, Li, Mg, Mo, Mn, Hg, Ni, K, Se, Ag, Na, Sr, Tl, Sn, Ti, W, U, V, Zn
GFAA		Al, Sb, As, Ba, Be, B, Cd, Ca, Cr, Co, Cu, Fe, Pb, Li, Mg, Mo, Mn, Hg, Ni, K, Se, Ag, Na, Sr, Tl, Sn, Ti, W, U, V, Zn

Comments: Mercury by CVAA if performed

LDC #: 48922F4a

VALIDATION FINDINGS WORKSHEET
Matrix Spike/Matrix Spike Duplicates

Reviewer: DTM
2nd Reviewer:

METHOD: Trace metals (EPA SW 846 Method 6020/6010/7470)

Please see qualifications below for all questions answered "N". Not applicable questions are identified as "N/A".

Y N N/A Was a matrix spike analyzed for each matrix in this SDG?

Y N N/A Were matrix spike percent recoveries (%R) within the control limits of 75-125? If the sample concentration exceeded the spike concentration by a factor of 4 or more, no action was taken.

Y N N/A Were all duplicate sample relative percent differences (RPD) ≤ 20% for samples?

LEVEL IV ONLY:

Y N N/A Were recalculated results acceptable? See Level IV Recalculation Worksheet for recalculations.

#	MS/MSD ID	Matrix	Analyte	MS %Recovery	MSD %Recovery	RPD (Limits)	Associated Samples	Qualifications
	6/7	S	Hg	134(71-125)			ALL	J/A (det/ND)
			Cu	471(75-125)	66		1-4	J/UJ/A (det)
						151(20)	1-4	J/UJ/A (det)

Comments:

LDC#: 48922F4a

VALIDATION FINDINGS WORKSHEET

Field Duplicates

Page: 1 of 1
Reviewer: DTM
2nd Reviewer:

METHOD: Metals (EPA Method 6010/6020/7000)

Analyte	Concentration (mg/Kg)		RPD
	1	3	
Copper	66.2	81.9	21
Mercury	0.12	0.13	8

V:\Darionna\FIELD DUPLICATES\Field Duplicates\FD_inorganic\2020\48922F4a.wpd

Laboratory Data Consultants, Inc.
Data Validation Report

Project/Site Name: Kimberly-Clark Upland Area

LDC Report Date: September 9, 2020

Parameters: Polynuclear Aromatic Hydrocarbons

Validation Level: Stage 2A

Laboratory: Friedman & Bruya, Inc.

Sample Delivery Group (SDG): 007302

Sample Identification	Laboratory Sample Identification	Matrix	Collection Date
CMS-B-24-6	007302-01	Soil	07/16/20
CMS-B-25-6	007302-02	Soil	07/16/20
CMS-B-18-6	007302-03	Soil	07/17/20
CMS-B-19-6	007302-04	Soil	07/17/20
CMS-B-20-6	007302-05	Soil	07/17/20
CMS-S-11-4	007302-06	Soil	07/17/20
CMS-S-12-4	007302-07	Soil	07/17/20
CMS-B-22-6	007302-08	Soil	07/17/20
CMS-B-21-6	007302-09	Soil	07/17/20
CMS-B-25-6MS	007302-02MS	Soil	07/16/20
CMS-B-25-6MSD	007302-02MSD	Soil	07/16/20

Introduction

This Data Validation Report (DVR) presents data validation findings and results for the associated samples listed on the cover page. Data validation was performed in accordance with a modified outline of the USEPA National Functional Guidelines (NFG) for Organic Superfund Methods Data Review (January 2017). Where specific guidance was not available, the data has been evaluated in a conservative manner consistent with industry standards using professional experience.

The analyses were performed by the following method:

Polynuclear Aromatic Hydrocarbons (PAHs) by Environmental Protection Agency (EPA) SW 846 Method 8270E in Selected Ion Monitoring (SIM) mode

All sample results were subjected to Stage 2A data validation, which comprises an evaluation of quality control (QC) summary results.

The following are definitions of the data qualifiers utilized during data validation:

J (Estimated): The compound or analyte was analyzed for and positively identified by the laboratory; however the reported concentration is estimated due to non-conformances discovered during data validation.

U (Non-detected): The compound or analyte was analyzed for and positively identified by the laboratory; however the compound or analyte should be considered non-detected at the reported concentration due to the presence of contaminants detected in the associated blank(s).

UJ (Non-detected estimated): The compound or analyte was reported as not detected by the laboratory; however the reported quantitation/detection limit is estimated due to non-conformances discovered during data validation.

R (Rejected): The sample results were rejected due to gross non-conformances discovered during data validation. Data qualified as rejected is not usable.

NA (Not Applicable): The non-conformance discovered during data validation demonstrates a high bias, while the affected compound or analyte in the associated sample(s) was reported as not detected by the laboratory and did not warrant the qualification of the data.

A qualification summary table is provided at the end of this report if data has been qualified. Flags are classified as P (protocol) or A (advisory) to indicate whether the flag is due to a laboratory deviation from a specified protocol or is of technical advisory nature.

I. Sample Receipt and Technical Holding Times

All samples were received in good condition and cooler temperatures upon receipt met validation criteria.

All technical holding time requirements were met.

II. GC/MS Instrument Performance Check

Instrument performance check data were not reviewed for Stage 2A validation.

III. Initial Calibration and Initial Calibration Verification

Initial calibration data were not reviewed for Stage 2A validation.

IV. Continuing Calibration

Continuing calibration data were not reviewed for Stage 2A validation.

V. Laboratory Blanks

Laboratory blanks were analyzed as required by the method. No contaminants were found in the laboratory blanks.

VI. Field Blanks

No field blanks were identified in this SDG.

VII. Surrogates

Surrogates were added to all samples as required by the method. All surrogate recoveries (%R) were within QC limits.

VIII. Matrix Spike/Matrix Spike Duplicates

Matrix spike (MS) and matrix spike duplicate (MSD) sample analysis was performed on an associated project sample. Percent recoveries (%R) were within QC limits. Relative percent differences (RPD) were within QC limits.

IX. Laboratory Control Samples

Laboratory control samples (LCS) were analyzed as required by the method. Percent recoveries (%R) were within QC limits.

X. Field Duplicates

No field duplicates were identified in this SDG.

XI. Internal Standards

Internal standards data were not reviewed for Stage 2A validation.

XII. Compound Quantitation

Raw data were not reviewed for Stage 2A validation.

XIII. Target Compound Identifications

Raw data were not reviewed for Stage 2A validation.

XIV. System Performance

Raw data were not reviewed for Stage 2A validation.

XV. Overall Assessment of Data

The analysis was conducted within all specifications of the method. No results were rejected in this SDG.

Kimberly-Clark Upland Area
Polynuclear Aromatic Hydrocarbons - Data Qualification Summary - SDG 007302

No Sample Data Qualified in this SDG

Kimberly-Clark Upland Area
Polynuclear Aromatic Hydrocarbons - Laboratory Blank Data Qualification Summary - SDG 007302

No Sample Data Qualified in this SDG

Kimberly-Clark Upland Area
Polynuclear Aromatic Hydrocarbons - Field Blank Data Qualification Summary - SDG 007302

No Sample Data Qualified in this SDG

LDC #: 48922G2b
SDG #: 007302
Laboratory: Friedman & Bruya, Inc.

VALIDATION COMPLETENESS WORKSHEET
Stage 2A

Date: 09/04/20
Page: 1 of 1
Reviewer: LT
2nd Reviewer:

METHOD: GC/MS Polynuclear Aromatic Hydrocarbons (EPA SW 846 Method 8270E-SIM)

The samples listed below were reviewed for each of the following validation areas. Validation findings are noted in attached validation findings worksheets.

	Validation Area		Comments
I.	Sample receipt/Technical holding times	A/A	
II.	GC/MS Instrument performance check	N	
III.	Initial calibration/ICV	N/N	
IV.	Continuing calibration	N	
V.	Laboratory Blanks	A	
VI.	Field blanks	N	
VII.	Surrogate spikes	A	
VIII.	Matrix spike/Matrix spike duplicates	A	(1911)
IX.	Laboratory control samples	A	LCS
X.	Field duplicates	N	
XI.	Internal standards	N	
XII.	Compound quantitation RL/LOQ/LODs	N	Dry weight basis = 1-9
XIII.	Target compound identification	N	
XIV.	System performance	N	
XV.	Overall assessment of data	A	

Note: A = Acceptable; N = Not provided/applicable; SW = See worksheet; ND = No compounds detected; R = Rinsate; FB = Field blank; D = Duplicate; TB = Trip blank; EB = Equipment blank; SB=Source blank; OTHER:

	Client ID	Lab ID	Matrix	Date
1	CMS-B-24-6	007302-01	Soil	07/16/20
2	CMS-B-25-6	007302-02	Soil	07/16/20
3	CMS-B-18-6	007302-03	Soil	07/17/20
4	CMS-B-19-6	007302-04	Soil	07/17/20
5	CMS-B-20-6	007302-05	Soil	07/17/20
6	CMS-S-11-4	007302-06	Soil	07/17/20
7	CMS-S-12-4	007302-07	Soil	07/17/20
8	CMS-B-22-6	007302-08	Soil	07/17/20
9	CMS-B-21-6	007302-09	Soil	07/17/20
10	CMS-B-25-6MS	007302-02MS	Soil	07/16/20
11	CMS-B-25-6MSD	007302-02MSD	Soil	07/16/20
12				
13	1.00-1650 MB 1/5			
14				

Laboratory Data Consultants, Inc.
Data Validation Report

Project/Site Name: Kimberly-Clark Upland Area

LDC Report Date: September 9, 2020

Parameters: Polychlorinated Biphenyls

Validation Level: Stage 2A

Laboratory: Friedman & Bruya, Inc.

Sample Delivery Group (SDG): 007302

Sample Identification	Laboratory Sample Identification	Matrix	Collection Date
CMS-B-24-6	007302-01	Soil	07/16/20
CMS-B-25-6	007302-02	Soil	07/16/20
CMS-B-18-6	007302-03	Soil	07/17/20
CMS-B-19-6	007302-04	Soil	07/17/20
CMS-B-20-6	007302-05	Soil	07/17/20
CMS-S-11-4	007302-06	Soil	07/17/20
CMS-S-12-4	007302-07	Soil	07/17/20
CMS-B-22-6	007302-08	Soil	07/17/20
CMS-B-21-6	007302-09	Soil	07/17/20
CMS-B-24-6MS	007302-01MS	Soil	07/16/20
CMS-B-24-6MSD	007302-01MSD	Soil	07/16/20

Introduction

This Data Validation Report (DVR) presents data validation findings and results for the associated samples listed on the cover page. Data validation was performed in accordance with a modified outline of the USEPA National Functional Guidelines (NFG) for Organic Superfund Methods Data Review (January 2017). Where specific guidance was not available, the data has been evaluated in a conservative manner consistent with industry standards using professional experience.

The analyses were performed by the following method:

Polychlorinated Biphenyls (PCBs) by Environmental Protection Agency (EPA) SW 846 Method 8082A

All sample results were subjected to Stage 2A data validation, which comprises an evaluation of quality control (QC) summary results.

The following are definitions of the data qualifiers utilized during data validation:

J (Estimated): The compound or analyte was analyzed for and positively identified by the laboratory; however the reported concentration is estimated due to non-conformances discovered during data validation.

U (Non-detected): The compound or analyte was analyzed for and positively identified by the laboratory; however the compound or analyte should be considered non-detected at the reported concentration due to the presence of contaminants detected in the associated blank(s).

UJ (Non-detected estimated): The compound or analyte was reported as not detected by the laboratory; however the reported quantitation/detection limit is estimated due to non-conformances discovered during data validation.

R (Rejected): The sample results were rejected due to gross non-conformances discovered during data validation. Data qualified as rejected is not usable.

NA (Not Applicable): The non-conformance discovered during data validation demonstrates a high bias, while the affected compound or analyte in the associated sample(s) was reported as not detected by the laboratory and did not warrant the qualification of the data.

A qualification summary table is provided at the end of this report if data has been qualified. Flags are classified as P (protocol) or A (advisory) to indicate whether the flag is due to a laboratory deviation from a specified protocol or is of technical advisory nature.

I. Sample Receipt and Technical Holding Times

All samples were received in good condition and cooler temperatures upon receipt met validation criteria.

All technical holding time requirements were met.

II. Initial Calibration and Initial Calibration Verification

Initial calibration data were not reviewed for Stage 2A validation.

III. Continuing Calibration

Continuing calibration data were not reviewed for Stage 2A validation.

IV. Laboratory Blanks

Laboratory blanks were analyzed as required by the method. No contaminants were found in the laboratory blanks.

V. Field Blanks

No field blanks were identified in this SDG.

VI. Surrogates

Surrogates were added to all samples as required by the method. All surrogate recoveries (%R) were within QC limits.

VII. Matrix Spike/Matrix Spike Duplicates

Matrix spike (MS) and matrix spike duplicate (MSD) sample analysis was performed on an associated project sample. Percent recoveries (%R) were within QC limits with the following exceptions:

Spike ID (Associated Samples)	Compound	MS (%R) (Limits)	MSD (%R) (Limits)	Flag	A or P
CMS-B-24-6MS/MSD (CMS-B-24-6)	Aroclor-1260	-	614 (38-124)	J (all detects)	A

Relative percent differences (RPD) were within QC limits with the following exceptions:

Spike ID (Associated Samples)	Compound	RPD (Limits)	Flag	A or P
CMS-B-24-6MS/MSD (CMS-B-24-6)	Aroclor-1016	33 (≤20)	NA	-

Spike ID (Associated Samples)	Compound	RPD (Limits)	Flag	A or P
CMS-B-24-6MS/MSD (CMS-B-24-6)	Aroclor-1260	149 (≤20)	J (all detects)	A

VIII. Laboratory Control Samples

Laboratory control samples (LCS) were analyzed as required by the method. Percent recoveries (%R) were within QC limits.

IX. Field Duplicates

No field duplicates were identified in this SDG.

X. Compound Quantitation

Raw data were not reviewed for Stage 2A validation.

XI. Target Compound Identification

Raw data were not reviewed for Stage 2A validation.

XII. Overall Assessment of Data

The analysis was conducted within all specifications of the method.

Due to MS/MSD %R and RPD, data were qualified as estimated in one sample.

No results were rejected in this SDG.

Kimberly-Clark Upland Area
Polychlorinated Biphenyls - Data Qualification Summary - SDG 007302

Sample	Compound	Flag	A or P	Reason
CMS-B-24-6	Aroclor-1260	J (all detects)	A	Matrix spike/Matrix spike duplicate (%R)
CMS-B-24-6	Aroclor-1260	J (all detects)	A	Matrix spike/Matrix spike duplicate (RPD)

Kimberly-Clark Upland Area
Polychlorinated Biphenyls - Laboratory Blank Data Qualification Summary - SDG 007302

No Sample Data Qualified in this SDG

Kimberly-Clark Upland Area
Polychlorinated Biphenyls - Field Blank Data Qualification Summary - SDG 007302

No Sample Data Qualified in this SDG

LDC #: 48922G3b
SDG #: 007302
Laboratory: Friedman & Bruya, Inc.

VALIDATION COMPLETENESS WORKSHEET
Stage 2A

Date: 09/04/20
Page: 1 of 1
Reviewer: LT
2nd Reviewer:

METHOD: GC Polychlorinated Biphenyls (EPA SW846 Method 8082A)

The samples listed below were reviewed for each of the following validation areas. Validation findings are noted in attached validation findings worksheets.

	Validation Area		Comments
I.	Sample receipt/Technical holding times	A / A	
II.	Initial calibration/ICV	N/N	
III.	Continuing calibration	N	
IV.	Laboratory Blanks	A	
V.	Field blanks	N	
VI.	Surrogate spikes	A	
VII.	Matrix spike/Matrix spike duplicates	SW	(10,11)
VIII.	Laboratory control samples	A	LCS
IX.	Field duplicates	N	
X.	Compound quantitation/RL/LOQ/LODs	N	Dry weight basis = 1-9
XI.	Target compound identification	N	
XII	Overall assessment of data	A	

Note: A = Acceptable; N = Not provided/applicable; SW = See worksheet; ND = No compounds detected; R = Rinsate; FB = Field blank; D = Duplicate; TB = Trip blank; EB = Equipment blank; SB=Source blank; OTHER:

	Client ID	Lab ID	Matrix	Date
1	CMS-B-24-6	007302-01	Soil	07/16/20
2	CMS-B-25-6	007302-02	Soil	07/16/20
3	CMS-B-18-6	007302-03	Soil	07/17/20
4	CMS-B-19-6	007302-04	Soil	07/17/20
5	CMS-B-20-6	007302-05	Soil	07/17/20
6	CMS-S-11-4	007302-06	Soil	07/17/20
7	CMS-S-12-4	007302-07	Soil	07/17/20
8	CMS-B-22-6	007302-08	Soil	07/17/20
9	CMS-B-21-6	007302-09	Soil	07/17/20
10	CMS-B-24-6MS	007302-01MS	Soil	07/16/20
11	CMS-B-24-6MSD	007302-01MSD	Soil	07/16/20
12				
13				

Notes:

1	OD-1651 MB 1/8						

LDC #: 48922G3b

VALIDATION FINDINGS WORKSHEET
Matrix Spike/Matrix Spike Duplicates

Reviewer: LT

METHOD: _X_ **GC** ___ **HPLC**

Please see qualifications below for all questions answered "N". Not applicable questions are identified as "N/A".

Y**x** N___ N/A___ Were a matrix spike (MS) and matrix spike duplicate (MSD) analyzed for each matrix in this SDG?

Y**x** N___ N/A___ Was an MS/MSD analyzed every 20 samples for each matrix or whenever a sample extraction was performed?

Y___ N**x** N/A___ Were the MS/MSD percent recoveries (%R) and relative percent differences (RPD) within QC limits?

#	MS/MSD ID	Compound	MS %R (Limits)	MSD %R (Limits)	RPD (Limits)	Associated Samples	Qualifications
	10/11	Aroclor-1260		614 (38 - 124)		1 (DET)	J/A DETS
		Aroclor-1016			33 (≤20)	(ND)	↓
		Aroclor-1260			149 (≤20)	(DET)	↓

Laboratory Data Consultants, Inc.
Data Validation Report

Project/Site Name: Kimberly-Clark Upland Area

LDC Report Date: August 27, 2020

Parameters: Mercury

Validation Level: Stage 2A

Laboratory: Friedman & Bruya, Inc.

Sample Delivery Group (SDG): 007347

Sample Identification	Laboratory Sample Identification	Matrix	Collection Date
PM-B-6-S-28-6-072220	007347-01	Soil	07/22/20

Introduction

This Data Validation Report (DVR) presents data validation findings and results for the associated samples listed on the cover page. Data validation was performed in accordance with a modified outline of the USEPA National Functional Guidelines (NFG) for Inorganic Superfund Methods Data Review (January 2017). Where specific guidance was not available, the data has been evaluated in a conservative manner consistent with industry standards using professional experience.

The analyses were performed by the following method:

Mercury by Environmental Protection Agency (EPA) Method 1631E

All sample results were subjected to Stage 2A data validation, which comprises an evaluation of quality control (QC) summary results.

The following are definitions of the data qualifiers utilized during data validation:

J (Estimated): The compound or analyte was analyzed for and positively identified by the laboratory; however the reported concentration is estimated due to non-conformances discovered during data validation.

U (Non-detected): The compound or analyte was analyzed for and positively identified by the laboratory; however the compound or analyte should be considered non-detected at the reported concentration due to the presence of contaminants detected in the associated blank(s).

UJ (Non-detected estimated): The compound or analyte was reported as not detected by the laboratory; however the reported quantitation/detection limit is estimated due to non-conformances discovered during data validation.

R (Rejected): The sample results were rejected due to gross non-conformances discovered during data validation. Data qualified as rejected is not usable.

NA (Not Applicable): The non-conformance discovered during data validation demonstrates a high bias, while the affected compound or analyte in the associated sample(s) was reported as not detected by the laboratory and did not warrant the qualification of the data.

A qualification summary table is provided at the end of this report if data has been qualified. Flags are classified as P (protocol) or A (advisory) to indicate whether the flag is due to a laboratory deviation from a specified protocol or is of technical advisory nature.

I. Sample Receipt and Technical Holding Times

All samples were received in good condition.

All technical holding time requirements were met.

II. Instrument Calibration

Instrument calibration data were not reviewed for Stage 2A validation.

III. Laboratory Blanks

Laboratory blanks were analyzed as required by the method. No contaminants were found in the laboratory blanks.

IV. Field Blanks

No field blanks were identified in this SDG.

V. Matrix Spike/Matrix Spike Duplicates

The laboratory has indicated that there were no matrix spike (MS) and matrix spike duplicate (MSD) analyses specified for the samples in this SDG, and therefore matrix spike and matrix spike duplicate analyses were not performed for this SDG.

VI. Duplicate Sample Analysis

The laboratory has indicated that there were no duplicate (DUP) analyses specified for the samples in this SDG, and therefore duplicate analyses were not performed for this SDG.

VII. Laboratory Control Samples

Laboratory control samples (LCS) were analyzed as required by the method. Percent recoveries (%R) were within QC limits.

VIII. Field Duplicates

No field duplicates were identified in this SDG.

IX. Sample Result Verification

Raw data were not reviewed for Stage 2A validation.

X. Overall Assessment of Data

The analysis was conducted within all specifications of the method. No results were rejected in this SDG.

Kimberly-Clark Upland Area
Mercury - Data Qualification Summary - SDG 007347

No Sample Data Qualified in this SDG

Kimberly-Clark Upland Area
Mercury - Laboratory Blank Data Qualification Summary - SDG 007347

No Sample Data Qualified in this SDG

Kimberly-Clark Upland Area
Mercury - Field Blank Data Qualification Summary - SDG 007347

No Sample Data Qualified in this SDG

LDC #: 48922H4c
SDG #: 007347
Laboratory: Friedman & Bruya, Inc.

VALIDATION COMPLETENESS WORKSHEET
Stage 2A

Date: 8/25/2020
Page: 1 of 1
Reviewer: DM
2nd Reviewer:

METHOD: Mercury (EPA Method 1631E)

The samples listed below were reviewed for each of the following validation areas. Validation findings are noted in attached validation findings worksheets.

	Validation Area		Comments
I.	Sample receipt/Technical holding times	A / A	
II.	Instrument Calibration	N	
III.	Laboratory Blanks	A	
IV.	Field Blanks	N	
V.	Matrix Spike/Matrix Spike Duplicates	N	
VI.	Duplicate sample analysis	N	
VII.	Laboratory control samples	A	LCS
VIII.	Field Duplicates	N	
IX.	Sample Result Verification	N	
X	Overall Assessment of Data	A	

Note: A = Acceptable; N = Not provided/applicable; SW = See worksheet; ND = No compounds detected; R = Rinsate; FB = Field blank; D = Duplicate; TB = Trip blank; EB = Equipment blank; SB=Source blank; OTHER:

	Client ID	Lab ID	Matrix	Date
1	PM-B-6-S-28-6-072220	007347-01	Soil	07/22/20
2				
3				
4				
5				
6				
7				
8				
9				
10				
11				
12				
13				
14				
15				
16				
17				

Notes:

Laboratory Data Consultants, Inc.
Data Validation Report

Project/Site Name: Kimberly-Clark Upland Area

LDC Report Date: September 9, 2020

Parameters: Polynuclear Aromatic Hydrocarbons

Validation Level: Stage 2A

Laboratory: Friedman & Bruya, Inc.

Sample Delivery Group (SDG): 007450

Sample Identification	Laboratory Sample Identification	Matrix	Collection Date
CMS-B-17-6	007450-01	Soil	07/27/20
CMS-B-16-6	007450-02	Soil	07/27/20
CMS-B-12-6	007450-03	Soil	07/27/20
CMS-S-13-4	007450-04	Soil	07/27/20
CMS-S-14-4	007450-05	Soil	07/27/20
CMS-S-15-4	007450-06	Soil	07/27/20
CMS-S-16-4	007450-07	Soil	07/27/20
CMS-510	007450-08	Soil	07/27/20
CMS-S-17-4	007450-09	Soil	07/27/20
CMS-S-18-4	007450-10	Soil	07/27/20
CMS-S-19-4	007450-11	Soil	07/27/20
CMS-S-20-4	007450-12	Soil	07/27/20
CMS-S-19-4MS	007450-11MS	Soil	07/27/20
CMS-S-19-4MSD	007450-11MSD	Soil	07/27/20

Introduction

This Data Validation Report (DVR) presents data validation findings and results for the associated samples listed on the cover page. Data validation was performed in accordance with a modified outline of the USEPA National Functional Guidelines (NFG) for Organic Superfund Methods Data Review (January 2017). Where specific guidance was not available, the data has been evaluated in a conservative manner consistent with industry standards using professional experience.

The analyses were performed by the following method:

Polynuclear Aromatic Hydrocarbons (PAHs) by Environmental Protection Agency (EPA) SW 846 Method 8270E in Selected Ion Monitoring (SIM) mode

All sample results were subjected to Stage 2A data validation, which comprises an evaluation of quality control (QC) summary results.

The following are definitions of the data qualifiers utilized during data validation:

J (Estimated): The compound or analyte was analyzed for and positively identified by the laboratory; however the reported concentration is estimated due to non-conformances discovered during data validation.

U (Non-detected): The compound or analyte was analyzed for and positively identified by the laboratory; however the compound or analyte should be considered non-detected at the reported concentration due to the presence of contaminants detected in the associated blank(s).

UJ (Non-detected estimated): The compound or analyte was reported as not detected by the laboratory; however the reported quantitation/detection limit is estimated due to non-conformances discovered during data validation.

R (Rejected): The sample results were rejected due to gross non-conformances discovered during data validation. Data qualified as rejected is not usable.

NA (Not Applicable): The non-conformance discovered during data validation demonstrates a high bias, while the affected compound or analyte in the associated sample(s) was reported as not detected by the laboratory and did not warrant the qualification of the data.

A qualification summary table is provided at the end of this report if data has been qualified. Flags are classified as P (protocol) or A (advisory) to indicate whether the flag is due to a laboratory deviation from a specified protocol or is of technical advisory nature.

I. Sample Receipt and Technical Holding Times

All samples were received in good condition and cooler temperatures upon receipt met validation criteria.

All technical holding time requirements were met.

II. GC/MS Instrument Performance Check

Instrument performance check data were not reviewed for Stage 2A validation.

III. Initial Calibration and Initial Calibration Verification

Initial calibration data were not reviewed for Stage 2A validation.

IV. Continuing Calibration

Continuing calibration data were not reviewed for Stage 2A validation.

V. Laboratory Blanks

Laboratory blanks were analyzed as required by the method. No contaminants were found in the laboratory blanks.

VI. Field Blanks

No field blanks were identified in this SDG.

VII. Surrogates

Surrogates were added to all samples as required by the method. All surrogate recoveries (%R) were within QC limits.

VIII. Matrix Spike/Matrix Spike Duplicates

Matrix spike (MS) and matrix spike duplicate (MSD) sample analysis was performed on an associated project sample. Percent recoveries (%R) were within QC limits. Relative percent differences (RPD) were within QC limits.

IX. Laboratory Control Samples

Laboratory control samples (LCS) were analyzed as required by the method. Percent recoveries (%R) were within QC limits.

X. Field Duplicates

Samples CMS-S-16-4 and CMS-510 were identified as field duplicates. No results were detected in any of the samples.

XI. Internal Standards

Internal standards data were not reviewed for Stage 2A validation.

XII. Compound Quantitation

Raw data were not reviewed for Stage 2A validation.

XIII. Target Compound Identifications

Raw data were not reviewed for Stage 2A validation.

XIV. System Performance

Raw data were not reviewed for Stage 2A validation.

XV. Overall Assessment of Data

The analysis was conducted within all specifications of the method. No results were rejected in this SDG.

Kimberly-Clark Upland Area
Polynuclear Aromatic Hydrocarbons - Data Qualification Summary - SDG 007450

No Sample Data Qualified in this SDG

Kimberly-Clark Upland Area
Polynuclear Aromatic Hydrocarbons - Laboratory Blank Data Qualification Summary - SDG 007450

No Sample Data Qualified in this SDG

Kimberly-Clark Upland Area
Polynuclear Aromatic Hydrocarbons - Field Blank Data Qualification Summary - SDG 007450

No Sample Data Qualified in this SDG

LDC #: 48922I2b
SDG #: 007450
Laboratory: Friedman & Bruya, Inc.

VALIDATION COMPLETENESS WORKSHEET
Stage 2A

Date: 09/04/20
Page: 1 of 1
Reviewer: VT
2nd Reviewer:

METHOD: GC/MS Polynuclear Aromatic Hydrocarbons (EPA SW 846 Method 8270E-SIM)

The samples listed below were reviewed for each of the following validation areas. Validation findings are noted in attached validation findings worksheets.

	Validation Area		Comments
I.	Sample receipt/Technical holding times	A / A	
II.	GC/MS Instrument performance check	N	
III.	Initial calibration/ICV	N/N	
IV.	Continuing calibration	N	
V.	Laboratory Blanks	A	
VI.	Field blanks	N	
VII.	Surrogate spikes	A	
VIII.	Matrix spike/Matrix spike duplicates	A	(13,14)
IX.	Laboratory control samples	A	LCS
X.	Field duplicates	ND	D = 7+8
XI.	Internal standards	N	
XII.	Compound quantitation RL/LOQ/LODs	N	Dry weight basis = 1-12
XIII.	Target compound identification	N	
XIV.	System performance	N	
XV.	Overall assessment of data	A	

Note: A = Acceptable; N = Not provided/applicable; SW = See worksheet; ND = No compounds detected; R = Rinsate; FB = Field blank; D = Duplicate; TB = Trip blank; EB = Equipment blank; SB=Source blank; OTHER:

	Client ID		Lab ID	Matrix	Date
1	CMS-B-17-6		007450-01	Soil	07/27/20
2	CMS-B-16-6		007450-02	Soil	07/27/20
3	CMS-B-12-6		007450-03	Soil	07/27/20
4	CMS-S-13-4		007450-04	Soil	07/27/20
5	CMS-S-14-4		007450-05	Soil	07/27/20
6	CMS-S-15-4		007450-06	Soil	07/27/20
7	CMS-S-16-4	D	007450-07	Soil	07/27/20
8	CMS-510	D	007450-08	Soil	07/27/20
9	CMS-S-17-4		007450-09	Soil	07/27/20
10	CMS-S-18-4		007450-10	Soil	07/27/20
11	CMS-S-19-4		007450-11	Soil	07/27/20
12	CMS-S-20-4		007450-12	Soil	07/27/20
13	CMS-S-19-4MS		007450-11MS	Soil	07/27/20
14	CMS-S-19-4MSD		007450-11MSD	Soil	07/27/20

1. 00-1678MB2 1/5
2. 00-1701 MB1/5

Laboratory Data Consultants, Inc.
Data Validation Report

Project/Site Name: Kimberly-Clark Upland Area

LDC Report Date: September 9, 2020

Parameters: Polychlorinated Biphenyls

Validation Level: Stage 2A

Laboratory: Friedman & Bruya, Inc.

Sample Delivery Group (SDG): 007450

Sample Identification	Laboratory Sample Identification	Matrix	Collection Date
CMS-B-17-6	007450-01	Soil	07/27/20
CMS-B-16-6	007450-02	Soil	07/27/20
CMS-B-12-6	007450-03	Soil	07/27/20
CMS-S-13-4	007450-04	Soil	07/27/20
CMS-S-14-4	007450-05	Soil	07/27/20
CMS-S-15-4	007450-06	Soil	07/27/20
CMS-S-16-4	007450-07	Soil	07/27/20
CMS-510	007450-08	Soil	07/27/20
CMS-S-17-4	007450-09	Soil	07/27/20
CMS-S-18-4	007450-10	Soil	07/27/20
CMS-S-19-4	007450-11	Soil	07/27/20
CMS-S-20-4	007450-12	Soil	07/27/20

Introduction

This Data Validation Report (DVR) presents data validation findings and results for the associated samples listed on the cover page. Data validation was performed in accordance with a modified outline of the USEPA National Functional Guidelines (NFG) for Organic Superfund Methods Data Review (January 2017). Where specific guidance was not available, the data has been evaluated in a conservative manner consistent with industry standards using professional experience.

The analyses were performed by the following method:

Polychlorinated Biphenyls (PCBs) by Environmental Protection Agency (EPA) SW 846 Method 8082A

All sample results were subjected to Stage 2A data validation, which comprises an evaluation of quality control (QC) summary results.

The following are definitions of the data qualifiers utilized during data validation:

J (Estimated): The compound or analyte was analyzed for and positively identified by the laboratory; however the reported concentration is estimated due to non-conformances discovered during data validation.

U (Non-detected): The compound or analyte was analyzed for and positively identified by the laboratory; however the compound or analyte should be considered non-detected at the reported concentration due to the presence of contaminants detected in the associated blank(s).

UJ (Non-detected estimated): The compound or analyte was reported as not detected by the laboratory; however the reported quantitation/detection limit is estimated due to non-conformances discovered during data validation.

R (Rejected): The sample results were rejected due to gross non-conformances discovered during data validation. Data qualified as rejected is not usable.

NA (Not Applicable): The non-conformance discovered during data validation demonstrates a high bias, while the affected compound or analyte in the associated sample(s) was reported as not detected by the laboratory and did not warrant the qualification of the data.

A qualification summary table is provided at the end of this report if data has been qualified. Flags are classified as P (protocol) or A (advisory) to indicate whether the flag is due to a laboratory deviation from a specified protocol or is of technical advisory nature.

I. Sample Receipt and Technical Holding Times

All samples were received in good condition and cooler temperatures upon receipt met validation criteria.

All technical holding time requirements were met.

II. Initial Calibration and Initial Calibration Verification

Initial calibration data were not reviewed for Stage 2A validation.

III. Continuing Calibration

Continuing calibration data were not reviewed for Stage 2A validation.

IV. Laboratory Blanks

Laboratory blanks were analyzed as required by the method. No contaminants were found in the laboratory blanks.

V. Field Blanks

No field blanks were identified in this SDG.

VI. Surrogates

Surrogates were added to all samples as required by the method. All surrogate recoveries (%R) were within QC limits.

VII. Matrix Spike/Matrix Spike Duplicates

The laboratory has indicated that there were no matrix spike (MS) and matrix spike duplicate (MSD) analyses specified for the samples in this SDG, and therefore matrix spike and matrix spike duplicate analyses were not performed for this SDG.

VIII. Laboratory Control Samples

Laboratory control samples (LCS) were analyzed as required by the method. Percent recoveries (%R) were within QC limits.

IX. Field Duplicates

Samples CMS-S-16-4 and CMS-510 were identified as field duplicates. No results were detected in any of the samples.

X. Compound Quantitation

Raw data were not reviewed for Stage 2A validation.

XI. Target Compound Identification

Raw data were not reviewed for Stage 2A validation.

XII. Overall Assessment of Data

The analysis was conducted within all specifications of the method. No results were rejected in this SDG.

Kimberly-Clark Upland Area
Polychlorinated Biphenyls - Data Qualification Summary - SDG 007450

No Sample Data Qualified in this SDG

Kimberly-Clark Upland Area
Polychlorinated Biphenyls - Laboratory Blank Data Qualification Summary - SDG 007450

No Sample Data Qualified in this SDG

Kimberly-Clark Upland Area
Polychlorinated Biphenyls - Field Blank Data Qualification Summary - SDG 007450

No Sample Data Qualified in this SDG

LDC #: 48922I3b
SDG #: 007450
Laboratory: Friedman & Bruya, Inc.

VALIDATION COMPLETENESS WORKSHEET
Stage 2A

Date: 09/04/20
Page: 1 of 1
Reviewer: VF
2nd Reviewer:

METHOD: GC Polychlorinated Biphenyls (EPA SW846 Method 8082A)

The samples listed below were reviewed for each of the following validation areas. Validation findings are noted in attached validation findings worksheets.

	Validation Area		Comments
I.	Sample receipt/Technical holding times	A/A	
II.	Initial calibration/ICV	N/N	
III.	Continuing calibration	N	
IV.	Laboratory Blanks	A	
V.	Field blanks	N	
VI.	Surrogate spikes	A	
VII.	Matrix spike/Matrix spike duplicates	N	Non client
VIII.	Laboratory control samples	A	LCS
IX.	Field duplicates	ND	D = 7+8
X.	Compound quantitation/RL/LOQ/LODs	N	Dry weight basis = 1-12
XI.	Target compound identification	N	
XII.	Overall assessment of data	A	

Note: A = Acceptable; N = Not provided/applicable; SW = See worksheet; ND = No compounds detected; R = Rinsate; FB = Field blank; D = Duplicate; TB = Trip blank; EB = Equipment blank; SB=Source blank; OTHER:

	Client ID		Lab ID	Matrix	Date
1	CMS-B-17-6		007450-01	Soil	07/27/20
2	CMS-B-16-6		007450-02	Soil	07/27/20
3	CMS-B-12-6		007450-03	Soil	07/27/20
4	CMS-S-13-4		007450-04	Soil	07/27/20
5	CMS-S-14-4		007450-05	Soil	07/27/20
6	CMS-S-15-4		007450-06	Soil	07/27/20
7	CMS-S-16-4	D	007450-07	Soil	07/27/20
8	CMS-510	D	007450-08	Soil	07/27/20
9	CMS-S-17-4		007450-09	Soil	07/27/20
10	CMS-S-18-4		007450-10	Soil	07/27/20
11	CMS-S-19-4		007450-11	Soil	07/27/20
12	CMS-S-20-4		007450-12	Soil	07/27/20
13					
14					

Notes:

1	00-1694 MB2 1/6						

Laboratory Data Consultants, Inc.
Data Validation Report

Project/Site Name: Kimberly-Clark Upland Area

LDC Report Date: September 9, 2020

Parameters: Polynuclear Aromatic Hydrocarbons

Validation Level: Stage 2A

Laboratory: Friedman & Bruya, Inc.

Sample Delivery Group (SDG): 007468

Sample Identification	Laboratory Sample Identification	Matrix	Collection Date
CMS-B-06-6	007468-01	Soil	07/28/20
CMS-B-11-6	007468-02	Soil	07/28/20
CMS-S-21-4	007468-03	Soil	07/28/20
CMS-S-22-4	007468-04	Soil	07/28/20
CMS-B-10-6	007468-05	Soil	07/28/20
CMS-B-05-6	007468-06	Soil	07/28/20
CMS-B-15-6	007468-07	Soil	07/28/20
CMS-B-14-6	007468-08	Soil	07/28/20
CMS-B-13-6	007468-09	Soil	07/28/20
CMS-B-09-6	007468-10	Soil	07/28/20
CMS-S-23-4	007468-11	Soil	07/28/20

Introduction

This Data Validation Report (DVR) presents data validation findings and results for the associated samples listed on the cover page. Data validation was performed in accordance with a modified outline of the USEPA National Functional Guidelines (NFG) for Organic Superfund Methods Data Review (January 2017). Where specific guidance was not available, the data has been evaluated in a conservative manner consistent with industry standards using professional experience.

The analyses were performed by the following method:

Polynuclear Aromatic Hydrocarbons (PAHs) by Environmental Protection Agency (EPA) SW 846 Method 8270E in Selected Ion Monitoring (SIM) mode

All sample results were subjected to Stage 2A data validation, which comprises an evaluation of quality control (QC) summary results.

The following are definitions of the data qualifiers utilized during data validation:

J (Estimated): The compound or analyte was analyzed for and positively identified by the laboratory; however the reported concentration is estimated due to non-conformances discovered during data validation.

U (Non-detected): The compound or analyte was analyzed for and positively identified by the laboratory; however the compound or analyte should be considered non-detected at the reported concentration due to the presence of contaminants detected in the associated blank(s).

UJ (Non-detected estimated): The compound or analyte was reported as not detected by the laboratory; however the reported quantitation/detection limit is estimated due to non-conformances discovered during data validation.

R (Rejected): The sample results were rejected due to gross non-conformances discovered during data validation. Data qualified as rejected is not usable.

NA (Not Applicable): The non-conformance discovered during data validation demonstrates a high bias, while the affected compound or analyte in the associated sample(s) was reported as not detected by the laboratory and did not warrant the qualification of the data.

A qualification summary table is provided at the end of this report if data has been qualified. Flags are classified as P (protocol) or A (advisory) to indicate whether the flag is due to a laboratory deviation from a specified protocol or is of technical advisory nature.

I. Sample Receipt and Technical Holding Times

All samples were received in good condition and cooler temperatures upon receipt met validation criteria.

All technical holding time requirements were met.

II. GC/MS Instrument Performance Check

Instrument performance check data were not reviewed for Stage 2A validation.

III. Initial Calibration and Initial Calibration Verification

Initial calibration data were not reviewed for Stage 2A validation.

IV. Continuing Calibration

Continuing calibration data were not reviewed for Stage 2A validation.

V. Laboratory Blanks

Laboratory blanks were analyzed as required by the method. No contaminants were found in the laboratory blanks.

VI. Field Blanks

No field blanks were identified in this SDG.

VII. Surrogates

Surrogates were added to all samples as required by the method. All surrogate recoveries (%R) were within QC limits.

VIII. Matrix Spike/Matrix Spike Duplicates

Matrix spike (MS) and matrix spike duplicate (MSD) sample analysis was performed on an associated project sample. Percent recoveries (%R) were within QC limits. Relative percent differences (RPD) were within QC limits.

IX. Laboratory Control Samples

Laboratory control samples (LCS) were analyzed as required by the method. Percent recoveries (%R) were within QC limits.

X. Field Duplicates

No field duplicates were identified in this SDG.

XI. Internal Standards

Internal standards data were not reviewed for Stage 2A validation.

XII. Compound Quantitation

Raw data were not reviewed for Stage 2A validation.

XIII. Target Compound Identifications

Raw data were not reviewed for Stage 2A validation.

XIV. System Performance

Raw data were not reviewed for Stage 2A validation.

XV. Overall Assessment of Data

The analysis was conducted within all specifications of the method. No results were rejected in this SDG.

Kimberly-Clark Upland Area
Polynuclear Aromatic Hydrocarbons - Data Qualification Summary - SDG 007468

No Sample Data Qualified in this SDG

Kimberly-Clark Upland Area
Polynuclear Aromatic Hydrocarbons - Laboratory Blank Data Qualification Summary - SDG 007468

No Sample Data Qualified in this SDG

Kimberly-Clark Upland Area
Polynuclear Aromatic Hydrocarbons - Field Blank Data Qualification Summary - SDG 007468

No Sample Data Qualified in this SDG

LDC #: 48922J2b
SDG #: 007468
Laboratory: Friedman & Bruya, Inc.

VALIDATION COMPLETENESS WORKSHEET
Stage 2A

Date: 09/04/20
Page: 1 of 1
Reviewer: LT
2nd Reviewer:

METHOD: GC/MS Polynuclear Aromatic Hydrocarbons (EPA SW 846 Method 8270E-SIM)

The samples listed below were reviewed for each of the following validation areas. Validation findings are noted in attached validation findings worksheets.

	Validation Area		Comments
I.	Sample receipt/Technical holding times	A / A	
II.	GC/MS Instrument performance check	N	
III.	Initial calibration/ICV	N/N	
IV.	Continuing calibration	N	
V.	Laboratory Blanks	A	
VI.	Field blanks	N	
VII.	Surrogate spikes	A	
VIII.	Matrix spike/Matrix spike duplicates	A	SDG 007450
IX.	Laboratory control samples	A	LCS
X.	Field duplicates	N	
XI.	Internal standards	N	
XII.	Compound quantitation RL/LOQ/LODs	N	Dry weight basis = 1-11
XIII.	Target compound identification	N	
XIV.	System performance	N	
XV.	Overall assessment of data	A	

Note: A = Acceptable; N = Not provided/applicable; SW = See worksheet; ND = No compounds detected; R = Rinsate; FB = Field blank; D = Duplicate; TB = Trip blank; EB = Equipment blank; SB=Source blank; OTHER:

	Client ID	Lab ID	Matrix	Date
1	CMS-B-06-6	007468-01	Soil	07/28/20
2	CMS-B-11-6	007468-02	Soil	07/28/20
3	CMS-S-21-4	007468-03	Soil	07/28/20
4	CMS-S-22-4	007468-04	Soil	07/28/20
5	CMS-B-10-6	007468-05	Soil	07/28/20
6	CMS-B-05-6	007468-06	Soil	07/28/20
7	CMS-B-15-6	007468-07	Soil	07/28/20
8	CMS-B-14-6	007468-08	Soil	07/28/20
9	CMS-B-13-6	007468-09	Soil	07/28/20
10	CMS-B-09-6	007468-10	Soil	07/28/20
11	CMS-S-23-4	007468-11	Soil	07/28/20
12				
13	1.00-1701 MB2 1/5			
14				

Laboratory Data Consultants, Inc.
Data Validation Report

Project/Site Name: Kimberly-Clark Upland Area

LDC Report Date: September 9, 2020

Parameters: Polychlorinated Biphenyls

Validation Level: Stage 2A

Laboratory: Friedman & Bruya, Inc.

Sample Delivery Group (SDG): 007468

Sample Identification	Laboratory Sample Identification	Matrix	Collection Date
CMS-B-06-6	007468-01	Soil	07/28/20
CMS-B-11-6	007468-02	Soil	07/28/20
CMS-S-21-4	007468-03	Soil	07/28/20
CMS-S-22-4	007468-04	Soil	07/28/20
CMS-B-10-6	007468-05	Soil	07/28/20
CMS-B-05-6	007468-06	Soil	07/28/20
CMS-B-15-6	007468-07	Soil	07/28/20
CMS-B-14-6	007468-08	Soil	07/28/20
CMS-B-13-6	007468-09	Soil	07/28/20
CMS-B-09-6	007468-10	Soil	07/28/20
CMS-S-23-4	007468-11	Soil	07/28/20
CMS-B-06-6MS	007468-01MS	Soil	07/28/20
CMS-B-06-6MSD	007468-01MSD	Soil	07/28/20

Introduction

This Data Validation Report (DVR) presents data validation findings and results for the associated samples listed on the cover page. Data validation was performed in accordance with a modified outline of the USEPA National Functional Guidelines (NFG) for Organic Superfund Methods Data Review (January 2017). Where specific guidance was not available, the data has been evaluated in a conservative manner consistent with industry standards using professional experience.

The analyses were performed by the following method:

Polychlorinated Biphenyls (PCBs) by Environmental Protection Agency (EPA) SW 846 Method 8082A

All sample results were subjected to Stage 2A data validation, which comprises an evaluation of quality control (QC) summary results.

The following are definitions of the data qualifiers utilized during data validation:

J (Estimated): The compound or analyte was analyzed for and positively identified by the laboratory; however the reported concentration is estimated due to non-conformances discovered during data validation.

U (Non-detected): The compound or analyte was analyzed for and positively identified by the laboratory; however the compound or analyte should be considered non-detected at the reported concentration due to the presence of contaminants detected in the associated blank(s).

UJ (Non-detected estimated): The compound or analyte was reported as not detected by the laboratory; however the reported quantitation/detection limit is estimated due to non-conformances discovered during data validation.

R (Rejected): The sample results were rejected due to gross non-conformances discovered during data validation. Data qualified as rejected is not usable.

NA (Not Applicable): The non-conformance discovered during data validation demonstrates a high bias, while the affected compound or analyte in the associated sample(s) was reported as not detected by the laboratory and did not warrant the qualification of the data.

A qualification summary table is provided at the end of this report if data has been qualified. Flags are classified as P (protocol) or A (advisory) to indicate whether the flag is due to a laboratory deviation from a specified protocol or is of technical advisory nature.

I. Sample Receipt and Technical Holding Times

All samples were received in good condition and cooler temperatures upon receipt met validation criteria.

All technical holding time requirements were met.

II. Initial Calibration and Initial Calibration Verification

Initial calibration data were not reviewed for Stage 2A validation.

III. Continuing Calibration

Continuing calibration data were not reviewed for Stage 2A validation.

IV. Laboratory Blanks

Laboratory blanks were analyzed as required by the method. No contaminants were found in the laboratory blanks.

V. Field Blanks

No field blanks were identified in this SDG.

VI. Surrogates

Surrogates were added to all samples as required by the method. All surrogate recoveries (%R) were within QC limits.

VII. Matrix Spike/Matrix Spike Duplicates

Matrix spike (MS) and matrix spike duplicate (MSD) sample analysis was performed on an associated project sample. Percent recoveries (%R) were within QC limits. Relative percent differences (RPD) were within QC limits.

VIII. Laboratory Control Samples

Laboratory control samples (LCS) were analyzed as required by the method. Percent recoveries (%R) were within QC limits.

IX. Field Duplicates

No field duplicates were identified in this SDG.

X. Compound Quantitation

Raw data were not reviewed for Stage 2A validation.

XI. Target Compound Identification

Raw data were not reviewed for Stage 2A validation.

XII. Overall Assessment of Data

The analysis was conducted within all specifications of the method. No results were rejected in this SDG.

Kimberly-Clark Upland Area
Polychlorinated Biphenyls - Data Qualification Summary - SDG 007468

No Sample Data Qualified in this SDG

Kimberly-Clark Upland Area
Polychlorinated Biphenyls - Laboratory Blank Data Qualification Summary - SDG 007468

No Sample Data Qualified in this SDG

Kimberly-Clark Upland Area
Polychlorinated Biphenyls - Field Blank Data Qualification Summary - SDG 007468

No Sample Data Qualified in this SDG

LDC #: 48922J3b
SDG #: 007468
Laboratory: Friedman & Bruya, Inc.

VALIDATION COMPLETENESS WORKSHEET
Stage 2A

Date: 09/04/20
Page: 1 of 1
Reviewer: LT
2nd Reviewer:

METHOD: GC Polychlorinated Biphenyls (EPA SW846 Method 8082A)

The samples listed below were reviewed for each of the following validation areas. Validation findings are noted in attached validation findings worksheets.

	Validation Area		Comments
I.	Sample receipt/Technical holding times	A / A	
II.	Initial calibration/ICV	N/N	
III.	Continuing calibration	N	
IV.	Laboratory Blanks	A	
V.	Field blanks	N	
VI.	Surrogate spikes	A	
VII.	Matrix spike/Matrix spike duplicates	A	(12/13)
VIII.	Laboratory control samples	A	LCS
IX.	Field duplicates	N	
X.	Compound quantitation/RL/LOQ/LODs	N	Dry weight basis = 1-11
XI.	Target compound identification	N	
XII	Overall assessment of data	A	

Note: A = Acceptable; N = Not provided/applicable; SW = See worksheet; ND = No compounds detected; R = Rinsate; FB = Field blank; D = Duplicate; TB = Trip blank; EB = Equipment blank; SB=Source blank; OTHER:

	Client ID	Lab ID	Matrix	Date
1	CMS-B-06-6	007468-01	Soil	07/28/20
2	CMS-B-11-6	007468-02	Soil	07/28/20
3	CMS-S-21-4	007468-03	Soil	07/28/20
4	CMS-S-22-4	007468-04	Soil	07/28/20
5	CMS-B-10-6	007468-05	Soil	07/28/20
6	CMS-B-05-6	007468-06	Soil	07/28/20
7	CMS-B-15-6	007468-07	Soil	07/28/20
8	CMS-B-14-6	007468-08	Soil	07/28/20
9	CMS-B-13-6	007468-09	Soil	07/28/20
10	CMS-B-09-6	007468-10	Soil	07/28/20
11	CMS-S-23-4	007468-11	Soil	07/28/20
12	CMS-B-06-6MS	007468-01MS	Soil	07/28/20
13	CMS-B-06-6MSD	007468-01MSD	Soil	07/28/20
14				

Notes:

1	00-1752 MB 1/6						

Laboratory Data Consultants, Inc.
Data Validation Report

Project/Site Name: Kimberly-Clark Upland Area

LDC Report Date: September 9, 2020

Parameters: Polynuclear Aromatic Hydrocarbons

Validation Level: Stage 2A

Laboratory: Friedman & Bruya, Inc.

Sample Delivery Group (SDG): 007498

Sample Identification	Laboratory Sample Identification	Matrix	Collection Date
CMS-S-24-4	007498-01	Soil	07/29/20
CMS-B-04-6	007498-02	Soil	07/29/20
CMS-B-03-6	007498-03	Soil	07/29/20

Introduction

This Data Validation Report (DVR) presents data validation findings and results for the associated samples listed on the cover page. Data validation was performed in accordance with a modified outline of the USEPA National Functional Guidelines (NFG) for Organic Superfund Methods Data Review (January 2017). Where specific guidance was not available, the data has been evaluated in a conservative manner consistent with industry standards using professional experience.

The analyses were performed by the following method:

Polynuclear Aromatic Hydrocarbons (PAHs) by Environmental Protection Agency (EPA) SW 846 Method 8270E in Selected Ion Monitoring (SIM) mode

All sample results were subjected to Stage 2A data validation, which comprises an evaluation of quality control (QC) summary results.

The following are definitions of the data qualifiers utilized during data validation:

J (Estimated): The compound or analyte was analyzed for and positively identified by the laboratory; however the reported concentration is estimated due to non-conformances discovered during data validation.

U (Non-detected): The compound or analyte was analyzed for and positively identified by the laboratory; however the compound or analyte should be considered non-detected at the reported concentration due to the presence of contaminants detected in the associated blank(s).

UJ (Non-detected estimated): The compound or analyte was reported as not detected by the laboratory; however the reported quantitation/detection limit is estimated due to non-conformances discovered during data validation.

R (Rejected): The sample results were rejected due to gross non-conformances discovered during data validation. Data qualified as rejected is not usable.

NA (Not Applicable): The non-conformance discovered during data validation demonstrates a high bias, while the affected compound or analyte in the associated sample(s) was reported as not detected by the laboratory and did not warrant the qualification of the data.

A qualification summary table is provided at the end of this report if data has been qualified. Flags are classified as P (protocol) or A (advisory) to indicate whether the flag is due to a laboratory deviation from a specified protocol or is of technical advisory nature.

I. Sample Receipt and Technical Holding Times

All samples were received in good condition and cooler temperatures upon receipt met validation criteria.

All technical holding time requirements were met.

II. GC/MS Instrument Performance Check

Instrument performance check data were not reviewed for Stage 2A validation.

III. Initial Calibration and Initial Calibration Verification

Initial calibration data were not reviewed for Stage 2A validation.

IV. Continuing Calibration

Continuing calibration data were not reviewed for Stage 2A validation.

V. Laboratory Blanks

Laboratory blanks were analyzed as required by the method. No contaminants were found in the laboratory blanks.

VI. Field Blanks

No field blanks were identified in this SDG.

VII. Surrogates

Surrogates were added to all samples as required by the method. All surrogate recoveries (%R) were within QC limits.

VIII. Matrix Spike/Matrix Spike Duplicates

The laboratory has indicated that there were no matrix spike (MS) and matrix spike duplicate (MSD) analyses specified for the samples in this SDG, and therefore matrix spike and matrix spike duplicate analyses were not performed for this SDG.

IX. Laboratory Control Samples

Laboratory control samples (LCS) and laboratory control samples duplicates (LCSD) were analyzed as required by the method. Percent recoveries (%R) were within QC limits. Relative percent differences (RPD) were within QC limits.

X. Field Duplicates

No field duplicates were identified in this SDG.

XI. Internal Standards

Internal standards data were not reviewed for Stage 2A validation.

XII. Compound Quantitation

Raw data were not reviewed for Stage 2A validation.

XIII. Target Compound Identifications

Raw data were not reviewed for Stage 2A validation.

XIV. System Performance

Raw data were not reviewed for Stage 2A validation.

XV. Overall Assessment of Data

The analysis was conducted within all specifications of the method. No results were rejected in this SDG.

Kimberly-Clark Upland Area
Polynuclear Aromatic Hydrocarbons - Data Qualification Summary - SDG 007498

No Sample Data Qualified in this SDG

Kimberly-Clark Upland Area
Polynuclear Aromatic Hydrocarbons - Laboratory Blank Data Qualification Summary - SDG 007498

No Sample Data Qualified in this SDG

Kimberly-Clark Upland Area
Polynuclear Aromatic Hydrocarbons - Field Blank Data Qualification Summary - SDG 007498

No Sample Data Qualified in this SDG

LDC #: 48922K2b
SDG #: 007498
Laboratory: Friedman & Bruya, Inc.

VALIDATION COMPLETENESS WORKSHEET
Stage 2A

Date: 09/04/20
Page: 1 of 1
Reviewer: LT
2nd Reviewer:

METHOD: GC/MS Polynuclear Aromatic Hydrocarbons (EPA SW 846 Method 8270E-SIM)

The samples listed below were reviewed for each of the following validation areas. Validation findings are noted in attached validation findings worksheets.

	Validation Area		Comments
I.	Sample receipt/Technical holding times	A/A	
II.	GC/MS Instrument performance check	N	
III.	Initial calibration/ICV	N/N	
IV.	Continuing calibration	N	
V.	Laboratory Blanks	A	
VI.	Field blanks	N	
VII.	Surrogate spikes	A	
VIII.	Matrix spike/Matrix spike duplicates	N	
IX.	Laboratory control samples	A	LCS/D
X.	Field duplicates	N	
XI.	Internal standards	N	
XII.	Compound quantitation RL/LOQ/LODs	N	Dry weight basis = 1-3
XIII.	Target compound identification	N	
XIV.	System performance	N	
XV.	Overall assessment of data	A	

Note: A = Acceptable; N = Not provided/applicable; SW = See worksheet; ND = No compounds detected; R = Rinsate; FB = Field blank; D = Duplicate; TB = Trip blank; EB = Equipment blank; SB=Source blank; OTHER:

	Client ID	Lab ID	Matrix	Date
1	CMS-S-24-4	007498-01	Soil	07/29/20
2	CMS-B-04-6	007498-02	Soil	07/29/20
3	CMS-B-03-6	007498-03	Soil	07/29/20
4				
5				
6				
7				
8				
9				

Notes:

1	00-1708 MB 1/5						

Laboratory Data Consultants, Inc.
Data Validation Report

Project/Site Name: Kimberly-Clark Upland Area

LDC Report Date: September 9, 2020

Parameters: Polychlorinated Biphenyls

Validation Level: Stage 2A

Laboratory: Friedman & Bruya, Inc.

Sample Delivery Group (SDG): 007498

Sample Identification	Laboratory Sample Identification	Matrix	Collection Date
CMS-S-24-4	007498-01	Soil	07/29/20
CMS-B-04-6	007498-02	Soil	07/29/20
CMS-B-03-6	007498-03	Soil	07/29/20

Introduction

This Data Validation Report (DVR) presents data validation findings and results for the associated samples listed on the cover page. Data validation was performed in accordance with a modified outline of the USEPA National Functional Guidelines (NFG) for Organic Superfund Methods Data Review (January 2017). Where specific guidance was not available, the data has been evaluated in a conservative manner consistent with industry standards using professional experience.

The analyses were performed by the following method:

Polychlorinated Biphenyls (PCBs) by Environmental Protection Agency (EPA) SW 846 Method 8082A

All sample results were subjected to Stage 2A data validation, which comprises an evaluation of quality control (QC) summary results.

The following are definitions of the data qualifiers utilized during data validation:

J (Estimated): The compound or analyte was analyzed for and positively identified by the laboratory; however the reported concentration is estimated due to non-conformances discovered during data validation.

U (Non-detected): The compound or analyte was analyzed for and positively identified by the laboratory; however the compound or analyte should be considered non-detected at the reported concentration due to the presence of contaminants detected in the associated blank(s).

UJ (Non-detected estimated): The compound or analyte was reported as not detected by the laboratory; however the reported quantitation/detection limit is estimated due to non-conformances discovered during data validation.

R (Rejected): The sample results were rejected due to gross non-conformances discovered during data validation. Data qualified as rejected is not usable.

NA (Not Applicable): The non-conformance discovered during data validation demonstrates a high bias, while the affected compound or analyte in the associated sample(s) was reported as not detected by the laboratory and did not warrant the qualification of the data.

A qualification summary table is provided at the end of this report if data has been qualified. Flags are classified as P (protocol) or A (advisory) to indicate whether the flag is due to a laboratory deviation from a specified protocol or is of technical advisory nature.

I. Sample Receipt and Technical Holding Times

All samples were received in good condition and cooler temperatures upon receipt met validation criteria.

All technical holding time requirements were met.

II. Initial Calibration and Initial Calibration Verification

Initial calibration data were not reviewed for Stage 2A validation.

III. Continuing Calibration

Continuing calibration data were not reviewed for Stage 2A validation.

IV. Laboratory Blanks

Laboratory blanks were analyzed as required by the method. No contaminants were found in the laboratory blanks.

V. Field Blanks

No field blanks were identified in this SDG.

VI. Surrogates

Surrogates were added to all samples as required by the method. All surrogate recoveries (%R) were within QC limits.

VII. Matrix Spike/Matrix Spike Duplicates

Matrix spike (MS) and matrix spike duplicate (MSD) sample analysis was performed on an associated project sample. Percent recoveries (%R) were within QC limits. Relative percent differences (RPD) were within QC limits.

VIII. Laboratory Control Samples

Laboratory control samples (LCS) were analyzed as required by the method. Percent recoveries (%R) were within QC limits.

IX. Field Duplicates

No field duplicates were identified in this SDG.

X. Compound Quantitation

Raw data were not reviewed for Stage 2A validation.

XI. Target Compound Identification

Raw data were not reviewed for Stage 2A validation.

XII. Overall Assessment of Data

The analysis was conducted within all specifications of the method. No results were rejected in this SDG.

Kimberly-Clark Upland Area
Polychlorinated Biphenyls - Data Qualification Summary - SDG 007498

No Sample Data Qualified in this SDG

Kimberly-Clark Upland Area
Polychlorinated Biphenyls - Laboratory Blank Data Qualification Summary - SDG 007498

No Sample Data Qualified in this SDG

Kimberly-Clark Upland Area
Polychlorinated Biphenyls - Field Blank Data Qualification Summary - SDG 007498

No Sample Data Qualified in this SDG

LDC #: 48922K3b
SDG #: 007498
Laboratory: Friedman & Bruya, Inc.

VALIDATION COMPLETENESS WORKSHEET
Stage 2A

Date: 09/04/20
Page: 1 of 1
Reviewer: [illegible]
2nd Reviewer: [illegible]

METHOD: GC Polychlorinated Biphenyls (EPA SW846 Method 8082A)

The samples listed below were reviewed for each of the following validation areas. Validation findings are noted in attached validation findings worksheets.

	Validation Area		Comments
I.	Sample receipt/Technical holding times	A / A	
II.	Initial calibration/ICV	N/N	
III.	Continuing calibration	N	
IV.	Laboratory Blanks	A	
V.	Field blanks	N	
VI.	Surrogate spikes	A	
VII.	Matrix spike/Matrix spike duplicates	A	SDG 007498
VIII.	Laboratory control samples	A	LCS
IX.	Field duplicates	N	
X.	Compound quantitation/RL/LOQ/LODs	N	Dry weight basis = 1-3
XI.	Target compound identification	N	
XII	Overall assessment of data	A	

Note: A = Acceptable; N = Not provided/applicable; SW = See worksheet; ND = No compounds detected; R = Rinsate; FB = Field blank; D = Duplicate; TB = Trip blank; EB = Equipment blank; SB=Source blank; OTHER:

	Client ID	Lab ID	Matrix	Date
1	CMS-S-24-4	007498-01	Soil	07/29/20
2	CMS-B-04-6	007498-02	Soil	07/29/20
3	CMS-B-03-6	007498-03	Soil	07/29/20
4				
5				
6				
7				
8				
9				
10				
11				
12				
13				

Notes:

1	10-1702MB2 1/6						

Laboratory Data Consultants, Inc.
Data Validation Report

Project/Site Name: Kimberly-Clark Upland Area

LDC Report Date: September 9, 2020

Parameters: Polynuclear Aromatic Hydrocarbons

Validation Level: Stage 2A

Laboratory: Friedman & Bruya, Inc.

Sample Delivery Group (SDG): 007525

Sample Identification	Laboratory Sample Identification	Matrix	Collection Date
CMS-S-25-4	007525-01	Soil	07/30/20
CMS-B-02-6	007525-02	Soil	07/30/20

Introduction

This Data Validation Report (DVR) presents data validation findings and results for the associated samples listed on the cover page. Data validation was performed in accordance with a modified outline of the USEPA National Functional Guidelines (NFG) for Organic Superfund Methods Data Review (January 2017). Where specific guidance was not available, the data has been evaluated in a conservative manner consistent with industry standards using professional experience.

The analyses were performed by the following method:

Polynuclear Aromatic Hydrocarbons (PAHs) by Environmental Protection Agency (EPA) SW 846 Method 8270E in Selected Ion Monitoring (SIM) mode

All sample results were subjected to Stage 2A data validation, which comprises an evaluation of quality control (QC) summary results.

The following are definitions of the data qualifiers utilized during data validation:

J (Estimated): The compound or analyte was analyzed for and positively identified by the laboratory; however the reported concentration is estimated due to non-conformances discovered during data validation.

U (Non-detected): The compound or analyte was analyzed for and positively identified by the laboratory; however the compound or analyte should be considered non-detected at the reported concentration due to the presence of contaminants detected in the associated blank(s).

UJ (Non-detected estimated): The compound or analyte was reported as not detected by the laboratory; however the reported quantitation/detection limit is estimated due to non-conformances discovered during data validation.

R (Rejected): The sample results were rejected due to gross non-conformances discovered during data validation. Data qualified as rejected is not usable.

NA (Not Applicable): The non-conformance discovered during data validation demonstrates a high bias, while the affected compound or analyte in the associated sample(s) was reported as not detected by the laboratory and did not warrant the qualification of the data.

A qualification summary table is provided at the end of this report if data has been qualified. Flags are classified as P (protocol) or A (advisory) to indicate whether the flag is due to a laboratory deviation from a specified protocol or is of technical advisory nature.

I. Sample Receipt and Technical Holding Times

All samples were received in good condition and cooler temperatures upon receipt met validation criteria.

All technical holding time requirements were met.

II. GC/MS Instrument Performance Check

Instrument performance check data were not reviewed for Stage 2A validation.

III. Initial Calibration and Initial Calibration Verification

Initial calibration data were not reviewed for Stage 2A validation.

IV. Continuing Calibration

Continuing calibration data were not reviewed for Stage 2A validation.

V. Laboratory Blanks

Laboratory blanks were analyzed as required by the method. No contaminants were found in the laboratory blanks.

VI. Field Blanks

No field blanks were identified in this SDG.

VII. Surrogates

Surrogates were added to all samples as required by the method. All surrogate recoveries (%R) were within QC limits.

VIII. Matrix Spike/Matrix Spike Duplicates

The laboratory has indicated that there were no matrix spike (MS) and matrix spike duplicate (MSD) analyses specified for the samples in this SDG, and therefore matrix spike and matrix spike duplicate analyses were not performed for this SDG.

IX. Laboratory Control Samples

Laboratory control samples (LCS) and laboratory control samples duplicates (LCSD) were analyzed as required by the method. Percent recoveries (%R) were within QC limits. Relative percent differences (RPD) were within QC limits.

X. Field Duplicates

No field duplicates were identified in this SDG.

XI. Internal Standards

Internal standards data were not reviewed for Stage 2A validation.

XII. Compound Quantitation

Raw data were not reviewed for Stage 2A validation.

XIII. Target Compound Identifications

Raw data were not reviewed for Stage 2A validation.

XIV. System Performance

Raw data were not reviewed for Stage 2A validation.

XV. Overall Assessment of Data

The analysis was conducted within all specifications of the method. No results were rejected in this SDG.

Kimberly-Clark Upland Area
Polynuclear Aromatic Hydrocarbons - Data Qualification Summary - SDG 007525

No Sample Data Qualified in this SDG

Kimberly-Clark Upland Area
Polynuclear Aromatic Hydrocarbons - Laboratory Blank Data Qualification Summary - SDG 007525

No Sample Data Qualified in this SDG

Kimberly-Clark Upland Area
Polynuclear Aromatic Hydrocarbons - Field Blank Data Qualification Summary - SDG 007525

No Sample Data Qualified in this SDG

LDC #: 48922L2b
SDG #: 007525
Laboratory: Friedman & Bruya, Inc.

VALIDATION COMPLETENESS WORKSHEET
Stage 2A

Date: 09/04/20
Page: 1 of 1
Reviewer: VT
2nd Reviewer:

METHOD: GC/MS Polynuclear Aromatic Hydrocarbons (EPA SW 846 Method 8270E-SIM)

The samples listed below were reviewed for each of the following validation areas. Validation findings are noted in attached validation findings worksheets.

	Validation Area		Comments
I.	Sample receipt/Technical holding times	A / A	
II.	GC/MS Instrument performance check	N	
III.	Initial calibration/ICV	N/N	
IV.	Continuing calibration	N	
V.	Laboratory Blanks	A	
VI.	Field blanks	N	
VII.	Surrogate spikes	A	
VIII.	Matrix spike/Matrix spike duplicates	N	
IX.	Laboratory control samples	A	LCS/D
X.	Field duplicates	N	
XI.	Internal standards	N	
XII.	Compound quantitation RL/LOQ/LODs	N	Dry weight basis = 1, 2
XIII.	Target compound identification	N	
XIV.	System performance	N	
XV.	Overall assessment of data	A	

Note: A = Acceptable; N = Not provided/applicable; SW = See worksheet; ND = No compounds detected; R = Rinsate; FB = Field blank; D = Duplicate; TB = Trip blank; EB = Equipment blank; SB=Source blank; OTHER:

	Client ID	Lab ID	Matrix	Date
1	CMS-S-25-4	007525-01	Soil	07/30/20
2	CMS-B-02-6	007525-02	Soil	07/30/20
3				
4				
5				
6				
7				
8				
9				

Notes:

1	00-1708 MB2 1/5						

Laboratory Data Consultants, Inc.
Data Validation Report

Project/Site Name: Kimberly-Clark Upland Area

LDC Report Date: September 9, 2020

Parameters: Polychlorinated Biphenyls

Validation Level: Stage 2A

Laboratory: Friedman & Bruya, Inc.

Sample Delivery Group (SDG): 007525

Sample Identification	Laboratory Sample Identification	Matrix	Collection Date
CMS-S-25-4	007525-01	Soil	07/30/20
CMS-B-02-6	007525-02	Soil	07/30/20
CMS-S-25-4MS	007525-01MS	Soil	07/30/20
CMS-S-25-4MSD	007525-01MSD	Soil	07/30/20

Introduction

This Data Validation Report (DVR) presents data validation findings and results for the associated samples listed on the cover page. Data validation was performed in accordance with a modified outline of the USEPA National Functional Guidelines (NFG) for Organic Superfund Methods Data Review (January 2017). Where specific guidance was not available, the data has been evaluated in a conservative manner consistent with industry standards using professional experience.

The analyses were performed by the following method:

Polychlorinated Biphenyls (PCBs) by Environmental Protection Agency (EPA) SW 846 Method 8082A

All sample results were subjected to Stage 2A data validation, which comprises an evaluation of quality control (QC) summary results.

The following are definitions of the data qualifiers utilized during data validation:

J (Estimated): The compound or analyte was analyzed for and positively identified by the laboratory; however the reported concentration is estimated due to non-conformances discovered during data validation.

U (Non-detected): The compound or analyte was analyzed for and positively identified by the laboratory; however the compound or analyte should be considered non-detected at the reported concentration due to the presence of contaminants detected in the associated blank(s).

UJ (Non-detected estimated): The compound or analyte was reported as not detected by the laboratory; however the reported quantitation/detection limit is estimated due to non-conformances discovered during data validation.

R (Rejected): The sample results were rejected due to gross non-conformances discovered during data validation. Data qualified as rejected is not usable.

NA (Not Applicable): The non-conformance discovered during data validation demonstrates a high bias, while the affected compound or analyte in the associated sample(s) was reported as not detected by the laboratory and did not warrant the qualification of the data.

A qualification summary table is provided at the end of this report if data has been qualified. Flags are classified as P (protocol) or A (advisory) to indicate whether the flag is due to a laboratory deviation from a specified protocol or is of technical advisory nature.

I. Sample Receipt and Technical Holding Times

All samples were received in good condition and cooler temperatures upon receipt met validation criteria.

All technical holding time requirements were met.

II. Initial Calibration and Initial Calibration Verification

Initial calibration data were not reviewed for Stage 2A validation.

III. Continuing Calibration

Continuing calibration data were not reviewed for Stage 2A validation.

IV. Laboratory Blanks

Laboratory blanks were analyzed as required by the method. No contaminants were found in the laboratory blanks.

V. Field Blanks

No field blanks were identified in this SDG.

VI. Surrogates

Surrogates were added to all samples as required by the method. All surrogate recoveries (%R) were within QC limits.

VII. Matrix Spike/Matrix Spike Duplicates

Matrix spike (MS) and matrix spike duplicate (MSD) sample analysis was performed on an associated project sample. Percent recoveries (%R) were within QC limits. Relative percent differences (RPD) were within QC limits.

VIII. Laboratory Control Samples

Laboratory control samples (LCS) were analyzed as required by the method. Percent recoveries (%R) were within QC limits.

IX. Field Duplicates

No field duplicates were identified in this SDG.

X. Compound Quantitation

Raw data were not reviewed for Stage 2A validation.

XI. Target Compound Identification

Raw data were not reviewed for Stage 2A validation.

XII. Overall Assessment of Data

The analysis was conducted within all specifications of the method. No results were rejected in this SDG.

Kimberly-Clark Upland Area
Polychlorinated Biphenyls - Data Qualification Summary - SDG 007525

No Sample Data Qualified in this SDG

Kimberly-Clark Upland Area
Polychlorinated Biphenyls - Laboratory Blank Data Qualification Summary - SDG 007525

No Sample Data Qualified in this SDG

Kimberly-Clark Upland Area
Polychlorinated Biphenyls - Field Blank Data Qualification Summary - SDG 007525

No Sample Data Qualified in this SDG

LDC #: 48922L3b
SDG #: 007525
Laboratory: Friedman & Bruya, Inc.

VALIDATION COMPLETENESS WORKSHEET
Stage 2A

Date: 9/04/20
Page: 1 of 1
Reviewer: VT
2nd Reviewer:

METHOD: GC Polychlorinated Biphenyls (EPA SW846 Method 8082A)

The samples listed below were reviewed for each of the following validation areas. Validation findings are noted in attached validation findings worksheets.

	Validation Area		Comments
I.	Sample receipt/Technical holding times	A / A	
II.	Initial calibration/ICV	N/N	
III.	Continuing calibration	N	
IV.	Laboratory Blanks	A	
V.	Field blanks	N	
VI.	Surrogate spikes	A	
VII.	Matrix spike/Matrix spike duplicates	A	(3,4)
VIII.	Laboratory control samples	A	LCS
IX.	Field duplicates	N	
X.	Compound quantitation/RL/LOQ/LODs	N	Dry weight basis = 1,2
XI.	Target compound identification	N	
XII	Overall assessment of data	A	

Note: A = Acceptable; N = Not provided/applicable; SW = See worksheet; ND = No compounds detected; R = Rinsate; FB = Field blank; D = Duplicate; TB = Trip blank; EB = Equipment blank; SB=Source blank; OTHER:

	Client ID	Lab ID	Matrix	Date
1	CMS-S-25-4	007525-01	Soil	07/30/20
2	CMS-B-02-6	007525-02	Soil	07/30/20
3	CMS-S-25-4MS	007525-01MS	Soil	07/30/20
4	CMS-S-25-4MSD	007525-01MSD	Soil	07/30/20
5				
6				
7				
8				
9				
10				
11				
12				
13				

Notes:

1	00-1750 MB 16						

LDC Report# 48922M2b

Laboratory Data Consultants, Inc.
Data Validation Report

Project/Site Name: Kimberly-Clark Upland Area

LDC Report Date: September 9, 2020

Parameters: Polynuclear Aromatic Hydrocarbons

Validation Level: Stage 2A

Laboratory: Friedman & Bruya, Inc.

Sample Delivery Group (SDG): 008016

Sample Identification	Laboratory Sample Identification	Matrix	Collection Date
CMS-S-26-4-080320	008016-02	Soil	08/03/20
CMS-B-08-6-080320	008016-03	Soil	08/03/20
CMS-S-27-4-080320	008016-04	Soil	08/03/20
CMS-S-28-4-080320	008016-05	Soil	08/03/20
CMS-B-01-6-080320	008016-06	Soil	08/03/20
CMS-S-26-4-080320MS	008016-02MS	Soil	08/03/20
CMS-S-26-4-080320MSD	008016-02MSD	Soil	08/03/20

Introduction

This Data Validation Report (DVR) presents data validation findings and results for the associated samples listed on the cover page. Data validation was performed in accordance with a modified outline of the USEPA National Functional Guidelines (NFG) for Organic Superfund Methods Data Review (January 2017). Where specific guidance was not available, the data has been evaluated in a conservative manner consistent with industry standards using professional experience.

The analyses were performed by the following method:

Polynuclear Aromatic Hydrocarbons (PAHs) by Environmental Protection Agency (EPA) SW 846 Method 8270E in Selected Ion Monitoring (SIM) mode

All sample results were subjected to Stage 2A data validation, which comprises an evaluation of quality control (QC) summary results.

The following are definitions of the data qualifiers utilized during data validation:

J (Estimated): The compound or analyte was analyzed for and positively identified by the laboratory; however the reported concentration is estimated due to non-conformances discovered during data validation.

U (Non-detected): The compound or analyte was analyzed for and positively identified by the laboratory; however the compound or analyte should be considered non-detected at the reported concentration due to the presence of contaminants detected in the associated blank(s).

UJ (Non-detected estimated): The compound or analyte was reported as not detected by the laboratory; however the reported quantitation/detection limit is estimated due to non-conformances discovered during data validation.

R (Rejected): The sample results were rejected due to gross non-conformances discovered during data validation. Data qualified as rejected is not usable.

NA (Not Applicable): The non-conformance discovered during data validation demonstrates a high bias, while the affected compound or analyte in the associated sample(s) was reported as not detected by the laboratory and did not warrant the qualification of the data.

A qualification summary table is provided at the end of this report if data has been qualified. Flags are classified as P (protocol) or A (advisory) to indicate whether the flag is due to a laboratory deviation from a specified protocol or is of technical advisory nature.

I. Sample Receipt and Technical Holding Times

All samples were received in good condition and cooler temperatures upon receipt met validation criteria.

All technical holding time requirements were met.

II. GC/MS Instrument Performance Check

Instrument performance check data were not reviewed for Stage 2A validation.

III. Initial Calibration and Initial Calibration Verification

Initial calibration data were not reviewed for Stage 2A validation.

IV. Continuing Calibration

Continuing calibration data were not reviewed for Stage 2A validation.

V. Laboratory Blanks

Laboratory blanks were analyzed as required by the method. No contaminants were found in the laboratory blanks.

VI. Field Blanks

No field blanks were identified in this SDG.

VII. Surrogates

Surrogates were added to all samples as required by the method. Surrogate recoveries (%R) were not within QC limits for samples CMS-S-26-4-080320 and CMS-S-27-4-080320. Using professional judgment, no data were qualified when one surrogate %R was outside the QC limits and the %R was greater than or equal to 10% or for samples analyzed at greater than or equal to 5X dilution.

VIII. Matrix Spike/Matrix Spike Duplicates

Matrix spike (MS) and matrix spike duplicate (MSD) sample analysis was performed on an associated project sample. Percent recoveries (%R) were within QC limits.

Relative percent differences (RPD) were within QC limits with the following exceptions:

Spike ID (Associated Samples)	Compound	RPD (Limits)	Flag	A or P
CMS-S-26-4-080320MS/MSD (CMS-S-26-4-080320)	Benzo(g,h,i)perylene	22 (≤20)	NA	-

IX. Laboratory Control Samples

Laboratory control samples (LCS) were analyzed as required by the method. Percent recoveries (%R) were within QC limits.

X. Field Duplicates

No field duplicates were identified in this SDG.

XI. Internal Standards

Internal standards data were not reviewed for Stage 2A validation.

XII. Compound Quantitation

Raw data were not reviewed for Stage 2A validation.

XIII. Target Compound Identifications

Raw data were not reviewed for Stage 2A validation.

XIV. System Performance

Raw data were not reviewed for Stage 2A validation.

XV. Overall Assessment of Data

The analysis was conducted within all specifications of the method. No results were rejected in this SDG.

Kimberly-Clark Upland Area
Polynuclear Aromatic Hydrocarbons - Data Qualification Summary - SDG 008016

No Sample Data Qualified in this SDG

Kimberly-Clark Upland Area
Polynuclear Aromatic Hydrocarbons - Laboratory Blank Data Qualification Summary - SDG 008016

No Sample Data Qualified in this SDG

Kimberly-Clark Upland Area
Polynuclear Aromatic Hydrocarbons - Field Blank Data Qualification Summary - SDG 008016

No Sample Data Qualified in this SDG

LDC #: 48922M2b **VALIDATION COMPLETENESS WORKSHEET** Date: 09/04/20
SDG #: 008016 Stage 2A Page: 1 of 1
Laboratory: Friedman & Bruya, Inc. Reviewer: VT
2nd Reviewer:

METHOD: GC/MS Polynuclear Aromatic Hydrocarbons (EPA SW 846 Method 8270E-SIM)

The samples listed below were reviewed for each of the following validation areas. Validation findings are noted in attached validation findings worksheets.

	Validation Area		Comments
I.	Sample receipt/Technical holding times	A / A	
II.	GC/MS Instrument performance check	N	
III.	Initial calibration/ICV	N/N	
IV.	Continuing calibration	N	
V.	Laboratory Blanks	A	
VI.	Field blanks	N	
VII.	Surrogate spikes	SW	1- one out; NQ 3 - one out 3 = 5x dilution - NQ
VIII.	Matrix spike/Matrix spike duplicates	SW	(6,7)
IX.	Laboratory control samples	A	LCS
X.	Field duplicates	N	
XI.	Internal standards	N	
XII.	Compound quantitation RL/LOQ/LODs	N	
XIII.	Target compound identification	N	
XIV.	System performance	N	
XV.	Overall assessment of data	A	

Note: A = Acceptable ND = No compounds detected D = Duplicate SB=Source blank
N = Not provided/applicable R = Rinsate TB = Trip blank OTHER:
SW = See worksheet FB = Field blank EB = Equipment blank

	Client ID	Lab ID	Matrix	Date
1	CMS-S-26-4-080320	008016-02	Soil	08/03/20
2	CMS-B-08-6-080320	008016-03	Soil	08/03/20
3	CMS-S-27-4-080320	008016-04	Soil	08/03/20
4	CMS-S-28-4-080320	008016-05	Soil	08/03/20
5	CMS-B-01-6-080320	008016-06	Soil	08/03/20
6	CMS-S-26-4-080320MS	008016-02MS	Soil	08/03/20
7	CMS-S-26-4-080320MSD	008016-02MSD	Soil	08/03/20
8				
9				

Notes:

1	00-1765 MB 1/5						

VALIDATION FINDINGS WORKSHEET

METHOD: GC/MS SVOA

A. Phenol	CC. Dimethylphthalate	EEE. Bis(2-ethylhexyl)phthalate	GGGG. C30-Hopane	I1. Methyl methanesulfonate
B. Bis (2-chloroethyl) ether	DD. Acenaphthylene	FFF. Di-n-octylphthalate	HHHH. 1-Methylphenanthrene	J1. Ethyl methanesulfonate
C. 2-Chlorophenol	EE. 2,6-Dinitrotoluene	GGG. Benzo(b)fluoranthene	IIII. 1,4-Dioxane	K1. o,o',o''-Triethylphosphorothioate
D. 1,3-Dichlorobenzene	FF. 3-Nitroaniline	HHH. Benzo(k)fluoranthene	JJJJ. Acetophenone	L1. n-Phenylene diamine
E. 1,4-Dichlorobenzene	GG. Acenaphthene	III. Benzo(a)pyrene	KKKK. Atrazine	M1. 1,4-Naphthoquinone
F. 1,2-Dichlorobenzene	HH. 2,4-Dinitrophenol	JJJ. Indeno(1,2,3-cd)pyrene	LLLL. Benzaldehyde	N1. N-Nitro-o-toluidine
G. 2-Methylphenol	II. 4-Nitrophenol	KKK. Dibenz(a,h)anthracene	MMMM. Caprolactam	O1. 1,3,5-Trinitrobenzene
H. 2,2'-Oxybis(1-chloropropane)	JJ. Dibenzofuran	LLL. Benzo(g,h,i)perylene	NNNN. 2,6-Dichlorophenol	P1. Pentachlorobenzene
I. 4-Methylphenol	KK. 2,4-Dinitrotoluene	MMM. Bis(2-Chloroisopropyl)ether	OOOO. 1,2-Diphenylhydrazine	Q1. 4-Aminobiphenyl
J. N-Nitroso-di-n-propylamine	LL. Diethylphthalate	NNN. Aniline	PPPP. 3-Methylphenol	R1. 2-Naphthylamine
K. Hexachloroethane	MM. 4-Chlorophenyl-phenyl ether	OOO. N-Nitrosodimethylamine	QQQQ. 3&4-Methylphenol	S1. Triphenylene
L. Nitrobenzene	NN. Fluorene	PPP. Benzoic Acid	RRRR. 4-Dimethyldibenzothiophene (4MDT)	T1. Octachlorostyrene
M. Isophorone	OO. 4-Nitroaniline	QQQ. Benzyl alcohol	SSSS. 2/3-Dimethyldibenzothiophene (4MDT)	U1. Famphur
N. 2-Nitrophenol	PP. 4,6-Dinitro-2-methylphenol	RRR. Pyridine	TTTT. 1-Methyldibenzothiophene (1MDT)	V1. 1,4-phenylenediamine
O. 2,4-Dimethylphenol	QQ. N-Nitrosodiphenylamine	SSS. Benzidine	UUUU.. 2,3,4,6-Tetrachlorophenol	W1. Methapyrilene
P. Bis(2-chloroethoxy)methane	RR. 4-Bromophenyl-phenylether	TTT. 1-Methylnaphthalene	VVVV. 1,2,4,5-Tetrachlorobenzene	X1. Pentachloroethane
Q. 2,4-Dichlorophenol	SS. Hexachlorobenzene	UUU.Benzo(b)thiophene	WWWW.. 2-Picoline	Y1. 3,3'-Dimethylbenzidine
R. 1,2,4-Trichlorobenzene	TT. Pentachlorophenol	VVV.Benzonaphthothiophene	XXXX. 3-Methylcholanthrene	Z1. o-Toluidine
S. Naphthalene	UU. Phenanthrene	WWW.Benzo(e)pyrene	YYYY. a,a-Dimethylphenethylamine	A2. 1-Naphthylamine
T. 4-Chloroaniline	VV. Anthracene	XXX. 2,6-Dimethylnaphthalene	ZZZZ. Hexachloropropene	B2. 4-Aminobiphenyl
U. Hexachlorobutadiene	WW. Carbazole	YYY. 2,3,5-Trimethylnaphthalene	A1. N-Nitrosodiethylamine	C2. 4-Nitroquinoline-1-oxide
V. 4-Chloro-3-methylphenol	XX. Di-n-butylphthalate	ZZZ. Perylene	B1. N-Nitrosodi-n-butylamine	D2. Hexachloropene
W. 2-Methylnaphthalene	YY. Fluoranthene	AAAA. Dibenzothiophene	C1. N-Nitrosomethylethylamine	E2. Bis (2-chloro-1-methylethyl) ether
X. Hexachlorocyclopentadiene	ZZ. Pyrene	BBBB. Benzo(a)fluoranthene	D1. N-Nitrosomorpholine	F2. Bifenthrin
Y. 2,4,6-Trichlorophenol	AAA. Butylbenzylphthalate	CCCC. Benzo(b)fluorene	E1. N-Nitrosopyrrolidine	G2. Cyfluthrin
Z. 2,4,5-Trichlorophenol	BBB. 3,3'-Dichlorobenzidine	DDDD. cis/trans-Decalin	F1. Phenacetin	H2. Cypermethrin
AA. 2-Chloronaphthalene	CCC. Benzo(a)anthracene	EEEE. 1,1'-Biphenyl	G1. 2-Acetylaminofluorene	I2. Permethrin (cis/trans)
BB. 2-Nitroaniline	DDD. Chrysene	FFFF. Retene	H1. Pronamide	J2. 5-Nitro-o-toluidine

LDC #: 48922M2b

VALIDATION FINDINGS WORKSHEET
Matrix Spike/Matrix Spike Duplicates

Reviewer: LT

METHOD: GC/MS PAHs (EPA SW 846 Method 8270E SIM)

Please see qualifications below for all questions answered "N". Not applicable questions are identified as "N/A".

Y x N__ N/A__ Were a matrix spike (MS) and matrix spike duplicate (MSD) or duplicate sample analyzed for each matrix in this SDG?

Y x N__ N/A__ Was a MS/MSD analyzed every 20 samples of each matrix?

Y__ N x N/A__ Were the MS/MSD percent recoveries (%R) and the relative percent differences (RPD) within the QC limits?

#	Date	MS/MSD ID	Compound	MS %R (Limits)	MSD %R (Limits)	RPD (Limits)	Associated Samples	Qualifications
		6/7	LLL			22 (≤20)	1 (ND)	J/A DETS

Laboratory Data Consultants, Inc.
Data Validation Report

Project/Site Name: Kimberly-Clark Upland Area

LDC Report Date: September 9, 2020

Parameters: Polychlorinated Biphenyls

Validation Level: Stage 2A

Laboratory: Friedman & Bruya, Inc.

Sample Delivery Group (SDG): 008016

Sample Identification	Laboratory Sample Identification	Matrix	Collection Date
CMS-S-26-4-080320	008016-02	Soil	08/03/20
CMS-B-08-6-080320	008016-03	Soil	08/03/20
CMS-S-27-4-080320	008016-04	Soil	08/03/20
CMS-S-28-4-080320	008016-05	Soil	08/03/20
CMS-B-01-6-080320	008016-06	Soil	08/03/20
CMS-S-26-4-080320MS	008016-02MS	Soil	08/03/20
CMS-S-26-4-080320MSD	008016-02MSD	Soil	08/03/20

Introduction

This Data Validation Report (DVR) presents data validation findings and results for the associated samples listed on the cover page. Data validation was performed in accordance with a modified outline of the USEPA National Functional Guidelines (NFG) for Organic Superfund Methods Data Review (January 2017). Where specific guidance was not available, the data has been evaluated in a conservative manner consistent with industry standards using professional experience.

The analyses were performed by the following method:

Polychlorinated Biphenyls (PCBs) by Environmental Protection Agency (EPA) SW 846 Method 8082A

All sample results were subjected to Stage 2A data validation, which comprises an evaluation of quality control (QC) summary results.

The following are definitions of the data qualifiers utilized during data validation:

J (Estimated): The compound or analyte was analyzed for and positively identified by the laboratory; however the reported concentration is estimated due to non-conformances discovered during data validation.

U (Non-detected): The compound or analyte was analyzed for and positively identified by the laboratory; however the compound or analyte should be considered non-detected at the reported concentration due to the presence of contaminants detected in the associated blank(s).

UJ (Non-detected estimated): The compound or analyte was reported as not detected by the laboratory; however the reported quantitation/detection limit is estimated due to non-conformances discovered during data validation.

R (Rejected): The sample results were rejected due to gross non-conformances discovered during data validation. Data qualified as rejected is not usable.

NA (Not Applicable): The non-conformance discovered during data validation demonstrates a high bias, while the affected compound or analyte in the associated sample(s) was reported as not detected by the laboratory and did not warrant the qualification of the data.

A qualification summary table is provided at the end of this report if data has been qualified. Flags are classified as P (protocol) or A (advisory) to indicate whether the flag is due to a laboratory deviation from a specified protocol or is of technical advisory nature.

I. Sample Receipt and Technical Holding Times

All samples were received in good condition and cooler temperatures upon receipt met validation criteria.

All technical holding time requirements were met.

II. Initial Calibration and Initial Calibration Verification

Initial calibration data were not reviewed for Stage 2A validation.

III. Continuing Calibration

Continuing calibration data were not reviewed for Stage 2A validation.

IV. Laboratory Blanks

Laboratory blanks were analyzed as required by the method. No contaminants were found in the laboratory blanks.

V. Field Blanks

No field blanks were identified in this SDG.

VI. Surrogates

Surrogates were added to all samples as required by the method. All surrogate recoveries (%R) were within QC limits.

VII. Matrix Spike/Matrix Spike Duplicates

Matrix spike (MS) and matrix spike duplicate (MSD) sample analysis was performed on an associated project sample. Percent recoveries (%R) were within QC limits. Relative percent differences (RPD) were within QC limits.

VIII. Laboratory Control Samples

Laboratory control samples (LCS) were analyzed as required by the method. Percent recoveries (%R) were within QC limits.

IX. Field Duplicates

No field duplicates were identified in this SDG.

X. Compound Quantitation

Raw data were not reviewed for Stage 2A validation.

XI. Target Compound Identification

Raw data were not reviewed for Stage 2A validation.

XII. Overall Assessment of Data

The analysis was conducted within all specifications of the method. No results were rejected in this SDG.

Kimberly-Clark Upland Area
Polychlorinated Biphenyls - Data Qualification Summary - SDG 008016

No Sample Data Qualified in this SDG

Kimberly-Clark Upland Area
Polychlorinated Biphenyls - Laboratory Blank Data Qualification Summary - SDG 008016

No Sample Data Qualified in this SDG

Kimberly-Clark Upland Area
Polychlorinated Biphenyls - Field Blank Data Qualification Summary - SDG 008016

No Sample Data Qualified in this SDG

LDC #: 48922M3b
SDG #: 008016
Laboratory: Friedman & Bruya, Inc.

VALIDATION COMPLETENESS WORKSHEET
Stage 2A

Date: 10/20/20
Page: 1 of 1
Reviewer: VT
2nd Reviewer:

METHOD: GC Polychlorinated Biphenyls (EPA SW846 Method 8082A)

The samples listed below were reviewed for each of the following validation areas. Validation findings are noted in attached validation findings worksheets.

	Validation Area		Comments
I.	Sample receipt/Technical holding times	A / A	
II.	Initial calibration/ICV	N/N	
III.	Continuing calibration	N	
IV.	Laboratory Blanks	A	
V.	Field blanks	N	
VI.	Surrogate spikes	A	
VII.	Matrix spike/Matrix spike duplicates	A	(6,7)
VIII.	Laboratory control samples	A	LCS
IX.	Field duplicates	N	
X.	Compound quantitation/RL/LOQ/LODs	N	
XI.	Target compound identification	N	
XII	Overall assessment of data	A	

Note: A = Acceptable; N = Not provided/applicable; SW = See worksheet; ND = No compounds detected; R = Rinsate; FB = Field blank; D = Duplicate; TB = Trip blank; EB = Equipment blank; SB=Source blank; OTHER:

	Client ID	Lab ID	Matrix	Date
1	CMS-S-26-4-080320	008016-02	Soil	08/03/20
2	CMS-B-08-6-080320	008016-03	Soil	08/03/20
3	CMS-S-27-4-080320	008016-04	Soil	08/03/20
4	CMS-S-28-4-080320	008016-05	Soil	08/03/20
5	CMS-B-01-6-080320	008016-06	Soil	08/03/20
6	CMS-S-26-4-080320MS	008016-02MS	Soil	08/03/20
7	CMS-S-26-4-080320MSD	008016-02MSD	Soil	08/03/20
8				
9				
10				
11				
12				
13				

Notes:

1	00-1766 MB 1/6						

Laboratory Data Consultants, Inc.
Data Validation Report

Project/Site Name: Kimberly-Clark Upland Area

LDC Report Date: August 31, 2020

Parameters: Metals

Validation Level: Stage 2A

Laboratory: Friedman & Bruya, Inc.

Sample Delivery Group (SDG): 008016

Sample Identification	Laboratory Sample Identification	Matrix	Collection Date
WT-EffluentA-080320	008016-01	Water	08/03/20

Introduction

This Data Validation Report (DVR) presents data validation findings and results for the associated samples listed on the cover page. Data validation was performed in accordance with a modified outline of the USEPA National Functional Guidelines (NFG) for Inorganic Superfund Methods Data Review (January 2017). Where specific guidance was not available, the data has been evaluated in a conservative manner consistent with industry standards using professional experience.

The analyses were performed by the following method:

Arsenic, Cadmium, Chromium, Copper, Lead, Mercury, Nickel, Silver, and Zinc by Environmental Protection Agency (EPA) Method 200.8

All sample results were subjected to Stage 2A data validation, which comprises an evaluation of quality control (QC) summary results.

The following are definitions of the data qualifiers utilized during data validation:

J (Estimated): The compound or analyte was analyzed for and positively identified by the laboratory; however the reported concentration is estimated due to non-conformances discovered during data validation.

U (Non-detected): The compound or analyte was analyzed for and positively identified by the laboratory; however the compound or analyte should be considered non-detected at the reported concentration due to the presence of contaminants detected in the associated blank(s).

UJ (Non-detected estimated): The compound or analyte was reported as not detected by the laboratory; however the reported quantitation/detection limit is estimated due to non-conformances discovered during data validation.

R (Rejected): The sample results were rejected due to gross non-conformances discovered during data validation. Data qualified as rejected is not usable.

NA (Not Applicable): The non-conformance discovered during data validation demonstrates a high bias, while the affected compound or analyte in the associated sample(s) was reported as not detected by the laboratory and did not warrant the qualification of the data.

A qualification summary table is provided at the end of this report if data has been qualified. Flags are classified as P (protocol) or A (advisory) to indicate whether the flag is due to a laboratory deviation from a specified protocol or is of technical advisory nature.

I. Sample Receipt and Technical Holding Times

All samples were received in good condition.

All technical holding time requirements were met.

II. ICPMS Tune

ICP-MS tune data were not reviewed for Stage 2A validation.

III. Instrument Calibration

Instrument calibration data were not reviewed for Stage 2A validation.

IV. ICP Interference Check Sample Analysis

ICP Interference check sample (ICS) analysis data were not reviewed for Stage 2A validation.

V. Laboratory Blanks

Laboratory blanks were analyzed as required by the method. No contaminants were found in the laboratory blanks.

VI. Field Blanks

No field blanks were identified in this SDG.

VII. Matrix Spike/Matrix Spike Duplicates

The laboratory has indicated that there were no matrix spike (MS) and matrix spike duplicate (MSD) analyses specified for the samples in this SDG, and therefore matrix spike and matrix spike duplicate analyses were not performed for this SDG.

VIII. Duplicate Sample Analysis

The laboratory has indicated that there were no duplicate (DUP) analyses specified for the samples in this SDG, and therefore duplicate analyses were not performed for this SDG.

IX. Serial Dilution

Serial dilution was not performed for this SDG.

X. Laboratory Control Samples

Laboratory control samples (LCS) were analyzed as required by the method. Percent recoveries (%R) were within QC limits.

XI. Field Duplicates

No field duplicates were identified in this SDG.

XII. Internal Standards (ICP-MS)

Internal standards data were not reviewed for Stage 2A validation.

XIII. Sample Result Verification

Raw data were not reviewed for Stage 2A validation.

XIV. Overall Assessment of Data

The analysis was conducted within all specifications of the method. No results were rejected in this SDG.

Kimberly-Clark Upland Area
Metals - Data Qualification Summary - SDG 008016

No Sample Data Qualified in this SDG

Kimberly-Clark Upland Area
Metals - Laboratory Blank Data Qualification Summary - SDG 008016

No Sample Data Qualified in this SDG

Kimberly-Clark Upland Area
Metals - Field Blank Data Qualification Summary - SDG 008016

No Sample Data Qualified in this SDG

LDC #: 48922M4a
SDG #: 008016
Laboratory: Friedman & Bruya, Inc.

VALIDATION COMPLETENESS WORKSHEET
Stage 2A

Date: 9/25/2020
Page: 1 of 1
Reviewer: DM
2nd Reviewer:

METHOD: Metals (EPA Method 200.8)

The samples listed below were reviewed for each of the following validation areas. Validation findings are noted in attached validation findings worksheets.

	Validation Area		Comments
I.	Sample receipt/Technical holding times	A / A	
II.	ICP/MS Tune	N	
III.	Instrument Calibration	N	
IV.	ICP Interference Check Sample (ICS) Analysis	N	
V.	Laboratory Blanks	A	
VI.	Field Blanks	N	
VII.	Matrix Spike/Matrix Spike Duplicates	N	
VIII.	Duplicate sample analysis	N	
IX.	Serial Dilution	N	
X.	Laboratory control samples	A	LCS
XI.	Field Duplicates	N	
XII.	Internal Standard (ICP-MS)	N	
XIII.	Sample Result Verification	N	
XIV.	Overall Assessment of Data	A	

Note: A = Acceptable; N = Not provided/applicable; SW = See worksheet; ND = No compounds detected; R = Rinsate; FB = Field blank; D = Duplicate; TB = Trip blank; EB = Equipment blank; SB=Source blank; OTHER:

	Client ID	Lab ID	Matrix	Date
1	WT-Effluent-080320	008016-01	Water	08/03/20
2				
3				
4				
5				
6				
7				
8				
9				
10				
11				
12				
13				

Notes:

LDC #: 48922M4a

VALIDATION FINDINGS WORKSHEET
Sample Specific Element Reference

Reviewer: DTM

All circled elements are applicable to each sample.

Sample ID	Matrix	Target Analyte List (TAL)
All	W	Al, Sb, (As), Ba, Be, B, (Cd), Ca, (Cr), Co, (Cu), Fe, (Pb), Li, Mg, Mo, Mn, (Hg), (Ni), K, Se, (Ag), Na, Sr, Tl, Sn, Ti, W, U, V, (Zn)
		Al, Sb, As, Ba, Be, B, Cd, Ca, Cr, Co, Cu, Fe, Pb, Li, Mg, Mo, Mn, Hg, Ni, K, Se, Ag, Na, Sr, Tl, Sn, Ti, W, U, V, Zn
		Al, Sb, As, Ba, Be, B, Cd, Ca, Cr, Co, Cu, Fe, Pb, Li, Mg, Mo, Mn, Hg, Ni, K, Se, Ag, Na, Sr, Tl, Sn, Ti, W, U, V, Zn
		Al, Sb, As, Ba, Be, B, Cd, Ca, Cr, Co, Cu, Fe, Pb, Li, Mg, Mo, Mn, Hg, Ni, K, Se, Ag, Na, Sr, Tl, Sn, Ti, W, U, V, Zn
		Al, Sb, As, Ba, Be, B, Cd, Ca, Cr, Co, Cu, Fe, Pb, Li, Mg, Mo, Mn, Hg, Ni, K, Se, Ag, Na, Sr, Tl, Sn, Ti, W, U, V, Zn
		Al, Sb, As, Ba, Be, B, Cd, Ca, Cr, Co, Cu, Fe, Pb, Li, Mg, Mo, Mn, Hg, Ni, K, Se, Ag, Na, Sr, Tl, Sn, Ti, W, U, V, Zn
		Al, Sb, As, Ba, Be, B, Cd, Ca, Cr, Co, Cu, Fe, Pb, Li, Mg, Mo, Mn, Hg, Ni, K, Se, Ag, Na, Sr, Tl, Sn, Ti, W, U, V, Zn
		Al, Sb, As, Ba, Be, B, Cd, Ca, Cr, Co, Cu, Fe, Pb, Li, Mg, Mo, Mn, Hg, Ni, K, Se, Ag, Na, Sr, Tl, Sn, Ti, W, U, V, Zn
		Al, Sb, As, Ba, Be, B, Cd, Ca, Cr, Co, Cu, Fe, Pb, Li, Mg, Mo, Mn, Hg, Ni, K, Se, Ag, Na, Sr, Tl, Sn, Ti, W, U, V, Zn
		Al, Sb, As, Ba, Be, B, Cd, Ca, Cr, Co, Cu, Fe, Pb, Li, Mg, Mo, Mn, Hg, Ni, K, Se, Ag, Na, Sr, Tl, Sn, Ti, W, U, V, Zn
		Al, Sb, As, Ba, Be, B, Cd, Ca, Cr, Co, Cu, Fe, Pb, Li, Mg, Mo, Mn, Hg, Ni, K, Se, Ag, Na, Sr, Tl, Sn, Ti, W, U, V, Zn
		Al, Sb, As, Ba, Be, B, Cd, Ca, Cr, Co, Cu, Fe, Pb, Li, Mg, Mo, Mn, Hg, Ni, K, Se, Ag, Na, Sr, Tl, Sn, Ti, W, U, V, Zn
		Al, Sb, As, Ba, Be, B, Cd, Ca, Cr, Co, Cu, Fe, Pb, Li, Mg, Mo, Mn, Hg, Ni, K, Se, Ag, Na, Sr, Tl, Sn, Ti, W, U, V, Zn
		Al, Sb, As, Ba, Be, B, Cd, Ca, Cr, Co, Cu, Fe, Pb, Li, Mg, Mo, Mn, Hg, Ni, K, Se, Ag, Na, Sr, Tl, Sn, Ti, W, U, V, Zn
		Al, Sb, As, Ba, Be, B, Cd, Ca, Cr, Co, Cu, Fe, Pb, Li, Mg, Mo, Mn, Hg, Ni, K, Se, Ag, Na, Sr, Tl, Sn, Ti, W, U, V, Zn
		Al, Sb, As, Ba, Be, B, Cd, Ca, Cr, Co, Cu, Fe, Pb, Li, Mg, Mo, Mn, Hg, Ni, K, Se, Ag, Na, Sr, Tl, Sn, Ti, W, U, V, Zn
		Al, Sb, As, Ba, Be, B, Cd, Ca, Cr, Co, Cu, Fe, Pb, Li, Mg, Mo, Mn, Hg, Ni, K, Se, Ag, Na, Sr, Tl, Sn, Ti, W, U, V, Zn
		Al, Sb, As, Ba, Be, B, Cd, Ca, Cr, Co, Cu, Fe, Pb, Li, Mg, Mo, Mn, Hg, Ni, K, Se, Ag, Na, Sr, Tl, Sn, Ti, W, U, V, Zn
		Al, Sb, As, Ba, Be, B, Cd, Ca, Cr, Co, Cu, Fe, Pb, Li, Mg, Mo, Mn, Hg, Ni, K, Se, Ag, Na, Sr, Tl, Sn, Ti, W, U, V, Zn
		Al, Sb, As, Ba, Be, B, Cd, Ca, Cr, Co, Cu, Fe, Pb, Li, Mg, Mo, Mn, Hg, Ni, K, Se, Ag, Na, Sr, Tl, Sn, Ti, W, U, V, Zn
		Al, Sb, As, Ba, Be, B, Cd, Ca, Cr, Co, Cu, Fe, Pb, Li, Mg, Mo, Mn, Hg, Ni, K, Se, Ag, Na, Sr, Tl, Sn, Ti, W, U, V, Zn
		Al, Sb, As, Ba, Be, B, Cd, Ca, Cr, Co, Cu, Fe, Pb, Li, Mg, Mo, Mn, Hg, Ni, K, Se, Ag, Na, Sr, Tl, Sn, Ti, W, U, V, Zn
Analysis Method		
ICP		Al, Sb, As, Ba, Be, B, Cd, Ca, Cr, Co, Cu, Fe, Pb, Li, Mg, Mo, Mn, Hg, Ni, K, Se, Ag, Na, Sr, Tl, Sn, Ti, W, U, V, Zn
ICP-MS		Al, Sb, As, Ba, Be, B, Cd, Ca, Cr, Co, Cu, Fe, Pb, Li, Mg, Mo, Mn, Hg, Ni, K, Se, Ag, Na, Sr, Tl, Sn, Ti, W, U, V, Zn
GFAA		Al, Sb, As, Ba, Be, B, Cd, Ca, Cr, Co, Cu, Fe, Pb, Li, Mg, Mo, Mn, Hg, Ni, K, Se, Ag, Na, Sr, Tl, Sn, Ti, W, U, V, Zn

Comments: Mercury by CVAA if performed

Laboratory Data Consultants, Inc.
Data Validation Report

Project/Site Name: Kimberly-Clark Upland Area

LDC Report Date: August 31, 2020

Parameters: Oil & Grease

Validation Level: Stage 2A

Laboratory: Friedman & Bruya, Inc.

Sample Delivery Group (SDG): 008016

Sample Identification	Laboratory Sample Identification	Matrix	Collection Date
WT-EffluentA-080320	008016-01	Water	08/03/20

Introduction

This Data Validation Report (DVR) presents data validation findings and results for the associated samples listed on the cover page. Data validation was performed in accordance with a modified outline of the USEPA National Functional Guidelines (NFG) for Inorganic Superfund Methods Data Review (January 2017). Where specific guidance was not available, the data has been evaluated in a conservative manner consistent with industry standards using professional experience.

The analyses were performed by the following method:

Oil and Grease by Environmental Protection Agency (EPA) Method 1664

All sample results were subjected to Stage 2A data validation, which comprises an evaluation of quality control (QC) summary results.

The following are definitions of the data qualifiers utilized during data validation:

J (Estimated): The compound or analyte was analyzed for and positively identified by the laboratory; however the reported concentration is estimated due to non-conformances discovered during data validation.

U (Non-detected): The compound or analyte was analyzed for and positively identified by the laboratory; however the compound or analyte should be considered non-detected at the reported concentration due to the presence of contaminants detected in the associated blank(s).

UJ (Non-detected estimated): The compound or analyte was reported as not detected by the laboratory; however the reported quantitation/detection limit is estimated due to non-conformances discovered during data validation.

R (Rejected): The sample results were rejected due to gross non-conformances discovered during data validation. Data qualified as rejected is not usable.

NA (Not Applicable): The non-conformance discovered during data validation demonstrates a high bias, while the affected compound or analyte in the associated sample(s) was reported as not detected by the laboratory and did not warrant the qualification of the data.

A qualification summary table is provided at the end of this report if data has been qualified. Flags are classified as P (protocol) or A (advisory) to indicate whether the flag is due to a laboratory deviation from a specified protocol or is of technical advisory nature.

I. Sample Receipt and Technical Holding Times

All samples were received in good condition.

All technical holding time requirements were met.

II. Initial Calibration

Initial calibration data were not reviewed for Stage 2A validation.

III. Continuing Calibration

Continuing calibration data were not reviewed for Stage 2A validation.

IV. Laboratory Blanks

Laboratory blanks were analyzed as required by the method. No contaminants were found in the laboratory blanks.

V. Field Blanks

No field blanks were identified in this SDG.

VI. Matrix Spike/Matrix Spike Duplicates

The laboratory has indicated that there were no matrix spike (MS) and matrix spike duplicate (MSD) analyses specified for the samples in this SDG, and therefore matrix spike and matrix spike duplicate analyses were not performed for this SDG.

VII. Duplicate Sample Analysis

The laboratory has indicated that there were no duplicate (DUP) analyses specified for the samples in this SDG, and therefore duplicate analyses were not performed for this SDG.

VIII. Laboratory Control Samples

Laboratory control samples (LCS) were analyzed as required by the method. Percent recoveries (%R) were within QC limits.

IX. Field Duplicates

No field duplicates were identified in this SDG.

X. Sample Result Verification

Raw data were not reviewed for Stage 2A validation.

XI. Overall Assessment of Data

The analysis was conducted within all specifications of the method. No results were rejected in this SDG.

Kimberly-Clark Upland Area
Oil & Grease - Data Qualification Summary - SDG 008016

No Sample Data Qualified in this SDG

Kimberly-Clark Upland Area
Oil & Grease - Laboratory Blank Data Qualification Summary - SDG 008016

No Sample Data Qualified in this SDG

Kimberly-Clark Upland Area
Oil & Grease - Field Blank Data Qualification Summary - SDG 008016

No Sample Data Qualified in this SDG

LDC #: 48922M6
SDG #: 008016
Laboratory: Friedman & Bruya, Inc.

VALIDATION COMPLETENESS WORKSHEET
Stage 2A

Date: 8/20/20
Page: 1 of 1
Reviewer: VDM
2nd Reviewer:

METHOD: (Analyte) Oil & Grease (EPA Method 1664)

The samples listed below were reviewed for each of the following validation areas. Validation findings are noted in attached validation findings worksheets.

	Validation Area		Comments
I.	Sample receipt/Technical holding times	A / A	
II	Initial calibration	N	
III.	Calibration verification	N	
IV	Laboratory Blanks	A	
V	Field blanks	N	
VI.	Matrix Spike/Matrix Spike Duplicates	N	
VII.	Duplicate sample analysis	N	
VIII.	Laboratory control samples	A	LCS
IX.	Field duplicates	N	
X.	Sample result verification	N	
XI	Overall assessment of data	A	

Note: A = Acceptable; N = Not provided/applicable; SW = See worksheet; ND = No compounds detected; R = Rinsate; FB = Field blank; D = Duplicate; TB = Trip blank; EB = Equipment blank; SB=Source blank; OTHER:

	Client ID	Lab ID	Matrix	Date
1	WT-Effluent-080320 A	008016-01	Water	08/03/20
2				
3				
4				
5				
6				
7				
8				
9				
10				
11				
12				
13				
14				

Notes:

Laboratory Data Consultants, Inc.
Data Validation Report

Project/Site Name: Kimberly-Clark Upland Area

LDC Report Date: September 9, 2020

Parameters: Polynuclear Aromatic Hydrocarbons

Validation Level: Stage 2A

Laboratory: Friedman & Bruya, Inc.

Sample Delivery Group (SDG): 008046

Sample Identification	Laboratory Sample Identification	Matrix	Collection Date
CMS-B-07-6-080420	008046-01	Soil	08/04/20
CMS-S-29-4-080420	008046-02	Soil	08/04/20
CMS-B-30-7-080420	008046-03	Soil	08/04/20
CMS-511-080420	008046-04	Soil	08/04/20
CMS-B-07-6-080420MS	008046-01MS	Soil	08/04/20
CMS-B-07-6-080420MSD	008046-01MSD	Soil	08/04/20

Introduction

This Data Validation Report (DVR) presents data validation findings and results for the associated samples listed on the cover page. Data validation was performed in accordance with a modified outline of the USEPA National Functional Guidelines (NFG) for Organic Superfund Methods Data Review (January 2017). Where specific guidance was not available, the data has been evaluated in a conservative manner consistent with industry standards using professional experience.

The analyses were performed by the following method:

Polynuclear Aromatic Hydrocarbons (PAHs) by Environmental Protection Agency (EPA) SW 846 Method 8270E in Selected Ion Monitoring (SIM) mode

All sample results were subjected to Stage 2A data validation, which comprises an evaluation of quality control (QC) summary results.

The following are definitions of the data qualifiers utilized during data validation:

J (Estimated): The compound or analyte was analyzed for and positively identified by the laboratory; however the reported concentration is estimated due to non-conformances discovered during data validation.

U (Non-detected): The compound or analyte was analyzed for and positively identified by the laboratory; however the compound or analyte should be considered non-detected at the reported concentration due to the presence of contaminants detected in the associated blank(s).

UJ (Non-detected estimated): The compound or analyte was reported as not detected by the laboratory; however the reported quantitation/detection limit is estimated due to non-conformances discovered during data validation.

R (Rejected): The sample results were rejected due to gross non-conformances discovered during data validation. Data qualified as rejected is not usable.

NA (Not Applicable): The non-conformance discovered during data validation demonstrates a high bias, while the affected compound or analyte in the associated sample(s) was reported as not detected by the laboratory and did not warrant the qualification of the data.

A qualification summary table is provided at the end of this report if data has been qualified. Flags are classified as P (protocol) or A (advisory) to indicate whether the flag is due to a laboratory deviation from a specified protocol or is of technical advisory nature.

I. Sample Receipt and Technical Holding Times

All samples were received in good condition and cooler temperatures upon receipt met validation criteria.

All technical holding time requirements were met.

II. GC/MS Instrument Performance Check

Instrument performance check data were not reviewed for Stage 2A validation.

III. Initial Calibration and Initial Calibration Verification

Initial calibration data were not reviewed for Stage 2A validation.

IV. Continuing Calibration

Continuing calibration data were not reviewed for Stage 2A validation.

V. Laboratory Blanks

Laboratory blanks were analyzed as required by the method. No contaminants were found in the laboratory blanks.

VI. Field Blanks

No field blanks were identified in this SDG.

VII. Surrogates

Surrogates were added to all samples as required by the method. All surrogate recoveries (%R) were within QC limits.

VIII. Matrix Spike/Matrix Spike Duplicates

Matrix spike (MS) and matrix spike duplicate (MSD) sample analysis was performed on an associated project sample. Percent recoveries (%R) were within QC limits.

Relative percent differences (RPD) were within QC limits with the following exceptions:

Spike ID (Associated Samples)	Compound	RPD (Limits)	Flag	A or P
CMS-B-07-6-080420MS/MSD (CMS-B-07-6-080420)	Naphthalene	24 (≤20)	NA	-

IX. Laboratory Control Samples

Laboratory control samples (LCS) were analyzed as required by the method. Percent recoveries (%R) were within QC limits.

X. Field Duplicates

Samples CMS-B-30-7-080420 and CMS-511-080420 were identified as field duplicates. No results were detected in any of the samples with the following exceptions:

Compound	Concentration (mg/Kg)		RPD
	CMS-B-30-7-080420	CMS-511-080420	
Naphthalene	0.021	0.13	144
Acenaphthene	0.028	0.12	124
Fluorene	0.027	0.60	183
Phenanthrene	0.12	1.5	170
Anthracene	0.042	1.6	190
Fluoranthene	0.26	0.83	105
Pyrene	0.24	0.84	111
Benzo(a)anthracene	0.10	0.52	135
Chrysene	0.12	0.81	148
Benzo(a)pyrene	0.096	0.45	130
Benzo(b)fluoranthene	0.11	0.48	125
Benzo(k)fluoranthene	0.044	0.17	118
Indeno(1,2,3-cd)pyrene	0.051	0.20	119
Dibenzo(a,h)anthracene	0.013	0.060	129
Benzo(g,h,i)perylene	0.050	0.17	109

XI. Internal Standards

Internal standards data were not reviewed for Stage 2A validation.

XII. Compound Quantitation

Raw data were not reviewed for Stage 2A validation.

XIII. Target Compound Identifications

Raw data were not reviewed for Stage 2A validation.

XIV. System Performance

Raw data were not reviewed for Stage 2A validation.

XV. Overall Assessment of Data

The analysis was conducted within all specifications of the method. No results were rejected in this SDG.

Kimberly-Clark Upland Area
Polynuclear Aromatic Hydrocarbons - Data Qualification Summary - SDG 008046

No Sample Data Qualified in this SDG

Kimberly-Clark Upland Area
Polynuclear Aromatic Hydrocarbons - Laboratory Blank Data Qualification Summary - SDG 008046

No Sample Data Qualified in this SDG

Kimberly-Clark Upland Area
Polynuclear Aromatic Hydrocarbons - Field Blank Data Qualification Summary - SDG 008046

No Sample Data Qualified in this SDG

LDC #: 48922N2b

SDG #: 008046

Laboratory: Friedman & Bruya, Inc.

VALIDATION COMPLETENESS WORKSHEET

Stage 2A

Date: 09/04/20

Page: 1 of 1

Reviewer: VT

2nd Reviewer:

METHOD: GC/MS Polynuclear Aromatic Hydrocarbons (EPA SW 846 Method 8270E-SIM)

The samples listed below were reviewed for each of the following validation areas. Validation findings are noted in attached validation findings worksheets.

	Validation Area		Comments
I.	Sample receipt/Technical holding times	A / A	
II.	GC/MS Instrument performance check	N	
III.	Initial calibration/ICV	N/N	
IV.	Continuing calibration	N	
V.	Laboratory Blanks	A	
VI.	Field blanks	N	
VII.	Surrogate spikes	A	
VIII.	Matrix spike/Matrix spike duplicates	SW	(5,6)
IX.	Laboratory control samples	A	LCS
X.	Field duplicates	SW	D = 3,4
XI.	Internal standards	N	
XII.	Compound quantitation RL/LOQ/LODs	N	Dry weight basis = 4
XIII.	Target compound identification	N	
XIV.	System performance	N	
XV.	Overall assessment of data	A	

Note: A = Acceptable; N = Not provided/applicable; SW = See worksheet; ND = No compounds detected; R = Rinsate; FB = Field blank; D = Duplicate; TB = Trip blank; EB = Equipment blank; SB=Source blank; OTHER:

	Client ID		Lab ID	Matrix	Date
1	CMS-B-07-06-080420		008046-01	Soil	08/04/20
2	CMS-S-29-4-080420		008046-02	Soil	08/04/20
3	CMS-B-30-7-080420	D	008046-03	Soil	08/04/20
4	CMS-511-080420	D	008046-04	Soil	08/04/20
5	CMS-B-07-06-080420MS		008046-01MS	Soil	08/04/20
6	CMS-B-07-06-080420MSD		008046-01MSD	Soil	08/04/20
7					
8					
9					

Notes:

1	00-1768MB1/5						

VALIDATION FINDINGS WORKSHEET

METHOD: GC/MS SVOA

A. Phenol	CC. Dimethylphthalate	EEE. Bis(2-ethylhexyl)phthalate	GGGG. C30-Hopane	I1. Methyl methanesulfonate
B. Bis (2-chloroethyl) ether	DD. Acenaphthylene	FFF. Di-n-octylphthalate	HHHH. 1-Methylphenanthrene	J1. Ethyl methanesulfonate
C. 2-Chlorophenol	EE. 2,6-Dinitrotoluene	GGG. Benzo(b)fluoranthene	IIII. 1,4-Dioxane	K1. o,o',o''-Triethylphosphorothioate
D. 1,3-Dichlorobenzene	FF. 3-Nitroaniline	HHH. Benzo(k)fluoranthene	JJJJ. Acetophenone	L1. n-Phenylene diamine
E. 1,4-Dichlorobenzene	GG. Acenaphthene	III. Benzo(a)pyrene	KKKK. Atrazine	M1. 1,4-Naphthoquinone
F. 1,2-Dichlorobenzene	HH. 2,4-Dinitrophenol	JJJ. Indeno(1,2,3-cd)pyrene	LLLL. Benzaldehyde	N1. N-Nitro-o-toluidine
G. 2-Methylphenol	II. 4-Nitrophenol	KKK. Dibenz(a,h)anthracene	MMMM. Caprolactam	O1. 1,3,5-Trinitrobenzene
H. 2,2'-Oxybis(1-chloropropane)	JJ. Dibenzofuran	LLL. Benzo(g,h,i)perylene	NNNN. 2,6-Dichlorophenol	P1. Pentachlorobenzene
I. 4-Methylphenol	KK. 2,4-Dinitrotoluene	MMM. Bis(2-Chloroisopropyl)ether	OOOO. 1,2-Diphenylhydrazine	Q1. 4-Aminobiphenyl
J. N-Nitroso-di-n-propylamine	LL. Diethylphthalate	NNN. Aniline	PPPP. 3-Methylphenol	R1. 2-Naphthylamine
K. Hexachloroethane	MM. 4-Chlorophenyl-phenyl ether	OOO. N-Nitrosodimethylamine	QQQQ. 3&4-Methylphenol	S1. Triphenylene
L. Nitrobenzene	NN. Fluorene	PPP. Benzoic Acid	RRRR. 4-Dimethyldibenzothiophene (4MDT)	T1. Octachlorostyrene
M. Isophorone	OO. 4-Nitroaniline	QQQ. Benzyl alcohol	SSSS. 2/3-Dimethyldibenzothiophene (4MDT)	U1. Famphur
N. 2-Nitrophenol	PP. 4,6-Dinitro-2-methylphenol	RRR. Pyridine	TTTT. 1-Methyldibenzothiophene (1MDT)	V1. 1,4-phenylenediamine
O. 2,4-Dimethylphenol	QQ. N-Nitrosodiphenylamine	SSS. Benzidine	UUUU.. 2,3,4,6-Tetrachlorophenol	W1. Methapyrilene
P. Bis(2-chloroethoxy)methane	RR. 4-Bromophenyl-phenylether	TTT. 1-Methylnaphthalene	VVVV. 1,2,4,5-Tetrachlorobenzene	X1. Pentachloroethane
Q. 2,4-Dichlorophenol	SS. Hexachlorobenzene	UUU.Benzo(b)thiophene	WWWW.. 2-Picoline	Y1. 3,3'-Dimethylbenzidine
R. 1,2,4-Trichlorobenzene	TT. Pentachlorophenol	VVV.Benzonaphthothiophene	XXXX. 3-Methylcholanthrene	Z1. o-Toluidine
S. Naphthalene	UU. Phenanthrene	WWW.Benzo(e)pyrene	YYYY. a,a-Dimethylphenethylamine	A2. 1-Naphthylamine
T. 4-Chloroaniline	VV. Anthracene	XXX. 2,6-Dimethylnaphthalene	ZZZZ. Hexachloropropene	B2. 4-Aminobiphenyl
U. Hexachlorobutadiene	WW. Carbazole	YYY. 2,3,5-Trimethylnaphthalene	A1. N-Nitrosodiethylamine	C2. 4-Nitroquinoline-1-oxide
V. 4-Chloro-3-methylphenol	XX. Di-n-butylphthalate	ZZZ. Perylene	B1. N-Nitrosodi-n-butylamine	D2. Hexachloropene
W. 2-Methylnaphthalene	YY. Fluoranthene	AAAA. Dibenzothiophene	C1. N-Nitrosomethylethylamine	E2. Bis (2-chloro-1-methylethyl) ether
X. Hexachlorocyclopentadiene	ZZ. Pyrene	BBBB. Benzo(a)fluoranthene	D1. N-Nitrosomorpholine	F2. Bifenthrin
Y. 2,4,6-Trichlorophenol	AAA. Butylbenzylphthalate	CCCC. Benzo(b)fluorene	E1. N-Nitrosopyrrolidine	G2. Cyfluthrin
Z. 2,4,5-Trichlorophenol	BBB. 3,3'-Dichlorobenzidine	DDDD. cis/trans-Decalin	F1. Phenacetin	H2. Cypermethrin
AA. 2-Chloronaphthalene	CCC. Benzo(a)anthracene	EEEE. 1,1'-Biphenyl	G1. 2-Acetylaminofluorene	I2. Permethrin (cis/trans)
BB. 2-Nitroaniline	DDD. Chrysene	FFFF. Retene	H1. Pronamide	J2. 5-Nitro-o-toluidine

LDC #: 48922N2b

VALIDATION FINDINGS WORKSHEET
Matrix Spike/Matrix Spike Duplicates

Reviewer: LT

METHOD: GC/MS PAHs (EPA SW 846 Method 8270E SIM)

Please see qualifications below for all questions answered "N". Not applicable questions are identified as "N/A".

Y x N__ N/A__ Were a matrix spike (MS) and matrix spike duplicate (MSD) or duplicate sample analyzed for each matrix in this SDG?

Y x N__ N/A__ Was a MS/MSD analyzed every 20 samples of each matrix?

Y__ N x N/A__ Were the MS/MSD percent recoveries (%R) and the relative percent differences (RPD) within the QC limits?

#	Date	MS/MSD ID	Compound	MS %R (Limits)	MSD %R (Limits)	RPD (Limits)	Associated Samples	Qualifications
		5/6	S			24 (≤20)	1 (ND)	J/A DETS

LDC#:48922N2b **VALIDATION FINDINGS WORKSHEET** Page:_1_of_1_
Field Duplicates Reviewer:__LT____

METHOD: GC/MS PAHs (EPA SW846 Method 8270E SIM)

Compound	Concentration (mg/kg)		RPD
	3	4	
S	0.021	0.13	144
GG	0.028	0.12	124
NN	0.027	0.60	183
UU	0.12	1.5	170
VV	0.042	1.6	190
YY	0.26	0.83	105
ZZ	0.24	0.84	111
CCC	0.10	0.52	135
DDD	0.12	0.81	148
III	0.096	0.45	130
GGG	0.11	0.48	125
HHH	0.044	0.17	118
JJJ	0.051	0.20	119
KKK	0.013	0.060	129
LLL	0.050	0.17	109

Laboratory Data Consultants, Inc.
Data Validation Report

Project/Site Name: Kimberly-Clark Upland Area

LDC Report Date: September 9, 2020

Parameters: Polychlorinated Biphenyls

Validation Level: Stage 2A

Laboratory: Friedman & Bruya, Inc.

Sample Delivery Group (SDG): 008046

Sample Identification	Laboratory Sample Identification	Matrix	Collection Date
CMS-B-07-6-080420	008046-01	Soil	08/04/20
CMS-S-29-4-080420	008046-02	Soil	08/04/20
CMS-B-30-7-080420	008046-03	Soil	08/04/20
CMS-511-080420	008046-04	Soil	08/04/20
CMS-B-31-7-080420	008046-05	Soil	08/04/20

Introduction

This Data Validation Report (DVR) presents data validation findings and results for the associated samples listed on the cover page. Data validation was performed in accordance with a modified outline of the USEPA National Functional Guidelines (NFG) for Organic Superfund Methods Data Review (January 2017). Where specific guidance was not available, the data has been evaluated in a conservative manner consistent with industry standards using professional experience.

The analyses were performed by the following method:

Polychlorinated Biphenyls (PCBs) by Environmental Protection Agency (EPA) SW 846 Method 8082A

All sample results were subjected to Stage 2A data validation, which comprises an evaluation of quality control (QC) summary results.

The following are definitions of the data qualifiers utilized during data validation:

J (Estimated): The compound or analyte was analyzed for and positively identified by the laboratory; however the reported concentration is estimated due to non-conformances discovered during data validation.

U (Non-detected): The compound or analyte was analyzed for and positively identified by the laboratory; however the compound or analyte should be considered non-detected at the reported concentration due to the presence of contaminants detected in the associated blank(s).

UJ (Non-detected estimated): The compound or analyte was reported as not detected by the laboratory; however the reported quantitation/detection limit is estimated due to non-conformances discovered during data validation.

R (Rejected): The sample results were rejected due to gross non-conformances discovered during data validation. Data qualified as rejected is not usable.

NA (Not Applicable): The non-conformance discovered during data validation demonstrates a high bias, while the affected compound or analyte in the associated sample(s) was reported as not detected by the laboratory and did not warrant the qualification of the data.

A qualification summary table is provided at the end of this report if data has been qualified. Flags are classified as P (protocol) or A (advisory) to indicate whether the flag is due to a laboratory deviation from a specified protocol or is of technical advisory nature.

I. Sample Receipt and Technical Holding Times

All samples were received in good condition and cooler temperatures upon receipt met validation criteria.

All technical holding time requirements were met.

II. Initial Calibration and Initial Calibration Verification

Initial calibration data were not reviewed for Stage 2A validation.

III. Continuing Calibration

Continuing calibration data were not reviewed for Stage 2A validation.

IV. Laboratory Blanks

Laboratory blanks were analyzed as required by the method. No contaminants were found in the laboratory blanks.

V. Field Blanks

No field blanks were identified in this SDG.

VI. Surrogates

Surrogates were added to all samples as required by the method. All surrogate recoveries (%R) were within QC limits.

VII. Matrix Spike/Matrix Spike Duplicates

Matrix spike (MS) and matrix spike duplicate (MSD) sample analysis was performed on an associated project sample. Percent recoveries (%R) were within QC limits. Relative percent differences (RPD) were within QC limits.

VIII. Laboratory Control Samples

Laboratory control samples (LCS) were analyzed as required by the method. Percent recoveries (%R) were within QC limits.

IX. Field Duplicates

Samples CMS-B-30-7-080420 and CMS-511-080420 were identified as field duplicates. No results were detected in any of the samples with the following exceptions:

Compound	Concentration (mg/Kg)		RPD
	CMS-B-30-7-080420	CMS-511-080420	
Aroclor-1254	0.042	0.12	96
Aroclor-1260	0.025	0.12	131

X. Compound Quantitation

Raw data were not reviewed for Stage 2A validation.

XI. Target Compound Identification

Raw data were not reviewed for Stage 2A validation.

XII. Overall Assessment of Data

The analysis was conducted within all specifications of the method. No results were rejected in this SDG.

Kimberly-Clark Upland Area
Polychlorinated Biphenyls - Data Qualification Summary - SDG 008046

No Sample Data Qualified in this SDG

Kimberly-Clark Upland Area
Polychlorinated Biphenyls - Laboratory Blank Data Qualification Summary - SDG 008046

No Sample Data Qualified in this SDG

Kimberly-Clark Upland Area
Polychlorinated Biphenyls - Field Blank Data Qualification Summary - SDG 008046

No Sample Data Qualified in this SDG

LDC #: 48922N3b
SDG #: 008046
Laboratory: Friedman & Bruya, Inc.

VALIDATION COMPLETENESS WORKSHEET
Stage 2A

Date: 09/09/20
Page: 1 of 1
Reviewer: VT
2nd Reviewer:

METHOD: GC Polychlorinated Biphenyls (EPA SW846 Method 8082A)

The samples listed below were reviewed for each of the following validation areas. Validation findings are noted in attached validation findings worksheets.

	Validation Area		Comments
I.	Sample receipt/Technical holding times	A / A	
II.	Initial calibration/ICV	N/N	
III.	Continuing calibration	N	
IV.	Laboratory Blanks	A	
V.	Field blanks	N	
VI.	Surrogate spikes	A	
VII.	Matrix spike/Matrix spike duplicates	A	SDG 008046
VIII.	Laboratory control samples	A	LCS
IX.	Field duplicates	SW	D=3+4
X.	Compound quantitation/RL/LOQ/LODs	N	Dry weight basis = 1-5
XI.	Target compound identification	N	
XII.	Overall assessment of data	A	

Note: A = Acceptable; N = Not provided/applicable; SW = See worksheet; ND = No compounds detected; R = Rinsate; FB = Field blank; D = Duplicate; TB = Trip blank; EB = Equipment blank; SB=Source blank; OTHER:

	Client ID		Lab ID	Matrix	Date
1	CMS-B-07-06-080420		008046-01	Soil	08/04/20
2	CMS-S-29-4-080420		008046-02	Soil	08/04/20
3	CMS-B-30-7-080420	D	008046-03	Soil	08/04/20
4	CMS-511-080420	D	008046-04	Soil	08/04/20
5	CMS-B-31-7-080420		008046-05	Soil	08/04/20
6					
7					
8					
9					
10					
11					
12					
13					

Notes:

1	10-1766 MB21/6						

LDC#:48922N3b **VALIDATION FINDINGS WORKSHEET** Page:_1_of_1_
Field Duplicates Reviewer:__LT____
2nd Reviewer:_____

METHOD: GC PCBs (EPA SW846 Method 8082A)

Compound	Concentration (mg/kg)		RPD
	3	4	
Aroclor 1254	0.042	0.12	96
Aroclor 1260	0.025	0.12	131

Laboratory Data Consultants, Inc.
Data Validation Report

Project/Site Name: Kimberly-Clark Upland Area

LDC Report Date: September 9, 2020

Parameters: Polynuclear Aromatic Hydrocarbons

Validation Level: Stage 2A

Laboratory: Friedman & Bruya, Inc.

Sample Delivery Group (SDG): 008072

Sample Identification	Laboratory Sample Identification	Matrix	Collection Date
CMS-S-30-4-080520	008072-01	Soil	08/05/20
CMS-S-31-4-080520	008072-02	Soil	08/05/20

Introduction

This Data Validation Report (DVR) presents data validation findings and results for the associated samples listed on the cover page. Data validation was performed in accordance with a modified outline of the USEPA National Functional Guidelines (NFG) for Organic Superfund Methods Data Review (January 2017). Where specific guidance was not available, the data has been evaluated in a conservative manner consistent with industry standards using professional experience.

The analyses were performed by the following method:

Polynuclear Aromatic Hydrocarbons (PAHs) by Environmental Protection Agency (EPA) SW 846 Method 8270E in Selected Ion Monitoring (SIM) mode

All sample results were subjected to Stage 2A data validation, which comprises an evaluation of quality control (QC) summary results.

The following are definitions of the data qualifiers utilized during data validation:

J (Estimated): The compound or analyte was analyzed for and positively identified by the laboratory; however the reported concentration is estimated due to non-conformances discovered during data validation.

U (Non-detected): The compound or analyte was analyzed for and positively identified by the laboratory; however the compound or analyte should be considered non-detected at the reported concentration due to the presence of contaminants detected in the associated blank(s).

UJ (Non-detected estimated): The compound or analyte was reported as not detected by the laboratory; however the reported quantitation/detection limit is estimated due to non-conformances discovered during data validation.

R (Rejected): The sample results were rejected due to gross non-conformances discovered during data validation. Data qualified as rejected is not usable.

NA (Not Applicable): The non-conformance discovered during data validation demonstrates a high bias, while the affected compound or analyte in the associated sample(s) was reported as not detected by the laboratory and did not warrant the qualification of the data.

A qualification summary table is provided at the end of this report if data has been qualified. Flags are classified as P (protocol) or A (advisory) to indicate whether the flag is due to a laboratory deviation from a specified protocol or is of technical advisory nature.

I. Sample Receipt and Technical Holding Times

All samples were received in good condition and cooler temperatures upon receipt met validation criteria.

All technical holding time requirements were met.

II. GC/MS Instrument Performance Check

Instrument performance check data were not reviewed for Stage 2A validation.

III. Initial Calibration and Initial Calibration Verification

Initial calibration data were not reviewed for Stage 2A validation.

IV. Continuing Calibration

Continuing calibration data were not reviewed for Stage 2A validation.

V. Laboratory Blanks

Laboratory blanks were analyzed as required by the method. No contaminants were found in the laboratory blanks.

VI. Field Blanks

No field blanks were identified in this SDG.

VII. Surrogates

Surrogates were added to all samples as required by the method. All surrogate recoveries (%R) were within QC limits.

VIII. Matrix Spike/Matrix Spike Duplicates

Matrix spike (MS) and matrix spike duplicate (MSD) sample analysis was performed on an associated project sample. Percent recoveries (%R) were within QC limits. Relative percent differences (RPD) were not within QC limits. No data were qualified since there were no associated samples in this SDG.

IX. Laboratory Control Samples

Laboratory control samples (LCS) were analyzed as required by the method. Percent recoveries (%R) were within QC limits.

X. Field Duplicates

No field duplicates were identified in this SDG.

XI. Internal Standards

Internal standards data were not reviewed for Stage 2A validation.

XII. Compound Quantitation

Raw data were not reviewed for Stage 2A validation.

XIII. Target Compound Identifications

Raw data were not reviewed for Stage 2A validation.

XIV. System Performance

Raw data were not reviewed for Stage 2A validation.

XV. Overall Assessment of Data

The analysis was conducted within all specifications of the method. No results were rejected in this SDG.

Kimberly-Clark Upland Area
Polynuclear Aromatic Hydrocarbons - Data Qualification Summary - SDG 008072

No Sample Data Qualified in this SDG

Kimberly-Clark Upland Area
Polynuclear Aromatic Hydrocarbons - Laboratory Blank Data Qualification Summary - SDG 008072

No Sample Data Qualified in this SDG

Kimberly-Clark Upland Area
Polynuclear Aromatic Hydrocarbons - Field Blank Data Qualification Summary - SDG 008072

No Sample Data Qualified in this SDG

LDC #: 48922O2b
SDG #: 008072
Laboratory: Friedman & Bruya, Inc.

VALIDATION COMPLETENESS WORKSHEET
Stage 2A

Date: 09/04/20
Page: 1 of 1
Reviewer: LT
2nd Reviewer:

METHOD: GC/MS Polynuclear Aromatic Hydrocarbons (EPA SW 846 Method 8270E-SIM)

The samples listed below were reviewed for each of the following validation areas. Validation findings are noted in attached validation findings worksheets.

	Validation Area		Comments
I.	Sample receipt/Technical holding times	A, A	
II.	GC/MS Instrument performance check	N	
III.	Initial calibration/ICV	N/N	
IV.	Continuing calibration	N	
V.	Laboratory Blanks	A	
VI.	Field blanks	N	
VII.	Surrogate spikes	A	
VIII.	Matrix spike/Matrix spike duplicates	SW	SPG 008046 RPD out, not associated
IX.	Laboratory control samples	A	LCS
X.	Field duplicates	N	
XI.	Internal standards	N	
XII.	Compound quantitation RL/LOQ/LODs	N	Dry weight basis = 1,2
XIII.	Target compound identification	N	
XIV.	System performance	N	
XV.	Overall assessment of data	A	

Note: A = Acceptable; N = Not provided/applicable; SW = See worksheet; ND = No compounds detected; R = Rinsate; FB = Field blank; D = Duplicate; TB = Trip blank; EB = Equipment blank; SB=Source blank; OTHER:

	Client ID	Lab ID	Matrix	Date
1	CMS-S-30-4-080520	008072-01	Soil	08/05/20
2	CMS-S-31-4-080520	008072-02	Soil	08/05/20
3				
4				
5				
6				
7				
8				
9				

Notes:

1	00-1768 MB 1/5						

Laboratory Data Consultants, Inc.
Data Validation Report

Project/Site Name: Kimberly-Clark Upland Area

LDC Report Date: September 9, 2020

Parameters: Polychlorinated Biphenyls

Validation Level: Stage 2A

Laboratory: Friedman & Bruya, Inc.

Sample Delivery Group (SDG): 008072

Sample Identification	Laboratory Sample Identification	Matrix	Collection Date
CMS-S-30-4-080520	008072-01	Soil	08/05/20
CMS-S-31-4-080520	008072-02	Soil	08/05/20

Introduction

This Data Validation Report (DVR) presents data validation findings and results for the associated samples listed on the cover page. Data validation was performed in accordance with a modified outline of the USEPA National Functional Guidelines (NFG) for Organic Superfund Methods Data Review (January 2017). Where specific guidance was not available, the data has been evaluated in a conservative manner consistent with industry standards using professional experience.

The analyses were performed by the following method:

Polychlorinated Biphenyls (PCBs) by Environmental Protection Agency (EPA) SW 846 Method 8082A

All sample results were subjected to Stage 2A data validation, which comprises an evaluation of quality control (QC) summary results.

The following are definitions of the data qualifiers utilized during data validation:

J (Estimated): The compound or analyte was analyzed for and positively identified by the laboratory; however the reported concentration is estimated due to non-conformances discovered during data validation.

U (Non-detected): The compound or analyte was analyzed for and positively identified by the laboratory; however the compound or analyte should be considered non-detected at the reported concentration due to the presence of contaminants detected in the associated blank(s).

UJ (Non-detected estimated): The compound or analyte was reported as not detected by the laboratory; however the reported quantitation/detection limit is estimated due to non-conformances discovered during data validation.

R (Rejected): The sample results were rejected due to gross non-conformances discovered during data validation. Data qualified as rejected is not usable.

NA (Not Applicable): The non-conformance discovered during data validation demonstrates a high bias, while the affected compound or analyte in the associated sample(s) was reported as not detected by the laboratory and did not warrant the qualification of the data.

A qualification summary table is provided at the end of this report if data has been qualified. Flags are classified as P (protocol) or A (advisory) to indicate whether the flag is due to a laboratory deviation from a specified protocol or is of technical advisory nature.

I. Sample Receipt and Technical Holding Times

All samples were received in good condition and cooler temperatures upon receipt met validation criteria.

All technical holding time requirements were met.

II. Initial Calibration and Initial Calibration Verification

Initial calibration data were not reviewed for Stage 2A validation.

III. Continuing Calibration

Continuing calibration data were not reviewed for Stage 2A validation.

IV. Laboratory Blanks

Laboratory blanks were analyzed as required by the method. No contaminants were found in the laboratory blanks.

V. Field Blanks

No field blanks were identified in this SDG.

VI. Surrogates

Surrogates were added to all samples as required by the method. All surrogate recoveries (%R) were within QC limits.

VII. Matrix Spike/Matrix Spike Duplicates

Matrix spike (MS) and matrix spike duplicate (MSD) sample analysis was performed on an associated project sample. Percent recoveries (%R) were within QC limits. Relative percent differences (RPD) were within QC limits.

VIII. Laboratory Control Samples

Laboratory control samples (LCS) were analyzed as required by the method. Percent recoveries (%R) were within QC limits.

IX. Field Duplicates

No field duplicates were identified in this SDG.

X. Compound Quantitation

Raw data were not reviewed for Stage 2A validation.

XI. Target Compound Identification

Raw data were not reviewed for Stage 2A validation.

XII. Overall Assessment of Data

The analysis was conducted within all specifications of the method. No results were rejected in this SDG.

Kimberly-Clark Upland Area
Polychlorinated Biphenyls - Data Qualification Summary - SDG 008072

No Sample Data Qualified in this SDG

Kimberly-Clark Upland Area
Polychlorinated Biphenyls - Laboratory Blank Data Qualification Summary - SDG 008072

No Sample Data Qualified in this SDG

Kimberly-Clark Upland Area
Polychlorinated Biphenyls - Field Blank Data Qualification Summary - SDG 008072

No Sample Data Qualified in this SDG

LDC #: 48922O3b
SDG #: 008072
Laboratory: Friedman & Bruya, Inc.

VALIDATION COMPLETENESS WORKSHEET
Stage 2A

Date: 09/04/20
Page: 1 of 1
Reviewer: LT
2nd Reviewer:

METHOD: GC Polychlorinated Biphenyls (EPA SW846 Method 8082A)

The samples listed below were reviewed for each of the following validation areas. Validation findings are noted in attached validation findings worksheets.

	Validation Area		Comments
I.	Sample receipt/Technical holding times	A/A	
II.	Initial calibration/ICV	N/N	
III.	Continuing calibration	N	
IV.	Laboratory Blanks	A	
V.	Field blanks	N	
VI.	Surrogate spikes	A	
VII.	Matrix spike/Matrix spike duplicates	A	SDG 008016
VIII.	Laboratory control samples	A	
IX.	Field duplicates	N	
X.	Compound quantitation/RL/LOQ/LODs	N	Dry weight basis = 1,2
XI.	Target compound identification	N	
XII.	Overall assessment of data	A	

Note: A = Acceptable; N = Not provided/applicable; SW = See worksheet; ND = No compounds detected; R = Rinsate; FB = Field blank; D = Duplicate; TB = Trip blank; EB = Equipment blank; SB=Source blank; OTHER:

	Client ID	Lab ID	Matrix	Date
1	CMS-S-30-4-080520	008072-01	Soil	08/05/20
2	CMS-S-31-4-080520	008072-02	Soil	08/05/20
3				
4				
5				
6				
7				
8				
9				
10				
11				
12				
13				

Notes:

1	001766 MB2 1/6						

LDC Report# 48922P2b

Laboratory Data Consultants, Inc.
Data Validation Report

Project/Site Name: Kimberly-Clark Upland Area

LDC Report Date: September 9, 2020

Parameters: Polynuclear Aromatic Hydrocarbons

Validation Level: Stage 2A

Laboratory: Friedman & Bruya, Inc.

Sample Delivery Group (SDG): 008170

Sample Identification	Laboratory Sample Identification	Matrix	Collection Date
CMS-B-23-6	008170-09	Soil	08/11/20
CMS-512	008170-10	Soil	08/11/20

Introduction

This Data Validation Report (DVR) presents data validation findings and results for the associated samples listed on the cover page. Data validation was performed in accordance with a modified outline of the USEPA National Functional Guidelines (NFG) for Organic Superfund Methods Data Review (January 2017). Where specific guidance was not available, the data has been evaluated in a conservative manner consistent with industry standards using professional experience.

The analyses were performed by the following method:

Polynuclear Aromatic Hydrocarbons (PAHs) by Environmental Protection Agency (EPA) SW 846 Method 8270E in Selected Ion Monitoring (SIM) mode

All sample results were subjected to Stage 2A data validation, which comprises an evaluation of quality control (QC) summary results.

The following are definitions of the data qualifiers utilized during data validation:

J (Estimated): The compound or analyte was analyzed for and positively identified by the laboratory; however the reported concentration is estimated due to non-conformances discovered during data validation.

U (Non-detected): The compound or analyte was analyzed for and positively identified by the laboratory; however the compound or analyte should be considered non-detected at the reported concentration due to the presence of contaminants detected in the associated blank(s).

UJ (Non-detected estimated): The compound or analyte was reported as not detected by the laboratory; however the reported quantitation/detection limit is estimated due to non-conformances discovered during data validation.

R (Rejected): The sample results were rejected due to gross non-conformances discovered during data validation. Data qualified as rejected is not usable.

NA (Not Applicable): The non-conformance discovered during data validation demonstrates a high bias, while the affected compound or analyte in the associated sample(s) was reported as not detected by the laboratory and did not warrant the qualification of the data.

A qualification summary table is provided at the end of this report if data has been qualified. Flags are classified as P (protocol) or A (advisory) to indicate whether the flag is due to a laboratory deviation from a specified protocol or is of technical advisory nature.

I. Sample Receipt and Technical Holding Times

All samples were received in good condition and cooler temperatures upon receipt met validation criteria.

All technical holding time requirements were met.

II. GC/MS Instrument Performance Check

Instrument performance check data were not reviewed for Stage 2A validation.

III. Initial Calibration and Initial Calibration Verification

Initial calibration data were not reviewed for Stage 2A validation.

IV. Continuing Calibration

Continuing calibration data were not reviewed for Stage 2A validation.

V. Laboratory Blanks

Laboratory blanks were analyzed as required by the method. No contaminants were found in the laboratory blanks.

VI. Field Blanks

No field blanks were identified in this SDG.

VII. Surrogates

Surrogates were added to all samples as required by the method. All surrogate recoveries (%R) were within QC limits.

VIII. Matrix Spike/Matrix Spike Duplicates

The laboratory has indicated that there were no matrix spike (MS) and matrix spike duplicate (MSD) analyses specified for the samples in this SDG, and therefore matrix spike and matrix spike duplicate analyses were not performed for this SDG.

IX. Laboratory Control Samples

Laboratory control samples (LCS) and laboratory control samples duplicates (LCSD) were analyzed as required by the method. Percent recoveries (%R) were within QC limits. Relative percent differences (RPD) were within QC limits.

X. Field Duplicates

Samples CMS-B-23-6 and CMS-512 were identified as field duplicates. No results were detected in any of the samples with the following exceptions:

Compound	Concentration (mg/Kg)		RPD
	CMS-B-23-6	CMS-512	
Fluoranthene	0.014	0.01U	Not calculable
Pyrene	0.017	0.01U	Not calculable
Chrysene	0.012	0.01U	Not calculable
4-Nitrophenol	0.012	0.01U	Not calculable
Benzo(b)fluoranthene	0.013	0.01U	Not calculable

XI. Internal Standards

Internal standards data were not reviewed for Stage 2A validation.

XII. Compound Quantitation

Raw data were not reviewed for Stage 2A validation.

XIII. Target Compound Identifications

Raw data were not reviewed for Stage 2A validation.

XIV. System Performance

Raw data were not reviewed for Stage 2A validation.

XV. Overall Assessment of Data

The analysis was conducted within all specifications of the method. No results were rejected in this SDG.

Kimberly-Clark Upland Area
Polynuclear Aromatic Hydrocarbons - Data Qualification Summary - SDG 008170

No Sample Data Qualified in this SDG

Kimberly-Clark Upland Area
Polynuclear Aromatic Hydrocarbons - Laboratory Blank Data Qualification Summary - SDG 008170

No Sample Data Qualified in this SDG

Kimberly-Clark Upland Area
Polynuclear Aromatic Hydrocarbons - Field Blank Data Qualification Summary - SDG 008170

No Sample Data Qualified in this SDG

LDC #: 48922P2b
SDG #: 008170
Laboratory: Friedman & Bruya, Inc.

VALIDATION COMPLETENESS WORKSHEET
Stage 2A

Date: 09/04/20
Page: 1 of 1
Reviewer: LF
2nd Reviewer:

METHOD: GC/MS Polynuclear Aromatic Hydrocarbons (EPA SW 846 Method 8270E-SIM)

The samples listed below were reviewed for each of the following validation areas. Validation findings are noted in attached validation findings worksheets.

	Validation Area		Comments
I.	Sample receipt/Technical holding times	A/A	
II.	GC/MS Instrument performance check	N	
III.	Initial calibration/ICV	N/N	
IV.	Continuing calibration	N	
V.	Laboratory Blanks	A	
VI.	Field blanks	N	
VII.	Surrogate spikes	A	
VIII.	Matrix spike/Matrix spike duplicates	N	
IX.	Laboratory control samples	A	LCS/D
X.	Field duplicates	SW	D= 1+2
XI.	Internal standards	N	
XII.	Compound quantitation RL/LOQ/LODs	N	Dry weight basis = 1,2
XIII.	Target compound identification	N	
XIV.	System performance	N	
XV.	Overall assessment of data	A	

Note: A = Acceptable; N = Not provided/applicable; SW = See worksheet; ND = No compounds detected; R = Rinsate; FB = Field blank; D = Duplicate; TB = Trip blank; EB = Equipment blank; SB=Source blank; OTHER:

	Client ID	Lab ID	Matrix	Date
1	CMS-B-23-6	008170-09	Soil	08/11/20
2	CMS-512	008170-10	Soil	08/11/20
3				
4				
5				
6				
7				
8				
9				

Notes:

1	06-1838 MB2 1/8						

VALIDATION FINDINGS WORKSHEET

METHOD: GC/MS SVOA

A. Phenol	CC. Dimethylphthalate	EEE. Bis(2-ethylhexyl)phthalate	GGGG. C30-Hopane	I1. Methyl methanesulfonate
B. Bis (2-chloroethyl) ether	DD. Acenaphthylene	FFF. Di-n-octylphthalate	HHHH. 1-Methylphenanthrene	J1. Ethyl methanesulfonate
C. 2-Chlorophenol	EE. 2,6-Dinitrotoluene	GGG. Benzo(b)fluoranthene	IIII. 1,4-Dioxane	K1. o,o',o''-Triethylphosphorothioate
D. 1,3-Dichlorobenzene	FF. 3-Nitroaniline	HHH. Benzo(k)fluoranthene	JJJJ. Acetophenone	L1. n-Phenylene diamine
E. 1,4-Dichlorobenzene	GG. Acenaphthene	III. Benzo(a)pyrene	KKKK. Atrazine	M1. 1,4-Naphthoquinone
F. 1,2-Dichlorobenzene	HH. 2,4-Dinitrophenol	JJJ. Indeno(1,2,3-cd)pyrene	LLLL. Benzaldehyde	N1. N-Nitro-o-toluidine
G. 2-Methylphenol	II. 4-Nitrophenol	KKK. Dibenz(a,h)anthracene	MMMM. Caprolactam	O1. 1,3,5-Trinitrobenzene
H. 2,2'-Oxybis(1-chloropropane)	JJ. Dibenzofuran	LLL. Benzo(g,h,i)perylene	NNNN. 2,6-Dichlorophenol	P1. Pentachlorobenzene
I. 4-Methylphenol	KK. 2,4-Dinitrotoluene	MMM. Bis(2-Chloroisopropyl)ether	OOOO. 1,2-Diphenylhydrazine	Q1. 4-Aminobiphenyl
J. N-Nitroso-di-n-propylamine	LL. Diethylphthalate	NNN. Aniline	PPPP. 3-Methylphenol	R1. 2-Naphthylamine
K. Hexachloroethane	MM. 4-Chlorophenyl-phenyl ether	OOO. N-Nitrosodimethylamine	QQQQ. 3&4-Methylphenol	S1. Triphenylene
L. Nitrobenzene	NN. Fluorene	PPP. Benzoic Acid	RRRR. 4-Dimethyldibenzothiophene (4MDT)	T1. Octachlorostyrene
M. Isophorone	OO. 4-Nitroaniline	QQQ. Benzyl alcohol	SSSS. 2/3-Dimethyldibenzothiophene (4MDT)	U1. Famphur
N. 2-Nitrophenol	PP. 4,6-Dinitro-2-methylphenol	RRR. Pyridine	TTTT. 1-Methyldibenzothiophene (1MDT)	V1. 1,4-phenylenediamine
O. 2,4-Dimethylphenol	QQ. N-Nitrosodiphenylamine	SSS. Benzidine	UUUU.. 2,3,4,6-Tetrachlorophenol	W1. Methapyrilene
P. Bis(2-chloroethoxy)methane	RR. 4-Bromophenyl-phenylether	TTT. 1-Methylnaphthalene	VVVV. 1,2,4,5-Tetrachlorobenzene	X1. Pentachloroethane
Q. 2,4-Dichlorophenol	SS. Hexachlorobenzene	UUU.Benzo(b)thiophene	WWWW.. 2-Picoline	Y1. 3,3'-Dimethylbenzidine
R. 1,2,4-Trichlorobenzene	TT. Pentachlorophenol	VVV.Benzonaphthothiophene	XXXX. 3-Methylcholanthrene	Z1. o-Toluidine
S. Naphthalene	UU. Phenanthrene	WWW.Benzo(e)pyrene	YYYY. a,a-Dimethylphenethylamine	A2. 1-Naphthylamine
T. 4-Chloroaniline	VV. Anthracene	XXX. 2,6-Dimethylnaphthalene	ZZZZ. Hexachloropropene	B2. 4-Aminobiphenyl
U. Hexachlorobutadiene	WW. Carbazole	YYY. 2,3,5-Trimethylnaphthalene	A1. N-Nitrosodiethylamine	C2. 4-Nitroquinoline-1-oxide
V. 4-Chloro-3-methylphenol	XX. Di-n-butylphthalate	ZZZ. Perylene	B1. N-Nitrosodi-n-butylamine	D2. Hexachloropene
W. 2-Methylnaphthalene	YY. Fluoranthene	AAAA. Dibenzothiophene	C1. N-Nitrosomethylethylamine	E2. Bis (2-chloro-1-methylethyl) ether
X. Hexachlorocyclopentadiene	ZZ. Pyrene	BBBB. Benzo(a)fluoranthene	D1. N-Nitrosomorpholine	F2. Bifenthrin
Y. 2,4,6-Trichlorophenol	AAA. Butylbenzylphthalate	CCCC. Benzo(b)fluorene	E1. N-Nitrosopyrrolidine	G2. Cyfluthrin
Z. 2,4,5-Trichlorophenol	BBB. 3,3'-Dichlorobenzidine	DDDD. cis/trans-Decalin	F1. Phenacetin	H2. Cypermethrin
AA. 2-Chloronaphthalene	CCC. Benzo(a)anthracene	EEEE. 1,1'-Biphenyl	G1. 2-Acetylaminofluorene	I2. Permethrin (cis/trans)
BB. 2-Nitroaniline	DDD. Chrysene	FFFF. Retene	H1. Pronamide	J2. 5-Nitro-o-toluidine

LDC#:48922P2b **VALIDATION FINDINGS WORKSHEET** Page:_1_of_1_
Field Duplicates Reviewer:__LT____

METHOD: GC/MS PAHs (EPA SW846 Method 8270E SIM)

Compound	Concentration (mg/kg)		RPD
	1	2	
YY	0.014	0.01U	NC
ZZ	0.017	0.01U	NC
DDD	0.012	0.01U	NC
II	0.012	0.01U	NC
GGG	0.013	0.01U	NC

Laboratory Data Consultants, Inc.
Data Validation Report

Project/Site Name: Kimberly-Clark Upland Area

LDC Report Date: September 9, 2020

Parameters: Polychlorinated Biphenyls

Validation Level: Stage 2A

Laboratory: Friedman & Bruya, Inc.

Sample Delivery Group (SDG): 008170

Sample Identification	Laboratory Sample Identification	Matrix	Collection Date
CMS-B-27-7	008170-04	Soil	08/11/20
CMS-S-32-4	008170-05	Soil	08/11/20
CMS-S-33-4	008170-06	Soil	08/11/20
CMS-S-34-4	008170-07	Soil	08/11/20
CMS-S-35-4	008170-08	Soil	08/11/20
CMS-B-23-6	008170-09	Soil	08/11/20
CMS-512	008170-10	Soil	08/11/20
CMS-B-19-7	008170-11	Soil	08/12/20
CMS-B-14-7	008170-12	Soil	08/12/20
CMS-B-20-7	008170-13	Soil	08/12/20
CMS-B-16-7	008170-14	Soil	08/12/20

Introduction

This Data Validation Report (DVR) presents data validation findings and results for the associated samples listed on the cover page. Data validation was performed in accordance with a modified outline of the USEPA National Functional Guidelines (NFG) for Organic Superfund Methods Data Review (January 2017). Where specific guidance was not available, the data has been evaluated in a conservative manner consistent with industry standards using professional experience.

The analyses were performed by the following method:

Polychlorinated Biphenyls (PCBs) by Environmental Protection Agency (EPA) SW 846 Method 8082A

All sample results were subjected to Stage 2A data validation, which comprises an evaluation of quality control (QC) summary results.

The following are definitions of the data qualifiers utilized during data validation:

J (Estimated): The compound or analyte was analyzed for and positively identified by the laboratory; however the reported concentration is estimated due to non-conformances discovered during data validation.

U (Non-detected): The compound or analyte was analyzed for and positively identified by the laboratory; however the compound or analyte should be considered non-detected at the reported concentration due to the presence of contaminants detected in the associated blank(s).

UJ (Non-detected estimated): The compound or analyte was reported as not detected by the laboratory; however the reported quantitation/detection limit is estimated due to non-conformances discovered during data validation.

R (Rejected): The sample results were rejected due to gross non-conformances discovered during data validation. Data qualified as rejected is not usable.

NA (Not Applicable): The non-conformance discovered during data validation demonstrates a high bias, while the affected compound or analyte in the associated sample(s) was reported as not detected by the laboratory and did not warrant the qualification of the data.

A qualification summary table is provided at the end of this report if data has been qualified. Flags are classified as P (protocol) or A (advisory) to indicate whether the flag is due to a laboratory deviation from a specified protocol or is of technical advisory nature.

I. Sample Receipt and Technical Holding Times

All samples were received in good condition and cooler temperatures upon receipt met validation criteria.

All technical holding time requirements were met.

II. Initial Calibration and Initial Calibration Verification

Initial calibration data were not reviewed for Stage 2A validation.

III. Continuing Calibration

Continuing calibration data were not reviewed for Stage 2A validation.

IV. Laboratory Blanks

Laboratory blanks were analyzed as required by the method. No contaminants were found in the laboratory blanks.

V. Field Blanks

No field blanks were identified in this SDG.

VI. Surrogates

Surrogates were added to all samples as required by the method. All surrogate recoveries (%R) were within QC limits.

VII. Matrix Spike/Matrix Spike Duplicates

The laboratory has indicated that there were no matrix spike (MS) and matrix spike duplicate (MSD) analyses specified for the samples in this SDG, and therefore matrix spike and matrix spike duplicate analyses were not performed for this SDG.

VIII. Laboratory Control Samples

Laboratory control samples (LCS) were analyzed as required by the method. Percent recoveries (%R) were within QC limits.

IX. Field Duplicates

Samples CMS-B-23-6 and CMS-512 were identified as field duplicates. No results were detected in any of the samples.

X. Compound Quantitation

Raw data were not reviewed for Stage 2A validation.

XI. Target Compound Identification

Raw data were not reviewed for Stage 2A validation.

XII. Overall Assessment of Data

The analysis was conducted within all specifications of the method. No results were rejected in this SDG.

Kimberly-Clark Upland Area
Polychlorinated Biphenyls - Data Qualification Summary - SDG 008170

No Sample Data Qualified in this SDG

Kimberly-Clark Upland Area
Polychlorinated Biphenyls - Laboratory Blank Data Qualification Summary - SDG 008170

No Sample Data Qualified in this SDG

Kimberly-Clark Upland Area
Polychlorinated Biphenyls - Field Blank Data Qualification Summary - SDG 008170

No Sample Data Qualified in this SDG

LDC #: 48922P3b
SDG #: 008170
Laboratory: Friedman & Bruya, Inc.

VALIDATION COMPLETENESS WORKSHEET
Stage 2A

Date: 09/04/20
Page: 1 of 1
Reviewer: G
2nd Reviewer:

METHOD: GC Polychlorinated Biphenyls (EPA SW846 Method 8082A)

The samples listed below were reviewed for each of the following validation areas. Validation findings are noted in attached validation findings worksheets.

	Validation Area		Comments
I.	Sample receipt/Technical holding times	A / A	
II.	Initial calibration/ICV	N/N	
III.	Continuing calibration	N	
IV.	Laboratory Blanks	A	
V.	Field blanks	N	
VI.	Surrogate spikes	A	
VII.	Matrix spike/Matrix spike duplicates	N	Non client
VIII.	Laboratory control samples	A	LCS
IX.	Field duplicates	ND	D=6+7
X.	Compound quantitation/RL/LOQ/LODs	N	Dry weight basis = 1-11
XI.	Target compound identification	N	
XII.	Overall assessment of data	A	

Note: A = Acceptable; N = Not provided/applicable; SW = See worksheet; ND = No compounds detected; R = Rinsate; FB = Field blank; D = Duplicate; TB = Trip blank; EB = Equipment blank; SB=Source blank; OTHER:

	Client ID	Lab ID	Matrix	Date
1	CMS-B-27-7	008170-04	Soil	08/11/20
2	CMS-S-32-4	008170-05	Soil	08/11/20
3	CMS-S-33-4	008170-06	Soil	08/11/20
4	CMS-S-34-4	008170-07	Soil	08/11/20
5	CMS-S-35-4	008170-08	Soil	08/11/20
6	CMS-B-23-6 D	008170-09	Soil	08/11/20
7	CMS-512 D	008170-10	Soil	08/11/20
8	CMS-B-19-7	008170-11	Soil	08/12/20
9	CMS-B-14-7	008170-12	Soil	08/12/20
10	CMS-B-20-7	008170-13	Soil	08/12/20
11	CMS-B-16-7	008170-14	Soil	08/12/20
12				
13				

Notes:

1	10-1834 MB2 1/6						

Laboratory Data Consultants, Inc.
Data Validation Report

Project/Site Name: Kimberly-Clark Upland Area

LDC Report Date: August 27, 2020

Parameters: Mercury

Validation Level: Stage 2A

Laboratory: Friedman & Bruya, Inc.

Sample Delivery Group (SDG): 008170

Sample Identification	Laboratory Sample Identification	Matrix	Collection Date
TP-GFB12-03-5	008170-01	Soil	08/11/20
TP-GFB12-02-5	008170-02	Soil	08/11/20
TP-GFB12-01-5	008170-03	Soil	08/11/20
TP-GFB12-03-5MS	008170-01MS	Soil	08/11/20
TP-GFB12-03-5MSD	008170-01MSD	Soil	08/11/20

Introduction

This Data Validation Report (DVR) presents data validation findings and results for the associated samples listed on the cover page. Data validation was performed in accordance with a modified outline of the USEPA National Functional Guidelines (NFG) for Inorganic Superfund Methods Data Review (January 2017). Where specific guidance was not available, the data has been evaluated in a conservative manner consistent with industry standards using professional experience.

The analyses were performed by the following method:

Mercury by Environmental Protection Agency (EPA) Method 1631E

All sample results were subjected to Stage 2A data validation, which comprises an evaluation of quality control (QC) summary results.

The following are definitions of the data qualifiers utilized during data validation:

J (Estimated): The compound or analyte was analyzed for and positively identified by the laboratory; however the reported concentration is estimated due to non-conformances discovered during data validation.

U (Non-detected): The compound or analyte was analyzed for and positively identified by the laboratory; however the compound or analyte should be considered non-detected at the reported concentration due to the presence of contaminants detected in the associated blank(s).

UJ (Non-detected estimated): The compound or analyte was reported as not detected by the laboratory; however the reported quantitation/detection limit is estimated due to non-conformances discovered during data validation.

R (Rejected): The sample results were rejected due to gross non-conformances discovered during data validation. Data qualified as rejected is not usable.

NA (Not Applicable): The non-conformance discovered during data validation demonstrates a high bias, while the affected compound or analyte in the associated sample(s) was reported as not detected by the laboratory and did not warrant the qualification of the data.

A qualification summary table is provided at the end of this report if data has been qualified. Flags are classified as P (protocol) or A (advisory) to indicate whether the flag is due to a laboratory deviation from a specified protocol or is of technical advisory nature.

I. Sample Receipt and Technical Holding Times

All samples were received in good condition.

All technical holding time requirements were met.

II. Instrument Calibration

Instrument calibration data were not reviewed for Stage 2A validation.

III. Laboratory Blanks

Laboratory blanks were analyzed as required by the method. No contaminants were found in the laboratory blanks.

IV. Field Blanks

No field blanks were identified in this SDG.

V. Matrix Spike/Matrix Spike Duplicates

Matrix spike (MS) and matrix spike duplicate (MSD) sample analysis was performed on an associated project sample. Percent recoveries (%R) were within QC limits with the following exceptions:

Spike ID (Associated Samples)	Analyte	MS (%R) (Limits)	MSD (%R) (Limits)	Flag	A or P
TP-GFB12-03-5MS/MSD (All samples in SDG 008170)	Mercury	-	54 (71-125)	J (all detects)	A

Relative percent differences (RPD) were within QC limits with the following exceptions:

Spike ID (Associated Samples)	Analyte	RPD (Limits)	Flag	A or P
TP-GFB12-03-5MS/MSD (All samples in SDG 008170)	Mercury	79 (≤20)	J (all detects)	A

VI. Duplicate Sample Analysis

The laboratory has indicated that there were no duplicate (DUP) analyses specified for the samples in this SDG, and therefore duplicate analyses were not performed for this SDG.

VII. Laboratory Control Samples

Laboratory control samples (LCS) were analyzed as required by the method. Percent recoveries (%R) were within QC limits.

VIII. Field Duplicates

No field duplicates were identified in this SDG.

IX. Sample Result Verification

Raw data were not reviewed for Stage 2A validation.

X. Overall Assessment of Data

The analysis was conducted within all specifications of the method.

Due to MS/MSD %R and RPD, data were qualified as estimated in three samples.

No results were rejected in this SDG.

Kimberly-Clark Upland Area
Mercury - Data Qualification Summary - SDG 008170

Sample	Analyte	Flag	A or P	Reason
TP-GFB12-03-5 TP-GFB12-02-5 TP-GFB12-01-5	Mercury	J (all detects)	A	Matrix spike/Matrix spike duplicate (%R)
TP-GFB12-03-5 TP-GFB12-02-5 TP-GFB12-01-5	Mercury	J (all detects)	A	Matrix spike/Matrix spike duplicate (RPD)

Kimberly-Clark Upland Area
Mercury - Laboratory Blank Data Qualification Summary - SDG 008170

No Sample Data Qualified in this SDG

Kimberly-Clark Upland Area
Mercury - Field Blank Data Qualification Summary - SDG 008170

No Sample Data Qualified in this SDG

LDC #: 48922P4c
SDG #: 008170
Laboratory: Friedman & Bruya, Inc.

VALIDATION COMPLETENESS WORKSHEET
Stage 2A

Date: 8/26/2020
Page: 1 of 1
Reviewer: DM
2nd Reviewer:

METHOD: Mercury (EPA Method 1631E)

The samples listed below were reviewed for each of the following validation areas. Validation findings are noted in attached validation findings worksheets.

	Validation Area		Comments
I.	Sample receipt/Technical holding times	A / A	
II.	Instrument Calibration	N	
III.	Laboratory Blanks	A	
IV.	Field Blanks	N	
V.	Matrix Spike/Matrix Spike Duplicates	SW	
VI.	Duplicate sample analysis	N	
VII.	Laboratory control samples	A	LCS
VIII.	Field Duplicates	N	
IX.	Sample Result Verification	N	
X.	Overall Assessment of Data	A	

Note: A = Acceptable; N = Not provided/applicable; SW = See worksheet; ND = No compounds detected; R = Rinsate; FB = Field blank; D = Duplicate; TB = Trip blank; EB = Equipment blank; SB=Source blank; OTHER:

	Client ID	Lab ID	Matrix	Date
1	TP-GFB12-03-5	008170-01	Soil	08/11/20
2	TP-GFB12-02-5	008170-02	Soil	08/11/20
3	TP-GFB12-01-5	008170-03	Soil	08/11/20
4	TP-GFB12-03-5MS	008170-01MS	Soil	08/11/20
5	TP-GFB12-03-5MSD	008170-01MSD	Soil	08/11/20
6				
7				
8				
9				
10				
11				
12				
13				
14				
15				
16				
17				

Notes:

LDC #: 48922P4c

VALIDATION FINDINGS WORKSHEET
Matrix Spike/Matrix Spike Duplicates

Reviewer: DTM
2nd Reviewer:

METHOD: Trace metals (EPA SW 846 Method 6020/6010/7470)

Please see qualifications below for all questions answered "N". Not applicable questions are identified as "N/A".

Y N N/A Was a matrix spike analyzed for each matrix in this SDG?

Y (N) N/A Were matrix spike percent recoveries (%R) within the control limits of 75-125? If the sample concentration exceeded the spike concentration by a factor of 4 or more, no action was taken.

Y (N) N/A Were all duplicate sample relative percent differences (RPD) ≤ 20% for samples?

LEVEL IV ONLY:

Y N N/A Were recalculated results acceptable? See Level IV Recalculation Worksheet for recalculations.

#	MS/MSD ID	Matrix	Analyte	MS %Recovery	MSD %Recovery	RPD (Limits)	Associated Samples	Qualifications
	4/5	S	Hg		54(71-125)		ALL	J/UJ/A (det)
						79(20)	ALL	J/UJ/A (det)

Comments:

Laboratory Data Consultants, Inc.
Data Validation Report

Project/Site Name: Kimberly-Clark Upland Area

LDC Report Date: September 9, 2020

Parameters: Polynuclear Aromatic Hydrocarbons

Validation Level: Stage 2A

Laboratory: Friedman & Bruya, Inc.

Sample Delivery Group (SDG): 008214

Sample Identification	Laboratory Sample Identification	Matrix	Collection Date
CMS-B-29-7	008214-02	Soil	08/13/20

Introduction

This Data Validation Report (DVR) presents data validation findings and results for the associated samples listed on the cover page. Data validation was performed in accordance with a modified outline of the USEPA National Functional Guidelines (NFG) for Organic Superfund Methods Data Review (January 2017). Where specific guidance was not available, the data has been evaluated in a conservative manner consistent with industry standards using professional experience.

The analyses were performed by the following method:

Polynuclear Aromatic Hydrocarbons (PAHs) by Environmental Protection Agency (EPA) SW 846 Method 8270E in Selected Ion Monitoring (SIM) mode

All sample results were subjected to Stage 2A data validation, which comprises an evaluation of quality control (QC) summary results.

The following are definitions of the data qualifiers utilized during data validation:

J (Estimated): The compound or analyte was analyzed for and positively identified by the laboratory; however the reported concentration is estimated due to non-conformances discovered during data validation.

U (Non-detected): The compound or analyte was analyzed for and positively identified by the laboratory; however the compound or analyte should be considered non-detected at the reported concentration due to the presence of contaminants detected in the associated blank(s).

UJ (Non-detected estimated): The compound or analyte was reported as not detected by the laboratory; however the reported quantitation/detection limit is estimated due to non-conformances discovered during data validation.

R (Rejected): The sample results were rejected due to gross non-conformances discovered during data validation. Data qualified as rejected is not usable.

NA (Not Applicable): The non-conformance discovered during data validation demonstrates a high bias, while the affected compound or analyte in the associated sample(s) was reported as not detected by the laboratory and did not warrant the qualification of the data.

A qualification summary table is provided at the end of this report if data has been qualified. Flags are classified as P (protocol) or A (advisory) to indicate whether the flag is due to a laboratory deviation from a specified protocol or is of technical advisory nature.

I. Sample Receipt and Technical Holding Times

All samples were received in good condition and cooler temperatures upon receipt met validation criteria.

All technical holding time requirements were met.

II. GC/MS Instrument Performance Check

Instrument performance check data were not reviewed for Stage 2A validation.

III. Initial Calibration and Initial Calibration Verification

Initial calibration data were not reviewed for Stage 2A validation.

IV. Continuing Calibration

Continuing calibration data were not reviewed for Stage 2A validation.

V. Laboratory Blanks

Laboratory blanks were analyzed as required by the method. No contaminants were found in the laboratory blanks.

VI. Field Blanks

No field blanks were identified in this SDG.

VII. Surrogates

Surrogates were added to all samples as required by the method. All surrogate recoveries (%R) were within QC limits.

VIII. Matrix Spike/Matrix Spike Duplicates

The laboratory has indicated that there were no matrix spike (MS) and matrix spike duplicate (MSD) analyses specified for the samples in this SDG, and therefore matrix spike and matrix spike duplicate analyses were not performed for this SDG.

IX. Laboratory Control Samples

Laboratory control samples (LCS) were analyzed as required by the method. Percent recoveries (%R) were within QC limits.

X. Field Duplicates

No field duplicates were identified in this SDG.

XI. Internal Standards

Internal standards data were not reviewed for Stage 2A validation.

XII. Compound Quantitation

Raw data were not reviewed for Stage 2A validation.

XIII. Target Compound Identifications

Raw data were not reviewed for Stage 2A validation.

XIV. System Performance

Raw data were not reviewed for Stage 2A validation.

XV. Overall Assessment of Data

The analysis was conducted within all specifications of the method. No results were rejected in this SDG.

Kimberly-Clark Upland Area
Polynuclear Aromatic Hydrocarbons - Data Qualification Summary - SDG 008214

No Sample Data Qualified in this SDG

Kimberly-Clark Upland Area
Polynuclear Aromatic Hydrocarbons - Laboratory Blank Data Qualification Summary - SDG 008214

No Sample Data Qualified in this SDG

Kimberly-Clark Upland Area
Polynuclear Aromatic Hydrocarbons - Field Blank Data Qualification Summary - SDG 008214

No Sample Data Qualified in this SDG

LDC #: 48922Q2b
SDG #: 008214
Laboratory: Friedman & Bruya, Inc.

VALIDATION COMPLETENESS WORKSHEET
Stage 2A

Date: 09/04/20
Page: 1 of 1
Reviewer: VT
2nd Reviewer:

METHOD: GC/MS Polynuclear Aromatic Hydrocarbons (EPA SW 846 Method 8270E-SIM)

The samples listed below were reviewed for each of the following validation areas. Validation findings are noted in attached validation findings worksheets.

	Validation Area		Comments
I.	Sample receipt/Technical holding times	A / A	
II.	GC/MS Instrument performance check	N	
III.	Initial calibration/ICV	N/N	
IV.	Continuing calibration	N	
V.	Laboratory Blanks	A	
VI.	Field blanks	N	
VII.	Surrogate spikes	A	
VIII.	Matrix spike/Matrix spike duplicates	N	Non client
IX.	Laboratory control samples	A	LCS
X.	Field duplicates	N	
XI.	Internal standards	N	
XII.	Compound quantitation RL/LOQ/LODs	N	Dry weight basis = 1
XIII.	Target compound identification	N	
XIV.	System performance	N	
XV.	Overall assessment of data	A	

Note: A = Acceptable; N = Not provided/applicable; SW = See worksheet; ND = No compounds detected; R = Rinsate; FB = Field blank; D = Duplicate; TB = Trip blank; EB = Equipment blank; SB=Source blank; OTHER:

	Client ID	Lab ID	Matrix	Date
1	CMS-B-29-7	008214-02	Soil	08/13/20
2				
3				
4				
5				
6				
7				
8				
9				

Notes:

1	00-1876 MB 1/5						

Laboratory Data Consultants, Inc.
Data Validation Report

Project/Site Name: Kimberly-Clark Upland Area

LDC Report Date: September 9, 2020

Parameters: Polychlorinated Biphenyls

Validation Level: Stage 2A

Laboratory: Friedman & Bruya, Inc.

Sample Delivery Group (SDG): 008214

Sample Identification	Laboratory Sample Identification	Matrix	Collection Date
CMS-B-33-7	008214-01	Soil	08/13/20
CMS-B-29-7	008214-02	Soil	08/13/20
CMS-B-24-7	008214-03	Soil	08/13/20
CMS-B-05-7	008214-04	Soil	08/14/20
CMS-B-03-7	008214-05	Soil	08/14/20
CMS-B-33-7MS	008214-01MS	Soil	08/13/20
CMS-B-33-7MSD	008214-01MSD	Soil	08/13/20

Introduction

This Data Validation Report (DVR) presents data validation findings and results for the associated samples listed on the cover page. Data validation was performed in accordance with a modified outline of the USEPA National Functional Guidelines (NFG) for Organic Superfund Methods Data Review (January 2017). Where specific guidance was not available, the data has been evaluated in a conservative manner consistent with industry standards using professional experience.

The analyses were performed by the following method:

Polychlorinated Biphenyls (PCBs) by Environmental Protection Agency (EPA) SW 846 Method 8082A

All sample results were subjected to Stage 2A data validation, which comprises an evaluation of quality control (QC) summary results.

The following are definitions of the data qualifiers utilized during data validation:

J (Estimated): The compound or analyte was analyzed for and positively identified by the laboratory; however the reported concentration is estimated due to non-conformances discovered during data validation.

U (Non-detected): The compound or analyte was analyzed for and positively identified by the laboratory; however the compound or analyte should be considered non-detected at the reported concentration due to the presence of contaminants detected in the associated blank(s).

UJ (Non-detected estimated): The compound or analyte was reported as not detected by the laboratory; however the reported quantitation/detection limit is estimated due to non-conformances discovered during data validation.

R (Rejected): The sample results were rejected due to gross non-conformances discovered during data validation. Data qualified as rejected is not usable.

NA (Not Applicable): The non-conformance discovered during data validation demonstrates a high bias, while the affected compound or analyte in the associated sample(s) was reported as not detected by the laboratory and did not warrant the qualification of the data.

A qualification summary table is provided at the end of this report if data has been qualified. Flags are classified as P (protocol) or A (advisory) to indicate whether the flag is due to a laboratory deviation from a specified protocol or is of technical advisory nature.

I. Sample Receipt and Technical Holding Times

All samples were received in good condition and cooler temperatures upon receipt met validation criteria.

All technical holding time requirements were met.

II. Initial Calibration and Initial Calibration Verification

Initial calibration data were not reviewed for Stage 2A validation.

III. Continuing Calibration

Continuing calibration data were not reviewed for Stage 2A validation.

IV. Laboratory Blanks

Laboratory blanks were analyzed as required by the method. No contaminants were found in the laboratory blanks.

V. Field Blanks

No field blanks were identified in this SDG.

VI. Surrogates

Surrogates were added to all samples as required by the method. All surrogate recoveries (%R) were within QC limits.

VII. Matrix Spike/Matrix Spike Duplicates

Matrix spike (MS) and matrix spike duplicate (MSD) sample analysis was performed on an associated project sample. Percent recoveries (%R) were within QC limits. Relative percent differences (RPD) were within QC limits.

VIII. Laboratory Control Samples

Laboratory control samples (LCS) were analyzed as required by the method. Percent recoveries (%R) were within QC limits.

IX. Field Duplicates

No field duplicates were identified in this SDG.

X. Compound Quantitation

Raw data were not reviewed for Stage 2A validation.

XI. Target Compound Identification

Raw data were not reviewed for Stage 2A validation.

XII. Overall Assessment of Data

The analysis was conducted within all specifications of the method. No results were rejected in this SDG.

Kimberly-Clark Upland Area
Polychlorinated Biphenyls - Data Qualification Summary - SDG 008214

No Sample Data Qualified in this SDG

Kimberly-Clark Upland Area
Polychlorinated Biphenyls - Laboratory Blank Data Qualification Summary - SDG 008214

No Sample Data Qualified in this SDG

Kimberly-Clark Upland Area
Polychlorinated Biphenyls - Field Blank Data Qualification Summary - SDG 008214

No Sample Data Qualified in this SDG

LDC #: 48922Q3b
SDG #: 008214
Laboratory: Friedman & Bruya, Inc.

VALIDATION COMPLETENESS WORKSHEET
Stage 2A

Date: 09/04/20
Page: 1 of 1
Reviewer: VJ
2nd Reviewer:

METHOD: GC Polychlorinated Biphenyls (EPA SW846 Method 8082A)

The samples listed below were reviewed for each of the following validation areas. Validation findings are noted in attached validation findings worksheets.

	Validation Area		Comments
I.	Sample receipt/Technical holding times	A/A	
II.	Initial calibration/ICV	N/N	
III.	Continuing calibration	N	
IV.	Laboratory Blanks	A	
V.	Field blanks	N	
VI.	Surrogate spikes	A	
VII.	Matrix spike/Matrix spike duplicates	A	(6,7)
VIII.	Laboratory control samples	A	LCS
IX.	Field duplicates	N	
X.	Compound quantitation/RL/LOQ/LODs	N	Dry weight basis = 1-5
XI.	Target compound identification	N	
XII.	Overall assessment of data	A	

Note: A = Acceptable; N = Not provided/applicable; SW = See worksheet; ND = No compounds detected; R = Rinsate; FB = Field blank; D = Duplicate; TB = Trip blank; EB = Equipment blank; SB=Source blank; OTHER:

	Client ID	Lab ID	Matrix	Date
1	CMS-B-33-7	008214-01	Soil	08/13/20
2	CMS-B-29-7	008214-02	Soil	08/13/20
3	CMS-B-24-7	008214-03	Soil	08/13/20
4	CMS-B-05-7	008214-04	Soil	08/14/20
5	CMS-B-03-7	008214-05	Soil	08/14/20
6	CMS-B-33-7MS	008214-01MS	Soil	08/13/20
7	CMS-B-33-7MSD	008214-01MSD	Soil	08/13/20
8				
9				
10				
11				
12				
13				

Notes:

1	00-1879MB 1/6						

LABORATORY DATA CONSULTANTS, INC.
2701 Loker Ave. West, Suite 220, Carlsbad, CA 92010 Bus: 760-827-1100 Fax: 760-827-1099

Aspect Consulting LLC
701 Second Ave., Suite 550
Seattle, WA 98104
ATTN: Carla Brock, LHG
cbrock@aspectconsulting.com

October 13, 2020

SUBJECT: Kimberly-Clark Upland Area, Data Validation

Dear Ms. Brock,

Enclosed are the final validation reports for the fractions listed below. These SDGs were received on September 22, 2020. Attachment 1 is a summary of the samples that were reviewed for each analysis.

LDC Project #49215:

SDG #	Fraction
008290, 008321, 008379, 008403 008433, 008462, 008492, 009024 009056, 009132, 009182, 009238	Polynuclear Aromatic Hydrocarbons, Polychlorinated Biphenyls, Metals, Total Petroleum Hydrocarbons as Extractables

The data validation was performed under Stage 2A guidelines. The analyses were validated using the following documents, as applicable to each method:

- USEPA National Functional Guidelines for Organic Superfund Methods Data Review, January 2017
- USEPA National Functional Guidelines for Inorganic Superfund Methods Data Review; January 2017
- EPA SW 846, Third Edition, Test Methods for Evaluating Solid Waste, update 1, July 1992; update IIA, August 1993; update II, September 1994; update IIB, January 1995; update III, December 1996; update IIIA, April 1998; IIIB, November 2004; update IV, February 2007; update V, July 2014

Please feel free to contact us if you have any questions.

Sincerely,

Christina Rink

Christina Rink
crink@lab-data.com
Project Manager/Senior Chemist

Stage 2A EDD **LDC #49215 (Aspect Consulting, LLC - Seattle, WA / Kimberly-Clark Upland Area 2020 Interm Action)**

LDC	SDG#	DATE REC'D	(3) DATE DUE	(16) PAH (8270E -SIM)		PCBs (8082A)		Cu (6020B)		(3) Metals (6020B)		(2) Metals (6020B)		Hg (1631E)		TPH-E (NWTPH -Dx)																					
Matrix: Water/Soil				W	S	W	S	W	S	W	S	W	S	W	S	W	S	W	S	W	S	W	S	W	S	W	S	W	S	W	S	W	S	W	S
A	008290	09/22/20	10/13/20	-	-	0	4	-	-	-	-	-	-	-	-	0	2																		
B	008321	09/22/20	10/13/20	0	2	0	1	-	-	-	-	-	-	-	-	0	2																		
C	008379	09/22/20	10/13/20	0	2	0	10	-	-	-	-	-	-	-	-	-	-																		
D	008403	09/22/20	10/13/20	0	1	0	3	-	-	-	-	-	-	-	-	0	3																		
E	008433	09/22/20	10/13/20	0	2	0	2	0	1	-	-	-	-	0	1	0	5																		
F	008462	09/22/20	10/13/20	-	-	-	-	-	-	0	29	-	-	-	-	-	-																		
G	008492	09/22/20	10/13/20	-	-	0	4	-	-	-	-	-	-	-	-	-	-																		
H	009024	09/22/20	10/13/20	-	-	-	-	-	-	-	-	0	8	0	8	-	-																		
I	009056	09/22/20	10/13/20	-	-	-	-	-	-	-	-	0	9	0	8	-	-																		
J	009132	09/22/20	10/13/20	-	-	-	-	-	-	-	-	0	9	0	7	-	-																		
K	009182	09/22/20	10/13/20	-	-	-	-	-	-	-	-	0	23	0	23	-	-																		
L	009238	09/22/20	10/13/20	-	-	-	-	0	4	-	-	-	-	0	8	-	-																		
Total	T/CR			0	7	0	24	0	5	0	29	0	49	0	55	0	12	0	0	0	0	0	0	0	0	0	0	0	0	0	0	0	0	0	181

Shaded cells indicate Stage 4 validation (all other cells are Stage 2A validation). These sample counts do not include MS, MSD, or DUP's.

Laboratory Data Consultants, Inc.
Data Validation Report

Project/Site Name: Kimberly-Clark Upland Area

LDC Report Date: October 12, 2020

Parameters: Polychlorinated Biphenyls

Validation Level: Stage 2A

Laboratory: Friedman & Bruya, Inc.

Sample Delivery Group (SDG): 008290

Sample Identification	Laboratory Sample Identification	Matrix	Collection Date
CMS-S-36-4	008290-01	Soil	08/17/20
CMS-S-37-4	008290-04	Soil	08/17/20
CMS-S-38-4	008290-05	Soil	08/17/20
CMS-S-39-4	008290-06	Soil	08/17/20
CMS-S-36-4MS	008290-01MS	Soil	08/17/20
CMS-S-36-4MSD	008290-01MSD	Soil	08/17/20

Introduction

This Data Validation Report (DVR) presents data validation findings and results for the associated samples listed on the cover page. Data validation was performed in accordance with a modified outline of the USEPA National Functional Guidelines (NFG) for Organic Superfund Methods Data Review (January 2017). Where specific guidance was not available, the data has been evaluated in a conservative manner consistent with industry standards using professional experience.

The analyses were performed by the following method:

Polychlorinated Biphenyls (PCBs) by Environmental Protection Agency (EPA) SW 846 Method 8082A

All sample results were subjected to Stage 2A data validation, which comprises an evaluation of quality control (QC) summary results.

The following are definitions of the data qualifiers utilized during data validation:

J (Estimated): The compound or analyte was analyzed for and positively identified by the laboratory; however the reported concentration is estimated due to non-conformances discovered during data validation.

U (Non-detected): The compound or analyte was analyzed for and positively identified by the laboratory; however the compound or analyte should be considered non-detected at the reported concentration due to the presence of contaminants detected in the associated blank(s).

UJ (Non-detected estimated): The compound or analyte was reported as not detected by the laboratory; however the reported quantitation/detection limit is estimated due to non-conformances discovered during data validation.

R (Rejected): The sample results were rejected due to gross non-conformances discovered during data validation. Data qualified as rejected is not usable.

NA (Not Applicable): The non-conformance discovered during data validation demonstrates a high bias, while the affected compound or analyte in the associated sample(s) was reported as not detected by the laboratory and did not warrant the qualification of the data.

A qualification summary table is provided at the end of this report if data has been qualified. Flags are classified as P (protocol) or A (advisory) to indicate whether the flag is due to a laboratory deviation from a specified protocol or is of technical advisory nature.

I. Sample Receipt and Technical Holding Times

All samples were received in good condition and cooler temperatures upon receipt met validation criteria.

All technical holding time requirements were met.

II. Initial Calibration and Initial Calibration Verification

Initial calibration data were not reviewed for Stage 2A validation.

III. Continuing Calibration

Continuing calibration data were not reviewed for Stage 2A validation.

IV. Laboratory Blanks

Laboratory blanks were analyzed as required by the method. No contaminants were found in the laboratory blanks.

V. Field Blanks

No field blanks were identified in this SDG.

VI. Surrogates

Surrogates were added to all samples as required by the method. All surrogate recoveries (%R) were within QC limits.

VII. Matrix Spike/Matrix Spike Duplicates

Matrix spike (MS) and matrix spike duplicate (MSD) sample analysis was performed on an associated project sample. Percent recoveries (%R) were within QC limits. Relative percent differences (RPD) were within QC limits.

VIII. Laboratory Control Samples

Laboratory control samples (LCS) were analyzed as required by the method. Percent recoveries (%R) were within QC limits.

IX. Field Duplicates

No field duplicates were identified in this SDG.

X. Compound Quantitation

Raw data were not reviewed for Stage 2A validation.

XI. Target Compound Identification

Raw data were not reviewed for Stage 2A validation.

XII. Overall Assessment of Data

The analysis was conducted within all specifications of the method. No results were rejected in this SDG.

Kimberly-Clark Upland Area
Polychlorinated Biphenyls - Data Qualification Summary - SDG 008290

No Sample Data Qualified in this SDG

Kimberly-Clark Upland Area
Polychlorinated Biphenyls - Laboratory Blank Data Qualification Summary - SDG 008290

No Sample Data Qualified in this SDG

Kimberly-Clark Upland Area
Polychlorinated Biphenyls - Field Blank Data Qualification Summary - SDG 008290

No Sample Data Qualified in this SDG

LDC #: 49215A3b
SDG #: 008290
Laboratory: Friedman & Bruya, Inc.

VALIDATION COMPLETENESS WORKSHEET
Stage 2A

Date: 10/10/20
Page: 1 of 1
Reviewer: K
2nd Reviewer:

METHOD: GC Polychlorinated Biphenyls (EPA SW846 Method 8082A)

The samples listed below were reviewed for each of the following validation areas. Validation findings are noted in attached validation findings worksheets.

	Validation Area		Comments
I.	Sample receipt/Technical holding times	A, A	
II.	Initial calibration/ICV	N/N	
III.	Continuing calibration	N	
IV.	Laboratory Blanks	A	
V.	Field blanks	N	
VI.	Surrogate spikes	A	
VII.	Matrix spike/Matrix spike duplicates	A	(5,6)
VIII.	Laboratory control samples	A	LCS
IX.	Field duplicates	N	
X.	Compound quantitation/RL/LOQ/LODs	N	Dry weight = 1-4
XI.	Target compound identification	N	
XII	Overall assessment of data	A	

Note: A = Acceptable; N = Not provided/applicable; SW = See worksheet; ND = No compounds detected; R = Rinsate; FB = Field blank; D = Duplicate; TB = Trip blank; EB = Equipment blank; SB=Source blank; OTHER:

	Client ID	Lab ID	Matrix	Date
1	CMS-S-36-4	008290-01	Soil	08/17/20
2	CMS-S-37-4	008290-04	Soil	08/17/20
3	CMS-S-38-4	008290-05	Soil	08/17/20
4	CMS-S-39-4	008290-06	Soil	08/17/20
5	CMS-S-36-4MS	008290-01MS	Soil	08/17/20
6	CMS-S-36-4MSD	008290-01MSD	Soil	08/17/20
7				
8				
9				
10				
11				
12				
13				

Notes:

1	10-1899 MB						

Laboratory Data Consultants, Inc.
Data Validation Report

Project/Site Name: Kimberly-Clark Upland Area

LDC Report Date: October 12, 2020

Parameters: Total Petroleum Hydrocarbons as Extractables

Validation Level: Stage 2A

Laboratory: Friedman & Bruya, Inc.

Sample Delivery Group (SDG): 008290

Sample Identification	Laboratory Sample Identification	Matrix	Collection Date
CMSB2-S-1-4	008290-02	Soil	08/17/20
CMSB2-S-2-4	008290-03	Soil	08/17/20

Introduction

This Data Validation Report (DVR) presents data validation findings and results for the associated samples listed on the cover page. Data validation was performed in accordance with a modified outline of the USEPA National Functional Guidelines (NFG) for Organic Superfund Methods Data Review (January 2017). Where specific guidance was not available, the data has been evaluated in a conservative manner consistent with industry standards using professional experience.

The analyses were performed by the following method:

Total Petroleum Hydrocarbons (TPH) as Extractables by NWTPH-Dx

All sample results were subjected to Stage 2A data validation, which comprises an evaluation of quality control (QC) summary results.

The following are definitions of the data qualifiers utilized during data validation:

J (Estimated): The compound or analyte was analyzed for and positively identified by the laboratory; however the reported concentration is estimated due to non-conformances discovered during data validation.

U (Non-detected): The compound or analyte was analyzed for and positively identified by the laboratory; however the compound or analyte should be considered not detected at the reported concentration due to the presence of contaminants detected in the associated blank(s).

UJ (Non-detected estimated): The compound or analyte was reported as not detected by the laboratory; however the reported quantitation/detection limit is estimated due to non-conformances discovered during data validation.

R (Rejected): The sample results were rejected due to gross non-conformances discovered during data validation. Data qualified as rejected is not usable.

NA (Not Applicable): The non-conformance discovered during data validation demonstrates a high bias, while the affected compound or analyte in the associated sample(s) was reported as not detected by the laboratory and did not warrant the qualification of the data.

A qualification summary table is provided at the end of this report if data has been qualified. Flags are classified as P (protocol) or A (advisory) to indicate whether the flag is due to a laboratory deviation from a specified protocol or is of technical advisory nature.

I. Sample Receipt and Technical Holding Times

All samples were received in good condition and cooler temperatures upon receipt met validation criteria.

All technical holding time requirements were met.

II. Initial Calibration and Initial Calibration Verification

Initial calibration data were not reviewed for Stage 2A validation.

III. Continuing Calibration

Continuing calibration data were not reviewed for Stage 2A validation.

IV. Laboratory Blanks

Laboratory blanks were analyzed as required by the method. No contaminants were found in the laboratory blanks.

V. Field Blanks

No field blanks were identified in this SDG.

VI. Surrogates

Surrogates were added to all samples as required by the method. All surrogate recoveries (%R) were within QC limits.

VII. Matrix Spike/Matrix Spike Duplicates

The laboratory has indicated that there were no matrix spike (MS) and matrix spike duplicate (MSD) analyses specified for the samples in this SDG, and therefore matrix spike and matrix spike duplicate analyses were not performed for this SDG.

VIII. Laboratory Control Samples

Laboratory control samples (LCS) were analyzed as required by the method. Percent recoveries (%R) were within QC limits.

IX. Field Duplicates

No field duplicates were identified in this SDG.

X. Compound Quantitation

Raw data were not reviewed for Stage 2A validation.

XI. Target Compound Identifications

Raw data were not reviewed for Stage 2A validation.

XII. Overall Assessment of Data

The analysis was conducted within all specifications of the method. No results were rejected in this SDG.

Kimberly-Clark Upland Area
Total Petroleum Hydrocarbons as Extractables - Data Qualification Summary - SDG 008290

No Sample Data Qualified in this SDG

Kimberly-Clark Upland Area
Total Petroleum Hydrocarbons as Extractables - Laboratory Blank Data Qualification Summary - SDG 008290

No Sample Data Qualified in this SDG

Kimberly-Clark Upland Area
Total Petroleum Hydrocarbons as Extractables - Field Blank Data Qualification Summary - SDG 008290

No Sample Data Qualified in this SDG

LDC #: 49215A8 **VALIDATION COMPLETENESS WORKSHEET** Date: 10/10/20
SDG #: 008290 Stage 2A Page: 1 of 1
Laboratory: Friedman & Bruya, Inc. Reviewer: LT
2nd Reviewer:

METHOD: GC TPH as Extractables (NWTPH-Dx)

The samples listed below were reviewed for each of the following validation areas. Validation findings are noted in attached validation findings worksheets.

	Validation Area		Comments
I.	Sample receipt/Technical holding times	A / A	
II.	Initial calibration/ICV	N/N	
III.	Continuing calibration	N	
IV.	Laboratory Blanks	A	
V.	Field blanks	N	
VI.	Surrogate spikes	A	
VII.	Matrix spike/Matrix spike duplicates	N	Non client
VIII.	Laboratory control samples	A	LCS
IX.	Field duplicates	N	
X.	Compound quantitation RL/LOQ/LODs	N	Dry weight basis = 1,2
XI.	Target compound identification	N	
XII	Overall assessment of data	A	

Note: A = Acceptable; N = Not provided/applicable; SW = See worksheet; ND = No compounds detected; R = Rinsate; FB = Field blank; D = Duplicate; TB = Trip blank; EB = Equipment blank; SB=Source blank; OTHER:

	Client ID	Lab ID	Matrix	Date
1	CMSB2-S-1-4	008290-02	Soil	08/17/20
2	CMSB2-S-2-4	008290-03	Soil	08/17/20
3				
4				
5				
6				
7				
8				
9				
10				
11				
12				
13				

Notes:

1	OU-1895 MB2						

Laboratory Data Consultants, Inc.
Data Validation Report

Project/Site Name: Kimberly-Clark Upland Area

LDC Report Date: October 12, 2020

Parameters: Polynuclear Aromatic Hydrocarbons

Validation Level: Stage 2A

Laboratory: Friedman & Bruya, Inc.

Sample Delivery Group (SDG): 008321

Sample Identification	Laboratory Sample Identification	Matrix	Collection Date
CMSB2-B-1-7	008321-01	Soil	08/20/20
CMSB2-B-2-7.5	008321-02	Soil	08/20/20
CMSB2-B-1-7MS	008321-01MS	Soil	08/20/20
CMSB2-B-1-7MSD	008321-01MSD	Soil	08/20/20

Introduction

This Data Validation Report (DVR) presents data validation findings and results for the associated samples listed on the cover page. Data validation was performed in accordance with a modified outline of the USEPA National Functional Guidelines (NFG) for Organic Superfund Methods Data Review (January 2017). Where specific guidance was not available, the data has been evaluated in a conservative manner consistent with industry standards using professional experience.

The analyses were performed by the following method:

Polynuclear Aromatic Hydrocarbons (PAHs) by Environmental Protection Agency (EPA) SW 846 Method 8270E in Selected Ion Monitoring (SIM) mode

All sample results were subjected to Stage 2A data validation, which comprises an evaluation of quality control (QC) summary results.

The following are definitions of the data qualifiers utilized during data validation:

J (Estimated): The compound or analyte was analyzed for and positively identified by the laboratory; however the reported concentration is estimated due to non-conformances discovered during data validation.

U (Non-detected): The compound or analyte was analyzed for and positively identified by the laboratory; however the compound or analyte should be considered non-detected at the reported concentration due to the presence of contaminants detected in the associated blank(s).

UJ (Non-detected estimated): The compound or analyte was reported as not detected by the laboratory; however the reported quantitation/detection limit is estimated due to non-conformances discovered during data validation.

R (Rejected): The sample results were rejected due to gross non-conformances discovered during data validation. Data qualified as rejected is not usable.

NA (Not Applicable): The non-conformance discovered during data validation demonstrates a high bias, while the affected compound or analyte in the associated sample(s) was reported as not detected by the laboratory and did not warrant the qualification of the data.

A qualification summary table is provided at the end of this report if data has been qualified. Flags are classified as P (protocol) or A (advisory) to indicate whether the flag is due to a laboratory deviation from a specified protocol or is of technical advisory nature.

I. Sample Receipt and Technical Holding Times

All samples were received in good condition and cooler temperatures upon receipt met validation criteria.

All technical holding time requirements were met.

II. GC/MS Instrument Performance Check

Instrument performance check data were not reviewed for Stage 2A validation.

III. Initial Calibration and Initial Calibration Verification

Initial calibration data were not reviewed for Stage 2A validation.

IV. Continuing Calibration

Continuing calibration data were not reviewed for Stage 2A validation.

V. Laboratory Blanks

Laboratory blanks were analyzed as required by the method. No contaminants were found in the laboratory blanks.

VI. Field Blanks

No field blanks were identified in this SDG.

VII. Surrogates

Surrogates were added to all samples as required by the method. All surrogate recoveries (%R) were within QC limits.

VIII. Matrix Spike/Matrix Spike Duplicates

Matrix spike (MS) and matrix spike duplicate (MSD) sample analysis was performed on an associated project sample. Percent recoveries (%R) were within QC limits. Relative percent differences (RPD) were within QC limits.

IX. Laboratory Control Samples

Laboratory control samples (LCS) were analyzed as required by the method. Percent recoveries (%R) were within QC limits.

X. Field Duplicates

No field duplicates were identified in this SDG.

XI. Internal Standards

Internal standards data were not reviewed for Stage 2A validation.

XII. Compound Quantitation

Raw data were not reviewed for Stage 2A validation.

XIII. Target Compound Identifications

Raw data were not reviewed for Stage 2A validation.

XIV. System Performance

Raw data were not reviewed for Stage 2A validation.

XV. Overall Assessment of Data

The analysis was conducted within all specifications of the method. No results were rejected in this SDG.

Kimberly-Clark Upland Area
Polynuclear Aromatic Hydrocarbons - Data Qualification Summary - SDG 008321

No Sample Data Qualified in this SDG

Kimberly-Clark Upland Area
Polynuclear Aromatic Hydrocarbons - Laboratory Blank Data Qualification Summary - SDG 008321

No Sample Data Qualified in this SDG

Kimberly-Clark Upland Area
Polynuclear Aromatic Hydrocarbons - Field Blank Data Qualification Summary - SDG 008321

No Sample Data Qualified in this SDG

LDC #: 49215B2b **VALIDATION COMPLETENESS WORKSHEET** Date: 1/11/21
SDG #: 008321 Stage 2A Page: 1 of 1
Laboratory: Friedman & Bruya, Inc. Reviewer: VT
2nd Reviewer:

METHOD: GC/MS Polynuclear Aromatic Hydrocarbons (EPA SW 846 Method 8270E-SIM)

The samples listed below were reviewed for each of the following validation areas. Validation findings are noted in attached validation findings worksheets.

	Validation Area		Comments
I.	Sample receipt/Technical holding times	A / A	
II.	GC/MS Instrument performance check	N	
III.	Initial calibration/ICV	N/N	
IV.	Continuing calibration	N	
V.	Laboratory Blanks	A	
VI.	Field blanks	N	
VII.	Surrogate spikes	A	
VIII.	Matrix spike/Matrix spike duplicates	A	(3,4)
IX.	Laboratory control samples	A	LCS
X.	Field duplicates	N	
XI.	Internal standards	N	
XII.	Compound quantitation RL/LOQ/LODs	N	Dry weight basis = 1,2
XIII.	Target compound identification	N	
XIV.	System performance	N	
XV.	Overall assessment of data	A	

Note: A = Acceptable ND = No compounds detected D = Duplicate SB=Source blank
N = Not provided/applicable R = Rinsate TB = Trip blank OTHER:
SW = See worksheet FB = Field blank EB = Equipment blank

	Client ID	Lab ID	Matrix	Date
1	CMSB2-B-1-7	008321-01	Soil	08/20/20
2	CMSB2-B-2-7.5	008321-02	Soil	08/20/20
3	CMSB2-B-1-7MS	008321-01MS	Soil	08/20/20
4	CMSB2-B-1-7MSD	008321-01MSD	Soil	08/20/20
5				
6				
7				
8				
9				

Notes:

1	00-1902 MB						

Laboratory Data Consultants, Inc.
Data Validation Report

Project/Site Name: Kimberly-Clark Upland Area

LDC Report Date: October 12, 2020

Parameters: Polychlorinated Biphenyls

Validation Level: Stage 2A

Laboratory: Friedman & Bruya, Inc.

Sample Delivery Group (SDG): 008321

Sample Identification	Laboratory Sample Identification	Matrix	Collection Date
CMS-S-40-4	008321-03	Soil	08/20/20

Introduction

This Data Validation Report (DVR) presents data validation findings and results for the associated samples listed on the cover page. Data validation was performed in accordance with a modified outline of the USEPA National Functional Guidelines (NFG) for Organic Superfund Methods Data Review (January 2017). Where specific guidance was not available, the data has been evaluated in a conservative manner consistent with industry standards using professional experience.

The analyses were performed by the following method:

Polychlorinated Biphenyls (PCBs) by Environmental Protection Agency (EPA) SW 846 Method 8082A

All sample results were subjected to Stage 2A data validation, which comprises an evaluation of quality control (QC) summary results.

The following are definitions of the data qualifiers utilized during data validation:

J (Estimated): The compound or analyte was analyzed for and positively identified by the laboratory; however the reported concentration is estimated due to non-conformances discovered during data validation.

U (Non-detected): The compound or analyte was analyzed for and positively identified by the laboratory; however the compound or analyte should be considered non-detected at the reported concentration due to the presence of contaminants detected in the associated blank(s).

UJ (Non-detected estimated): The compound or analyte was reported as not detected by the laboratory; however the reported quantitation/detection limit is estimated due to non-conformances discovered during data validation.

R (Rejected): The sample results were rejected due to gross non-conformances discovered during data validation. Data qualified as rejected is not usable.

NA (Not Applicable): The non-conformance discovered during data validation demonstrates a high bias, while the affected compound or analyte in the associated sample(s) was reported as not detected by the laboratory and did not warrant the qualification of the data.

A qualification summary table is provided at the end of this report if data has been qualified. Flags are classified as P (protocol) or A (advisory) to indicate whether the flag is due to a laboratory deviation from a specified protocol or is of technical advisory nature.

I. Sample Receipt and Technical Holding Times

All samples were received in good condition and cooler temperatures upon receipt met validation criteria.

All technical holding time requirements were met.

II. Initial Calibration and Initial Calibration Verification

Initial calibration data were not reviewed for Stage 2A validation.

III. Continuing Calibration

Continuing calibration data were not reviewed for Stage 2A validation.

IV. Laboratory Blanks

Laboratory blanks were analyzed as required by the method. No contaminants were found in the laboratory blanks.

V. Field Blanks

No field blanks were identified in this SDG.

VI. Surrogates

Surrogates were added to all samples as required by the method. All surrogate recoveries (%R) were within QC limits.

VII. Matrix Spike/Matrix Spike Duplicates

Matrix spike (MS) and matrix spike duplicate (MSD) sample analysis was performed on an associated project sample. Percent recoveries (%R) were within QC limits. Relative percent differences (RPD) were within QC limits.

VIII. Laboratory Control Samples

Laboratory control samples (LCS) were analyzed as required by the method. Percent recoveries (%R) were within QC limits.

IX. Field Duplicates

No field duplicates were identified in this SDG.

X. Compound Quantitation

Raw data were not reviewed for Stage 2A validation.

XI. Target Compound Identification

Raw data were not reviewed for Stage 2A validation.

XII. Overall Assessment of Data

The analysis was conducted within all specifications of the method. No results were rejected in this SDG.

Kimberly-Clark Upland Area
Polychlorinated Biphenyls - Data Qualification Summary - SDG 008321

No Sample Data Qualified in this SDG

Kimberly-Clark Upland Area
Polychlorinated Biphenyls - Laboratory Blank Data Qualification Summary - SDG 008321

No Sample Data Qualified in this SDG

Kimberly-Clark Upland Area
Polychlorinated Biphenyls - Field Blank Data Qualification Summary - SDG 008321

No Sample Data Qualified in this SDG

LDC #: 49215B3b
SDG #: 008321
Laboratory: Friedman & Bruya, Inc.

VALIDATION COMPLETENESS WORKSHEET
Stage 2A

Date: 10/10/20
Page: 1 of 1
Reviewer: LT
2nd Reviewer:

METHOD: GC Polychlorinated Biphenyls (EPA SW846 Method 8082A)

The samples listed below were reviewed for each of the following validation areas. Validation findings are noted in attached validation findings worksheets.

	Validation Area		Comments
I.	Sample receipt/Technical holding times	A / A	
II.	Initial calibration/ICV	N/N	
III.	Continuing calibration	N	
IV.	Laboratory Blanks	A	
V.	Field blanks	N	
VI.	Surrogate spikes	A	
VII.	Matrix spike/Matrix spike duplicates	A	SDG 008290
VIII.	Laboratory control samples	A	LCS
IX.	Field duplicates	N	
X.	Compound quantitation/RL/LOQ/LODs	N	Dry weight basis = 1
XI.	Target compound identification	N	
XII.	Overall assessment of data	A	

Note: A = Acceptable; N = Not provided/applicable; SW = See worksheet; ND = No compounds detected; R = Rinsate; FB = Field blank; D = Duplicate; TB = Trip blank; EB = Equipment blank; SB=Source blank; OTHER:

	Client ID	Lab ID	Matrix	Date
1	CMS-S-40-4	008321-03	Soil	08/20/20
2				
3				
4				
5				
6				
7				
8				
9				
10				
11				
12				
13				

Notes:

1	00-1899 MB						

Laboratory Data Consultants, Inc.
Data Validation Report

Project/Site Name: Kimberly-Clark Upland Area

LDC Report Date: October 12, 2020

Parameters: Total Petroleum Hydrocarbons as Extractables

Validation Level: Stage 2A

Laboratory: Friedman & Bruya, Inc.

Sample Delivery Group (SDG): 008321

Sample Identification	Laboratory Sample Identification	Matrix	Collection Date
CMSB2-B-1-7	008321-01	Soil	08/20/20
CMSB2-B-2-7.5	008321-02	Soil	08/20/20

Introduction

This Data Validation Report (DVR) presents data validation findings and results for the associated samples listed on the cover page. Data validation was performed in accordance with a modified outline of the USEPA National Functional Guidelines (NFG) for Organic Superfund Methods Data Review (January 2017). Where specific guidance was not available, the data has been evaluated in a conservative manner consistent with industry standards using professional experience.

The analyses were performed by the following method:

Total Petroleum Hydrocarbons (TPH) as Extractables by NWTPH-Dx

All sample results were subjected to Stage 2A data validation, which comprises an evaluation of quality control (QC) summary results.

The following are definitions of the data qualifiers utilized during data validation:

J (Estimated): The compound or analyte was analyzed for and positively identified by the laboratory; however the reported concentration is estimated due to non-conformances discovered during data validation.

U (Non-detected): The compound or analyte was analyzed for and positively identified by the laboratory; however the compound or analyte should be considered not detected at the reported concentration due to the presence of contaminants detected in the associated blank(s).

UJ (Non-detected estimated): The compound or analyte was reported as not detected by the laboratory; however the reported quantitation/detection limit is estimated due to non-conformances discovered during data validation.

R (Rejected): The sample results were rejected due to gross non-conformances discovered during data validation. Data qualified as rejected is not usable.

NA (Not Applicable): The non-conformance discovered during data validation demonstrates a high bias, while the affected compound or analyte in the associated sample(s) was reported as not detected by the laboratory and did not warrant the qualification of the data.

A qualification summary table is provided at the end of this report if data has been qualified. Flags are classified as P (protocol) or A (advisory) to indicate whether the flag is due to a laboratory deviation from a specified protocol or is of technical advisory nature.

I. Sample Receipt and Technical Holding Times

All samples were received in good condition and cooler temperatures upon receipt met validation criteria.

All technical holding time requirements were met.

II. Initial Calibration and Initial Calibration Verification

Initial calibration data were not reviewed for Stage 2A validation.

III. Continuing Calibration

Continuing calibration data were not reviewed for Stage 2A validation.

IV. Laboratory Blanks

Laboratory blanks were analyzed as required by the method. No contaminants were found in the laboratory blanks.

V. Field Blanks

No field blanks were identified in this SDG.

VI. Surrogates

Surrogates were added to all samples as required by the method. All surrogate recoveries (%R) were within QC limits.

VII. Matrix Spike/Matrix Spike Duplicates

The laboratory has indicated that there were no matrix spike (MS) and matrix spike duplicate (MSD) analyses specified for the samples in this SDG, and therefore matrix spike and matrix spike duplicate analyses were not performed for this SDG.

VIII. Laboratory Control Samples

Laboratory control samples (LCS) were analyzed as required by the method. Percent recoveries (%R) were within QC limits.

IX. Field Duplicates

No field duplicates were identified in this SDG.

X. Compound Quantitation

Raw data were not reviewed for Stage 2A validation.

XI. Target Compound Identifications

Raw data were not reviewed for Stage 2A validation.

XII. Overall Assessment of Data

The analysis was conducted within all specifications of the method. No results were rejected in this SDG.

Kimberly-Clark Upland Area
Total Petroleum Hydrocarbons as Extractables - Data Qualification Summary - SDG 008321

No Sample Data Qualified in this SDG

Kimberly-Clark Upland Area
Total Petroleum Hydrocarbons as Extractables - Laboratory Blank Data Qualification Summary - SDG 008321

No Sample Data Qualified in this SDG

Kimberly-Clark Upland Area
Total Petroleum Hydrocarbons as Extractables - Field Blank Data Qualification Summary - SDG 008321

No Sample Data Qualified in this SDG

LDC #: 49215B8 **VALIDATION COMPLETENESS WORKSHEET** Date: 12/10/20
SDG #: 008321 Stage 2A Page: 1 of 1
Laboratory: Friedman & Bruya, Inc. Reviewer: LT
2nd Reviewer:

METHOD: GC TPH as Extractables (NWTPH-Dx)

The samples listed below were reviewed for each of the following validation areas. Validation findings are noted in attached validation findings worksheets.

	Validation Area		Comments
I.	Sample receipt/Technical holding times	A / A	
II.	Initial calibration/ICV	N/N	
III.	Continuing calibration	N	
IV.	Laboratory Blanks	A	
V.	Field blanks	N	
VI.	Surrogate spikes	A	
VII.	Matrix spike/Matrix spike duplicates	N	Non client
VIII.	Laboratory control samples	A	LCS
IX.	Field duplicates	N	
X.	Compound quantitation RL/LOQ/LODs	N	Dry weight basis = 1,2
XI.	Target compound identification	N	
XII	Overall assessment of data	A	

Note: A = Acceptable; N = Not provided/applicable; SW = See worksheet; ND = No compounds detected; R = Rinsate; FB = Field blank; D = Duplicate; TB = Trip blank; EB = Equipment blank; SB=Source blank; OTHER:

	Client ID	Lab ID	Matrix	Date
1	CMSB2-B-1-7	008321-01	Soil	08/20/20
2	CMSB2-B-2-7.5	008321-02	Soil	08/20/20
3				
4				
5				
6				
7				
8				
9				
10				
11				
12				
13				

Notes:

1	00-1901 MB2						

LDC Report# 49215C2b

Laboratory Data Consultants, Inc.
Data Validation Report

Project/Site Name: Kimberly-Clark Upland Area

LDC Report Date: October 12, 2020

Parameters: Polynuclear Aromatic Hydrocarbons

Validation Level: Stage 2A

Laboratory: Friedman & Bruya, Inc.

Sample Delivery Group (SDG): 008379

Sample Identification	Laboratory Sample Identification	Matrix	Collection Date
CMS-B-28-9	008379-01	Soil	08/25/20
CMS-B-30-8	008379-03	Soil	08/25/20

Introduction

This Data Validation Report (DVR) presents data validation findings and results for the associated samples listed on the cover page. Data validation was performed in accordance with a modified outline of the USEPA National Functional Guidelines (NFG) for Organic Superfund Methods Data Review (January 2017). Where specific guidance was not available, the data has been evaluated in a conservative manner consistent with industry standards using professional experience.

The analyses were performed by the following method:

Polynuclear Aromatic Hydrocarbons (PAHs) by Environmental Protection Agency (EPA) SW 846 Method 8270E in Selected Ion Monitoring (SIM) mode

All sample results were subjected to Stage 2A data validation, which comprises an evaluation of quality control (QC) summary results.

The following are definitions of the data qualifiers utilized during data validation:

J (Estimated): The compound or analyte was analyzed for and positively identified by the laboratory; however the reported concentration is estimated due to non-conformances discovered during data validation.

U (Non-detected): The compound or analyte was analyzed for and positively identified by the laboratory; however the compound or analyte should be considered non-detected at the reported concentration due to the presence of contaminants detected in the associated blank(s).

UJ (Non-detected estimated): The compound or analyte was reported as not detected by the laboratory; however the reported quantitation/detection limit is estimated due to non-conformances discovered during data validation.

R (Rejected): The sample results were rejected due to gross non-conformances discovered during data validation. Data qualified as rejected is not usable.

NA (Not Applicable): The non-conformance discovered during data validation demonstrates a high bias, while the affected compound or analyte in the associated sample(s) was reported as not detected by the laboratory and did not warrant the qualification of the data.

A qualification summary table is provided at the end of this report if data has been qualified. Flags are classified as P (protocol) or A (advisory) to indicate whether the flag is due to a laboratory deviation from a specified protocol or is of technical advisory nature.

I. Sample Receipt and Technical Holding Times

All samples were received in good condition and cooler temperatures upon receipt met validation criteria.

All technical holding time requirements were met.

II. GC/MS Instrument Performance Check

Instrument performance check data were not reviewed for Stage 2A validation.

III. Initial Calibration and Initial Calibration Verification

Initial calibration data were not reviewed for Stage 2A validation.

IV. Continuing Calibration

Continuing calibration data were not reviewed for Stage 2A validation.

V. Laboratory Blanks

Laboratory blanks were analyzed as required by the method. No contaminants were found in the laboratory blanks.

VI. Field Blanks

No field blanks were identified in this SDG.

VII. Surrogates

Surrogates were added to all samples as required by the method. All surrogate recoveries (%R) were within QC limits.

VIII. Matrix Spike/Matrix Spike Duplicates

The laboratory has indicated that there were no matrix spike (MS) and matrix spike duplicate (MSD) analyses specified for the samples in this SDG, and therefore matrix spike and matrix spike duplicate analyses were not performed for this SDG.

IX. Laboratory Control Samples

Laboratory control samples (LCS) and laboratory control samples duplicates (LCSD) were analyzed as required by the method. Percent recoveries (%R) were within QC limits with the following exceptions:

LCS ID (Associated Samples)	Compound	LCS %R (Limits)	LCSD %R (Limits)	Flag	A or P
LCS/LCSD-082620 (CMS-B-28-9 CMS-B-30-8)	Naphthalene	92 (69-89)	92 (69-89)	NA	-

Relative percent differences (RPD) were within QC limits.

X. Field Duplicates

No field duplicates were identified in this SDG.

XI. Internal Standards

Internal standards data were not reviewed for Stage 2A validation.

XII. Compound Quantitation

Raw data were not reviewed for Stage 2A validation.

XIII. Target Compound Identifications

Raw data were not reviewed for Stage 2A validation.

XIV. System Performance

Raw data were not reviewed for Stage 2A validation.

XV. Overall Assessment of Data

The analysis was conducted within all specifications of the method. No results were rejected in this SDG.

Kimberly-Clark Upland Area
Polynuclear Aromatic Hydrocarbons - Data Qualification Summary - SDG 008379

No Sample Data Qualified in this SDG

Kimberly-Clark Upland Area
Polynuclear Aromatic Hydrocarbons - Laboratory Blank Data Qualification Summary - SDG 008379

No Sample Data Qualified in this SDG

Kimberly-Clark Upland Area
Polynuclear Aromatic Hydrocarbons - Field Blank Data Qualification Summary - SDG 008379

No Sample Data Qualified in this SDG

LDC #: 49215C2b

SDG #: 008379

Laboratory: Friedman & Bruya, Inc.

VALIDATION COMPLETENESS WORKSHEET

Stage 2A

Date: 9/10/20

Page: 1 of 1

Reviewer: LG

2nd Reviewer:

METHOD: GC/MS Polynuclear Aromatic Hydrocarbons (EPA SW 846 Method 8270E-SIM)

The samples listed below were reviewed for each of the following validation areas. Validation findings are noted in attached validation findings worksheets.

	Validation Area		Comments
I.	Sample receipt/Technical holding times	A / A	
II.	GC/MS Instrument performance check	N	
III.	Initial calibration/ICV	N/N	
IV.	Continuing calibration	N	
V.	Laboratory Blanks	A	
VI.	Field blanks	N	
VII.	Surrogate spikes	A	
VIII.	Matrix spike/Matrix spike duplicates	N	
IX.	Laboratory control samples	SW	LCS/D
X.	Field duplicates	N	
XI.	Internal standards	N	
XII.	Compound quantitation RL/LOQ/LODs	N	Dry weight = 1,2
XIII.	Target compound identification	N	
XIV.	System performance	N	
XV.	Overall assessment of data	A	

Note: A = Acceptable; N = Not provided/applicable; SW = See worksheet; ND = No compounds detected; R = Rinsate; FB = Field blank; D = Duplicate; TB = Trip blank; EB = Equipment blank; SB=Source blank; OTHER:

	Client ID	Lab ID	Matrix	Date
1	CMS-B-28-9	008379-01	Soil	08/25/20
2	CMS-B-30-8	008379-03	Soil	08/25/20
3				
4				
5				
6				
7				
8				
9				

Notes:

1	00-1946 MB3						

VALIDATION FINDINGS WORKSHEET

METHOD: GC/MS SVOA

A. Phenol	CC. Dimethylphthalate	EEE. Bis(2-ethylhexyl)phthalate	GGGG. C30-Hopane	I1. Methyl methanesulfonate
B. Bis (2-chloroethyl) ether	DD. Acenaphthylene	FFF. Di-n-octylphthalate	HHHH. 1-Methylphenanthrene	J1. Ethyl methanesulfonate
C. 2-Chlorophenol	EE. 2,6-Dinitrotoluene	GGG. Benzo(b)fluoranthene	IIII. 1,4-Dioxane	K1. o,o',o''-Triethylphosphorothioate
D. 1,3-Dichlorobenzene	FF. 3-Nitroaniline	HHH. Benzo(k)fluoranthene	JJJJ. Acetophenone	L1. n-Phenylene diamine
E. 1,4-Dichlorobenzene	GG. Acenaphthene	III. Benzo(a)pyrene	KKKK. Atrazine	M1. 1,4-Naphthoquinone
F. 1,2-Dichlorobenzene	HH. 2,4-Dinitrophenol	JJJ. Indeno(1,2,3-cd)pyrene	LLLL. Benzaldehyde	N1. N-Nitro-o-toluidine
G. 2-Methylphenol	II. 4-Nitrophenol	KKK. Dibenz(a,h)anthracene	MMMM. Caprolactam	O1. 1,3,5-Trinitrobenzene
H. 2,2'-Oxybis(1-chloropropane)	JJ. Dibenzofuran	LLL. Benzo(g,h,i)perylene	NNNN. 2,6-Dichlorophenol	P1. Pentachlorobenzene
I. 4-Methylphenol	KK. 2,4-Dinitrotoluene	MMM. Bis(2-Chloroisopropyl)ether	OOOO. 1,2-Diphenylhydrazine	Q1. 4-Aminobiphenyl
J. N-Nitroso-di-n-propylamine	LL. Diethylphthalate	NNN. Aniline	PPPP. 3-Methylphenol	R1. 2-Naphthylamine
K. Hexachloroethane	MM. 4-Chlorophenyl-phenyl ether	OOO. N-Nitrosodimethylamine	QQQQ. 3&4-Methylphenol	S1. Triphenylene
L. Nitrobenzene	NN. Fluorene	PPP. Benzoic Acid	RRRR. 4-Dimethyldibenzothiophene (4MDT)	T1. Octachlorostyrene
M. Isophorone	OO. 4-Nitroaniline	QQQ. Benzyl alcohol	SSSS. 2/3-Dimethyldibenzothiophene (4MDT)	U1. Famphur
N. 2-Nitrophenol	PP. 4,6-Dinitro-2-methylphenol	RRR. Pyridine	TTTT. 1-Methyldibenzothiophene (1MDT)	V1. 1,4-phenylenediamine
O. 2,4-Dimethylphenol	QQ. N-Nitrosodiphenylamine	SSS. Benzidine	UUUU.. 2,3,4,6-Tetrachlorophenol	W1. Methapyrilene
P. Bis(2-chloroethoxy)methane	RR. 4-Bromophenyl-phenylether	TTT. 1-Methylnaphthalene	VVVV. 1,2,4,5-Tetrachlorobenzene	X1. Pentachloroethane
Q. 2,4-Dichlorophenol	SS. Hexachlorobenzene	UUU.Benzo(b)thiophene	WWWW.. 2-Picoline	Y1. 3,3'-Dimethylbenzidine
R. 1,2,4-Trichlorobenzene	TT. Pentachlorophenol	VVV.Benzonaphthothiophene	XXXX. 3-Methylcholanthrene	Z1. o-Toluidine
S. Naphthalene	UU. Phenanthrene	WWW.Benzo(e)pyrene	YYYY. a,a-Dimethylphenethylamine	A2. 1-Naphthylamine
T. 4-Chloroaniline	VV. Anthracene	XXX. 2,6-Dimethylnaphthalene	ZZZZ. Hexachloropropene	B2. 4-Aminobiphenyl
U. Hexachlorobutadiene	WW. Carbazole	YYY. 2,3,5-Trimethylnaphthalene	A1. N-Nitrosodiethylamine	C2. 4-Nitroquinoline-1-oxide
V. 4-Chloro-3-methylphenol	XX. Di-n-butylphthalate	ZZZ. Perylene	B1. N-Nitrosodi-n-butylamine	D2. Hexachloropene
W. 2-Methylnaphthalene	YY. Fluoranthene	AAAA. Dibenzothiophene	C1. N-Nitrosomethylethylamine	E2. Bis (2-chloro-1-methylethyl) ether
X. Hexachlorocyclopentadiene	ZZ. Pyrene	BBBB. Benzo(a)fluoranthene	D1. N-Nitrosomorpholine	F2. Bifenthrin
Y. 2,4,6-Trichlorophenol	AAA. Butylbenzylphthalate	CCCC. Benzo(b)fluorene	E1. N-Nitrosopyrrolidine	G2. Cyfluthrin
Z. 2,4,5-Trichlorophenol	BBB. 3,3'-Dichlorobenzidine	DDDD. cis/trans-Decalin	F1. Phenacetin	H2. Cypermethrin
AA. 2-Chloronaphthalene	CCC. Benzo(a)anthracene	EEEE. Biphenyl	G1. 2-Acetylaminofluorene	I2. Permethrin (cis/trans)
BB. 2-Nitroaniline	DDD. Chrysene	FFFF. Retene	H1. Pronamide	J2. 5-Nitro-o-toluidine

LDC #: 49215C2b

VALIDATION FINDINGS WORKSHEET
Laboratory Control Samples (LCS)

Reviewer: LT

METHOD: GC/MS PAHs (EPA SW 846 Method 8270C-SIM)

Please see qualifications below for all questions answered "N". Not applicable questions are identified as "N/A".

Y x N N/A Was a LCS required?

Y N x N/A Were the LCS/LCSD percent recoveries (%R) and the relative percent differences (RPD) within the QC limits?

#	Date	LCS/LCSD ID	Compound	LCS %R (Limits)	LCSD %R (Limits)	RPD (Limits)	Associated Samples	Qualifications
		LCS/LCSD-082620	S	92 (69 - 89)	92 (69 - 89)		1,2 (ND)	J/P DETS

Laboratory Data Consultants, Inc.
Data Validation Report

Project/Site Name: Kimberly-Clark Upland Area

LDC Report Date: October 12, 2020

Parameters: Polychlorinated Biphenyls

Validation Level: Stage 2A

Laboratory: Friedman & Bruya, Inc.

Sample Delivery Group (SDG): 008379

Sample Identification	Laboratory Sample Identification	Matrix	Collection Date
CMS-B-28-9	008379-01	Soil	08/25/20
CMS-B-30-8	008379-03	Soil	08/25/20
CMS-B-27-8	008379-04	Soil	08/25/20
CMS-S-41-4	008379-05	Soil	08/25/20
CMS-S-42-4	008379-06	Soil	08/25/20
CMS-S-42-4DL	008379-06DL	Soil	08/25/20
CMS-513	008379-07	Soil	08/25/20
CMS-S-43-4	008379-08	Soil	08/25/20
CMS-B-38-7	008379-09	Soil	08/25/20
CMS-S-44-4	008379-10	Soil	08/25/20
CMS-B-28-9MS	008379-01MS	Soil	08/25/20
CMS-B-28-9MSD	008379-01MSD	Soil	08/25/20

Introduction

This Data Validation Report (DVR) presents data validation findings and results for the associated samples listed on the cover page. Data validation was performed in accordance with a modified outline of the USEPA National Functional Guidelines (NFG) for Organic Superfund Methods Data Review (January 2017). Where specific guidance was not available, the data has been evaluated in a conservative manner consistent with industry standards using professional experience.

The analyses were performed by the following method:

Polychlorinated Biphenyls (PCBs) by Environmental Protection Agency (EPA) SW 846 Method 8082A

All sample results were subjected to Stage 2A data validation, which comprises an evaluation of quality control (QC) summary results.

The following are definitions of the data qualifiers utilized during data validation:

J (Estimated): The compound or analyte was analyzed for and positively identified by the laboratory; however the reported concentration is estimated due to non-conformances discovered during data validation.

U (Non-detected): The compound or analyte was analyzed for and positively identified by the laboratory; however the compound or analyte should be considered non-detected at the reported concentration due to the presence of contaminants detected in the associated blank(s).

UJ (Non-detected estimated): The compound or analyte was reported as not detected by the laboratory; however the reported quantitation/detection limit is estimated due to non-conformances discovered during data validation.

DNR Do not report from this analysis; the result for this analyte is to be reported from an alternative analysis.

R (Rejected): The sample results were rejected due to gross non-conformances discovered during data validation. Data qualified as rejected is not usable.

NA (Not Applicable): The non-conformance discovered during data validation demonstrates a high bias, while the affected compound or analyte in the associated sample(s) was reported as not detected by the laboratory and did not warrant the qualification of the data.

A qualification summary table is provided at the end of this report if data has been qualified. Flags are classified as P (protocol) or A (advisory) to indicate whether the flag is due to a laboratory deviation from a specified protocol or is of technical advisory nature.

I. Sample Receipt and Technical Holding Times

All samples were received in good condition and cooler temperatures upon receipt met validation criteria.

All technical holding time requirements were met.

II. Initial Calibration and Initial Calibration Verification

Initial calibration data were not reviewed for Stage 2A validation.

III. Continuing Calibration

Continuing calibration data were not reviewed for Stage 2A validation.

IV. Laboratory Blanks

Laboratory blanks were analyzed as required by the method. No contaminants were found in the laboratory blanks.

V. Field Blanks

No field blanks were identified in this SDG.

VI. Surrogates

Surrogates were added to all samples as required by the method. All surrogate recoveries (%R) were within QC limits.

VII. Matrix Spike/Matrix Spike Duplicates

Matrix spike (MS) and matrix spike duplicate (MSD) sample analysis was performed on an associated project sample. Percent recoveries (%R) were within QC limits. Relative percent differences (RPD) were within QC limits.

VIII. Laboratory Control Samples

Laboratory control samples (LCS) were analyzed as required by the method. Percent recoveries (%R) were within QC limits.

IX. Field Duplicates

Samples CMS-S-41-4 and CMS-513 were identified as field duplicates. No results were detected in any of the samples with the following exceptions:

Compound	Concentration (mg/Kg)		RPD
	CMS-S-41-4	CMS-513	
Aroclor-1254	0.21	0.17	21
Aroclor-1260	0.23	0.18	24

X. Compound Quantitation

Raw data were not reviewed for Stage 2A validation.

XI. Target Compound Identification

Raw data were not reviewed for Stage 2A validation.

XII. Overall Assessment of Data

The analysis was conducted within all specifications of the method.

In the case where more than one result was reported for an individual sample, the least technically acceptable results were deemed not reportable as follows:

Sample	Compound	Reason	Flag	A or P
CMS-S-42-4	Arolcor-1254 Arolcor-1260	Results exceeded calibration range.	DNR	-
CMS-S-42-4DL	All compounds except Arolcor-1254 Arolcor-1260	Results from undiluted analyses were more usable.	DNR	-

No results were rejected in this SDG.

Kimberly-Clark Upland Area
Polychlorinated Biphenyls - Data Qualification Summary - SDG 008379

Sample	Compound	Flag	A or P	Reason
CMS-S-42-4	Arolcor-1254 Arolcor-1260	DNR	-	Overall assessment of data
CMS-S-42-4DL	All compounds except Arolcor-1254 Arolcor-1260	DNR	-	Overall assessment of data

Kimberly-Clark Upland Area
Polychlorinated Biphenyls - Laboratory Blank Data Qualification Summary - SDG 008379

No Sample Data Qualified in this SDG

Kimberly-Clark Upland Area
Polychlorinated Biphenyls - Field Blank Data Qualification Summary - SDG 008379

No Sample Data Qualified in this SDG

LDC #: 49215C3b
SDG #: 008379
Laboratory: Friedman & Bruya, Inc.

VALIDATION COMPLETENESS WORKSHEET
Stage 2A

Date: 10/10/20
Page: 1 of 1
Reviewer: LC
2nd Reviewer:

METHOD: GC Polychlorinated Biphenyls (EPA SW846 Method 8082A)

The samples listed below were reviewed for each of the following validation areas. Validation findings are noted in attached validation findings worksheets.

	Validation Area		Comments
I.	Sample receipt/Technical holding times	A / A	
II.	Initial calibration/ICV	N/N	
III.	Continuing calibration	N	
IV.	Laboratory Blanks	A	
V.	Field blanks	N	
VI.	Surrogate spikes	A	
VII.	Matrix spike/Matrix spike duplicates	A	~~(11) MS only~~ (11, 12)
VIII.	Laboratory control samples	A	LCS
IX.	Field duplicates	SW	D = 4+7
X.	Compound quantitation/RL/LOQ/LODs	N	Dry weight basis = 1-10
XI.	Target compound identification	N	
XII.	Overall assessment of data	SW	

Note: A = Acceptable; N = Not provided/applicable; SW = See worksheet; ND = No compounds detected; R = Rinsate; FB = Field blank; D = Duplicate; TB = Trip blank; EB = Equipment blank; SB=Source blank; OTHER:

	Client ID	Lab ID	Matrix	Date
1	CMS-B-28-9	008379-01	Soil	08/25/20
2	CMS-B-30-8	008379-03	Soil	08/25/20
3	CMS-B-27-8	008379-04	Soil	08/25/20
4	CMS-S-41-4 D1	008379-05	Soil	08/25/20
5	CMS-S-42-4	008379-06	Soil	08/25/20
6	CMS-S-42-4DL	008379-06DL	Soil	08/25/20
7	CMS-513 D1	008379-07	Soil	08/25/20
8	CMS-S-43-4	008379-08	Soil	08/25/20
9	CMS-B-38-7	008379-09	Soil	08/25/20
10	CMS-S-44-4	008379-10	Soil	08/25/20
11	CMS-B-28-9MS	008379-01MS	Soil	08/25/20
12	↓ MSD	↓ MSD	↓	↓
13				

Notes:

1	00-1921 MB						

LDC#:49215C3b **VALIDATION FINDINGS WORKSHEET** Page:_1_of_1_
Field Duplicates Reviewer:__LT____

METHOD: GC PCBs (EPA SW846 Method 8082A)

Compound	Concentration (mg/kg)		RPD
	4	7	
Aroclor 1254	0.21	0.17	21
Aroclor 1260	0.23	0.18	24

LDC #: 49215C3b

VALIDATION FINDINGS WORKSHEET
Overall Assessment of Data

Reviewer: LT

METHOD: GC PCBs (EPA SW 846 Method 8082A)

Please see qualifications below for all questions answered "N". Not applicable questions are identified as "N/A".

All available information pertaining to the data were reviewed using professional judgement to compliment the determination of the overall quality of the data.

Yes x No__ N/A__ Was the overall quality and usability of the data acceptable?

#	Date	Sample ID	Compound	Finding	Qualifications
		5	Aroclor 1254 and Aroclor 1260	exceed calibration range	DNR
		6	All except Aroclor 1254 and Aroclor 1260	diluted	DNR

Comments: _____

Laboratory Data Consultants, Inc.
Data Validation Report

Project/Site Name: Kimberly-Clark Upland Area

LDC Report Date: October 12, 2020

Parameters: Polynuclear Aromatic Hydrocarbons

Validation Level: Stage 2A

Laboratory: Friedman & Bruya, Inc.

Sample Delivery Group (SDG): 008403

Sample Identification	Laboratory Sample Identification	Matrix	Collection Date
CMSB1-B-01-6	008403-04	Soil	08/26/20
CMSB1-B-01-6MS	008403-04MS	Soil	08/26/20
CMSB1-B-01-6MSD	008403-04MSD	Soil	08/26/20

Introduction

This Data Validation Report (DVR) presents data validation findings and results for the associated samples listed on the cover page. Data validation was performed in accordance with a modified outline of the USEPA National Functional Guidelines (NFG) for Organic Superfund Methods Data Review (January 2017). Where specific guidance was not available, the data has been evaluated in a conservative manner consistent with industry standards using professional experience.

The analyses were performed by the following method:

Polynuclear Aromatic Hydrocarbons (PAHs) by Environmental Protection Agency (EPA) SW 846 Method 8270E in Selected Ion Monitoring (SIM) mode

All sample results were subjected to Stage 2A data validation, which comprises an evaluation of quality control (QC) summary results.

The following are definitions of the data qualifiers utilized during data validation:

J (Estimated): The compound or analyte was analyzed for and positively identified by the laboratory; however the reported concentration is estimated due to non-conformances discovered during data validation.

U (Non-detected): The compound or analyte was analyzed for and positively identified by the laboratory; however the compound or analyte should be considered non-detected at the reported concentration due to the presence of contaminants detected in the associated blank(s).

UJ (Non-detected estimated): The compound or analyte was reported as not detected by the laboratory; however the reported quantitation/detection limit is estimated due to non-conformances discovered during data validation.

R (Rejected): The sample results were rejected due to gross non-conformances discovered during data validation. Data qualified as rejected is not usable.

NA (Not Applicable): The non-conformance discovered during data validation demonstrates a high bias, while the affected compound or analyte in the associated sample(s) was reported as not detected by the laboratory and did not warrant the qualification of the data.

A qualification summary table is provided at the end of this report if data has been qualified. Flags are classified as P (protocol) or A (advisory) to indicate whether the flag is due to a laboratory deviation from a specified protocol or is of technical advisory nature.

I. Sample Receipt and Technical Holding Times

All samples were received in good condition and cooler temperatures upon receipt met validation criteria.

All technical holding time requirements were met.

II. GC/MS Instrument Performance Check

Instrument performance check data were not reviewed for Stage 2A validation.

III. Initial Calibration and Initial Calibration Verification

Initial calibration data were not reviewed for Stage 2A validation.

IV. Continuing Calibration

Continuing calibration data were not reviewed for Stage 2A validation.

V. Laboratory Blanks

Laboratory blanks were analyzed as required by the method. No contaminants were found in the laboratory blanks.

VI. Field Blanks

No field blanks were identified in this SDG.

VII. Surrogates

Surrogates were added to all samples as required by the method. All surrogate recoveries (%R) were within QC limits.

VIII. Matrix Spike/Matrix Spike Duplicates

Matrix spike (MS) and matrix spike duplicate (MSD) sample analysis was performed on an associated project sample. Percent recoveries (%R) were within QC limits. Relative percent differences (RPD) were within QC limits.

IX. Laboratory Control Samples

Laboratory control samples (LCS) were analyzed as required by the method. Percent recoveries (%R) were within QC limits.

X. Field Duplicates

No field duplicates were identified in this SDG.

XI. Internal Standards

Internal standards data were not reviewed for Stage 2A validation.

XII. Compound Quantitation

Raw data were not reviewed for Stage 2A validation.

XIII. Target Compound Identifications

Raw data were not reviewed for Stage 2A validation.

XIV. System Performance

Raw data were not reviewed for Stage 2A validation.

XV. Overall Assessment of Data

The analysis was conducted within all specifications of the method. No results were rejected in this SDG.

Kimberly-Clark Upland Area
Polynuclear Aromatic Hydrocarbons - Data Qualification Summary - SDG 008403

No Sample Data Qualified in this SDG

Kimberly-Clark Upland Area
Polynuclear Aromatic Hydrocarbons - Laboratory Blank Data Qualification Summary - SDG 008403

No Sample Data Qualified in this SDG

Kimberly-Clark Upland Area
Polynuclear Aromatic Hydrocarbons - Field Blank Data Qualification Summary - SDG 008403

No Sample Data Qualified in this SDG

LDC #: 49215D2b

SDG #: 008403

Laboratory: Friedman & Bruya, Inc.

VALIDATION COMPLETENESS WORKSHEET

Stage 2A

Date: 10/10/20

Page: 1 of 1

Reviewer: LS

2nd Reviewer:

METHOD: GC/MS Polynuclear Aromatic Hydrocarbons (EPA SW 846 Method 8270E-SIM)

The samples listed below were reviewed for each of the following validation areas. Validation findings are noted in attached validation findings worksheets.

	Validation Area		Comments
I.	Sample receipt/Technical holding times	A / A	
II.	GC/MS Instrument performance check	N	
III.	Initial calibration/ICV	N/N	
IV.	Continuing calibration	N	
V.	Laboratory Blanks	A	
VI.	Field blanks	N	
VII.	Surrogate spikes	A	
VIII.	Matrix spike/Matrix spike duplicates	A	(2,3)
IX.	Laboratory control samples	A	LCS
X.	Field duplicates	N	
XI.	Internal standards	N	
XII.	Compound quantitation RL/LOQ/LODs	N	Dry weight basis = 1
XIII.	Target compound identification	N	
XIV.	System performance	N	
XV.	Overall assessment of data	A	

Note: A = Acceptable; N = Not provided/applicable; SW = See worksheet; ND = No compounds detected; R = Rinsate; FB = Field blank; D = Duplicate; TB = Trip blank; EB = Equipment blank; SB=Source blank; OTHER:

	Client ID	Lab ID	Matrix	Date
1	CMSB1-B-01-6	008403-04	Soil	08/26/20
2	CMSB1-B-01-6MS	008403-04MS	Soil	08/26/20
3	CMSB1-B-01-6MSD	008403-04MSD	Soil	08/26/20
4				
5				
6				
7				
8				
9				

Notes:

1	OD-197-MB						

LDC Report# 49215D3b

Laboratory Data Consultants, Inc.
Data Validation Report

Project/Site Name: Kimberly-Clark Upland Area

LDC Report Date: October 12, 2020

Parameters: Polychlorinated Biphenyls

Validation Level: Stage 2A

Laboratory: Friedman & Bruya, Inc.

Sample Delivery Group (SDG): 008403

Sample Identification	Laboratory Sample Identification	Matrix	Collection Date
CMS-S-45-4	008403-01	Soil	08/26/20
CMS-S-46-4	008403-02	Soil	08/26/20
CMS-S-47-4	008403-03	Soil	08/26/20

Introduction

This Data Validation Report (DVR) presents data validation findings and results for the associated samples listed on the cover page. Data validation was performed in accordance with a modified outline of the USEPA National Functional Guidelines (NFG) for Organic Superfund Methods Data Review (January 2017). Where specific guidance was not available, the data has been evaluated in a conservative manner consistent with industry standards using professional experience.

The analyses were performed by the following method:

Polychlorinated Biphenyls (PCBs) by Environmental Protection Agency (EPA) SW 846 Method 8082A

All sample results were subjected to Stage 2A data validation, which comprises an evaluation of quality control (QC) summary results.

The following are definitions of the data qualifiers utilized during data validation:

J (Estimated): The compound or analyte was analyzed for and positively identified by the laboratory; however the reported concentration is estimated due to non-conformances discovered during data validation.

U (Non-detected): The compound or analyte was analyzed for and positively identified by the laboratory; however the compound or analyte should be considered non-detected at the reported concentration due to the presence of contaminants detected in the associated blank(s).

UJ (Non-detected estimated): The compound or analyte was reported as not detected by the laboratory; however the reported quantitation/detection limit is estimated due to non-conformances discovered during data validation.

R (Rejected): The sample results were rejected due to gross non-conformances discovered during data validation. Data qualified as rejected is not usable.

NA (Not Applicable): The non-conformance discovered during data validation demonstrates a high bias, while the affected compound or analyte in the associated sample(s) was reported as not detected by the laboratory and did not warrant the qualification of the data.

A qualification summary table is provided at the end of this report if data has been qualified. Flags are classified as P (protocol) or A (advisory) to indicate whether the flag is due to a laboratory deviation from a specified protocol or is of technical advisory nature.

I. Sample Receipt and Technical Holding Times

All samples were received in good condition and cooler temperatures upon receipt met validation criteria.

All technical holding time requirements were met.

II. Initial Calibration and Initial Calibration Verification

Initial calibration data were not reviewed for Stage 2A validation.

III. Continuing Calibration

Continuing calibration data were not reviewed for Stage 2A validation.

IV. Laboratory Blanks

Laboratory blanks were analyzed as required by the method. No contaminants were found in the laboratory blanks.

V. Field Blanks

No field blanks were identified in this SDG.

VI. Surrogates

Surrogates were added to all samples as required by the method. All surrogate recoveries (%R) were within QC limits.

VII. Matrix Spike/Matrix Spike Duplicates

Matrix spike (MS) and matrix spike duplicate (MSD) sample analysis was performed on an associated project sample. Percent recoveries (%R) were within QC limits. Relative percent differences (RPD) were within QC limits.

VIII. Laboratory Control Samples

Laboratory control samples (LCS) were analyzed as required by the method. Percent recoveries (%R) were within QC limits.

IX. Field Duplicates

No field duplicates were identified in this SDG.

X. Compound Quantitation

Raw data were not reviewed for Stage 2A validation.

XI. Target Compound Identification

Raw data were not reviewed for Stage 2A validation.

XII. Overall Assessment of Data

The analysis was conducted within all specifications of the method. No results were rejected in this SDG.

Kimberly-Clark Upland Area
Polychlorinated Biphenyls - Data Qualification Summary - SDG 008403

No Sample Data Qualified in this SDG

Kimberly-Clark Upland Area
Polychlorinated Biphenyls - Laboratory Blank Data Qualification Summary - SDG 008403

No Sample Data Qualified in this SDG

Kimberly-Clark Upland Area
Polychlorinated Biphenyls - Field Blank Data Qualification Summary - SDG 008403

No Sample Data Qualified in this SDG

LDC #: 49215D3b
SDG #: 008403
Laboratory: Friedman & Bruya, Inc.

VALIDATION COMPLETENESS WORKSHEET
Stage 2A

Date: 10/10/20
Page: 1 of 1
Reviewer: LS
2nd Reviewer:

METHOD: GC Polychlorinated Biphenyls (EPA SW846 Method 8082A)

The samples listed below were reviewed for each of the following validation areas. Validation findings are noted in attached validation findings worksheets.

	Validation Area		Comments
I.	Sample receipt/Technical holding times	A/A	
II.	Initial calibration/ICV	N/N	
III.	Continuing calibration	N	
IV.	Laboratory Blanks	A	
V.	Field blanks	N	
VI.	Surrogate spikes	A	
VII.	Matrix spike/Matrix spike duplicates	A	SDG 008379
VIII.	Laboratory control samples	A	LCS
IX.	Field duplicates	N	
X.	Compound quantitation/RL/LOQ/LODs	N	Dry weight basis = 1-3
XI.	Target compound identification	N	
XII.	Overall assessment of data	A	

Note: A = Acceptable; N = Not provided/applicable; SW = See worksheet; ND = No compounds detected; R = Rinsate; FB = Field blank; D = Duplicate; TB = Trip blank; EB = Equipment blank; SB=Source blank; OTHER:

	Client ID	Lab ID	Matrix	Date
1	CMS-S-45-4	008403-01	Soil	08/26/20
2	CMS-S-46-4	008403-02	Soil	08/26/20
3	CMS-S-47-4	008403-03	Soil	08/26/20
4				
5				
6				
7				
8				
9				
10				
11				
12				
13				

Notes:

1	00-1921 MB						

Laboratory Data Consultants, Inc.
Data Validation Report

Project/Site Name: Kimberly-Clark Upland Area

LDC Report Date: October 12, 2020

Parameters: Total Petroleum Hydrocarbons as Extractables

Validation Level: Stage 2A

Laboratory: Friedman & Bruya, Inc.

Sample Delivery Group (SDG): 008403

Sample Identification	Laboratory Sample Identification	Matrix	Collection Date
CMSB1-B-01-6	008403-04	Soil	08/26/20
CMSB1-S-01-4	008403-05	Soil	08/26/20
CMSB1-S-02-4	008403-06	Soil	08/26/20

Introduction

This Data Validation Report (DVR) presents data validation findings and results for the associated samples listed on the cover page. Data validation was performed in accordance with a modified outline of the USEPA National Functional Guidelines (NFG) for Organic Superfund Methods Data Review (January 2017). Where specific guidance was not available, the data has been evaluated in a conservative manner consistent with industry standards using professional experience.

The analyses were performed by the following method:

Total Petroleum Hydrocarbons (TPH) as Extractables by NWTPH-Dx

All sample results were subjected to Stage 2A data validation, which comprises an evaluation of quality control (QC) summary results.

The following are definitions of the data qualifiers utilized during data validation:

J (Estimated): The compound or analyte was analyzed for and positively identified by the laboratory; however the reported concentration is estimated due to non-conformances discovered during data validation.

U (Non-detected): The compound or analyte was analyzed for and positively identified by the laboratory; however the compound or analyte should be considered not detected at the reported concentration due to the presence of contaminants detected in the associated blank(s).

UJ (Non-detected estimated): The compound or analyte was reported as not detected by the laboratory; however the reported quantitation/detection limit is estimated due to non-conformances discovered during data validation.

R (Rejected): The sample results were rejected due to gross non-conformances discovered during data validation. Data qualified as rejected is not usable.

NA (Not Applicable): The non-conformance discovered during data validation demonstrates a high bias, while the affected compound or analyte in the associated sample(s) was reported as not detected by the laboratory and did not warrant the qualification of the data.

A qualification summary table is provided at the end of this report if data has been qualified. Flags are classified as P (protocol) or A (advisory) to indicate whether the flag is due to a laboratory deviation from a specified protocol or is of technical advisory nature.

I. Sample Receipt and Technical Holding Times

All samples were received in good condition and cooler temperatures upon receipt met validation criteria.

All technical holding time requirements were met.

II. Initial Calibration and Initial Calibration Verification

Initial calibration data were not reviewed for Stage 2A validation.

III. Continuing Calibration

Continuing calibration data were not reviewed for Stage 2A validation.

IV. Laboratory Blanks

Laboratory blanks were analyzed as required by the method. No contaminants were found in the laboratory blanks.

V. Field Blanks

No field blanks were identified in this SDG.

VI. Surrogates

Surrogates were added to all samples as required by the method. All surrogate recoveries (%R) were within QC limits.

VII. Matrix Spike/Matrix Spike Duplicates

The laboratory has indicated that there were no matrix spike (MS) and matrix spike duplicate (MSD) analyses specified for the samples in this SDG, and therefore matrix spike and matrix spike duplicate analyses were not performed for this SDG.

VIII. Laboratory Control Samples

Laboratory control samples (LCS) were analyzed as required by the method. Percent recoveries (%R) were within QC limits.

IX. Field Duplicates

No field duplicates were identified in this SDG.

X. Compound Quantitation

Raw data were not reviewed for Stage 2A validation.

XI. Target Compound Identifications

Raw data were not reviewed for Stage 2A validation.

XII. Overall Assessment of Data

The analysis was conducted within all specifications of the method. No results were rejected in this SDG.

Kimberly-Clark Upland Area
Total Petroleum Hydrocarbons as Extractables - Data Qualification Summary - SDG 008403

No Sample Data Qualified in this SDG

Kimberly-Clark Upland Area
Total Petroleum Hydrocarbons as Extractables - Laboratory Blank Data Qualification Summary - SDG 008403

No Sample Data Qualified in this SDG

Kimberly-Clark Upland Area
Total Petroleum Hydrocarbons as Extractables - Field Blank Data Qualification Summary - SDG 008403

No Sample Data Qualified in this SDG

LDC #: 49215D8
SDG #: 008403
Laboratory: Friedman & Bruya, Inc.

VALIDATION COMPLETENESS WORKSHEET
Stage 2A

Date: 10/10/20
Page: 1 of 1
Reviewer: LS
2nd Reviewer: [signature]

METHOD: GC TPH as Extractables (NWTPH-Dx)

The samples listed below were reviewed for each of the following validation areas. Validation findings are noted in attached validation findings worksheets.

	Validation Area		Comments
I.	Sample receipt/Technical holding times	A / A	
II.	Initial calibration/ICV	N/N	
III.	Continuing calibration	N	
IV.	Laboratory Blanks	A	
V.	Field blanks	N	
VI.	Surrogate spikes	A	
VII.	Matrix spike/Matrix spike duplicates	N	Non client
VIII.	Laboratory control samples	A	LCS
IX.	Field duplicates	N	
X.	Compound quantitation RL/LOQ/LODs	N	Dry weight basis = 1-3
XI.	Target compound identification	N	
XII.	Overall assessment of data	A	

Note: A = Acceptable; N = Not provided/applicable; SW = See worksheet; ND = No compounds detected; R = Rinsate; FB = Field blank; D = Duplicate; TB = Trip blank; EB = Equipment blank; SB=Source blank; OTHER:

	Client ID	Lab ID	Matrix	Date
1	CMSB1-B-01-6	008403-04	Soil	08/26/20
2	CMSB1-S-01-4	008403-05	Soil	08/26/20
3	CMSB1-S-02-4	008403-06	Soil	08/26/20
4				
5				
6				
7				
8				
9				
10				
11				
12				
13				

Notes:

1	00-1926MB2						

Laboratory Data Consultants, Inc.
Data Validation Report

Project/Site Name: Kimberly-Clark Upland Area

LDC Report Date: October 12, 2020

Parameters: Polynuclear Aromatic Hydrocarbons

Validation Level: Stage 2A

Laboratory: Friedman & Bruya, Inc.

Sample Delivery Group (SDG): 008433

Sample Identification	Laboratory Sample Identification	Matrix	Collection Date
CMSB1-B-03-6	008433-03	Soil	08/27/20
CMSB1-B-02-6	008433-04	Soil	08/27/20

Introduction

This Data Validation Report (DVR) presents data validation findings and results for the associated samples listed on the cover page. Data validation was performed in accordance with a modified outline of the USEPA National Functional Guidelines (NFG) for Organic Superfund Methods Data Review (January 2017). Where specific guidance was not available, the data has been evaluated in a conservative manner consistent with industry standards using professional experience.

The analyses were performed by the following method:

Polynuclear Aromatic Hydrocarbons (PAHs) by Environmental Protection Agency (EPA) SW 846 Method 8270E in Selected Ion Monitoring (SIM) mode

All sample results were subjected to Stage 2A data validation, which comprises an evaluation of quality control (QC) summary results.

The following are definitions of the data qualifiers utilized during data validation:

J (Estimated): The compound or analyte was analyzed for and positively identified by the laboratory; however the reported concentration is estimated due to non-conformances discovered during data validation.

U (Non-detected): The compound or analyte was analyzed for and positively identified by the laboratory; however the compound or analyte should be considered non-detected at the reported concentration due to the presence of contaminants detected in the associated blank(s).

UJ (Non-detected estimated): The compound or analyte was reported as not detected by the laboratory; however the reported quantitation/detection limit is estimated due to non-conformances discovered during data validation.

R (Rejected): The sample results were rejected due to gross non-conformances discovered during data validation. Data qualified as rejected is not usable.

NA (Not Applicable): The non-conformance discovered during data validation demonstrates a high bias, while the affected compound or analyte in the associated sample(s) was reported as not detected by the laboratory and did not warrant the qualification of the data.

A qualification summary table is provided at the end of this report if data has been qualified. Flags are classified as P (protocol) or A (advisory) to indicate whether the flag is due to a laboratory deviation from a specified protocol or is of technical advisory nature.

I. Sample Receipt and Technical Holding Times

All samples were received in good condition and cooler temperatures upon receipt met validation criteria.

All technical holding time requirements were met.

II. GC/MS Instrument Performance Check

Instrument performance check data were not reviewed for Stage 2A validation.

III. Initial Calibration and Initial Calibration Verification

Initial calibration data were not reviewed for Stage 2A validation.

IV. Continuing Calibration

Continuing calibration data were not reviewed for Stage 2A validation.

V. Laboratory Blanks

Laboratory blanks were analyzed as required by the method. No contaminants were found in the laboratory blanks.

VI. Field Blanks

No field blanks were identified in this SDG.

VII. Surrogates

Surrogates were added to all samples as required by the method. Surrogate recoveries (%R) were not within QC limits for sample CMSB1-B-02-6. Using professional judgment, no data were qualified when one surrogate %R was outside the QC limits and the %R was greater than or equal to 10%.

VIII. Matrix Spike/Matrix Spike Duplicates

Matrix spike (MS) and matrix spike duplicate (MSD) sample analysis was performed on an associated project sample. Percent recoveries (%R) were within QC limits. Relative percent differences (RPD) were within QC limits.

IX. Laboratory Control Samples

Laboratory control samples (LCS) were analyzed as required by the method. Percent recoveries (%R) were within QC limits.

X. Field Duplicates

No field duplicates were identified in this SDG.

XI. Internal Standards

Internal standards data were not reviewed for Stage 2A validation.

XII. Compound Quantitation

Raw data were not reviewed for Stage 2A validation.

XIII. Target Compound Identifications

Raw data were not reviewed for Stage 2A validation.

XIV. System Performance

Raw data were not reviewed for Stage 2A validation.

XV. Overall Assessment of Data

The analysis was conducted within all specifications of the method. No results were rejected in this SDG.

Kimberly-Clark Upland Area
Polynuclear Aromatic Hydrocarbons - Data Qualification Summary - SDG 008433

No Sample Data Qualified in this SDG

Kimberly-Clark Upland Area
Polynuclear Aromatic Hydrocarbons - Laboratory Blank Data Qualification Summary - SDG 008433

No Sample Data Qualified in this SDG

Kimberly-Clark Upland Area
Polynuclear Aromatic Hydrocarbons - Field Blank Data Qualification Summary - SDG 008433

No Sample Data Qualified in this SDG

LDC #: 49215E2b

SDG #: 008433

Laboratory: Friedman & Bruya, Inc.

VALIDATION COMPLETENESS WORKSHEET

Stage 2A

Date: 10/16/20

Page: 1 of 1

Reviewer: VT

2nd Reviewer:

METHOD: GC/MS Polynuclear Aromatic Hydrocarbons (EPA SW 846 Method 8270E-SIM)

The samples listed below were reviewed for each of the following validation areas. Validation findings are noted in attached validation findings worksheets.

	Validation Area		Comments
I.	Sample receipt/Technical holding times	A/A	
II.	GC/MS Instrument performance check	N	
III.	Initial calibration/ICV	N/N	
IV.	Continuing calibration	N	
V.	Laboratory Blanks	A	
VI.	Field blanks	N	
VII.	Surrogate spikes	SW	2-one at, NB
VIII.	Matrix spike/Matrix spike duplicates	A	SDG 008403
IX.	Laboratory control samples	A	LCS
X.	Field duplicates	N	
XI.	Internal standards	N	
XII.	Compound quantitation RL/LOQ/LODs	N	Dry weight basis=12
XIII.	Target compound identification	N	
XIV.	System performance	N	
XV.	Overall assessment of data	A	

Note: A = Acceptable; N = Not provided/applicable; SW = See worksheet; ND = No compounds detected; R = Rinsate; FB = Field blank; D = Duplicate; TB = Trip blank; EB = Equipment blank; SB=Source blank; OTHER:

	Client ID	Lab ID	Matrix	Date
1	CMSB1-B-03-6	008433-03	Soil	08/27/20
2	CMSB1-B-02-6	008433-04	Soil	08/27/20
3				
4				
5				
6				
7				
8				
9				

Notes:

1	00-1057MB						

Laboratory Data Consultants, Inc.
Data Validation Report

Project/Site Name: Kimberly-Clark Upland Area

LDC Report Date: October 12, 2020

Parameters: Polychlorinated Biphenyls

Validation Level: Stage 2A

Laboratory: Friedman & Bruya, Inc.

Sample Delivery Group (SDG): 008433

Sample Identification	Laboratory Sample Identification	Matrix	Collection Date
OMS-S-20-2.5	008433-02	Soil	08/27/20
OMS-S-20-2.5DL	008433-02DL	Soil	08/27/20
OMS-S-20-2.5MS	008433-02MS	Soil	08/27/20
OMS-S-20-2.5MSD	008433-02MSD	Soil	08/27/20

Introduction

This Data Validation Report (DVR) presents data validation findings and results for the associated samples listed on the cover page. Data validation was performed in accordance with a modified outline of the USEPA National Functional Guidelines (NFG) for Organic Superfund Methods Data Review (January 2017). Where specific guidance was not available, the data has been evaluated in a conservative manner consistent with industry standards using professional experience.

The analyses were performed by the following method:

Polychlorinated Biphenyls (PCBs) by Environmental Protection Agency (EPA) SW 846 Method 8082A

All sample results were subjected to Stage 2A data validation, which comprises an evaluation of quality control (QC) summary results.

The following are definitions of the data qualifiers utilized during data validation:

J (Estimated): The compound or analyte was analyzed for and positively identified by the laboratory; however the reported concentration is estimated due to non-conformances discovered during data validation.

U (Non-detected): The compound or analyte was analyzed for and positively identified by the laboratory; however the compound or analyte should be considered non-detected at the reported concentration due to the presence of contaminants detected in the associated blank(s).

UJ (Non-detected estimated): The compound or analyte was reported as not detected by the laboratory; however the reported quantitation/detection limit is estimated due to non-conformances discovered during data validation.

DNR Do not report from this analysis; the result for this analyte is to be reported from an alternative analysis.

R (Rejected): The sample results were rejected due to gross non-conformances discovered during data validation. Data qualified as rejected is not usable.

NA (Not Applicable): The non-conformance discovered during data validation demonstrates a high bias, while the affected compound or analyte in the associated sample(s) was reported as not detected by the laboratory and did not warrant the qualification of the data.

A qualification summary table is provided at the end of this report if data has been qualified. Flags are classified as P (protocol) or A (advisory) to indicate whether the flag is due to a laboratory deviation from a specified protocol or is of technical advisory nature.

I. Sample Receipt and Technical Holding Times

All samples were received in good condition and cooler temperatures upon receipt met validation criteria.

All technical holding time requirements were met.

II. Initial Calibration and Initial Calibration Verification

Initial calibration data were not reviewed for Stage 2A validation.

III. Continuing Calibration

Continuing calibration data were not reviewed for Stage 2A validation.

IV. Laboratory Blanks

Laboratory blanks were analyzed as required by the method. No contaminants were found in the laboratory blanks.

V. Field Blanks

No field blanks were identified in this SDG.

VI. Surrogates

Surrogates were added to all samples as required by the method. All surrogate recoveries (%R) were within QC limits.

VII. Matrix Spike/Matrix Spike Duplicates

Matrix spike (MS) and matrix spike duplicate (MSD) sample analysis was performed on an associated project sample. Percent recoveries (%R) were within QC limits with the following exceptions:

Spike ID (Associated Samples)	Compound	MS (%R) (Limits)	MSD (%R) (Limits)	Flag	A or P
OMS-S-20-2.5MS/MSD (OMS-S-20-2.5)	Aroclor-1260	880 (25-137)	1300 (25-137)	NA	-

Relative percent differences (RPD) were within QC limits with the following exceptions:

Spike ID (Associated Samples)	Compound	RPD (Limits)	Flag	A or P
OMS-S-20-2.5MS/MSD (OMS-S-20-2.5)	Aroclor-1016 Aroclor-1260	23 (≤20) 39 (≤20)	NA	-

VIII. Laboratory Control Samples

Laboratory control samples (LCS) were analyzed as required by the method. Percent recoveries (%R) were within QC limits.

IX. Field Duplicates

No field duplicates were identified in this SDG.

X. Compound Quantitation

Raw data were not reviewed for Stage 2A validation.

XI. Target Compound Identification

Raw data were not reviewed for Stage 2A validation.

XII. Overall Assessment of Data

The analysis was conducted within all specifications of the method.

In the case where more than one result was reported for an individual sample, the least technically acceptable results were deemed not reportable as follows:

Sample	Compound	Reason	Flag	A or P
OMS-S-20-2.5	Aroclor-1254	Results exceeded calibration range.	DNR	-

No results were rejected in this SDG.

Kimberly-Clark Upland Area
Polychlorinated Biphenyls - Data Qualification Summary - SDG 008433

Sample	Compound	Flag	A or P	Reason
OMS-S-20-2.5	Aroclor-1254	DNR	-	Overall assessment of data

Kimberly-Clark Upland Area
Polychlorinated Biphenyls - Laboratory Blank Data Qualification Summary - SDG 008433

No Sample Data Qualified in this SDG

Kimberly-Clark Upland Area
Polychlorinated Biphenyls - Field Blank Data Qualification Summary - SDG 008433

No Sample Data Qualified in this SDG

LDC #: 49215E3b
SDG #: 008433
Laboratory: Friedman & Bruya, Inc.

VALIDATION COMPLETENESS WORKSHEET
Stage 2A

Date: 10/10/20
Page: 1 of 1
Reviewer: VT
2nd Reviewer:

METHOD: GC Polychlorinated Biphenyls (EPA SW846 Method 8082A)

The samples listed below were reviewed for each of the following validation areas. Validation findings are noted in attached validation findings worksheets.

	Validation Area		Comments
I.	Sample receipt/Technical holding times	A / A	
II.	Initial calibration/ICV	N/N	
III.	Continuing calibration	N	
IV.	Laboratory Blanks	A	
V.	Field blanks	N	
VI.	Surrogate spikes	A	
VII.	Matrix spike/Matrix spike duplicates	SW	(3,4)
VIII.	Laboratory control samples	A	LCS
IX.	Field duplicates	N	
X.	Compound quantitation/RL/LOQ/LODs	N	Dry weight basis = 1,2
XI.	Target compound identification	N	
XII.	Overall assessment of data	SW	

Note: A = Acceptable; N = Not provided/applicable; SW = See worksheet; ND = No compounds detected; R = Rinsate; FB = Field blank; D = Duplicate; TB = Trip blank; EB = Equipment blank; SB=Source blank; OTHER:

	Client ID	Lab ID	Matrix	Date
1	OMS-S-20-2.5	008433-02	Soil	08/27/20
2	OMS-S-20-2.5DL	008433-02DL	Soil	08/27/20
3	OMS-S-20-2.5MS	008433-02MS	Soil	08/27/20
4	OMS-S-20-2.5MSD	008433-02MSD	Soil	08/27/20
5				
6				
7				
8				
9				
10				
11				
12				
13				

Notes:

1	082807-MB						

LDC #: 49215E3b

VALIDATION FINDINGS WORKSHEET
Matrix Spike/Matrix Spike Duplicates

Reviewer: LT

METHOD: X **GC** ___ **HPLC**

Please see qualifications below for all questions answered "N". Not applicable questions are identified as "N/A".

Y x N___ N/A ___ Were a matrix spike (MS) and matrix spike duplicate (MSD) analyzed for each matrix in this SDG?

Y x N___ N/A___ Was an MS/MSD analyzed every 20 samples for each matrix or whenever a sample extraction was performed?

Y___ N x N/A___ Were the MS/MSD percent recoveries (%R) and relative percent differences (RPD) within QC limits?

#	MS/MSD ID	Compound	MS %R (Limits)	MSD %R (Limits)	RPD (Limits)	Associated Samples	Qualifications
	3/4	Aroclor 1260	880 (25 - 137)	1300 (25 - 137)		1 (ND)	J/A dets
		Aroclor 1016			23 (≤ 20)	↓	↓
		Aroclor 1260			39 (≤ 20)	↓	↓

LDC #: 49215E3b

VALIDATION FINDINGS WORKSHEET
Overall Assessment of Data

METHOD: GC PCBs (EPA SW 846 Method 8082A)

Please see qualifications below for all questions answered "N". Not applicable questions are identified as "N/A".

All available information pertaining to the data were reviewed using professional judgement to compliment the determination of the overall quality of the data.

Yes x No__ N/A__ Was the overall quality and usability of the data acceptable?

#	Date	Sample ID	Compound	Finding	Qualifications
		1	Aroclor 1254	exceed calibration range	DNR

Comments: _____

Laboratory Data Consultants, Inc.
Data Validation Report

Project/Site Name: Kimberly-Clark Upland Area

LDC Report Date: October 12, 2020

Parameters: Metals

Validation Level: Stage 2A

Laboratory: Friedman & Bruya, Inc.

Sample Delivery Group (SDG): 008433

Sample Identification	Laboratory Sample Identification	Matrix	Collection Date
OMS-S-20-2.5	008433-02	Soil	08/27/20

Introduction

This Data Validation Report (DVR) presents data validation findings and results for the associated samples listed on the cover page. Data validation was performed in accordance with a modified outline of the USEPA National Functional Guidelines (NFG) for Inorganic Superfund Methods Data Review (January 2017). Where specific guidance was not available, the data has been evaluated in a conservative manner consistent with industry standards using professional experience.

The analyses were performed by the following methods:

Copper by Environmental Protection Agency (EPA) SW 846 Method 6020B
Mercury by EPA Method 1631E

All sample results were subjected to Stage 2A data validation, which comprises an evaluation of quality control (QC) summary results.

The following are definitions of the data qualifiers utilized during data validation:

J (Estimated): The compound or analyte was analyzed for and positively identified by the laboratory; however the reported concentration is estimated due to non-conformances discovered during data validation.

U (Non-detected): The compound or analyte was analyzed for and positively identified by the laboratory; however the compound or analyte should be considered non-detected at the reported concentration due to the presence of contaminants detected in the associated blank(s).

UJ (Non-detected estimated): The compound or analyte was reported as not detected by the laboratory; however the reported quantitation/detection limit is estimated due to non-conformances discovered during data validation.

R (Rejected): The sample results were rejected due to gross non-conformances discovered during data validation. Data qualified as rejected is not usable.

NA (Not Applicable): The non-conformance discovered during data validation demonstrates a high bias, while the affected compound or analyte in the associated sample(s) was reported as not detected by the laboratory and did not warrant the qualification of the data.

A qualification summary table is provided at the end of this report if data has been qualified. Flags are classified as P (protocol) or A (advisory) to indicate whether the flag is due to a laboratory deviation from a specified protocol or is of technical advisory nature.

I. Sample Receipt and Technical Holding Times

All samples were received in good condition.

All technical holding time requirements were met.

II. ICPMS Tune

ICP-MS tune data were not reviewed for Stage 2A validation.

III. Instrument Calibration

Instrument calibration data were not reviewed for Stage 2A validation.

IV. ICP Interference Check Sample Analysis

ICP Interference check sample (ICS) analysis data were not reviewed for Stage 2A validation.

V. Laboratory Blanks

Laboratory blanks were analyzed as required by the methods. No contaminants were found in the laboratory blanks.

VI. Field Blanks

No field blanks were identified in this SDG.

VII. Matrix Spike/Matrix Spike Duplicates

The laboratory has indicated that there were no matrix spike (MS) and matrix spike duplicate (MSD) analyses specified for the samples in this SDG, and therefore matrix spike and matrix spike duplicate analyses were not performed for this SDG.

VIII. Duplicate Sample Analysis

The laboratory has indicated that there were no duplicate (DUP) analyses specified for the samples in this SDG, and therefore duplicate analyses were not performed for this SDG.

IX. Serial Dilution

Serial dilution was not performed for this SDG.

X. Laboratory Control Samples

Laboratory control samples (LCS) were analyzed as required by the methods. Percent recoveries (%R) were within QC limits.

XI. Field Duplicates

No field duplicates were identified in this SDG.

XII. Internal Standards (ICP-MS)

Internal standards data were not reviewed for Stage 2A validation.

XIII. Sample Result Verification

Raw data were not reviewed for Stage 2A validation.

XIV. Overall Assessment of Data

The analysis was conducted within all specifications of the methods. No results were rejected in this SDG.

Kimberly-Clark Upland Area
Metals - Data Qualification Summary - SDG 008433

No Sample Data Qualified in this SDG

Kimberly-Clark Upland Area
Metals - Laboratory Blank Data Qualification Summary - SDG 008433

No Sample Data Qualified in this SDG

Kimberly-Clark Upland Area
Metals - Field Blank Data Qualification Summary - SDG 008433

No Sample Data Qualified in this SDG

LDC #: 49215E4a

SDG #: 008433

Laboratory: Friedman & Bruya, Inc.

VALIDATION COMPLETENESS WORKSHEET

Stage 2A

Date: 10/16/20

Page: 1 of 1

Reviewer: VT

2nd Reviewer:

METHOD: Cu, Cr, Hg (EPA SW 846 Method 6020B/EPA Method 1631E)

The samples listed below were reviewed for each of the following validation areas. Validation findings are noted in attached validation findings worksheets.

	Validation Area		Comments
I.	Sample receipt/Technical holding times	A/A	
II.	ICP/MS Tune	N	
III.	Instrument Calibration	N	
IV.	ICP Interference Check Sample (ICS) Analysis	N	
V.	Laboratory Blanks	A	
VI.	Field Blanks	N	
VII.	Matrix Spike/Matrix Spike Duplicates	N	Non client
VIII.	Duplicate sample analysis	N	
IX.	Serial Dilution	N	
X.	Laboratory control samples	A	LCS
XI.	Field Duplicates	N	
XII.	Internal Standard (ICP-MS)	N	
XIII.	Sample Result Verification	N	Dry weight basis = 1
XIV.	Overall Assessment of Data	A	

Note: A = Acceptable; N = Not provided/applicable; SW = See worksheet; ND = No compounds detected; R = Rinsate; FB = Field blank; D = Duplicate; TB = Trip blank; EB = Equipment blank; SB=Source blank; OTHER:

	Client ID	Lab ID	Matrix	Date
1	OMS-S-20-2.5	008433-02	Soil	08/27/20
2				
3				
4				
5				
6				
7				
8				
9				
10				
11				
12				
13				
14				

Notes:

LDC #: 49215E4a

VALIDATION FINDINGS WORKSHEET
Sample Specific Element Reference

Reviewer: LT

All circled elements are applicable to each sample.

Sample ID	Matrix	Target Analyte List (TAL)
1	S	Cu, Hg

Laboratory Data Consultants, Inc.
Data Validation Report

Project/Site Name: Kimberly-Clark Upland Area

LDC Report Date: October 12, 2020

Parameters: Total Petroleum Hydrocarbons as Extractables

Validation Level: Stage 2A

Laboratory: Friedman & Bruya, Inc.

Sample Delivery Group (SDG): 008433

Sample Identification	Laboratory Sample Identification	Matrix	Collection Date
CMSB1-S-03-4	008433-01	Soil	08/27/20
CMSB1-B-03-6	008433-03	Soil	08/27/20
CMSB1-B-02-6	008433-04	Soil	08/27/20
CMSB1-S-04-4	008433-05	Soil	08/27/20
CMSB1-S-05-4	008433-06	Soil	08/27/20

Introduction

This Data Validation Report (DVR) presents data validation findings and results for the associated samples listed on the cover page. Data validation was performed in accordance with a modified outline of the USEPA National Functional Guidelines (NFG) for Organic Superfund Methods Data Review (January 2017). Where specific guidance was not available, the data has been evaluated in a conservative manner consistent with industry standards using professional experience.

The analyses were performed by the following method:

Total Petroleum Hydrocarbons (TPH) as Extractables by NWTPH-Dx

All sample results were subjected to Stage 2A data validation, which comprises an evaluation of quality control (QC) summary results.

The following are definitions of the data qualifiers utilized during data validation:

J (Estimated): The compound or analyte was analyzed for and positively identified by the laboratory; however the reported concentration is estimated due to non-conformances discovered during data validation.

U (Non-detected): The compound or analyte was analyzed for and positively identified by the laboratory; however the compound or analyte should be considered not detected at the reported concentration due to the presence of contaminants detected in the associated blank(s).

UJ (Non-detected estimated): The compound or analyte was reported as not detected by the laboratory; however the reported quantitation/detection limit is estimated due to non-conformances discovered during data validation.

R (Rejected): The sample results were rejected due to gross non-conformances discovered during data validation. Data qualified as rejected is not usable.

NA (Not Applicable): The non-conformance discovered during data validation demonstrates a high bias, while the affected compound or analyte in the associated sample(s) was reported as not detected by the laboratory and did not warrant the qualification of the data.

A qualification summary table is provided at the end of this report if data has been qualified. Flags are classified as P (protocol) or A (advisory) to indicate whether the flag is due to a laboratory deviation from a specified protocol or is of technical advisory nature.

I. Sample Receipt and Technical Holding Times

All samples were received in good condition and cooler temperatures upon receipt met validation criteria.

All technical holding time requirements were met.

II. Initial Calibration and Initial Calibration Verification

Initial calibration data were not reviewed for Stage 2A validation.

III. Continuing Calibration

Continuing calibration data were not reviewed for Stage 2A validation.

IV. Laboratory Blanks

Laboratory blanks were analyzed as required by the method. No contaminants were found in the laboratory blanks.

V. Field Blanks

No field blanks were identified in this SDG.

VI. Surrogates

Surrogates were added to all samples as required by the method. All surrogate recoveries (%R) were within QC limits.

VII. Matrix Spike/Matrix Spike Duplicates

The laboratory has indicated that there were no matrix spike (MS) and matrix spike duplicate (MSD) analyses specified for the samples in this SDG, and therefore matrix spike and matrix spike duplicate analyses were not performed for this SDG.

VIII. Laboratory Control Samples

Laboratory control samples (LCS) were analyzed as required by the method. Percent recoveries (%R) were within QC limits.

IX. Field Duplicates

No field duplicates were identified in this SDG.

X. Compound Quantitation

Raw data were not reviewed for Stage 2A validation.

XI. Target Compound Identifications

Raw data were not reviewed for Stage 2A validation.

XII. Overall Assessment of Data

The analysis was conducted within all specifications of the method. No results were rejected in this SDG.

Kimberly-Clark Upland Area
Total Petroleum Hydrocarbons as Extractables - Data Qualification Summary - SDG 008433

No Sample Data Qualified in this SDG

Kimberly-Clark Upland Area
Total Petroleum Hydrocarbons as Extractables - Laboratory Blank Data Qualification Summary - SDG 008433

No Sample Data Qualified in this SDG

Kimberly-Clark Upland Area
Total Petroleum Hydrocarbons as Extractables - Field Blank Data Qualification Summary - SDG 008433

No Sample Data Qualified in this SDG

LDC #: 49215E8 **VALIDATION COMPLETENESS WORKSHEET** Date: 10/10/20
SDG #: 008433 Stage 2A Page: 1 of 1
Laboratory: Friedman & Bruya, Inc. Reviewer: VT
2nd Reviewer:

METHOD: GC TPH as Extractables (NWTPH-Dx)

The samples listed below were reviewed for each of the following validation areas. Validation findings are noted in attached validation findings worksheets.

	Validation Area		Comments
I.	Sample receipt/Technical holding times	A/A	
II.	Initial calibration/ICV	N/N	
III.	Continuing calibration	N	
IV.	Laboratory Blanks	A	
V.	Field blanks	N	
VI.	Surrogate spikes	A	
VII.	Matrix spike/Matrix spike duplicates	N	Non client
VIII.	Laboratory control samples	A	LCS
IX.	Field duplicates	N	
X.	Compound quantitation RL/LOQ/LODs	N	Dry weight basis = 1-5
XI.	Target compound identification	N	
XII	Overall assessment of data	A	

Note: A = Acceptable; N = Not provided/applicable; SW = See worksheet; ND = No compounds detected; R = Rinsate; FB = Field blank; D = Duplicate; TB = Trip blank; EB = Equipment blank; SB=Source blank; OTHER:

	Client ID	Lab ID	Matrix	Date
1	CMSB1-S-03-4	008433-01	Soil	08/27/20
2	CMSB1-B-03-6	008433-03	Soil	08/27/20
3	CMSB1-B-02-6	008433-04	Soil	08/27/20
4	CMSB1-S-04-4	008433-05	Soil	08/27/20
5	CMSB1-S-05-4	008433-06	Soil	08/27/20
6				
7				
8				
9				
10				
11				
12				
13				

Notes:

1	00-1960 MB						

Laboratory Data Consultants, Inc.
Data Validation Report

Project/Site Name: Kimberly-Clark Upland Area

LDC Report Date: October 8, 2020

Parameters: Metals

Validation Level: Stage 2A

Laboratory: Friedman & Bruya, Inc.

Sample Delivery Group (SDG): 008462

Sample Identification	Laboratory Sample Identification	Matrix	Collection Date
REC5-S-01-4	008462-01	Soil	08/28/20
REC5-S-01-7	008462-02	Soil	08/28/20
REC5-S-01-10	008462-03	Soil	08/28/20
REC5-B-01-12	008462-04	Soil	08/28/20
REC5-S-02-4	008462-05	Soil	08/28/20
REC5-S-02-7	008462-06	Soil	08/28/20
REC5-S-02-7DL	008462-06DL	Soil	08/28/20
REC5-514	008462-07	Soil	08/28/20
REC5-514DL	008462-07DL	Soil	08/28/20
REC5-S-06-4	008462-08	Soil	08/28/20
REC5-S-03-4	008462-09	Soil	08/28/20
REC5-S-03-7	008462-10	Soil	08/28/20
REC5-S-02-10	008462-11	Soil	08/28/20
REC5-S-03-10	008462-12	Soil	08/28/20
REC5-B-02-12	008462-13	Soil	08/28/20
REC5-B-02-12DL	008462-13DL	Soil	08/28/20
REC5-S-06-7	008462-14	Soil	08/28/20
REC5-S-05-4	008462-15	Soil	08/28/20
REC5-S-04-4	008462-16	Soil	08/28/20
REC5-B-03-12	008462-17	Soil	08/28/20
REC5-B-03-12DL	008462-17DL	Soil	08/28/20
REC5-S-06-10	008462-18	Soil	08/28/20
REC5-S-06-10DL	008462-18DL	Soil	08/28/20
REC5-S-05-7	008462-19	Soil	08/28/20
REC5-S-05-10	008462-20	Soil	08/28/20
REC5-S-05-10DL	008462-20DL	Soil	08/28/20
REC5-S-04-7	008462-21	Soil	08/28/20

Sample Identification	Laboratory Sample Identification	Matrix	Collection Date
REC5-S-04-7DL	008462-21DL	Soil	08/28/20
REC5-S-04-10	008462-22	Soil	08/28/20
REC5-S-01-4MS	008462-01MS	Soil	08/28/20
REC5-S-01-4MSD	008462-01MSD	Soil	08/28/20
REC5-S-04-7MS	008462-21MS	Soil	08/28/20
REC5-S-04-7MSD	008462-21MSD	Soil	08/28/20

Introduction

This Data Validation Report (DVR) presents data validation findings and results for the associated samples listed on the cover page. Data validation was performed in accordance with a modified outline of the USEPA National Functional Guidelines (NFG) for Inorganic Superfund Methods Data Review (January 2017). Where specific guidance was not available, the data has been evaluated in a conservative manner consistent with industry standards using professional experience.

The analyses were performed by the following methods:

Arsenic, Copper and Lead by Environmental Protection Agency (EPA) SW 846 Method 6020B

All sample results were subjected to Stage 2A data validation, which comprises an evaluation of quality control (QC) summary results.

The following are definitions of the data qualifiers utilized during data validation:

J (Estimated): The compound or analyte was analyzed for and positively identified by the laboratory; however the reported concentration is estimated due to non-conformances discovered during data validation.

U (Non-detected): The compound or analyte was analyzed for and positively identified by the laboratory; however the compound or analyte should be considered non-detected at the reported concentration due to the presence of contaminants detected in the associated blank(s).

UJ (Non-detected estimated): The compound or analyte was reported as not detected by the laboratory; however the reported quantitation/detection limit is estimated due to non-conformances discovered during data validation.

R (Rejected): The sample results were rejected due to gross non-conformances discovered during data validation. Data qualified as rejected is not usable.

NA (Not Applicable): The non-conformance discovered during data validation demonstrates a high bias, while the affected compound or analyte in the associated sample(s) was reported as not detected by the laboratory and did not warrant the qualification of the data.

DNR (Do Not Report): A more appropriate result is reported from another analysis or dilution.

A qualification summary table is provided at the end of this report if data has been qualified. Flags are classified as P (protocol) or A (advisory) to indicate whether the flag is due to a laboratory deviation from a specified protocol or is of technical advisory nature.

I. Sample Receipt and Technical Holding Times

All samples were received in good condition.

All technical holding time requirements were met.

II. ICPMS Tune

ICP-MS tune data were not reviewed for Stage 2A validation.

III. Instrument Calibration

Instrument calibration data were not reviewed for Stage 2A validation.

IV. ICP Interference Check Sample Analysis

ICP Interference check sample (ICS) analysis data were not reviewed for Stage 2A validation.

V. Laboratory Blanks

Laboratory blanks were analyzed as required by the methods. No contaminants were found in the laboratory blanks.

VI. Field Blanks

No field blanks were identified in this SDG.

VII. Matrix Spike/Matrix Spike Duplicates

Matrix spike (MS) and matrix spike duplicate (MSD) sample analysis was performed on an associated project sample. Percent recoveries (%R) were within QC limits with the following exceptions:

Spike ID (Associated Samples)	Analyte	MS (%R) (Limits)	MSD (%R) (Limits)	Flag	A or P
REC5-S-04-7MS/MSD (REC5-S-04-7 REC5-S-04-10)	Arsenic	72 (75-125)	74 (75-125)	J (all detects)	A

Relative percent differences (RPD) were within QC limits.

VIII. Duplicate Sample Analysis

The laboratory has indicated that there were no duplicate (DUP) analyses specified for the samples in this SDG, and therefore duplicate analyses were not performed for this SDG.

IX. Serial Dilution

Serial dilution was not performed for this SDG.

X. Laboratory Control Samples

Laboratory control samples (LCS) were analyzed as required by the methods. Percent recoveries (%R) were within QC limits.

XI. Field Duplicates

Samples REC5-B-01-12 and REC5-514 were identified as field duplicates. No results were detected in any of the samples with the following exceptions:

Analyte	Concentration (mg/Kg)		RPD
	REC5-B-01-12	REC5-514	
Arsenic	4.75	6.51	31
Copper	17.7	19.9	12
Lead	2.59	3.17	20

XII. Internal Standards (ICP-MS)

Internal standards data were not reviewed for Stage 2A validation.

XIII. Sample Result Verification

Raw data were not reviewed for Stage 2A validation.

XIV. Overall Assessment of Data

The analysis was conducted within all specifications of the methods.

In the case where more than one result was reported for an individual sample, the least technically acceptable results were deemed not reportable as follows:

Sample	Analyte	Reason	Flag	A or P
REC5-S-02-7DL REC5-514DL REC5-B-02-12DL REC5-B-03-12DL REC5-S-06-10DL REC5-S-05-10DL REC5-S-04-7DL	Copper	Results from undiluted analyses were more usable.	DNR	-

Due to MS/MSD %R, data were qualified as estimated in two samples.

No results were rejected in this SDG.

Kimberly-Clark Upland Area
Metals - Data Qualification Summary - SDG 008462

Sample	Analyte	Flag	A or P	Reason
REC5-S-04-7 REC5-S-04-10	Arsenic	J (all detects)	A	Matrix spike/Matrix spike duplicate (%R)
REC5-S-02-7DL REC5-514DL REC5-B-02-12DL REC5-B-03-12DL REC5-S-06-10DL REC5-S-05-10DL REC5-S-04-7DL	Copper	DNR	-	Overall assessment of data

Kimberly-Clark Upland Area
Metals - Laboratory Blank Data Qualification Summary - SDG 008462

No Sample Data Qualified in this SDG

Kimberly-Clark Upland Area
Metals - Field Blank Data Qualification Summary - SDG 008462

No Sample Data Qualified in this SDG

LDC #: 49215F4a

SDG #: 008462

Laboratory: Friedman & Bruya, Inc.

VALIDATION COMPLETENESS WORKSHEET

Stage 2A

Date: 10/2/2020

Page: 1 of 2

Reviewer: DM

2nd Reviewer:

METHOD: Metals (EPA SW 846 Method 6020B)

The samples listed below were reviewed for each of the following validation areas. Validation findings are noted in attached validation findings worksheets.

	Validation Area		Comments
I.	Sample receipt/Technical holding times	A / A	
II.	ICP/MS Tune	N	
III.	Instrument Calibration	N	
IV.	ICP Interference Check Sample (ICS) Analysis	N	
V.	Laboratory Blanks	A	
VI.	Field Blanks	N	
VII.	Matrix Spike/Matrix Spike Duplicates	SW	
VIII.	Duplicate sample analysis	N	
IX.	Serial Dilution	N	
X.	Laboratory control samples	A	LCS
XI.	Field Duplicates	~~SW~~	(4,8) (4,9)
XII.	Internal Standard (ICP-MS)	N	
XIII.	Sample Result Verification	N	
XIV.	Overall Assessment of Data	SW	

Note: A = Acceptable; N = Not provided/applicable; SW = See worksheet; ND = No compounds detected; R = Rinsate; FB = Field blank; D = Duplicate; TB = Trip blank; EB = Equipment blank; SB=Source blank; OTHER:

	Client ID	Lab ID	Matrix	Date
1	REC5-S-01-4	008462-01	Soil	08/28/20
2	REC5-S-01-7	008462-02	Soil	08/28/20
3	REC5-S-01-10	008462-03	Soil	08/28/20
4	REC5-B-01-12	008462-04	Soil	08/28/20
5	REC5-S-02-4	008462-05	Soil	08/28/20
6	REC5-S-02-7	008462-06	Soil	08/28/20
7	REC5-S-02-7DL	008462-06DL	Soil	08/28/20
8	REC5-514	008462-07	Soil	08/28/20
9	REC5-514DL	008462-07DL	Soil	08/28/20
10	REC5-S-06-4	008462-08	Soil	08/28/20
11	REC5-S-03-4	008462-09	Soil	08/28/20
12	REC5-S-03-7	008462-10	Soil	08/28/20
13	REC5-S-02-10	008462-11	Soil	08/28/20
14	REC5-S-03-10	008462-12	Soil	08/28/20
15	REC5-B-02-12	008462-13	Soil	08/28/20

LDC #: 49215F4a
SDG #: 008462
Laboratory: Friedman & Bruya, Inc.

VALIDATION COMPLETENESS WORKSHEET
Stage 2A

Date: 10/2/2020

Reviewer: DM
2nd Reviewer:

METHOD: Metals (EPA SW 846 Method 6020B)

	Client ID	Lab ID	Matrix	Date
16	REC5-B-02-12DL	008462-13DL	Soil	08/28/20
17	REC5-S-06-7	008462-14	Soil	08/28/20
18	REC5-S-05-4	008462-15	Soil	08/28/20
19	REC5-S-04-4	008462-16	Soil	08/28/20
20	REC5-B-03-12	008462-17	Soil	08/28/20
21	REC5-B-03-12DL	008462-17DL	Soil	08/28/20
22	REC5-S-06-10	008462-18	Soil	08/28/20
23	REC5-S-06-10DL	008462-18DL	Soil	08/28/20
24	REC5-S-05-7	008462-19	Soil	08/28/20
25	REC5-S-05-10	008462-20	Soil	08/28/20
26	REC5-S-05-10DL	008462-20DL	Soil	08/28/20
27	REC5-S-04-7	008462-21	Soil	08/28/20
28	REC5-S-04-7DL	008462-21DL	Soil	08/28/20
29	REC5-S-04-10	008462-22	Soil	08/28/20
30	REC5-S-01-4MS	008462-01MS	Soil	08/28/20
31	REC5-S-01-4MSD	008462-01MSD	Soil	08/28/20
32	REC5-S-04-7MS	008462-21MS	Soil	08/28/20
33	REC5-S-04-7MSD	008462-21MSD	Soil	08/28/20
34				
35				
36				

Notes:

LDC #: 49215F4 9

VALIDATION FINDINGS WORKSHEET
Sample Specific Element Reference

Reviewer: DTM

All circled elements are applicable to each sample.

Sample ID	Matrix	Target Analyte List (TAL)
~~1-6,8~~	S	Al, Sb, (As), Ba, Be, B, Cd, Ca, Cr, Co, (Cu) Fe, (Pb), Li, Mg, Mo, Mn, ~~(Hg)~~ DTM, Ni, K, Se, Ag, Na, Sr, Tl, Sn, Ti, W, U, V, Zn
1-6,8,10-15,		Al, Sb, As, Ba, Be, B, Cd, Ca, Cr, Co, Cu, Fe, Pb, Li, Mg, Mo, Mn, Hg, Ni, K, Se, Ag, Na, Sr, Tl, Sn, Ti, W, U, V, Zn
17-20, 22,		Al, Sb, As, Ba, Be, B, Cd, Ca, Cr, Co, Cu, Fe, Pb, Li, Mg, Mo, Mn, Hg, Ni, K, Se, Ag, Na, Sr, Tl, Sn, Ti, W, U, V, Zn
24-25, 27,		Al, Sb, As, Ba, Be, B, Cd, Ca, Cr, Co, Cu, Fe, Pb, Li, Mg, Mo, Mn, Hg, Ni, K, Se, Ag, Na, Sr, Tl, Sn, Ti, W, U, V, Zn
29		Al, Sb, As, Ba, Be, B, Cd, Ca, Cr, Co, Cu, Fe, Pb, Li, Mg, Mo, Mn, Hg, Ni, K, Se, Ag, Na, Sr, Tl, Sn, Ti, W, U, V, Zn
		Al, Sb, As, Ba, Be, B, Cd, Ca, Cr, Co, Cu, Fe, Pb, Li, Mg, Mo, Mn, Hg, Ni, K, Se, Ag, Na, Sr, Tl, Sn, Ti, W, U, V, Zn
7, 16, 21,	S	Al, Sb, As, Ba, Be, B, Cd, Ca, Cr, Co, (Cu) Fe, Pb, Li, Mg, Mo, Mn, Hg, Ni, K, Se, Ag, Na, Sr, Tl, Sn, Ti, W, U, V, Zn
23, 26, 29		Al, Sb, As, Ba, Be, B, Cd, Ca, Cr, Co, Cu, Fe, Pb, Li, Mg, Mo, Mn, Hg, Ni, K, Se, Ag, Na, Sr, Tl, Sn, Ti, W, U, V, Zn
		Al, Sb, As, Ba, Be, B, Cd, Ca, Cr, Co, Cu, Fe, Pb, Li, Mg, Mo, Mn, Hg, Ni, K, Se, Ag, Na, Sr, Tl, Sn, Ti, W, U, V, Zn
QC 30-33	S	Al, Sb, (As), Ba, Be, B, Cd, Ca, Cr, Co, (Cu) Fe, (Pb), Li, Mg, Mo, Mn, Hg, Ni, K, Se, Ag, Na, Sr, Tl, Sn, Ti, W, U, V, Zn
		Al, Sb, As, Ba, Be, B, Cd, Ca, Cr, Co, Cu, Fe, Pb, Li, Mg, Mo, Mn, Hg, Ni, K, Se, Ag, Na, Sr, Tl, Sn, Ti, W, U, V, Zn
		Al, Sb, As, Ba, Be, B, Cd, Ca, Cr, Co, Cu, Fe, Pb, Li, Mg, Mo, Mn, Hg, Ni, K, Se, Ag, Na, Sr, Tl, Sn, Ti, W, U, V, Zn
		Al, Sb, As, Ba, Be, B, Cd, Ca, Cr, Co, Cu, Fe, Pb, Li, Mg, Mo, Mn, Hg, Ni, K, Se, Ag, Na, Sr, Tl, Sn, Ti, W, U, V, Zn
		Al, Sb, As, Ba, Be, B, Cd, Ca, Cr, Co, Cu, Fe, Pb, Li, Mg, Mo, Mn, Hg, Ni, K, Se, Ag, Na, Sr, Tl, Sn, Ti, W, U, V, Zn
		Al, Sb, As, Ba, Be, B, Cd, Ca, Cr, Co, Cu, Fe, Pb, Li, Mg, Mo, Mn, Hg, Ni, K, Se, Ag, Na, Sr, Tl, Sn, Ti, W, U, V, Zn
		Al, Sb, As, Ba, Be, B, Cd, Ca, Cr, Co, Cu, Fe, Pb, Li, Mg, Mo, Mn, Hg, Ni, K, Se, Ag, Na, Sr, Tl, Sn, Ti, W, U, V, Zn
		Al, Sb, As, Ba, Be, B, Cd, Ca, Cr, Co, Cu, Fe, Pb, Li, Mg, Mo, Mn, Hg, Ni, K, Se, Ag, Na, Sr, Tl, Sn, Ti, W, U, V, Zn
		Al, Sb, As, Ba, Be, B, Cd, Ca, Cr, Co, Cu, Fe, Pb, Li, Mg, Mo, Mn, Hg, Ni, K, Se, Ag, Na, Sr, Tl, Sn, Ti, W, U, V, Zn
		Al, Sb, As, Ba, Be, B, Cd, Ca, Cr, Co, Cu, Fe, Pb, Li, Mg, Mo, Mn, Hg, Ni, K, Se, Ag, Na, Sr, Tl, Sn, Ti, W, U, V, Zn
		Al, Sb, As, Ba, Be, B, Cd, Ca, Cr, Co, Cu, Fe, Pb, Li, Mg, Mo, Mn, Hg, Ni, K, Se, Ag, Na, Sr, Tl, Sn, Ti, W, U, V, Zn
		Al, Sb, As, Ba, Be, B, Cd, Ca, Cr, Co, Cu, Fe, Pb, Li, Mg, Mo, Mn, Hg, Ni, K, Se, Ag, Na, Sr, Tl, Sn, Ti, W, U, V, Zn
		Al, Sb, As, Ba, Be, B, Cd, Ca, Cr, Co, Cu, Fe, Pb, Li, Mg, Mo, Mn, Hg, Ni, K, Se, Ag, Na, Sr, Tl, Sn, Ti, W, U, V, Zn
		Al, Sb, As, Ba, Be, B, Cd, Ca, Cr, Co, Cu, Fe, Pb, Li, Mg, Mo, Mn, Hg, Ni, K, Se, Ag, Na, Sr, Tl, Sn, Ti, W, U, V, Zn
Analysis Method		
ICP		Al, Sb, As, Ba, Be, B, Cd, Ca, Cr, Co, Cu, Fe, Pb, Li, Mg, Mo, Mn, Hg, Ni, K, Se, Ag, Na, Sr, Tl, Sn, Ti, W, U, V, Zn
ICP-MS		Al, Sb, As, Ba, Be, B, Cd, Ca, Cr, Co, Cu, Fe, Pb, Li, Mg, Mo, Mn, Hg, Ni, K, Se, Ag, Na, Sr, Tl, Sn, Ti, W, U, V, Zn
GFAA		Al, Sb, As, Ba, Be, B, Cd, Ca, Cr, Co, Cu, Fe, Pb, Li, Mg, Mo, Mn, Hg, Ni, K, Se, Ag, Na, Sr, Tl, Sn, Ti, W, U, V, Zn

Comments: Mercury by CVAA if performed

LDC #:49215F4a

VALIDATION FINDINGS WORKSHEET
Matrix Spike/Matrix Spike Duplicates

METHOD: Trace metals (EPA SW 846 Method 6020/6010/7470)

Please see qualifications below for all questions answered "N". Not applicable questions are identified as "N/A".

Y N N/A Was a matrix spike analyzed for each matrix in this SDG?

Y N N/A Were matrix spike percent recoveries (%R) within the control limits of 75-125? If the sample concentration exceeded the spike concentration by a factor of 4 or more, no action was taken.

Y N N/A Were all duplicate sample relative percent differences (RPD) ≤ 20% for samples?

LEVEL IV ONLY:

Y N N/A Were recalculated results acceptable? See Level IV Recalculation Worksheet for recalculations.

#	MS/MSD ID	Matrix	Analyte	MS %Recovery	MSD %Recovery	RPD (Limits)	Associated Samples	Qualifications
	32/33	S	As	72(75-125)	74		27,29	J/UJ/A (det)

Comments:

LDC#: 49215F4a

VALIDATION FINDINGS WORKSHEET

Field Duplicates

Page: 1 of 1

Reviewer: DTM

METHOD: Metals (EPA Method 6010/6020/7000)

Analyte	Concentration (mg/Kg)		RPD
	4	8	
Arsenic	4.75	6.51	31
Copper	17.7	19.9	12
Lead	2.59	3.17	20

Analyte	Concentration (mg/Kg)		RPD
	4	9	
Copper		25U	NC

V:\Darionna\FIELD DUPLICATES\Field Duplicates\FD_inorganic\2020\49215F4a.wpd

LDC #: 49215F4a

VALIDATION FINDINGS WORKSHEET
Overall Assessment of Data

METHOD: Trace Metals (EPA SW 846 Method 6010/6020/7000)

Please see qualifications below for all questions answered "N". Not applicable questions are identified as "N/A".

All available information pertaining to the data were reviewed using professional judgement to compliment the determination of the overall quality of the data.

Y N N/A Was the overall quality and usability of the data acceptable?

#	Date	Sample ID	Analyte	Finding	Qualification
		7,9,16,21,23,26,28	Cu	Samples' internal standard passed, but original analyses was accepted due to detected result.	D NR

Laboratory Data Consultants, Inc.
Data Validation Report

Project/Site Name: Kimberly-Clark Upland Area

LDC Report Date: October 12, 2020

Parameters: Polychlorinated Biphenyls

Validation Level: Stage 2A

Laboratory: Friedman & Bruya, Inc.

Sample Delivery Group (SDG): 008492

Sample Identification	Laboratory Sample Identification	Matrix	Collection Date
CMS-S-48-4	008492-01	Soil	08/31/20
CMS-S-49-4	008492-02	Soil	08/31/20
CMS-515	008492-03	Soil	08/31/20
CMS-S-50-4	008492-04	Soil	08/31/20
CMS-S-48-4MS	008492-01MS	Soil	08/31/20
CMS-S-48-4MSD	008492-01MSD	Soil	08/31/20

Introduction

This Data Validation Report (DVR) presents data validation findings and results for the associated samples listed on the cover page. Data validation was performed in accordance with a modified outline of the USEPA National Functional Guidelines (NFG) for Organic Superfund Methods Data Review (January 2017). Where specific guidance was not available, the data has been evaluated in a conservative manner consistent with industry standards using professional experience.

The analyses were performed by the following method:

Polychlorinated Biphenyls (PCBs) by Environmental Protection Agency (EPA) SW 846 Method 8082A

All sample results were subjected to Stage 2A data validation, which comprises an evaluation of quality control (QC) summary results.

The following are definitions of the data qualifiers utilized during data validation:

J (Estimated): The compound or analyte was analyzed for and positively identified by the laboratory; however the reported concentration is estimated due to non-conformances discovered during data validation.

U (Non-detected): The compound or analyte was analyzed for and positively identified by the laboratory; however the compound or analyte should be considered non-detected at the reported concentration due to the presence of contaminants detected in the associated blank(s).

UJ (Non-detected estimated): The compound or analyte was reported as not detected by the laboratory; however the reported quantitation/detection limit is estimated due to non-conformances discovered during data validation.

R (Rejected): The sample results were rejected due to gross non-conformances discovered during data validation. Data qualified as rejected is not usable.

NA (Not Applicable): The non-conformance discovered during data validation demonstrates a high bias, while the affected compound or analyte in the associated sample(s) was reported as not detected by the laboratory and did not warrant the qualification of the data.

A qualification summary table is provided at the end of this report if data has been qualified. Flags are classified as P (protocol) or A (advisory) to indicate whether the flag is due to a laboratory deviation from a specified protocol or is of technical advisory nature.

I. Sample Receipt and Technical Holding Times

All samples were received in good condition and cooler temperatures upon receipt met validation criteria.

All technical holding time requirements were met.

II. Initial Calibration and Initial Calibration Verification

Initial calibration data were not reviewed for Stage 2A validation.

III. Continuing Calibration

Continuing calibration data were not reviewed for Stage 2A validation.

IV. Laboratory Blanks

Laboratory blanks were analyzed as required by the method. No contaminants were found in the laboratory blanks.

V. Field Blanks

No field blanks were identified in this SDG.

VI. Surrogates

Surrogates were added to all samples as required by the method. All surrogate recoveries (%R) were within QC limits.

VII. Matrix Spike/Matrix Spike Duplicates

Matrix spike (MS) and matrix spike duplicate (MSD) sample analysis was performed on an associated project sample. Percent recoveries (%R) were within QC limits with the following exceptions:

Spike ID (Associated Samples)	Compound	MS (%R) (Limits)	MSD (%R) (Limits)	Flag	A or P
CMS-S-48-4MS/MSD (CMS-S-48-4)	Aroclor-1260	-	140 (25-137)	NA	-

Relative percent differences (RPD) were within QC limits.

VIII. Laboratory Control Samples

Laboratory control samples (LCS) were analyzed as required by the method. Percent recoveries (%R) were within QC limits.

IX. Field Duplicates

Samples CMS-515 and CMS-S-50-4 were identified as field duplicates. No results were detected in any of the samples.

X. Compound Quantitation

Raw data were not reviewed for Stage 2A validation.

XI. Target Compound Identification

Raw data were not reviewed for Stage 2A validation.

XII. Overall Assessment of Data

The analysis was conducted within all specifications of the method. No results were rejected in this SDG.

Kimberly-Clark Upland Area
Polychlorinated Biphenyls - Data Qualification Summary - SDG 008492

No Sample Data Qualified in this SDG

Kimberly-Clark Upland Area
Polychlorinated Biphenyls - Laboratory Blank Data Qualification Summary - SDG 008492

No Sample Data Qualified in this SDG

Kimberly-Clark Upland Area
Polychlorinated Biphenyls - Field Blank Data Qualification Summary - SDG 008492

No Sample Data Qualified in this SDG

LDC #: 49215G3b
SDG #: 008492
Laboratory: Friedman & Bruya, Inc.

VALIDATION COMPLETENESS WORKSHEET
Stage 2A

Date: 10/10/20
Page: 1 of 1
Reviewer: VT
2nd Reviewer:

METHOD: GC Polychlorinated Biphenyls (EPA SW846 Method 8082A)

The samples listed below were reviewed for each of the following validation areas. Validation findings are noted in attached validation findings worksheets.

	Validation Area		Comments
I.	Sample receipt/Technical holding times	A/A	
II.	Initial calibration/ICV	N/N	
III.	Continuing calibration	N	
IV.	Laboratory Blanks	A	
V.	Field blanks	N	
VI.	Surrogate spikes	A	
VII.	Matrix spike/Matrix spike duplicates	SW	(5,6)
VIII.	Laboratory control samples	A	LCS
IX.	Field duplicates	ND	D=3+4
X.	Compound quantitation/RL/LOQ/LODs	N	
XI.	Target compound identification	N	
XII.	Overall assessment of data	A	

Note: A = Acceptable; N = Not provided/applicable; SW = See worksheet; ND = No compounds detected; R = Rinsate; FB = Field blank; D = Duplicate; TB = Trip blank; EB = Equipment blank; SB=Source blank; OTHER:

	Client ID		Lab ID	Matrix	Date
1	CMS-S-48-4		008492-01	Soil	08/31/20
2	CMS-S-49-4		008492-02	Soil	08/31/20
3	CMS-515	D	008492-03	Soil	08/31/20
4	CMS-S-50-4	D	008492-04	Soil	08/31/20
5	CMS-S-48-4MS		008492-01MS	Soil	08/31/20
6	CMS-S-48-4MSD		008492-01MSD	Soil	08/31/20
7					
8					
9					
10					
11					
12					
13					

Notes:

1	00-1976 MB						

LDC #: 49215G3b

VALIDATION FINDINGS WORKSHEET
Matrix Spike/Matrix Spike Duplicates

Reviewer: LT

METHOD: X **GC** ___ **HPLC**

Please see qualifications below for all questions answered "N". Not applicable questions are identified as "N/A".

Y x N___ N/A ___ Were a matrix spike (MS) and matrix spike duplicate (MSD) analyzed for each matrix in this SDG?

Y x N___ N/A___ Was an MS/MSD analyzed every 20 samples for each matrix or whenever a sample extraction was performed?

Y___ N x N/A___ Were the MS/MSD percent recoveries (%R) and relative percent differences (RPD) within QC limits?

#	MS/MSD ID	Compound	MS %R (Limits)	MSD %R (Limits)	RPD (Limits)	Associated Samples	Qualifications
	5/6	Aroclor 1260		140 (25 - 137)		1 (ND)	J/A dets

Laboratory Data Consultants, Inc.
Data Validation Report

Project/Site Name: Kimberly-Clark Upland Area

LDC Report Date: October 8, 2020

Parameters: Metals

Validation Level: Stage 2A

Laboratory: Friedman & Bruya, Inc.

Sample Delivery Group (SDG): 009024

Sample Identification	Laboratory Sample Identification	Matrix	Collection Date
BBH-S-01-4	009024-01	Soil	09/01/20
BBH-S-02-4	009024-02	Soil	09/01/20
BBH-S-03-4	009024-03	Soil	09/01/20
BBH-S-04-4	009024-04	Soil	09/01/20
BBH-S-05-4	009024-05	Soil	09/01/20
BBH-S-06-4	009024-06	Soil	09/01/20
BBH-S-08-4	009024-07	Soil	09/01/20
BBH-S-07-4	009024-08	Soil	09/01/20
BBH-S-01-4MS	009024-01MS	Soil	09/01/20
BBH-S-01-4MSD	009024-01MSD	Soil	09/01/20

Introduction

This Data Validation Report (DVR) presents data validation findings and results for the associated samples listed on the cover page. Data validation was performed in accordance with a modified outline of the USEPA National Functional Guidelines (NFG) for Inorganic Superfund Methods Data Review (January 2017). Where specific guidance was not available, the data has been evaluated in a conservative manner consistent with industry standards using professional experience.

The analyses were performed by the following methods:

Copper and Zinc by Environmental Protection Agency (EPA) SW 846 Method 6020B
Mercury by EPA Method 1631E

All sample results were subjected to Stage 2A data validation, which comprises an evaluation of quality control (QC) summary results.

The following are definitions of the data qualifiers utilized during data validation:

J (Estimated): The compound or analyte was analyzed for and positively identified by the laboratory; however the reported concentration is estimated due to non-conformances discovered during data validation.

U (Non-detected): The compound or analyte was analyzed for and positively identified by the laboratory; however the compound or analyte should be considered non-detected at the reported concentration due to the presence of contaminants detected in the associated blank(s).

UJ (Non-detected estimated): The compound or analyte was reported as not detected by the laboratory; however the reported quantitation/detection limit is estimated due to non-conformances discovered during data validation.

R (Rejected): The sample results were rejected due to gross non-conformances discovered during data validation. Data qualified as rejected is not usable.

NA (Not Applicable): The non-conformance discovered during data validation demonstrates a high bias, while the affected compound or analyte in the associated sample(s) was reported as not detected by the laboratory and did not warrant the qualification of the data.

A qualification summary table is provided at the end of this report if data has been qualified. Flags are classified as P (protocol) or A (advisory) to indicate whether the flag is due to a laboratory deviation from a specified protocol or is of technical advisory nature.

I. Sample Receipt and Technical Holding Times

All samples were received in good condition.

All technical holding time requirements were met.

II. ICPMS Tune

ICP-MS tune data were not reviewed for Stage 2A validation.

III. Instrument Calibration

Instrument calibration data were not reviewed for Stage 2A validation.

IV. ICP Interference Check Sample Analysis

ICP Interference check sample (ICS) analysis data were not reviewed for Stage 2A validation.

V. Laboratory Blanks

Laboratory blanks were analyzed as required by the methods. No contaminants were found in the laboratory blanks.

VI. Field Blanks

No field blanks were identified in this SDG.

VII. Matrix Spike/Matrix Spike Duplicates

Matrix spike (MS) and matrix spike duplicate (MSD) sample analysis was performed on an associated project sample. Percent recoveries (%R) were within QC limits with the following exceptions:

Spike ID (Associated Samples)	Analyte	MS (%R) (Limits)	MSD (%R) (Limits)	Flag	A or P
BBH-S-01-4MS/MSD (All samples in SDG 009024)	Copper	0 (75-125)	0 (75-125)	J (all detects)	A
BBH-S-01-4MS/MSD (BBH-S-01-4 BBH-S-02-4 BBH-S-03-4 BBH-S-05-4 BBH-S-08-4)	Mercury	224 (71-125)	232 (71-125)	J (all detects)	A
BBH-S-01-4MS/MSD (BBH-S-04-4 BBH-S-06-4 BBH-S-07-4)	Mercury	224 (71-125)	232 (71-125)	NA	-

Relative percent differences (RPD) were within QC limits.

VIII. Duplicate Sample Analysis

The laboratory has indicated that there were no duplicate (DUP) analyses specified for the samples in this SDG, and therefore duplicate analyses were not performed for this SDG.

IX. Serial Dilution

Serial dilution was not performed for this SDG.

X. Laboratory Control Samples

Laboratory control samples (LCS) were analyzed as required by the methods. Percent recoveries (%R) were within QC limits.

XI. Field Duplicates

No field duplicates were identified in this SDG.

XII. Internal Standards (ICP-MS)

Internal standards data were not reviewed for Stage 2A validation.

XIII. Sample Result Verification

Raw data were not reviewed for Stage 2A validation.

XIV. Overall Assessment of Data

The analysis was conducted within all specifications of the methods.

Due to MS/MSD %R, data were qualified as estimated in eight samples.

No results were rejected in this SDG.

Kimberly-Clark Upland Area
Metals - Data Qualification Summary - SDG 009024

Sample	Analyte	Flag	A or P	Reason
BBH-S-01-4 BBH-S-02-4 BBH-S-03-4 BBH-S-04-4 BBH-S-05-4 BBH-S-06-4 BBH-S-08-4 BBH-S-07-4	Copper	J (all detects)	A	Matrix spike/Matrix spike duplicate (%R)
BBH-S-01-4 BBH-S-02-4 BBH-S-03-4 BBH-S-05-4 BBH-S-08-4	Mercury	J (all detects)	A	Matrix spike/Matrix spike duplicate (%R)

Kimberly-Clark Upland Area
Metals - Laboratory Blank Data Qualification Summary - SDG 009024

No Sample Data Qualified in this SDG

Kimberly-Clark Upland Area
Metals - Field Blank Data Qualification Summary - SDG 009024

No Sample Data Qualified in this SDG

LDC #: 49215H4a
SDG #: 009024
Laboratory: Friedman & Bruya, Inc.

VALIDATION COMPLETENESS WORKSHEET
Stage 2A

Date: 10/2/2020
Page: 1 of 1
Reviewer: OM
2nd Reviewer:

METHOD: Metals (EPA SW 846 Method 6020B/EPA Method 1631E)

The samples listed below were reviewed for each of the following validation areas. Validation findings are noted in attached validation findings worksheets.

	Validation Area		Comments
I.	Sample receipt/Technical holding times	A / A	
II.	ICP/MS Tune	N	
III.	Instrument Calibration	N	
IV.	ICP Interference Check Sample (ICS) Analysis	N	
V.	Laboratory Blanks	A	
VI.	Field Blanks	N	
VII.	Matrix Spike/Matrix Spike Duplicates	SW	
VIII.	Duplicate sample analysis	N	
IX.	Serial Dilution	N	
X.	Laboratory control samples	A	LCS
XI.	Field Duplicates	N	
XII.	Internal Standard (ICP-MS)	N	
XIII.	Sample Result Verification	N	
XIV	Overall Assessment of Data	A	

Note: A = Acceptable; N = Not provided/applicable; SW = See worksheet; ND = No compounds detected; R = Rinsate; FB = Field blank; D = Duplicate; TB = Trip blank; EB = Equipment blank; SB=Source blank; OTHER:

	Client ID	Lab ID	Matrix	Date
1	BBH-S-01-4	009024-01	Soil	09/01/20
2	BBH-S-02-4	009024-02	Soil	09/01/20
3	BBH-S-03-4	009024-03	Soil	09/01/20
4	BBH-S-04-4	009024-04	Soil	09/01/20
5	BBH-S-05-4	009024-05	Soil	09/01/20
6	BBH-S-06-4	009024-06	Soil	09/01/20
7	BBH-S-08-4	009024-07	Soil	09/01/20
8	BBH-S-07-4	009024-08	Soil	09/01/20
9	BBH-S-01-4MS	009024-01MS	Soil	09/01/20
10	BBH-S-01-4MSD	009024-01MSD	Soil	09/01/20
11				
12				
13				
14				

Notes:

LDC #: 49215HH9

VALIDATION FINDINGS WORKSHEET
Sample Specific Element Reference

Reviewer: DTM

All circled elements are applicable to each sample.

Sample ID	Matrix	Target Analyte List (TAL)
1-8	S	Al, Sb, As, Ba, Be, B, Cd, Ca, Cr, Co, (Cu), Fe, Pb, Li, Mg, Mo, Mn, (Hg), Ni, K, Se, Ag, Na, Sr, Tl, Sn, Ti, W, U, V, (Zn)
		Al, Sb, As, Ba, Be, B, Cd, Ca, Cr, Co, Cu, Fe, Pb, Li, Mg, Mo, Mn, Hg, Ni, K, Se, Ag, Na, Sr, Tl, Sn, Ti, W, U, V, Zn
QC9-10	S	Al, Sb, As, Ba, Be, B, Cd, Ca, Cr, Co, Cu, Fe, Pb, Li, Mg, Mo, Mn, Hg, Ni, K, Se, Ag, Na, Sr, Tl, Sn, Ti, W, U, V, Zn
		Al, Sb, As, Ba, Be, B, Cd, Ca, Cr, Co, Cu, Fe, Pb, Li, Mg, Mo, Mn, Hg, Ni, K, Se, Ag, Na, Sr, Tl, Sn, Ti, W, U, V, Zn
		Al, Sb, As, Ba, Be, B, Cd, Ca, Cr, Co, Cu, Fe, Pb, Li, Mg, Mo, Mn, Hg, Ni, K, Se, Ag, Na, Sr, Tl, Sn, Ti, W, U, V, Zn
		Al, Sb, As, Ba, Be, B, Cd, Ca, Cr, Co, Cu, Fe, Pb, Li, Mg, Mo, Mn, Hg, Ni, K, Se, Ag, Na, Sr, Tl, Sn, Ti, W, U, V, Zn
		Al, Sb, As, Ba, Be, B, Cd, Ca, Cr, Co, Cu, Fe, Pb, Li, Mg, Mo, Mn, Hg, Ni, K, Se, Ag, Na, Sr, Tl, Sn, Ti, W, U, V, Zn
		Al, Sb, As, Ba, Be, B, Cd, Ca, Cr, Co, Cu, Fe, Pb, Li, Mg, Mo, Mn, Hg, Ni, K, Se, Ag, Na, Sr, Tl, Sn, Ti, W, U, V, Zn
		Al, Sb, As, Ba, Be, B, Cd, Ca, Cr, Co, Cu, Fe, Pb, Li, Mg, Mo, Mn, Hg, Ni, K, Se, Ag, Na, Sr, Tl, Sn, Ti, W, U, V, Zn
		Al, Sb, As, Ba, Be, B, Cd, Ca, Cr, Co, Cu, Fe, Pb, Li, Mg, Mo, Mn, Hg, Ni, K, Se, Ag, Na, Sr, Tl, Sn, Ti, W, U, V, Zn
		Al, Sb, As, Ba, Be, B, Cd, Ca, Cr, Co, Cu, Fe, Pb, Li, Mg, Mo, Mn, Hg, Ni, K, Se, Ag, Na, Sr, Tl, Sn, Ti, W, U, V, Zn
		Al, Sb, As, Ba, Be, B, Cd, Ca, Cr, Co, Cu, Fe, Pb, Li, Mg, Mo, Mn, Hg, Ni, K, Se, Ag, Na, Sr, Tl, Sn, Ti, W, U, V, Zn
		Al, Sb, As, Ba, Be, B, Cd, Ca, Cr, Co, Cu, Fe, Pb, Li, Mg, Mo, Mn, Hg, Ni, K, Se, Ag, Na, Sr, Tl, Sn, Ti, W, U, V, Zn
		Al, Sb, As, Ba, Be, B, Cd, Ca, Cr, Co, Cu, Fe, Pb, Li, Mg, Mo, Mn, Hg, Ni, K, Se, Ag, Na, Sr, Tl, Sn, Ti, W, U, V, Zn
		Al, Sb, As, Ba, Be, B, Cd, Ca, Cr, Co, Cu, Fe, Pb, Li, Mg, Mo, Mn, Hg, Ni, K, Se, Ag, Na, Sr, Tl, Sn, Ti, W, U, V, Zn
		Al, Sb, As, Ba, Be, B, Cd, Ca, Cr, Co, Cu, Fe, Pb, Li, Mg, Mo, Mn, Hg, Ni, K, Se, Ag, Na, Sr, Tl, Sn, Ti, W, U, V, Zn
		Al, Sb, As, Ba, Be, B, Cd, Ca, Cr, Co, Cu, Fe, Pb, Li, Mg, Mo, Mn, Hg, Ni, K, Se, Ag, Na, Sr, Tl, Sn, Ti, W, U, V, Zn
		Al, Sb, As, Ba, Be, B, Cd, Ca, Cr, Co, Cu, Fe, Pb, Li, Mg, Mo, Mn, Hg, Ni, K, Se, Ag, Na, Sr, Tl, Sn, Ti, W, U, V, Zn
		Al, Sb, As, Ba, Be, B, Cd, Ca, Cr, Co, Cu, Fe, Pb, Li, Mg, Mo, Mn, Hg, Ni, K, Se, Ag, Na, Sr, Tl, Sn, Ti, W, U, V, Zn
		Al, Sb, As, Ba, Be, B, Cd, Ca, Cr, Co, Cu, Fe, Pb, Li, Mg, Mo, Mn, Hg, Ni, K, Se, Ag, Na, Sr, Tl, Sn, Ti, W, U, V, Zn
		Al, Sb, As, Ba, Be, B, Cd, Ca, Cr, Co, Cu, Fe, Pb, Li, Mg, Mo, Mn, Hg, Ni, K, Se, Ag, Na, Sr, Tl, Sn, Ti, W, U, V, Zn
Analysis Method		
ICP		Al, Sb, As, Ba, Be, B, Cd, Ca, Cr, Co, Cu, Fe, Pb, Li, Mg, Mo, Mn, Hg, Ni, K, Se, Ag, Na, Sr, Tl, Sn, Ti, W, U, V, Zn
ICP-MS		Al, Sb, As, Ba, Be, B, Cd, Ca, Cr, Co, Cu, Fe, Pb, Li, Mg, Mo, Mn, Hg, Ni, K, Se, Ag, Na, Sr, Tl, Sn, Ti, W, U, V, Zn
GFAA		Al, Sb, As, Ba, Be, B, Cd, Ca, Cr, Co, Cu, Fe, Pb, Li, Mg, Mo, Mn, Hg, Ni, K, Se, Ag, Na, Sr, Tl, Sn, Ti, W, U, V, Zn

Comments: Mercury by CVAA if performed

LDC #:49215H4a

VALIDATION FINDINGS WORKSHEET
Matrix Spike/Matrix Spike Duplicates

METHOD: Trace metals (EPA SW 846 Method 6020/6010/7470)

Please see qualifications below for all questions answered "N". Not applicable questions are identified as "N/A".

Y N N/A Was a matrix spike analyzed for each matrix in this SDG?

Y N N/A Were matrix spike percent recoveries (%R) within the control limits of 75-125? If the sample concentration exceeded the spike concentration by a factor of 4 or more, no action was taken.

Y N N/A Were all duplicate sample relative percent differences (RPD) ≤ 20% for samples?

LEVEL IV ONLY:

Y N N/A Were recalculated results acceptable? See Level IV Recalculation Worksheet for recalculations.

#	MS/MSD ID	Matrix	Analyte	MS %Recovery	MSD %Recovery	RPD (Limits)	Associated Samples	Qualifications
	9/10	S	Cu	0(75-125)	0		ALL	J/R/A (det)
			Hg	224(71-125)	232		ALL	J/A ~~(ND/det)~~ (1-3,5,7=det)

Comments:_____

Laboratory Data Consultants, Inc.
Data Validation Report

Project/Site Name: Kimberly-Clark Upland Area

LDC Report Date: October 8, 2020

Parameters: Metals

Validation Level: Stage 2A

Laboratory: Friedman & Bruya, Inc.

Sample Delivery Group (SDG): 009056

Sample Identification	Laboratory Sample Identification	Matrix	Collection Date
BBH-S-09-4	009056-01	Soil	09/02/20
BBH-S-10-4	009056-02	Soil	09/02/20
BBH-S-11-4	009056-03	Soil	09/02/20
BBH-S-12-4	009056-04	Soil	09/02/20
BBH-S-13-4	009056-05	Soil	09/02/20
BBH-S-14-4	009056-06	Soil	09/02/20
BBH-S-15-4	009056-07	Soil	09/02/20
BBH-S-16-4	009056-08	Soil	09/02/20
BBH-S-16-4DL	009056-08DL	Soil	09/02/20

Introduction

This Data Validation Report (DVR) presents data validation findings and results for the associated samples listed on the cover page. Data validation was performed in accordance with a modified outline of the USEPA National Functional Guidelines (NFG) for Inorganic Superfund Methods Data Review (January 2017). Where specific guidance was not available, the data has been evaluated in a conservative manner consistent with industry standards using professional experience.

The analyses were performed by the following methods:

Copper and Zinc by Environmental Protection Agency (EPA) SW 846 Method 6020B
Mercury by EPA Method 1631E

All sample results were subjected to Stage 2A data validation, which comprises an evaluation of quality control (QC) summary results.

The following are definitions of the data qualifiers utilized during data validation:

J (Estimated): The compound or analyte was analyzed for and positively identified by the laboratory; however the reported concentration is estimated due to non-conformances discovered during data validation.

U (Non-detected): The compound or analyte was analyzed for and positively identified by the laboratory; however the compound or analyte should be considered non-detected at the reported concentration due to the presence of contaminants detected in the associated blank(s).

UJ (Non-detected estimated): The compound or analyte was reported as not detected by the laboratory; however the reported quantitation/detection limit is estimated due to non-conformances discovered during data validation.

R (Rejected): The sample results were rejected due to gross non-conformances discovered during data validation. Data qualified as rejected is not usable.

NA (Not Applicable): The non-conformance discovered during data validation demonstrates a high bias, while the affected compound or analyte in the associated sample(s) was reported as not detected by the laboratory and did not warrant the qualification of the data.

DNR (Do Not Report): A more appropriate result is reported from another analysis or dilution.

A qualification summary table is provided at the end of this report if data has been qualified. Flags are classified as P (protocol) or A (advisory) to indicate whether the flag is due to a laboratory deviation from a specified protocol or is of technical advisory nature.

I. Sample Receipt and Technical Holding Times

All samples were received in good condition.

All technical holding time requirements were met.

II. ICPMS Tune

ICP-MS tune data were not reviewed for Stage 2A validation.

III. Instrument Calibration

Instrument calibration data were not reviewed for Stage 2A validation.

IV. ICP Interference Check Sample Analysis

ICP Interference check sample (ICS) analysis data were not reviewed for Stage 2A validation.

V. Laboratory Blanks

Laboratory blanks were analyzed as required by the methods. No contaminants were found in the laboratory blanks.

VI. Field Blanks

No field blanks were identified in this SDG.

VII. Matrix Spike/Matrix Spike Duplicates

The laboratory has indicated that there were no matrix spike (MS) and matrix spike duplicate (MSD) analyses specified for the samples in this SDG, and therefore matrix spike and matrix spike duplicate analyses were not performed for this SDG.

VIII. Duplicate Sample Analysis

The laboratory has indicated that there were no duplicate (DUP) analyses specified for the samples in this SDG, and therefore duplicate analyses were not performed for this SDG.

IX. Serial Dilution

Serial dilution was not performed for this SDG.

X. Laboratory Control Samples

Laboratory control samples (LCS) were analyzed as required by the methods. Percent recoveries (%R) were within QC limits.

XI. Field Duplicates

No field duplicates were identified in this SDG.

XII. Internal Standards (ICP-MS)

Internal standards data were not reviewed for Stage 2A validation.

XIII. Sample Result Verification

Raw data were not reviewed for Stage 2A validation.

XIV. Overall Assessment of Data

The analysis was conducted within all specifications of the methods.

In the case where more than one result was reported for an individual sample, the least technically acceptable results were deemed not reportable as follows:

Sample	Analyte	Reason	Flag	A or P
BBH-S-16-4DL	Copper Zinc	Results from undiluted analyses were more usable.	DNR	-

No results were rejected in this SDG.

Kimberly-Clark Upland Area
Metals - Data Qualification Summary - SDG 009056

Sample	Analyte	Flag	A or P	Reason
BBH-S-16-4DL	Copper Zinc	DNR	-	Overall assessment of data

Kimberly-Clark Upland Area
Metals - Laboratory Blank Data Qualification Summary - SDG 009056

No Sample Data Qualified in this SDG

Kimberly-Clark Upland Area
Metals - Field Blank Data Qualification Summary - SDG 009056

No Sample Data Qualified in this SDG

LDC #: 49215l4a
SDG #: 009056
Laboratory: Friedman & Bruya, Inc.

VALIDATION COMPLETENESS WORKSHEET
Stage 2A

Date: 9/7/2020
Page: 1 of 1
Reviewer: KM
2nd Reviewer:

METHOD: Metals (EPA SW 846 Method 6020B/EPA Method 1631E)

The samples listed below were reviewed for each of the following validation areas. Validation findings are noted in attached validation findings worksheets.

	Validation Area		Comments
I.	Sample receipt/Technical holding times	A / A	
II.	ICP/MS Tune	N	
III.	Instrument Calibration	N	
IV.	ICP Interference Check Sample (ICS) Analysis	N	
V.	Laboratory Blanks	A	
VI.	Field Blanks	N	
VII.	Matrix Spike/Matrix Spike Duplicates	N	
VIII.	Duplicate sample analysis	N	
IX.	Serial Dilution	N	
X.	Laboratory control samples	A	LCS
XI.	Field Duplicates	N	
XII.	Internal Standard (ICP-MS)	N	
XIII.	Sample Result Verification	N	
XIV	Overall Assessment of Data	SW	

Note: A = Acceptable; N = Not provided/applicable; SW = See worksheet; ND = No compounds detected; R = Rinsate; FB = Field blank; D = Duplicate; TB = Trip blank; EB = Equipment blank; SB=Source blank; OTHER:

	Client ID	Lab ID	Matrix	Date
1	BBH-S-09-4	009056-01	Soil	09/02/20
2	BBH-S-10-4	009056-02	Soil	09/02/20
3	BBH-S-11-4	009056-03	Soil	09/02/20
4	BBH-S-12-4	009056-04	Soil	09/02/20
5	BBH-S-13-4	009056-05	Soil	09/02/20
6	BBH-S-14-4	009056-06	Soil	09/02/20
7	BBH-S-15-4	009056-07	Soil	09/02/20
8	BBH-S-16-4	009056-08	Soil	09/02/20
9	BBH-S-16-4DL	009056-08DL	Soil	09/02/20
10				
11				
12				
13				
14				

Notes:

LDC #: 49215I49

VALIDATION FINDINGS WORKSHEET
Sample Specific Element Reference

Reviewer: DTM

All circled elements are applicable to each sample.

Sample ID	Matrix	Target Analyte List (TAL)
1-9	S	Al, Sb, As, Ba, Be, B, Cd, Ca, Cr, Co, (Cu), Fe, Pb, Li, Mg, Mo, Mn, (Hg), Ni, K, Se, Ag, Na, Sr, Tl, Sn, Ti, W, U, V, (Zn)
		Al, Sb, As, Ba, Be, B, Cd, Ca, Cr, Co, Cu, Fe, Pb, Li, Mg, Mo, Mn, Hg, Ni, K, Se, Ag, Na, Sr, Tl, Sn, Ti, W, U, V, Zn
9	S	Al, Sb, As, Ba, Be, B, Cd, Ca, Cr, Co, (Cu), Fe, Pb, Li, Mg, Mo, Mn, Hg, Ni, K, Se, Ag, Na, Sr, Tl, Sn, Ti, W, U, V, (Zn)
		Al, Sb, As, Ba, Be, B, Cd, Ca, Cr, Co, Cu, Fe, Pb, Li, Mg, Mo, Mn, Hg, Ni, K, Se, Ag, Na, Sr, Tl, Sn, Ti, W, U, V, Zn
		Al, Sb, As, Ba, Be, B, Cd, Ca, Cr, Co, Cu, Fe, Pb, Li, Mg, Mo, Mn, Hg, Ni, K, Se, Ag, Na, Sr, Tl, Sn, Ti, W, U, V, Zn
		Al, Sb, As, Ba, Be, B, Cd, Ca, Cr, Co, Cu, Fe, Pb, Li, Mg, Mo, Mn, Hg, Ni, K, Se, Ag, Na, Sr, Tl, Sn, Ti, W, U, V, Zn
		Al, Sb, As, Ba, Be, B, Cd, Ca, Cr, Co, Cu, Fe, Pb, Li, Mg, Mo, Mn, Hg, Ni, K, Se, Ag, Na, Sr, Tl, Sn, Ti, W, U, V, Zn
		Al, Sb, As, Ba, Be, B, Cd, Ca, Cr, Co, Cu, Fe, Pb, Li, Mg, Mo, Mn, Hg, Ni, K, Se, Ag, Na, Sr, Tl, Sn, Ti, W, U, V, Zn
		Al, Sb, As, Ba, Be, B, Cd, Ca, Cr, Co, Cu, Fe, Pb, Li, Mg, Mo, Mn, Hg, Ni, K, Se, Ag, Na, Sr, Tl, Sn, Ti, W, U, V, Zn
		Al, Sb, As, Ba, Be, B, Cd, Ca, Cr, Co, Cu, Fe, Pb, Li, Mg, Mo, Mn, Hg, Ni, K, Se, Ag, Na, Sr, Tl, Sn, Ti, W, U, V, Zn
		Al, Sb, As, Ba, Be, B, Cd, Ca, Cr, Co, Cu, Fe, Pb, Li, Mg, Mo, Mn, Hg, Ni, K, Se, Ag, Na, Sr, Tl, Sn, Ti, W, U, V, Zn
		Al, Sb, As, Ba, Be, B, Cd, Ca, Cr, Co, Cu, Fe, Pb, Li, Mg, Mo, Mn, Hg, Ni, K, Se, Ag, Na, Sr, Tl, Sn, Ti, W, U, V, Zn
		Al, Sb, As, Ba, Be, B, Cd, Ca, Cr, Co, Cu, Fe, Pb, Li, Mg, Mo, Mn, Hg, Ni, K, Se, Ag, Na, Sr, Tl, Sn, Ti, W, U, V, Zn
		Al, Sb, As, Ba, Be, B, Cd, Ca, Cr, Co, Cu, Fe, Pb, Li, Mg, Mo, Mn, Hg, Ni, K, Se, Ag, Na, Sr, Tl, Sn, Ti, W, U, V, Zn
		Al, Sb, As, Ba, Be, B, Cd, Ca, Cr, Co, Cu, Fe, Pb, Li, Mg, Mo, Mn, Hg, Ni, K, Se, Ag, Na, Sr, Tl, Sn, Ti, W, U, V, Zn
		Al, Sb, As, Ba, Be, B, Cd, Ca, Cr, Co, Cu, Fe, Pb, Li, Mg, Mo, Mn, Hg, Ni, K, Se, Ag, Na, Sr, Tl, Sn, Ti, W, U, V, Zn
		Al, Sb, As, Ba, Be, B, Cd, Ca, Cr, Co, Cu, Fe, Pb, Li, Mg, Mo, Mn, Hg, Ni, K, Se, Ag, Na, Sr, Tl, Sn, Ti, W, U, V, Zn
		Al, Sb, As, Ba, Be, B, Cd, Ca, Cr, Co, Cu, Fe, Pb, Li, Mg, Mo, Mn, Hg, Ni, K, Se, Ag, Na, Sr, Tl, Sn, Ti, W, U, V, Zn
		Al, Sb, As, Ba, Be, B, Cd, Ca, Cr, Co, Cu, Fe, Pb, Li, Mg, Mo, Mn, Hg, Ni, K, Se, Ag, Na, Sr, Tl, Sn, Ti, W, U, V, Zn
		Al, Sb, As, Ba, Be, B, Cd, Ca, Cr, Co, Cu, Fe, Pb, Li, Mg, Mo, Mn, Hg, Ni, K, Se, Ag, Na, Sr, Tl, Sn, Ti, W, U, V, Zn
Analysis Method		
ICP		Al, Sb, As, Ba, Be, B, Cd, Ca, Cr, Co, Cu, Fe, Pb, Li, Mg, Mo, Mn, Hg, Ni, K, Se, Ag, Na, Sr, Tl, Sn, Ti, W, U, V, Zn
ICP-MS		Al, Sb, As, Ba, Be, B, Cd, Ca, Cr, Co, Cu, Fe, Pb, Li, Mg, Mo, Mn, Hg, Ni, K, Se, Ag, Na, Sr, Tl, Sn, Ti, W, U, V, Zn
GFAA		Al, Sb, As, Ba, Be, B, Cd, Ca, Cr, Co, Cu, Fe, Pb, Li, Mg, Mo, Mn, Hg, Ni, K, Se, Ag, Na, Sr, Tl, Sn, Ti, W, U, V, Zn

Comments: Mercury by CVAA if performed

LDC #: 49215I4a

VALIDATION FINDINGS WORKSHEET
Overall Assessment of Data

Reviewer: DTM

METHOD: Trace Metals (EPA SW 846 Method 6010/6020/7000)

Please see qualifications below for all questions answered "N". Not applicable questions are identified as "N/A".

All available information pertaining to the data were reviewed using professional judgement to compliment the determination of the overall quality of the data.

Y N N/A Was the overall quality and usability of the data acceptable?

#	Date	Sample ID	Analyte	Finding	Qualification
		9	Cu,Zn	Samples' internal standard passed, but original analyses was accepted due to detected result.	DNR

Laboratory Data Consultants, Inc.
Data Validation Report

Project/Site Name: Kimberly-Clark Upland Area

LDC Report Date: October 8, 2020

Parameters: Metals

Validation Level: Stage 2A

Laboratory: Friedman & Bruya, Inc.

Sample Delivery Group (SDG): 009132

Sample Identification	Laboratory Sample Identification	Matrix	Collection Date
BBH-S-17-4	009132-01	Soil	09/08/20
BBH-S-17-4DL	009132-01DL	Soil	09/08/20
BBH-S-18-4	009132-02	Soil	09/08/20
BBH-S-19-4	009132-03	Soil	09/08/20
BBH-S-19-4DL	009132-03DL	Soil	09/08/20
BBH-S-20-4	009132-04	Soil	09/08/20
BBH-516	009132-05	Soil	09/08/20
BBH-S-21-4	009132-06	Soil	09/08/20
BBH-S-22-4	009132-07	Soil	09/08/20
BBH-S-17-4MS	009132-01MS	Soil	09/08/20
BBH-S-17-4MSD	009132-01MSD	Soil	09/08/20

Introduction

This Data Validation Report (DVR) presents data validation findings and results for the associated samples listed on the cover page. Data validation was performed in accordance with a modified outline of the USEPA National Functional Guidelines (NFG) for Inorganic Superfund Methods Data Review (January 2017). Where specific guidance was not available, the data has been evaluated in a conservative manner consistent with industry standards using professional experience.

The analyses were performed by the following methods:

Copper and Zinc by Environmental Protection Agency (EPA) SW 846 Method 6020B
Mercury by EPA Method 1631E

All sample results were subjected to Stage 2A data validation, which comprises an evaluation of quality control (QC) summary results.

The following are definitions of the data qualifiers utilized during data validation:

J (Estimated): The compound or analyte was analyzed for and positively identified by the laboratory; however the reported concentration is estimated due to non-conformances discovered during data validation.

U (Non-detected): The compound or analyte was analyzed for and positively identified by the laboratory; however the compound or analyte should be considered non-detected at the reported concentration due to the presence of contaminants detected in the associated blank(s).

UJ (Non-detected estimated): The compound or analyte was reported as not detected by the laboratory; however the reported quantitation/detection limit is estimated due to non-conformances discovered during data validation.

R (Rejected): The sample results were rejected due to gross non-conformances discovered during data validation. Data qualified as rejected is not usable.

NA (Not Applicable): The non-conformance discovered during data validation demonstrates a high bias, while the affected compound or analyte in the associated sample(s) was reported as not detected by the laboratory and did not warrant the qualification of the data.

DNR (Do Not Report): A more appropriate result is reported from another analysis or dilution.

A qualification summary table is provided at the end of this report if data has been qualified. Flags are classified as P (protocol) or A (advisory) to indicate whether the flag is due to a laboratory deviation from a specified protocol or is of technical advisory nature.

I. Sample Receipt and Technical Holding Times

All samples were received in good condition.

All technical holding time requirements were met.

II. ICPMS Tune

ICP-MS tune data were not reviewed for Stage 2A validation.

III. Instrument Calibration

Instrument calibration data were not reviewed for Stage 2A validation.

IV. ICP Interference Check Sample Analysis

ICP Interference check sample (ICS) analysis data were not reviewed for Stage 2A validation.

V. Laboratory Blanks

Laboratory blanks were analyzed as required by the methods. No contaminants were found in the laboratory blanks.

VI. Field Blanks

No field blanks were identified in this SDG.

VII. Matrix Spike/Matrix Spike Duplicates

Matrix spike (MS) and matrix spike duplicate (MSD) sample analysis was performed on an associated project sample. Percent recoveries (%R) were within QC limits. Relative percent differences (RPD) were within QC limits.

VIII. Duplicate Sample Analysis

The laboratory has indicated that there were no duplicate (DUP) analyses specified for the samples in this SDG, and therefore duplicate analyses were not performed for this SDG.

IX. Serial Dilution

Serial dilution was not performed for this SDG.

X. Laboratory Control Samples

Laboratory control samples (LCS) were analyzed as required by the methods. Percent recoveries (%R) were within QC limits.

XI. Field Duplicates

Samples BBH-S-20-4 and BBH-516 were identified as field duplicates. No results were detected in any of the samples with the following exceptions:

Analyte	Concentration (mg/Kg)		RPD
	BBH-S-20-4	BBH-516	
Copper	28.7	23.4	20
Zinc	50.6	44.5	13
Mercury	0.30	0.37	21

XII. Internal Standards (ICP-MS)

Internal standards data were not reviewed for Stage 2A validation.

XIII. Sample Result Verification

Raw data were not reviewed for Stage 2A validation.

XIV. Overall Assessment of Data

The analysis was conducted within all specifications of the methods.

In the case where more than one result was reported for an individual sample, the least technically acceptable results were deemed not reportable as follows:

Sample	Analyte	Reason	Flag	A or P
BBH-S-17-4DL BBH-S-19-4DL	Copper	Results from undiluted analyses were more usable.	DNR	-

No results were rejected in this SDG.

Kimberly-Clark Upland Area
Metals - Data Qualification Summary - SDG 009132

Sample	Analyte	Flag	A or P	Reason
BBH-S-17-4DL BBH-S-19-4DL	Copper	DNR	-	Overall assessment of data

Kimberly-Clark Upland Area
Metals - Laboratory Blank Data Qualification Summary - SDG 009132

No Sample Data Qualified in this SDG

Kimberly-Clark Upland Area
Metals - Field Blank Data Qualification Summary - SDG 009132

No Sample Data Qualified in this SDG

LDC #: 49215J4a
SDG #: 009132
Laboratory: Friedman & Bruya, Inc.

VALIDATION COMPLETENESS WORKSHEET
Stage 2A

Date: 10/2/2020
Page: 1 of 1
Reviewer: DM
2nd Reviewer:

METHOD: Metals (EPA SW 846 Method 6020B/EPA Method 1631E)

The samples listed below were reviewed for each of the following validation areas. Validation findings are noted in attached validation findings worksheets.

	Validation Area		Comments
I.	Sample receipt/Technical holding times	A / A	
II.	ICP/MS Tune	N	
III.	Instrument Calibration	N	
IV.	ICP Interference Check Sample (ICS) Analysis	N	
V.	Laboratory Blanks	A	
VI.	Field Blanks	N	
VII.	Matrix Spike/Matrix Spike Duplicates	A	
VIII.	Duplicate sample analysis	N	
IX.	Serial Dilution	N	
X.	Laboratory control samples	A	LCS
XI.	Field Duplicates	SW	(6,7)
XII.	Internal Standard (ICP-MS)	N	
XIII.	Sample Result Verification	N	
XIV	Overall Assessment of Data	A SW	

Note: A = Acceptable; N = Not provided/applicable; SW = See worksheet; ND = No compounds detected; R = Rinsate; FB = Field blank; D = Duplicate; TB = Trip blank; EB = Equipment blank; SB=Source blank; OTHER:

	Client ID	Lab ID	Matrix	Date
1	BBH-S-17-4	009132-01	Soil	09/08/20
2	BBH-S-17-4DL	009132-01DL	Soil	09/08/20
3	BBH-S-18-4	009132-02	Soil	09/08/20
4	BBH-S-19-4	009132-03	Soil	09/08/20
5	BBH-S-19-4DL	009132-03DL	Soil	09/08/20
6	BBH-S-20-4	009132-04	Soil	09/08/20
7	BBH-516	009132-05	Soil	09/08/20
8	BBH-S-21-4	009132-06	Soil	09/08/20
9	BBH-S-22-4	009132-07	Soil	09/08/20
10	BBH-S-17-4MS	009132-01MS	Soil	09/08/20
11	BBH-S-17-4MSD	009132-01MSD	Soil	09/08/20
12				
13				
14				

Notes:

LDC #: 49215J49

VALIDATION FINDINGS WORKSHEET
Sample Specific Element Reference

Reviewer: DTM

All circled elements are applicable to each sample.

Sample ID	Matrix	Target Analyte List (TAL)
1,4	S	Al, Sb, As, Ba, Be, B, Cd, Ca, Cr, Co, (Cu), Fe, Pb, Li, Mg, Mo, Mn, (Hg), Ni, K, Se, Ag, Na, Sr, Tl, Sn, Ti, W, U, V, Zn
		Al, Sb, As, Ba, Be, B, Cd, Ca, Cr, Co, Cu, Fe, Pb, Li, Mg, Mo, Mn, Hg, Ni, K, Se, Ag, Na, Sr, Tl, Sn, Ti, W, U, V, Zn
2,5	S	Al, Sb, As, Ba, Be, B, Cd, Ca, Cr, Co, (Cu), Fe, Pb, Li, Mg, Mo, Mn, Hg, Ni, K, Se, Ag, Na, Sr, Tl, Sn, Ti, W, U, V, (Zn)
		Al, Sb, As, Ba, Be, B, Cd, Ca, Cr, Co, Cu, Fe, Pb, Li, Mg, Mo, Mn, Hg, Ni, K, Se, Ag, Na, Sr, Tl, Sn, Ti, W, U, V, Zn
3,7-9	S	Al, Sb, As, Ba, Be, B, Cd, Ca, Cr, Co, (Cu), Fe, Pb, Li, Mg, Mo, Mn, (Hg), Ni, K, Se, Ag, Na, Sr, Tl, Sn, Ti, W, U, V, (Zn)
		Al, Sb, As, Ba, Be, B, Cd, Ca, Cr, Co, Cu, Fe, Pb, Li, Mg, Mo, Mn, Hg, Ni, K, Se, Ag, Na, Sr, Tl, Sn, Ti, W, U, V, Zn
6	S	Al, Sb, As, Ba, Be, B, Cd, Ca, Cr, Co, (Cu), Fe, Pb, Li, Mg, Mo, Mn, Hg, Ni, K, Se, Ag, Na, Sr, Tl, Sn, Ti, W, U, V, (Zn)
		Al, Sb, As, Ba, Be, B, Cd, Ca, Cr, Co, Cu, Fe, Pb, Li, Mg, Mo, Mn, Hg, Ni, K, Se, Ag, Na, Sr, Tl, Sn, Ti, W, U, V, Zn
6	S	Al, Sb, As, Ba, Be, B, Cd, Ca, Cr, Co, Cu, Fe, Pb, Li, Mg, Mo, Mn, (Hg), Ni, K, Se, Ag, Na, Sr, Tl, Sn, Ti, W, U, V, Zn
		Al, Sb, As, Ba, Be, B, Cd, Ca, Cr, Co, Cu, Fe, Pb, Li, Mg, Mo, Mn, Hg, Ni, K, Se, Ag, Na, Sr, Tl, Sn, Ti, W, U, V, Zn
DC 10-11	S	Al, Sb, As, Ba, Be, B, Cd, Ca, Cr, Co, (Cu), Fe, Pb, Li, Mg, Mo, Mn, (Hg), Ni, K, Se, Ag, Na, Sr, Tl, Sn, Ti, W, U, V, (Zn)
		Al, Sb, As, Ba, Be, B, Cd, Ca, Cr, Co, Cu, Fe, Pb, Li, Mg, Mo, Mn, Hg, Ni, K, Se, Ag, Na, Sr, Tl, Sn, Ti, W, U, V, Zn
		Al, Sb, As, Ba, Be, B, Cd, Ca, Cr, Co, Cu, Fe, Pb, Li, Mg, Mo, Mn, Hg, Ni, K, Se, Ag, Na, Sr, Tl, Sn, Ti, W, U, V, Zn
		Al, Sb, As, Ba, Be, B, Cd, Ca, Cr, Co, Cu, Fe, Pb, Li, Mg, Mo, Mn, Hg, Ni, K, Se, Ag, Na, Sr, Tl, Sn, Ti, W, U, V, Zn
		Al, Sb, As, Ba, Be, B, Cd, Ca, Cr, Co, Cu, Fe, Pb, Li, Mg, Mo, Mn, Hg, Ni, K, Se, Ag, Na, Sr, Tl, Sn, Ti, W, U, V, Zn
		Al, Sb, As, Ba, Be, B, Cd, Ca, Cr, Co, Cu, Fe, Pb, Li, Mg, Mo, Mn, Hg, Ni, K, Se, Ag, Na, Sr, Tl, Sn, Ti, W, U, V, Zn
		Al, Sb, As, Ba, Be, B, Cd, Ca, Cr, Co, Cu, Fe, Pb, Li, Mg, Mo, Mn, Hg, Ni, K, Se, Ag, Na, Sr, Tl, Sn, Ti, W, U, V, Zn
		Al, Sb, As, Ba, Be, B, Cd, Ca, Cr, Co, Cu, Fe, Pb, Li, Mg, Mo, Mn, Hg, Ni, K, Se, Ag, Na, Sr, Tl, Sn, Ti, W, U, V, Zn
		Al, Sb, As, Ba, Be, B, Cd, Ca, Cr, Co, Cu, Fe, Pb, Li, Mg, Mo, Mn, Hg, Ni, K, Se, Ag, Na, Sr, Tl, Sn, Ti, W, U, V, Zn
		Al, Sb, As, Ba, Be, B, Cd, Ca, Cr, Co, Cu, Fe, Pb, Li, Mg, Mo, Mn, Hg, Ni, K, Se, Ag, Na, Sr, Tl, Sn, Ti, W, U, V, Zn
		Al, Sb, As, Ba, Be, B, Cd, Ca, Cr, Co, Cu, Fe, Pb, Li, Mg, Mo, Mn, Hg, Ni, K, Se, Ag, Na, Sr, Tl, Sn, Ti, W, U, V, Zn

Analysis Method		
ICP		Al, Sb, As, Ba, Be, B, Cd, Ca, Cr, Co, Cu, Fe, Pb, Li, Mg, Mo, Mn, Hg, Ni, K, Se, Ag, Na, Sr, Tl, Sn, Ti, W, U, V, Zn
ICP-MS		Al, Sb, As, Ba, Be, B, Cd, Ca, Cr, Co, Cu, Fe, Pb, Li, Mg, Mo, Mn, Hg, Ni, K, Se, Ag, Na, Sr, Tl, Sn, Ti, W, U, V, Zn
GFAA		Al, Sb, As, Ba, Be, B, Cd, Ca, Cr, Co, Cu, Fe, Pb, Li, Mg, Mo, Mn, Hg, Ni, K, Se, Ag, Na, Sr, Tl, Sn, Ti, W, U, V, Zn

Comments: Mercury by CVAA if performed

LDC#: 49215J4a

VALIDATION FINDINGS WORKSHEET
Field Duplicates

METHOD: Metals (EPA Method 6010/6020/7000)

Analyte	Concentration (mg/Kg)		RPD
	6	7	
Copper	28.7	23.4	20
Zinc	50.6	44.5	13
Mercury	0.30	0.37	21

V:\Darionna\FIELD DUPLICATES\Field Duplicates\FD_inorganic\2020\49215J4a.wpd

VALIDATION FINDINGS WORKSHEET
Overall Assessment of Data

METHOD: Trace Metals (EPA SW 846 Method 6010/6020/7000)

Please see qualifications below for all questions answered "N". Not applicable questions are identified as "N/A".

All available information pertaining to the data were reviewed using professional judgement to compliment the determination of the overall quality of the data.

Y N N/A Was the overall quality and usability of the data acceptable?

#	Date	Sample ID	Analyte	Finding	Qualification
		2,5	Cu	Samples' internal standard passed, but original analyses was accepted due to detected result.	DNR

Laboratory Data Consultants, Inc.
Data Validation Report

Project/Site Name: Kimberly-Clark Upland Area

LDC Report Date: October 8, 2020

Parameters: Metals

Validation Level: Stage 2A

Laboratory: Friedman & Bruya, Inc.

Sample Delivery Group (SDG): 009182

Sample Identification	Laboratory Sample Identification	Matrix	Collection Date
BBH-S-23-4	009182-01	Soil	09/09/20
BBH-S-24-4	009182-02	Soil	09/09/20
BBH-S-25-4	009182-03	Soil	09/09/20
BBH-S-26-4	009182-04	Soil	09/09/20
BBH-S-27-4	009182-05	Soil	09/09/20
BBH-S-28-4	009182-06	Soil	09/09/20
BBH-S-27-8	009182-07	Soil	09/10/20
BBH-S-28-8	009182-08	Soil	09/10/20
BBH-S-29-4	009182-09	Soil	09/10/20
BBH-S-29-8	009182-10	Soil	09/10/20
BBH-S-30-4	009182-11	Soil	09/10/20
BBH-S-30-8	009182-12	Soil	09/10/20
BBH-B-30-10	009182-13	Soil	09/10/20
BBH-B-36-10	009182-14	Soil	09/10/20
BBH-S-31-4	009182-15	Soil	09/10/20
BBH-S-31-8	009182-16	Soil	09/10/20
BBH-S-32-4	009182-17	Soil	09/10/20
BBH-S-32-8	009182-18	Soil	09/10/20
BBH-517	009182-19	Soil	09/10/20
BBH-S-34-4	009182-20	Soil	09/10/20
BBH-S-34-8	009182-21	Soil	09/10/20
BBH-B-31-10	009182-22	Soil	09/10/20
BBH-S-33-4	009182-23	Soil	09/10/20
BBH-S-23-4MS	009182-01MS	Soil	09/09/20
BBH-S-23-4MSD	009182-01MSD	Soil	09/09/20
BBH-S-34-8MS	009182-21MS	Soil	09/10/20
BBH-S-34-8MSD	009182-21MSD	Soil	09/10/20

Introduction

This Data Validation Report (DVR) presents data validation findings and results for the associated samples listed on the cover page. Data validation was performed in accordance with a modified outline of the USEPA National Functional Guidelines (NFG) for Inorganic Superfund Methods Data Review (January 2017). Where specific guidance was not available, the data has been evaluated in a conservative manner consistent with industry standards using professional experience.

The analyses were performed by the following methods:

Copper and Zinc by Environmental Protection Agency (EPA) SW 846 Method 6020B
Mercury by EPA Method 1631E

All sample results were subjected to Stage 2A data validation, which comprises an evaluation of quality control (QC) summary results.

The following are definitions of the data qualifiers utilized during data validation:

J (Estimated): The compound or analyte was analyzed for and positively identified by the laboratory; however the reported concentration is estimated due to non-conformances discovered during data validation.

U (Non-detected): The compound or analyte was analyzed for and positively identified by the laboratory; however the compound or analyte should be considered non-detected at the reported concentration due to the presence of contaminants detected in the associated blank(s).

UJ (Non-detected estimated): The compound or analyte was reported as not detected by the laboratory; however the reported quantitation/detection limit is estimated due to non-conformances discovered during data validation.

R (Rejected): The sample results were rejected due to gross non-conformances discovered during data validation. Data qualified as rejected is not usable.

NA (Not Applicable): The non-conformance discovered during data validation demonstrates a high bias, while the affected compound or analyte in the associated sample(s) was reported as not detected by the laboratory and did not warrant the qualification of the data.

A qualification summary table is provided at the end of this report if data has been qualified. Flags are classified as P (protocol) or A (advisory) to indicate whether the flag is due to a laboratory deviation from a specified protocol or is of technical advisory nature.

I. Sample Receipt and Technical Holding Times

All samples were received in good condition.

All technical holding time requirements were met.

II. ICPMS Tune

ICP-MS tune data were not reviewed for Stage 2A validation.

III. Instrument Calibration

Instrument calibration data were not reviewed for Stage 2A validation.

IV. ICP Interference Check Sample Analysis

ICP Interference check sample (ICS) analysis data were not reviewed for Stage 2A validation.

V. Laboratory Blanks

Laboratory blanks were analyzed as required by the methods. No contaminants were found in the laboratory blanks.

VI. Field Blanks

No field blanks were identified in this SDG.

VII. Matrix Spike/Matrix Spike Duplicates

Matrix spike (MS) and matrix spike duplicate (MSD) sample analysis was performed on an associated project sample. Percent recoveries (%R) were within QC limits with the following exceptions:

Spike ID (Associated Samples)	Analyte	MS (%R) (Limits)	MSD (%R) (Limits)	Flag	A or P
BBH-S-34-8MS/MSD (BBH-S-34-8 BBH-B-31-10 BBH-S-33-4)	Copper	361 (75-125)	0 (75-125)	J (all detects)	A
BBH-S-34-8MS/MSD (BBH-S-34-8 BBH-B-31-10 BBH-S-33-4)	Zinc	69 (75-125)	152 (75-125)	J (all detects) UJ (all non-detects)	A
BBH-S-34-8MS/MSD (BBH-S-33-4)	Mercury	127 (71-125)	-	J (all detects)	A

Spike ID (Associated Samples)	Analyte	MS (%R) (Limits)	MSD (%R) (Limits)	Flag	A or P
BBH-S-34-8MS/MSD (BBH-S-34-8 BBH-B-31-10)	Mercury	127 (71-125)	-	NA	-

Relative percent differences (RPD) were within QC limits with the following exceptions:

Spike ID (Associated Samples)	Analyte	RPD (Limits)	Flag	A or P
BBH-S-34-8MS/MSD (BBH-S-34-8 BBH-B-31-10 BBH-S-33-4)	Copper	200 (≤20)	J (all detects)	A

VIII. Duplicate Sample Analysis

The laboratory has indicated that there were no duplicate (DUP) analyses specified for the samples in this SDG, and therefore duplicate analyses were not performed for this SDG.

IX. Serial Dilution

Serial dilution was not performed for this SDG.

X. Laboratory Control Samples

Laboratory control samples (LCS) were analyzed as required by the methods. Percent recoveries (%R) were within QC limits.

XI. Field Duplicates

Samples BBH-S-32-8 and BBH-517 were identified as field duplicates. No results were detected in any of the samples with the following exceptions:

Analyte	Concentration (mg/Kg)		RPD
	BBH-S-32-8	BBH-517	
Copper	32.0	44.6	33
Zinc	101	75.2	29

XII. Internal Standards (ICP-MS)

Internal standards data were not reviewed for Stage 2A validation.

XIII. Sample Result Verification

Raw data were not reviewed for Stage 2A validation.

XIV. Overall Assessment of Data

The analysis was conducted within all specifications of the methods.

Due to MS/MSD %R and RPD, data were qualified as estimated in three samples.

No results were rejected in this SDG.

Kimberly-Clark Upland Area
Metals - Data Qualification Summary - SDG 009182

Sample	Analyte	Flag	A or P	Reason
BBH-S-34-8 BBH-B-31-10 BBH-S-33-4	Copper	J (all detects)	A	Matrix spike/Matrix spike duplicate (%R)
BBH-S-34-8 BBH-B-31-10 BBH-S-33-4	Zinc	J (all detects) UJ (all non-detects)	A	Matrix spike/Matrix spike duplicate (%R)
BBH-S-33-4	Mercury	J (all detects)	A	Matrix spike/Matrix spike duplicate (%R)
BBH-S-34-8 BBH-B-31-10 BBH-S-33-4	Copper	J (all detects)	A	Matrix spike/Matrix spike duplicate (RPD)

Kimberly-Clark Upland Area
Metals - Laboratory Blank Data Qualification Summary - SDG 009182

No Sample Data Qualified in this SDG

Kimberly-Clark Upland Area
Metals - Field Blank Data Qualification Summary - SDG 009182

No Sample Data Qualified in this SDG

LDC #: 49215K4a
SDG #: 009182
Laboratory: Friedman & Bruya, Inc.

VALIDATION COMPLETENESS WORKSHEET
Stage 2A

Date: 10/2/2020
Page: 1 of 2
Reviewer: DM
2nd Reviewer:

METHOD: Metals (EPA SW 846 Method 6020B/EPA Method 1631E)

The samples listed below were reviewed for each of the following validation areas. Validation findings are noted in attached validation findings worksheets.

	Validation Area		Comments
I.	Sample receipt/Technical holding times	A / A	
II.	ICP/MS Tune	N	
III.	Instrument Calibration	N	
IV.	ICP Interference Check Sample (ICS) Analysis	N	
V.	Laboratory Blanks	A	
VI.	Field Blanks	N	
VII.	Matrix Spike/Matrix Spike Duplicates	SW	
VIII.	Duplicate sample analysis	N	
IX.	Serial Dilution	N	
X.	Laboratory control samples	A	LCS
XI.	Field Duplicates	SW	(18,19)
XII.	Internal Standard (ICP-MS)	N	
XIII.	Sample Result Verification	N	
XIV	Overall Assessment of Data	A	

Note: A = Acceptable; N = Not provided/applicable; SW = See worksheet; ND = No compounds detected; R = Rinsate; FB = Field blank; D = Duplicate; TB = Trip blank; EB = Equipment blank; SB=Source blank; OTHER:

	Client ID	Lab ID	Matrix	Date
1	BBH-S-23-4	009182-01	Soil	09/09/20
2	BBH-S-24-4	009182-02	Soil	09/09/20
3	BBH-S-25-4	009182-03	Soil	09/09/20
4	BBH-S-26-4	009182-04	Soil	09/09/20
5	BBH-S-27-4	009182-05	Soil	09/09/20
6	BBH-S-28-4	009182-06	Soil	09/09/20
7	BBH-S-27-8	009182-07	Soil	09/10/20
8	BBH-S-28-8	009182-08	Soil	09/10/20
9	BBH-S-29-4	009182-09	Soil	09/10/20
10	BBH-S-29-8	009182-10	Soil	09/10/20
11	BBH-S-30-4	009182-11	Soil	09/10/20
12	BBH-S-30-8	009182-12	Soil	09/10/20
13	BBH-B-30-10	009182-13	Soil	09/10/20
14	BBH-B-36-10	009182-14	Soil	09/10/20
15	BBH-S-31-4	009182-15	Soil	09/10/20

LDC #: 49215K4a

SDG #: 009182

Laboratory: Friedman & Bruya, Inc.

VALIDATION COMPLETENESS WORKSHEET

Stage 2A

Date: 10/2/2020

Reviewer: DM

2nd Reviewer:

METHOD: Metals (EPA SW 846 Method 6020B/EPA Method 1631E)

	Client ID	Lab ID	Matrix	Date
16	BBH-S-31-8	009182-16	Soil	09/10/20
17	BBH-S-32-4	009182-17	Soil	09/10/20
18	BBH-S-32-8	009182-18	Soil	09/10/20
19	BBH-517	009182-19	Soil	09/10/20
20	BBH-S-34-4	009182-20	Soil	09/10/20
21	BBH-S-34-8	009182-21	Soil	09/10/20
22	BBH-B-31-10	009182-22	Soil	09/10/20
23	BBH-S-33-4	009182-23	Soil	09/10/20
24	BBH-S-23-4MS	009182-01MS	Soil	09/09/20
25	BBH-S-23-4MSD	009182-01MSD	Soil	09/09/20
26	BBH-S-34-8MS	009182-21MS	Soil	09/10/20
27	BBH-S-34-8MSD	009182-21MSD	Soil	09/10/20
28				
29				
30				

Notes:

LDC #: 49215K4q

VALIDATION FINDINGS WORKSHEET
Sample Specific Element Reference

Reviewer: DTM

All circled elements are applicable to each sample.

Sample ID	Matrix	Target Analyte List (TAL)
I-14, 1673	S	Al, Sb, As, Ba, Be, B, Cd, Ca, Cr, Co, (Cu), Fe, Pb, Li, Mg, Mo, Mn, (Hg), Ni, K, Se, Ag, Na, Sr, Tl, Sn, Ti, W, U, V, (Zn)
		Al, Sb, As, Ba, Be, B, Cd, Ca, Cr, Co, Cu, Fe, Pb, Li, Mg, Mo, Mn, Hg, Ni, K, Se, Ag, Na, Sr, Tl, Sn, Ti, W, U, V, Zn
15	S	Al, Sb, As, Ba, Be, B, Cd, Ca, Cr, Co, (Cu), Fe, Pb, Li, Mg, Mo, Mn, Hg, Ni, K, Se, Ag, Na, Sr, Tl, Sn, Ti, W, U, V, (Zn)
		Al, Sb, As, Ba, Be, B, Cd, Ca, Cr, Co, Cu, Fe, Pb, Li, Mg, Mo, Mn, Hg, Ni, K, Se, Ag, Na, Sr, Tl, Sn, Ti, W, U, V, Zn
15	S	Al, Sb, As, Ba, Be, B, Cd, Ca, Cr, Co, Cu, Fe, Pb, Li, Mg, Mo, Mn, (Hg), Ni, K, Se, Ag, Na, Sr, Tl, Sn, Ti, W, U, V, Zn
		Al, Sb, As, Ba, Be, B, Cd, Ca, Cr, Co, Cu, Fe, Pb, Li, Mg, Mo, Mn, Hg, Ni, K, Se, Ag, Na, Sr, Tl, Sn, Ti, W, U, V, Zn
DC 24-77	S	Al, Sb, As, Ba, Be, B, Cd, Ca, Cr, Co, (Cu), Fe, Pb, Li, Mg, Mo, Mn, (Hg), Ni, K, Se, Ag, Na, Sr, Tl, Sn, Ti, W, U, V, (Zn)
		Al, Sb, As, Ba, Be, B, Cd, Ca, Cr, Co, Cu, Fe, Pb, Li, Mg, Mo, Mn, Hg, Ni, K, Se, Ag, Na, Sr, Tl, Sn, Ti, W, U, V, Zn
		Al, Sb, As, Ba, Be, B, Cd, Ca, Cr, Co, Cu, Fe, Pb, Li, Mg, Mo, Mn, Hg, Ni, K, Se, Ag, Na, Sr, Tl, Sn, Ti, W, U, V, Zn
		Al, Sb, As, Ba, Be, B, Cd, Ca, Cr, Co, Cu, Fe, Pb, Li, Mg, Mo, Mn, Hg, Ni, K, Se, Ag, Na, Sr, Tl, Sn, Ti, W, U, V, Zn
		Al, Sb, As, Ba, Be, B, Cd, Ca, Cr, Co, Cu, Fe, Pb, Li, Mg, Mo, Mn, Hg, Ni, K, Se, Ag, Na, Sr, Tl, Sn, Ti, W, U, V, Zn
		Al, Sb, As, Ba, Be, B, Cd, Ca, Cr, Co, Cu, Fe, Pb, Li, Mg, Mo, Mn, Hg, Ni, K, Se, Ag, Na, Sr, Tl, Sn, Ti, W, U, V, Zn
		Al, Sb, As, Ba, Be, B, Cd, Ca, Cr, Co, Cu, Fe, Pb, Li, Mg, Mo, Mn, Hg, Ni, K, Se, Ag, Na, Sr, Tl, Sn, Ti, W, U, V, Zn
		Al, Sb, As, Ba, Be, B, Cd, Ca, Cr, Co, Cu, Fe, Pb, Li, Mg, Mo, Mn, Hg, Ni, K, Se, Ag, Na, Sr, Tl, Sn, Ti, W, U, V, Zn
		Al, Sb, As, Ba, Be, B, Cd, Ca, Cr, Co, Cu, Fe, Pb, Li, Mg, Mo, Mn, Hg, Ni, K, Se, Ag, Na, Sr, Tl, Sn, Ti, W, U, V, Zn
		Al, Sb, As, Ba, Be, B, Cd, Ca, Cr, Co, Cu, Fe, Pb, Li, Mg, Mo, Mn, Hg, Ni, K, Se, Ag, Na, Sr, Tl, Sn, Ti, W, U, V, Zn
		Al, Sb, As, Ba, Be, B, Cd, Ca, Cr, Co, Cu, Fe, Pb, Li, Mg, Mo, Mn, Hg, Ni, K, Se, Ag, Na, Sr, Tl, Sn, Ti, W, U, V, Zn
		Al, Sb, As, Ba, Be, B, Cd, Ca, Cr, Co, Cu, Fe, Pb, Li, Mg, Mo, Mn, Hg, Ni, K, Se, Ag, Na, Sr, Tl, Sn, Ti, W, U, V, Zn
		Al, Sb, As, Ba, Be, B, Cd, Ca, Cr, Co, Cu, Fe, Pb, Li, Mg, Mo, Mn, Hg, Ni, K, Se, Ag, Na, Sr, Tl, Sn, Ti, W, U, V, Zn
		Al, Sb, As, Ba, Be, B, Cd, Ca, Cr, Co, Cu, Fe, Pb, Li, Mg, Mo, Mn, Hg, Ni, K, Se, Ag, Na, Sr, Tl, Sn, Ti, W, U, V, Zn
		Al, Sb, As, Ba, Be, B, Cd, Ca, Cr, Co, Cu, Fe, Pb, Li, Mg, Mo, Mn, Hg, Ni, K, Se, Ag, Na, Sr, Tl, Sn, Ti, W, U, V, Zn

Analysis Method		
ICP		Al, Sb, As, Ba, Be, B, Cd, Ca, Cr, Co, Cu, Fe, Pb, Li, Mg, Mo, Mn, Hg, Ni, K, Se, Ag, Na, Sr, Tl, Sn, Ti, W, U, V, Zn
ICP-MS		Al, Sb, As, Ba, Be, B, Cd, Ca, Cr, Co, Cu, Fe, Pb, Li, Mg, Mo, Mn, Hg, Ni, K, Se, Ag, Na, Sr, Tl, Sn, Ti, W, U, V, Zn
GFAA		Al, Sb, As, Ba, Be, B, Cd, Ca, Cr, Co, Cu, Fe, Pb, Li, Mg, Mo, Mn, Hg, Ni, K, Se, Ag, Na, Sr, Tl, Sn, Ti, W, U, V, Zn

Comments: Mercury by CVAA if performed

LDC #:49215K4a

VALIDATION FINDINGS WORKSHEET
Matrix Spike/Matrix Spike Duplicates

METHOD: Trace metals (EPA SW 846 Method 6020/6010/7470)

Please see qualifications below for all questions answered "N". Not applicable questions are identified as "N/A".

Y N N/A Was a matrix spike analyzed for each matrix in this SDG?

Y N N/A Were matrix spike percent recoveries (%R) within the control limits of 75-125? If the sample concentration exceeded the spike concentration by a factor of 4 or more, no action was taken.

Y N N/A Were all duplicate sample relative percent differences (RPD) ≤ 20% for samples?

LEVEL IV ONLY:

Y N N/A Were recalculated results acceptable? See Level IV Recalculation Worksheet for recalculations.

#	MS/MSD ID	Matrix	Analyte	MS %Recovery	MSD %Recovery	RPD (Limits)	Associated Samples	Qualifications
	26/27	S	Cu	361	0		21-23	J/R/A (det)
			Zn	69	152		21-23	J/UJ/A (det)
			Cu			200	21-23	J/UJ/A (det)
			Hg	127 (71-125)			21-23	~~J/UJ/A (ND/det)~~ 23=Det 5det|A

49215K4a.wpd

LDC#: 49215K4a

VALIDATION FINDINGS WORKSHEET
Field Duplicates

METHOD: Metals (EPA Method 6010/6020/7000)

Analyte	Concentration (mg/Kg)		RPD
	18	19	
Copper	32.0	44.6	33
Zinc	101	75.2	29

V:\Darionna\FIELD DUPLICATES\Field Duplicates\FD_inorganic\2020\49215K4a.wpd

Laboratory Data Consultants, Inc.
Data Validation Report

Project/Site Name: Kimberly-Clark Upland Area

LDC Report Date: October 8, 2020

Parameters: Metals

Validation Level: Stage 2A

Laboratory: Friedman & Bruya, Inc.

Sample Delivery Group (SDG): 009238

Sample Identification	Laboratory Sample Identification	Matrix	Collection Date
BBH-S-35-4	009238-01	Soil	09/14/20
BBH-S-36-4	009238-02	Soil	09/14/20
BBH-S-37-4	009238-03	Soil	09/14/20
BBH-S-38-4	009238-04	Soil	09/14/20
BBH-S-39-4	009238-05	Soil	09/14/20
BBH-S-40-4	009238-06	Soil	09/14/20
BBH-S-41-4	009238-07	Soil	09/14/20
BBH-S-42-4	009238-08	Soil	09/14/20
BBH-S-35-4MS	009238-01MS	Soil	09/14/20
BBH-S-35-4MSD	009238-01MSD	Soil	09/14/20

Introduction

This Data Validation Report (DVR) presents data validation findings and results for the associated samples listed on the cover page. Data validation was performed in accordance with a modified outline of the USEPA National Functional Guidelines (NFG) for Inorganic Superfund Methods Data Review (January 2017). Where specific guidance was not available, the data has been evaluated in a conservative manner consistent with industry standards using professional experience.

The analyses were performed by the following methods:

Copper by Environmental Protection Agency (EPA) SW 846 Method 6020B
Mercury by EPA Method 1631E

All sample results were subjected to Stage 2A data validation, which comprises an evaluation of quality control (QC) summary results.

The following are definitions of the data qualifiers utilized during data validation:

J (Estimated): The compound or analyte was analyzed for and positively identified by the laboratory; however the reported concentration is estimated due to non-conformances discovered during data validation.

U (Non-detected): The compound or analyte was analyzed for and positively identified by the laboratory; however the compound or analyte should be considered non-detected at the reported concentration due to the presence of contaminants detected in the associated blank(s).

UJ (Non-detected estimated): The compound or analyte was reported as not detected by the laboratory; however the reported quantitation/detection limit is estimated due to non-conformances discovered during data validation.

R (Rejected): The sample results were rejected due to gross non-conformances discovered during data validation. Data qualified as rejected is not usable.

NA (Not Applicable): The non-conformance discovered during data validation demonstrates a high bias, while the affected compound or analyte in the associated sample(s) was reported as not detected by the laboratory and did not warrant the qualification of the data.

DNR (Do Not Report): A more appropriate result is reported from another analysis or dilution.

A qualification summary table is provided at the end of this report if data has been qualified. Flags are classified as P (protocol) or A (advisory) to indicate whether the flag is due to a laboratory deviation from a specified protocol or is of technical advisory nature.

I. Sample Receipt and Technical Holding Times

All samples were received in good condition.

All technical holding time requirements were met.

II. ICPMS Tune

ICP-MS tune data were not reviewed for Stage 2A validation.

III. Instrument Calibration

Instrument calibration data were not reviewed for Stage 2A validation.

IV. ICP Interference Check Sample Analysis

ICP Interference check sample (ICS) analysis data were not reviewed for Stage 2A validation.

V. Laboratory Blanks

Laboratory blanks were analyzed as required by the methods. No contaminants were found in the laboratory blanks.

VI. Field Blanks

No field blanks were identified in this SDG.

VII. Matrix Spike/Matrix Spike Duplicates

Matrix spike (MS) and matrix spike duplicate (MSD) sample analysis was performed on an associated project sample. Percent recoveries (%R) were within QC limits. Relative percent differences (RPD) were within QC limits.

VIII. Duplicate Sample Analysis

The laboratory has indicated that there were no duplicate (DUP) analyses specified for the samples in this SDG, and therefore duplicate analyses were not performed for this SDG.

IX. Serial Dilution

Serial dilution was not performed for this SDG.

X. Laboratory Control Samples

Laboratory control samples (LCS) were analyzed as required by the methods. Percent recoveries (%R) were within QC limits.

XI. Field Duplicates

No field duplicates were identified in this SDG.

XII. Internal Standards (ICP-MS)

Internal standards data were not reviewed for Stage 2A validation.

XIII. Sample Result Verification

Raw data were not reviewed for Stage 2A validation.

XIV. Overall Assessment of Data

The analysis was conducted within all specifications of the methods. No results were rejected in this SDG.

Kimberly-Clark Upland Area
Metals - Data Qualification Summary - SDG 009238

No Sample Data Qualified in this SDG

Kimberly-Clark Upland Area
Metals - Laboratory Blank Data Qualification Summary - SDG 009238

No Sample Data Qualified in this SDG

Kimberly-Clark Upland Area
Metals - Field Blank Data Qualification Summary - SDG 009238

No Sample Data Qualified in this SDG

LDC #: 49215L4a
SDG #: 009238
Laboratory: Friedman & Bruya, Inc.

VALIDATION COMPLETENESS WORKSHEET
Stage 2A

Date: 10/2/2020
Page: 1 of 1
Reviewer: DM
2nd Reviewer:

METHOD: Cr, Hg (EPA SW 846 Method 6020B/EPA Method 1631E)

The samples listed below were reviewed for each of the following validation areas. Validation findings are noted in attached validation findings worksheets.

	Validation Area		Comments
I.	Sample receipt/Technical holding times	A / A	
II.	ICP/MS Tune	N	
III.	Instrument Calibration	N	
IV.	ICP Interference Check Sample (ICS) Analysis	N	
V.	Laboratory Blanks	A	
VI.	Field Blanks	N	
VII.	Matrix Spike/Matrix Spike Duplicates	A	
VIII.	Duplicate sample analysis	N	
IX.	Serial Dilution	N	
X.	Laboratory control samples	A	LCS
XI.	Field Duplicates	N	
XII.	Internal Standard (ICP-MS)	N	
XIII.	Sample Result Verification	N	
XIV.	Overall Assessment of Data	A	

Note: A = Acceptable; N = Not provided/applicable; SW = See worksheet; ND = No compounds detected; R = Rinsate; FB = Field blank; D = Duplicate; TB = Trip blank; EB = Equipment blank; SB=Source blank; OTHER:

	Client ID	Lab ID	Matrix	Date
1	BBH-S-35-4	009238-01	Soil	09/19/20
2	BBH-S-36-4	009238-02	Soil	09/19/20
3	BBH-S-37-4	009238-03	Soil	09/19/20
4	BBH-S-38-4	009238-04	Soil	09/19/20
5	BBH-S-39-4	009238-05	Soil	09/19/20
6	BBH-S-40-4	009238-06	Soil	09/19/20
7	BBH-S-41-4	009238-07	Soil	09/19/20
8	BBH-S-42-4	009238-08	Soil	09/19/20
9	BBH-S-35-4MS	009238-01MS	Soil	09/19/20
10	BBH-S-35-4MSD	009238-01MSD	Soil	09/19/20
11				
12				
13				
14				

Notes:

LDC #: 49215S4a

VALIDATION FINDINGS WORKSHEET
Sample Specific Element Reference

Reviewer: DTM

All circled elements are applicable to each sample.

Sample ID	Matrix	Target Analyte List (TAL)
1-3, 7	S	Al, Sb, As, Ba, Be, B, Cd, Ca, Cr, Co, (Cu) Fe, Pb, Li, Mg, Mo, Mn, (Hg), Ni, K, Se, Ag, Na, Sr, Tl, Sn, Ti, W, U, V, Zn
		Al, Sb, As, Ba, Be, B, Cd, Ca, Cr, Co, Cu, Fe, Pb, Li, Mg, Mo, Mn, Hg, Ni, K, Se, Ag, Na, Sr, Tl, Sn, Ti, W, U, V, Zn
4-6, 8	S	Al, Sb, As, Ba, Be, B, Cd, Ca, Cr, Co, Cu, Fe, Pb, Li, Mg, Mo, Mn, (Hg), Ni, K, Se, Ag, Na, Sr, Tl, Sn, Ti, W, U, V, Zn
		Al, Sb, As, Ba, Be, B, Cd, Ca, Cr, Co, Cu, Fe, Pb, Li, Mg, Mo, Mn, Hg, Ni, K, Se, Ag, Na, Sr, Tl, Sn, Ti, W, U, V, Zn
oc 9-10	S	Al, Sb, As, Ba, Be, B, Cd, Ca, Cr, Co, (Cu) Fe, Pb, Li, Mg, Mo, Mn, (Hg), Ni, K, Se, Ag, Na, Sr, Tl, Sn, Ti, W, U, V, Zn
		Al, Sb, As, Ba, Be, B, Cd, Ca, Cr, Co, Cu, Fe, Pb, Li, Mg, Mo, Mn, Hg, Ni, K, Se, Ag, Na, Sr, Tl, Sn, Ti, W, U, V, Zn
		Al, Sb, As, Ba, Be, B, Cd, Ca, Cr, Co, Cu, Fe, Pb, Li, Mg, Mo, Mn, Hg, Ni, K, Se, Ag, Na, Sr, Tl, Sn, Ti, W, U, V, Zn
		Al, Sb, As, Ba, Be, B, Cd, Ca, Cr, Co, Cu, Fe, Pb, Li, Mg, Mo, Mn, Hg, Ni, K, Se, Ag, Na, Sr, Tl, Sn, Ti, W, U, V, Zn
		Al, Sb, As, Ba, Be, B, Cd, Ca, Cr, Co, Cu, Fe, Pb, Li, Mg, Mo, Mn, Hg, Ni, K, Se, Ag, Na, Sr, Tl, Sn, Ti, W, U, V, Zn
		Al, Sb, As, Ba, Be, B, Cd, Ca, Cr, Co, Cu, Fe, Pb, Li, Mg, Mo, Mn, Hg, Ni, K, Se, Ag, Na, Sr, Tl, Sn, Ti, W, U, V, Zn
		Al, Sb, As, Ba, Be, B, Cd, Ca, Cr, Co, Cu, Fe, Pb, Li, Mg, Mo, Mn, Hg, Ni, K, Se, Ag, Na, Sr, Tl, Sn, Ti, W, U, V, Zn
		Al, Sb, As, Ba, Be, B, Cd, Ca, Cr, Co, Cu, Fe, Pb, Li, Mg, Mo, Mn, Hg, Ni, K, Se, Ag, Na, Sr, Tl, Sn, Ti, W, U, V, Zn
		Al, Sb, As, Ba, Be, B, Cd, Ca, Cr, Co, Cu, Fe, Pb, Li, Mg, Mo, Mn, Hg, Ni, K, Se, Ag, Na, Sr, Tl, Sn, Ti, W, U, V, Zn
		Al, Sb, As, Ba, Be, B, Cd, Ca, Cr, Co, Cu, Fe, Pb, Li, Mg, Mo, Mn, Hg, Ni, K, Se, Ag, Na, Sr, Tl, Sn, Ti, W, U, V, Zn
		Al, Sb, As, Ba, Be, B, Cd, Ca, Cr, Co, Cu, Fe, Pb, Li, Mg, Mo, Mn, Hg, Ni, K, Se, Ag, Na, Sr, Tl, Sn, Ti, W, U, V, Zn
		Al, Sb, As, Ba, Be, B, Cd, Ca, Cr, Co, Cu, Fe, Pb, Li, Mg, Mo, Mn, Hg, Ni, K, Se, Ag, Na, Sr, Tl, Sn, Ti, W, U, V, Zn
		Al, Sb, As, Ba, Be, B, Cd, Ca, Cr, Co, Cu, Fe, Pb, Li, Mg, Mo, Mn, Hg, Ni, K, Se, Ag, Na, Sr, Tl, Sn, Ti, W, U, V, Zn
		Al, Sb, As, Ba, Be, B, Cd, Ca, Cr, Co, Cu, Fe, Pb, Li, Mg, Mo, Mn, Hg, Ni, K, Se, Ag, Na, Sr, Tl, Sn, Ti, W, U, V, Zn
		Al, Sb, As, Ba, Be, B, Cd, Ca, Cr, Co, Cu, Fe, Pb, Li, Mg, Mo, Mn, Hg, Ni, K, Se, Ag, Na, Sr, Tl, Sn, Ti, W, U, V, Zn
		Al, Sb, As, Ba, Be, B, Cd, Ca, Cr, Co, Cu, Fe, Pb, Li, Mg, Mo, Mn, Hg, Ni, K, Se, Ag, Na, Sr, Tl, Sn, Ti, W, U, V, Zn
		Al, Sb, As, Ba, Be, B, Cd, Ca, Cr, Co, Cu, Fe, Pb, Li, Mg, Mo, Mn, Hg, Ni, K, Se, Ag, Na, Sr, Tl, Sn, Ti, W, U, V, Zn

Analysis Method		
ICP		Al, Sb, As, Ba, Be, B, Cd, Ca, Cr, Co, Cu, Fe, Pb, Li, Mg, Mo, Mn, Hg, Ni, K, Se, Ag, Na, Sr, Tl, Sn, Ti, W, U, V, Zn
ICP-MS		Al, Sb, As, Ba, Be, B, Cd, Ca, Cr, Co, Cu, Fe, Pb, Li, Mg, Mo, Mn, Hg, Ni, K, Se, Ag, Na, Sr, Tl, Sn, Ti, W, U, V, Zn
GFAA		Al, Sb, As, Ba, Be, B, Cd, Ca, Cr, Co, Cu, Fe, Pb, Li, Mg, Mo, Mn, Hg, Ni, K, Se, Ag, Na, Sr, Tl, Sn, Ti, W, U, V, Zn

Comments: Mercury by CVAA if performed

LABORATORY DATA CONSULTANTS, INC.
2701 Loker Ave. West, Suite 220, Carlsbad, CA 92010 Bus: 760-827-1100 Fax: 760-827-1099

Aspect Consulting LLC
701 Second Ave., Suite 550
Seattle, WA 98104
ATTN: Ms. Carla Brock
cbrock@aspectconsulting.com

November 17, 2020

SUBJECT: Kimberly-Clark Upland Area, Data Validation

Dear Ms. Brock,

Enclosed are the final validation reports for the fractions listed below. These SDGs were received on October 30, 2020. Attachment 1 is a summary of the samples that were reviewed for each analysis.

LDC Project #49554:

SDG #	Fraction
009289, 009316, 009348, 009369 009431, 009494, 009564, 010033 010063, 010302, 010084, 010110 010130, 010155, 010179, 010208 010237, 010269	Polynuclear Aromatic Hydrocarbons, Metals, Total Petroleum Hydrocarbons as Extractables

The data validation was performed under Stage 2A guidelines. The analyses were validated using the following documents, as applicable to each method:

- USEPA National Functional Guidelines for Organic Superfund Methods Data Review, January 2017
- USEPA National Functional Guidelines for Inorganic Superfund Methods Data Review; January 2017
- EPA SW 846, Third Edition, Test Methods for Evaluating Solid Waste, update 1, July 1992; update IIA, August 1993; update II, September 1994; update IIB, January 1995; update III, December 1996; update IIIA, April 1998; IIIB, November 2004; update IV, February 2007; update V, July 2014

Please feel free to contact us if you have any questions.

Sincerely,

Christina Rink

Christina Rink
crink@lab-data.com
Project Manager/Senior Chemist

Stage 2A EDD **LDC #49554 (Aspect Consulting, LLC - Seattle, WA / Kimberly-Clark Upland Area 2020 Interm Action)**

LDC	SDG#	DATE REC'D	(3) DATE DUE	(18) PAH (8270E -SIM)		(3) Metals (6020B)		Cu (6020B)		Cu,Zn (6020B)		Zn (6020B)		Hg (1631E)		TPH-E (NWTPH -Dx)																					
Matrix: Water/Soil				W	S	W	S	W	S	W	S	W	S	W	S	W	S	W	S	W	S	W	S	W	S	W	S	W	S	W	S	W	S	W	S	W	S
A	009289	10/30/20	11/20/20	-	-	-	-	0	1	0	3	-	-	0	7	-	-																				
B	009316	10/30/20	11/20/20	-	-	-	-	-	-	0	13	-	-	0	13	-	-																				
C	009348	10/30/20	11/20/20	-	-	-	-	-	-	0	4	-	-	0	4	-	-																				
D	009369	10/30/20	11/20/20	-	-	-	-	-	-	0	19	-	-	0	19	-	-																				
E	009431	10/30/20	11/20/20	-	-	-	-	-	-	0	8	-	-	0	8	-	-																				
F	009494	10/30/20	11/20/20	-	-	0	1	-	-	-	-	-	-	0	1	0	1																				
G	009564	10/30/20	11/20/20	-	-	-	-	0	1	0	4	-	-	0	10	-	-																				
H	010033	10/30/20	11/20/20	-	-	-	-	-	-	0	5	-	-	0	7	-	-																				
I	010063	10/30/20	11/20/20	-	-	0	5	0	2	0	2	-	-	0	8	0	5																				
J	010302	10/30/20	11/20/20	-	-	-	-	0	5	0	1	0	1	0	13	-	-																				
K	010084	10/30/20	11/20/20	0	4	-	-	-	-	0	1	-	-	0	1	-	-																				
L	010110	10/30/20	11/20/20	-	-	-	-	-	-	0	6	-	-	0	6	-	-																				
M	010130	10/30/20	11/20/20	-	-	-	-	-	-	0	12	-	-	0	12	-	-																				
N	010155	10/30/20	11/20/20	-	-	-	-	-	-	0	10	-	-	0	10	-	-																				
O	010179	10/30/20	11/20/20	-	-	-	-	-	-	0	13	-	-	0	13	-	-																				
P	010208	10/30/20	11/20/20	-	-	-	-	0	4	0	1	0	1	0	11	-	-																				
Q	010237	10/30/20	11/20/20	-	-	-	-	0	4	-	-	-	-	0	3	-	-																				
R	010269	10/30/20	11/20/20	-	-	-	-	0	3	-	-	-	-	0	17	-	-																				
Total	T/CR			0	4	0	6	0	20	0	102	0	2	0	163	0	6	0	0	0	0	0	0	0	0	0	0	0	0	0	0	0	0	0	0	0	303

Shaded cells indicate Stage 4 validation (all other cells are Stage 2A validation). These sample counts do not include MS, MSD, or DUP's.

Laboratory Data Consultants, Inc.
Data Validation Report

Project/Site Name: Kimberly-Clark Upland Area

LDC Report Date: November 16, 2020

Parameters: Metals

Validation Level: Stage 2A

Laboratory: Friedman & Bruya, Inc.

Sample Delivery Group (SDG): 009289

Sample Identification	Laboratory Sample Identification	Matrix	Collection Date
BBH-S-43-41	009289-01	Soil	09/16/20
BBH-S-44-4	009289-02	Soil	09/16/20
BBH-S-45-4	009289-03	Soil	09/16/20
BBH-S-46-4	009289-04	Soil	09/16/20
BBH-B-25-10	009289-05	Soil	09/16/20
BBH-S-16-8	009289-06	Soil	09/16/20
BBH-S-33-8	009289-07	Soil	09/16/20

Introduction

This Data Validation Report (DVR) presents data validation findings and results for the associated samples listed on the cover page. Data validation was performed in accordance with a modified outline of the USEPA National Functional Guidelines (NFG) for Inorganic Superfund Methods Data Review (January 2017). Where specific guidance was not available, the data has been evaluated in a conservative manner consistent with industry standards using professional experience.

The analyses were performed by the following methods:

Copper and Zinc by Environmental Protection Agency (EPA) SW 846 Method 6020B
Mercury by EPA Method 1631E

All sample results were subjected to Stage 2A data validation, which comprises an evaluation of quality control (QC) summary results.

The following are definitions of the data qualifiers utilized during data validation:

J (Estimated): The compound or analyte was analyzed for and positively identified by the laboratory; however the reported concentration is estimated due to non-conformances discovered during data validation.

U (Non-detected): The compound or analyte was analyzed for and positively identified by the laboratory; however the compound or analyte should be considered non-detected at the reported concentration due to the presence of contaminants detected in the associated blank(s).

UJ (Non-detected estimated): The compound or analyte was reported as not detected by the laboratory; however the reported quantitation/detection limit is estimated due to non-conformances discovered during data validation.

R (Rejected): The sample results were rejected due to gross non-conformances discovered during data validation. Data qualified as rejected is not usable.

NA (Not Applicable): The non-conformance discovered during data validation demonstrates a high bias, while the affected compound or analyte in the associated sample(s) was reported as not detected by the laboratory and did not warrant the qualification of the data.

A qualification summary table is provided at the end of this report if data has been qualified. Flags are classified as P (protocol) or A (advisory) to indicate whether the flag is due to a laboratory deviation from a specified protocol or is of technical advisory nature.

I. Sample Receipt and Technical Holding Times

All samples were received in good condition.

All technical holding time requirements were met.

II. ICPMS Tune

ICP-MS tune data were not reviewed for Stage 2A validation.

III. Instrument Calibration

Instrument calibration data were not reviewed for Stage 2A validation.

IV. ICP Interference Check Sample Analysis

ICP Interference check sample (ICS) analysis data were not reviewed for Stage 2A validation.

V. Laboratory Blanks

Laboratory blanks were analyzed as required by the methods. No contaminants were found in the laboratory blanks.

VI. Field Blanks

No field blanks were identified in this SDG.

VII. Matrix Spike/Matrix Spike Duplicates

The laboratory has indicated that there were no matrix spike (MS) and matrix spike duplicate (MSD) analyses specified for the samples in this SDG, and therefore matrix spike and matrix spike duplicate analyses were not performed for this SDG.

VIII. Duplicate Sample Analysis

The laboratory has indicated that there were no duplicate (DUP) analyses specified for the samples in this SDG, and therefore duplicate analyses were not performed for this SDG.

IX. Serial Dilution

Serial dilution was not performed for this SDG.

X. Laboratory Control Samples

Laboratory control samples (LCS) were analyzed as required by the methods. Percent recoveries (%R) were within QC limits.

XI. Field Duplicates

No field duplicates were identified in this SDG.

XII. Internal Standards (ICP-MS)

Internal standards data were not reviewed for Stage 2A validation.

XIII. Sample Result Verification

Raw data were not reviewed for Stage 2A validation.

XIV. Overall Assessment of Data

The analysis was conducted within all specifications of the methods. No results were rejected in this SDG.

Kimberly-Clark Upland Area
Metals - Data Qualification Summary - SDG 009289

No Sample Data Qualified in this SDG

Kimberly-Clark Upland Area
Metals - Laboratory Blank Data Qualification Summary - SDG 009289

No Sample Data Qualified in this SDG

Kimberly-Clark Upland Area
Metals - Field Blank Data Qualification Summary - SDG 009289

No Sample Data Qualified in this SDG

LDC #: 49554A4a
SDG #: 009289
Laboratory: Friedman & Bruya, Inc.

VALIDATION COMPLETENESS WORKSHEET
Stage 2A

Date: 11/12/2020
Page: 1 of 1
Reviewer: DTM
2nd Reviewer:

METHOD: Metals (EPA SW 846 Method 6020B/EPA Method 1631E)

The samples listed below were reviewed for each of the following validation areas. Validation findings are noted in attached validation findings worksheets.

	Validation Area		Comments
I.	Sample receipt/Technical holding times	A/A	
II.	ICP/MS Tune	N	
III.	Instrument Calibration	N	
IV.	ICP Interference Check Sample (ICS) Analysis	N	
V.	Laboratory Blanks	A	
VI.	Field Blanks	N	
VII.	Matrix Spike/Matrix Spike Duplicates	N	
VIII.	Duplicate sample analysis	N	
IX.	Serial Dilution	N	
X.	Laboratory control samples	A	LCS
XI.	Field Duplicates	N	
XII.	Internal Standard (ICP-MS)	N	
XIII.	Sample Result Verification	N	
XIV.	Overall Assessment of Data	A	

Note: A = Acceptable; N = Not provided/applicable; SW = See worksheet; ND = No compounds detected; R = Rinsate; FB = Field blank; D = Duplicate; TB = Trip blank; EB = Equipment blank; SB=Source blank; OTHER:

	Client ID	Lab ID	Matrix	Date
1	BBH-S-43-41	009289-01	Soil	09/16/20
2	BBH-S-44-4	009289-02	Soil	09/16/20
3	BBH-S-45-4	009289-03	Soil	09/16/20
4	BBH-S-46-4	009289-04	Soil	09/16/20
5	BBH-B-25-10	009289-05	Soil	09/16/20
6	BBH-S-16-8	009289-06	Soil	09/16/20
7	BBH-S-33-8	009289-07	Soil	09/16/20
8				

Notes:

LDC #: 49554A4a

VALIDATION FINDINGS WORKSHEET

Sample Specific Element Reference

Reviewer: DTM

All circled elements are applicable to each sample.

Sample ID	Matrix	Target Analyte List (TAL)
1	S	Cu
5-7	S	Cu, Zn
ALL	S	Hg
		Al, Sb, As, Ba, Be, B, Cd, Ca, Cr, Co, Cu, Fe, Pb, Li, Mg, Mo, Mn, Hg, Ni, K, Se, Ag, Na, Sr, Tl, Sn, Ti, W, U, V, Zn
		Al, Sb, As, Ba, Be, B, Cd, Ca, Cr, Co, Cu, Fe, Pb, Li, Mg, Mo, Mn, Hg, Ni, K, Se, Ag, Na, Sr, Tl, Sn, Ti, W, U, V, Zn
		Al, Sb, As, Ba, Be, B, Cd, Ca, Cr, Co, Cu, Fe, Pb, Li, Mg, Mo, Mn, Hg, Ni, K, Se, Ag, Na, Sr, Tl, Sn, Ti, W, U, V, Zn
		Al, Sb, As, Ba, Be, B, Cd, Ca, Cr, Co, Cu, Fe, Pb, Li, Mg, Mo, Mn, Hg, Ni, K, Se, Ag, Na, Sr, Tl, Sn, Ti, W, U, V, Zn
		Al, Sb, As, Ba, Be, B, Cd, Ca, Cr, Co, Cu, Fe, Pb, Li, Mg, Mo, Mn, Hg, Ni, K, Se, Ag, Na, Sr, Tl, Sn, Ti, W, U, V, Zn
		Al, Sb, As, Ba, Be, B, Cd, Ca, Cr, Co, Cu, Fe, Pb, Li, Mg, Mo, Mn, Hg, Ni, K, Se, Ag, Na, Sr, Tl, Sn, Ti, W, U, V, Zn
		Al, Sb, As, Ba, Be, B, Cd, Ca, Cr, Co, Cu, Fe, Pb, Li, Mg, Mo, Mn, Hg, Ni, K, Se, Ag, Na, Sr, Tl, Sn, Ti, W, U, V, Zn
		Al, Sb, As, Ba, Be, B, Cd, Ca, Cr, Co, Cu, Fe, Pb, Li, Mg, Mo, Mn, Hg, Ni, K, Se, Ag, Na, Sr, Tl, Sn, Ti, W, U, V, Zn
		Al, Sb, As, Ba, Be, B, Cd, Ca, Cr, Co, Cu, Fe, Pb, Li, Mg, Mo, Mn, Hg, Ni, K, Se, Ag, Na, Sr, Tl, Sn, Ti, W, U, V, Zn
		Al, Sb, As, Ba, Be, B, Cd, Ca, Cr, Co, Cu, Fe, Pb, Li, Mg, Mo, Mn, Hg, Ni, K, Se, Ag, Na, Sr, Tl, Sn, Ti, W, U, V, Zn
		Al, Sb, As, Ba, Be, B, Cd, Ca, Cr, Co, Cu, Fe, Pb, Li, Mg, Mo, Mn, Hg, Ni, K, Se, Ag, Na, Sr, Tl, Sn, Ti, W, U, V, Zn
Analysis Method		
ICP		Al, Sb, As, Ba, Be, B, Cd, Ca, Cr, Co, Cu, Fe, Pb, Li, Mg, Mo, Mn, Hg, Ni, K, Se, Ag, Na, Sr, Tl, Sn, Ti, W, U, V, Zn
ICP-MS		Al, Sb, As, Ba, Be, B, Cd, Ca, Cr, Co, Cu, Fe, Pb, Li, Mg, Mo, Mn, Hg, Ni, K, Se, Ag, Na, Sr, Tl, Sn, Ti, W, U, V, Zn
GFAA		Al, Sb, As, Ba, Be, B, Cd, Ca, Cr, Co, Cu, Fe, Pb, Li, Mg, Mo, Mn, Hg, Ni, K, Se, Ag, Na, Sr, Tl, Sn, Ti, W, U, V, Zn

Comments: Mercury by CVAA if performed

Laboratory Data Consultants, Inc.
Data Validation Report

Project/Site Name: Kimberly-Clark Upland Area

LDC Report Date: November 16, 2020

Parameters: Metals

Validation Level: Stage 2A

Laboratory: Friedman & Bruya, Inc.

Sample Delivery Group (SDG): 009316

Sample Identification	Laboratory Sample Identification	Matrix	Collection Date
BBH-B-23-10	009316-01	Soil	09/17/20
BBH-S-18-8	009316-02	Soil	09/17/20
BBH-S-17-8	009316-03	Soil	09/17/20
BBH-B-22-10	009316-04	Soil	09/17/20
BBH-S-14-8	009316-05	Soil	09/17/20
BBH-S-13-8	009316-06	Soil	09/17/20
BBH-518	009316-07	Soil	09/17/20
BBH-S-15-8	009316-08	Soil	09/17/20
BBH-S-19-8	009316-09	Soil	09/17/20
BBH-S-20-8	009316-10	Soil	09/17/20
BBH-B-25-10	009316-11	Soil	09/17/20
BBH-S-22-8	009316-12	Soil	09/17/20
BBH-S-21-8	009316-13	Soil	09/17/20
BBH-B-23-10MS	009316-01MS	Soil	09/17/20
BBH-B-23-10MSD	009316-01MSD	Soil	09/17/20

Introduction

This Data Validation Report (DVR) presents data validation findings and results for the associated samples listed on the cover page. Data validation was performed in accordance with a modified outline of the USEPA National Functional Guidelines (NFG) for Inorganic Superfund Methods Data Review (January 2017). Where specific guidance was not available, the data has been evaluated in a conservative manner consistent with industry standards using professional experience.

The analyses were performed by the following methods:

Copper and Zinc by Environmental Protection Agency (EPA) SW 846 Method 6020B
Mercury by EPA Method 1631E

All sample results were subjected to Stage 2A data validation, which comprises an evaluation of quality control (QC) summary results.

The following are definitions of the data qualifiers utilized during data validation:

J (Estimated): The compound or analyte was analyzed for and positively identified by the laboratory; however the reported concentration is estimated due to non-conformances discovered during data validation.

U (Non-detected): The compound or analyte was analyzed for and positively identified by the laboratory; however the compound or analyte should be considered non-detected at the reported concentration due to the presence of contaminants detected in the associated blank(s).

UJ (Non-detected estimated): The compound or analyte was reported as not detected by the laboratory; however the reported quantitation/detection limit is estimated due to non-conformances discovered during data validation.

R (Rejected): The sample results were rejected due to gross non-conformances discovered during data validation. Data qualified as rejected is not usable.

NA (Not Applicable): The non-conformance discovered during data validation demonstrates a high bias, while the affected compound or analyte in the associated sample(s) was reported as not detected by the laboratory and did not warrant the qualification of the data.

A qualification summary table is provided at the end of this report if data has been qualified. Flags are classified as P (protocol) or A (advisory) to indicate whether the flag is due to a laboratory deviation from a specified protocol or is of technical advisory nature.

I. Sample Receipt and Technical Holding Times

All samples were received in good condition.

All technical holding time requirements were met.

II. ICPMS Tune

ICP-MS tune data were not reviewed for Stage 2A validation.

III. Instrument Calibration

Instrument calibration data were not reviewed for Stage 2A validation.

IV. ICP Interference Check Sample Analysis

ICP Interference check sample (ICS) analysis data were not reviewed for Stage 2A validation.

V. Laboratory Blanks

Laboratory blanks were analyzed as required by the methods. No contaminants were found in the laboratory blanks.

VI. Field Blanks

No field blanks were identified in this SDG.

VII. Matrix Spike/Matrix Spike Duplicates

Matrix spike (MS) and matrix spike duplicate (MSD) sample analysis was performed on an associated project sample. Percent recoveries (%R) were within QC limits with the following exceptions:

Spike ID (Associated Samples)	Analyte	MS (%R) (Limits)	MSD (%R) (Limits)	Flag	A or P
BBH-B-23-10MS/MSD (BBH-B-23-10)	Mercury	157 (71-125)	-	J (all detects)	A
BBH-B-23-10MS/MSD (BBH-S-18-8 BBH-S-17-8 BBH-B-22-10 BBH-S-14-8 BBH-S-13-8 BBH-518 BBH-S-15-8 BBH-S-19-8 BBH-S-20-8 BBH-B-25-10 BBH-S-22-8 BBH-S-21-8)	Mercury	157 (71-125)	-	NA	-

Relative percent differences (RPD) were within QC limits with the following exceptions:

Spike ID (Associated Samples)	Analyte	RPD (Limits)	Flag	A or P
BBH-B-23-10MS/MSD (All samples in SDG 009316)	Mercury	23 (≤20)	J (all detects) UJ (all non-detects)	A

VIII. Duplicate Sample Analysis

The laboratory has indicated that there were no duplicate (DUP) analyses specified for the samples in this SDG, and therefore duplicate analyses were not performed for this SDG.

IX. Serial Dilution

Serial dilution was not performed for this SDG.

X. Laboratory Control Samples

Laboratory control samples (LCS) were analyzed as required by the methods. Percent recoveries (%R) were within QC limits.

XI. Field Duplicates

Samples BBH-B-23-10 and BBH-518 were identified as field duplicates. No results were detected in any of the samples with the following exceptions:

Analyte	Concentration (mg/Kg)		RPD
	BBH-B-23-10	BBH-518	
Copper	49.2	32.5	41
Zinc	86.3	60.2	36
Mercury	0.13	0.1U	Not calculable

XII. Internal Standards (ICP-MS)

Internal standards data were not reviewed for Stage 2A validation.

XIII. Sample Result Verification

Raw data were not reviewed for Stage 2A validation.

XIV. Overall Assessment of Data

The analysis was conducted within all specifications of the methods.

Due to MS/MSD %R and RPD, data were qualified as estimated in thirteen samples.

No results were rejected in this SDG.

Kimberly-Clark Upland Area
Metals - Data Qualification Summary - SDG 009316

Sample	Analyte	Flag	A or P	Reason
BBH-B-23-10	Mercury	J (all detects)	A	Matrix spike/Matrix spike duplicate (%R)
BBH-B-23-10 BBH-S-18-8 BBH-S-17-8 BBH-B-22-10 BBH-S-14-8 BBH-S-13-8 BBH-518 BBH-S-15-8 BBH-S-19-8 BBH-S-20-8 BBH-B-25-10 BBH-S-22-8 BBH-S-21-8	Mercury	J (all detects) UJ (all non-detects)	A	Matrix spike/Matrix spike duplicate (RPD)

Kimberly-Clark Upland Area
Metals - Laboratory Blank Data Qualification Summary - SDG 009316

No Sample Data Qualified in this SDG

Kimberly-Clark Upland Area
Metals - Field Blank Data Qualification Summary - SDG 009316

No Sample Data Qualified in this SDG

LDC #: 49554B4a

SDG #: 009316

Laboratory: Friedman & Bruya, Inc.

VALIDATION COMPLETENESS WORKSHEET

Stage 2A

Date: 11/12/2020

Reviewer: DTM

2nd Reviewer:

METHOD: Metals (EPA SW 846 Method 6020B/EPA Method 1631E)

The samples listed below were reviewed for each of the following validation areas. Validation findings are noted in attached validation findings worksheets.

	Validation Area		Comments
I.	Sample receipt/Technical holding times	A/A	
II.	ICP/MS Tune	N	
III.	Instrument Calibration	N	
IV.	ICP Interference Check Sample (ICS) Analysis	N	
V.	Laboratory Blanks	A	
VI.	Field Blanks	N	
VII.	Matrix Spike/Matrix Spike Duplicates	SW	
VIII.	Duplicate sample analysis	N	
IX.	Serial Dilution	N	
X.	Laboratory control samples	A	LCS
XI.	Field Duplicates	SW	(1,7)
XII.	Internal Standard (ICP-MS)	N	
XIII.	Sample Result Verification	N	
XIV.	Overall Assessment of Data	A	

Note: A = Acceptable; N = Not provided/applicable; SW = See worksheet; ND = No compounds detected; R = Rinsate; FB = Field blank; D = Duplicate; TB = Trip blank; EB = Equipment blank; SB=Source blank; OTHER:

	Client ID	Lab ID	Matrix	Date
1	BBH-B-23-10	009316-01	Soil	09/17/20
2	BBH-S-18-8	009316-02	Soil	09/17/20
3	BBH-S-17-8	009316-03	Soil	09/17/20
4	BBH-B-22-10	009316-04	Soil	09/17/20
5	BBH-S-14-8	009316-05	Soil	09/17/20
6	BBH-S-13-8	009316-06	Soil	09/17/20
7	BBH-518	009316-07	Soil	09/17/20
8	BBH-S-15-8	009316-08	Soil	09/17/20
9	BBH-S-19-8	009316-09	Soil	09/17/20
10	BBH-S-20-8	009316-10	Soil	09/17/20
11	BBH-B-25-10	009316-11	Soil	09/17/20
12	BBH-S-22-8	009316-12	Soil	09/17/20

LDC #: 49554B4a

SDG #: 009316

Laboratory: Friedman & Bruya, Inc.

VALIDATION COMPLETENESS WORKSHEET

Stage 2A

Date: 11/12/2020

Reviewer: DTM

2nd Reviewer:

METHOD: Metals (EPA SW 846 Method 6020B/EPA Method 1631E)

	Client ID	Lab ID	Matrix	Date
13	BBH-S-21-8	009316-13	Soil	09/17/20
14	BBH-B-23-10MS	009316-01MS	Soil	09/17/20
15	BBH-B-23-10MSD	009316-01MSD	Soil	09/17/20
16				
17				
18				

Notes:

LDC #: 49554B4a

VALIDATION FINDINGS WORKSHEET

Sample Specific Element Reference

Reviewer: DTM

All circled elements are applicable to each sample.

Sample ID	Matrix	Target Analyte List (TAL)
2-3,5-7,10-13	S	Cu, Zn, Hg
1,4,8-9	S	Cu, Zn
1,4,8-9	S	Hg
QC 14-15	S	Cu, Zn, Hg
		Al, Sb, As, Ba, Be, B, Cd, Ca, Cr, Co, Cu, Fe, Pb, Li, Mg, Mo, Mn, Hg, Ni, K, Se, Ag, Na, Sr, Tl, Sn, Ti, W, U, V, Zn
		Al, Sb, As, Ba, Be, B, Cd, Ca, Cr, Co, Cu, Fe, Pb, Li, Mg, Mo, Mn, Hg, Ni, K, Se, Ag, Na, Sr, Tl, Sn, Ti, W, U, V, Zn
		Al, Sb, As, Ba, Be, B, Cd, Ca, Cr, Co, Cu, Fe, Pb, Li, Mg, Mo, Mn, Hg, Ni, K, Se, Ag, Na, Sr, Tl, Sn, Ti, W, U, V, Zn
		Al, Sb, As, Ba, Be, B, Cd, Ca, Cr, Co, Cu, Fe, Pb, Li, Mg, Mo, Mn, Hg, Ni, K, Se, Ag, Na, Sr, Tl, Sn, Ti, W, U, V, Zn
		Al, Sb, As, Ba, Be, B, Cd, Ca, Cr, Co, Cu, Fe, Pb, Li, Mg, Mo, Mn, Hg, Ni, K, Se, Ag, Na, Sr, Tl, Sn, Ti, W, U, V, Zn
		Al, Sb, As, Ba, Be, B, Cd, Ca, Cr, Co, Cu, Fe, Pb, Li, Mg, Mo, Mn, Hg, Ni, K, Se, Ag, Na, Sr, Tl, Sn, Ti, W, U, V, Zn
		Al, Sb, As, Ba, Be, B, Cd, Ca, Cr, Co, Cu, Fe, Pb, Li, Mg, Mo, Mn, Hg, Ni, K, Se, Ag, Na, Sr, Tl, Sn, Ti, W, U, V, Zn
		Al, Sb, As, Ba, Be, B, Cd, Ca, Cr, Co, Cu, Fe, Pb, Li, Mg, Mo, Mn, Hg, Ni, K, Se, Ag, Na, Sr, Tl, Sn, Ti, W, U, V, Zn
		Al, Sb, As, Ba, Be, B, Cd, Ca, Cr, Co, Cu, Fe, Pb, Li, Mg, Mo, Mn, Hg, Ni, K, Se, Ag, Na, Sr, Tl, Sn, Ti, W, U, V, Zn
		Al, Sb, As, Ba, Be, B, Cd, Ca, Cr, Co, Cu, Fe, Pb, Li, Mg, Mo, Mn, Hg, Ni, K, Se, Ag, Na, Sr, Tl, Sn, Ti, W, U, V, Zn
		Al, Sb, As, Ba, Be, B, Cd, Ca, Cr, Co, Cu, Fe, Pb, Li, Mg, Mo, Mn, Hg, Ni, K, Se, Ag, Na, Sr, Tl, Sn, Ti, W, U, V, Zn
		Al, Sb, As, Ba, Be, B, Cd, Ca, Cr, Co, Cu, Fe, Pb, Li, Mg, Mo, Mn, Hg, Ni, K, Se, Ag, Na, Sr, Tl, Sn, Ti, W, U, V, Zn
Analysis Method		
ICP		Al, Sb, As, Ba, Be, B, Cd, Ca, Cr, Co, Cu, Fe, Pb, Li, Mg, Mo, Mn, Hg, Ni, K, Se, Ag, Na, Sr, Tl, Sn, Ti, W, U, V, Zn
ICP-MS		Al, Sb, As, Ba, Be, B, Cd, Ca, Cr, Co, Cu, Fe, Pb, Li, Mg, Mo, Mn, Hg, Ni, K, Se, Ag, Na, Sr, Tl, Sn, Ti, W, U, V, Zn
GFAA		Al, Sb, As, Ba, Be, B, Cd, Ca, Cr, Co, Cu, Fe, Pb, Li, Mg, Mo, Mn, Hg, Ni, K, Se, Ag, Na, Sr, Tl, Sn, Ti, W, U, V, Zn

Comments: Mercury by CVAA if performed

LDC #: 49554B4a

VALIDATION FINDINGS WORKSHEET
Matrix Spike/Matrix Spike Duplicates

Reviewer: DTM

METHOD: Trace metals (EPA SW 846 Method 6020/6010/7470)

Please see qualifications below for all questions answered "N". Not applicable questions are identified as "N/A".

Y N N/A Was a matrix spike analyzed for each matrix in this SDG?

Y N N/A Were matrix spike percent recoveries (%R) within the control limits of 75-125? If the sample concentration exceeded the spike concentration by a factor of 4 or more, no action was taken.

Y N N/A Were all duplicate sample relative percent differences (RPD) ≤ 20% for samples?

LEVEL IV ONLY:

Y N N/A Were recalculated results acceptable? See Level IV Recalculation Worksheet for recalculations.

#	MS/MSD ID	Matrix	Analyte	MS %Recovery	MSD %Recovery	RPD (Limits)	Associated Samples	Qual	DET	ND	PS Recovery%
	14/15	S	Hg	157(71-125)			ALL	J/A	1	2-13	
			Hg			23(20)	ALL	J/UJ/A	1	2-13	

Comments:

LDC#: 49554B4a

VALIDATION FINDINGS WORKSHEET

Field Duplicates

Reviewer: DTM

METHOD: Metals (EPA Method 6010/6020/7000)

Analyte	Concentration (mg/Kg)		RPD
	1	7	
Copper	49.2	32.5	41
Zinc	86.3	60.2	36
Mercury	0.13	0.1U	NC

Laboratory Data Consultants, Inc.
Data Validation Report

Project/Site Name: Kimberly-Clark Upland Area

LDC Report Date: November 16, 2020

Parameters: Metals

Validation Level: Stage 2A

Laboratory: Friedman & Bruya, Inc.

Sample Delivery Group (SDG): 009348

Sample Identification	Laboratory Sample Identification	Matrix	Collection Date
BBH-B-16-10	009348-01	Soil	09/18/20
BBH-S-23-8	009348-02	Soil	09/18/20
BBH-S-24-8	009348-03	Soil	09/18/20
BBH-B-27-10	009348-04	Soil	09/18/20
BBH-B-16-10MS	009348-01MS	Soil	09/18/20
BBH-B-16-10MSD	009348-01MSD	Soil	09/18/20

Introduction

This Data Validation Report (DVR) presents data validation findings and results for the associated samples listed on the cover page. Data validation was performed in accordance with a modified outline of the USEPA National Functional Guidelines (NFG) for Inorganic Superfund Methods Data Review (January 2017). Where specific guidance was not available, the data has been evaluated in a conservative manner consistent with industry standards using professional experience.

The analyses were performed by the following methods:

Copper and Zinc by Environmental Protection Agency (EPA) SW 846 Method 6020B
Mercury by EPA Method 1631E

All sample results were subjected to Stage 2A data validation, which comprises an evaluation of quality control (QC) summary results.

The following are definitions of the data qualifiers utilized during data validation:

J (Estimated): The compound or analyte was analyzed for and positively identified by the laboratory; however the reported concentration is estimated due to non-conformances discovered during data validation.

U (Non-detected): The compound or analyte was analyzed for and positively identified by the laboratory; however the compound or analyte should be considered non-detected at the reported concentration due to the presence of contaminants detected in the associated blank(s).

UJ (Non-detected estimated): The compound or analyte was reported as not detected by the laboratory; however the reported quantitation/detection limit is estimated due to non-conformances discovered during data validation.

R (Rejected): The sample results were rejected due to gross non-conformances discovered during data validation. Data qualified as rejected is not usable.

NA (Not Applicable): The non-conformance discovered during data validation demonstrates a high bias, while the affected compound or analyte in the associated sample(s) was reported as not detected by the laboratory and did not warrant the qualification of the data.

A qualification summary table is provided at the end of this report if data has been qualified. Flags are classified as P (protocol) or A (advisory) to indicate whether the flag is due to a laboratory deviation from a specified protocol or is of technical advisory nature.

I. Sample Receipt and Technical Holding Times

All samples were received in good condition.

All technical holding time requirements were met.

II. ICPMS Tune

ICP-MS tune data were not reviewed for Stage 2A validation.

III. Instrument Calibration

Instrument calibration data were not reviewed for Stage 2A validation.

IV. ICP Interference Check Sample Analysis

ICP Interference check sample (ICS) analysis data were not reviewed for Stage 2A validation.

V. Laboratory Blanks

Laboratory blanks were analyzed as required by the methods. No contaminants were found in the laboratory blanks.

VI. Field Blanks

No field blanks were identified in this SDG.

VII. Matrix Spike/Matrix Spike Duplicates

Matrix spike (MS) and matrix spike duplicate (MSD) sample analysis was performed on an associated project sample. Percent recoveries (%R) were within QC limits. Relative percent differences (RPD) were within QC limits.

VIII. Duplicate Sample Analysis

The laboratory has indicated that there were no duplicate (DUP) analyses specified for the samples in this SDG, and therefore duplicate analyses were not performed for this SDG.

IX. Serial Dilution

Serial dilution was not performed for this SDG.

X. Laboratory Control Samples

Laboratory control samples (LCS) were analyzed as required by the methods. Percent recoveries (%R) were within QC limits.

XI. Field Duplicates

No field duplicates were identified in this SDG.

XII. Internal Standards (ICP-MS)

Internal standards data were not reviewed for Stage 2A validation.

XIII. Sample Result Verification

Raw data were not reviewed for Stage 2A validation.

XIV. Overall Assessment of Data

The analysis was conducted within all specifications of the methods. No results were rejected in this SDG.

Kimberly-Clark Upland Area
Metals - Data Qualification Summary - SDG 009348

No Sample Data Qualified in this SDG

Kimberly-Clark Upland Area
Metals - Laboratory Blank Data Qualification Summary - SDG 009348

No Sample Data Qualified in this SDG

Kimberly-Clark Upland Area
Metals - Field Blank Data Qualification Summary - SDG 009348

No Sample Data Qualified in this SDG

LDC #: 49554C4a

SDG #: 009348

Laboratory: Friedman & Bruya, Inc.

VALIDATION COMPLETENESS WORKSHEET

Stage 2A

Date: 11/12/2020

Reviewer: DTM

2nd Reviewer:

METHOD: Metals (EPA SW 846 Method 6020B/EPA Method 1631E)

The samples listed below were reviewed for each of the following validation areas. Validation findings are noted in attached validation findings worksheets.

	Validation Area		Comments
I.	Sample receipt/Technical holding times	A/A	
II.	ICP/MS Tune	N	
III.	Instrument Calibration	N	
IV.	ICP Interference Check Sample (ICS) Analysis	N	
V.	Laboratory Blanks	A	
VI.	Field Blanks	N	
VII.	Matrix Spike/Matrix Spike Duplicates	A	
VIII.	Duplicate sample analysis	N	
IX.	Serial Dilution	N	
X.	Laboratory control samples	A	LCS
XI.	Field Duplicates	N	
XII.	Internal Standard (ICP-MS)	N	
XIII.	Sample Result Verification	N	
XIV.	Overall Assessment of Data	A	

Note: A = Acceptable; ND = No compounds detected; D = Duplicate; SB=Source blank
N = Not provided/applicable; R = Rinsate; TB = Trip blank; OTHER:
SW = See worksheet; FB = Field blank; EB = Equipment blank

	Client ID	Lab ID	Matrix	Date
1	BBH-B-16-10	009348-01	Soil	09/18/20
2	BBH-S-23-8	009348-02	Soil	09/18/20
3	BBH-S-24-8	009348-03	Soil	09/18/20
4	BBH-B-27-10	009348-04	Soil	09/18/20
5	BBH-B-16-10MS	009348-01MS	Soil	09/18/20
6	BBH-B-16-10MSD	009348-01MSD	Soil	09/18/20
7				
8				
9				

Notes:

LDC #: 49554C4a

VALIDATION FINDINGS WORKSHEET

Sample Specific Element Reference

Reviewer: DTM

All circled elements are applicable to each sample.

Sample ID	Matrix	Target Analyte List (TAL)
1-4	S	Cu, Zn, Hg
QC 5-6	S	Cu, Zn, Hg
		Al, Sb, As, Ba, Be, B, Cd, Ca, Cr, Co, Cu, Fe, Pb, Li, Mg, Mo, Mn, Hg, Ni, K, Se, Ag, Na, Sr, Tl, Sn, Ti, W, U, V, Zn
		Al, Sb, As, Ba, Be, B, Cd, Ca, Cr, Co, Cu, Fe, Pb, Li, Mg, Mo, Mn, Hg, Ni, K, Se, Ag, Na, Sr, Tl, Sn, Ti, W, U, V, Zn
		Al, Sb, As, Ba, Be, B, Cd, Ca, Cr, Co, Cu, Fe, Pb, Li, Mg, Mo, Mn, Hg, Ni, K, Se, Ag, Na, Sr, Tl, Sn, Ti, W, U, V, Zn
		Al, Sb, As, Ba, Be, B, Cd, Ca, Cr, Co, Cu, Fe, Pb, Li, Mg, Mo, Mn, Hg, Ni, K, Se, Ag, Na, Sr, Tl, Sn, Ti, W, U, V, Zn
		Al, Sb, As, Ba, Be, B, Cd, Ca, Cr, Co, Cu, Fe, Pb, Li, Mg, Mo, Mn, Hg, Ni, K, Se, Ag, Na, Sr, Tl, Sn, Ti, W, U, V, Zn
		Al, Sb, As, Ba, Be, B, Cd, Ca, Cr, Co, Cu, Fe, Pb, Li, Mg, Mo, Mn, Hg, Ni, K, Se, Ag, Na, Sr, Tl, Sn, Ti, W, U, V, Zn
		Al, Sb, As, Ba, Be, B, Cd, Ca, Cr, Co, Cu, Fe, Pb, Li, Mg, Mo, Mn, Hg, Ni, K, Se, Ag, Na, Sr, Tl, Sn, Ti, W, U, V, Zn
		Al, Sb, As, Ba, Be, B, Cd, Ca, Cr, Co, Cu, Fe, Pb, Li, Mg, Mo, Mn, Hg, Ni, K, Se, Ag, Na, Sr, Tl, Sn, Ti, W, U, V, Zn
		Al, Sb, As, Ba, Be, B, Cd, Ca, Cr, Co, Cu, Fe, Pb, Li, Mg, Mo, Mn, Hg, Ni, K, Se, Ag, Na, Sr, Tl, Sn, Ti, W, U, V, Zn
		Al, Sb, As, Ba, Be, B, Cd, Ca, Cr, Co, Cu, Fe, Pb, Li, Mg, Mo, Mn, Hg, Ni, K, Se, Ag, Na, Sr, Tl, Sn, Ti, W, U, V, Zn
		Al, Sb, As, Ba, Be, B, Cd, Ca, Cr, Co, Cu, Fe, Pb, Li, Mg, Mo, Mn, Hg, Ni, K, Se, Ag, Na, Sr, Tl, Sn, Ti, W, U, V, Zn
		Al, Sb, As, Ba, Be, B, Cd, Ca, Cr, Co, Cu, Fe, Pb, Li, Mg, Mo, Mn, Hg, Ni, K, Se, Ag, Na, Sr, Tl, Sn, Ti, W, U, V, Zn
		Al, Sb, As, Ba, Be, B, Cd, Ca, Cr, Co, Cu, Fe, Pb, Li, Mg, Mo, Mn, Hg, Ni, K, Se, Ag, Na, Sr, Tl, Sn, Ti, W, U, V, Zn
Analysis Method		
ICP		Al, Sb, As, Ba, Be, B, Cd, Ca, Cr, Co, Cu, Fe, Pb, Li, Mg, Mo, Mn, Hg, Ni, K, Se, Ag, Na, Sr, Tl, Sn, Ti, W, U, V, Zn
ICP-MS		Al, Sb, As, Ba, Be, B, Cd, Ca, Cr, Co, Cu, Fe, Pb, Li, Mg, Mo, Mn, Hg, Ni, K, Se, Ag, Na, Sr, Tl, Sn, Ti, W, U, V, Zn
GFAA		Al, Sb, As, Ba, Be, B, Cd, Ca, Cr, Co, Cu, Fe, Pb, Li, Mg, Mo, Mn, Hg, Ni, K, Se, Ag, Na, Sr, Tl, Sn, Ti, W, U, V, Zn

Comments: Mercury by CVAA if performed

Laboratory Data Consultants, Inc.
Data Validation Report

Project/Site Name: Kimberly-Clark Upland Area

LDC Report Date: November 16, 2020

Parameters: Metals

Validation Level: Stage 2A

Laboratory: Friedman & Bruya, Inc.

Sample Delivery Group (SDG): 009369

Sample Identification	Laboratory Sample Identification	Matrix	Collection Date
BBH-S-47-4	0093969-01	Soil	09/21/20
BBH-S-48-4	0093969-02	Soil	09/21/20
BBH-S-49-4	0093969-03	Soil	09/21/20
BBH-S-49-8	0093969-04	Soil	09/21/20
BBH-519	0093969-05	Soil	09/21/20
BBH-S-50-4	0093969-06	Soil	09/21/20
BBH-S-51-4	0093969-07	Soil	09/21/20
BBH-S-51-8	0093969-08	Soil	09/21/20
BBH-S-53-4	0093969-09	Soil	09/21/20
BBH-S-52-8	0093969-10	Soil	09/21/20
BBH-S-54-4	0093969-11	Soil	09/21/20
BBH-S-55-4	0093969-12	Soil	09/21/20
BBH-B-21-10	0093969-13	Soil	09/21/20
BBH-S-04-8	0093969-14	Soil	09/21/20
BBH-S-06-8	0093969-15	Soil	09/21/20
BBH-B-26-10	0093969-16	Soil	09/21/20
BBH-S-56-4	0093969-17	Soil	09/21/20
BBH-S-08-8	0093969-18	Soil	09/21/20
BBH-S-05-8	0093969-19	Soil	09/21/20
BBH-S-47-4MS	0093969-01MS	Soil	09/21/20
BBH-S-47-4MSD	0093969-01MSD	Soil	09/21/20

Introduction

This Data Validation Report (DVR) presents data validation findings and results for the associated samples listed on the cover page. Data validation was performed in accordance with a modified outline of the USEPA National Functional Guidelines (NFG) for Inorganic Superfund Methods Data Review (January 2017). Where specific guidance was not available, the data has been evaluated in a conservative manner consistent with industry standards using professional experience.

The analyses were performed by the following methods:

Copper and Zinc by Environmental Protection Agency (EPA) SW 846 Method 6020B
Mercury by EPA Method 1631E

All sample results were subjected to Stage 2A data validation, which comprises an evaluation of quality control (QC) summary results.

The following are definitions of the data qualifiers utilized during data validation:

J (Estimated): The compound or analyte was analyzed for and positively identified by the laboratory; however the reported concentration is estimated due to non-conformances discovered during data validation.

U (Non-detected): The compound or analyte was analyzed for and positively identified by the laboratory; however the compound or analyte should be considered non-detected at the reported concentration due to the presence of contaminants detected in the associated blank(s).

UJ (Non-detected estimated): The compound or analyte was reported as not detected by the laboratory; however the reported quantitation/detection limit is estimated due to non-conformances discovered during data validation.

R (Rejected): The sample results were rejected due to gross non-conformances discovered during data validation. Data qualified as rejected is not usable.

NA (Not Applicable): The non-conformance discovered during data validation demonstrates a high bias, while the affected compound or analyte in the associated sample(s) was reported as not detected by the laboratory and did not warrant the qualification of the data.

A qualification summary table is provided at the end of this report if data has been qualified. Flags are classified as P (protocol) or A (advisory) to indicate whether the flag is due to a laboratory deviation from a specified protocol or is of technical advisory nature.

I. Sample Receipt and Technical Holding Times

All samples were received in good condition.

All technical holding time requirements were met.

II. ICPMS Tune

ICP-MS tune data were not reviewed for Stage 2A validation.

III. Instrument Calibration

Instrument calibration data were not reviewed for Stage 2A validation.

IV. ICP Interference Check Sample Analysis

ICP Interference check sample (ICS) analysis data were not reviewed for Stage 2A validation.

V. Laboratory Blanks

Laboratory blanks were analyzed as required by the methods. No contaminants were found in the laboratory blanks.

VI. Field Blanks

No field blanks were identified in this SDG.

VII. Matrix Spike/Matrix Spike Duplicates

Matrix spike (MS) and matrix spike duplicate (MSD) sample analysis was performed on an associated project sample. Percent recoveries (%R) were within QC limits. Relative percent differences (RPD) were within QC limits.

VIII. Duplicate Sample Analysis

The laboratory has indicated that there were no duplicate (DUP) analyses specified for the samples in this SDG, and therefore duplicate analyses were not performed for this SDG.

IX. Serial Dilution

Serial dilution was not performed for this SDG.

X. Laboratory Control Samples

Laboratory control samples (LCS) were analyzed as required by the methods. Percent recoveries (%R) were within QC limits.

XI. Field Duplicates

Samples BBH-S-49-8 and BBH-519 were identified as field duplicates. No results were detected in any of the samples with the following exceptions:

Analyte	Concentration (mg/Kg)		RPD
	BBH-S-49-8	BBH-519	
Copper	20.5	18.7	9
Zinc	43.0	42.4	1

XII. Internal Standards (ICP-MS)

Internal standards data were not reviewed for Stage 2A validation.

XIII. Sample Result Verification

Raw data were not reviewed for Stage 2A validation.

XIV. Overall Assessment of Data

The analysis was conducted within all specifications of the methods. No results were rejected in this SDG.

Kimberly-Clark Upland Area
Metals - Data Qualification Summary - SDG 009369

No Sample Data Qualified in this SDG

Kimberly-Clark Upland Area
Metals - Laboratory Blank Data Qualification Summary - SDG 009369

No Sample Data Qualified in this SDG

Kimberly-Clark Upland Area
Metals - Field Blank Data Qualification Summary - SDG 009369

No Sample Data Qualified in this SDG

LDC #: 49554D4a

SDG #: 009369

Laboratory: Friedman & Bruya, Inc.

VALIDATION COMPLETENESS WORKSHEET

Stage 2A

Date: 11/12/2020

Reviewer: DTM

2nd Reviewer:

METHOD: Metals (EPA SW 846 Method 6020B/EPA Method 1631E)

The samples listed below were reviewed for each of the following validation areas. Validation findings are noted in attached validation findings worksheets.

	Validation Area		Comments
I.	Sample receipt/Technical holding times	A/A	
II.	ICP/MS Tune	N	
III.	Instrument Calibration	N	
IV.	ICP Interference Check Sample (ICS) Analysis	N	
V.	Laboratory Blanks	A	
VI.	Field Blanks	N	
VII.	Matrix Spike/Matrix Spike Duplicates	A	
VIII.	Duplicate sample analysis	N	
IX.	Serial Dilution	N	
X.	Laboratory control samples	A	LCS
XI.	Field Duplicates	SW	(4,5)
XII.	Internal Standard (ICP-MS)	N	
XIII.	Sample Result Verification	N	
XIV.	Overall Assessment of Data	A	

Note: A = Acceptable; N = Not provided/applicable; SW = See worksheet; ND = No compounds detected; R = Rinsate; FB = Field blank; D = Duplicate; TB = Trip blank; EB = Equipment blank; SB=Source blank; OTHER:

	Client ID	Lab ID	Matrix	Date
1	BBH-S-47-4	0093969-01	Soil	09/21/20
2	BBH-S-48-4	0093969-02	Soil	09/21/20
3	BBH-S-49-4	0093969-03	Soil	09/21/20
4	BBH-S-49-8	0093969-04	Soil	09/21/20
5	BBH-519	0093969-05	Soil	09/21/20
6	BBH-S-50-4	0093969-06	Soil	09/21/20
7	BBH-S-51-4	0093969-07	Soil	09/21/20
8	BBH-S-51-8	0093969-08	Soil	09/21/20
9	BBH-S-53-4	0093969-09	Soil	09/21/20
10	BBH-S-52-8	0093969-10	Soil	09/21/20
11	BBH-S-54-4	0093969-11	Soil	09/21/20
12	BBH-S-55-4	0093969-12	Soil	09/21/20

LDC #: 49554D4a

SDG #: 009369

Laboratory: Friedman & Bruya, Inc.

VALIDATION COMPLETENESS WORKSHEET

Stage 2A

Date:11/12/2020

Reviewer: DTM

2nd Reviewer:

METHOD: Metals (EPA SW 846 Method 6020B/EPA Method 1631E)

	Client ID	Lab ID	Matrix	Date
13	BBH-B-21-10	0093969-13	Soil	09/21/20
14	BBH-S-04-8	0093969-14	Soil	09/21/20
15	BBH-S-06-8	0093969-15	Soil	09/21/20
16	BBH-B-26-10	0093969-16	Soil	09/21/20
17	BBH-S-56-4	0093969-17	Soil	09/21/20
18	BBH-S-08-8	0093969-18	Soil	09/21/20
19	BBH-S-05-8	0093969-19	Soil	09/21/20
20	BBH-S-47-4MS	0093969-01MS	Soil	09/21/20
21	BBH-S-47-4MSD	0093969-01MSD	Soil	09/21/20
22				
23				
24				

Notes:

LDC #: 49554D4a

VALIDATION FINDINGS WORKSHEET

Page: 1 of 1

Sample Specific Element Reference

Reviewer: DTM

All circled elements are applicable to each sample.

Sample ID	Matrix	Target Analyte List (TAL)
1-19	S	Cu, Zn, Hg
QC20-21	S	Cu, Zn, Hg
		Al, Sb, As, Ba, Be, B, Cd, Ca, Cr, Co, Cu, Fe, Pb, Li, Mg, Mo, Mn, Hg, Ni, K, Se, Ag, Na, Sr, Tl, Sn, Ti, W, U, V, Zn
		Al, Sb, As, Ba, Be, B, Cd, Ca, Cr, Co, Cu, Fe, Pb, Li, Mg, Mo, Mn, Hg, Ni, K, Se, Ag, Na, Sr, Tl, Sn, Ti, W, U, V, Zn
		Al, Sb, As, Ba, Be, B, Cd, Ca, Cr, Co, Cu, Fe, Pb, Li, Mg, Mo, Mn, Hg, Ni, K, Se, Ag, Na, Sr, Tl, Sn, Ti, W, U, V, Zn
		Al, Sb, As, Ba, Be, B, Cd, Ca, Cr, Co, Cu, Fe, Pb, Li, Mg, Mo, Mn, Hg, Ni, K, Se, Ag, Na, Sr, Tl, Sn, Ti, W, U, V, Zn
		Al, Sb, As, Ba, Be, B, Cd, Ca, Cr, Co, Cu, Fe, Pb, Li, Mg, Mo, Mn, Hg, Ni, K, Se, Ag, Na, Sr, Tl, Sn, Ti, W, U, V, Zn
		Al, Sb, As, Ba, Be, B, Cd, Ca, Cr, Co, Cu, Fe, Pb, Li, Mg, Mo, Mn, Hg, Ni, K, Se, Ag, Na, Sr, Tl, Sn, Ti, W, U, V, Zn
		Al, Sb, As, Ba, Be, B, Cd, Ca, Cr, Co, Cu, Fe, Pb, Li, Mg, Mo, Mn, Hg, Ni, K, Se, Ag, Na, Sr, Tl, Sn, Ti, W, U, V, Zn
		Al, Sb, As, Ba, Be, B, Cd, Ca, Cr, Co, Cu, Fe, Pb, Li, Mg, Mo, Mn, Hg, Ni, K, Se, Ag, Na, Sr, Tl, Sn, Ti, W, U, V, Zn
		Al, Sb, As, Ba, Be, B, Cd, Ca, Cr, Co, Cu, Fe, Pb, Li, Mg, Mo, Mn, Hg, Ni, K, Se, Ag, Na, Sr, Tl, Sn, Ti, W, U, V, Zn
		Al, Sb, As, Ba, Be, B, Cd, Ca, Cr, Co, Cu, Fe, Pb, Li, Mg, Mo, Mn, Hg, Ni, K, Se, Ag, Na, Sr, Tl, Sn, Ti, W, U, V, Zn
		Al, Sb, As, Ba, Be, B, Cd, Ca, Cr, Co, Cu, Fe, Pb, Li, Mg, Mo, Mn, Hg, Ni, K, Se, Ag, Na, Sr, Tl, Sn, Ti, W, U, V, Zn
		Al, Sb, As, Ba, Be, B, Cd, Ca, Cr, Co, Cu, Fe, Pb, Li, Mg, Mo, Mn, Hg, Ni, K, Se, Ag, Na, Sr, Tl, Sn, Ti, W, U, V, Zn
		Al, Sb, As, Ba, Be, B, Cd, Ca, Cr, Co, Cu, Fe, Pb, Li, Mg, Mo, Mn, Hg, Ni, K, Se, Ag, Na, Sr, Tl, Sn, Ti, W, U, V, Zn
Analysis Method		
ICP		Al, Sb, As, Ba, Be, B, Cd, Ca, Cr, Co, Cu, Fe, Pb, Li, Mg, Mo, Mn, Hg, Ni, K, Se, Ag, Na, Sr, Tl, Sn, Ti, W, U, V, Zn
ICP-MS		Al, Sb, As, Ba, Be, B, Cd, Ca, Cr, Co, Cu, Fe, Pb, Li, Mg, Mo, Mn, Hg, Ni, K, Se, Ag, Na, Sr, Tl, Sn, Ti, W, U, V, Zn
GFAA		Al, Sb, As, Ba, Be, B, Cd, Ca, Cr, Co, Cu, Fe, Pb, Li, Mg, Mo, Mn, Hg, Ni, K, Se, Ag, Na, Sr, Tl, Sn, Ti, W, U, V, Zn

Comments: Mercury by CVAA if performed

LDC#: 49554D4a

VALIDATION FINDINGS WORKSHEET

Field Duplicates

Reviewer:_DTM_

METHOD: Metals (EPA Method 6010/6020/7000)

Analyte	Concentration (mg/Kg)		RPD
	4	5	
Copper	20.5	18.7	9
Zinc	43.0	42.4	1

Laboratory Data Consultants, Inc.
Data Validation Report

Project/Site Name: Kimberly-Clark Upland Area

LDC Report Date: November 16, 2020

Parameters: Metals

Validation Level: Stage 2A

Laboratory: Friedman & Bruya, Inc.

Sample Delivery Group (SDG): 009431

Sample Identification	Laboratory Sample Identification	Matrix	Collection Date
BBH-S-57-4	009431-01	Soil	09/22/20
BBH-S-57-8	009431-02	Soil	09/22/20
BBH-B-24-10	009431-03	Soil	09/22/20
BBH-S-58-4	009431-04	Soil	09/23/20
BBH-S-59-4	009431-05	Soil	09/23/20
BBH-S-10-8	009431-06	Soil	09/23/20
BBH-B-15-10	009431-07	Soil	09/23/20
BBH-S-09-8	009431-08	Soil	09/23/20
BBH-S-57-4MS	009431-01MS	Soil	09/22/20
BBH-S-57-4MSD	009431-01MSD	Soil	09/22/20

Introduction

This Data Validation Report (DVR) presents data validation findings and results for the associated samples listed on the cover page. Data validation was performed in accordance with a modified outline of the USEPA National Functional Guidelines (NFG) for Inorganic Superfund Methods Data Review (January 2017). Where specific guidance was not available, the data has been evaluated in a conservative manner consistent with industry standards using professional experience.

The analyses were performed by the following methods:

Copper and Zinc by Environmental Protection Agency (EPA) SW 846 Method 6020B
Mercury by EPA Method 1631E

All sample results were subjected to Stage 2A data validation, which comprises an evaluation of quality control (QC) summary results.

The following are definitions of the data qualifiers utilized during data validation:

J (Estimated): The compound or analyte was analyzed for and positively identified by the laboratory; however the reported concentration is estimated due to non-conformances discovered during data validation.

U (Non-detected): The compound or analyte was analyzed for and positively identified by the laboratory; however the compound or analyte should be considered non-detected at the reported concentration due to the presence of contaminants detected in the associated blank(s).

UJ (Non-detected estimated): The compound or analyte was reported as not detected by the laboratory; however the reported quantitation/detection limit is estimated due to non-conformances discovered during data validation.

R (Rejected): The sample results were rejected due to gross non-conformances discovered during data validation. Data qualified as rejected is not usable.

NA (Not Applicable): The non-conformance discovered during data validation demonstrates a high bias, while the affected compound or analyte in the associated sample(s) was reported as not detected by the laboratory and did not warrant the qualification of the data.

A qualification summary table is provided at the end of this report if data has been qualified. Flags are classified as P (protocol) or A (advisory) to indicate whether the flag is due to a laboratory deviation from a specified protocol or is of technical advisory nature.

I. Sample Receipt and Technical Holding Times

All samples were received in good condition.

All technical holding time requirements were met.

II. ICPMS Tune

ICP-MS tune data were not reviewed for Stage 2A validation.

III. Instrument Calibration

Instrument calibration data were not reviewed for Stage 2A validation.

IV. ICP Interference Check Sample Analysis

ICP Interference check sample (ICS) analysis data were not reviewed for Stage 2A validation.

V. Laboratory Blanks

Laboratory blanks were analyzed as required by the methods. No contaminants were found in the laboratory blanks.

VI. Field Blanks

No field blanks were identified in this SDG.

VII. Matrix Spike/Matrix Spike Duplicates

Matrix spike (MS) and matrix spike duplicate (MSD) sample analysis was performed on an associated project sample. Percent recoveries (%R) were within QC limits with the following exceptions:

Spike ID (Associated Samples)	Analyte	MS (%R) (Limits)	MSD (%R) (Limits)	Flag	A or P
BBH-S-57-4MS/MSD (BBH-S-57-4 BBH-S-57-8 BBH-S-58-4 BBH-S-59-4 BBH-S-10-8 BBH-B-15-10 BBH-S-09-8)	Mercury	-	137 (71-125)	J (all detects)	A
BBH-S-57-4MS/MSD (BBH-B-24-10)	Mercury	-	137 (71-125)	NA	-

Relative percent differences (RPD) were within QC limits.

VIII. Duplicate Sample Analysis

The laboratory has indicated that there were no duplicate (DUP) analyses specified for the samples in this SDG, and therefore duplicate analyses were not performed for this SDG.

IX. Serial Dilution

Serial dilution was not performed for this SDG.

X. Laboratory Control Samples

Laboratory control samples (LCS) were analyzed as required by the methods. Percent recoveries (%R) were within QC limits.

XI. Field Duplicates

No field duplicates were identified in this SDG.

XII. Internal Standards (ICP-MS)

Internal standards data were not reviewed for Stage 2A validation.

XIII. Sample Result Verification

Raw data were not reviewed for Stage 2A validation.

XIV. Overall Assessment of Data

The analysis was conducted within all specifications of the methods.

Due to MS/MSD %R, data were qualified as estimated in seven samples.

No results were rejected in this SDG.

Kimberly-Clark Upland Area
Metals - Data Qualification Summary - SDG 009431

Sample	Analyte	Flag	A or P	Reason
BBH-S-57-4 BBH-S-57-8 BBH-S-58-4 BBH-S-59-4 BBH-S-10-8 BBH-B-15-10 BBH-S-09-8	Mercury	J (all detects)	A	Matrix spike/Matrix spike duplicate (%R)

Kimberly-Clark Upland Area
Metals - Laboratory Blank Data Qualification Summary - SDG 009431

No Sample Data Qualified in this SDG

Kimberly-Clark Upland Area
Metals - Field Blank Data Qualification Summary - SDG 009431

No Sample Data Qualified in this SDG

LDC #: 49554E4a

SDG #: 009431

Laboratory: Friedman & Bruya, Inc.

VALIDATION COMPLETENESS WORKSHEET

Stage 2A

Date: 11/12/2020

Page: 1 of 1

Reviewer: DTM

2nd Reviewer:

METHOD: Metals (EPA SW 846 Method 6020B/EPA Method 1631E)

The samples listed below were reviewed for each of the following validation areas. Validation findings are noted in attached validation findings worksheets.

	Validation Area		Comments
I.	Sample receipt/Technical holding times	A/A	
II.	ICP/MS Tune	N	
III.	Instrument Calibration	N	
IV.	ICP Interference Check Sample (ICS) Analysis	N	
V.	Laboratory Blanks	A	
VI.	Field Blanks	N	
VII.	Matrix Spike/Matrix Spike Duplicates	SW	
VIII.	Duplicate sample analysis	N	
IX.	Serial Dilution	N	
X.	Laboratory control samples	A	LCS
XI.	Field Duplicates	N	
XII.	Internal Standard (ICP-MS)	N	
XIII.	Sample Result Verification	N	
XIV.	Overall Assessment of Data	A	

Note: A = Acceptable; N = Not provided/applicable; SW = See worksheet; ND = No compounds detected; R = Rinsate; FB = Field blank; D = Duplicate; TB = Trip blank; EB = Equipment blank; SB=Source blank; OTHER:

	Client ID	Lab ID	Matrix	Date
1	BBH-S-57-4	009431-01	Soil	09/22/20
2	BBH-S-57-8	009431-02	Soil	09/22/20
3	BBH-B-24-10	009431-03	Soil	09/22/20
4	BBH-S-58-4	009431-04	Soil	09/23/20
5	BBH-S-59-4	009431-05	Soil	09/23/20
6	BBH-S-10-8	009431-06	Soil	09/23/20
7	BBH-B-15-10	009431-07	Soil	09/23/20
8	BBH-S-09-8	009431-08	Soil	09/23/20
9	BBH-S-57-4MS	009431-01MS	Soil	09/22/20
10	BBH-S-57-4MSD	009431-01MSD	Soil	09/22/20

Notes:

_LDC #:__49544E4a___ **VALIDATION FINDINGS WORKSHEET** Page:__1__of__1__

Sample Specific Element Reference Reviewer:__DTM__

All circled elements are applicable to each sample.

Sample ID	Matrix	Target Analyte List (TAL)
1-6	S	Cu, Zn
1-6	S	Hg
7-8	S	Cu, Zn, Hg
QC910	S	Cu, Zn, Hg
		Al, Sb, As, Ba, Be, B, Cd, Ca, Cr, Co, Cu, Fe, Pb, Li, Mg, Mo, Mn, Hg, Ni, K, Se, Ag, Na, Sr, Tl, Sn, Ti, W, U, V, Zn
		Al, Sb, As, Ba, Be, B, Cd, Ca, Cr, Co, Cu, Fe, Pb, Li, Mg, Mo, Mn, Hg, Ni, K, Se, Ag, Na, Sr, Tl, Sn, Ti, W, U, V, Zn
		Al, Sb, As, Ba, Be, B, Cd, Ca, Cr, Co, Cu, Fe, Pb, Li, Mg, Mo, Mn, Hg, Ni, K, Se, Ag, Na, Sr, Tl, Sn, Ti, W, U, V, Zn
		Al, Sb, As, Ba, Be, B, Cd, Ca, Cr, Co, Cu, Fe, Pb, Li, Mg, Mo, Mn, Hg, Ni, K, Se, Ag, Na, Sr, Tl, Sn, Ti, W, U, V, Zn
		Al, Sb, As, Ba, Be, B, Cd, Ca, Cr, Co, Cu, Fe, Pb, Li, Mg, Mo, Mn, Hg, Ni, K, Se, Ag, Na, Sr, Tl, Sn, Ti, W, U, V, Zn
		Al, Sb, As, Ba, Be, B, Cd, Ca, Cr, Co, Cu, Fe, Pb, Li, Mg, Mo, Mn, Hg, Ni, K, Se, Ag, Na, Sr, Tl, Sn, Ti, W, U, V, Zn
		Al, Sb, As, Ba, Be, B, Cd, Ca, Cr, Co, Cu, Fe, Pb, Li, Mg, Mo, Mn, Hg, Ni, K, Se, Ag, Na, Sr, Tl, Sn, Ti, W, U, V, Zn
		Al, Sb, As, Ba, Be, B, Cd, Ca, Cr, Co, Cu, Fe, Pb, Li, Mg, Mo, Mn, Hg, Ni, K, Se, Ag, Na, Sr, Tl, Sn, Ti, W, U, V, Zn
		Al, Sb, As, Ba, Be, B, Cd, Ca, Cr, Co, Cu, Fe, Pb, Li, Mg, Mo, Mn, Hg, Ni, K, Se, Ag, Na, Sr, Tl, Sn, Ti, W, U, V, Zn
		Al, Sb, As, Ba, Be, B, Cd, Ca, Cr, Co, Cu, Fe, Pb, Li, Mg, Mo, Mn, Hg, Ni, K, Se, Ag, Na, Sr, Tl, Sn, Ti, W, U, V, Zn
		Al, Sb, As, Ba, Be, B, Cd, Ca, Cr, Co, Cu, Fe, Pb, Li, Mg, Mo, Mn, Hg, Ni, K, Se, Ag, Na, Sr, Tl, Sn, Ti, W, U, V, Zn
		Al, Sb, As, Ba, Be, B, Cd, Ca, Cr, Co, Cu, Fe, Pb, Li, Mg, Mo, Mn, Hg, Ni, K, Se, Ag, Na, Sr, Tl, Sn, Ti, W, U, V, Zn
		Al, Sb, As, Ba, Be, B, Cd, Ca, Cr, Co, Cu, Fe, Pb, Li, Mg, Mo, Mn, Hg, Ni, K, Se, Ag, Na, Sr, Tl, Sn, Ti, W, U, V, Zn
Analysis Method		
ICP		Al, Sb, As, Ba, Be, B, Cd, Ca, Cr, Co, Cu, Fe, Pb, Li, Mg, Mo, Mn, Hg, Ni, K, Se, Ag, Na, Sr, Tl, Sn, Ti, W, U, V, Zn
ICP-MS		Al, Sb, As, Ba, Be, B, Cd, Ca, Cr, Co, Cu, Fe, Pb, Li, Mg, Mo, Mn, Hg, Ni, K, Se, Ag, Na, Sr, Tl, Sn, Ti, W, U, V, Zn
GFAA		Al, Sb, As, Ba, Be, B, Cd, Ca, Cr, Co, Cu, Fe, Pb, Li, Mg, Mo, Mn, Hg, Ni, K, Se, Ag, Na, Sr, Tl, Sn, Ti, W, U, V, Zn

Comments:__Mercury by CVAA if performed

LDC #: 49554E4a

VALIDATION FINDINGS WORKSHEET
Matrix Spike/Matrix Spike Duplicates

Reviewer: DTM

METHOD: Trace metals (EPA SW 846 Method 6020/6010/7470)

Please see qualifications below for all questions answered "N". Not applicable questions are identified as "N/A".

Y N N/A Was a matrix spike analyzed for each matrix in this SDG?

Y N N/A Were matrix spike percent recoveries (%R) within the control limits of 75-125? If the sample concentration exceeded the spike concentration by a factor of 4 or more, no action was taken.

Y N N/A Were all duplicate sample relative percent differences (RPD) ≤ 20% for samples?

LEVEL IV ONLY:

Y N N/A Were recalculated results acceptable? See Level IV Recalculation Worksheet for recalculations.

#	MS/MSD ID	Matrix	Analyte	MS %Recovery	MSD %Recovery	RPD (Limits)	Associated Samples	Qual	DET	ND	PS Recovery%
	9/10	S	Hg		137(71-125)		ALL	J/A	1-2,4-8	3	

Comments:

Laboratory Data Consultants, Inc.
Data Validation Report

Project/Site Name: Kimberly-Clark Upland Area

LDC Report Date: November 16, 2020

Parameters: Metals

Validation Level: Stage 2A

Laboratory: Friedman & Bruya, Inc.

Sample Delivery Group (SDG): 009494

Sample Identification	Laboratory Sample Identification	Matrix	Collection Date
B2-Trench-01-8	009494-01	Soil	09/25/20

Introduction

This Data Validation Report (DVR) presents data validation findings and results for the associated samples listed on the cover page. Data validation was performed in accordance with a modified outline of the USEPA National Functional Guidelines (NFG) for Inorganic Superfund Methods Data Review (January 2017). Where specific guidance was not available, the data has been evaluated in a conservative manner consistent with industry standards using professional experience.

The analyses were performed by the following methods:

Copper, Lead, and Zinc by Environmental Protection Agency (EPA) SW 846 Method 6020B
Mercury by EPA Method 1631E

All sample results were subjected to Stage 2A data validation, which comprises an evaluation of quality control (QC) summary results.

The following are definitions of the data qualifiers utilized during data validation:

J (Estimated): The compound or analyte was analyzed for and positively identified by the laboratory; however the reported concentration is estimated due to non-conformances discovered during data validation.

U (Non-detected): The compound or analyte was analyzed for and positively identified by the laboratory; however the compound or analyte should be considered non-detected at the reported concentration due to the presence of contaminants detected in the associated blank(s).

UJ (Non-detected estimated): The compound or analyte was reported as not detected by the laboratory; however the reported quantitation/detection limit is estimated due to non-conformances discovered during data validation.

R (Rejected): The sample results were rejected due to gross non-conformances discovered during data validation. Data qualified as rejected is not usable.

NA (Not Applicable): The non-conformance discovered during data validation demonstrates a high bias, while the affected compound or analyte in the associated sample(s) was reported as not detected by the laboratory and did not warrant the qualification of the data.

A qualification summary table is provided at the end of this report if data has been qualified. Flags are classified as P (protocol) or A (advisory) to indicate whether the flag is due to a laboratory deviation from a specified protocol or is of technical advisory nature.

I. Sample Receipt and Technical Holding Times

All samples were received in good condition.

All technical holding time requirements were met.

II. ICPMS Tune

ICP-MS tune data were not reviewed for Stage 2A validation.

III. Instrument Calibration

Instrument calibration data were not reviewed for Stage 2A validation.

IV. ICP Interference Check Sample Analysis

ICP Interference check sample (ICS) analysis data were not reviewed for Stage 2A validation.

V. Laboratory Blanks

Laboratory blanks were analyzed as required by the methods. No contaminants were found in the laboratory blanks.

VI. Field Blanks

No field blanks were identified in this SDG.

VII. Matrix Spike/Matrix Spike Duplicates

The laboratory has indicated that there were no matrix spike (MS) and matrix spike duplicate (MSD) analyses specified for the samples in this SDG, and therefore matrix spike and matrix spike duplicate analyses were not performed for this SDG.

VIII. Duplicate Sample Analysis

The laboratory has indicated that there were no duplicate (DUP) analyses specified for the samples in this SDG, and therefore duplicate analyses were not performed for this SDG.

IX. Serial Dilution

Serial dilution was not performed for this SDG.

X. Laboratory Control Samples

Laboratory control samples (LCS) were analyzed as required by the methods. Percent recoveries (%R) were within QC limits.

XI. Field Duplicates

No field duplicates were identified in this SDG.

XII. Internal Standards (ICP-MS)

Internal standards data were not reviewed for Stage 2A validation.

XIII. Sample Result Verification

Raw data were not reviewed for Stage 2A validation.

XIV. Overall Assessment of Data

The analysis was conducted within all specifications of the methods. No results were rejected in this SDG.

Kimberly-Clark Upland Area
Metals - Data Qualification Summary - SDG 009494

No Sample Data Qualified in this SDG

Kimberly-Clark Upland Area
Metals - Laboratory Blank Data Qualification Summary - SDG 009494

No Sample Data Qualified in this SDG

Kimberly-Clark Upland Area
Metals - Field Blank Data Qualification Summary - SDG 009494

No Sample Data Qualified in this SDG

LDC #: 49554F4a

SDG #: 009494

Laboratory: Friedman & Bruya, Inc.

VALIDATION COMPLETENESS WORKSHEET

Stage 2A

Date: 11/12/2020

Page: 1 of 1

Reviewer: DTM

2nd Reviewer:

METHOD: Metals (EPA SW 846 Method 6020B/EPA Method 1631E)

The samples listed below were reviewed for each of the following validation areas. Validation findings are noted in attached validation findings worksheets.

	Validation Area		Comments
I.	Sample receipt/Technical holding times	A/A	
II.	ICP/MS Tune	N	
III.	Instrument Calibration	N	
IV.	ICP Interference Check Sample (ICS) Analysis	N	
V.	Laboratory Blanks	A	
VI.	Field Blanks	N	
VII.	Matrix Spike/Matrix Spike Duplicates	N	
VIII.	Duplicate sample analysis	N	
IX.	Serial Dilution	N	
X.	Laboratory control samples	A	LCS
XI.	Field Duplicates	N	
XII.	Internal Standard (ICP-MS)	N	
XIII.	Sample Result Verification	N	
XIV.	Overall Assessment of Data	A	

Note: A = Acceptable; ND = No compounds detected; D = Duplicate; SB=Source blank
N = Not provided/applicable; R = Rinsate; TB = Trip blank; OTHER:
SW = See worksheet; FB = Field blank; EB = Equipment blank

	Client ID	Lab ID	Matrix	Date
1	B2-Trench-01-8	009494-01	Soil	09/25/20
2				
3				
4				
5				
6				

Notes:

LDC #: 49554F4a

VALIDATION FINDINGS WORKSHEET

Sample Specific Element Reference

Reviewer: DTM

All circled elements are applicable to each sample.

Sample ID	Matrix	Target Analyte List (TAL)
ALL	S	Pb, Cu, Zn,
ALL	S	Hg
		Al, Sb, As, Ba, Be, B, Cd, Ca, Cr, Co, Cu, Fe, Pb, Li, Mg, Mo, Mn, Hg, Ni, K, Se, Ag, Na, Sr, Tl, Sn, Ti, W, U, V, Zn
		Al, Sb, As, Ba, Be, B, Cd, Ca, Cr, Co, Cu, Fe, Pb, Li, Mg, Mo, Mn, Hg, Ni, K, Se, Ag, Na, Sr, Tl, Sn, Ti, W, U, V, Zn
		Al, Sb, As, Ba, Be, B, Cd, Ca, Cr, Co, Cu, Fe, Pb, Li, Mg, Mo, Mn, Hg, Ni, K, Se, Ag, Na, Sr, Tl, Sn, Ti, W, U, V, Zn
		Al, Sb, As, Ba, Be, B, Cd, Ca, Cr, Co, Cu, Fe, Pb, Li, Mg, Mo, Mn, Hg, Ni, K, Se, Ag, Na, Sr, Tl, Sn, Ti, W, U, V, Zn
		Al, Sb, As, Ba, Be, B, Cd, Ca, Cr, Co, Cu, Fe, Pb, Li, Mg, Mo, Mn, Hg, Ni, K, Se, Ag, Na, Sr, Tl, Sn, Ti, W, U, V, Zn
		Al, Sb, As, Ba, Be, B, Cd, Ca, Cr, Co, Cu, Fe, Pb, Li, Mg, Mo, Mn, Hg, Ni, K, Se, Ag, Na, Sr, Tl, Sn, Ti, W, U, V, Zn
		Al, Sb, As, Ba, Be, B, Cd, Ca, Cr, Co, Cu, Fe, Pb, Li, Mg, Mo, Mn, Hg, Ni, K, Se, Ag, Na, Sr, Tl, Sn, Ti, W, U, V, Zn
		Al, Sb, As, Ba, Be, B, Cd, Ca, Cr, Co, Cu, Fe, Pb, Li, Mg, Mo, Mn, Hg, Ni, K, Se, Ag, Na, Sr, Tl, Sn, Ti, W, U, V, Zn
		Al, Sb, As, Ba, Be, B, Cd, Ca, Cr, Co, Cu, Fe, Pb, Li, Mg, Mo, Mn, Hg, Ni, K, Se, Ag, Na, Sr, Tl, Sn, Ti, W, U, V, Zn
		Al, Sb, As, Ba, Be, B, Cd, Ca, Cr, Co, Cu, Fe, Pb, Li, Mg, Mo, Mn, Hg, Ni, K, Se, Ag, Na, Sr, Tl, Sn, Ti, W, U, V, Zn
		Al, Sb, As, Ba, Be, B, Cd, Ca, Cr, Co, Cu, Fe, Pb, Li, Mg, Mo, Mn, Hg, Ni, K, Se, Ag, Na, Sr, Tl, Sn, Ti, W, U, V, Zn
		Al, Sb, As, Ba, Be, B, Cd, Ca, Cr, Co, Cu, Fe, Pb, Li, Mg, Mo, Mn, Hg, Ni, K, Se, Ag, Na, Sr, Tl, Sn, Ti, W, U, V, Zn
		Al, Sb, As, Ba, Be, B, Cd, Ca, Cr, Co, Cu, Fe, Pb, Li, Mg, Mo, Mn, Hg, Ni, K, Se, Ag, Na, Sr, Tl, Sn, Ti, W, U, V, Zn
Analysis Method		
ICP		Al, Sb, As, Ba, Be, B, Cd, Ca, Cr, Co, Cu, Fe, Pb, Li, Mg, Mo, Mn, Hg, Ni, K, Se, Ag, Na, Sr, Tl, Sn, Ti, W, U, V, Zn
ICP-MS		Al, Sb, As, Ba, Be, B, Cd, Ca, Cr, Co, Cu, Fe, Pb, Li, Mg, Mo, Mn, Hg, Ni, K, Se, Ag, Na, Sr, Tl, Sn, Ti, W, U, V, Zn
GFAA		Al, Sb, As, Ba, Be, B, Cd, Ca, Cr, Co, Cu, Fe, Pb, Li, Mg, Mo, Mn, Hg, Ni, K, Se, Ag, Na, Sr, Tl, Sn, Ti, W, U, V, Zn

Comments: Mercury by CVAA if performed

Laboratory Data Consultants, Inc.
Data Validation Report

Project/Site Name: Kimberly-Clark Upland Area

LDC Report Date: November 16, 2020

Parameters: Total Petroleum Hydrocarbons as Extractables

Validation Level: Stage 2A

Laboratory: Friedman & Bruya, Inc.

Sample Delivery Group (SDG): 009494

Sample Identification	Laboratory Sample Identification	Matrix	Collection Date
B2-Trench-01-8	009494-01	Soil	09/25/20

Introduction

This Data Validation Report (DVR) presents data validation findings and results for the associated samples listed on the cover page. Data validation was performed in accordance with a modified outline of the USEPA National Functional Guidelines (NFG) for Organic Superfund Methods Data Review (January 2017). Where specific guidance was not available, the data has been evaluated in a conservative manner consistent with industry standards using professional experience.

The analyses were performed by the following method:

Total Petroleum Hydrocarbons (TPH) as Extractables by NWTPH-Dx

All sample results were subjected to Stage 2A data validation, which comprises an evaluation of quality control (QC) summary results.

The following are definitions of the data qualifiers utilized during data validation:

J (Estimated): The compound or analyte was analyzed for and positively identified by the laboratory; however the reported concentration is estimated due to non-conformances discovered during data validation.

U (Non-detected): The compound or analyte was analyzed for and positively identified by the laboratory; however the compound or analyte should be considered not detected at the reported concentration due to the presence of contaminants detected in the associated blank(s).

UJ (Non-detected estimated): The compound or analyte was reported as not detected by the laboratory; however the reported quantitation/detection limit is estimated due to non-conformances discovered during data validation.

R (Rejected): The sample results were rejected due to gross non-conformances discovered during data validation. Data qualified as rejected is not usable.

NA (Not Applicable): The non-conformance discovered during data validation demonstrates a high bias, while the affected compound or analyte in the associated sample(s) was reported as not detected by the laboratory and did not warrant the qualification of the data.

A qualification summary table is provided at the end of this report if data has been qualified. Flags are classified as P (protocol) or A (advisory) to indicate whether the flag is due to a laboratory deviation from a specified protocol or is of technical advisory nature.

I. Sample Receipt and Technical Holding Times

All samples were received in good condition and cooler temperatures upon receipt met validation criteria.

All technical holding time requirements were met.

II. Initial Calibration and Initial Calibration Verification

Initial calibration data were not reviewed for Stage 2A validation.

III. Continuing Calibration

Continuing calibration data were not reviewed for Stage 2A validation.

IV. Laboratory Blanks

Laboratory blanks were analyzed as required by the method. No contaminants were found in the laboratory blanks.

V. Field Blanks

No field blanks were identified in this SDG.

VI. Surrogates

Surrogates were added to all samples as required by the method. All surrogate recoveries (%R) were within QC limits.

VII. Matrix Spike/Matrix Spike Duplicates

The laboratory has indicated that there were no matrix spike (MS) and matrix spike duplicate (MSD) analyses specified for the samples in this SDG, and therefore matrix spike and matrix spike duplicate analyses were not performed for this SDG.

VIII. Laboratory Control Samples

Laboratory control samples (LCS) were analyzed as required by the method. Percent recoveries (%R) were within QC limits.

IX. Field Duplicates

No field duplicates were identified in this SDG.

X. Compound Quantitation

Raw data were not reviewed for Stage 2A validation.

XI. Target Compound Identifications

Raw data were not reviewed for Stage 2A validation.

XII. Overall Assessment of Data

The analysis was conducted within all specifications of the method. No results were rejected in this SDG.

Kimberly-Clark Upland Area
Total Petroleum Hydrocarbons as Extractables - Data Qualification Summary - SDG 009494

No Sample Data Qualified in this SDG

Kimberly-Clark Upland Area
Total Petroleum Hydrocarbons as Extractables - Laboratory Blank Data Qualification Summary - SDG 009494

No Sample Data Qualified in this SDG

Kimberly-Clark Upland Area
Total Petroleum Hydrocarbons as Extractables - Field Blank Data Qualification Summary - SDG 009494

No Sample Data Qualified in this SDG

LDC #: 49554F8 **VALIDATION COMPLETENESS WORKSHEET** Date: 11/12/20
SDG #: 009494 Stage 2A Page: 1 of 1
Laboratory: Friedman & Bruya, Inc. Reviewer: LT
2nd Reviewer:

METHOD: GC TPH as Extractables (NWTPH-Dx)

The samples listed below were reviewed for each of the following validation areas. Validation findings are noted in attached validation findings worksheets.

	Validation Area		Comments
I.	Sample receipt/Technical holding times	A/A	
II.	Initial calibration/ICV	N/N	
III.	Continuing calibration	N	
IV.	Laboratory Blanks	A	
V.	Field blanks	N	
VI.	Surrogate spikes	A	
VII.	Matrix spike/Matrix spike duplicates	N	Non client
VIII.	Laboratory control samples	A	LCS
IX.	Field duplicates	N	
X.	Compound quantitation RL/LOQ/LODs	N	Dry weight basis = 1
XI.	Target compound identification	N	
XII.	Overall assessment of data	A	

Note: A = Acceptable; N = Not provided/applicable; SW = See worksheet; ND = No compounds detected; R = Rinsate; FB = Field blank; D = Duplicate; TB = Trip blank; EB = Equipment blank; SB=Source blank; OTHER:

	Client ID	Lab ID	Matrix	Date
1	B2-Trench-01-8	009494-01	Soil	09/25/20
2				
3				
4				
5				
6				
7				
8				
9				
10				
11				
12				
13				

Notes:

1	00-2202 MB						

Laboratory Data Consultants, Inc.
Data Validation Report

Project/Site Name: Kimberly-Clark Upland Area

LDC Report Date: November 16, 2020

Parameters: Metals

Validation Level: Stage 2A

Laboratory: Friedman & Bruya, Inc.

Sample Delivery Group (SDG): 009564

Sample Identification	Laboratory Sample Identification	Matrix	Collection Date
BBH-S-60-4	009564-01	Soil	09/30/20
BBH-S-60-8	009564-02	Soil	09/30/20
BBH-S-61-4	009564-03	Soil	09/30/20
BBH-S-61-8	009564-04	Soil	09/30/20
BBH-S-62-4	009564-05	Soil	09/30/20
BBH-S-63-4	009564-06	Soil	09/30/20
BBH-520	009564-07	Soil	09/30/20
BBH-S-64-4	009564-08	Soil	09/30/20
BBH-S-12-8	009564-09	Soil	09/30/20
BBH-B-13-10	009564-10	Soil	09/30/20
BBH-S-61-4MS	009564-03MS	Soil	09/30/20
BBH-S-61-4MSD	009564-03MSD	Soil	09/30/20

Introduction

This Data Validation Report (DVR) presents data validation findings and results for the associated samples listed on the cover page. Data validation was performed in accordance with a modified outline of the USEPA National Functional Guidelines (NFG) for Inorganic Superfund Methods Data Review (January 2017). Where specific guidance was not available, the data has been evaluated in a conservative manner consistent with industry standards using professional experience.

The analyses were performed by the following methods:

Copper and Zinc by Environmental Protection Agency (EPA) SW 846 Method 6020B
Mercury by EPA Method 1631E

All sample results were subjected to Stage 2A data validation, which comprises an evaluation of quality control (QC) summary results.

The following are definitions of the data qualifiers utilized during data validation:

J (Estimated): The compound or analyte was analyzed for and positively identified by the laboratory; however the reported concentration is estimated due to non-conformances discovered during data validation.

U (Non-detected): The compound or analyte was analyzed for and positively identified by the laboratory; however the compound or analyte should be considered non-detected at the reported concentration due to the presence of contaminants detected in the associated blank(s).

UJ (Non-detected estimated): The compound or analyte was reported as not detected by the laboratory; however the reported quantitation/detection limit is estimated due to non-conformances discovered during data validation.

R (Rejected): The sample results were rejected due to gross non-conformances discovered during data validation. Data qualified as rejected is not usable.

NA (Not Applicable): The non-conformance discovered during data validation demonstrates a high bias, while the affected compound or analyte in the associated sample(s) was reported as not detected by the laboratory and did not warrant the qualification of the data.

A qualification summary table is provided at the end of this report if data has been qualified. Flags are classified as P (protocol) or A (advisory) to indicate whether the flag is due to a laboratory deviation from a specified protocol or is of technical advisory nature.

I. Sample Receipt and Technical Holding Times

All samples were received in good condition.

All technical holding time requirements were met.

II. ICPMS Tune

ICP-MS tune data were not reviewed for Stage 2A validation.

III. Instrument Calibration

Instrument calibration data were not reviewed for Stage 2A validation.

IV. ICP Interference Check Sample Analysis

ICP Interference check sample (ICS) analysis data were not reviewed for Stage 2A validation.

V. Laboratory Blanks

Laboratory blanks were analyzed as required by the methods. No contaminants were found in the laboratory blanks.

VI. Field Blanks

No field blanks were identified in this SDG.

VII. Matrix Spike/Matrix Spike Duplicates

Matrix spike (MS) and matrix spike duplicate (MSD) sample analysis was performed on an associated project sample. Percent recoveries (%R) were within QC limits with the following exceptions:

Spike ID (Associated Samples)	Analyte	MS (%R) (Limits)	MSD (%R) (Limits)	Flag	A or P
BBH-S-61-4MS/MSD (BBH-S-61-4 BBH-S-63-4 BBH-S-64-4 BBH-S-12-8 BBH-B-13-10)	Copper	-	153 (75-125)	J (all detects)	A
BBH-S-61-4MS/MSD (BBH-S-61-4 BBH-S-63-4 BBH-S-12-8 BBH-B-13-10)	Zinc	162 (75-125)	215 (75-125)	J (all detects)	A

Relative percent differences (RPD) were within QC limits with the following exceptions:

Spike ID (Associated Samples)	Analyte	RPD (Limits)	Flag	A or P
BBH-S-61-4MS/MSD (BBH-S-61-4 BBH-S-63-4 BBH-S-64-4 BBH-S-12-8 BBH-B-13-10)	Copper	25 (≤20)	J (all detects)	A
BBH-S-61-4MS/MSD (BBH-S-61-4 BBH-S-63-4 BBH-S-12-8 BBH-B-13-10)	Zinc	28 (≤20)	J (all detects)	A

VIII. Duplicate Sample Analysis

The laboratory has indicated that there were no duplicate (DUP) analyses specified for the samples in this SDG, and therefore duplicate analyses were not performed for this SDG.

IX. Serial Dilution

Serial dilution was not performed for this SDG.

X. Laboratory Control Samples

Laboratory control samples (LCS) were analyzed as required by the methods. Percent recoveries (%R) were within QC limits.

XI. Field Duplicates

Samples BBH-S-60-4 and BBH-520 were identified as field duplicates. No results were detected in any of the samples with the following exceptions:

Analyte	Concentration (mg/Kg)		RPD
	BBH-S-60-4	BBH-520	
Mercury	1.9	1.5	24

XII. Internal Standards (ICP-MS)

Internal standards data were not reviewed for Stage 2A validation.

XIII. Sample Result Verification

Raw data were not reviewed for Stage 2A validation.

XIV. Overall Assessment of Data

The analysis was conducted within all specifications of the methods.

Due to MS/MSD %R and RPD, data were qualified as estimated in five samples.

No results were rejected in this SDG.

Kimberly-Clark Upland Area
Metals - Data Qualification Summary - SDG 009564

Sample	Analyte	Flag	A or P	Reason
BBH-S-61-4 BBH-S-63-4 BBH-S-64-4 BBH-S-12-8 BBH-B-13-10	Copper	J (all detects)	A	Matrix spike/Matrix spike duplicate (%R)(RPD)
BBH-S-61-4 BBH-S-63-4 BBH-S-12-8 BBH-B-13-10	Zinc	J (all detects)	A	Matrix spike/Matrix spike duplicate (%R)(RPD)

Kimberly-Clark Upland Area
Metals - Laboratory Blank Data Qualification Summary - SDG 009564

No Sample Data Qualified in this SDG

Kimberly-Clark Upland Area
Metals - Field Blank Data Qualification Summary - SDG 009564

No Sample Data Qualified in this SDG

LDC #: 49554G4a
SDG #: 009564
Laboratory: Friedman & Bruya, Inc.

VALIDATION COMPLETENESS WORKSHEET
Stage 2A

Date: 11/12/2020
Page: 1 of 1
Reviewer: DTM
2nd Reviewer:

METHOD: Metals (EPA SW 846 Method 6020B/EPA Method 1631E)

The samples listed below were reviewed for each of the following validation areas. Validation findings are noted in attached validation findings worksheets.

	Validation Area		Comments
I.	Sample receipt/Technical holding times	A/A	
II.	ICP/MS Tune	N	
III.	Instrument Calibration	N	
IV.	ICP Interference Check Sample (ICS) Analysis	N	
V.	Laboratory Blanks	A	
VI.	Field Blanks	N	
VII.	Matrix Spike/Matrix Spike Duplicates	SW	
VIII.	Duplicate sample analysis	N	
IX.	Serial Dilution	N	
X.	Laboratory control samples	A	LCS
XI.	Field Duplicates	SW	(1,7)
XII.	Internal Standard (ICP-MS)	N	
XIII.	Sample Result Verification	N	
XIV.	Overall Assessment of Data	A	

Note: A = Acceptable; ND = No compounds detected; D = Duplicate; SB=Source blank
N = Not provided/applicable; R = Rinsate; TB = Trip blank; OTHER:
SW = See worksheet; FB = Field blank; EB = Equipment blank

	Client ID	Lab ID	Matrix	Date
1	BBH-S-60-4	009564-01	Soil	09/30/20
2	BBH-S-60-8	009564-02	Soil	09/30/20
3	BBH-S-61-4	009564-03	Soil	09/30/20
4	BBH-S-61-8	009564-04	Soil	09/30/20
5	BBH-S-62-4	009564-05	Soil	09/30/20
6	BBH-S-63-4	009564-06	Soil	09/30/20
7	BBH-520	009564-07	Soil	09/30/20
8	BBH-S-64-4	009564-08	Soil	09/30/20
9	BBH-S-12-8	009564-09	Soil	09/30/20
10	BBH-B-13-10	009564-10	Soil	09/30/20
11	BBH-S-61-4MS	009564-03MS	Soil	09/30/20
12	BBH-S-61-4MSD	009564-03MSD	Soil	09/30/20

Notes:

LDC #: 49554G4a

VALIDATION FINDINGS WORKSHEET

Sample Specific Element Reference

Reviewer: DTM

All circled elements are applicable to each sample.

Sample ID	Matrix	Target Analyte List (TAL)
3,6	S	Cu, Zn
3,6	S	Hg
8	S	Cu
9-10	S	Cu, Zn, Hg
1-7	S	Hg
QC 11-12	S	Cu, Zn, Hg
		Al, Sb, As, Ba, Be, B, Cd, Ca, Cr, Co, Cu, Fe, Pb, Li, Mg, Mo, Mn, Hg, Ni, K, Se, Ag, Na, Sr, Tl, Sn, Ti, W, U, V, Zn
		Al, Sb, As, Ba, Be, B, Cd, Ca, Cr, Co, Cu, Fe, Pb, Li, Mg, Mo, Mn, Hg, Ni, K, Se, Ag, Na, Sr, Tl, Sn, Ti, W, U, V, Zn
		Al, Sb, As, Ba, Be, B, Cd, Ca, Cr, Co, Cu, Fe, Pb, Li, Mg, Mo, Mn, Hg, Ni, K, Se, Ag, Na, Sr, Tl, Sn, Ti, W, U, V, Zn
		Al, Sb, As, Ba, Be, B, Cd, Ca, Cr, Co, Cu, Fe, Pb, Li, Mg, Mo, Mn, Hg, Ni, K, Se, Ag, Na, Sr, Tl, Sn, Ti, W, U, V, Zn
		Al, Sb, As, Ba, Be, B, Cd, Ca, Cr, Co, Cu, Fe, Pb, Li, Mg, Mo, Mn, Hg, Ni, K, Se, Ag, Na, Sr, Tl, Sn, Ti, W, U, V, Zn
		Al, Sb, As, Ba, Be, B, Cd, Ca, Cr, Co, Cu, Fe, Pb, Li, Mg, Mo, Mn, Hg, Ni, K, Se, Ag, Na, Sr, Tl, Sn, Ti, W, U, V, Zn
		Al, Sb, As, Ba, Be, B, Cd, Ca, Cr, Co, Cu, Fe, Pb, Li, Mg, Mo, Mn, Hg, Ni, K, Se, Ag, Na, Sr, Tl, Sn, Ti, W, U, V, Zn
		Al, Sb, As, Ba, Be, B, Cd, Ca, Cr, Co, Cu, Fe, Pb, Li, Mg, Mo, Mn, Hg, Ni, K, Se, Ag, Na, Sr, Tl, Sn, Ti, W, U, V, Zn
		Al, Sb, As, Ba, Be, B, Cd, Ca, Cr, Co, Cu, Fe, Pb, Li, Mg, Mo, Mn, Hg, Ni, K, Se, Ag, Na, Sr, Tl, Sn, Ti, W, U, V, Zn
		Al, Sb, As, Ba, Be, B, Cd, Ca, Cr, Co, Cu, Fe, Pb, Li, Mg, Mo, Mn, Hg, Ni, K, Se, Ag, Na, Sr, Tl, Sn, Ti, W, U, V, Zn
Analysis Method		
ICP		Al, Sb, As, Ba, Be, B, Cd, Ca, Cr, Co, Cu, Fe, Pb, Li, Mg, Mo, Mn, Hg, Ni, K, Se, Ag, Na, Sr, Tl, Sn, Ti, W, U, V, Zn
ICP-MS		Al, Sb, As, Ba, Be, B, Cd, Ca, Cr, Co, Cu, Fe, Pb, Li, Mg, Mo, Mn, Hg, Ni, K, Se, Ag, Na, Sr, Tl, Sn, Ti, W, U, V, Zn
GFAA		Al, Sb, As, Ba, Be, B, Cd, Ca, Cr, Co, Cu, Fe, Pb, Li, Mg, Mo, Mn, Hg, Ni, K, Se, Ag, Na, Sr, Tl, Sn, Ti, W, U, V, Zn

Comments: Mercury by CVAA if performed

LDC #: 49554G4a

VALIDATION FINDINGS WORKSHEET
Matrix Spike/Matrix Spike Duplicates

Reviewer: DTM

METHOD: Trace metals (EPA SW 846 Method 6020/6010/7470)

Please see qualifications below for all questions answered "N". Not applicable questions are identified as "N/A".

Y N N/A Was a matrix spike analyzed for each matrix in this SDG?

Y N N/A Were matrix spike percent recoveries (%R) within the control limits of 75-125? If the sample concentration exceeded the spike concentration by a factor of 4 or more, no action was taken.

Y N N/A Were all duplicate sample relative percent differences (RPD) ≤ 20% for samples?

LEVEL IV ONLY:

Y N N/A Were recalculated results acceptable? See Level IV Recalculation Worksheet for recalculations.

#	MS/MSD ID	Matrix	Analyte	MS %Recovery	MSD %Recovery	RPD (Limits)	Associated Samples	Qual	DET	ND	PS Recovery%
	11/12	S	Cu		153(75-125)		3,6,8-10	J/A	ALL		
			Cu			25(20)	3,6,8-10	J/UJ/A	ALL		
			Zn	162(75-125)	215		3,6,9-10	J/A	ALL		
			Zn			28(20)	3,6,9-10	J/UJ/A	ALL		

Comments:

METHOD: Metals (EPA Method 6010/6020/7000)

Analyte	Concentration (mg/Kg)		RPD
	1	7	
Mercury	1.9	1.5	24

Laboratory Data Consultants, Inc.
Data Validation Report

Project/Site Name: Kimberly-Clark Upland Area

LDC Report Date: November 16, 2020

Parameters: Metals

Validation Level: Stage 2A

Laboratory: Friedman & Bruya, Inc.

Sample Delivery Group (SDG): 010033

Sample Identification	Laboratory Sample Identification	Matrix	Collection Date
BBH-S-65-4	010033-01	Soil	10/01/20
BBH-S-66-4	010033-02	Soil	10/01/20
BBH-B-19-10	010033-03	Soil	10/01/20
BBH-S-42-8	010033-04	Soil	10/01/20
BBH-B-20-10	010033-05	Soil	10/01/20
BBH-S-67-8	010033-06	Soil	10/01/20
BBH-B-04-10	010033-07	Soil	10/01/20

Introduction

This Data Validation Report (DVR) presents data validation findings and results for the associated samples listed on the cover page. Data validation was performed in accordance with a modified outline of the USEPA National Functional Guidelines (NFG) for Inorganic Superfund Methods Data Review (January 2017). Where specific guidance was not available, the data has been evaluated in a conservative manner consistent with industry standards using professional experience.

The analyses were performed by the following methods:

Copper and Zinc by Environmental Protection Agency (EPA) SW 846 Method 6020B
Mercury by EPA Method 1631E

All sample results were subjected to Stage 2A data validation, which comprises an evaluation of quality control (QC) summary results.

The following are definitions of the data qualifiers utilized during data validation:

J (Estimated): The compound or analyte was analyzed for and positively identified by the laboratory; however the reported concentration is estimated due to non-conformances discovered during data validation.

U (Non-detected): The compound or analyte was analyzed for and positively identified by the laboratory; however the compound or analyte should be considered non-detected at the reported concentration due to the presence of contaminants detected in the associated blank(s).

UJ (Non-detected estimated): The compound or analyte was reported as not detected by the laboratory; however the reported quantitation/detection limit is estimated due to non-conformances discovered during data validation.

R (Rejected): The sample results were rejected due to gross non-conformances discovered during data validation. Data qualified as rejected is not usable.

NA (Not Applicable): The non-conformance discovered during data validation demonstrates a high bias, while the affected compound or analyte in the associated sample(s) was reported as not detected by the laboratory and did not warrant the qualification of the data.

A qualification summary table is provided at the end of this report if data has been qualified. Flags are classified as P (protocol) or A (advisory) to indicate whether the flag is due to a laboratory deviation from a specified protocol or is of technical advisory nature.

I. Sample Receipt and Technical Holding Times

All samples were received in good condition.

All technical holding time requirements were met.

II. ICPMS Tune

ICP-MS tune data were not reviewed for Stage 2A validation.

III. Instrument Calibration

Instrument calibration data were not reviewed for Stage 2A validation.

IV. ICP Interference Check Sample Analysis

ICP Interference check sample (ICS) analysis data were not reviewed for Stage 2A validation.

V. Laboratory Blanks

Laboratory blanks were analyzed as required by the methods. No contaminants were found in the laboratory blanks.

VI. Field Blanks

No field blanks were identified in this SDG.

VII. Matrix Spike/Matrix Spike Duplicates

The laboratory has indicated that there were no matrix spike (MS) and matrix spike duplicate (MSD) analyses specified for the samples in this SDG, and therefore matrix spike and matrix spike duplicate analyses were not performed for this SDG.

VIII. Duplicate Sample Analysis

The laboratory has indicated that there were no duplicate (DUP) analyses specified for the samples in this SDG, and therefore duplicate analyses were not performed for this SDG.

IX. Serial Dilution

Serial dilution was not performed for this SDG.

X. Laboratory Control Samples

Laboratory control samples (LCS) were analyzed as required by the methods. Percent recoveries (%R) were within QC limits.

XI. Field Duplicates

No field duplicates were identified in this SDG.

XII. Internal Standards (ICP-MS)

Internal standards data were not reviewed for Stage 2A validation.

XIII. Sample Result Verification

Raw data were not reviewed for Stage 2A validation.

XIV. Overall Assessment of Data

The analysis was conducted within all specifications of the methods. No results were rejected in this SDG.

Kimberly-Clark Upland Area
Metals - Data Qualification Summary - SDG 010033

No Sample Data Qualified in this SDG

Kimberly-Clark Upland Area
Metals - Laboratory Blank Data Qualification Summary - SDG 010033

No Sample Data Qualified in this SDG

Kimberly-Clark Upland Area
Metals - Field Blank Data Qualification Summary - SDG 010033

No Sample Data Qualified in this SDG

LDC #: 49554H4a

SDG #: 010033

Laboratory: Friedman & Bruya, Inc.

VALIDATION COMPLETENESS WORKSHEET

Stage 2A

Date: 11/12/2020

Page: 1 of 1

Reviewer: DTM

2nd Reviewer:

METHOD: Metals (EPA SW 846 Method 6020B/EPA Method 1631E)

The samples listed below were reviewed for each of the following validation areas. Validation findings are noted in attached validation findings worksheets.

	Validation Area		Comments
I.	Sample receipt/Technical holding times	A/A	
II.	ICP/MS Tune	N	
III.	Instrument Calibration	N	
IV.	ICP Interference Check Sample (ICS) Analysis	N	
V.	Laboratory Blanks	A	
VI.	Field Blanks	N	
VII.	Matrix Spike/Matrix Spike Duplicates	N	
VIII.	Duplicate sample analysis	N	
IX.	Serial Dilution	N	
X.	Laboratory control samples	A	LCS
XI.	Field Duplicates	N	
XII.	Internal Standard (ICP-MS)	N	
XIII.	Sample Result Verification	N	
XIV.	Overall Assessment of Data	A	

Note: A = Acceptable; N = Not provided/applicable; SW = See worksheet; ND = No compounds detected; R = Rinsate; FB = Field blank; D = Duplicate; TB = Trip blank; EB = Equipment blank; SB=Source blank; OTHER:

	Client ID	Lab ID	Matrix	Date
1	BBH-S-65-4	010033-01	Soil	10/01/20
2	BBH-S-66-4	010033-02	Soil	10/01/20
3	BBH-B-19-10	010033-03	Soil	10/01/20
4	BBH-S-42-8	010033-04	Soil	10/01/20
5	BBH-B-20-10	010033-05	Soil	10/01/20
6	BBH-S-67-8	010033-06	Soil	10/01/20
7	BBH-B-04-10	010033-07	Soil	10/01/20
8				

Notes:

LDC #: 49554H4a

VALIDATION FINDINGS WORKSHEET

Page: 1 of 1

Sample Specific Element Reference

Reviewer: DTM

All circled elements are applicable to each sample.

Sample ID	Matrix	Target Analyte List (TAL)
2-3,5-7	S	Cu, Zn, Hg
1,4	S	Hg
		Al, Sb, As, Ba, Be, B, Cd, Ca, Cr, Co, Cu, Fe, Pb, Li, Mg, Mo, Mn, Hg, Ni, K, Se, Ag, Na, Sr, Tl, Sn, Ti, W, U, V, Zn
		Al, Sb, As, Ba, Be, B, Cd, Ca, Cr, Co, Cu, Fe, Pb, Li, Mg, Mo, Mn, Hg, Ni, K, Se, Ag, Na, Sr, Tl, Sn, Ti, W, U, V, Zn
		Al, Sb, As, Ba, Be, B, Cd, Ca, Cr, Co, Cu, Fe, Pb, Li, Mg, Mo, Mn, Hg, Ni, K, Se, Ag, Na, Sr, Tl, Sn, Ti, W, U, V, Zn
		Al, Sb, As, Ba, Be, B, Cd, Ca, Cr, Co, Cu, Fe, Pb, Li, Mg, Mo, Mn, Hg, Ni, K, Se, Ag, Na, Sr, Tl, Sn, Ti, W, U, V, Zn
		Al, Sb, As, Ba, Be, B, Cd, Ca, Cr, Co, Cu, Fe, Pb, Li, Mg, Mo, Mn, Hg, Ni, K, Se, Ag, Na, Sr, Tl, Sn, Ti, W, U, V, Zn
		Al, Sb, As, Ba, Be, B, Cd, Ca, Cr, Co, Cu, Fe, Pb, Li, Mg, Mo, Mn, Hg, Ni, K, Se, Ag, Na, Sr, Tl, Sn, Ti, W, U, V, Zn
		Al, Sb, As, Ba, Be, B, Cd, Ca, Cr, Co, Cu, Fe, Pb, Li, Mg, Mo, Mn, Hg, Ni, K, Se, Ag, Na, Sr, Tl, Sn, Ti, W, U, V, Zn
		Al, Sb, As, Ba, Be, B, Cd, Ca, Cr, Co, Cu, Fe, Pb, Li, Mg, Mo, Mn, Hg, Ni, K, Se, Ag, Na, Sr, Tl, Sn, Ti, W, U, V, Zn
		Al, Sb, As, Ba, Be, B, Cd, Ca, Cr, Co, Cu, Fe, Pb, Li, Mg, Mo, Mn, Hg, Ni, K, Se, Ag, Na, Sr, Tl, Sn, Ti, W, U, V, Zn
		Al, Sb, As, Ba, Be, B, Cd, Ca, Cr, Co, Cu, Fe, Pb, Li, Mg, Mo, Mn, Hg, Ni, K, Se, Ag, Na, Sr, Tl, Sn, Ti, W, U, V, Zn
		Al, Sb, As, Ba, Be, B, Cd, Ca, Cr, Co, Cu, Fe, Pb, Li, Mg, Mo, Mn, Hg, Ni, K, Se, Ag, Na, Sr, Tl, Sn, Ti, W, U, V, Zn
		Al, Sb, As, Ba, Be, B, Cd, Ca, Cr, Co, Cu, Fe, Pb, Li, Mg, Mo, Mn, Hg, Ni, K, Se, Ag, Na, Sr, Tl, Sn, Ti, W, U, V, Zn
Analysis Method		
ICP		Al, Sb, As, Ba, Be, B, Cd, Ca, Cr, Co, Cu, Fe, Pb, Li, Mg, Mo, Mn, Hg, Ni, K, Se, Ag, Na, Sr, Tl, Sn, Ti, W, U, V, Zn
ICP-MS		Al, Sb, As, Ba, Be, B, Cd, Ca, Cr, Co, Cu, Fe, Pb, Li, Mg, Mo, Mn, Hg, Ni, K, Se, Ag, Na, Sr, Tl, Sn, Ti, W, U, V, Zn
GFAA		Al, Sb, As, Ba, Be, B, Cd, Ca, Cr, Co, Cu, Fe, Pb, Li, Mg, Mo, Mn, Hg, Ni, K, Se, Ag, Na, Sr, Tl, Sn, Ti, W, U, V, Zn

Comments: Mercury by CVAA if performed

Laboratory Data Consultants, Inc.
Data Validation Report

Project/Site Name: Kimberly-Clark Upland Area

LDC Report Date: November 16, 2020

Parameters: Metals

Validation Level: Stage 2A

Laboratory: Friedman & Bruya, Inc.

Sample Delivery Group (SDG): 010063

Sample Identification	Laboratory Sample Identification	Matrix	Collection Date
BBH-B-24-11	010063-01	Soil	10/02/20
BBH-B-17-10	010063-02	Soil	10/02/20
DT-B-04-8	010063-03	Soil	10/02/20
DT-B-02-8	010063-04	Soil	10/02/20
DT-B-05-8	010063-05	Soil	10/02/20
DT-521	010063-06	Soil	10/02/20
DT-B-03-8	010063-07	Soil	10/02/20
BBH-S-68-8	010063-08	Soil	10/02/20
BBH-S-69-4	010063-09	Soil	10/02/20
BBH-B-17-10MS	010063-02MS	Soil	10/02/20
BBH-B-17-10MSD	010063-02MSD	Soil	10/02/20

Introduction

This Data Validation Report (DVR) presents data validation findings and results for the associated samples listed on the cover page. Data validation was performed in accordance with a modified outline of the USEPA National Functional Guidelines (NFG) for Inorganic Superfund Methods Data Review (January 2017). Where specific guidance was not available, the data has been evaluated in a conservative manner consistent with industry standards using professional experience.

The analyses were performed by the following methods:

Copper, Lead, and Zinc by Environmental Protection Agency (EPA) SW 846 Method 6020B
Mercury by EPA Method 1631E

All sample results were subjected to Stage 2A data validation, which comprises an evaluation of quality control (QC) summary results.

The following are definitions of the data qualifiers utilized during data validation:

J (Estimated): The compound or analyte was analyzed for and positively identified by the laboratory; however the reported concentration is estimated due to non-conformances discovered during data validation.

U (Non-detected): The compound or analyte was analyzed for and positively identified by the laboratory; however the compound or analyte should be considered non-detected at the reported concentration due to the presence of contaminants detected in the associated blank(s).

UJ (Non-detected estimated): The compound or analyte was reported as not detected by the laboratory; however the reported quantitation/detection limit is estimated due to non-conformances discovered during data validation.

R (Rejected): The sample results were rejected due to gross non-conformances discovered during data validation. Data qualified as rejected is not usable.

NA (Not Applicable): The non-conformance discovered during data validation demonstrates a high bias, while the affected compound or analyte in the associated sample(s) was reported as not detected by the laboratory and did not warrant the qualification of the data.

A qualification summary table is provided at the end of this report if data has been qualified. Flags are classified as P (protocol) or A (advisory) to indicate whether the flag is due to a laboratory deviation from a specified protocol or is of technical advisory nature.

I. Sample Receipt and Technical Holding Times

All samples were received in good condition.

All technical holding time requirements were met.

II. ICPMS Tune

ICP-MS tune data were not reviewed for Stage 2A validation.

III. Instrument Calibration

Instrument calibration data were not reviewed for Stage 2A validation.

IV. ICP Interference Check Sample Analysis

ICP Interference check sample (ICS) analysis data were not reviewed for Stage 2A validation.

V. Laboratory Blanks

Laboratory blanks were analyzed as required by the methods. No contaminants were found in the laboratory blanks.

VI. Field Blanks

No field blanks were identified in this SDG.

VII. Matrix Spike/Matrix Spike Duplicates

Matrix spike (MS) and matrix spike duplicate (MSD) sample analysis was performed on an associated project sample. Percent recoveries (%R) were within QC limits. Relative percent differences (RPD) were within QC limits.

VIII. Duplicate Sample Analysis

The laboratory has indicated that there were no duplicate (DUP) analyses specified for the samples in this SDG, and therefore duplicate analyses were not performed for this SDG.

IX. Serial Dilution

Serial dilution was not performed for this SDG.

X. Laboratory Control Samples

Laboratory control samples (LCS) were analyzed as required by the methods. Percent recoveries (%R) were within QC limits.

XI. Field Duplicates

Samples DT-B-05-8 and DT-521 were identified as field duplicates. No results were detected in any of the samples with the following exceptions:

Analyte	Concentration (mg/Kg)		RPD
	DT-B-05-8	DT-521	
Copper	45.2	51.0	12
Lead	12.7	13.7	8
Zinc	55.4	65.5	17
Mercury	0.14	0.20	35

XII. Internal Standards (ICP-MS)

Internal standards data were not reviewed for Stage 2A validation.

XIII. Sample Result Verification

Raw data were not reviewed for Stage 2A validation.

XIV. Overall Assessment of Data

The analysis was conducted within all specifications of the methods. No results were rejected in this SDG.

Kimberly-Clark Upland Area
Metals - Data Qualification Summary - SDG 010063

No Sample Data Qualified in this SDG

Kimberly-Clark Upland Area
Metals - Laboratory Blank Data Qualification Summary - SDG 010063

No Sample Data Qualified in this SDG

Kimberly-Clark Upland Area
Metals - Field Blank Data Qualification Summary - SDG 010063

No Sample Data Qualified in this SDG

LDC #: 49554I4a

SDG #: 010063

Laboratory: Friedman & Bruya, Inc.

VALIDATION COMPLETENESS WORKSHEET

Stage 2A

Date: 11/12/2020

Page: 1 of 1

Reviewer: DTM

2nd Reviewer:

METHOD: Metals (EPA SW 846 Method 6020B/EPA Method 1631E)

The samples listed below were reviewed for each of the following validation areas. Validation findings are noted in attached validation findings worksheets.

	Validation Area		Comments
I.	Sample receipt/Technical holding times	A/A	
II.	ICP/MS Tune	N	
III.	Instrument Calibration	N	
IV.	ICP Interference Check Sample (ICS) Analysis	N	
V.	Laboratory Blanks	A	
VI.	Field Blanks	N	
VII.	Matrix Spike/Matrix Spike Duplicates	A	
VIII.	Duplicate sample analysis	N	
IX.	Serial Dilution	N	
X.	Laboratory control samples	A	LCS
XI.	Field Duplicates	SW	(5,6)
XII.	Internal Standard (ICP-MS)	N	
XIII.	Sample Result Verification	N	
XIV.	Overall Assessment of Data	A	

Note: A = Acceptable; N = Not provided/applicable; SW = See worksheet; ND = No compounds detected; R = Rinsate; FB = Field blank; D = Duplicate; TB = Trip blank; EB = Equipment blank; SB=Source blank; OTHER:

	Client ID	Lab ID	Matrix	Date
1	BBH-B-24-11	010063-01	Soil	10/02/20
2	BBH-B-17-10	010063-02	Soil	10/02/20
3	DT-B-04-8	010063-03	Soil	10/02/20
4	DT-B-02-8	010063-04	Soil	10/02/20
5	DT-B-05-8	010063-05	Soil	10/02/20
6	DT-521	010063-06	Soil	10/02/20
7	DT-B-03-8	010063-07	Soil	10/02/20
8	BBH-S-68-8	010063-08	Soil	10/02/20
9	BBH-S-69-4	010063-09	Soil	10/02/20
10	BBH-B-17-10MS	010063-02MS	Soil	10/02/20
11	BBH-B-17-10MSD	010063-02MSD	Soil	10/02/20

Notes:

LDC #: 49554I4a

VALIDATION FINDINGS WORKSHEET

Sample Specific Element Reference

Reviewer: DTM

All circled elements are applicable to each sample.

Sample ID	Matrix	Target Analyte List (TAL)
1	S	Cu
8	S	Cu, Hg
2,9	S	Cu, Zn, Hg
3-7	S	Cu, Pb, Zn
3-7	S	Hg
QC 10-11	S	Cu, Pb, Zn, Hg
		Al, Sb, As, Ba, Be, B, Cd, Ca, Cr, Co, Cu, Fe, Pb, Li, Mg, Mo, Mn, Hg, Ni, K, Se, Ag, Na, Sr, Tl, Sn, Ti, W, U, V, Zn
		Al, Sb, As, Ba, Be, B, Cd, Ca, Cr, Co, Cu, Fe, Pb, Li, Mg, Mo, Mn, Hg, Ni, K, Se, Ag, Na, Sr, Tl, Sn, Ti, W, U, V, Zn
		Al, Sb, As, Ba, Be, B, Cd, Ca, Cr, Co, Cu, Fe, Pb, Li, Mg, Mo, Mn, Hg, Ni, K, Se, Ag, Na, Sr, Tl, Sn, Ti, W, U, V, Zn
		Al, Sb, As, Ba, Be, B, Cd, Ca, Cr, Co, Cu, Fe, Pb, Li, Mg, Mo, Mn, Hg, Ni, K, Se, Ag, Na, Sr, Tl, Sn, Ti, W, U, V, Zn
		Al, Sb, As, Ba, Be, B, Cd, Ca, Cr, Co, Cu, Fe, Pb, Li, Mg, Mo, Mn, Hg, Ni, K, Se, Ag, Na, Sr, Tl, Sn, Ti, W, U, V, Zn
		Al, Sb, As, Ba, Be, B, Cd, Ca, Cr, Co, Cu, Fe, Pb, Li, Mg, Mo, Mn, Hg, Ni, K, Se, Ag, Na, Sr, Tl, Sn, Ti, W, U, V, Zn
		Al, Sb, As, Ba, Be, B, Cd, Ca, Cr, Co, Cu, Fe, Pb, Li, Mg, Mo, Mn, Hg, Ni, K, Se, Ag, Na, Sr, Tl, Sn, Ti, W, U, V, Zn
		Al, Sb, As, Ba, Be, B, Cd, Ca, Cr, Co, Cu, Fe, Pb, Li, Mg, Mo, Mn, Hg, Ni, K, Se, Ag, Na, Sr, Tl, Sn, Ti, W, U, V, Zn
Analysis Method		
ICP		Al, Sb, As, Ba, Be, B, Cd, Ca, Cr, Co, Cu, Fe, Pb, Li, Mg, Mo, Mn, Hg, Ni, K, Se, Ag, Na, Sr, Tl, Sn, Ti, W, U, V, Zn
ICP-MS		Al, Sb, As, Ba, Be, B, Cd, Ca, Cr, Co, Cu, Fe, Pb, Li, Mg, Mo, Mn, Hg, Ni, K, Se, Ag, Na, Sr, Tl, Sn, Ti, W, U, V, Zn
GFAA		Al, Sb, As, Ba, Be, B, Cd, Ca, Cr, Co, Cu, Fe, Pb, Li, Mg, Mo, Mn, Hg, Ni, K, Se, Ag, Na, Sr, Tl, Sn, Ti, W, U, V, Zn

Comments: Mercury by CVAA if performed

METHOD: Metals (EPA Method 6010/6020/7000)

Analyte	Concentration (mg/Kg)		RPD
	5	6	
Copper	45.2	51.0	12
Lead	12.7	13.7	8
Zinc	55.4	65.5	17
Mercury	0.14	0.20	35

LDC Report# 49554I8

Laboratory Data Consultants, Inc.
Data Validation Report

Project/Site Name: Kimberly-Clark Upland Area

LDC Report Date: November 16, 2020

Parameters: Total Petroleum Hydrocarbons as Extractables

Validation Level: Stage 2A

Laboratory: Friedman & Bruya, Inc.

Sample Delivery Group (SDG): 010063

Sample Identification	Laboratory Sample Identification	Matrix	Collection Date
DT-B-04-8	010063-03	Soil	10/02/20
DT-B-02-8	010063-04	Soil	10/02/20
DT-B-05-8	010063-05	Soil	10/02/20
DT-521	010063-06	Soil	10/02/20
DT-B-03-8	010063-07	Soil	10/02/20

Introduction

This Data Validation Report (DVR) presents data validation findings and results for the associated samples listed on the cover page. Data validation was performed in accordance with a modified outline of the USEPA National Functional Guidelines (NFG) for Organic Superfund Methods Data Review (January 2017). Where specific guidance was not available, the data has been evaluated in a conservative manner consistent with industry standards using professional experience.

The analyses were performed by the following method:

Total Petroleum Hydrocarbons (TPH) as Extractables by NWTPH-Dx

All sample results were subjected to Stage 2A data validation, which comprises an evaluation of quality control (QC) summary results.

The following are definitions of the data qualifiers utilized during data validation:

J (Estimated): The compound or analyte was analyzed for and positively identified by the laboratory; however the reported concentration is estimated due to non-conformances discovered during data validation.

U (Non-detected): The compound or analyte was analyzed for and positively identified by the laboratory; however the compound or analyte should be considered not detected at the reported concentration due to the presence of contaminants detected in the associated blank(s).

UJ (Non-detected estimated): The compound or analyte was reported as not detected by the laboratory; however the reported quantitation/detection limit is estimated due to non-conformances discovered during data validation.

R (Rejected): The sample results were rejected due to gross non-conformances discovered during data validation. Data qualified as rejected is not usable.

NA (Not Applicable): The non-conformance discovered during data validation demonstrates a high bias, while the affected compound or analyte in the associated sample(s) was reported as not detected by the laboratory and did not warrant the qualification of the data.

A qualification summary table is provided at the end of this report if data has been qualified. Flags are classified as P (protocol) or A (advisory) to indicate whether the flag is due to a laboratory deviation from a specified protocol or is of technical advisory nature.

I. Sample Receipt and Technical Holding Times

All samples were received in good condition and cooler temperatures upon receipt met validation criteria.

All technical holding time requirements were met.

II. Initial Calibration and Initial Calibration Verification

Initial calibration data were not reviewed for Stage 2A validation.

III. Continuing Calibration

Continuing calibration data were not reviewed for Stage 2A validation.

IV. Laboratory Blanks

Laboratory blanks were analyzed as required by the method. No contaminants were found in the laboratory blanks.

V. Field Blanks

No field blanks were identified in this SDG.

VI. Surrogates

Surrogates were added to all samples as required by the method. All surrogate recoveries (%R) were within QC limits.

VII. Matrix Spike/Matrix Spike Duplicates

The laboratory has indicated that there were no matrix spike (MS) and matrix spike duplicate (MSD) analyses specified for the samples in this SDG, and therefore matrix spike and matrix spike duplicate analyses were not performed for this SDG.

VIII. Laboratory Control Samples

Laboratory control samples (LCS) were analyzed as required by the method. Percent recoveries (%R) were within QC limits.

IX. Field Duplicates

Samples DT-B-05-8 and DT-521 were identified as field duplicates. No results were detected in any of the samples.

X. Compound Quantitation

Raw data were not reviewed for Stage 2A validation.

XI. Target Compound Identifications

Raw data were not reviewed for Stage 2A validation.

XII. Overall Assessment of Data

The analysis was conducted within all specifications of the method. No results were rejected in this SDG.

Kimberly-Clark Upland Area
Total Petroleum Hydrocarbons as Extractables - Data Qualification Summary - SDG 010063

No Sample Data Qualified in this SDG

Kimberly-Clark Upland Area
Total Petroleum Hydrocarbons as Extractables - Laboratory Blank Data Qualification Summary - SDG 010063

No Sample Data Qualified in this SDG

Kimberly-Clark Upland Area
Total Petroleum Hydrocarbons as Extractables - Field Blank Data Qualification Summary - SDG 010063

No Sample Data Qualified in this SDG

LDC #: 49554I8 **VALIDATION COMPLETENESS WORKSHEET** Date: 11/12/20
SDG #: 010063 Stage 2A Page: 1 of 1
Laboratory: Friedman & Bruya, Inc. Reviewer: LT
2nd Reviewer:

METHOD: GC TPH as Extractables (NWTPH-Dx)

The samples listed below were reviewed for each of the following validation areas. Validation findings are noted in attached validation findings worksheets.

	Validation Area		Comments
I.	Sample receipt/Technical holding times	A/A	
II.	Initial calibration/ICV	N/N	
III.	Continuing calibration	N	
IV.	Laboratory Blanks	A	
V.	Field blanks	N	
VI.	Surrogate spikes	A	
VII.	Matrix spike/Matrix spike duplicates	N	Non client
VIII.	Laboratory control samples	A	LCS
IX.	Field duplicates	ND	D = 3+4
X.	Compound quantitation RL/LOQ/LODs	N	Dry weight basis = 1-5
XI.	Target compound identification	N	
XII.	Overall assessment of data	A	

Note: A = Acceptable; N = Not provided/applicable; SW = See worksheet; ND = No compounds detected; R = Rinsate; FB = Field blank; D = Duplicate; TB = Trip blank; EB = Equipment blank; SB=Source blank; OTHER:

	Client ID		Lab ID	Matrix	Date
1	DT-B-04-8		010063-03	Soil	10/02/20
2	DT-B-02-8		010063-04	Soil	10/02/20
3	DT-B-05-8	D	010063-05	Soil	10/02/20
4	DT-521	D	010063-06	Soil	10/02/20
5	DT-B-03-8		010063-07	Soil	10/02/20
6					
7					
8					
9					
10					
11					
12					
13					

Notes:

1	00-2270 MB						

Laboratory Data Consultants, Inc.
Data Validation Report

Project/Site Name: Kimberly-Clark Upland Area

LDC Report Date: November 16, 2020

Parameters: Metals

Validation Level: Stage 2A

Laboratory: Friedman & Bruya, Inc.

Sample Delivery Group (SDG): 010302

Sample Identification	Laboratory Sample Identification	Matrix	Collection Date
BBH-B-05-11	010302-01	Soil	10/16/20
BBH-S-91-4	010302-02	Soil	10/16/20
BBH-S-91-8	010302-03	Soil	10/16/20
BBH-B-02-11	010302-04	Soil	10/16/20
BBH-S-94-4	010302-05	Soil	10/16/20
BBH-S-92-8	010302-06	Soil	10/16/20
BBH-S-93-8	010302-07	Soil	10/16/20
BBH-S-94-4	010302-08	Soil	10/16/20
BBH-S-95-4	010302-09	Soil	10/16/20
BBH-S-96-4	010302-10	Soil	10/16/20
BBH-S-97-8	010302-11	Soil	10/16/20
BBH-525	010302-12	Soil	10/16/20
BBH-525DL	010302-12DL	Soil	10/16/20
BBH-S-94-8	010302-13	Soil	10/16/20
BBH-S-94-8DL	010302-13DL	Soil	10/16/20
BBH-S-97-8MS	010302-11MS	Soil	10/16/20
BBH-S-97-8MSD	010302-11MSD	Soil	10/16/20

Introduction

This Data Validation Report (DVR) presents data validation findings and results for the associated samples listed on the cover page. Data validation was performed in accordance with a modified outline of the USEPA National Functional Guidelines (NFG) for Inorganic Superfund Methods Data Review (January 2017). Where specific guidance was not available, the data has been evaluated in a conservative manner consistent with industry standards using professional experience.

The analyses were performed by the following methods:

Copper and Zinc by Environmental Protection Agency (EPA) SW 846 Method 6020B
Mercury by EPA Method 1631E

All sample results were subjected to Stage 2A data validation, which comprises an evaluation of quality control (QC) summary results.

The following are definitions of the data qualifiers utilized during data validation:

J (Estimated): The compound or analyte was analyzed for and positively identified by the laboratory; however the reported concentration is estimated due to non-conformances discovered during data validation.

U (Non-detected): The compound or analyte was analyzed for and positively identified by the laboratory; however the compound or analyte should be considered non-detected at the reported concentration due to the presence of contaminants detected in the associated blank(s).

UJ (Non-detected estimated): The compound or analyte was reported as not detected by the laboratory; however the reported quantitation/detection limit is estimated due to non-conformances discovered during data validation.

DNR Do not report from this analysis; the result for this analyte is to be reported from an alternative analysis.

R (Rejected): The sample results were rejected due to gross non-conformances discovered during data validation. Data qualified as rejected is not usable.

NA (Not Applicable): The non-conformance discovered during data validation demonstrates a high bias, while the affected compound or analyte in the associated sample(s) was reported as not detected by the laboratory and did not warrant the qualification of the data.

A qualification summary table is provided at the end of this report if data has been qualified. Flags are classified as P (protocol) or A (advisory) to indicate whether the flag is due to a laboratory deviation from a specified protocol or is of technical advisory nature.

I. Sample Receipt and Technical Holding Times

All samples were received in good condition.

All technical holding time requirements were met.

II. ICPMS Tune

ICP-MS tune data were not reviewed for Stage 2A validation.

III. Instrument Calibration

Instrument calibration data were not reviewed for Stage 2A validation.

IV. ICP Interference Check Sample Analysis

ICP Interference check sample (ICS) analysis data were not reviewed for Stage 2A validation.

V. Laboratory Blanks

Laboratory blanks were analyzed as required by the methods. No contaminants were found in the laboratory blanks.

VI. Field Blanks

No field blanks were identified in this SDG.

VII. Matrix Spike/Matrix Spike Duplicates

Matrix spike (MS) and matrix spike duplicate (MSD) sample analysis was performed on an associated project sample. Percent recoveries (%R) were within QC limits with the following exceptions:

Spike ID (Associated Samples)	Analyte	MS (%R) (Limits)	MSD (%R) (Limits)	Flag	A or P
BBH-S-97-8MS/MSD (BBH-S-91-4 BBH-S-97-8 BBH-525 BBH-525DL BBH-S-94-8 BBH-S-94-8DL)	Copper	30 (75-125)	136 (75-125)	J (all detects) UJ (all non-detects)	A

Relative percent differences (RPD) were within QC limits with the following exceptions:

Spike ID (Associated Samples)	Analyte	RPD (Limits)	Flag	A or P
BBH-S-97-8MS/MSD (BBH-S-91-4 BBH-S-97-8 BBH-525 BBH-525DL BBH-S-94-8 BBH-S-94-8DL)	Copper	128 (≤20)	J (all detects) UJ (all non-detects)	A

VIII. Duplicate Sample Analysis

The laboratory has indicated that there were no duplicate (DUP) analyses specified for the samples in this SDG, and therefore duplicate analyses were not performed for this SDG.

IX. Serial Dilution

Serial dilution was not performed for this SDG.

X. Laboratory Control Samples

Laboratory control samples (LCS) were analyzed as required by the methods. Percent recoveries (%R) were within QC limits.

XI. Field Duplicates

Samples BBH-525 and BBH-S-94-8 were identified as field duplicates. No results were detected in any of the samples with the following exceptions:

Analyte	Concentration (mg/Kg)		RPD
	BBH-525	BBH-S-94-8	
Copper	19.8	18.4	7
Mercury	0.83	0.78	6

XII. Internal Standards (ICP-MS)

Internal standards data were not reviewed for Stage 2A validation.

XIII. Sample Result Verification

Raw data were not reviewed for Stage 2A validation.

XIV. Overall Assessment of Data

The analysis was conducted within all specifications of the methods.

In the case where more than one result was reported for an individual sample, the least technically acceptable results were deemed not reportable as follows:

Sample	Analyte	Reason	Flag	A or P
BBH-525DL BBH-S-94-8DL	Copper	Sample with lower dilution is more acceptable due to having a detected result.	DNR	-

Due to MS/MSD %R and RPD, data were qualified as estimated in four samples.

No results were rejected in this SDG.

Kimberly-Clark Upland Area
Metals - Data Qualification Summary - SDG 010302

Sample	Analyte	Flag	A or P	Reason
BBH-S-91-4 BBH-S-97-8 BBH-525 BBH-S-94-8	Copper	J (all detects)	A	Matrix spike/Matrix spike duplicate (%R)
BBH-S-91-4 BBH-S-97-8 BBH-525 BBH-S-94-8	Copper	J (all detects)	A	Matrix spike/Matrix spike duplicate (RPD)
BBH-525DL BBH-S-94-8DL	Copper	DNR	-	Overall assessment of data

Kimberly-Clark Upland Area
Metals - Laboratory Blank Data Qualification Summary - SDG 010302

No Sample Data Qualified in this SDG

Kimberly-Clark Upland Area
Metals - Field Blank Data Qualification Summary - SDG 010302

No Sample Data Qualified in this SDG

LDC #: 49554J4a
SDG #: 010302
Laboratory: Friedman & Bruya, Inc.

VALIDATION COMPLETENESS WORKSHEET
Stage 2A

Date: 11/12/2020

Reviewer: DTM
2nd Reviewer:

METHOD: Metals (EPA SW 846 Method 6020B/EPA Method 1631E)

The samples listed below were reviewed for each of the following validation areas. Validation findings are noted in attached validation findings worksheets.

	Validation Area		Comments
I.	Sample receipt/Technical holding times	A/A	
II.	ICP/MS Tune	N	
III.	Instrument Calibration	N	
IV.	ICP Interference Check Sample (ICS) Analysis	N	
V.	Laboratory Blanks	A	
VI.	Field Blanks	N	
VII.	Matrix Spike/Matrix Spike Duplicates	SW	
VIII.	Duplicate sample analysis	N	
IX.	Serial Dilution	N	
X.	Laboratory control samples	A	LCS
XI.	Field Duplicates	SW	(12,14)(13,15)
XII.	Internal Standard (ICP-MS)	N	
XIII.	Sample Result Verification	N	
XIV.	Overall Assessment of Data	SW	

Note: A = Acceptable; N = Not provided/applicable; SW = See worksheet; ND = No compounds detected; R = Rinsate; FB = Field blank; D = Duplicate; TB = Trip blank; EB = Equipment blank; SB=Source blank; OTHER:

	Client ID	Lab ID	Matrix	Date
1	BBH-B-05-11	010302-01	Soil	10/16/20
2	BBH-S-91-4	010302-02	Soil	10/16/20
3	BBH-S-91-8	010302-03	Soil	10/16/20
4	BBH-B-02-11	010302-04	Soil	10/16/20
5	BBH-S-94-4	010302-05	Soil	10/16/20
6	BBH-S-92-8	010302-06	Soil	10/16/20
7	BBH-S-93-8	010302-07	Soil	10/16/20
8	BBH-S-94-4	010302-08	Soil	10/16/20
9	BBH-S-95-4	010302-09	Soil	10/16/20
10	BBH-S-96-4	010302-10	Soil	10/16/20
11	BBH-S-97-8	010302-11	Soil	10/16/20
12	BBH-525	010302-12	Soil	10/16/20

LDC #: 49554J4a

SDG #: 010302

Laboratory: Friedman & Bruya, Inc.

VALIDATION COMPLETENESS WORKSHEET

Stage 2A

Date: 11/12/2020

Reviewer: DTM

2nd Reviewer:

METHOD: Metals (EPA SW 846 Method 6020B/EPA Method 1631E)

	Client ID	Lab ID	Matrix	Date
13	BBH-525DL	010302-12DL	Soil	10/16/20
14	BBH-S-94-8	010302-13	Soil	10/16/20
15	BBH-S-94-8DL	010302-13DL	Soil	10/16/20
16	BBH-S-97-8MS	010302-11MS	Soil	10/16/20
17	BBH-S-97-8MSD	010302-11MSD	Soil	10/16/20
18				
19				
20				

Notes:

LDC #: 49554J4a

VALIDATION FINDINGS WORKSHEET

Sample Specific Element Reference

Reviewer: DTM

All circled elements are applicable to each sample.

Sample ID	Matrix	Target Analyte List (TAL)
2, 13,15	S	Cu
12,14	S	Cu, Hg
3	S	Zn
11	S	Cu, Zn
1-11,	S	Hg
QC 16-17	S	Cu, Zn, Hg
		Al, Sb, As, Ba, Be, B, Cd, Ca, Cr, Co, Cu, Fe, Pb, Li, Mg, Mo, Mn, Hg, Ni, K, Se, Ag, Na, Sr, Tl, Sn, Ti, W, U, V, Zn
		Al, Sb, As, Ba, Be, B, Cd, Ca, Cr, Co, Cu, Fe, Pb, Li, Mg, Mo, Mn, Hg, Ni, K, Se, Ag, Na, Sr, Tl, Sn, Ti, W, U, V, Zn
		Al, Sb, As, Ba, Be, B, Cd, Ca, Cr, Co, Cu, Fe, Pb, Li, Mg, Mo, Mn, Hg, Ni, K, Se, Ag, Na, Sr, Tl, Sn, Ti, W, U, V, Zn
		Al, Sb, As, Ba, Be, B, Cd, Ca, Cr, Co, Cu, Fe, Pb, Li, Mg, Mo, Mn, Hg, Ni, K, Se, Ag, Na, Sr, Tl, Sn, Ti, W, U, V, Zn
		Al, Sb, As, Ba, Be, B, Cd, Ca, Cr, Co, Cu, Fe, Pb, Li, Mg, Mo, Mn, Hg, Ni, K, Se, Ag, Na, Sr, Tl, Sn, Ti, W, U, V, Zn
		Al, Sb, As, Ba, Be, B, Cd, Ca, Cr, Co, Cu, Fe, Pb, Li, Mg, Mo, Mn, Hg, Ni, K, Se, Ag, Na, Sr, Tl, Sn, Ti, W, U, V, Zn
		Al, Sb, As, Ba, Be, B, Cd, Ca, Cr, Co, Cu, Fe, Pb, Li, Mg, Mo, Mn, Hg, Ni, K, Se, Ag, Na, Sr, Tl, Sn, Ti, W, U, V, Zn
		Al, Sb, As, Ba, Be, B, Cd, Ca, Cr, Co, Cu, Fe, Pb, Li, Mg, Mo, Mn, Hg, Ni, K, Se, Ag, Na, Sr, Tl, Sn, Ti, W, U, V, Zn
		Al, Sb, As, Ba, Be, B, Cd, Ca, Cr, Co, Cu, Fe, Pb, Li, Mg, Mo, Mn, Hg, Ni, K, Se, Ag, Na, Sr, Tl, Sn, Ti, W, U, V, Zn
Analysis Method		
ICP		Al, Sb, As, Ba, Be, B, Cd, Ca, Cr, Co, Cu, Fe, Pb, Li, Mg, Mo, Mn, Hg, Ni, K, Se, Ag, Na, Sr, Tl, Sn, Ti, W, U, V, Zn
ICP-MS		Al, Sb, As, Ba, Be, B, Cd, Ca, Cr, Co, Cu, Fe, Pb, Li, Mg, Mo, Mn, Hg, Ni, K, Se, Ag, Na, Sr, Tl, Sn, Ti, W, U, V, Zn
GFAA		Al, Sb, As, Ba, Be, B, Cd, Ca, Cr, Co, Cu, Fe, Pb, Li, Mg, Mo, Mn, Hg, Ni, K, Se, Ag, Na, Sr, Tl, Sn, Ti, W, U, V, Zn

Comments: Mercury by CVAA if performed

LDC #: 49554J4a

VALIDATION FINDINGS WORKSHEET
Matrix Spike/Matrix Spike Duplicates

Reviewer: DTM

METHOD: Trace metals (EPA SW 846 Method 6020/6010/7470)

Please see qualifications below for all questions answered "N". Not applicable questions are identified as "N/A".

Y N N/A Was a matrix spike analyzed for each matrix in this SDG?

Y N N/A Were matrix spike percent recoveries (%R) within the control limits of 75-125? If the sample concentration exceeded the spike concentration by a factor of 4 or more, no action was taken.

Y N N/A Were all duplicate sample relative percent differences (RPD) ≤ 20% for samples?

LEVEL IV ONLY:

Y N N/A Were recalculated results acceptable? See Level IV Recalculation Worksheet for recalculations.

#	MS/MSD ID	Matrix	Analyte	MS %Recovery	MSD %Recovery	RPD (Limits)	Associated Samples	Qual	DET	ND	PS Recovery%
	16/17	S	Cu	30(75-125)	136		2, 11-15	J/UJ/A		13,15	
			Cu			128(20)	2, 11-15	J/UJ/A		13,15	

Comments:

METHOD: Metals (EPA Method 6010/6020/7000)

Analyte	Concentration (mg/Kg)		RPD
	12	14	
Copper	19.8	18.4	7
Mercury	0.83	0.78	6

LDC #: 49554J4a

VALIDATION FINDINGS WORKSHEET
Overall Assessment of Data

METHOD: Trace Metals (EPA SW 846 Method 6010/6020/7000)

Please see qualifications below for all questions answered "N". Not applicable questions are identified as "N/A".

All available information pertaining to the data were reviewed using professional judgement to compliment the determination of the overall quality of the data.

Y N N/A Was the overall quality and usability of the data acceptable?

#	Sample ID	Analyte	Finding	Qualification
	13,15	Cu	Sample with lower dilution is more acceptable due to having a detected result.	DNR

Comments:

Laboratory Data Consultants, Inc.
Data Validation Report

Project/Site Name: Kimberly-Clark Upland Area

LDC Report Date: November 16, 2020

Parameters: Polynuclear Aromatic Hydrocarbons

Validation Level: Stage 2A

Laboratory: Friedman & Bruya, Inc.

Sample Delivery Group (SDG): 010084

Sample Identification	Laboratory Sample Identification	Matrix	Collection Date
BA7-S-01-3	010084-01	Soil	10/05/20
BA7-S-02-3	010084-02	Soil	10/05/20
BA7-S-01-6	010084-03	Soil	10/05/20
BA7-S-02-6	010084-04	Soil	10/05/20

Introduction

This Data Validation Report (DVR) presents data validation findings and results for the associated samples listed on the cover page. Data validation was performed in accordance with a modified outline of the USEPA National Functional Guidelines (NFG) for Organic Superfund Methods Data Review (January 2017). Where specific guidance was not available, the data has been evaluated in a conservative manner consistent with industry standards using professional experience.

The analyses were performed by the following method:

Polynuclear Aromatic Hydrocarbons (PAHs) by Environmental Protection Agency (EPA) SW 846 Method 8270E in Selected Ion Monitoring (SIM) mode

All sample results were subjected to Stage 2A data validation, which comprises an evaluation of quality control (QC) summary results.

The following are definitions of the data qualifiers utilized during data validation:

J (Estimated): The compound or analyte was analyzed for and positively identified by the laboratory; however the reported concentration is estimated due to non-conformances discovered during data validation.

U (Non-detected): The compound or analyte was analyzed for and positively identified by the laboratory; however the compound or analyte should be considered non-detected at the reported concentration due to the presence of contaminants detected in the associated blank(s).

UJ (Non-detected estimated): The compound or analyte was reported as not detected by the laboratory; however the reported quantitation/detection limit is estimated due to non-conformances discovered during data validation.

R (Rejected): The sample results were rejected due to gross non-conformances discovered during data validation. Data qualified as rejected is not usable.

NA (Not Applicable): The non-conformance discovered during data validation demonstrates a high bias, while the affected compound or analyte in the associated sample(s) was reported as not detected by the laboratory and did not warrant the qualification of the data.

A qualification summary table is provided at the end of this report if data has been qualified. Flags are classified as P (protocol) or A (advisory) to indicate whether the flag is due to a laboratory deviation from a specified protocol or is of technical advisory nature.

I. Sample Receipt and Technical Holding Times

All samples were received in good condition and cooler temperatures upon receipt met validation criteria.

All technical holding time requirements were met.

II. GC/MS Instrument Performance Check

Instrument performance check data were not reviewed for Stage 2A validation.

III. Initial Calibration and Initial Calibration Verification

Initial calibration data were not reviewed for Stage 2A validation.

IV. Continuing Calibration

Continuing calibration data were not reviewed for Stage 2A validation.

V. Laboratory Blanks

Laboratory blanks were analyzed as required by the method. No contaminants were found in the laboratory blanks.

VI. Field Blanks

No field blanks were identified in this SDG.

VII. Surrogates

Surrogates were added to all samples as required by the method. Surrogate recoveries (%R) were not within QC limits for sample BA7-S-02-3. Using professional judgment, no data were qualified when one surrogate %R was outside the QC limits and the %R was greater than or equal to 10%.

VIII. Matrix Spike/Matrix Spike Duplicates

The laboratory has indicated that there were no matrix spike (MS) and matrix spike duplicate (MSD) analyses specified for the samples in this SDG, and therefore matrix spike and matrix spike duplicate analyses were not performed for this SDG.

IX. Laboratory Control Samples

Laboratory control samples (LCS) were analyzed as required by the method. Percent recoveries (%R) were within QC limits.

X. Field Duplicates

No field duplicates were identified in this SDG.

XI. Internal Standards

Internal standards data were not reviewed for Stage 2A validation.

XII. Compound Quantitation

Raw data were not reviewed for Stage 2A validation.

XIII. Target Compound Identifications

Raw data were not reviewed for Stage 2A validation.

XIV. System Performance

Raw data were not reviewed for Stage 2A validation.

XV. Overall Assessment of Data

The analysis was conducted within all specifications of the method. No results were rejected in this SDG.

Kimberly-Clark Upland Area
Polynuclear Aromatic Hydrocarbons - Data Qualification Summary - SDG 010084

No Sample Data Qualified in this SDG

Kimberly-Clark Upland Area
Polynuclear Aromatic Hydrocarbons - Laboratory Blank Data Qualification Summary - SDG 010084

No Sample Data Qualified in this SDG

Kimberly-Clark Upland Area
Polynuclear Aromatic Hydrocarbons - Field Blank Data Qualification Summary - SDG 010084

No Sample Data Qualified in this SDG

LDC #: 49554K2b **VALIDATION COMPLETENESS WORKSHEET** Date: 11/12/20
SDG #: 010084 Stage 2A Page: 1 of 1
Laboratory: Friedman & Bruya, Inc. Reviewer: VT
2nd Reviewer:

METHOD: GC/MS Polynuclear Aromatic Hydrocarbons (EPA SW 846 Method 8270E-SIM)

The samples listed below were reviewed for each of the following validation areas. Validation findings are noted in attached validation findings worksheets.

	Validation Area		Comments
I.	Sample receipt/Technical holding times	A / A	
II.	GC/MS Instrument performance check	N	
III.	Initial calibration/ICV	N/N	
IV.	Continuing calibration	N	
V.	Laboratory Blanks	A	
VI.	Field blanks	N	
VII.	Surrogate spikes	SW	2- one acid and one base out, NQ
VIII.	Matrix spike/Matrix spike duplicates	N	MB- one base out, NQ Non client
IX.	Laboratory control samples	A	LCS
X.	Field duplicates	N	
XI.	Internal standards	N	
XII.	Compound quantitation RL/LOQ/LODs	N	Dry weight basis = 14
XIII.	Target compound identification	N	
XIV.	System performance	N	
XV.	Overall assessment of data	A	

Note: A = Acceptable; N = Not provided/applicable; SW = See worksheet; ND = No compounds detected; R = Rinsate; FB = Field blank; D = Duplicate; TB = Trip blank; EB = Equipment blank; SB=Source blank; OTHER:

	Client ID	Lab ID	Matrix	Date
1	BA7-S-01-3	010084-01	Soil	10/05/20
2	BA7-S-02-3	010084-02	Soil	10/05/20
3	BA7-S-01-6	010084-03	Soil	10/05/20
4	BA7-S-02-6	010084-04	Soil	10/05/20
5				
6				
7				
8				
9				

Notes:

1	00-2266 MB2						

LDC Report# 49554K4a

Laboratory Data Consultants, Inc.
Data Validation Report

Project/Site Name: Kimberly-Clark Upland Area

LDC Report Date: November 16, 2020

Parameters: Metals

Validation Level: Stage 2A

Laboratory: Friedman & Bruya, Inc.

Sample Delivery Group (SDG): 010084

Sample Identification	Laboratory Sample Identification	Matrix	Collection Date
BBH-B-34-10	010084-05	Soil	10/05/20

Introduction

This Data Validation Report (DVR) presents data validation findings and results for the associated samples listed on the cover page. Data validation was performed in accordance with a modified outline of the USEPA National Functional Guidelines (NFG) for Inorganic Superfund Methods Data Review (January 2017). Where specific guidance was not available, the data has been evaluated in a conservative manner consistent with industry standards using professional experience.

The analyses were performed by the following methods:

Copper and Zinc by Environmental Protection Agency (EPA) SW 846 Method 6020B
Mercury by EPA Method 1631E

All sample results were subjected to Stage 2A data validation, which comprises an evaluation of quality control (QC) summary results.

The following are definitions of the data qualifiers utilized during data validation:

J (Estimated): The compound or analyte was analyzed for and positively identified by the laboratory; however the reported concentration is estimated due to non-conformances discovered during data validation.

U (Non-detected): The compound or analyte was analyzed for and positively identified by the laboratory; however the compound or analyte should be considered non-detected at the reported concentration due to the presence of contaminants detected in the associated blank(s).

UJ (Non-detected estimated): The compound or analyte was reported as not detected by the laboratory; however the reported quantitation/detection limit is estimated due to non-conformances discovered during data validation.

R (Rejected): The sample results were rejected due to gross non-conformances discovered during data validation. Data qualified as rejected is not usable.

NA (Not Applicable): The non-conformance discovered during data validation demonstrates a high bias, while the affected compound or analyte in the associated sample(s) was reported as not detected by the laboratory and did not warrant the qualification of the data.

A qualification summary table is provided at the end of this report if data has been qualified. Flags are classified as P (protocol) or A (advisory) to indicate whether the flag is due to a laboratory deviation from a specified protocol or is of technical advisory nature.

I. Sample Receipt and Technical Holding Times

All samples were received in good condition.

All technical holding time requirements were met.

II. ICPMS Tune

ICP-MS tune data were not reviewed for Stage 2A validation.

III. Instrument Calibration

Instrument calibration data were not reviewed for Stage 2A validation.

IV. ICP Interference Check Sample Analysis

ICP Interference check sample (ICS) analysis data were not reviewed for Stage 2A validation.

V. Laboratory Blanks

Laboratory blanks were analyzed as required by the methods. No contaminants were found in the laboratory blanks.

VI. Field Blanks

No field blanks were identified in this SDG.

VII. Matrix Spike/Matrix Spike Duplicates

The laboratory has indicated that there were no matrix spike (MS) and matrix spike duplicate (MSD) analyses specified for the samples in this SDG, and therefore matrix spike and matrix spike duplicate analyses were not performed for this SDG.

VIII. Duplicate Sample Analysis

The laboratory has indicated that there were no duplicate (DUP) analyses specified for the samples in this SDG, and therefore duplicate analyses were not performed for this SDG.

IX. Serial Dilution

Serial dilution was not performed for this SDG.

X. Laboratory Control Samples

Laboratory control samples (LCS) were analyzed as required by the methods. Percent recoveries (%R) were within QC limits.

XI. Field Duplicates

No field duplicates were identified in this SDG.

XII. Internal Standards (ICP-MS)

Internal standards data were not reviewed for Stage 2A validation.

XIII. Sample Result Verification

Raw data were not reviewed for Stage 2A validation.

XIV. Overall Assessment of Data

The analysis was conducted within all specifications of the methods. No results were rejected in this SDG.

Kimberly-Clark Upland Area
Metals - Data Qualification Summary - SDG 010084

No Sample Data Qualified in this SDG

Kimberly-Clark Upland Area
Metals - Laboratory Blank Data Qualification Summary - SDG 010084

No Sample Data Qualified in this SDG

Kimberly-Clark Upland Area
Metals - Field Blank Data Qualification Summary - SDG 010084

No Sample Data Qualified in this SDG

LDC #: 49554K4a

SDG #: 010084

Laboratory: Friedman & Bruya, Inc.

VALIDATION COMPLETENESS WORKSHEET

Stage 2A

Date: 11/12/2020

Reviewer: DTM

2nd Reviewer:

METHOD: Metals (EPA SW 846 Method 6020B/EPA Method 1631E)

The samples listed below were reviewed for each of the following validation areas. Validation findings are noted in attached validation findings worksheets.

	Validation Area		Comments
I.	Sample receipt/Technical holding times	A/A	
II.	ICP/MS Tune	N	
III.	Instrument Calibration	N	
IV.	ICP Interference Check Sample (ICS) Analysis	N	
V.	Laboratory Blanks	A	
VI.	Field Blanks	N	
VII.	Matrix Spike/Matrix Spike Duplicates	N	
VIII.	Duplicate sample analysis	N	
IX.	Serial Dilution	N	
X.	Laboratory control samples	A	LCS
XI.	Field Duplicates	N	
XII.	Internal Standard (ICP-MS)	N	
XIII.	Sample Result Verification	N	
XIV.	Overall Assessment of Data	A	

Note: A = Acceptable; N = Not provided/applicable; SW = See worksheet; ND = No compounds detected; R = Rinsate; FB = Field blank; D = Duplicate; TB = Trip blank; EB = Equipment blank; SB=Source blank; OTHER:

	Client ID	Lab ID	Matrix	Date
1	BBH-B-34-10	010084-05	Soil	10/05/20
2				
3				
4				
5				
6				
7				

Notes:

LDC #: 49554K4a

VALIDATION FINDINGS WORKSHEET

Sample Specific Element Reference

Reviewer: DTM

All circled elements are applicable to each sample.

Sample ID	Matrix	Target Analyte List (TAL)
ALL	S	Cu, Zn
ALL	S	Hg
		Al, Sb, As, Ba, Be, B, Cd, Ca, Cr, Co, Cu, Fe, Pb, Li, Mg, Mo, Mn, Hg, Ni, K, Se, Ag, Na, Sr, Tl, Sn, Ti, W, U, V, Zn
		Al, Sb, As, Ba, Be, B, Cd, Ca, Cr, Co, Cu, Fe, Pb, Li, Mg, Mo, Mn, Hg, Ni, K, Se, Ag, Na, Sr, Tl, Sn, Ti, W, U, V, Zn
		Al, Sb, As, Ba, Be, B, Cd, Ca, Cr, Co, Cu, Fe, Pb, Li, Mg, Mo, Mn, Hg, Ni, K, Se, Ag, Na, Sr, Tl, Sn, Ti, W, U, V, Zn
		Al, Sb, As, Ba, Be, B, Cd, Ca, Cr, Co, Cu, Fe, Pb, Li, Mg, Mo, Mn, Hg, Ni, K, Se, Ag, Na, Sr, Tl, Sn, Ti, W, U, V, Zn
		Al, Sb, As, Ba, Be, B, Cd, Ca, Cr, Co, Cu, Fe, Pb, Li, Mg, Mo, Mn, Hg, Ni, K, Se, Ag, Na, Sr, Tl, Sn, Ti, W, U, V, Zn
		Al, Sb, As, Ba, Be, B, Cd, Ca, Cr, Co, Cu, Fe, Pb, Li, Mg, Mo, Mn, Hg, Ni, K, Se, Ag, Na, Sr, Tl, Sn, Ti, W, U, V, Zn
		Al, Sb, As, Ba, Be, B, Cd, Ca, Cr, Co, Cu, Fe, Pb, Li, Mg, Mo, Mn, Hg, Ni, K, Se, Ag, Na, Sr, Tl, Sn, Ti, W, U, V, Zn
		Al, Sb, As, Ba, Be, B, Cd, Ca, Cr, Co, Cu, Fe, Pb, Li, Mg, Mo, Mn, Hg, Ni, K, Se, Ag, Na, Sr, Tl, Sn, Ti, W, U, V, Zn
		Al, Sb, As, Ba, Be, B, Cd, Ca, Cr, Co, Cu, Fe, Pb, Li, Mg, Mo, Mn, Hg, Ni, K, Se, Ag, Na, Sr, Tl, Sn, Ti, W, U, V, Zn
		Al, Sb, As, Ba, Be, B, Cd, Ca, Cr, Co, Cu, Fe, Pb, Li, Mg, Mo, Mn, Hg, Ni, K, Se, Ag, Na, Sr, Tl, Sn, Ti, W, U, V, Zn
		Al, Sb, As, Ba, Be, B, Cd, Ca, Cr, Co, Cu, Fe, Pb, Li, Mg, Mo, Mn, Hg, Ni, K, Se, Ag, Na, Sr, Tl, Sn, Ti, W, U, V, Zn
		Al, Sb, As, Ba, Be, B, Cd, Ca, Cr, Co, Cu, Fe, Pb, Li, Mg, Mo, Mn, Hg, Ni, K, Se, Ag, Na, Sr, Tl, Sn, Ti, W, U, V, Zn
		Al, Sb, As, Ba, Be, B, Cd, Ca, Cr, Co, Cu, Fe, Pb, Li, Mg, Mo, Mn, Hg, Ni, K, Se, Ag, Na, Sr, Tl, Sn, Ti, W, U, V, Zn
Analysis Method		
ICP		Al, Sb, As, Ba, Be, B, Cd, Ca, Cr, Co, Cu, Fe, Pb, Li, Mg, Mo, Mn, Hg, Ni, K, Se, Ag, Na, Sr, Tl, Sn, Ti, W, U, V, Zn
ICP-MS		Al, Sb, As, Ba, Be, B, Cd, Ca, Cr, Co, Cu, Fe, Pb, Li, Mg, Mo, Mn, Hg, Ni, K, Se, Ag, Na, Sr, Tl, Sn, Ti, W, U, V, Zn
GFAA		Al, Sb, As, Ba, Be, B, Cd, Ca, Cr, Co, Cu, Fe, Pb, Li, Mg, Mo, Mn, Hg, Ni, K, Se, Ag, Na, Sr, Tl, Sn, Ti, W, U, V, Zn

Comments: Mercury by CVAA if performed

Laboratory Data Consultants, Inc.
Data Validation Report

Project/Site Name: Kimberly-Clark Upland Area

LDC Report Date: November 16, 2020

Parameters: Metals

Validation Level: Stage 2A

Laboratory: Friedman & Bruya, Inc.

Sample Delivery Group (SDG): 010110

Sample Identification	Laboratory Sample Identification	Matrix	Collection Date
BBH-B-15-11	010110-01	Soil	10/06/20
BBH-B-28-10	010110-02	Soil	10/06/20
BBH-B-32-10	010110-03	Soil	10/06/20
BBH-B-07-10	010110-04	Soil	10/06/20
BBH-B-01-10	010110-05	Soil	10/06/20
BBH-B-10-10	010110-06	Soil	10/06/20
BBH-B-15-11MS	010110-01MS	Soil	10/06/20
BBH-B-15-11MSD	010110-01MSD	Soil	10/06/20

Introduction

This Data Validation Report (DVR) presents data validation findings and results for the associated samples listed on the cover page. Data validation was performed in accordance with a modified outline of the USEPA National Functional Guidelines (NFG) for Inorganic Superfund Methods Data Review (January 2017). Where specific guidance was not available, the data has been evaluated in a conservative manner consistent with industry standards using professional experience.

The analyses were performed by the following methods:

Copper and Zinc by Environmental Protection Agency (EPA) SW 846 Method 6020B
Mercury by EPA Method 1631E

All sample results were subjected to Stage 2A data validation, which comprises an evaluation of quality control (QC) summary results.

The following are definitions of the data qualifiers utilized during data validation:

J (Estimated): The compound or analyte was analyzed for and positively identified by the laboratory; however the reported concentration is estimated due to non-conformances discovered during data validation.

U (Non-detected): The compound or analyte was analyzed for and positively identified by the laboratory; however the compound or analyte should be considered non-detected at the reported concentration due to the presence of contaminants detected in the associated blank(s).

UJ (Non-detected estimated): The compound or analyte was reported as not detected by the laboratory; however the reported quantitation/detection limit is estimated due to non-conformances discovered during data validation.

R (Rejected): The sample results were rejected due to gross non-conformances discovered during data validation. Data qualified as rejected is not usable.

NA (Not Applicable): The non-conformance discovered during data validation demonstrates a high bias, while the affected compound or analyte in the associated sample(s) was reported as not detected by the laboratory and did not warrant the qualification of the data.

A qualification summary table is provided at the end of this report if data has been qualified. Flags are classified as P (protocol) or A (advisory) to indicate whether the flag is due to a laboratory deviation from a specified protocol or is of technical advisory nature.

I. Sample Receipt and Technical Holding Times

All samples were received in good condition.

All technical holding time requirements were met.

II. ICPMS Tune

ICP-MS tune data were not reviewed for Stage 2A validation.

III. Instrument Calibration

Instrument calibration data were not reviewed for Stage 2A validation.

IV. ICP Interference Check Sample Analysis

ICP Interference check sample (ICS) analysis data were not reviewed for Stage 2A validation.

V. Laboratory Blanks

Laboratory blanks were analyzed as required by the methods. No contaminants were found in the laboratory blanks.

VI. Field Blanks

No field blanks were identified in this SDG.

VII. Matrix Spike/Matrix Spike Duplicates

Matrix spike (MS) and matrix spike duplicate (MSD) sample analysis was performed on an associated project sample. Percent recoveries (%R) were within QC limits with the following exceptions:

Spike ID (Associated Samples)	Analyte	MS (%R) (Limits)	MSD (%R) (Limits)	Flag	A or P
BBH-B-15-11MS/MSD (All samples in SDG 010110)	Copper	198 (75-125)	130 (75-125)	J (all detects)	A

Relative percent differences (RPD) were within QC limits with the following exceptions:

Spike ID (Associated Samples)	Analyte	RPD (Limits)	Flag	A or P
BBH-B-15-11MS/MSD (All samples in SDG 010110)	Copper	41 (≤20)	J (all detects)	A

VIII. Duplicate Sample Analysis

The laboratory has indicated that there were no duplicate (DUP) analyses specified for the samples in this SDG, and therefore duplicate analyses were not performed for this SDG.

IX. Serial Dilution

Serial dilution was not performed for this SDG.

X. Laboratory Control Samples

Laboratory control samples (LCS) were analyzed as required by the methods. Percent recoveries (%R) were within QC limits.

XI. Field Duplicates

No field duplicates were identified in this SDG.

XII. Internal Standards (ICP-MS)

Internal standards data were not reviewed for Stage 2A validation.

XIII. Sample Result Verification

Raw data were not reviewed for Stage 2A validation.

XIV. Overall Assessment of Data

The analysis was conducted within all specifications of the methods.

Due to MS/MSD %R and RPD, data were qualified as estimated in six samples.

No results were rejected in this SDG.

Kimberly-Clark Upland Area
Metals - Data Qualification Summary - SDG 010110

Sample	Analyte	Flag	A or P	Reason
BBH-B-15-11 BBH-B-28-10 BBH-B-32-10 BBH-B-07-10 BBH-B-01-10 BBH-B-10-10	Copper	J (all detects)	A	Matrix spike/Matrix spike duplicate (%R)
BBH-B-15-11 BBH-B-28-10 BBH-B-32-10 BBH-B-07-10 BBH-B-01-10 BBH-B-10-10	Copper	J (all detects)	A	Matrix spike/Matrix spike duplicate (RPD)

Kimberly-Clark Upland Area
Metals - Laboratory Blank Data Qualification Summary - SDG 010110

No Sample Data Qualified in this SDG

Kimberly-Clark Upland Area
Metals - Field Blank Data Qualification Summary - SDG 010110

No Sample Data Qualified in this SDG

LDC #: 49554L4a

SDG #: 010110

Laboratory: Friedman & Bruya, Inc.

VALIDATION COMPLETENESS WORKSHEET

Stage 2A

Date: 11/12/2020

Reviewer: DTM

2nd Reviewer:

METHOD: Metals (EPA SW 846 Method 6020B/EPA Method 1631E)

The samples listed below were reviewed for each of the following validation areas. Validation findings are noted in attached validation findings worksheets.

	Validation Area		Comments
I.	Sample receipt/Technical holding times	A/A	
II.	ICP/MS Tune	N	
III.	Instrument Calibration	N	
IV.	ICP Interference Check Sample (ICS) Analysis	N	
V.	Laboratory Blanks	A	
VI.	Field Blanks	N	
VII.	Matrix Spike/Matrix Spike Duplicates	SW	
VIII.	Duplicate sample analysis	N	
IX.	Serial Dilution	N	
X.	Laboratory control samples	A	LCS
XI.	Field Duplicates	N	
XII.	Internal Standard (ICP-MS)	N	
XIII.	Sample Result Verification	N	
XIV.	Overall Assessment of Data	A	

Note: A = Acceptable; N = Not provided/applicable; SW = See worksheet; ND = No compounds detected; R = Rinsate; FB = Field blank; D = Duplicate; TB = Trip blank; EB = Equipment blank; SB=Source blank; OTHER:

	Client ID	Lab ID	Matrix	Date
1	BBH-B-15-11	010110-01	Soil	10/06/20
2	BBH-B-28-10	010110-02	Soil	10/06/20
3	BBH-B-32-10	010110-03	Soil	10/06/20
4	BBH-B-07-10	010110-04	Soil	10/06/20
5	BBH-B-01-10	010110-05	Soil	10/06/20
6	BBH-B-10-10	010110-06	Soil	10/06/20
7	BBH-B-15-11MS	010110-01MS	Soil	10/06/20
8	BBH-B-15-11MSD	010110-01MSD	Soil	10/06/20
9				

Notes:

LDC #: 49554L4a

VALIDATION FINDINGS WORKSHEET

Sample Specific Element Reference

Reviewer: DTM

All circled elements are applicable to each sample.

Sample ID	Matrix	Target Analyte List (TAL)
1-6	S	Cu,Zn, Hg
QC 7-8	S	Cu,Zn, Hg
		Al, Sb, As, Ba, Be, B, Cd, Ca, Cr, Co, Cu, Fe, Pb, Li, Mg, Mo, Mn, Hg, Ni, K, Se, Ag, Na, Sr, Tl, Sn, Ti, W, U, V, Zn
		Al, Sb, As, Ba, Be, B, Cd, Ca, Cr, Co, Cu, Fe, Pb, Li, Mg, Mo, Mn, Hg, Ni, K, Se, Ag, Na, Sr, Tl, Sn, Ti, W, U, V, Zn
		Al, Sb, As, Ba, Be, B, Cd, Ca, Cr, Co, Cu, Fe, Pb, Li, Mg, Mo, Mn, Hg, Ni, K, Se, Ag, Na, Sr, Tl, Sn, Ti, W, U, V, Zn
		Al, Sb, As, Ba, Be, B, Cd, Ca, Cr, Co, Cu, Fe, Pb, Li, Mg, Mo, Mn, Hg, Ni, K, Se, Ag, Na, Sr, Tl, Sn, Ti, W, U, V, Zn
		Al, Sb, As, Ba, Be, B, Cd, Ca, Cr, Co, Cu, Fe, Pb, Li, Mg, Mo, Mn, Hg, Ni, K, Se, Ag, Na, Sr, Tl, Sn, Ti, W, U, V, Zn
		Al, Sb, As, Ba, Be, B, Cd, Ca, Cr, Co, Cu, Fe, Pb, Li, Mg, Mo, Mn, Hg, Ni, K, Se, Ag, Na, Sr, Tl, Sn, Ti, W, U, V, Zn
		Al, Sb, As, Ba, Be, B, Cd, Ca, Cr, Co, Cu, Fe, Pb, Li, Mg, Mo, Mn, Hg, Ni, K, Se, Ag, Na, Sr, Tl, Sn, Ti, W, U, V, Zn
		Al, Sb, As, Ba, Be, B, Cd, Ca, Cr, Co, Cu, Fe, Pb, Li, Mg, Mo, Mn, Hg, Ni, K, Se, Ag, Na, Sr, Tl, Sn, Ti, W, U, V, Zn
		Al, Sb, As, Ba, Be, B, Cd, Ca, Cr, Co, Cu, Fe, Pb, Li, Mg, Mo, Mn, Hg, Ni, K, Se, Ag, Na, Sr, Tl, Sn, Ti, W, U, V, Zn
		Al, Sb, As, Ba, Be, B, Cd, Ca, Cr, Co, Cu, Fe, Pb, Li, Mg, Mo, Mn, Hg, Ni, K, Se, Ag, Na, Sr, Tl, Sn, Ti, W, U, V, Zn
		Al, Sb, As, Ba, Be, B, Cd, Ca, Cr, Co, Cu, Fe, Pb, Li, Mg, Mo, Mn, Hg, Ni, K, Se, Ag, Na, Sr, Tl, Sn, Ti, W, U, V, Zn
		Al, Sb, As, Ba, Be, B, Cd, Ca, Cr, Co, Cu, Fe, Pb, Li, Mg, Mo, Mn, Hg, Ni, K, Se, Ag, Na, Sr, Tl, Sn, Ti, W, U, V, Zn
		Al, Sb, As, Ba, Be, B, Cd, Ca, Cr, Co, Cu, Fe, Pb, Li, Mg, Mo, Mn, Hg, Ni, K, Se, Ag, Na, Sr, Tl, Sn, Ti, W, U, V, Zn
Analysis Method		
ICP		Al, Sb, As, Ba, Be, B, Cd, Ca, Cr, Co, Cu, Fe, Pb, Li, Mg, Mo, Mn, Hg, Ni, K, Se, Ag, Na, Sr, Tl, Sn, Ti, W, U, V, Zn
ICP-MS		Al, Sb, As, Ba, Be, B, Cd, Ca, Cr, Co, Cu, Fe, Pb, Li, Mg, Mo, Mn, Hg, Ni, K, Se, Ag, Na, Sr, Tl, Sn, Ti, W, U, V, Zn
GFAA		Al, Sb, As, Ba, Be, B, Cd, Ca, Cr, Co, Cu, Fe, Pb, Li, Mg, Mo, Mn, Hg, Ni, K, Se, Ag, Na, Sr, Tl, Sn, Ti, W, U, V, Zn

Comments: Mercury by CVAA if performed

LDC #: 49554L4a

VALIDATION FINDINGS WORKSHEET
Matrix Spike/Matrix Spike Duplicates

Reviewer: DTM

METHOD: Trace metals (EPA SW 846 Method 6020/6010/7470)

Please see qualifications below for all questions answered "N". Not applicable questions are identified as "N/A".

Y N N/A Was a matrix spike analyzed for each matrix in this SDG?

Y N N/A Were matrix spike percent recoveries (%R) within the control limits of 75-125? If the sample concentration exceeded the spike concentration by a factor of 4 or more, no action was taken.

Y N N/A Were all duplicate sample relative percent differences (RPD) ≤ 20% for samples?

LEVEL IV ONLY:

Y N N/A Were recalculated results acceptable? See Level IV Recalculation Worksheet for recalculations.

#	MS/MSD ID	Matrix	Analyte	MS %Recovery	MSD %Recovery	RPD (Limits)	Associated Samples	Qual	DET	ND	PS Recovery%
	7/8	S	Cu	198(75-125)	130		ALL	J/A	ALL		
			Cu			41(20)	ALL	J/UJ/A	ALL		

Comments:

Laboratory Data Consultants, Inc.
Data Validation Report

Project/Site Name: Kimberly-Clark Upland Area

LDC Report Date: November 16, 2020

Parameters: Metals

Validation Level: Stage 2A

Laboratory: Friedman & Bruya, Inc.

Sample Delivery Group (SDG): 010130

Sample Identification	Laboratory Sample Identification	Matrix	Collection Date
BBH-S-70-4	010130-01	Soil	10/07/20
BBH-S-70-8	010130-02	Soil	10/07/20
BBH-B-08-10	010130-03	Soil	10/07/20
BBH-B-02-10	010130-04	Soil	10/07/20
BBH-S-71-4	010130-05	Soil	10/07/20
BBH-S-71-8	010130-06	Soil	10/07/20
BBH-S-72-4	010130-07	Soil	10/07/20
BBH-S-72-8	010130-08	Soil	10/07/20
BBH-B-05-10	010130-09	Soil	10/07/20
BBH-B-33-10	010130-10	Soil	10/07/20
BBH-522	010130-11	Soil	10/07/20
BBH-B-29-10	010130-12	Soil	10/07/20
BBH-S-70-4MS	010130-01MS	Soil	10/07/20
BBH-S-70-4MSD	010130-01MSD	Soil	10/07/20

Introduction

This Data Validation Report (DVR) presents data validation findings and results for the associated samples listed on the cover page. Data validation was performed in accordance with a modified outline of the USEPA National Functional Guidelines (NFG) for Inorganic Superfund Methods Data Review (January 2017). Where specific guidance was not available, the data has been evaluated in a conservative manner consistent with industry standards using professional experience.

The analyses were performed by the following methods:

Copper and Zinc by Environmental Protection Agency (EPA) SW 846 Method 6020B
Mercury by EPA Method 1631E

All sample results were subjected to Stage 2A data validation, which comprises an evaluation of quality control (QC) summary results.

The following are definitions of the data qualifiers utilized during data validation:

J (Estimated): The compound or analyte was analyzed for and positively identified by the laboratory; however the reported concentration is estimated due to non-conformances discovered during data validation.

U (Non-detected): The compound or analyte was analyzed for and positively identified by the laboratory; however the compound or analyte should be considered non-detected at the reported concentration due to the presence of contaminants detected in the associated blank(s).

UJ (Non-detected estimated): The compound or analyte was reported as not detected by the laboratory; however the reported quantitation/detection limit is estimated due to non-conformances discovered during data validation.

R (Rejected): The sample results were rejected due to gross non-conformances discovered during data validation. Data qualified as rejected is not usable.

NA (Not Applicable): The non-conformance discovered during data validation demonstrates a high bias, while the affected compound or analyte in the associated sample(s) was reported as not detected by the laboratory and did not warrant the qualification of the data.

A qualification summary table is provided at the end of this report if data has been qualified. Flags are classified as P (protocol) or A (advisory) to indicate whether the flag is due to a laboratory deviation from a specified protocol or is of technical advisory nature.

I. Sample Receipt and Technical Holding Times

All samples were received in good condition.

All technical holding time requirements were met.

II. ICPMS Tune

ICP-MS tune data were not reviewed for Stage 2A validation.

III. Instrument Calibration

Instrument calibration data were not reviewed for Stage 2A validation.

IV. ICP Interference Check Sample Analysis

ICP Interference check sample (ICS) analysis data were not reviewed for Stage 2A validation.

V. Laboratory Blanks

Laboratory blanks were analyzed as required by the methods. No contaminants were found in the laboratory blanks.

VI. Field Blanks

No field blanks were identified in this SDG.

VII. Matrix Spike/Matrix Spike Duplicates

Matrix spike (MS) and matrix spike duplicate (MSD) sample analysis was performed on an associated project sample. Percent recoveries (%R) were within QC limits. Relative percent differences (RPD) were within QC limits.

VIII. Duplicate Sample Analysis

The laboratory has indicated that there were no duplicate (DUP) analyses specified for the samples in this SDG, and therefore duplicate analyses were not performed for this SDG.

IX. Serial Dilution

Serial dilution was not performed for this SDG.

X. Laboratory Control Samples

Laboratory control samples (LCS) were analyzed as required by the methods. Percent recoveries (%R) were within QC limits.

XI. Field Duplicates

Samples BBH-B-33-10 and BBH-522 were identified as field duplicates. No results were detected in any of the samples with the following exceptions:

Analyte	Concentration (mg/Kg)		RPD
	BBH-B-33-10	BBH-522	
Copper	9.09	11.7	25
Zinc	22.7	28.5	23

XII. Internal Standards (ICP-MS)

Internal standards data were not reviewed for Stage 2A validation.

XIII. Sample Result Verification

Raw data were not reviewed for Stage 2A validation.

XIV. Overall Assessment of Data

The analysis was conducted within all specifications of the methods. No results were rejected in this SDG.

Kimberly-Clark Upland Area
Metals - Data Qualification Summary - SDG 010130

No Sample Data Qualified in this SDG

Kimberly-Clark Upland Area
Metals - Laboratory Blank Data Qualification Summary - SDG 010130

No Sample Data Qualified in this SDG

Kimberly-Clark Upland Area
Metals - Field Blank Data Qualification Summary - SDG 010130

No Sample Data Qualified in this SDG

LDC #: 49554M4a
SDG #: 010130
Laboratory: Friedman & Bruya, Inc.

VALIDATION COMPLETENESS WORKSHEET
Stage 2A

Date: 11/12/2020

Reviewer: DTM
2nd Reviewer:

METHOD: Metals (EPA SW 846 Method 6020B/EPA Method 1631E)

The samples listed below were reviewed for each of the following validation areas. Validation findings are noted in attached validation findings worksheets.

	Validation Area		Comments
I.	Sample receipt/Technical holding times	A/A	
II.	ICP/MS Tune	N	
III.	Instrument Calibration	N	
IV.	ICP Interference Check Sample (ICS) Analysis	N	
V.	Laboratory Blanks	A	
VI.	Field Blanks	N	
VII.	Matrix Spike/Matrix Spike Duplicates	A	
VIII.	Duplicate sample analysis	N	
IX.	Serial Dilution	N	
X.	Laboratory control samples	A	LCS
XI.	Field Duplicates	SW	(10,11)
XII.	Internal Standard (ICP-MS)	N	
XIII.	Sample Result Verification	N	
XIV.	Overall Assessment of Data	A	

Note: A = Acceptable; N = Not provided/applicable; SW = See worksheet; ND = No compounds detected; R = Rinsate; FB = Field blank; D = Duplicate; TB = Trip blank; EB = Equipment blank; SB=Source blank; OTHER:

	Client ID	Lab ID	Matrix	Date
1	BBH-S-70-4	010130-01	Soil	10/07/20
2	BBH-S-70-8	010130-02	Soil	10/07/20
3	BBH-B-08-10	010130-03	Soil	10/07/20
4	BBH-B-02-10	010130-04	Soil	10/07/20
5	BBH-S-71-4	010130-05	Soil	10/07/20
6	BBH-S-71-8	010130-06	Soil	10/07/20
7	BBH-S-72-4	010130-07	Soil	10/07/20
8	BBH-S-72-8	010130-08	Soil	10/07/20
9	BBH-B-05-10	010130-09	Soil	10/07/20
10	BBH-B-33-10	010130-10	Soil	10/07/20
11	BBH-522	010130-11	Soil	10/07/20
12	BBH-B-29-10	010130-12	Soil	10/07/20

LDC #: 49554M4a

SDG #: 010130

Laboratory: Friedman & Bruya, Inc.

VALIDATION COMPLETENESS WORKSHEET

Stage 2A

Date:11/12/2020

Reviewer: DTM

2nd Reviewer:

METHOD: Metals (EPA SW 846 Method 6020B/EPA Method 1631E)

	Client ID	Lab ID	Matrix	Date
13	BBH-S-70-4MS	010130-01MS	Soil	10/07/20
14	BBH-S-70-4MSD	010130-01MSD	Soil	10/07/20
15				
16				
17				

Notes:

LDC #: 49554M4a

VALIDATION FINDINGS WORKSHEET

Sample Specific Element Reference

Reviewer: DTM

All circled elements are applicable to each sample.

Sample ID	Matrix	Target Analyte List (TAL)
1-3,7,12	S	Cu, Zn
4-6,8-11	S	Cu, Zn, Hg
1-3,7,12	S	Hg
QC 13-14	S	Cu, Zn, Hg
		Al, Sb, As, Ba, Be, B, Cd, Ca, Cr, Co, Cu, Fe, Pb, Li, Mg, Mo, Mn, Hg, Ni, K, Se, Ag, Na, Sr, Tl, Sn, Ti, W, U, V, Zn
		Al, Sb, As, Ba, Be, B, Cd, Ca, Cr, Co, Cu, Fe, Pb, Li, Mg, Mo, Mn, Hg, Ni, K, Se, Ag, Na, Sr, Tl, Sn, Ti, W, U, V, Zn
		Al, Sb, As, Ba, Be, B, Cd, Ca, Cr, Co, Cu, Fe, Pb, Li, Mg, Mo, Mn, Hg, Ni, K, Se, Ag, Na, Sr, Tl, Sn, Ti, W, U, V, Zn
		Al, Sb, As, Ba, Be, B, Cd, Ca, Cr, Co, Cu, Fe, Pb, Li, Mg, Mo, Mn, Hg, Ni, K, Se, Ag, Na, Sr, Tl, Sn, Ti, W, U, V, Zn
		Al, Sb, As, Ba, Be, B, Cd, Ca, Cr, Co, Cu, Fe, Pb, Li, Mg, Mo, Mn, Hg, Ni, K, Se, Ag, Na, Sr, Tl, Sn, Ti, W, U, V, Zn
		Al, Sb, As, Ba, Be, B, Cd, Ca, Cr, Co, Cu, Fe, Pb, Li, Mg, Mo, Mn, Hg, Ni, K, Se, Ag, Na, Sr, Tl, Sn, Ti, W, U, V, Zn
		Al, Sb, As, Ba, Be, B, Cd, Ca, Cr, Co, Cu, Fe, Pb, Li, Mg, Mo, Mn, Hg, Ni, K, Se, Ag, Na, Sr, Tl, Sn, Ti, W, U, V, Zn
		Al, Sb, As, Ba, Be, B, Cd, Ca, Cr, Co, Cu, Fe, Pb, Li, Mg, Mo, Mn, Hg, Ni, K, Se, Ag, Na, Sr, Tl, Sn, Ti, W, U, V, Zn
		Al, Sb, As, Ba, Be, B, Cd, Ca, Cr, Co, Cu, Fe, Pb, Li, Mg, Mo, Mn, Hg, Ni, K, Se, Ag, Na, Sr, Tl, Sn, Ti, W, U, V, Zn
		Al, Sb, As, Ba, Be, B, Cd, Ca, Cr, Co, Cu, Fe, Pb, Li, Mg, Mo, Mn, Hg, Ni, K, Se, Ag, Na, Sr, Tl, Sn, Ti, W, U, V, Zn
		Al, Sb, As, Ba, Be, B, Cd, Ca, Cr, Co, Cu, Fe, Pb, Li, Mg, Mo, Mn, Hg, Ni, K, Se, Ag, Na, Sr, Tl, Sn, Ti, W, U, V, Zn
		Al, Sb, As, Ba, Be, B, Cd, Ca, Cr, Co, Cu, Fe, Pb, Li, Mg, Mo, Mn, Hg, Ni, K, Se, Ag, Na, Sr, Tl, Sn, Ti, W, U, V, Zn
Analysis Method		
ICP		Al, Sb, As, Ba, Be, B, Cd, Ca, Cr, Co, Cu, Fe, Pb, Li, Mg, Mo, Mn, Hg, Ni, K, Se, Ag, Na, Sr, Tl, Sn, Ti, W, U, V, Zn
ICP-MS		Al, Sb, As, Ba, Be, B, Cd, Ca, Cr, Co, Cu, Fe, Pb, Li, Mg, Mo, Mn, Hg, Ni, K, Se, Ag, Na, Sr, Tl, Sn, Ti, W, U, V, Zn
GFAA		Al, Sb, As, Ba, Be, B, Cd, Ca, Cr, Co, Cu, Fe, Pb, Li, Mg, Mo, Mn, Hg, Ni, K, Se, Ag, Na, Sr, Tl, Sn, Ti, W, U, V, Zn

Comments: Mercury by CVAA if performed

LDC#: 49554M4a

VALIDATION FINDINGS WORKSHEET

Field Duplicates

Page: 1 of 1

Reviewer: DTM

METHOD: Metals (EPA Method 6010/6020/7000)

Analyte	Concentration (mg/Kg)		RPD
	10	11	
Copper	9.09	11.7	25
Mercury	22.7	28.5	23

Laboratory Data Consultants, Inc.
Data Validation Report

Project/Site Name: Kimberly-Clark Upland Area

LDC Report Date: November 16, 2020

Parameters: Metals

Validation Level: Stage 2A

Laboratory: Friedman & Bruya, Inc.

Sample Delivery Group (SDG): 010155

Sample Identification	Laboratory Sample Identification	Matrix	Collection Date
BBH-B-29-10	010155-01	Soil	10/08/20
BBH-B-35-10	010155-02	Soil	10/08/20
BBH-S-73-4	010155-03	Soil	10/08/20
BBH-S-73-8	010155-04	Soil	10/08/20
BBH-S-74-4	010155-05	Soil	10/08/20
BBH-S-74-8	010155-06	Soil	10/08/20
BBH-S-75-4	010155-07	Soil	10/08/20
BBH-B-11-10	010155-08	Soil	10/08/20
BBH-B-09-10	010155-09	Soil	10/08/20
BBH-B-12-10	010155-10	Soil	10/08/20
BBH-B-29-10MS	010155-01MS	Soil	10/08/20
BBH-B-29-10MSD	010155-01MSD	Soil	10/08/20

Introduction

This Data Validation Report (DVR) presents data validation findings and results for the associated samples listed on the cover page. Data validation was performed in accordance with a modified outline of the USEPA National Functional Guidelines (NFG) for Inorganic Superfund Methods Data Review (January 2017). Where specific guidance was not available, the data has been evaluated in a conservative manner consistent with industry standards using professional experience.

The analyses were performed by the following methods:

Copper and Zinc by Environmental Protection Agency (EPA) SW 846 Method 6020B
Mercury by EPA Method 1631E

All sample results were subjected to Stage 2A data validation, which comprises an evaluation of quality control (QC) summary results.

The following are definitions of the data qualifiers utilized during data validation:

J (Estimated): The compound or analyte was analyzed for and positively identified by the laboratory; however the reported concentration is estimated due to non-conformances discovered during data validation.

U (Non-detected): The compound or analyte was analyzed for and positively identified by the laboratory; however the compound or analyte should be considered non-detected at the reported concentration due to the presence of contaminants detected in the associated blank(s).

UJ (Non-detected estimated): The compound or analyte was reported as not detected by the laboratory; however the reported quantitation/detection limit is estimated due to non-conformances discovered during data validation.

R (Rejected): The sample results were rejected due to gross non-conformances discovered during data validation. Data qualified as rejected is not usable.

NA (Not Applicable): The non-conformance discovered during data validation demonstrates a high bias, while the affected compound or analyte in the associated sample(s) was reported as not detected by the laboratory and did not warrant the qualification of the data.

A qualification summary table is provided at the end of this report if data has been qualified. Flags are classified as P (protocol) or A (advisory) to indicate whether the flag is due to a laboratory deviation from a specified protocol or is of technical advisory nature.

I. Sample Receipt and Technical Holding Times

All samples were received in good condition.

All technical holding time requirements were met.

II. ICPMS Tune

ICP-MS tune data were not reviewed for Stage 2A validation.

III. Instrument Calibration

Instrument calibration data were not reviewed for Stage 2A validation.

IV. ICP Interference Check Sample Analysis

ICP Interference check sample (ICS) analysis data were not reviewed for Stage 2A validation.

V. Laboratory Blanks

Laboratory blanks were analyzed as required by the methods. No contaminants were found in the laboratory blanks.

VI. Field Blanks

No field blanks were identified in this SDG.

VII. Matrix Spike/Matrix Spike Duplicates

Matrix spike (MS) and matrix spike duplicate (MSD) sample analysis was performed on an associated project sample. Percent recoveries (%R) were within QC limits. Relative percent differences (RPD) were within QC limits.

VIII. Duplicate Sample Analysis

The laboratory has indicated that there were no duplicate (DUP) analyses specified for the samples in this SDG, and therefore duplicate analyses were not performed for this SDG.

IX. Serial Dilution

Serial dilution was not performed for this SDG.

X. Laboratory Control Samples

Laboratory control samples (LCS) were analyzed as required by the methods. Percent recoveries (%R) were within QC limits.

XI. Field Duplicates

No field duplicates were identified in this SDG.

XII. Internal Standards (ICP-MS)

Internal standards data were not reviewed for Stage 2A validation.

XIII. Sample Result Verification

Raw data were not reviewed for Stage 2A validation.

XIV. Overall Assessment of Data

The analysis was conducted within all specifications of the methods. No results were rejected in this SDG.

Kimberly-Clark Upland Area
Metals - Data Qualification Summary - SDG 010155

No Sample Data Qualified in this SDG

Kimberly-Clark Upland Area
Metals - Laboratory Blank Data Qualification Summary - SDG 010155

No Sample Data Qualified in this SDG

Kimberly-Clark Upland Area
Metals - Field Blank Data Qualification Summary - SDG 010155

No Sample Data Qualified in this SDG

LDC #: 49554N4a

SDG #: 010155

Laboratory: Friedman & Bruya, Inc.

VALIDATION COMPLETENESS WORKSHEET

Stage 2A

Date: 11/13/2020

Reviewer: DTM

2nd Reviewer:

METHOD: Metals (EPA SW 846 Method 6020B/EPA Method 1631E)

The samples listed below were reviewed for each of the following validation areas. Validation findings are noted in attached validation findings worksheets.

	Validation Area		Comments
I.	Sample receipt/Technical holding times	A/A	
II.	ICP/MS Tune	N	
III.	Instrument Calibration	N	
IV.	ICP Interference Check Sample (ICS) Analysis	N	
V.	Laboratory Blanks	A	
VI.	Field Blanks	N	
VII.	Matrix Spike/Matrix Spike Duplicates	A	
VIII.	Duplicate sample analysis	N	
IX.	Serial Dilution	N	
X.	Laboratory control samples	A	LCS
XI.	Field Duplicates	N	
XII.	Internal Standard (ICP-MS)	N	
XIII.	Sample Result Verification	N	
XIV.	Overall Assessment of Data	A	

Note: A = Acceptable; ND = No compounds detected; D = Duplicate; SB=Source blank
N = Not provided/applicable; R = Rinsate; TB = Trip blank; OTHER:
SW = See worksheet; FB = Field blank; EB = Equipment blank

	Client ID	Lab ID	Matrix	Date
1	BBH-B-29-10	010155-01	Soil	10/08/20
2	BBH-B-35-10	010155-02	Soil	10/08/20
3	BBH-S-73-4	010155-03	Soil	10/08/20
4	BBH-S-73-8	010155-04	Soil	10/08/20
5	BBH-S-74-4	010155-05	Soil	10/08/20
6	BBH-S-74-8	010155-06	Soil	10/08/20
7	BBH-S-75-4	010155-07	Soil	10/08/20
8	BBH-B-11-10	010155-08	Soil	10/08/20
9	BBH-B-09-10	010155-09	Soil	10/08/20
10	BBH-B-12-10	010155-10	Soil	10/08/20
11	BBH-B-29-10MS	010155-01MS	Soil	10/08/20
12	BBH-B-29-10MSD	010155-01MSD	Soil	10/08/20

Notes:

LDC #: 49554N4a

VALIDATION FINDINGS WORKSHEET

Sample Specific Element Reference

Reviewer: DTM

All circled elements are applicable to each sample.

Sample ID	Matrix	Target Analyte List (TAL)
1-8,10	S	Cu, Zn, Hg
9	S	Cu, Zn
9	S	Hg
QC 11-12	S	Cu, Zn, Hg
		Al, Sb, As, Ba, Be, B, Cd, Ca, Cr, Co, Cu, Fe, Pb, Li, Mg, Mo, Mn, Hg, Ni, K, Se, Ag, Na, Sr, Tl, Sn, Ti, W, U, V, Zn
		Al, Sb, As, Ba, Be, B, Cd, Ca, Cr, Co, Cu, Fe, Pb, Li, Mg, Mo, Mn, Hg, Ni, K, Se, Ag, Na, Sr, Tl, Sn, Ti, W, U, V, Zn
		Al, Sb, As, Ba, Be, B, Cd, Ca, Cr, Co, Cu, Fe, Pb, Li, Mg, Mo, Mn, Hg, Ni, K, Se, Ag, Na, Sr, Tl, Sn, Ti, W, U, V, Zn
		Al, Sb, As, Ba, Be, B, Cd, Ca, Cr, Co, Cu, Fe, Pb, Li, Mg, Mo, Mn, Hg, Ni, K, Se, Ag, Na, Sr, Tl, Sn, Ti, W, U, V, Zn
		Al, Sb, As, Ba, Be, B, Cd, Ca, Cr, Co, Cu, Fe, Pb, Li, Mg, Mo, Mn, Hg, Ni, K, Se, Ag, Na, Sr, Tl, Sn, Ti, W, U, V, Zn
		Al, Sb, As, Ba, Be, B, Cd, Ca, Cr, Co, Cu, Fe, Pb, Li, Mg, Mo, Mn, Hg, Ni, K, Se, Ag, Na, Sr, Tl, Sn, Ti, W, U, V, Zn
		Al, Sb, As, Ba, Be, B, Cd, Ca, Cr, Co, Cu, Fe, Pb, Li, Mg, Mo, Mn, Hg, Ni, K, Se, Ag, Na, Sr, Tl, Sn, Ti, W, U, V, Zn
		Al, Sb, As, Ba, Be, B, Cd, Ca, Cr, Co, Cu, Fe, Pb, Li, Mg, Mo, Mn, Hg, Ni, K, Se, Ag, Na, Sr, Tl, Sn, Ti, W, U, V, Zn
		Al, Sb, As, Ba, Be, B, Cd, Ca, Cr, Co, Cu, Fe, Pb, Li, Mg, Mo, Mn, Hg, Ni, K, Se, Ag, Na, Sr, Tl, Sn, Ti, W, U, V, Zn
		Al, Sb, As, Ba, Be, B, Cd, Ca, Cr, Co, Cu, Fe, Pb, Li, Mg, Mo, Mn, Hg, Ni, K, Se, Ag, Na, Sr, Tl, Sn, Ti, W, U, V, Zn
Analysis Method		
ICP		Al, Sb, As, Ba, Be, B, Cd, Ca, Cr, Co, Cu, Fe, Pb, Li, Mg, Mo, Mn, Hg, Ni, K, Se, Ag, Na, Sr, Tl, Sn, Ti, W, U, V, Zn
ICP-MS		Al, Sb, As, Ba, Be, B, Cd, Ca, Cr, Co, Cu, Fe, Pb, Li, Mg, Mo, Mn, Hg, Ni, K, Se, Ag, Na, Sr, Tl, Sn, Ti, W, U, V, Zn
GFAA		Al, Sb, As, Ba, Be, B, Cd, Ca, Cr, Co, Cu, Fe, Pb, Li, Mg, Mo, Mn, Hg, Ni, K, Se, Ag, Na, Sr, Tl, Sn, Ti, W, U, V, Zn

Comments: Mercury by CVAA if performed

Laboratory Data Consultants, Inc.
Data Validation Report

Project/Site Name: Kimberly-Clark Upland Area

LDC Report Date: November 16, 2020

Parameters: Metals

Validation Level: Stage 2A

Laboratory: Friedman & Bruya, Inc.

Sample Delivery Group (SDG): 010179

Sample Identification	Laboratory Sample Identification	Matrix	Collection Date
BBH-S-76-4	010179-01	Soil	10/09/20
BBH-S-76-8	010179-02	Soil	10/09/20
BBH-S-77-8	010179-03	Soil	10/09/20
BBH-B-03-10	010179-04	Soil	10/09/20
BBH-B-06-10	010179-05	Soil	10/09/20
BBH-S-78-4	010179-06	Soil	10/09/20
BBH-S-78-8	010179-07	Soil	10/09/20
BBH-S-79-4	010179-08	Soil	10/09/20
BBH-S-79-8	010179-09	Soil	10/09/20
BBH-S-79-8DL	010179-09DL	Soil	10/09/20
BBH-B-18-10	010179-10	Soil	10/09/20
BBH-S-80-4	010179-11	Soil	10/09/20
BBH-S-80-8	010179-12	Soil	10/09/20
BBH-S-75-8	010179-13	Soil	10/09/20
BBH-S-76-4MS	010179-01MS	Soil	10/09/20
BBH-S-76-4MSD	010179-01MSD	Soil	10/09/20

Introduction

This Data Validation Report (DVR) presents data validation findings and results for the associated samples listed on the cover page. Data validation was performed in accordance with a modified outline of the USEPA National Functional Guidelines (NFG) for Inorganic Superfund Methods Data Review (January 2017). Where specific guidance was not available, the data has been evaluated in a conservative manner consistent with industry standards using professional experience.

The analyses were performed by the following methods:

Copper and Zinc by Environmental Protection Agency (EPA) SW 846 Method 6020B
Mercury by EPA Method 1631E

All sample results were subjected to Stage 2A data validation, which comprises an evaluation of quality control (QC) summary results.

The following are definitions of the data qualifiers utilized during data validation:

J (Estimated): The compound or analyte was analyzed for and positively identified by the laboratory; however the reported concentration is estimated due to non-conformances discovered during data validation.

U (Non-detected): The compound or analyte was analyzed for and positively identified by the laboratory; however the compound or analyte should be considered non-detected at the reported concentration due to the presence of contaminants detected in the associated blank(s).

UJ (Non-detected estimated): The compound or analyte was reported as not detected by the laboratory; however the reported quantitation/detection limit is estimated due to non-conformances discovered during data validation.

DNR Do not report from this analysis; the result for this analyte is to be reported from an alternative analysis.

R (Rejected): The sample results were rejected due to gross non-conformances discovered during data validation. Data qualified as rejected is not usable.

NA (Not Applicable): The non-conformance discovered during data validation demonstrates a high bias, while the affected compound or analyte in the associated sample(s) was reported as not detected by the laboratory and did not warrant the qualification of the data.

A qualification summary table is provided at the end of this report if data has been qualified. Flags are classified as P (protocol) or A (advisory) to indicate whether the flag is due to a laboratory deviation from a specified protocol or is of technical advisory nature.

I. Sample Receipt and Technical Holding Times

All samples were received in good condition.

All technical holding time requirements were met.

II. ICPMS Tune

ICP-MS tune data were not reviewed for Stage 2A validation.

III. Instrument Calibration

Instrument calibration data were not reviewed for Stage 2A validation.

IV. ICP Interference Check Sample Analysis

ICP Interference check sample (ICS) analysis data were not reviewed for Stage 2A validation.

V. Laboratory Blanks

Laboratory blanks were analyzed as required by the methods. No contaminants were found in the laboratory blanks.

VI. Field Blanks

No field blanks were identified in this SDG.

VII. Matrix Spike/Matrix Spike Duplicates

Matrix spike (MS) and matrix spike duplicate (MSD) sample analysis was performed on an associated project sample. Percent recoveries (%R) were within QC limits with the following exceptions:

Spike ID (Associated Samples)	Analyte	MS (%R) (Limits)	MSD (%R) (Limits)	Flag	A or P
BBH-S-76-4MS/MSD (BBH-S-76-4 BBH-S-76-8 BBH-B-03-10 BBH-B-06-10 BBH-S-78-4 BBH-S-78-8 BBH-S-79-4 BBH-S-79-8 BBH-S-79-8DL BBH-B-18-10 BBH-S-80-4 BBH-S-80-8 BBH-S-75-8)	Zinc	68 (75-125)	-	J (all detects) UJ (all non-detects)	A

Spike ID (Associated Samples)	Analyte	MS (%R) (Limits)	MSD (%R) (Limits)	Flag	A or P
BBH-S-76-4MS/MSD (BBH-S-76-4 BBH-S-76-8 BBH-S-78-4 BBH-S-79-4 BBH-S-75-8)	Mercury	-	144 (71-125)	J (all detects)	A
BBH-S-76-4MS/MSD (BBH-S-77-8 BBH-B-03-10 BBH-B-06-10 BBH-S-78-8 BBH-S-79-8 BBH-B-18-10 BBH-S-80-4 BBH-S-80-8)	Mercury	-	144 (71-125)	NA	-

Relative percent differences (RPD) were within QC limits with the following exceptions:

Spike ID (Associated Samples)	Analyte	RPD (Limits)	Flag	A or P
BBH-S-76-4MS/MSD (BBH-S-76-4 BBH-S-76-8 BBH-B-03-10 BBH-B-06-10 BBH-S-78-4 BBH-S-78-8 BBH-S-79-4 BBH-S-79-8 BBH-S-79-8DL BBH-B-18-10 BBH-S-80-4 BBH-S-80-8 BBH-S-75-8)	Copper Zinc	21 (≤20) 32 (≤20)	J (all detects) UJ (all non-detects) J (all detects) UJ (all non-detects)	A
BBH-S-76-4MS/MSD (BBH-S-76-4 BBH-S-76-8 BBH-S-77-8 BBH-B-03-10 BBH-B-06-10 BBH-S-78-4 BBH-S-78-8 BBH-S-79-4 BBH-S-79-8 BBH-B-18-10 BBH-S-80-4 BBH-S-80-8 BBH-S-75-8)	Mercury	26 (≤20)	J (all detects) UJ (all non-detects)	A

VIII. Duplicate Sample Analysis

The laboratory has indicated that there were no duplicate (DUP) analyses specified for the samples in this SDG, and therefore duplicate analyses were not performed for this SDG.

IX. Serial Dilution

Serial dilution was not performed for this SDG.

X. Laboratory Control Samples

Laboratory control samples (LCS) were analyzed as required by the methods. Percent recoveries (%R) were within QC limits.

XI. Field Duplicates

No field duplicates were identified in this SDG.

XII. Internal Standards (ICP-MS)

Internal standards data were not reviewed for Stage 2A validation.

XIII. Sample Result Verification

Raw data were not reviewed for Stage 2A validation.

XIV. Overall Assessment of Data

The analysis was conducted within all specifications of the methods.

In the case where more than one result was reported for an individual sample, the least technically acceptable results were deemed not reportable as follows:

Sample	Analyte	Reason	Flag	A or P
BBH-S-79-8DL	Copper Zinc	Sample with lower dilution is more acceptable due to having a detected result.	DNR	-

Due to MS/MSD %R and RPD, data were qualified as estimated in thirteen samples.

No results were rejected in this SDG.

Kimberly-Clark Upland Area
Metals - Data Qualification Summary - SDG 010179

Sample	Analyte	Flag	A or P	Reason
BBH-S-76-4 BBH-S-76-8 BBH-B-03-10 BBH-B-06-10 BBH-S-78-4 BBH-S-78-8 BBH-S-79-4 BBH-S-79-8 BBH-B-18-10 BBH-S-80-4 BBH-S-80-8 BBH-S-75-8	Zinc	J (all detects) UJ (all non-detects)	A	Matrix spike/Matrix spike duplicate (%R)
BBH-S-76-4 BBH-S-76-8 BBH-S-78-4 BBH-S-79-4 BBH-S-75-8	Mercury	J (all detects)	A	Matrix spike/Matrix spike duplicate (%R)
BBH-S-76-4 BBH-S-76-8 BBH-B-03-10 BBH-B-06-10 BBH-S-78-4 BBH-S-78-8 BBH-S-79-4 BBH-S-79-8 BBH-B-18-10 BBH-S-80-4 BBH-S-80-8 BBH-S-75-8	Copper Zinc	J (all detects) UJ (all non-detects) J (all detects) UJ (all non-detects)	A	Matrix spike/Matrix spike duplicate (RPD)
BBH-S-76-4 BBH-S-76-8 BBH-S-77-8 BBH-B-03-10 BBH-B-06-10 BBH-S-78-4 BBH-S-78-8 BBH-S-79-4 BBH-S-79-8 BBH-B-18-10 BBH-S-80-4 BBH-S-80-8 BBH-S-75-8	Mercury	J (all detects) UJ (all non-detects)	A	Matrix spike/Matrix spike duplicate (RPD)
BBH-S-79-8DL	Copper Zinc	DNR	-	Overall assessment of data

Kimberly-Clark Upland Area
Metals - Laboratory Blank Data Qualification Summary - SDG 010179

No Sample Data Qualified in this SDG

Kimberly-Clark Upland Area
Metals - Field Blank Data Qualification Summary - SDG 010179

No Sample Data Qualified in this SDG

LDC #: 49554O4a
SDG #: 010179
Laboratory: Friedman & Bruya, Inc.

VALIDATION COMPLETENESS WORKSHEET
Stage 2A

Date: 11/13/2020

Reviewer: DTM
2nd Reviewer:

METHOD: Metals (EPA SW 846 Method 6020B/EPA Method 1631E)

The samples listed below were reviewed for each of the following validation areas. Validation findings are noted in attached validation findings worksheets.

	Validation Area		Comments
I.	Sample receipt/Technical holding times	A/A	
II.	ICP/MS Tune	N	
III.	Instrument Calibration	N	
IV.	ICP Interference Check Sample (ICS) Analysis	N	
V.	Laboratory Blanks	A	
VI.	Field Blanks	N	
VII.	Matrix Spike/Matrix Spike Duplicates	SW	
VIII.	Duplicate sample analysis	N	
IX.	Serial Dilution	N	
X.	Laboratory control samples	A	LCS
XI.	Field Duplicates	N	
XII.	Internal Standard (ICP-MS)	N	
XIII.	Sample Result Verification	N	
XIV.	Overall Assessment of Data	SW	

Note: A = Acceptable; N = Not provided/applicable; SW = See worksheet; ND = No compounds detected; R = Rinsate; FB = Field blank; D = Duplicate; TB = Trip blank; EB = Equipment blank; SB=Source blank; OTHER:

	Client ID	Lab ID	Matrix	Date
1	BBH-S-76-4	010179-01	Soil	10/09/20
2	BBH-S-76-8	010179-02	Soil	10/09/20
3	BBH-S-77-8	010179-03	Soil	10/09/20
4	BBH-B-03-10	010179-04	Soil	10/09/20
5	BBH-B-06-10	010179-05	Soil	10/09/20
6	BBH-S-78-4	010179-06	Soil	10/09/20
7	BBH-S-78-8	010179-07	Soil	10/09/20
8	BBH-S-79-4	010179-08	Soil	10/09/20
9	BBH-S-79-8	010179-09	Soil	10/09/20
10	BBH-S-79-8DL	010179-09DL	Soil	10/09/20
11	BBH-B-18-10	010179-10	Soil	10/09/20
12	BBH-S-80-4	010179-11	Soil	10/09/20

LDC #: 49554O4a

SDG #: 010179

Laboratory: Friedman & Bruya, Inc.

VALIDATION COMPLETENESS WORKSHEET

Stage 2A

Date: 11/13/2020

Reviewer: DTM

2nd Reviewer:

METHOD: Metals (EPA SW 846 Method 6020B/EPA Method 1631E)

	Client ID	Lab ID	Matrix	Date
13	BBH-S-80-8	010179-12	Soil	10/09/20
14	BBH-S-75-8	010179-13	Soil	10/09/20
15	BBH-S-76-4MS	010179-01MS	Soil	10/09/20
16	BBH-S-76-4MSD	010179-01MSD	Soil	10/09/20
17				
18				
19				

Notes:

LDC #: 49554O4a

VALIDATION FINDINGS WORKSHEET

Sample Specific Element Reference

Reviewer: DTM

All circled elements are applicable to each sample.

Sample ID	Matrix	Target Analyte List (TAL)
1-2,8-13	S	Cu, Zn, Hg
4-7,14	S	Cu, Zn
3-7,14	S	Hg
QC 15-16	S	Cu, Zn, Hg
		Al, Sb, As, Ba, Be, B, Cd, Ca, Cr, Co, Cu, Fe, Pb, Li, Mg, Mo, Mn, Hg, Ni, K, Se, Ag, Na, Sr, Tl, Sn, Ti, W, U, V, Zn
		Al, Sb, As, Ba, Be, B, Cd, Ca, Cr, Co, Cu, Fe, Pb, Li, Mg, Mo, Mn, Hg, Ni, K, Se, Ag, Na, Sr, Tl, Sn, Ti, W, U, V, Zn
		Al, Sb, As, Ba, Be, B, Cd, Ca, Cr, Co, Cu, Fe, Pb, Li, Mg, Mo, Mn, Hg, Ni, K, Se, Ag, Na, Sr, Tl, Sn, Ti, W, U, V, Zn
		Al, Sb, As, Ba, Be, B, Cd, Ca, Cr, Co, Cu, Fe, Pb, Li, Mg, Mo, Mn, Hg, Ni, K, Se, Ag, Na, Sr, Tl, Sn, Ti, W, U, V, Zn
		Al, Sb, As, Ba, Be, B, Cd, Ca, Cr, Co, Cu, Fe, Pb, Li, Mg, Mo, Mn, Hg, Ni, K, Se, Ag, Na, Sr, Tl, Sn, Ti, W, U, V, Zn
		Al, Sb, As, Ba, Be, B, Cd, Ca, Cr, Co, Cu, Fe, Pb, Li, Mg, Mo, Mn, Hg, Ni, K, Se, Ag, Na, Sr, Tl, Sn, Ti, W, U, V, Zn
		Al, Sb, As, Ba, Be, B, Cd, Ca, Cr, Co, Cu, Fe, Pb, Li, Mg, Mo, Mn, Hg, Ni, K, Se, Ag, Na, Sr, Tl, Sn, Ti, W, U, V, Zn
		Al, Sb, As, Ba, Be, B, Cd, Ca, Cr, Co, Cu, Fe, Pb, Li, Mg, Mo, Mn, Hg, Ni, K, Se, Ag, Na, Sr, Tl, Sn, Ti, W, U, V, Zn
		Al, Sb, As, Ba, Be, B, Cd, Ca, Cr, Co, Cu, Fe, Pb, Li, Mg, Mo, Mn, Hg, Ni, K, Se, Ag, Na, Sr, Tl, Sn, Ti, W, U, V, Zn
Analysis Method		
ICP		Al, Sb, As, Ba, Be, B, Cd, Ca, Cr, Co, Cu, Fe, Pb, Li, Mg, Mo, Mn, Hg, Ni, K, Se, Ag, Na, Sr, Tl, Sn, Ti, W, U, V, Zn
ICP-MS		Al, Sb, As, Ba, Be, B, Cd, Ca, Cr, Co, Cu, Fe, Pb, Li, Mg, Mo, Mn, Hg, Ni, K, Se, Ag, Na, Sr, Tl, Sn, Ti, W, U, V, Zn
GFAA		Al, Sb, As, Ba, Be, B, Cd, Ca, Cr, Co, Cu, Fe, Pb, Li, Mg, Mo, Mn, Hg, Ni, K, Se, Ag, Na, Sr, Tl, Sn, Ti, W, U, V, Zn

Comments: Mercury by CVAA if performed

LDC #: 49554O4a

VALIDATION FINDINGS WORKSHEET
Matrix Spike/Matrix Spike Duplicates

Reviewer: DTM

METHOD: Trace metals (EPA SW 846 Method 6020/6010/7470)

Please see qualifications below for all questions answered "N". Not applicable questions are identified as "N/A".

Y N N/A Was a matrix spike analyzed for each matrix in this SDG?

Y N N/A Were matrix spike percent recoveries (%R) within the control limits of 75-125? If the sample concentration exceeded the spike concentration by a factor of 4 or more, no action was taken.

Y N N/A Were all duplicate sample relative percent differences (RPD) ≤ 20% for samples?

LEVEL IV ONLY:

Y N N/A Were recalculated results acceptable? See Level IV Recalculation Worksheet for recalculations.

#	MS/MSD ID	Matrix	Analyte	MS %Recovery	MSD %Recovery	RPD (Limits)	Associated Samples	Qual	DET	ND	PS Recovery%
	15/16	S	Cu			21(20)	1-2, 4-14	J/UJ/A		10	
		S	Zn	68(75-125)			1-2, 4-14	J/UJ/A		10	
			Zn			32(20)	1-2, 4-14	J/UJ/A		10	
			Hg		144(71-125)		1-9,11-14	J/A	1,2,6,8,14		
			Hg			26(20)	1-9,11-14	J/UJ/A	1,2,6,8,14		

Comments:

LDC #: 49554O4a

VALIDATION FINDINGS WORKSHEET
Overall Assessment of Data

Reviewer: DTM

METHOD: Trace Metals (EPA SW 846 Method 6010/6020/7000)

Please see qualifications below for all questions answered "N". Not applicable questions are identified as "N/A".

All available information pertaining to the data were reviewed using professional judgement to compliment the determination of the overall quality of the data.

Y N N/A Was the overall quality and usability of the data acceptable?

#	Sample ID	Analyte	Finding	Qualification
	10	Cu, Zn	Sample with lower dilution is more acceptable due to having a detected result.	DNR

Comments:

Laboratory Data Consultants, Inc.
Data Validation Report

Project/Site Name: Kimberly-Clark Upland Area

LDC Report Date: November 16, 2020

Parameters: Metals

Validation Level: Stage 2A

Laboratory: Friedman & Bruya, Inc.

Sample Delivery Group (SDG): 010208

Sample Identification	Laboratory Sample Identification	Matrix	Collection Date
BBH-523	010208-01	Soil	10/12/20
BBH-S-39-8	010208-02	Soil	10/12/20
BBH-S-81-4	010208-03	Soil	10/12/20
BBH-S-82-4	010208-04	Soil	10/12/20
BBH-S-83-4	010208-05	Soil	10/13/20
BBH-S-84-4	010208-06	Soil	10/13/20
BBH-S-85-8	010208-07	Soil	10/13/20
BBH-S-85-4	010208-08	Soil	10/13/20
BBH-S-65-8	010208-09	Soil	10/13/20
BBH-S-86-4	010208-10	Soil	10/13/20
BBH-S-57-8	010208-11	Soil	10/13/20
BBH-S-41-8	010208-12	Soil	10/13/20
BBH-523MS	010208-01MS	Soil	10/12/20
BBH-523MSD	010208-01MSD	Soil	10/12/20

Introduction

This Data Validation Report (DVR) presents data validation findings and results for the associated samples listed on the cover page. Data validation was performed in accordance with a modified outline of the USEPA National Functional Guidelines (NFG) for Inorganic Superfund Methods Data Review (January 2017). Where specific guidance was not available, the data has been evaluated in a conservative manner consistent with industry standards using professional experience.

The analyses were performed by the following methods:

Copper and Zinc by Environmental Protection Agency (EPA) SW 846 Method 6020B
Mercury by EPA Method 1631E

All sample results were subjected to Stage 2A data validation, which comprises an evaluation of quality control (QC) summary results.

The following are definitions of the data qualifiers utilized during data validation:

J (Estimated): The compound or analyte was analyzed for and positively identified by the laboratory; however the reported concentration is estimated due to non-conformances discovered during data validation.

U (Non-detected): The compound or analyte was analyzed for and positively identified by the laboratory; however the compound or analyte should be considered non-detected at the reported concentration due to the presence of contaminants detected in the associated blank(s).

UJ (Non-detected estimated): The compound or analyte was reported as not detected by the laboratory; however the reported quantitation/detection limit is estimated due to non-conformances discovered during data validation.

R (Rejected): The sample results were rejected due to gross non-conformances discovered during data validation. Data qualified as rejected is not usable.

NA (Not Applicable): The non-conformance discovered during data validation demonstrates a high bias, while the affected compound or analyte in the associated sample(s) was reported as not detected by the laboratory and did not warrant the qualification of the data.

A qualification summary table is provided at the end of this report if data has been qualified. Flags are classified as P (protocol) or A (advisory) to indicate whether the flag is due to a laboratory deviation from a specified protocol or is of technical advisory nature.

I. Sample Receipt and Technical Holding Times

All samples were received in good condition.

All technical holding time requirements were met.

II. ICPMS Tune

ICP-MS tune data were not reviewed for Stage 2A validation.

III. Instrument Calibration

Instrument calibration data were not reviewed for Stage 2A validation.

IV. ICP Interference Check Sample Analysis

ICP Interference check sample (ICS) analysis data were not reviewed for Stage 2A validation.

V. Laboratory Blanks

Laboratory blanks were analyzed as required by the methods. No contaminants were found in the laboratory blanks.

VI. Field Blanks

No field blanks were identified in this SDG.

VII. Matrix Spike/Matrix Spike Duplicates

Matrix spike (MS) and matrix spike duplicate (MSD) sample analysis was performed on an associated project sample. Percent recoveries (%R) were within QC limits with the following exceptions:

Spike ID (Associated Samples)	Analyte	MS (%R) (Limits)	MSD (%R) (Limits)	Flag	A or P
BBH-523MS/MSD (BBH-S-81-4 BBH-S-82-4 BBH-S-83-4 BBH-S-85-4 BBH-S-65-8)	Copper	63 (75-125)	-	J (all detects) UJ (all non-detects)	A

For BBH-523MS/MSD, no data were qualified for mercury percent recoveries (%R) outside the QC limits since the parent sample results were greater than 4X the spike concentration.

Relative percent differences (RPD) were within QC limits.

VIII. Duplicate Sample Analysis

The laboratory has indicated that there were no duplicate (DUP) analyses specified for the samples in this SDG, and therefore duplicate analyses were not performed for this SDG.

IX. Serial Dilution

Serial dilution was not performed for this SDG.

X. Laboratory Control Samples

Laboratory control samples (LCS) were analyzed as required by the methods. Percent recoveries (%R) were within QC limits.

XI. Field Duplicates

Samples BBH-523 and BBH-S-39-8 were identified as field duplicates. No results were detected in any of the samples with the following exceptions:

Analyte	Concentration (mg/Kg)		RPD
	BBH-523	BBH-S-39-8	
Mercury	1.1	0.94	16

XII. Internal Standards (ICP-MS)

Internal standards data were not reviewed for Stage 2A validation.

XIII. Sample Result Verification

Raw data were not reviewed for Stage 2A validation.

XIV. Overall Assessment of Data

The analysis was conducted within all specifications of the methods.

Due to MS/MSD %R, data were qualified as estimated in five samples.

No results were rejected in this SDG.

Kimberly-Clark Upland Area
Metals - Data Qualification Summary - SDG 010208

Sample	Analyte	Flag	A or P	Reason
BBH-S-81-4 BBH-S-82-4 BBH-S-83-4 BBH-S-85-4 BBH-S-65-8	Copper	J (all detects) UJ (all non-detects)	A	Matrix spike/Matrix spike duplicate (%R)

Kimberly-Clark Upland Area
Metals - Laboratory Blank Data Qualification Summary - SDG 010208

No Sample Data Qualified in this SDG

Kimberly-Clark Upland Area
Metals - Field Blank Data Qualification Summary - SDG 010208

No Sample Data Qualified in this SDG

LDC #: 49554P4a

SDG #: 010208

Laboratory: Friedman & Bruya, Inc.

VALIDATION COMPLETENESS WORKSHEET

Stage 2A

Date: 11/13/2020

Reviewer: DTM

2nd Reviewer:

METHOD: Metals (EPA SW 846 Method 6020B/EPA Method 1631E)

The samples listed below were reviewed for each of the following validation areas. Validation findings are noted in attached validation findings worksheets.

	Validation Area		Comments
I.	Sample receipt/Technical holding times	A/A	
II.	ICP/MS Tune	N	
III.	Instrument Calibration	N	
IV.	ICP Interference Check Sample (ICS) Analysis	N	
V.	Laboratory Blanks	A	
VI.	Field Blanks	N	
VII.	Matrix Spike/Matrix Spike Duplicates	SW	
VIII.	Duplicate sample analysis	N	
IX.	Serial Dilution	N	
X.	Laboratory control samples	A	LCS
XI.	Field Duplicates	SW	(1,2)
XII.	Internal Standard (ICP-MS)	N	
XIII.	Sample Result Verification	N	
XIV.	Overall Assessment of Data	A	

Note: A = Acceptable; N = Not provided/applicable; SW = See worksheet; ND = No compounds detected; R = Rinsate; FB = Field blank; D = Duplicate; TB = Trip blank; EB = Equipment blank; SB=Source blank; OTHER:

	Client ID	Lab ID	Matrix	Date
1	BBH-523	010208-01	Soil	10/12/20
2	BBH-S-39-8	010208-02	Soil	10/12/20
3	BBH-S-81-4	010208-03	Soil	10/12/20
4	BBH-S-82-4	010208-04	Soil	10/12/20
5	BBH-S-83-4	010208-05	Soil	10/13/20
6	BBH-S-84-4	010208-06	Soil	10/13/20
7	BBH-S-85-8	010208-07	Soil	10/13/20
8	BBH-S-85-4	010208-08	Soil	10/13/20
9	BBH-S-65-8	010208-09	Soil	10/13/20
10	BBH-S-86-4	010208-10	Soil	10/13/20
11	BBH-S-57-8	010208-11	Soil	10/13/20
12	BBH-S-41-8	010208-12	Soil	10/13/20

LDC #: 49554P4a

SDG #: 010208

Laboratory: Friedman & Bruya, Inc.

VALIDATION COMPLETENESS WORKSHEET

Stage 2A

Date:12/13/2020

Reviewer: DTM

2nd Reviewer:

METHOD: Metals (EPA SW 846 Method 6020B/EPA Method 1631E)

	Client ID	Lab ID	Matrix	Date
13	BBH-523MS	010208-01MS	Soil	10/12/20
14	BBH-523MSD	010208-01MSD	Soil	10/12/20
15				
16				
17				

Notes:

LDC #: 49554P4a

VALIDATION FINDINGS WORKSHEET

Sample Specific Element Reference

Reviewer: DTM

All circled elements are applicable to each sample.

Sample ID	Matrix	Target Analyte List (TAL)
3-4, 8-9	S	Cu, Hg
5	S	Cu, Zn, Hg
12	S	Zn
1-2, 6-7, 10-11	S	Hg
QC 13/14	S	Cu, Zn, Hg
		Al, Sb, As, Ba, Be, B, Cd, Ca, Cr, Co, Cu, Fe, Pb, Li, Mg, Mo, Mn, Hg, Ni, K, Se, Ag, Na, Sr, Tl, Sn, Ti, W, U, V, Zn
		Al, Sb, As, Ba, Be, B, Cd, Ca, Cr, Co, Cu, Fe, Pb, Li, Mg, Mo, Mn, Hg, Ni, K, Se, Ag, Na, Sr, Tl, Sn, Ti, W, U, V, Zn
		Al, Sb, As, Ba, Be, B, Cd, Ca, Cr, Co, Cu, Fe, Pb, Li, Mg, Mo, Mn, Hg, Ni, K, Se, Ag, Na, Sr, Tl, Sn, Ti, W, U, V, Zn
		Al, Sb, As, Ba, Be, B, Cd, Ca, Cr, Co, Cu, Fe, Pb, Li, Mg, Mo, Mn, Hg, Ni, K, Se, Ag, Na, Sr, Tl, Sn, Ti, W, U, V, Zn
		Al, Sb, As, Ba, Be, B, Cd, Ca, Cr, Co, Cu, Fe, Pb, Li, Mg, Mo, Mn, Hg, Ni, K, Se, Ag, Na, Sr, Tl, Sn, Ti, W, U, V, Zn
		Al, Sb, As, Ba, Be, B, Cd, Ca, Cr, Co, Cu, Fe, Pb, Li, Mg, Mo, Mn, Hg, Ni, K, Se, Ag, Na, Sr, Tl, Sn, Ti, W, U, V, Zn
		Al, Sb, As, Ba, Be, B, Cd, Ca, Cr, Co, Cu, Fe, Pb, Li, Mg, Mo, Mn, Hg, Ni, K, Se, Ag, Na, Sr, Tl, Sn, Ti, W, U, V, Zn
		Al, Sb, As, Ba, Be, B, Cd, Ca, Cr, Co, Cu, Fe, Pb, Li, Mg, Mo, Mn, Hg, Ni, K, Se, Ag, Na, Sr, Tl, Sn, Ti, W, U, V, Zn
Analysis Method		
ICP		Al, Sb, As, Ba, Be, B, Cd, Ca, Cr, Co, Cu, Fe, Pb, Li, Mg, Mo, Mn, Hg, Ni, K, Se, Ag, Na, Sr, Tl, Sn, Ti, W, U, V, Zn
ICP-MS		Al, Sb, As, Ba, Be, B, Cd, Ca, Cr, Co, Cu, Fe, Pb, Li, Mg, Mo, Mn, Hg, Ni, K, Se, Ag, Na, Sr, Tl, Sn, Ti, W, U, V, Zn
GFAA		Al, Sb, As, Ba, Be, B, Cd, Ca, Cr, Co, Cu, Fe, Pb, Li, Mg, Mo, Mn, Hg, Ni, K, Se, Ag, Na, Sr, Tl, Sn, Ti, W, U, V, Zn

Comments: Mercury by CVAA if performed

LDC #: 49554P4a

VALIDATION FINDINGS WORKSHEET
Matrix Spike/Matrix Spike Duplicates

Reviewer: DTM

METHOD: Trace metals (EPA SW 846 Method 6020/6010/7470)

Please see qualifications below for all questions answered "N". Not applicable questions are identified as "N/A".

Y N N/A Was a matrix spike analyzed for each matrix in this SDG?

Y N N/A Were matrix spike percent recoveries (%R) within the control limits of 75-125? If the sample concentration exceeded the spike concentration by a factor of 4 or more, no action was taken.

Y N N/A Were all duplicate sample relative percent differences (RPD) ≤ 20% for samples?

LEVEL IV ONLY:

Y N N/A Were recalculated results acceptable? See Level IV Recalculation Worksheet for recalculations.

#	MS/MSD ID	Matrix	Analyte	MS %Recovery	MSD %Recovery	RPD (Limits)	Associated Samples	Qual	DET	ND	PS Recovery%
	13/14	S	Cu	63(75-125)	75		3-5,8-9	J/UJ/A		3	

Comments: 13/14 Hg >4x Spike

LDC#: 49554P4a

VALIDATION FINDINGS WORKSHEET

Field Duplicates

Reviewer: DTM

METHOD: Metals (EPA Method 6010/6020/7000)

Analyte	Concentration (mg/Kg)		RPD
	1	2	
Mercury	1.1	0.94	16

LDC Report# 49554Q4a

Laboratory Data Consultants, Inc.
Data Validation Report

Project/Site Name: Kimberly-Clark Upland Area

LDC Report Date: November 16, 2020

Parameters: Metals

Validation Level: Stage 2A

Laboratory: Friedman & Bruya, Inc.

Sample Delivery Group (SDG): 010237

Sample Identification	Laboratory Sample Identification	Matrix	Collection Date
BBH-B-15-12	010237-01	Soil	10/14/20
BBH-S-87-4	010237-02	Soil	10/14/20
BBH-S-88-8	010237-03	Soil	10/14/20
BBH-B-23-11	010237-04	Soil	10/14/20
BBH-B-23-11DL	010237-04DL	Soil	10/14/20
BBH-B-15-12MS	010237-01MS	Soil	10/14/20
BBH-B-15-12MSD	010237-01MSD	Soil	10/14/20

Introduction

This Data Validation Report (DVR) presents data validation findings and results for the associated samples listed on the cover page. Data validation was performed in accordance with a modified outline of the USEPA National Functional Guidelines (NFG) for Inorganic Superfund Methods Data Review (January 2017). Where specific guidance was not available, the data has been evaluated in a conservative manner consistent with industry standards using professional experience.

The analyses were performed by the following methods:

Copper by Environmental Protection Agency (EPA) SW 846 Method 6020B
Mercury by EPA Method 1631E

All sample results were subjected to Stage 2A data validation, which comprises an evaluation of quality control (QC) summary results.

The following are definitions of the data qualifiers utilized during data validation:

J (Estimated): The compound or analyte was analyzed for and positively identified by the laboratory; however the reported concentration is estimated due to non-conformances discovered during data validation.

U (Non-detected): The compound or analyte was analyzed for and positively identified by the laboratory; however the compound or analyte should be considered non-detected at the reported concentration due to the presence of contaminants detected in the associated blank(s).

UJ (Non-detected estimated): The compound or analyte was reported as not detected by the laboratory; however the reported quantitation/detection limit is estimated due to non-conformances discovered during data validation.

DNR Do not report from this analysis; the result for this analyte is to be reported from an alternative analysis.

R (Rejected): The sample results were rejected due to gross non-conformances discovered during data validation. Data qualified as rejected is not usable.

NA (Not Applicable): The non-conformance discovered during data validation demonstrates a high bias, while the affected compound or analyte in the associated sample(s) was reported as not detected by the laboratory and did not warrant the qualification of the data.

A qualification summary table is provided at the end of this report if data has been qualified. Flags are classified as P (protocol) or A (advisory) to indicate whether the flag is due to a laboratory deviation from a specified protocol or is of technical advisory nature.

I. Sample Receipt and Technical Holding Times

All samples were received in good condition.

All technical holding time requirements were met.

II. ICPMS Tune

ICP-MS tune data were not reviewed for Stage 2A validation.

III. Instrument Calibration

Instrument calibration data were not reviewed for Stage 2A validation.

IV. ICP Interference Check Sample Analysis

ICP Interference check sample (ICS) analysis data were not reviewed for Stage 2A validation.

V. Laboratory Blanks

Laboratory blanks were analyzed as required by the methods. No contaminants were found in the laboratory blanks.

VI. Field Blanks

No field blanks were identified in this SDG.

VII. Matrix Spike/Matrix Spike Duplicates

Matrix spike (MS) and matrix spike duplicate (MSD) sample analysis was performed on an associated project sample. Percent recoveries (%R) were within QC limits. Relative percent differences (RPD) were within QC limits.

VIII. Duplicate Sample Analysis

The laboratory has indicated that there were no duplicate (DUP) analyses specified for the samples in this SDG, and therefore duplicate analyses were not performed for this SDG.

IX. Serial Dilution

Serial dilution was not performed for this SDG.

X. Laboratory Control Samples

Laboratory control samples (LCS) were analyzed as required by the methods. Percent recoveries (%R) were within QC limits.

XI. Field Duplicates

No field duplicates were identified in this SDG.

XII. Internal Standards (ICP-MS)

Internal standards data were not reviewed for Stage 2A validation.

XIII. Sample Result Verification

Raw data were not reviewed for Stage 2A validation.

XIV. Overall Assessment of Data

The analysis was conducted within all specifications of the methods.

In the case where more than one result was reported for an individual sample, the least technically acceptable results were deemed not reportable as follows:

Sample	Analyte	Reason	Flag	A or P
BBH-B-23-11DL	Copper	Sample with lower dilution is more acceptable due to having a detected result.	DNR	-

No results were rejected in this SDG.

Kimberly-Clark Upland Area
Metals - Data Qualification Summary - SDG 010237

Sample	Analyte	Flag	A or P	Reason
BBH-B-23-11DL	Copper	DNR	-	Overall assessment of data

Kimberly-Clark Upland Area
Metals - Laboratory Blank Data Qualification Summary - SDG 010237

No Sample Data Qualified in this SDG

Kimberly-Clark Upland Area
Metals - Field Blank Data Qualification Summary - SDG 010237

No Sample Data Qualified in this SDG

LDC #: 49554Q4a
SDG #: 010237
Laboratory: Friedman & Bruya, Inc.

VALIDATION COMPLETENESS WORKSHEET
Stage 2A

Date: 11/13/2020

Reviewer: DTM
2nd Reviewer:

METHOD: Cu, Hg (EPA SW 846 Method 6020B/EPA Method 1631E)

The samples listed below were reviewed for each of the following validation areas. Validation findings are noted in attached validation findings worksheets.

	Validation Area		Comments
I.	Sample receipt/Technical holding times	A/A	
II.	ICP/MS Tune	N	
III.	Instrument Calibration	N	
IV.	ICP Interference Check Sample (ICS) Analysis	N	
V.	Laboratory Blanks	A	
VI.	Field Blanks	N	
VII.	Matrix Spike/Matrix Spike Duplicates	A	
VIII.	Duplicate sample analysis	N	
IX.	Serial Dilution	N	
X.	Laboratory control samples	A	LCS
XI.	Field Duplicates	N	
XII.	Internal Standard (ICP-MS)	N	
XIII.	Sample Result Verification	N	
XIV.	Overall Assessment of Data	SW	

Note: A = Acceptable; N = Not provided/applicable; SW = See worksheet; ND = No compounds detected; R = Rinsate; FB = Field blank; D = Duplicate; TB = Trip blank; EB = Equipment blank; SB=Source blank; OTHER:

	Client ID	Lab ID	Matrix	Date
1	BBH-B-15-12	010237-01	Soil	10/14/20
2	BBH-S-87-4	010237-02	Soil	10/14/20
3	BBH-S-88-8	010237-03	Soil	10/14/20
4	BBH-B-23-11	010237-04	Soil	10/14/20
5	BBH-B-23-11DL	010237-04DL	Soil	10/14/20
6	BBH-B-15-12MS	010237-01MS	Soil	10/14/20
7	BBH-B-15-12MSD	010237-01MSD	Soil	10/14/20
8				

Notes:

LDC #: 49554Q4a

VALIDATION FINDINGS WORKSHEET
Sample Specific Element Reference

Reviewer: DTM

All circled elements are applicable to each sample.

Sample ID	Matrix	Target Analyte List (TAL)
1, 4	S	Cu, Hg
3, 5	S	Cu
2	S	Hg
QC 6-7	S	Hg, Cu
		Al, Sb, As, Ba, Be, B, Cd, Ca, Cr, Co, Cu, Fe, Pb, Li, Mg, Mo, Mn, Hg, Ni, K, Se, Ag, Na, Sr, Tl, Sn, Ti, W, U, V, Zn
		Al, Sb, As, Ba, Be, B, Cd, Ca, Cr, Co, Cu, Fe, Pb, Li, Mg, Mo, Mn, Hg, Ni, K, Se, Ag, Na, Sr, Tl, Sn, Ti, W, U, V, Zn
		Al, Sb, As, Ba, Be, B, Cd, Ca, Cr, Co, Cu, Fe, Pb, Li, Mg, Mo, Mn, Hg, Ni, K, Se, Ag, Na, Sr, Tl, Sn, Ti, W, U, V, Zn
		Al, Sb, As, Ba, Be, B, Cd, Ca, Cr, Co, Cu, Fe, Pb, Li, Mg, Mo, Mn, Hg, Ni, K, Se, Ag, Na, Sr, Tl, Sn, Ti, W, U, V, Zn
		Al, Sb, As, Ba, Be, B, Cd, Ca, Cr, Co, Cu, Fe, Pb, Li, Mg, Mo, Mn, Hg, Ni, K, Se, Ag, Na, Sr, Tl, Sn, Ti, W, U, V, Zn
		Al, Sb, As, Ba, Be, B, Cd, Ca, Cr, Co, Cu, Fe, Pb, Li, Mg, Mo, Mn, Hg, Ni, K, Se, Ag, Na, Sr, Tl, Sn, Ti, W, U, V, Zn
		Al, Sb, As, Ba, Be, B, Cd, Ca, Cr, Co, Cu, Fe, Pb, Li, Mg, Mo, Mn, Hg, Ni, K, Se, Ag, Na, Sr, Tl, Sn, Ti, W, U, V, Zn
		Al, Sb, As, Ba, Be, B, Cd, Ca, Cr, Co, Cu, Fe, Pb, Li, Mg, Mo, Mn, Hg, Ni, K, Se, Ag, Na, Sr, Tl, Sn, Ti, W, U, V, Zn
		Al, Sb, As, Ba, Be, B, Cd, Ca, Cr, Co, Cu, Fe, Pb, Li, Mg, Mo, Mn, Hg, Ni, K, Se, Ag, Na, Sr, Tl, Sn, Ti, W, U, V, Zn
		Al, Sb, As, Ba, Be, B, Cd, Ca, Cr, Co, Cu, Fe, Pb, Li, Mg, Mo, Mn, Hg, Ni, K, Se, Ag, Na, Sr, Tl, Sn, Ti, W, U, V, Zn
		Al, Sb, As, Ba, Be, B, Cd, Ca, Cr, Co, Cu, Fe, Pb, Li, Mg, Mo, Mn, Hg, Ni, K, Se, Ag, Na, Sr, Tl, Sn, Ti, W, U, V, Zn
		Al, Sb, As, Ba, Be, B, Cd, Ca, Cr, Co, Cu, Fe, Pb, Li, Mg, Mo, Mn, Hg, Ni, K, Se, Ag, Na, Sr, Tl, Sn, Ti, W, U, V, Zn
Analysis Method		
ICP		Al, Sb, As, Ba, Be, B, Cd, Ca, Cr, Co, Cu, Fe, Pb, Li, Mg, Mo, Mn, Hg, Ni, K, Se, Ag, Na, Sr, Tl, Sn, Ti, W, U, V, Zn
ICP-MS		Al, Sb, As, Ba, Be, B, Cd, Ca, Cr, Co, Cu, Fe, Pb, Li, Mg, Mo, Mn, Hg, Ni, K, Se, Ag, Na, Sr, Tl, Sn, Ti, W, U, V, Zn
GFAA		Al, Sb, As, Ba, Be, B, Cd, Ca, Cr, Co, Cu, Fe, Pb, Li, Mg, Mo, Mn, Hg, Ni, K, Se, Ag, Na, Sr, Tl, Sn, Ti, W, U, V, Zn

Comments: Mercury by CVAA if performed

LDC #: 49554Q4a

VALIDATION FINDINGS WORKSHEET
Overall Assessment of Data

Reviewer: DTM

METHOD: Trace Metals (EPA SW 846 Method 6010/6020/7000)

Please see qualifications below for all questions answered "N". Not applicable questions are identified as "N/A".

All available information pertaining to the data were reviewed using professional judgement to compliment the determination of the overall quality of the data.

Y N N/A Was the overall quality and usability of the data acceptable?

#	Sample ID	Analyte	Finding	Qualification
	5	Cu	Sample with lower dilution is more acceptable due to having a detected result.	DNR

Comments:

Laboratory Data Consultants, Inc.
Data Validation Report

Project/Site Name: Kimberly-Clark Upland Area

LDC Report Date: November 16, 2020

Parameters: Metals

Validation Level: Stage 2A

Laboratory: Friedman & Bruya, Inc.

Sample Delivery Group (SDG): 010269

Sample Identification	Laboratory Sample Identification	Matrix	Collection Date
GFB12-S-01-4	010269-01	Soil	10/15/20
GFB12-S-02-4	010269-02	Soil	10/15/20
GFB12-S-03-4	010269-03	Soil	10/15/20
GFB12-S-04-4	010269-04	Soil	10/15/20
GFB12-S-05-4	010269-05	Soil	10/15/20
GFB12-S-06-4	010269-06	Soil	10/15/20
GFB12-S-07-4	010269-07	Soil	10/15/20
GFB12-S-08-4	010269-08	Soil	10/15/20
GFB12-B-01-6	010269-09	Soil	10/15/20
GFB12-B-02-6	010269-10	Soil	10/15/20
GFB12-524	010269-11	Soil	10/15/20
BBH-S-89-4	010269-12	Soil	10/15/20
BBH-B-20-11	010269-13	Soil	10/15/20
BBH-B-04-11	010269-14	Soil	10/15/20
BBH-S-90-8	010269-15	Soil	10/15/20
BBH-B-28-11	010269-16	Soil	10/15/20
BBH-B-08-11	010269-17	Soil	10/15/20
BBH-B-08-11DL	010269-17DL	Soil	10/15/20
BBH-B-08-11MS	010269-17MS	Soil	10/15/20
BBH-B-08-11MSD	010269-17MSD	Soil	10/15/20

Introduction

This Data Validation Report (DVR) presents data validation findings and results for the associated samples listed on the cover page. Data validation was performed in accordance with a modified outline of the USEPA National Functional Guidelines (NFG) for Inorganic Superfund Methods Data Review (January 2017). Where specific guidance was not available, the data has been evaluated in a conservative manner consistent with industry standards using professional experience.

The analyses were performed by the following methods:

Copper by Environmental Protection Agency (EPA) SW 846 Method 6020B
Mercury by EPA Method 1631E

All sample results were subjected to Stage 2A data validation, which comprises an evaluation of quality control (QC) summary results.

The following are definitions of the data qualifiers utilized during data validation:

J (Estimated): The compound or analyte was analyzed for and positively identified by the laboratory; however the reported concentration is estimated due to non-conformances discovered during data validation.

U (Non-detected): The compound or analyte was analyzed for and positively identified by the laboratory; however the compound or analyte should be considered non-detected at the reported concentration due to the presence of contaminants detected in the associated blank(s).

UJ (Non-detected estimated): The compound or analyte was reported as not detected by the laboratory; however the reported quantitation/detection limit is estimated due to non-conformances discovered during data validation.

DNR Do not report from this analysis; the result for this analyte is to be reported from an alternative analysis.

R (Rejected): The sample results were rejected due to gross non-conformances discovered during data validation. Data qualified as rejected is not usable.

NA (Not Applicable): The non-conformance discovered during data validation demonstrates a high bias, while the affected compound or analyte in the associated sample(s) was reported as not detected by the laboratory and did not warrant the qualification of the data.

A qualification summary table is provided at the end of this report if data has been qualified. Flags are classified as P (protocol) or A (advisory) to indicate whether the flag is due to a laboratory deviation from a specified protocol or is of technical advisory nature.

I. Sample Receipt and Technical Holding Times

All samples were received in good condition.

All technical holding time requirements were met.

II. ICPMS Tune

ICP-MS tune data were not reviewed for Stage 2A validation.

III. Instrument Calibration

Instrument calibration data were not reviewed for Stage 2A validation.

IV. ICP Interference Check Sample Analysis

ICP Interference check sample (ICS) analysis data were not reviewed for Stage 2A validation.

V. Laboratory Blanks

Laboratory blanks were analyzed as required by the methods. No contaminants were found in the laboratory blanks.

VI. Field Blanks

No field blanks were identified in this SDG.

VII. Matrix Spike/Matrix Spike Duplicates

Matrix spike (MS) and matrix spike duplicate (MSD) sample analysis was performed on an associated project sample. Percent recoveries (%R) were within QC limits. Relative percent differences (RPD) were within QC limits.

VIII. Duplicate Sample Analysis

The laboratory has indicated that there were no duplicate (DUP) analyses specified for the samples in this SDG, and therefore duplicate analyses were not performed for this SDG.

IX. Serial Dilution

Serial dilution was not performed for this SDG.

X. Laboratory Control Samples

Laboratory control samples (LCS) were analyzed as required by the methods. Percent recoveries (%R) were within QC limits.

XI. Field Duplicates

Samples GFB12-S-06-4 and GFB12-524 were identified as field duplicates. No results were detected in any of the samples with the following exceptions:

Analyte	Concentration (mg/Kg)		RPD
	GFB12-S-06-4	GFB12-524	
Mercury	1.2	1.3	8

XII. Internal Standards (ICP-MS)

Internal standards data were not reviewed for Stage 2A validation.

XIII. Sample Result Verification

Raw data were not reviewed for Stage 2A validation.

XIV. Overall Assessment of Data

The analysis was conducted within all specifications of the methods.

In the case where more than one result was reported for an individual sample, the least technically acceptable results were deemed not reportable as follows:

Sample	Analyte	Reason	Flag	A or P
BBH-B-08-11DL	Copper	Sample with lower dilution is more acceptable due to having a detected result.	DNR	-

No results were rejected in this SDG.

Kimberly-Clark Upland Area
Metals - Data Qualification Summary - SDG 010269

Sample	Analyte	Flag	A or P	Reason
BBH-B-08-11DL	Copper	DNR	-	Overall assessment of data

Kimberly-Clark Upland Area
Metals - Laboratory Blank Data Qualification Summary - SDG 010269

No Sample Data Qualified in this SDG

Kimberly-Clark Upland Area
Metals - Field Blank Data Qualification Summary - SDG 010269

No Sample Data Qualified in this SDG

LDC #: 49554R4a
SDG #: 010269
Laboratory: Friedman & Bruya, Inc.

VALIDATION COMPLETENESS WORKSHEET
Stage 2A

Date:11/13/2020

Reviewer:DTM
2nd Reviewer:

METHOD: Cu, Hg (EPA SW 846 Method 6020B/EPA Method 1631E)

The samples listed below were reviewed for each of the following validation areas. Validation findings are noted in attached validation findings worksheets.

	Validation Area		Comments
I.	Sample receipt/Technical holding times	A/A	
II.	ICP/MS Tune	N	
III.	Instrument Calibration	N	
IV.	ICP Interference Check Sample (ICS) Analysis	N	
V.	Laboratory Blanks	A	
VI.	Field Blanks	N	
VII.	Matrix Spike/Matrix Spike Duplicates	A	
VIII.	Duplicate sample analysis	N	
IX.	Serial Dilution	N	
X.	Laboratory control samples	A	LCS
XI.	Field Duplicates	SW	(6,11)
XII.	Internal Standard (ICP-MS)	N	
XIII.	Sample Result Verification	N	
XIV.	Overall Assessment of Data	SW	

Note: A = Acceptable; N = Not provided/applicable; SW = See worksheet; ND = No compounds detected; R = Rinsate; FB = Field blank; D = Duplicate; TB = Trip blank; EB = Equipment blank; SB=Source blank; OTHER:

	Client ID	Lab ID	Matrix	Date
1	GFB12-S-01-4	010269-01	Soil	10/15/20
2	GFB12-S-02-4	010269-02	Soil	10/15/20
3	GFB12-S-03-4	010269-03	Soil	10/15/20
4	GFB12-S-04-4	010269-04	Soil	10/15/20
5	GFB12-S-05-4	010269-05	Soil	10/15/20
6	GFB12-S-06-4	010269-06	Soil	10/15/20
7	GFB12-S-07-4	010269-07	Soil	10/15/20
8	GFB12-S-08-4	010269-08	Soil	10/15/20
9	GFB12-B-01-6	010269-09	Soil	10/15/20
10	GFB12-B-02-6	010269-10	Soil	10/15/20
11	GFB12-524	010269-11	Soil	10/15/20

LDC #: 49554R4a
SDG #: 010269
Laboratory: Friedman & Bruya, Inc.

VALIDATION COMPLETENESS WORKSHEET
Stage 2A

Date:11/13/2020

Reviewer: DTM
2nd Reviewer:

METHOD: Cu, Hg (EPA SW 846 Method 6020B/EPA Method 1631E)

	Client ID	Lab ID	Matrix	Date
12	BBH-S-89-4	010269-12	Soil	10/15/20
13	BBH-B-20-11	010269-13	Soil	10/15/20
14	BBH-B-04-11	010269-14	Soil	10/15/20
15	BBH-S-90-8	010269-15	Soil	10/15/20
16	BBH-B-28-11	010269-16	Soil	10/15/20
17	BBH-B-08-11	010269-17	Soil	10/15/20
18	BBH-B-08-11DL	010269-17DL	Soil	10/15/20
19	BBH-B-08-11MS	010269-17MS	Soil	10/15/20
20	BBH-B-08-11MSD	010269-17MSD	Soil	10/15/20
21				
22				
23				

Notes:

LDC #: 49554R4a

VALIDATION FINDINGS WORKSHEET

Sample Specific Element Reference

Reviewer: DTM

All circled elements are applicable to each sample.

Sample ID	Matrix	Target Analyte List (TAL)
13,17	S	Cu, Hg
18	S	Cu
QC 19-20	S	Cu, Hg
		Al, Sb, As, Ba, Be, B, Cd, Ca, Cr, Co, Cu, Fe, Pb, Li, Mg, Mo, Mn, Hg, Ni, K, Se, Ag, Na, Sr, Tl, Sn, Ti, W, U, V, Zn
		Al, Sb, As, Ba, Be, B, Cd, Ca, Cr, Co, Cu, Fe, Pb, Li, Mg, Mo, Mn, Hg, Ni, K, Se, Ag, Na, Sr, Tl, Sn, Ti, W, U, V, Zn
		Al, Sb, As, Ba, Be, B, Cd, Ca, Cr, Co, Cu, Fe, Pb, Li, Mg, Mo, Mn, Hg, Ni, K, Se, Ag, Na, Sr, Tl, Sn, Ti, W, U, V, Zn
		Al, Sb, As, Ba, Be, B, Cd, Ca, Cr, Co, Cu, Fe, Pb, Li, Mg, Mo, Mn, Hg, Ni, K, Se, Ag, Na, Sr, Tl, Sn, Ti, W, U, V, Zn
		Al, Sb, As, Ba, Be, B, Cd, Ca, Cr, Co, Cu, Fe, Pb, Li, Mg, Mo, Mn, Hg, Ni, K, Se, Ag, Na, Sr, Tl, Sn, Ti, W, U, V, Zn
		Al, Sb, As, Ba, Be, B, Cd, Ca, Cr, Co, Cu, Fe, Pb, Li, Mg, Mo, Mn, Hg, Ni, K, Se, Ag, Na, Sr, Tl, Sn, Ti, W, U, V, Zn
		Al, Sb, As, Ba, Be, B, Cd, Ca, Cr, Co, Cu, Fe, Pb, Li, Mg, Mo, Mn, Hg, Ni, K, Se, Ag, Na, Sr, Tl, Sn, Ti, W, U, V, Zn
		Al, Sb, As, Ba, Be, B, Cd, Ca, Cr, Co, Cu, Fe, Pb, Li, Mg, Mo, Mn, Hg, Ni, K, Se, Ag, Na, Sr, Tl, Sn, Ti, W, U, V, Zn
		Al, Sb, As, Ba, Be, B, Cd, Ca, Cr, Co, Cu, Fe, Pb, Li, Mg, Mo, Mn, Hg, Ni, K, Se, Ag, Na, Sr, Tl, Sn, Ti, W, U, V, Zn
		Al, Sb, As, Ba, Be, B, Cd, Ca, Cr, Co, Cu, Fe, Pb, Li, Mg, Mo, Mn, Hg, Ni, K, Se, Ag, Na, Sr, Tl, Sn, Ti, W, U, V, Zn
Analysis Method		
ICP		Al, Sb, As, Ba, Be, B, Cd, Ca, Cr, Co, Cu, Fe, Pb, Li, Mg, Mo, Mn, Hg, Ni, K, Se, Ag, Na, Sr, Tl, Sn, Ti, W, U, V, Zn
ICP-MS		Al, Sb, As, Ba, Be, B, Cd, Ca, Cr, Co, Cu, Fe, Pb, Li, Mg, Mo, Mn, Hg, Ni, K, Se, Ag, Na, Sr, Tl, Sn, Ti, W, U, V, Zn
GFAA		Al, Sb, As, Ba, Be, B, Cd, Ca, Cr, Co, Cu, Fe, Pb, Li, Mg, Mo, Mn, Hg, Ni, K, Se, Ag, Na, Sr, Tl, Sn, Ti, W, U, V, Zn

Comments: Mercury by CVAA if performed

LDC#: 49554R4a

VALIDATION FINDINGS WORKSHEET

Page: 1 of 1

Field Duplicates

Reviewer: DTM

METHOD: Metals (EPA Method 6010/6020/7000)

Analyte	Concentration (mg/Kg)		RPD
	6	11	
Mercury	1.2	1.3	8

LDC #: 49554R4a

VALIDATION FINDINGS WORKSHEET
Overall Assessment of Data

Reviewer: DTN

METHOD: Trace Metals (EPA SW 846 Method 6010/6020/7000)

Please see qualifications below for all questions answered "N". Not applicable questions are identified as "N/A".

All available information pertaining to the data were reviewed using professional judgement to compliment the determination of the overall quality of the data.

Y N N/A Was the overall quality and usability of the data acceptable?

#	Sample ID	Analyte	Finding	Qualification
	18	Cu	Sample with lower dilution is more acceptable due to having a detected result.	DNR

Comments:

LABORATORY DATA CONSULTANTS, INC.
2701 Loker Ave. West, Suite 220, Carlsbad, CA 92010 Bus: 760-827-1100 Fax: 760-827-1099

Aspect Consulting LLC
701 Second Ave., Suite 550
Seattle, WA 98104
ATTN: Ms. Carla Brock
cbrock@aspectconsulting.com

December 3, 2020

SUBJECT: Kimberly-Clark Upland Area, Data Validation

Dear Ms. Brock,

Enclosed are the final validation reports for the fractions listed below. These SDGs were received on November 12, 2020. Attachment 1 is a summary of the samples that were reviewed for each analysis.

LDC Project #49664:

SDG #	Fraction
010352, 010369, 010391 010462, 010506, 010541 011027, 011068	Metals, Total Petroleum Hydrocarbons as Extractables

The data validation was performed under Stage 2A guidelines. The analyses were validated using the following documents, as applicable to each method:

- USEPA National Functional Guidelines for Organic Superfund Methods Data Review, January 2017
- USEPA National Functional Guidelines for Inorganic Superfund Methods Data Review; January 2017
- EPA SW 846, Third Edition, Test Methods for Evaluating Solid Waste, update 1, July 1992; update IIA, August 1993; update II, September 1994; update IIB, January 1995; update III, December 1996; update IIIA, April 1998; IIIB, November 2004; update IV, February 2007; update V, July 2014

Please feel free to contact us if you have any questions.

Sincerely,

Christina Rink

Christina Rink
crink@lab-data.com
Project Manager/Senior Chemist

Stage 2A EDD

LDC #49664 (Aspect Consulting, LLC - Seattle, WA / Kimberly-Clark Upland Area 2020 Interm Action)

LDC	SDG#	DATE REC'D	(3) DATE DUE	(3) Metals (6020B)		Cu (6020B)		Hg (1631E)		TPH-E (NWTPH-Dx)																									
Matrix:	Water/Soil			W	S	W	S	W	S	W	S	W	S	W	S	W	S	W	S	W	S	W	S	W	S	W	S	W	S	W	S	W	S	W	S
A	010352	11/12/20	12/07/20	-	-	0	1	0	8	-	-																								
B	010369	11/12/20	12/07/20	-	-	-	-	0	6	-	-																								
C	010391	11/12/20	12/07/20	-	-	-	-	0	5	-	-																								
D	010462	11/12/20	12/07/20	-	-	-	-	0	3	-	-																								
E	010506	11/12/20	12/07/20	0	2	-	-	0	3	0	2																								
F	010541	11/12/20	12/07/20	-	-	-	-	0	1	-	-																								
G	011027	11/12/20	12/07/20	-	-	-	-	0	1	-	-																								
H	011068	11/12/20	12/07/20	-	-	-	-	0	1	-	-																								
Total	T/CR			0	2	0	1	0	28	0	2	0	0	0	0	0	0	0	0	0	0	0	0	0	0	0	0	0	0	0	0	0	0	0	33

Shaded cells indicate Stage 4 validation (all other cells are Stage 2A validation). These sample counts do not include MS, MSD, or DUP's.

L:\Aspect Consulting\Kimberly Clark\49664ST.wpd

Laboratory Data Consultants, Inc.
Data Validation Report

Project/Site Name: Kimberly-Clark Upland Area

LDC Report Date: December 2, 2020

Parameters: Metals

Validation Level: Stage 2A

Laboratory: Friedman & Bruya, Inc.

Sample Delivery Group (SDG): 010352

Sample Identification	Laboratory Sample Identification	Matrix	Collection Date
BBH-S-98-4	010352-01	Soil	10/20/20
BBH-S-99-8	010352-02	Soil	10/20/20
BBH-S-100-4	010352-03	Soil	10/20/20
GFB12-S-09-4	010352-04	Soil	10/20/20
GFB12-S-10-4	010352-05	Soil	10/20/20
GFB12-S-11-4	010352-06	Soil	10/20/20
GFB12-S-12-4	010352-07	Soil	10/20/20
GFB12-B-01-8	010352-08	Soil	10/20/20
BBH-S-98-4MS	010352-01MS	Soil	10/20/20
BBH-S-98-4MSD	010352-01MSD	Soil	10/20/20

Introduction

This Data Validation Report (DVR) presents data validation findings and results for the associated samples listed on the cover page. Data validation was performed in accordance with a modified outline of the USEPA National Functional Guidelines (NFG) for Inorganic Superfund Methods Data Review (January 2017). Where specific guidance was not available, the data has been evaluated in a conservative manner consistent with industry standards using professional experience.

The analyses were performed by the following methods:

Copper by Environmental Protection Agency (EPA) SW 846 Method 6020B
Mercury by EPA Method 1631E

All sample results were subjected to Stage 2A data validation, which comprises an evaluation of quality control (QC) summary results.

The following are definitions of the data qualifiers utilized during data validation:

J (Estimated): The compound or analyte was analyzed for and positively identified by the laboratory; however the reported concentration is estimated due to non-conformances discovered during data validation.

U (Non-detected): The compound or analyte was analyzed for and positively identified by the laboratory; however the compound or analyte should be considered non-detected at the reported concentration due to the presence of contaminants detected in the associated blank(s).

UJ (Non-detected estimated): The compound or analyte was reported as not detected by the laboratory; however the reported quantitation/detection limit is estimated due to non-conformances discovered during data validation.

R (Rejected): The sample results were rejected due to gross non-conformances discovered during data validation. Data qualified as rejected is not usable.

NA (Not Applicable): The non-conformance discovered during data validation demonstrates a high bias, while the affected compound or analyte in the associated sample(s) was reported as not detected by the laboratory and did not warrant the qualification of the data.

A qualification summary table is provided at the end of this report if data has been qualified. Flags are classified as P (protocol) or A (advisory) to indicate whether the flag is due to a laboratory deviation from a specified protocol or is of technical advisory nature.

I. Sample Receipt and Technical Holding Times

All samples were received in good condition.

All technical holding time requirements were met.

II. ICPMS Tune

ICP-MS tune data were not reviewed for Stage 2A validation.

III. Instrument Calibration

Instrument calibration data were not reviewed for Stage 2A validation.

IV. ICP Interference Check Sample Analysis

ICP Interference check sample (ICS) analysis data were not reviewed for Stage 2A validation.

V. Laboratory Blanks

Laboratory blanks were analyzed as required by the methods. No contaminants were found in the laboratory blanks.

VI. Field Blanks

No field blanks were identified in this SDG.

VII. Matrix Spike/Matrix Spike Duplicates

Matrix spike (MS) and matrix spike duplicate (MSD) sample analysis was performed on an associated project sample. Percent recoveries (%R) were within QC limits with the following exceptions:

Spike ID (Associated Samples)	Analyte	MS (%R) (Limits)	MSD (%R) (Limits)	Flag	A or P
BBH-S-98-4MS/MSD (BBH-S-98-4 BBH-S-99-8 GFB12-S-09-4 GFB12-S-12-4)	Mercury	-	130 (71-125)	J (all detects)	A
BBH-S-98-4MS/MSD (BBH-S-100-4 GFB12-S-10-4 GFB12-S-11-4 GFB12-B-01-8)	Mercury	-	130 (71-125)	NA	-

Relative percent differences (RPD) were within QC limits.

VIII. Duplicate Sample Analysis

The laboratory has indicated that there were no duplicate (DUP) analyses specified for the samples in this SDG, and therefore duplicate analyses were not performed for this SDG.

IX. Serial Dilution

Serial dilution was not performed for this SDG.

X. Laboratory Control Samples

Laboratory control samples (LCS) were analyzed as required by the methods. Percent recoveries (%R) were within QC limits.

XI. Field Duplicates

No field duplicates were identified in this SDG.

XII. Internal Standards (ICP-MS)

Internal standards data were not reviewed for Stage 2A validation.

XIII. Sample Result Verification

Raw data were not reviewed for Stage 2A validation.

XIV. Overall Assessment of Data

The analysis was conducted within all specifications of the methods.

Due to MS/MSD %R, data were qualified as estimated in four samples.

No results were rejected in this SDG.

Kimberly-Clark Upland Area
Metals - Data Qualification Summary - SDG 010352

Sample	Analyte	Flag	A or P	Reason
BBH-S-98-4 BBH-S-99-8 GFB12-S-09-4 GFB12-S-12-4	Mercury	J (all detects)	A	Matrix spike/Matrix spike duplicate (%R)

Kimberly-Clark Upland Area
Metals - Laboratory Blank Data Qualification Summary - SDG 010352

No Sample Data Qualified in this SDG

Kimberly-Clark Upland Area
Metals - Field Blank Data Qualification Summary - SDG 010352

No Sample Data Qualified in this SDG

LDC #: 49664A4a

SDG #: 010352

Laboratory: Friedman & Bruya, Inc.

VALIDATION COMPLETENESS WORKSHEET

Stage 2A

Date: 12/1/2020

Page: 1 of 1

Reviewer: DTM

2nd Reviewer:

METHOD: Metals (EPA SW 846 Method 6020B/EPA Method 1631E)

The samples listed below were reviewed for each of the following validation areas. Validation findings are noted in attached validation findings worksheets.

	Validation Area		Comments
I.	Sample receipt/Technical holding times	A/A	
II.	ICP/MS Tune	N	
III.	Instrument Calibration	N	
IV.	ICP Interference Check Sample (ICS) Analysis	N	
V.	Laboratory Blanks	A	
VI.	Field Blanks	N	
VII.	Matrix Spike/Matrix Spike Duplicates	SW	
VIII.	Duplicate sample analysis	N	
IX.	Serial Dilution	N	
X.	Laboratory control samples	A	LCS
XI.	Field Duplicates	N	
XII.	Internal Standard (ICP-MS)	N	
XIII.	Sample Result Verification	N	
XIV.	Overall Assessment of Data	A	

Note: A = Acceptable; N = Not provided/applicable; SW = See worksheet; ND = No compounds detected; R = Rinsate; FB = Field blank; D = Duplicate; TB = Trip blank; EB = Equipment blank; SB=Source blank; OTHER:

	Client ID	Lab ID	Matrix	Date
1	BBH-S-98-4	010352-01	Soil	10/20/20
2	BBH-S-99-8	010352-02	Soil	10/20/20
3	BBH-S-100-4	010352-03	Soil	10/20/20
4	GFB12-S-09-4	010352-04	Soil	10/20/20
5	GFB12-S-10-4	010352-05	Soil	10/20/20
6	GFB12-S-11-4	010352-06	Soil	10/20/20
7	GFB12-S-12-4	010352-07	Soil	10/20/20
8	GFB12-B-01-8	010352-08	Soil	10/20/20
9	BBH-S-98-4MS	010352-01MS	Soil	10/20/20
10	BBH-S-98-4MSD	010352-01MSD	Soil	10/20/20

Notes:

LDC #: 49664A4a

VALIDATION FINDINGS WORKSHEET

Sample Specific Element Reference

Reviewer: DTM

All circled elements are applicable to each sample.

Sample ID	Matrix	Target Analyte List (TAL)
1	S	Cu, Hg
2-8	S	Hg
QC 9-10	S	Cu, Hg
		Al, Sb, As, Ba, Be, B, Cd, Ca, Cr, Co, Cu, Fe, Pb, Li, Mg, Mo, Mn, Hg, Ni, K, Se, Ag, Na, Sr, Tl, Sn, Ti, W, U, V, Zn
		Al, Sb, As, Ba, Be, B, Cd, Ca, Cr, Co, Cu, Fe, Pb, Li, Mg, Mo, Mn, Hg, Ni, K, Se, Ag, Na, Sr, Tl, Sn, Ti, W, U, V, Zn
		Al, Sb, As, Ba, Be, B, Cd, Ca, Cr, Co, Cu, Fe, Pb, Li, Mg, Mo, Mn, Hg, Ni, K, Se, Ag, Na, Sr, Tl, Sn, Ti, W, U, V, Zn
		Al, Sb, As, Ba, Be, B, Cd, Ca, Cr, Co, Cu, Fe, Pb, Li, Mg, Mo, Mn, Hg, Ni, K, Se, Ag, Na, Sr, Tl, Sn, Ti, W, U, V, Zn
		Al, Sb, As, Ba, Be, B, Cd, Ca, Cr, Co, Cu, Fe, Pb, Li, Mg, Mo, Mn, Hg, Ni, K, Se, Ag, Na, Sr, Tl, Sn, Ti, W, U, V, Zn
		Al, Sb, As, Ba, Be, B, Cd, Ca, Cr, Co, Cu, Fe, Pb, Li, Mg, Mo, Mn, Hg, Ni, K, Se, Ag, Na, Sr, Tl, Sn, Ti, W, U, V, Zn
		Al, Sb, As, Ba, Be, B, Cd, Ca, Cr, Co, Cu, Fe, Pb, Li, Mg, Mo, Mn, Hg, Ni, K, Se, Ag, Na, Sr, Tl, Sn, Ti, W, U, V, Zn
		Al, Sb, As, Ba, Be, B, Cd, Ca, Cr, Co, Cu, Fe, Pb, Li, Mg, Mo, Mn, Hg, Ni, K, Se, Ag, Na, Sr, Tl, Sn, Ti, W, U, V, Zn
		Al, Sb, As, Ba, Be, B, Cd, Ca, Cr, Co, Cu, Fe, Pb, Li, Mg, Mo, Mn, Hg, Ni, K, Se, Ag, Na, Sr, Tl, Sn, Ti, W, U, V, Zn
		Al, Sb, As, Ba, Be, B, Cd, Ca, Cr, Co, Cu, Fe, Pb, Li, Mg, Mo, Mn, Hg, Ni, K, Se, Ag, Na, Sr, Tl, Sn, Ti, W, U, V, Zn
		Al, Sb, As, Ba, Be, B, Cd, Ca, Cr, Co, Cu, Fe, Pb, Li, Mg, Mo, Mn, Hg, Ni, K, Se, Ag, Na, Sr, Tl, Sn, Ti, W, U, V, Zn
		Al, Sb, As, Ba, Be, B, Cd, Ca, Cr, Co, Cu, Fe, Pb, Li, Mg, Mo, Mn, Hg, Ni, K, Se, Ag, Na, Sr, Tl, Sn, Ti, W, U, V, Zn
Analysis Method		
ICP		Al, Sb, As, Ba, Be, B, Cd, Ca, Cr, Co, Cu, Fe, Pb, Li, Mg, Mo, Mn, Hg, Ni, K, Se, Ag, Na, Sr, Tl, Sn, Ti, W, U, V, Zn
ICP-MS		Al, Sb, As, Ba, Be, B, Cd, Ca, Cr, Co, Cu, Fe, Pb, Li, Mg, Mo, Mn, Hg, Ni, K, Se, Ag, Na, Sr, Tl, Sn, Ti, W, U, V, Zn
GFAA		Al, Sb, As, Ba, Be, B, Cd, Ca, Cr, Co, Cu, Fe, Pb, Li, Mg, Mo, Mn, Hg, Ni, K, Se, Ag, Na, Sr, Tl, Sn, Ti, W, U, V, Zn

Comments: Mercury by CVAA if performed

LDC #: 49664A4a

VALIDATION FINDINGS WORKSHEET
Matrix Spike/Matrix Spike Duplicates

Reviewer: DTM

METHOD: Trace metals (EPA SW 846 Method 6020/6010/7470)

Please see qualifications below for all questions answered "N". Not applicable questions are identified as "N/A".

Y N N/A Was a matrix spike analyzed for each matrix in this SDG?

Y N N/A Were matrix spike percent recoveries (%R) within the control limits of 75-125? If the sample concentration exceeded the spike concentration by a factor of 4 or more, no action was taken.

Y N N/A Were all duplicate sample relative percent differences (RPD) ≤ 20% for samples?

LEVEL IV ONLY:

Y N N/A Were recalculated results acceptable? See Level IV Recalculation Worksheet for recalculations.

#	MS/MSD ID	Matrix	Analyte	MS %Recovery	MSD %Recovery	RPD (Limits)	Associated Samples	Qual	DET	ND	PS Recovery%
	9-10	S	Hg		130 (71-125)		ALL	J/A		3,5-6,8	

Comments:

Laboratory Data Consultants, Inc.
Data Validation Report

Project/Site Name: Kimberly-Clark Upland Area

LDC Report Date: December 2, 2020

Parameters: Mercury

Validation Level: Stage 2A

Laboratory: Friedman & Bruya, Inc.

Sample Delivery Group (SDG): 010369

Sample Identification	Laboratory Sample Identification	Matrix	Collection Date
GFB12-S-13-4	010369-01	Soil	10/21/20
GFB12-S-14-4	010369-02	Soil	10/21/20
GFB12-S-15-4	010369-03	Soil	10/21/20
GFB12-B-02-8	010369-04	Soil	10/21/20
GFB12-B-03-8	010369-05	Soil	10/21/20
BBH-S-101-4	010369-06	Soil	10/21/20
GFB12-S-13-4MS	010369-01MS	Soil	10/21/20
GFB12-S-13-4MSD	010369-01MSD	Soil	10/21/20

Introduction

This Data Validation Report (DVR) presents data validation findings and results for the associated samples listed on the cover page. Data validation was performed in accordance with a modified outline of the USEPA National Functional Guidelines (NFG) for Inorganic Superfund Methods Data Review (January 2017). Where specific guidance was not available, the data has been evaluated in a conservative manner consistent with industry standards using professional experience.

The analyses were performed by the following method:

Mercury by Environmental Protection Agency (EPA) Method 1631E

All sample results were subjected to Stage 2A data validation, which comprises an evaluation of quality control (QC) summary results.

The following are definitions of the data qualifiers utilized during data validation:

J (Estimated): The compound or analyte was analyzed for and positively identified by the laboratory; however the reported concentration is estimated due to non-conformances discovered during data validation.

U (Non-detected): The compound or analyte was analyzed for and positively identified by the laboratory; however the compound or analyte should be considered non-detected at the reported concentration due to the presence of contaminants detected in the associated blank(s).

UJ (Non-detected estimated): The compound or analyte was reported as not detected by the laboratory; however the reported quantitation/detection limit is estimated due to non-conformances discovered during data validation.

R (Rejected): The sample results were rejected due to gross non-conformances discovered during data validation. Data qualified as rejected is not usable.

NA (Not Applicable): The non-conformance discovered during data validation demonstrates a high bias, while the affected compound or analyte in the associated sample(s) was reported as not detected by the laboratory and did not warrant the qualification of the data.

A qualification summary table is provided at the end of this report if data has been qualified. Flags are classified as P (protocol) or A (advisory) to indicate whether the flag is due to a laboratory deviation from a specified protocol or is of technical advisory nature.

I. Sample Receipt and Technical Holding Times

All samples were received in good condition.

All technical holding time requirements were met.

II. Instrument Calibration

Instrument calibration data were not reviewed for Stage 2A validation.

III. Laboratory Blanks

Laboratory blanks were analyzed as required by the method. No contaminants were found in the laboratory blanks.

IV. Field Blanks

No field blanks were identified in this SDG.

V. Matrix Spike/Matrix Spike Duplicates

Matrix spike (MS) and matrix spike duplicate (MSD) sample analysis was performed on an associated project sample. Percent recoveries (%R) were within QC limits. Relative percent differences (RPD) were within QC limits.

VI. Duplicate Sample Analysis

The laboratory has indicated that there were no duplicate (DUP) analyses specified for the samples in this SDG, and therefore duplicate analyses were not performed for this SDG.

VII. Laboratory Control Samples

Laboratory control samples (LCS) were analyzed as required by the method. Percent recoveries (%R) were within QC limits.

VIII. Field Duplicates

No field duplicates were identified in this SDG.

IX. Sample Result Verification

Raw data were not reviewed for Stage 2A validation.

X. Overall Assessment of Data

The analysis was conducted within all specifications of the method. No results were rejected in this SDG.

Kimberly-Clark Upland Area
Mercury - Data Qualification Summary - SDG 010369

No Sample Data Qualified in this SDG

Kimberly-Clark Upland Area
Mercury - Laboratory Blank Data Qualification Summary - SDG 010369

No Sample Data Qualified in this SDG

Kimberly-Clark Upland Area
Mercury - Field Blank Data Qualification Summary - SDG 010369

No Sample Data Qualified in this SDG

LDC #: 49664B4c

SDG #: 010369

Laboratory: Friedman & Bruya, Inc.

VALIDATION COMPLETENESS WORKSHEET

Stage 2A

Date: 12/1/2020

Reviewer: DTM

2nd Reviewer:

METHOD: Mercury (EPA Method 1631E)

The samples listed below were reviewed for each of the following validation areas. Validation findings are noted in attached validation findings worksheets.

	Validation Area		Comments
I.	Sample receipt/Technical holding times	A/A	
II.	Instrument Calibration	N	
III.	Laboratory Blanks	A	
IV.	Field Blanks	N	
V.	Matrix Spike/Matrix Spike Duplicates	A	
VI.	Duplicate sample analysis	N	
VII.	Laboratory control samples	A	LCS
VIII.	Field Duplicates	N	
IX.	Sample Result Verification	N	
X.	Overall Assessment of Data	A	

Note: A = Acceptable; ND = No compounds detected; D = Duplicate; SB=Source blank
N = Not provided/applicable; R = Rinsate; TB = Trip blank; OTHER:
SW = See worksheet; FB = Field blank; EB = Equipment blank

	Client ID	Lab ID	Matrix	Date
1	GFB12-S-13-4	010369-01	Soil	10/21/20
2	GFB12-S-14-4	010369-02	Soil	10/21/20
3	GFB12-S-15-4	010369-03	Soil	10/21/20
4	GFB12-B-02-8	010369-04	Soil	10/21/20
5	GFB12-B-03-8	010369-05	Soil	10/21/20
6	BBH-S-101-4	010369-06	Soil	10/21/20
7	GFB12-S-13-4MS	010369-01MS	Soil	10/21/20
8	GFB12-S-13-4MSD	010369-01MSD	Soil	10/21/20
9				
10				

Notes:

Laboratory Data Consultants, Inc.
Data Validation Report

Project/Site Name: Kimberly-Clark Upland Area

LDC Report Date: December 2, 2020

Parameters: Mercury

Validation Level: Stage 2A

Laboratory: Friedman & Bruya, Inc.

Sample Delivery Group (SDG): 010391

Sample Identification	Laboratory Sample Identification	Matrix	Collection Date
BBH-S-102-8	010391-01	Soil	10/22/20
BBH-S-102-4	010391-02	Soil	10/22/20
BBH-S-103-4	010391-03	Soil	10/22/20
BBH-S-104-4	010391-04	Soil	10/22/20
BBH-S-105-8	010391-05	Soil	10/22/20

Introduction

This Data Validation Report (DVR) presents data validation findings and results for the associated samples listed on the cover page. Data validation was performed in accordance with a modified outline of the USEPA National Functional Guidelines (NFG) for Inorganic Superfund Methods Data Review (January 2017). Where specific guidance was not available, the data has been evaluated in a conservative manner consistent with industry standards using professional experience.

The analyses were performed by the following method:

Mercury by Environmental Protection Agency (EPA) Method 1631E

All sample results were subjected to Stage 2A data validation, which comprises an evaluation of quality control (QC) summary results.

The following are definitions of the data qualifiers utilized during data validation:

J (Estimated): The compound or analyte was analyzed for and positively identified by the laboratory; however the reported concentration is estimated due to non-conformances discovered during data validation.

U (Non-detected): The compound or analyte was analyzed for and positively identified by the laboratory; however the compound or analyte should be considered non-detected at the reported concentration due to the presence of contaminants detected in the associated blank(s).

UJ (Non-detected estimated): The compound or analyte was reported as not detected by the laboratory; however the reported quantitation/detection limit is estimated due to non-conformances discovered during data validation.

R (Rejected): The sample results were rejected due to gross non-conformances discovered during data validation. Data qualified as rejected is not usable.

NA (Not Applicable): The non-conformance discovered during data validation demonstrates a high bias, while the affected compound or analyte in the associated sample(s) was reported as not detected by the laboratory and did not warrant the qualification of the data.

A qualification summary table is provided at the end of this report if data has been qualified. Flags are classified as P (protocol) or A (advisory) to indicate whether the flag is due to a laboratory deviation from a specified protocol or is of technical advisory nature.

I. Sample Receipt and Technical Holding Times

All samples were received in good condition.

All technical holding time requirements were met.

II. Instrument Calibration

Instrument calibration data were not reviewed for Stage 2A validation.

III. Laboratory Blanks

Laboratory blanks were analyzed as required by the method. No contaminants were found in the laboratory blanks.

IV. Field Blanks

No field blanks were identified in this SDG.

V. Matrix Spike/Matrix Spike Duplicates

The laboratory has indicated that there were no matrix spike (MS) and matrix spike duplicate (MSD) analyses specified for the samples in this SDG, and therefore matrix spike and matrix spike duplicate analyses were not performed for this SDG.

VI. Duplicate Sample Analysis

The laboratory has indicated that there were no duplicate (DUP) analyses specified for the samples in this SDG, and therefore duplicate analyses were not performed for this SDG.

VII. Laboratory Control Samples

Laboratory control samples (LCS) were analyzed as required by the method. Percent recoveries (%R) were within QC limits.

VIII. Field Duplicates

No field duplicates were identified in this SDG.

IX. Sample Result Verification

Raw data were not reviewed for Stage 2A validation.

X. Overall Assessment of Data

The analysis was conducted within all specifications of the method. No results were rejected in this SDG.

Kimberly-Clark Upland Area
Mercury - Data Qualification Summary - SDG 010391

No Sample Data Qualified in this SDG

Kimberly-Clark Upland Area
Mercury - Laboratory Blank Data Qualification Summary - SDG 010391

No Sample Data Qualified in this SDG

Kimberly-Clark Upland Area
Mercury - Field Blank Data Qualification Summary - SDG 010391

No Sample Data Qualified in this SDG

LDC #: 49664C4c
SDG #: 010391
Laboratory: Friedman & Bruya, Inc.

VALIDATION COMPLETENESS WORKSHEET
Stage 2A

Date: 12/1/2020

Reviewer: DTM
2nd Reviewer:

METHOD: Mercury (EPA Method 1631E)

The samples listed below were reviewed for each of the following validation areas. Validation findings are noted in attached validation findings worksheets.

	Validation Area		Comments
I.	Sample receipt/Technical holding times	A/A	
II.	Instrument Calibration	N	
III.	Laboratory Blanks	A	
IV.	Field Blanks	N	
V.	Matrix Spike/Matrix Spike Duplicates	N	
VI.	Duplicate sample analysis	N	
VII.	Laboratory control samples	A	LCS
VIII.	Field Duplicates	N	
IX.	Sample Result Verification	N	
X.	Overall Assessment of Data	A	

Note: A = Acceptable; N = Not provided/applicable; SW = See worksheet; ND = No compounds detected; R = Rinsate; FB = Field blank; D = Duplicate; TB = Trip blank; EB = Equipment blank; SB=Source blank; OTHER:

	Client ID	Lab ID	Matrix	Date
1	BBH-S-102-8	010391-01	Soil	10/22/20
2	BBH-S-102-4	010391-02	Soil	10/22/20
3	BBH-S-103-4	010391-03	Soil	10/22/20
4	BBH-S-104-4	010391-04	Soil	10/22/20
5	BBH-S-105-8	010391-05	Soil	10/22/20
6				
7				
8				
9				

Notes:

Laboratory Data Consultants, Inc.
Data Validation Report

Project/Site Name: Kimberly-Clark Upland Area

LDC Report Date: December 2, 2020

Parameters: Mercury

Validation Level: Stage 2A

Laboratory: Friedman & Bruya, Inc.

Sample Delivery Group (SDG): 010462

Sample Identification	Laboratory Sample Identification	Matrix	Collection Date
BBH-S-106-4	010462-01	Soil	10/27/20
BBH-S-107-4	010462-02	Soil	10/27/20
BBH-S-108-4	010462-03	Soil	10/27/20
BBH-S-106-4MS	010462-01MS	Soil	10/27/20
BBH-S-106-4MSD	010462-01MSD	Soil	10/27/20

Introduction

This Data Validation Report (DVR) presents data validation findings and results for the associated samples listed on the cover page. Data validation was performed in accordance with a modified outline of the USEPA National Functional Guidelines (NFG) for Inorganic Superfund Methods Data Review (January 2017). Where specific guidance was not available, the data has been evaluated in a conservative manner consistent with industry standards using professional experience.

The analyses were performed by the following method:

Mercury by Environmental Protection Agency (EPA) Method 1631E

All sample results were subjected to Stage 2A data validation, which comprises an evaluation of quality control (QC) summary results.

The following are definitions of the data qualifiers utilized during data validation:

J (Estimated): The compound or analyte was analyzed for and positively identified by the laboratory; however the reported concentration is estimated due to non-conformances discovered during data validation.

U (Non-detected): The compound or analyte was analyzed for and positively identified by the laboratory; however the compound or analyte should be considered non-detected at the reported concentration due to the presence of contaminants detected in the associated blank(s).

UJ (Non-detected estimated): The compound or analyte was reported as not detected by the laboratory; however the reported quantitation/detection limit is estimated due to non-conformances discovered during data validation.

R (Rejected): The sample results were rejected due to gross non-conformances discovered during data validation. Data qualified as rejected is not usable.

NA (Not Applicable): The non-conformance discovered during data validation demonstrates a high bias, while the affected compound or analyte in the associated sample(s) was reported as not detected by the laboratory and did not warrant the qualification of the data.

A qualification summary table is provided at the end of this report if data has been qualified. Flags are classified as P (protocol) or A (advisory) to indicate whether the flag is due to a laboratory deviation from a specified protocol or is of technical advisory nature.

I. Sample Receipt and Technical Holding Times

All samples were received in good condition.

All technical holding time requirements were met.

II. Instrument Calibration

Instrument calibration data were not reviewed for Stage 2A validation.

III. Laboratory Blanks

Laboratory blanks were analyzed as required by the method. No contaminants were found in the laboratory blanks.

IV. Field Blanks

No field blanks were identified in this SDG.

V. Matrix Spike/Matrix Spike Duplicates

Matrix spike (MS) and matrix spike duplicate (MSD) sample analysis was performed on an associated project sample. Percent recoveries (%R) were within QC limits with the following exceptions:

Spike ID (Associated Samples)	Analyte	MS (%R) (Limits)	MSD (%R) (Limits)	Flag	A or P
BBH-S-106-4MS/MSD (All samples in SDG 010462)	Mercury	145 (71-125)	148 (71-125)	J (all detects)	A

Relative percent differences (RPD) were within QC limits.

VI. Duplicate Sample Analysis

The laboratory has indicated that there were no duplicate (DUP) analyses specified for the samples in this SDG, and therefore duplicate analyses were not performed for this SDG.

VII. Laboratory Control Samples

Laboratory control samples (LCS) were analyzed as required by the method. Percent recoveries (%R) were within QC limits.

VIII. Field Duplicates

No field duplicates were identified in this SDG.

IX. Sample Result Verification

Raw data were not reviewed for Stage 2A validation.

X. Overall Assessment of Data

The analysis was conducted within all specifications of the method.

Due to MS/MSD %R, data were qualified as estimated in three samples.

No results were rejected in this SDG.

Kimberly-Clark Upland Area
Mercury - Data Qualification Summary - SDG 010462

Sample	Analyte	Flag	A or P	Reason
BBH-S-106-4 BBH-S-107-4 BBH-S-108-4	Mercury	J (all detects)	A	Matrix spike/Matrix spike duplicate (%R)

Kimberly-Clark Upland Area
Mercury - Laboratory Blank Data Qualification Summary - SDG 010462

No Sample Data Qualified in this SDG

Kimberly-Clark Upland Area
Mercury - Field Blank Data Qualification Summary - SDG 010462

No Sample Data Qualified in this SDG

LDC #: 49664D4c

SDG #: 010462

Laboratory: Friedman & Bruya, Inc.

VALIDATION COMPLETENESS WORKSHEET

Stage 2A

Date:12/1/2020

Page: 1 of 1

Reviewer: DTM

2nd Reviewer:

METHOD: Mercury (EPA Method 1631E)

The samples listed below were reviewed for each of the following validation areas. Validation findings are noted in attached validation findings worksheets.

	Validation Area		Comments
I.	Sample receipt/Technical holding times	A/A	
II.	Instrument Calibration	N	
III.	Laboratory Blanks	A	
IV.	Field Blanks	N	
V.	Matrix Spike/Matrix Spike Duplicates	SW	
VI.	Duplicate sample analysis	N	
VII.	Laboratory control samples	A	LCS
VIII.	Field Duplicates	N	
IX.	Sample Result Verification	N	
X.	Overall Assessment of Data	A	

Note: A = Acceptable; N = Not provided/applicable; SW = See worksheet; ND = No compounds detected; R = Rinsate; FB = Field blank; D = Duplicate; TB = Trip blank; EB = Equipment blank; SB=Source blank; OTHER:

	Client ID	Lab ID	Matrix	Date
1	BBH-S-106-4	010462-01	Soil	10/27/20
2	BBH-S-107-4	010462-02	Soil	10/27/20
3	BBH-S-108-4	010462-03	Soil	10/27/20
4	BBH-S-106-4MS	010462-01MS	Soil	10/27/20
5	BBH-S-106-4MSD	010462-01MSD	Soil	10/27/20
6				
7				
8				
9				
10				
11				

Notes:

LDC #: 49664D4c

VALIDATION FINDINGS WORKSHEET
Matrix Spike/Matrix Spike Duplicates

Reviewer: DTM

METHOD: Trace metals (EPA SW 846 Method 6020/6010/7470)

Please see qualifications below for all questions answered "N". Not applicable questions are identified as "N/A".

Y N N/A Was a matrix spike analyzed for each matrix in this SDG?

Y N N/A Were matrix spike percent recoveries (%R) within the control limits of 75-125? If the sample concentration exceeded the spike concentration by a factor of 4 or more, no action was taken.

Y N N/A Were all duplicate sample relative percent differences (RPD) ≤ 20% for samples?

LEVEL IV ONLY:

Y N N/A Were recalculated results acceptable? See Level IV Recalculation Worksheet for recalculations.

#	MS/MSD ID	Matrix	Analyte	MS %Recovery	MSD %Recovery	RPD (Limits)	Associated Samples	Qual	DET	ND	P Recov
	4/5	S	Hg	145(71-125)	148		ALL	J/A	ALL		

Comments:

Laboratory Data Consultants, Inc.
Data Validation Report

Project/Site Name: Kimberly-Clark Upland Area

LDC Report Date: December 2, 2020

Parameters: Metals

Validation Level: Stage 2A

Laboratory: Friedman & Bruya, Inc.

Sample Delivery Group (SDG): 010506

Sample Identification	Laboratory Sample Identification	Matrix	Collection Date
BBH-S-109-4	010506-01	Soil	10/28/20
DT-B-06-8	010506-02	Soil	10/28/20
DT-S-01-4	010506-03	Soil	10/28/20

Introduction

This Data Validation Report (DVR) presents data validation findings and results for the associated samples listed on the cover page. Data validation was performed in accordance with a modified outline of the USEPA National Functional Guidelines (NFG) for Inorganic Superfund Methods Data Review (January 2017). Where specific guidance was not available, the data has been evaluated in a conservative manner consistent with industry standards using professional experience.

The analyses were performed by the following methods:

Copper, Lead, and Zinc by Environmental Protection Agency (EPA) SW 846 Method 6020B
Mercury by EPA Method 1631E

All sample results were subjected to Stage 2A data validation, which comprises an evaluation of quality control (QC) summary results.

The following are definitions of the data qualifiers utilized during data validation:

J (Estimated): The compound or analyte was analyzed for and positively identified by the laboratory; however the reported concentration is estimated due to non-conformances discovered during data validation.

U (Non-detected): The compound or analyte was analyzed for and positively identified by the laboratory; however the compound or analyte should be considered non-detected at the reported concentration due to the presence of contaminants detected in the associated blank(s).

UJ (Non-detected estimated): The compound or analyte was reported as not detected by the laboratory; however the reported quantitation/detection limit is estimated due to non-conformances discovered during data validation.

R (Rejected): The sample results were rejected due to gross non-conformances discovered during data validation. Data qualified as rejected is not usable.

NA (Not Applicable): The non-conformance discovered during data validation demonstrates a high bias, while the affected compound or analyte in the associated sample(s) was reported as not detected by the laboratory and did not warrant the qualification of the data.

A qualification summary table is provided at the end of this report if data has been qualified. Flags are classified as P (protocol) or A (advisory) to indicate whether the flag is due to a laboratory deviation from a specified protocol or is of technical advisory nature.

I. Sample Receipt and Technical Holding Times

All samples were received in good condition.

All technical holding time requirements were met.

II. ICPMS Tune

ICP-MS tune data were not reviewed for Stage 2A validation.

III. Instrument Calibration

Instrument calibration data were not reviewed for Stage 2A validation.

IV. ICP Interference Check Sample Analysis

ICP Interference check sample (ICS) analysis data were not reviewed for Stage 2A validation.

V. Laboratory Blanks

Laboratory blanks were analyzed as required by the methods. No contaminants were found in the laboratory blanks.

VI. Field Blanks

No field blanks were identified in this SDG.

VII. Matrix Spike/Matrix Spike Duplicates

The laboratory has indicated that there were no matrix spike (MS) and matrix spike duplicate (MSD) analyses specified for the samples in this SDG, and therefore matrix spike and matrix spike duplicate analyses were not performed for this SDG.

VIII. Duplicate Sample Analysis

The laboratory has indicated that there were no duplicate (DUP) analyses specified for the samples in this SDG, and therefore duplicate analyses were not performed for this SDG.

IX. Serial Dilution

Serial dilution was not performed for this SDG.

X. Laboratory Control Samples

Laboratory control samples (LCS) were analyzed as required by the methods. Percent recoveries (%R) were within QC limits.

XI. Field Duplicates

No field duplicates were identified in this SDG.

XII. Internal Standards (ICP-MS)

Internal standards data were not reviewed for Stage 2A validation.

XIII. Sample Result Verification

Raw data were not reviewed for Stage 2A validation.

XIV. Overall Assessment of Data

The analysis was conducted within all specifications of the methods. No results were rejected in this SDG.

Kimberly-Clark Upland Area
Metals - Data Qualification Summary - SDG 010506

No Sample Data Qualified in this SDG

Kimberly-Clark Upland Area
Metals - Laboratory Blank Data Qualification Summary - SDG 010506

No Sample Data Qualified in this SDG

Kimberly-Clark Upland Area
Metals - Field Blank Data Qualification Summary - SDG 010506

No Sample Data Qualified in this SDG

LDC #: 49664E4a

SDG #: 010506

Laboratory: Friedman & Bruya, Inc.

VALIDATION COMPLETENESS WORKSHEET

Stage 2A

Date: 12/1/2020

Page: 1 of 1

Reviewer: DTM

2nd Reviewer:

METHOD: Metals (EPA SW 846 Method 6020B/EPA Method 1631E)

The samples listed below were reviewed for each of the following validation areas. Validation findings are noted in attached validation findings worksheets.

	Validation Area		Comments
I.	Sample receipt/Technical holding times	A/A	
II.	ICP/MS Tune	N	
III.	Instrument Calibration	N	
IV.	ICP Interference Check Sample (ICS) Analysis	N	
V.	Laboratory Blanks	A	
VI.	Field Blanks	N	
VII.	Matrix Spike/Matrix Spike Duplicates	N	
VIII.	Duplicate sample analysis	N	
IX.	Serial Dilution	N	
X.	Laboratory control samples	A	LCS
XI.	Field Duplicates	N	
XII.	Internal Standard (ICP-MS)	N	
XIII.	Sample Result Verification	N	
XIV.	Overall Assessment of Data	A	

Note: A = Acceptable; N = Not provided/applicable; SW = See worksheet; ND = No compounds detected; R = Rinsate; FB = Field blank; D = Duplicate; TB = Trip blank; EB = Equipment blank; SB=Source blank; OTHER:

	Client ID	Lab ID	Matrix	Date
1	BBH-S-109-4	010506-01	Soil	10/28/20
2	DT-B-06-8	010506-02	Soil	10/28/20
3	DT-S-01-4	010506-03	Soil	10/28/20
4				

Notes:

LDC #: 49664E4a

VALIDATION FINDINGS WORKSHEET

Sample Specific Element Reference

Reviewer: DTM

All circled elements are applicable to each sample.

Sample ID	Matrix	Target Analyte List (TAL)
2-3	S	Cu, Pb, Zn, Hg
1	S	Hg
		Al, Sb, As, Ba, Be, B, Cd, Ca, Cr, Co, Cu, Fe, Pb, Li, Mg, Mo, Mn, Hg, Ni, K, Se, Ag, Na, Sr, Tl, Sn, Ti, W, U, V, Zn
		Al, Sb, As, Ba, Be, B, Cd, Ca, Cr, Co, Cu, Fe, Pb, Li, Mg, Mo, Mn, Hg, Ni, K, Se, Ag, Na, Sr, Tl, Sn, Ti, W, U, V, Zn
		Al, Sb, As, Ba, Be, B, Cd, Ca, Cr, Co, Cu, Fe, Pb, Li, Mg, Mo, Mn, Hg, Ni, K, Se, Ag, Na, Sr, Tl, Sn, Ti, W, U, V, Zn
		Al, Sb, As, Ba, Be, B, Cd, Ca, Cr, Co, Cu, Fe, Pb, Li, Mg, Mo, Mn, Hg, Ni, K, Se, Ag, Na, Sr, Tl, Sn, Ti, W, U, V, Zn
		Al, Sb, As, Ba, Be, B, Cd, Ca, Cr, Co, Cu, Fe, Pb, Li, Mg, Mo, Mn, Hg, Ni, K, Se, Ag, Na, Sr, Tl, Sn, Ti, W, U, V, Zn
		Al, Sb, As, Ba, Be, B, Cd, Ca, Cr, Co, Cu, Fe, Pb, Li, Mg, Mo, Mn, Hg, Ni, K, Se, Ag, Na, Sr, Tl, Sn, Ti, W, U, V, Zn
		Al, Sb, As, Ba, Be, B, Cd, Ca, Cr, Co, Cu, Fe, Pb, Li, Mg, Mo, Mn, Hg, Ni, K, Se, Ag, Na, Sr, Tl, Sn, Ti, W, U, V, Zn
		Al, Sb, As, Ba, Be, B, Cd, Ca, Cr, Co, Cu, Fe, Pb, Li, Mg, Mo, Mn, Hg, Ni, K, Se, Ag, Na, Sr, Tl, Sn, Ti, W, U, V, Zn
		Al, Sb, As, Ba, Be, B, Cd, Ca, Cr, Co, Cu, Fe, Pb, Li, Mg, Mo, Mn, Hg, Ni, K, Se, Ag, Na, Sr, Tl, Sn, Ti, W, U, V, Zn
		Al, Sb, As, Ba, Be, B, Cd, Ca, Cr, Co, Cu, Fe, Pb, Li, Mg, Mo, Mn, Hg, Ni, K, Se, Ag, Na, Sr, Tl, Sn, Ti, W, U, V, Zn
		Al, Sb, As, Ba, Be, B, Cd, Ca, Cr, Co, Cu, Fe, Pb, Li, Mg, Mo, Mn, Hg, Ni, K, Se, Ag, Na, Sr, Tl, Sn, Ti, W, U, V, Zn
		Al, Sb, As, Ba, Be, B, Cd, Ca, Cr, Co, Cu, Fe, Pb, Li, Mg, Mo, Mn, Hg, Ni, K, Se, Ag, Na, Sr, Tl, Sn, Ti, W, U, V, Zn
Analysis Method		
ICP		Al, Sb, As, Ba, Be, B, Cd, Ca, Cr, Co, Cu, Fe, Pb, Li, Mg, Mo, Mn, Hg, Ni, K, Se, Ag, Na, Sr, Tl, Sn, Ti, W, U, V, Zn
ICP-MS		Al, Sb, As, Ba, Be, B, Cd, Ca, Cr, Co, Cu, Fe, Pb, Li, Mg, Mo, Mn, Hg, Ni, K, Se, Ag, Na, Sr, Tl, Sn, Ti, W, U, V, Zn
GFAA		Al, Sb, As, Ba, Be, B, Cd, Ca, Cr, Co, Cu, Fe, Pb, Li, Mg, Mo, Mn, Hg, Ni, K, Se, Ag, Na, Sr, Tl, Sn, Ti, W, U, V, Zn

Comments: Mercury by CVAA if performed

Laboratory Data Consultants, Inc.
Data Validation Report

Project/Site Name: Kimberly-Clark Upland Area

LDC Report Date: November 20, 2020

Parameters: Total Petroleum Hydrocarbons as Extractables

Validation Level: Stage 2A

Laboratory: Friedman & Bruya, Inc.

Sample Delivery Group (SDG): 010506

Sample Identification	Laboratory Sample Identification	Matrix	Collection Date
DT-B-06-8	010506-02	Soil	10/28/20
DT-S-01-4	010506-03	Soil	10/28/20

Introduction

This Data Validation Report (DVR) presents data validation findings and results for the associated samples listed on the cover page. Data validation was performed in accordance with a modified outline of the USEPA National Functional Guidelines (NFG) for Organic Superfund Methods Data Review (January 2017). Where specific guidance was not available, the data has been evaluated in a conservative manner consistent with industry standards using professional experience.

The analyses were performed by the following method:

Total Petroleum Hydrocarbons (TPH) as Extractables by NWTPH-Dx

All sample results were subjected to Stage 2A data validation, which comprises an evaluation of quality control (QC) summary results.

The following are definitions of the data qualifiers utilized during data validation:

J (Estimated): The compound or analyte was analyzed for and positively identified by the laboratory; however the reported concentration is estimated due to non-conformances discovered during data validation.

U (Non-detected): The compound or analyte was analyzed for and positively identified by the laboratory; however the compound or analyte should be considered not detected at the reported concentration due to the presence of contaminants detected in the associated blank(s).

UJ (Non-detected estimated): The compound or analyte was reported as not detected by the laboratory; however the reported quantitation/detection limit is estimated due to non-conformances discovered during data validation.

R (Rejected): The sample results were rejected due to gross non-conformances discovered during data validation. Data qualified as rejected is not usable.

NA (Not Applicable): The non-conformance discovered during data validation demonstrates a high bias, while the affected compound or analyte in the associated sample(s) was reported as not detected by the laboratory and did not warrant the qualification of the data.

A qualification summary table is provided at the end of this report if data has been qualified. Flags are classified as P (protocol) or A (advisory) to indicate whether the flag is due to a laboratory deviation from a specified protocol or is of technical advisory nature.

I. Sample Receipt and Technical Holding Times

All samples were received in good condition and cooler temperatures upon receipt met validation criteria.

All technical holding time requirements were met.

II. Initial Calibration and Initial Calibration Verification

Initial calibration data were not reviewed for Stage 2A validation.

III. Continuing Calibration

Continuing calibration data were not reviewed for Stage 2A validation.

IV. Laboratory Blanks

Laboratory blanks were analyzed as required by the method. No contaminants were found in the laboratory blanks.

V. Field Blanks

No field blanks were identified in this SDG.

VI. Surrogates

Surrogates were added to all samples as required by the method. All surrogate recoveries (%R) were within QC limits.

VII. Matrix Spike/Matrix Spike Duplicates

The laboratory has indicated that there were no matrix spike (MS) and matrix spike duplicate (MSD) analyses specified for the samples in this SDG, and therefore matrix spike and matrix spike duplicate analyses were not performed for this SDG.

VIII. Laboratory Control Samples

Laboratory control samples (LCS) were analyzed as required by the method. Percent recoveries (%R) were within QC limits.

IX. Field Duplicates

No field duplicates were identified in this SDG.

X. Compound Quantitation

Raw data were not reviewed for Stage 2A validation.

XI. Target Compound Identifications

Raw data were not reviewed for Stage 2A validation.

XII. Overall Assessment of Data

The analysis was conducted within all specifications of the method. No results were rejected in this SDG.

Kimberly-Clark Upland Area
Total Petroleum Hydrocarbons as Extractables - Data Qualification Summary - SDG 010506

No Sample Data Qualified in this SDG

Kimberly-Clark Upland Area
Total Petroleum Hydrocarbons as Extractables - Laboratory Blank Data Qualification Summary - SDG 010506

No Sample Data Qualified in this SDG

Kimberly-Clark Upland Area
Total Petroleum Hydrocarbons as Extractables - Field Blank Data Qualification Summary - SDG 010506

No Sample Data Qualified in this SDG

LDC #: 49664E8
SDG #: 010506
Laboratory: Friedman & Bruya, Inc.

VALIDATION COMPLETENESS WORKSHEET
Stage 2A

Date: 11/18/20
Page: 1 of 1
Reviewer: LT
2nd Reviewer:

METHOD: GC TPH as Extractables (NWTPH-Dx)

The samples listed below were reviewed for each of the following validation areas. Validation findings are noted in attached validation findings worksheets.

	Validation Area		Comments
I.	Sample receipt/Technical holding times	A, A	
II.	Initial calibration/ICV	N/N	
III.	Continuing calibration	N	
IV.	Laboratory Blanks	A	
V.	Field blanks	N	
VI.	Surrogate spikes	A	
VII.	Matrix spike/Matrix spike duplicates	N	Non client
VIII.	Laboratory control samples	A	LCS
IX.	Field duplicates	N	
X.	Compound quantitation RL/LOQ/LODs	N	Dry weight basis= 1,2
XI.	Target compound identification	N	
XII	Overall assessment of data	A	

Note: A = Acceptable; N = Not provided/applicable; SW = See worksheet; ND = No compounds detected; R = Rinsate; FB = Field blank; D = Duplicate; TB = Trip blank; EB = Equipment blank; SB=Source blank; OTHER:

	Client ID	Lab ID	Matrix	Date
1	DT-B-06-8	010506-02	Soil	10/28/20
2	DT-S-01-4	010506-03	Soil	10/28/20
3				
4				
5				
6				
7				
8				
9				
10				
11				
12				
13				

Notes:

1	00-2438 MB						

Laboratory Data Consultants, Inc.
Data Validation Report

Project/Site Name: Kimberly-Clark Upland Area

LDC Report Date: December 2, 2020

Parameters: Mercury

Validation Level: Stage 2A

Laboratory: Friedman & Bruya, Inc.

Sample Delivery Group (SDG): 010541

Sample Identification	Laboratory Sample Identification	Matrix	Collection Date
GFB12-S-16-4	010541-01	Soil	10/29/20
GFB12-S-16-4MS	010541-01MS	Soil	10/29/20
GFB12-S-16-4MSD	010541-01MSD	Soil	10/29/20

Introduction

This Data Validation Report (DVR) presents data validation findings and results for the associated samples listed on the cover page. Data validation was performed in accordance with a modified outline of the USEPA National Functional Guidelines (NFG) for Inorganic Superfund Methods Data Review (January 2017). Where specific guidance was not available, the data has been evaluated in a conservative manner consistent with industry standards using professional experience.

The analyses were performed by the following method:

Mercury by Environmental Protection Agency (EPA) Method 1631E

All sample results were subjected to Stage 2A data validation, which comprises an evaluation of quality control (QC) summary results.

The following are definitions of the data qualifiers utilized during data validation:

J (Estimated): The compound or analyte was analyzed for and positively identified by the laboratory; however the reported concentration is estimated due to non-conformances discovered during data validation.

U (Non-detected): The compound or analyte was analyzed for and positively identified by the laboratory; however the compound or analyte should be considered non-detected at the reported concentration due to the presence of contaminants detected in the associated blank(s).

UJ (Non-detected estimated): The compound or analyte was reported as not detected by the laboratory; however the reported quantitation/detection limit is estimated due to non-conformances discovered during data validation.

R (Rejected): The sample results were rejected due to gross non-conformances discovered during data validation. Data qualified as rejected is not usable.

NA (Not Applicable): The non-conformance discovered during data validation demonstrates a high bias, while the affected compound or analyte in the associated sample(s) was reported as not detected by the laboratory and did not warrant the qualification of the data.

A qualification summary table is provided at the end of this report if data has been qualified. Flags are classified as P (protocol) or A (advisory) to indicate whether the flag is due to a laboratory deviation from a specified protocol or is of technical advisory nature.

I. Sample Receipt and Technical Holding Times

All samples were received in good condition.

All technical holding time requirements were met.

II. Instrument Calibration

Instrument calibration data were not reviewed for Stage 2A validation.

III. Laboratory Blanks

Laboratory blanks were analyzed as required by the method. No contaminants were found in the laboratory blanks.

IV. Field Blanks

No field blanks were identified in this SDG.

V. Matrix Spike/Matrix Spike Duplicates

Matrix spike (MS) and matrix spike duplicate (MSD) sample analysis was performed on an associated project sample. For GFB12-S-16-4MS/MSD, no data were qualified for mercury percent recoveries outside the QC limits since the parent sample results were greater than 4X the spike concentration. Relative percent differences (RPD) were within QC limits.

VI. Duplicate Sample Analysis

The laboratory has indicated that there were no duplicate (DUP) analyses specified for the samples in this SDG, and therefore duplicate analyses were not performed for this SDG.

VII. Laboratory Control Samples

Laboratory control samples (LCS) were analyzed as required by the method. Percent recoveries (%R) were within QC limits.

VIII. Field Duplicates

No field duplicates were identified in this SDG.

IX. Sample Result Verification

Raw data were not reviewed for Stage 2A validation.

X. Overall Assessment of Data

The analysis was conducted within all specifications of the method. No results were rejected in this SDG.

Kimberly-Clark Upland Area
Mercury - Data Qualification Summary - SDG 010541

No Sample Data Qualified in this SDG

Kimberly-Clark Upland Area
Mercury - Laboratory Blank Data Qualification Summary - SDG 010541

No Sample Data Qualified in this SDG

Kimberly-Clark Upland Area
Mercury - Field Blank Data Qualification Summary - SDG 010541

No Sample Data Qualified in this SDG

LDC #: 49664F4c

SDG #: 010541

Laboratory: Friedman & Bruya, Inc.

VALIDATION COMPLETENESS WORKSHEET

Stage 2A

Date: 12/2/2020

Page: 1 of 1

Reviewer: DTM

2nd Reviewer:

METHOD: Mercury (EPA Method 1631E)

The samples listed below were reviewed for each of the following validation areas. Validation findings are noted in attached validation findings worksheets.

	Validation Area		Comments
I.	Sample receipt/Technical holding times	A/A	
II.	Instrument Calibration	N	
III.	Laboratory Blanks	A	
IV.	Field Blanks	N	
V.	Matrix Spike/Matrix Spike Duplicates	SW	2/3 Hg > 4xSpike
VI.	Duplicate sample analysis	N	
VII.	Laboratory control samples	A	LCS
VIII.	Field Duplicates	N	
IX.	Sample Result Verification	N	
X.	Overall Assessment of Data	A	

Note: A = Acceptable; N = Not provided/applicable; SW = See worksheet; ND = No compounds detected; R = Rinsate; FB = Field blank; D = Duplicate; TB = Trip blank; EB = Equipment blank; SB=Source blank; OTHER:

	Client ID	Lab ID	Matrix	Date
1	GFB12-S-16-4	010541-01	Soil	10/29/20
2	GFB12-S-16-4MS	010541-01MS	Soil	10/29/20
3	GFB12-S-16-4MSD	010541-01MSD	Soil	10/29/20
4				
5				
6				
7				
8				

Notes:

Laboratory Data Consultants, Inc.
Data Validation Report

Project/Site Name: Kimberly-Clark Upland Area

LDC Report Date: December 2, 2020

Parameters: Mercury

Validation Level: Stage 2A

Laboratory: Friedman & Bruya, Inc.

Sample Delivery Group (SDG): 011027

Sample Identification	Laboratory Sample Identification	Matrix	Collection Date
GFB12-S-17-4	011027-01	Soil	11/03/20
GFB12-S-17-4MS	011027-01MS	Soil	11/03/20
GFB12-S-17-4MSD	011027-01MSD	Soil	11/03/20

Introduction

This Data Validation Report (DVR) presents data validation findings and results for the associated samples listed on the cover page. Data validation was performed in accordance with a modified outline of the USEPA National Functional Guidelines (NFG) for Inorganic Superfund Methods Data Review (January 2017). Where specific guidance was not available, the data has been evaluated in a conservative manner consistent with industry standards using professional experience.

The analyses were performed by the following method:

Mercury by Environmental Protection Agency (EPA) Method 1631E

All sample results were subjected to Stage 2A data validation, which comprises an evaluation of quality control (QC) summary results.

The following are definitions of the data qualifiers utilized during data validation:

J (Estimated): The compound or analyte was analyzed for and positively identified by the laboratory; however the reported concentration is estimated due to non-conformances discovered during data validation.

U (Non-detected): The compound or analyte was analyzed for and positively identified by the laboratory; however the compound or analyte should be considered non-detected at the reported concentration due to the presence of contaminants detected in the associated blank(s).

UJ (Non-detected estimated): The compound or analyte was reported as not detected by the laboratory; however the reported quantitation/detection limit is estimated due to non-conformances discovered during data validation.

R (Rejected): The sample results were rejected due to gross non-conformances discovered during data validation. Data qualified as rejected is not usable.

NA (Not Applicable): The non-conformance discovered during data validation demonstrates a high bias, while the affected compound or analyte in the associated sample(s) was reported as not detected by the laboratory and did not warrant the qualification of the data.

A qualification summary table is provided at the end of this report if data has been qualified. Flags are classified as P (protocol) or A (advisory) to indicate whether the flag is due to a laboratory deviation from a specified protocol or is of technical advisory nature.

I. Sample Receipt and Technical Holding Times

All samples were received in good condition.

All technical holding time requirements were met.

II. Instrument Calibration

Instrument calibration data were not reviewed for Stage 2A validation.

III. Laboratory Blanks

Laboratory blanks were analyzed as required by the method. No contaminants were found in the laboratory blanks.

IV. Field Blanks

No field blanks were identified in this SDG.

V. Matrix Spike/Matrix Spike Duplicates

Matrix spike (MS) and matrix spike duplicate (MSD) sample analysis was performed on an associated project sample.

For GFB12-S-17-4MS/MSD, no data were qualified for mercury percent recoveries outside the QC limits since the parent sample results were greater than 4X the spike concentration.

Relative percent differences (RPD) were within QC limits with the following exceptions:

Spike ID (Associated Samples)	Analyte	RPD (Limits)	Flag	A or P
GFB12-S-17-4MS/MSD (All samples in SDG 011027)	Mercury	50 (≤20)	J (all detects)	A

VI. Duplicate Sample Analysis

The laboratory has indicated that there were no duplicate (DUP) analyses specified for the samples in this SDG, and therefore duplicate analyses were not performed for this SDG.

VII. Laboratory Control Samples

Laboratory control samples (LCS) were analyzed as required by the method. Percent recoveries (%R) were within QC limits.

VIII. Field Duplicates

No field duplicates were identified in this SDG.

IX. Sample Result Verification

Raw data were not reviewed for Stage 2A validation.

X. Overall Assessment of Data

The analysis was conducted within all specifications of the method.

Due to MS/MSD RPD, data were qualified as estimated in one sample.

No results were rejected in this SDG.

Kimberly-Clark Upland Area
Mercury - Data Qualification Summary - SDG 011027

Sample	Analyte	Flag	A or P	Reason
GFB12-S-17-4	Mercury	J (all detects)	A	Matrix spike/Matrix spike duplicate (RPD)

Kimberly-Clark Upland Area
Mercury - Laboratory Blank Data Qualification Summary - SDG 011027

No Sample Data Qualified in this SDG

Kimberly-Clark Upland Area
Mercury - Field Blank Data Qualification Summary - SDG 011027

No Sample Data Qualified in this SDG

LDC #: 49664G4c

SDG #: 011027

Laboratory: Friedman & Bruya, Inc.

VALIDATION COMPLETENESS WORKSHEET

Stage 2A

Date: 12/2/2020

Reviewer: DTM

2nd Reviewer:

METHOD: Mercury (EPA Method 1631E)

The samples listed below were reviewed for each of the following validation areas. Validation findings are noted in attached validation findings worksheets.

	Validation Area		Comments
I.	Sample receipt/Technical holding times	A/A	
II.	Instrument Calibration	N	
III.	Laboratory Blanks	A	
IV.	Field Blanks	N	
V.	Matrix Spike/Matrix Spike Duplicates	SW	2/3 > 4x Spike
VI.	Duplicate sample analysis	N	
VII.	Laboratory control samples	A	LCS
VIII.	Field Duplicates	N	
IX.	Sample Result Verification	N	
X.	Overall Assessment of Data	A	

Note: A = Acceptable; N = Not provided/applicable; SW = See worksheet; ND = No compounds detected; R = Rinsate; FB = Field blank; D = Duplicate; TB = Trip blank; EB = Equipment blank; SB=Source blank; OTHER:

	Client ID	Lab ID	Matrix	Date
1	GFB12-S-17-4	011027-01	Soil	11/03/20
2	GFB12-S-17-4MS	011027-01MS	Soil	11/03/20
3	GFB12-S-17-4MSD	011027-01MSD	Soil	11/03/20
4				
5				
6				
7				
8				

Notes:

LDC #: 49664G4c

VALIDATION FINDINGS WORKSHEET
Matrix Spike/Matrix Spike Duplicates

Reviewer: DTM

METHOD: Trace metals (EPA SW 846 Method 6020/6010/7470)

Please see qualifications below for all questions answered "N". Not applicable questions are identified as "N/A".

Y N N/A Was a matrix spike analyzed for each matrix in this SDG?

Y N N/A Were matrix spike percent recoveries (%R) within the control limits of 75-125? If the sample concentration exceeded the spike concentration by a factor of 4 or more, no action was taken.

Y N N/A Were all duplicate sample relative percent differences (RPD) ≤ 20% for samples?

LEVEL IV ONLY:

Y N N/A Were recalculated results acceptable? See Level IV Recalculation Worksheet for recalculations.

#	MS/MSD ID	Matrix	Analyte	MS %Recovery	MSD %Recovery	RPD (Limits)	Associated Samples	Qual	DET	ND	P Recov
	2/3	S	Hg			50(20)	ALL	J/UJ/A	ALL		

Comments:

Laboratory Data Consultants, Inc.
Data Validation Report

Project/Site Name: Kimberly-Clark Upland Area

LDC Report Date: December 2, 2020

Parameters: Mercury

Validation Level: Stage 2A

Laboratory: Friedman & Bruya, Inc.

Sample Delivery Group (SDG): 011068

Sample Identification	Laboratory Sample Identification	Matrix	Collection Date
GFB12-S-18-4	011068-01	Soil	11/04/20
GFB12-S-18-4MS	011068-01MS	Soil	11/04/20
GFB12-S-18-4MSD	011068-01MSD	Soil	11/04/20

Introduction

This Data Validation Report (DVR) presents data validation findings and results for the associated samples listed on the cover page. Data validation was performed in accordance with a modified outline of the USEPA National Functional Guidelines (NFG) for Inorganic Superfund Methods Data Review (January 2017). Where specific guidance was not available, the data has been evaluated in a conservative manner consistent with industry standards using professional experience.

The analyses were performed by the following method:

Mercury by Environmental Protection Agency (EPA) Method 1631E

All sample results were subjected to Stage 2A data validation, which comprises an evaluation of quality control (QC) summary results.

The following are definitions of the data qualifiers utilized during data validation:

J (Estimated): The compound or analyte was analyzed for and positively identified by the laboratory; however the reported concentration is estimated due to non-conformances discovered during data validation.

U (Non-detected): The compound or analyte was analyzed for and positively identified by the laboratory; however the compound or analyte should be considered non-detected at the reported concentration due to the presence of contaminants detected in the associated blank(s).

UJ (Non-detected estimated): The compound or analyte was reported as not detected by the laboratory; however the reported quantitation/detection limit is estimated due to non-conformances discovered during data validation.

R (Rejected): The sample results were rejected due to gross non-conformances discovered during data validation. Data qualified as rejected is not usable.

NA (Not Applicable): The non-conformance discovered during data validation demonstrates a high bias, while the affected compound or analyte in the associated sample(s) was reported as not detected by the laboratory and did not warrant the qualification of the data.

A qualification summary table is provided at the end of this report if data has been qualified. Flags are classified as P (protocol) or A (advisory) to indicate whether the flag is due to a laboratory deviation from a specified protocol or is of technical advisory nature.

I. Sample Receipt and Technical Holding Times

All samples were received in good condition.

All technical holding time requirements were met.

II. Instrument Calibration

Instrument calibration data were not reviewed for Stage 2A validation.

III. Laboratory Blanks

Laboratory blanks were analyzed as required by the method. No contaminants were found in the laboratory blanks.

IV. Field Blanks

No field blanks were identified in this SDG.

V. Matrix Spike/Matrix Spike Duplicates

Matrix spike (MS) and matrix spike duplicate (MSD) sample analysis was performed on an associated project sample. For GFB12-S-18-4MS/MSD, no data were qualified for mercury percent recoveries outside the QC limits since the parent sample results were greater than 4X the spike concentration. Relative percent differences (RPD) were within QC limits.

VI. Duplicate Sample Analysis

The laboratory has indicated that there were no duplicate (DUP) analyses specified for the samples in this SDG, and therefore duplicate analyses were not performed for this SDG.

VII. Laboratory Control Samples

Laboratory control samples (LCS) were analyzed as required by the method. Percent recoveries (%R) were within QC limits.

VIII. Field Duplicates

No field duplicates were identified in this SDG.

IX. Sample Result Verification

Raw data were not reviewed for Stage 2A validation.

X. Overall Assessment of Data

The analysis was conducted within all specifications of the method. No results were rejected in this SDG.

Kimberly-Clark Upland Area
Mercury - Data Qualification Summary - SDG 011068

No Sample Data Qualified in this SDG

Kimberly-Clark Upland Area
Mercury - Laboratory Blank Data Qualification Summary - SDG 011068

No Sample Data Qualified in this SDG

Kimberly-Clark Upland Area
Mercury - Field Blank Data Qualification Summary - SDG 011068

No Sample Data Qualified in this SDG

LDC #: 49664H4c

SDG #: 011068

Laboratory: Friedman & Bruya, Inc.

VALIDATION COMPLETENESS WORKSHEET

Stage 2A

Date: 12/2/2020

Reviewer: DTM

2nd Reviewer:

METHOD: Mercury (EPA Method 1631E)

The samples listed below were reviewed for each of the following validation areas. Validation findings are noted in attached validation findings worksheets.

	Validation Area		Comments
I.	Sample receipt/Technical holding times	A/A	
II.	Instrument Calibration	N	
III.	Laboratory Blanks	A	
IV.	Field Blanks	N	
V.	Matrix Spike/Matrix Spike Duplicates	SW	2/3 Hg >4x Spike
VI.	Duplicate sample analysis	N	
VII.	Laboratory control samples	A	LCS
VIII.	Field Duplicates	N	
IX.	Sample Result Verification	N	
X.	Overall Assessment of Data	A	

Note: A = Acceptable; N = Not provided/applicable; SW = See worksheet; ND = No compounds detected; R = Rinsate; FB = Field blank; D = Duplicate; TB = Trip blank; EB = Equipment blank; SB=Source blank; OTHER:

	Client ID	Lab ID	Matrix	Date
1	GFB12-S-18-4	011068-01	Soil	11/04/20
2	GFB12-S-18-4MS	011068-01MS	Soil	11/04/20
3	GFB12-S-18-4MSD	011068-01MSD	Soil	11/04/20
4				
5				
6				
7				
8				

Notes:

APPENDIX D

Report of Archaeological Monitoring (Perteet Inc.)

Allyson Brooks Ph.D., Director
State Historic Preservation Officer

December 28, 2020

Mr. Steve Germiat
Principal Hydrogeologist
Aspect Consulting

In future correspondence please refer to:
Project Tracking Code: 050912-24-SN
Property: Kimberly Clark Pulp and Paper Mill Demolition World Wide
Re: Archaeology - Concur with Monitoring Report

Dear Mr. Germiat:

The State Historic Preservation Officer (SHPO) and the Department of Archaeology and Historic Preservation (DAHP) has been provided with documentation regarding the above referenced project. In response, we concur with the results and recommendations made in the monitoring report entitled "Results of Archaeological Monitoring for the Kimberly-Clark Everett Interim Action." Specifically, we agree that although the building remnants and infrastructure found during monitoring likely date to the historical period, not enough was found during this project to require any further archaeological work at this time. No further archaeological work is recommended for this project.

These comments are based on the information available at the time of this review and on behalf of the SHPO pursuant to Washington State law. Please note that should the project scope of work and/or location change significantly, please contact DAHP for further review.

Thank you for the opportunity to review and comment. Please ensure that the DAHP Project Number (a.k.a. Project Tracking Code) is attached to any further communications with the DAHP about this project. Should you have any questions, please feel free to contact me.

Sincerely,



Stephanie Jolivette
Local Governments Archaeologist
(360) 628-2755
Stephanie.Jolivette@dahp.wa.gov

CULTURAL RESOURCES REPORT COVER SHEET

Author: Jack Johnson, PhD, RPA

Title of Report: Results of Archaeological Monitoring for the Kimberly-Clark Everett Interim Action

Date of Report: October 23, 2020

County(ies): Snohomish Section: 19 Township: 29 N Range: 5 E

Quad: Everett, Wa, 7.5' Quad. Acres: <1

PDF of report submitted (REQUIRED) ☒ Yes

Historic Property Export Files submitted? ☐ Yes ☒ No

Archaeological Site(s)/Isolate(s) Found or Amended? ☐ Yes ☒ No

TCP(s) found? ☐ Yes ☒ No

Replace a draft? ☐ Yes ☒ No

Satisfy a DAHP Archaeological Excavation Permit requirement? ☐ Yes # ☒ No

DAHP Archaeological Site #:

_____
_____
_____
_____
_____
_____
_____
_____
_____

PERTEET
Better communities, by design

PERTEET.COM
505 FIFTH AVENUE S, SUITE 300
SEATTLE, WA 98104
206.436.0515

October 23, 2020

Steve J. Germiat, LHG
Principal Hydrogeologist
Aspect Consulting, LLC
710 Second Avenue, Suite 550
Seattle, WA 98104

Re: Results of Archaeological Monitoring for the Kimberly-Clark Everett Interim Action

Dear Mr. Germiat,

This letter provides the results of cultural resources monitoring conducted by Perteet for the Kimberly-Clark Interim Action Project at the Kimberly-Clark Worldwide Site Upland Area (Site) in Everett, Washington (Figure 1). The project location, regulatory context, monitoring methods, and results are described in detail below. Detailed background information on the natural and cultural environments of the project area are provided by Rinck and colleagues (2013) and will not be repeated in this report.

Archaeological monitoring of excavations for the current phase of the Interim Action Project is now complete. Sediments removed during excavation were limited to historical fill; no native sediments or soils were encountered during monitoring. No pre-contact archaeological materials were observed during monitoring. Subsurface remnants of historical mill structures were encountered and documented during monitoring of excavation in two project areas. Structural elements documented in the Hydraulic Barker (HB) area probably represent remnants of the hydraulic debarking facility erected by the Soundview Pulp Company in 1945 (Everett Daily Herald, Feb. 8, 1954:20). Structural elements documented in the Central Maintenance Shop (CMS) area represent remnants of various infrastructure and facilities installed from the 1930s onward. Subsurface structural remains observed during monitoring were not removed and remain in situ.

No observed structural elements incorporated distinctive features that could yield historical insight through additional research, and no historical artifacts were encountered in association with structural remains. Standing historical mill structures throughout the site were demolished in 2013 after a Final Mitigated Determination of Non-Significance issued by the City of Everett (Attachment A) required an evaluation of the historical significance of only the Puget Sound Pulp and Timber Main Office Building, which is outside the current project area. No additional work is therefore recommended within the current project area.

PROJECT LOCATION AND DESCRIPTION

Kimberly-Clark (K-C) has undertaken removal of contaminated soil in nine areas within the Site (Figure 2). The Site lies within Section 19 of Township 29 North, Range 5 East, Willamette Meridian. It is south of US Naval Station Everett, adjacent to the East Waterway in Port Gardner Bay, and bordered to the west by the BNSF railroad. Data from geotechnical boreholes and geoarchaeological analysis indicate that seven of the nine

planned cleanup areas were entirely within historical dredge fill associated with development of the mill site (Rinck et al. 2013). However, the CMS and HB areas lie within an area previously identified as having a high potential for encountering native sediment during excavations (Figure 3). These two areas therefore required archaeological monitoring during removal of contaminated sediments.

Removal of contaminated materials involved excavation of uncontaminated backfill overburden and underlying contaminated deposits, followed by disposal of contaminated materials at an off-site facility. Cleanup work was conducted by Aspect Consulting, LLC (Aspect) on behalf of K-C under the guidance of an Interim Action Work Plan (IAWP) prepared by Aspect as an exhibit to an Amendment to Agreed Order No. DE 9476 (Order) between K-C and the Washington State Department of Ecology (Ecology) (Aspect 2019). A prior phase of interim cleanup was undertaken in 2013-2014 under this Order. All documents pertaining to the current IAWP and Order are available on the Ecology website (WSDE 2020).

REGULATORY SETTING

The project is subject to the Washington State Environmental Policy Act (SEPA) that requires the project proponent to identify any places or objects listed on or eligible for national, state, or local preservation registers in the vicinity of the project. The regulation also requires proponents to describe evidence for sites of historic, archaeological, scientific, or cultural importance in the vicinity of a project, and describe proposed measures to reduce or control impacts to those sites. Agencies are encouraged by SEPA to consult with others to find acceptable ways to avoid or mitigate any adverse impacts that may be caused by the project.

The project is also subject to several Washington state laws pertaining to archaeological cultural resources. For example, the Archaeological Sites and Resources Act [RCW 27.53] prohibits knowingly excavating or disturbing prehistoric and historic archaeological sites on public or private land. The Indian Graves and Records Act [RCW 27.44] prohibits knowingly destroying American Indian graves and provides that inadvertent disturbance through construction or other activities requires re-interment under supervision of the appropriate Indian tribe. In order to prevent the looting or depredation of sites, any maps, records, or other information identifying the location of archaeological sites, historic sites, artifacts, or the site of traditional ceremonial, or social uses and activities of Indian Tribes are also exempt from disclosure [RCW 42.56.300].

The Tulalip Tribes have previously communicated to Ecology that the Everett waterfront is a very culturally sensitive area. Previous cultural resources assessment (Rinck et al. 2013) and was completed due to the Tribe's and other interested parties' concern for cultural resources in the project vicinity.

PROJECT BACKGROUND

A cultural resources assessment was conducted in 2013 prior to demolition of historical mill structures and initial cleanup efforts at the Site (Rinck et al. 2013). This work reviewed extensive historical and geotechnical data to detail the long history of use of the project vicinity by Native Americans and subsequent Euroamerican settlers, including extensive modification of the Site in conjunction with development of the historical mill. This land modification emplaced large amounts of dredge and mill fill across the Site, and extended the former shoreline westward by over 500 feet (152 meters) in some areas, covering native foreshore, marshland, and sub-tidal depositional environments. Variable depths of fill across the Site were documented, and areas of high archaeological sensitivity within the Site were identified (Figure 3). An archaeological monitoring and discovery plan (MDP) was formulated to guide subsequent demolition and cleanup efforts (Rinck 2013). This plan calls for monitoring of fill excavations by a geologist, and archaeological monitoring of excavation below fill in moderate and high sensitivity areas or when intact cultural materials are observed by the geologist.

Archaeological monitoring following this MDP was performed during prior cleanup efforts at the site in 2013 to the south of current project areas (Undem et al. 2014). Monitoring efforts documented a small amount of historical and pre-contact cultural material within historical fill. In all cases where cultural materials were encountered, poor integrity and a lack of data potential precluded the need for additional targeted recovery or mitigation measures. Historical features observed were associated with mill construction and operation. Pre-contact materials encountered include one pre-contact edge-altered cobble (stone chopping/digging tool) and several fragments of fire-modified rock (FMR). All pre-contact materials were encountered in displaced contexts within lower fill at about 6.5 feet (2 meters) below the surface. The stone tool was recorded as an isolate (Smithsonian trinomial 45SN629) (Undem 2014) and donated to Hibulb Cultural Center; no other cultural remains encountered during this phase of work were formally recorded as archaeological sites.

In the current project area, fill deposits were expected to be roughly 6 feet (1.8 meters) thick in the HB area and between 6 and 12 feet (1.8 to 3.7 meters) thick in the CMS area based on available geotechnical data (Rinck et al. 2013) and observations from previous cleanup efforts in the vicinity (Aspect 2015). Natural deposits below the fill include sediments deposited in backshore, beach, foreshore, marsh, and sub-tidal deltaic environments. Thus current project excavations had potential to encounter pre-contact and early historical cultural materials along the historical shoreline but buried below the fill. The fill could also harbor stable former surfaces with potential for historical cultural materials.

CULTURAL RESOURCES MONITORING METHODS

Prior to the start of excavation, Perteet archaeologist Emily Peterson coordinated with Aspect project leads to review the site MDP established prior to earlier cleanup efforts. As per this plan, site excavation in historical fill containing no cultural remains was monitored by a geologist. Aspect notified Perteet when excavation was anticipated to extend below fill, and a Perteet archaeologist was then deployed to perform excavation monitoring. On the first day of archaeological monitoring, Perteet archaeologist Jack Johnson met with Aspect and other project personnel on-site to review monitoring and site safety protocols.

Archaeological monitoring was performed in two distinct areas within the Site: the Hydraulic Barker (HB) area and the Central Maintenance Shop (CMS) area. Archaeological monitoring of the HB area was performed on May 29, 2020 by Jack Johnson. In this location, removal of a roughly 50 foot by 20 foot (15.2 by 9.1 meter) area of overburden to a depth of roughly 6 feet (1.8 meters) below surface was completed prior to archaeological monitoring to allow equipment access for dewatering. At the eastern edge of this area, a roughly 20 foot by 20 foot (6 by 6 meter) area of historical fill had also been excavated to a depth of roughly 10 feet (3 meters) below surface prior to the arrival of the archaeological monitor. The archaeological monitor observed subsequent excavation of this smaller area to a depth of roughly 13 feet (4 meters) below the surface, where excavation ended. Archaeological monitoring of the CMS area was performed on July 10, 13, and 14 by Perteet archaeologist Patrick Garrison. A small amount of overburden fill had been removed prior to archaeological monitoring in this area; archaeological monitoring observed subsequent excavation of this area to a depth of about 6 feet (1.8 meters) below the surface, where excavation ended.

Throughout archaeological monitoring, Perteet archaeologists described excavation methods, sediments, and cultural materials encountered using standardized forms and terminology. Photographs were taken using digital cameras and a log of all photographs taken was kept. Location data were recorded on hand-drawn maps. Excavation spoils were examined for cultural materials.

Due to the contaminated nature of the site, archaeological monitoring in both areas was performed at a safe distance from potentially-contaminated deposits. This inhibited the archaeologists' ability to closely examine cultural materials or subsurface stratigraphy encountered during excavation, especially in the small HB area

where a combination of contaminated materials, space constraints, and excavation depth prevented safe entry into the fully-excavated pit. However, historical structural remains and debris encountered during excavation were identifiable from the surface grade in this area. Further, because project objectives focused on the removal of loose contaminated sediment, site excavation was able to work around extant structural remains without displacing these remains, facilitating exposure and documentation from a safe working distance.

RESULTS OF CULTURAL RESOURCES MONITORING

In both excavation areas, archaeological monitors observed and documented structural remains and building debris associated with historical mill operations. Identified structural remains were within historical fill, and no evidence of intact cultural remains within native sediment was observed. No pre-contact cultural materials were observed.

Within the HB area, structural remains included concrete foundations, wood pilings, and brick and metal debris. Debris was encountered between roughly 6 and 10 feet (1.8 to 3 meters) below the surface within mottled brown fill (Figure 4). Concrete features and wood piling were encountered at roughly 10 feet (3 meters) to 11 feet (3.35 meters) below the surface. They include a 10-inch (25 centimeter) thick, 5-foot (1.5 meter) wide concrete foundation in the south wall of the excavation pit, a small concrete footing at the east edge of the pit, and an elbow-shaped concrete feature protruding from the north wall of the pit and trending westward (Figures 5 and 6). One displaced timber piling protruded from the south wall of the pit adjacent to the concrete foundation, and another remained *in situ* at the elbow of the concrete feature protruding from the north wall. These materials are remnants of the former hydraulic bark removal facility erected in 1945 at this location (Figure 7), and the elbow-shaped concrete feature probably represents the remnant of the southernmost of the former log ways used to collect floated logs from the shoreline waterway, which was adjacent to this structure at the time.

Within the CMS area, structural remains included a concrete vault, concrete pipe, foundations, and walkways, one segment of wood stave pipe, steel pipes, and brick debris (Figure 8). Cultural materials in this location were shallowly-buried, and all lie within historical fill in the upper 6 feet (1.8 meters) of subsurface deposits. The wood stave pipe (Figure 9) represents remnant mill process sewer pipes indicated in historic maps from 1957 (Figure 10), and were probably installed during the early period of mill operation in the 1930s given the construction methods and materials used. Other extant structural remains probably date to the 1950s or later; historic maps and aerial imagery indicate this portion of the site was relatively undeveloped until sometime between 1941 and 1952 (Figures 11 and 12) with most of the previous structures in this area dating to the 1960s or later.

The types of historic features and debris encountered during monitoring are ubiquitous and lack the potential to yield historical insights in the absence of diagnostic features or associated intact deposits of contemporary artifacts. For example, similar structural remnants of dozens of buildings can be expected at this Site alone. Perteet therefore did not record these features as one or more archaeological sites, but instead documented them with detailed notes and photographs. Observed structural features described above also remain *in situ*, and were not removed or otherwise adversely affected by cleanup excavations.

DISCUSSION

Structural remains associated with the historical mill were encountered during archaeological monitoring of excavations in both the HB and the CMS areas. Observed structural remains date primarily to the mid-1940s or later, although a segment of wood stave pipe in the CMS area may date to initial mill operation in the 1930s. Remains were not associated with deposits of other cultural materials that could provide additional information related to the history of mill operations at the Site, and therefore do not hold any potential for yielding additional historical insights.

No precontact artifacts or buried surfaces were observed during monitoring. Ground disturbance in the HB and CMS areas is now complete, and no further monitoring or cultural resources investigations are recommended.

Thank you for the opportunity to work with you on this project. Please do not hesitate to contact me with any questions regarding this report.

Sincerely,

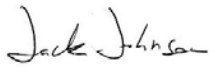

Jack Johnson, Ph.D., RPA
Project Archaeologist, Perteet Inc.

REFERENCES

Aspect Consulting, LLC

2015 *Interim Action Report, Kimberly-Clark Worldwide Site Upland Area, Everett, Washington*. Report Prepared for Kimberly-Clark Worldwide, Inc.

2019 *Work Plan for Second Interim Action, Kimberly-Clark Worldwide Site Upland Area, Everett, Washington*. Report prepared for Kimberly-Clark Worldwide, Inc.

Rinck, Brandy

2013 *Cultural Resources Monitoring and Discovery Plan for the Kimberly-Clark Worldwide Site Upland Area, Everett, Snohomish County, Washington*. Report prepared for Aspect Consulting, LLC. SWCA/Northwest Archaeological Associates, Seattle, Washington.

Rinck, Brandy, Sharon Boswell, and Johonna Shea

2013 *Archaeological Resources Assessment for the Kimbely-Clark Worldwide Site Upland Area, Everett, Snohomish County, Washington*. Report prepared for Aspect Consulting, LLC. SWCA/Northwest Archaeological Associates, Seattle, Washington.

Undem, Cyrena

2014 State of Washington Archaeological Isolate Inventory Form, 45SN629, KC-WW-13-01. On file, Washington State Department of Archaeology and Historic Preservation, Olympia, Washington.

Undem, Cyrena, Michael Shong, and Brandy Rinck

2014 Results of Cultural Resources Monitoring at the Kimberly-Clark Worldwide Site Upland Area, Everett, Washington. SWCA Project No. 24976. Letter report to Aspect Consulting, LLC. SWCA Environmental Consultants, Seattle, Washington.

Washington State Department of Ecology
2020 *Kimberly-Clark Worldwide*. Online resource accessed October 15, 2020. https://apps.ecology.wa.gov/gsp/Sitepage.aspx?csid=2569

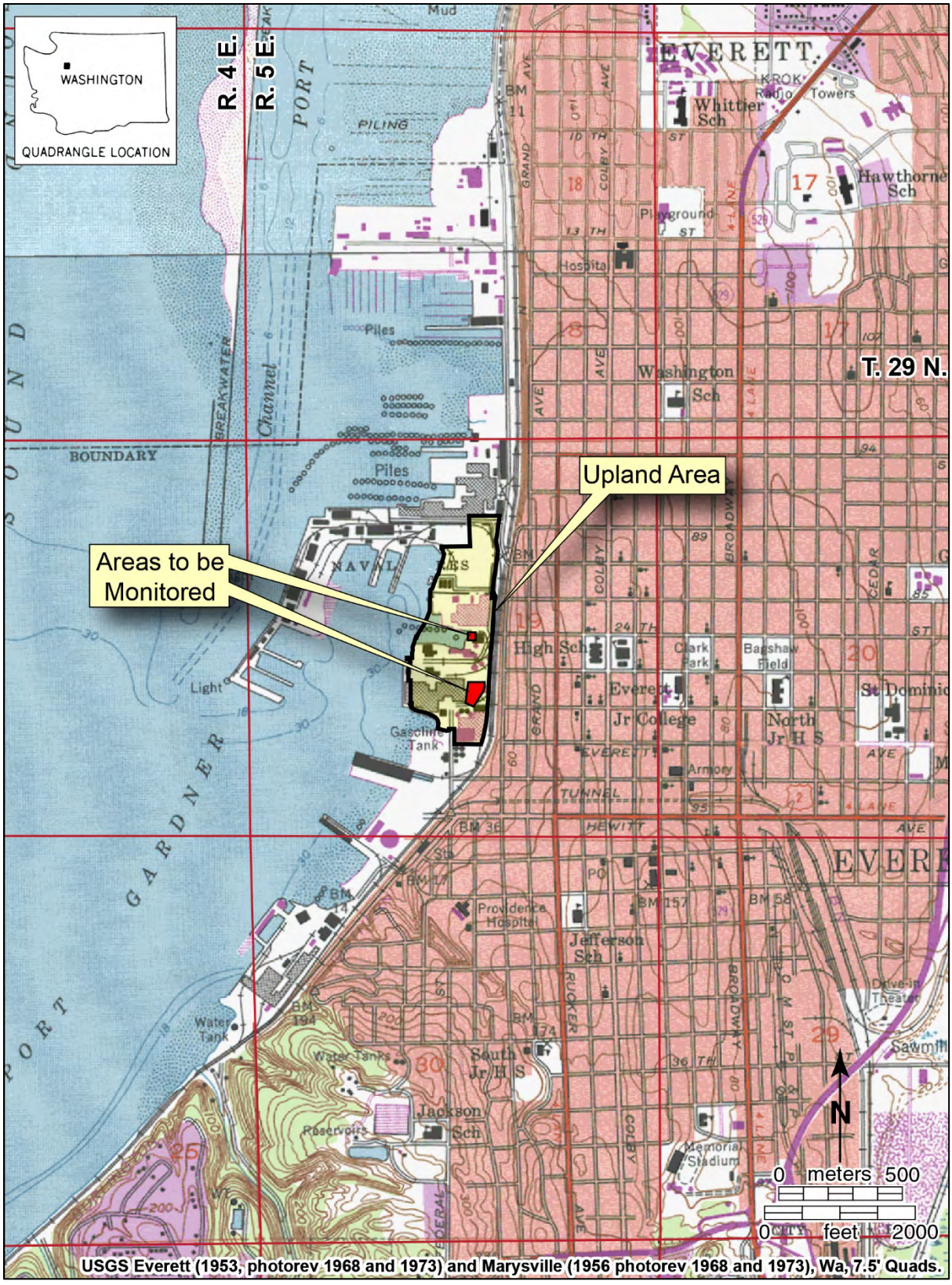

Figure 1. Project location.



Figure 2. Air photo showing the nine Interim Action Cleanup Areas.



Figure 3. Air photo showing monitored areas over site sensitivity model in Rinck et al. 2013:55 (Figure 24).



Figure 4. Cultural debris observed in the Hydraulic Barker Area.

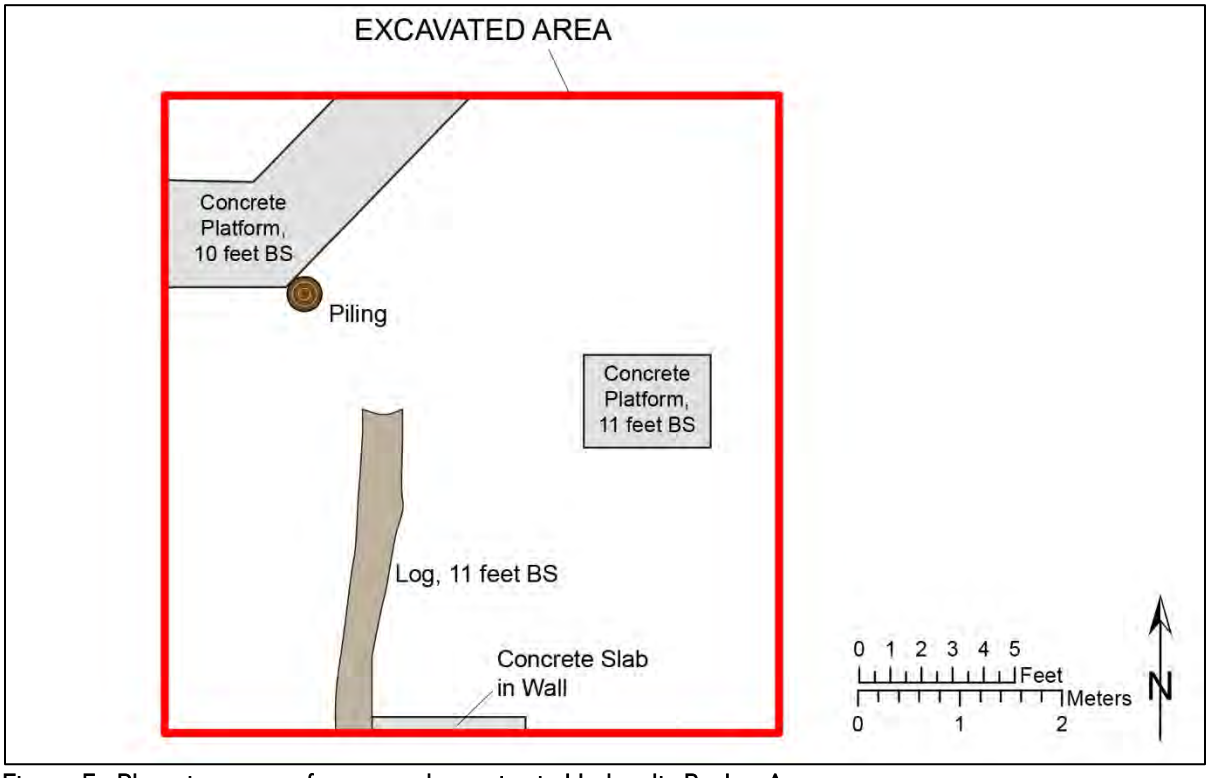

Figure 5. Plan view map of structural remains in Hydraulic Barker Area.



Figure 6. Photo of excavated Hydraulic Barker Area showing concrete and wood structural remains.

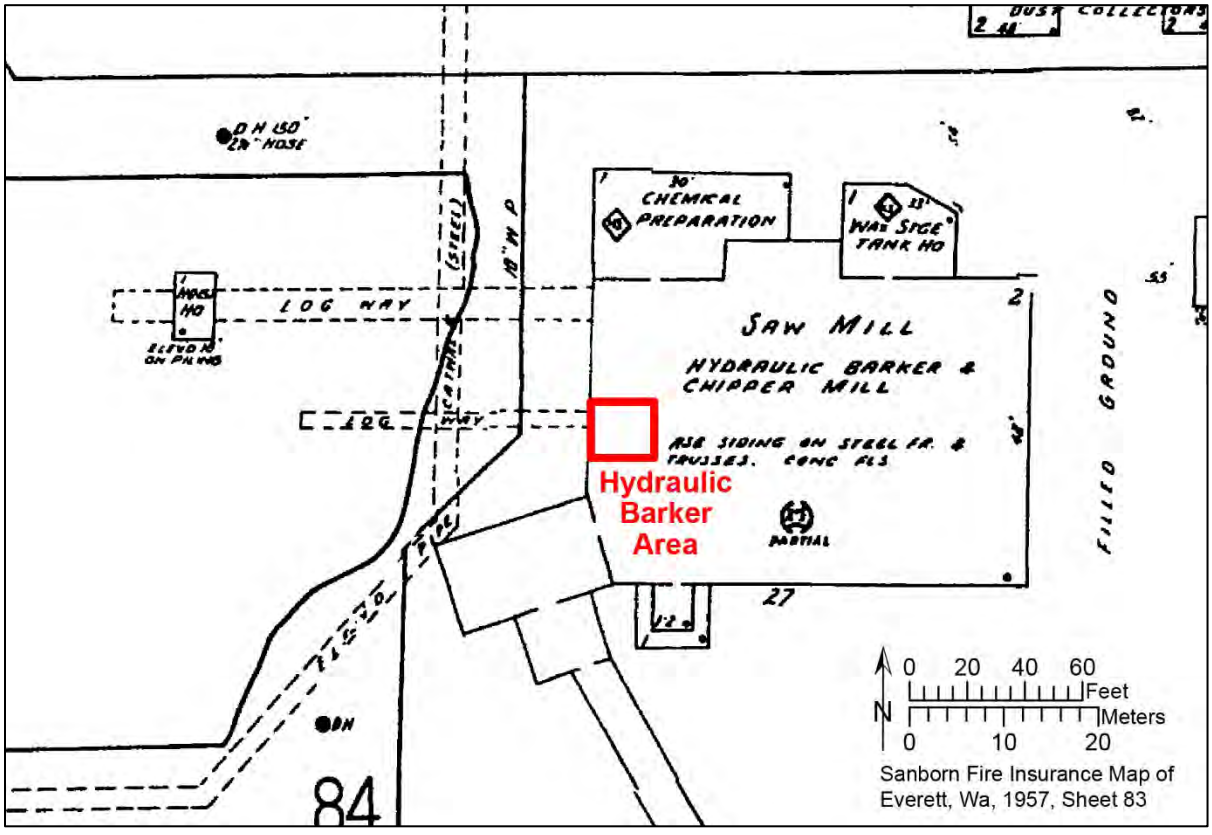

Figure 7. Sanborn Fire Insurance Map, 1957, showing the Hydraulic Barker Area.

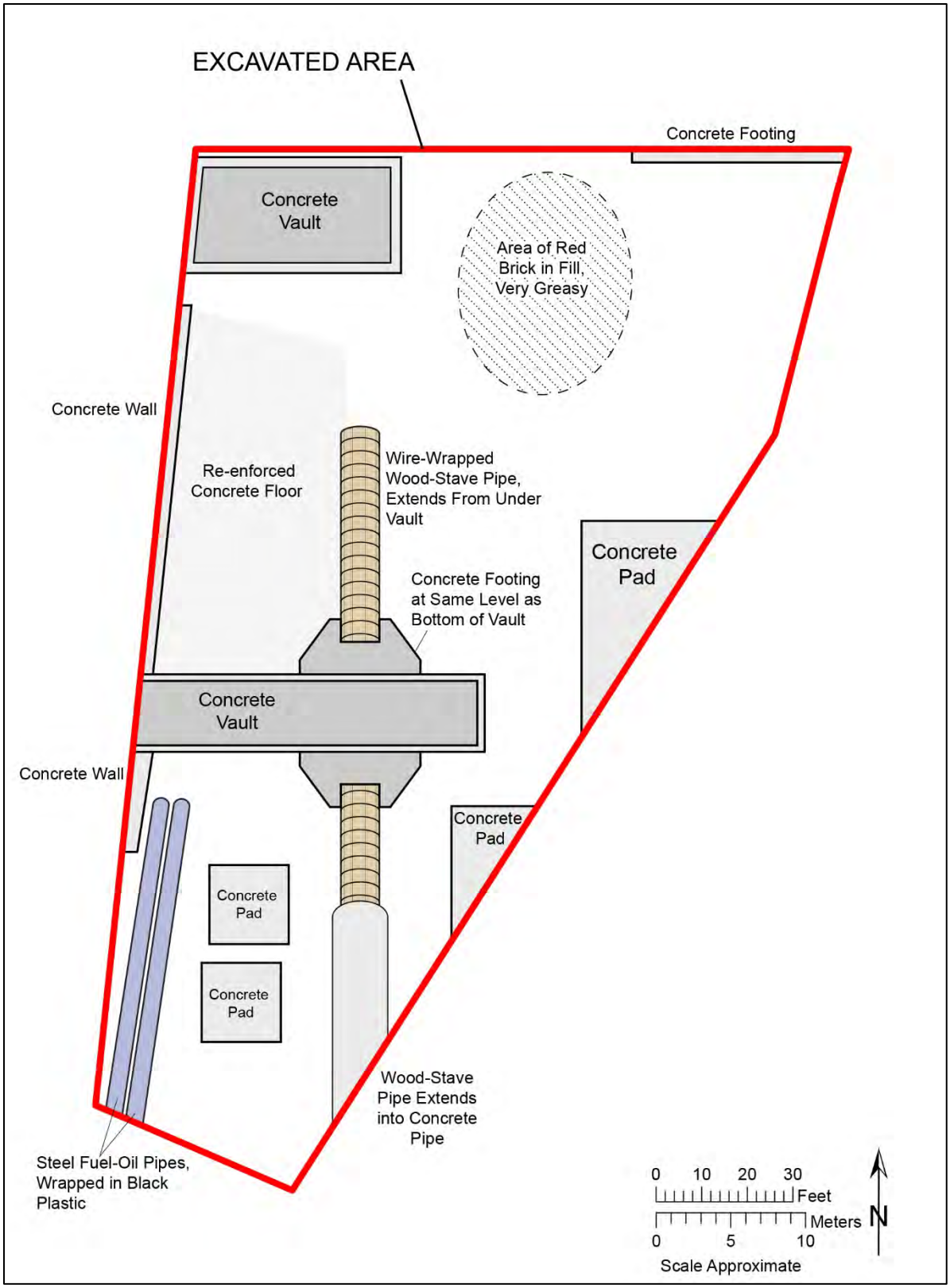

Figure 8. Plan view of observed remains in the CMS Area.



Figure 9. Overview of wood-stave pipe in the CMS Area.

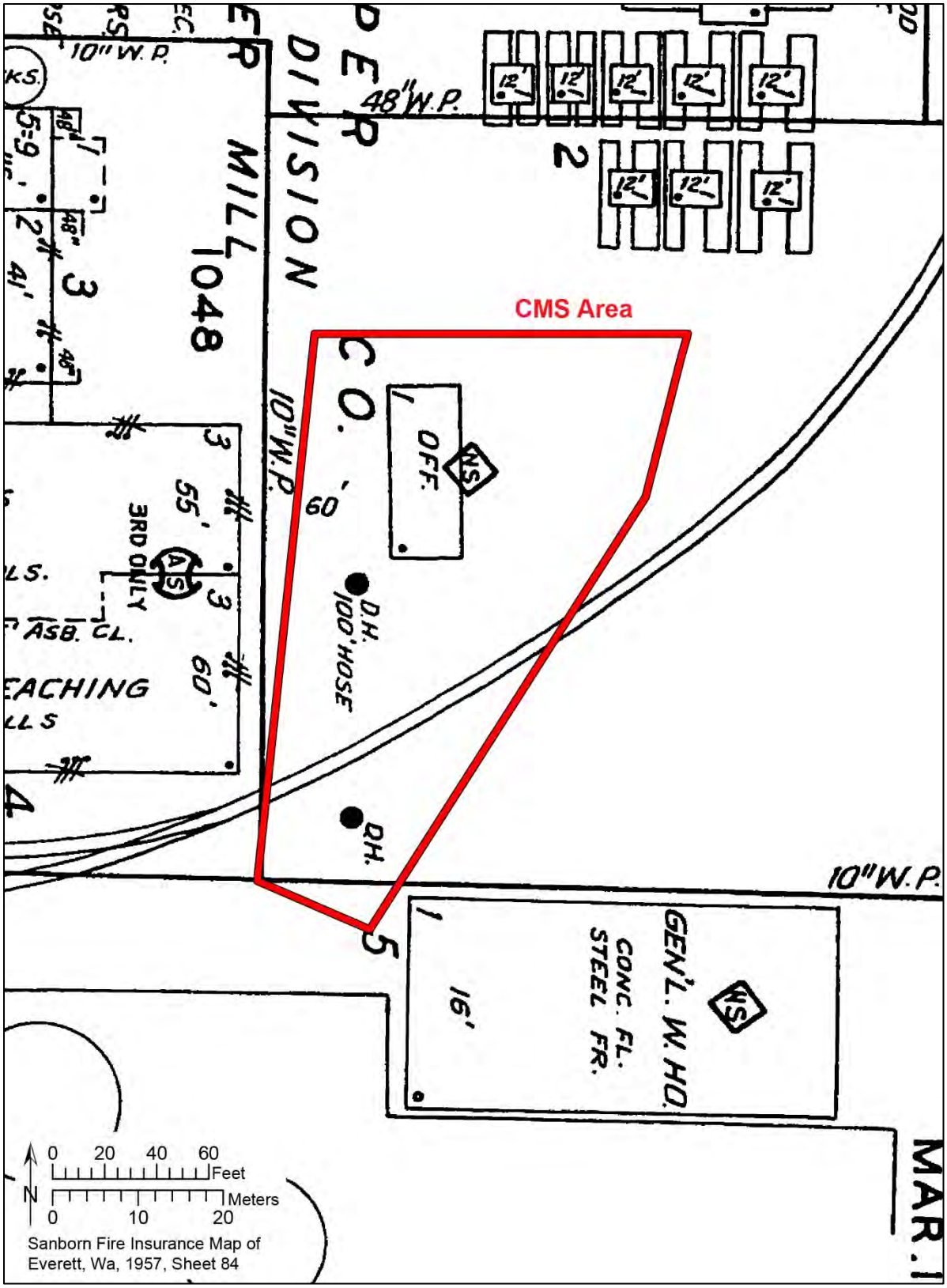

Figure 10. Sanborn Fire Insurance Map, 1957, showing the CMS Area.

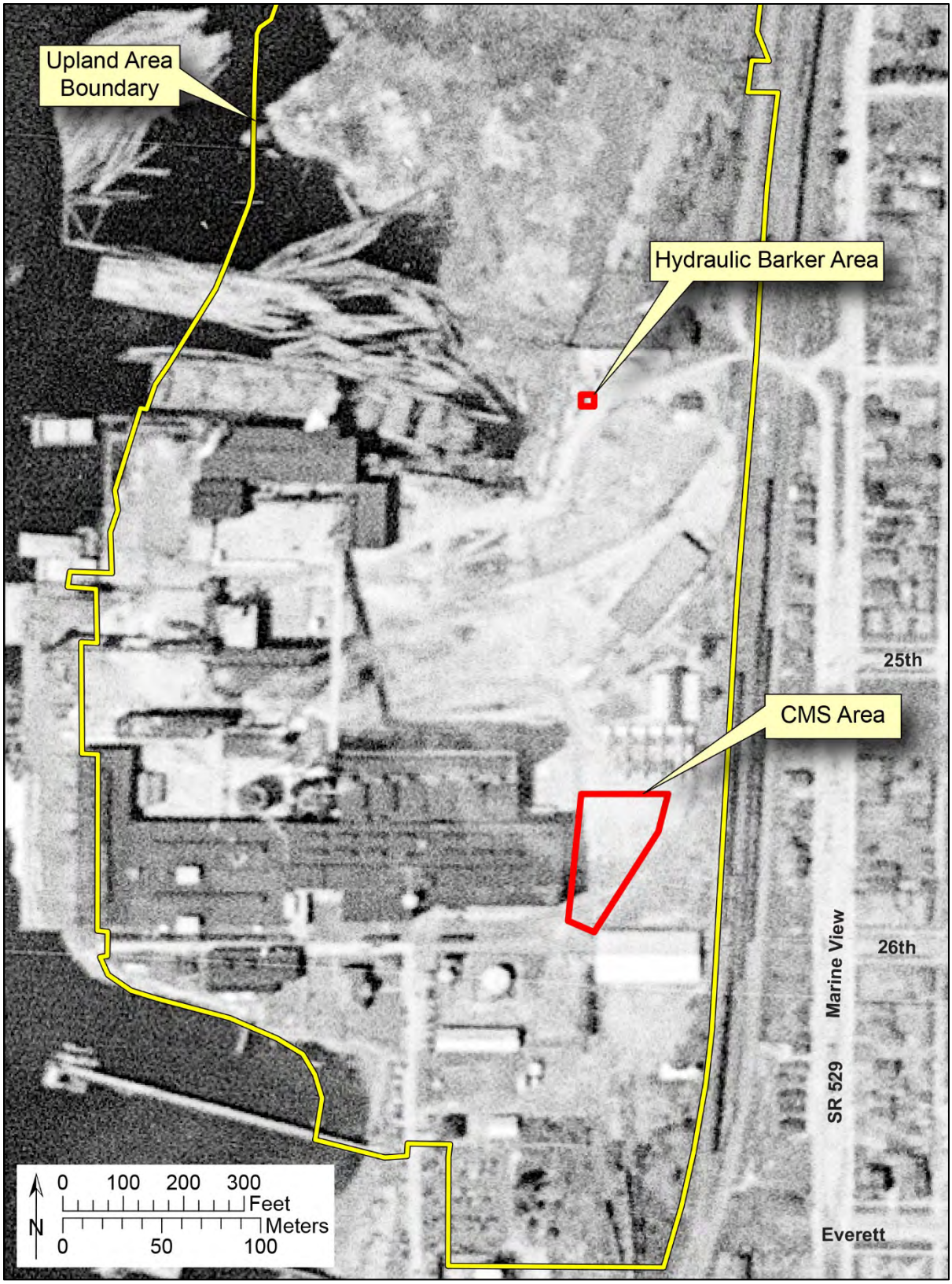

Figure 11. Historical air photo, 1941, showing monitored areas.

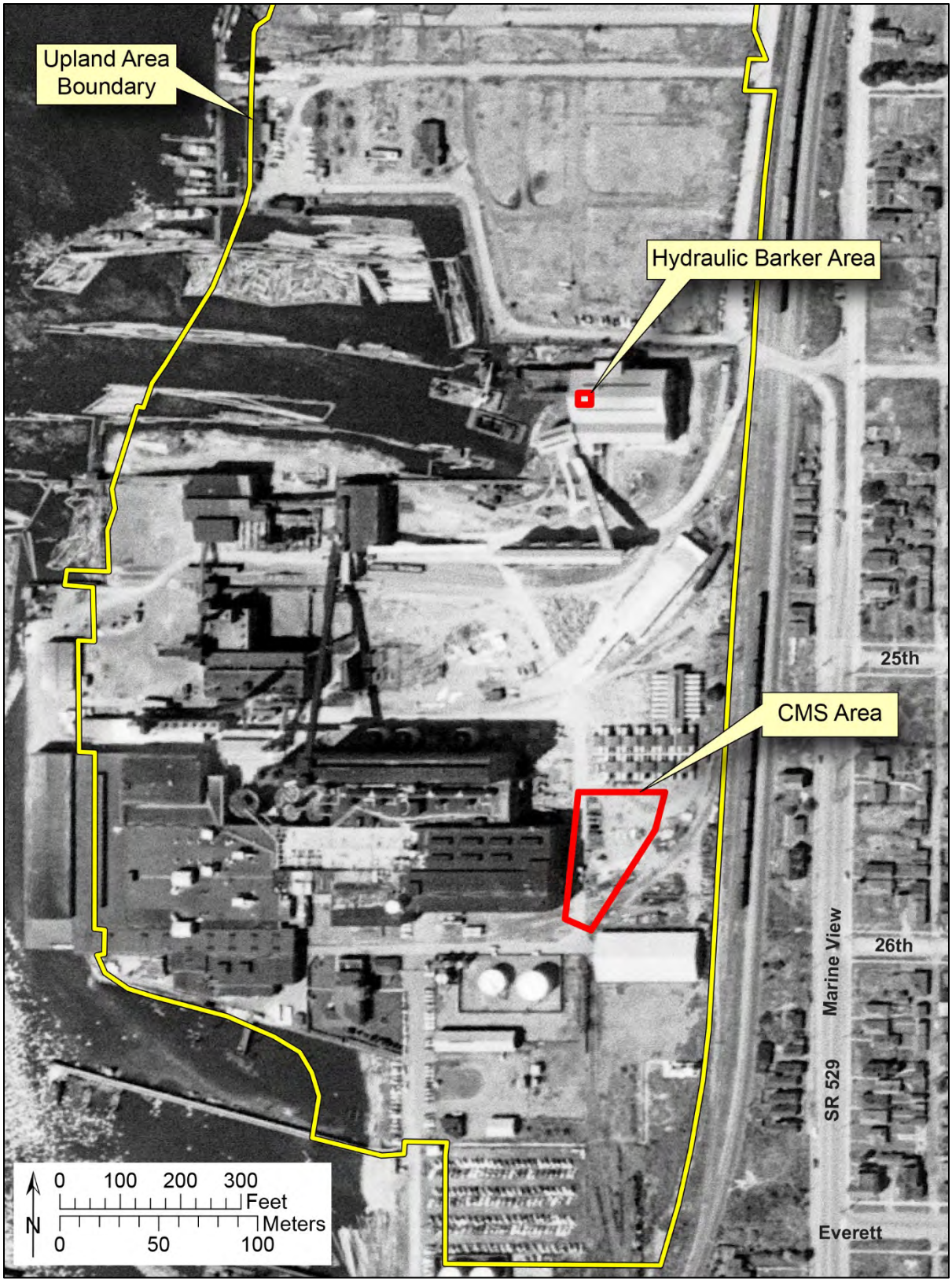

Figure 12. Historical air photo, 1952, showing monitored areas.

ATTACHMENT A
Determination of Non-Significance

FINAL MITIGATED
DETERMINATION OF NON-SIGNIFICANCE
SEPA12-010
May 25, 2012

Description of Proposal: Demolition of Kimberly Clark Pulp and Paper Mill facilities upland from the shoreline, not including any structures or utilities located more than 2 feet below existing grade.

Applicant: Kimberly Clark Worldwide
Rick Tucker, Mill Manager
2600 Federal Avenue
Everett, WA 98201

Location: 2600 Federal Ave

Zoning: M-2 -- Heavy Industry

Lead Agency: City of Everett Planning Department

Contact Person: John Jimerson Phone: (425) 257-8731

AGENCIES WITH JURISDICTION

The following agencies have been identified as possibly having jurisdiction over the proposal. It is the responsibility of the applicant to identify and obtain all necessary permits and approvals.

1. Department of Ecology (Construction Stormwater General Permit, NPDES Water Discharge Permit Modification/ Demolition Notification).

2. Department of Labor and Industries (Asbestos Abatement/Demolition Notification).

THRESHOLD DETERMINATION

The lead agency for this proposal has determined that it does not have a probable significant adverse impact on the environment. An Environmental Impact Statement is not required under RCW 43.21C.030(2)(c). This determination assumes compliance with State law and City ordinances related to general environmental protection including but not limited to right-of-way improvement requirements, drainage, etc. This decision was made after review of a completed environmental checklist and other information on file with the lead agency. This information is available to the public on request. This Mitigated Determination of Non-Significance is specifically conditioned on compliance with the conditions attached hereto which are incorporated by reference as if fully set forth herein.

This Final DNS is issued under WAC 197-11-355. A 14-day public comment period for this proposal has been completed.

MITIGATION MEASURES

1. No demolition in the immediate vicinity of the Puget Sound Pulp and Timber Main Office Building, or of the building itself, may be commenced before: 1) Kimberly Clark has submitted an evaluation of the historical significance of that building, prepared by a qualified historian or other professional qualified to

perform such evaluation; 2) the City, in consultation with the Washington State Department of Archeology and Historic Preservation, has deemed the evaluation complete and adequate; and 3) Kimberly Clark has made a binding commitment approved by the City in consultation with the Washington State Department of Archeology and Historic Preservation to document and record historically significant aspects or features of the building and contribute same to an agency or entity as directed by the City.

This Final DNS is issued under WAC 197-11-355. A 14-day public comment period for this proposal has been completed.

Responsible Official: Allan Giffen, Director Phone: (425) 257-8731

Address: 2930 Wetmore Avenue, Suite 8-A, Everett, WA 98201

Date: May 25, 2012

Signature: _____

You may appeal this determination by filing an appeal on forms provided by the Planning Department and a *fee to the* Planning/Community Development Permit Services Counter at 3200 Cedar Street, 2nd Floor, no later than June 8, 2012.

Contact John Jimerson to read or ask about the procedures for SEPA appeals.

NOTE: A DNS may be withdrawn in the event of significant changes in the proposal, disclosure of new significant information, misrepresentation by the applicant, or failure to comply with the conditions upon which this Determination of Non-Significance is predicated.

APPENDIX E

Statistical Calculation Results for Area-Specific Compliance Evaluations

Nonparametric UCL Statistics for Data Sets with Non-Detects

User Selected Options	BBH Area
Date/Time of Computation	ProUCL 5.112/18/2020 9:28:14 AM
From File	WorkSheet.xls
Full Precision	OFF
Confidence Coefficient	95%
Number of Bootstrap Operations	2000

Copper

General Statistics

Total Number of Observations	84	Number of Distinct Observations	66
Number of Detects	81	Number of Non-Detects	3
Number of Distinct Detects	65	Number of Distinct Non-Detects	2
Minimum Detect	6.81	Minimum Non-Detect	5
Maximum Detect	58.3	Maximum Non-Detect	25
Variance Detects	112.6	Percent Non-Detects	3.571%
Mean Detects	17.52	SD Detects	10.61
Median Detects	13.7	CV Detects	0.605
Skewness Detects	2.122	Kurtosis Detects	4.388
Mean of Logged Detects	2.736	SD of Logged Detects	0.474

Nonparametric Distribution Free UCL Statistics

Data do not follow a Discernible Distribution at 5% Significance Level

Kaplan-Meier (KM) Statistics using Normal Critical Values and other Nonparametric UCLs

Mean	17.18	Standard Error of Mean	1.159
SD	10.55	95% KM (BCA) UCL	19.17
95% KM (t) UCL	19.11	95% KM (Percentile Bootstrap) UCL	19.15
95% KM (z) UCL	19.09	95% KM Bootstrap t UCL	19.5
90% KM Chebyshev UCL	20.66	95% KM Chebyshev UCL	22.23
97.5% KM Chebyshev UCL	24.42	99% KM Chebyshev UCL	28.71

Statistics using KM estimates on Logged Data and Assuming Lognormal Distribution

KM SD (logged)	0.495	95% Critical H Value (KM-Log)	1.841
KM Mean (logged)	2.707	KM Geo Mean	14.99
KM Standard Error of Mean (logged)	0.0545	95% H-UCL (KM -Log)	18.73

Suggested UCL to Use

95% KM (t) UCL	19.11	KM H-UCL	18.73
95% KM (BCA) UCL	19.17		

Note: Suggestions regarding the selection of a 95% UCL are provided to help the user to select the most appropriate 95% UCL.

Recommendations are based upon data size, data distribution, and skewness.

These recommendations are based upon the results of the simulation studies summarized in Singh, Maichle, and Lee (2006).

However, simulations results will not cover all Real World data sets; for additional insight the user may want to consult a statistician.

Nonparametric UCL Statistics for Data Sets with Non-Detects

User Selected Options	BBH Area
Date/Time of Computation	ProUCL 5.112/18/2020 9:30:52 AM
From File	WorkSheet.xls
Full Precision	OFF
Confidence Coefficient	95%
Number of Bootstrap Operations	2000

Zinc

General Statistics

Total Number of Observations	75	Number of Distinct Observations	72
		Number of Missing Observations	0
Minimum	12.2	Mean	35.26
Maximum	220	Median	29.9
SD	25.59	Std. Error of Mean	2.955
Coefficient of Variation	0.726	Skewness	5.314
Mean of logged Data	3.437	SD of logged Data	0.454

Nonparametric Distribution Free UCL Statistics

Data do not follow a Discernible Distribution (0.05)

Assuming Normal Distribution

95% Normal UCL		95% UCLs (Adjusted for Skewness)	
95% Student's-t UCL	40.18	95% Adjusted-CLT UCL (Chen-1995)	42.05
		95% Modified-t UCL (Johnson-1978)	40.48

Nonparametric Distribution Free UCLs

95% CLT UCL	40.12	95% Jackknife UCL	40.18
95% Standard Bootstrap UCL	40.16	95% Bootstrap-t UCL	43.78
95% Hall's Bootstrap UCL	62.52	95% Percentile Bootstrap UCL	40.8
95% BCA Bootstrap UCL	42.72		
90% Chebyshev(Mean, Sd) UCL	44.12	95% Chebyshev(Mean, Sd) UCL	48.14
97.5% Chebyshev(Mean, Sd) UCL	53.71	99% Chebyshev(Mean, Sd) UCL	64.66

Suggested UCL to Use

95% Student's-t UCL	40.18	or 95% Modified-t UCL	40.48

Note: Suggestions regarding the selection of a 95% UCL are provided to help the user to select the most appropriate 95% UCL.

Recommendations are based upon data size, data distribution, and skewness.

These recommendations are based upon the results of the simulation studies summarized in Singh, Maichle, and Lee (2006).

However, simulations results will not cover all Real World data sets; for additional insight the user may want to consult a statistician.

Nonparametric UCL Statistics for Data Sets with Non-Detects

User Selected Options	BBH Area
Date/Time of Computation	ProUCL 5.112/18/2020 9:35:48 AM
From File	WorkSheet.xls
Full Precision	OFF
Confidence Coefficient	95%
Number of Bootstrap Operations	2000

Mercury

General Statistics

Total Number of Observations	113	Number of Distinct Observations	17
Number of Detects	20	Number of Non-Detects	93
Number of Distinct Detects	16	Number of Distinct Non-Detects	1
Minimum Detect	0.11	Minimum Non-Detect	0.1
Maximum Detect	0.78	Maximum Non-Detect	0.1
Variance Detects	0.0544	Percent Non-Detects	82.3%
Mean Detects	0.313	SD Detects	0.233
Median Detects	0.195	CV Detects	0.745
Skewness Detects	1.17	Kurtosis Detects	-0.132
Mean of Logged Detects	-1.391	SD of Logged Detects	0.669

Nonparametric Distribution Free UCL Statistics

Data do not follow a Discernible Distribution at 5% Significance Level

Kaplan-Meier (KM) Statistics using Normal Critical Values and other Nonparametric UCLs

Mean	0.138	Standard Error of Mean	0.0121
SD	0.126	95% KM (BCA) UCL	0.158
95% KM (t) UCL	0.158	95% KM (Percentile Bootstrap) UCL	0.157
95% KM (z) UCL	0.158	95% KM Bootstrap t UCL	0.168
90% KM Chebyshev UCL	0.174	95% KM Chebyshev UCL	0.191
97.5% KM Chebyshev UCL	0.213	99% KM Chebyshev UCL	0.258

Statistics using KM estimates on Logged Data and Assuming Lognormal Distribution

KM SD (logged)	0.443	95% Critical H Value (KM-Log)	1.803
KM Mean (logged)	-2.141	KM Geo Mean	0.118
KM Standard Error of Mean (logged)	0.0428	95% H-UCL (KM -Log)	0.14

Suggested UCL to Use

95% KM (Chebyshev) UCL 0.191

Note: Suggestions regarding the selection of a 95% UCL are provided to help the user to select the most appropriate 95% UCL.

Recommendations are based upon data size, data distribution, and skewness.

These recommendations are based upon the results of the simulation studies summarized in Singh, Maichle, and Lee (2006).

However, simulations results will not cover all Real World data sets; for additional insight the user may want to consult a statistician.

1	**Lognormal UCL Statistics for Data Sets with Non-Detects**	
2		
3	User Selected Options	Central Maintenance Shop Area
4	Date/Time of Computation	ProUCL 5.112/9/2020 11:49:16 AM
5	From File	WorkSheet.xls
6	Full Precision	OFF
7	Confidence Coefficient	95%
8	Number of Bootstrap Operations	2000
9		
10	**Total PCBs**	
11		
12	**General Statistics**	

13	Total Number of Observations	68	Number of Distinct Observations	10
14	Number of Detects	9	Number of Non-Detects	59
15	Number of Distinct Detects	9	Number of Distinct Non-Detects	1
16	Minimum Detect	0.024	Minimum Non-Detect	0.02
17	Maximum Detect	0.3	Maximum Non-Detect	0.02
18	Variance Detects	0.0093	Percent Non-Detects	86.76%
19	Mean Detects	0.0883	SD Detects	0.0964
20	Median Detects	0.054	CV Detects	1.092
21	Skewness Detects	1.773	Kurtosis Detects	2.305
22	Mean of Logged Detects	-2.844	SD of Logged Detects	0.909
23				
24	**Lognormal GOF Test on Detected Observations Only**			
25	Shapiro Wilk Test Statistic	0.862	**Shapiro Wilk GOF Test**	
26	5% Shapiro Wilk Critical Value	0.829	Detected Data appear Lognormal at 5% Significance Level	
27	Lilliefors Test Statistic	0.212	**Lilliefors GOF Test**	
28	5% Lilliefors Critical Value	0.274	Detected Data appear Lognormal at 5% Significance Level	
29	**Detected Data appear Lognormal at 5% Significance Level**			
30				
31	**Lognormal ROS Statistics Using Imputed Non-Detects**			
32	Mean in Original Scale	0.0136	Mean in Log Scale	-6.933
33	SD in Original Scale	0.0446	SD in Log Scale	2.504
34	Geometric d_mean	9.7539E-4	95% Percentile Bootstrap UCL	0.0232
35	95% t UCL (assumes normality of ROS data)	0.0226	95% BCA Bootstrap UCL	0.0283
36	95% Bootstrap t UCL	0.0404	95% H-UCL (Log ROS)	0.0569
37				
38	**Statistics using KM estimates on Logged Data and Assuming Lognormal Distribution**			
39	KM Mean (logged)	-3.771	KM Geo Mean	0.023
40	KM SD (logged)	0.478	95% Critical H Value (KM-Log)	1.854
41	KM Standard Error of Mean (logged)	0.0614	95% H-UCL (KM -Log)	0.0288
42				
56				

UCL Statistics for Data Sets with Non-Detects

User Selected Options	Hydraulic Barker Area Record Samples
Date/Time of Computation	ProUCL 5.112/8/2020 3:04:22 PM
From File	WorkSheet.xls
Full Precision	OFF
Confidence Coefficient	95%
Number of Bootstrap Operations	2000

Copper

General Statistics

Total Number of Observations	18	Number of Distinct Observations	18
		Number of Missing Observations	0
Minimum	9.64	Mean	33.61
Maximum	64.4	Median	29.6
SD	18.32	Std. Error of Mean	4.317
Coefficient of Variation	0.545	Skewness	0.281

Normal GOF Test

Shapiro Wilk Test Statistic	0.933	**Shapiro Wilk GOF Test**
5% Shapiro Wilk Critical Value	0.897	Data appear Normal at 5% Significance Level
Lilliefors Test Statistic	0.136	**Lilliefors GOF Test**
5% Lilliefors Critical Value	0.202	Data appear Normal at 5% Significance Level

Data appear Normal at 5% Significance Level

Assuming Normal Distribution

95% Normal UCL		95% UCLs (Adjusted for Skewness)	
95% Student's-t UCL	41.12	95% Adjusted-CLT UCL (Chen-1995)	41.02
		95% Modified-t UCL (Johnson-1978)	41.17

Gamma GOF Test

A-D Test Statistic	0.432	**Anderson-Darling Gamma GOF Test**
5% A-D Critical Value	0.746	Detected data appear Gamma Distributed at 5% Significance Level
K-S Test Statistic	0.147	**Kolmogorov-Smirnov Gamma GOF Test**
5% K-S Critical Value	0.205	Detected data appear Gamma Distributed at 5% Significance Level

Detected data appear Gamma Distributed at 5% Significance Level

Gamma Statistics

k hat (MLE)	3.038	k star (bias corrected MLE)	2.569
Theta hat (MLE)	11.06	Theta star (bias corrected MLE)	13.09
nu hat (MLE)	109.4	nu star (bias corrected)	92.47
MLE Mean (bias corrected)	33.61	MLE Sd (bias corrected)	20.97
		Approximate Chi Square Value (0.05)	71.3
Adjusted Level of Significance	0.0357	Adjusted Chi Square Value	69.51

Assuming Gamma Distribution

95% Approximate Gamma UCL (use when n>=50))	43.6	95% Adjusted Gamma UCL (use when n<50)	44.71

Lognormal GOF Test

Shapiro Wilk Test Statistic	0.904	**Shapiro Wilk Lognormal GOF Test**

53				5% Shapiro Wilk Critical Value		0.897	Data appear Lognormal at 5% Significance Level					
54				Lilliefors Test Statistic		0.15	**Lilliefors Lognormal GOF Test**					
55				5% Lilliefors Critical Value		0.202	Data appear Lognormal at 5% Significance Level					
56	Data appear Lognormal at 5% Significance Level											
57												
58	**Lognormal Statistics**											
59				Minimum of Logged Data		2.266	Mean of logged Data					3.341
60				Maximum of Logged Data		4.165	SD of logged Data					0.647
61												
62	**Assuming Lognormal Distribution**											
63				95% H-UCL		49.05	90% Chebyshev (MVUE) UCL					50.98
64				95% Chebyshev (MVUE) UCL		58.49	97.5% Chebyshev (MVUE) UCL					68.93
65				99% Chebyshev (MVUE) UCL		89.43						
66												
67	**Nonparametric Distribution Free UCL Statistics**											
68	Data appear to follow a Discernible Distribution at 5% Significance Level											
69												
70	**Nonparametric Distribution Free UCLs**											
71				95% CLT UCL		40.71	95% Jackknife UCL					41.12
72				95% Standard Bootstrap UCL		40.49	95% Bootstrap-t UCL					41.85
73				95% Hall's Bootstrap UCL		41.43	95% Percentile Bootstrap UCL					40.76
74				95% BCA Bootstrap UCL		40.76						
75				90% Chebyshev(Mean, Sd) UCL		46.56	95% Chebyshev(Mean, Sd) UCL					52.43
76				97.5% Chebyshev(Mean, Sd) UCL		60.57	99% Chebyshev(Mean, Sd) UCL					76.57
77												
78	**Suggested UCL to Use**											
79				95% Student's-t UCL		41.12						
80												
81	Note: Suggestions regarding the selection of a 95% UCL are provided to help the user to select the most appropriate 95% UCL.											
82	Recommendations are based upon data size, data distribution, and skewness.											
83	These recommendations are based upon the results of the simulation studies summarized in Singh, Maichle, and Lee (2006).											
84	However, simulations results will not cover all Real World data sets; for additional insight the user may want to consult a statistician.											
85												
86	**Mercury**											
87												
88	**General Statistics**											
89				Total Number of Observations		18	Number of Distinct Observations					8
90				Number of Detects		8	Number of Non-Detects					10
91				Number of Distinct Detects		7	Number of Distinct Non-Detects					1
92				Minimum Detect		0.076	Minimum Non-Detect					0.07
93				Maximum Detect		0.34	Maximum Non-Detect					0.07
94				Variance Detects		0.0079	Percent Non-Detects					55.56%
95				Mean Detects		0.165	SD Detects					0.0889
96				Median Detects		0.17	CV Detects					0.538
97				Skewness Detects		0.977	Kurtosis Detects					1.094
98				Mean of Logged Detects		-1.926	SD of Logged Detects					0.541
99												
100	**Normal GOF Test on Detects Only**											
101				Shapiro Wilk Test Statistic		0.874	**Shapiro Wilk GOF Test**					
102				5% Shapiro Wilk Critical Value		0.818	Detected Data appear Normal at 5% Significance Level					
103				Lilliefors Test Statistic		0.223	**Lilliefors GOF Test**					
104				5% Lilliefors Critical Value		0.283	Detected Data appear Normal at 5% Significance Level					

105	Detected Data appear Normal at 5% Significance Level											
106												
107	Kaplan-Meier (KM) Statistics using Normal Critical Values and other Nonparametric UCLs											
108					KM Mean	0.112			KM Standard Error of Mean	0.0184		
109					KM SD	0.0729			95% KM (BCA) UCL	0.144		
110					95% KM (t) UCL	0.144			95% KM (Percentile Bootstrap) UCL	0.142		
111					95% KM (z) UCL	0.143			95% KM Bootstrap t UCL	0.158		
112					90% KM Chebyshev UCL	0.167			95% KM Chebyshev UCL	0.192		
113					97.5% KM Chebyshev UCL	0.227			99% KM Chebyshev UCL	0.295		
114												
115	Gamma GOF Tests on Detected Observations Only											
116					A-D Test Statistic	0.448			Anderson-Darling GOF Test			
117					5% A-D Critical Value	0.719			Detected data appear Gamma Distributed at 5% Significance Level			
118					K-S Test Statistic	0.222			Kolmogorov-Smirnov GOF			
119					5% K-S Critical Value	0.295			Detected data appear Gamma Distributed at 5% Significance Level			
120	Detected data appear Gamma Distributed at 5% Significance Level											
121												
122	Gamma Statistics on Detected Data Only											
123					k hat (MLE)	4.122			k star (bias corrected MLE)	2.66		
124					Theta hat (MLE)	0.0401			Theta star (bias corrected MLE)	0.0621		
125					nu hat (MLE)	65.96			nu star (bias corrected)	42.56		
126					Mean (detects)	0.165						
127												
128	Gamma ROS Statistics using Imputed Non-Detects											
129	GROS may not be used when data set has > 50% NDs with many tied observations at multiple DLs											
130	GROS may not be used when kstar of detects is small such as <1.0, especially when the sample size is small (e.g., <15-20)											
131	For such situations, GROS method may yield incorrect values of UCLs and BTVs											
132	This is especially true when the sample size is small.											
133	For gamma distributed detected data, BTVs and UCLs may be computed using gamma distribution on KM estimates											
134					Minimum	0.01			Mean	0.0805		
135					Maximum	0.34			Median	0.0231		
136					SD	0.0968			CV	1.203		
137					k hat (MLE)	0.741			k star (bias corrected MLE)	0.654		
138					Theta hat (MLE)	0.109			Theta star (bias corrected MLE)	0.123		
139					nu hat (MLE)	26.67			nu star (bias corrected)	23.56		
140					Adjusted Level of Significance (β)	0.0357						
141					Approximate Chi Square Value (23.56, α)	13.51			Adjusted Chi Square Value (23.56, β)	12.78		
142					95% Gamma Approximate UCL (use when n>=50)	0.14			95% Gamma Adjusted UCL (use when n<50)	0.148		
143												
144	Estimates of Gamma Parameters using KM Estimates											
145					Mean (KM)	0.112			SD (KM)	0.0729		
146					Variance (KM)	0.00531			SE of Mean (KM)	0.0184		
147					k hat (KM)	2.375			k star (KM)	2.016		
148					nu hat (KM)	85.5			nu star (KM)	72.59		
149					theta hat (KM)	0.0473			theta star (KM)	0.0557		
150					80% gamma percentile (KM)	0.168			90% gamma percentile (KM)	0.218		
151					95% gamma percentile (KM)	0.266			99% gamma percentile (KM)	0.372		
152												
153	Gamma Kaplan-Meier (KM) Statistics											
154					Approximate Chi Square Value (72.59, α)	53.97			Adjusted Chi Square Value (72.59, β)	52.43		
155					95% Gamma Approximate KM-UCL (use when n>=50)	0.151			95% Gamma Adjusted KM-UCL (use when n<50)	0.156		
156												

	A	B	C	D	E	F	G	H	I	J	K	L
157	**Lognormal GOF Test on Detected Observations Only**											
158					Shapiro Wilk Test Statistic	0.898	**Shapiro Wilk GOF Test**					
159					5% Shapiro Wilk Critical Value	0.818	Detected Data appear Lognormal at 5% Significance Level					
160					Lilliefors Test Statistic	0.21	**Lilliefors GOF Test**					
161					5% Lilliefors Critical Value	0.283	Detected Data appear Lognormal at 5% Significance Level					
162	Detected Data appear Lognormal at 5% Significance Level											
163												
164	**Lognormal ROS Statistics Using Imputed Non-Detects**											
165					Mean in Original Scale	0.0912	Mean in Log Scale	-2.845				
166					SD in Original Scale	0.0896	SD in Log Scale	1.007				
167					95% t UCL (assumes normality of ROS data)	0.128	95% Percentile Bootstrap UCL	0.126				
168					95% BCA Bootstrap UCL	0.131	95% Bootstrap t UCL	0.141				
169					95% H-UCL (Log ROS)	0.184						
170												
171	**Statistics using KM estimates on Logged Data and Assuming Lognormal Distribution**											
172					KM Mean (logged)	-2.334	KM Geo Mean	0.0969				
173					KM SD (logged)	0.497	95% Critical H Value (KM-Log)	2.018				
174					KM Standard Error of Mean (logged)	0.125	95% H-UCL (KM -Log)	0.14				
175					KM SD (logged)	0.497	95% Critical H Value (KM-Log)	2.018				
176					KM Standard Error of Mean (logged)	0.125						
177												
178	**DL/2 Statistics**											
179	**DL/2 Normal**						**DL/2 Log-Transformed**					
180					Mean in Original Scale	0.0929	Mean in Log Scale	-2.719				
181					SD in Original Scale	0.0877	SD in Log Scale	0.808				
182					95% t UCL (Assumes normality)	0.129	95% H-Stat UCL	0.145				
183	DL/2 is not a recommended method, provided for comparisons and historical reasons											
184												
185	**Nonparametric Distribution Free UCL Statistics**											
186	Detected Data appear Normal Distributed at 5% Significance Level											
187												
188	**Suggested UCL to Use**											
189					95% KM (t) UCL	0.144						
190												
191	Note: Suggestions regarding the selection of a 95% UCL are provided to help the user to select the most appropriate 95% UCL.											
192	Recommendations are based upon data size, data distribution, and skewness.											
193	These recommendations are based upon the results of the simulation studies summarized in Singh, Maichle, and Lee (2006).											
194	However, simulations results will not cover all Real World data sets; for additional insight the user may want to consult a statistician.											
195												
196												
197	**Zinc**											
198												
199	**General Statistics**											
200					Total Number of Observations	18	Number of Distinct Observations	18				
201							Number of Missing Observations	0				
202					Minimum	17.4	Mean	61.2				
203					Maximum	145	Median	61.45				
204					SD	35.59	Std. Error of Mean	8.389				
205					Coefficient of Variation	0.582	Skewness	0.919				
206												
207	**Normal GOF Test**											
208					Shapiro Wilk Test Statistic	0.901	**Shapiro Wilk GOF Test**					

209				5% Shapiro Wilk Critical Value		0.897		Data appear Normal at 5% Significance Level				
210				Lilliefors Test Statistic		0.173		**Lilliefors GOF Test**				
211				5% Lilliefors Critical Value		0.202		Data appear Normal at 5% Significance Level				
212						Data appear Normal at 5% Significance Level						
213												
214						**Assuming Normal Distribution**						
215				**95% Normal UCL**				**95% UCLs (Adjusted for Skewness)**				
216				95% Student's-t UCL		75.79		95% Adjusted-CLT UCL (Chen-1995)				76.94
217								95% Modified-t UCL (Johnson-1978)				76.1
218												
219						**Gamma GOF Test**						
220				A-D Test Statistic		0.575		**Anderson-Darling Gamma GOF Test**				
221				5% A-D Critical Value		0.746		Detected data appear Gamma Distributed at 5% Significance Level				
222				K-S Test Statistic		0.149		**Kolmogorov-Smirnov Gamma GOF Test**				
223				5% K-S Critical Value		0.205		Detected data appear Gamma Distributed at 5% Significance Level				
224						Detected data appear Gamma Distributed at 5% Significance Level						
225												
226						**Gamma Statistics**						
227				k hat (MLE)		2.954		k star (bias corrected MLE)				2.498
228				Theta hat (MLE)		20.72		Theta star (bias corrected MLE)				24.5
229				nu hat (MLE)		106.3		nu star (bias corrected)				89.94
230				MLE Mean (bias corrected)		61.2		MLE Sd (bias corrected)				38.72
231								Approximate Chi Square Value (0.05)				69.07
232				Adjusted Level of Significance		0.0357		Adjusted Chi Square Value				67.32
233												
234						**Assuming Gamma Distribution**						
235				95% Approximate Gamma UCL (use when n>=50))		79.69		95% Adjusted Gamma UCL (use when n<50)				81.76
236												
237						**Lognormal GOF Test**						
238				Shapiro Wilk Test Statistic		0.899		**Shapiro Wilk Lognormal GOF Test**				
239				5% Shapiro Wilk Critical Value		0.897		Data appear Lognormal at 5% Significance Level				
240				Lilliefors Test Statistic		0.186		**Lilliefors Lognormal GOF Test**				
241				5% Lilliefors Critical Value		0.202		Data appear Lognormal at 5% Significance Level				
242						Data appear Lognormal at 5% Significance Level						
243												
244						**Lognormal Statistics**						
245				Minimum of Logged Data		2.856		Mean of logged Data				3.935
246				Maximum of Logged Data		4.977		SD of logged Data				0.652
247												
248						**Assuming Lognormal Distribution**						
249				95% H-UCL		89.35		90% Chebyshev (MVUE) UCL				92.77
250				95% Chebyshev (MVUE) UCL		106.5		97.5% Chebyshev (MVUE) UCL				125.6
251				99% Chebyshev (MVUE) UCL		163.1						
252												
253						**Nonparametric Distribution Free UCL Statistics**						
254						Data appear to follow a Discernible Distribution at 5% Significance Level						
255												
256						**Nonparametric Distribution Free UCLs**						
257				95% CLT UCL		75		95% Jackknife UCL				75.79
258				95% Standard Bootstrap UCL		74.52		95% Bootstrap-t UCL				78.47
259				95% Hall's Bootstrap UCL		84.87		95% Percentile Bootstrap UCL				74.79
260				95% BCA Bootstrap UCL		74.84						

	A	B	C	D	E	F	G	H	I	J	K	L
261				90% Chebyshev(Mean, Sd) UCL		86.37				95% Chebyshev(Mean, Sd) UCL		97.76
262				97.5% Chebyshev(Mean, Sd) UCL		113.6				99% Chebyshev(Mean, Sd) UCL		144.7
263												
264						**Suggested UCL to Use**						
265					95% Student's-t UCL	75.79						
266												
267												
268												
269												
270												
271												

Note: Suggestions regarding the selection of a 95% UCL are provided to help the user to select the most appropriate 95% UCL.

Recommendations are based upon data size, data distribution, and skewness.

These recommendations are based upon the results of the simulation studies summarized in Singh, Maichle, and Lee (2006).

However, simulations results will not cover all Real World data sets; for additional insight the user may want to consult a statistician.

Nonparametric UCL Statistics for Data Sets with Non-Detects

User Selected Options	BBH Area
Date/Time of Computation	ProUCL 5.112/18/2020 9:30:52 AM
From File	WorkSheet.xls
Full Precision	OFF
Confidence Coefficient	95%
Number of Bootstrap Operations	2000

Zinc

General Statistics

Total Number of Observations	75	Number of Distinct Observations	72
		Number of Missing Observations	0
Minimum	12.2	Mean	35.26
Maximum	220	Median	29.9
SD	25.59	Std. Error of Mean	2.955
Coefficient of Variation	0.726	Skewness	5.314
Mean of logged Data	3.437	SD of logged Data	0.454

Nonparametric Distribution Free UCL Statistics

Data do not follow a Discernible Distribution (0.05)

Assuming Normal Distribution

95% Normal UCL		95% UCLs (Adjusted for Skewness)	
95% Student's-t UCL	40.18	95% Adjusted-CLT UCL (Chen-1995)	42.05
		95% Modified-t UCL (Johnson-1978)	40.48

Nonparametric Distribution Free UCLs

95% CLT UCL	40.12	95% Jackknife UCL	40.18
95% Standard Bootstrap UCL	40.16	95% Bootstrap-t UCL	43.78
95% Hall's Bootstrap UCL	62.52	95% Percentile Bootstrap UCL	40.8
95% BCA Bootstrap UCL	42.72		
90% Chebyshev(Mean, Sd) UCL	44.12	95% Chebyshev(Mean, Sd) UCL	48.14
97.5% Chebyshev(Mean, Sd) UCL	53.71	99% Chebyshev(Mean, Sd) UCL	64.66

Suggested UCL to Use

95% Student's-t UCL	40.18	or 95% Modified-t UCL	40.48

Note: Suggestions regarding the selection of a 95% UCL are provided to help the user to select the most appropriate 95% UCL.

Recommendations are based upon data size, data distribution, and skewness.

These recommendations are based upon the results of the simulation studies summarized in Singh, Maichle, and Lee (2006).

However, simulations results will not cover all Real World data sets; for additional insight the user may want to consult a statistician.

Nonparametric UCL Statistics for Data Sets with Non-Detects

User Selected Options	BBH Area
Date/Time of Computation	ProUCL 5.112/18/2020 9:35:48 AM
From File	WorkSheet.xls
Full Precision	OFF
Confidence Coefficient	95%
Number of Bootstrap Operations	2000

Mercury

General Statistics

Total Number of Observations	113	Number of Distinct Observations	17
Number of Detects	20	Number of Non-Detects	93
Number of Distinct Detects	16	Number of Distinct Non-Detects	1
Minimum Detect	0.11	Minimum Non-Detect	0.1
Maximum Detect	0.78	Maximum Non-Detect	0.1
Variance Detects	0.0544	Percent Non-Detects	82.3%
Mean Detects	0.313	SD Detects	0.233
Median Detects	0.195	CV Detects	0.745
Skewness Detects	1.17	Kurtosis Detects	-0.132
Mean of Logged Detects	-1.391	SD of Logged Detects	0.669

Nonparametric Distribution Free UCL Statistics

Data do not follow a Discernible Distribution at 5% Significance Level

Kaplan-Meier (KM) Statistics using Normal Critical Values and other Nonparametric UCLs

Mean	0.138	Standard Error of Mean	0.0121
SD	0.126	95% KM (BCA) UCL	0.158
95% KM (t) UCL	0.158	95% KM (Percentile Bootstrap) UCL	0.157
95% KM (z) UCL	0.158	95% KM Bootstrap t UCL	0.168
90% KM Chebyshev UCL	0.174	95% KM Chebyshev UCL	0.191
97.5% KM Chebyshev UCL	0.213	99% KM Chebyshev UCL	0.258

Statistics using KM estimates on Logged Data and Assuming Lognormal Distribution

KM SD (logged)	0.443	95% Critical H Value (KM-Log)	1.803
KM Mean (logged)	-2.141	KM Geo Mean	0.118
KM Standard Error of Mean (logged)	0.0428	95% H-UCL (KM -Log)	0.14

Suggested UCL to Use

95% KM (Chebyshev) UCL 0.191

Note: Suggestions regarding the selection of a 95% UCL are provided to help the user to select the most appropriate 95% UCL.

Recommendations are based upon data size, data distribution, and skewness.

These recommendations are based upon the results of the simulation studies summarized in Singh, Maichle, and Lee (2006).

However, simulations results will not cover all Real World data sets; for additional insight the user may want to consult a statistician.

1	**Lognormal UCL Statistics for Data Sets with Non-Detects**	
2		
3	User Selected Options	Central Maintenance Shop Area
4	Date/Time of Computation	ProUCL 5.112/9/2020 11:49:16 AM
5	From File	WorkSheet.xls
6	Full Precision	OFF
7	Confidence Coefficient	95%
8	Number of Bootstrap Operations	2000
9		
10	**Total PCBs**	
11		
12	**General Statistics**	

13	Total Number of Observations	68	Number of Distinct Observations	10
14	Number of Detects	9	Number of Non-Detects	59
15	Number of Distinct Detects	9	Number of Distinct Non-Detects	1
16	Minimum Detect	0.024	Minimum Non-Detect	0.02
17	Maximum Detect	0.3	Maximum Non-Detect	0.02
18	Variance Detects	0.0093	Percent Non-Detects	86.76%
19	Mean Detects	0.0883	SD Detects	0.0964
20	Median Detects	0.054	CV Detects	1.092
21	Skewness Detects	1.773	Kurtosis Detects	2.305
22	Mean of Logged Detects	-2.844	SD of Logged Detects	0.909
23				
24	**Lognormal GOF Test on Detected Observations Only**			
25	Shapiro Wilk Test Statistic	0.862	**Shapiro Wilk GOF Test**	
26	5% Shapiro Wilk Critical Value	0.829	Detected Data appear Lognormal at 5% Significance Level	
27	Lilliefors Test Statistic	0.212	**Lilliefors GOF Test**	
28	5% Lilliefors Critical Value	0.274	Detected Data appear Lognormal at 5% Significance Level	
29	**Detected Data appear Lognormal at 5% Significance Level**			
30				
31	**Lognormal ROS Statistics Using Imputed Non-Detects**			
32	Mean in Original Scale	0.0136	Mean in Log Scale	-6.933
33	SD in Original Scale	0.0446	SD in Log Scale	2.504
34	Geometric d_mean	9.7539E-4	95% Percentile Bootstrap UCL	0.0232
35	95% t UCL (assumes normality of ROS data)	0.0226	95% BCA Bootstrap UCL	0.0283
36	95% Bootstrap t UCL	0.0404	95% H-UCL (Log ROS)	0.0569
37				
38	**Statistics using KM estimates on Logged Data and Assuming Lognormal Distribution**			
39	KM Mean (logged)	-3.771	KM Geo Mean	0.023
40	KM SD (logged)	0.478	95% Critical H Value (KM-Log)	1.854
41	KM Standard Error of Mean (logged)	0.0614	95% H-UCL (KM -Log)	0.0288
42				
56				

UCL Statistics for Data Sets with Non-Detects

User Selected Options	Hydraulic Barker Area Record Samples
Date/Time of Computation	ProUCL 5.112/8/2020 3:04:22 PM
From File	WorkSheet.xls
Full Precision	OFF
Confidence Coefficient	95%
Number of Bootstrap Operations	2000

Copper

General Statistics

Total Number of Observations	18	Number of Distinct Observations	18
		Number of Missing Observations	0
Minimum	9.64	Mean	33.61
Maximum	64.4	Median	29.6
SD	18.32	Std. Error of Mean	4.317
Coefficient of Variation	0.545	Skewness	0.281

Normal GOF Test

Shapiro Wilk Test Statistic	0.933	**Shapiro Wilk GOF Test**
5% Shapiro Wilk Critical Value	0.897	Data appear Normal at 5% Significance Level
Lilliefors Test Statistic	0.136	**Lilliefors GOF Test**
5% Lilliefors Critical Value	0.202	Data appear Normal at 5% Significance Level

Data appear Normal at 5% Significance Level

Assuming Normal Distribution

95% Normal UCL		95% UCLs (Adjusted for Skewness)	
95% Student's-t UCL	41.12	95% Adjusted-CLT UCL (Chen-1995)	41.02
		95% Modified-t UCL (Johnson-1978)	41.17

Gamma GOF Test

A-D Test Statistic	0.432	**Anderson-Darling Gamma GOF Test**
5% A-D Critical Value	0.746	Detected data appear Gamma Distributed at 5% Significance Level
K-S Test Statistic	0.147	**Kolmogorov-Smirnov Gamma GOF Test**
5% K-S Critical Value	0.205	Detected data appear Gamma Distributed at 5% Significance Level

Detected data appear Gamma Distributed at 5% Significance Level

Gamma Statistics

k hat (MLE)	3.038	k star (bias corrected MLE)	2.569
Theta hat (MLE)	11.06	Theta star (bias corrected MLE)	13.09
nu hat (MLE)	109.4	nu star (bias corrected)	92.47
MLE Mean (bias corrected)	33.61	MLE Sd (bias corrected)	20.97
		Approximate Chi Square Value (0.05)	71.3
Adjusted Level of Significance	0.0357	Adjusted Chi Square Value	69.51

Assuming Gamma Distribution

95% Approximate Gamma UCL (use when n>=50))	43.6	95% Adjusted Gamma UCL (use when n<50)	44.71

Lognormal GOF Test

Shapiro Wilk Test Statistic	0.904	**Shapiro Wilk Lognormal GOF Test**

53				5% Shapiro Wilk Critical Value		0.897	Data appear Lognormal at 5% Significance Level					
54				Lilliefors Test Statistic		0.15	**Lilliefors Lognormal GOF Test**					
55				5% Lilliefors Critical Value		0.202	Data appear Lognormal at 5% Significance Level					
56	Data appear Lognormal at 5% Significance Level											
57												
58	**Lognormal Statistics**											
59				Minimum of Logged Data		2.266	Mean of logged Data					3.341
60				Maximum of Logged Data		4.165	SD of logged Data					0.647
61												
62	**Assuming Lognormal Distribution**											
63				95% H-UCL		49.05	90% Chebyshev (MVUE) UCL					50.98
64				95% Chebyshev (MVUE) UCL		58.49	97.5% Chebyshev (MVUE) UCL					68.93
65				99% Chebyshev (MVUE) UCL		89.43						
66												
67	**Nonparametric Distribution Free UCL Statistics**											
68	Data appear to follow a Discernible Distribution at 5% Significance Level											
69												
70	**Nonparametric Distribution Free UCLs**											
71				95% CLT UCL		40.71	95% Jackknife UCL					41.12
72				95% Standard Bootstrap UCL		40.49	95% Bootstrap-t UCL					41.85
73				95% Hall's Bootstrap UCL		41.43	95% Percentile Bootstrap UCL					40.76
74				95% BCA Bootstrap UCL		40.76						
75				90% Chebyshev(Mean, Sd) UCL		46.56	95% Chebyshev(Mean, Sd) UCL					52.43
76				97.5% Chebyshev(Mean, Sd) UCL		60.57	99% Chebyshev(Mean, Sd) UCL					76.57
77												
78	**Suggested UCL to Use**											
79				95% Student's-t UCL		41.12						
80												
81	Note: Suggestions regarding the selection of a 95% UCL are provided to help the user to select the most appropriate 95% UCL.											
82	Recommendations are based upon data size, data distribution, and skewness.											
83	These recommendations are based upon the results of the simulation studies summarized in Singh, Maichle, and Lee (2006).											
84	However, simulations results will not cover all Real World data sets; for additional insight the user may want to consult a statistician.											
85												
86	**Mercury**											
87												
88	**General Statistics**											
89				Total Number of Observations		18	Number of Distinct Observations					8
90				Number of Detects		8	Number of Non-Detects					10
91				Number of Distinct Detects		7	Number of Distinct Non-Detects					1
92				Minimum Detect		0.076	Minimum Non-Detect					0.07
93				Maximum Detect		0.34	Maximum Non-Detect					0.07
94				Variance Detects		0.0079	Percent Non-Detects					55.56%
95				Mean Detects		0.165	SD Detects					0.0889
96				Median Detects		0.17	CV Detects					0.538
97				Skewness Detects		0.977	Kurtosis Detects					1.094
98				Mean of Logged Detects		-1.926	SD of Logged Detects					0.541
99												
100	**Normal GOF Test on Detects Only**											
101				Shapiro Wilk Test Statistic		0.874	**Shapiro Wilk GOF Test**					
102				5% Shapiro Wilk Critical Value		0.818	Detected Data appear Normal at 5% Significance Level					
103				Lilliefors Test Statistic		0.223	**Lilliefors GOF Test**					
104				5% Lilliefors Critical Value		0.283	Detected Data appear Normal at 5% Significance Level					

105	Detected Data appear Normal at 5% Significance Level											
106												
107	Kaplan-Meier (KM) Statistics using Normal Critical Values and other Nonparametric UCLs											
108					KM Mean	0.112			KM Standard Error of Mean	0.0184		
109					KM SD	0.0729			95% KM (BCA) UCL	0.144		
110					95% KM (t) UCL	0.144			95% KM (Percentile Bootstrap) UCL	0.142		
111					95% KM (z) UCL	0.143			95% KM Bootstrap t UCL	0.158		
112					90% KM Chebyshev UCL	0.167			95% KM Chebyshev UCL	0.192		
113					97.5% KM Chebyshev UCL	0.227			99% KM Chebyshev UCL	0.295		
114												
115	Gamma GOF Tests on Detected Observations Only											
116					A-D Test Statistic	0.448			Anderson-Darling GOF Test			
117					5% A-D Critical Value	0.719			Detected data appear Gamma Distributed at 5% Significance Level			
118					K-S Test Statistic	0.222			Kolmogorov-Smirnov GOF			
119					5% K-S Critical Value	0.295			Detected data appear Gamma Distributed at 5% Significance Level			
120	Detected data appear Gamma Distributed at 5% Significance Level											
121												
122	Gamma Statistics on Detected Data Only											
123					k hat (MLE)	4.122			k star (bias corrected MLE)	2.66		
124					Theta hat (MLE)	0.0401			Theta star (bias corrected MLE)	0.0621		
125					nu hat (MLE)	65.96			nu star (bias corrected)	42.56		
126					Mean (detects)	0.165						
127												
128	Gamma ROS Statistics using Imputed Non-Detects											
129	GROS may not be used when data set has > 50% NDs with many tied observations at multiple DLs											
130	GROS may not be used when kstar of detects is small such as <1.0, especially when the sample size is small (e.g., <15-20)											
131	For such situations, GROS method may yield incorrect values of UCLs and BTVs											
132	This is especially true when the sample size is small.											
133	For gamma distributed detected data, BTVs and UCLs may be computed using gamma distribution on KM estimates											
134					Minimum	0.01			Mean	0.0805		
135					Maximum	0.34			Median	0.0231		
136					SD	0.0968			CV	1.203		
137					k hat (MLE)	0.741			k star (bias corrected MLE)	0.654		
138					Theta hat (MLE)	0.109			Theta star (bias corrected MLE)	0.123		
139					nu hat (MLE)	26.67			nu star (bias corrected)	23.56		
140					Adjusted Level of Significance (β)	0.0357						
141					Approximate Chi Square Value (23.56, α)	13.51			Adjusted Chi Square Value (23.56, β)	12.78		
142					95% Gamma Approximate UCL (use when n>=50)	0.14			95% Gamma Adjusted UCL (use when n<50)	0.148		
143												
144	Estimates of Gamma Parameters using KM Estimates											
145					Mean (KM)	0.112			SD (KM)	0.0729		
146					Variance (KM)	0.00531			SE of Mean (KM)	0.0184		
147					k hat (KM)	2.375			k star (KM)	2.016		
148					nu hat (KM)	85.5			nu star (KM)	72.59		
149					theta hat (KM)	0.0473			theta star (KM)	0.0557		
150					80% gamma percentile (KM)	0.168			90% gamma percentile (KM)	0.218		
151					95% gamma percentile (KM)	0.266			99% gamma percentile (KM)	0.372		
152												
153	Gamma Kaplan-Meier (KM) Statistics											
154					Approximate Chi Square Value (72.59, α)	53.97			Adjusted Chi Square Value (72.59, β)	52.43		
155					95% Gamma Approximate KM-UCL (use when n>=50)	0.151			95% Gamma Adjusted KM-UCL (use when n<50)	0.156		
156												

	A	B	C	D	E	F	G	H	I	J	K	L
157	**Lognormal GOF Test on Detected Observations Only**											
158					Shapiro Wilk Test Statistic	0.898	**Shapiro Wilk GOF Test**					
159					5% Shapiro Wilk Critical Value	0.818	Detected Data appear Lognormal at 5% Significance Level					
160					Lilliefors Test Statistic	0.21	**Lilliefors GOF Test**					
161					5% Lilliefors Critical Value	0.283	Detected Data appear Lognormal at 5% Significance Level					
162	Detected Data appear Lognormal at 5% Significance Level											
163												
164	**Lognormal ROS Statistics Using Imputed Non-Detects**											
165					Mean in Original Scale	0.0912	Mean in Log Scale	-2.845				
166					SD in Original Scale	0.0896	SD in Log Scale	1.007				
167					95% t UCL (assumes normality of ROS data)	0.128	95% Percentile Bootstrap UCL	0.126				
168					95% BCA Bootstrap UCL	0.131	95% Bootstrap t UCL	0.141				
169					95% H-UCL (Log ROS)	0.184						
170												
171	**Statistics using KM estimates on Logged Data and Assuming Lognormal Distribution**											
172					KM Mean (logged)	-2.334	KM Geo Mean	0.0969				
173					KM SD (logged)	0.497	95% Critical H Value (KM-Log)	2.018				
174					KM Standard Error of Mean (logged)	0.125	95% H-UCL (KM -Log)	0.14				
175					KM SD (logged)	0.497	95% Critical H Value (KM-Log)	2.018				
176					KM Standard Error of Mean (logged)	0.125						
177												
178	**DL/2 Statistics**											
179	**DL/2 Normal**						**DL/2 Log-Transformed**					
180					Mean in Original Scale	0.0929	Mean in Log Scale	-2.719				
181					SD in Original Scale	0.0877	SD in Log Scale	0.808				
182					95% t UCL (Assumes normality)	0.129	95% H-Stat UCL	0.145				
183	DL/2 is not a recommended method, provided for comparisons and historical reasons											
184												
185	**Nonparametric Distribution Free UCL Statistics**											
186	Detected Data appear Normal Distributed at 5% Significance Level											
187												
188	**Suggested UCL to Use**											
189					95% KM (t) UCL	0.144						
190												
191	Note: Suggestions regarding the selection of a 95% UCL are provided to help the user to select the most appropriate 95% UCL.											
192	Recommendations are based upon data size, data distribution, and skewness.											
193	These recommendations are based upon the results of the simulation studies summarized in Singh, Maichle, and Lee (2006).											
194	However, simulations results will not cover all Real World data sets; for additional insight the user may want to consult a statistician.											
195												
196												
197	**Zinc**											
198												
199	**General Statistics**											
200					Total Number of Observations	18	Number of Distinct Observations	18				
201							Number of Missing Observations	0				
202					Minimum	17.4	Mean	61.2				
203					Maximum	145	Median	61.45				
204					SD	35.59	Std. Error of Mean	8.389				
205					Coefficient of Variation	0.582	Skewness	0.919				
206												
207	**Normal GOF Test**											
208					Shapiro Wilk Test Statistic	0.901	**Shapiro Wilk GOF Test**					

209				5% Shapiro Wilk Critical Value		0.897		Data appear Normal at 5% Significance Level				
210				Lilliefors Test Statistic		0.173		**Lilliefors GOF Test**				
211				5% Lilliefors Critical Value		0.202		Data appear Normal at 5% Significance Level				
212						Data appear Normal at 5% Significance Level						
213												
214						**Assuming Normal Distribution**						
215				**95% Normal UCL**				**95% UCLs (Adjusted for Skewness)**				
216				95% Student's-t UCL		75.79		95% Adjusted-CLT UCL (Chen-1995)				76.94
217								95% Modified-t UCL (Johnson-1978)				76.1
218												
219						**Gamma GOF Test**						
220				A-D Test Statistic		0.575		**Anderson-Darling Gamma GOF Test**				
221				5% A-D Critical Value		0.746		Detected data appear Gamma Distributed at 5% Significance Level				
222				K-S Test Statistic		0.149		**Kolmogorov-Smirnov Gamma GOF Test**				
223				5% K-S Critical Value		0.205		Detected data appear Gamma Distributed at 5% Significance Level				
224						Detected data appear Gamma Distributed at 5% Significance Level						
225												
226						**Gamma Statistics**						
227				k hat (MLE)		2.954		k star (bias corrected MLE)				2.498
228				Theta hat (MLE)		20.72		Theta star (bias corrected MLE)				24.5
229				nu hat (MLE)		106.3		nu star (bias corrected)				89.94
230				MLE Mean (bias corrected)		61.2		MLE Sd (bias corrected)				38.72
231								Approximate Chi Square Value (0.05)				69.07
232				Adjusted Level of Significance		0.0357		Adjusted Chi Square Value				67.32
233												
234						**Assuming Gamma Distribution**						
235				95% Approximate Gamma UCL (use when n>=50))		79.69		95% Adjusted Gamma UCL (use when n<50)				81.76
236												
237						**Lognormal GOF Test**						
238				Shapiro Wilk Test Statistic		0.899		**Shapiro Wilk Lognormal GOF Test**				
239				5% Shapiro Wilk Critical Value		0.897		Data appear Lognormal at 5% Significance Level				
240				Lilliefors Test Statistic		0.186		**Lilliefors Lognormal GOF Test**				
241				5% Lilliefors Critical Value		0.202		Data appear Lognormal at 5% Significance Level				
242						Data appear Lognormal at 5% Significance Level						
243												
244						**Lognormal Statistics**						
245				Minimum of Logged Data		2.856		Mean of logged Data				3.935
246				Maximum of Logged Data		4.977		SD of logged Data				0.652
247												
248						**Assuming Lognormal Distribution**						
249				95% H-UCL		89.35		90% Chebyshev (MVUE) UCL				92.77
250				95% Chebyshev (MVUE) UCL		106.5		97.5% Chebyshev (MVUE) UCL				125.6
251				99% Chebyshev (MVUE) UCL		163.1						
252												
253						**Nonparametric Distribution Free UCL Statistics**						
254						Data appear to follow a Discernible Distribution at 5% Significance Level						
255												
256						**Nonparametric Distribution Free UCLs**						
257				95% CLT UCL		75		95% Jackknife UCL				75.79
258				95% Standard Bootstrap UCL		74.52		95% Bootstrap-t UCL				78.47
259				95% Hall's Bootstrap UCL		84.87		95% Percentile Bootstrap UCL				74.79
260				95% BCA Bootstrap UCL		74.84						

	A	B	C	D	E	F	G	H	I	J	K	L
261				90% Chebyshev(Mean, Sd) UCL		86.37				95% Chebyshev(Mean, Sd) UCL		97.76
262				97.5% Chebyshev(Mean, Sd) UCL		113.6				99% Chebyshev(Mean, Sd) UCL		144.7
263												
264						**Suggested UCL to Use**						
265					95% Student's-t UCL	75.79						
266												
267												
268												
269												
270												
271												

Note: Suggestions regarding the selection of a 95% UCL are provided to help the user to select the most appropriate 95% UCL.

Recommendations are based upon data size, data distribution, and skewness.

These recommendations are based upon the results of the simulation studies summarized in Singh, Maichle, and Lee (2006).

However, simulations results will not cover all Real World data sets; for additional insight the user may want to consult a statistician.

APPENDIX F

Groundwater pH Monitoring Data Collected during CM Removal

F. Groundwater pH Monitoring Conducted during CM Removal

This appendix presents groundwater pH monitoring data collected throughout the crushed material (CM) removal project, conducted in general accordance with the pH Monitoring Plan included as Appendix E to the Interim Action Work Plan (Work Plan; Aspect, 2019).

F.1.1. pH Monitoring Methods

As required by the CM Removal Plan of Operations (K-C, 2018), the CM was removed from 17 CM Excavation Sequencing Areas (Areas), arranged in three "rows" denoted Eastern Areas, Central Areas, and Western Areas based on their position on the Site, as follows:

- The Eastern Areas were, from south to north, A1, B1, F, G, L, and M (Figure F1)
- The Central Areas were, from south to north, A2, B2, E, H, K, and N (Figure F2)
- The Western Areas were, from south to north, C, D, I, J, and O (Figure F3)

CM removal was conducted in the Eastern Areas, followed by the Central Areas, followed by the Western Areas, except for minor areas of CM serving as haul roads and remaining beneath part of the eastern fence line until the last phases of the project.

Groundwater across the Site flows generally from east to west with discharge to the East Waterway. Monitoring was conducted in existing monitoring wells located downgradient (west) of an Area undergoing CM removal to assess whether that action created a pH increase in groundwater that posed a risk of migration to the East Waterway.

For each Area, two sets of wells were established in the pH Monitoring Plan: "proximal wells" positioned as close as possible downgradient (west) of the Area, and "downgradient wells" located downgradient of the proximal wells. Due to decommissioning of monitoring wells as the interim action or CM removal projects progressed, the following changes to wells monitored were implemented during the monitoring program, following discussion with and approval by Washington State Department of Ecology (Ecology):

- For monitoring of Eastern Area G, downgradient well GF9-MW-1 was not found in the field. Adjacent well GF9-MW-2, located approximately 25 feet south of it, was monitored to achieve coverage (Figure F1).
- For monitoring of Western Area C, well MW-1 replaced proximal wells PM-MW-7, REC7-MW-3, and UST68-MW-5 (Figure F3).
- For monitoring of Western Area D, wells UST71-MW-102 and BA6-MW-101 replaced proximal wells UST71-MW-101, UST71-MW-104, and BA-MW-5 (Figure F3).

As required by the pH Monitoring Plan, Ecology evaluated the pH data being collected during CM removal and agreed that no change to the proposed Area K proximal wells TM-MW-5 and LP-MW-1 was warranted based on the lack of other suitably located wells and lack of pH impact observed in monitoring through the first 3 months of CM removal, including all of the Eastern Areas.

Figures F1, F2, and F3 depict the proximal wells (blue-highlighted) and downgradient wells (orange-highlighted) monitored for the Eastern, Central, and Western Areas, respectively. The wells monitored for each Area are also included with their data in Tables F-1 through F-17.

Prior to the start of CM removal in each Area, monitoring was conducted in designated proximal and downgradient wells three times within a 1-week or longer period to document the baseline pH condition, defined as the average of the three pH measurements. Throughout the subsequent CM removal in an Area, and for a period of 3 weeks following its completion, pH monitoring was conducted at least weekly in the proximal wells. When CM excavation was occurring in the first Areas (A1 and B1), pH monitoring was conducted daily as required by the pH Monitoring Plan. Based on that initial dataset, Ecology agreed to maintain the weekly monitoring frequency unless CM was observed beneath the water table during its removal in a specific Area. Ultimately, CM was not observed beneath the water table[1] during the removal project, except in localized subsurface structures (e.g., vaults) that were generally isolated from the surrounding subsurface, and around the LP-MW-1 well location as described in Section F.1.2.1 below.

A "trigger pH" value was defined for each well as the baseline pH value plus 0.5 pH unit. If, during or following CM removal in an Area, groundwater pH in a proximal monitoring well was observed to increase and exceed the trigger pH for a period of 3 weeks, it would have triggered daily monitoring of the proximal wells and the start of monitoring in the downgradient wells for that Area. If groundwater pH was observed to increase and exceed the trigger pH for 1 week at the downgradient wells, K-C would have notified Ecology to discuss the situation and decide whether to implement a contingency remediation action to achieve protection of the East Waterway. The pH Monitoring Plan provides additional details regarding the pH monitoring program and the contingency action decision process.

F.1.2. pH Monitoring Results

Monitoring of 35 proximal wells over more than 4 months of CM removal covering approximately 32 acres documented no exceedances of a trigger pH value attributable to the CM removal action (Tables F-1 through F-17). Well LP-MW-1 did record a substantial pH increase, but it was not related to the CM removal action as discussed in the following section.

[1] Largely because CM removal was conducted during dry-season conditions when the water table was low.

The collective pH monitoring data demonstrate that removing the more than 200,000 tons of CM from the Site did not create migration of high-pH groundwater toward the East Waterway.

F.1.2.1. Well LP-MW-1

Between September 22 and 28, 2020, a dramatic groundwater pH increase, from pH 7.20 to pH 9.72, was measured in well LP-MW-1, which is located on the boundary between Western Areas I and J and within the footprint of the former log pond (Figure F2). As per the pH Monitoring Plan, LP-MW-1 was a proximal well to be monitored during CM removal in Areas H and K east of it. The pH spike was confirmed with a second measurement on September 29—a reading of pH 10.52, which was nearly 3 pH units greater than the pH 7.62 trigger value based on the well's baseline readings (Table F-10). However, collective information indicates that the pH spike was a result of a rapidly rising groundwater level submerging the base of the CM in that area, in response to a large-scale rain event; it was not due to CM removal activities.

As discussed in Aspect (2017) and again in the pH Monitoring Plan, well LP-MW-1 has historically had the highest pH readings measured on the Site, which is due to the facts that (1) its well screen is shallow enough that it intercepts the thick layer of CM in that area and (2) the log pond fill has low enough permeability that precipitation does not infiltrate there nearly as readily as the dredge fill outside of the log pond. Consequently, when the seasonal rains begin, the groundwater level within the log pond footprint "mounds up" because infiltration is so slow. The mounded groundwater submerges CM within the well's screened interval, which creates very high pH groundwater in the shallow depth interval screened by LP-MW-1.

Between August 31 and September 22, 2020, the pH readings in LP-MW-1, collected prior to and then during CM removal in Areas H and K, ranged from 7.0 to 7.5—near-neutral values typical of the water table being below the base of the CM in that area. For example, on September 3, the water level was 7.0 feet below the well's top of casing, confirming it was below the base of the CM. Between September 24 and 26, the Site received approximately 1.6 inches of rain. On September 28, the pH in LP-MW-1 had risen to 9.7; the water level was not measured that day. On September 29, when a pH of 10.5 was measured, the water level had risen to 3.3 feet below top of casing. Comparing the September 3 and September 29 readings, the water level rose about 3.7 feet, submerging the base of the CM, and the pH increased about 3.3 units in response. Figure F4 illustrates the relationship of water level (relative to the base of the CM) and pH at well LP-MW-1, with data going back to 2013.

The water level-pH effect was clearly observed at well LP-MW-1 both in 2016 and 2017, and the September 2020 data are a continuation of that seasonal effect—a result of the large precipitation event that preceded it and not the CM removal activities occurring east of it. That conclusion is further supported by the fact that pH changed by 0.3 pH units or less in each of the other six wells monitored on September 28 that are located outside of the log pond footprint: wells BA-MW-2, BA-MW-3, and CN-MW-101 increased slightly, while wells SHB-MW-102, PM-MW-4, and TM-MW-5 decreased slightly, relative to their prior measurement (Tables F-8, F-9, F-10, and F-12).

TABLES

Table F-1. Groundwater pH Data for Excavation Sequencing Area A1

Project No. 110207, Everett, Washington

	pH Reading in Standard Units				
	Proximal Wells		Downgradient Wells to Monitor if pH Increase >0.5 unit is Observed in Proximal Well(s)		
Date	BCT-MW-104	BCT-MW-106	REC7-MW-3	UST68-MW-5	REC7-MW-4
Baseline Readings for this Sequencing Area (3x in 1 week)					
6/3/2020	7.25	7.08		7.88	7.81
6/4/2020	7.34	7.18		7.93	7.95
6/5/2020	7.33	7.18		7.96	7.94
6/10/2020	7.24	7.12	7.53		7.77
6/11/2020			7.67		
6/12/2020			7.84		
Average Baseline	*7.29*	*7.14*	*7.68*	*7.92*	*7.87*
"Trigger pH"	***7.79***	***7.64***	***8.18***	***8.42***	***8.37***
First Areas A1 + B1: Daily Compliance Readings During CM Removal in this Sequencing Area					
6/30/2020	7.06	7.19			
7/1/2020	7.21	7.12			
7/6/2020	7.35	7.19			
7/7/2020	7.37	7.17			
7/8/2020	7.35	7.17			
Weekly (at least) Compliance Readings for 3 Weeks After CM Removal is Done in this Sequencing Area					
7/9/2020	7.44	7.12			
7/13/2020	7.40	7.18			
7/21/2020	7.52	7.16			
7/27/2020	7.43	7.14			
8/3/2020	7.38	7.10			

Notes

"Trigger pH" for proximal wells is the pH that, if exceeded for 3 weeks, triggers daily monitoring of proximal well and start monitoring of downgradient wells.

"Trigger pH" for downgradient wells is the pH that, if exceeded for 1 week, triggers consultation with Ecology regarding response action.

Table F-2. Groundwater pH Data for Excavation Sequencing Area B1

Project No. 110207, Everett, Washington

	pH Reading in Standard Units			
	Proximal Wells		Downgradient Wells to Monitor if pH Increase >0.5 unit is Observed in Proximal Well(s)	
Date	PM-MW-5	BCT-MW-108	PM-MW-2	PM-MW-4
Baseline Readings for this Sequencing Area (3x in 1 week)				
6/3/2020	10.74	11.02	7.65	10.11
6/4/2020	10.72	11.06	7.63	10.15
6/5/2020	10.72	11.04	7.63	10.16
Average Baseline	*10.73*	*11.04*	*7.64*	*10.14*
"Trigger pH"	***11.23***	***11.54***	***8.14***	***10.64***
First Areas A1 + B1: Daily Compliance Readings During CM Removal in this Sequencing Area				
6/30/2020	10.80	10.82		
7/1/2020	10.85	10.90		
7/6/2020	10.76	11.14		
7/7/2020	10.73	11.22		
7/8/2020	10.69	11.20		
7/9/2020	10.73	11.22		
7/10/2020	10.67	11.13		
7/13/2020	10.66	11.19		
Weekly (at least) Compliance Readings for 3 Weeks After CM Removal is Done in this Sequencing Area				
7/14/2020	10.68	11.14		
7/16/2020	10.68	11.20		
7/17/2020	10.58	11.11		
7/20/2020	10.57	11.04		
7/22/2020	10.54	11.11		
7/23/2020	10.48	11.08		
7/27/2020	10.55	11.09		
7/29/2020	10.53	11.03		
7/30/2020	10.54	11.06		
8/3/2020	10.41	11.05		
8/10/2020	10.40	11.01		

Notes

"Trigger pH" for proximal wells is the pH that, if exceeded for 3 weeks, triggers daily monitoring of proximal well and start monitoring of downgradient wells.

"Trigger pH" for downgradient wells is the pH that, if exceeded for 1 week, triggers consultation with Ecology regarding response action.

Table F-3. Groundwater pH Data for Excavation Sequencing Area F

Project No. 110207, Everett, Washington

	pH Reading in Standard Units				
	Proximal Wells		Downgradient Wells to Monitor if pH Increase >0.5 unit is Observed in Proximal Well(s)		
Date	AP-MW-1R	PM-MW-3	BA-MW-2	BA-MW-3	PM-MW-6
Baseline Readings for this Sequencing Area (3x in 1 week)					
6/10/2020	10.63		9.30	7.28	6.86
6/11/2020	10.44	9.52	9.32	7.34	7.05
6/12/2020	10.40	9.58	9.29	7.31	7.15
6/15/2020		9.46			
6/19/2020		9.20			
Average Baseline	*10.49*	*9.44*	*9.30*	*7.31*	*7.02*
"Trigger pH"	***10.99***	***9.94***	***9.80***	***7.81***	***7.52***
Weekly (at least) Compliance Readings During CM Removal in this Sequencing Area					
7/9/2020	10.37	8.98			
7/10/2020	10.41	9.22			
7/13/2020	10.35	8.91			
7/14/2020	10.27	8.59			
7/21/2020	10.34	8.07			
Weekly (at least) Compliance Readings for 3 Weeks After CM Removal is Done in this Sequencing Area					
7/27/2020	10.30	8.62			
8/3/2020	10.23	7.78			
8/10/2020	10.20	7.85			

Notes

"Trigger pH" for proximal wells is the pH that, if exceeded for 3 weeks, triggers daily monitoring of proximal well and start monitoring of downgradient wells.

"Trigger pH" for downgradient wells is the pH that, if exceeded for 1 week, triggers consultation with Ecology regarding response action.

Table F-4. Groundwater pH Data for Excavation Sequencing Area G

Project No. 110207, Everett, Washington

	pH Reading in Standard Units		
	Proximal Wells	Downgradient Wells to Monitor if pH Increase >0.5 unit is Observed in Proximal Well(s)	
Date	GF9-MW-3	GF9-MW-1	GF9-MW-2
Baseline Readings for this Sequencing Area (3x in 1 week)			
7/13/2020	6.90	Well not found. GF9-MW-2 is 24 ft from it.	
7/14/2020	6.91		
7/16/2020	6.88		11.70
7/17/2020	6.93		11.75
7/20/2020	6.91		11.83
Average Baseline	*6.91*		*11.76*
"Trigger pH"	***7.41***		***12.26***
Weekly (at least) Compliance Readings During CM Removal in this Sequencing Area			
7/21/2020	6.92		
8/3/2020	6.84		
8/10/2020	6.88		
8/17/2020	6.88		
Weekly (at least) Compliance Readings for 3 Weeks After CM Removal is Done in this Sequencing Area			
8/24/2020	6.92		
8/31/2020	6.88		
9/3/2020	6.92		
9/8/2020	6.92		

Notes

"Trigger pH" for proximal wells is the pH that, if exceeded for 3 weeks, triggers daily monitoring of proximal well and start monitoring of downgradient wells.

"Trigger pH" for downgradient wells is the pH that, if exceeded for 1 week, triggers consultation with Ecology regarding response action.

Table F-5. Groundwater pH Data for Excavation Sequencing Area L

Project No. 110207, Everett, Washington

	pH Reading in Standard Units			
	Proximal Wells		Downgradient Wells to Monitor if pH Increase >0.5 unit is Observed in Proximal Well(s)	
Date	UST29-MW-103	LP-MW-4	UST29-MW101	UST29-MW102
Baseline Readings for this Sequencing Area (3x in 1 week)				
7/13/2020	9.21	6.92		
7/14/2020	9.22	6.92		
7/16/2020	9.19	6.91	9.97	7.91
7/17/2020	9.21	6.90	10.01	7.91
7/20/2020	8.82	6.89	10.07	8.68
Average Baseline	*9.13*	*6.91*	*10.02*	*8.17*
"Trigger pH"	***9.63***	***7.41***	***10.52***	***8.67***
Weekly (at least) Compliance Readings During CM Removal in this Sequencing Area *(Daily if CM is observed below water table)*				
8/3/2020	8.68	6.89		
8/10/2020	8.66	6.91		
8/17/2020	8.29	6.98		
Weekly (at least) Compliance Readings for 3 Weeks After CM Removal is Done in this Sequencing Area				
8/24/2020	8.33	6.95		
8/31/2020	8.43	6.90		
9/3/2020	8.68	6.90		
9/8/2020	8.06	6.99		

Notes

No CM was observed below water table during removal.

"Trigger pH" for proximal wells is the pH that, if exceeded for 3 weeks, triggers daily monitoring of proximal well and start monitoring of downgradient wells.

"Trigger pH" for downgradient wells is the pH that, if exceeded for 1 week, triggers consultation with Ecology regarding response action.

Table F-6. Groundwater pH Data for Excavation Sequencing Area M

Project No. 110207, Everett, Washington

	pH Reading in Standard Units			
	Proximal Wells	Downgradient Wells to Monitor if pH Increase >0.5 unit is Observed in Proximal Well(s)		
Date	TM-MW-2	TM-MW-1	CN-MW-103	TM-MW-5
Baseline Readings for this Sequencing Area (3x in 1 week)				
7/14/2020	8.61			
7/16/2020	8.64	6.57	6.51	7.78
7/17/2020	8.66	6.58	6.48	7.79
7/20/2020	7.37	6.56	6.50	7.83
Average Baseline	*8.32*	*6.57*	*6.50*	*7.80*
"Trigger pH"	***8.82***	***7.07***	***7.00***	***8.30***
Weekly (at least) Compliance Readings During CM Removal in this Sequencing Area *(Daily if CM is observed below water table)*				
8/5/2020	7.29	6.63		
8/10/2020	7.32			
8/17/2020	7.26			
8/24/2020	7.22			
Weekly (at least) Compliance Readings for 3 Weeks After CM Removal is Done in this Sequencing Area				
8/31/2020	7.24			
9/8/2020	7.06			
9/14/2020	7.20			
9/22/2020	7.01			

Notes

"Trigger pH" for proximal wells is the pH that, if exceeded for 3 weeks, triggers daily monitoring of proximal well and start monitoring of downgradient wells.

"Trigger pH" for downgradient wells is the pH that, if exceeded for 1 week, triggers consultation with Ecology regarding response action.

Table F-7. Groundwater pH Data for Excavation Sequencing Area A2

Project No. 110207, Everett, Washington

	pH Reading in Standard Units				
	Proximal Wells			Downgradient Wells to Monitor if pH Increase >0.5 unit is Observed in Proximal Well(s)	
Date	UST68-MW-5	MW-2	REC7-MW-4	REC7-MW-3	MW-1
Baseline Readings for this Sequencing Area (3x in 1 week)					
8/10/2020	8.05	7.82	7.95	7.17	7.41
8/12/2020	8.08	7.88	7.96	7.60	7.43
8/13/2020	8.04	7.89	7.93	7.62	7.45
8/17/2020	7.99	7.72	7.85		
Average Baseline	*8.04*	*7.83*	*7.92*	*7.46*	*7.43*
"Trigger pH"	***8.54***	***8.33***	***8.42***	***7.96***	***7.93***
Weekly (at least) Compliance Readings During CM Removal in this Sequencing Area					
8/31/2020	7.92	7.77	7.87		
Weekly (at least) Compliance Readings for 3 Weeks After CM Removal is Done in this Sequencing Area					
9/8/2020	8.18	7.68	7.77		
9/14/2020	8.27	7.77	7.90		
9/21/2020	8.12				
9/22/2020	8.13	7.60	7.82		

Notes

"Trigger pH" for proximal wells is the pH that, if exceeded for 3 weeks, triggers daily monitoring of proximal well and start monitoring of downgradient wells.

"Trigger pH" for downgradient wells is the pH that, if exceeded for 1 week, triggers consultation with Ecology regarding response action.

Table F-8. Groundwater pH Data for Excavation Sequencing Area B2

Project No. 110207, Everett, Washington

	pH Reading in Standard Units		
	Proximal Wells	Downgradient Wells to Monitor if pH Increase >0.5 unit is Observed in Proximal Well(s)	
Date	PM-MW-4	REC7-MW-3	PM-MW-7
Baseline Readings for this Sequencing Area (3x in 1 week)			
8/10/2020	10.14	7.60	7.17
8/12/2020	10.18	7.60	7.15
8/13/2020	10.17	7.62	7.09
8/17/2020	9.86		
Average Baseline	*10.09*	*7.61*	*7.14*
"Trigger pH"	***10.59***	***8.11***	***7.64***
Weekly (at least) Compliance Readings During CM Removal in this Sequencing Area			
9/8/2020	9.79		
Weekly (at least) Compliance Readings for 3 Weeks After CM Removal is Done in this Sequencing Area			
9/14/2020	9.77		
9/22/2020	9.75		
9/28/2020	9.60		

Notes

"Trigger pH" for proximal wells is the pH that, if exceeded for 3 weeks, triggers daily monitoring of proximal well and start monitoring of downgradient wells.

"Trigger pH" for downgradient wells is the pH that, if exceeded for 1 week, triggers consultation with Ecology regarding response action.

Table F-9. Groundwater pH Data for Excavation Sequencing Area E

Project No. 110207, Everett, Washington

	pH Reading in Standard Units					
	Proximal Wells		Downgradient Wells to Monitor if pH Increase >0.5 unit is Observed in Proximal Well(s)			
Date	BA-MW-2	BA-MW-3	BA-MW-1	UST71-MW-104	UST71-MW-103	PM-MW-6
Baseline Readings for this Sequencing Area (3x in 1 week)						
8/26/2020	9.03	7.41	7.50	7.56	6.43	7.12
8/27/2020	9.05	7.44	7.49	7.58	6.46	7.11
8/28/2020	9.03	7.40	7.52	7.57	6.47	7.09
Average Baseline	*9.04*	*7.42*	*7.50*	*7.57*	*6.45*	*7.11*
"Trigger pH"	***9.54***	***7.92***	***8.00***	***8.07***	***6.95***	***7.61***
Weekly (at least) Compliance Readings During CM Removal in this Sequencing Area						
9/8/2020	8.88	7.25				
Weekly (at least) Compliance Readings for 3 Weeks After CM Removal is Done in this Sequencing Area						
9/14/2020	8.79	7.50				
9/22/2020	8.90	7.27				
9/28/2020	9.15	7.58				

Notes

"Trigger pH" for proximal wells is the pH that, if exceeded for 3 weeks, triggers daily monitoring of proximal well and start monitoring of downgradient wells.

"Trigger pH" for downgradient wells is the pH that, if exceeded for 1 week, triggers consultation with Ecology regarding response action.

Table F-10. Groundwater pH Data for Excavation Sequencing Area H

Project No. 110207, Everett, Washington

	pH Reading in Standard Units				
	Proximal Wells			Downgradient Wells to Monitor if pH Increase >0.5 unit is Observed in Proximal Well(s)	
Date	LP-MW-1	SHB-MW-102*	SHB-MW101	LP-MW-2	SHB-MW-2
Baseline Readings for this Sequencing Area (3x in 1 week)					
8/31/2020	7.04	7.28	6.84	6.52	6.69
9/2/2020	7.07	7.30	6.83	6.50	6.63
9/3/2020	7.24	7.31	6.82	6.54	6.61
Average Baseline	*7.12*	*7.30*	*6.83*	*6.52*	*6.64*
"Trigger pH"	***7.62***	***7.80***	***7.33***	***7.02***	***7.14***
Weekly (at least) Compliance Readings During CM Removal in this Sequencing Area					
9/14/2020	7.52	7.35	7.52		
Weekly (at least) Compliance Readings for 3 Weeks After CM Removal is Done in this Sequencing Area					
9/22/2020	7.20	7.30			
9/28/2020	9.72	7.20			
9/29/2020	10.52	inaccessible*	6.85		
10/1/2020	10.84		6.85	6.71	6.60
10/2/2020	10.85				
10/5/2020	11.34		6.87	6.95	7.13
10/7/2020	11.30		6.98	6.97	7.06
10/9/2020	11.38		6.99	7.02	7.13
10/12/2020	11.60		7.07	6.57	6.66

Notes

Red highlighted values exceed Trigger pH value.

*: The driller decommissioning wells in an adjacent area inadvertently decommissioned this well on 9/29. Well SHB-MW-101, located 25 feet from this well, is substituted as a proximal well for the rest of the monitoring.

"Trigger pH" for proximal wells is the pH that, if exceeded for 3 weeks, triggers daily monitoring of proximal well and start monitoring of downgradient wells.

"Trigger pH" for downgradient wells is the pH that, if exceeded for 1 week, triggers consultation with Ecology regarding response action.

Table F-11. Groundwater pH Data for Excavation Sequencing Area K

Project No. 110207, Everett, Washington

	pH Reading in Standard Units				
	Proximal Wells		Downgradient Wells to Monitor if pH Increase >0.5 unit is Observed in Proximal Well(s)		
Date	TM-MW-5	LP-MW-1	TM-MW-6	REC6-MW-2	MW-6
Baseline Readings for this Sequencing Area (3x in 1 week)					
9/8/2020	7.68	7.18	7.37	7.00	7.13
9/9/2020	7.49	7.27	7.34	7.02	7.14
9/10/2020	7.56	7.26	7.31	7.01	7.19
Average Baseline	*7.58*	*7.24*	*7.34*	*7.01*	*7.15*
"Trigger pH"	***8.08***	***7.74***	***7.84***	***7.51***	***7.65***
Weekly (at least) Compliance Readings During CM Removal in this Sequencing Area					
9/22/2020	7.60	7.20			
9/28/2020	7.50	9.72			
9/29/2020		10.52			
Weekly (at least) Compliance Readings for 3 Weeks After CM Removal is Done in this Sequencing Area					
10/1/2020	8.05	10.84	7.35	6.96	7.20
10/2/2020	7.45	10.85			
10/5/2020	7.43	11.24	7.52	7.22	7.29
10/7/2020	7.50	11.31	7.57	7.20	7.34
10/9/2020	7.41	11.38	7.55	7.18	7.32
10/12/2020	7.67	11.60	7.21	6.99	7.17

Notes

Red highlighted values exceed Trigger pH value.

"Trigger pH" for proximal wells is the pH that, if exceeded for 3 weeks, triggers daily monitoring of proximal well and start monitoring of downgradient wells.

"Trigger pH" for downgradient wells is the pH that, if exceeded for 1 week, triggers consultation with Ecology regarding response action.

Table F-12. Groundwater pH Data for Excavation Sequencing Area N

Project No. 110207, Everett, Washington

	pH Reading in Standard Units					
	Proximal Wells		Downgradient Wells to Monitor if pH Increase >0.5 unit is Observed in Proximal Well(s)			
Date	CN-MW-101	TM-MW-5	NRU-MW-102	NRS-MW-102	REC7-MW-2	TM-MW-6
Baseline Readings for this Sequencing Area (3x in 1 week)						
9/8/2020	6.52	7.68	7.12	6.56	6.85	7.37
9/9/2020	6.59	7.49	6.89	6.67	6.86	7.34
9/10/2020	6.56	7.56	6.91	6.54	6.89	7.31
Average Baseline	*6.56*	*7.58*	*6.97*	*6.59*	*6.87*	*7.34*
"Trigger pH"	***7.06***	***8.08***	***7.47***	***7.09***	***7.37***	***7.84***
Weekly (at least) Compliance Readings During CM Removal in this Sequencing Area						
9/28/2020	6.57	7.50				
10/1/2020		8.05				
10/2/2020	6.57	7.45				
Weekly (at least) Compliance Readings for 3 Weeks After CM Removal is Done in this Sequencing Area						
10/5/2020	6.56	7.41				
10/12/2020	6.50	7.67				
10/19/2020	6.56	7.38				

Notes

"Trigger pH" for proximal wells is the pH that, if exceeded for 3 weeks, triggers daily monitoring of proximal well and start monitoring of downgradient wells.

"Trigger pH" for downgradient wells is the pH that, if exceeded for 1 week, triggers consultation with Ecology regarding response action.

Table F-13. Groundwater pH Data for Excavation Sequencing Area C

Project No. 110207, Everett, Washington

	pH Reading in Standard Units			
	Proximal Wells			
Date	PM-MW-7*	REC7-MW-3*	UST68-MW-5*	MW-1
Baseline Readings for this Sequencing Area (3x in 1 week)				
9/21/2020	7.17	7.57	8.12	7.40
9/22/2020	7.16	7.60	8.13	7.43
9/23/2020	7.17	7.57	8.15	7.49
Average Baseline	*7.17*	*7.58*	*8.13*	*7.44*
"Trigger pH"	***7.67***	***8.08***	***8.63***	***7.94***
Weekly (at least) Compliance Readings During CM Removal in this Sequencing Area				
10/2/2020	inaccessible*	inaccessible*	inaccessible*	6.84
10/5/2020				6.88
Weekly (at least) Compliance Readings for 3 Weeks After CM Removal is Done in this Sequencing Area				
10/12/2020	inaccessible*	inaccessible*	inaccessible*	7.50
10/19/2020				6.79
10/28/2020				7.26

Notes

*: The driller decommissioning wells in an adjacent area inadvertently decommissioned these wells on 9/29. Therefore, well MW-1 has been substituted as a proximal well for the rest of the monitoring. Other adjacent wells were decommissioned for the OMS excavation.

"Trigger pH" for proximal wells is the pH that, if exceeded for 3 weeks, triggers daily monitoring of proximal well and start monitoring of downgradient wells.

"Trigger pH" for downgradient wells is the pH that, if exceeded for 1 week, triggers consultation with Ecology regarding response action.

Table F-14. Groundwater pH Data for Excavation Sequencing Area D

Project No. 110207, Everett, Washington

	pH Reading in Standard Units								
	Proximal Wells					Downgradient Wells to Monitor if pH Increase >0.5 unit is Observed in Proximal Well(s)			
Date	BA-MW-5*	UST71-MW-101*	UST71-MW-103*	UST71-MW-102	BA6-MW101	RCD-MW-101	UST70-MW-2	REC3-MW-1R	PM-MW-8
Baseline Readings for this Sequencing Area (3x in 1 week)									
9/21/2020	6.62	7.12	6.21			6.66	7.08	7.26	7.05
9/22/2020	6.62	7.14	6.24			6.68	7.12	7.24	7.07
9/23/2020	6.64	7.17	6.26			6.64	7.11	7.30	7.10
10/2/2020	inaccessible*	inaccessible*	inaccessible*	6.30	7.20				
10/5/2020				6.33	7.22				
10/6/2020				6.35	7.19				
Avg Baseline	*6.63*	*7.14*	*6.24*	*6.33*	*7.20*	*6.66*	*7.10*	*7.27*	*7.07*
"Trigger pH"	***7.13***	***7.64***	***6.74***	***6.83***	***7.70***	***7.16***	***7.60***	***7.77***	***7.57***
Weekly (at least) Compliance Readings During CM Removal in this Sequencing Area									
10/9/2020	inaccessible*	inaccessible*	inaccessible*	6.36	7.26				
Weekly (at least) Compliance Readings for 3 Weeks After CM Removal is Done in this Sequencing Area									
10/12/2020				Dry	7.07				
10/19/2020	inaccessible*	inaccessible*	inaccessible*	6.33	7.05				
10/28/2020				6.26	6.61				

Notes

*: Well UST71-MW-103 was located just within the CM footprint and required decommissioning to allow complete CM removal. However, the driller inadvertently also decommissioned nearby wells UST71-MW-101 and BA-MW-5 on 9/29. Consequently, adjacent non-shoreline wells UST71-MW-102 and BA6-MW-101 have been replaced as proximal wells.

"Trigger pH" for proximal wells is the pH that, if exceeded for 3 weeks, triggers daily monitoring of proximal well and start monitoring of downgradient wells.

"Trigger pH" for downgradient wells is the pH that, if exceeded for 1 week, triggers consultation with Ecology regarding response action.

Table F-15. Groundwater pH Data for Excavation Sequencing Area I

Project No. 110207, Everett, Washington

	pH Reading in Standard Units	
	Proximal Wells	
Date	LP-MW-2	SHB-MW-2
Baseline Readings for this Sequencing Area (3x in 1 week)		
10/5/2020	6.95	7.13
10/6/2020	6.92	7.14
10/7/2020	7.17	7.16
Average Baseline	*7.01*	*7.14*
"Trigger pH"	***7.51***	***7.64***
Weekly (at least) Compliance Readings During CM Removal in this Sequencing Area		
10/9/2020	7.02	7.13
10/12/2020	6.57	6.66
Weekly (at least) Compliance Readings for 3 Weeks After CM Removal is Done in this Sequencing Area		
10/19/2020	6.55	6.87
10/28/2020	6.65	6.89
11/2/2020	6.60	6.87

No Downgradient Wells

Notes

"Trigger pH" for proximal wells is the pH that, if exceeded for 3 weeks, triggers daily monitoring of proximal well and start monitoring of downgradient wells.

"Trigger pH" for downgradient wells is the pH that, if exceeded for 1 week, triggers consultation with Ecology regarding response action.

Table F-16. Groundwater pH Data for Excavation Sequencing Area J

Project No. 110207, Everett, Washington

	pH Reading in Standard Units			
	Proximal Wells			No Downgradient Wells
Date	TM-MW-6	REC6-MW-2	MW-6	
Baseline Readings for this Sequencing Area (3x in 1 week)				
10/1/2020	7.35	6.96	7.20	
10/5/2020	7.52	7.22	7.29	
10/7/2020	7.57	7.20	7.34	
10/9/2020	7.55	7.18	7.32	
Average Baseline	*7.50*	*7.14*	*7.29*	
"Trigger pH"	***8.00***	***7.64***	***7.79***	
Weekly (at least) Compliance Readings During CM Removal in this Sequencing Area				
10/12/2020	7.21	6.99	7.17	
10/19/2020	7.22	6.67	7.20	
Weekly (at least) Compliance Readings for 3 Weeks After CM Removal is Done in this Sequencing Area				
10/28/2020	7.18	6.66	7.22	
11/2/2020	7.15	6.67	7.10	
11/12/2020	7.18	6.75	7.06	

Notes

"Trigger pH" for proximal wells is the pH that, if exceeded for 3 weeks, triggers daily monitoring of proximal well and start monitoring of downgradient wells.

"Trigger pH" for downgradient wells is the pH that, if exceeded for 1 week, triggers consultation with Ecology regarding response action.

Table F-17. Groundwater pH Data for Excavation Sequencing Area O

Project No. 110207, Everett, Washington

	pH Reading in Standard Units			
	Proximal Wells			
Date	NRU-MW-102	NRS-MW-102	REC7-MW-2	TM-MW-6
Baseline Readings for this Sequencing Area (3x in 1 week)				
10/8/2020	6.96	7.05	6.99	7.54
10/9/2020	6.99	7.09	6.93	7.55
10/12/2020	7.04	6.91	6.64	7.21
Average Baseline	*7.00*	*7.02*	*6.85*	*7.43*
"Trigger pH"	***7.50***	***7.52***	***7.35***	***7.93***
Weekly (at least) Compliance Readings During CM Removal in this Sequencing Area				
10/19/2020	7.00	7.03	6.65	7.22
Weekly (at least) Compliance Readings for 3 Weeks After CM Removal is Done in this Sequencing Area				
10/28/2020	7.02	7.05	6.68	7.18
11/2/2020	6.96	6.92	6.66	7.15
11/12/2020	7.00	6.94	7.33	7.18

No Downgradient Wells

Notes

"Trigger pH" for proximal wells is the pH that, if exceeded for 3 weeks, triggers daily monitoring of proximal well and start monitoring of downgradient wells.

"Trigger pH" for downgradient wells is the pH that, if exceeded for 1 week, triggers consultation with Ecology regarding response action.

FIGURES

GIS Path: T:\projects_8\KimberlyClark\Env_Support_110207\Delivered\IA_Fall2020\Deliverable\F1 Wells Monitored for pH - East.mxd || Coordinate System: NAD 1983 StatePlane Washington North FIPS 4601 Feet || Date Saved: 2020-12-15 || User: truilen || Print Date: 2020-12-15

Proximal Well
Downgradient Well (Refer to text)
Monitoring Wells
Proposed Interim Action Area
CM Removal Sequencing Area (CM Removal Plan of Operations, July 2017)
Former Log Pond
Crushed Material Boundary
Upland Area Boundary

N

CN-MW-3
CN-MW-2
CN-MW-1
REC7-MW-1
NRP-MW-3
NRU-MW-102
MW-5
NRP-MW-2
NRU-MW-101
NRS-MW-101
NRS-MW-102
UG-MW-1
CN-MW-101
CN-MW-104
TM-MW-1
CN-MW-102
CN-MW-103
TM-MW-2
M
TM-MW-3
REC7-MW-2
TM-MW-5
TM-MW-6
TM-MW-4
REC6-MW-2
UST29-MW-101
UST29-MW-102
UST29-MW-103
L
HBV-MW-101
MW-6
LP-MW-4
LP-MW-2
LP-MW-1
HB-MW-1R
SHB-MW-101
SHB-MW-102
GF9-MW-3
GF9-MW-4
GF9-MW-1
GF9-MW-2
SHB-MW-2
G
AP-MW-1R
UG-MW-2R
RCD-MW-101
BA-MW-5
BA-MW-2
BA6-MW-101
BA-MW-1
BA-MW-7
REC5-MW-1R
UST70-MW-101
UST71-MW-104
UST70-MW-2
UST70-MW-102
BA-MW-3
BA-MW-4
UST71-MW-101
UST71-MW-102
UST71-MW-103
F
REC3-MW-1R
PM-MW-3
BBH-MW-101
BBH-MW-103
BBH-MW-102
BBH-MW-104
PM-MW-6
OPS-MW-1
PM-MW-8
PM-MW-1
CMS-MW-1R
CMS-MW-2
PM-MW-2
PM-MW-5
B1
PM-MW-7
PM-MW-4
DAST-MW-101
REC7-MW-3
BCT-MW-108
BCT-MW-107
OMS-MW-2
UST68-MW-5
A1
BCT-MW-106
OMS-MW-1
BCT-MW-103
MW-1
BCT-MW-105
BCT-MW-102
BCT-MW-101
MW-2
BCT-MW-104
REC1-MW-3
REC1-MW-4
REC7-MW-4
REC1-MW-15
REC1-MW-14
REC1-MW-1
REC1-MW-12
REC1-MW-2
REC1-MW-9
REC1-MW-10
REC1-MW-8
REC1-MW-5
REC1-MW-11
REC1-MW-7
REC1-MW-6

0 100 200
Feet

Wells Monitored for pH during CM Removal in Eastern Excavation Areas A1, B1, F, G, L, and M

Report for 2nd Interim Action
K-C Worldwide Site Upland Area
Everett, Washington

Aspect CONSULTING	DEC-2020	BY: SJG / TDR	FIGURE NO. F1
	PROJECT NO. 110207	REVISED BY: RAP	

GIS Path: T:\projects_8\KimberlyClark\Env_Support_110207\Delivered\A_Fall2020\Deliverable\F2 Wells Monitored for pH - Central.mxd || Coordinate System: NAD 1983 StatePlane Washington North FIPS 4601 Feet || Date Saved: 2020-12-15 || User: tullen || Print Date: 2020-12-15

Proximal Well
Downgradient Well (Refer to text)
Monitoring Wells
Proposed Interim Action Area
CM Removal Sequencing Area (CM Removal Plan of Operations, July 2017)
Former Log Pond
Crushed Material Boundary
Upland Area Boundary

CN-MW-3
CN-MW-2
CN-MW-1
REC7-MW-1
NRU-MW-102
NRP-MW-3
MW-5
NRP-MW-2
NRU-MW-101
NRS-MW-101
NRS-MW-102
UG-MW-1
N
CN-MW-101
CN-MW-104
TM-MW-1
REC7-MW-2
CN-MW-102
CN-MW-103
TM-MW-2
TM-MW-3
TM-MW-5
TM-MW-6
K
TM-MW-4
REC6-MW-2
UST29-MW-101
UST29-MW-102
UST29-MW-103
HBV-MW-101
MW-6
LP-MW-4
LP-MW-2
LP-MW-1
HB-MW-1R
SHB-MW-101
SHB-MW-102
GF9-MW-3
GF9-MW-4
GF9-MW-1
GF9-MW-2
SHB-MW-2
H
AP-MW-1R
UG-MW-2R
RCD-MW-101
BA-MW-5
BA6-MW-101
BA-MW-1
BA-MW-2
REC5-MW-1R
BA-MW-7
UST70-MW-101
UST71-MW-104
UST70-MW-2
E
UST70-MW-102
BA-MW-3
BA-MW-4
UST71-MW-101
UST71-MW-102
UST71-MW-103
REC3-MW-1R
PM-MW-3
BBH-MW-101
BBH-MW-103
BBH-MW-102
BBH-MW-104
PM-MW-6
OPS-MW-1
PM-MW-8
PM-MW-1
CMS-MW-1R
CMS-MW-2
PM-MW-2
PM-MW-5
PM-MW-7
PM-MW-4
B2
DAST-MW-101
REC7-MW-3
BCT-MW-108
BCT-MW-107
OMS-MW-2
UST68-MW-5
BCT-MW-106
A2
BCT-MW-103
OMS-MW-1
MW-1
BCT-MW-105
BCT-MW-102
BCT-MW-101
MW-2
BCT-MW-104
REC1-MW-3
REC1-MW-4
REC1-MW-1
REC7-MW-4
REC1-MW-15
REC1-MW-14
REC1-MW-12
REC1-MW-2
REC1-MW-9
REC1-MW-10
REC1-MW-8
REC1-MW-5
REC1-MW-11
REC1-MW-7
REC1-MW-6

0 100 200
Feet

Wells Monitored for pH during CM Removal in Central Excavation Areas A2, B2, E, H, K, and N

Report for 2nd Interim Action
K-C Worldwide Site Upland Area
Everett, Washington

Aspect CONSULTING	DEC-2020	BY: SJG / TDR	FIGURE NO. F2
	PROJECT NO. 110207	REVISED BY: RAP	

GIS Path: T:\projects_8\KimberlyClark\Env_Support_110207\Delivered\IA_Fall2020\Deliverable\F3 Wells Monitored for pH - West.mxd || Coordinate System: NAD 1983 StatePlane Washington North FIPS 4601 Feet || Date Saved: 2020-12-15 || User: ttrullen || Print Date: 2020-12-15

Proximal Well
Downgradient Well (Refer to text)
Monitoring Wells
Proposed Interim Action Area
CM Removal Sequencing Area (CM Removal Plan of Operations, July 2017)
Former Log Pond
Crushed Material Boundary
Upland Area Boundary

N

CN-MW-3
CN-MW-2
CN-MW-1
REC7-MW-1
NRP-MW-3
NRU-MW-102
MW-5
NRP-MW-2
NRU-MW-101
NRS-MW-101
NRS-MW-102
UG-MW-1
CN-MW-101
CN-MW-104
TM-MW-1
REC7-MW-2
CN-MW-102
TM-MW-3
CN-MW-103
TM-MW-2
O
TM-MW-5
TM-MW-6
TM-MW-4
REC6-MW-2
UST29-MW-101
UST29-MW-102
UST29-MW-103
HBV-MW-101
MW-6
J
LP-MW-4
LP-MW-2
LP-MW-1
HB-MW-1R
SHB-MW-101
SHB-MW-102
GF9-MW-3
GF9-MW-4
GF9-MW-1
GF9-MW-2
SHB-MW-2
I
AP-MW-1R
UG-MW-2R
RCD-MW-101
BA6-MW-101
BA-MW-5
BA-MW-1
BA-MW-2
BA-MW-7
REC5-MW-1R
UST70-MW-101
UST70-MW-2
D
UST71-MW-104
UST70-MW-102
BA-MW-3
BA-MW-4
UST71-MW-101
UST71-MW-102
UST71-MW-103
REC3-MW-1R
PM-MW-3
BBH-MW-101
BBH-MW-103
BBH-MW-102
PM-MW-6
BBH-MW-104
OPS-MW-1
PM-MW-8
PM-MW-1
CMS-MW-2
PM-MW-2
CMS-MW-1R
PM-MW-5
PM-MW-7
C
PM-MW-4
DAST-MW-101
REC7-MW-3
BCT-MW-108
UST68-MW-5
BCT-MW-107
OMS-MW-2
BCT-MW-106
OMS-MW-1
BCT-MW-103
MW-1
BCT-MW-102
BCT-MW-105
BCT-MW-101
MW-2
BCT-MW-104
REC1-MW-3
REC1-MW-4
REC1-MW-1
REC7-MW-4
REC1-MW-15
REC1-MW-14
REC1-MW-12
REC1-MW-2
REC1-MW-9
REC1-MW-10
REC1-MW-8
REC1-MW-5
REC1-MW-11
REC1-MW-7
REC1-MW-6

0 100 200
Feet

Wells Monitored for pH during CM Removal in Western Excavation Areas C, D, I, J, and O

Report for 2nd Interim Action
K-C Worldwide Site Upland Area
Everett, Washington

Aspect Consulting	DEC-2020	BY: SJG / TDR	FIGURE NO. F3
	PROJECT NO. 110207	REVISED BY: RAP	

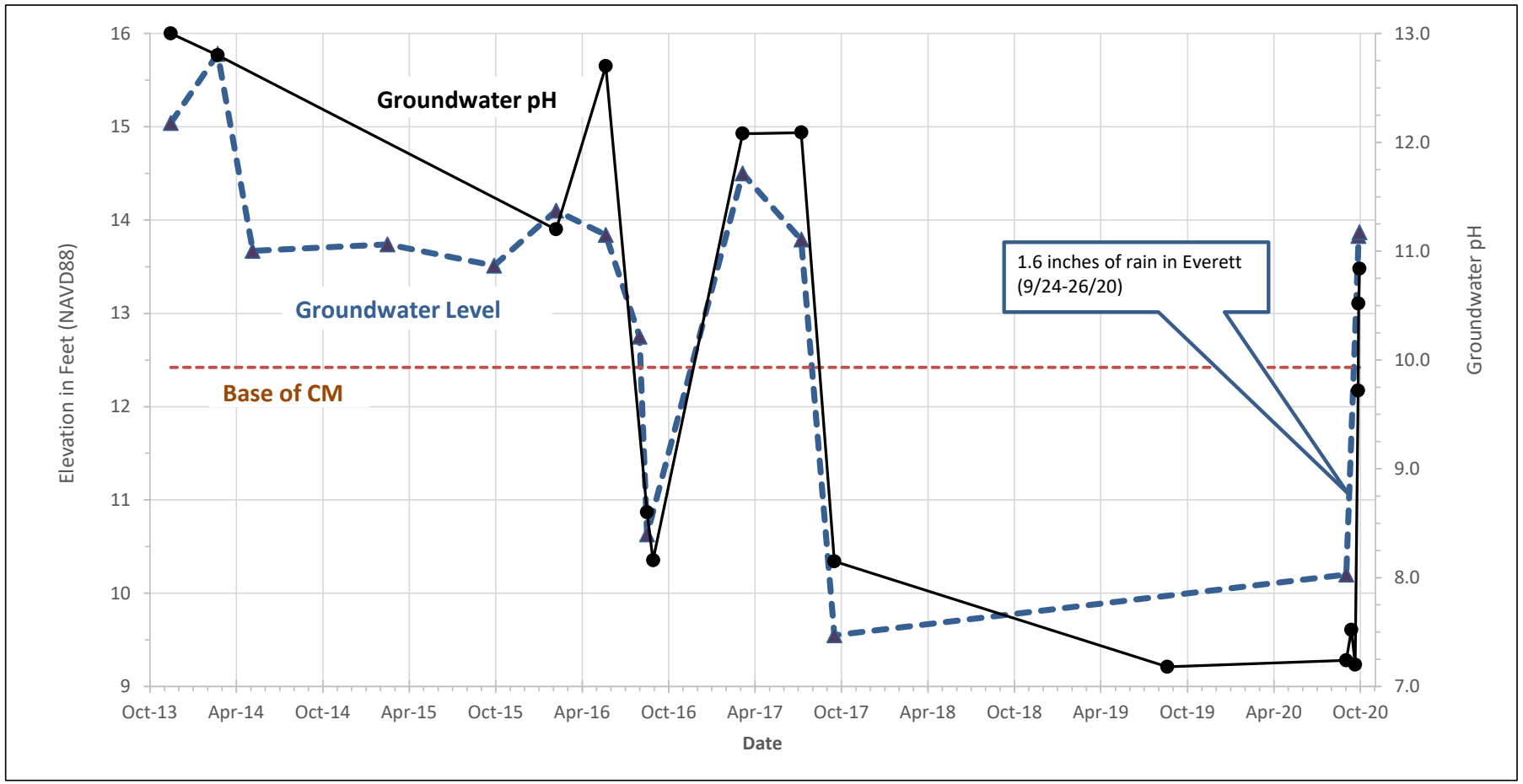

Figure F4
Well LP-MW-1 Groundwater Levels and pH Over Time
Report for Second Interim Action
K-C Upland Area, Everett, WA

Aspect Consulting
11/18//2020
V:\110207 KC Everett Mill\Deliverables\Interim Action Report 2020\Client Review Draft\App F pH monitoring\Figure F4 pH and water levels plot

APPENDIX G

Tabulation of Dust Monitoring Data/Observations and Controls Implemented

TABLE

Table G-1. Daily Average Dust (PM_{10}) Concentrations, Visual Observations, and Dust Control Measures Employed

Project No. 110207, Everett, Washington

		Quantitative Measurements			
Date	General Site Earthwork Activities	Monitoring Duration (Hour:Min)	Daily Average PM_{10} Conc. (mg/m^3)	Qualitative Observations regarding Visible Dust	Contractor Dust Control Measures Employed
	Maximum Daily Average PM_{10} Concentration during Work Hours (mg/m^3), excluding smoke and fog days =		**0.029**	***Air quality standard for PM10 is 0.15 mg/m^3 as 24-hr average.***	
	Average PM_{10} Concentration during Work Hours for Project Duration (mg/m^3), excluding smoke and fog days =		**0.008**		
05/20/20	Breach Pipe C; constructed settling basin on pavement for vactor materials	6:20	0.005		
05/21/20	Video/vactor pipes C and M. Remove unusable wood chips	6:50	0.004		
05/22/20	Remove unusable wood chips	2:40	0.005		
05/26/20	Pipe K excavation; Remove unusable wood chips	7:40	0.001		
05/27/20	Pipe K excavation; Pipe C plug w/ CDF	7:05	0.002		
05/28/20	Hydraulic Barker area scrape/stockpile CM, start soil excavation. Wood chip removal.	7:35	0.010		
05/29/20	Hydraulic Barker area soil excavation	8:00	0.010		
06/01/20	Removal of Pipe M inland of plugged vault.	7:40	0.003		
06/02/20	Expose, breach, plug Pipe K at shoreline	6:00	0.008		
06/03/20	Removed inland portion of Pipe M. Potholed to find inland portion of Pipe K.	7:45	0.005		
06/04/20	Pipe K plugging. Backfill Pipe M vault. Hydraulic Barker overexcavation.	7:10	0.002		
06/05/20	Cut concrete to expose wooden Pipe F @ shoreline. Pipe M pipe removal, backfill.	7:10	0.007		
06/08/20	Breached Pipe F @ 15' and 75', video pipe. Hydraulic Barker overexcavation.	Rain - no monitoring			
06/09/20	Begin filling Pipe F with CDF.	Rain - no monitoring			
06/10/20	Complete CDF placement inside and around Pipe F @15' and 75' breaches.	8:00	0.003		
06/11/20	CM potholing.	6:00	0.008		
06/12/20	(half-day rain) CM removal from PM-B-6 area. CM potholing.	4:20	0.008		
06/15/20	PM-B-6 CM scraping/stockpiling and soil excavation.	Rain - no monitoring			
06/16/20	PM-B-6 soil excavation.	6:45	0.001		
06/17/20	Log Pond chip conveyor area CM stripping, then soil excavation.	6:50	0.002		
06/18/20	Log Pond chip conveyor area soil excav. Clark Nickerson CM & overburden stripping,	8:00	0.002		
06/19/20	Brush clearing but no earthwork.	No earthwork - no monitoring			
06/22/20	Soil over-excavation in PMB6 and Log Pond conveyor areas.	7:15	0.002		
06/23/20	Soil excavation in Log Pond conveyor and Clark-Nickerson west areas.	7:25	0.002		
06/24/20	Soil excavation in Clark Nickerson east and soil over-excavation in PMB6 areas.	8:00	0.005		
06/25/20	Soil excavation in OMS area.	8:00	0.005		
06/26/20	Soil excavation in OMS area.	7:20	0.004		
06/29/20	Soil excavation in OMS area, soil over-excavation in LP Conveyor and CN-west areas.	8:00	0.014		
06/30/20	CM excavation/stockpiling onsite from areas A1 and B1.	3:05 before rain	0.004		
07/01/20	CM removal from A1 and B1.	Rain - no monitoring			
07/02/20	CM removal from A1 and B1.	Rain - no monitoring			
07/06/20	Over-excavation in PMB6 and OMS areas.	7:30	0.009		
07/07/20	Soil excavation in OMS area. Backfilling Log Pond & CN excavations. CM removal A1 & B1.	Rain - no monitoring			
07/08/20	CMS soil excavation. CM removal A1 & B1.	7:40	0.006		
07/09/20	CMS soil excavation. CM removal B1 & F.	7:30	0.008		
07/10/20	CMS soil excavation. CM removal B1 & F.	7:20	0.005		
07/13/20	Soil excavation in CMS area. CM removal B1 & F.	7:50	0.008		
07/14/20	Soil excavation in CMS area. CM removal F.	7:55	-0.001*		
07/15/20	Soil over-excavation in OMS and PMB6 areas. CM removal F.	7:50	0.010		
07/16/20	Soil excavation in CMS area. CM removal F.	7:35	0.014		
07/17/20	Soil excavation in CMS area. CM removal F.	7:10	0.013		
07/20/20	Soil excavation in CMS area. CM removal F.	8:00	0.009		

Table G-1. Daily Average Dust (PM_{10}) Concentrations, Visual Observations, and Dust Control Measures Employed

Project No. 110207, Everett, Washington

		Quantitative Measurements			
Date	General Site Earthwork Activities	Monitoring Duration (Hour:Min)	Daily Average PM_{10} Conc. (mg/m^3)	Qualitative Observations regarding Visible Dust	Contractor Dust Control Measures Employed
07/21/20	CM removal in F and G areas.	8:00	0.013		
07/22/20	Soil over-excavation in PMB6 area. CM removal in Areas F and G.	8:00	0.008	Minimal dust generated from CM excavation, moderate dust beneath trucks on site. No visible dust observed at fenceline.	Water truck operated continuously to control dust on travelways.
07/23/20	CM removal in Areas F and G.	8:00	0.010	Same as above.	Same as above
07/24/20	CM removal in Area G.	Meter malfunction		Same as above.	Same as above.
07/27/20	Soil excavation in CMS area. CM removal in Area G.	7:55	0.029	Same as above. Observed BNSF locomotive idling near dust monitor all day, and large dust cloud originating well south of site.	Same as above.
07/28/20	Soil excavation in CMS area. CM removal in Area G.	7:30	0.004	Minimal dust generated from CM excavation, minimal to moderate dust when loading CM, and beneath trucks, on site. No visible dust observed at fenceline.	Same as above.
07/29/20	Soil excavation in CMS area. CM removal in Area G.	7:20	0.009	Same as above.	Same as above.
07/30/20	Soil excavation in CMS area. CM removal in Areas G and L.	6:40	0.004	Same as above.	Same as above.
07/31/20	CM removal in Area L.	7:40	0.013	Same as above.	Same as above.
08/03/20	Soil excavation in CMS area. CM removal in Areas G and L.	7:40	0.010	Same as above.	Same as above.
08/04/20	Soil excavation in CMS area. CM removal in Areas G and L.	8:00	0.010	Same as above.	Same as above.
08/05/20	Soil excavation in CMS area. CM removal in Areas L and M.	8:00	0.008	Same as above.	Same as above.
08/06/20	CM removal in Areas L and M.	Rain - no monitoring		No dust observed at fenceline.	None.
08/07/20	CM removal in Area M.	Mist - no monitoring			Periodic use of water truck for selected parts of haul route.
08/10/20	CM removal in Area M. Backfilling PMB6 excavation and CM Area F.	5:15	0.004	No dust observed at fenceline.	Water truck operated continuously to control dust on travelways.
08/11/20	Soil excavation in CMS area. Test pitting GFB12 location. CM removal in Area M.	7:25	0.003	No dust observed at fenceline.	Same as above.
08/12/20	Soil excavation in CMS area. CM removal in Area M.	7:20	0.015	No dust observed at fenceline.	Same as above.
08/13/20	Soil excavation in CMS area. CM removal in Area M.	8:00	0.013	No dust observed at fenceline. City conducted construction work near the site--on 25th St. west of 529.	Same as above.
08/14/20	Soil excavation in CMS area. CM removal in Area M.	6:50	0.018	Same as above.	Same as above.
08/17/20	Soil excavation in CMS area incl. bunker pipe area. CM removal in Area M. Backfilling Areas B1 & F.	8:00	0.017	Same as above.	Same as above.
08/18/20	Soil excavation in CMS area. CM removal in Area M. Backfilling Areas B1 & F.	7:35	0.010	Same as above.	Same as above.
08/19/20	Soil excavation in CMS area. CM removal in Area M. Backfilling Areas B1 & F.	7:35	0.010	Same as above.	Same as above.
08/20/20	Soil excavation in CMS area. CM removal in Area M. Backfilling Areas B1 & F.	Rain - no monitoring		Same as above.	Periodic use of water truck for selected parts of haul route.
08/21/20	Soil excavation in CMS area. CM removal in Area M. Moved water conveyance line and water storage tank. Backfilling Areas F & L.	8:00	0.007	Same as above.	Water truck operated continuously to control dust on travelways.
08/24/20	CM removal in Areas M, A2, and B2. Backfilling Areas F & G.	6:20	0.014	No dust observed at fenceline.	Same as above.
08/25/20	Soil excavation in CMS area. CM removal in Areas M, A2, and B2. Backfilling Areas F & G.	7:35	0.008	No dust observed at fenceline.	Same as above.
08/26/20	Soil excavation in CMS area. CM removal in Areas M, A2, and B2. Backfilling Areas F & G.	7:00	0.013	City conducted construction work near the site--on 25th St. west of 529. No dust observed at fenceline.	Same as above.
08/27/20	Soil excavation in CMS area (bunker pipe trench) and SE corner of OMS area. CM removal in Areas A2 and B2. Backfilling Areas F & G.	6:55	0.006	No dust observed at fenceline.	Same as above.
08/28/20	Soil excavation in REC5-MW-1 area. CM removal in Areas A2 and B2. Backfilling Areas F & G.	7:30	0.007	Same as above.	Same as above.
08/31/20	Soil excavation in CMS area. CM removal in Areas A2, and B2. Backfilling Areas F & G.	7:15	0.012	Same as above.	Same as above.
09/01/20	Soil excavation in BBH area. CM removal in Areas A2, B2, and E. Backfilling Areas F, G, & L.	5:55	0.001	Same as above.	Same as above.
09/02/20	Soil excavation in BBH area. CM removal in Areas B2 and E. Backfilling Areas F & L.	7:35	0.004	Same as above.	Same as above.
09/03/20	CM removal in Areas B2 and E. Backfilling Areas F & L.	7:55	0.002	Same as above.	Same as above.
09/04/20	CM removal in Areas B2 and E. Backfilling Areas F & L.	7:05	0.012	Same as above.	Same as above.

Table G-1. Daily Average Dust (PM_{10}) Concentrations, Visual Observations, and Dust Control Measures Employed

Project No. 110207, Everett, Washington

		Quantitative Measurements			
Date	**General Site Earthwork Activities**	**Monitoring Duration (Hour:Min)**	**Daily Average PM_{10} Conc. (mg/m^3)**	**Qualitative Observations regarding Visible Dust**	**Contractor Dust Control Measures Employed**
09/08/20	Soil excavation in BBH area. CM removal in Area E. Backfilling Areas F & L.	7:40	0.171	**Heavy to moderate smoke from fires present all day** - reflected in particulate monitoring data (max reading = 0.245 mg/m3). Slight dust generated during CM removal activities, no dust visible at fence line.	Two water trucks operated continuously to control dust on travelways.
09/09/20	Soil excavation in BBH area. CM removal in Area E, minor removal in A2 and B2 as needed to maintain haul road. Backfilling Areas F & L.	7:45	0.103	**Light to moderate smoke from fires present all day** - reflected in particulate monitoring data. Slight dust generated during CM removal activities, no visible dust at fence line.	Water truck operated continuously to control dust on travelways.
09/10/20	Soil excavation in BBH area. CM removal in Area E. Backfilling Areas F & L.	7:25	0.109	**Same as above.**	Same as above.
09/11/20	CM removal in Area E, minor removal in A2 and B2 as needed to maintain haul road. Backfilling Areas F & L.	Wildfire Smoke - no monitoring		**Moderate to heavy smoke from fires present throughout the day**. ICI water truck watered roads onsite throughout the day. No dust visible at fence line.	Same as above.
09/14/20	Soil excvation in BBH area. CM removal in Area H and minor removal in B2. Backfilling CMS area and Area L.	Wildfire Smoke - no monitoring		**Same as above.**	Same as above.
09/15/20	CM removal in Area H and minor removal in B2. Backfilling CMS and REC5 areas and CM Areas B2 and L.	Wildfire Smoke - no monitoring		**Same as above.**	Same as above.
09/16/20	Soil excavation in BBH area. CM removal in Area H and minor removal in B2. Backfilling CMS and REC5 areas and Areas B1 and B2.	Wildfire Smoke - no monitoring		**Same as above.**	Same as above.
09/17/20	Soil excavation in BBH area. CM removal in Area H and minor removal in Area E. Backfilling CMS area and Areas B1 and B2.	Wildfire Smoke - no monitoring		**Same as above.**	Same as above.
09/18/20	Soil excavation in BBH area. CM removal in Area H and started removal in Area K. Backfilling CMS area and Areas B1 and B2.	Wildfire Smoke - no monitoring		**Same as above.**	Same as above.
09/21/20	Soil excavation in BBH area. CM removal in Area K. Backfilling Areas B2 and L.	7:05	0.010	No dust observed at fenceline.	Same as above.
09/22/20	Soil excavation in BBH area. CM removal in Area K and minor removal in Area E. Backfilling Areas B2 and L.	3:05	0.008	Monitoring stopped once light rain began. No dust observed at fenceline.	Water truck operated until rain was well underway.
09/23/20	Soil excavation in BBH area. CM removal in Area K. Backfilling Areas A1, A2, B2, and L.	Rain - no monitoring		No dust observed at fenceline.	Active dust control not needed due to rain.
09/24/20	Excavation in Digester Trench area. CM removal in Area K. Backfilling Areas B2 and L.	Rain - no monitoring		Same as above.	Same as above.
09/25/20	Excavation in Digester Trench area. CM removal in Area K and starting Area N. Backfilling Area L.	Rain - no monitoring		Same as above.	Same as above.
09/28/20	Excavation in Digester Trench area. CM removal in Areas K and N. Backfilling Area L.	6:25	0.008	Same as above.	Water truck operated continuously to control dust on travelways.
09/29/20	Excavation in Digester Trench area. CM removal in Areas K and N. Backfilling Area L.	8:00	0.016	Same as above.	Same as above.
09/30/20	Excavation in Digester Trench and BBH areas. CM removal in Areas N and C.	7:05	0.018	City of Everett doing construction on 25th St east of site. Visible dust not apparent at fenceline.	Same as above.
10/01/20	Excavation in BBH area. CM removal in Areas N and C.	8:00	0.035	**Fog^ present most of day.** City of Everett doing construction on 25th St east of site. Visible dust not apparent at fenceline.	Same as above.
10/02/20	Excavation in Digester Trench and BBH areas. CM removal in Areas N and C.	7:25	0.038	**Fog^ present much of day.** Visible dust not apparent at fenceline.	Same as above.
10/05/20	Excavation in BBH area. CM removal in Areas N, C. Backfill in completed eastern and central areas.	7:20	0.032	**Fog^ present much of day.** Visible dust not apparent at fenceline.	Same as above.
10/06/20	Excavation in BBH area. CM removal in Area C. Backfill in completed eastern and central areas.	6:20	0.027	**Fog^ present until early afternoon.** Visible dust not apparent at fenceline.	Same as above.
10/07/20	Excavation in BBH area. CM removal in Areas C,D. Backfill in completed eastern and central areas.	Rain - no monitoring		Visible dust not apparent at fenceline.	Water truck operated periodically as needed.
10/08/20	Excavation in BBH area. CM removal in Areas D. Backfill in completed eastern and central areas.	6:00	0.003	Same as above.	Water truck operated continuously to control dust on travelways.
10/09/20	Excavation in BBH area. CM removal in Areas D,I. Backfill in completed eastern and central areas.	6:15	0.009	Same as above.	Same as above.

Table G-1. Daily Average Dust (PM_{10}) Concentrations, Visual Observations, and Dust Control Measures Employed

Project No. 110207, Everett, Washington

		Quantitative Measurements			
Date	General Site Earthwork Activities	Monitoring Duration (Hour:Min)	Daily Average PM_{10} Conc. (mg/m^3)	Qualitative Observations regarding Visible Dust	Contractor Dust Control Measures Employed
10/12/20	Excavation in BBH and BAMW7 areas. CM removal in Area I. Backfill in completed eastern and central areas.	Rain - no monitoring		Visible dust not apparent at fenceline.	Water truck operated periodically as needed.
10/13/20	Excavation in BBH area. CM removal in Area I. Backfill in completed eastern and central areas.	Rain - no monitoring		Visible dust not apparent at fenceline.	Same as above.
10/14/20	Excavation in BBH and GFB12 areas. CM removal in Area I. Backfill in completed eastern and central areas.	Rain - no monitoring		Visible dust not apparent at fenceline.	Same as above.
10/15/20	Excavation in BBH and GFB12 areas. CM removal in Areas I, J. Backfill in completed eastern and central areas.	7:05	0.011	Visible dust not apparent at fenceline.	Same as above.
10/16/20	Excavation in BBH area. CM removal in Areas I, J, O. Backfill in completed eastern and central areas.	7:05	0.009	Visible dust not apparent at fenceline.	Same as above.
10/19/20	CM removal in Area J. Backfill in completed eastern and central areas.	Rain - no monitoring		Visible dust not apparent at fenceline.	Water truck operated periodically as needed.
10/20/20	Excavation in BBH and GFB12 areas. CM removal in Area J. Backfill in completed eastern and central areas.	Rain - no monitoring		Visible dust not apparent at fenceline.	Same as above.
10/21/20	Excavation in BBH and GFB12 areas. CM removal in Areas J, O. Backfill in completed eastern and central areas.	Rain - no monitoring		Visible dust not apparent at fenceline.	Same as above.
10/22/20	Excavation in BBH area. CM removal in Areas J, O. Backfill in completed eastern and central areas.	Rain - no monitoring		Visible dust not apparent at fenceline.	Same as above.
10/23/20	CM removal in Areas J, O. Backfill in completed eastern and central areas.	Rain - no monitoring		Visible dust not apparent at fenceline.	Same as above.

Notes:

*: Meter malfunctioned, generating negative readings.

^: High humidity and esp. fog can cause high bias in the dust monitor's readings. This is due to water-uptake and resulting hygroscopic growth of the aerosol particles, causing them to scatter more light and generate higher apparent mass concentration readings by the photometric instrument (TSI Application Note EXPMN-008 [2014]).

FIGURE

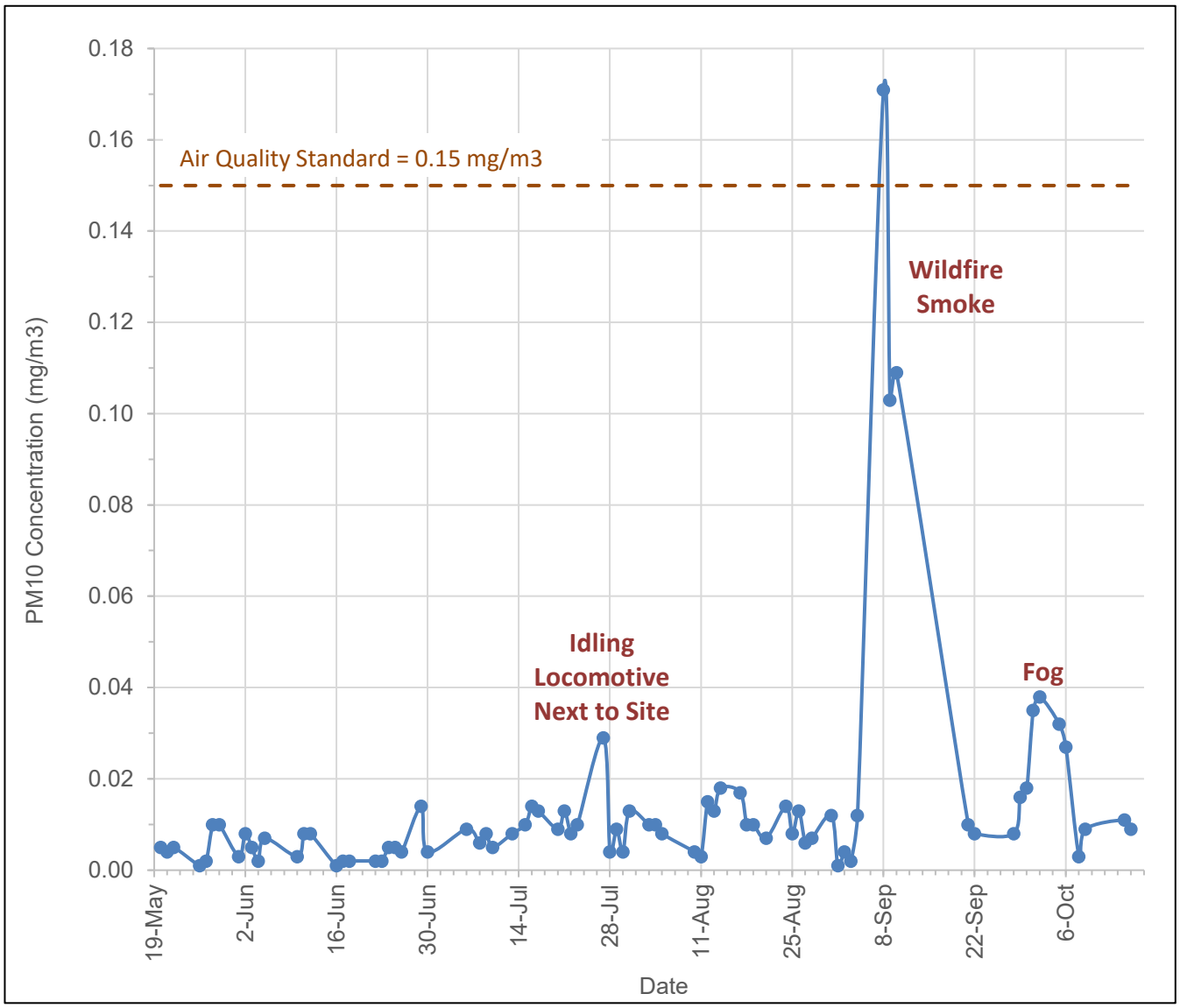

Figure G1
Daily Avg. Dust (PM10) Concentrations Over Time
Report for Second Interim Action
K-C Upland Area, Everett, WA

APPENDIX H

Waste Disposal Records

ASN 4 ASBESTOS WASTE SHIPMENT REPORT FORM

PLEASE PRINT OR TYPE. If you have questions, contact your local DEQ Regional Office in Portland 503-229-5982, Salem 503-378-5086, Medford 541-776-6010 ext. 235, or Bend 541-633-2019, Pendleton 541-278-4626, OR call 800-452-4011 for the location of your local regional DEQ office.

WASTE GENERATOR: (Contractor, Facility, or Operator)

1. Asbestos removal site name and address: TCI JOB # 20-09139
   2600 Federal Ave Everett WA 98201
   Street / City/State / County / Zip
   Contact person: Reed Frubling Phone: 360-661-6301
2. Operator's name and address: Performance Abatement Services Phone: 425-806-8404
   7415 W. Bostian Rd. | Woodinville, WA | Snohomish | 98072
   Street / City/State / County / Zip
3. Waste disposal site: Wasco County Landfill Phone: 541-296-4082
   2550 Steele Road | The Dalles, OR | Wasco | 97058
   Street / City/State / County / Zip
4. Describe asbestos materials: A-cm pipe insulation
5. Containers: Number: 10 wrap 86 bags Type: wrap bags
6. Total quantity (cubic yards): 0.4
7. **OPERATOR'S CERTIFICATION:** I hereby declare that the contents of this consignment are fully and accurately described above by proper shipping name and are classified, packaged, marked and labeled, and are in all respects in proper condition for transport according to all government regulations. All movement of this asbestos-containing material is recorded on this Waste Shipment Record Form.
   Name: Anicero Garcia Company: Performance Abatement Services
   Signature: [signature] Date: 8-19-20

TRANSPORTER(S):

8. Transporter #1: (Acknowledgment of receipt of materials)
   Agent: Anicero Garcia Company: PAS
   Address: 7415 W. Bostian Rd. Woodinville, WA 98072 Phone: 425-806-8404
   Signature: [signature] Date: 8-19-20
9. Transporter #2: (Acknowledgment of receipt of materials)
   Agent: _____ Company: _____
   Address: _____ Phone: _____
   Signature: _____ Date: _____

DISPOSAL: (Certification of receipt of asbestos materials covered by this manifest, except as noted in item 11 below.)

10. Waste Disposal Site: Wasco County Landfill
    Name and Title: WASCO COUNTY LANDFILL Linda Miller Date: AUG 25 2020
    Signature: [signature] Phone: 541-296-4082 ~~541-296-4082~~
11. **DISCREPANCY SPACE:** (Add attachments as needed)

(Revised 7/12)

12-AQ-042

CERTIFICATE OF DESTRUCTION

I, Joseph Allen-Thompson, of Regional Disposal Company (RSI facility), hereby certify that the entire product described in Section A has been properly and legally disposed of in Roosevelt Regional MSW Landfill on 6/02-10/16, 2020 (attach any appropriate documentation).

I understand that due to potential concerns related to such things as health, quality, and loss of goodwill, Interwest Construction (Company) does not want this product to be distributed to consumers, even through so called "distressed merchandise" channels of trade, and I further certify that these items were destroyed in such a manner that it cannot be sold, and that the company has taken every reasonable step to prevent resale of said items.

Name (print): Joseph Allen-Thompson

Signature: Joseph Allen-Thompson

Title: General Manager

Date: 12/22/2020

Section A- Products Destroyed (attached additional sheets if needed):

Waste Profile Number (if applicable): 4178201498, 4178201504 4178201495, 4178202676

Description of Product	***Quantity or Weight***
Contaminated Soil MC-19151(intermodal)	15,733.20 Tons
Contaminated Soil MC-19193 (dirt pit)	4,942.40 Tons

APPENDIX I

City of Everett Documentation for

PS04 Outfall Decommissioning

CITY OF EVERETT
Public Works

MEMORANDUM

Abandonment Close Out Report for Puget Sound Outfall No. 4, Work Order 2018 1433

FROM: Brian Doolan, P.E. Sewer/Drainage Maintenance Supervisor

DATE: February 24, 2021

PSO 4 Abandonment Work Plan (submitted February 19, 2020)

The City of Everett's plans to abandon Puget Sound Outfall No. 4 (PSO 4) were submitted to the Department of Ecology on February 19, 2020. PSO 4 runs through the former Kimberly Clark (KC) upland property.

The PSO4 pipeline previously carried stormwater from the local collection basin and infrequently the combined sewer overflow from the City's Lift Station No. 5. Approximately seven acres of storm water from two private parking lots and a small area of West Marine View Drive flowed through the line and out PS0 4 whenever it rained. When PSO 4 was functional, stormwater (that bypassed LS No. 5) or combined sewer overflows (from LS No. 5) entered a manhole east of the railroad tracks and were carried through a 10-inch pipe under the tracks. The PSO 4 pipeline also carried the historical discharges originating from the KC site.

The abandonment of PSO 4 has resulted in no further stormwater or combined sewer overflow discharges from the outfall. With Ecology Water Quality approval, city forces have temporarily re-routed PSO 4 stormwater and combined sewer flows to combine with the city's PSO No. 5 located at Lift Station No. 3.PSO 4 is permitted by Ecology to discharge combined sewer overflows and stormwater. The City of Everett's NPDES wastewater collection and treatment permit, Permit No. WA0024490 (expired October 30, 2020 and now administratively extended), lists PSO 4 as a permitted point of discharge for combined sewer (Section S.8); stormwater discharges from PSO 4 and the city's stormwater collection are covered under the Western Washington Phase II Stormwater General Permit (effective date August 1, 2019).

The PSO 4 pipeline started at Lift Station No. 5 as a 10-inch diameter pipe, where it crossed under the railroad tracks to enter the former KC site. As the pipeline traveled west across the KC site, multiple revisions, pipe types, and pipe upsizing occurred over the years to accommodate the site's historical industrial use, with multiple connections added from the KC facilities. By the time effluent reached the point of discharge, the pipe was 30 inches in diameter, an increase of nine times the flow capacity. Pipe types used included clay tiles, ductile, and concrete. Nine manhole structures were abandoned across the site, varying between brick and concrete.

The methods used to abandon the pipeline and manholes were from documents provided to the Ecology Toxics Cleanup Program for this site (Aspect Consulting memorandum to Andy Kallus, *Approach for Plugging Open Pipes at Shoreline,* June 27, 2018) and were referenced in the February 2020 work plan.

Each manhole and pipe access location along the pipeline alignment was filled with a control density fill mix (CDF) as specified in the submitted work plan. The CDF mix was applied for a length of at least five times the pipe diameter at each manhole and all connections. The CDF mix is lean cement, which upon setting has only a few hundred psi compressive strength. The work plan presented the metal analyses of the CDF aggregate materials from the gravel pit indicating the aggregate metal levels are well below MTCA Method A for soils.

Figure 1 shows PSO 4 across the former KC site, the manhole locations, and the lay lengths that were fully filled with CDF.

Concrete trucks were brought on site and delivered the CDF at a consistency and viscosity that allowed the CDF to be pumped to at least the five times the pipe diameter length for each manhole connection stated in the Aspect Consulting memo. The CDF supplier provided a mix that was able to fill the pipes (adjustments had to be made as viscosity specifications are not normal for concrete mixes). The pump hose was measured and marked with the required length to be used at each manhole location to ensure the volume requirement of five times the diameter length was met. At the end of the entire pour the volume required at all nine manhole locations was exceeded by one yard of CDF, surpassing the established quantity for the length requirement.

The CDF was delivered in two pours due to the CDF viscosity and to ensure the head pressure of CDF in a manhole did not push the CDF beyond the length needed to keep the pipe's full circumference filled. The first pour filled the pipes to the required length and then was allowed to set, preventing the CDF from being pushed further down the pipe due to the manhole head pressure. A visual inspection was completed after each pour to ensure the pipe's circumference was filled after the pump hose was removed. Once the pipe connections were filled and

allowed to initially set, the entire manhole structure was filled but for the last foot. The remaining roughly one-foot depth from the top of the CDF fill to the surface of the manholes was left unfilled to allow for final grading of the site by KC's contractor and to avoid impacting and damaging the structure and CDF.

Specific Details

On Thursday February 27, 2020, all connections including inlet and outlet pipes from each of the nine manholes across the site were filled with the specified CDF mix. At each location, the manhole was prepared by city crews prior to being abandoned. Manholes and their connecting pipes were previously cleaned by city crews and were void of debris. At each location, a crew member made entry to and inspected the manhole and connecting lines to verify the lines were still clean.

Once a manhole was ready, a cement mixer with a pumper delivered the CDF directly to each manhole and their connecting pipes. The pumper hose was inserted by the crew member into each pipe for the CDF volume needed to meet the five times the diameter length requirement. For example, the first upstream manhole had a 10-inch pipe for its inlet and outlet and therefore required a length of 50 inches of each pipe to be filled. The hose was inserted 50 inches resulting in the CDF being pumped into and filling the pipe beyond the required 50 inches. This allowed the full lay length of CDF required to fully fill the circumference. This was repeated at each of the manhole and connecting pipe locations for all inlets and the outlet segments of pipe. Once the pumping was completed at each manhole the pipe was visually checked to ensure that it was filled.

On Friday February 28th, 2020, after the previous day's applied CDF could initially cure, each of the nine manholes had additional CDF added to within one foot of the surface. This eliminated air gaps and prevented ground water inflow.

Some of the manholes were smaller due to their last section being a cone rather than a cylinder shape. Manhole No. 9, the last structure discharge was smaller than was estimated.

See photos below for typical installation examples. Photo 1 shows how a pump line was typically processed with the entrant entering the manhole to push the line up the pipe. Photo 2 shows a manhole after both upstream and downstream pipes had been filled.

Below is a summary of the abandonment information for each location, listed by manhole number (per Figure 1).

Manhole No. 1

Manhole No. 1 has a 10-inch pipe entering and exiting the structure. The structure is 5-feet deep and 4-feet in dimeter. The pipe distance filled with CDF was 50 inches in both directions. The estimated total CDF volume that filled the pipes and the manhole was three cubic yards.

Manhole No. 2

This manhole has a 10-inch pipe entering and a 16-inch pipe exiting the structure. The structure is 6-feet deep and 4-feet in diameter. The pipe length filled was 50 inches on the inlet pipe and 80 inches on the outlet pipe. Approximately five cubic yards of CDF filled the pipes and manhole.

Manhole No. 3

This manhole has a 16-inch pipe entering and a 16-inch pipe exiting the structure. The structure is 6-feet deep and 4-feet in diameter. The pipe length filled was 80 inches on both the inlet and outlet pipes. About six cubic yards of CDF filled the pipes and manhole.

Manhole No. 4

This manhole has a 16-inch pipe entering and a 16-inch pipe exiting the structure. The structure is 6-feet deep and 4-feet in diameter. The pipe length filled was 80 inches on both the inlet and outlet pipes. An estimated six cubic yards of CDF filled the pipes and manhole.

Manhole No. 5

This manhole has a 16-inch pipe entering and an 18-inch pipe exiting the structure. The structure is 8.5 feet deep and 4.5 feet in diameter. The pipe length filled was 80 inches on the inlet pipe and 90 inches on the outlet pipe. An estimated nine cubic yards of CDF filled the pipes and manhole.

Manhole No. 6

This manhole has an 18-inch pipe entering and an 18-inch pipe exiting the structure. The structure is 9-feet deep and 4.5 feet in diameter. The pipe length filled was 90 inches on the inlet pipe and 90 inches on the outlet pipe. Just over nine cubic yards of CDF filled the pipes and manhole.

Manhole No. 7

This manhole has an 18-inch pipe entering and an 18-inch pipe exiting the structure. The structure is 13.5 feet deep and 4.5 feet in diameter. The pipe length filled was 90 inches on the inlet pipe and 90 inches on the outlet pipe. An estimated 12 cubic yards of CDF filled the pipes and manhole.

Manhole No. 8

This manhole has an 18-inch pipe entering and a 30-inch pipe exiting the structure. The structure is 14-feet deep and 6-feet in diameter. The pipe length filled was 90 inches on the inlet pipe and 150 inches on the outlet pipe. An estimated 20 cubic yards of CDF filled the pipes and manhole.

Manhole No. 9 – (or Vault)

This structure is a vault rather than a manhole. The structure has a 30-inch pipe entering and a 30-inch pipe exiting the structure. The vault was smaller than expected. The pipe length filled was 90 inches on the inlet pipe and the outlet pipe. Both the inlet and outlet pipe were capped at the structure to allow complete filling and blocked to prevent water from entering or exiting. The total volume of CDF to abandon this vault and piping was approximately 20 cubic yards.

End of Pipe for PS 04

The pipe west of Manhole No. 9 is attached underneath the wharf and is a 30-inch diameter clay-tile pipe. City crews planned to plug the accessible end of pipe with a mechanical plug during low tides in July 2020. Due to the cleanup effort going on during the summer of 2020, city forces could not access the wharf area to install the plug. This work is now being coordinated with the Port of Everett and installation of the mechanical plug is now scheduled during a low tide cycle the last week of March 2021.

Once the mechanical plug is installed photos will be emailed to Ecology.



Photo 1: Preparing a manhole for CDF Fill



Photo 2: Typical CDF Fill of Pipes and Manhole

Att. Figure 1, Site Map

Cc: Andy Kallus, Department of Ecology Toxics Cleanup
Kate Snider, Floyd|Snider
Hanna Lintukorpi, City of Everett
Mark Sadler, City of Everett
Project Files

Figure 1, Site Map

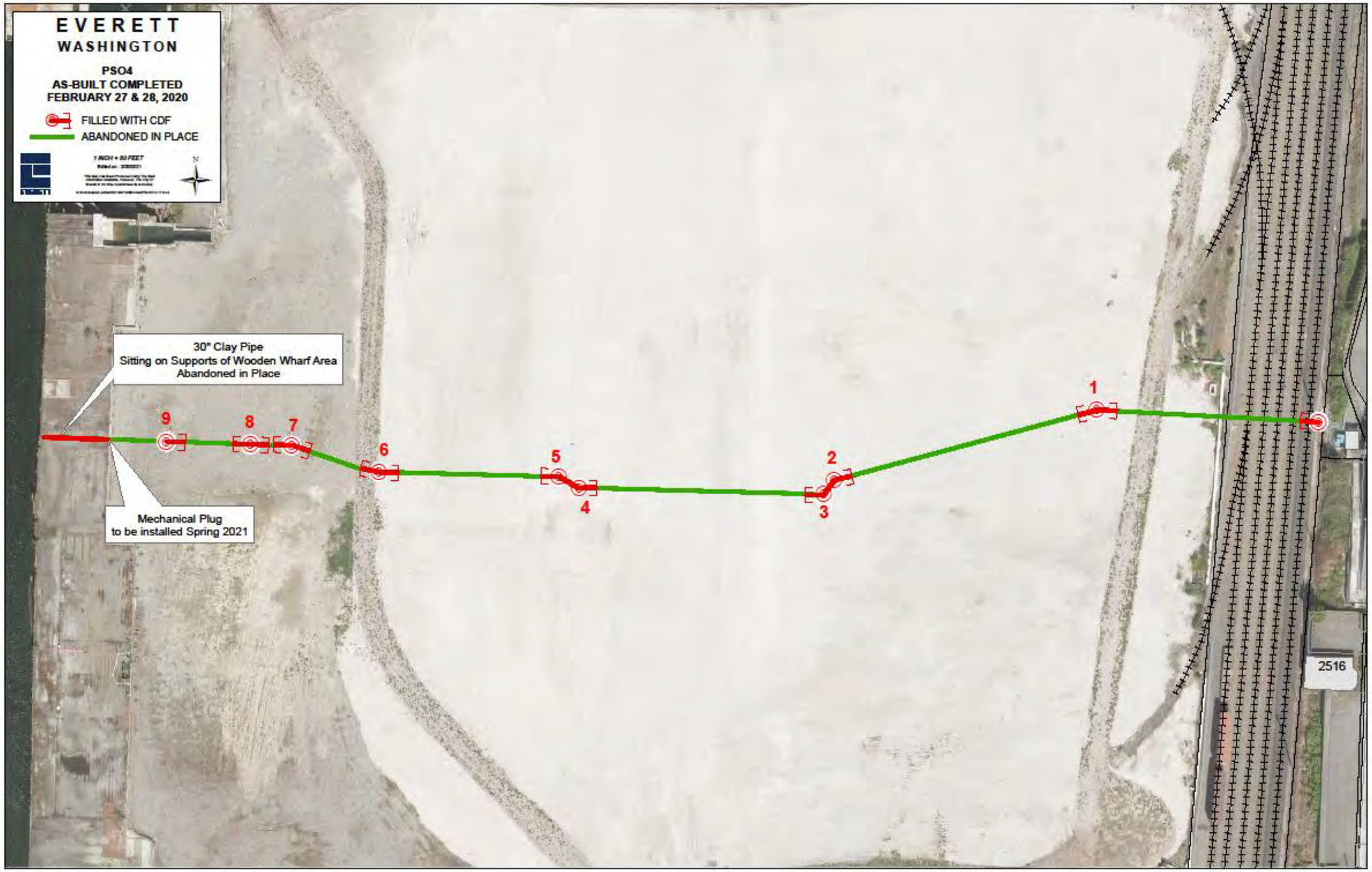

FINAL CONSTRUCTION REPORT

Kimberly-Clark Worldwide Site Upland Area
3rd Interim Action

Port of Everett
Everett, Washington

July 30, 2024

Prepared for

Port of Everett

SEATTLE
155 NE 100th St, Ste 302, Seattle, WA 98125 T 206.631.8680 landauinc.com

Construction Report
3rd Interim Action
Kimberly-Clark Worldwide Site Upland Area
Port of Everett
Everett, Washington

This document was prepared by, or under the direct supervision of, the technical professionals noted below.

Document prepared by: _____ Dylan Frazer, LG
Project Manager; Senior Associate

Document reviewed by: _____ Ken Reid, LEG
Quality Reviewer; Senior Associate

Date:	July 30, 2024
Project No.:	0121049.080.084
File path:	P:\121\049\R\3rd IA Implementation Report\Landau MIE KC 3rd IA Implementation Report_Final 073024.docx
Project Coordinator:	LJL

LANDAU ASSOCIATES

This page intentionally left blank.

TABLE OF CONTENTS

Page

1.0 Introduction 1-1
2.0 Implementation of the Interim Action 2-1
2.1 Ecology Coordination and Permitting 2-1
2.2 Site Grading 2-2
2.2.1 Preload and Grading 2-2
2.2.2 Import Fill Evaluations 2-2
2.2.2.1 South Terminal Stockpile 2-3
2.2.2.2 Getchell Pit #15415 2-3
2.2.2.3 Cadman Pit D345 (a) 2-3
2.2.2.4 Cadman Pit D345 (b) 2-3
2.2.2.5 Mandan Pit (a) 2-4
2.2.2.6 Mandan Pit (b) 2-4
2.2.2.7 Other Materials 2-4
2.2.3 Abandoned Pipe Decommissioning 2-4
2.3 Cap Construction 2-5
2.4 Utility Installation 2-5
2.5 Outfall Reconstruction 2-6
2.6 Soil and Groundwater Management 2-6
2.6.1 Management of Unsuitable Excavated Soils 2-7
2.6.1.1 Potentially Contaminated Soil 2-8
2.6.1.2 Geotechnically Unsuitable Soil 2-8
2.6.1.3 Concrete and Historical Foundations 2-8
2.6.1.4 Wood Chips 2-9
2.6.2 Management of Groundwater 2-9
2.6.2.1 Monitoring Well Decommissioning 2-9
2.7 Security Fencing 2-10
3.0 Cultural Resources 3-1
4.0 Compliance Monitoring 4-1
4.1 Protection Monitoring 4-1
4.1.1 Protection of Human Health 4-1
4.1.2 Protection of the Environment 4-1
4.2 Performance Monitoring 4-2
4.3 Confirmation Monitoring 4-2
5.0 Summary 5-1
6.0 Use of This Report 6-1
7.0 References 7-1

FIGURES

Figure	Title
1	Vicinity Map
2	Third Interim Action Site Diagram

APPENDICES

Appendix	Title
A	Project As-built Plan Set
B	Preload Ground Improvement Summary Memorandum
C	Import Fill Evaluation—Analytical Laboratory Reports
D	Selected Site Photographs
E	Waste Disposal Documentation
F	City of Everett Sewer Discharge Authorization
G	Archaeological Monitoring Report

LIST OF ABBREVIATIONS AND ACRONYMS

AO ..... agreed order
Aspect ..... Aspect Consulting
bgs ..... below ground surface
BMP ..... best management practice
BTEX ..... benzene, toluene, ethylbenzene, and xylenes
CDF ..... controlled density fill
CESCL ..... construction erosion and sediment control lead
CM ..... crushed material
CSBC ..... crushed surfacing base course
CSGP ..... construction stormwater general permit
CY ..... cubic yards
Ecology ..... Washington State Department of Ecology
EPA ..... US Environmental Protection Agency
ESA ..... Endangered Species Act
ft ..... feet, foot
HASP ..... health and safety plan
ID ..... identification
Interim Action ..... 3rd Interim Cleanup Action
K-C ..... Kimberly-Clark Worldwide, Inc.
Krazan ..... Krazan & Associates, Inc.
Landau ..... Landau Associates, Inc.
LNAPL ..... light non-aqueous phase liquids
M&D Plan ..... Cultural Resources Monitoring and Discovery Plan
mg/kg ..... milligrams per kilogram
MIE ..... Maritime Industrial Expansion
MTCA ..... Model Toxics Control Act
NWTPH-Dx ..... Northwest total petroleum hydrocarbon diesel-range extended
NWTPH-Gx ..... Northwest total petroleum hydrocarbon gasoline-range extended
PAH ..... polycyclic aromatic hydrocarbons
PCB ..... polychlorinated biphenyl
Port ..... Port of Everett
Preload Memo ..... Preload Ground Improvement Summary Memorandum
Project ..... Port's MIE at Norton Terminal project
PUD ..... public utility district
PVC ..... polyvinyl chloride
RCRA ..... Resource Conservation and Recovery Act
Report ..... Interim Action Construction Report
SGMP ..... Soil and Groundwater Management Plan

LIST OF ABBREVIATIONS AND ACRONYMS (CONTINUED)

SIM ..... selected ion monitoring
Site ..... Upland Area of the former K-C MTCA site
SVOC..... semivolatile organic compound
SWPPP ..... stormwater pollution prevention plan
TPH-D ..... diesel-range total petroleum hydrocarbons
TPH-G ..... gasoline-range total petroleum hydrocarbons
TPH-O ..... oil-range total petroleum hydrocarbons
UCL ..... upper confidence limit
WAC ..... Washington Administrative Code
Work Plan..... Interim Action Work Plan and Addendum

1.0 INTRODUCTION

On behalf of the Port of Everett (Port), this Interim Action Construction Report (Report) presents implementation of the 3rd Interim Cleanup Action (Interim Action) at the Upland Area of the former Kimberly-Clark Worldwide, Inc. (K-C) Model Toxics Control Act (MTCA) site (Site). The Site is located adjacent to and just north of the Port's main Marine Terminal facilities in Everett, Washington. The Interim Action was conducted in coordination with the Port's Maritime Industrial Expansion (MIE) at Norton Terminal project (collectively referred to in this document as the Project), as illustrated on Figures 1 and 2.

The Interim Action was conducted in accordance with the Agreed Order (AO) between the Port, K-C, and the Washington State Department of Ecology (Ecology; AO No. DE 9476). The second amendment to the AO addresses a 3rd Interim Action completed at the Site by the Port (Ecology 2021). Work to satisfy the requirements of this 3rd Interim Action was guided by the Interim Action Work Plan (Landau Associates, Inc. [Landau] 2021), and the Interim Action Work Plan Addendum No. 1 (Landau 2022), collectively referenced in this document as the Work Plan.

2.0 IMPLEMENTATION OF THE INTERIM ACTION

The Project, which included implementation of the Interim Action, commenced in October 2021 and concluded in May of 2023. Interim Action portions of the Project generally included site grading, cap construction, utility installation, outfall reconstruction, soil and groundwater management, and security fencing installation. Preload ground improvement activities to support cap construction were conducted in portions of the Site prior to approval of the Work Plan; this work was proposed in the Preload Ground Improvement technical memorandum (Preload Memo) that was approved by Ecology, which was included as an attachment to the Work Plan. Preloading activities are discussed in this report as a part of the Interim Action.

2.1 Ecology Coordination and Permitting

The Interim Action was implemented in accordance with the second amendment to the AO. In addition to Ecology approval of the Work Plan, the Port maintained consistent communication with Ecology's Site manager, Andy Kallus, during the Project, which included weekly coordination meetings, requests for reviews of contractor submittals, and general updates of observations at the Site.

The Port also obtained the following permits and approvals for the Project:

- NOAA Fisheries Section 7 Endangered Species Act (ESA) Letter of Concurrence (February 10, 2021)
- US Fish & Wildlife Section 7 ESA Letter of Concurrence (March 11, 2021)
- US Army Corps of Engineers Nationwide Permit 7 Authorization (June 14, 2021)
- City of Everett Shoreline Substantial Development Permit, Height Modification, and Landscaping Modification Approval (September 23, 2021)
- Washington State Department of Archaeology and Historic Preservation No Historic Properties Affected Concurrence Letter (March 17, 2021)
- Port State Environmental Policy Act mitigated determination of non-significance (March 8, 2021)
- Ecology Administrative Order for compliance with Water Pollution Control Act, Water Quality Standards, and National Pollutant Discharge Elimination System Construction Stormwater General Permit (CSGP; August 3, 2021)
- Washington State coverage under the CSGP (August 6, 2021)
- City of Everett Public Works Permit (October 26, 2021)
- Maritime Administration National Environmental Policy Act Record of Categorical Exclusion (April 15, 2021)
- City of Everett Letter of Substantive Requirements (August 10, 2021)
- Washington Department of Fish & Wildlife Letter of Substantive Requirements of the Hydraulic Code (July 8, 2021).

Copies of permits and approvals are held by the Port and can be provided upon request.

2.2 Site Grading

Site grading conducted during implementation of the Interim Action included importing, grading, and compacting clean fill to meet the following goals: 1) increase elevation of the Site to be protective of anticipated sea level rise associated with expected climate change impacts, 2) direct stormwater drainage to the site-wide stormwater conveyance and treatment system, and 3) support construction of the low-permeability cap described in Section 2.3 to reduce surface water infiltration. Final site grades are presented on as-built sheets C3.3 through C3.14 (Appendix A).

Clean fill was compacted to meet subgrade design requirements for the low-permeability cap. A preload was also used at the Site to further limit long-term settlement in areas with significant wood debris deposits and protect the long-term functionality of the low-permeability cap.

2.2.1 Preload and Grading

Preload activities were conducted in accordance with the Preload Early Action Letter, which was included as an attachment to the Work Plan. Preload material was imported to the Site, placed in preload within the area illustrated on as-built sheet C1.1 (Appendix A). Following completion of preloading, the material was used as fill during Site grading activities. Preload material was evaluated against import fill criteria presented in the Work Plan prior to being transported on Site, as is detailed in Section 2.2.2 below. Results of preloading activities are presented in the Preload Ground Improvement Summary Memorandum (Appendix B).

Performance of the preload was monitored from August 2021 through the completion of settlement associated with the preload in January 2022. Following completion of preloading activities, preload soil was used to provide the base course for the pavement cap and raise the elevation of the Upland Area. This material was graded and compacted to meet geotechnical requirements, reduce stormwater infiltration, and convey stormwater to stormwater treatment infrastructure installed as a part of the Project.

2.2.2 Import Fill Evaluations

In accordance with the Work Plan, import fill evaluations were conducted by the contractor and submitted to the Port and Ecology for review and approval prior to delivering the material to the Site. Fill materials imported to the Site were sampled at a rate of five samples for the first 1,000 cubic yards (CY) and one sample per each additional 1,000 CY of each specific material. Characterization samples were analyzed for the following:

- Gasoline-range total petroleum hydrocarbons (TPH-G) by Northwest total petroleum hydrocarbon gasoline-range extended (NWTPH-Gx) and Northwest total petroleum hydrocarbon diesel-range extended (NWPTH-Dx)
- Polycyclic aromatic hydrocarbons (PAHs) by US Environmental Protection Agency (EPA) Method 8270 selected ion monitoring (SIM)
- Metals (arsenic, copper, lead, mercury, nickel, zinc) by EPA Method 6000/7000

- Polychlorinated biphenyls (PCBs) by EPA Method 8082.

Analytical results were evaluated against import fill criteria as presented in the Work Plan either by a direct comparison to that criteria or using a statistical evaluation in coordination with Ecology. Import fill evaluation data and initial evaluations are presented in contractor-provided memoranda in Appendix C; this appendix also includes statistical evaluation worksheets, if used.

2.2.2.1 South Terminal Stockpile

Material from a soil stockpile located within the Port's South Terminal was utilized for haul road construction during placement of preload material. In accordance with import fill criteria presented in the Preload Memo (dated April 6, 2021), which was included as an attachment to the Work Plan, import fill characterization sampling was conducted to characterize the approximately 1,650-CY stockpile of ballast rock, which had been stored at the Port's South Terminal wharf area. Six representative samples of the material were collected. Laboratory analytical results were screened against the import fill criteria presented in the Preload Memo.

As presented in the Preload Memo, all analytical results met the screening levels, which indicates that this imported material meets the criteria and is suitable for use at the Site. As is presented in the Preload Memo, no surface grading or excavation was conducted during import or placement of this material, and this material was only placed at elevations above the current and future expected groundwater table (i.e., in unsaturated conditions).

2.2.2.2 Getchell Pit #15415

As presented in the July 26, 2021 letter prepared by Krazan & Associates, Inc. (Krazan), 15 characterization samples (representative of 11,000 CY of material) were collected from crushed surfacing base course (CSBC) sourced from the Miles Sand and Gravel—Getchell Pit #15415. Results for all analytes met the criteria by a direct comparison to the Work Plan criteria and provided satisfactory import fill data for material represented by these samples.

2.2.2.3 Cadman Pit D345 (a)

As presented in the August 18, 2021 letter prepared by Krazan, 22 characterization samples (representative of 18,000 CY of material) were collected from CSBC sourced from the Cadman Sand and Gravel pit #D345. Results for copper and nickel did not meet import fill criteria by a direct comparison to the Work Plan criteria; results for other analytes provided satisfactory import fill data. As suggested by Ecology, a 95 percent Upper Confidence Limit (95UCL) was calculated for both the copper and nickel data sets using EPA ProUCL 5.1 software; the 95UCL for nickel was 36.69 milligrams per kilogram (mg/kg) and the 95UCL for copper was 29.74 mg/kg. These calculated values are less than the applicable import fill criteria and indicate that these results provide satisfactory import fill data for material represented by these samples.

2.2.2.4 Cadman Pit D345 (b)

As presented in the September 13, 2021 letter prepared by Krazan, 25 additional characterization samples (representative of an additional 25,000 CY of material) were collected from CSBC sourced from

the Cadman Sand and Gravel pit #D345. Results for nickel did not meet import fill criteria by a direct comparison to the Work Plan criteria; results for other analytes provide satisfactory import fill data. As suggested by Ecology, a 95UCL was calculated for the nickel data sets using EPA ProUCL 5.1 software; the 95UCL for nickel was 28.45 mg/kg. This calculated value is less than the applicable import fill criteria and indicates that these results provide satisfactory import fill data for material represented by these samples.

2.2.2.5 Mandan Pit (a)

As presented in the December 7, 2021 letter prepared by Aspect Consulting (Aspect), 14 CSBC characterization samples (representative of 10,000 CY) and 14 structural fill samples (representative of 10,000 CY) were collected from the Granite Construction Mandan Pit. Results for copper and nickel did not meet import fill criteria by a direct comparison to the Work Plan criteria; results for other analytes provide satisfactory import fill data. As presented in the letter, the nickel and copper data were statistically evaluated by calculating a 95UCL for the nickel data sets using EPA ProUCL 5.1 software; the 95UCL for nickel was 28.45 mg/kg. This calculated value is less than the applicable import fill criteria and indicates that these results provide satisfactory import fill data for material represented by these samples.

2.2.2.6 Mandan Pit (b)

As presented in the March 29, 2022 letter prepared by Aspect, an additional four CSBC characterization samples (representative of an additional 4,000 CY) and 10 additional structural fill samples (representative of an additional 10,000 CY) were collected from the Granite Construction Mandan Pit. Of the four additional CSBC samples and 10 additional structural fill samples collected for this submittal, one analytical result for mercury did not meet import fill criteria by a direct comparison to the Work Plan criteria; results for other analytes provide satisfactory import fill data. As presented in the summary letter, this mercury result was less than two times the criteria and is suspected to be within the range of natural background concentrations; these results were determined to provide satisfactory import fill data for material represented by these samples.

2.2.2.7 Other Materials

Additional materials imported to the Site during the Project included quarry spalls, pea gravel, and rip rap. Consistent with Ecology's guidance, because these materials were washed and did not include any fraction smaller than ¼-inch, laboratory analysis for comparison to import fill criteria was not necessary. Use of these materials was consistent with project plans, except for placement of quarry spalls in areas where concrete structures were left in place and/or void spaces beneath existing structures were filled.

2.2.3 Abandoned Pipe Decommissioning

Abandoned pipes were decommissioned during Site grading activities to support the long-term effectiveness of the grading activities and to reduce the risk of contamination being spread via preferential pathways to surface water. Existing abandoned underground pipes previously identified on historical plans within 75 feet (ft) inland of the shoreline were demolished by filling completely with

controlled density fill (CDF) or by removal. Any additional abandoned underground pipes (within 75 ft inland of the shoreline) encountered during subsurface activities within the work zone were decommissioned consistent with requirements of the Work Plan by being filled with a CDF or grout plug equal to five times the diameter of the pipe. Additionally, abandoned underground pipes 15 inches in diameter or greater encountered during subsurface activities throughout the Site will be filled with CDF or removed and replaced with quarry spall backfill.

Sheet D2.1 of the as-built plans (Appendix A) illustrates abandoned pipes that were decommissioned. As noted on this sheet, the contractor potholed to locate pipes identified on the plans prior to decommissioning; some pipes were not located and may have been previously decommissioned by removal and/or were not accurately depicted on historical plans. Select photographs of pipe decommissioning are included in Appendix D, and include the following:

- A 36-inch wood stave pipe at the eastern edge of the Site was decommissioned after being exposed and prior to being filled with quarry spalls.
- A 48-inch steel pipe along the eastern Site boundary was capped at its northern end and elevated concentrations of methane were detected when the pipe was cut. The pipe was decommissioned by being filled with grout under the supervision of an industrial hygienist.
- A 36-inch wood stave pipe running east/west, just northwest of the existing warehouse was full of water when exposed. A hydrogen sulfide odor was observed. The pipe was decommissioned by being filled with quarry spalls and CDF under the supervision of an industrial hygienist.

2.3 Cap Construction

Following intrusive activities and general site grading, a low-permeability cap consisting of low-permeability pavement materials was constructed to further reduce surface water infiltration and to prevent exposure of terrestrial ecological receptors. The pavement was graded so that all rainfall is routed to stormwater conveyance system inlet structures. A total of approximately 33.2 acres were capped. The total pavement area includes the originally planned 29.5 acres of pavement, plus an additional acreage at the northern portion of the Site to result in a total pavement area of 33.2 acres. The extent of the capped area and pavement section details are illustrated on Sheets C3.1 and C3.2 of the as-built plans (Appendix A). Photographs of the completed cap are also included in Appendix D.

Based on an approximate maximum capping area of 40.84 acres presented in the Work Plan, approximately 81 percent of the maximum capping area of the Site described in the AO has been capped, which far exceeds the 30 percent infiltration reduction performance goal of the Interim Action.

2.4 Utility Installation

During earthwork activities and prior to cap construction, the project included installation of subgrade utilities to minimize future disturbance of the cap. Utilities installed included a storm drainage system, potable water, sanitary sewer, electrical and communications, and electrical for light poles; additional subsurface foundation installations were required for light pole installation and other aboveground utility infrastructure.

Subgrade utilities were installed in trenches ranging from 1 to 2 ft below the former grade shallow enough to be within clean fill material placed at the Site during implementation of the 2nd Interim Action completed by K-C in 2020, up to approximately 8 ft below ground surface (bgs). Select structures required excavation of up to 18 ft bgs (i.e., the stormwater lift station upstream of the stormwater treatment system and Outfall M). Excavated material generated during trenching was managed in accordance with the Work Plan and is described in further detail in Section 2.6.

Utility trench cutoff walls were also installed to reduce the risk of contaminating adjacent properties, or contamination from nearby properties impacting the Site at the Site boundary on Federal Avenue and at the two reconstructed outfalls—Outfall A and Outfall M. Cutoff wall details are provided in as-built sheets C5.2 (Federal Avenue utilities) and C4.10 and C4.14 (outfalls).

2.5 Outfall Reconstruction

Consistent with project plans, existing Outfalls A and M were reconstructed for discharge from the new stormwater system. Outfall reconstruction activities were conducted in the dry during low tide windows in the mornings of July 25 through July 27. Soil excavated from around the former outfall pipes consisted of brown to black, silty sand with some cobbles and debris (bricks); clean imported quarry spalls and rip rap was used as fill during reconstruction.

As the former Outfall A outlet daylighted north of the new Outfall A, abandonment of the former outfall pipe was completed after reconstruction of the new outfall. The former Outfall A pipe was shown on historical plans, but initially could not be located along the shoreline and had to be located in the upland portion of the Site. A pipe, suspected to be the former Outfall A pipe, was located upstream near an existing storm drain structure near the existing warehouse in a pothole excavation approximately 8 ft bgs. On August 2, 2022, a camera was placed in the pipe. The camera initially followed the pipe approximately 69 ft to the west before encountering water. The camera was in the pipe at the time of a falling tide and proceeded down the pipe as the tide decreased up to a total of 128 ft west of the point of entry. Based on a tide elevation at the time of the camera's furthest travel distance, the elevation of the pipe at the furthest point the camera progressed was -0.8 ft, or approximately 16 ft bgs. Based on the fact that the water in the pipe was fluctuating with the tide, and the location of the pipe generally matched historical plans, this pipe was determined to be the former Outfall A pipe and was abandoned by filling with CDF from the access point in the pothole excavation. The outfall was later identified along the shoreline on August 11, 2022, and the pipe was also plugged at this point with grout placed behind sandbags.

As-built sheets C4.9 and C4.10 present details for the reconstructed outfalls. Select photographs of the outfall reconstruction are included in Appendix D.

2.6 Soil and Groundwater Management

Management of contaminated soil and groundwater during construction of subgrade utilities was conducted in accordance with the soil and groundwater management plan (SGMP), which was an attachment to the Work Plan. The project also included excavation outside the Site boundary to the

south, which was within the ExxonMobil/ADC MTCA cleanup site. Soil excavated from the ExxonMobil/ADC site was managed separately in coordination with Ecology and was guided by the ExxonMobil/ADC SGMP.

Excavated soil generally included 2–5 ft of clean sand fill placed during the 2nd Interim Action and was underlain by hydraulic fill. Field screening was conducted to determine when soil was suitable for on-site backfill; generally, all of the recent sand fill and some of the underlying hydraulic fill was reused onsite. Soil reused onsite was placed only in areas ultimately covered by the low-permeability cap and was placed in approximately the same vertical horizon it originated. However, field screening also indicated significant quantities of potentially contaminated soil, geotechnically unsuitable soil, and in-place concrete structures and rubble. Potentially contaminated soil was consistent with contaminated soils previously observed at the Site; no "new conditions" were observed. Additionally, no crushed demolition debris (crushed material or "CM") as identified and removed during the 2nd Interim Action was observed.

Potentially contaminated and geotechnically unsuitable soil was managed as one material during construction activities; in total, 17,850 tons of soil was excavated and removed from the Site for offsite disposal as non-hazardous waste. In addition, 7.1 million gallons of groundwater was removed from excavations was disposed of in the City of Everett sanitary sewer system.

2.6.1 Management of Unsuitable Excavated Soils

Excavated materials not reused onsite were managed in accordance with the SGMP. These materials included potentially contaminated soil, geotechnically unsuitable soil, concrete, and wood debris.

Following excavation and field screening, potentially contaminated soil and geotechnically unsuitable soil was transported to an onsite temporary stockpile cell. Temporary soil stockpile cells were constructed to contain the soil and prevent rain and stormwater from being in contact with the contaminated soil; details for the temporary soil stockpile construction details are provided in as-built sheets C1.4. Soil for disposal was loaded from the temporary stockpile into containers or trucks for transport to the disposal facility.

Soil representative of potentially contaminated and geotechnically unsuitable soil observed throughout the project was sampled for waste characterization purposes. Waste characterization samples were analyzed for diesel- and oil-range total petroleum hydrocarbons (TPH-D/O); benzene, toluene, ethylbenzene, and xylenes (BTEX); PCBs; semivolatile organic compounds (SVOCs); Resource Conservation and Recovery Act (RCRA) 8 metals; and sulfate. The analytical results were provided to Republic Services, Waste Management, and Cadman for development of waste profiles. Depending on container and truck availability, soil was exported to all three of these facilities as non-hazardous waste. Waste characterization laboratory analytical reports are included with the waste profiles presented in Appendix E, and field-screening indicated that these samples were representative of potentially contaminated soil that was removed from the Site during the duration of the project.

2.6.1.1 Potentially Contaminated Soil

Potentially contaminated soil observed during intrusive activities generally consisted of gray to black sands and silts with petroleum odor and sheen and varying amounts of gravel and cobbles, bricks, and dimensional lumber. Free-phase petroleum (light non-aqueous phase liquids or "LNAPL") was not observed. Given the defined vertical and horizontal limits of excavation necessary for utility installation, the areal extent of any observed contaminated soil was not clear; nor did field observations indicate a new source of contamination. In general, soils with petroleum odor and sheen were observed as shallow as approximately 3 ft bgs and as deep as 10 ft bgs in excavations throughout the Site. In addition to specific locations discussed below, photographs of potentially contaminated soil are included in Appendix D.

Some areas with more significant contamination included the following:

- During excavation at the light pole LP06 location, heavy sheen was observed in soil and groundwater encountered beneath the recent sand fill. In-place vertical and horizontal concrete structures were encountered at this location. A photograph of the material encountered is included in Appendix D, and the location of LP06 is clearly illustrated on sheet G1.4 (labeled as NT-HML-06; Appendix A).
- Gray silt and sand with creosote odor and several creosote-treated piles were observed at and below approximately 6 ft bgs in the excavation for the stormwater lift station vault located just east of reconstructed Outfall M. A photograph of this material and the creosote-treated timbers is included in Appendix D.

2.6.1.2 Geotechnically Unsuitable Soil

Geotechnically unsuitable soils consisted of sands and silts with above-optimum moisture contents and varying amounts of rock and other debris. General photographs showing geotechnically unsuitable soil are included in Appendix D; additional notable materials observed are described below.

- Significant concrete debris and rock was observed on March 3, 2022 between approximately 1 ft bgs to 7 ft bgs in a light pole foundation excavation located just inside the south gate to the Site. Brick and some dimensional wood debris was also observed in this material. The Port discussed observations with Ecology and concluded this material was general debris and not CM. A photograph of the excavated debris is included in Appendix D.

2.6.1.3 Concrete and Historical Foundations

Significant volumes of in-place concrete structures were observed at the Site. Observed concrete structures included vertical walls, horizontal floors, and vertical metal and concrete pilings. In-place concrete structures were removed using a hydraulic breaker to facilitate excavation necessary for utility installation. Areas where concrete structures were left in place are illustrated on as-built sheet 3.21 (Appendix A), and in these areas, single- or double-layer geogrid was installed for geotechnical stability and long-term integrity of the low-permeability cap. Photographs of example concrete structures encountered during intrusive activities are included in Appendix D. Clean concrete, broken into pieces and free of any soil and rebar, was trucked to offsite recycling facilities.

2.6.1.4 Wood Chips

Wood chips, some with a petroleum odor, were observed in discontinuous areas from an approximately 20-ft by 20-ft by 3-ft-deep area to the south and southwest of the existing public utility district (PUD) substation, generally within the historical "log pond fill area," as shown on as-built figure G2.1 (Appendix A). Photographs of this material are included in Appendix D. Wood chips were excavated where proof rolling of existing soils indicated a soft subgrade; thin lenses of wood chips were observed in the sidewalls outside of excavated areas and at depths beyond the maximum excavation depth of 3 ft bgs. Additional wood chips may be present in the area southwest of the existing PUD substation, but observations indicated that the most concentrated volumes of wood chips were within 3 ft of the ground surface, which was removed.

After excavation, the wood chips were managed as potentially contaminated soil stockpile for offsite disposal as described above in 2.6.1.1.

2.6.2 Management of Groundwater

To facilitate construction, groundwater encountered during excavation was dewatered using sumps or well points, as needed, and was managed in accordance with the SGMP. Collected groundwater was conveyed to settling tanks operated by the Port's contractor, who tested the water to verify compliance with the discharge authorization prior to discharge to the City of Everett's sanitary sewer collection system in accordance with a City of Everett Discharge Authorization No. MD-41-2021 (Appendix F). Approximately 7.1 million gallons of groundwater were treated and discharged to the City's sanitary sewer.

No groundwater was managed by infiltration at the Site.

2.6.2.1 Monitoring Well Decommissioning

Existing monitoring wells within the extent of the Project were decommissioned in accordance with the Work Plan and resource protection well decommissioning requirements presented in Washington Administrative Code (WAC) 173-160-460.

A total of 10 monitoring wells were decommissioned. Decommissioned monitoring wells include the eight monitoring wells decommissioned on October 14, 2021; the locations of these wells are shown on as-built sheets D1.1 through D1.8 (Appendix A). Two additional wells were decommissioned in the northeast corner of the Site on November 23, 2022 to accommodate additional paving. The location of decommissioned monitoring well UG-MW-1 is shown on sheet G3.1 (Appendix A); the second of the two additional wells was located approximately 95 ft directly north of UG-MW-1. This well did not have an Ecology well identification (ID) tag, and no records of this well were located; the well was approximately 57 ft deep and was constructed with a 1-inch polyvinyl chloride (PVC) well casing. The unknown well was removed by overdrilling and was filled with grout and bentonite chips.

Well Name	Ecology Tag ID	Well Diameter	Decommission Date
REC1-MW-5	BHS 334	2-inch	October 14, 2021
REC1-MW-8	BHS 325	¾-inch	October 14, 2021
REC1-MW-9	BHS 326	2-inch	October 14, 2021
REC7-MW-4	BHE 801	2-inch	October 14, 2021
MW-1	BHM 187	1-inch	October 14, 2021
MW-2	BHM 188	1-inch	October 14, 2021
SHB-MW2	BIE 369	2-inch	October 14, 2021
UST71-MW-102	BIP 814	2-inch	October 14, 2021
UG-MW-1	BHE 991	2-inch	October 21, 2022
Unknown well	N/A	1-inch	October 22, 2022

2.7 Security Fencing

Demolition of the existing Site fence and installation of new security fencing was completed to maintain vector control and to prevent human contact with residual Site contamination. Security fencing details are shown on Sheets C 6.1 through C6.6 of the as-builts (Appendix A).

3.0 CULTURAL RESOURCES

The Interim Action included implementation of a Cultural Resources Monitoring and Discovery Plan (M&D Plan), which was included as an attachment to the Work Plan. Implementation of the M&D Plan generally included the archeological monitoring of excavations at depths where there was a moderate potential for encountering buried cultural resources. Potential buried cultural resources were not observed during the Interim Action; a summary report documenting the results of cultural monitoring conducted during the Project is included in Appendix G.

4.0 COMPLIANCE MONITORING

MTCA requires compliance monitoring for all cleanup actions, as described in WAC 173-340-410. Compliance monitoring is conducted for the following three purposes:

- Protection monitoring to confirm that human health and the environment are adequately protected during construction and operation and maintenance of the cleanup action.
- Performance monitoring to confirm that the cleanup action has attained cleanup standards and any other performance standards.
- Confirmational monitoring to confirm the long-term effectiveness of the cleanup action once the cleanup standards and other performance standards have been attained.

Compliance monitoring for the Interim Action was limited to protection monitoring and performance monitoring for verification that the Project scope is completed as planned. Subsequent remedial investigation work at the Upland Area will evaluate the effectiveness of the Interim Action relative to final cleanup standards for the Upland Area, which will inform development of the final cleanup action.

4.1 Protection Monitoring

Protection monitoring implemented during the Interim Action included measures for the protection of human health and protection of the environment.

4.1.1 Protection of Human Health

Monitoring for protection of human health addresses worker safety for activities related to construction, operation, and maintenance of the cleanup action and was addressed in a Site-specific health and safety plan (HASP) developed by the contractor, which was also adopted by additional personnel onsite. Additionally, a Landau-specific project HASP was developed during preparation of the Work Plan. The HASPs were implemented to monitor and mitigate physical and chemical hazards associated with Site activities, consistent with the requirements of WAC 173-340-810.

4.1.2 Protection of the Environment

Environmental protection monitoring was conducted during the construction activities. This included monitoring for dust, preparation and implementation of a stormwater pollution prevention plan (SWPPP), and implementation and monitoring of best management practices (BMPs) to minimize dust generation and/or control stormwater runoff from contaminated soil cleanup actions during construction. During construction, a certified construction erosion and sediment control lead (CESCL) monitored performance of the BMPs and recommended changes in approach or application, if necessary. The CESCL also visually monitored the Site to verify that stormwater runoff was not being impacted by Site activities.

The Port also conducted quantitative dust monitoring throughout the duration of the Project. Dust monitoring was conducted on days when intrusive or site grading activities were conducted and when there was no recorded precipitation. Daily dust readings were collected upwind, adjacent to, and

downwind of areas of intrusive activity using a dust meter rated to detect particulate matter equal to or less than 10 micrometers in diameter. An action level (consistent with Washington State Ambient Air Quality 24-Hour Average Standard) of 0.150 milligrams per cubic meter was established; measurements only exceeded this action level on October 20, 2022, when regional wildfire smoke impacted measurements at all three Site air monitoring locations.

4.2 Performance Monitoring

Performance monitoring consisted of verification that the Interim Action was completed consistent with the scope of work as described in the Work Plan, and that final conditions meet the Project's 30 percent reduction in stormwater infiltration performance goal, as presented in the AO. The Port confirmed completion of the Interim Action through consistent coordination with both the construction contractor and Ecology, significant construction observation directly by the Port and by Port representatives, and preparation of as-built project plans to document final conditions. Meeting the 30 percent reduction in stormwater infiltration goal is demonstrated by the final limits of the low-permeability cap, which covers approximately 81 percent of the maximum capping area of the Site as defined in the AO.

4.3 Confirmation Monitoring

Confirmation monitoring will be conducted following finalization of the remedial investigation/feasibility study and cleanup action plan during implementation of the final cleanup action for the Upland Area.

5.0 SUMMARY

The Port, Ecology, and federal funding partners successfully completed the 3rd Interim Action at the K-C Site, satisfying the requirements of the second amendment to the AO. This project provides substantial benefits to human health and the environment, all while integrating the cleanup with a long-term Site use that restores the job numbers lost when the mill closed in 2012.

Completion of the Interim Action expedites cleanup of the K-C Upland Area, reduces surface water infiltration through residual soil contamination that could be mobilized into groundwater by surface water infiltration, and thus improves groundwater quality and prevents wildlife exposure to residual soil contamination. Completion of the Interim Action also integrates Site infrastructure improvements and cleanup elements to ensure consistency with future Site use and long-term protection of human health and the environment. Additional accomplishments of the Interim Action include the removal and disposal of 17, 850 tons of soil, removal and disposal of 7.1 million gallons of groundwater, and exceeding the AO's goal of a 30 percent reduction in surface water infiltration by placement of a low-permeability cap across 81 percent of the Site's maximum capping area.

While additional capping may occur as part of this interim action at a later date, the Port requests written confirmation that the requirements of the second amendment to the AO have been fulfilled with respect to the areas completed.

6.0 USE OF THIS REPORT

This report has been prepared for the exclusive use of the Port of Everett. Reliance on this report by third parties is at their sole risk. Further, the reuse of information, conclusions, and recommendations provided herein for extensions of the project or for any other project, without review and authorization by Landau, shall be at the user's sole risk. Landau warrants that within the limitations of scope, schedule, and budget, our services have been provided in a manner consistent with that level of care and skill ordinarily exercised by members of the profession currently practicing in the same locality under similar conditions as this project. We make no other warranty, either express or implied.

7.0 REFERENCES

Ecology. 2021. Second Amendment to Agreed Order No. DE 9476 In the Matter of Remedial Action by Kimberly-Clark Worldwide, Inc and the Port of Everett. Washington State Department of Ecology. May 18.

Landau. 2021. Final Interim Action Work Plan, Kimberly-Clark Worldwide Site Upland Area, 3rd Interim Action, Port of Everett, Everett, Washington. Landau Associates, Inc. August 5.

Landau. 2022. Technical Memorandum: Interim Action Work Plan Addendum No. 1, Construction Phase 2—Low-Permeability Cap Expansion, Kimberly-Clark Worldwide Site Upland Area, Everett, Washington. Landau Associates, Inc. July 20.

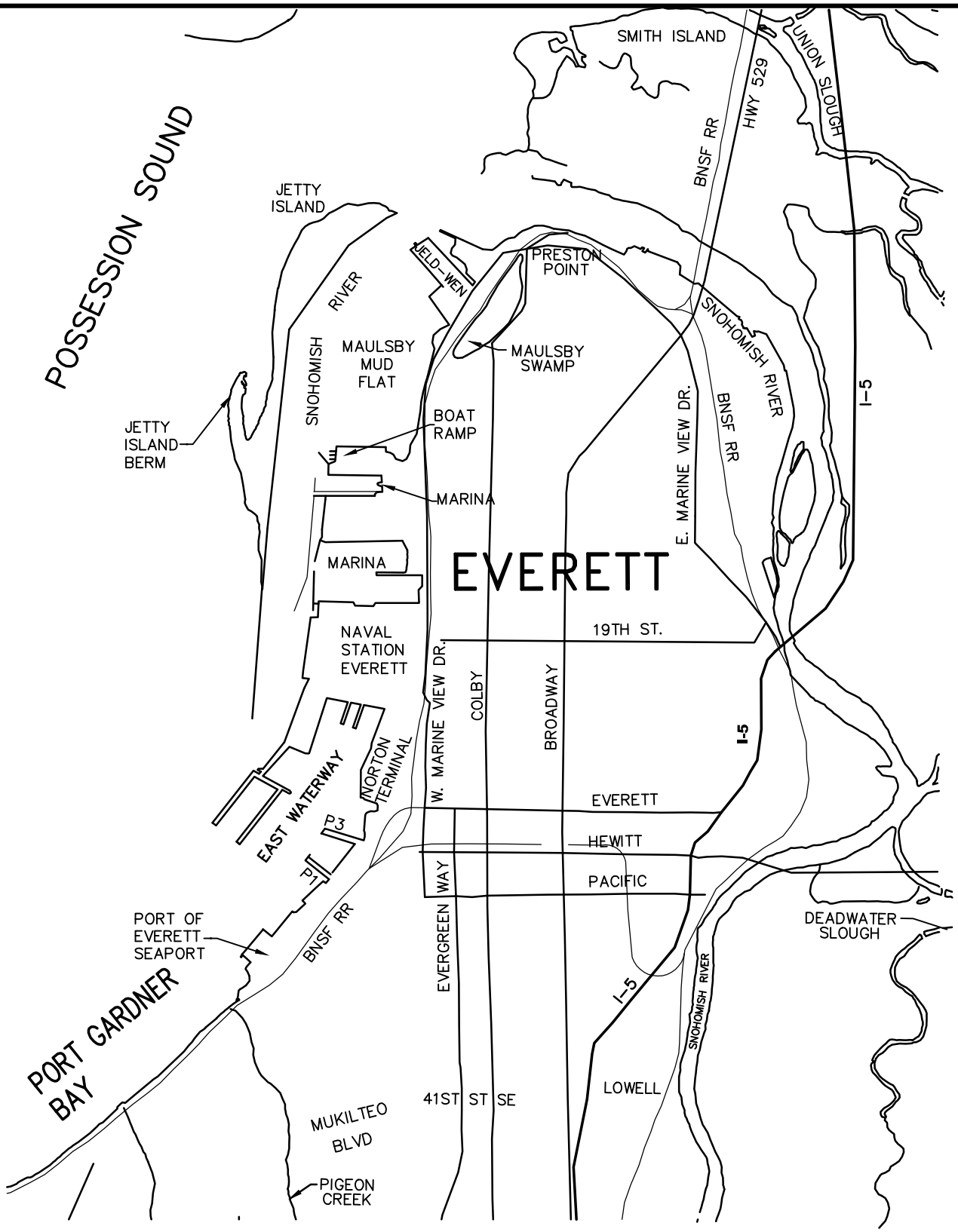

FIGURE 1

VICINITY MAP

SCALE: NTS

03-04-2021

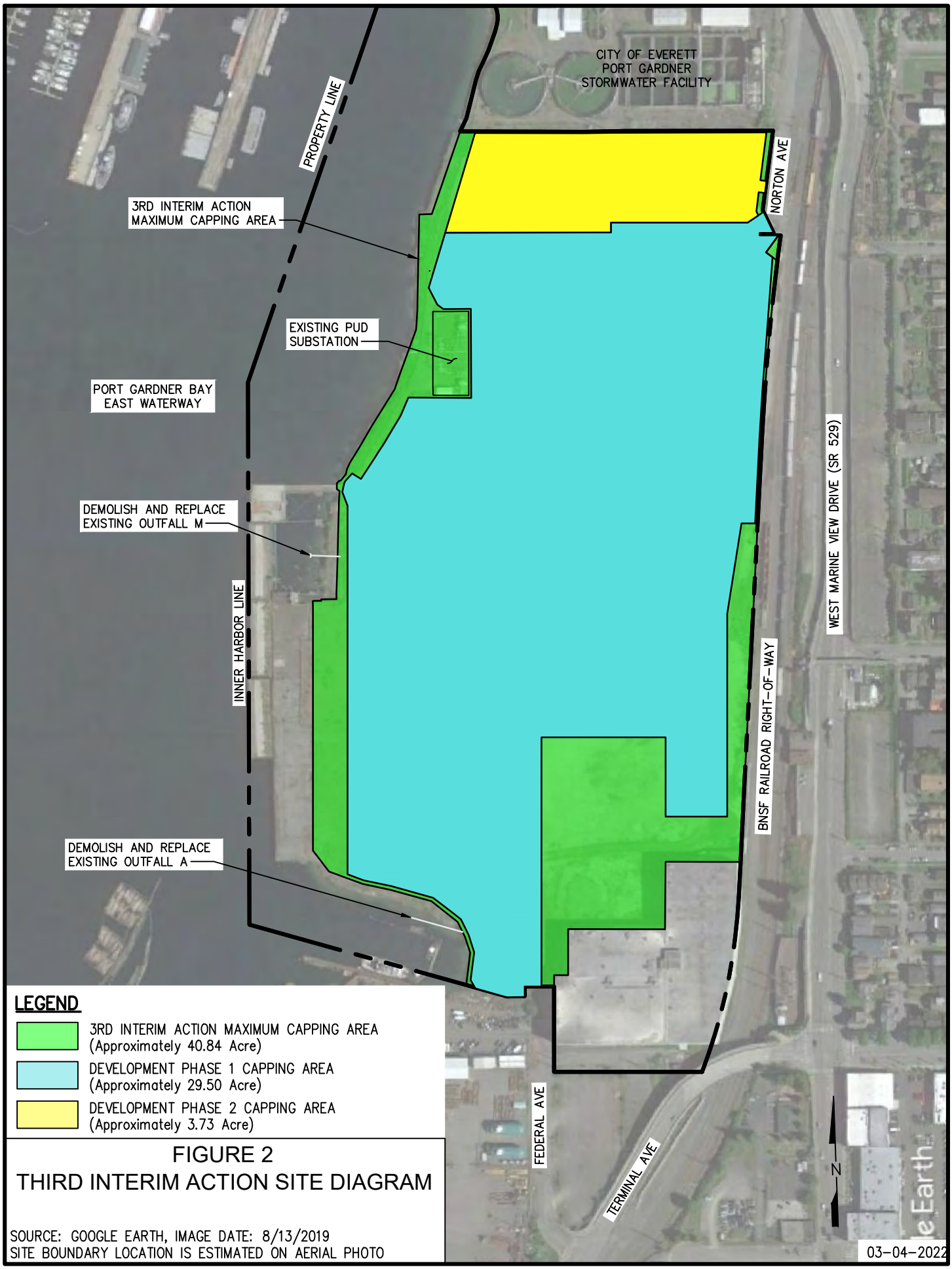

FIGURE 2
THIRD INTERIM ACTION SITE DIAGRAM

SOURCE: GOOGLE EARTH, IMAGE DATE: 8/13/2019
SITE BOUNDARY LOCATION IS ESTIMATED ON AERIAL PHOTO

APPENDIX A

Project As-built Plan Set

NORTON TERMINAL DEVELOPMENT & MTCA 3RD INTERIM ACTION AS-BUILTS 06-02-2023

Port of EVERETT

GRANT INFORMATION:
MARAD FY 2020 BUILD
GRANT NO. 693JF72140023

DEFERRED SUBMITTALS:
PREFAB LONGSHORE BUILDING TRAILER
PREFAB GUARD SHACK

*NOTE: ALL DEFERRED SUBMITTALS SHALL BE REVIEWED AND APPROVED BY ARCHITECT PRIOR TO PERMIT SUBMISSION.

COMMISSIONERS:
TOM STIGER
GLEN BACHMAN
DAVID SIMPSON

PORT STAFF:

LISA LEFEBER	CEO/EXECUTIVE DIRECTOR
CARL WOLLEBEK	CHIEF OPERATIONS OFFICER
WALTER SEIDL	MARINE TERMINALS DIRECTOR
JOHN KLEKOTKA, PE, SE	CHIEF OF ENGINEERING & PLANNING
STEPHEN HAGER, PE	PROJECT MANAGER

CONSULTING ENGINEERS:

KPFF CONSULTING ENGINEERS	CIVIL/STRUCTURAL
LANDAU ASSOCIATES	ENVIRONMENTAL/GEOTECHNICAL
ELCON ASSOCIATES	ELECTRICAL
2812 ARCHITECTURE	ARCHITECT
HBB	LANDSCAPE ARCHITECTURE
DAVID EVANS & ASSOC., INC	TOPOGRAPHIC SURVEY

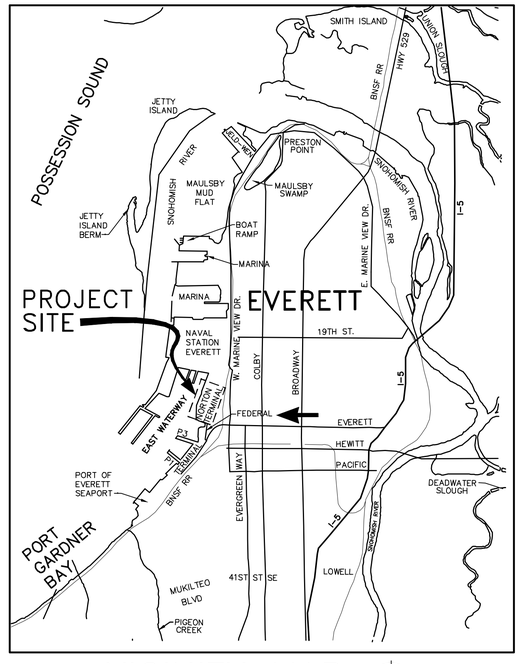

VICINITY MAP
SCALE: NTS

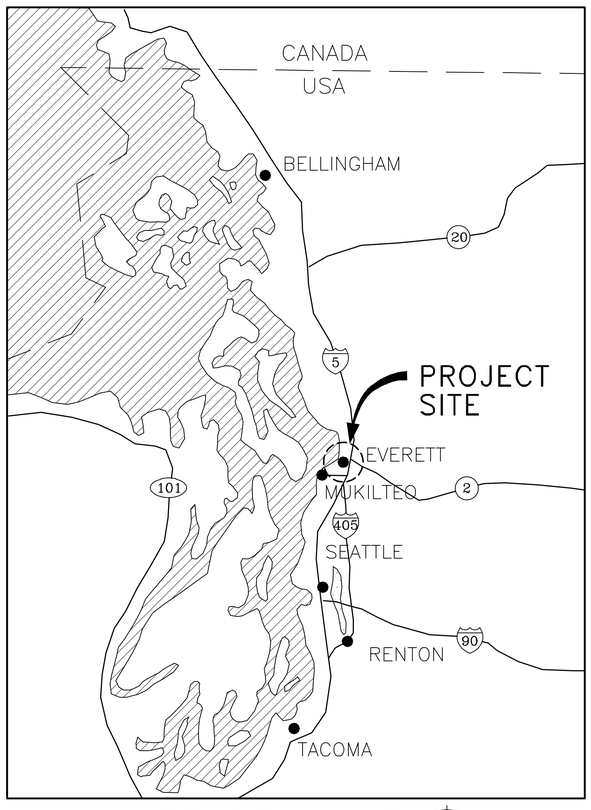

LOCATION MAP
SCALE: NTS

IF SHEET IS LESS THAN 22x34
REDUCE SCALE ACCORDINGLY

Port of EVERETT
P.O. BOX 538
EVERETT, WA 98206
(425) 259-3164

kpff
1601 5th Avenue, Suite 1300
Seattle, Washington 98101
(206) 382-0600 Fax (206) 382-0500
PROJECT NO. 1600120

NO.	DATE	BY	REVISION
2	07/05/2023	NW	AS-BUILT
1	06/21/2021	NW	ISSUED FOR BID
0	05/07/2021	NW	FOR CITY REVIEW

RECORD CONDITIONS ILLUSTRATED IN THESE PLANS REFLECT INFORMATION PROVIDED BY THE CONTRACTOR. RECORD CONDITIONS WERE NOT VERIFIED BY ENGINEER.

PROJECT ENGINEER: N. WATSON	SCALE: AS SHOWN
DESIGNED BY: J. BECKER	DATE: 05/07/2021
DRAWN BY: K. EDWARDS, D. YU	CHECKED BY: N. WATSON
APPROVED BY:	

PORT OF EVERETT
NORTON TERMINAL DEVELOPMENT & MTCA 3RD INTERIM ACTION
TITLE SHEET AND LOCATION PLAN

DWG. NO. **G1.0**
CIP NO. 1-8-900-05
PROJECT NO. MT-NT-2021-02.2
SHEET NO. 01 OF 150

AS-BUILTS

DRAWING INDEX

SHEET NO.	DWG NO.	REV NO.	DRAWING TITLE
			CIVIL
01	G1.0	1	TITLE SHEET AND LOCATION PLAN
02	G1.1	2	SHEET INDEX AND ABBREVIATIONS
03	G1.2	1	GENERAL NOTES AND LEGEND
04	G1.3	1	UTILITY STRUCTURE LOADING CRITERIA
05	G1.4	4	MTCA BOUNDARY SITE PLAN
06	G2.1	1	FORMER BUILDING FOUNDATION PLAN
07	G2.2	1	FORMER UNDERGROUND UTILITY PLAN
08	G3.1	1	SOIL BORING SITE PLAN
09	G4.1	0	SITE ACCESS AND STOCKPILE PLAN
10	G5.1	4	CONSTRAINTS AND PHASING PLAN
11	D1.1	2	EXISTING CONDITION AND DEMOLITION SITE PLAN (1 OF 2)
12	D1.2	1	EXISTING CONDITION AND DEMOLITION SITE PLAN (2 OF 2)
13	D1.3	1	FEDERAL AVE UTILITY DEMOLITION PLAN
14	D1.4	2	DEMOLITION DETAILS (1 OF 4)
15	D1.5	1	DEMOLITION DETAILS (2 OF 4)
16	D1.6	1	DEMOLITION DETAILS (3 OF 4)
17	D1.7	1	DEMOLITION DETAILS (4 OF 4)
17A	D1.8	0	DEMOLITION DETAILS (5A OF 5A)
18	D2.1	2	UTILITY PIPE FILL AND ABANDONMENT PLAN
19	C1.1	3	TESC SITE PLAN AND SEDIMENT CONTROL PLAN
20	C1.2	1	TESC SITE PLAN – FEDERAL AVENUE
21	C1.3	1	TEMPORARY EROSION AND SEDIMENT CONTROL SECTIONS
22	C1.4	1	TESC STOCKPILE COVER DETAILS
23	C2.1	5	OVERALL SITE PLAN AND HORIZONTAL CONTROL
24	C2.2	4	NORTH AND SOUTH GATE DETAIL SITE PLAN
25	C2.3	2	SITE PLAN DETAILS (1 OF 2)
26	C2.4	2	SITE PLAN DETAILS (2 OF 2)
27	C2.5	1	FEDERAL AVE DETAIL SITE PLAN
28	C2.6	3	LOAD RESTRICTION ZONE SITE PLAN
29	C3.1	4	PAVING OVERALL PLAN
30	C3.2	2	PAVING SECTIONS
31	C3.3	5	GRADING OVERALL PLAN
32	C3.4	3	GRADING DETAIL PLAN (1 OF 7)
33	C3.5	3	GRADING DETAIL PLAN (2 OF 7)
34	C3.6	4	GRADING DETAIL PLAN (3 OF 7)
35	C3.7	4	GRADING DETAIL PLAN (4 OF 7)
36	C3.8	3	GRADING DETAIL PLAN (5 OF 7)
37	C3.9	2	GRADING DETAIL PLAN (6 OF 7)
38	C3.10	4	GRADING DETAIL PLAN (7 OF 7)
38A	C3.10A	0	SUBSTATION SITE GRADING PLAN
39	C3.11	1	SITE SECTIONS (1 OF 4)
40	C3.12	1	SITE SECTIONS (2 OF 4)
41	C3.13	2	SITE SECTIONS (3 OF 4)
42	C3.14	4	SITE SECTIONS (4 OF 4)
42A	C3.15	0	SUBSTATION SITE SECTIONS
43	C3.21	0	PAVEMENT GEOGRID HORIZONTAL CONTROL SITE PLAN
44	C3.22	6	PAVEMENT AND GEOGRID HORIZONTAL CONTROL SCHEDULE
44A	C3.30	0	ECO BLOCK WALL PROFILES
45	C4.1	7	STORMWATER OVERALL PLAN
46	C4.2	5	STORMWATER DETAIL PLAN (1 OF 7)
47	C4.3	4	STORMWATER DETAIL PLAN (2 OF 7)
48	C4.4	6	STORMWATER DETAIL PLAN (3 OF 7)
49	C4.5	4	STORMWATER DETAIL PLAN (4 OF 7)
50	C4.6	3	STORMWATER DETAIL PLAN (5 OF 7)
51	C4.7	3	STORMWATER DETAIL PLAN (6 OF 7)
52	C4.8	7	STORMWATER DETAIL PLAN (7 OF 7)
52A	C4.8A	0	SUBSTATION SITE DEVELOPMENT

DRAWING INDEX

SHEET NO.	DWG NO.	REV NO.	DRAWING TITLE
			CIVIL
53	C4.9	3	STORMWATER DETAIL PLAN OUTFALL M
54	C4.10	2	STORMWATER PROFILES
55	C4.11	4	ENLARGED PLAN STORMWATER TREATMENT SYSTEM
56	C4.12	1	STORMWATER DETAILS CESF TREATMENT FLOW DIAGRAM
57	C4.13	2	STORMWATER DETAILS (SHEET 1 OF 4)
58	C4.14	1	STORMWATER DETAILS (SHEET 2 OF 4)
59	C4.15	1	STORMWATER DETAILS (SHEET 3 OF 4)
60	C4.16	3	STORMWATER DETAILS (SHEET 4 OF 4)
61	C4.17	8	STORM & TRENCH DRAIN STRUCTURE SCHEDULE & DETAILS
62	C4.21	1	TRENCH DRAIN PROFILE (SHEET 1 OF 5)
63	C4.22	1	TRENCH DRAIN PROFILE (SHEET 2 OF 5)
64	C4.23	2	TRENCH DRAIN PROFILE (SHEET 3 OF 5)
65	C4.24	2	TRENCH DRAIN PROFILE (SHEET 4 OF 5)
65A	C4.24A	2	TRENCH DRAIN PROFILE (SHEET 5 OF 5)
66	C4.25	2	TRENCH DRAIN DETAILS
67	C5.1	7	WATER AND SEWER OVERALL PLAN
68	C5.2	4	WATER AND SEWER DETAIL PLAN (1 OF 9)
69	C5.3	3	WATER AND SEWER DETAIL PLAN (2 OF 9)
70	C5.4	5	WATER AND SEWER DETAIL PLAN (3 OF 9)
71	C5.5	3	WATER AND SEWER DETAIL PLAN (4 OF 9)
72	C5.6	5	WATER AND SEWER DETAIL PLAN (5 OF 9)
73	C5.7	1	WATER AND SEWER DETAIL PLAN (6 OF 9)
74	C5.8	4	WATER AND SEWER DETAIL PLAN (7 OF 9)
75	C5.9	3	WATER AND SEWER DETAIL PLAN (8 OF 9)
76	C5.10	1	WATER AND SEWER DETAIL PLAN (9 OF 9)
77	C5.20	2	WATER DETAILS
78	C5.21	1	SEWER DETAILS (1 OF 2)
79	C5.22	2	SEWER DETAILS (2 OF 2)
80	C5.23	0	SEWER STRUCTURE SCHEDULE
81	C5.30	2	WATER PROFILE (SHEET 1 OF 8)
82	C5.31	3	WATER PROFILE (SHEET 2 OF 8)
83	C5.32	2	WATER PROFILE (SHEET 3 OF 8)
84	C5.33	1	WATER PROFILE (SHEET 4 OF 8)
85	C5.34	1	WATER PROFILE (SHEET 5 OF 8)
86	C5.35	3	WATER PROFILE (SHEET 6 OF 8)
87	C5.36	3	WATER PROFILE (SHEET 7 OF 8)
87A	C5.37	0	WATER PROFILE (SHEET 8 OF 8)
87B	C5.38	0	WATER PROFILE (SHEET 9 OF 9)
88	C6.1	4	SECURITY FENCE OVERALL SITE PLAN
89	C6.2	2	SECURITY FENCE DETAIL SITE PLAN – SOUTH GATE
90	C6.3	3	SECURITY FENCE DETAIL SITE PLAN – NORTH GATE
91	C6.4	1	SECURITY FENCE DETAILS (1 OF 3)
92	C6.5	1	SECURITY FENCE DETAILS (2 OF 3)
93	C6.6	0	SECURITY FENCE DETAILS (3 OF 3)
94	C7.1	1	FEDERAL AVE PAINT STRIPING PLAN
95	C7.2	1	LOAD RESTRICTION ZONE PAINT STRIPING PLAN
96	C8.1	1	SNOHOMISH PUD DUCT BANK PROFILE (SHEET 1 OF 3)
97	C8.2	0	SNOHOMISH PUD DUCT BANK PROFILE (SHEET 2 OF 3)
98	C8.3	0	SNOHOMISH PUD DUCT BANK PROFILE (SHEET 3 OF 3)
			STRUCTURAL
99	S1.1	2	STRUCTURAL NOTES & HIGH–MAST LIGHT POLE FDN DETAILS
100	S1.2	4	LOW–MAST LIGHT & COMM POLE FOUNDATIONS
101	S1.3	3	TRENCH DRAIN AND EQUIPMENT PAD DETAILS
102	S1.4	4	SECTIONS

DRAWING INDEX

SHEET NO.	DWG NO.	REV NO.	DRAWING TITLE
102A	S1.5	0	ECO BLOCK WALL SECTIONS AND DETAILS
			ELECTRICAL
103	E0.1	1	ELECTRICAL LEGEND AND ABBREVIATIONS
104	E1.1	2	OVERALL SITE PLAN
105	E1.2	4	SITE PLAN (1 OF 4)
106	E1.3	3	SITE PLAN (2 OF 4)
107	E1.4	2	SITE PLAN (3 OF 4)
108	E1.5	2	SITE PLAN (4 OF 4)
108A	E1.6	1	NORTH PROPERTIES SITE PLAN
109	E4.1	3	ENLARGED ELECTRICAL PLAN MIDDLE OF YARD
110	E4.2	1	ENLARGED GROUNDING PLAN MIDDLE OF YARD
111	E4.3	1	ENLARGED ELECTRICAL PLAN SOUTH GATE
112	E4.4	1	ENLARGED ELECTRICAL PLAN WATERFRONT/BARGE RAMP
113	E4.5	1	ENLARGED ELECTRICAL PLAN NORTH PORTABLE BUILDINGS
114	E4.6	1	ENLARGED ELECTRICAL PLAN CONTROL PANELS
115	E4.7	1	ENLARGED ELECTRICAL PLAN SNOPUD VAULTS, POLE LP14
116	E4.8	1	ENLARGED ELECTRICAL PLAN FEDERAL AVE
117	E4.9	0	ENLARGED ELECTRICAL PLAN FEDERAL AVE
118	E5.1	1	ELECTRICAL DETAILS
119	E5.2	1	ELECTRICAL DETAILS
120	E5.3	3	ELECTRICAL DETAILS
121	E5.4	2	ELECTRICAL DETAILS
122	E5.5	2	ELECTRICAL DETAILS
123	E5.6	1	POLE ELEVATION AND BASE DETAILS
124	E5.7	1	BRACKET ARM CONFIGURATIONS
125	E5.8	1	GROUNDING DETAILS
126	E6.1	4	ONE–LINE DIAGRAM
127	E6.2	1	CIRCUIT/CONDUCTOR SCHEDULES
128	E6.3	3	MINI POWER ZONES ONE–LINE DIAGRAM
129	E6.4	1	PANEL SCHEDULES
130	E6.5	2	PANEL SCHEDULES
131	E6.6	2	VAULT SCHEDULES
132	E6.7	1	SNOHOMISH COUNTY PUD VAULT STANDARDS
133	E7.1	1	LUMINAIRE SCHEDULE
134	E7.2	3	LIGHT POLE SCHEDULE
135	E7.3	2	WEST LIGHTING CONTROLS SCHEMATIC DIAGRAM
136	E7.4	1	MIDDLE LIGHTING CONTROLS SCHEMATIC DIAGRAM
137	E7.5	1	EAST LIGHTING CONTROLS SCHEMATIC DIAGRAM
138	E7.6	1	LIGHTING CONTROLS SCHEMATIC DIAGRAM
			ARCHITECTURAL
139	A1	0	BREAKROOM, RESTROOM AND GUARD SHACK PLANS
			LANDSCAPE
140	L1.0	1	PLANTING PLAN, LEGEND, NOTES, ABBREVIATIONS & DETAILS
			SURVEY
141	1	3/8/2021	TOPOGRAPHIC SURVEY
142	2	3/8/2021	TOPOGRAPHIC SURVEY
143	3	3/8/2021	TOPOGRAPHIC SURVEY
144	4	3/8/2021	TOPOGRAPHIC SURVEY
145	5	3/8/2021	TOPOGRAPHIC SURVEY
146	6	3/8/2021	TOPOGRAPHIC SURVEY
147	7	3/8/2021	TOPOGRAPHIC SURVEY
148	8	3/8/2021	TOPOGRAPHIC SURVEY
149	9	3/8/2021	TOPOGRAPHIC SURVEY
150	10	3/8/2021	TOPOGRAPHIC SURVEY

ABBREVIATIONS

A/C, ASPH	ASPHALT CONCRETE
ACP	ASPHALT CONCRETE PAVEMENT
AL	ALUMINUM
ALTA	AMERICAN LAND TITLE ASSOCIATION
APPROX	APPROXIMATE
BGS	BELOW GROUND SURFACE
BLDG	BUILDING
BMP	BEST MANAGEMENT PRACTICE
BOT	BOTTOM
BP	BURIED POWER
B/W	BETWEEN
BW	BACK OF WALK
CAP	CAPACITY
CB	CATCH BASIN
CEM	CEMENT
CESF	CHITOSAN ENHANCED SAND FILTER
C&G	CURB AND GUTTER
CI	CAST IRON
CL	CENTERLINE
CLF	CHAIN LINK FENCE
CLR	CLEARANCE
CMP	CORRUGATED METAL PIPE
CO	CLEANOUT
COE	CITY OF EVERETT
COMM	COMMUNICATION
CONC	CONCRETE
CONN	CONNECTION
CONT	CONTINUOUS
CONT'D	CONTINUED
COE	CITY OF EVERETT
CP	CONCRETE PIPE
CSBC	CRUSHED SURFACING BASE COURSE
CSFM	CITY SANITARY FORCE MAIN
CSL	CROSSHOLE SONIC LOGGING
CSO	COMBINED SEWER OVERFLOW
CTR	CENTER
CW	CONCRETE WALK
DEA	DAVID EVANS & ASSOCIATES
DEMO	DEMOLITION
DI	DUCTILE IRON
DIA, DIAM	DIAMETER
DS	DOWNSPOUT
DWG	DRAWING
DWO	DEEP WATER OUTFALL
ECD	ELECTRICAL CONDUIT
ED	ELECTRICAL DUCTBANK
EF	EACH FACE
EG	EXISTING GRADE
EHW	EXTREME HIGH WATER
ELEC	ELECTRICAL
EL, ELEV	ELEVATION
ELW	EXTREME LOW WATER
EM	ELECTRICAL METER
EOP	EDGE OF PAVEMENT
EV	ELECTRICAL VAULT
EX, EXIST	EXISTING
FDN	FOUNDATION
FG	FINISH GRADE
FH	FIRE HYDRANT
FL	FLOW LINE
FO	FIBER OPTIC
FT	FEET
G	GAS
GALV	GALVANIZED
GLO	GOVERNMENT LAND OFFICE
GS	GROUND SURFACE
GV	GATE VALVE
GVL	GRAVEL
HAZMAT	HAZARDOUS MATERIALS
HDPE	HIGH DENSITY POLYETHYLENE
HTL	HIGH TIDE LINE
HMA	HOT MIX ASPHALT
HORIZ	HORIZONTAL
HP	HIGH POINT
IAWP	INTERIM ACTION WORK PLAN
IE	INVERT ELEVATION
K–C	KIMBERLY–CLARK
KLF	KIPS PER LINEAL FOOT

(SEE SHEET G1.2 FOR ADDITIONAL ABBREVIATIONS)

IF SHEET IS LESS THAN 22x34
REDUCE SCALE ACCORDINGLY

Port of EVERETT
P.O. BOX 538
EVERETT, WA 98206
(425) 259–3164

kpff
1601 5th Avenue, Suite 1300
Seattle, Washington 98101
(206) 382-0600 Fax (206) 382-0500
PROJECT NO. 1600120

NO.	DATE	BY	REVISION
4	07/05/2023	NW	AS–BUILT
3	06/29/2022	NW	SUBSTATION SITE DEVELOPMENT
2	04/08/2022	NW	MARITIME TENANT SITE DEVELOPMENT
1	06/21/2021	NW	ISSUED FOR BID
0	05/07/2021	NW	FOR CITY REVIEW

RECORD CONDITIONS ILLUSTRATED IN THESE PLANS REFLECT INFORMATION PROVIDED BY THE CONTRACTOR. RECORD CONDITIONS WERE NOT VERIFIED BY ENGINEER.

PROJECT ENGINEER: N. WATSON	SCALE: AS SHOWN
DESIGNED BY: J. BECKER	DATE: 05/07/2021
DRAWN BY: K. EDWARDS, D. YU	CHECKED BY: N. WATSON
APPROVED BY:	

PORT OF EVERETT

NORTON TERMINAL DEVELOPMENT
& MTCA 3RD INTERIM ACTION
SHEET INDEX AND ABBREVIATIONS

DWG. NO. **G1.1**
CIP NO. 1–8–900–05
PROJECT NO. MT–NT–2021–02.2
SHEET NO. 02 OF 150

AS-BUILTS

ABBREVIATIONS (CONTINUED)

LF	LINEAR FEET
LOC	LOCATION
LS	LANDSIDE
MAT'LS	MATERIALS
ME	MATCH EXISTING
MH	MANHOLE
MHHW	MEAN HIGHER HIGH WATER
MHW	MEAN HIGH WATER
MIN	MINIMUM
MLLW	MEAN LOWER LOW WATER
MLW	MEAN LOW WATER
MSRC	MARINE SPILL RESPONSE CORPORATION
MTCA	MODEL TOXICS CONTROL ACT
MW	MONITORING WELL
NIC	NOT IN CONTRACT
NT	NORTON TERMINAL
NTS	NOT TO SCALE
OC	ON CENTER
OHW	ORDINARY HIGH WATER
OPP	OPPODITE
OWS	OIL/WATER SEPARATOR
P	POWER
PDA	PILE DRIVING ANALYZER
PP	POWER POLE
PRV	PRESSURE REDUCING VALVE
PSI	POUNDS PER SQUARE INCH
PVC	POLYVINYL CHLORIDE
PVMT	PAVEMENT
REF	REFERENCE DIMENSION
REINF	REINFORCEMENT
REPL	REPLACE
REQ'D	REQUIRED
REV	REVISION
RD	ROAD
R.O.W.	RIGHT-OF-WAY
RPBA	REDUCED PRESSURE BACKFLOW ASSEMBLY
RW	RETAINING WALL
SCH	SCHEDULE
SD	STORM DRAIN
SDFM	STORM DRAIN FORCE MAIN
SDMH	STORM DRAIN MANHOLE
SF	STORM FILTER
SIM	SIMILAR
SNO PUD	SNOHOMISH COUNTY PUBLIC UTILITY DISTRICT
SOW	SCOPE OF WORK
SS	SANITARY SEWER, STAINLESS STEEL
SSFM	SANITARY SEWER FORCE MAIN
SSMH	SANITARY SEWER MANHOLE
SSS	SIDE SANITARY SEWER
ST	STREET
STD	STANDARD
SWPPP	STORMWATER POLLUTION PREVENTION PLAN
SYMM	SYMMETRIC
T	TELECOMMUNICATION UTILITY
T&B	TOP AND BOTTOM
TB	THRUST BLOCK
TC	TOP OF CURB
TD	TRENCH DRAIN
TYP	TYPICAL
U	UNKNOWN UTILITY
UGP	UNDERGROUND POWER
UNC	UNIFIED NATIONAL COARSE
UNO	UNLESS NOTED OTHERWISE
VEG	VEGETATION
VERT	VERTICAL
VIF	VERIFY IN FIELD
W	WATER
WHS	WELDED HEADED STUD
W/	WITH
W/O	WITHOUT
WABO	WASHINGTON ASSOCIATION OF BUILDING OFFICIALS
WM	WATER MAIN
WS	WATERSIDE

GENERAL NOTES:

1. ALL CONSTRUCTION SHALL CONFORM TO THESE PLANS AND SPECIFICATIONS AND THE CURRENT VERSION OF THE CITY OF EVERETT STANDARDS.
2. CONTRACTOR SHALL VERIFY ALL LEVELS, DIMENSIONS, AND EXISTING CONDITIONS IN THE FIELD BEFORE PROCEEDING. CONTRACTOR SHALL NOTIFY THE ENGINEER OF ANY DISCREPANCIES OR FIELD CHANGES PRIOR TO INSTALLATION OR FABRICATION. IN CASE OF DISCREPANCIES BETWEEN THE EXISTING CONDITIONS AND THE PLANS, THE CONTRACTOR SHALL OBTAIN DIRECTION FROM THE ENGINEER BEFORE PROCEEDING. DIMENSIONS AND CALLOUTS NOTED AS PLUS OR MINUS (±) OR (REF) INDICATE UNVERIFIED DIMENSIONS AND ARE APPROXIMATE. NOTIFY THE ENGINEER IMMEDIATELY OF CONFLICTS OR EXCESSIVE VARIATIONS FROM AS INDICATED. NOTED DIMENSIONS TAKE PRECEDENCE OVER SCALED DIMENSIONS – DO NOT SCALE THE PLANS.
3. ALL LOCATIONS OF EXISTING STRUCTURES AND UTILITIES SHOWN HEREIN HAVE BEEN OBTAINED FROM AVAILABLE RECORDS AND SHOULD, THEREFORE, BE CONSIDERED APPROXIMATE ONLY AND NOT NECESSARILY COMPLETE. IT IS THE RESPONSIBILITY OF THE CONTRACTOR TO INDEPENDENTLY VERIFY THE ACCURACY OF ALL UTILITY LOCATIONS SHOWN AND TO FURTHER DISCOVER AND AVOID OTHER UTILITIES NOT SHOWN HEREIN WHICH MAY BE AFFECTED BY THE IMPLEMENTATION OF THIS PLAN. THE CONTRACTOR SHALL POTHOLE OR OTHERWISE CONFIRM EXISTING CONDITIONS, SPECIFICALLY PIPE SIZES PRIOR TO CONSTRUCTION, AND BRING ANY CONFLICTS BETWEEN EXISTING CONDITIONS AND NEW WORK TO THE ENGINEER'S ATTENTION.
4. THE EXISTING NORTON TERMINAL SITE UTILITIES HAVE UNDERGONE NUMEROUS REPAIR AND UPGRADE PROJECTS SINCE THE TIME OF THE ORIGINAL CONSTRUCTION. THESE REPAIRS MAY NOT ALL BE REFLECTED IN THESE CONTRACT DOCUMENTS. REFERENCE DRAWINGS FOR THESE CONTRACTS ARE AVAILABLE FROM THE PORT OF EVERETT. IT IS ANTICIPATED THAT MOST SITE UTILITIES WERE DEMOLISHED OR ABANDONED DURING DEMOLITION OF FORMER KIMBERLY-CLARK SITE.
5. A COPY OF THE PLANS SHALL BE ON-SITE WHENEVER CONSTRUCTION IS IN PROGRESS. THROUGHOUT THE PROGRESS OF THE WORK OF THIS CONTRACT, THE CONTRACTOR SHALL MAINTAIN AN ACCURATE RECORD OF ALL CHANGES IN THE CONTRACT DOCUMENTS. UPON THE COMPLETION OF THIS CONTRACT, THE CONTRACTOR SHALL PROVIDE ONE COMPLETE SET OF CONTRACTOR REDLINE AS-BUILT TO THE PORT OF EVERETT.
6. THE CONTRACTOR SHALL LOCATE ALL UTILITIES WITHIN THE PROJECT SITE PRIOR TO WORK. CONTRACTOR SHALL CONTACT 811 "CALL BEFORE YOU DIG" AND AN INDEPENDENT LOCATING SERVICE TO LOCATE ALL UTILITIES AT LEAST 48 HOURS PRIOR TO WORK.
7. THE CONTRACTOR SHALL FIELD VERIFY ALL DIMENSIONS OF EXISTING STRUCTURES AND OTHER FEATURES THAT MAY IMPACT THE WORK. CONTRACTOR SHALL BRING ANY CONFLICTS TO THE ENGINEER'S ATTENTION PRIOR TO BEGINNING AFFECTED WORK.
8. ANY DAMAGE TO EXISTING UTILITIES, OTHER FACILITIES OR EQUIPMENT DUE TO THE CONTRACTOR'S NEGLIGENCE, EXCEPT FOR ITEMS DESIGNATED FOR DEMOLITION, SHALL BE PROMPTLY REPAIRED BY THE CONTRACTOR AT HIS EXPENSE. THIS INCLUDES ITEMS OUTSIDE THE WORK AREA AND WITHIN THE PORT OF EVERETT PROPERTY THAT ARE DAMAGED BY CONSTRUCTION ACTIVITIES DURING EXECUTION OF THIS CONTRACT.
9. PRIOR TO LAYING PIPE, THE CONTRACTOR SHALL EXPOSE EXISTING WATER, STORM WATER AND SEWER PIPING AT CONNECTION POINTS TO VERIFY THAT FIELD CONDITIONS MATCH INFORMATION SHOWN ON THE PLANS, SPECIFICALLY THE LOCATION, ELEVATION, DIAMETER, AND MATERIAL OF EXISTING PIPE. CONTRACTOR SHALL CONTACT THE ENGINEER IF DISCREPANCIES ARE DISCOVERED.
10. ALL ACTIVATION AND DEACTIVATION OF UTILITIES SHALL BE COORDINATED WITH THE UTILITY AND THE ENGINEER IN ADVANCE. PROVIDE A MINIMUM OF 3 DAYS ADVANCE WRITTEN NOTICE TO THE UTILITY AND ENGINEER.
11. SHORING AND EXCAVATION SHALL BE IN ACCORDANCE WITH STATE AND FEDERAL REQUIREMENTS. SEE SPECIFICATIONS FOR ADDITIONAL REQUIREMENTS.
12. THE CONTRACTOR SHALL KEEP ALL STREETS AND VEHICULAR TRAFFIC AREAS USED FOR THIS WORK CLEAN AT ALL TIMES, SEE SPECIFICATIONS FOR ADDITIONAL REQUIREMENTS.
13. CONTRACTOR IS RESPONSIBLE FOR ANY TRAFFIC CONTROLS REQUIRED DURING THE DURATION OF THIS PROJECT, PER CONTRACTOR'S OPERATION. ALL TRAFFIC CONTROL SHALL BE IN ACCORDANCE WITH THE MANUAL OF UNIFORM TRAFFIC CONTROL DEVICES.
14. CONTRACTOR SHALL BE AWARE OF FACILITY OPERATION REQUIREMENTS AND SHALL COORDINATE ACCESS TO THE SITE WITH THE ENGINEER. CONTRACTOR SHALL MAINTAIN ADJACENT TENANT ACCESS AT ALL TIMES AND SHALL NOT RESTRICT TENANT OPERATIONS WITHOUT APPROVAL OF THE ENGINEER.
15. THE CONTRACTOR SHALL PLACE CONSTRUCTION DEBRIS CONTROL DEVICES, BOOMS, TARPAULINS AND OTHER DEVICES AS NECESSARY TO PREVENT DEBRIS FROM ENTERING THE WATER, AND AIR BORNE MATERIALS FROM LEAVING THE IMMEDIATE VICINITY OF THE SITE. THE CONTRACTOR SHALL BE RESPONSIBLE FOR CLEANUP OF ANY MATERIALS DEPOSITED OUTSIDE THE WORK AREA.
16. MAINTAIN UTILITY SERVICE TO EXISTING BUILDINGS, UTILITIES AND FIRE HYDRANTS DURING CONSTRUCTION UNLESS NOTED OTHERWISE OR APPROVED BY THE ENGINEER. INSTALL NEW UTILITY LINES TO POINTS OF CONNECTION TO EXISTING UTILITY LINE PRIOR TO DEMOLITION OF THE EXISTING LINES, UNLESS NOTED OTHERWISE. WATER SERVICE SHUTDOWNS WILL BE LIMITED TO 2 HOURS FOR EACH UTILITY CROSSOVER AND SHALL BE COORDINATED WITH THE ENGINEER. POWER AND COMMUNICATION SHUTDOWNS SHALL BE LIMITED AND SHALL BE COORDINATED WITH THE ENGINEER. SEE SPECIFICATIONS FOR FURTHER SHUTDOWN REQUIREMENTS.
17. CONTRACTOR-INITIATED CHANGES SHALL BE SUBMITTED IN WRITING TO THE PORT FOR APPROVAL PRIOR TO FABRICATION OR CONSTRUCTION. CHANGES SHOWN ON SHOP DRAWINGS ONLY WILL NOT SATISFY THIS REQUIREMENT.
18. THE CONTRACTOR SHALL TAKE NECESSARY MEASURES TO PREVENT INTERRUPTION OF OPERATIONS AND PROTECT ALL EXISTING SURFACES/STRUCTURES TO REMAIN AT THE FACILITY DURING CONSTRUCTION. DETAILS SHALL BE PRESENTED IN THE CONTRACTOR'S WORK PLAN.
19. PROJECT NORTH AS INDICATED ON THESE DRAWINGS IS FOR CONVERSATIONAL GENERAL DIRECTIONAL REFERENCE. BEARINGS NOTES ON DRAWINGS ARE RELATIVE TO TRUE NORTH.
20. CONTRACTOR SHALL BE RESPONSIBLE FOR ERECTION STABILITY AND TEMPORARY SUPPORT AS NECESSARY. DETAILED CONSTRUCTION PLANS SHALL BE PREPARED BY THE CONTRACTOR AND APPROVED BY THE PORT PRIOR TO MOBILIZATION.
21. SEE ALSO STRUCTURAL GENERAL NOTES ON SHEETS S1.1–S1.3.
22. NORTON TERMINAL IS ON THE WASHINGTON STATE DEPARTMENT OF ECOLOGY LIST OF CONTAMINATED SITES AND IS CURRENTLY IN THE MTCA CLEANUP PROCESS. REFER TO THE SOIL AND GROUNDWATER MANAGEMENT PLAN IN APPENDIX B OF THE SPECIFICATIONS FOR ADDITIONAL INFORMATION.
23. SEE SHEET G1.3 FOR UNDERGROUND STRUCTURE LOADING CRITERIA REQUIREMENTS.

LEGEND:

- BORE HOLE
- MONUMENT WELL
- WATER VALVE
- WATER SPIGOT
- SANITARY SEWER MANHOLE
- STORM DRAIN MANHOLE
- TELEPHONE RISER
- GUY ANCHOR
- ELECTRIC METER (EM)
- LUMINARE
- EXISTING PIPE SLOPE
- PROPOSED PIPE SLOPE DIRECTION
- EXISTING GRADE SLOPE DIRECTION
- PROPOSED GRADE SLOPE DIRECTION
- FIRE HYDRANT
- LIGHT POLE

- EXISTING CONTOUR
- CLF — EXISTING CHAINLINK FENCE
- OHW — EXISTING OVERHEAD WIRE LINE
- SS — EXISTING SANITARY SEWER LINE
- UGP — EXISTING UNDERGROUND POWER LINE
- W — EXISTING WATER LINE
- FO — EXISTING FIBER OPTIC
- SD — EXISTING STORM DRAIN
- BP — BURIED POWER LINE
- T — TELEPHONE LINE
- W — WATER LINE
- PROPERTY LINE
- LEASE LIMIT
- EASEMENT
- WATER
- SEWER
- STORMWATER
- TRENCH DRAIN
- FENCE
- PROPOSED CONTOUR

REFERENCE SYMBOLS:

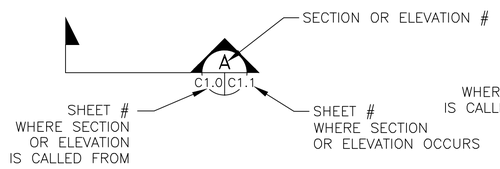

VERT DATUM: NAVD 88
CONV TO MLLW = NAVD88+2.03
HORZ DATUM: NAD 83/91

IF SHEET IS LESS THAN 22x34 REDUCE SCALE ACCORDINGLY

Port of EVERETT
P.O. BOX 538
EVERETT, WA 98206
(425) 259-3164

kpff
1601 5th Avenue, Suite 1300
Seattle, Washington 98101
(206) 382-0600 Fax (206) 382-0500
PROJECT NO. 1600120

NO.	DATE	BY	REVISION
3	07/05/2023	NW	AS-BUILT
2	06/21/2021	NW	ISSUED FOR BID
1	05/07/2021	NW	FOR CITY REVIEW

RECORD CONDITIONS ILLUSTRATED IN THESE PLANS REFLECT INFORMATION PROVIDED BY THE CONTRACTOR. RECORD CONDITIONS WERE NOT VERIFIED BY ENGINEER.

PROJECT ENGINEER: N. WATSON	SCALE: AS SHOWN
DESIGNED BY: J. BECKER	DATE: 05/07/2021
DRAWN BY: K. EDWARDS, D. YU	CHECKED BY: N. WATSON
APPROVED BY:	

PORT OF EVERETT

NORTON TERMINAL DEVELOPMENT & MTCA 3RD INTERIM ACTION GENERAL NOTES AND LEGEND

DWG. NO. **G1.2**
CIP NO. 1-8-900-05
PROJECT NO. MT-NT-2021-02.2
SHEET NO. 03 OF 150

AS-BUILTS

TRAVEL LOADING:

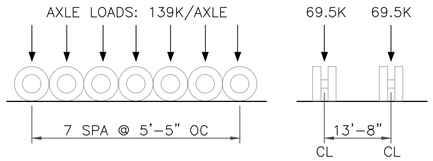

OPERATING LOADING: (MAXIMUM OUTRIGGER LOAD)

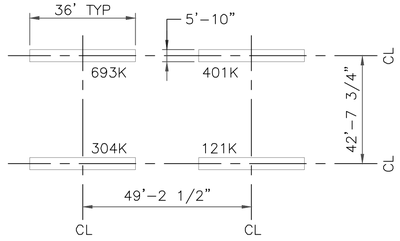

OUTRIGGER PLACEMENT SHALL BE BETWEEN GRID LINES A-H. OUTRIGGERS SHALL BE PLACED PARALLEL TO THE BERTHING FACE OF WHARF & SHALL NOT BE PLACED ON VAULT LIDS OR TRENCH DRAINS

TEREX HMK 7608 MOBILE HARBOR CRANE

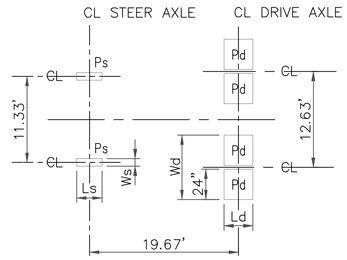

Ps = 16K
(INCLUDES 10% IMPACT)
Ws = 20"
Ls = 6.1"
qs = 131 psi

Pd = 65k
(INCLUDES 10% IMPACT)
Wd = 51"
Ld = 23"
qd = 112 psi

TAYLOR "BIG RED" THDC-976 CONTAINER HANDLER

NOTE:
CONTAINER HANDLING REACH STACKERS CURRENTLY USED ON SITE ARE HYSTER RS46-36CH AND LINDE C4535TLS. THE TAYLOR THPC-976 LOADING WILL GOVERN OVER THE HYSTER AND LINDE LOADING.

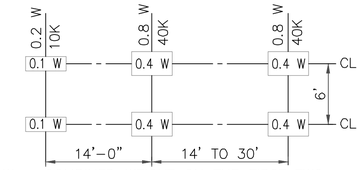

W = COMBINED WEIGHT ON THE FIRST TWO AXLES WHICH IS THE SAME AS FOR THE CORRESPONDING H TRUCK.

NOTE: ADD 10% IMPACT TO ABOVE LOADS

HS 25 TRUCK = (1.25 x HS20)

UNDERGROUND UTILITY STRUCTURES DESIGN LOADING CRITERIA

1. ALL UNDERGROUND AND AT GRADE STRUCTURES INCLUDING MANHOLES, CATCH BASINS, HAND HOLES, VAULTS, CLEANOUTS AND OTHER STRUCTURES, INCLUDING ALL RINGS, COVERS, HATCHES, GRATES AND OTHER FEATURES WHICH MAY APPLY, SHALL BE CONTRACTOR DESIGNED. ALL VAULTS SHALL BE CONTRACTOR DESIGNED TO WITHSTAND LOADING CRITERIA FOR THE TAYLOR "BIG RED" THDC-976 CONTAINER HANDLER SHOWN ON THIS SHEET UNLESS NOTED OTHERWISE. VAULTS LOCATED WITHIN THE PROTECTIVE BOLLARDS SHALL BE CONTRACTOR DESIGNED TO WITHSTAND LOADING CRITERIA FOR THE AASHTO HS 25 TRUCK.
2. LID CASTING AND FRAME SHALL BE 200 KIP PROOF TEST LOAD RATED PER AASHTO M306.
3. CONTRACTOR SHALL SUBMIT STAMPED AND SIGNED SHOP DRAWINGS AND CALCULATIONS COMPLETED BY A WASHINGTON STATE REGISTERED STRUCTURAL ENGINEER FOR APPROVAL BY THE ENGINEER PRIOR TO FABRICATION OF ALL UNDERGROUND UTILITY STRUCTURES. SHOP DRAWINGS AND CALCULATIONS PROVIDED BY THE CONTRACTOR SHALL ADDRESS BUOYANCY AND SOIL BEARING PRESSURE.
4. STANDARD PLAN REFERENCES AND MANUFACTURER MODEL NUMBERS FOR UNDERGROUND UTILITY STRUCTURES ARE INTENDED TO PROVIDE INTERIOR GEOMETRY AND INTENT ONLY. THE CONTRACTOR SHALL INCREASE REQUIRED REINFORCING AND WALL THICKNESS, AND CHANGE ACCESS GRATE AND COVER AS REQUIRED TO ACCOMMODATE LOADING CRITERIA REQUIREMENTS.
5. REFER TO THE GEOTECHNICAL ENGINEERING DESIGN REPORT DATED MAY, 2021 PREPARED BY LANDAU ASSOCIATES FOR SOIL DESIGN CRITERIA TO BE APPLIED TO VAULT DESIGN.
6. DEAD LOAD SHALL BE APPLIED TO ALL STRUCTURES, WHICH INCLUDES THE WEIGHT OF THE CONSTRUCTION MATERIALS AND THE SOIL.
7. LIVE LOADS SHALL BE APPLIED TO ALL STRUCTURES TO ACT SIMULTANEOUSLY AND IN COMBINATION WITH DEAD LOADS, SOIL LOADS AND HYDROSTATIC PRESSURE.
8. MEASURED DEPTH TO GROUNDWATER IN THE UPLAND AREAS OF THE NORTON TERMINAL GENERALLY RANGES 6 TO 12 FEET BELOW GROUND SURFACE, BUT IS SHALLOWER ALONG THE EAST EDGE OF THE SITE AS DESCRIBED IN THE GEOTECHNICAL REPORT. DEWATERING MAY BE REQUIRED FOR INSTALLATION OF UTILITY LINES AND STRUCTURES DEPENDING UPON LOCATION, TIME OF YEAR AND TIDE ELEVATION. SEE SPECIFICATIONS AND SOIL AND GROUNDWATER MANAGEMENT PLAN FOR ADDITIONAL GROUNDWATER INFORMATION.

VERT DATUM: NAVD 88
CONV TO MLLW = NAVD88+2.03
HORZ DATUM: NAD 83/91

IF SHEET IS LESS THAN 22x34
REDUCE SCALE ACCORDINGLY

Port of EVERETT
P.O. BOX 538
EVERETT, WA 98206
(425) 259-3164

kpff
1601 5th Avenue, Suite 1300
Seattle, Washington 98101
(206) 382-0600 Fax (206) 382-0500
PROJECT NO. 1600120

NO.	DATE	BY	REVISION
2	07/05/2023	NW	AS-BUILT
1	06/21/2021	NW	ISSUED FOR BID
0	05/07/2021	NW	FOR CITY REVIEW

NO.	DATE	BY	REVISION

RECORD CONDITIONS ILLUSTRATED IN THESE PLANS REFLECT INFORMATION PROVIDED BY THE CONTRACTOR. RECORD CONDITIONS WERE NOT VERIFIED BY ENGINEER.

PROJECT ENGINEER: N. WATSON	SCALE: AS SHOWN
DESIGNED BY: J. BECKER	DATE: 05/07/2021
DRAWN BY: K. EDWARDS, D. YU	CHECKED BY: N. WATSON
APPROVED BY:	

PORT OF EVERETT

NORTON TERMINAL DEVELOPMENT & MTCA 3RD INTERIM ACTION
UTILITY STRUCTURE LOADING CRITERIA

DWG. NO. **G1.3**
CIP NO. 1-8-900-05
PROJECT NO. MT-NT-2021-02.2
SHEET NO. 04 OF 150

AS-BUILTS

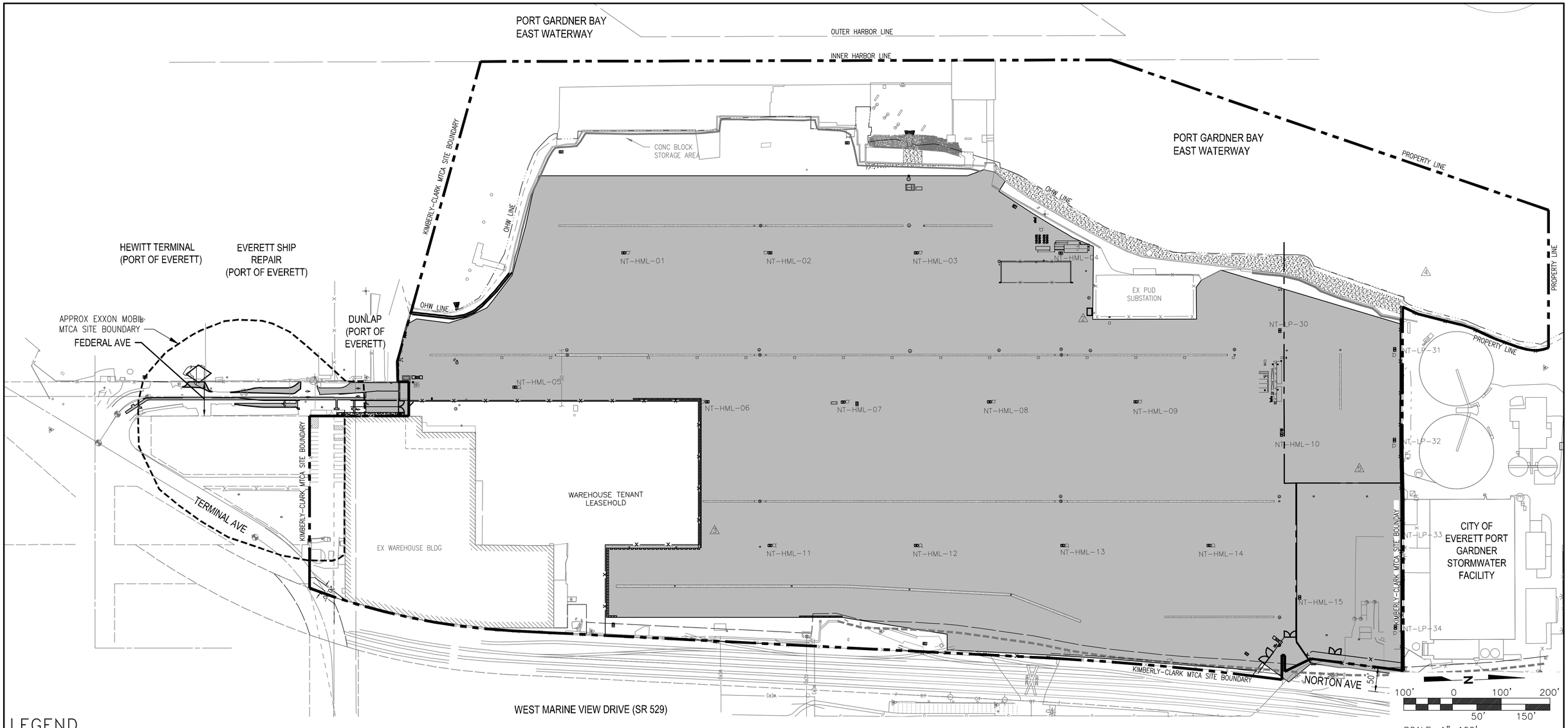

SCALE: 1"=100'

LEGEND

- KIMBERLY-CLARK MTCA SITE BOUNDARY
- EXXON MOBIL MTCA SITE BOUNDARY

VERT DATUM: NAVD 88
CONV TO MLLW = NAVD88+2.03
HORZ DATUM: NAD 83/91

IF SHEET IS LESS THAN 22x34
REDUCE SCALE ACCORDINGLY

Port of EVERETT
P.O. BOX 538
EVERETT, WA 98206
(425) 259-3164

kpff
1601 5th Avenue, Suite 1300
Seattle, Washington 98101
(206) 382-0600 Fax (206) 382-0500
PROJECT NO. 1600120

NO.	DATE	BY	REVISION
4	04/08/2022	NW	MARITIME TENANT SITE DEVELOPMENT
3	12/02/2021	JB	DELETE ECOLOGY BLOCK WALL, ADD EX WHS GRAVEL PAD CONTOURS AND UPDATE FINAL GRADES & PAVEMENT COORDINATES
2	12/02/2021	NW	2-INCH TO 9-INCH PVMT
1	06/21/2021	NW	ISSUED FOR BID
0	05/07/2021	NW	FOR CITY REVIEW

NO.	DATE	BY	REVISION
5	07/05/2023	NW	AS-BUILT
4	06/29/2022	NW	SUBSTATION SITE DEVELOPMENT

RECORD CONDITIONS ILLUSTRATED IN THESE PLANS REFLECT INFORMATION PROVIDED BY THE CONTRACTOR. RECORD CONDITIONS WERE NOT VERIFIED BY ENGINEER.

PROJECT ENGINEER: N. WATSON	SCALE: 1" = 100'
DESIGNED BY: J. BECKER	DATE: 05/07/2021
DRAWN BY: K. EDWARDS, D. YU	CHECKED BY: N. WATSON
APPROVED BY:	

PORT OF EVERETT

NORTON TERMINAL DEVELOPMENT & MTCA 3RD INTERIM ACTION MTCA BOUNDARY SITE PLAN

DWG. NO. **G1.4**
CIP NO. 1-8-900-05
PROJECT NO. MT-NT-2021-02.2
SHEET NO. 05 OF 150

AS-BUILTS

PORT GARDNER BAY
EAST WATERWAY

OUTER HARBOR LINE

INNER HARBOR LINE

PROPERTY LINE

OHW LINE

DUNLAP
(PORT OF
EVERETT)

FEDERAL AVE

EX WAREHOUSE BLDG

EX PUD
SUBSTATION

FORMER BLDG FOOTPRINTS, TYP
ABOVE GROUND STRUCTURE HAS
BEEN REMOVED FOUNDATIONS
STILL EXIST BELOW GROUND

BNSF RAILROAD R.O.W.

NORTON AVE

WEST MARINE VIEW DRIVE (SR 529)

NOTES

1. GENERAL LIMITS OF KNOWN REMAINING FOUNDATIONS ARE SHOWN BASED ON EXISTING RECORD DRAWINGS AND SURVEY OF FOUNDATIONS EXPOSED DURING FALL 2020 INTERIM ACTION CLEANUP EXCAVATIONS ON SITE. SURVEY BACKGROUNDS ARE ALSO SHOWN ON CIVIL SITE PLANS, INCLUDING ELEVATIONS OF THE TOP OF MANY OF THE FOUNDATION ELEMENTS.
2. SEE SHEET D1.1 FOR SITE DEMOLITION AND NOTE THAT EXISTING FOUNDATION DEMOLITION SHALL BE PERFORMED AS REQUIRED TO ACCOMMODATE INSTALLATION OF PROPOSED UTILITIES AND INFRASTRUCTURE.

LEGEND

- BUILDING OR STRUCTURE FOUNDED ON TIMBER PILES
- BUILDING OR STRUCTURE FOUNDED ON STEEL H-PILES
- BUILDING OR STRUCTURE FOUNDED ON SLAB-ON-GRADE
- BUILDING OR STRUCTURE FOUNDED ON PRE-CAST PILES
- BUILDING OR STRUCTURE FOUNDED ON STEEL PIPE PILES
- BUILDING OR STRUCTURE FOUNDED ON AUGER-CAST PILES
- NON-BUILDING FOUNDED ON STEEL & TIMBER PILES
- HOG FUEL PILES AREA
- LOG POND FILL AREA

SOURCE: MOFFATT & NICHOL. 2014. SALTCHUCK EVERETT PROPERTY DILIGENCE PROCESS, FOSS MARITIME SHIPYARD MASTER REDEVELOPMENT PLAN, THIRD DRAFT. JANUARY 23.

N

80' 0 80' 160'
40' 120'

SCALE: 1"=80'

VERT DATUM: NAVD 88
CONV TO MLLW = NAVD88+2.03
HORZ DATUM: NAD 83/91

IF SHEET IS LESS THAN 22x34
REDUCE SCALE ACCORDINGLY

Port of EVERETT
P.O. BOX 538
EVERETT, WA 98206
(425) 259-3164

kpff
1601 5th Avenue, Suite 1300
Seattle, Washington 98101
(206) 382-0600 Fax (206) 382-0500
PROJECT NO. 1600120

NO.	DATE	BY	REVISION
2	07/05/2023	NW	AS-BUILT
1	06/21/2021	NW	ISSUED FOR BID
0	05/07/2021	NW	FOR CITY REVIEW

RECORD CONDITIONS ILLUSTRATED IN THESE PLANS REFLECT INFORMATION PROVIDED BY THE CONTRACTOR. RECORD CONDITIONS WERE NOT VERIFIED BY ENGINEER.

PROJECT ENGINEER: N. WATSON	SCALE: 1" = 80'
DESIGNED BY: J. BECKER	DATE: 05/07/2021
DRAWN BY: K. EDWARDS, D. YU	CHECKED BY: N. WATSON
APPROVED BY:	

PORT OF EVERETT

NORTON TERMINAL DEVELOPMENT & MTCA 3RD INTERIM ACTION FORMER BUILDING FOUNDATION PLAN

DWG. NO. **G2.1**
CIP NO. 1-8-900-05
PROJECT NO. MT-NT-2021-02.2
SHEET NO. 06 OF 150

AS-BUILTS

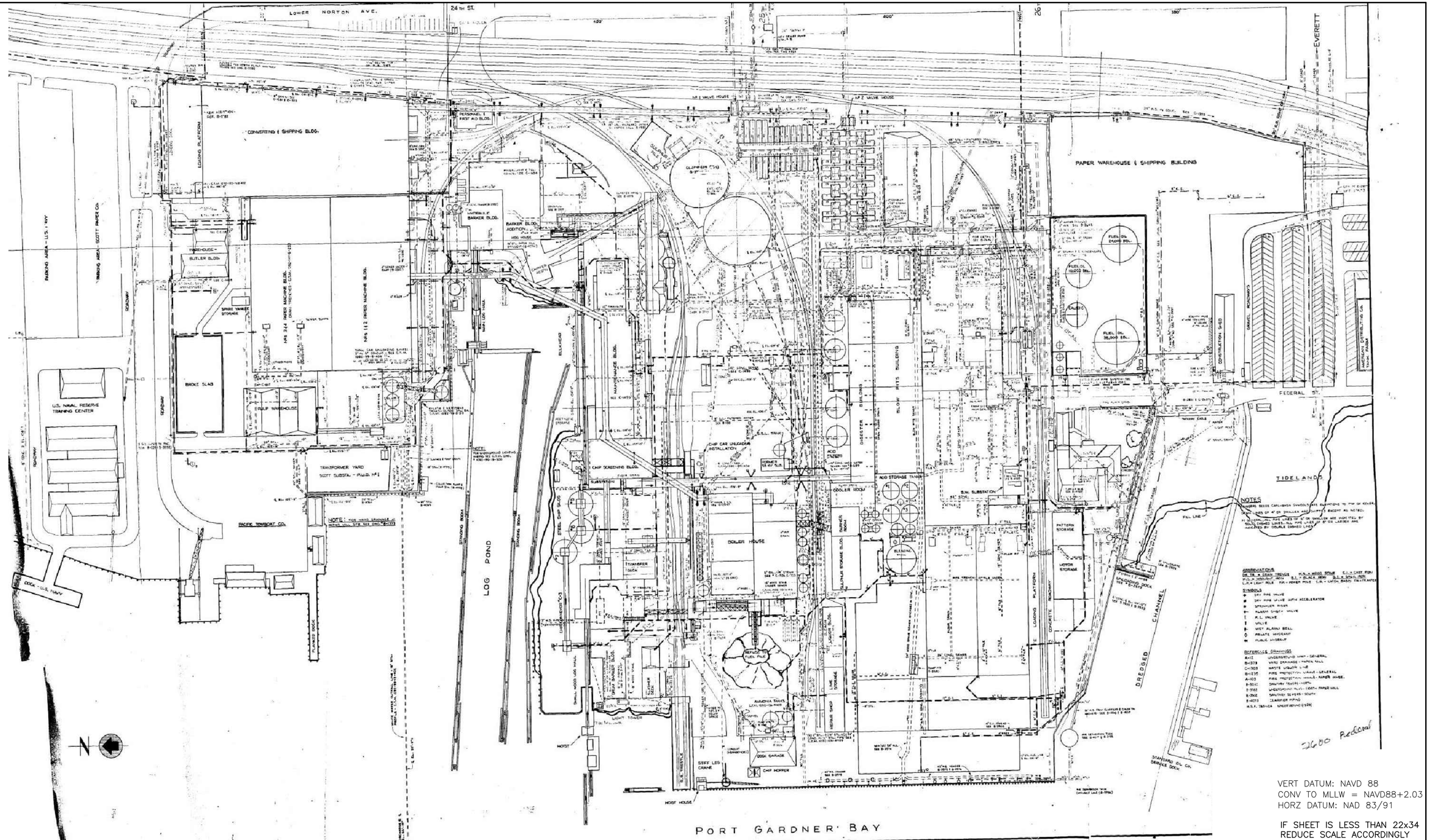

VERT DATUM: NAVD 88
CONV TO MLLW = NAVD88+2.03
HORZ DATUM: NAD 83/91

IF SHEET IS LESS THAN 22x34
REDUCE SCALE ACCORDINGLY

Port of EVERETT
P.O. BOX 538
EVERETT, WA 98206
(425) 259-3164

kpff
1601 5th Avenue, Suite 1300
Seattle, Washington 98101
(206) 382-0600 Fax (206) 382-0500
PROJECT NO. 1600120

NO.	DATE	BY	REVISION
2	07/05/2023	NW	AS-BUILT
1	06/21/2021	NW	ISSUED FOR BID
0	05/07/2021	NW	FOR CITY REVIEW

NO.	DATE	BY	REVISION

RECORD CONDITIONS ILLUSTRATED IN THESE PLANS REFLECT INFORMATION PROVIDED BY THE CONTRACTOR. RECORD CONDITIONS WERE NOT VERIFIED BY ENGINEER.

PROJECT ENGINEER: N. WATSON	SCALE: 1" = 80'
DESIGNED BY: J. BECKER	DATE: 05/07/2021
DRAWN BY: K. EDWARDS, D. YU	CHECKED BY: N. WATSON
APPROVED BY:	

PORT OF EVERETT

NORTON TERMINAL DEVELOPMENT & MTCA 3RD INTERIM ACTION FORMER UNDERGROUND UTILITY PLAN

DWG. NO. **G2.2**

CIP NO. 1-8-900-05

PROJECT NO. MT-NT-2021-02.2

SHEET NO. 07 OF 150

AS-BUILTS

PORT GARDNER BAY
EAST WATERWAY

OUTER HARBOR LINE

INNER HARBOR LINE

EX BERTHING FLOAT

EX CONC STRUCTURE

EX OUTFALL M 12" PVC CAPPED AT PIPE END IE=0.1'±

EX RIPRAP SHORELINE

EX BARGE DOCK, PIP

PROPERTY LINE

EX ASPHALT WHARF

EX CONC WHARF

EX WOOD DOCK

CONC BLOCK STORAGE AREA

EX CONC BLOCKS

EX BERM

EX TOP OF BANK

OHW LINE

EX DOCK

EX BRUSH

EX SAND

EX VEG

EX ASPH ROAD

EX PUD SUBSTATION

EX ROCK BULKHEAD

DUNLAP (PORT OF EVERETT)

FEDERAL AVE

EX LOADING DOCK, TYP

EX WAREHOUSE BLDG

EX LOADING DOCK

EX GVL

EX ASPH

EX GUARD SHACK

CITY OF EVERETT PORT GARDNER STORMWATER FACILITY

EX DWO ABOVE GRADE PIP

EX DWO BELOW GRADE PIP

EX DWO ABOVE GRADE CMS-MW-02

WASTEWATER/STORMWATER PIPELINE EASEMENT

EX HDPE PIPE ABOVE GRADE, PIP

BNSF RAILROAD R.O.W.

WEST MARINE VIEW DRIVE (SR 529)

NORTON AVE

PM-MW-7 PM-MW-8 REC3-MW-1 UST70-MW-2 BA-MW-07 BA-MW-05 SHB-MW-02 LP-MW-2 REC7-MW-3 REC7-MW-4 REC7-MW-2 REC7-MW-1 REC6-MW-02 TW-MW-6 NRP-MW-02 NRP-MW-3 MIE-SB-11 PM-MW-6 REC5-MW-1 TP-3 SHB-B-02 SHB-B-04 MW-6 DP-18 MIE-SB-3 OMS-MW-1 MW-1 MW-2 PM-MW-4 UST68-MW-5 GF-B-12 BA-MW-4 MIE-SB-9 CSB-B-01 LP-MW-1 DP-19 1AB 2AB DP-13 DP-11 UST68-MW-1 PM-B-9 PM-MW-2 B-3-93 MIE-SB-7 PM-MW-1 REC1-MW-9 REC1-MW-8 REC1-MW-5 GF-B-15-1 PM-B-4 BA-MW-1 DP-10 TM-MW-5 MIE-SB-2 1A 2A 3A 4A 5AA 5A 6A TM-MW-1 MIE-SB-6 MIE-SB-4 DP-20 B-2-93 PM-MW-3 MIE-SB-10 B-1-93 PM-MW-05 GF-B-9 GF9-B-1 GF9-B-2 GF9-MW-3 DP-21 DP-22 1B 2B 3BA 4B 5B 6B REC1-MW-15 REC1-MW-4 REC1-MW-7 REC1-MW-10 REC1-MW-3 REC1-MW-6 REC1-MW-2 REC1-MW-14 DP-06 GF-B-14 PM-B-8 PM-B-07 GF11-B-2 GF-B-11 GF11-B-1 GF11-B-3 DA-MW-01 OPS-MW-01 MIE-SB-8 B-2-89 EX SAND MIE-SB-5 HB-MW-1 HB-B-3 HB-B-1 1C 2C 3C 4C TM-MW-02 5C 6C MIE-SB-1 1D 2D TM-MW-04 3D 4D 5D 6D REC1-MW-11 REC1-MW-12 REC2-B-03 REC2-B-01 REC2-B-02 REC1-MW-1 CMS-MW-01 CMS-B04 DA-B-1 GF-B-8 8G HB-B-6 HB-B-2 C-1-94 1E 2E 3E 4E 5E 6E TM-MW-3 C-2-94 1F 2F 3F 4F 5F 6F C-3-94 UC-MW-1 8H 7H GF-B-07 HB-B-5

NOTES

1. SOIL BORINGS AND GEOTECHNICAL DATA SHOWN ON THIS SHEET FOR REFERENCE AND ARE FURTHER DESCRIBED IN THE LANDAU ASSOCIATES GEOTECHNICAL REPORT PROVIDED IN THE APPENDIX TO SPECIFICATIONS.

LEGEND

- ⊕ HISTORICAL SOIL BORING LOCATION COMPLETE PRIOR TO 2020
- SOIL BORING LOCATION BY LANDAU ASSOC., FROM SEPTEMBER 2020 AND APRIL 2021
- ERT SURVEY ALIGNMENT

N

80' 0 80' 160'
40' 120'

SCALE: 1"=80'

CALL 48 HOURS BEFORE YOU DIG DIAL 811

VERT DATUM: NAVD 88
CONV TO MLLW = NAVD88+2.03
HORZ DATUM: NAD 83/91

IF SHEET IS LESS THAN 22x34 REDUCE SCALE ACCORDINGLY

Port of EVERETT
P.O. BOX 538
EVERETT, WA 98206
(425) 259-3164

kpff
1601 5th Avenue, Suite 1300
Seattle, Washington 98101
(206) 382-0600 Fax (206) 382-0500
PROJECT NO. 1600120

NO.	DATE	BY	REVISION
2	07/05/2023	NW	AS-BUILT
1	06/21/2021	NW	ISSUED FOR BID
0	05/07/2021	NW	FOR CITY REVIEW

RECORD CONDITIONS ILLUSTRATED IN THESE PLANS REFLECT INFORMATION PROVIDED BY THE CONTRACTOR. RECORD CONDITIONS WERE NOT VERIFIED BY ENGINEER.

PROJECT ENGINEER: N. WATSON	SCALE: 1" = 80'
DESIGNED BY: J. BECKER	DATE: 05/07/2021
DRAWN BY: K. EDWARDS, D. YU	CHECKED BY: N. WATSON
APPROVED BY:	

PORT OF EVERETT

NORTON TERMINAL DEVELOPMENT & MTCA 3RD INTERIM ACTION SOIL BORING SITE PLAN

DWG. NO. **G3.1**

CIP NO. 1-8-900-05

PROJECT NO. MT-NT-2021-02.2

SHEET NO. 08 OF 150

AS-BUILTS

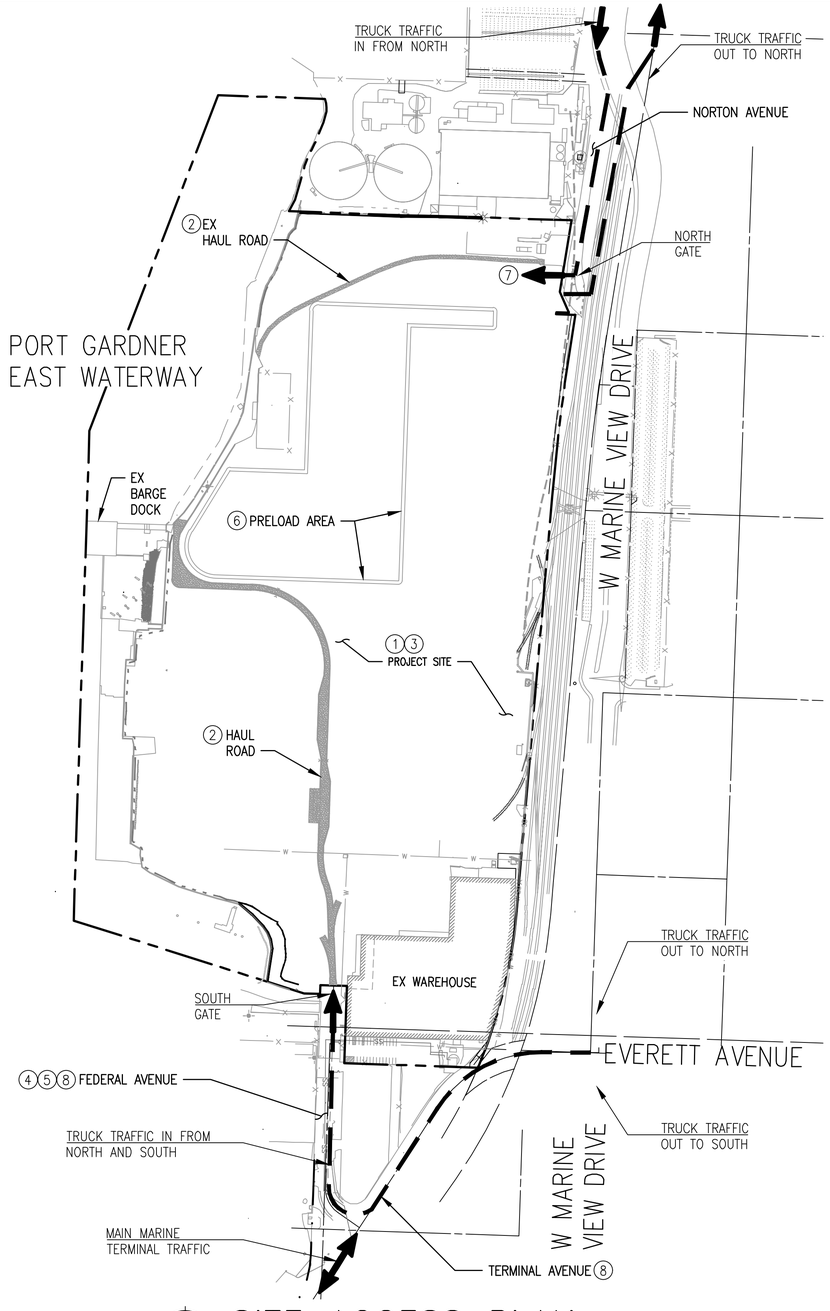

SITE ACCESS PLAN

SCALE: 1" = 200'

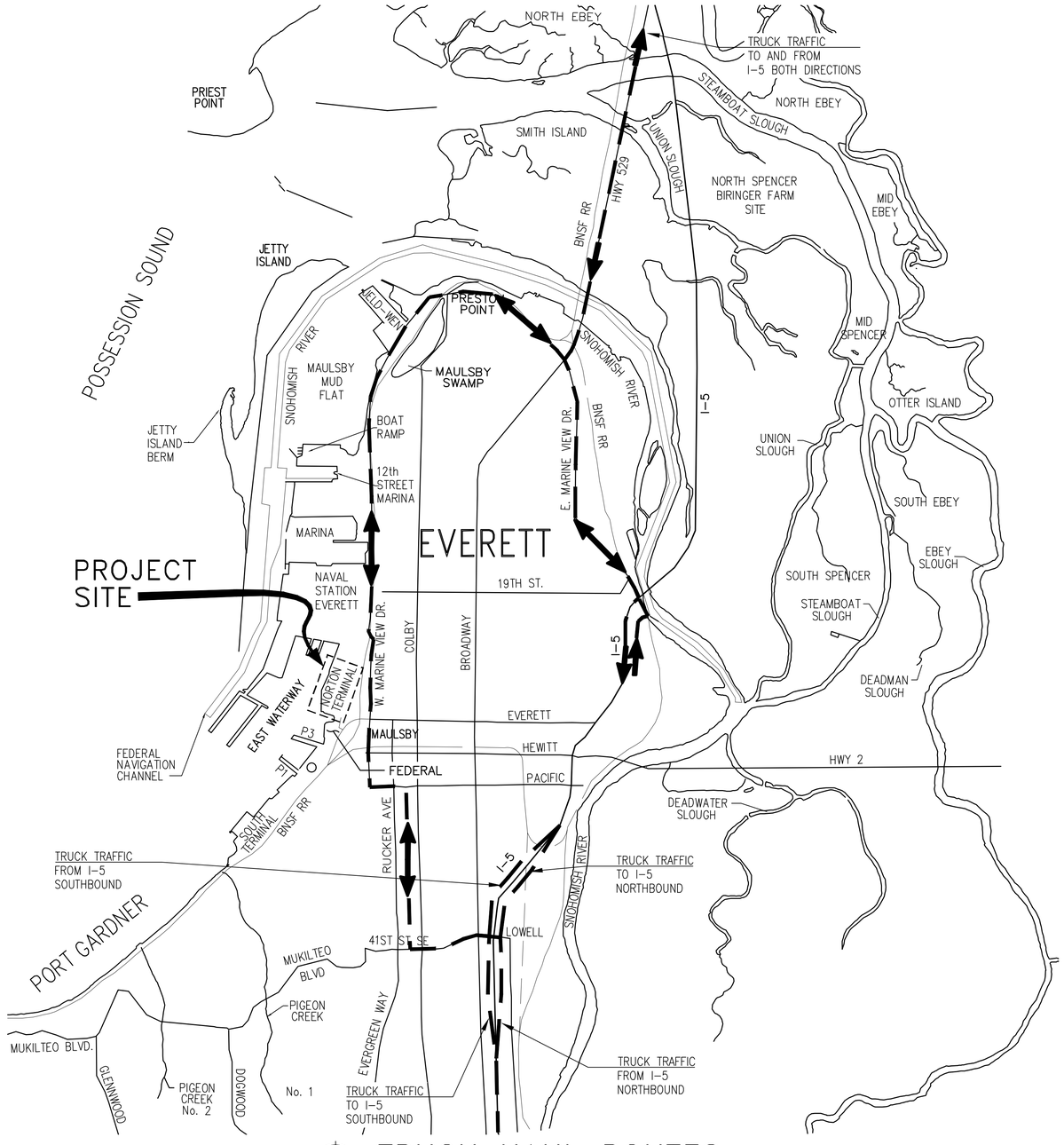

TRUCK HAUL ROUTES

SCALE: 1" = 2000'

KEY NOTES

1. THE MAJORITY OF THE SITE WAS BACKFILLED WITH APPROXIMATELY 1 TO 5 FEET OF SAND BACKFILL IN FALL 2020 DURING THE 2ND INTERIM ACTION CLEANUP. THE CONTRACTOR SHALL BE AWARE THAT THERE IS THE POTENTIAL THAT SOME CONSTRUCTION EQUIPMENT OR TRUCKS MAY EXPERIENCE POOR TRACTION OR GET STUCK DRIVING OVER THE EXISTING SAND IN PORTIONS OF THE SITE. SEE SPECIFICATIONS FOR ADDITIONAL INFORMATION.
2. SEPARATE PRELOAD CONTRACT WILL LEAVE A GRAVEL HAUL ROAD FROM FEDERAL AVENUE TO THE PRELOAD THAT WILL BE AVAILABLE FOR USE BY THE CONTRACTOR. AN EXISTING GRAVEL ROAD IS ALSO AVAILABLE AT THE NORTH END.
3. UNLESS OTHERWISE SHOWN OR APPROVED BY THE ENGINEER, THE CONTRACTOR SHALL LOCATE ALL STOCKPILES AND THEIR CONSTRUCTION TRAILER WITHIN THE WORK AREA LIMITS SHOWN. SEE SHEET C1.1 FOR FURTHER REQUIREMENTS.
4. CONTRACTOR MAY SHARE CONSTRUCTION ACCESS POINTS WITH OTHER CONTRACTORS. SEE SHEET C5.1 AND SPECIFICATIONS FOR FURTHER DETAILS.
5. CONTRACTOR SHALL PROVIDE TRAFFIC CONTROL AND MAINTAIN ONE LANE OF TRAFFIC DURING ALL WORK WITHIN THE FEDERAL AVENUE ROW. THIS WILL BE REQUIRED TO MAINTAIN ACCESS TO EXISTING TENANTS ALONG FEDERAL AVENUE (EVERETT SHIP REPAIR, DUNLAP AND MAIN TERMINAL TRAFFIC) AND OTHER CONSTRUCTION PROJECTS AS SHOWN.
6. CONTRACTOR SHALL PROVIDE ACCESS TO PORT SURVEYORS TO THE SETTLEMENT MONITORING POINTS ON THE PRELOAD FOOTPRINT BETWEEN SEPTEMBER 2021 AND MARCH 2022.
7. CONTRACTOR CAN UTILIZE EXISTING NORTH CONSTRUCTION ACCESS SHOWN ON SHEET C1.1 FOR THE MAJORITY OF THE PROJECT UNTIL DIRECTED BY ENGINEER TO UTILIZE THE NEW NORTH GATE ALIGNMENT.
8. NO CONTRACTOR TRAFFIC QUEUING IS ALLOWED ON EITHER TERMINAL AVENUE OR FEDERAL AVENUE.

IF SHEET IS LESS THAN 22x34 REDUCE SCALE ACCORDINGLY

Port of EVERETT
P.O. BOX 538
EVERETT, WA 98206
(425) 259-3164

kpff
1601 5th Avenue, Suite 1300
Seattle, Washington 98101
(206) 382-0600 Fax (206) 382-0500
PROJECT NO. 1600120

NO.	DATE	BY	REVISION
1	07/05/2023	NW	AS-BUILT
0	06/21/2021	NW	ISSUED FOR BID

NO.	DATE	BY	REVISION

RECORD CONDITIONS ILLUSTRATED IN THESE PLANS REFLECT INFORMATION PROVIDED BY THE CONTRACTOR. RECORD CONDITIONS WERE NOT VERIFIED BY ENGINEER.

PROJECT ENGINEER: N. WATSON	SCALE: AS SHOWN
DESIGNED BY: J. BECKER	DATE: 06/21/2021
DRAWN BY: K. EDWARDS, D. YU	CHECKED BY: N. WATSON
APPROVED BY:	

PORT OF EVERETT

NORTON TERMINAL DEVELOPMENT & MTCA 3RD INTERIM ACTION
SITE ACCESS AND STOCKPILE PLAN

DWG. NO. **G4.1**
CIP NO. 1-8-900-05
PROJECT NO. MT-NT-2021-02.2
SHEET NO. 09 OF 150

AS-BUILTS

OTHER CONSTRUCTION PROJECTS

A NORTON TERMINAL – PRELOAD & MTCA 3RD INTERIM ACTION – SEPARATE PRELOAD CONTRACT CONSTRUCTION WILL OCCUR DURING SUMMER AND EARLY FALL 2021 (ANTICIPATED TO BE COMPLETE BY MID-OCTOBER). THIS PROJECT WOULD SHARE ACCESS AT BOTH THE NORTH AND SOUTH ENDS DURING CONSTRUCTION.

B CITY FORCEMAIN CONSTRUCTION – THE CITY OF EVERETT WILL HAVE A SEPARATE PROJECT THAT INSTALLS A FORCEMAIN THRU THE WORK AREA FROM FEDERAL AVENUE AT THE SOUTH TO THE PORT GARDNER STORMWATER FACILITY AT THE NORTH AS SHOWN. CONSTRUCTION IS ANTICIPATED DURING FIRST QUARTER 2022 AND WILL PROGRESS FROM SOUTH TO NORTH. THIS CONTRACTOR WILL GENERALLY OCCUPY SEGMENTS OF THE EASEMENT AREA SHOWN IN THE DRAWINGS AS THE WORK PROGRESSES. THEY MAY DEMOBILIZE IF THE PRELOAD MATERIAL AT THE NORTHERN PORTION OF THE ALIGNMENT IS NOT REMOVED AND WILL RETURN AS SOON AS THAT AREA IS AVAILABLE. THE CONTRACTOR SHALL COORDINATE AND ALLOW ACCESS FOR THIS CONTRACTOR TO INSTALL THE NEW FORCEMAIN THROUGH THE NORTON TERMINAL WORK AREA.

C EXXON-MOBIL/ADC MTCA CLEANUP – EXXON-MOBIL WILL BE PERFORMING CLEAN-UP EXCAVATION ON BOTH SIDES OF THE FEDERAL AVENUE ROW BETWEEN MAY AND SEPTEMBER 1, 2022. THIS PROJECT WILL SHARE ACCESS FROM THE SOUTH VIA FEDERAL AVENUE.

D SNOPUD WORK AT FEDERAL AVENUE – SNOPUD MAY BE REMOVING A GUY POLE AT THE NORTH AND SOUTH ENDS OF FEDERAL AVENUE AND RELOCATING SOME OVERHEAD POWER LINES ON FEDERAL AVENUE DURING THE COURSE OF THE PROJECT. △1

E SEPARATE WAREHOUSE TENANT LEASEHOLD CONTRACT CONSTRUCTION WILL OCCUR DURING SUMMER AND EARLY FALL 2021 (ANTICIPATED TO BE COMPLETE BY OCTOBER). WORK WILL INCLUDE THE PLACEMENT AND COMPACTION OF A 1-FOOT THICK LAYER OF CRUSHED SURFACING BASE COURSE. IMMEDIATELY FOLLOWING CONSTRUCTION, THE PORT WILL USE THE AREA TO STORE EMPTY CARGO CONTAINERS. THIS PROJECT WILL SHARE ACCESS VIA FEDERAL AVENUE. THE CONTRACTOR SHALL COORDINATE DEMOLITION AND UTILITY PIPE FILL AND ABANDONMENT WORK IN THIS AREA WITH THE PORT AND THE PORT'S CONTRACTOR

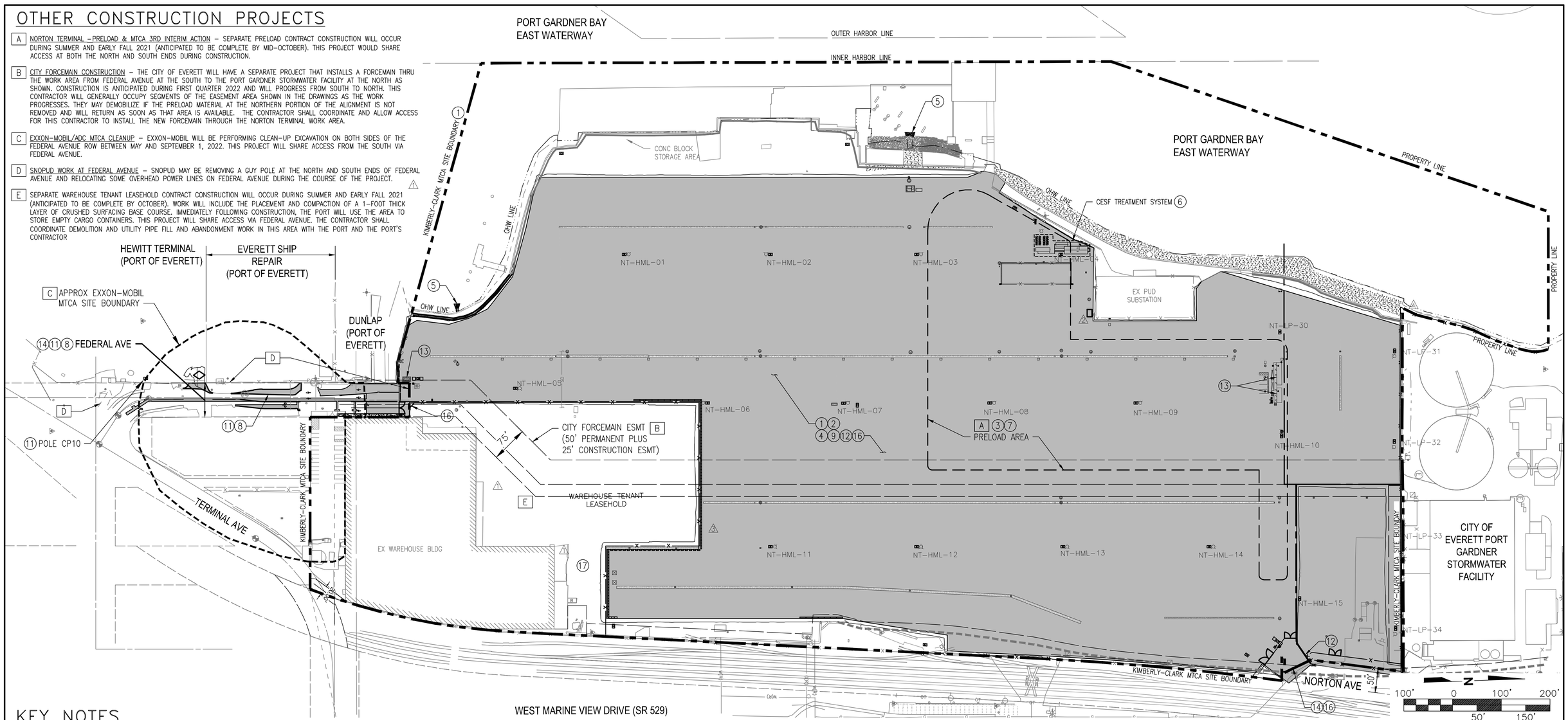

SCALE: 1"=100'

KEY NOTES

1. THE PROJECT HAS A DUAL PURPOSE AS A COMBINED DEVELOPMENT OF NORTON TERMINAL AND A 3RD INTERIM ACTION CLEANUP FROM THE FORMER KIMBERLY-CLARK OPERATIONS. THE NORTON TERMINAL IS WITHIN THE KIMBERLY-CLARK MTCA SITE. SEE SPECIFICATIONS FOR FURTHER ENVIRONMENTAL REQUIREMENTS.
2. SEE SHEET G2.1 AND THE SPECIFICATIONS FOR FURTHER INFORMATION ON REMAINING KNOWN BELOW GRADE FOUNDATIONS FROM THE FORMER KIMBERLY-CLARK FACILITY.
3. THE CONTRACTOR SHALL BE AWARE THAT THE NORTHERN PORTION OF THE SITE HAS KNOWN WOOD WASTE DEPOSITS THAT IMPACT VARIOUS SITE DESIGN ELEMENTS. SEE SPECIFICATIONS FOR FURTHER REQUIREMENTS.
4. SEE SPECIFICATIONS FOR TERMINAL OPENING AND SUBSTANTIAL COMPLETION MILESTONE REQUIREMENTS.
5. OUTFALL REPLACEMENT (SEE STORMWATER DRAWINGS) IS SUBJECT TO IN-WATER CONSTRUCTION WINDOWS AND SHALL BE COMPLETED BETWEEN JULY 16 AND FEBRUARY 15. WORK SHALL ALSO BE PERFORMED IN THE "DRY" AT LOW TIDES. SEE SPECIFICATIONS FOR FURTHER ENVIRONMENTAL REQUIREMENTS AND BMPS.
6. CESF TREATMENT SYSTEM SHALL BE COMPLETE AND OPERATIONAL PRIOR TO OFF-SITE DISCHARGE OF STORM WATER RUNOFF. CONTRACTOR SHALL INFILTRATE ALL STORMWATER ON-SITE UNTIL NEW PAVEMENT IS PLACED. ANY NEW PAVED AREAS SHALL TEMPORARILY CONVEY RUNOFF TO AN INFILTRATION AREA OR TO THE CESF SYSTEM FOR TREATMENT PRIOR TO OFF-SITE DISCHARGE. SEE SPECIFICATIONS AND TESC DRAWINGS FOR FURTHER REQUIREMENTS.
7. PRELOAD IS ANTICIPATED TO BE COMPLETE IN FIRST QUARTER 2022. CONTRACTOR SHALL ASSUME THAT SOME PORTIONS OF PRELOAD MAY NEED TO STAY IN PLACE UNTIL MID-MARCH 2022. IT IS ANTICIPATED THAT PORTIONS OF THE PRELOAD MAY BE AVAILABLE FOR RELOCATION SOONER BASED ON RESULTS OF SETTLEMENT MONITORING.
8. CONTRACTOR SHALL COMPLETE INSTALLATION OF THE NEW WATERLINE, ELECTRICAL AND COMMUNICATIONS DUCTBANKS (INCLUDING ASSOCIATED TRENCHING, BACKFILL & REPAVING) LOCATED WITHIN THE FEDERAL AVENUE ROW PRIOR TO THE MAY 1, 2022 START OF EXXON-MOBIL CLEANUP. CONTRACTOR SHALL NOTE THAT WORK WITHIN FEDERAL AVENUE IS WITHIN THE EXXON-MOBIL/ADC MTCA SITE AS SHOWN ON G1.4. SEE SPECIFICATIONS FOR FURTHER ENVIRONMENTAL REQUIREMENTS.
9. THE CONTRACTOR SHALL COMPLETE THE PROJECT ON-SITE COMMUNICATIONS DUCTBANKS, VAULTS AND POLES PRIOR TO AUGUST 1, 2022 AND ALLOW THE PORT ACCESS TO THIS INFRASTRUCTURE TO PULL COMMUNICATIONS CABLES AND INSTALL EQUIPMENT ONTO POLES PRIOR TO TERMINAL OPENING. SEE ELECTRICAL DRAWINGS FOR FURTHER DETAILS.
10. DUE TO EXXON-MOBIL CONSTRUCTION, THE CONTRACTOR SHALL WAIT TO INSTALL NEW FEDERAL AVENUE SLIDE GATE FROM HEWITT TERMINAL (AND ASSOCIATED ELECTRICAL POWER) UNTIL SEPTEMBER 1, 2022.
11. CONTRACTOR SHALL COORDINATE WITH PORT (AND SEPARATE COMMUNICATIONS CONTRACTOR) TO MINIMIZE CHANGE-OVER DURATION BETWEEN EXISTING COMMUNICATIONS POLE AND NEW COMMUNICATIONS POLE (AND INTERCEPTION OF CONDUITS IN HEWITT TERMINAL). NEW COMMUNICATIONS POLE CP10 AND ADJACENT CONDUITS SHALL BE INSTALLED AND READY FOR WORK BY OTHERS ON MARCH 1, 2022. SEE ELECTRICAL DRAWINGS FOR FURTHER DETAILS.
12. THE CONTRACTOR WILL INSTALL THE BELOW GRADE INFRASTRUCTURE FOR THE SNOPUD EQUIPMENT WITHIN NORTON TERMINAL AND SHALL COORDINATE WITH SNOPUD TO ALLOW INSTALLATION OF THEIR EQUIPMENT AND CABLING. SEE ELECTRICAL DRAWINGS FOR DETAILS.
13. CONTRACTOR SHALL NOTE THAT THE MODULAR LONGSHORE BUILDINGS AND GUARD SHACK WILL BE DEFERRED SUBMITTALS FROM THE CITY BASED ON CONTRACTOR DESIGN. CONSTRUCTION CAN NOT BEGIN UNTIL THE CONTRACTOR OBTAINS REQUIRED PERMITS FROM THE CITY. SEE ARCHITECTURAL SPECIFICATIONS.
14. SEE SHEET G4.1 FOR SITE ACCESS REQUIREMENTS.
15. NOT USED
16. SEE SPECIFICATIONS FOR DEWATERING REQUIREMENTS AND POTENTIAL CITY SANITARY SEWER DISCHARGE LOCATIONS NEAR NORTH AND SOUTH GATES AS SHOWN ON SHEET C1.1. △1
17. REFER TO SHEET C1.1 FOR AREA AVAILABLE TO CONTRACTOR FOR LAYDOWN/STOCKPILE AREA ON NORTH SIDE OF WAREHOUSE.

LEGEND

KIMBERLY-CLARK MTCA SITE BOUNDARY

EXXON MOBIL MTCA SITE BOUNDARY

VERT DATUM: NAVD 88
CONV TO MLLW = NAVD88+2.03
HORZ DATUM: NAD 83/91

IF SHEET IS LESS THAN 22x34
REDUCE SCALE ACCORDINGLY

Port of EVERETT
P.O. BOX 538
EVERETT, WA 98206
(425) 259-3164

kpff
1601 5th Avenue, Suite 1300
Seattle, Washington 98101
(206) 382-0600 Fax (206) 382-0500
PROJECT NO. 1600120

NO.	DATE	BY	REVISION
△4	02/18/2022	NW	MARITIME TENANT SITE DEVELOPMENT
△3	12/02/2021	JB	DELETE ECOLOGY BLOCK WALL, ADD EX WHS GRAVEL PAD CONTOURS AND UPDATE FINAL GRADES & PAVEMENT COORDINATES
△2	12/02/2021	NW	2-INCH TO 9-INCH PVMT
△1	07/28/2021	NW	ADDENDUM 4
△	06/21/2021	NW	ISSUED FOR BID
△5	07/05/2023	NW	AS-BUILT

RECORD CONDITIONS ILLUSTRATED IN THESE PLANS REFLECT INFORMATION PROVIDED BY THE CONTRACTOR. RECORD CONDITIONS WERE NOT VERIFIED BY ENGINEER.

PROJECT ENGINEER: N. WATSON	SCALE: 1" = 100'
DESIGNED BY: J. BECKER	DATE: 06/21/2021
DRAWN BY: K. EDWARDS, D. YU	CHECKED BY: N. WATSON
APPROVED BY:	

PORT OF EVERETT

NORTON TERMINAL DEVELOPMENT & MTCA 3RD INTERIM ACTION CONSTRAINTS AND PHASING PLAN

DWG. NO. **G5.1**

CIP NO. 1-8-900-05

PROJECT NO. MT-NT-2021-02.2

SHEET NO. 10 OF 150

AS-BUILTS

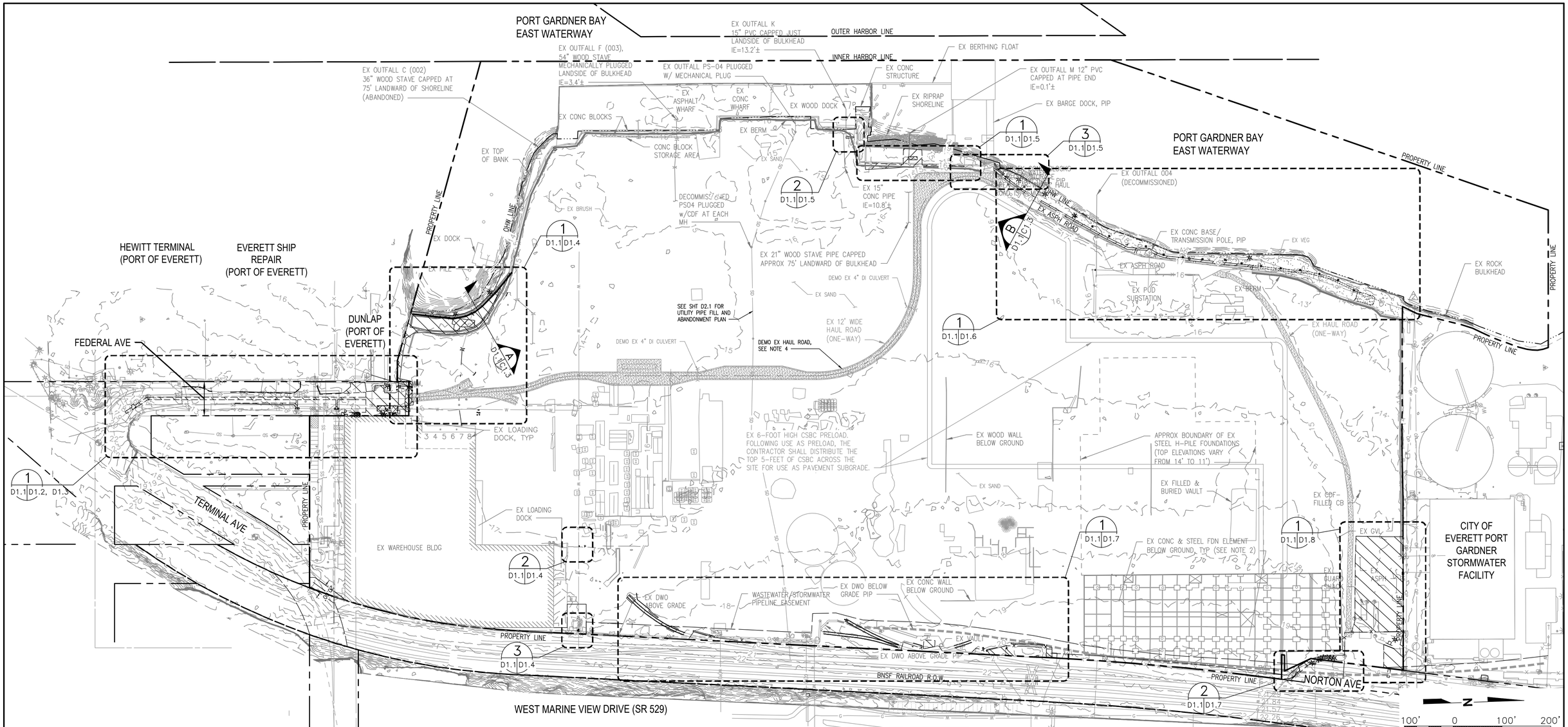

SCALE: 1"=100'

CALL 48 HOURS BEFORE YOU DIG DIAL 811

VERT DATUM: NAVD 88
CONV TO MLLW = NAVD88+2.03
HORZ DATUM: NAD 83/91

IF SHEET IS LESS THAN 22x34 REDUCE SCALE ACCORDINGLY

LEGEND

- DEMO EX ASPHALT
- DEMO EX CONCRETE

DEMOLITION NOTES

1. SEE SHEET D2.1 FOR EXISTING UTILITY PIPE FILL AND ABANDONMENT PLAN.
2. ADDITIONAL DEMOLITION OF EXISTING FOUNDATIONS MAY BE REQUIRED TO ACCOMMODATE INSTALLATION OF NEW UTILITIES AND SITE IMPROVEMENTS BEYOND WHAT IS SHOWN ON THESE DRAWINGS.
3. CONTRACTOR SHALL USE CARE TO REMOVE AND NOT DAMAGE ITEMS MARKED FOR SALVAGE. CONTRACTOR SHALL RETURN SALVAGED ITEMS TO THE PORT AT COVERED LOADING DOCKS 1 AND 2 ALONG WEST SIDE OF EXISTING WAREHOUSE.
4. CONTRACTOR SHALL DEMOLISH EXISTING HAUL ROAD WHEN NO LONGER NEEDED. HAUL ROAD MATERIAL SHALL BE BLENDED WITH OTHER SITE SOILS AS PART OF SITE GRADING.
5. UTILITIES, STRUCTURES AND SITE FEATURES NOT INDICATED FOR DEMOLITION SHALL BE PROTECT-IN-PLACE.
6. ALL ITEMS MARKED FOR DEMOLITION (DEMO) SHALL BE DEMOLISHED AND REMOVED FROM THE SITE AND DISPOSED OF AT AN APPROVED UPLAND DISPOSAL SITE IN ACCORDANCE WITH THE SPECIFICATIONS. ANY FEES REQUIRED FOR DISPOSAL ARE THE RESPONSIBILITY OF THE CONTRACTOR.

EXISTING CONDITIONS NOTES

1. BOUNDARY AND SURVEY CONTROL SHOWN ON THESE DRAWINGS ARE BASED ON A SURVEY TITLED 'A.L.T.A./N.S.P.S. LAND TITLE SURVEY EVERETT MILL SITE FOR KIMBERLY-CLARKE WORLDWIDE, INC. SNOHOMISH COUNTY, WASHINGTON' PREPARED BY DAVID EVANS AND ASSOCIATES, PROJECT NUMBER KMBY007, DATED 10-31-2019.
2. OUTFALL AND BURIED FOUNDATION INFORMATION SHOWN ON THESE DRAWINGS ARE BASED ON A MAPPING CAD FILE TITLED 'SV-TP-X-KPFX5075-EXPOSED-PIPES-2020-10-16.DWG', PREPARED BY DAVID EVANS AND ASSOCIATES, RECEIVED BY EMAIL ON OCTOBER 16, 2020.
3. TOPOGRAPHY (EXTERIOR TO SITE), UTILITIES, AND SITE FEATURES SHOWN ON THESE DRAWINGS ARE BASED ON A SURVEY TITLED 'TOPOGRAPHIC SURVEY PORT OF EVERETT MIE DESIGN SUPPORT', PREPARED BY DAVID EVANS AND ASSOCIATES, PROJECT NUMBER KPFX5074, DATED 06-16-2020.
4. TOPOGRAPHY (INTERIOR TO SITE) SHOWN ON THESE DRAWINGS IS BASED ON A SURVEY TITLED 'SITE CONDITIONS AFTER REMOVAL KIMBERLY-CLARK MILL SITE CRUSHED MATERIAL REMOVAL PROJECT', PREPARED BY DAVID EVANS AND ASSOCIATES, PROJECT NUMBER KMBY00000010, DATED 05-30-2018.

Port of EVERETT
P.O. BOX 538
EVERETT, WA 98206
(425) 259-3164

kpff
1601 5th Avenue, Suite 1300
Seattle, Washington 98101
(206) 382-0600 Fax (206) 382-0500
PROJECT NO. 1600120

NO.	DATE	BY	REVISION
3	07/05/2023	NW	AS-BUILT
2	04/08/2022	NW	MARITIME TENANT SITE DEVELOPMENT
1	06/21/2021	NW	ISSUED FOR BID
0	05/07/2021	NW	FOR CITY REVIEW

RECORD CONDITIONS ILLUSTRATED IN THESE PLANS REFLECT INFORMATION PROVIDED BY THE CONTRACTOR. RECORD CONDITIONS WERE NOT VERIFIED BY ENGINEER.

PROJECT ENGINEER: N. WATSON	SCALE: 1" = 100'
DESIGNED BY: J. BECKER	DATE: 05/07/2021
DRAWN BY: K. EDWARDS, D. YU	CHECKED BY: N. WATSON
APPROVED BY:	

PORT OF EVERETT

NORTON TERMINAL DEVELOPMENT & MTCA 3RD INTERIM ACTION EXISTING CONDITION & DEMOLITION SITE PLAN (1 OF 2)

DWG. NO. **D1.1**

CIP NO. 1-8-900-05

PROJECT NO. MT-NT-2021-02.2

SHEET NO. 11 OF 150

AS-BUILTS

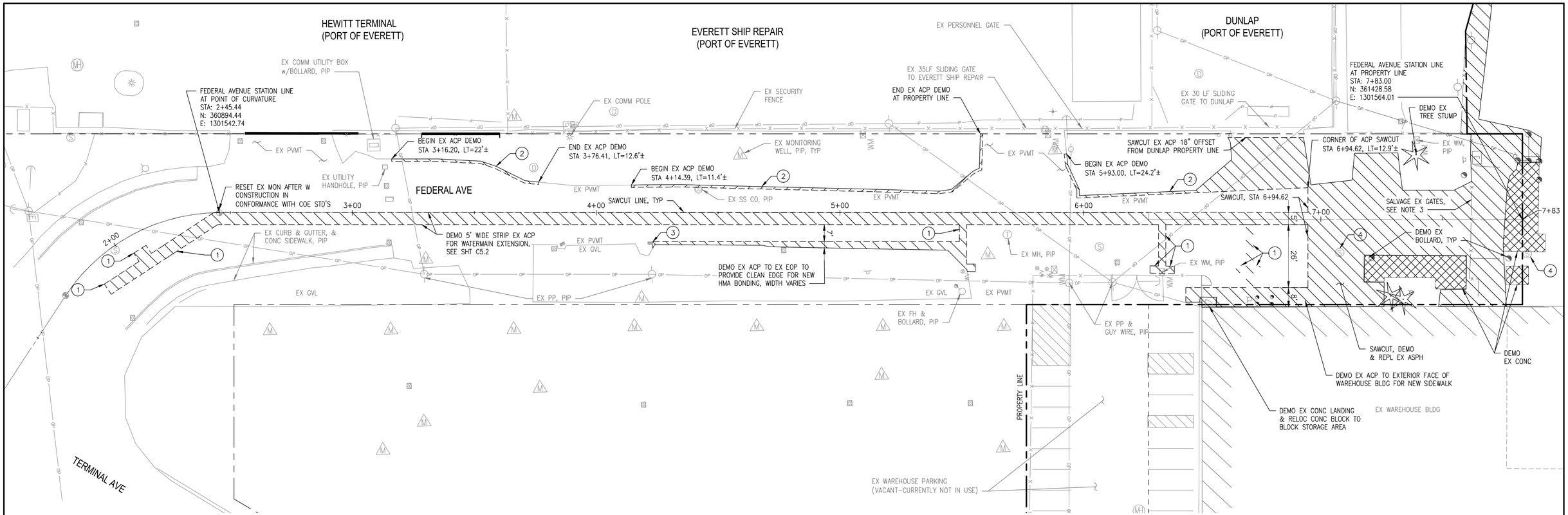

LEGEND

- DEMO EX ASPHALT
- DEMO EX CONCRETE
- SAWCUT LINE

KEY NOTES

1. SAWCUT & DEMO EX ACP AS NEEDED FOR WATERMAIN EXTENSION AND RECONNECTION OF EXISTING SERVICES. SEE NOTE 4 & 9. SEE SHT D1.3
2. SAWCUT & DEMO OUTERMOST 1' WIDE STRIP OF EX ACP TO PROVIDE CLEAN EDGE FOR NEW PAVEMENT EXTENSION. SEE NOTE 9
3. SAWCUT & DEMO EX ACP TO FACE OF EX CB GRATE. PROTECT–IN–PLACE EX CB & GRATE, SEE NOTE 9
4. EXISTING SEWER MANHOLE, PROTECT–IN–PLACE

DEMOLITION NOTES

1. ADDITIONAL DEMOLITION OF EXISTING FOUNDATIONS MAY BE REQUIRED TO ACCOMMODATE INSTALLATION OF PROPOSED UTILITIES.
2. FROM PAST BORINGS EXISTING ASPHALT PAVEMENT THICKNESS IN FEDERAL AVENUE IS ANTICIPATED TO BE 8" TO 9" THICK.
3. CONTRACTOR SHALL USE CARE TO REMOVE AND NOT DAMAGE ITEMS MARKED FOR SALVAGE. CONTRACTOR SHALL RETURN SALVAGED ITEMS TO THE PORT AT COVERED LOADING DOCKS 1 AND 2 ALONG WEST SIDE OF EXISTING WAREHOUSE.
4. EXISTING UTILITY LOCATIONS ARE APPROXIMATE. CONTRACTOR SHALL POTHOLE AND FIELD LOCATE EX UTILITIES AS NECESSARY.
5. UTILITIES STRUCTURES AND SITE FEATURES NOT INDICATED FOR DEMOLITION SHALL BE PROTECT–IN–PLACE.
6. ALL ITEMS MARKED FOR DEMOLITION (DEMO) SHALL BE DEMOLISHED AND REMOVED FROM THE SITE AND DISPOSED OF AT AN APPROVED UPLAND DISPOSAL SITE IN ACCORDANCE WITH THE SPECIFICATIONS. ANY FEES REQUIRED FOR DISPOSAL ARE THE RESPONSIBILITY OF THE CONTRACTOR.
7. PERFORM PAVEMENT SAWCUTTING IN CONFORMANCE WITH DOE BMP C152. CONTRACTOR SHALL FIELD MEASURE AND ESTABLISH EXISTING PAVEMENT GRADES AND SLOPES PRIOR TO DEMOLITION. PAVEMENT SHALL BE REPLACED FLUSH WITH SAWCUT EDGE OF EXISTING PAVEMENT AND SHALL BE CONSTRUCTED TO MATCH ALL EXISTING GRADES AND SLOPES.
8. SAWCUT AND DEMOLISH EXISTING ASPHALT PAVEMENT FOR WATER REROUTE. SEE DETAIL 1, SHEET D1.2 FOR TYPICAL PAVEMENT RESTORATION DETAIL.
9. CONTRACTOR SHALL NOTIFY ENGINEER WHERE PVMT DAMAGE EXTENDS PVMT DEMO LIMITS. CONTRACTOR SHALL ADJUST SAWCUT AND PVMT DEMO LIMITS PER GUIDANCE OF ENGINEER.

1 SURFACE FEATURES & PAVEMENT DEMO
D1.1 D1.2 SCALE: 1"=20'

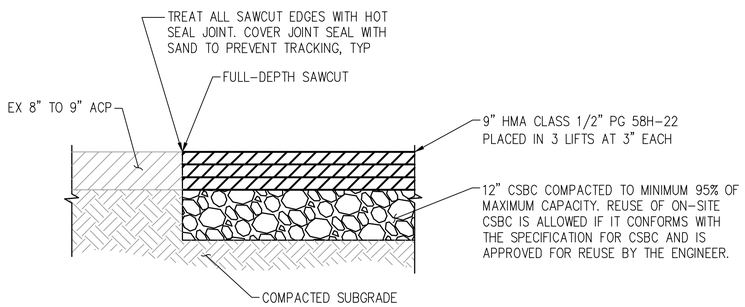

1 TYPICAL PAVEMENT RESTORATION DETAIL
D1.2 D1.2 SCALE: NTS

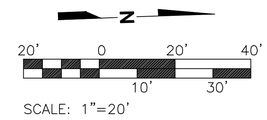

SCALE: 1"=20'

CALL 48 HOURS BEFORE YOU DIG DIAL 811

VERT DATUM: NAVD 88
CONV TO MLLW = NAVD88+2.03
HORZ DATUM: NAD 83/91

IF SHEET IS LESS THAN 22x34 REDUCE SCALE ACCORDINGLY

Port of EVERETT
P.O. BOX 538
EVERETT, WA 98206
(425) 259–3164

kpff
1601 5th Avenue, Suite 1300
Seattle, Washington 98101
(206) 382-0600 Fax (206) 382-0500
PROJECT NO. 1600120

NO.	DATE	BY	REVISION
3	07/05/2023	NW	AS–BUILT
2	06/21/2021	NW	ISSUED FOR BID
1	05/07/2021	NW	FOR CITY REVIEW

RECORD CONDITIONS ILLUSTRATED IN THESE PLANS REFLECT INFORMATION PROVIDED BY THE CONTRACTOR. RECORD CONDITIONS WERE NOT VERIFIED BY ENGINEER.

PROJECT ENGINEER: N. WATSON	SCALE: 1" = 20'
DESIGNED BY: J. BECKER	DATE: 05/07/2021
DRAWN BY: K. EDWARDS, D. YU	CHECKED BY: N. WATSON
APPROVED BY:	

PORT OF EVERETT

NORTON TERMINAL DEVELOPMENT & MTCA 3RD INTERIM ACTION EXISTING CONDITIONS & DEMOLITION SITE PLAN (2 OF 2)

DWG. NO.	D1.2
CIP NO.	1–8–900–05
PROJECT NO.	MT–NT–2021–02.2
SHEET NO.	12 OF 150

AS-BUILTS

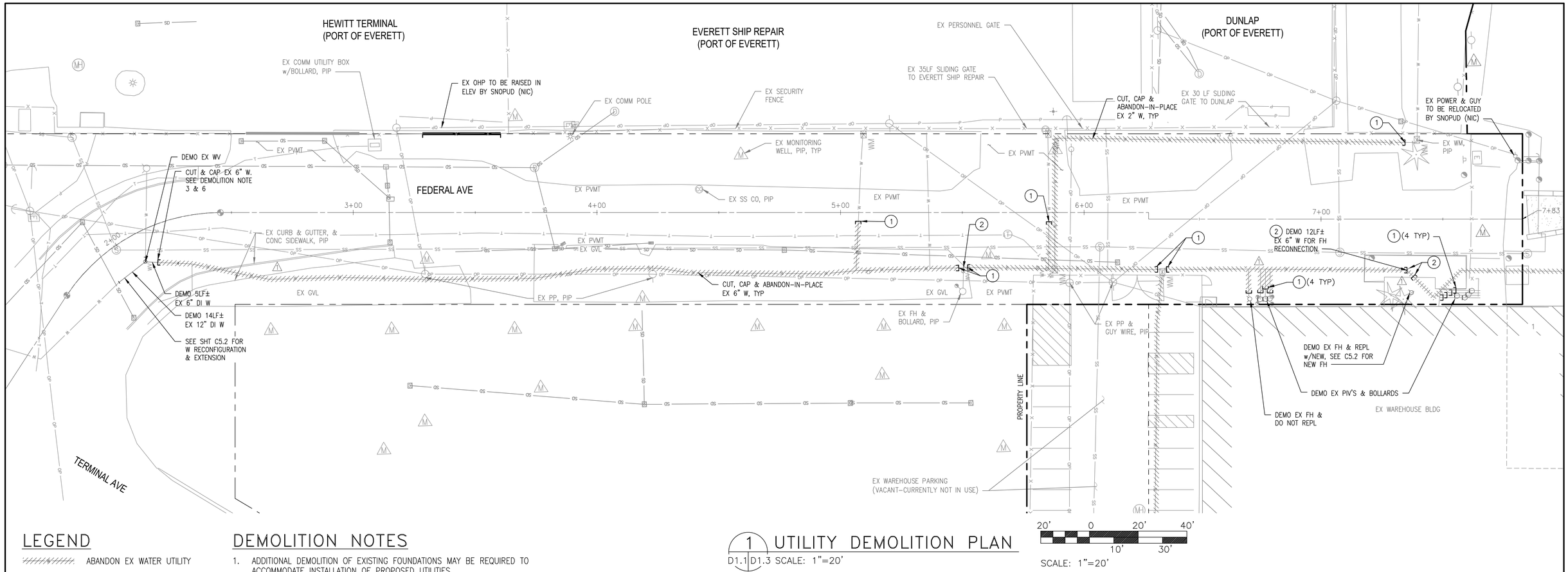

1 UTILITY DEMOLITION PLAN
D1.1 | D1.3 SCALE: 1"=20'

SCALE: 1"=20'

LEGEND

- ABANDON EX WATER UTILITY
- DEMO EX WATER UTILITY
- PIPE CAP

KEY NOTES

1. CUT & PLUG EX PIPE w/GRAVITY PLUG PER DETAIL 3, SHEET D1.3, SEE NOTE 3 & 6
2. DEMO EX 6" TEE FOR FIRE HYDRANT RECONNECTION

DEMOLITION NOTES

1. ADDITIONAL DEMOLITION OF EXISTING FOUNDATIONS MAY BE REQUIRED TO ACCOMMODATE INSTALLATION OF PROPOSED UTILITIES.
2. FROM PAST BORINGS EXISTING ASPHALT PAVEMENT THICKNESS IN FEDERAL AVENUE IS ANTICIPATED TO BE 8" TO 9" THICK.
3. THE EXISTING UTILITY LOCATIONS AND DEPTHS SHOWN ON THESE PLANS ARE APPROXIMATE. NO REPRESENTATION IS MADE AS TO THE ACCURACY OR COMPLETENESS OF THE INFORMATION. THE CONTRACTOR SHALL POTHOLE OR OTHERWISE CONFIRM EXISTING CONDITIONS PRIOR TO START OF WORK. IF CONDITIONS DIFFER FROM THOSE SHOWN ON THE PLANS, THE CONTRACTOR SHALL NOTIFY THE ENGINEER AND SHALL NOT BEGIN CONSTRUCTION UNTIL THE CHANGED CONDITIONS HAVE BEEN EVALUATED. THE CONTRACTOR SHALL TAKE PRECAUTIONARY MEASURES TO PROTECT FROM DAMAGE OR DESTRUCTION ALL UTILITIES AS SHOWN AND ALL UTILITIES NOT SHOWN THAT MAY BE ENCOUNTERED DURING CONSTRUCTION DUE TO NO RECORD OF THEIR EXISTENCE.
4. UTILITIES, STRUCTURES AND SITE FEATURES NOT INDICATED FOR DEMOLITION SHALL BE PROTECT-IN-PLACE.
5. ALL ITEMS MARKED FOR DEMOLITION (DEMO) SHALL BE DEMOLISHED AND REMOVED FROM THE SITE AND DISPOSED OF AT AN APPROVED UPLAND DISPOSAL SITE IN ACCORDANCE WITH THE SPECIFICATIONS. ANY FEES REQUIRED FOR DISPOSAL ARE THE RESPONSIBILITY OF THE CONTRACTOR.
6. CONTRACTOR SHALL COORDINATE WITH CITY TO SHUT-OFF WATER SERVICE AS NEEDED TO CONSTRUCT WATERMAIN EXTENSION AND TO DECOMMISSION AND ABANDON EXISTING WATER SERVICES AS NOTED ON THE DRAWINGS.

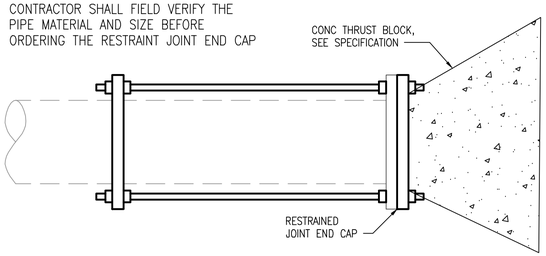

2 UTILITY PIPE END CAP DETAIL FOR PRESSURIZED PIPE CONDITION
SCALE: NTS

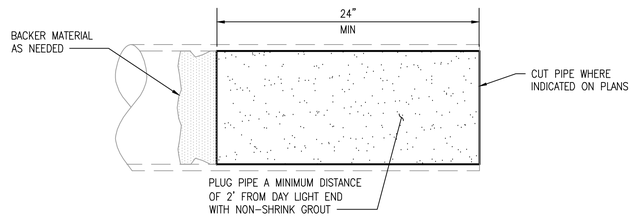

3 UTILITY PIPE END CAP DETAIL FOR NON-PRESSURIZED (GRAVITY) PIPE CONDITION
SCALE: NTS

CALL 48 HOURS BEFORE YOU DIG DIAL 811

VERT DATUM: NAVD 88
CONV TO MLLW = NAVD88+2.03
HORZ DATUM: NAD 83/91

IF SHEET IS LESS THAN 22x34 REDUCE SCALE ACCORDINGLY

Port of EVERETT
P.O. BOX 538
EVERETT, WA 98206
(425) 259-3164

kpff
1601 5th Avenue, Suite 1300
Seattle, Washington 98101
(206) 382-0600 Fax (206) 382-0500
PROJECT NO. 1600120

NO.	DATE	BY	REVISION
3	07/05/2023	NW	AS-BUILT
2	10/15/2021	NW	REVISED PER CITY PRE-CONSTRUCTION MEETING
1	06/21/2021	NW	ISSUED FOR BID

RECORD CONDITIONS ILLUSTRATED IN THESE PLANS REFLECT INFORMATION PROVIDED BY THE CONTRACTOR. RECORD CONDITIONS WERE NOT VERIFIED BY ENGINEER.

PROJECT ENGINEER: N. WATSON	SCALE: 1" = 20'
DESIGNED BY: J. BECKER	DATE: 06/21/2021
DRAWN BY: K. EDWARDS, D. YU	CHECKED BY: N. WATSON
APPROVED BY:	

PORT OF EVERETT

NORTON TERMINAL DEVELOPMENT & MTCA 3RD INTERIM ACTION
FEDERAL AVE UTILITY DEMOLITION PLAN

DWG. NO. **D1.3**
CIP NO. 1-8-900-05
PROJECT NO. MT-NT-2021-02.2
SHEET NO. 13 OF 150

AS-BUILTS

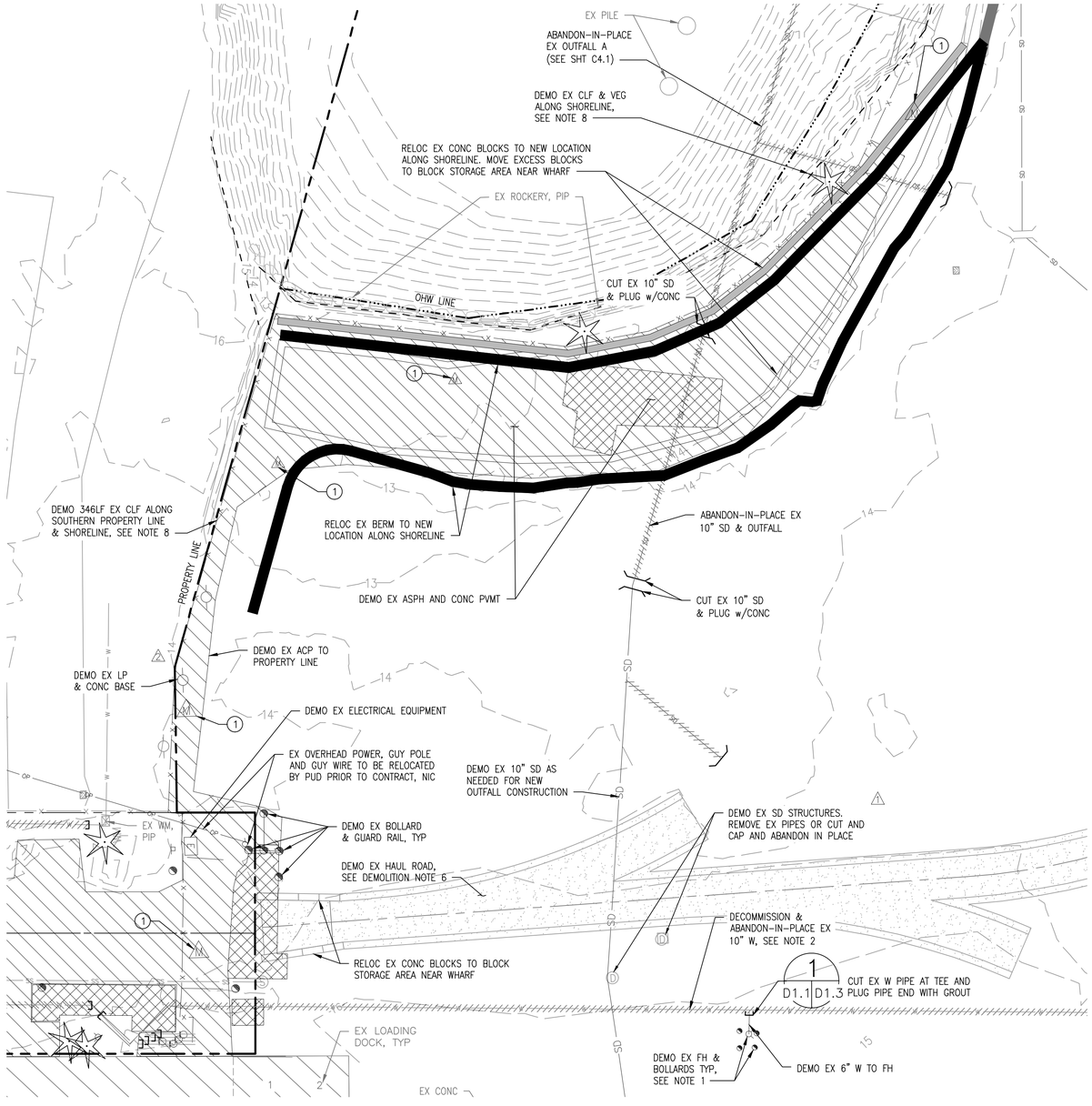

1 DEMOLITION DETAIL
D1.1 | D1.4 SCALE: 1"=20'

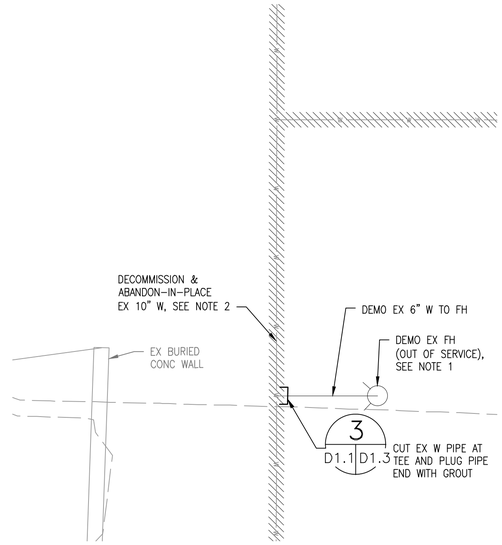

2 DEMOLITION DETAIL
D1.1 | D1.4 SCALE: 1"=10'

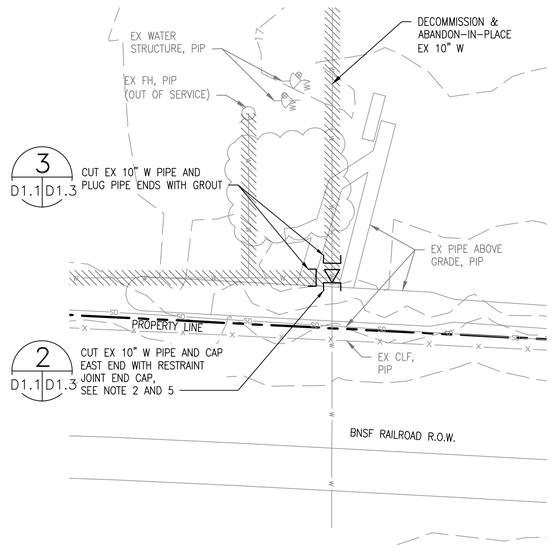

3 DEMOLITION DETAIL
D1.1 | D1.4 SCALE: 1"=10'

LEGEND

- DEMO EX ASPHALT
- DEMO EX CONCRETE
- SAWCUT LINE

KEY NOTES

(1) DECOMMISSION EXISTING MONITORING WELL

DEMOLITION NOTES

1. CONTRACTOR SHALL COMPLETELY REMOVE EXISTING FIRE HYDRANT AND GATE VALVE. REMAINING PIPE MAY BE COMPLETELY REMOVED OR CUT AND CAPPED PER DETAIL 3, SHEET D1.3 FOR ABANDONMENT-IN-PLACE.
2. THE EXISTING UTILITY LOCATIONS AND DEPTHS SHOWN ON THESE PLANS ARE APPROXIMATE. NO REPRESENTATION IS MADE AS TO THE ACCURACY OR COMPLETENESS OF THE INFORMATION. THE CONTRACTOR SHALL POTHOLE OR OTHERWISE CONFIRM EXISTING CONDITIONS PRIOR TO START OF WORK. IF CONDITIONS DIFFER FROM THOSE SHOWN ON THE PLANS, THE CONTRACTOR SHALL NOTIFY THE ENGINEER AND SHALL NOT BEGIN CONSTRUCTION UNTIL THE CHANGED CONDITIONS HAVE BEEN EVALUATED. THE CONTRACTOR SHALL TAKE PRECAUTIONARY MEASURES TO PROTECT FROM DAMAGE OR DESTRUCTION ALL UTILITIES AS SHOWN AND ALL UTILITIES NOT SHOWN THAT MAY BE ENCOUNTERED DURING CONSTRUCTION DUE TO NO RECORD OF THEIR EXISTENCE.
3. UTILITIES, STRUCTURES AND SITE FEATURES NOT INDICATED FOR DEMOLITION SHALL BE PROTECTED-IN-PLACE.
4. ALL ITEMS MARKED FOR DEMOLITION (DEMO) SHALL BE DEMOLISHED AND REMOVED FROM THE SITE AND DISPOSED OF AT AN APPROVED UPLAND DISPOSAL SITE IN ACCORDANCE WITH THE SPECIFICATIONS. ANY FEES REQUIRED FOR DISPOSAL ARE THE RESPONSIBILITY OF THE CONTRACTOR.
5. CONTRACTOR SHALL COORDINATE WITH CITY TO SHUT-OFF WATER SERVICE AS NEEDED TO CONSTRUCT WATERMAIN EXTENSION AND TO DECOMMISSION AND ABANDON EXISTING WATER SERVICES AS NOTED ON THE DRAWINGS.
6. CONTRACTOR SHALL DEMOLISH EXISTING HAUL ROAD WHEN NO LONGER NEEDED. HAUL ROAD MATERIAL SHALL BE BLENDED WITH OTHER SITE SOILS AS PART OF SITE GRADING.
7. CONTRACTOR SHALL USE CARE TO REMOVE AND NOT DAMAGE ITEMS MARKED FOR SALVAGE. CONTRACTOR SHALL RETURN SALVAGED ITEMS TO THE PORT AT COVERED LOADING DOCKS 1 AND 2 ALONG WEST SIDE OF EXISTING WAREHOUSE.
8. DEMOLITION OF EXISTING CHAINLINK FENCE SHALL INCLUDE DEMOLITION OF EXISTING POSTS, CONCRETE FOUNDATIONS, BARBED WIRE, AND FASTENERS.

CALL 48 HOURS BEFORE YOU DIG DIAL 811

VERT DATUM: NAVD 88
CONV TO MLLW = NAVD88+2.03
HORZ DATUM: NAD 83/91

IF SHEET IS LESS THAN 22x34 REDUCE SCALE ACCORDINGLY

Port of Everett
P.O. BOX 538
EVERETT, WA 98206
(425) 259-3164

kpff
1601 5th Avenue, Suite 1300
Seattle, Washington 98101
(206) 382-0600 Fax (206) 382-0500
PROJECT NO. 1600120

NO.	DATE	BY	REVISION
3	07/05/2023	NW	AS-BUILT
2	10/15/2021	NW	REVISED TO DEMO AND NOT SALVAGE EXISTING LUMINARE
1	07/23/2021	NW	ADDENDUM 3
0	06/21/2021	NW	ISSUED FOR BID

NO.	DATE	BY	REVISION

RECORD CONDITIONS ILLUSTRATED IN THESE PLANS REFLECT INFORMATION PROVIDED BY THE CONTRACTOR. RECORD CONDITIONS WERE NOT VERIFIED BY ENGINEER.

PROJECT ENGINEER: N. WATSON	SCALE: AS SHOWN
DESIGNED BY: J. BECKER	DATE: 06/21/2021
DRAWN BY: K. EDWARDS, D. YU	CHECKED BY: N. WATSON
APPROVED BY:	

PORT OF EVERETT
NORTON TERMINAL DEVELOPMENT & MTCA 3RD INTERIM ACTION
DEMOLITION DETAILS
(1 OF 5)

DWG. NO. **D1.4**
CIP NO. 1-8-900-05
PROJECT NO. MT-NT-2021-02.2
SHEET NO. 14 OF 150

AS-BUILTS

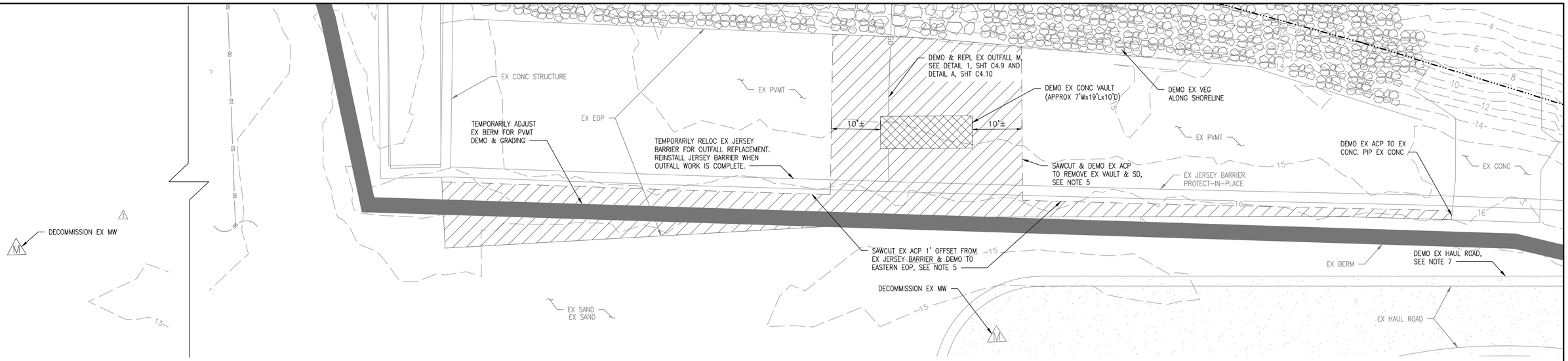

1 DEMOLITION DETAIL

D1.1 D1.5 SCALE: 1" = 10'

LEGEND

- DEMO EX ASPHALT
- CLEAR & GRUB AREA, SEE SHT D1.6
- SAWCUT LINE

DEMOLITION NOTES

1. THE EXISTING UTILITY LOCATIONS AND DEPTHS SHOWN ON THESE PLANS ARE APPROXIMATE. NO REPRESENTATION IS MADE AS TO THE ACCURACY OR COMPLETENESS OF THE INFORMATION. THE CONTRACTOR SHALL POTHOLE OR OTHERWISE CONFIRM EXISTING CONDITIONS PRIOR TO START OF WORK. IF CONDITIONS DIFFER FROM THOSE SHOWN ON THE PLANS, THE CONTRACTOR SHALL NOTIFY THE ENGINEER AND SHALL NOT BEGIN CONSTRUCTION UNTIL THE CHANGED CONDITIONS HAVE BEEN EVALUATED. THE CONTRACTOR SHALL TAKE PRECAUTIONARY MEASURES TO PROTECT FROM DAMAGE OR DESTRUCTION ALL UTILITIES AS SHOWN AND ALL UTILITIES NOT SHOWN THAT MAY BE ENCOUNTERED DURING CONSTRUCTION DUE TO NO RECORD OF THEIR EXISTENCE.
2. UTILITIES, STRUCTURES AND SITE FEATURES NOT INDICATED FOR DEMOLITION SHALL BE PROTECTED-IN-PLACE.
3. ALL ITEMS MARKED FOR DEMOLITION (DEMO) SHALL BE DEMOLISHED AND REMOVED FROM THE SITE AND DISPOSED OF AT AN APPROVED UPLAND DISPOSAL SITE IN ACCORDANCE WITH THE SPECIFICATIONS. ANY FEES REQUIRED FOR DISPOSAL ARE THE RESPONSIBILITY OF THE CONTRACTOR.
4. CONTRACTOR SHALL COORDINATE WITH CITY TO SHUT-OFF WATER SERVICE AS NEEDED TO CONSTRUCT WATERMAIN EXTENSION AND TO DECOMMISSION AND ABANDON EXISTING WATER SERVICES AS NOTED ON THE DRAWINGS.
5. EXISTING ACP NEAR OUTFALL M IS APPROXIMATELY 6" THICK. CONTRACTOR SHALL FIELD VERIFY THICKNESS AND REMOVE THE FULL THICKNESS OF ACP MARKED FOR DEMO.
6. EXISTING ASPHALT PATH IS APPROXIMATELY 4" THICK. CONTRACTOR SHALL FIELD VERIFY THICKNESS AND REMOVE THE FULL THICKNESS OF ACP MARKED FOR DEMO.
7. CONTRACTOR SHALL DEMOLISH EXISTING HAUL ROAD WHEN NO LONGER NEEDED. HAUL ROAD MATERIAL SHALL BE BLENDED WITH OTHER SITE SOILS AS PART OF SITE GRADING.

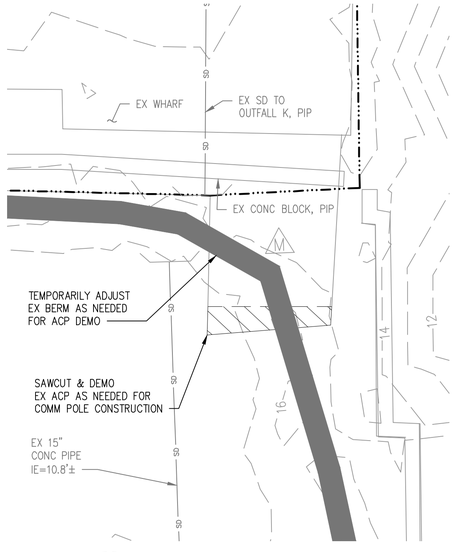

2 DEMOLITION DETAIL

D1.1 D1.5 SCALE: 1" = 10'

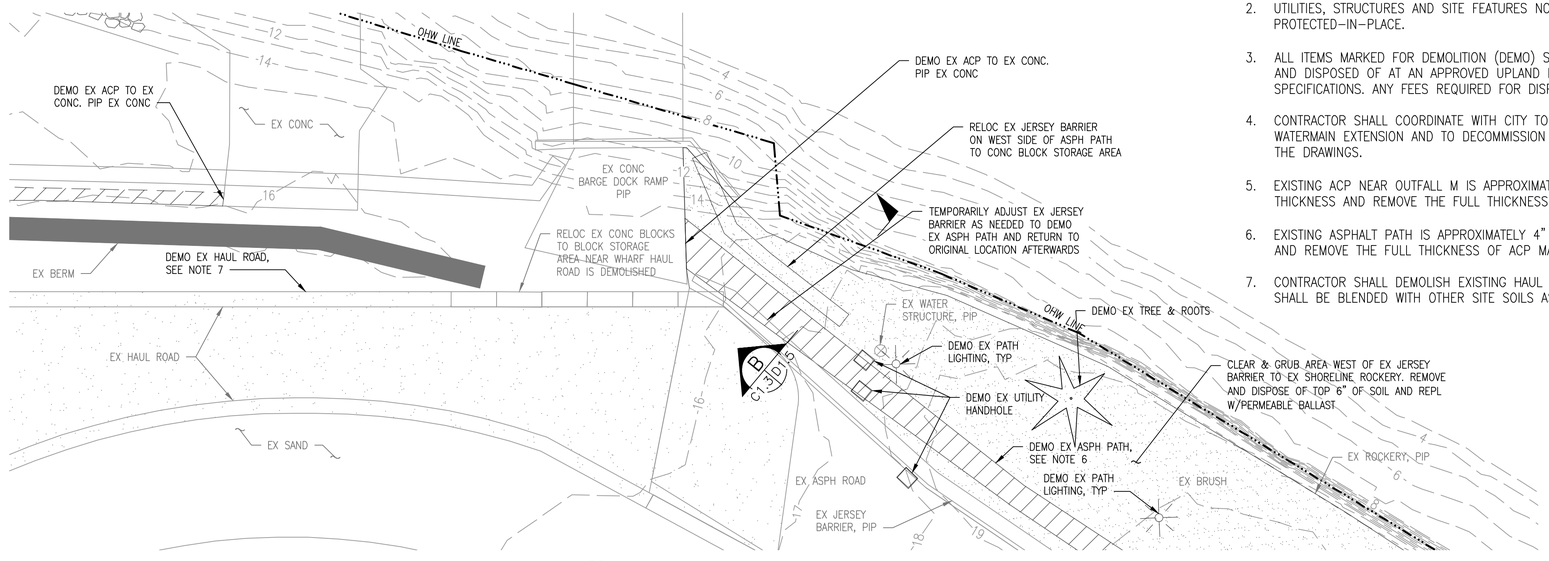

3 DEMOLITION DETAIL

D1.1 D1.5 SCALE: 1" = 10'

CALL 48 HOURS BEFORE YOU DIG DIAL 811

VERT DATUM: NAVD 88
CONV TO MLLW = NAVD88+2.03
HORZ DATUM: NAD 83/91

IF SHEET IS LESS THAN 22x34 REDUCE SCALE ACCORDINGLY

Port of EVERETT
P.O. BOX 538
EVERETT, WA 98206
(425) 259-3164

kpff
1601 5th Avenue, Suite 1300
Seattle, Washington 98101
(206) 382-0600 Fax (206) 382-0500
PROJECT NO. 1600120

NO.	DATE	BY	REVISION
2	07/05/2023	NW	AS-BUILT
1	09/15/2021	NW	REVISED PER RFI008
0	06/21/2021	NW	ISSUED FOR BID

RECORD CONDITIONS ILLUSTRATED IN THESE PLANS REFLECT INFORMATION PROVIDED BY THE CONTRACTOR. RECORD CONDITIONS WERE NOT VERIFIED BY ENGINEER.

PROJECT ENGINEER: N. WATSON	SCALE: AS SHOWN
DESIGNED BY: J. BECKER	DATE: 06/21/2021
DRAWN BY: K. EDWARDS, D. YU	CHECKED BY: N. WATSON
APPROVED BY:	

PORT OF EVERETT

NORTON TERMINAL DEVELOPMENT & MTCA 3RD INTERIM ACTION DEMOLITION DETAILS (2 OF 5)

DWG. NO. **D1.5**

CIP NO. 1-8-900-05

PROJECT NO. MT-NT-2021-02.2

SHEET NO. 15 OF 150

AS-BUILTS

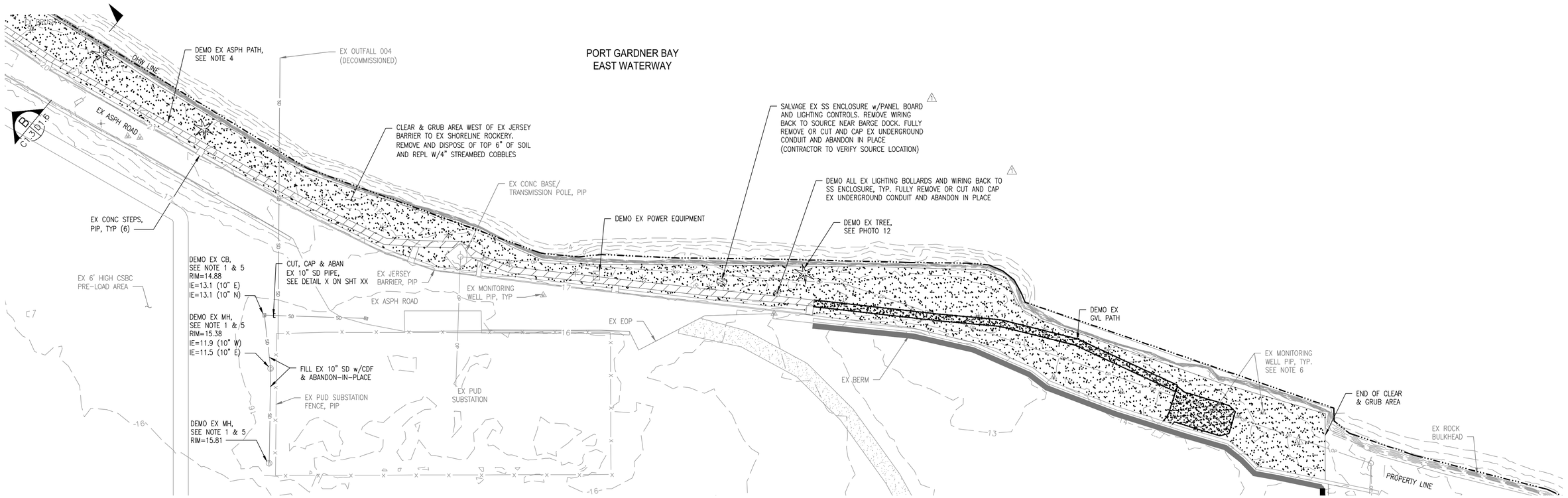

DEMOLITION NOTES

1. THE EXISTING UTILITY LOCATIONS AND DEPTHS SHOWN ON THESE PLANS ARE APPROXIMATE. NO REPRESENTATION IS MADE AS TO THE ACCURACY OR COMPLETENESS OF THE INFORMATION. THE CONTRACTOR SHALL POTHOLE OR OTHERWISE CONFIRM EXISTING CONDITIONS PRIOR TO START OF WORK. IF CONDITIONS DIFFER FROM THOSE SHOWN ON THE PLANS, THE CONTRACTOR SHALL NOTIFY THE ENGINEER AND SHALL NOT BEGIN CONSTRUCTION UNTIL THE CHANGED CONDITIONS HAVE BEEN EVALUATED. THE CONTRACTOR SHALL TAKE PRECAUTIONARY MEASURES TO PROTECT FROM DAMAGE OR DESTRUCTION ALL UTILITIES AS SHOWN AND ALL UTILITIES NOT SHOWN THAT MAY BE ENCOUNTERED DURING CONSTRUCTION DUE TO NO RECORD OF THEIR EXISTENCE.
2. UTILITIES, STRUCTURES AND SITE FEATURES NOT INDICATED FOR DEMOLITION SHALL BE PROTECTED-IN-PLACE.
3. ALL ITEMS MARKED FOR DEMOLITION (DEMO) SHALL BE DEMOLISHED AND REMOVED FROM THE SITE AND DISPOSED OF AT AN APPROVED UPLAND DISPOSAL SITE IN ACCORDANCE WITH THE SPECIFICATIONS. ANY FEES REQUIRED FOR DISPOSAL ARE THE RESPONSIBILITY OF THE CONTRACTOR.
4. EXISTING ASPHALT PATH IS APPROXIMATELY 4" THICK. CONTRACTOR SHALL FIELD VERIFY THICKNESS AND REMOVE THE FULL THICKNESS OF ACP MARKED FOR DEMO.
5. CONTRACTOR SHALL DEMO EXISTING CB AND MH STTRUCTURES TO ELEVATION 14' OR LOWER. FILL REMAINING STRUCTURES AND PIPE WITH CDF. PLACE GEOGRID OVER EXISTING SD STRUCTURES BEFORE BACKFILL PLACEMENT AND COMPACTION. EXTEND GEOGRID 3' MIN ON ALL SIDES EXCEPT EXTEND TO EXISTING FENCE ON NORTH SIDE. SEE SHEET C3.21. CONTRACTOR SHALL USE CARE TO PROTECT THE ADJACENT SNOHOMISH PUD FENCE, BUILDING AND EQUIPMENT FROM DAMAGE. DAMAGE TO PUD INFRASTRUCTURE BY THE CONTRACTOR SHALL BE REPAIRED AT NO COST TO THE PORT TO THE SATISFACTION OF THE PUD.
6. CLEARING, GRUBBING & DEMOLITION ACTIVITIES SHALL NOT DISTURB AN AREA WITHIN ABOUT 1' AROUND PERIMETER OF EXISTING MONITORING WELLS TO PROTECT THE WELLS IN PLACE. BRUSH AND WEEDS TALLER THAN 12 INCHES THAT ARE LOCATED WITHIN THE 1' OF UNDISTURBED AREA AROUND EACH MONITORING WELL SHALL BE REMOVED BY HAND WITH SHOVEL. VEGETATION REMOVAL SHALL INCLUDE REMOVAL OF ROOTS.
7. CONTRACTOR SHALL BE RESPONSIBLE FOR REVIEW OF THE EXISTING SHORELINE CONDITIONS AND SHALL CHOOSE THE APPROPRIATE EQUIPMENT TO CLEAR, GRUB AND PLACES STREAMBED COBBLES SO AS TO NOT DAMAGE OR TRIGGER FAILURE OF THE SHORELINE ROCKERY. DAMAGE TO THE ROCKERY CAUSED BY THE CONTRACTOR SHALL BE REPAIRED BY THE CONTRACTOR AT NO COST TO THE PORT, TO THE PORT'S SATISFACTION.

1 DEMOLITION DETAIL

D1.1 | D1.6 SCALE: 1" = 30'

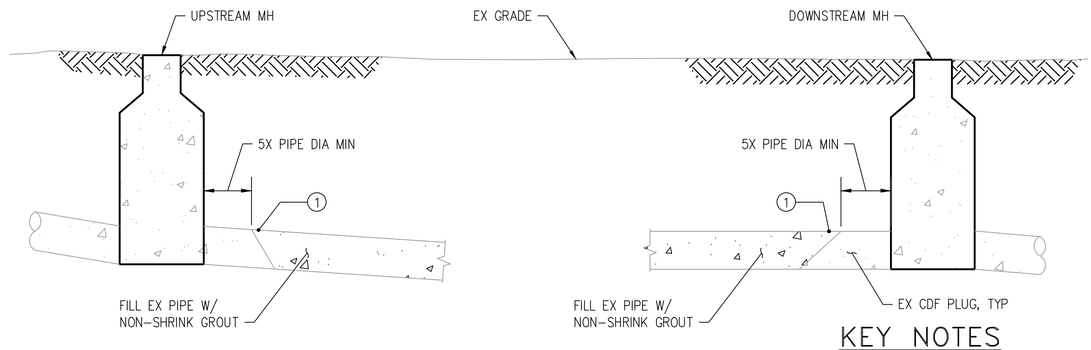

2 GRAVITY PIPE ABANDON-IN-PLACE DETAIL

C.X.X | CX.X SCALE: NTS

LEGEND

- DEMO EX ASPHALT
- DEMO EX GRAVEL
- CLEAR & GRUB AREA
- SAWCUT LINE
- EXISTING MONITORING WELL, PROTECT-IN-PLACE, SEE NOTE 6

KEY NOTES

(1) EXPOSE AND BREECH EXISTING PIPE 5. PIPE DIAMETERS FROM UPSTREAM AND DOWNSTREAM MANHOLES. IF PIPE PLUG IS ENCOUNTERED, EXPOSE AND BREECH PIPE AN ADDITIONAL 2 PIPE DIAMETERS FURTHER FROM STRUCTURE UNTIL AN UNOBSTRUCTED SECTION OF PIPE IS BREECHED EACH END.

CALL 48 HOURS BEFORE YOU DIG DIAL 811

VERT DATUM: NAVD 88
CONV TO MLLW = NAVD88+2.03
HORZ DATUM: NAD 83/91

IF SHEET IS LESS THAN 22x34 REDUCE SCALE ACCORDINGLY

Port of EVERETT
P.O. BOX 538
EVERETT, WA 98206
(425) 259-3164

kpff
1601 5th Avenue, Suite 1300
Seattle, Washington 98101
(206) 382-0600 Fax (206) 382-0500
PROJECT NO. 1600120

NO.	DATE	BY	REVISION
2	07/05/2023	NW	AS-BUILT
1	07/23/2021	NW	ADDENDUM 3
0	06/21/2021	NW	ISSUED FOR BID

NO.	DATE	BY	REVISION

RECORD CONDITIONS ILLUSTRATED IN THESE PLANS REFLECT INFORMATION PROVIDED BY THE CONTRACTOR. RECORD CONDITIONS WERE NOT VERIFIED BY ENGINEER.

PROJECT ENGINEER: N. WATSON	SCALE: AS SHOWN
DESIGNED BY: J. BECKER	DATE: 06/21/2021
DRAWN BY: K. EDWARDS, D. YU	CHECKED BY: N. WATSON
APPROVED BY:	

PORT OF EVERETT

NORTON TERMINAL DEVELOPMENT & MTCA 3RD INTERIM ACTION
DEMOLITION DETAILS
(3 OF 5)

DWG. NO. **D1.6**
CIP NO. 1-8-900-05
PROJECT NO. MT-NT-2021-02.2
SHEET NO. 16 OF 150

AS-BUILTS

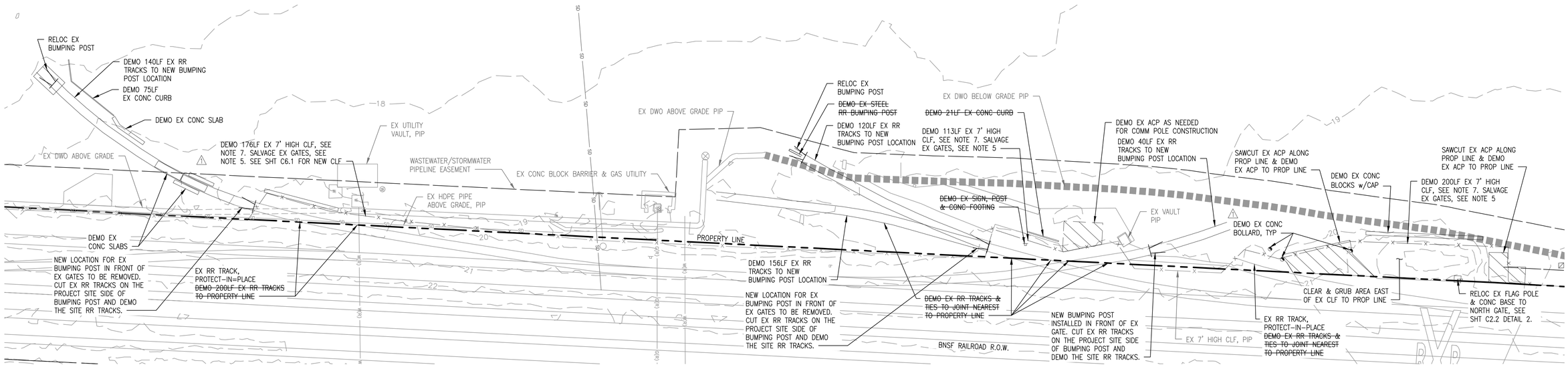

1 DEMOLITION DETAIL

D1.1|D1.7 SCALE: 1"=30'

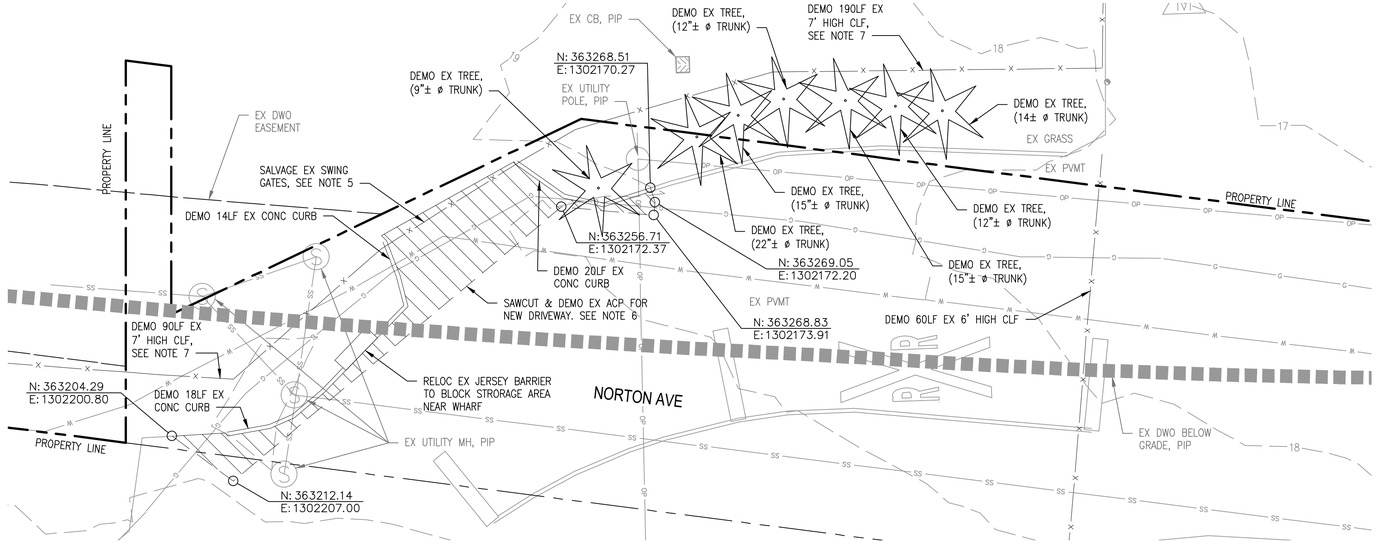

2 DEMOLITION DETAIL

D1.1|D1.7 SCALE: 1"=10'

DEMOLITION NOTES

1. THE EXISTING UTILITY LOCATIONS AND DEPTHS SHOWN ON THESE PLANS ARE APPROXIMATE. NO REPRESENTATION IS MADE AS TO THE ACCURACY OR COMPLETENESS OF THE INFORMATION. THE CONTRACTOR SHALL POTHOLE OR OTHERWISE CONFIRM EXISTING CONDITIONS PRIOR TO START OF WORK. IF CONDITIONS DIFFER FROM THOSE SHOWN ON THE PLANS, THE CONTRACTOR SHALL NOTIFY THE ENGINEER AND SHALL NOT BEGIN CONSTRUCTION UNTIL THE CHANGED CONDITIONS HAVE BEEN EVALUATED. THE CONTRACTOR SHALL TAKE PRECAUTIONARY MEASURES TO PROTECT FROM DAMAGE OR DESTRUCTION ALL UTILITIES AS SHOWN AND ALL UTILITIES NOT SHOWN THAT MAY BE ENCOUNTERED DURING CONSTRUCTION DUE TO NO RECORD OF THEIR EXISTENCE.
2. UTILITIES, STRUCTURES AND SITE FEATURES NOT INDICATED FOR DEMOLITION SHALL BE PROTECTED-IN-PLACE.
3. ALL ITEMS MARKED FOR DEMOLITION (DEMO) SHALL BE DEMOLISHED AND REMOVED FROM THE SITE AND DISPOSED OF AT AN APPROVED UPLAND DISPOSAL SITE IN ACCORDANCE WITH THE SPECIFICATIONS. ANY FEES REQUIRED FOR DISPOSAL ARE THE RESPONSIBILITY OF THE CONTRACTOR.
4. CONTRACTOR SHALL COORDINATE WITH CITY TO SHUT-OFF WATER SERVICE AS NEEDED TO CONSTRUCT WATERMAIN EXTENSION AND TO DECOMMISSION AND ABANDON EXISTING WATER SERVICES AS NOTED ON THE DRAWINGS.
5. CONTRACTOR SHALL USE CARE TO REMOVE AND NOT DAMAGE ITEMS MARKED FOR SALVAGE. CONTRACTOR SHALL RETURN SALVAGED ITEMS TO THE PORT AT COVERED LOADING DOCKS 1 AND 2 ALONG WEST SIDE OF EXISTING WAREHOUSE.
6. EXISTING ACP IN NORTON AVE IS APPROXIMATELY 6" THICK. CONTRACTOR SHALL FIELD VERIFY THICKNESS AND REMOVE THE FULL THICKNESS OF ACP MARKED FOR DEMO.
7. DEMOLITION OF EXISTING CHAINLINK FENCE SHALL INCLUDE DEMOLITION OF EXISTING POSTS, CONCRETE FOUNDATIONS, BARBED WIRE, AND FASTENERS.

LEGEND

- DEMO EX ASPHALT
- DEMO EX CONCRETE
- SAWCUT LINE
- BUMPING POST

CALL 48 HOURS BEFORE YOU DIG DIAL 811

VERT DATUM: NAVD 88
CONV TO MLLW = NAVD88+2.03
HORZ DATUM: NAD 83/91

IF SHEET IS LESS THAN 22x34 REDUCE SCALE ACCORDINGLY

Port of EVERETT
P.O. BOX 538
EVERETT, WA 98206
(425) 259-3164

kpff
1601 5th Avenue, Suite 1300
Seattle, Washington 98101
(206) 382-0600 Fax (206) 382-0500
PROJECT NO. 1600120

NO.	DATE	BY	REVISION
2	07/05/2023	NW	AS-BUILT
1	10/15/2021	NW	REVISED PER RFI 024
0	06/21/2021	NW	ISSUED FOR BID

NO.	DATE	BY	REVISION

RECORD CONDITIONS ILLUSTRATED IN THESE PLANS REFLECT INFORMATION PROVIDED BY THE CONTRACTOR. RECORD CONDITIONS WERE NOT VERIFIED BY ENGINEER.

PROJECT ENGINEER: N. WATSON	SCALE: AS SHOWN
DESIGNED BY: J. BECKER	DATE: 06/21/2021
DRAWN BY: K. EDWARDS, D. YU	CHECKED BY: N. WATSON
APPROVED BY:	

PORT OF EVERETT

NORTON TERMINAL DEVELOPMENT & MTCA 3RD INTERIM ACTION
DEMOLITION DETAILS
(4 OF 5)

DWG. NO. **D1.7**
CIP NO. 1-8-900-05
PROJECT NO. MT-NT-2021-02.2
SHEET NO. 17 OF 150

AS-BUILTS

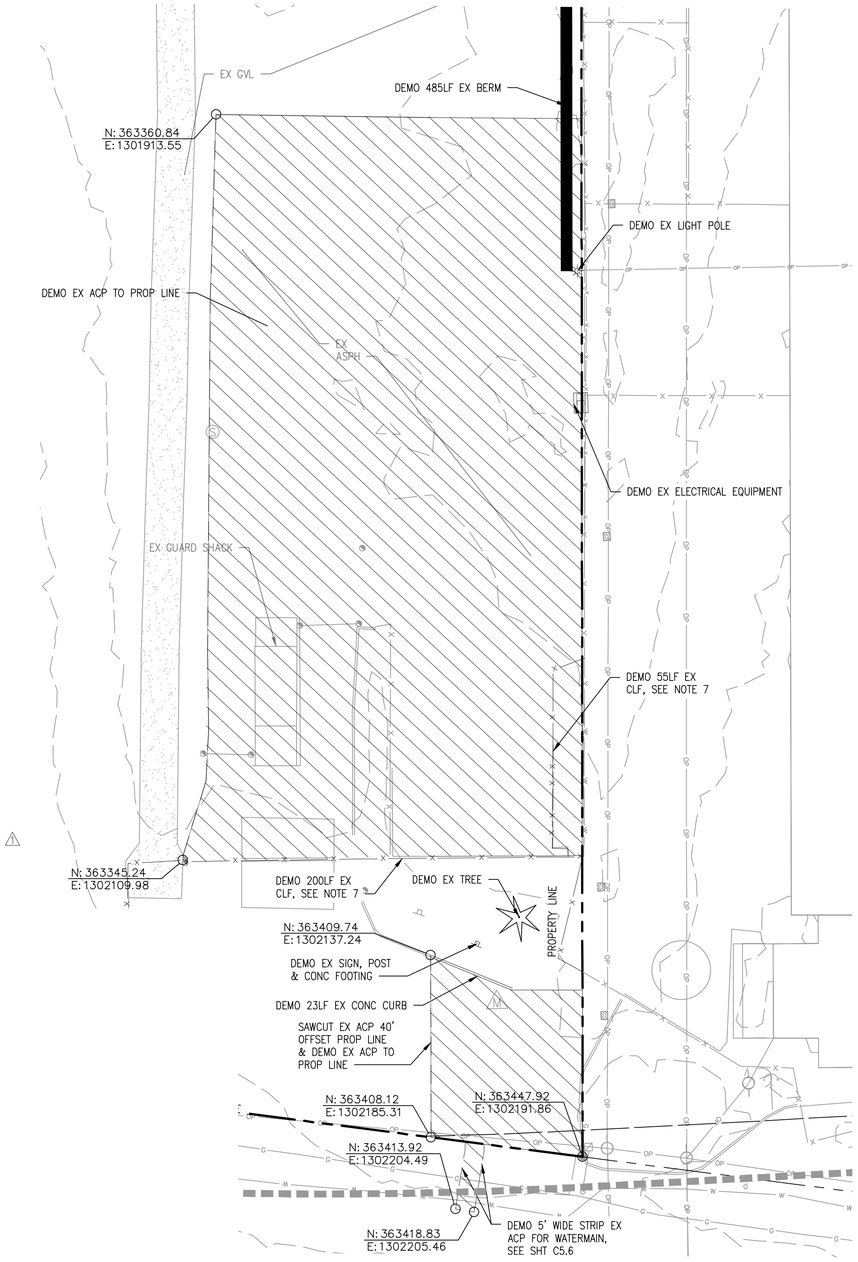

1 DEMOLITION DETAIL
D1.1 | D1.8 SCALE: 1"=20'

DEMOLITION NOTES

1. THE EXISTING UTILITY LOCATIONS AND DEPTHS SHOWN ON THESE PLANS ARE APPROXIMATE. NO REPRESENTATION IS MADE AS TO THE ACCURACY OR COMPLETENESS OF THE INFORMATION. THE CONTRACTOR SHALL POTHOLE OR OTHERWISE CONFIRM EXISTING CONDITIONS PRIOR TO START OF WORK. IF CONDITIONS DIFFER FROM THOSE SHOWN ON THE PLANS, THE CONTRACTOR SHALL NOTIFY THE ENGINEER AND SHALL NOT BEGIN CONSTRUCTION UNTIL THE CHANGED CONDITIONS HAVE BEEN EVALUATED. THE CONTRACTOR SHALL TAKE PRECAUTIONARY MEASURES TO PROTECT FROM DAMAGE OR DESTRUCTION ALL UTILITIES AS SHOWN AND ALL UTILITIES NOT SHOWN THAT MAY BE ENCOUNTERED DURING CONSTRUCTION DUE TO NO RECORD OF THEIR EXISTENCE.
2. UTILITIES, STRUCTURES AND SITE FEATURES NOT INDICATED FOR DEMOLITION SHALL BE PROTECTED-IN-PLACE.
3. ALL ITEMS MARKED FOR DEMOLITION (DEMO) SHALL BE DEMOLISHED AND REMOVED FROM THE SITE AND DISPOSED OF AT AN APPROVED UPLAND DISPOSAL SITE IN ACCORDANCE WITH THE SPECIFICATIONS. ANY FEES REQUIRED FOR DISPOSAL ARE THE RESPONSIBILITY OF THE CONTRACTOR.
4. CONTRACTOR SHALL COORDINATE WITH CITY TO SHUT-OFF WATER SERVICE AS NEEDED TO CONSTRUCT WATERMAIN EXTENSION AND TO DECOMMISSION AND ABANDON EXISTING WATER SERVICES AS NOTED ON THE DRAWINGS.
5. CONTRACTOR SHALL USE CARE TO REMOVE AND NOT DAMAGE ITEMS MARKED FOR SALVAGE. CONTRACTOR SHALL RETURN SALVAGED ITEMS TO THE PORT AT COVERED LOADING DOCKS 1 AND 2 ALONG WEST SIDE OF EXISTING WAREHOUSE.
6. EXISTING ACP IN NORTON AVE IS APPROXIMATELY 6" THICK. CONTRACTOR SHALL FIELD VERIFY THICKNESS AND REMOVE THE FULL THICKNESS OF ACP MARKED FOR DEMO.
7. DEMOLITION OF EXISTING CHAINLINK FENCE SHALL INCLUDE DEMOLITION OF EXISTING POSTS, CONCRETE FOUNDATIONS, BARBED WIRE, AND FASTENERS.

LEGEND

- DEMO EX ASPHALT
- DEMO EX CONCRETE
- SAWCUT LINE

CALL 48 HOURS BEFORE YOU DIG DIAL 811

VERT DATUM: NAVD 88
CONV TO MLLW = NAVD88+2.03
HORZ DATUM: NAD 83/91

IF SHEET IS LESS THAN 22x34 REDUCE SCALE ACCORDINGLY

Port of EVERETT
P.O. BOX 538
EVERETT, WA 98206
(425) 259-3164

kpff
1601 5th Avenue, Suite 1300
Seattle, Washington 98101
(206) 382-0600 Fax (206) 382-0500
PROJECT NO. 1600120

NO.	DATE	BY	REVISION
3	07/05/2023	NW	AS-BUILT
2	06/28/2022	NW	SUBSTATION SITE DEVELOPMENT
1	04/08/2022	NW	MARITIME TENANT SITE DEVELOPMENT

RECORD CONDITIONS ILLUSTRATED IN THESE PLANS REFLECT INFORMATION PROVIDED BY THE CONTRACTOR. RECORD CONDITIONS WERE NOT VERIFIED BY ENGINEER.

PROJECT ENGINEER: N. WATSON	SCALE: AS SHOWN
DESIGNED BY: J. BECKER	DATE: 06/21/2021
DRAWN BY: K. EDWARDS, D. YU	CHECKED BY: N. WATSON
APPROVED BY:	

PORT OF EVERETT

NORTON TERMINAL DEVELOPMENT & MTCA 3RD INTERIM ACTION
DEMOLITION DETAILS
(5A OF 5A) 3

DWG. NO. **D1.8**
CIP NO. 1-8-900-05
PROJECT NO. MT-NT-2021-02.2
SHEET NO. 17A 3 OF 150

AS-BUILTS

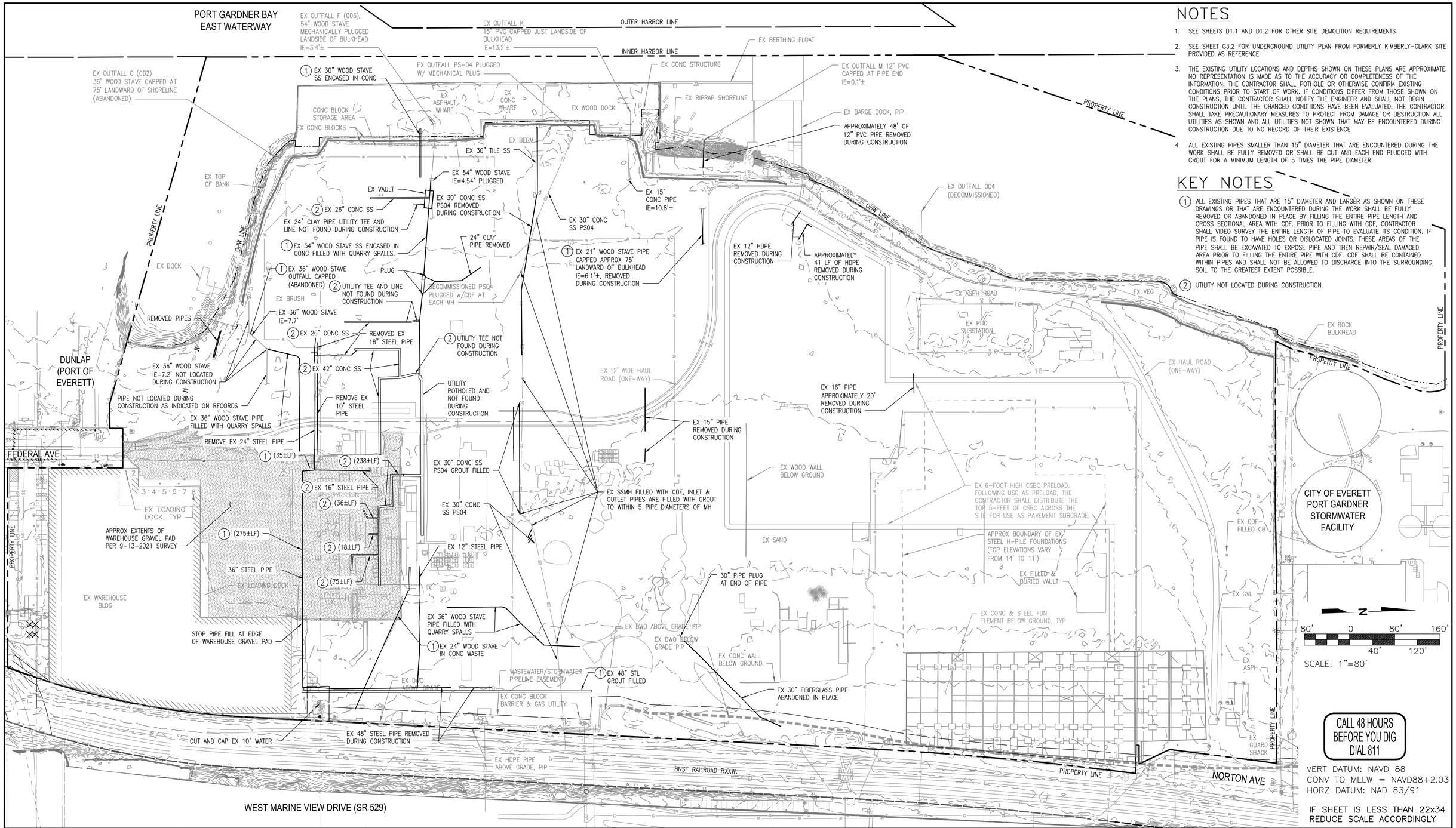

NOTES

1. SEE SHEETS D1.1 AND D1.2 FOR OTHER SITE DEMOLITION REQUIREMENTS.
2. SEE SHEET G3.2 FOR UNDERGROUND UTILITY PLAN FROM FORMERLY KIMBERLY-CLARK SITE PROVIDED AS REFERENCE.
3. THE EXISTING UTILITY LOCATIONS AND DEPTHS SHOWN ON THESE PLANS ARE APPROXIMATE. NO REPRESENTATION IS MADE AS TO THE ACCURACY OR COMPLETENESS OF THE INFORMATION. THE CONTRACTOR SHALL POTHOLE OR OTHERWISE CONFIRM EXISTING CONDITIONS PRIOR TO START OF WORK. IF CONDITIONS DIFFER FROM THOSE SHOWN ON THE PLANS, THE CONTRACTOR SHALL NOTIFY THE ENGINEER AND SHALL NOT BEGIN CONSTRUCTION UNTIL THE CHANGED CONDITIONS HAVE BEEN EVALUATED. THE CONTRACTOR SHALL TAKE PRECAUTIONARY MEASURES TO PROTECT FROM DAMAGE OR DESTRUCTION ALL UTILITIES AS SHOWN AND ALL UTILITIES NOT SHOWN THAT MAY BE ENCOUNTERED DURING CONSTRUCTION DUE TO NO RECORD OF THEIR EXISTENCE.
4. ALL EXISTING PIPES SMALLER THAN 15" DIAMETER THAT ARE ENCOUNTERED DURING THE WORK SHALL BE FULLY REMOVED OR SHALL BE CUT AND EACH END PLUGGED WITH GROUT FOR A MINIMUM LENGTH OF 5 TIMES THE PIPE DIAMETER.

KEY NOTES

(1) ALL EXISTING PIPES THAT ARE 15" DIAMETER AND LARGER AS SHOWN ON THESE DRAWINGS OR THAT ARE ENCOUNTERED DURING THE WORK SHALL BE FULLY REMOVED OR ABANDONED IN PLACE BY FILLING THE ENTIRE PIPE LENGTH AND CROSS SECTIONAL AREA WITH CDF. PRIOR TO FILLING WITH CDF, CONTRACTOR SHALL VIDEO SURVEY THE ENTIRE LENGTH OF PIPE TO EVALUATE ITS CONDITION. IF PIPE IS FOUND TO HAVE HOLES OR DISLOCATED JOINTS, THESE AREAS OF THE PIPE SHALL BE EXCAVATED TO EXPOSE PIPE AND THEN REPAIR/SEAL DAMAGED AREA PRIOR TO FILLING THE ENTIRE PIPE WITH CDF. CDF SHALL BE CONTAINED WITHIN PIPES AND SHALL NOT BE ALLOWED TO DISCHARGE INTO THE SURROUNDING SOIL TO THE GREATEST EXTENT POSSIBLE.

(2) UTILITY NOT LOCATED DURING CONSTRUCTION.

SCALE: 1"=80'

CALL 48 HOURS BEFORE YOU DIG DIAL 811

VERT DATUM: NAVD 88
CONV TO MLLW = NAVD88+2.03
HORZ DATUM: NAD 83/91

IF SHEET IS LESS THAN 22x34 REDUCE SCALE ACCORDINGLY

Port of EVERETT
P.O. BOX 538
EVERETT, WA 98206
(425) 259-3164

kpff
1601 5th Avenue, Suite 1300
Seattle, Washington 98101
(206) 382-0600 Fax (206) 382-0500
PROJECT NO. 1600120

NO.	DATE	BY	REVISION
3	07/05/2023	NW	AS-BUILT
2	10/19/2021	NW	REVISED UTILITY PIPE FILL TO STOP AT WAREHOUSE GRAVEL PAD.
1	06/21/2021	NW	ISSUED FOR BID
0	05/07/2021	NW	FOR CITY REVIEW

RECORD CONDITIONS ILLUSTRATED IN THESE PLANS REFLECT INFORMATION PROVIDED BY THE CONTRACTOR. RECORD CONDITIONS WERE NOT VERIFIED BY ENGINEER.

PROJECT ENGINEER: N. WATSON	SCALE: 1" = 80'
DESIGNED BY: J. BECKER	DATE: 05/07/2021
DRAWN BY: K. EDWARDS, D. YU	CHECKED BY: N. WATSON
APPROVED BY:	

PORT OF EVERETT

NORTON TERMINAL DEVELOPMENT & MTCA 3RD INTERIM ACTION UTILITY PIPE FILL AND ABANDONMENT PLAN

DWG. NO. **D2.1**
CIP NO. 1-8-900-05
PROJECT NO. MT-NT-2021-02.2
SHEET NO. 18 OF 150

AS-BUILTS

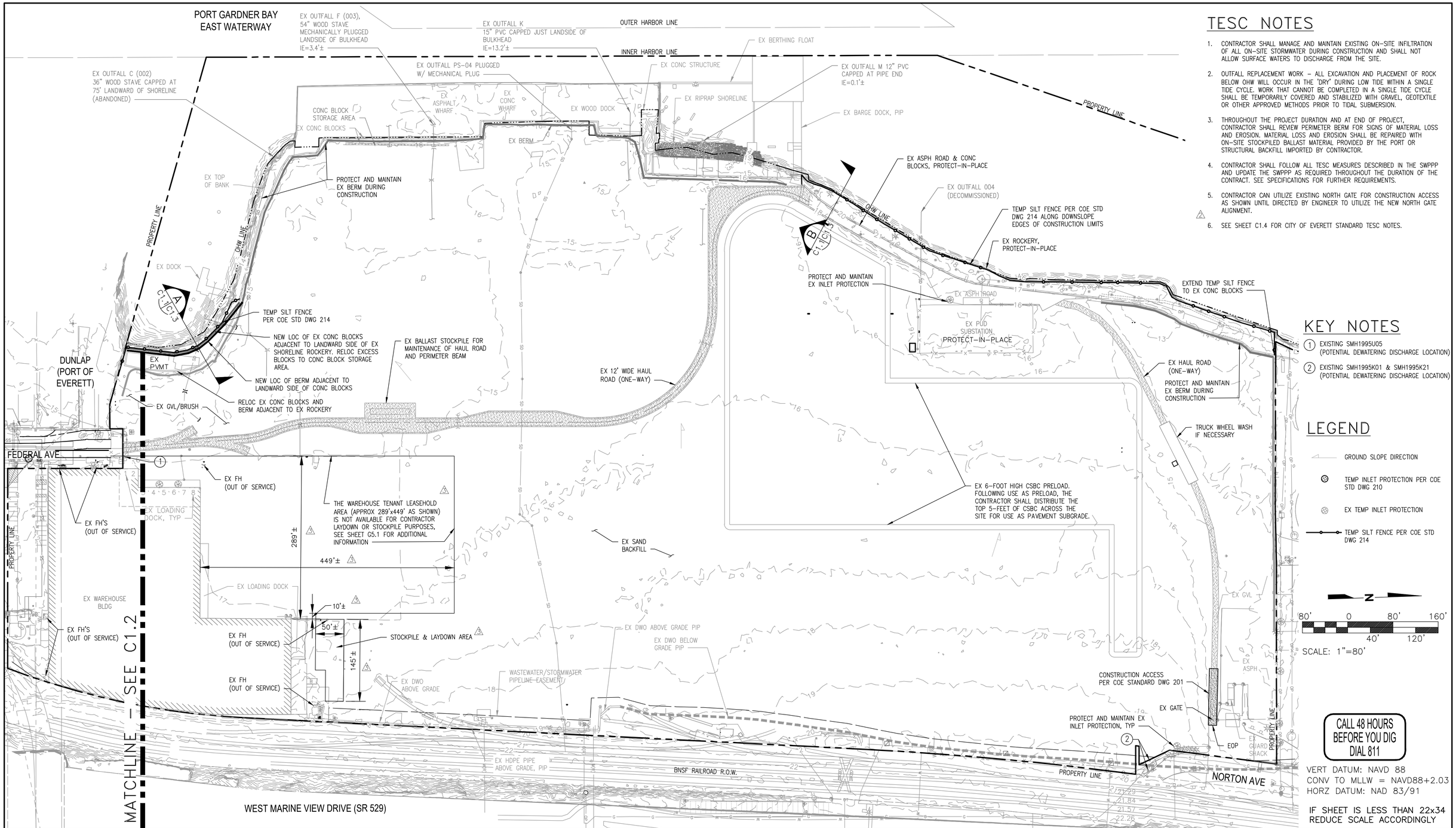

TESC NOTES

1. CONTRACTOR SHALL MANAGE AND MAINTAIN EXISTING ON-SITE INFILTRATION OF ALL ON-SITE STORMWATER DURING CONSTRUCTION AND SHALL NOT ALLOW SURFACE WATERS TO DISCHARGE FROM THE SITE.
2. OUTFALL REPLACEMENT WORK – ALL EXCAVATION AND PLACEMENT OF ROCK BELOW OHW WILL OCCUR IN THE 'DRY' DURING LOW TIDE WITHIN A SINGLE TIDE CYCLE. WORK THAT CANNOT BE COMPLETED IN A SINGLE TIDE CYCLE SHALL BE TEMPORARILY COVERED AND STABILIZED WITH GRAVEL, GEOTEXTILE OR OTHER APPROVED METHODS PRIOR TO TIDAL SUBMERSION.
3. THROUGHOUT THE PROJECT DURATION AND AT END OF PROJECT, CONTRACTOR SHALL REVIEW PERIMETER BERM FOR SIGNS OF MATERIAL LOSS AND EROSION. MATERIAL LOSS AND EROSION SHALL BE REPAIRED WITH ON-SITE STOCKPILED BALLAST MATERIAL PROVIDED BY THE PORT OR STRUCTURAL BACKFILL IMPORTED BY CONTRACTOR.
4. CONTRACTOR SHALL FOLLOW ALL TESC MEASURES DESCRIBED IN THE SWPPP AND UPDATE THE SWPPP AS REQUIRED THROUGHOUT THE DURATION OF THE CONTRACT. SEE SPECIFICATIONS FOR FURTHER REQUIREMENTS.
5. CONTRACTOR CAN UTILIZE EXISTING NORTH GATE FOR CONSTRUCTION ACCESS AS SHOWN UNTIL DIRECTED BY ENGINEER TO UTILIZE THE NEW NORTH GATE ALIGNMENT. △2
6. SEE SHEET C1.4 FOR CITY OF EVERETT STANDARD TESC NOTES.

KEY NOTES

1. EXISTING SMH1995U05 (POTENTIAL DEWATERING DISCHARGE LOCATION)
2. EXISTING SMH1995K01 & SMH1995K21 (POTENTIAL DEWATERING DISCHARGE LOCATION)

LEGEND

- GROUND SLOPE DIRECTION
- TEMP INLET PROTECTION PER COE STD DWG 210
- EX TEMP INLET PROTECTION
- TEMP SILT FENCE PER COE STD DWG 214

N

80' 0 80' 160'
40' 120'
SCALE: 1"=80'

CALL 48 HOURS BEFORE YOU DIG DIAL 811

VERT DATUM: NAVD 88
CONV TO MLLW = NAVD88+2.03
HORZ DATUM: NAD 83/91

IF SHEET IS LESS THAN 22x34 REDUCE SCALE ACCORDINGLY

Port of EVERETT
P.O. BOX 538
EVERETT, WA 98206
(425) 259-3164

kpff
1601 5th Avenue, Suite 1300
Seattle, Washington 98101
(206) 382-0600 Fax (206) 382-0500
PROJECT NO. 1600120

NO.	DATE	BY	REVISION
△2	07/05/2023	NW	AS-BUILT
△1	07/28/2021	NW	ADDENDUM 4
△2	07/09/2021	NW	ADDENDUM 1
△1	06/21/2021	NW	ISSUED FOR BID
△1	05/07/2021	NW	FOR CITY REVIEW

NO.	DATE	BY	REVISION

RECORD CONDITIONS ILLUSTRATED IN THESE PLANS REFLECT INFORMATION PROVIDED BY THE CONTRACTOR. RECORD CONDITIONS WERE NOT VERIFIED BY ENGINEER.

PROJECT ENGINEER: N. WATSON	SCALE: 1" = 80'
DESIGNED BY: J. BECKER	DATE: 05/07/2021
DRAWN BY: K. EDWARDS, D. YU	CHECKED BY: N. WATSON
APPROVED BY:	

PORT OF EVERETT

NORTON TERMINAL DEVELOPMENT & MTCA 3RD INTERIM ACTION TESC SITE PLAN AND SEDIMENT CONTROL PLAN

DWG. NO. **C1.1**
CIP NO. 1-8-900-05
PROJECT NO. MT-NT-2021-02.2
SHEET NO. 19 OF 150

AS-BUILTS

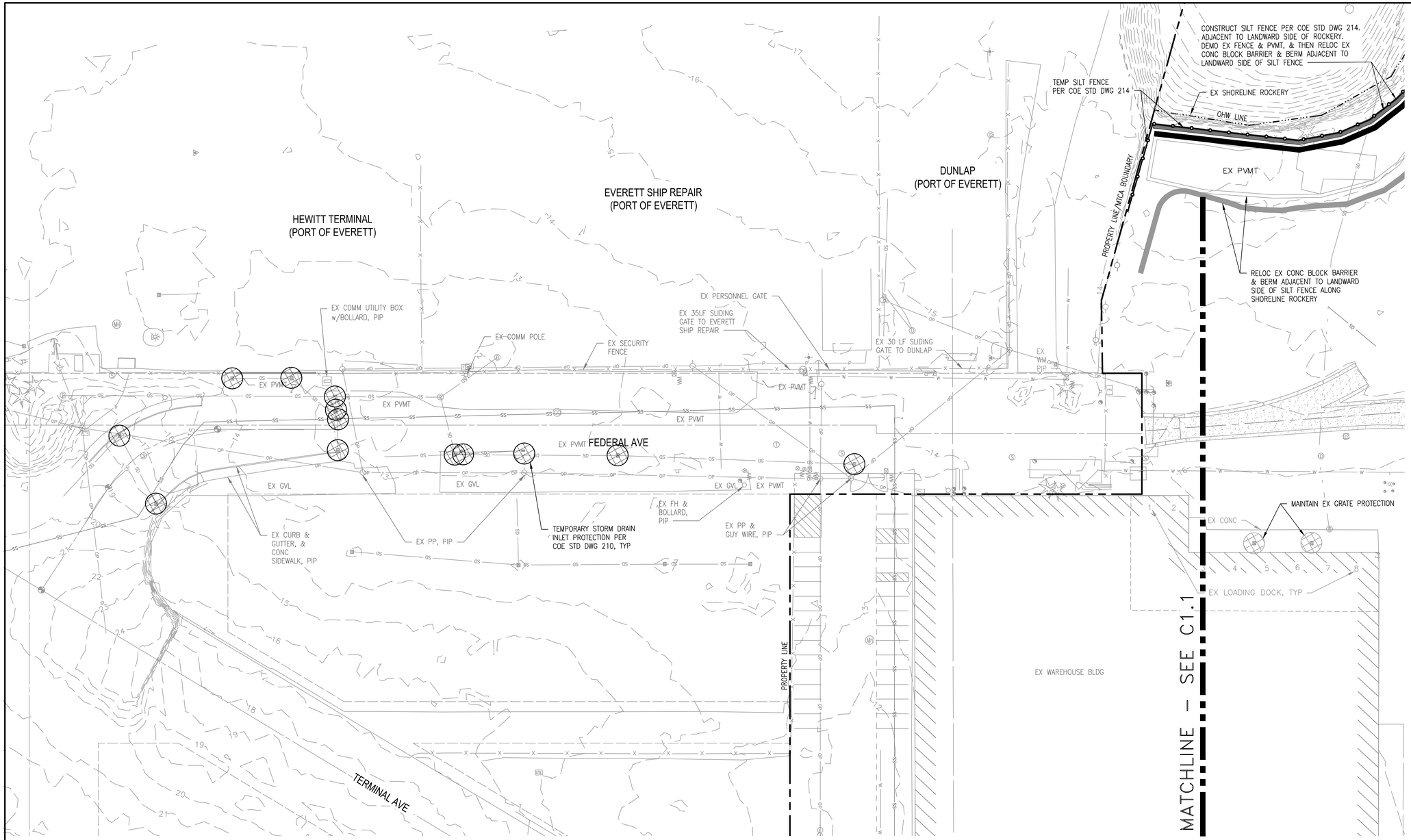

TESC NOTES

1. CONTRACTOR SHALL INSTALL AND MAINTAIN TESC BMPS AS SHOWN DURING TRENCHING AND OTHER CONSTRUCTION ON FEDERAL AVENUE THAT DISTURB EXISTING PAVEMENT. SEE SPECIFICATIONS FOR FURTHER REQUIREMENTS.

LEGEND

- GROUND SLOPE DIRECTION
- TEMP INLET PROTECTION PER COE STD DWG 210
- EX TEMP INLET PROTECTION
- TEMP SILT FENCE PER CITY STD DWG 214

N

30' 0 30' 60'
15' 45'
SCALE: 1"=30'

CALL 48 HOURS BEFORE YOU DIG DIAL 811

VERT DATUM: NAVD 88
CONV TO MLLW = NAVD88+2.03
HORZ DATUM: NAD 83/91

IF SHEET IS LESS THAN 22x34 REDUCE SCALE ACCORDINGLY

Port of EVERETT
P.O. BOX 538
EVERETT, WA 98206
(425) 259-3164

kpff
1601 5th Avenue, Suite 1300
Seattle, Washington 98101
(206) 382-0600 Fax (206) 382-0500
PROJECT NO. 1600120

NO.	DATE	BY	REVISION
2	07/05/2023	NW	AS-BUILT
1	06/21/2021	NW	ISSUED FOR BID
0	05/07/2021	NW	FOR CITY REVIEW

NO.	DATE	BY	REVISION

RECORD CONDITIONS ILLUSTRATED IN THESE PLANS REFLECT INFORMATION PROVIDED BY THE CONTRACTOR. RECORD CONDITIONS WERE NOT VERIFIED BY ENGINEER.

PROJECT ENGINEER: N. WATSON	SCALE: 1" = 30'
DESIGNED BY: J. BECKER	DATE: 05/07/2021
DRAWN BY: K. EDWARDS, D. YU	CHECKED BY: N. WATSON
APPROVED BY:	

PORT OF EVERETT

NORTON TERMINAL DEVELOPMENT
& MTCA 3RD INTERIM ACTION
TESC SITE PLAN
FEDERAL AVENUE

DWG. NO. **C1.2**
CIP NO. 1-8-900-05
PROJECT NO. MT-NT-2021-02.2
SHEET NO. 20 OF 150

AS-BUILTS

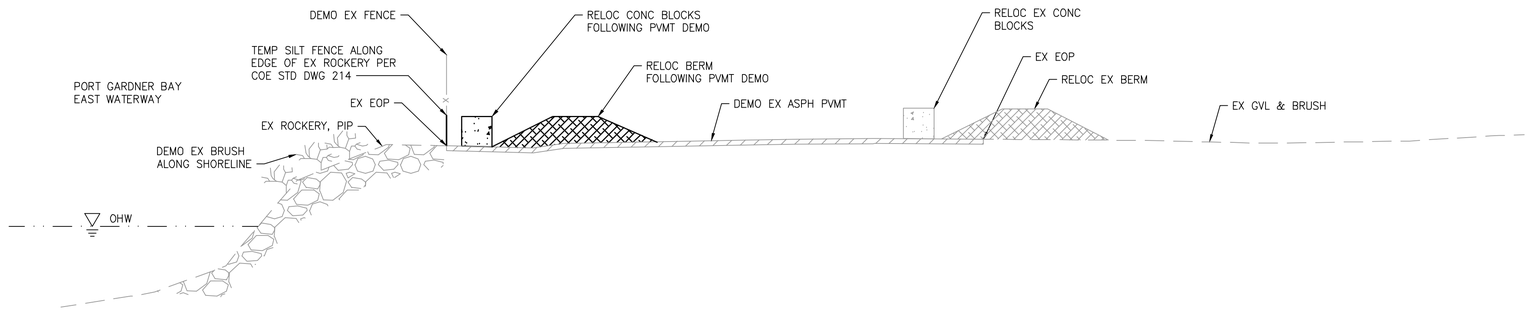

A SECTION

C1.1 | C1.3 SCALE: 1" = 5' HORIZ, 1"=5' VERT

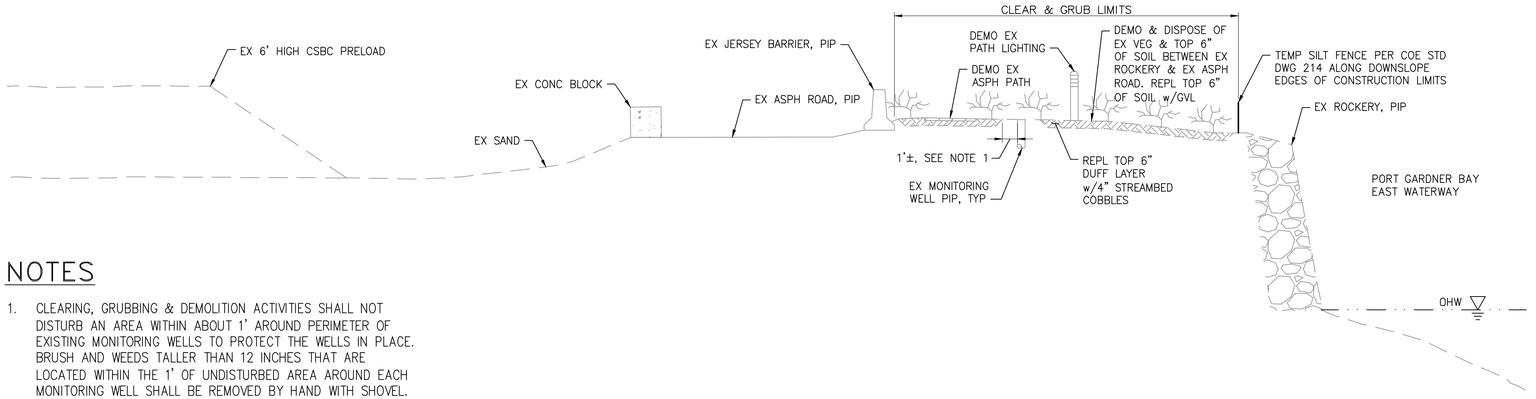

NOTES

1. CLEARING, GRUBBING & DEMOLITION ACTIVITIES SHALL NOT DISTURB AN AREA WITHIN ABOUT 1' AROUND PERIMETER OF EXISTING MONITORING WELLS TO PROTECT THE WELLS IN PLACE. BRUSH AND WEEDS TALLER THAN 12 INCHES THAT ARE LOCATED WITHIN THE 1' OF UNDISTURBED AREA AROUND EACH MONITORING WELL SHALL BE REMOVED BY HAND WITH SHOVEL. VEGETATION REMOVAL SHALL INCLUDE REMOVAL OF ROOTS.

B SECTION

C1.1 | C1.3 SCALE: 1" = 5' HORIZ, 1"=5' VERT

CALL 48 HOURS BEFORE YOU DIG DIAL 811

VERT DATUM: NAVD 88
CONV TO MLLW = NAVD88+2.03
HORZ DATUM: NAD 83/91

IF SHEET IS LESS THAN 22x34 REDUCE SCALE ACCORDINGLY

Port of EVERETT
P.O. BOX 538
EVERETT, WA 98206
(425) 259-3164

kpff
1601 5th Avenue, Suite 1300
Seattle, Washington 98101
(206) 382-0600 Fax (206) 382-0500
PROJECT NO. 1600120

NO.	DATE	BY	REVISION
2	07/05/2023	NW	AS-BUILT
1	06/21/2021	NW	ISSUED FOR BID
0	05/07/2021	NW	FOR CITY REVIEW

NO.	DATE	BY	REVISION

RECORD CONDITIONS ILLUSTRATED IN THESE PLANS REFLECT INFORMATION PROVIDED BY THE CONTRACTOR. RECORD CONDITIONS WERE NOT VERIFIED BY ENGINEER.

PROJECT ENGINEER: N. WATSON	SCALE: AS SHOWN
DESIGNED BY: J. BECKER	DATE: 05/07/2021
DRAWN BY: K. EDWARDS, D. YU	CHECKED BY: N. WATSON
APPROVED BY:	

PORT OF EVERETT

NORTON TERMINAL DEVELOPMENT & MTCA 3RD INTERIM ACTION TEMPORARY EROSION AND SEDIMENT CONTROL SECTIONS

DWG. NO. **C1.3**
CIP NO. 1-8-900-05
PROJECT NO. MT-NT-2021-02.2
SHEET NO. 21 OF 150

AS-BUILTS

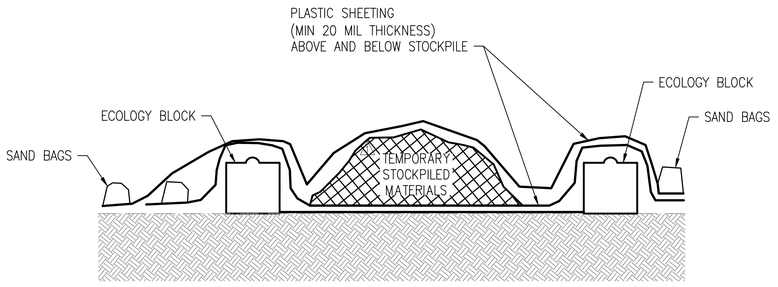

1 STOCKPILE COVER
C1.1|C1.4 SCALE: NTS

NOTES

1. STOCKPILED MATERIALS SHALL BE COVERED AND SECURED FROM WIND, RAIN, AND OTHER DISTURBANCES AT ALL TIMES EXCEPT DURING ACTIVE LOADING AND UNLOADING.
2. CONTRACTOR SHALL REMOVE WATER WITHIN THE STOCKPILE AREAS BY PUMPING TO A CONTAINMENT VESSEL FOR ANALYSIS TO DETERMINE ITS PROPER DISPOSAL. CONTRACTOR SHALL BE RESPONSIBLE FOR DISPOSAL OF COLLECTED WATER IN THE STOCKPILE AREA.
3. CONTRACTOR IS RESPONSIBLE FOR SOIL AND STOCKPILE MANAGEMENT, INCLUDING SIZE, LOCATION AND NUMBER OF STOCKPILES. SEE SPECIFICATIONS FOR FURTHER REQUIREMENTS.
4. IF MULTIPLE SHEETS OF PLASTIC SHEETING ARE USED ABOVE OR BELOW THE STOCKPILES, THEY MUST OVERLAP BY 3' MINIMUM.
5. BARRIER REQUIRED AT TOE OF STOCKPILES.
6. SECURE COVERING TIGHTLY IN PLACE BY USING SANDBAGS OR TIRES ON ROPES WITH MAXIMUM 10' GRID SPACING IN ALL DIRECTIONS.
7. STOCKPILES MUST BE LOCATED MORE THAN 75' FROM SHORELINE AND AWAY FROM STORM DRAIN CATCH BASINS.
8. GROUND SURFACES UNDER CONTAMINATED MATERIAL STOCKPILES SHALL BE FREE OF OBJECTS THAT WILL DAMAGE SHEETING, OR A LAYER OF GEOTEXTILE OR PLYWOOD SHALL BE PLACED BELOW.

CITY OF EVERETT STANDARD TESC NOTES (VOL. 1, 2-5)

1. APPROVAL OF THIS EROSION/SEDIMENTATION CONTROL (ESC) PLAN DOES NOT CONSTITUTE AN APPROVAL OF PERMANENT ROAD OR DRAINAGE DESIGN (E.G. SIZE AND LOCATION OF ROADS, PIPES, RESTRICTORS, CHANNELS, RETENTION FACILITIES, UTILITIES).
2. THE IMPLEMENTATION OF THESE ESC PLANS AND THE CONSTRUCTION, MAINTENANCE, REPLACEMENT, AND UPGRADING OF THESE ESC FACILITIES IS THE RESPONSIBILITY OF THE APPLICANT/CONTRACTOR UNTIL ALL CONSTRUCTION IS COMPLETED AND APPROVED AND PERMANENT STABILIZATION MEASURES ARE ESTABLISHED.
3. THE BOUNDARIES OF THE CLEARING LIMITS SHOWN ON THIS PLAN SHALL BE CLEARLY FLAGGED IN THE FIELD PRIOR TO CONSTRUCTION. DURING THE CONSTRUCTION PERIOD, NO DISTURBANCE BEYOND THE FLAGGED CLEARING LIMITS SHALL BE PERMITTED. THE FLAGGING SHALL BE MAINTAINED BY THE APPLICANT/CONTRACTOR FOR THE DURATION OF CONSTRUCTION.
4. THE ESC FACILITIES SHOWN ON THIS PLAN MUST BE CONSTRUCTED IN CONJUNCTION WITH ALL CLEARING AND GRADING ACTIVITIES, AND IN SUCH A MANNER AS TO ENSURE THAT SEDIMENT AND SEDIMENT LADEN WATER DO NOT ENTER THE DRAINAGE SYSTEM, ROADWAYS, OR VIOLATE APPLICABLE WATER QUALITY STANDARDS.
5. THE ESC FACILITIES SHOWN ON THIS PLAN ARE THE MINIMUM REQUIREMENTS FOR ANTICIPATED SITE CONDITIONS. DURING THE CONSTRUCTION PERIOD, THESE ESC FACILITIES SHALL BE UPGRADED AS NEEDED FOR UNEXPECTED STORM EVENTS AND TO ENSURE THAT SEDIMENT AND SEDIMENT-LADEN WATER DO NO LEAVE THE SITE.
6. THE ESC FACILITIES SHALL BE INSPECTED ROUTINELY AND MAINTAINED BY THE APPLICANT/CONTRACTOR TO ENSURE THEIR CONTINUED FUNCTIONING, ESPECIALLY AFTER STORM EVENTS.
7. THE ESC FACILITIES ON INACTIVE SITES SHALL BE INSPECTED AND MAINTAINED A MINIMUM OF ONCE A MONTH OR WITHIN THE 48 HOURS FOLLOWING A MAJOR STORM EVENT.
8. AT NO TIME SHALL MORE THAN ONE FOOT OF SEDIMENT BE ALLOWED TO ACCUMULATE WITHIN A TRAPPED CATCH BASIN. ALL CATCH BASINS AND CONVEYANCE LINES SHALL BE CLEANED PRIOR TO PAVING. THE CLEANING OPERATION SHALL NOT FLUSH SEDIMENT LADEN WATER INTO THE DOWNSTREAM SYSTEM.
9. STABILIZED CONSTRUCTION ENTRANCES SHALL BE INSTALLED AT THE BEGINNING OF CONSTRUCTION AND MAINTAINED FOR THE DURATION OF THE PROJECT. ADDITIONAL MEASURES MAY BE REQUIRED TO ENSURE THAT ALL PAVED AREAS ARE KEPT CLEAN FOR THE DURATION OF THE PROJECT.
10. THE CONTRACTOR SHALL PROVIDE PERIODIC STREET CLEANING TO REMOVE DEBRIS AND SEDIMENT TRACKED OFF THE SITE.
11. APPROPRIATE MEASURES SHALL BE TAKEN TO STOP SEDIMENT FROM ENTERING SURFACE WATER BODIES IF PROPOSED BMPs FAIL.
12. BARE AND/OR DISTURBED SOILS SHALL REMAIN UNCOVERED AND/OR UNSTABILIZED FOR NO MORE THAN 2 DAYS FROM OCTOBER 1 THROUGH APRIL 30, AND FOR NO MORE THAN 7 DAYS FROM MAY 1 THROUGH SEPTEMBER 30.

CALL 48 HOURS BEFORE YOU DIG DIAL 811

VERT DATUM: NAVD 88
CONV TO MLLW = NAVD88+2.03
HORZ DATUM: NAD 83/91

IF SHEET IS LESS THAN 22x34 REDUCE SCALE ACCORDINGLY

Port of EVERETT
P.O. BOX 538
EVERETT, WA 98206
(425) 259-3164

kpff
1601 5th Avenue, Suite 1300
Seattle, Washington 98101
(206) 382-0600 Fax (206) 382-0500
PROJECT NO. 1600120

NO.	DATE	BY	REVISION
2	07/05/2023	NW	AS-BUILT
1	07/09/2021	NW	ADDENDUM 1
0	06/21/2021	NW	ISSUED FOR BID

NO.	DATE	BY	REVISION

RECORD CONDITIONS ILLUSTRATED IN THESE PLANS REFLECT INFORMATION PROVIDED BY THE CONTRACTOR. RECORD CONDITIONS WERE NOT VERIFIED BY ENGINEER.

PROJECT ENGINEER: N. WATSON	SCALE: AS SHOWN
DESIGNED BY: J. BECKER	DATE: 06/21/2021
DRAWN BY: K. EDWARDS, D. YU	CHECKED BY: N. WATSON
APPROVED BY:	

PORT OF EVERETT

NORTON TERMINAL DEVELOPMENT & MTCA 3RD INTERIM ACTION
TESC STOCKPILE COVER DETAILS

DWG. NO. **C1.4**
CIP NO. 1-8-900-05
PROJECT NO. MT-NT-2021-02.2
SHEET NO. 22 OF 150

AS-BUILTS

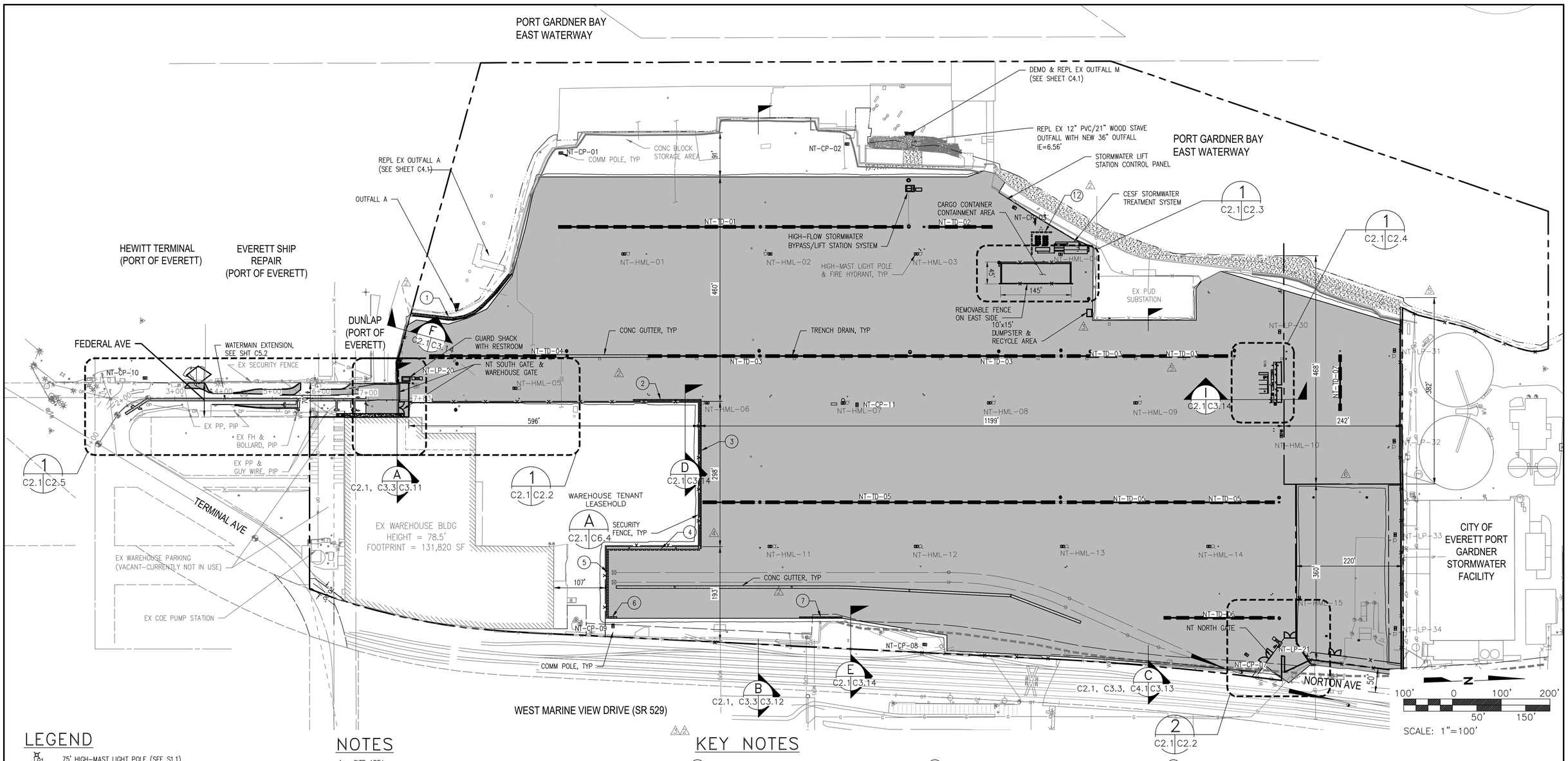

LEGEND

- LP1 — 75' HIGH-MAST LIGHT POLE (SEE S1.1)
- 30' LOW-MAST LIGHT POLE (SEE S1.2)

PAVEMENT PHASING:

- 9" ASPH PVMT OVER 12" CSBC
  (APPROX ~~23.3~~ 29.8 ACRES AND APPROX 1.95 ACRES FOR FUTURE MARITIME TENANT)
- ~~TEMPORARY 2" ASPH PVMT OVER 12" CSBC THAT WILL BE PAVED TO THE FULL 9" DEPTH PVMT IN THE FUTURE (APPROX 6.5 ACRES)~~ TEMPORARY 2" PVMT NOT USED
- TEMPORARY GRAVEL SURFACE THAT WILL BE PAVED IN THE FUTURE

NOTES

1. SITE AREA:
   LANDWARD OF OHW = 1,985,647 SF (45.6± AC)
   WATERWARD OF OHW = 548,392 SF (12.6± AC)
   TIDELANDS = 509,282 SF (11.7± AC)
   TOTAL = 2,534,039 SF (58.2± AC)
2. SITE BUILDING COVERAGE:
   EXISTING WAREHOUSE FOOTPRINT = 131,820 SF
   8x15' GUARD SHACK = 120 SF (DEFERRED SUBMITTAL)
   2 - 10'x20' SECURITY SHACKS = 400 SF (FUTURE - NIC, SEE DETAL 1, C2.2)
   10'x30' LONGSHOREMAN TRAILER FOR BREAKROOM/OFFICE = 300 SF (DEFERRED SUBMITTAL)
   10'x46' LONGSHOREMAN TRAILER FOR RESTROOM/SHOWER = 460 SF (DEFERRED SUBMITTAL)
   SITE BUILDING COVERAGE = 6.7%
   [(131,820+120+400+300+460)/1,985,647]

KEY NOTES

1. 39 PORT PROVIDED BLOCKS (2'Wx2'Hx6'L) w/NO GAP BETWEEN BLOCKS PLACED ALONG LANDWARD FACE OF EX ROCKERY.
2. 11 PORT PROVIDED JERSEY BARRIERS (2'WX2'-6"HX12'-6"L) W/NO GAP BETWEEN BARRIERS PLACED AT 2' OFFSET FROM SECURITY FENCE.
3. 51 PORT PROVIDED BLOCKS (2'WX2'HX6'L) W/NO GAP BETWEEN BLOCKS PLACED ADJACENT TO SECURITY FENCE.
4. 22 PORT PROVIDED BLOCKS (2'-6"WX2'-4"HX5'L) W/42" MAX GAP BETWEEN BLOCKS PLACED ADJACENT TO CONC GUTTER.
5. 25 PORT PROVIDED BLOCKS (2'-8"WX3'HX5'-7"L) W/NO GAP BETWEEN BLOCKS PLACED ADJACENT TO SECURITY FENCE WALL.
6. 3 PORT PROVIDED BLOCKS (2'-8"WX3'HX5'-7"L) W/NO GAP BETWEEN BLOCKS PLACED ADJACENT TO PVMT EDGE.
7. 7 PORT PROVIDED JERSEY BARRIERS (2'Wx2'-6"Hx12'-6"L) w/NO GAP BETWEEN BARRIERS PLACED ADJACENT TO PVMT EDGE.
8. NOT USED
9. NOT USED
10. NOT USED
11. NOT USED
12. 10 CONTRACTOR FURNISHED, PAINTED BLOCKS (2'Wx2'Hx6'L) w/42" MAX GAP BETWEEN BLOCKS.

CALL 48 HOURS BEFORE YOU DIG DIAL 811

VERT DATUM: NAVD 88
CONV TO MLLW = NAVD88+2.03
HORZ DATUM: NAD 83/91

IF SHEET IS LESS THAN 22x34 REDUCE SCALE ACCORDINGLY

Port of EVERETT
P.O. BOX 538
EVERETT, WA 98206
(425) 259-3164

kpff
1601 5th Avenue, Suite 1300
Seattle, Washington 98101
(206) 382-0600 Fax (206) 382-0500
PROJECT NO. 1600120

NO.	DATE	BY	REVISION
4	12/02/2021	JB	DELETE ECOLOGY BLOCK WALL, ADD EX WHS GRAVEL PAD CONTOURS AND UPDATE FINAL GRADES & PAVEMENT COORDINATES
3	12/02/2021	NW	2-INCH TO 9-INCH PVMT
2	07/09/2021	NW	ADDENDUM 1
1	06/21/2021	NW	ISSUED FOR BID
0	05/07/2021	NW	FOR CITY REVIEW

NO.	DATE	BY	REVISION
7	07/05/2023	NW	AS-BUILT
6	06/29/2022	NW	SUBSTATION SITE DEVELOPMENT
5	04/08/2022	NW	MARITIME TENANT SITE DEVELOPMENT

RECORD CONDITIONS ILLUSTRATED IN THESE PLANS REFLECT INFORMATION PROVIDED BY THE CONTRACTOR. RECORD CONDITIONS WERE NOT VERIFIED BY ENGINEER.

PROJECT ENGINEER: N. WATSON	SCALE: 1" = 100'
DESIGNED BY: J. BECKER	DATE: 05/07/2021
DRAWN BY: K. EDWARDS, D. YU	CHECKED BY: N. WATSON
APPROVED BY:	

PORT OF EVERETT

NORTON TERMINAL DEVELOPMENT & MTCA 3RD INTERIM ACTION OVERALL SITE PLAN & HORIZONTAL CONTROL

DWG. NO. **C2.1**
CIP NO. 1-8-900-05
PROJECT NO. MT-NT-2021-02.2
SHEET NO. 23 OF 150

AS-BUILTS

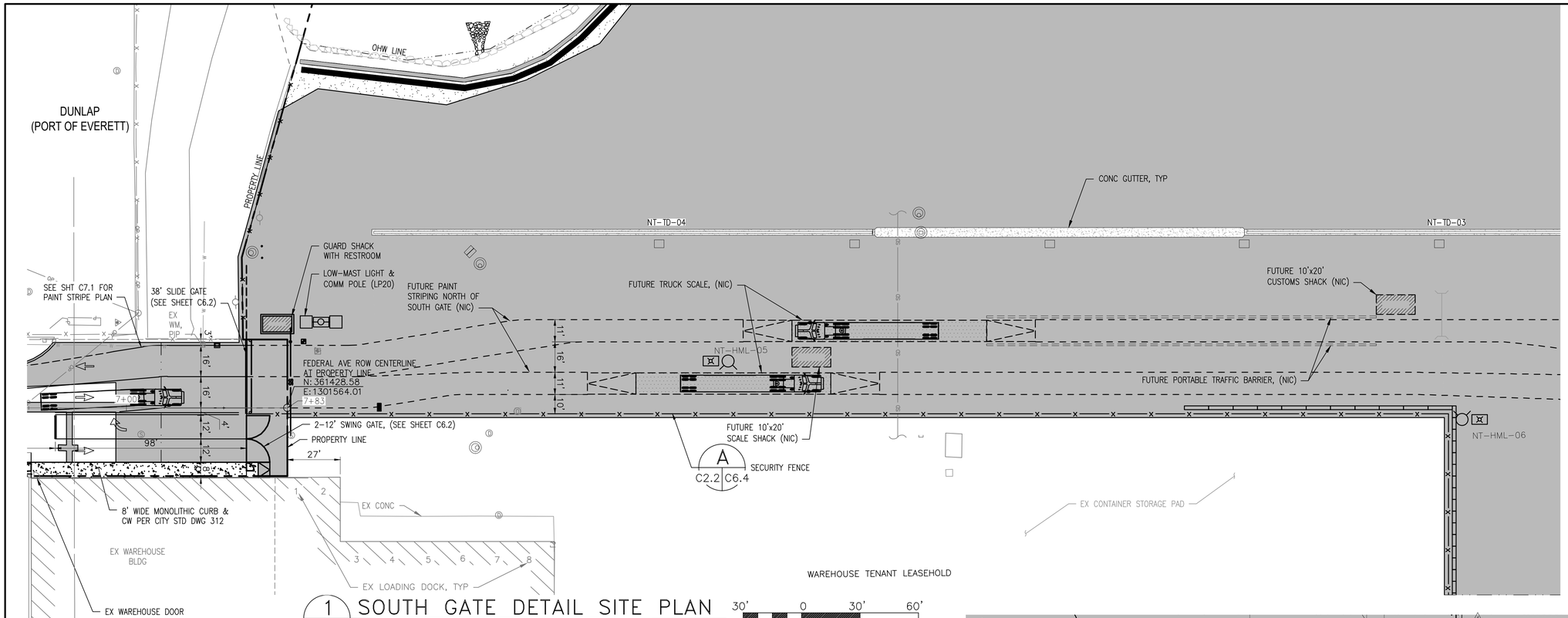

1 SOUTH GATE DETAIL SITE PLAN
C2.1 C2.2

30' 0 30' 60'
15' 45'
SCALE: 1"=30'

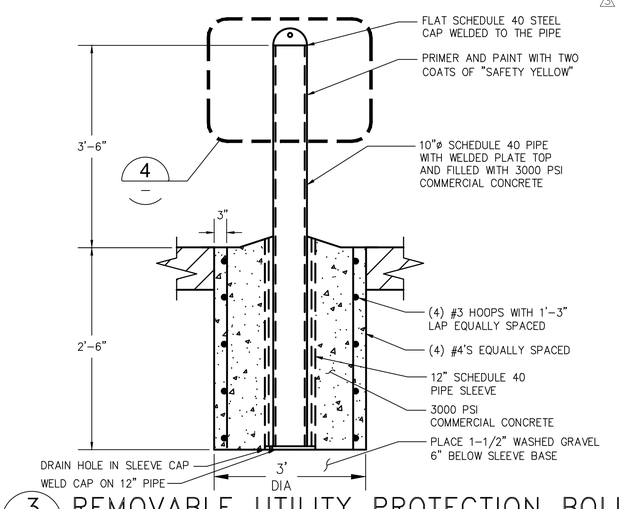

3 REMOVABLE UTILITY PROTECTION BOLLARD
E4.1 C2.2 NTS (SEE KEYED NOTE10, SHEET E4.1)

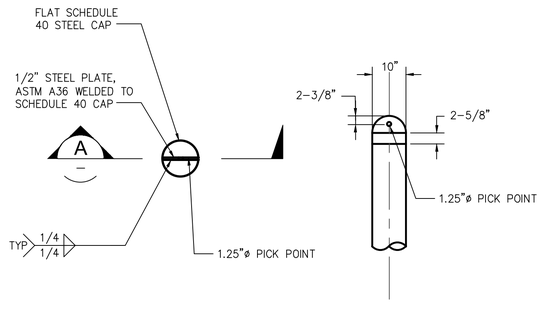

4 REMOVABLE BOLLARD CAP
C2.2 C2.2 NTS

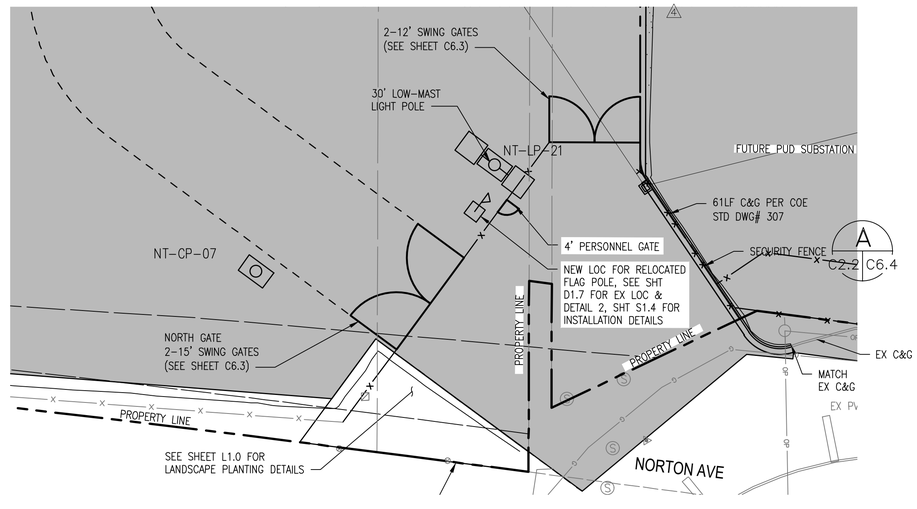

2 NORTH GATE DETAIL SITE PLAN
C2.1 C2.2

20' 0 20' 40'
10' 30'
SCALE: 1"=20'

NOTES

1. LANES AND GATES DESIGNED TO ACCOMMODATE A WB-67 VEHICLE (TRACTOR WITH 53' TRAILER).

LEGEND

- 9" ASPH PVMT OVER 12" CSBC
- TEMPORARY 2" PVMT NOT USED
- PROPOSED GRAVEL SURFACE
- PAINTED TRAFFIC FLOW ARROW

N

CALL 48 HOURS
BEFORE YOU DIG
DIAL 811

VERT DATUM: NAVD 88
CONV TO MLLW = NAVD88+2.03
HORZ DATUM: NAD 83/91

IF SHEET IS LESS THAN 22x34
REDUCE SCALE ACCORDINGLY

Port of EVERETT
P.O. BOX 538
EVERETT, WA 98206
(425) 259-3164

kpff
1601 5th Avenue, Suite 1300
Seattle, Washington 98101
(206) 382-0600 Fax (206) 382-0500
PROJECT NO. 1600120

NO.	DATE	BY	REVISION
5	07/05/2023	NW	AS-BUILT
4	04/08/2022	NW	MARITIME TENANT SITE DEVELOPMENT
3	12/06/2021	JB	ADDED REMOVABLE BOLLARD DETAIL
2	12/02/2021	NW	2-INCH TO 9-INCH PVMT
1	06/21/2021	NW	ISSUED FOR BID
0	05/07/2021	NW	FOR CITY REVIEW

RECORD CONDITIONS ILLUSTRATED IN THESE PLANS REFLECT INFORMATION PROVIDED BY THE CONTRACTOR. RECORD CONDITIONS WERE NOT VERIFIED BY ENGINEER.

PROJECT ENGINEER: N. WATSON	SCALE: AS SHOWN
DESIGNED BY: J. BECKER	DATE: 05/07/2021
DRAWN BY: K. EDWARDS, D. YU	CHECKED BY: N. WATSON
APPROVED BY:	

PORT OF EVERETT

NORTON TERMINAL DEVELOPMENT & MTCA 3RD INTERIM ACTION NORTH AND SOUTH GATE DETAIL SITE PLAN

DWG. NO. **C2.2**
CIP NO. 1-8-900-05
PROJECT NO. MT-NT-2021-02.2
SHEET NO. 24 OF 150

AS-BUILTS

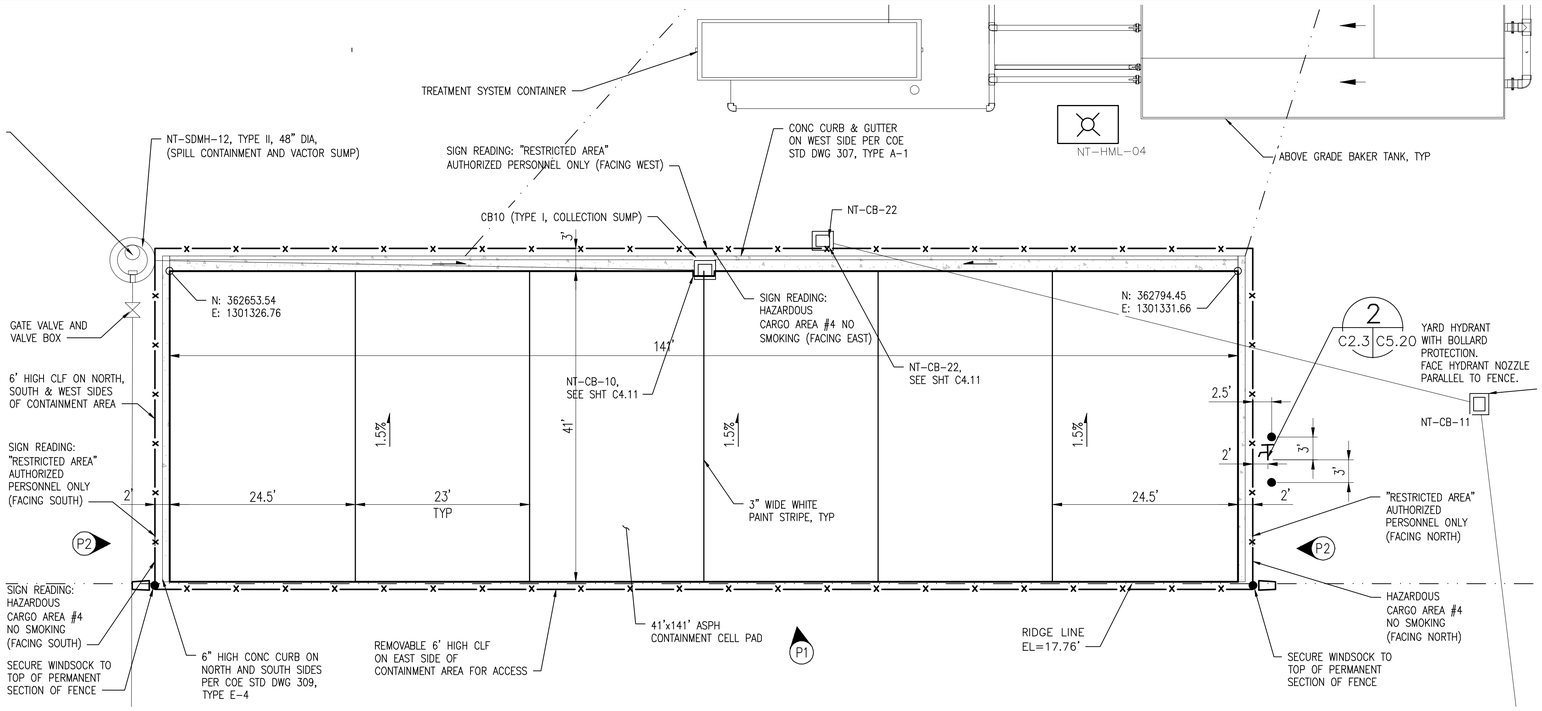

1 CARGO CONTAINER CONTAINMENT AREA DETAIL

C2.1 C2.3 SCALE: 1" = 10'

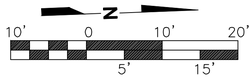

SCALE: 1"=10'

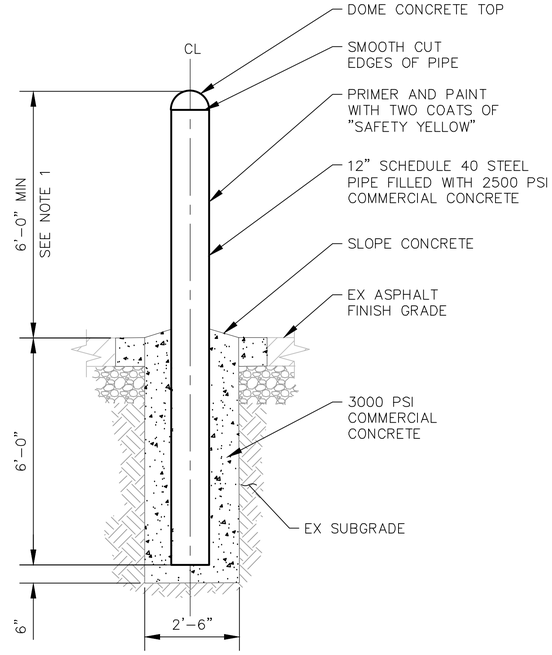

1 DETAIL – FIXED UTILITY PROTECTION BOLLARD

C6.2, C6.3 C2.3 SCALE: NTS

SECTION H NOT USED

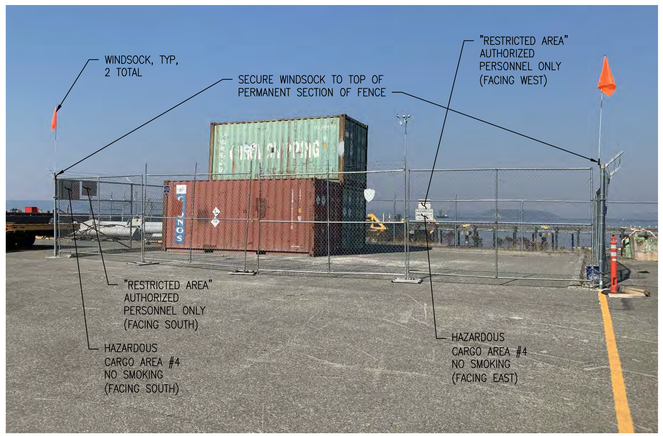

H SECTION – NORTH PROPERTY LIMIT

C2.1, C3.7 C2.3 SCALE: 1" = 2'

P1 CARGO CONTAINER CONTAINMENT AREA

C2.3 C2.3 (LOOKING WEST)

SECURELY MOUNT SIGNAGE NEAR TOP OF SECURITY FENCE IN 3 AREAS AS INDICATED ON DETAIL P1, THIS SHT



APPROX SIGN DIMENSIONS = 18"X20"

APPROX SIGN DIMENSIONS = 24"X30"

P2 CONTAINMENT AREA SIGNAGE

C2.3 C2.3 (LOOKING NORTH AND SOUTH)

NOTES

1. GROUPS OF BOLLARDS THAT PROTECT A COMMON STRUCTURE SHALL BE CUT AT THE SAME TOP ELEVATION SUCH THAT THE SHORTEST BOLLARD HAS A MINIMUM HEIGHT OF 6'. SIMILARLY, GROUP OF BOLLARDS THAT ARE WITHIN 20-FEET OF EACH OTHER SHALL ALL BE CUT AT THE SAME TOP ELEVATION SUCH THAT THE SHORTEST BOLLARD HAS A MINIMUM HEIGHT OF 6'.

LEGEND

XX LOCATION AND DIRECTION PF PHOTO

CALL 48 HOURS BEFORE YOU DIG DIAL 811

VERT DATUM: NAVD 88
CONV TO MLLW = NAVD88+2.03
HORZ DATUM: NAD 83/91

IF SHEET IS LESS THAN 22x34 REDUCE SCALE ACCORDINGLY

Port of EVERETT
P.O. BOX 538
EVERETT, WA 98206
(425) 259-3164

kpff
1601 5th Avenue, Suite 1300
Seattle, Washington 98101
(206) 382-0600 Fax (206) 382-0500
PROJECT NO. 1600120

NO.	DATE	BY	REVISION
3	07/05/2023	NW	AS-BUILT
2	04/08/2022	NW	MARITIME TENANT SITE DEVELOPMENT
1	06/21/2021	NW	ISSUED FOR BID
0	05/07/2021	NW	FOR CITY REVIEW

RECORD CONDITIONS ILLUSTRATED IN THESE PLANS REFLECT INFORMATION PROVIDED BY THE CONTRACTOR. RECORD CONDITIONS WERE NOT VERIFIED BY ENGINEER.

PROJECT ENGINEER: N. WATSON	SCALE: AS SHOWN
DESIGNED BY: J. BECKER	DATE: 05/07/2021
DRAWN BY: K. EDWARDS, D. YU	CHECKED BY: N. WATSON
APPROVED BY:	

PORT OF EVERETT

NORTON TERMINAL DEVELOPMENT & MTCA 3RD INTERIM ACTION SITE PLAN DETAILS (1 OF 2)

DWG. NO. **C2.3**
CIP NO. 1-8-900-05
PROJECT NO. MT-NT-2021-02.2
SHEET NO. 25 OF 150

AS-BUILTS

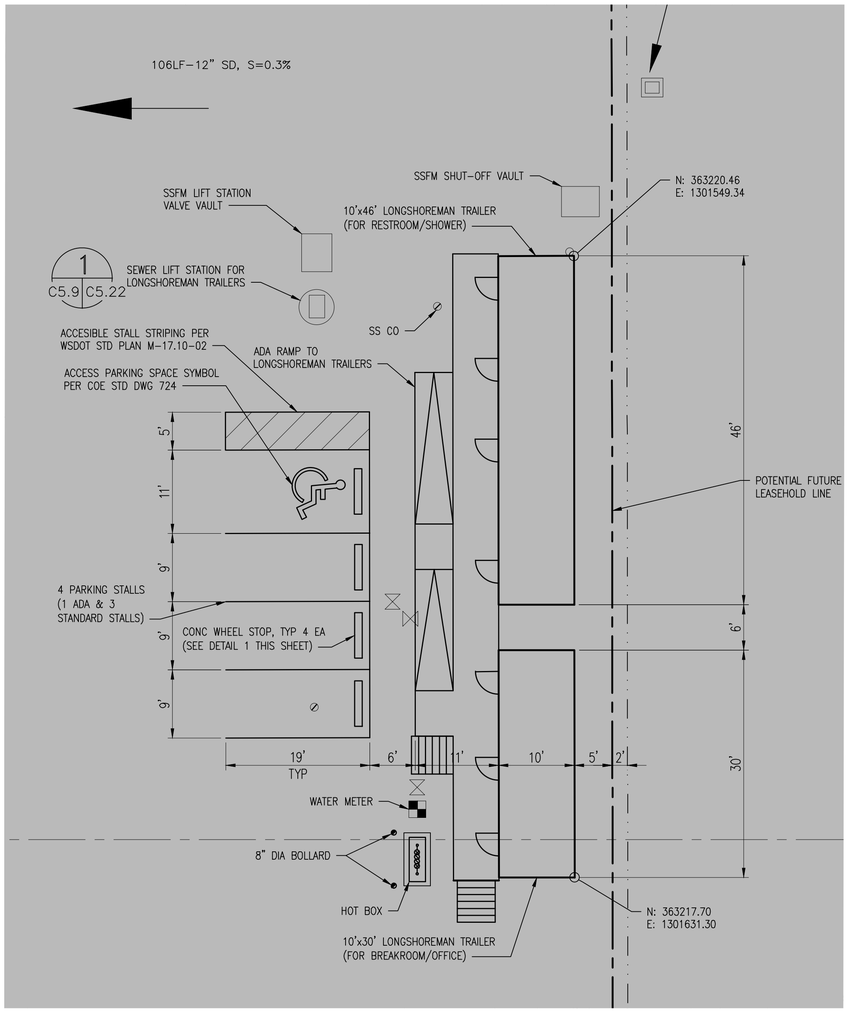

1 LONGSHOREMAN TRAILER DETAIL PLAN

C2.1 C2.3 SCALE: 1" = 10'

10' 0 10' 20'

5' 15'

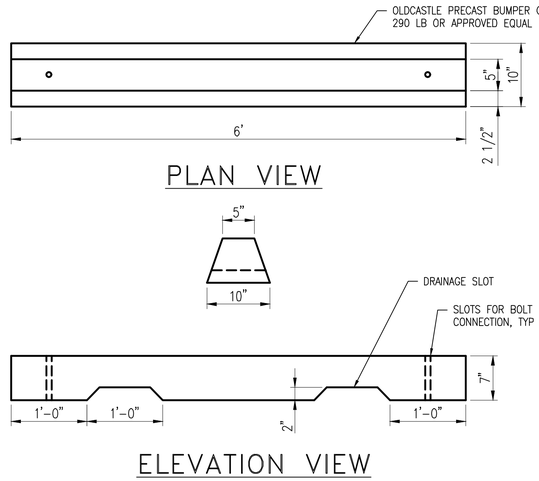

1 PRECAST CURB BUMPER DETAIL

SCALE: NTS

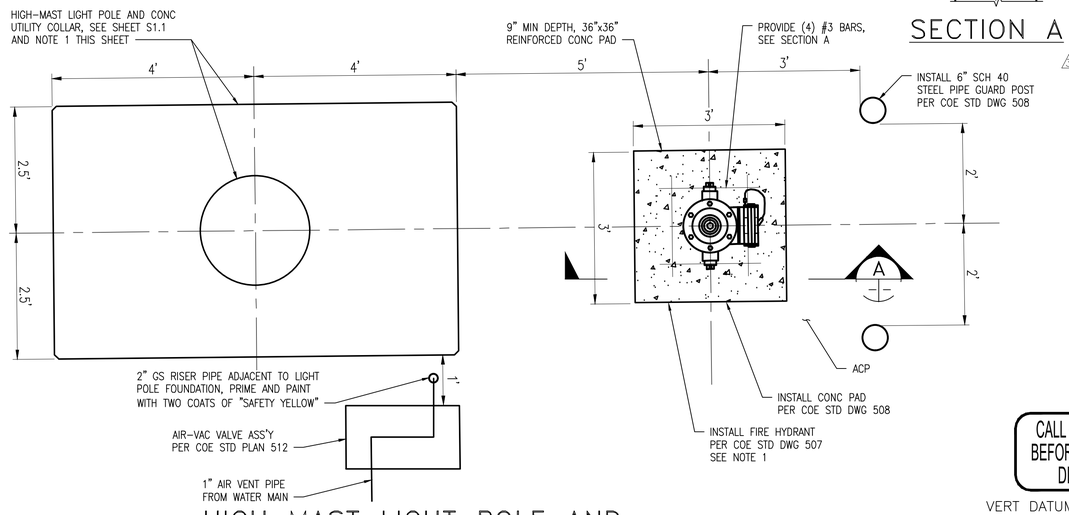

2 HIGH MAST LIGHT POLE AND FIRE HYDRANT ASS'Y DETAILS

SCALE: NTS

NOTES

1. CONTRACTOR SHALL DRILL HIGH–MAST LIGHT POLE FOUNDATIONS PRIOR TO INSTALLATION OF ALL OTHER UTILITIES AND FIRE HYDRANTS. THE LOCATION OF LIGHT POLE FOUNDATIONS MAY REQUIRE HORIZONTAL ADJUSTMENT IF BELOW GRADE OBSTRUCTIONS ARE ENCOUNTERED. IF OBSTRUCTIONS ARE ENCOUNTERED, CONTRACTOR SHALL NOTIFY ENGINEER TO AGREE ON NEW LOCATION WHICH MAY AFFECT THE LOCATION OF OTHER UTILITIES.

LEGEND

9" ASPH PVMT OVER 12" CSBC

TEMPORARY 2" ASPH PVMT OVER 12" CSBC THAT WILL BE PAVED TO THE FULL 9" DEPTH PVMT IN THE FUTURE

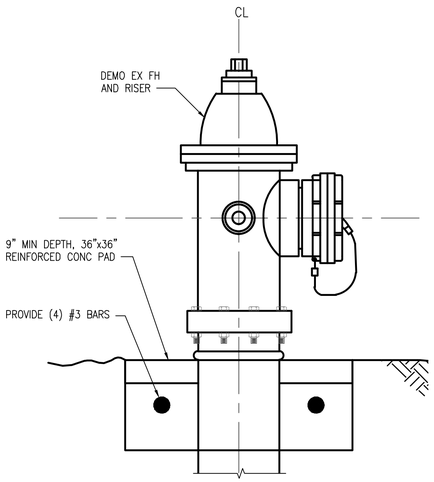

SECTION A

CALL 48 HOURS BEFORE YOU DIG DIAL 811

VERT DATUM: NAVD 88
CONV TO MLLW = NAVD88+2.03
HORZ DATUM: NAD 83/91

IF SHEET IS LESS THAN 22x34 REDUCE SCALE ACCORDINGLY

Port of EVERETT
P.O. BOX 538
EVERETT, WA 98206
(425) 259–3164

kpff
1601 5th Avenue, Suite 1300
Seattle, Washington 98101
(206) 382-0600 Fax (206) 382-0500
PROJECT NO. 1600120

NO.	DATE	BY	REVISION
4	07/05/2023	NW	AS–BUILT
3	02/18/2022	NW	MARITIME TENANT SITE DEVELOPMENT
2	12/02/2021	NW	2–INCH TO 9–INCH PVMT
1	06/21/2021	NW	ISSUED FOR BID
0	05/07/2021	NW	FOR CITY REVIEW

RECORD CONDITIONS ILLUSTRATED IN THESE PLANS REFLECT INFORMATION PROVIDED BY THE CONTRACTOR. RECORD CONDITIONS WERE NOT VERIFIED BY ENGINEER.

PROJECT ENGINEER: N. WATSON	SCALE: AS SHOWN
DESIGNED BY: J. BECKER	DATE: 05/07/2021
DRAWN BY: K. EDWARDS, D. YU	CHECKED BY: N. WATSON
APPROVED BY:	

PORT OF EVERETT

NORTON TERMINAL DEVELOPMENT & MTCA 3RD INTERIM ACTION SITE PLAN DETAILS (2 OF 2)

DWG. NO. **C2.4**

CIP NO. 1–8–900–05

PROJECT NO. MT–NT–2021–02.2

SHEET NO. 26 OF 150

AS-BUILTS

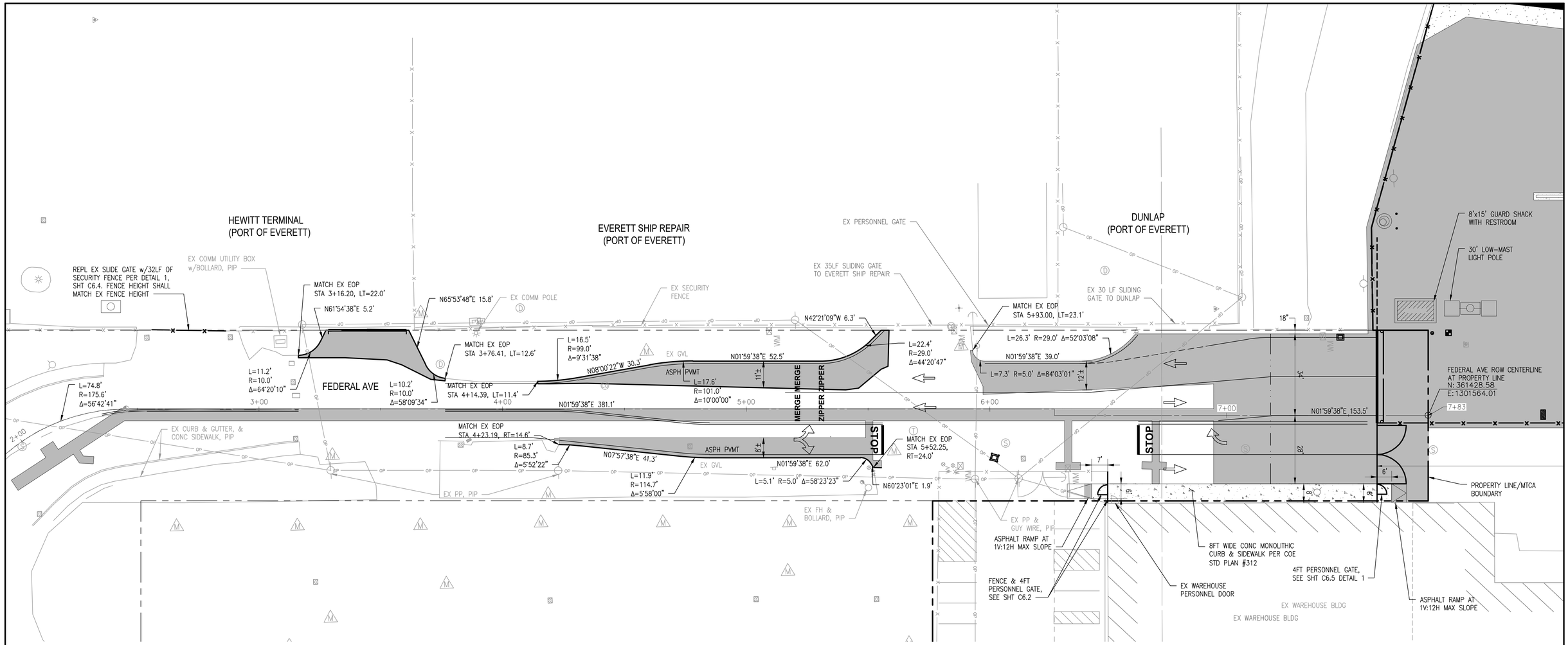

1 FEDERAL AVE DETAIL SITE PLAN

C2.1 | C2.5

NOTES

1. LANES AND GATES DESIGNED TO ACCOMMODATE A WB-67 VEHICLE (TRACTOR WITH 53' TRAILER).

LEGEND

- 9" ASPH PVMT OVER 12" CSBC
- TEMPORARY 2" ASPH PVMT OVER 12" CSBC THAT WILL BE PAVED TO THE FULL 9" DEPTH PVMT IN THE FUTURE
- PROPOSED GRAVEL SURFACE
- PAINTED TRAFFIC FLOW ARROW

N

20' 0 20' 40'

10' 30'

SCALE: 1"=20'

CALL 48 HOURS BEFORE YOU DIG DIAL 811

VERT DATUM: NAVD 88
CONV TO MLLW = NAVD88+2.03
HORZ DATUM: NAD 83/91

IF SHEET IS LESS THAN 22x34 REDUCE SCALE ACCORDINGLY

Port of EVERETT
P.O. BOX 538
EVERETT, WA 98206
(425) 259-3164

kpff
1601 5th Avenue, Suite 1300
Seattle, Washington 98101
(206) 382-0600 Fax (206) 382-0500
PROJECT NO. 1600120

NO.	DATE	BY	REVISION
3	07/05/2023	NW	AS-BUILT
2	06/21/2021	NW	ISSUED FOR BID
1	05/07/2021	NW	FOR CITY REVIEW

RECORD CONDITIONS ILLUSTRATED IN THESE PLANS REFLECT INFORMATION PROVIDED BY THE CONTRACTOR. RECORD CONDITIONS WERE NOT VERIFIED BY ENGINEER.

PROJECT ENGINEER: N. WATSON	SCALE: 1" = 20'
DESIGNED BY: J. BECKER	DATE: 05/07/2021
DRAWN BY: K. EDWARDS, D. YU	CHECKED BY: N. WATSON
APPROVED BY:	

PORT OF EVERETT

NORTON TERMINAL DEVELOPMENT & MTCA 3RD INTERIM ACTION
FEDERAL AVE
DETAIL SITE PLAN

DWG. NO. C2.5
CIP NO. 1-8-900-05
PROJECT NO. MT-NT-2021-02.2
SHEET NO. 27 OF 150

AS-BUILTS

PORT GARDNER BAY
EAST WATERWAY

OUTER HARBOR LINE

INNER HARBOR LINE

PORT GARDNER BAY
EAST WATERWAY

PROPERTY LINE

OHW LINE

CONC BLOCK STORAGE AREA

COMM POLE, TYP

EX ASPH ROAD

HEWITT TERMINAL
(PORT OF EVERETT)

EVERETT SHIP
REPAIR
(PORT OF EVERETT)

DUNLAP
(PORT OF
EVERETT)

FEDERAL AVE

NT-HML-01

NT-HML-02

NT-HML-03

NT-HML-04

NT-HML-05

NT-HML-06

NT-HML-07

NT-HML-08

NT-HML-09

NT-HML-10

NT-HML-11

NT-HML-12

NT-HML-13

NT-HML-14

NT-HML-15

NT-LP-30

NT-LP-31

NT-LP-32

NT-LP-33

NT-LP-34

EX PUD
SUBSTATION

46'

10'x15'
DUMPSTER &
RECYCLE AREA

LOAD RESTRICTION ZONE - B
CONTAINER STORAGE 1 HIGH
(NO STACKING)

646'

683'

28'

WAREHOUSE TENANT
LEASEHOLD

EX WAREHOUSE BLDG

TERMINAL AVE

CITY OF
EVERETT PORT
GARDNER
STORMWATER
FACILITY

SERVICE
GATE

BNSF RAILROAD R.O.W.

NORTON AVE

50'

WEST MARINE VIEW DRIVE (SR 529)

N

100' 0 100' 200'

50' 150'

SCALE: 1"=100'

LEGEND

LOAD RESTRICTION ZONE – A
(NO CONTAINER STORAGE IN THIS AREA)

LOAD RESTRICTION ZONE – B
(CONTAINER STORAGE 1 HIGH, NO STACKING IN THIS AREA)

NOTES

1. DUE TO PRESENCE OF WOOD WASTE DEPOSITS LOAD RESTRICTION ZONE – B AND AMOUNT OF PRELOAD APPLIED, STACKING OF MULTIPLE CONTAINERS AND OTHER HEAVY CARGO LOADING IS RESTRICTED. SEE GEOTECHNICAL REPORT FOR FURTHER INFORMATION.

CALL 48 HOURS
BEFORE YOU DIG
DIAL 811

VERT DATUM: NAVD 88
CONV TO MLLW = NAVD88+2.03
HORZ DATUM: NAD 83/91

IF SHEET IS LESS THAN 22x34
REDUCE SCALE ACCORDINGLY

Port of EVERETT
P.O. BOX 538
EVERETT, WA 98206
(425) 259-3164

kpff
1601 5th Avenue, Suite 1300
Seattle, Washington 98101
(206) 382-0600 Fax (206) 382-0500
PROJECT NO. 1600120

NO.	DATE	BY	REVISION
4	02/18/2022	NW	MARITIME TENANT SITE DEVELOPMENT
3	12/02/2021	JB	DELETE ECOLOGY BLOCK WALL, ADD EX WHS GRAVEL PAD CONTOURS AND UPDATE FINAL GRADES & PAVEMENT COORDINATES
2	12/02/2021	NW	2-INCH TO 9-INCH PVMT
1	06/21/2021	NW	ISSUED FOR BID
0	05/07/2021	NW	FOR CITY REVIEW
5	07/05/2023	NW	AS-BUILT

RECORD CONDITIONS ILLUSTRATED IN THESE PLANS REFLECT INFORMATION PROVIDED BY THE CONTRACTOR. RECORD CONDITIONS WERE NOT VERIFIED BY ENGINEER.

PROJECT ENGINEER: N. WATSON	SCALE: 1" = 100'
DESIGNED BY: J. BECKER	DATE: 05/07/2021
DRAWN BY: K. EDWARDS, D. YU	CHECKED BY: N. WATSON
APPROVED BY:	

PORT OF EVERETT

NORTON TERMINAL DEVELOPMENT & MTCA 3RD INTERIM ACTION LOAD RESTRICTION ZONE SITE PLAN

DWG. NO. **C2.6**

CIP NO. 1-8-900-05

PROJECT NO. MT-NT-2021-02.2

SHEET NO. 28 OF 150

AS-BUILTS

PORT GARDNER BAY
EAST WATERWAY

OUTER HARBOR LINE

INNER HARBOR LINE

EX BERTHING FLOAT

EX CONC STRUCTURE

EX RIPRAP SHORELINE

EX BARGE DOCK, PIP

REPL EX 12" PVC/21" WOOD STAVE OUTFALL WITH NEW 36" OUTFALL IE=6.56'

STORMWATER LIFT STATION CONTROL PANEL

CESF STORMWATER TREATMENT SYSTEM

HIGH-FLOW STORMWATER BYPASS/LIFT STATION SYSTEM

EX ASPHALT WHARF

EX CONC WHARF

EX WOOD DOCK

EX BERM

CONC BLOCK STORAGE AREA

EX CONC BLOCKS

COMM POLE, TYP

EX TOP OF BANK

REPL EX OUTFALL A WITH NEW 18" OUTFALL

OUTFALL A

EX DOCK

PROPERTY LINE

OHW LINE

PROPERTY LINE

NT-TD-01

NT-TD-02

NT-HML-01

NT-HML-02

NT-HML-03

NT-HML-04

A C3.1 C3.2

EX ASPH ROAD

EX PUD SUBSTATION

CARGO CONTAINER CONTAINMENT AREA

10'x15' DUMPSTER & RECYCLE AREA

EX ROCK BULKHEAD

PROPERTY LINE

DUNLAP (PORT OF EVERETT)

CONC GUTTER, TYP

TRENCH DRAIN, TYP

NT-TD-04

NT-TD-03

NT-TD-03

NT-TD-03

NT-TD-03

NT-LP-30

NT-LP-31

NT-HML-05

NT-HML-06

NT-HML-07

NT-HML-08

NT-HML-09

NT-TD-07

NT-HML-10

CITY OF EVERETT PORT GARDNER STORMWATER FACILITY

6+00

7+00

7+83

FEDERAL AVE

NT SOUTH GATE & WAREHOUSE GATE

EX LOADING DOCK, TYP

WAREHOUSE TENANT LEASEHOLD

EX LOADING DOCK

EX WAREHOUSE BLDG

PROPERTY LINE

B C3.1 C3.2

C C3.1 C3.2

NT-TD-05

NT-TD-05

NT-TD-05

EX GVL

NT-LP-33

NT-HML-11

NT-HML-12

NT-HML-13

EX DWO ABOVE GRADE PIP

EX DWO BELOW GRADE PIP

CONC GUTTER, TYP

EX DWO ABOVE GRADE

WASTEWATER/STORMWATER PIPELINE EASEMENT

EX ASPH

NT-LP

EX GUARD POST

EX HDPE PIPE ABOVE GRADE, PIP

BNSF RAILROAD R.O.W.

PROPERTY LINE

NORTON AVE

21.29
21.84
21.57
22.26

WEST MARINE VIEW DRIVE (SR 529)

NOTES

1. GEOGRID IS SHOWN WITHIN THE PAVEMENT BASE COURSE IN AREAS WHERE EXISTING REMAINING FOUNDATIONS ARE WITHIN CLOSE PROXIMITY TO THE PROPOSED PAVEMENT SUBGRADE. SEE SHEET G3.1 FOR FORMER BUILDING FOUNDATION FOOTPRINT AREAS.

LEGEND

9" ASPH PVMT OVER 12" CSBC
(APPROX ~~23.3~~ ~~29.8~~ 31.8 ACRES)

TEMPORARY 2" PVMT NOT USED

~~TEMPORARY GRAVEL SURFACE (THIS AREA WILL BE DEVELOPED UNDER A SEPARATE FUTURE PERMIT)~~
~~FUTURE MARITIME SITE = 2.0 ACRES~~
FUTURE PUD SITE = 0.60 ACRES
FILL SLOPES = 0.64 ACRES

TOTAL GRAVEL AREA = ~~3.24~~ 1.24 ACRES

HMA PAVEMENT SINGLE LAYER GEOGRID
(SEE C3.21 FOR HORIZONTAL CONTROL) B C3.1 C3.2

HMA PAVEMENT MULTI-LAYER GEOGRID
(SEE C3.21 FOR HORIZONTAL CONTROL) C C3.1 C3.2

N

80' 0 80' 160'
40' 120'

SCALE: 1"=80'

CALL 48 HOURS BEFORE YOU DIG DIAL 811

VERT DATUM: NAVD 88
CONV TO MLLW = NAVD88+2.03
HORZ DATUM: NAD 83/91

IF SHEET IS LESS THAN 22x34 REDUCE SCALE ACCORDINGLY

Port of EVERETT
P.O. BOX 538
EVERETT, WA 98206
(425) 259-3164

kpff
1601 5th Avenue, Suite 300
Seattle, Washington 98101
(206) 382-0600 Fax (206) 382-0500
PROJECT NO. 1600120

NO.	DATE	BY	REVISION
4	04/08/2022	NW	MARITIME TENANT SITE DEVELOPMENT
3	12/02/2021	JB	DELETE ECOLOGY BLOCK WALL, ADD EX WHS GRAVEL PAD CONTOURS AND UPDATE FINAL GRADES & PAVEMENT COORDINATES
2	12/02/2021	NW	2-INCH TO 9-INCH PVMT
1	06/21/2021	NW	ISSUED FOR BID
0	05/07/2021	NW	FOR CITY REVIEW
5	07/05/2023	NW	AS-BUILT
4	06/29/2022	NW	SUBSTATION SITE DEVELOPMENT

RECORD CONDITIONS ILLUSTRATED IN THESE PLANS REFLECT INFORMATION PROVIDED BY THE CONTRACTOR. RECORD CONDITIONS WERE NOT VERIFIED BY ENGINEER.

PROJECT ENGINEER: N. WATSON	SCALE: 1" = 80'
DESIGNED BY: J. BECKER	DATE: 05/07/2021
DRAWN BY: K. EDWARDS, D. YU	CHECKED BY: N. WATSON
APPROVED BY:	

PORT OF EVERETT

NORTON TERMINAL DEVELOPMENT & MTCA 3RD INTERIM ACTION PAVING OVERALL PLAN

DWG. NO. **C3.1**

CIP NO. 1-8-900-05

PROJECT NO. MT-NT-2021-02.2

SHEET NO. 29 OF 150

AS-BUILTS

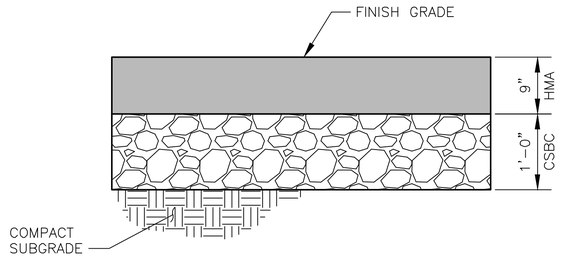

A TYPICAL ASPHALT PAVEMENT SECTION
C3.1 C3.2 SCALE: NTS

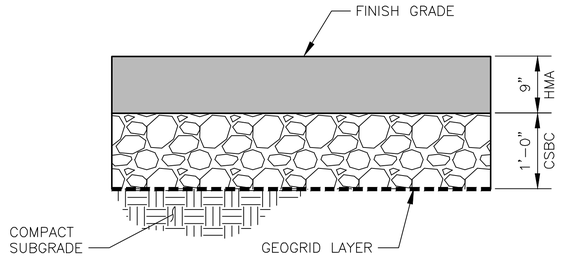

B ASPHALT PAVEMENT SECTION WITH SINGLE LAYER GEOGRID
C3.1 C3.2 SCALE: NTS

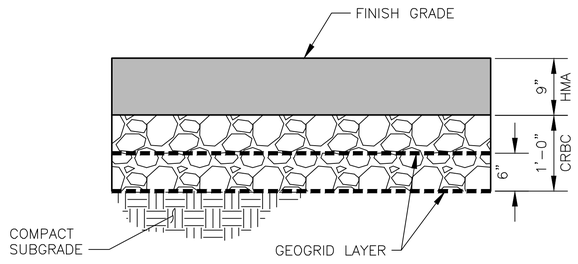

C ASPHALT PAVEMENT SECTION WITH MULTI-LAYER GEOGRID
C3.1 C3.2 SCALE: NTS

SECTION D NOT USED

D TYPICAL ASPHALT PAVEMENT TRANSITION SECTION
C3.1 C3.2 SCALE: NTS

SECTION E NOT USED

E TYPICAL ASPHALT TRANSITION RAMP SECTION
C3.1 C3.2 SCALE: NTS

VERT DATUM: NAVD 88
CONV TO MLLW = NAVD88+2.03
HORZ DATUM: NAD 83/91

IF SHEET IS LESS THAN 22x34
REDUCE SCALE ACCORDINGLY

Port of EVERETT
P.O. BOX 538
EVERETT, WA 98206
(425) 259-3164

kpff
1601 5th Avenue, Suite 1300
Seattle, Washington 98101
(206) 382-0600 Fax (206) 382-0500
PROJECT NO. 1600120

NO.	DATE	BY	REVISION
3	07/05/2023	NW	AS-BUILT
2	12/02/2021	NW	2-INCH TO 9-INCH PVMT
1	06/21/2021	NW	ISSUED FOR BID
0	05/07/2021	NW	FOR CITY REVIEW

RECORD CONDITIONS ILLUSTRATED IN THESE PLANS REFLECT INFORMATION PROVIDED BY THE CONTRACTOR. RECORD CONDITIONS WERE NOT VERIFIED BY ENGINEER.

PROJECT ENGINEER: N. WATSON	SCALE: AS SHOWN
DESIGNED BY: J. BECKER	DATE: 05/07/2021
DRAWN BY: K. EDWARDS, D. YU	CHECKED BY: N. WATSON
APPROVED BY:	

PORT OF EVERETT
NORTON TERMINAL DEVELOPMENT & MTCA 3RD INTERIM ACTION PAVEMENT SECTIONS

DWG. NO. **C3.2**
CIP NO. 1-8-900-05
PROJECT NO. MT-NT-2021-02.2
SHEET NO. 30 OF 150

AS-BUILTS

PORT GARDNER BAY
EAST WATERWAY

OUTER HARBOR LINE

INNER HARBOR LINE

PROPERTY LINE

OHW LINE

DEMO & REPL EX OUTFALL M
(SEE SHEET C4.1)

REPL EX OUTFALL A (SEE
SHEET C4.1)

CONC BLOCK
STORAGE AREA

EX BERM

EX SAND BACKFILL TO REMAIN

COMM POLE, TYP

17.35'
17.36'

STORMWATER LIFT STATION
CONTROL PANEL

HIGH-FLOW STORMWATER
BYPASS/LIFT STATION SYSTEM

CESF STORMWATER
TREATMENT SYSTEM

16.07'
16.07'

101.0', S=1.2%

115.0', S=1.47%

147.0', S=1.30%

184.5', S=1.98%

112.5', S=1.27%

142.5', S=1.98%

NT-HML-01
NT-HML-02
NT-HML-03
NT-HML-04

RIDGELINE=17.76'

RIDGE 17.76'

CARGO CONTAINER
CONTAINMENT AREA

EX PUD
SUBSTATION

10'x15' DUMPSTER
& RECYCLE AREA

CONCRETE GUTTER, TYP

CONC GUTTER, TYP

C
C3.3 S1.3

TRENCH DRAIN, TYP

TRENCH DRAIN, TYP

B
C3.3 S1.3

15.85'

15.85'

DUNLAP
(PORT OF
EVERETT)

N: 361407.47
E: 1301587.78

N: 362024.07
E: 1301587.74

NT-HML-05
NT-HML-06
NT-HML-07
NT-HML-08
NT-HML-09
NT-HML-10
NT-HML-30
NT-LP-31
NT-LP-33

FEDERAL AVE

PROPERTY LINE/
MTCA BOUNDARY

NT SOUTH GATE &
WAREHOUSE GATE

EX CONTAINER STORAGE PAD

WAREHOUSE TENANT
LEASEHOLD

A
C2.1, C3.3 C3.11

EX WAREHOUSE
BLDG

RIDGELINE=19.51'
RIDGELINE=19.51'

RIDGE 19.51'

18.08'
18.08'

RIDGE 20.90'

RIDGELINE=20.90'
RIDGELINE=20.90'

CONC GUTTER, TYP

N: 361820.93
E: 1301876.97

N: 362013.77
E: 1301883.69

N: 363258.32
E: 1302159.84

N: 363443.44
E: 1302191.12

N: 361819.41
E: 1302084.30

BNSF RAILROAD R.O.W.

B
C2.1, C3.3 C3.12

C
C2.1, C3.3, C4.1 C3.13

WEST MARINE VIEW DRIVE (SR 529)

PROPERTY LINE

NORTON AVE

CITY OF EVERETT
PORT GARDNER
STORMWATER
FACILITY

NOTES

1. SEE SHEET C3.1 FOR PAVEMENT SECTION TYPES/THICKNESS.
2. SEAL ALL LONGITUDINAL AND TRANSVERSE JOINTS BETWEEN NEW REPLACEMENT AND EXISTING PAVEMENTS PER SPECIFICATIONS.
3. ADJUST EXISTING MANHOLE, HANDHOLE, INLET RIM, AND/OR VALVE COVER TO GRADE PRIOR TO PAVING. PROTECT-IN-PLACE.

LEGEND

FINAL CONTOUR

EXISTING CONTOUR

N

80' 0 80' 160'
40' 120'

SCALE: 1"=80'

CALL 48 HOURS
BEFORE YOU DIG
DIAL 811

VERT DATUM: NAVD 88
CONV TO MLLW = NAVD88+2.03
HORZ DATUM: NAD 83/91

IF SHEET IS LESS THAN 22x34
REDUCE SCALE ACCORDINGLY

AS-BUILTS

Port of EVERETT
P.O. BOX 538
EVERETT, WA 98206
(425) 259-3164

kpff
1601 5th Avenue, Suite 1300
Seattle, Washington 98101
(206) 382-0600 Fax (206) 382-0500
PROJECT NO. 1600120

NO.	DATE	BY	REVISION
6	04/08/2022	NW	MARITIME TENANT SITE DEVELOPMENT
4	12/02/2021	JB	DELETE ECOLOGY BLOCK WALL, ADD EX WHS GRAVEL PAD CONTOURS AND UPDATE FINAL GRADES & PAVEMENT COORDINATES
3	12/02/2021	NW	2-INCH TO 9-INCH PVMT
2	07/09/2021	NW	ADDENDUM 1
1	06/21/2021	NW	ISSUED FOR BID
0	05/07/2021	NW	FOR CITY REVIEW
7	07/05/2023	NW	AS-BUILT
5	06/29/2022	NW	SUBSTATION SITE DEVELOPMENT

RECORD CONDITIONS ILLUSTRATED IN THESE PLANS REFLECT INFORMATION PROVIDED BY THE CONTRACTOR. RECORD CONDITIONS WERE NOT VERIFIED BY ENGINEER.

PROJECT ENGINEER: N. WATSON	SCALE: 1" = 80'
DESIGNED BY: J. BECKER	DATE: 05/07/2021
DRAWN BY: K. EDWARDS, D. YU	CHECKED BY: N. WATSON
APPROVED BY:	

PORT OF EVERETT

NORTON TERMINAL DEVELOPMENT & MTCA 3RD INTERIM ACTION GRADING OVERALL PLAN

DWG. NO. **C3.3**

CIP NO. 1-8-900-05

PROJECT NO. MT-NT-2021-02.2

SHEET NO. 31 OF 150

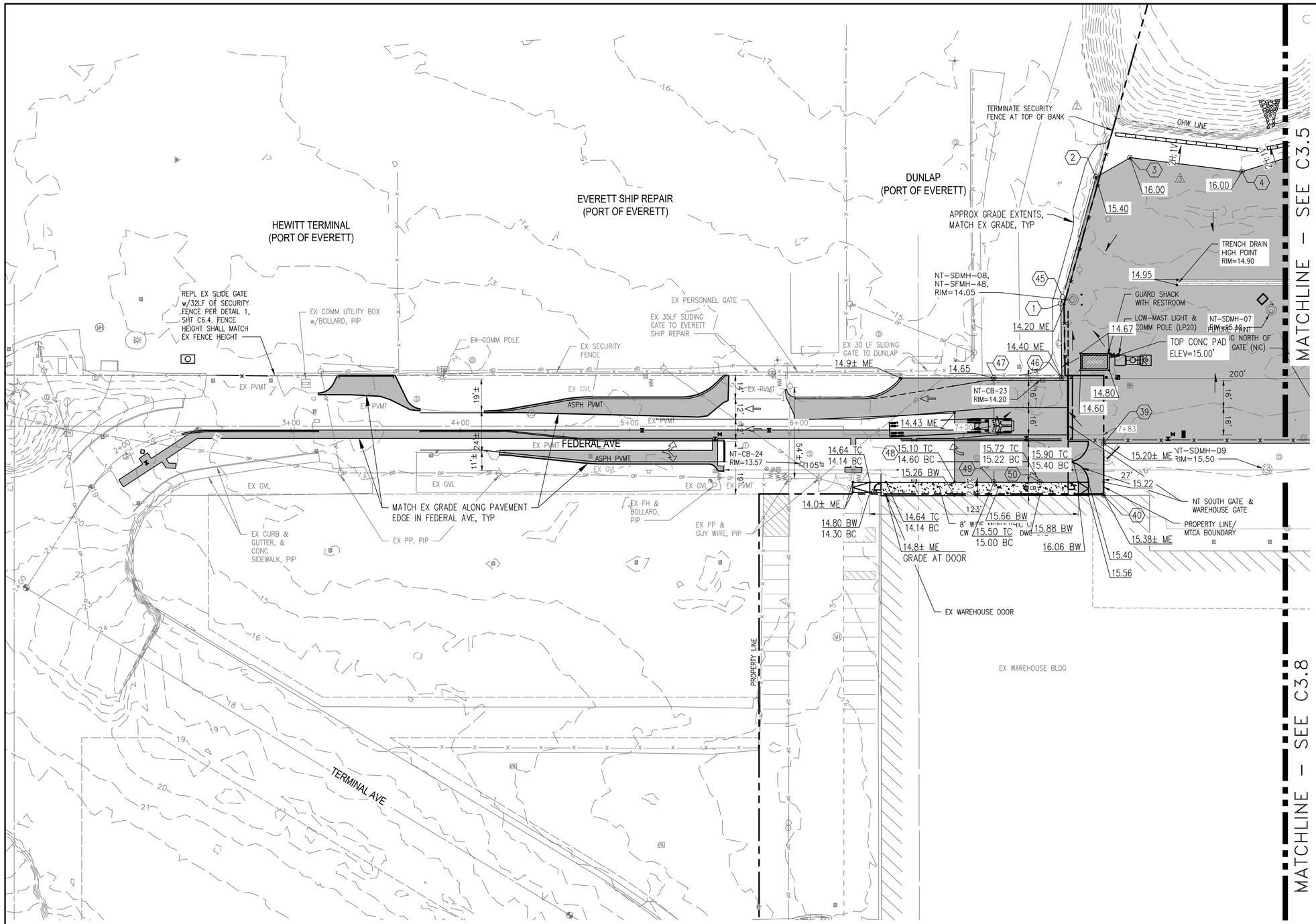

NOTES

1. SEE WATER AND ELECTRICAL SHEETS FOR REQUIRED UTILITY TRENCHING IN FEDERAL AVENUE.
2. SEAL ALL LONGITUDINAL AND TRANSVERSE JOINTS BETWEEN NEW REPLACEMENT AND EXISTING PAVEMENTS PER SPECIFICATIONS.
3. ADJUST EXISTING MANHOLE, HANDHOLE, INLET RIM, AND/OR VALVE COVER TO GRADE PRIOR TO PAVING. PROTECT-IN-PLACE.

LEGEND

- HMA PAVEMENT, 9" HMA OVER 12" CRBC SEE SECTION A ON C3.2
- 17.30 — FINISH GRADE SPOT ELEVATION
- 0.7% — FINISH GRADE SLOPE
- XX — PAVEMENT HORIZONTAL CONTROL POINT (SEE C3.22 FOR PAVEMENT HORIZONTAL CONTROL SCHEDULE)

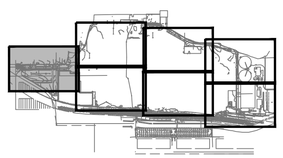

KEYMAP

N

30' 0 30' 60'
15' 45'

SCALE: 1"=30'

CALL 48 HOURS BEFORE YOU DIG DIAL 811

VERT DATUM: NAVD 88
CONV TO MLLW = NAVD88+2.03
HORZ DATUM: NAD 83/91

IF SHEET IS LESS THAN 22x34 REDUCE SCALE ACCORDINGLY

Port of EVERETT
P.O. BOX 538
EVERETT, WA 98206
(425) 259-3164

kpff
1601 5th Avenue, Suite 1300
Seattle, Washington 98101
(206) 382-0600 Fax (206) 382-0500
PROJECT NO. 1600120

NO.	DATE	BY	REVISION
4	07/05/2023	NW	AS-BUILT
3	12/02/2021	JB	DELETE ECOLOGY BLOCK WALL, ADD EX WHS GRAVEL PAD CONTOURS AND UPDATE FINAL GRADES & PAVEMENT COORDINATES
2	08/26/2021	NW	REVISED PER CITY COMMENTS
1	06/21/2021	NW	ISSUED FOR BID
0	05/07/2021	NW	FOR CITY REVIEW

RECORD CONDITIONS ILLUSTRATED IN THESE PLANS REFLECT INFORMATION PROVIDED BY THE CONTRACTOR. RECORD CONDITIONS WERE NOT VERIFIED BY ENGINEER.

PROJECT ENGINEER: N. WATSON	SCALE: 1" = 30'
DESIGNED BY: J. BECKER	DATE: 05/07/2021
DRAWN BY: K. EDWARDS, D. YU	CHECKED BY: N. WATSON
APPROVED BY:	

PORT OF EVERETT

NORTON TERMINAL DEVELOPMENT & MTCA 3RD INTERIM ACTION GRADING DETAIL PLAN (1 OF 7)

DWG. NO. **C3.4**
CIP NO. 1-8-900-05
PROJECT NO. MT-NT-2021-02.2
SHEET NO. 32 OF 150

AS-BUILTS

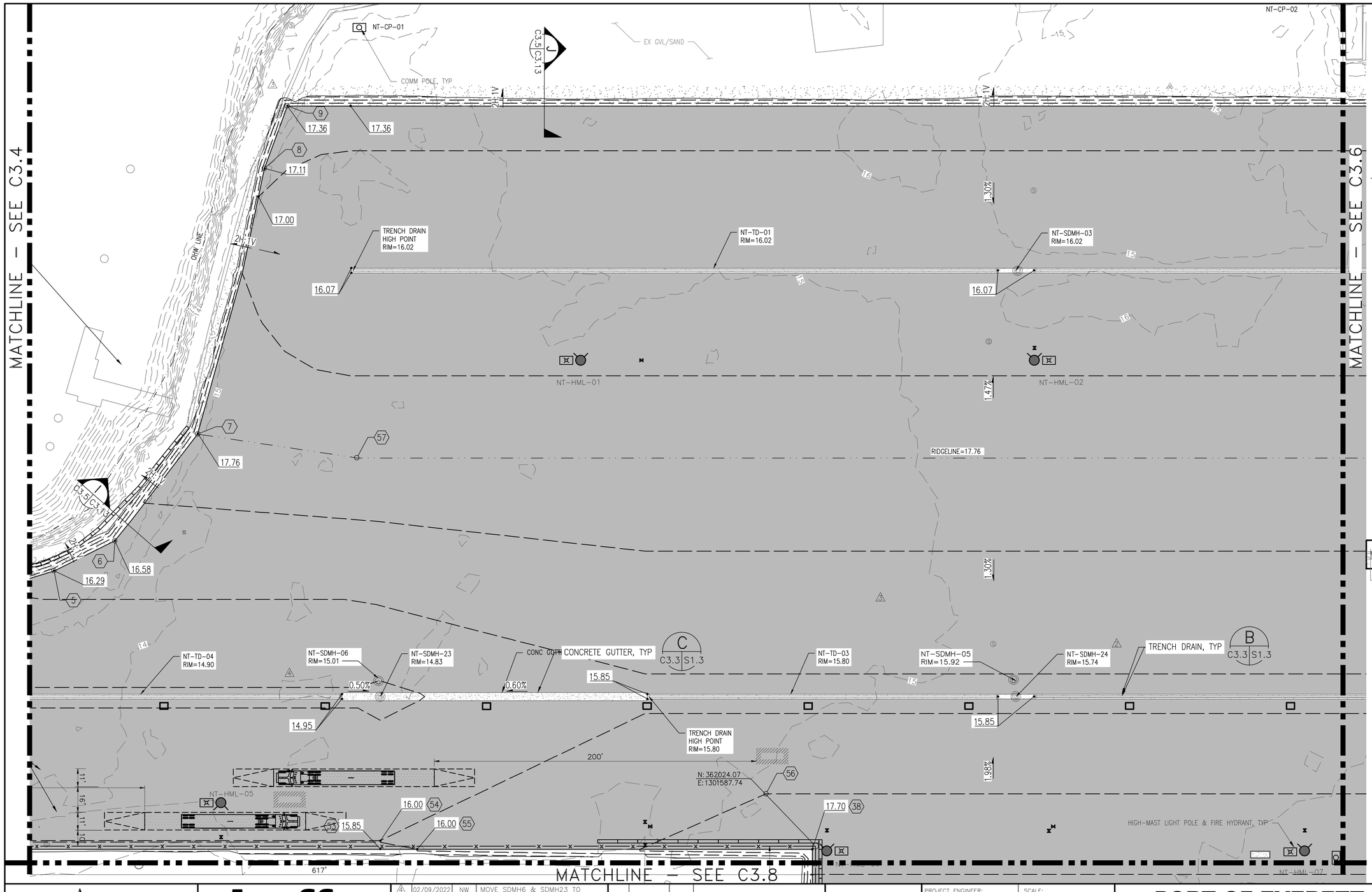

NOTES

1. SEAL ALL LONGITUDINAL AND TRANSVERSE JOINTS BETWEEN NEW REPLACEMENT AND EXISTING PAVEMENTS PER SPECIFICATIONS.
2. ADJUST EXISTING MANHOLE, HANDHOLE, INLET RIM, AND/OR VALVE COVER TO GRADE PRIOR TO PAVING. PROTECT-IN-PLACE.

LEGEND

- HMA PAVEMENT, 9" HMA OVER 12" CRBC SEE SECTION A ON C3.2
- 17.30 — FINISH GRADE SPOT ELEVATION
- 0.7% — FINISH GRADE SLOPE
- XX — PAVEMENT HORIZONTAL CONTROL POINT (SEE C3.22 FOR PAVEMENT HORIZONTAL CONTROL SCHEDULE)

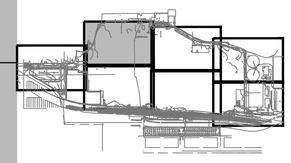

KEYMAP

N

30' 0 30' 60'
15' 45'

SCALE: 1"=30'

CALL 48 HOURS BEFORE YOU DIG DIAL 811

VERT DATUM: NAVD 88
CONV TO MLLW = NAVD88+2.03
HORZ DATUM: NAD 83/91

IF SHEET IS LESS THAN 22x34 REDUCE SCALE ACCORDINGLY

Port of EVERETT
P.O. BOX 538
EVERETT, WA 98206
(425) 259-3164

kpff
1601 5th Avenue, Suite 1300
Seattle, Washington 98101
(206) 382-0600 Fax (206) 382-0500
PROJECT NO. 1600120

NO.	DATE	BY	REVISION
4	02/09/2022	NW	MOVE SDMH6 & SDMH23 TO AVOID WOOD STAVE PIPE
3	12/02/2021	JB	DELETE ECOLOGY BLOCK WALL, ADD EX WHS GRAVEL PAD CONTOURS AND UPDATE FINAL GRADES & PAVEMENT COORDINATES
2	09/27/2021	NW	REVISED PER RFI010 & WHSE GVL YARD DRAINAGE
1	06/21/2021	NW	ISSUED FOR BID
0	05/07/2021	NW	FOR CITY REVIEW
5	07/05/2023	NW	AS-BUILT

RECORD CONDITIONS ILLUSTRATED IN THESE PLANS REFLECT INFORMATION PROVIDED BY THE CONTRACTOR. RECORD CONDITIONS WERE NOT VERIFIED BY ENGINEER.

PROJECT ENGINEER: N. WATSON	SCALE: 1" = 30'
DESIGNED BY: J. BECKER	DATE: 05/07/2021
DRAWN BY: K. EDWARDS, D. YU	CHECKED BY: N. WATSON
APPROVED BY:	

PORT OF EVERETT

NORTON TERMINAL DEVELOPMENT & MTCA 3RD INTERIM ACTION GRADING DETAIL PLAN (2 OF 7)

DWG. NO. **C3.5**

CIP NO. 1-8-900-05

PROJECT NO. MT-NT-2021-02.2

SHEET NO. 33 OF 150

AS-BUILTS

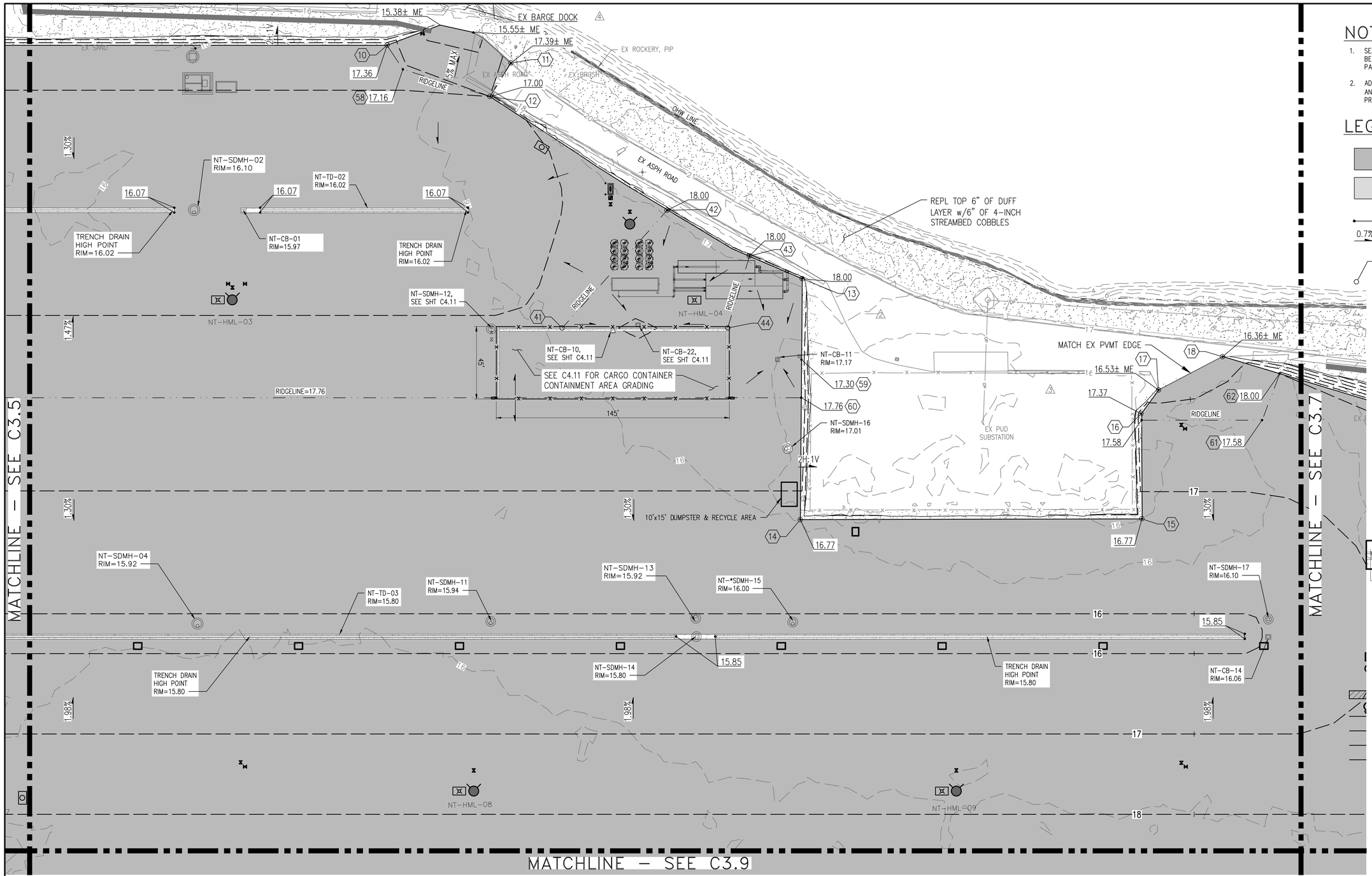

NOTES

1. SEAL ALL LONGITUDINAL AND TRANSVERSE JOINTS BETWEEN NEW REPLACEMENT AND EXISTING PAVEMENTS PER SPECIFICATIONS.
2. ADJUST EXISTING MANHOLE, HANDHOLE, INLET RIM, AND/OR VALVE COVER TO GRADE PRIOR TO PAVING. PROTECT-IN-PLACE.

LEGEND

- HMA PAVEMENT, 9" HMA OVER 12" CRBC SEE SECTION A ON C3.2 (3)
- TEMPORARY 2" PVMT NOT USED
- 17.30 FINISH GRADE SPOT ELEVATION
- 0.7% FINISH GRADE SLOPE
- XX PAVEMENT HORIZONTAL CONTROL POINT (SEE C3.22 FOR PAVEMENT HORIZONTAL CONTROL SCHEDULE)

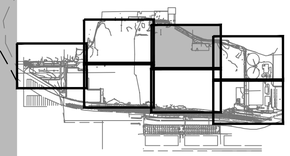

KEYMAP

N

30' 0 30' 60'
15' 45'

SCALE: 1"=30'

CALL 48 HOURS BEFORE YOU DIG DIAL 811

VERT DATUM: NAVD 88
CONV TO MLLW = NAVD88+2.03
HORZ DATUM: NAD 83/91

IF SHEET IS LESS THAN 22x34 REDUCE SCALE ACCORDINGLY

Port of EVERETT
P.O. BOX 538
EVERETT, WA 98206
(425) 259-3164

kpff
1601 5th Avenue, Suite 1300
Seattle, Washington 98101
(206) 382-0600 Fax (206) 382-0500
PROJECT NO. 1600120

NO.	DATE	BY	REVISION
4	12/02/2021	JB	DELETE ECOLOGY BLOCK WALL, ADD EX WHS GRAVEL PAD CONTOURS AND UPDATE FINAL GRADES & PAVEMENT COORDINATES
3	12/02/2021	NW	2-INCH TO 9-INCH PVMT
2	07/28/2021	NW	ADDENDUM 4
1	06/21/2021	NW	ISSUED FOR BID
0	05/07/2021	NW	FOR CITY REVIEW

NO.	DATE	BY	REVISION
A	07/05/2023	NW	AS-BUILT

RECORD CONDITIONS ILLUSTRATED IN THESE PLANS REFLECT INFORMATION PROVIDED BY THE CONTRACTOR. RECORD CONDITIONS WERE NOT VERIFIED BY ENGINEER.

PROJECT ENGINEER: N. WATSON	SCALE: 1" = 30'
DESIGNED BY: J. BECKER	DATE: 05/07/2021
DRAWN BY: K. EDWARDS, D. YU	CHECKED BY: N. WATSON
APPROVED BY:	

PORT OF EVERETT

NORTON TERMINAL DEVELOPMENT & MTCA 3RD INTERIM ACTION GRADING DETAIL PLAN (3 OF 7)

DWG. NO. **C3.6**

CIP NO. 1-8-900-05

PROJECT NO. MT-NT-2021-02.2

SHEET NO. 34 OF 150

AS-BUILTS

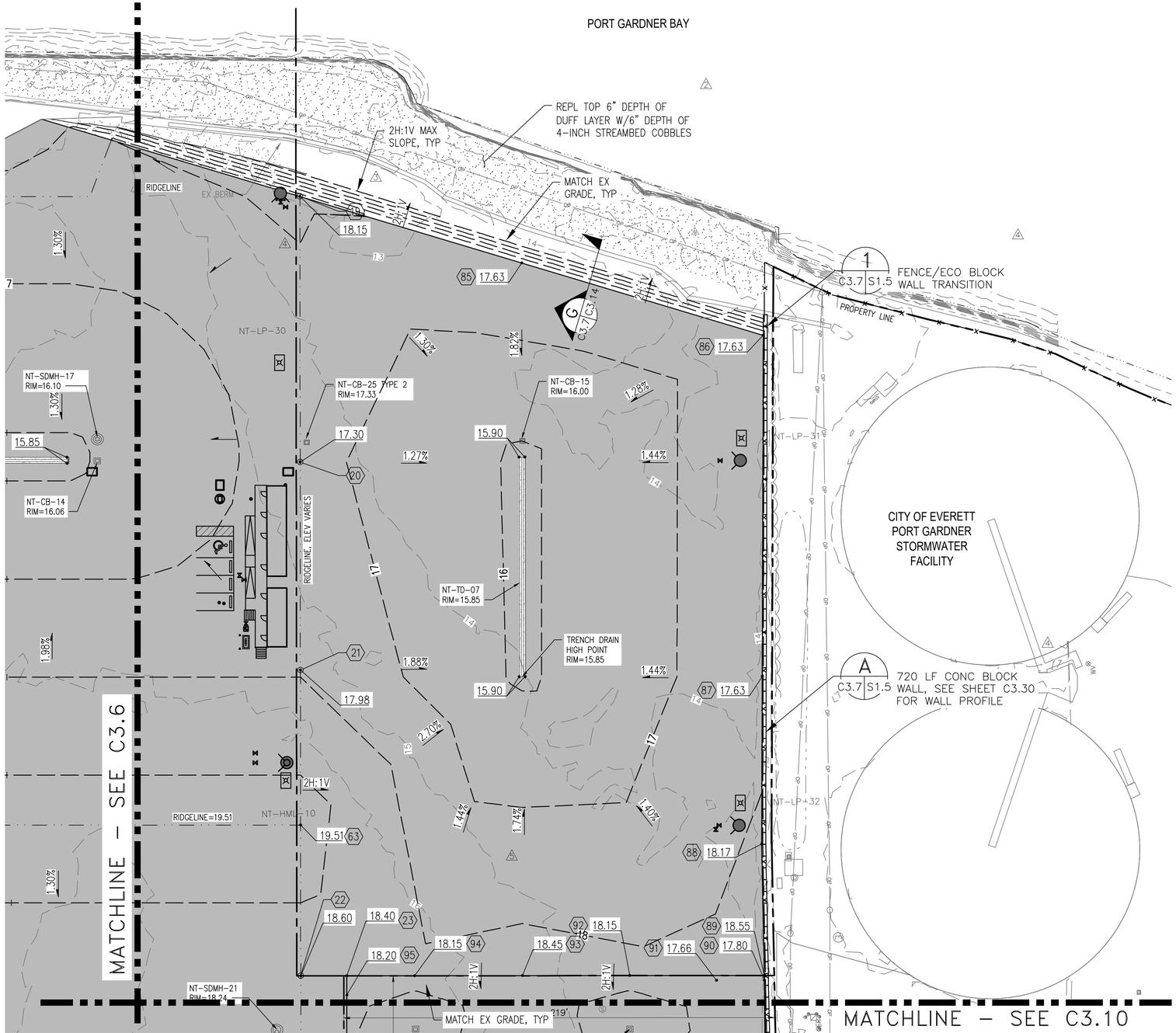

NOTES

1. SEAL ALL LONGITUDINAL AND TRANSVERSE JOINTS BETWEEN NEW REPLACEMENT AND EXISTING PAVEMENTS PER SPECIFICATIONS.
2. SURFACE OF FUTURE MARITIME SITE SHALL CONSIST OF 12-INCH THICK COMPACTED CSBC OVER COMPACTED SUBGRADE.
3. SEE SHEET C3.10A FOR FILL AND FINAL PAVEMENT GRADES

LEGEND

- HMA PAVEMENT, 9" HMA OVER 12" CRBC SEE SECTION A ON C3.2
- TEMPORARY 2" PVMT NOT USED
- 17.30 FINISH GRADE SPOT ELEVATION
- 0.7% FINISH GRADE SLOPE
- XX PAVEMENT HORIZONTAL CONTROL POINT (SEE C3.22 FOR PAVEMENT HORIZONTAL CONTROL SCHEDULE)

KEYMAP

N

30' 0 30' 60'
15' 45'

SCALE: 1"=30'

CALL 48 HOURS BEFORE YOU DIG DIAL 811

VERT DATUM: NAVD 88
CONV TO MLLW = NAVD88+2.03
HORZ DATUM: NAD 83/91

IF SHEET IS LESS THAN 22x34 REDUCE SCALE ACCORDINGLY

Port of EVERETT
P.O. BOX 538
EVERETT, WA 98206
(425) 259-3164

kpff
1601 5th Avenue, Suite 1300
Seattle, Washington 98101
(206) 382-0600 Fax (206) 382-0500
PROJECT NO. 1600120

NO.	DATE	BY	REVISION
6	07/05/2023	NW	AS-BUILT
5	06/29/2022	NW	SUBSTATION SITE DEVELOPMENT
4	04/08/2022	NW	MARITIME TENANT SITE DEVELOPMENT
3	12/02/2021	NW	2-INCH TO 9-INCH PVMT
2	07/09/2021	NW	ADDENDUM 1
1	06/21/2021	NW	ISSUED FOR BID
0	05/07/2021	NW	FOR CITY REVIEW

RECORD CONDITIONS ILLUSTRATED IN THESE PLANS REFLECT INFORMATION PROVIDED BY THE CONTRACTOR. RECORD CONDITIONS WERE NOT VERIFIED BY ENGINEER.

PROJECT ENGINEER: N. WATSON	SCALE: 1" = 30'
DESIGNED BY: J. BECKER	DATE: 05/07/2021
DRAWN BY: K. EDWARDS, D. YU	CHECKED BY: N. WATSON
APPROVED BY:	

PORT OF EVERETT

NORTON TERMINAL DEVELOPMENT & MTCA 3RD INTERIM ACTION GRADING DETAIL PLAN (4 OF 7)

DWG. NO. **C3.7**
CIP NO. 1-8-900-05
PROJECT NO. MT-NT-2021-02.2
SHEET NO. 35 OF 150

AS-BUILTS

MATCHLINE – SEE C3.5

MATCHLINE – SEE C3.4

MATCHLINE – SEE C3.6

HIGH-MAST LIGHT POLE & FIRE HYDRANT, TYP

NT-HML-06

17.70

18.13 TOP
17.71 FG

18.13 TOP
17.80 FG

18.13 TOP
17.71 FG

18.13 TOP
17.80 FG

D
C3.8 S1.3

ELECTRICAL EQUIPMENT PAD

1.98%

RIDGELINE=19.51

1.27%

2H:1V

EX CONTAINER STORAGE PAD

WAREHOUSE TENANT LEASEHOLD

TRENCH DRAIN
HIGH POINT
RIM=18.03

18.08

D
C3.8 C3.14

18.08

18.08

NT-SDMH-10
RIM=18.03

TRENCH DRAIN, TYP

B
C3.8 S1.3

18.08

E
C3.8 S1.3

5' WIDE CONCRETE
GUTTER, TYP

NT-CB-06
RIM=19.90

NT-CB-05
RIM=19.90

20.14 HP

16.27± EG

20.21

20.13 FL

0.50%

0.50%

0.50%

0.50%

20.13

37

36

20.21

E
C3.8 S1.3

1.96%

NT-CB-04
RIM=19.89

NT-HML-11

21.20

20.90

64

RIDGELINE=20.90

CONCRETE GUTTER, TYP

C
C3.8 S1.3

51

20.4'

20.90

65

66

20.90 HP

CONC GUTTER, TYP

68

20.90 HP

0.50%

0.50%

0.50%

0.50%

EX WAREHOUSE BLDG

52

21.05

NT-CB-09
RIM=20.30

NT-CB-08
RIM=20.30

A
C3.8 S1.4

35

18

34

21.60

21.60

21.60

67

21.60

21.60

PROPERTY LINE

NOTES

1. SEAL ALL LONGITUDINAL AND TRANSVERSE JOINTS BETWEEN NEW REPLACEMENT AND EXISTING PAVEMENTS PER SPECIFICATIONS.
2. ADJUST EXISTING MANHOLE, HANDHOLE, INLET RIM, AND/OR VALVE COVER TO GRADE PRIOR TO PAVING. PROTECT-IN-PLACE.

LEGEND

- HMA PAVEMENT, 9" HMA OVER 12" CRBC SEE SECTION A ON C3.2
- 17.30 — FINISH GRADE SPOT ELEVATION
- 0.7% — FINISH GRADE SLOPE
- XX — PAVEMENT HORIZONTAL CONTROL POINT (SEE C3.22 FOR PAVEMENT HORIZONTAL CONTROL SCHEDULE)

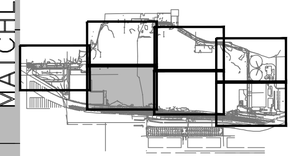

KEYMAP

N

30' 0 30' 60'
15' 45'

SCALE: 1"=30'

CALL 48 HOURS BEFORE YOU DIG DIAL 811

VERT DATUM: NAVD 88
CONV TO MLLW = NAVD88+2.03
HORZ DATUM: NAD 83/91

IF SHEET IS LESS THAN 22x34 REDUCE SCALE ACCORDINGLY

Port of EVERETT
P.O. BOX 538
EVERETT, WA 98206
(425) 259-3164

kpff
1601 5th Avenue, Suite 1300
Seattle, Washington 98101
(206) 382-0600 Fax (206) 382-0500
PROJECT NO. 1600120

NO.	DATE	BY	REVISION
4	07/05/2023	NW	AS-BUILT
3	12/02/2021	JB	DELETE ECOLOGY BLOCK WALL, ADD EX WHS GRAVEL PAD CONTOURS AND UPDATE FINAL GRADES & PAVEMENT COORDINATES
2	11/11/2021	NW	REVISED PER RFI030
1	06/21/2021	NW	ISSUED FOR BID
0	05/07/2021	NW	FOR CITY REVIEW

RECORD CONDITIONS ILLUSTRATED IN THESE PLANS REFLECT INFORMATION PROVIDED BY THE CONTRACTOR. RECORD CONDITIONS WERE NOT VERIFIED BY ENGINEER.

PROJECT ENGINEER: N. WATSON	SCALE: 1" = 30'
DESIGNED BY: J. BECKER	DATE: 05/07/2021
DRAWN BY: K. EDWARDS, D. YU	CHECKED BY: N. WATSON
APPROVED BY:	

PORT OF EVERETT

NORTON TERMINAL DEVELOPMENT & MTCA 3RD INTERIM ACTION GRADING DETAIL PLAN (5 OF 7)

DWG. NO. **C3.8**

CIP NO. 1-8-900-05

PROJECT NO. MT-NT-2021-02.2

SHEET NO. 36 OF 150

AS-BUILTS

MATCHLINE – SEE C3.6

MATCHLINE – SEE C3.8

MATCHLINE – SEE C3.10

1.98%

RIDGELINE=19.51

1.27%

19

TD5
RIM=18.03

TRENCH DRAIN
HIGH POINT
RIM=18.03

TRENCH DRAIN, TYP

B
C3.9 S1.3

NT–SDMH–18
RIM=18.17

NT–SDMH–19
RIM=18.03

18.08

TRENCH DRAIN
HIGH POINT
RIM=18.03

NT–HML–12

NT–HML–13

NT–HML–14

CONCRETE GUTTER, TYP

C
C3.9 S1.3

RIDGELINE=20.90

20.90

70

BREAKLINE

1.22%

L=255.600, R=603.800
Δ=24.2544

RIDGELINE

20.90 HP

71

0.50%

NT–CB–07
RIM=20.30

NT–CB–18
RIM=20.30

0.90%

21.70 HP

74

84

21.75

75

1.55%

20

TRENCH DRAIN
HIGH POINT
RIM=19.45

NT–TD–06
RIM=19.45

19.50

20.90

77

69

22.25

21.60

33

22.50

32

72

73

76

21.20

78

1.37%

RELOCATED FLAG POLE &
CONC BASE, SEE SHT D1.7

2–15FT SERVICE
SWING GATES

4' PERSC

NT NORTI

BNSF RAILROAD R.O.W.

PROPERTY LINE

NOTES

1. SEAL ALL LONGITUDINAL AND TRANSVERSE JOINTS BETWEEN NEW REPLACEMENT AND EXISTING PAVEMENTS PER SPECIFICATIONS.
2. ADJUST EXISTING MANHOLE, HANDHOLE, INLET RIM, AND/OR VALVE COVER TO GRADE PRIOR TO PAVING. PROTECT–IN–PLACE.

LEGEND

- HMA PAVEMENT, 9" HMA OVER 12" CRBC SEE SECTION A ON C3.2 (2)
- TEMPORARY 2" PVMT NOT USED
- 17.30 — FINISH GRADE SPOT ELEVATION
- 0.7% — FINISH GRADE SLOPE
- XX — PAVEMENT HORIZONTAL CONTROL POINT (SEE C3.22 FOR PAVEMENT HORIZONTAL CONTROL SCHEDULE)

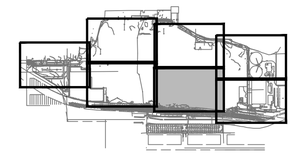

KEYMAP

N

30' 0 30' 60'
15' 45'

SCALE: 1"=30'

CALL 48 HOURS BEFORE YOU DIG DIAL 811

VERT DATUM: NAVD 88
CONV TO MLLW = NAVD88+2.03
HORZ DATUM: NAD 83/91

IF SHEET IS LESS THAN 22x34 REDUCE SCALE ACCORDINGLY

Port of EVERETT
P.O. BOX 538
EVERETT, WA 98206
(425) 259–3164

kpff
1601 5th Avenue, Suite 1300
Seattle, Washington 98101
(206) 382-0600 Fax (206) 382-0500
PROJECT NO. 1600120

NO.	DATE	BY	REVISION
3	07/05/2023	NW	AS–BUILT
2	12/02/2021	NW	2–INCH TO 9–INCH PVMT
1	06/21/2021	NW	ISSUED FOR BID
0	05/07/2021	NW	FOR CITY REVIEW

RECORD CONDITIONS ILLUSTRATED IN THESE PLANS REFLECT INFORMATION PROVIDED BY THE CONTRACTOR. RECORD CONDITIONS WERE NOT VERIFIED BY ENGINEER.

PROJECT ENGINEER: N. WATSON	SCALE: 1" = 30'
DESIGNED BY: J. BECKER	DATE: 05/07/2021
DRAWN BY: K. EDWARDS, D. YU	CHECKED BY: N. WATSON
APPROVED BY:	

PORT OF EVERETT

NORTON TERMINAL DEVELOPMENT & MTCA 3RD INTERIM ACTION GRADING DETAIL PLAN (6 OF 7)

DWG. NO. **C3.9**

CIP NO. 1–8–900–05

PROJECT NO. MT–NT–2021–02.2

SHEET NO. 37 OF 150

AS-BUILTS

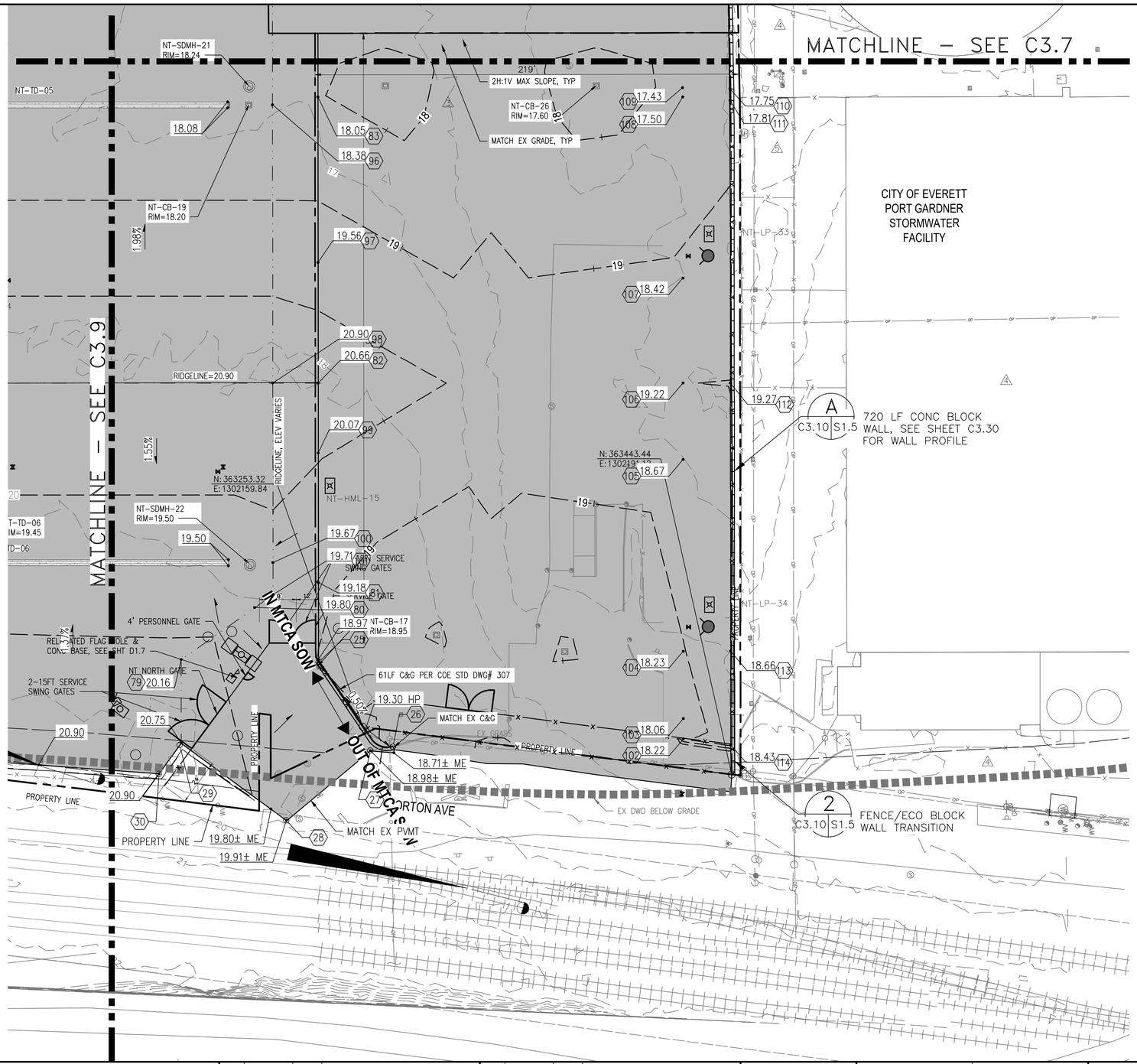

NOTES

1. SEAL ALL LONGITUDINAL AND TRANSVERSE JOINTS BETWEEN NEW REPLACEMENT AND EXISTING PAVEMENTS PER SPECIFICATIONS.
2. ADJUST EXISTING MANHOLE, HANDHOLE, INLET RIM, AND/OR VALVE COVER TO GRADE PRIOR TO PAVING. PROTECT-IN-PLACE.
3. SEE SHEET C3.10A FOR FILL AND FINAL PAVEMENT GRADES.

LEGEND

- HMA PAVEMENT, 9" HMA OVER 12" CRBC SEE SECTION A ON C3.2
- 12" CRBC
- 17.30 — FINISH GRADE SPOT ELEVATION
- 0.7% — FINISH GRADE SLOPE
- XX — PAVEMENT HORIZONTAL CONTROL POINT (SEE C3.22 FOR PAVEMENT HORIZONTAL CONTROL SCHEDULE)

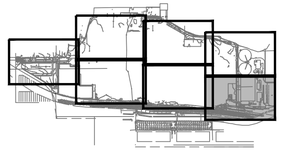

KEYMAP

30' 0 30' 60'
15' 45'

SCALE: 1"=30'

CALL 48 HOURS BEFORE YOU DIG DIAL 811

VERT DATUM: NAVD 88
CONV TO MLLW = NAVD88+2.03
HORZ DATUM: NAD 83/91

IF SHEET IS LESS THAN 22x34 REDUCE SCALE ACCORDINGLY

Port of EVERETT
P.O. BOX 538
EVERETT, WA 98206
(425) 259-3164

kpff
1601 5th Avenue, Suite 1300
Seattle, Washington 98101
(206) 382-0600 Fax (206) 382-0500
PROJECT NO. 1600120

NO.	DATE	BY	REVISION
5	07/05/2023	NW	AS-BUILT
5	06/29/2022	NW	SUBSTATION SITE DEVELOPMENT
4	04/08/2022	NW	MARITIME TENANT SITE DEVELOPMENT
3	12/02/2021	NW	2-INCH TO 9-INCH PVMT
2	07/09/2021	NW	ADDENDUM 1
1	06/21/2021	NW	ISSUED FOR BID
0	05/07/2021	NW	FOR CITY REVIEW

RECORD CONDITIONS ILLUSTRATED IN THESE PLANS REFLECT INFORMATION PROVIDED BY THE CONTRACTOR. RECORD CONDITIONS WERE NOT VERIFIED BY ENGINEER.

PROJECT ENGINEER: N. WATSON	SCALE: 1" = 30'
DESIGNED BY: J. BECKER	DATE: 05/07/2021
DRAWN BY: K. EDWARDS, D. YU	CHECKED BY: N. WATSON
APPROVED BY:	

PORT OF EVERETT

NORTON TERMINAL DEVELOPMENT & MTCA 3RD INTERIM ACTION GRADING DETAIL PLAN (7 OF 7)

DWG. NO. **C3.10**

CIP NO. 1-8-900-05

PROJECT NO. MT-NT-2021-02.2

SHEET NO. 38 OF 150

AS-BUILTS

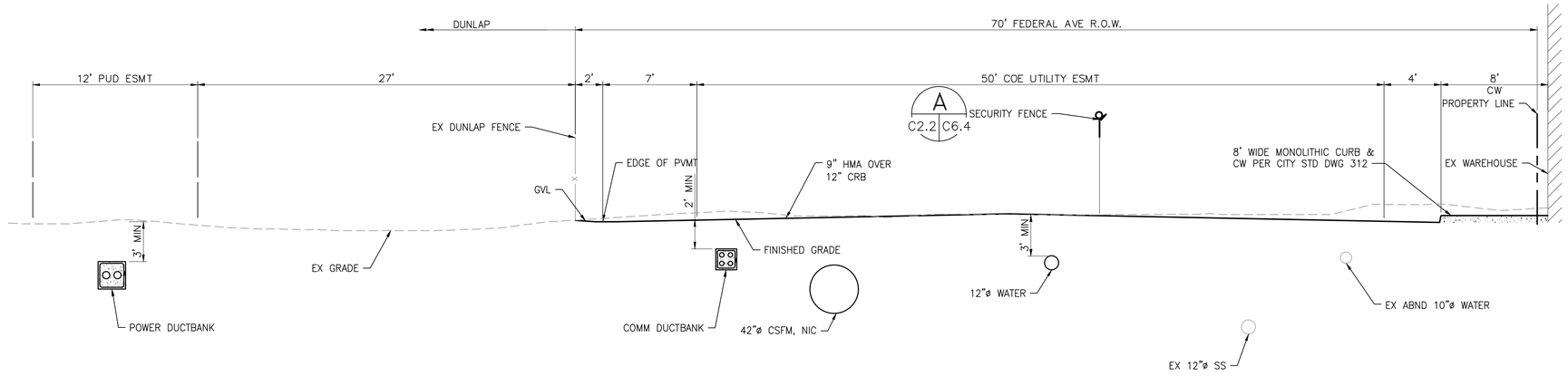

A SECTION
C2.1, C3.3, C4.1 C3.11 SCALE: 1" = 5' HORIZ, 1"=5' VERT

5' 0 5' 10'
2.5' 7.5'

CALL 48 HOURS
BEFORE YOU DIG
DIAL 811

VERT DATUM: NAVD 88
CONV TO MLLW = NAVD88+2.03
HORZ DATUM: NAD 83/91

IF SHEET IS LESS THAN 22x34
REDUCE SCALE ACCORDINGLY

Port of EVERETT
P.O. BOX 538
EVERETT, WA 98206
(425) 259-3164

kpff
1601 5th Avenue, Suite 1300
Seattle, Washington 98101
(206) 382-0600 Fax (206) 382-0500
PROJECT NO. 1600120

NO.	DATE	BY	REVISION
2	07/05/2023	NW	AS-BUILT
1	06/21/2021	NW	ISSUED FOR BID
0	05/07/2021	NW	FOR CITY REVIEW

NO.	DATE	BY	REVISION

RECORD CONDITIONS ILLUSTRATED IN THESE PLANS REFLECT INFORMATION PROVIDED BY THE CONTRACTOR. RECORD CONDITIONS WERE NOT VERIFIED BY ENGINEER.

PROJECT ENGINEER: N. WATSON	SCALE: AS SHOWN
DESIGNED BY: J. BECKER	DATE: 05/07/2021
DRAWN BY: K. EDWARDS, D. YU	CHECKED BY: N. WATSON
APPROVED BY:	

PORT OF EVERETT

NORTON TERMINAL DEVELOPMENT
& MTCA 3RD INTERIM ACTION
SITE SECTIONS
(1 OF 4)

DWG. NO. **C3.11**
CIP NO. 1-8-900-05
PROJECT NO. MT-NT-2021-02.2
SHEET NO. 39 OF 150

AS-BUILTS

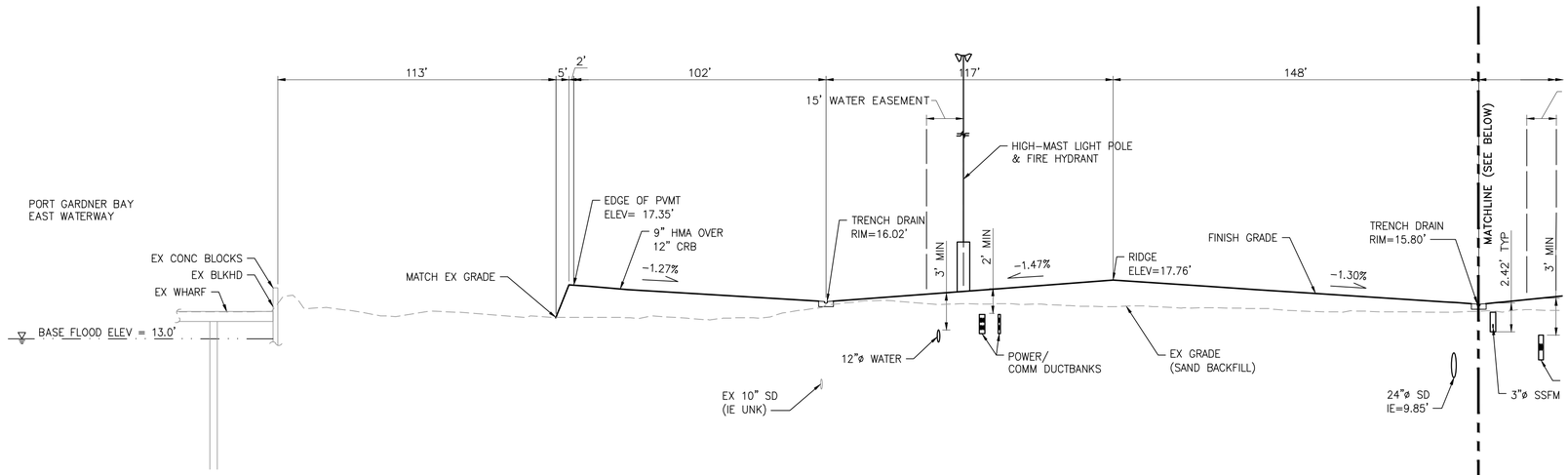

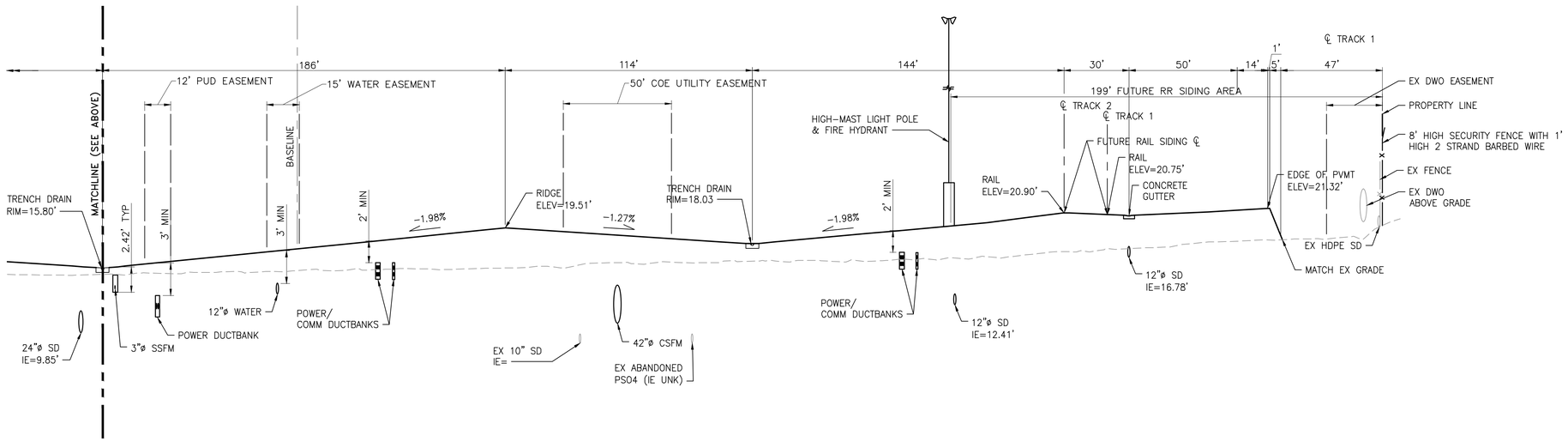

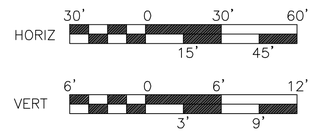

B SECTION

C2.1, C3.3, C4.1 C3.12 SCALE: 1"=30' HORIZ, 1"=6' VERT

CALL 48 HOURS
BEFORE YOU DIG
DIAL 811

VERT DATUM: NAVD 88
CONV TO MLLW = NAVD88+2.03
HORZ DATUM: NAD 83/91

IF SHEET IS LESS THAN 22x34
REDUCE SCALE ACCORDINGLY

Port of EVERETT
P.O. BOX 538
EVERETT, WA 98206
(425) 259-3164

kpff
1601 5th Avenue, Suite 1300
Seattle, Washington 98101
(206) 382-0600 Fax (206) 382-0500
PROJECT NO. 1600120

NO.	DATE	BY	REVISION
2	07/05/2023	NW	AS-BUILT
1	06/21/2021	NW	ISSUED FOR BID
0	05/07/2021	NW	FOR CITY REVIEW

NO.	DATE	BY	REVISION

RECORD CONDITIONS ILLUSTRATED IN THESE PLANS REFLECT INFORMATION PROVIDED BY THE CONTRACTOR. RECORD CONDITIONS WERE NOT VERIFIED BY ENGINEER.

PROJECT ENGINEER: N. WATSON	SCALE: AS SHOWN
DESIGNED BY: J. BECKER	DATE: 05/07/2021
DRAWN BY: K. EDWARDS, D. YU	CHECKED BY: N. WATSON
APPROVED BY:	

PORT OF EVERETT

NORTON TERMINAL DEVELOPMENT
& MTCA 3RD INTERIM ACTION
SITE SECTIONS
(2 OF 4)

DWG. NO. **C3.12**
CIP NO. 1-8-900-05
PROJECT NO. MT-NT-2021-02.2
SHEET NO. 40 OF 150

AS-BUILTS

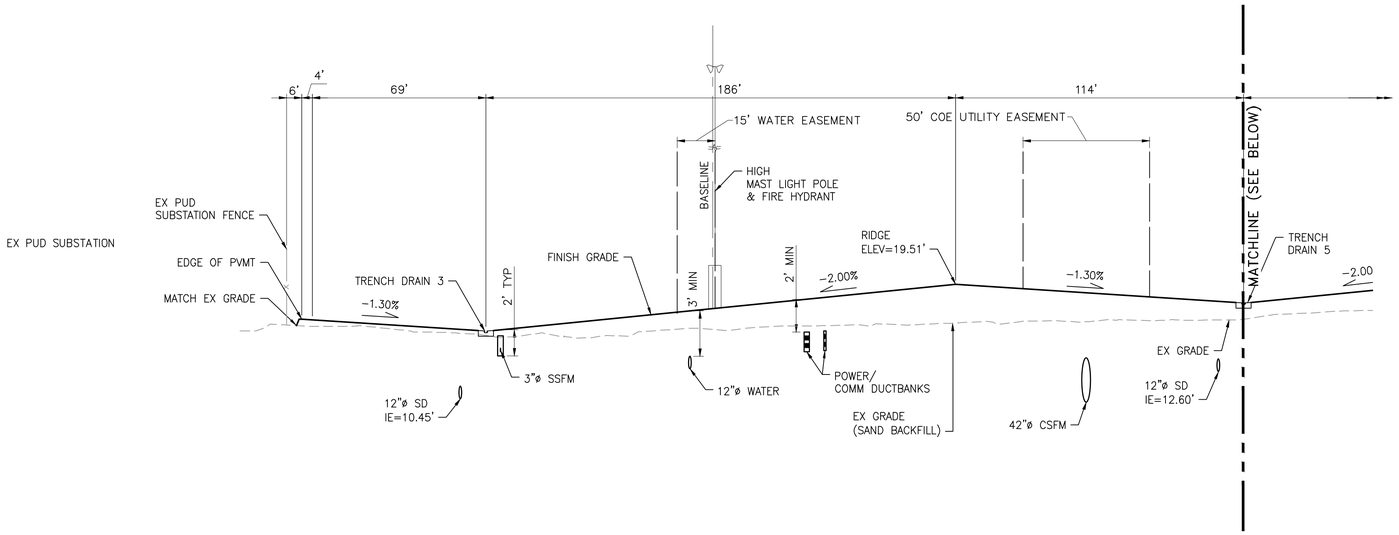

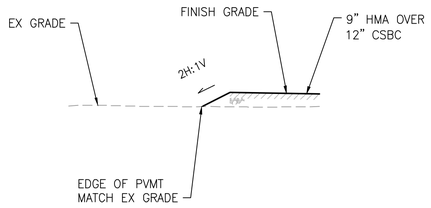

I SECTION

C3.5 C3.13 SCALE: 1"=10' HORIZ, 1"=10' VERT

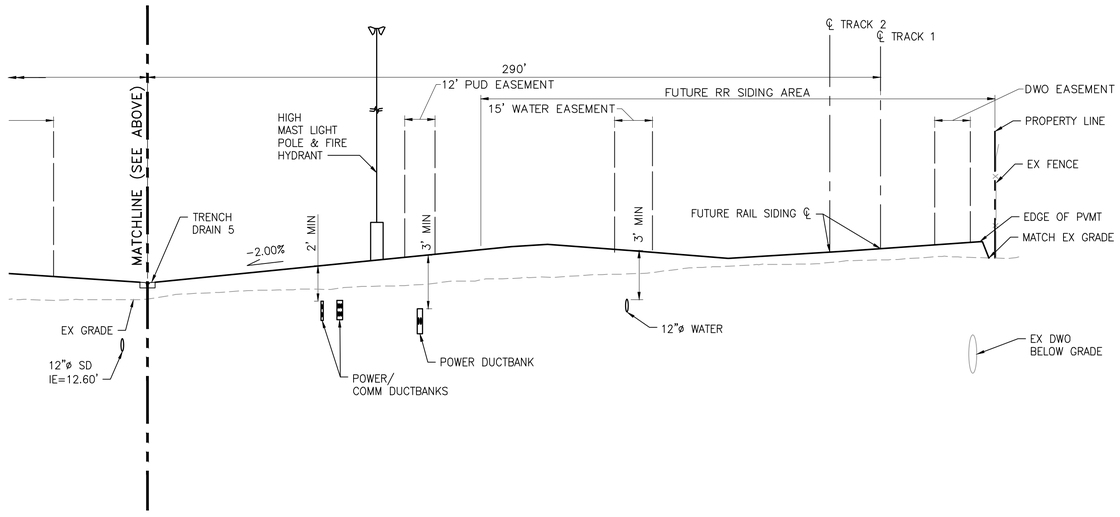

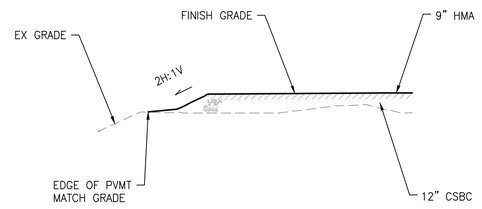

J SECTION

C3.5 C3.13 SCALE: 1"=10' HORIZ, 1"=10' VERT

HORIZ, VERT 10' 0 10' 20' / 5' 15'

C SECTION

C2.1, C3.3, C4.1 C3.13 SCALE: 1"=30' HORIZ, 1"=6' VERT

HORIZ 30' 0 30' 60' / 15' 45'

VERT 6' 0 6' 12' / 3' 9'

CALL 48 HOURS BEFORE YOU DIG DIAL 811

VERT DATUM: NAVD 88
CONV TO MLLW = NAVD88+2.03
HORZ DATUM: NAD 83/91

IF SHEET IS LESS THAN 22x34 REDUCE SCALE ACCORDINGLY

Port of EVERETT
P.O. BOX 538
EVERETT, WA 98206
(425) 259-3164

kpff
1601 5th Avenue, Suite 1300
Seattle, Washington 98101
(206) 382-0600 Fax (206) 382-0500
PROJECT NO. 1600120

NO.	DATE	BY	REVISION
3	07/05/2023	NW	AS-BUILT
2	12/02/2021	NW	2-INCH TO 9-INCH PVMT
1	06/21/2021	NW	ISSUED FOR BID
0	05/07/2021	NW	FOR CITY REVIEW

NO.	DATE	BY	REVISION

RECORD CONDITIONS ILLUSTRATED IN THESE PLANS REFLECT INFORMATION PROVIDED BY THE CONTRACTOR. RECORD CONDITIONS WERE NOT VERIFIED BY ENGINEER.

PROJECT ENGINEER:	SCALE:
N. WATSON	AS SHOWN
DESIGNED BY:	DATE:
J. BECKER	05/07/2021
DRAWN BY:	CHECKED BY:
K. EDWARDS, D. YU	N. WATSON
APPROVED BY:	

PORT OF EVERETT

NORTON TERMINAL DEVELOPMENT & MTCA 3RD INTERIM ACTION SITE SECTIONS (3 OF 4)

DWG. NO. **C3.13**

CIP NO. 1-8-900-05

PROJECT NO. MT-NT-2021-02.2

SHEET NO. 41 OF 150

AS-BUILTS

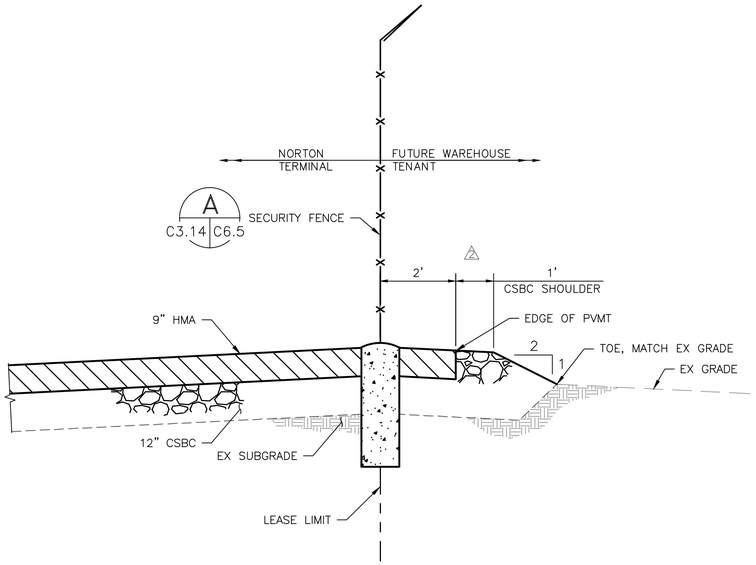

D SECTION – WAREHOUSE NORTH YARD
C2.1 C3.14 SCALE: 1" = 2'

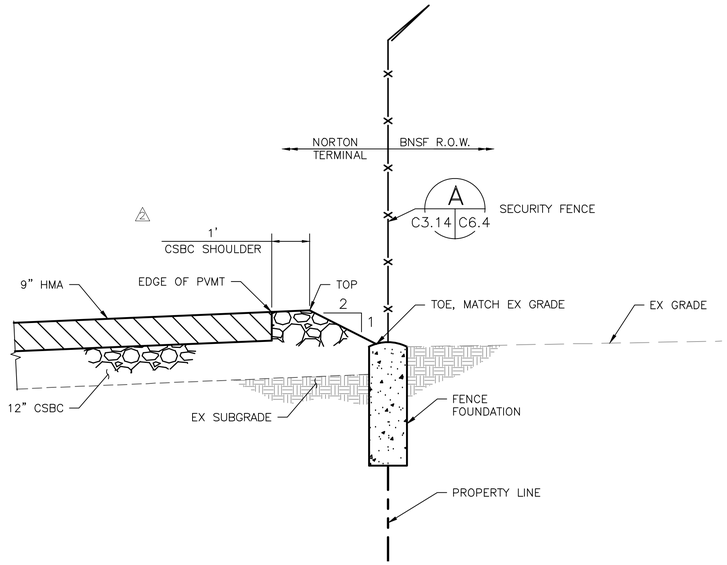

E SECTION – EASTERN FENCE
C2.1 C3.14 SCALE: 1" = 2'

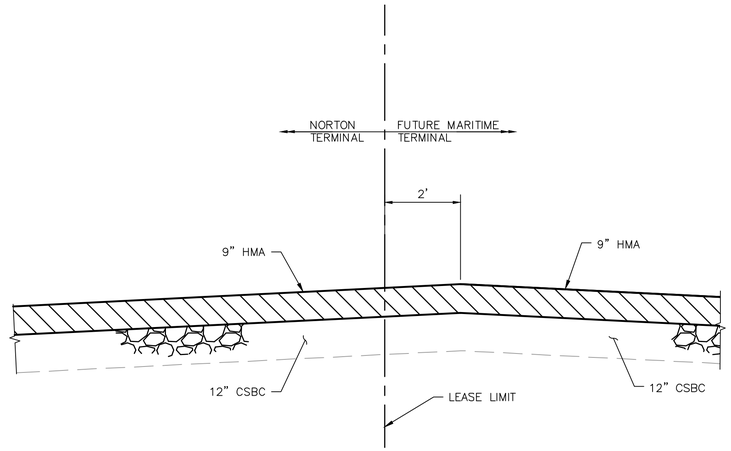

I SECTION – FUTURE MARINE TENANT LEASE LINE
C2.1 C3.14

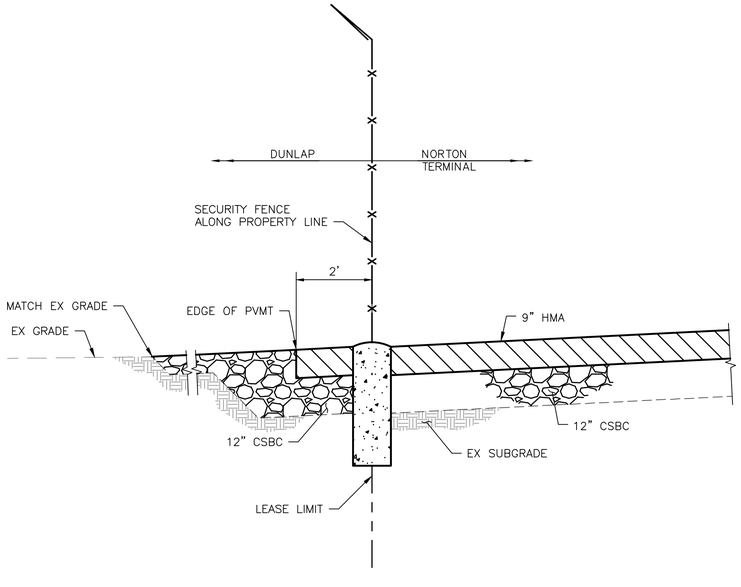

F SECTION – DUNLAP NORTH FENCE
C2.1 C3.14 SCALE: 1" = 2'

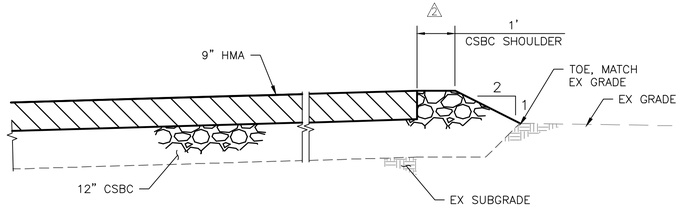

G SECTION – PAVEMENT EDGE TRANSITION
C3.7, C3.10 C3.14 SCALE: 1" = 2'

CALL 48 HOURS BEFORE YOU DIG DIAL 811

VERT DATUM: NAVD 88
CONV TO MLLW = NAVD88+2.03
HORZ DATUM: NAD 83/91

IF SHEET IS LESS THAN 22x34 REDUCE SCALE ACCORDINGLY

Port of EVERETT
P.O. BOX 538
EVERETT, WA 98206
(425) 259-3164

kpff
1601 5th Avenue, Suite 1300
Seattle, Washington 98101
(206) 382-0600 Fax (206) 382-0500
PROJECT NO. 1600120

NO.	DATE	BY	REVISION
6	07/05/2023	NW	AS-BUILT
5	06/29/2022	NW	SUBSTATION SITE DEVELOPMENT
4	04/08/2022	NW	MARITIME TENANT SITE DEVELOPMENT
3	12/02/2021	NW	2-INCH TO 9-INCH PVMT
2	07/09/2021	NW	ADDENDUM 1
1	06/21/2021	NW	ISSUED FOR BID
0	05/07/2021	NW	FOR CITY REVIEW

RECORD CONDITIONS ILLUSTRATED IN THESE PLANS REFLECT INFORMATION PROVIDED BY THE CONTRACTOR. RECORD CONDITIONS WERE NOT VERIFIED BY ENGINEER.

PROJECT ENGINEER: N. WATSON	SCALE: AS SHOWN
DESIGNED BY: J. BECKER	DATE: 05/07/2021
DRAWN BY: K. EDWARDS, D. YU	CHECKED BY: N. WATSON
APPROVED BY:	

PORT OF EVERETT

NORTON TERMINAL DEVELOPMENT
& MTCA 3RD INTERIM ACTION
SITE SECTIONS
(4 OF 4)

DWG. NO. **C3.14**
CIP NO. 1-8-900-05
PROJECT NO. MT-NT-2021-02.2
SHEET NO. 42 OF 150

AS-BUILTS

PORT GARDNER BAY
EAST WATERWAY

OUTER HARBOR LINE

INNER HARBOR LINE

EX BERTHING FLOAT

EX CONC STRUCTURE

EX RIPRAP SHORELINE

EX BARGE DOCK, PIP

CONC BLOCK STORAGE AREA

EX CONC BLOCKS

EX ASPHALT WHARF

EX CONC WHARF

EX WOOD DOCK

EX BERM

EX TOP OF BANK

PROPERTY LINE

OHW LINE

EX DOCK

EX BRUSH

EX SAND

EX VEG

PLACE GEOGRID OVER EX SD STRUCTURES. EXTEND GEOGRID 3' MIN ON ALL SIDES EXCEPT EXTEND TO EX FENCE ON NORTH SIDE. SEE SHT D1.6

EX ASPH ROAD

EX PUD SUBSTATION

EX ROCK BULKHEAD

EX HAUL ROAD (ONE-WAY)

DUNLAP (PORT OF EVERETT)

FEDERAL AVE

EX 12' WIDE HAUL ROAD (ONE-WAY)

20'±

13'

EX WOOD WALL BELOW GROUND

EX LOADING DOCK, TYP

EX WAREHOUSE BLDG

EX LOADING DOCK

EX SAND

EX CDF-FILLED CB

CITY OF EVERETT PORT GARDNER STORMWATER FACILITY

EX GVL

EX ASPH

EX GUARD SHACK

EX DWO ABOVE GRADE

WASTEWATER/STORMWATER PIPELINE EASEMENT

EX CONC BLOCK BARRIER & GAS UTILITY

EX HDPE PIPE ABOVE GRADE, PIP

BNSF RAILROAD R.O.W.

NORTON AVE

WEST MARINE VIEW DRIVE (SR 529)

NOTES

1. GEOGRID IS SHOWN WITHIN THE PAVEMENT BASE COURSE IN AREAS WHERE EXISTING REMAINING FOUNDATIONS ARE WITHIN CLOSE PROXIMITY TO THE PROPOSED PAVEMENT SUBGRADE. SEE SHEET G3.1 FOR FORMER BUILDING FOUNDATION FOOTPRINT AREAS.

LEGEND

HMA PAVEMENT
SINGLE LAYER GEOGRID
(SEE C3.21 FOR HORIZONTAL CONTROL) — B | C3.21 | C3.2

HMA PAVEMENT
MULTI-LAYER GEOGRID
(SEE C3.21 FOR HORIZONTAL CONTROL) — C | C3.21 | C3.2

XX — PAVEMENT GEORGRID
HORIZONTAL CONTROL POINT
(SEE C3.22 FOR GEOGRID HORIZONTAL CONTROL SCHEDULE)

N

80' 0 80' 160'
40' 120'

SCALE: 1"=80'

CALL 48 HOURS BEFORE YOU DIG DIAL 811

VERT DATUM: NAVD 88
CONV TO MLLW = NAVD88+2.03
HORZ DATUM: NAD 83/91

IF SHEET IS LESS THAN 22x34 REDUCE SCALE ACCORDINGLY

Port of EVERETT
P.O. BOX 538
EVERETT, WA 98206
(425) 259-3164

kpff
1601 5th Avenue, Suite 1300
Seattle, Washington 98101
(206) 382-0600 Fax (206) 382-0500
PROJECT NO. 1600120

NO.	DATE	BY	REVISION
1	07/05/2023	NW	AS-BUILT
0	06/21/2021	NW	ISSUED FOR BID

RECORD CONDITIONS ILLUSTRATED IN THESE PLANS REFLECT INFORMATION PROVIDED BY THE CONTRACTOR. RECORD CONDITIONS WERE NOT VERIFIED BY ENGINEER.

PROJECT ENGINEER: N. WATSON	SCALE: 1" = 80'
DESIGNED BY: J. BECKER	DATE: 06/21/2021
DRAWN BY: K. EDWARDS, D. YU	CHECKED BY: N. WATSON
APPROVED BY:	

PORT OF EVERETT

NORTON TERMINAL DEVELOPMENT & MTCA 3RD INTERIM ACTION PAVEMENT GEOGRID HORIZONTAL CONTROL SITE PLAN

DWG. NO. **C3.21**

CIP NO. 1-8-900-05

PROJECT NO. MT-NT-2021-02.2

SHEET NO. 43 OF 150

AS-BUILTS

GEOGRID HORIZONTAL CONTROL SCHEDULE

POINT #	NORTHING	EASTING
1	361405.95	1301485.76
2	361429.36	1301411.69
3	362106.23	1301529.57
4	362074.49	1301814.03
5	362014.26	1301811.93
6	362022.00	1301589.67
7	361752.32	1301580.28
8	361822.65	1301885.04
9	361912.68	1301888.17
10	361910.86	1301940.41
11	361859.26	1301938.62
12	361858.01	1301974.59
13	361820.58	1301973.29
14	362006.27	1301908.55
15	362054.24	1301910.22
16	362050.87	1302006.91
17	362002.90	1302005.24
18	362127.12	1301556.79
19	362374.87	1301521.41
20	362351.00	1301660.65
21	362461.10	1301664.48
22	363219.03	1301799.31
23	363242.52	1301800.11
24	362424.86	1301843.33
25	362446.84	1301844.09
26	362442.67	1301964.02
27	362495.14	1301965.85
28	362499.32	1301845.92
29	362517.12	1301786.50
30	362532.37	1301548.69
31	362609.67	1301789.72
32	362608.60	1301837.72
33	362670.89	1301839.88
34	362670.35	1301863.88
35	362724.88	1301865.78
36	362719.03	1302033.68
37	362516.13	1302026.61
38	362514.12	1302084.21
39	362387.68	1302059.51
40	362388.57	1302034.18
41	362206.00	1302027.82

POINT #	NORTHING	EASTING
42	362209.34	1301931.88
43	362181.49	1301930.91
44	362185.66	1301810.98
45	362153.67	1301809.87
46	362156.18	1301737.91
47	362235.77	1301740.69
48	362237.44	1301692.71
49	362122.52	1301688.71
50	362575.82	1301518.34
51	362652.03	1301521.00
52	362651.50	1301544.99
53	362575.28	1301542.34
54	362810.77	1301535.26
55	362798.97	1301629.19
56	362747.13	1301628.03
57	362744.44	1301730.85
58	362702.95	1301729.92
59	362700.24	1301851.02
60	362748.62	1301852.10
61	362845.10	1301576.47
62	362987.90	1301581.44
63	362984.56	1301677.38
64	363174.76	1301684.00
65	363165.57	1301947.84
66	363237.66	1301950.35
67	363242.09	1302144.78
68	363241.25	1302168.90
69	363198.36	1302196.11
70	363158.27	1302166.07
71	363146.92	1302180.46
72	362783.8	1302140.26
73	362800.14	1301670.96
74	362841.76	1301672.41
75	363062.19	1301398.64
76	363174.39	1301404.57
77	363173.13	1301477.49
78	363060.38	1301474.58
79	362250.00	1301587.59
80	362310.28	1301589.69
81	362309.03	1301625.67
82	362248.74	1301623.58

POINT #	NORTHING	EASTING
83	361904.31	1301473.90
84	362032.76	1301478.38
85	362104.77	1301571.41
86	362318.56	1301541.46
87	362429.64	1301545.32
88	362373.14	1301591.79
89	362412.66	1301472.64
90	362448.75	1301473.90
91	362447.62	1301506.43
92	362411.53	1301505.17
93	362918.80	1301528.84
94	362917.06	1301578.98
95	362989.64	1301531.30
96	363329.22	1301953.55
97	363321.65	1302171.08

NOTE:

NORTHINGS AND EASTINGS OF STRUCTURES ARE BASED OFF OF CONSTRUCTION SURVEY AS-BUILTS PROVIDED BY THE CONTRACTOR.

PAVEMENT HORIZONTAL CONTROL SCHEDULE

POINT #	NORTHING	EASTING
1	361405.95	1301485.76
2	361429.36	1301411.69
3	361449.96	1301400.98
4	361515.73	1301411.43
5	361557.03	1301400.14
6	361595.34	1301382.80
7	361649.11	1301318.24
8	361696.33	1301154.66
9	361711.96	1301116.26
10	362589.89	1301146.82
11	362666.42	1301160.36
12	362652.73	1301180.84
13	362842.76	1301300.70
14	362836.36	1301450.31
15	363048.77	1301457.17
16	363050.75	1301391.50
17	363061.93	1301377.39
18	363102.29	1301358.12
19	363232.44	1301402.15
20	363227.86	1301537.59
21	363224.29	1301643.53
22	363219.10	1301797.31
23	363242.58	1301798.11
24	363230.37	1302115.60
25	363231.75	1302125.53
26	363268.65	1302170.75
27	363256.73	1302172.36
28	363212.14	1302206.99
29	363158.27	1302166.08
30	363146.92	1302180.47
31	362820.27	1302143.91
32	362514.27	1302116.82
33	362515.39	1302084.46
34	362301.48	1302042.67
35	361817.75	1302025.83
36	361822.69	1301884.04
37	362011.52	1301890.61
38	362022.00	1301589.67
39	361428.41	1301569.01
40	361427.35	1301599.71

POINT #	NORTHING	EASTING
41	362692.59	1301326.12
42	362760.56	1301255.04
43	362810.46	1301285.56
44	362795.48	1301329.69
45	361407.18	1301481.86
46	361405.04	1301529.67
47	361365.04	1301528.28
48	361339.61	1301588.93
49	361362.90	1301589.74
50	361389.89	1301590.68
51	361821.02	1301931.93
52	361819.98	1301961.87
53	361753.50	1301580.32
54	361753.68	1301575.33
55	361776.45	1301581.12
56	361994.38	1301554.18
57	361747.46	1301336.50
58	362599.20	1301162.03
59	362840.61	1301350.95
60	362839.60	1301374.52
61	363125.49	1301398.43
62	363136.74	1301369.77
63	363221.62	1301722.49
64	361841.46	1301932.60
65	361840.21	1301962.57
66	362080.47	1301970.94
67	362078.24	1302034.90
68	362320.04	1301980.16
69	362426.96	1302067.18
70	362523.76	1301956.39
71	362559.72	1302000.72
72	362638.29	1302127.45
73	362795.96	1302141.67
74	362789.91	1302068.10
75	362805.60	1302035.95
76	362937.38	1302157.13
77	362964.59	1301971.74
78	363084.93	1302173.69
79	363160.55	1302121.82
80	363199.50	1302096.24

POINT #	NORTHING	EASTING
81	363232.92	1302084.48
82	363236.40	1301981.20
83	363241.40	1301833.18
84	362769.79	1302018.29
85	363344.24	1301439.98
86	363466.04	1301481.19
87	363459.46	1301654.97
88	363456.23	1301740.37
89	363455.26	1301807.29
90	363455.22	1301809.79
91	363430.73	1301808.96
92	363386.63	1301804.97
93	363332.01	1301803.13
94	363277.04	1301801.27
95	363242.18	1301809.92
96	363217.78	1301836.40
97	363238.51	1301918.88
98	363212.92	1301980.38
99	363235.18	1302017.41
100	363209.78	1302073.27
101	363209.22	1302089.86
102	363419.07	1302171.91
103	363419.43	1302161.36
104	363420.61	1302126.55
105	363423.95	1302027.35
106	363425.29	1301987.78
107	363427.12	1301933.43
108	363430.29	1301839.79
109	363430.36	1301834.95
110	363454.84	1301836.41
111	363454.71	1301842.39
112	363449.77	1301988.63
113	363445.09	1302127.38
114	363443.45	1302175.93

NOTE:

NORTHINGS AND EASTINGS OF STRUCTURES ARE BASED OFF OF CONSTRUCTION SURVEY AS-BUILTS PROVIDED BY THE CONTRACTOR.

CALL 48 HOURS BEFORE YOU DIG DIAL 811

VERT DATUM: NAVD 88
CONV TO MLLW = NAVD88+2.03
HORZ DATUM: NAD 83/91

IF SHEET IS LESS THAN 22x34 REDUCE SCALE ACCORDINGLY

Port of EVERETT
P.O. BOX 538
EVERETT, WA 98206
(425) 259-3164

kpff
1601 5th Avenue, Suite 1300
Seattle, Washington 98101
(206) 382-0600 Fax (206) 382-0500
PROJECT NO. 1600120

NO.	DATE	BY	REVISION
4	12/02/2021	JB	DELETE ECOLOGY BLOCK WALL, ADD EX WHS GRAVEL PAD CONTOURS AND UPDATE FINAL GRADES & PAVEMENT COORDINATES
3	11/11/2021	NW	REVISED PER RFI030
2	08/26/2021	NW	REVISED PER CITY COMMENTS
1	07/28/2021	NW	ADDENDUM 4
0	06/21/2021	NW	ISSUED FOR BID

NO.	DATE	BY	REVISION
7	07/05/2023	NW	AS-BUILT
6	04/08/2022	NW	MARITIME TENANT SITE DEVELOPMENT
5	02/09/2022	NW	MOVE SDMH6 & SDMH23 TO AVOID WOOD STAVE PIPE

RECORD CONDITIONS ILLUSTRATED IN THESE PLANS REFLECT INFORMATION PROVIDED BY THE CONTRACTOR. RECORD CONDITIONS WERE NOT VERIFIED BY ENGINEER.

PROJECT ENGINEER: N. WATSON	SCALE: 1" = 80'
DESIGNED BY: J. BECKER	DATE: 06/21/2021
DRAWN BY: K. EDWARDS, D. YU	CHECKED BY: N. WATSON
APPROVED BY:	

PORT OF EVERETT

NORTON TERMINAL DEVELOPMENT & MTCA 3RD INTERIM ACTION PAVEMENT AND GEOGRID HORIZONTAL CONTROL SCHEDULE

DWG. NO. C3.22
CIP NO. 1-8-900-05
PROJECT NO. MT-NT-2021-02.2
SHEET NO. 44 OF 150

AS-BUILTS

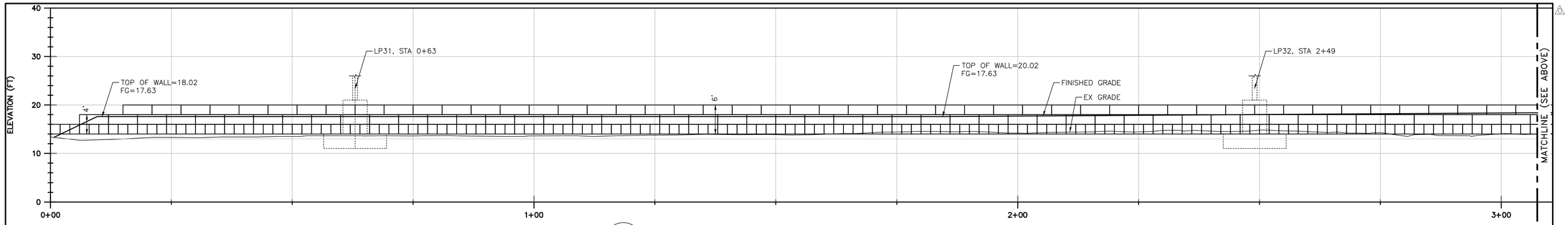

1 ECO BLOCK WALL PROFILE

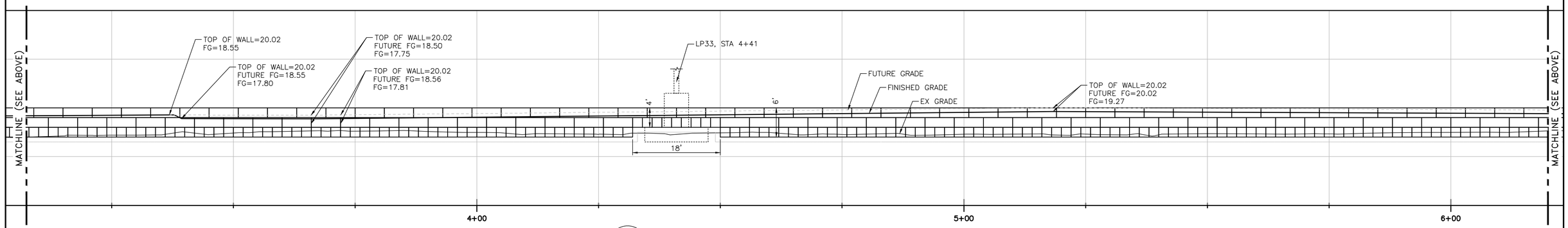

1 ECO BLOCK WALL PROFILE

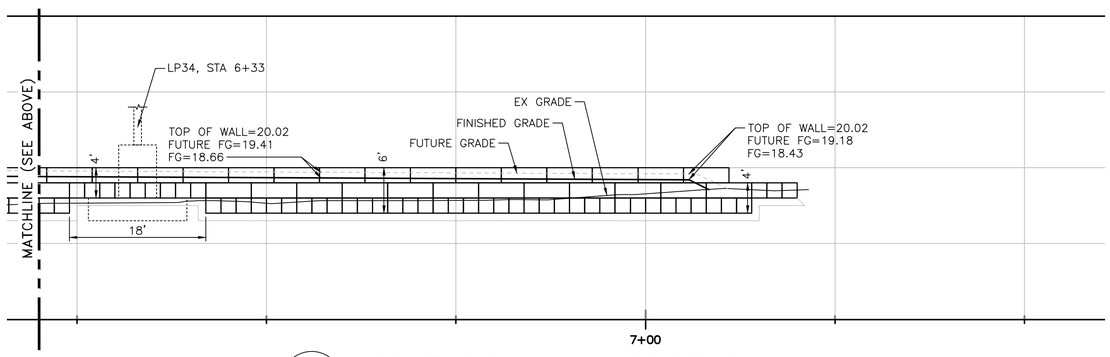

1 ECO BLOCK WALL PROFILE

10' 0 10' 20'
5' 15'
SCALE: 1"=10'

CALL 48 HOURS BEFORE YOU DIG DIAL 811

VERT DATUM: NAVD 88
CONV TO MLLW = NAVD88+2.03
HORZ DATUM: NAD 83/91

IF SHEET IS LESS THAN 22x34 REDUCE SCALE ACCORDINGLY

AS-BUILTS

Port of EVERETT
P.O. BOX 538
EVERETT, WA 98206
(425) 259-3164

kpff
1601 5th Avenue, Suite 1300
Seattle, Washington 98101
(206) 382-0600 Fax (206) 382-0500
PROJECT NO. 1600120

NO.	DATE	BY	REVISION
1	07/05/2023	NW	AS-BUILT
0	04/08/2022	NW	MARITIME TENANT SITE DEVELOPMENT

RECORD CONDITIONS ILLUSTRATED IN THESE PLANS REFLECT INFORMATION PROVIDED BY THE CONTRACTOR. RECORD CONDITIONS WERE NOT VERIFIED BY ENGINEER.

PROJECT ENGINEER: N. WATSON	SCALE: 1" = 10'
DESIGNED BY: J. BECKER	DATE: 06/21/2021
DRAWN BY: K. EDWARDS, D. YU	CHECKED BY: N. WATSON
APPROVED BY:	

PORT OF EVERETT

NORTON TERMINAL DEVELOPMENT & MTCA 3RD INTERIM ACTION

ECO BLOCK WALL PROFILES

DWG. NO. C3.30
CIP NO. 1-8-900-05
PROJECT NO. MT-NT-2021-02.2
SHEET NO. 44A OF 150

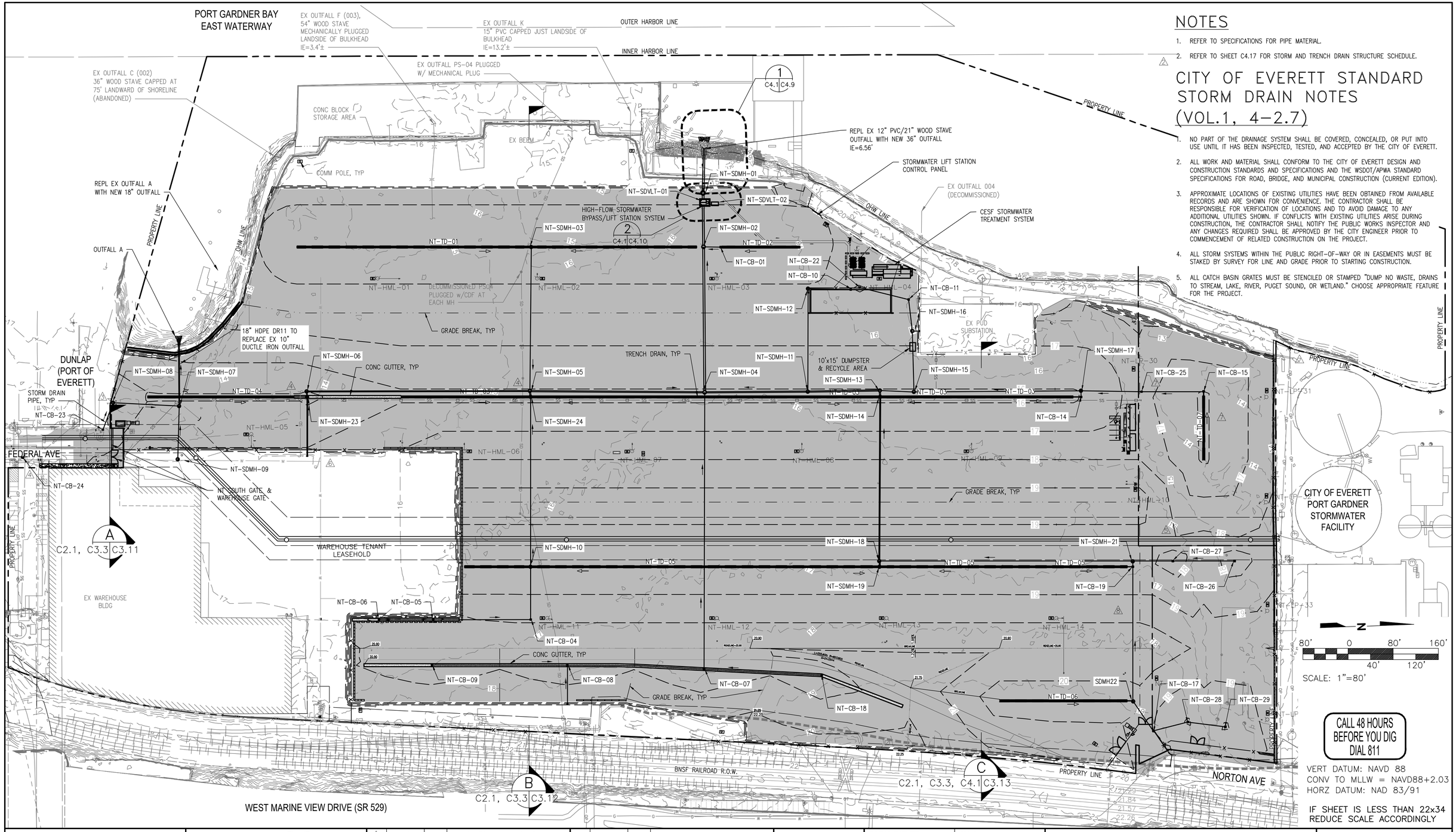

NOTES

1. REFER TO SPECIFICATIONS FOR PIPE MATERIAL.
2. REFER TO SHEET C4.17 FOR STORM AND TRENCH DRAIN STRUCTURE SCHEDULE.

CITY OF EVERETT STANDARD STORM DRAIN NOTES (VOL.1, 4-2.7)

1. NO PART OF THE DRAINAGE SYSTEM SHALL BE COVERED, CONCEALED, OR PUT INTO USE UNTIL IT HAS BEEN INSPECTED, TESTED, AND ACCEPTED BY THE CITY OF EVERETT.
2. ALL WORK AND MATERIAL SHALL CONFORM TO THE CITY OF EVERETT DESIGN AND CONSTRUCTION STANDARDS AND SPECIFICATIONS AND THE WSDOT/APWA STANDARD SPECIFICATIONS FOR ROAD, BRIDGE, AND MUNICIPAL CONSTRUCTION (CURRENT EDITION).
3. APPROXIMATE LOCATIONS OF EXISTING UTILITIES HAVE BEEN OBTAINED FROM AVAILABLE RECORDS AND ARE SHOWN FOR CONVENIENCE. THE CONTRACTOR SHALL BE RESPONSIBLE FOR VERIFICATION OF LOCATIONS AND TO AVOID DAMAGE TO ANY ADDITIONAL UTILITIES SHOWN. IF CONFLICTS WITH EXISTING UTILITIES ARISE DURING CONSTRUCTION, THE CONTRACTOR SHALL NOTIFY THE PUBLIC WORKS INSPECTOR AND ANY CHANGES REQUIRED SHALL BE APPROVED BY THE CITY ENGINEER PRIOR TO COMMENCEMENT OF RELATED CONSTRUCTION ON THE PROJECT.
4. ALL STORM SYSTEMS WITHIN THE PUBLIC RIGHT-OF-WAY OR IN EASEMENTS MUST BE STAKED BY SURVEY FOR LINE AND GRADE PRIOR TO STARTING CONSTRUCTION.
5. ALL CATCH BASIN GRATES MUST BE STENCILED OR STAMPED "DUMP NO WASTE, DRAINS TO STREAM, LAKE, RIVER, PUGET SOUND, OR WETLAND." CHOOSE APPROPRIATE FEATURE FOR THE PROJECT.

CALL 48 HOURS BEFORE YOU DIG DIAL 811

VERT DATUM: NAVD 88
CONV TO MLLW = NAVD88+2.03
HORZ DATUM: NAD 83/91

IF SHEET IS LESS THAN 22x34 REDUCE SCALE ACCORDINGLY

Port of EVERETT
P.O. BOX 538
EVERETT, WA 98206
(425) 259-3164

kpff
1601 5th Avenue, Suite 1300
Seattle, Washington 98101
(206) 382-0600 Fax (206) 382-0500
PROJECT NO. 1600120

NO.	DATE	BY	REVISION
7	12/02/2021	NW	2-INCH TO 9-INCH PVMT
6	09/27/2021	NW	REVISED PER RFI010 & WHSE GVL YARD DRAINAGE
5	08/26/2021	NW	REVISED PER CITY COMMENTS & UPDATE ELEC BACKGROUND PER ADDENDUM 3
4	07/09/2021	NW	ADDENDUM 1
3	06/21/2021	NW	ISSUED FOR BID
2	05/07/2021	NW	FOR CITY REVIEW
8	07/05/2023	NW	AS-BUILT
7	06/29/2022	NW	SUBSTATION SITE DEVELOPMENT
6	04/08/2022	NW	MARITIME TENANT SITE DEVELOPMENT
5	02/09/2022	NW	MOVE SDMH6 & SDMH23 TO AVOID WOOD STAVE PIPE

RECORD CONDITIONS ILLUSTRATED IN THESE PLANS REFLECT INFORMATION PROVIDED BY THE CONTRACTOR. RECORD CONDITIONS WERE NOT VERIFIED BY ENGINEER.

PROJECT ENGINEER: N. WATSON	SCALE: 1" = 80'
DESIGNED BY: J. BECKER	DATE: 05/07/2021
DRAWN BY: K. EDWARDS, D. YU	CHECKED BY: N. WATSON
APPROVED BY:	

PORT OF EVERETT

NORTON TERMINAL DEVELOPMENT & MTCA 3RD INTERIM ACTION STORMWATER OVERALL PLAN

DWG. NO.	C4.1
CIP NO.	1-8-900-05
PROJECT NO.	MT-NT-2021-02.2
SHEET NO.	45 OF 150

AS-BUILTS

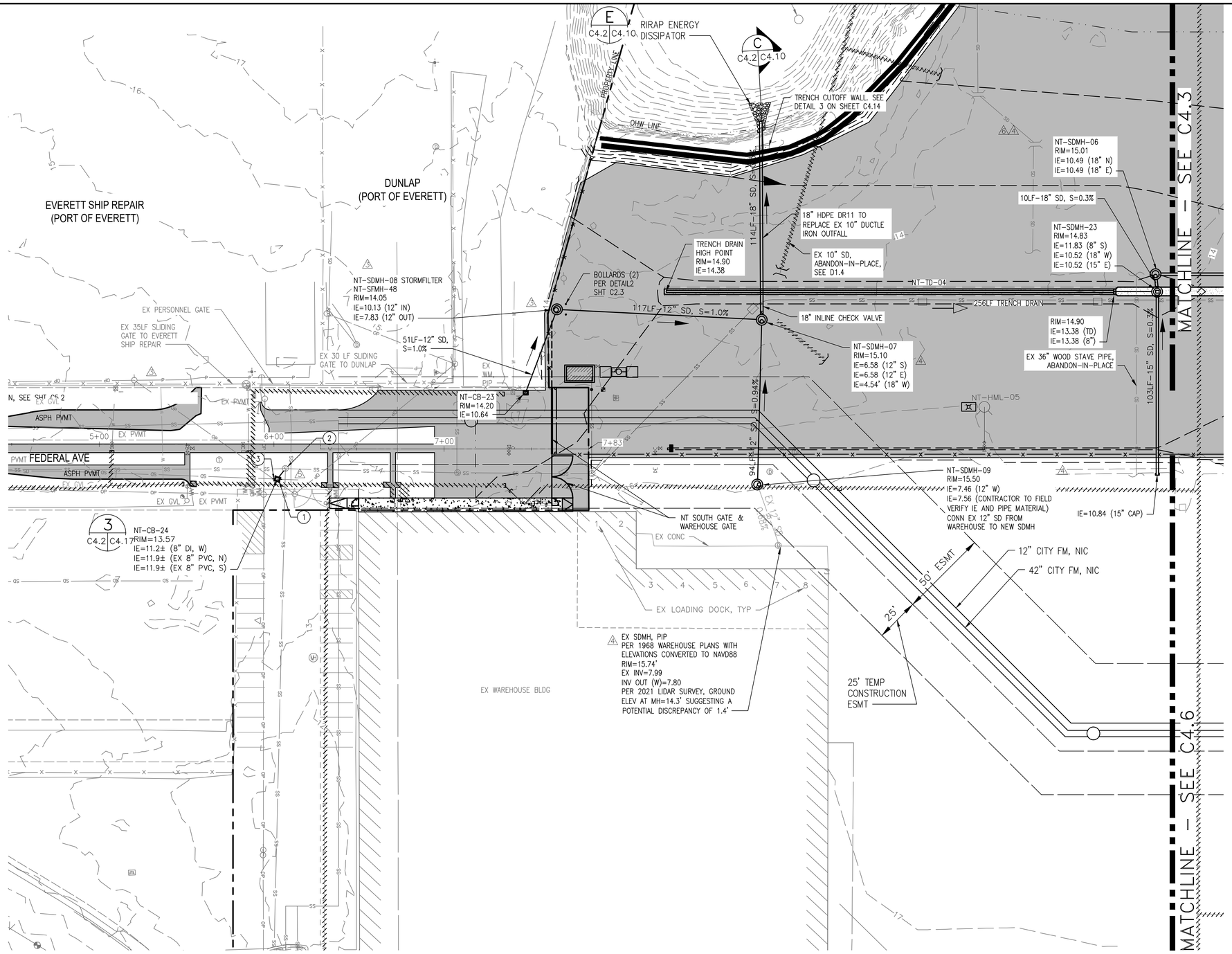

GENERAL NOTES

1. ALL WORK BELOW ORDINARY HIGH WATER (OHW) LINE SHALL OCCUR IN THE 'DRY'.
2. EXCAVATION AND PLACEMENT OF ROCK BELOW HTL SHALL OCCUR WITHIN A SINGLE TIDE CYCLE. IF WORK IS NOT COMPLETED WITHIN A SINGLE TIDE CYCLE, TEMPORARILY COVER AND STABILIZE EXPOSED SOILS WITH GRAVEL, GEOTEXTILE OR OTHER APPROVED METHODS PRIOR TO TIDAL SUBMERSION.
3. SEE DETAIL 1 ON C4.17 FOR TYPICAL STORM DRAIN TRENCH DETAIL.

CONSTRUCTION KEY NOTES

1. CB24 TYPE 1L WITH SOLID LID. CONSTRUCT CB24 OVER EX 8" PVC SD. CONN EX 8" PVC SD TO CB24. SEE CB24 DETAIL 3, SHEET C4.17 FOR ADDITIONAL INFORMATION
2. EX CSO SMHU07. CORE DRILL FOR NEW 8" INLET FROM CB24 TYPE 1L. SEE DETAIL 3, SHEET C4.17.
3. PLUG SOUTH 8" PVC SD OUTLET PIPE WITH RUBBER/STAINLESS STEEL MECHANICAL PLUG TO DIVERT FLOW TO EX SMHU07.

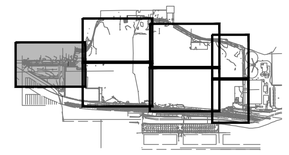

KEYMAP

N

30' 0 30' 60'
15' 45'

SCALE: 1"=30'

CALL 48 HOURS BEFORE YOU DIG DIAL 811

VERT DATUM: NAVD 88
CONV TO MLLW = NAVD88+2.03
HORZ DATUM: NAD 83/91

IF SHEET IS LESS THAN 22x34 REDUCE SCALE ACCORDINGLY

Port of EVERETT
P.O. BOX 538
EVERETT, WA 98206
(425) 259-3164

kpff
1601 5th Avenue, Suite 1300
Seattle, Washington 98101
(206) 382-0600 Fax (206) 382-0500
PROJECT NO. 1600120

NO.	DATE	BY	REVISION
5	10/25/2021	NW	REVISED PER CITY COMMENTS.
4	09/27/2021	NW	REVISED PER RFI010 & WHSE GVL YARD DRAINAGE
3	08/26/2021	NW	REVISED PER CITY COMMENTS & UPDATE ELEC BACKGROUND PER ADDENDUM 3
2	07/23/2021	NW	ADDENDUM 3
1	06/21/2021	NW	ISSUED FOR BID
0	05/07/2021	NW	FOR CITY REVIEW

NO.	DATE	BY	REVISION
7	07/05/2023	NW	AS-BUILT
6	02/09/2022	NW	MOVE SDMH6 & SDMH23 TO AVOID WOOD STAVE PIPE

RECORD CONDITIONS ILLUSTRATED IN THESE PLANS REFLECT INFORMATION PROVIDED BY THE CONTRACTOR. RECORD CONDITIONS WERE NOT VERIFIED BY ENGINEER.

PROJECT ENGINEER: N. WATSON	SCALE: 1" = 30'
DESIGNED BY: J. BECKER	DATE: 05/07/2021
DRAWN BY: K. EDWARDS, D. YU	CHECKED BY: N. WATSON
APPROVED BY:	

PORT OF EVERETT

NORTON TERMINAL DEVELOPMENT & MTCA 3RD INTERIM ACTION STORMWATER DETAIL PLAN (1 OF 7)

DWG. NO. **C4.2**
CIP NO. 1-8-900-05
PROJECT NO. MT-NT-2021-02.2
SHEET NO. 46 OF 150

AS-BUILTS

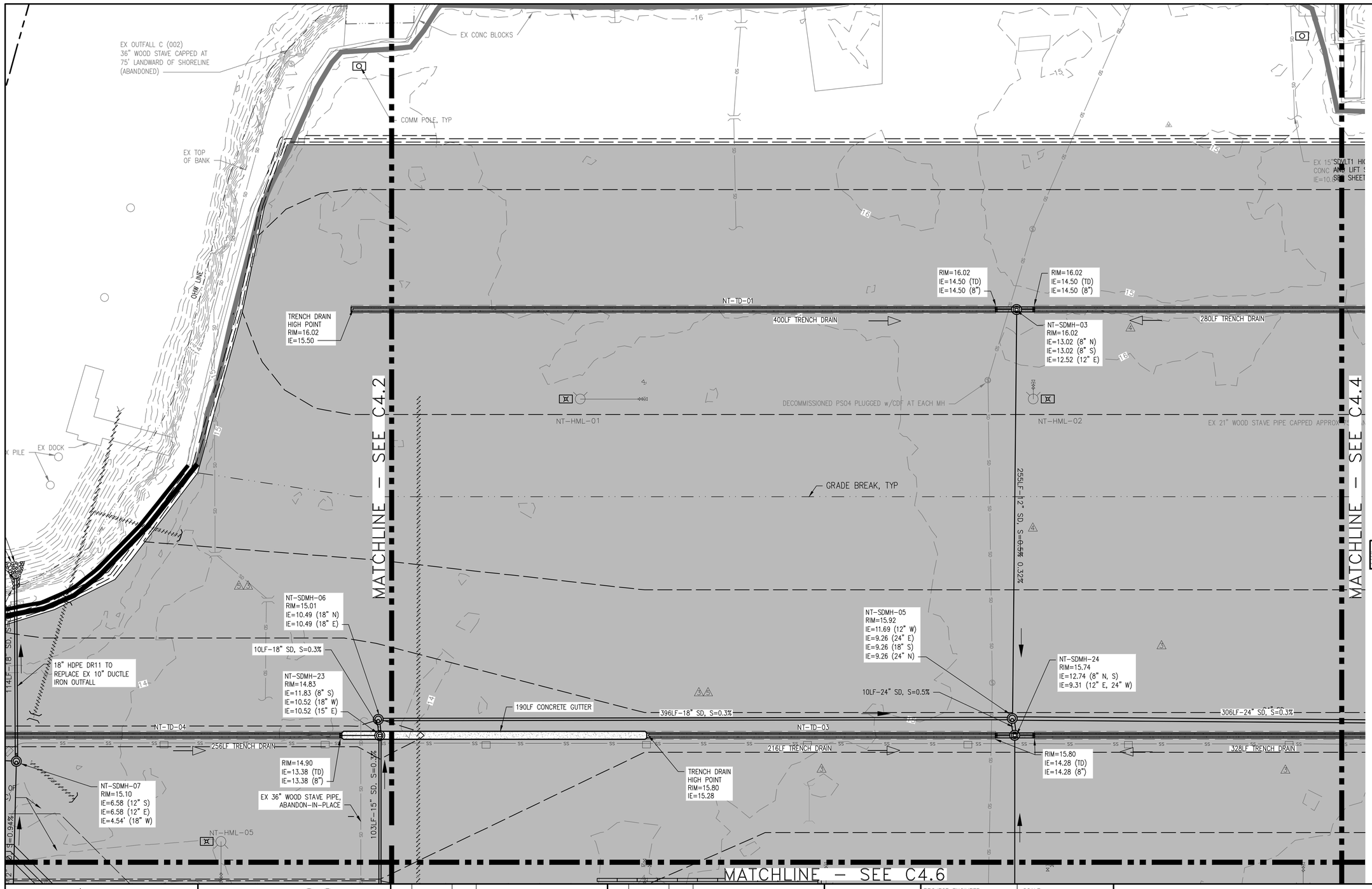

GENERAL NOTES

1. SEE DETAIL 1 ON C4.17 FOR TYPICAL STORM DRAIN TRENCH DETAIL.

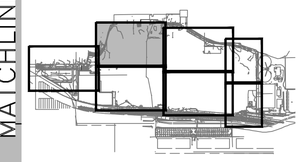

KEYMAP

30' 0 30' 60'
15' 45'

SCALE: 1"=30'

CALL 48 HOURS BEFORE YOU DIG DIAL 811

VERT DATUM: NAVD 88
CONV TO MLLW = NAVD88+2.03
HORZ DATUM: NAD 83/91

IF SHEET IS LESS THAN 22x34 REDUCE SCALE ACCORDINGLY

Port of EVERETT
P.O. BOX 538
EVERETT, WA 98206
(425) 259-3164

kpff
1601 5th Avenue, Suite 1300
Seattle, Washington 98101
(206) 382-0600 Fax (206) 382-0500
PROJECT NO. 1600120

NO.	DATE	BY	REVISION
6	02/09/2022	NW	MOVE SDMH6 & SDMH23 TO AVOID WOOD STAVE PIPE
5	11/03/2021	NW	REVISED PER RFI010A
4	09/27/2021	NW	REVISED PER RFI010 & WHSE GVL YARD DRAINAGE
3	07/23/2021	NW	ADDENDUM 3
2	06/21/2021	NW	ISSUED FOR BID
1	05/07/2021	NW	FOR CITY REVIEW
6	07/05/2023	NW	AS-BUILT

RECORD CONDITIONS ILLUSTRATED IN THESE PLANS REFLECT INFORMATION PROVIDED BY THE CONTRACTOR. RECORD CONDITIONS WERE NOT VERIFIED BY ENGINEER.

PROJECT ENGINEER: N. WATSON	SCALE: 1" = 30'
DESIGNED BY: J. BECKER	DATE: 05/07/2021
DRAWN BY: K. EDWARDS, D. YU	CHECKED BY: N. WATSON
APPROVED BY:	

PORT OF EVERETT

NORTON TERMINAL DEVELOPMENT & MTCA 3RD INTERIM ACTION STORMWATER DETAIL PLAN (2 OF 7)

DWG. NO. **C4.3**
CIP NO. 1-8-900-05
PROJECT NO. MT-NT-2021-02.2
SHEET NO. 47 OF 150

AS-BUILTS

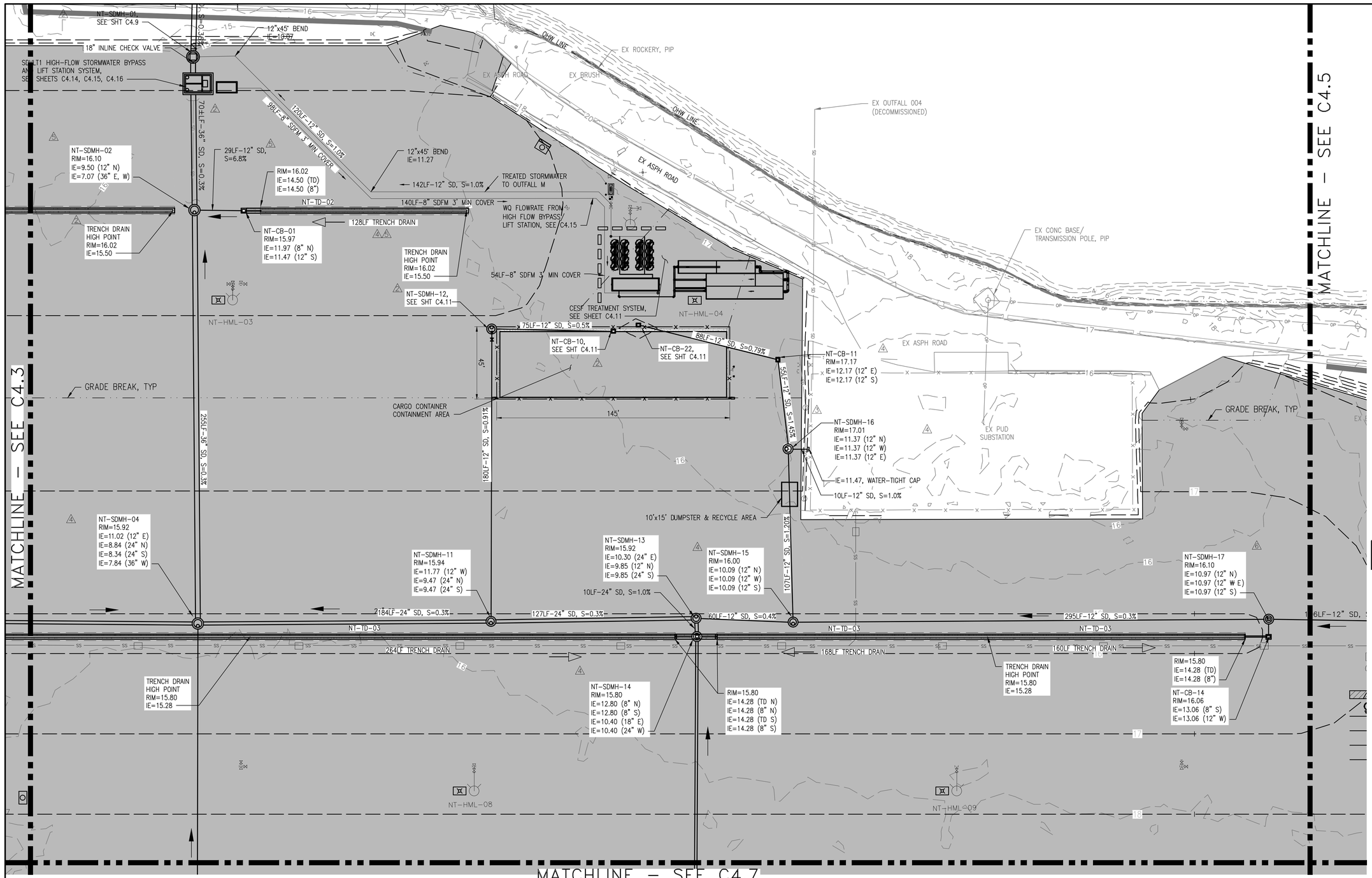

GENERAL NOTES

1. SEE DETAIL 1 ON C4.17 FOR TYPICAL STORM DRAIN TRENCH DETAIL.

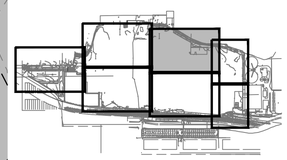

KEYMAP

30' 0 30' 60'
15' 45'
SCALE: 1"=30'

CALL 48 HOURS BEFORE YOU DIG DIAL 811

VERT DATUM: NAVD 88
CONV TO MLLW = NAVD88+2.03
HORZ DATUM: NAD 83/91

IF SHEET IS LESS THAN 22x34 REDUCE SCALE ACCORDINGLY

Port of EVERETT
P.O. BOX 538
EVERETT, WA 98206
(425) 259-3164

kpff
1601 5th Avenue, Suite 1300
Seattle, Washington 98101
(206) 382-0600 Fax (206) 382-0500
PROJECT NO. 1600120

NO.	DATE	BY	REVISION
6	12/02/2021	NW	2-INCH TO 9-INCH PVMT
5	11/03/2021	NW	REVISED PER RFI010A
4	09/27/2021	NW	REVISED PER RFI010 & WHSE GVL YARD DRAINAGE
3	07/28/2021	NW	ADDENDUM 4
2	07/23/2021	NW	ADDENDUM 3
1	06/21/2021	NW	ISSUED FOR BID
0	05/07/2021	NW	FOR CITY REVIEW
7	07/05/2023	NW	AS-BUILT

RECORD CONDITIONS ILLUSTRATED IN THESE PLANS REFLECT INFORMATION PROVIDED BY THE CONTRACTOR. RECORD CONDITIONS WERE NOT VERIFIED BY ENGINEER.

PROJECT ENGINEER: N. WATSON	SCALE: 1" = 30'
DESIGNED BY: J. BECKER	DATE: 05/07/2021
DRAWN BY: K. EDWARDS, D. YU	CHECKED BY: N. WATSON
APPROVED BY:	

PORT OF EVERETT

NORTON TERMINAL DEVELOPMENT & MTCA 3RD INTERIM ACTION STORMWATER DETAIL PLAN (3 OF 7)

DWG. NO. **C4.4**
CIP NO. 1-8-900-05
PROJECT NO. MT-NT-2021-02.2
SHEET NO. 48 OF 150

AS-BUILTS

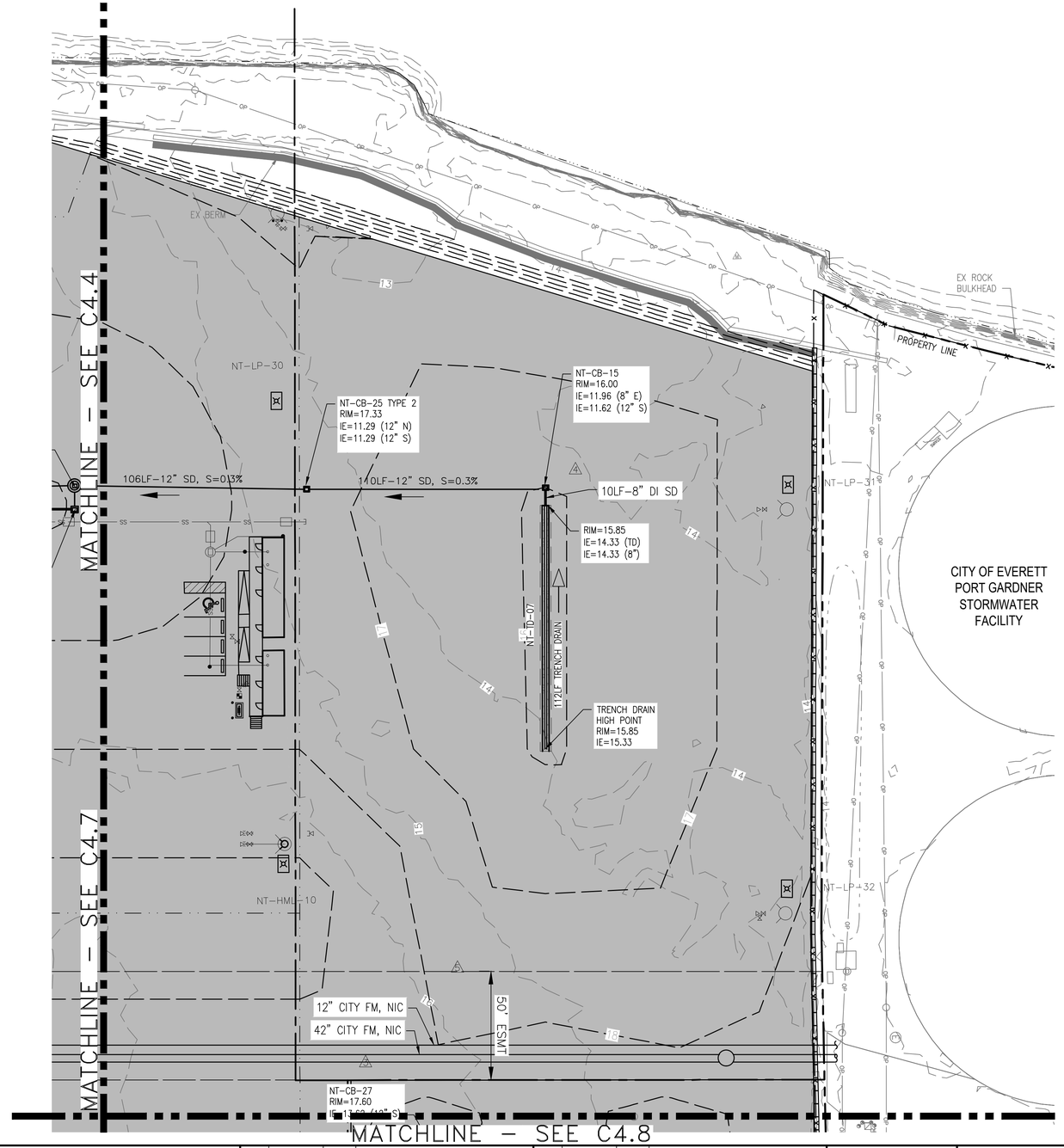

GENERAL NOTES

1. SEE DETAIL 1 ON C4.17 FOR TYPICAL STORM DRAIN TRENCH DETAIL.
2. SEE C4.8A FOR FINAL STORMWATER IMPROVEMENTS FOR SUBSTATION SITE DEVELOPMENT AREA.

SECTION A NOT USED
SEE SHEET C4.8

A GRAVEL INTERCEPTOR TRENCH SECTION
C4.5 | C4.5 SCALE: NTS

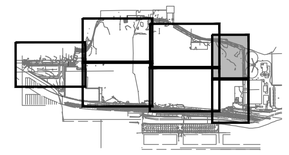

KEYMAP

30' 0 30' 60'
15' 45'
SCALE: 1"=30'

CALL 48 HOURS BEFORE YOU DIG DIAL 811

VERT DATUM: NAVD 88
CONV TO MLLW = NAVD88+2.03
HORZ DATUM: NAD 83/91

IF SHEET IS LESS THAN 22x34 REDUCE SCALE ACCORDINGLY

AS-BUILTS

Port of EVERETT
P.O. BOX 538
EVERETT, WA 98206
(425) 259-3164

kpff
1601 5th Avenue, Suite 1300
Seattle, Washington 98101
(206) 382-0600 Fax (206) 382-0500
PROJECT NO. 1600120

NO.	DATE	BY	REVISION
6	07/05/2023	NW	AS-BUILT
5	06/29/2022	NW	SUBSTATION SITE DEVELOPMENT
4	04/08/2022	NW	MARITIME TENANT SITE DEVELOPMENT
3	12/02/2021	NW	2-INCH TO 9-INCH PVMT
2	07/09/2021	NW	ADDENDUM 1
1	06/21/2021	NW	ISSUED FOR BID
0	05/07/2021	NW	FOR CITY REVIEW

RECORD CONDITIONS ILLUSTRATED IN THESE PLANS REFLECT INFORMATION PROVIDED BY THE CONTRACTOR. RECORD CONDITIONS WERE NOT VERIFIED BY ENGINEER.

PROJECT ENGINEER: N. WATSON	SCALE: 1" = 30'
DESIGNED BY: J. BECKER	DATE: 05/07/2021
DRAWN BY: K. EDWARDS, D. YU	CHECKED BY: N. WATSON
APPROVED BY:	

PORT OF EVERETT

NORTON TERMINAL DEVELOPMENT & MTCA 3RD INTERIM ACTION STORMWATER DETAIL PLAN (4 OF 7)

DWG. NO. **C4.5**
CIP NO. 1-8-900-05
PROJECT NO. MT-NT-2021-02.2
SHEET NO. 49 OF 150

MATCHLINE – SEE C4.3

MATCHLINE – SEE C4.2

MATCHLINE – SEE C4.7

NT-SDMH-09
RIM=15.50
IE=7.46 (12" W)
IE=7.56 (CONTRACTOR TO FIELD VERIFY IE AND PIPE MATERIAL)
CONN EX 12" SD FROM WAREHOUSE TO NEW SDMH

IE=10.84 (15" CAP)

12" CITY FM, NIC

42" CITY FM, NIC

50' ESMT

WAREHOUSE TENANT LEASEHOLD

TRENCH DRAIN
HIGH POINT
RIM=18.03
IE=17.51

NT-HML-06

300LF-12" SD, S=0.9%

GRADE BREAK, TYP

NT-HML-07

NT-SDMH-10
RIM=18.03
IE=15.03 (8" N)
IE=15.03 (8" S)
IE=12.10 (12" E)
IE=12.10 (12" W)

104LF-TRENCH DRAIN

328LF TRENCH DRAIN

RIM=18.03
IE=16.51 (TD)
IE=16.51 (8")

95LF-12" SD, S=2.2%

NT-CB-06
RIM=19.90
IE=15.74 (12" N)

NT-CB-05
RIM=19.90
IE=15.20 (12" N)
IE=15.20 (12" S)

180LF CONC GUTTER

96LF-12" SD, S=0.55%

173LF-12" SD, S=0.55%

E
C3.8 S1.3

NT-HML-11

NT-CB-04
RIM=19.89
IE=14.25 (12" S)
IE=14.25 (12" W)

EX LOADING DOCK

20.90

20.90

CONC GUTTER, TYP

240LF-12" SD, S=0.3%

602LF CONC GUTTER TO CB7

EX WAREHOUSE BLDG

NT-CB-09
RIM=20.30
IE=17.30 (12" N)

A
C3.8 S1.4

NT-CB-08
RIM=20.30
IE=16.58 (12" N)
IE=16.58 (12" S)
IE=16.58 (12" E)

70LF-12" SD, S=0.3%

WATER-TIGHT END CAP
IE=16.79

EX DWO ABOVE GRADE PIP

EX UTILITY VAULT, PIP

GRADE BREAK, TYP

EX DWO ABOVE GRADE

WASTEWATER/STORMWATER PIPELINE EASEMENT

EX HDPE PIPE ABOVE GRADE, PIP

PROPERTY LINE

GENERAL NOTES

1. SEE DETAIL 1 ON C4.17 FOR TYPICAL STORM DRAIN TRENCH DETAIL.

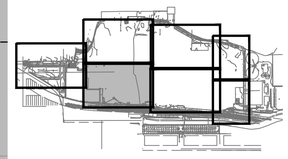

KEYMAP

N

30' 0 30' 60'
15' 45'

SCALE: 1"=30'

CALL 48 HOURS BEFORE YOU DIG DIAL 811

VERT DATUM: NAVD 88
CONV TO MLLW = NAVD88+2.03
HORZ DATUM: NAD 83/91

IF SHEET IS LESS THAN 22x34 REDUCE SCALE ACCORDINGLY

AS-BUILTS

Port of EVERETT
P.O. BOX 538
EVERETT, WA 98206
(425) 259-3164

kpff
1601 5th Avenue, Suite 1300
Seattle, Washington 98101
(206) 382-0600 Fax (206) 382-0500
PROJECT NO. 1600120

NO.	DATE	BY	REVISION
4	02/09/2022	NW	MOVE SDMH6 & SDMH23 TO AVOID WOOD STAVE PIPE
3	12/02/2021	JB	DELETE ECOLOGY BLOCK WALL, ADD EX WHS GRAVEL PAD CONTOURS AND UPDATE FINAL GRADES & PAVEMENT COORDINATES
2	09/27/2021	NW	REVISED PER RFI010 & WHSE GVL YARD DRAINAGE
1	06/21/2021	NW	ISSUED FOR BID
0	05/07/2021	NW	FOR CITY REVIEW
5	07/05/2023	NW	AS-BUILT

RECORD CONDITIONS ILLUSTRATED IN THESE PLANS REFLECT INFORMATION PROVIDED BY THE CONTRACTOR. RECORD CONDITIONS WERE NOT VERIFIED BY ENGINEER.

PROJECT ENGINEER: N. WATSON	SCALE: 1" = 30'
DESIGNED BY: J. BECKER	DATE: 05/07/2021
DRAWN BY: K. EDWARDS, D. YU	CHECKED BY: N. WATSON
APPROVED BY:	

PORT OF EVERETT

NORTON TERMINAL DEVELOPMENT & MTCA 3RD INTERIM ACTION STORMWATER DETAIL PLAN (5 OF 7)

DWG. NO. **C4.6**

CIP NO. 1-8-900-05

PROJECT NO. MT-NT-2021-02.2

SHEET NO. 50 OF 150

MATCHLINE – SEE C4.4

MATCHLINE – SEE C4.6

MATCHLINE – SEE C4.8

490LF–12" SD, S=1.0%

290LF–18" SD, S=0.4%

GRADE BREAK, TYP

12" CITY FM, NIC

42" CITY FM, NIC

50' ESMT

NT–SDMH–18
RIM=18.17
IE=12.06 (12" N)
IE=11.56 (18" W)
IE=11.56 (18" E)

TRENCH DRAIN
HIGH POINT
RIM=18.03
IE=17.51

10LF–18" SD, S=0.4%

446LF–12" SD, S=0.3%

NT–TD–05

264LF TRENCH DRAIN

216LF TRENCH DRAIN

208LF TRENCH DRAIN

NT–SDMH–19
RIM=18.03
IE=15.03 (8" N)
IE=15.03 (8" S)
IE=11.60 (18" W)

RIM=18.03
IE=16.51 (TD N)
IE=16.51 (8" N)
IE=16.51 (TD S)
IE=16.51 (8" S)

TRENCH DRAIN
HIGH POINT
RIM=18.03
IE=17.51

RIM=18.03
IE=16.51 (TD)
IE=16.51 (8")

NT–HML–12

NT–HML–13

NT–HML–14

20.90

RIDGELINE=20.90

BREAKLINE

1.98%

1.22%

L=255.600, R=603.800
Δ=24.2544

RIDGELINE

NT–CB–07
RIM=20.30
IE=16.58 12" N
IE=15.85 12" S
IE=15.85 12" W

242LF–12" SD, S=0.3%

208LF–12" SD, S=0.35%

NT–CB–18
RIM=20.30
IE=17.30

361LF CONC GUTTER TO CB7

EX DWO BELOW GRADE PIP

GRADE BREAK, TYP

21.75

TRENCH DRAIN
HIGH POINT
RIM=19.45
IE=18.93

RIM=19.45
IE=17.93 (TD)
IE=17.93 (8")

NT–TD–06

224LF TRENCH DRAIN

21.25
22.25

EX VAULT
PIP

4' PERSONNEL G

RELOCATED FLAG POLE &
CONC BASE, SEE SH D1.7

NT NORTH GATE

2–15FT SERVICE
SWING GATES

22.25

BNSF RAILROAD R.O.W.

PROPERTY LINE

GENERAL NOTES

1. SEE DETAIL 1 ON C4.17 FOR TYPICAL STORM DRAIN TRENCH DETAIL.

KEYMAP

30' 0 30' 60'
15' 45'

SCALE: 1"=30'

CALL 48 HOURS BEFORE YOU DIG DIAL 811

VERT DATUM: NAVD 88
CONV TO MLLW = NAVD88+2.03
HORZ DATUM: NAD 83/91

IF SHEET IS LESS THAN 22x34 REDUCE SCALE ACCORDINGLY

Port of EVERETT
P.O. BOX 538
EVERETT, WA 98206
(425) 259–3164

kpff
1601 5th Avenue, Suite 1300
Seattle, Washington 98101
(206) 382-0600 Fax (206) 382-0500
PROJECT NO. 1600120

NO.	DATE	BY	REVISION
4	07/05/2023	NW	AS–BUILT
3	12/02/2021	NW	2–INCH TO 9–INCH PVMT
2	09/27/2021	NW	REVISED PER RFI010
1	06/21/2021	NW	ISSUED FOR BID
0	05/07/2021	NW	FOR CITY REVIEW

RECORD CONDITIONS ILLUSTRATED IN THESE PLANS REFLECT INFORMATION PROVIDED BY THE CONTRACTOR. RECORD CONDITIONS WERE NOT VERIFIED BY ENGINEER.

PROJECT ENGINEER: N. WATSON	SCALE: 1" = 30'
DESIGNED BY: J. BECKER	DATE: 05/07/2021
DRAWN BY: K. EDWARDS, D. YU	CHECKED BY: N. WATSON
APPROVED BY:	

PORT OF EVERETT

NORTON TERMINAL DEVELOPMENT & MTCA 3RD INTERIM ACTION STORMWATER DETAIL PLAN (6 OF 7)

DWG. NO. **C4.7**

CIP NO. 1–8–900–05

PROJECT NO. MT–NT–2021–02.2

SHEET NO. 51 OF 150

AS-BUILTS

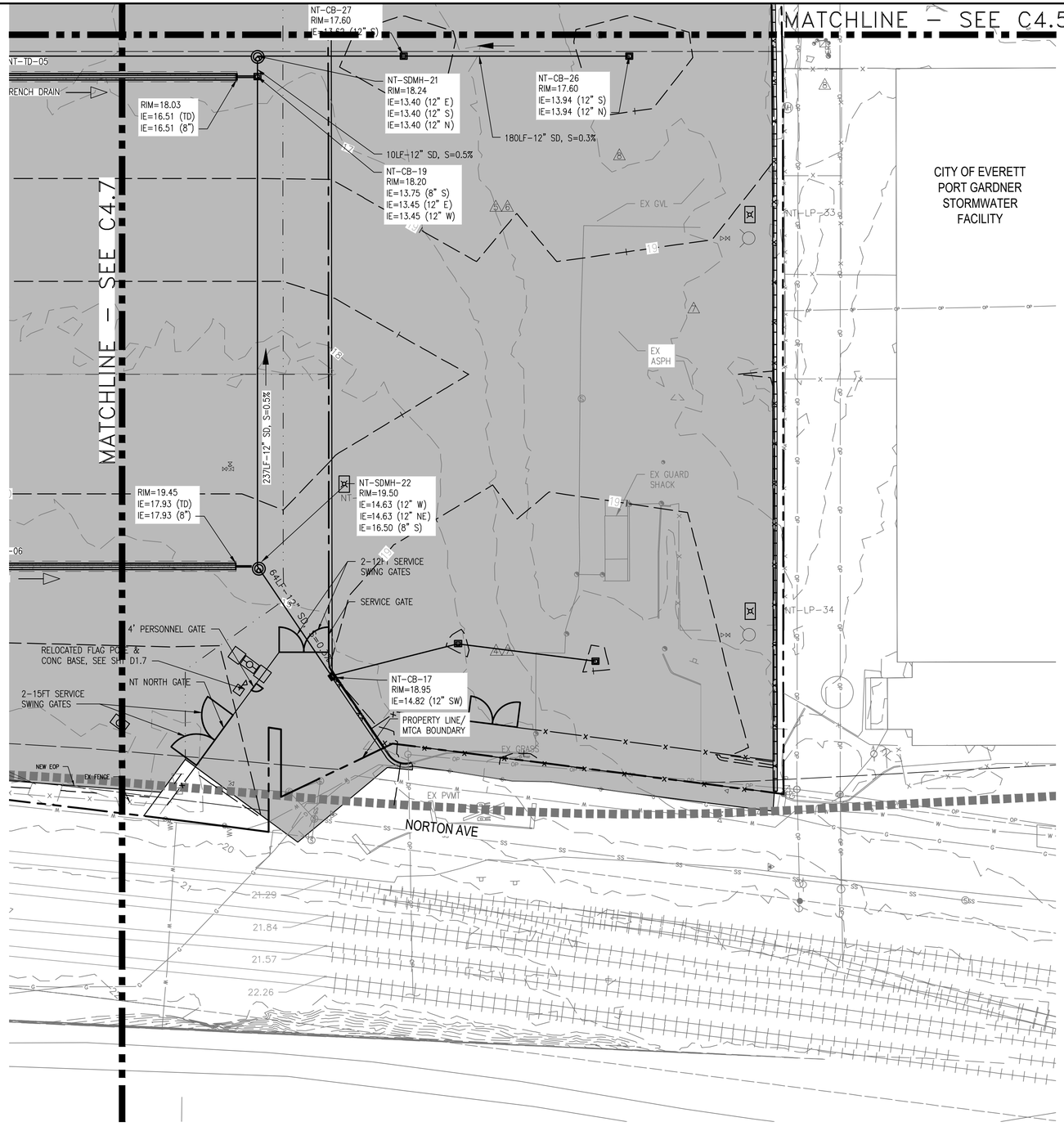

GENERAL NOTES

1. SEE DETAIL 1 ON C4.17 FOR TYPICAL STORM DRAIN TRENCH DETAIL.
2. SEE C4.8A FOR FINAL STORMWATER IMPROVEMENTS FOR SUBSTATION SITE DEVELOPMENT AREA.

A C4.8 C4.8 GRAVEL INTERCEPTOR TRENCH SECTION

SCALE: NTS

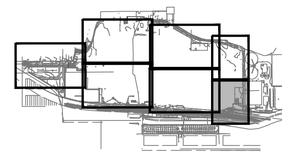

KEYMAP

N

30' 0 30' 60'

15' 45'

SCALE: 1"=30'

CALL 48 HOURS BEFORE YOU DIG DIAL 811

VERT DATUM: NAVD 88
CONV TO MLLW = NAVD88+2.03
HORZ DATUM: NAD 83/91

IF SHEET IS LESS THAN 22x34 REDUCE SCALE ACCORDINGLY

Port of EVERETT
P.O. BOX 538
EVERETT, WA 98206
(425) 259-3164

kpff
1601 5th Avenue, Suite 1300
Seattle, Washington 98101
(206) 382-0600 Fax (206) 382-0500
PROJECT NO. 1600120

NO.	DATE	BY	REVISION
6	01/18/2022	NW	REVISED PER RFI044
5	12/02/2021	NW	2-INCH TO 9-INCH PVMT
4	09/27/2021	NW	REVISED PER RFI010
3	07/23/2021	NW	ADDENDUM 3
2	07/09/2021	NW	ADDENDUM 1
1	06/21/2021	NW	ISSUED FOR BID
0	05/07/2021	NW	FOR CITY REVIEW

NO.	DATE	BY	REVISION
8	07/05/2023	NW	AS-BUILT
7	06/29/2022	NW	SUBSTATION SITE DEVELOPMENT
6	04/08/2022	NW	MARITIME TENANT SITE DEVELOPMENT

RECORD CONDITIONS ILLUSTRATED IN THESE PLANS REFLECT INFORMATION PROVIDED BY THE CONTRACTOR. RECORD CONDITIONS WERE NOT VERIFIED BY ENGINEER.

PROJECT ENGINEER: N. WATSON	SCALE: 1" = 30'
DESIGNED BY: J. BECKER	DATE: 05/07/2021
DRAWN BY: K. EDWARDS, D. YU	CHECKED BY: N. WATSON
APPROVED BY:	

PORT OF EVERETT

NORTON TERMINAL DEVELOPMENT & MTCA 3RD INTERIM ACTION STORMWATER DETAIL PLAN (7 OF 7)

DWG. NO. **C4.8**

CIP NO. 1-8-900-05

PROJECT NO. MT-NT-2021-02.2

SHEET NO. 52 OF 150

AS-BUILTS

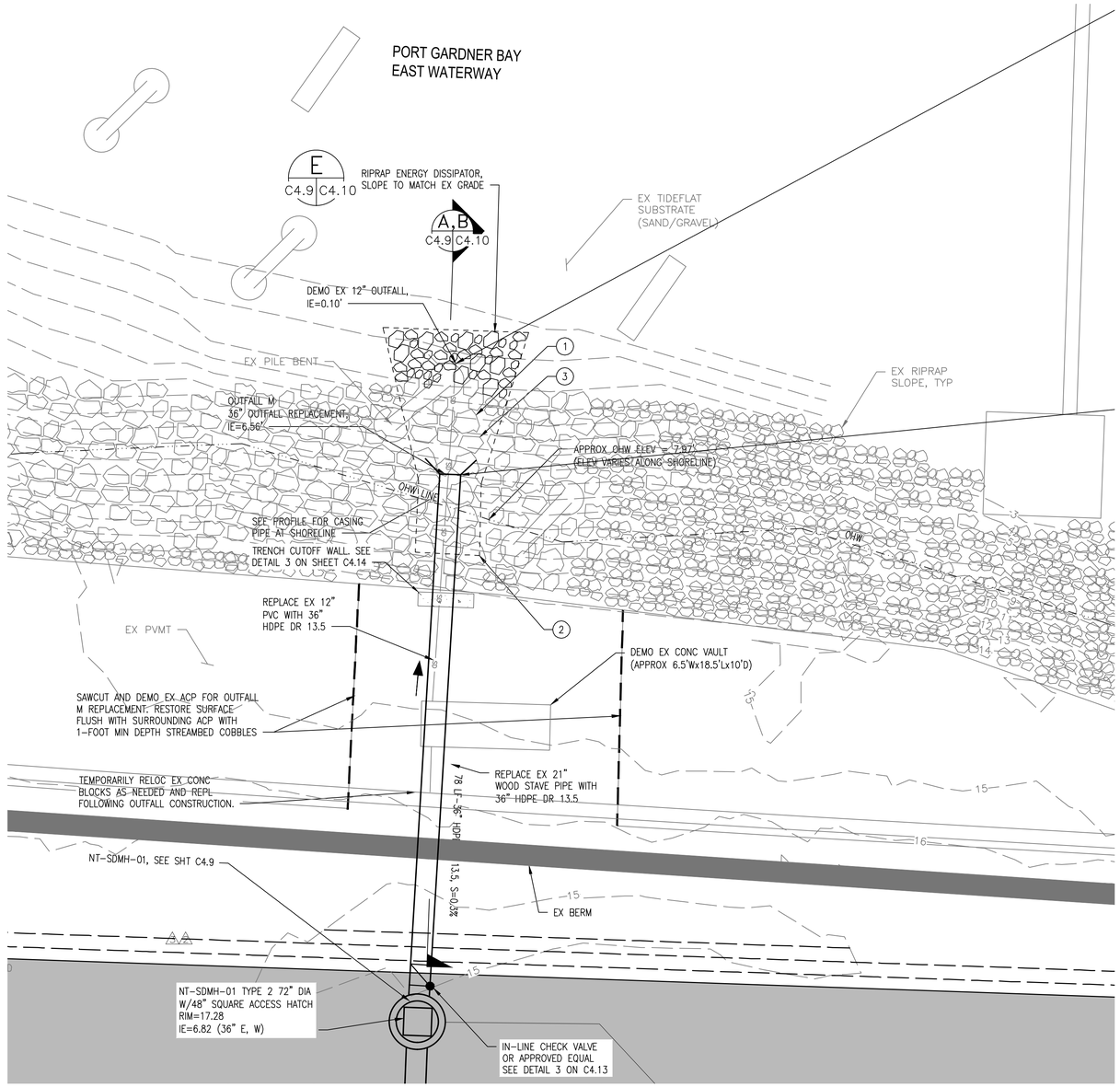

1 OUTFALL M DETAIL PLAN
C4.1 C4.9

10' 0 10' 20'
5' 15'
SCALE: 1"=10'

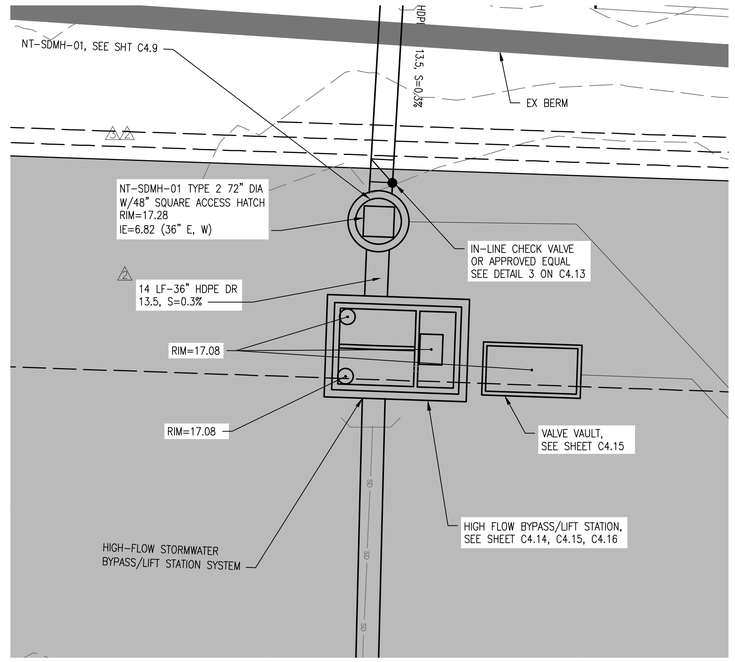

2 HIGH-FLOW BYPASS & LIFT STATION DETAIL PLAN
C4.1 C4.9

GENERAL NOTES

1. ALL WORK BELOW ORDINARY HIGH WATER (OHW) LINE SHALL OCCUR IN THE 'DRY'.
2. EXCAVATION AND PLACEMENT OF ROCK BELOW HTL SHALL OCCUR WITHIN A SINGLE TIDE CYCLE. IF WORK IS NOT COMPLETED WITHIN A SINGLE TIDE CYCLE, TEMPORARILY COVER AND STABILIZE EXPOSED SOILS WITH GRAVEL, GEOTEXTILE OR OTHER APPROVED METHODS PRIOR TO TIDAL SUBMERSION.

CONSTRUCTION KEY NOTES

1. RESTORE RIPRAP TO ITS ORIGINAL ELEVATION, DEPTH, AND LIMITS FOLLOWING OUTFALL REPLACEMENT.
2. KEY RESTORED RIPRAP INTO EXISTING RIPRAP FOLLOWING OUTFALL REPLACEMENT WORK.
3. EXISTING RIRRAP AND CONCRETE RUBBLE THAT IS REMOVED FOR OUTFALL M CONSTRUCTION SHALL BE STOCKPILED IN A CONTAINED AREA AT THE UPLANDS FOR CHARACTERIZATION BY THE PORT IN CONFORMANCE WITH THE SOIL AND GROUNDWATER MANAGEMENT PLAN.
4. RIPRAP SHALL BE REPLACED WITH NEW MATERIALS THAT THE REQUIRED IMPORT CRITERIA AS DESCRIBED IN THE SPECIFICATIONS.

N

CALL 48 HOURS BEFORE YOU DIG DIAL 811

VERT DATUM: NAVD 88
CONV TO MLLW = NAVD88+2.03
HORZ DATUM: NAD 83/91

IF SHEET IS LESS THAN 22x34 REDUCE SCALE ACCORDINGLY

Port of EVERETT
P.O. BOX 538
EVERETT, WA 98206
(425) 259-3164

kpff
1601 5th Avenue, Suite 1300
Seattle, Washington 98101
(206) 382-0600 Fax (206) 382-0500
PROJECT NO. 1600120

NO.	DATE	BY	REVISION
4	07/05/2023	NW	AS-BUILT
3	09/17/2021	NW	UPDATED ELEVATIONS PER RFI007
2	07/23/2021	NW	ADDENDUM 3
1	06/21/2021	NW	ISSUED FOR BID
0	05/07/2021	NW	FOR CITY REVIEW

NO.	DATE	BY	REVISION

RECORD CONDITIONS ILLUSTRATED IN THESE PLANS REFLECT INFORMATION PROVIDED BY THE CONTRACTOR. RECORD CONDITIONS WERE NOT VERIFIED BY ENGINEER.

PROJECT ENGINEER: N. WATSON	SCALE: 1" = 10'
DESIGNED BY: J. BECKER	DATE: 05/07/2021
DRAWN BY: K. EDWARDS, D. YU	CHECKED BY: N. WATSON
APPROVED BY:	

PORT OF EVERETT

NORTON TERMINAL DEVELOPMENT & MTCA 3RD INTERIM ACTION STORMWATER DETAIL PLAN OUTFALL M

DWG. NO. **C4.9**
CIP NO. 1-8-900-05
PROJECT NO. MT-NT-2021-02.2
SHEET NO. 53 OF 150

AS-BUILTS

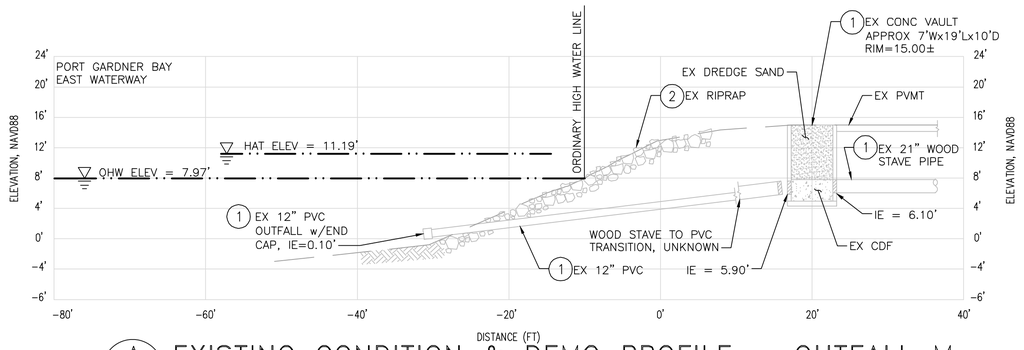

A EXISTING CONDITION & DEMO PROFILE – OUTFALL M

C4.9 | C4.10 SCALE: 1"=10'

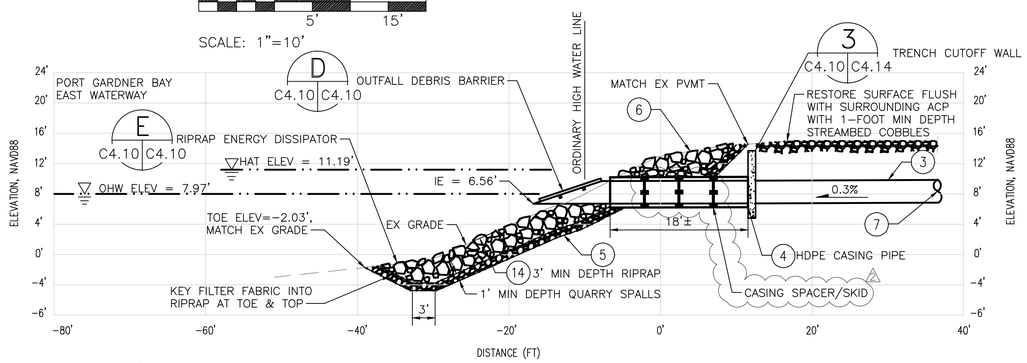

B DEVELOPED CONDITION & DEMO PROFILE – OUTFALL M

C4.9 | C4.10 SCALE: 1"=10'

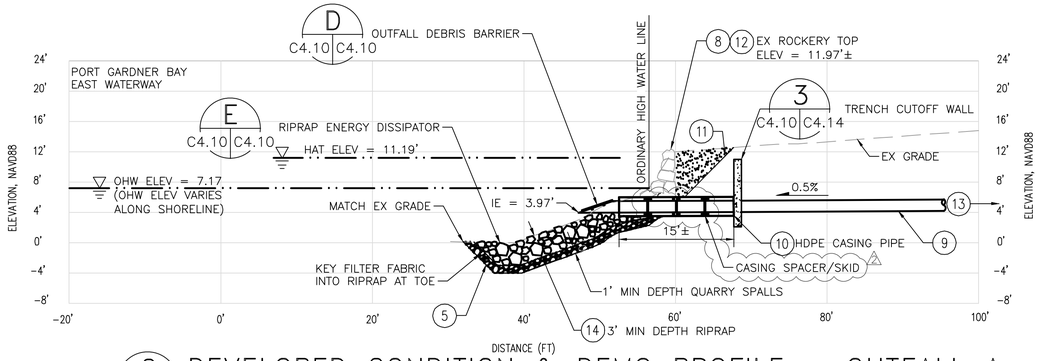

C DEVELOPED CONDITION & DEMO PROFILE – OUTFALL A

C4.2 | C4.10 SCALE: 1"=10'

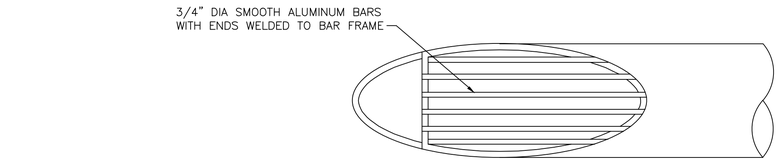

PLAN VIEW

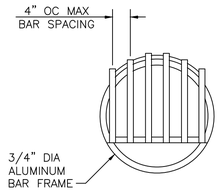

END VIEW

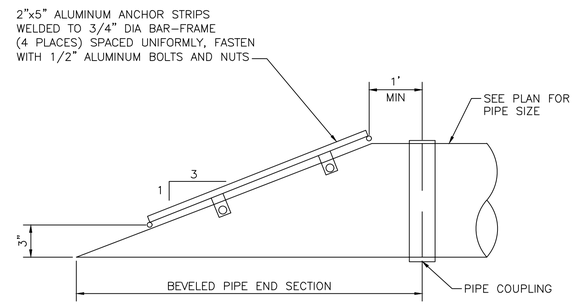

SIDE VIEW

D DETAIL – OUTFALL DEBRIS BARRIER

C4.10 | C4.10 SCALE : NTS

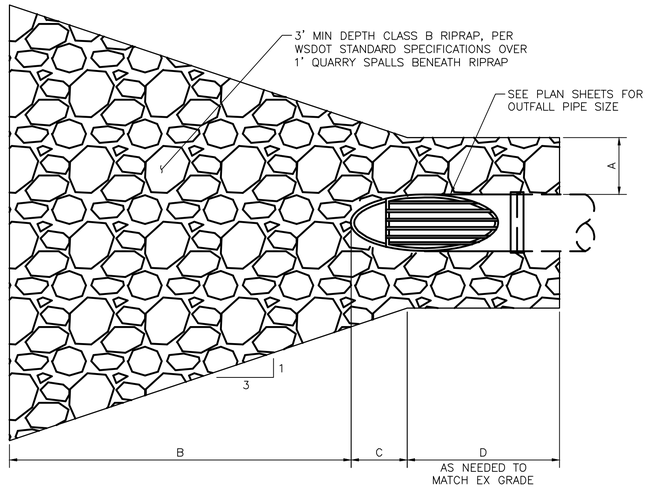

E DETAIL – RIPRAP ENERGY DISSIPATOR

C4.2, C4.9, C4.10 | C4.10 SCALE: NTS

GENERAL NOTES

1. ALL WORK BELOW ORDINARY HIGH WATER (OHW) LINE SHALL OCCUR IN THE 'DRY'.
2. EXCAVATION AND PLACEMENT OF ROCK BELOW HTL WILL OCCUR IN THE 'DRY' WITHIN A SINGLE TIDE CYCLE. WORK THAT CANNOT BE COMPLETED IN A SINGLE TIDE CYCLE SHALL TEMPORARILY COVER AND STABILIZE EXPOSED SOILS WITH GRAVEL, GEOTEXTILE OR OTHER APPROVED METHODS PRIOR TO TIDAL SUBMERSION.

CONSTRUCTION KEY NOTES

1. DEMOLISH AND REMOVE.
2. ALL EXISTING RIPRAP AND CONCRETE RUBBLE THAT IS REMOVED FOR OUTFALL REPLACEMENT SHALL BE DISPOSED AT AN APPROVED OFF–SITE LOCATION AND SHALL BE REPLACED WITH NEW RIPRAP
3. REPLACE EXISTING 12" PVC OUTFALL WITH NEW 36" HDPE.
4. INSTALL 48" HDPE PIPE TO ENCASE 36" HDPE OUTFALL PIPE. FILL ANNULAR SPACE WITH NON–SHRINK GROUT.
5. COVER EXCAVATED, EXPOSED SUBGRADE SOILS WITH FILTER FABRIC PRIOR TO QUARRY SPALL PLACEMENT.
6. RESTORE RIPRAP TO ORIGINAL ELEVATION, DEPTH, AND LIMITS FOLLOWING OUTFALL REPLACEMENT WITH NEW RIPRAP.
7. PIPE TO UPLAND STORM DRAIN SYSTEM.
8. TEMPORARILY RELOCATE EXISTING ROCKERY TO ACCOMMODATE OUTFALL INSTALLATION.
9. PLUG & ABANDON EXISTING 10" DI OUTFALL AND REPLACE WITH 18" HDPE OUTFALL.
10. INSTALL 30" HDPE PIPE TO ENCASE 18" HDPE OUTFALL PIPE. FILL ANNULAR SPACE WITH NON–SHRINK GROUT.
11. COVER EXCAVATED, EXPOSED SUBGRADE SOILS WITH FILTER FABRIC PRIOR TO GRAVEL BACKFILL PLACEMENT FOR ROCKERY.
12. RESTORE EXISTING ROCKERY TO ORIGINAL ELEVATION AND LIMITS FOLLOWING OUTFALL INSTALLATION.
13. PIPE TO UPLAND STORM DRAIN SYSTEM. UPLAND STORM WATER RUNOFF IS TREATED BY FILTER CARTRIDGE(S) FOR WATER QUALITY TREATMENT BEFORE DISCHARGE TO OUTFALL A.
14. RIPRAP SHALL CONFORM TO WSDOT SPEC 9–13.4 CLASS B ROCK FOR EROSION AND SCOUR PROTECTION

ENERGY DISSIPATOR SCHEDULE

OUTFALL SIZE	A	B	C	D
18"	1.5'	10.5'	1.5'	8'±
36"	3'	18'	3'	10'±

CALL 48 HOURS BEFORE YOU DIG DIAL 811

VERT DATUM: NAVD 88
CONV TO MLLW = NAVD88+2.03
HORZ DATUM: NAD 83/91

IF SHEET IS LESS THAN 22x34 REDUCE SCALE ACCORDINGLY

Port of EVERETT
P.O. BOX 538
EVERETT, WA 98206
(425) 259–3164

kpff
1601 5th Avenue, Suite 1300
Seattle, Washington 98101
(206) 382-0600 Fax (206) 382-0500
PROJECT NO. 1600120

NO.	DATE	BY	REVISION
4	07/05/2023	NW	AS–BUILT
3	07/09/2021	NW	ADDENDUM 1
2	06/21/2021	NW	ISSUED FOR BID
1	05/07/2021	NW	FOR CITY REVIEW

NO.	DATE	BY	REVISION

RECORD CONDITIONS ILLUSTRATED IN THESE PLANS REFLECT INFORMATION PROVIDED BY THE CONTRACTOR. RECORD CONDITIONS WERE NOT VERIFIED BY ENGINEER.

PROJECT ENGINEER: N. WATSON	SCALE: 1" = 30'
DESIGNED BY: J. BECKER	DATE: 05/07/2021
DRAWN BY: K. EDWARDS, D. YU	CHECKED BY: N. WATSON
APPROVED BY:	

PORT OF EVERETT

NORTON TERMINAL DEVELOPMENT & MTCA 3RD INTERIM ACTION STORMWATER PROFILES

DWG. NO. **C4.10**
CIP NO. 1–8–900–05
PROJECT NO. MT–NT–2021–02.2
SHEET NO. 54 OF 150

AS-BUILTS

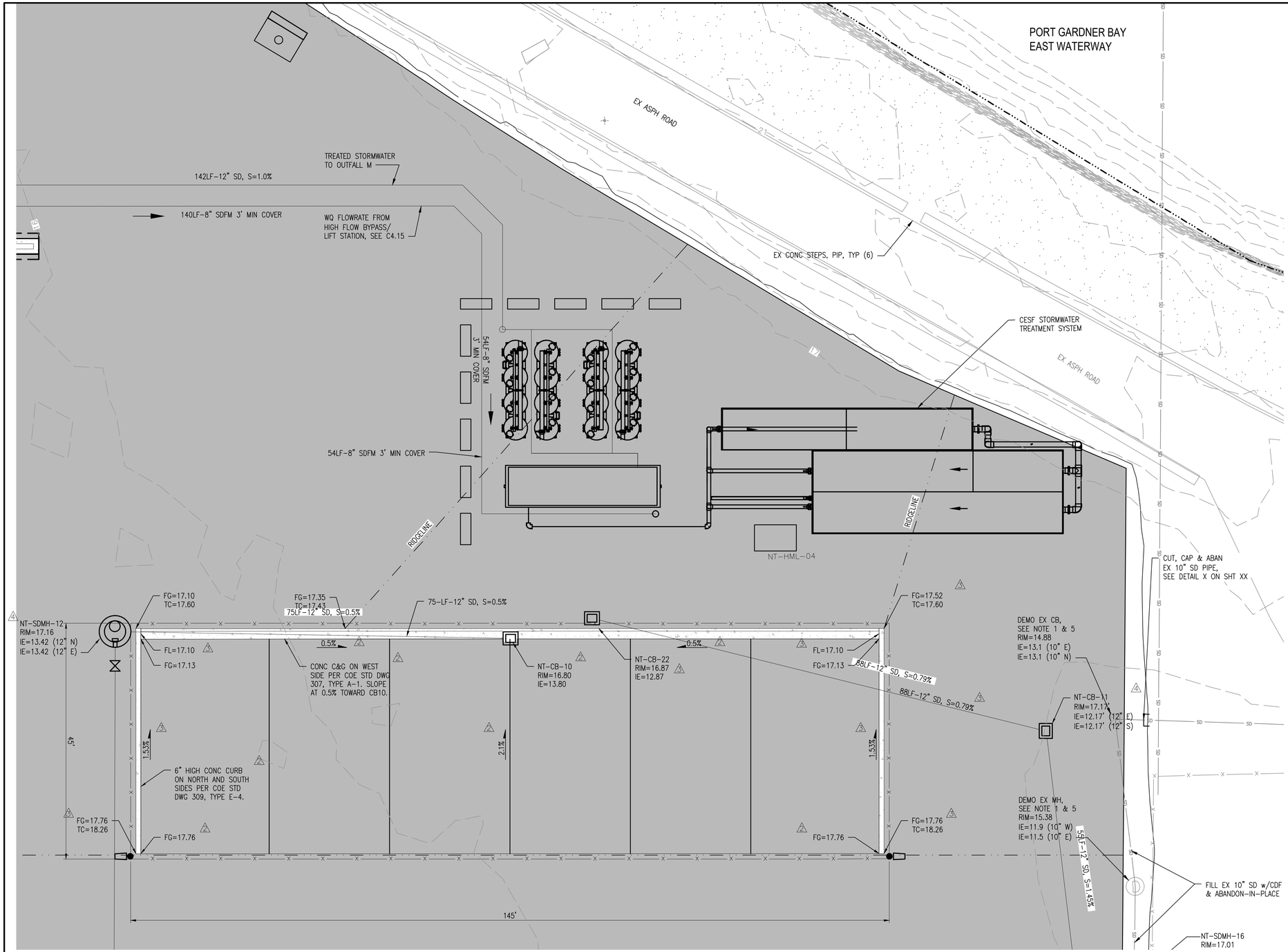

GENERAL NOTES

1. THE CHITOSAN ENHANCED SAND FILTRATION TREATMENT SYSTEM SHOWN IS A PRELIMINARY DESIGN LAYOUT AND IS NOT THE FINAL TREATMENT SYSTEM CONFIGURATION. THE CONTRACTOR SHALL COORDINATE WITH THE TREATMENT SYSTEM VENDOR TO OPTIMIZE THE TREATMENT SYSTEM LAYOUT PER THEIR RECOMMENDATIONS.
2. THE CHITOSAN ENHANCED SAND FILTRATION SYSTEM GENERALLY CONSISTS OF THREE MAIN COMPONENTS: TREATMENT SYSTEM CONTAINER, SAND FILTER PODS, AND ABOVE GROUND SETTLEMENT TANKS.

LEGEND

- PROPERTY LINE
- LEASE LIMIT
- EASEMENT
- WATER
- SEWER
- STORMWATER
- TRENCH DRAIN
- FENCE
- EXISTING WATER
- EXISTING SEWER
- EXISTING STORMWATER
- EXISTING FENCE
- FIRE HYDRANT
- LIGHT POLE
- PROPOSED CONTOUR
- EXISTING CONTOUR

N

10' 0 10' 20'

5' 15'

SCALE: 1"=10'

CALL 48 HOURS BEFORE YOU DIG DIAL 811

VERT DATUM: NAVD 88
CONV TO MLLW = NAVD88+2.03
HORZ DATUM: NAD 83/91

IF SHEET IS LESS THAN 22x34 REDUCE SCALE ACCORDINGLY

Port of EVERETT
P.O. BOX 538
EVERETT, WA 98206
(425) 259-3164

kpff
1601 5th Avenue, Suite 1300
Seattle, Washington 98101
(206) 382-0600 Fax (206) 382-0500
PROJECT NO. 1600120

NO.	DATE	BY	REVISION
7	07/05/2023	NW	AS-BUILT
6	09/27/2021	NW	REVISED PER RFI010
5	07/28/2021	NW	ADDENDUM 4
4	07/23/2021	NW	ADDENDUM 3
3	06/21/2021	NW	ISSUED FOR BID
2	05/07/2021	NW	FOR CITY REVIEW
1			

RECORD CONDITIONS ILLUSTRATED IN THESE PLANS REFLECT INFORMATION PROVIDED BY THE CONTRACTOR. RECORD CONDITIONS WERE NOT VERIFIED BY ENGINEER.

PROJECT ENGINEER: N. WATSON	SCALE: 1" = 10'
DESIGNED BY: J. BECKER	DATE: 05/07/2021
DRAWN BY: K. EDWARDS, D. YU	CHECKED BY: N. WATSON
APPROVED BY:	

PORT OF EVERETT

NORTON TERMINAL DEVELOPMENT & MTCA 3RD INTERIM ACTION ENLARGED PLAN STORMWATER TREATMENT SYSTEM

DWG. NO. **C4.11**

CIP NO. 1-8-900-05

PROJECT NO. MT-NT-2021-02.2

SHEET NO. 55 OF 150

AS-BUILTS

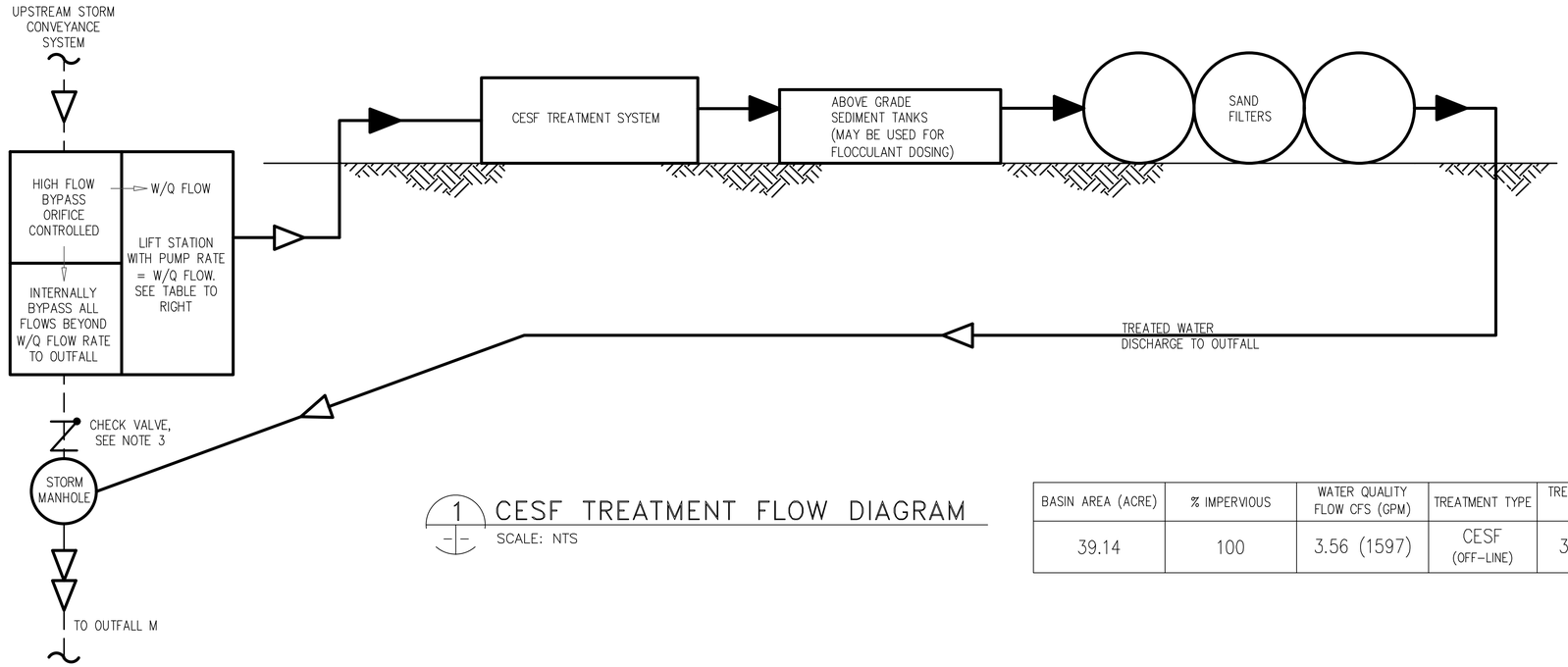

1 CESF TREATMENT FLOW DIAGRAM

SCALE: NTS

BASIN AREA (ACRE)	% IMPERVIOUS	WATER QUALITY FLOW CFS (GPM)	TREATMENT TYPE	TREATMENT CAPACITY CFS (GPM)
39.14	100	3.56 (1597)	CESF (OFF-LINE)	3.57 (1,600)

GENERAL NOTES:

1. HIGH FLOW BYPASS AND LIFT STATION ARE COMBINED INTO A SINGLE STRUCTURE.
2. SEE SHEET C4.14 FOR HIGH FLOW BYPASS/LIFT STATION DIMENSIONS, ORIFICE SIZE, AND CONFIGURATION.
3. STORMWATER CONVEYANCE SYSTEM IS TIDALLY INFLUENCED. CHECK VALVES PREVENT SEA WATER FROM ENTERING THE STORMWATER TREATMENT SYSTEM VIA THE HIGH FLOW BYPASS/LIFT STATION.
4. BASIN AREA INCLUDES FUTURE MARITIME TENANT LEASEHOLD AND WAREHOUSE TENANT LEASEHOLD NORTH YARD.

LEGEND:

- BELOW GROUND FLOW DIRECTION
- ABOVE GROUND FLOW DIRECTION
- EXISTING ABOVE GROUND FLOW DIRECTION

CALL 48 HOURS BEFORE YOU DIG DIAL 811

VERT DATUM: NAVD 88
CONV TO MLLW = NAVD88+2.03
HORZ DATUM: NAD 83/91

IF SHEET IS LESS THAN 22x34 REDUCE SCALE ACCORDINGLY

Port of EVERETT
P.O. BOX 538
EVERETT, WA 98206
(425) 259-3164

kpff
1601 5th Avenue, Suite 1300
Seattle, Washington 98101
(206) 382-0600 Fax (206) 382-0500
PROJECT NO. 1600120

NO.	DATE	BY	REVISION
2	07/05/2023	NW	AS-BUILT
1	06/21/2021	NW	ISSUED FOR BID
0	05/07/2021	NW	FOR CITY REVIEW

RECORD CONDITIONS ILLUSTRATED IN THESE PLANS REFLECT INFORMATION PROVIDED BY THE CONTRACTOR. RECORD CONDITIONS WERE NOT VERIFIED BY ENGINEER.

PROJECT ENGINEER: N. WATSON	SCALE: AS SHOWN
DESIGNED BY: J. BECKER	DATE: 05/07/2021
DRAWN BY: K. EDWARDS, D. YU	CHECKED BY: N. WATSON
APPROVED BY:	

PORT OF EVERETT

NORTON TERMINAL DEVELOPMENT & MTCA 3RD INTERIM ACTION STORMWATER DETAILS
CESF TREATMENT FLOW DIAGRAM

DWG. NO. **C4.12**
CIP NO. 1-8-900-05
PROJECT NO. MT-NT-2021-02.2
SHEET NO. 56 OF 150

AS-BUILTS

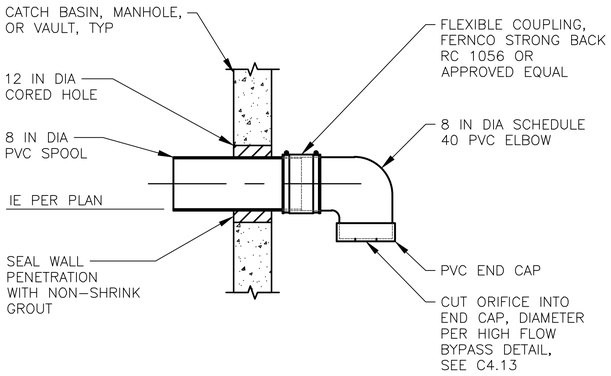

1 DOWN-TURNED ELBOW CONNECTION

SCALE: NTS

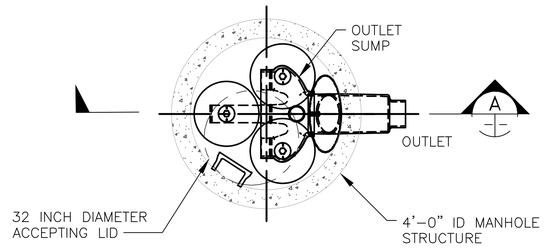

2 OUTFALL A STORMFILTER DETAIL

SCALE: NTS

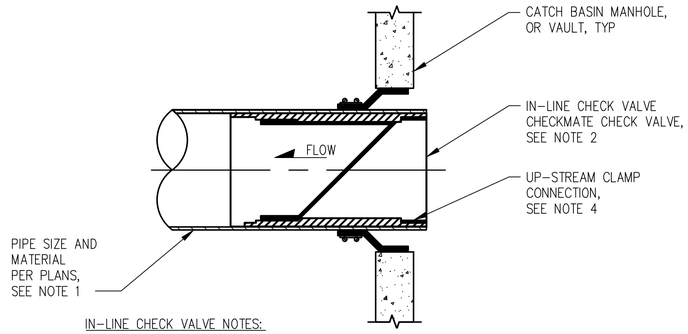

IN-LINE CHECK VALVE NOTES:

1. VERIFY INSIDE DIAMETER OF PIPE WITH VALVE MANUFACTURER.
2. LOCATE VALVE FULLY INSIDE PIPE PRIOR TO ATTACHMENT.
3. VERIFY THAT VALVE FULLY OPENS AND RETURNS TO CLOSED POSITION PER MANUFACTURERS RECOMMENDATIONS.
4. PROVIDE UP-STREAM OR DOWN-STREAM CLAMP CONNECTION AS INDICATED ON THE PLANS.

3 IN-LINE CHECK VALVE

SCALE: NTS

OUTFALL A TREATMENT SUMMARY

BASIN AREA (ACRE)	% IMPERVIOUS	WATER QUALITY FLOW CFS (GPM)	TREATMENT TYPE
0.40	100	0.04 (17.95)	STORMFILTER

STORMFILTER DESIGN

CARTRIDGE HEIGHT (IN)	CARTRIDGE FLOWRATE (GPM/CARTRIDGE)	NO. OF CARTRIDGES NEEDED	MAX NO. CARTRIDGES	HYDRAULIC DROP (FT)
18	7.5	3	3	2.3

NOT USED

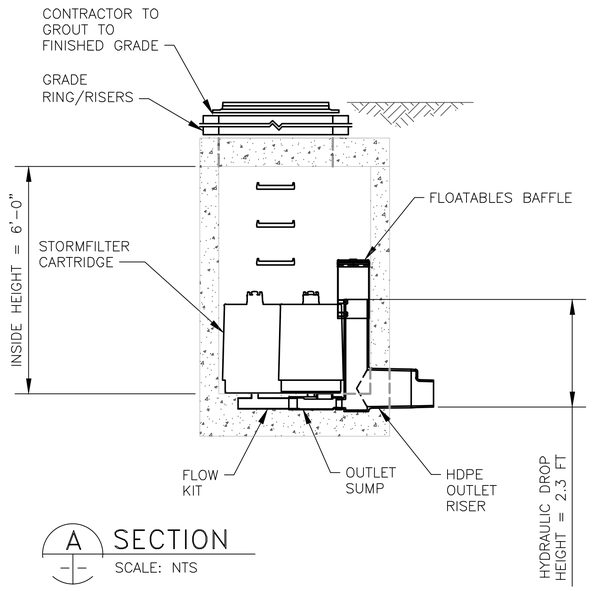

A SECTION

SCALE: NTS

5 PIPE TO STRUCTURE CONNECTION

SCALE: NTS

4 CATCH BASIN CONNECTION

C4.13 C4.4, C4.7 SCALE: NTS

CALL 48 HOURS BEFORE YOU DIG DIAL 811

VERT DATUM: NAVD 88
CONV TO MLLW = NAVD88+2.03
HORZ DATUM: NAD 83/91

IF SHEET IS LESS THAN 22x34 REDUCE SCALE ACCORDINGLY

Port of Everett
P.O. BOX 538
EVERETT, WA 98206
(425) 259-3164

kpff
1601 5th Avenue, Suite 1300
Seattle, Washington 98101
(206) 382-0600 Fax (206) 382-0500
PROJECT NO. 1600120

NO.	DATE	BY	REVISION
3	07/05/2023	NW	AS-BUILT
2	12/02/2021	NW	2-INCH TO 9-INCH PVMT
1	06/21/2021	NW	ISSUED FOR BID
0	05/07/2021	NW	FOR CITY REVIEW

RECORD CONDITIONS ILLUSTRATED IN THESE PLANS REFLECT INFORMATION PROVIDED BY THE CONTRACTOR. RECORD CONDITIONS WERE NOT VERIFIED BY ENGINEER.

PROJECT ENGINEER: N. WATSON	SCALE: AS SHOWN
DESIGNED BY: J. BECKER	DATE: 05/07/2021
DRAWN BY: K. EDWARDS, D. YU	CHECKED BY: N. WATSON
APPROVED BY:	

PORT OF EVERETT

NORTON TERMINAL DEVELOPMENT & MTCA 3RD INTERIM ACTION
STORMWATER DETAILS
(1 OF 4)

DWG. NO. **C4.13**
CIP NO. 1-8-900-05
PROJECT NO. MT-NT-2021-02.2
SHEET NO. 57 OF 150

AS-BUILTS

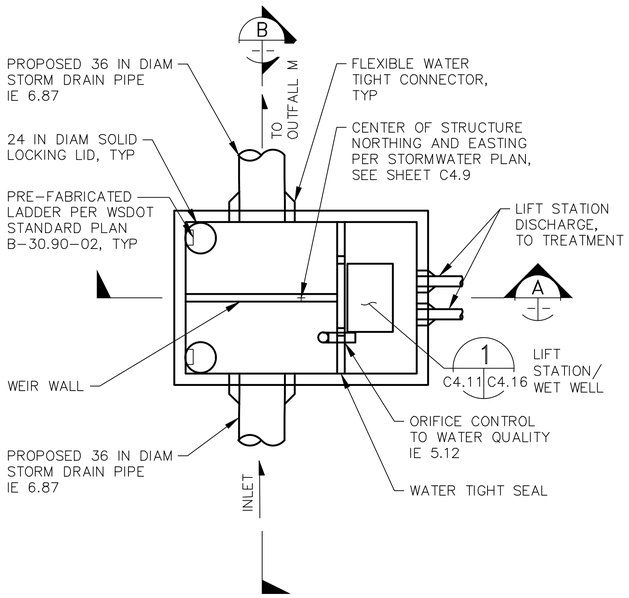

1 DETAIL
C4.9 C4.14 SCALE: 1" = 5'-0"

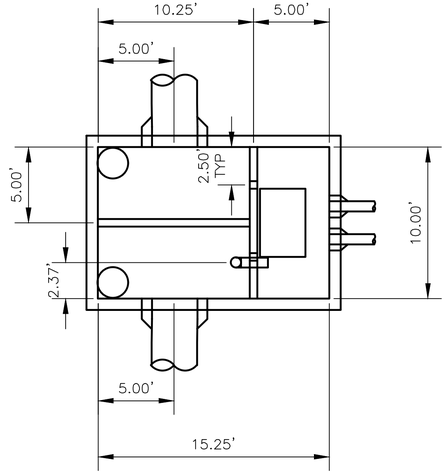

2 DETAIL
C4.9 C4.14 SCALE: 1" = 5'-0"

GENERAL NOTES:

1. CONTRACTOR SHALL SUBMIT SHOP DRAWINGS AND CALCULATIONS TO ENGINEER FOR APPROVAL PRIOR TO CONSTRUCTION. SEE SPECIFICATIONS FOR ADDITIONAL REQUIREMENTS.

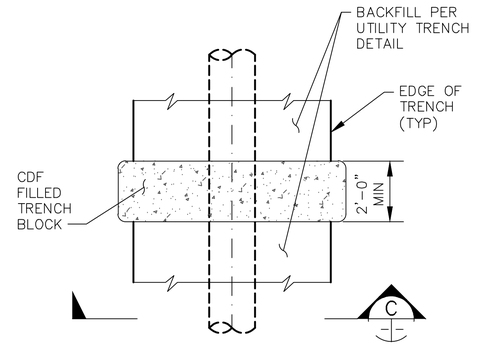

3 UTILITY TRENCH CUTOFF WALL DETAIL
C4.10 C4.14 SCALE: 1" = 5'-0"

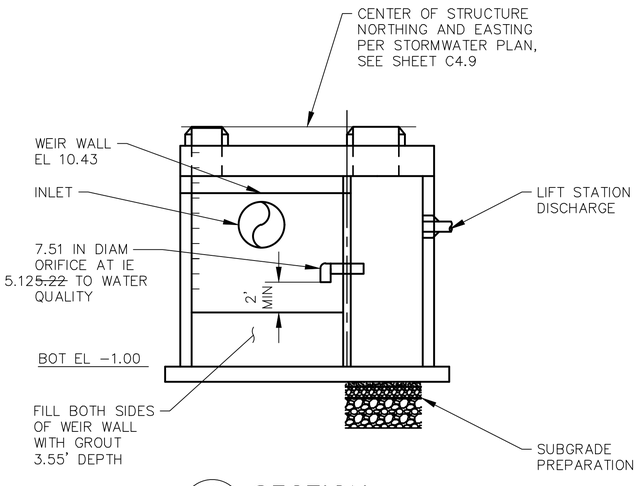

A SECTION
SCALE: 1" = 5'-0"

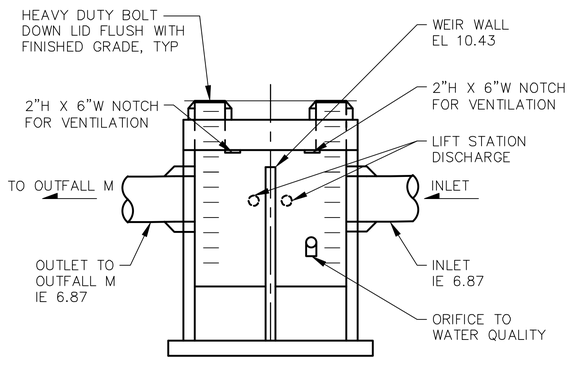

B SECTION
SCALE: 1" = 5'-0"

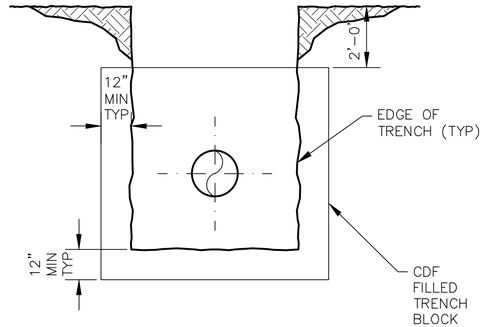

C SECTION
SCALE: 1" = 5'-0"

CALL 48 HOURS BEFORE YOU DIG DIAL 811

VERT DATUM: NAVD 88
CONV TO MLLW = NAVD88+2.03
HORZ DATUM: NAD 83/91

IF SHEET IS LESS THAN 22x34 REDUCE SCALE ACCORDINGLY

Port of EVERETT
P.O. BOX 538
EVERETT, WA 98206
(425) 259-3164

kpff
1601 5th Avenue, Suite 1300
Seattle, Washington 98101
(206) 382-0600 Fax (206) 382-0500
PROJECT NO. 1600120

NO.	DATE	BY	REVISION
2	07/05/2023	NW	AS-BUILT
1	06/21/2021	NW	ISSUED FOR BID
0	05/07/2021	NW	FOR CITY REVIEW

NO.	DATE	BY	REVISION

RECORD CONDITIONS ILLUSTRATED IN THESE PLANS REFLECT INFORMATION PROVIDED BY THE CONTRACTOR. RECORD CONDITIONS WERE NOT VERIFIED BY ENGINEER.

PROJECT ENGINEER: N. WATSON	SCALE: AS SHOWN
DESIGNED BY: J. BECKER	DATE: 05/07/2021
DRAWN BY: K. EDWARDS, D. YU	CHECKED BY: N. WATSON
APPROVED BY:	

PORT OF EVERETT

NORTON TERMINAL DEVELOPMENT & MTCA 3RD INTERIM ACTION STORMWATER DETAILS (2 OF 4)

DWG. NO. **C4.14**
CIP NO. 1-8-900-05
PROJECT NO. MT-NT-2021-02.2
SHEET NO. 58 OF 150

AS-BUILTS

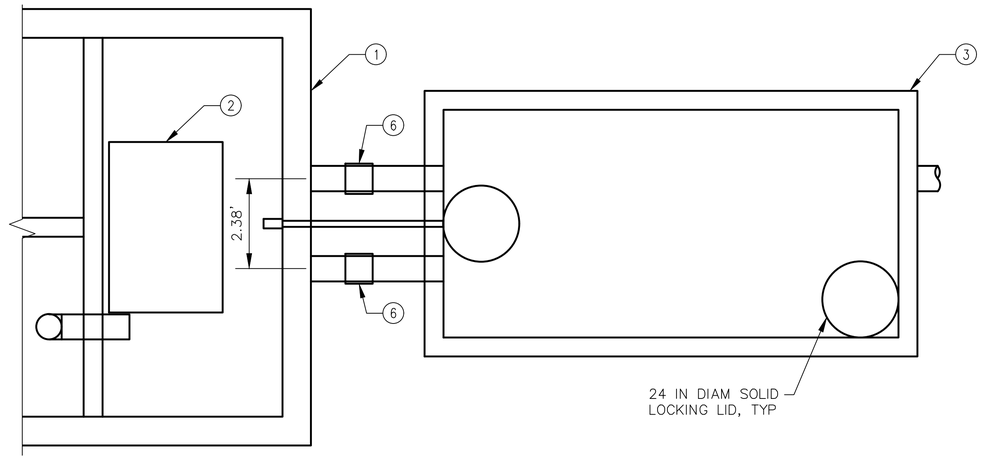

1 LIFT STATION DETAIL
C4.15 C4.16 SCALE: 1" = 2'-0"

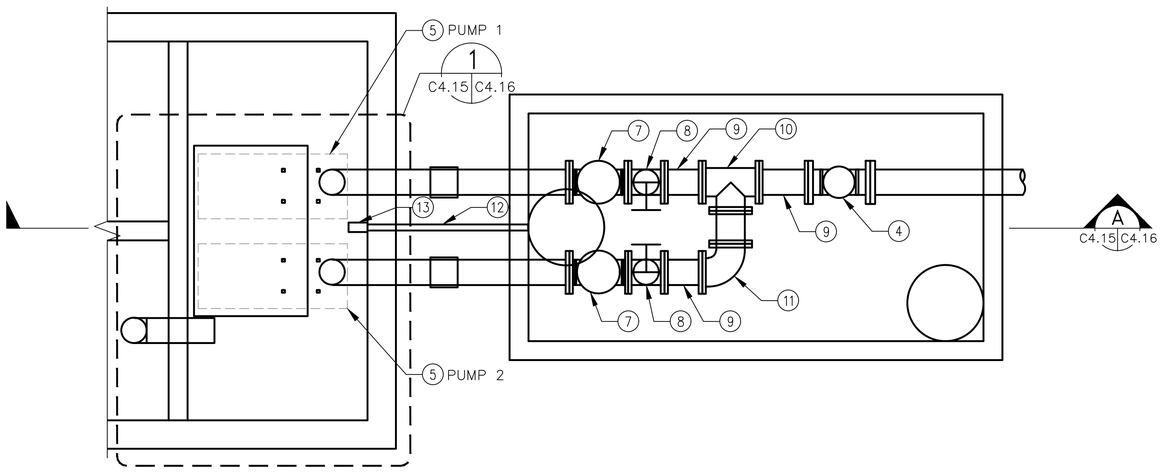

2 LIFT STATION DETAIL
C4.15 C4.16 SCALE: 1" = 2'-0"

NOTES

1. CONSTRUCT LIFT STATION AND PROVIDE STORM DRAINAGE, PRESSURE MAIN AND ELECTRICAL CONNECTIONS TO THE WET WELL. WET WELL SECTION IS SHOWN SCHEMATICALLY. LOCATE AND INSTALL THE MODULAR BASE, MOTOR MOUNT, DISCHARGE PIPE, RAILS AND OTHER APPURTENANCES PER MANUFACTURERS RECOMMENDATIONS.
2. MOUNT THE CONTROL PANEL AND ROUTE CONDUIT TO THE LIFT STATION PER THE ELECTRICAL PLANS.
3. PROVIDE A SPARE 3/4" CONDUIT FROM THE WET WELL TO THE ELECTRICAL EQUIPMENT. MOUNT AND CAP EXPOSED END.
4. INSTALL TOP PICK LOAD RATED HATCH FLUSH WITH GRADE. FALL PROTECTION APPURTENANCES SHALL BE INSTALLED AT HATCH.
5. ALL COMPONENTS INSTALLED IN THE LIFT STATION SHALL BE SUITABLE FOR NEC CLASS 1, DIVISION 1 LOCATIONS.

EQUIPMENT LIST

1	10'X15.25' CONCRETE VAULT, FLOW SPLITTER/LIFT STATION	1	SEE SPECS
2	HATCH WITH 4.5' X 3' CLEAR OPENING AND SAFETY GRATE, SEE NOTE 4	1	PER MFR
3	OLDCASTLE PRECAST 6'X12' (I.D.) METER VAULT	1	PER MFR
4	8" MAGNETIC FLOW METER, SEE PUMP OPERATION NOTE 2	1	PER MFR
5	BASIS OF DESIGN PUMP – FLYGT SUBMERSIBLE NON-CLOG SEWAGE PUMP NP3171 MT 3 ~ ADAPTIVE 435	2	PER MFR
6	8" MJ/MJ RESTRAINED JOINT COUPLING	2	PER AWWA C110
7	8" RESILIENT HINGED CI CHECK VALVE	2	PER AWWA C508
8	8" RESILIENT-SEATED CI ECCENTRIC PLUG VALVE	2	PER AWWA C517-05
9	8" DI CL 53 SPOOL FLG X FLG ASPHALT COATED LENGTH AS REQD	3	PER AWWA C110
10	8"X8"X8" DI TEE FL/FL ASPHALT COATED	1	PER AWWA C110
11	8" DI 90 DEG ELBOW FL/FL ASPHALT COATED	1	PER AWWA C110
12	2" SCH 40 PVC DRAIN LINE	1	PER MFR
13	2" SCH 40 PVC CHECK VALVE	1	PER MFR

BASIS OF DESIGN PUMP CHARACTERISTICS

	MIN EFF %	PUMP RATING GPM	PUMP RATING PASS ø	TDH FT	MOTOR RATING RPM	MOTOR RATING HP	MOTOR RATING VOLTS
PUMP 1, PUMP 2 & MOTORS	88.0%	1,600	–	LOW-HIGH 38.8-39.0	1,755	25	460

PUMP OPERATION

1. PUMP 1 AND PUMP 2 DUTY POINTS SHALL BE SET AT A FIXED WATER QUALITY FLOW RATE.
2. INSTALL A ROSEMOUNT MAGMETER, WITH WIRELESS TRANSMITTER ON THE DISCHARGE LINE TO COMMUNICATE FLOW RATES WITH THE CONTROL PANEL AND VARIABLE FREQUENCY DRIVES.
3. PUMP 1 AND PUMP 2 WILL BE CONTROLLED WITH VARIABLE FREQUENCY DRIVES ON EACH PUMP MOTOR TO MAINTAIN WATER QUALITY FLOW RATES.
4. PUMP 1 AND PUMP 2 WILL NOT RUN IN PARALLEL.
5. PUMP 1 AND PUMP 2 SHALL ALTERNATE DUTY AFTER EVERY CYCLE.
6. EMERGENCY OFF SWITCH SHALL REMAIN ACTIVE WHILE THE SYSTEM IS IN MANUAL MODE.
7. SET HIGHWATER ALARM FLOAT JUST BELOW BOTTOM OF LID.

CALL 48 HOURS BEFORE YOU DIG DIAL 811

VERT DATUM: NAVD 88
CONV TO MLLW = NAVD88+2.03
HORZ DATUM: NAD 83/91

IF SHEET IS LESS THAN 22x34 REDUCE SCALE ACCORDINGLY

Port of EVERETT
P.O. BOX 538
EVERETT, WA 98206
(425) 259-3164

kpff
1601 5th Avenue, Suite 1300
Seattle, Washington 98101
(206) 382-0600 Fax (206) 382-0500
PROJECT NO. 1600120

NO.	DATE	BY	REVISION
2	07/05/2023	NW	AS-BUILT
1	06/21/2021	NW	ISSUED FOR BID
0	05/07/2021	NW	FOR CITY REVIEW

RECORD CONDITIONS ILLUSTRATED IN THESE PLANS REFLECT INFORMATION PROVIDED BY THE CONTRACTOR. RECORD CONDITIONS WERE NOT VERIFIED BY ENGINEER.

PROJECT ENGINEER: N. WATSON	SCALE: AS SHOWN
DESIGNED BY: J. BECKER	DATE: 05/07/2021
DRAWN BY: K. EDWARDS, D. YU	CHECKED BY: N. WATSON
APPROVED BY:	

PORT OF EVERETT

NORTON TERMINAL DEVELOPMENT & MTCA 3RD INTERIM ACTION STORMWATER DETAILS (3 OF 4)

DWG. NO. **C4.15**
CIP NO. 1-8-900-05
PROJECT NO. MT-NT-2021-02.2
SHEET NO. 59 OF 150

AS-BUILTS

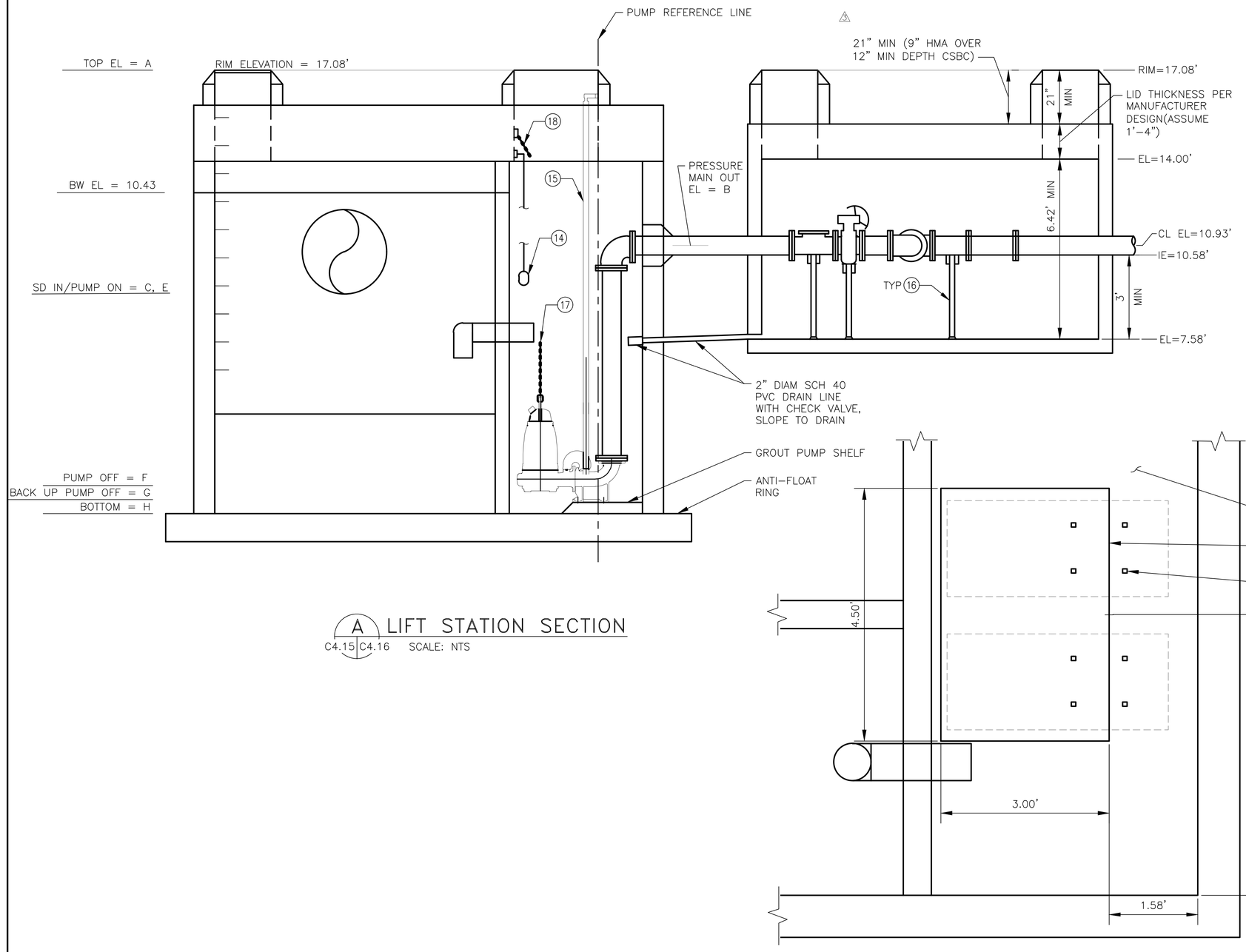

A LIFT STATION SECTION
C4.15 | C4.16 SCALE: NTS

1 WET WELL CONFIGURATION
C4.14 | C4.16 SCALE: NTS

EQUIPMENT LIST

14	ROTO - FLOAT TYPE S	4	PER MFR
15	316 STAINLESS STEEL GUIDE BARS	4	PER MFR
16	PIPE SUPPORT/VALVE STAND	3	SEE SPECS
17	316 STAINLESS STEEL LIFTING CHAIN ASSEMBLY AND LIFTING DEVICE	2	PER MFR
18	316 STAINLESS STEEL UPPER MOUNTING BRACKET	2	PER MFR

ELEVATIONS

DESCRIPTION	REF	PUMP STA ELEV. (NAVD88)
TOP OF WET WELL	A	17.08
PRESSURE MAIN OUT CL	B	10.93'
GRAVITY LINE IN	C	6.87
HIGH WATER ALARM SEE PUMP OP. NOTE 7 ON C4.15	D	-
PUMP ON	E	6.87
PUMP OFF	F	0
BACKUP PUMP OFF (EMERGENCY OFF)	G	-0.50
BOTTOM OF WET WELL	H	-1.00

NOTES

1. ELECTRICAL PENETRATIONS SHALL BE MADE WATER TIGHT.
2. PUMP ELEVATIONS SHALL BE FIELD ADJUSTED DURING COMMISSIONING.

CALL 48 HOURS BEFORE YOU DIG DIAL 811

VERT DATUM: NAVD 88
CONV TO MLLW = NAVD88+2.03
HORZ DATUM: NAD 83/91

IF SHEET IS LESS THAN 22x34 REDUCE SCALE ACCORDINGLY

Port of EVERETT
P.O. BOX 538
EVERETT, WA 98206
(425) 259-3164

kpff
1601 5th Avenue, Suite 1300
Seattle, Washington 98101
(206) 382-0600 Fax (206) 382-0500
PROJECT NO. 1600120

NO.	DATE	BY	REVISION
4	07/05/2023	NW	AS-BUILT
3	11/30/2021	NW	REVISED PER RFI017
2	09/17/2021	NW	UPDATED RIM ELEVATIONS PER RFI007
1	06/21/2021	NW	ISSUED FOR BID
0	05/07/2021	NW	FOR CITY REVIEW

RECORD CONDITIONS ILLUSTRATED IN THESE PLANS REFLECT INFORMATION PROVIDED BY THE CONTRACTOR. RECORD CONDITIONS WERE NOT VERIFIED BY ENGINEER.

PROJECT ENGINEER: N. WATSON	SCALE: AS SHOWN
DESIGNED BY: J. BECKER	DATE: 05/07/2021
DRAWN BY: K. EDWARDS, D. YU	CHECKED BY: N. WATSON
APPROVED BY:	

PORT OF EVERETT

NORTON TERMINAL DEVELOPMENT & MTCA 3RD INTERIM ACTION STORMWATER DETAILS (4 OF 4)

DWG. NO. **C4.16**
CIP NO. 1-8-900-05
PROJECT NO. MT-NT-2021-02.2
SHEET NO. 60 OF 150

AS-BUILTS

STORM DRAIN STRUCTURE SCHEDULE

NORTHING & EASTING COORDINATES ARE TAKEN AT THE CENTER OF EACH STRUCTURE.
STORMWATER MANHOLES AND CATCH BASINS SHALL BE INSTALLED PER CITY OF EVERETT STANDARD DRAWING NO. 405 & 402. (1)

ID	STRUCTURE TYPE	SIZE (DIA, IN)	EASTING	NORTHING	NOTES
NT-SDVLT-01	LIFT STATION	SEE PLAN	1301166.32	362471.40	2
NT-SDVLT-02	VALVE VAULT	SEE PLAN	1301169.19	362489.21	2
NT-SDMH-01	CB TYPE 2	72"	1301149.61	362469.02	2
NT-SDMH-02	CB TYPE 2	60"	1301244.84	362466.62	2
NT-SDMH-03	CB TYPE 2	48"	1301234.56	362162.09	3
NT-SDMH-04	CB TYPE 2	72" (4)	1301501.78	362459.76	2
NT-SDMH-05	CB TYPE 2	54"	1301488.63	362150.65	2
NT-SDMH-06	CB TYPE 2	48"	1301475.54	361756.13 (4)(7)	2
NT-SDMH-07	CB TYPE 2	48"	1301493.68	361530.10	2
NT-SDMH-08	CB TYPE 2	48"	1301483.64	361413.35 (3)	1, 3
NT-SDMH-09	CB TYPE 2	48"	1301587.80	361524.35	2
NT-SDMH-10	CB TYPE 2	48"	1301798.97	362141.17	3
NT-SDMH-11	CB TYPE 2	48"	1301506.83	362641.83	2
NT-SDMH-12	CB TYPE 2	48"	1301325.16	362648.70	2
NT-SDMH-13	CB TYPE 2	54" (4)	1301509.27	362769.41	2
NT-SDMH-14	CB TYPE 2	48"	1301520.65	362769.46	3
NT-SDMH-15	CB TYPE 2	48"	1301513.86	362829.53	2
NT-SDMH-16	CB TYPE 2	48"	1301406.05	362830.19	2 (8)
NT-SDMH-17	CB TYPE 2	48"	1301522.22	363125.19	3
NT-SDMH-18	CB TYPE 2	48"	1301810.63	362757.94	2
NT-SDMH-19	CB TYPE 2	48"	1301820.54	362757.95	3
~~NT-SDMH-20~~	~~CB TYPE 2~~	~~48"~~	~~1301819.35~~	~~363014.76~~	3, 8 (6)(8)
NT-SDMH-21	CB TYPE 2	48"	1301826.48	363206.04	2
NT-SDMH-22	CB TYPE 2	48"	1302074.06	363197.98	2
NT-SDMH-23	CB TYPE 2	48"	1301485.53	361756.78 (7)	3, 4 (4)
NT-SDMH-24	CB TYPE 2	54"	1301499.13	362151.71	3, 5 (8)
NT-CB-01	CB TYPE 1		1301246.24	362497.12	3
~~NT-CB-02~~	~~CB TYPE 1~~		~~1301499.14~~	~~362151.87~~	3, 6 (4)
~~NT-CB-03~~	~~CB TYPE 1~~		~~1301484.88~~	~~361742.48~~	3, 7
NT-CB-04	CB TYPE 1		1301892.42	362138.03	3 (6)
NT-CB-05	CB TYPE 1		1301886.60	361965.92	3
NT-CB-06	CB TYPE 1		1301883.16	361869.81	3
NT-CB-07	CB TYPE 1		1301990.46	362441.53	3
NT-CB-08	CB TYPE 1		1301975.11	362200.19	3
NT-CB-09	CB TYPE 1		1301960.57	361960.34	3
NT-CB-10	CB TYPE 1		1301329.09	362724.14	3
NT-CB-11	CB TYPE 1		1301350.32	362825.68 (7)	3
~~NT-CB-12~~	~~CB TYPE 1~~		~~1301526.04~~	~~362924.92~~	3, 8 (6)
~~NT-CB-13~~	~~CB TYPE 1~~		~~1301529.53~~	~~363024.86~~	3, 8
NT-CB-14	CB TYPE 1		1301533.18	363124.53 (8)	3
NT-CB-15	CB TYPE 1		1301530.62	363341.45	3
~~NT-CB-16~~	~~CB TYPE 1~~		~~1301825.87~~	~~362914.48~~	3, 8 (6)
NT-CB-17	CB TYPE 1		1302127.50	363231.45	3
NT-CB-18	CB TYPE 1		1302008.59	362648.99 (8)	3
NT-CB-19	CB TYPE 1		1301835.97	363205.46	3
~~NT-CB-20~~	~~CB TYPE 1~~		~~1301926.15~~	~~363209.24~~	3, 8 (6)
~~NT-CB-21~~	~~CB TYPE 1~~		~~1302012.06~~	~~363206.34~~	3, 8
NT-CB-22	CB TYPE 1		1301325.78	362739.82	3 (2)
NT-CB-23	CB TYPE 1		1301530.62	361393.67	3 (3)
NT-CB-24	CB TYPE 1L		1301575.09	361249.99	2 (3)
NT-CB-25	CB TYPE 2		1301527.51	363231.56	2 (3)
NT-CB-26	CB TYPE 1		1301832.27	363385.70	3
NT-CB-27	CB TYPE 1		1301828.47	363276.57	
NT-CB-28	CB TYPE 1		1302113.75	363292.76	
NT-CB-29	CB TYPE 1		1302124.55	363359.11	

TRENCH DRAIN SCHEDULE

NORTHING & EASTING COORDINATES ARE TAKEN AT THE CENTER OF EACH INTERNAL END

ID	EASTING	NORTHING
NT-TD-01 SOUTH END	1301219.95	361749.12
NT-TD-01 NORTH END	1301244.46	362453.12
NT-TD-02 SOUTH END (4)	1301246.36	362507.70
NT-TD-02 NORTH END	1301250.82	362635.62
NT-TD-03 SOUTH END	1301491.19	361923.79
NT-TD-03 NORTH END	1301532.48	363109.83 (6)
NT-TD-04 SOUTH END	1301475.61	361475.99
NT-TD-04 NORTH END (4)	1301484.51	361731.84
NT-TD-05 SOUTH END	1301794.91	362025.28
NT-TD-05 NORTH END	1301835.64	363195.33
NT-TD-06 SOUTH END (6)	1302064.69	362962.86
NT-TD-06 NORTH END	1302072.48	363186.72

STORM DRAIN STRUCTURE SCHEDULE NOTES:

1. SDMH8 SHALL BE A STORMFILTER BY CONTECH OR APPROVED EQUAL MANHOLE STRUCTURE THAT COLLECTS SURFACE WATER RUNOFF AND IS CAPABLE OF TREATING IT TO MEET DEPARTMENT OF ECOLOGY 'BASIC' TREATMENT CRITERIA.
2. SOLID COVER.
3. GRATE COVER.
4. SDMH23 REPLACES DELETED CB3
5. SDMH24 REPLACES DELETED CB2
6. CB2 IS DELETED & REPLACED BY SDMH24
7. CB3 IS DELETED & REPLACED BY SDMH23
8. CB12, CB13, CB16, CB20, CB21, SDMH20 ARE DELETED

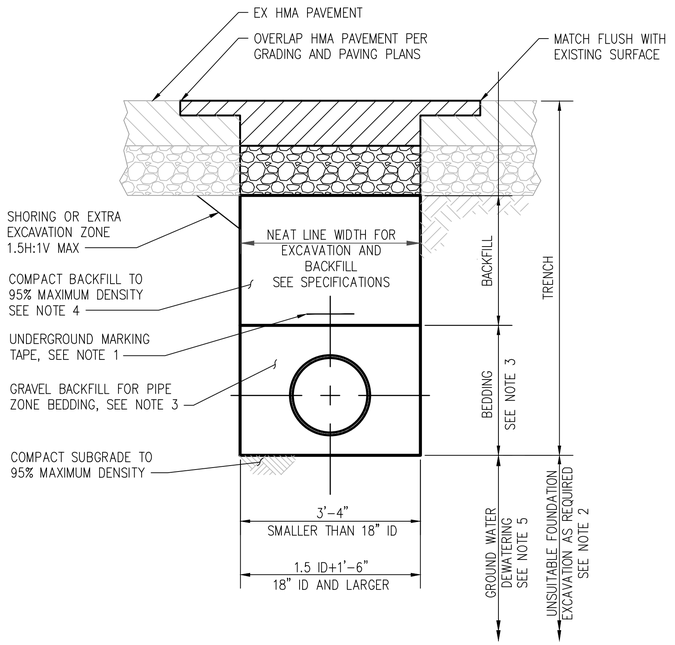

1 TYPICAL TRENCH DETAIL FOR STORM DRAIN
X|C4.17 SCALE: NTS

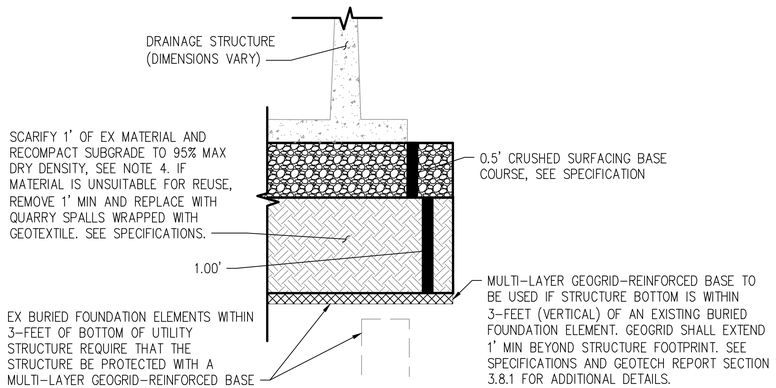

2 PRECAST STRUCTURES SUBGRADE PREPARATION
–|C4.17 SCALE: NTS

PIPE TRENCH NOTES

1. PLACE THE APPROPRIATE UTILITY MARKING TAPE, WITH METAL FIBERS, 1' ABOVE THE PIPE CONTINUOUSLY ALONG THE PIPE LENGTH.
2. UNSUITABLE FOUNDATION EXCAVATION NOT SHOWN. SEE SPECIFICATIONS.
3. TRENCH BEDDING SECTION PER COE STANDARD PLAN 614-TYPICAL TRENCH SECTION.
4. DEWATER TO AT LEAST 2 FEET BELOW SUBGRADE. SEE SPECIFICATIONS.

NOTE:

NORTHINGS AND EASTINGS OF STRUCTURES ARE BASED OFF OF CONSTRUCTION SURVEY AS-BUILTS PROVIDED BY THE CONTRACTOR.

IF SHEET IS LESS THAN 22x34 REDUCE SCALE ACCORDINGLY

Port of EVERETT
P.O. BOX 538
EVERETT, WA 98206
(425) 259-3164

kpff
1601 5th Avenue, Suite 1300
Seattle, Washington 98101
(206) 382-0600 Fax (206) 382-0500
PROJECT NO. 1600120

NO.	DATE	BY	REVISION
5	10/25/2021	NW	REVISED PER CITY COMMENTS.
4	09/27/2021	NW	REVISED PER RFI010 & WHSE GVL YARD DRAINAGE.
3	08/26/2021	NW	REVISED PER CITY COMMENTS AND CLARIFIED RIM TYPE AS SOLID OR GRATE.
2	07/28/2021	NW	ADDENDUM 4
1	07/09/2021	NW	ADDENDUM 1
0	06/21/2021	NW	ISSUED FOR BID

NO.	DATE	BY	REVISION
8	07/05/2023	NW	AS-BUILT
6	04/08/2022	NW	MARITIME TENANT SITE DEVELOPMENT
7	02/09/2022	NW	MOVE SDMH6 & SDMH23 TO AVOID WOOD STAVE PIPE
6	12/02/2021	NW	2-INCH TO 9-INCH PVMT

RECORD CONDITIONS ILLUSTRATED IN THESE PLANS REFLECT INFORMATION PROVIDED BY THE CONTRACTOR. RECORD CONDITIONS WERE NOT VERIFIED BY ENGINEER.

PROJECT ENGINEER: N. WATSON	SCALE: AS SHOWN
DESIGNED BY: J. BECKER	DATE: 06/21/2021
DRAWN BY: K. EDWARDS, D. YU	CHECKED BY: N. WATSON
APPROVED BY:	

PORT OF EVERETT

NORTON TERMINAL DEVELOPMENT & MTCA 3RD INTERIM ACTION STORM & TRENCH DRAIN STRUCTURE SCHEDULE & DETAILS

DWG. NO. **C4.17**
CIP NO. 1-8-900-05
PROJECT NO. MT-NT-2021-02.2
SHEET NO. 61 OF 150

AS-BUILTS

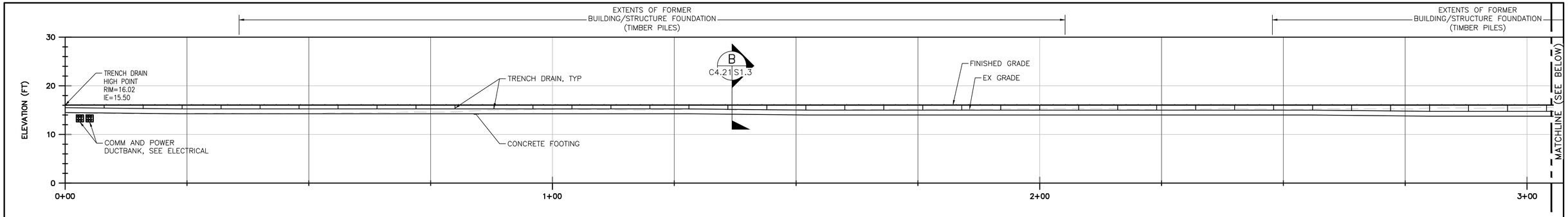

1 NT-TD-01 TRENCH DRAIN PROFILE

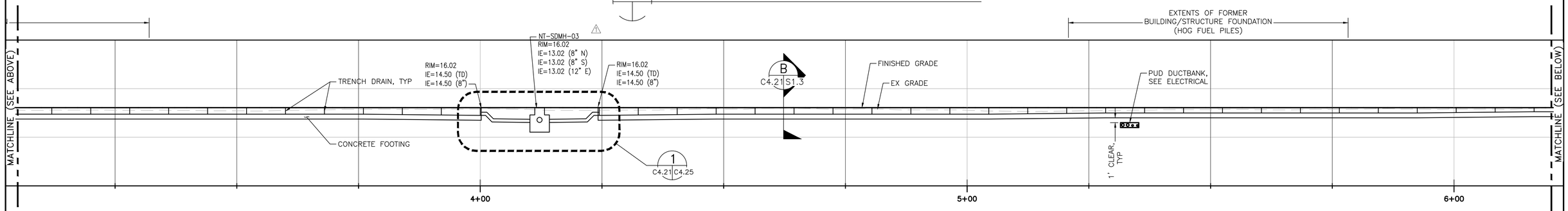

1 NT-TD-01 TRENCH DRAIN PROFILE

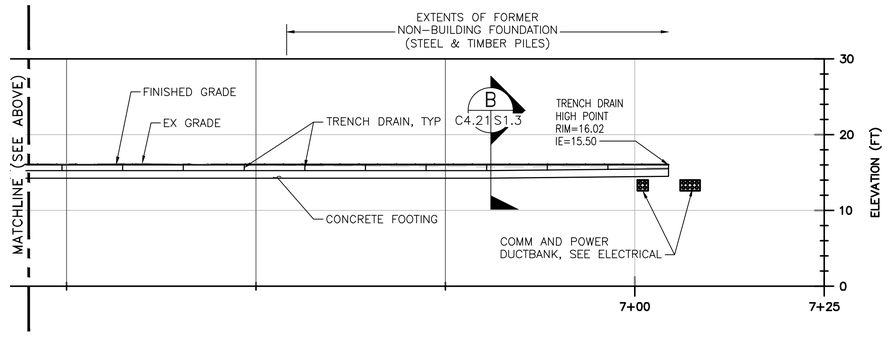

1 NT-TD-01 TRENCH DRAIN PROFILE

GENERAL NOTES

1. EXISTING FOUNDATION STRUCTURES SHOWN IN PROFILE ARE APPROXIMATE AND SHOWN FOR REFERENCE ONLY. NOT ALL FOUNDATION STRUCTURES/DEBRIS ARE SHOWN. CONTRACTOR SHALL CONFIRM EXISTING CONDITIONS PRIOR TO START OF WORK. IF CONDITIONS DIFFER FROM THOSE SHOWN IN PROFILE, THE CONTRACTOR SHALL NOTIFY THE ENGINEER AND NOT BEGIN CONSTRUCTION UNTIL CHANGED CONDITIONS HAVE BEEN EVALUATED.
2. EXISTING UTILITY LOCATIONS AND DEPTHS ARE SHOWN APPROXIMATE. CONTRACTOR SHALL POTHOLE PRIOR TO START OF WORK. PROTECT-IN-PLACE ALL EXISTING UTILITIES SHOWN IN PROFILE, UNLESS NOTED OTHERWISE.

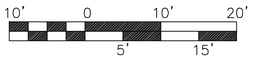

SCALE: 1"=10'

CALL 48 HOURS BEFORE YOU DIG DIAL 811

VERT DATUM: NAVD 88
CONV TO MLLW = NAVD88+2.03
HORZ DATUM: NAD 83/91

IF SHEET IS LESS THAN 22x34 REDUCE SCALE ACCORDINGLY

Port of EVERETT
P.O. BOX 538
EVERETT, WA 98206
(425) 259-3164

kpff
1601 5th Avenue, Suite 1300
Seattle, Washington 98101
(206) 382-0600 Fax (206) 382-0500
PROJECT NO. 1600120

NO.	DATE	BY	REVISION
2	07/05/2023	NW	AS-BUILT
1	09/27/2021	NW	REVISED PER RFI010
0	06/21/2021	NW	ISSUED FOR BID

NO.	DATE	BY	REVISION

RECORD CONDITIONS ILLUSTRATED IN THESE PLANS REFLECT INFORMATION PROVIDED BY THE CONTRACTOR. RECORD CONDITIONS WERE NOT VERIFIED BY ENGINEER.

PROJECT ENGINEER: N. WATSON	SCALE: 1" = 10'
DESIGNED BY: J. BECKER	DATE: 06/21/2021
DRAWN BY: K. EDWARDS, D. YU	CHECKED BY: N. WATSON
APPROVED BY:	

PORT OF EVERETT

NORTON TERMINAL DEVELOPMENT
& MTCA 3RD INTERIM ACTION
TRENCH DRAIN PROFILES
(SHEET 1 OF 5)

DWG. NO. **C4.21**
CIP NO. 1-8-900-05
PROJECT NO. MT-NT-2021-02.2
SHEET NO. 62 OF 150

AS-BUILTS

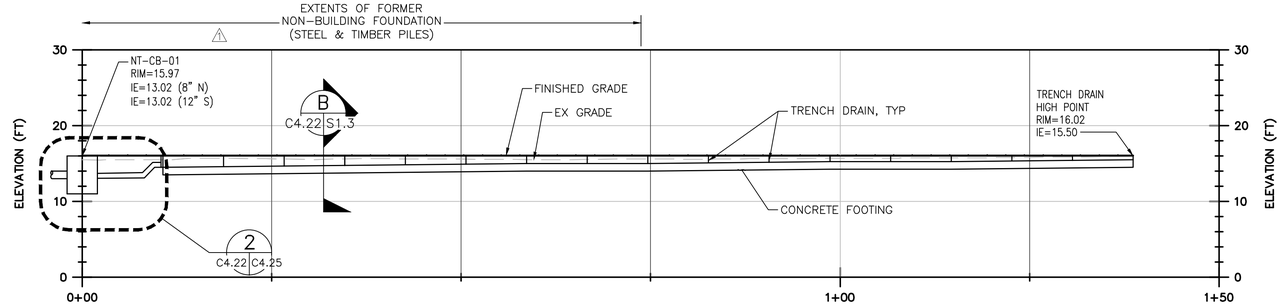

2 NT-TD-02 TRENCH DRAIN PROFILE

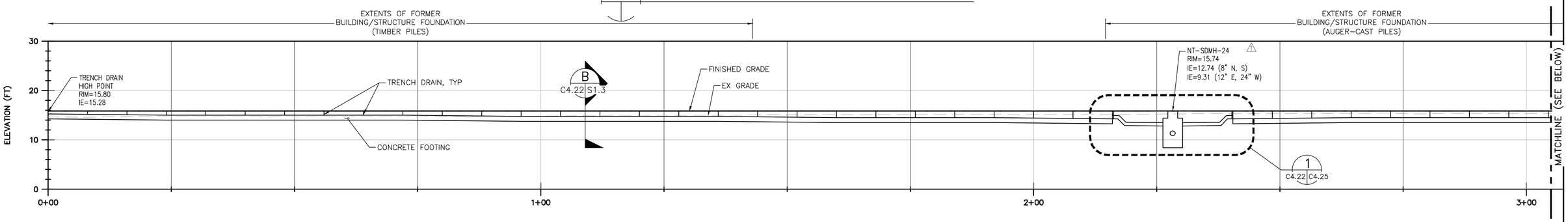

3 NT-TD-03 TRENCH DRAIN PROFILE

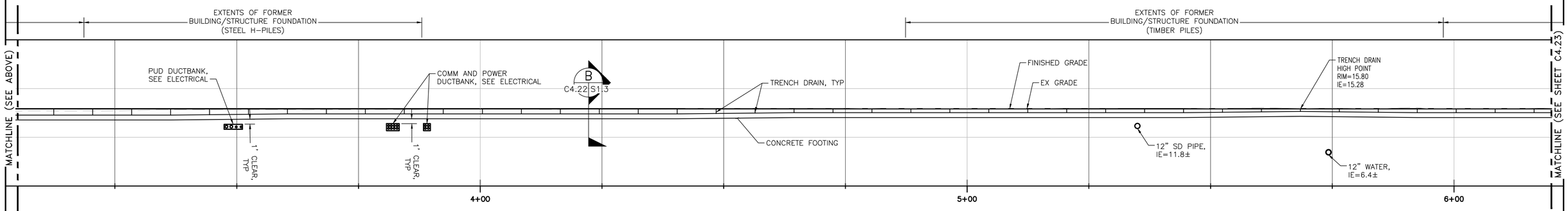

3 NT-TD-03 TRENCH DRAIN PROFILE

GENERAL NOTES

1. EXISTING FOUNDATION STRUCTURES SHOWN IN PROFILE ARE APPROXIMATE AND SHOWN FOR REFERENCE ONLY. NOT ALL FOUNDATION STRUCTURES/DEBRIS ARE SHOWN. CONTRACTOR SHALL CONFIRM EXISTING CONDITIONS PRIOR TO START OF WORK. IF CONDITIONS DIFFER FROM THOSE SHOWN IN PROFILE, THE CONTRACTOR SHALL NOTIFY THE ENGINEER AND NOT BEGIN CONSTRUCTION UNTIL CHANGED CONDITIONS HAVE BEEN EVALUATED.
2. EXISTING UTILITY LOCATIONS AND DEPTHS ARE SHOWN APPROXIMATE. CONTRACTOR SHALL POTHOLE PRIOR TO START OF WORK. PROTECT-IN-PLACE ALL EXISTING UTILITIES SHOWN IN PROFILE, UNLESS NOTED OTHERWISE.

CALL 48 HOURS BEFORE YOU DIG DIAL 811

10' 0 10' 20'
5' 15'
SCALE: 1"=10'

VERT DATUM: NAVD 88
CONV TO MLLW = NAVD88+2.03
HORZ DATUM: NAD 83/91

IF SHEET IS LESS THAN 22x34 REDUCE SCALE ACCORDINGLY

Port of EVERETT
P.O. BOX 538
EVERETT, WA 98206
(425) 259-3164

kpff
1601 5th Avenue, Suite 1300
Seattle, Washington 98101
(206) 382-0600 Fax (206) 382-0500
PROJECT NO. 1600120

NO.	DATE	BY	REVISION
2	07/05/2023	NW	AS-BUILT
1	09/27/2021	NW	REVISED PER RFI010 & WHSE GVL YARD DRAINAGE
0	06/21/2021	NW	ISSUED FOR BID

NO.	DATE	BY	REVISION

RECORD CONDITIONS ILLUSTRATED IN THESE PLANS REFLECT INFORMATION PROVIDED BY THE CONTRACTOR. RECORD CONDITIONS WERE NOT VERIFIED BY ENGINEER.

PROJECT ENGINEER: N. WATSON	SCALE: 1" = 10'
DESIGNED BY: J. BECKER	DATE: 06/21/2021
DRAWN BY: K. EDWARDS, D. YU	CHECKED BY: N. WATSON
APPROVED BY:	

PORT OF EVERETT

NORTON TERMINAL DEVELOPMENT & MTCA 3RD INTERIM ACTION
TRENCH DRAIN PROFILES
(SHEET 2 OF 5)

DWG. NO. **C4.22**
CIP NO. 1-8-900-05
PROJECT NO. MT-NT-2021-02.2
SHEET NO. 63 OF 150

AS-BUILTS

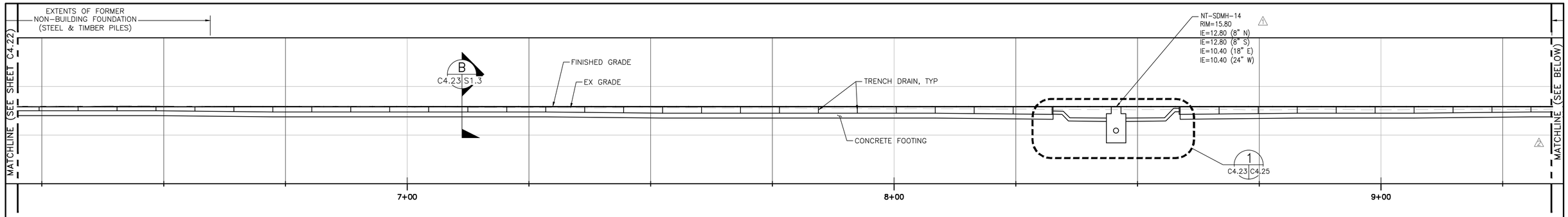

3 NT-TD-03 TRENCH DRAIN PROFILE

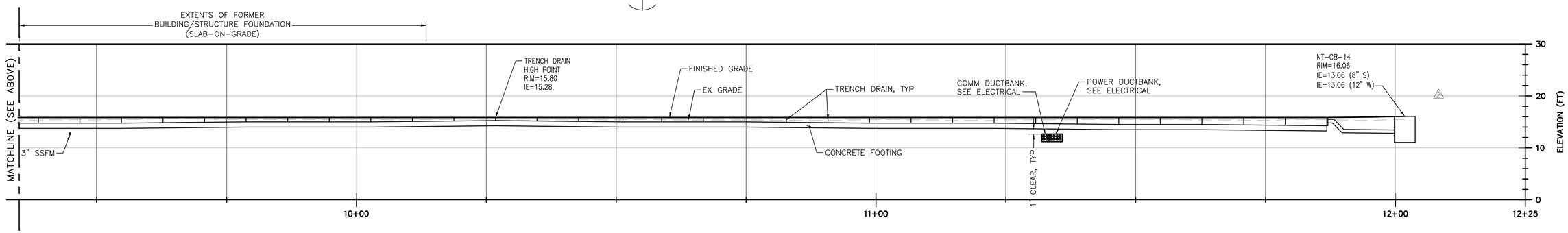

3 NT-TD-03 TRENCH DRAIN PROFILE

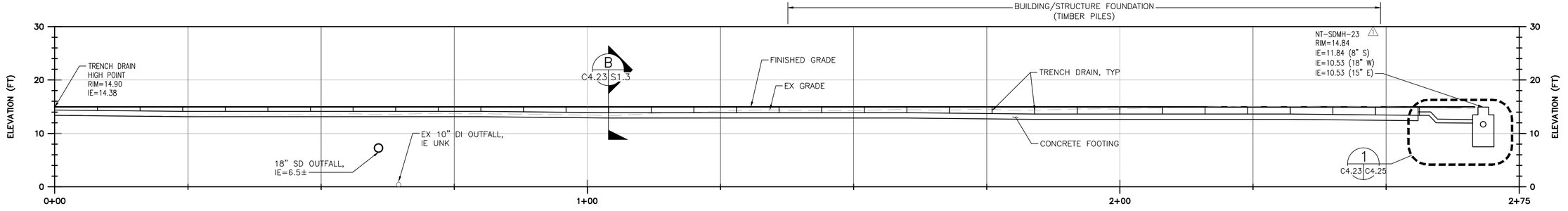

4 NT-TD-04 TRENCH DRAIN PROFILE

GENERAL NOTES

1. EXISTING FOUNDATION STRUCTURES SHOWN IN PROFILE ARE APPROXIMATE AND SHOWN FOR REFERENCE ONLY. NOT ALL FOUNDATION STRUCTURES/DEBRIS ARE SHOWN. CONTRACTOR SHALL CONFIRM EXISTING CONDITIONS PRIOR TO START OF WORK. IF CONDITIONS DIFFER FROM THOSE SHOWN IN PROFILE, THE CONTRACTOR SHALL NOTIFY THE ENGINEER AND NOT BEGIN CONSTRUCTION UNTIL CHANGED CONDITIONS HAVE BEEN EVALUATED.
2. EXISTING UTILITY LOCATIONS AND DEPTHS ARE SHOWN APPROXIMATE. CONTRACTOR SHALL POTHOLE PRIOR TO START OF WORK. PROTECT-IN-PLACE ALL EXISTING UTILITIES SHOWN IN PROFILE, UNLESS NOTED OTHERWISE.

10' 0 10' 20'
5' 15'
SCALE: 1"=10'

CALL 48 HOURS BEFORE YOU DIG DIAL 811

VERT DATUM: NAVD 88
CONV TO MLLW = NAVD88+2.03
HORZ DATUM: NAD 83/91

IF SHEET IS LESS THAN 22x34 REDUCE SCALE ACCORDINGLY

Port of EVERETT
P.O. BOX 538
EVERETT, WA 98206
(425) 259-3164

kpff
1601 5th Avenue, Suite 1300
Seattle, Washington 98101
(206) 382-0600 Fax (206) 382-0500
PROJECT NO. 1600120

NO.	DATE	BY	REVISION
3	07/05/2023	NW	AS-BUILT
2	12/02/2021	NW	2-INCH TO 9-INCH PVMT
1	09/27/2021	NW	REVISED PER RFI010 & WHSE GVL YARD DRAINAGE
0	06/21/2021	NW	ISSUED FOR BID

RECORD CONDITIONS ILLUSTRATED IN THESE PLANS REFLECT INFORMATION PROVIDED BY THE CONTRACTOR. RECORD CONDITIONS WERE NOT VERIFIED BY ENGINEER.

PROJECT ENGINEER: N. WATSON	SCALE: 1" = 10'
DESIGNED BY: J. BECKER	DATE: 06/07/2021
DRAWN BY: K. EDWARDS, D. YU	CHECKED BY: N. WATSON
APPROVED BY:	

PORT OF EVERETT

NORTON TERMINAL DEVELOPMENT & MTCA 3RD INTERIM ACTION TRENCH DRAIN PROFILES (SHEET 3 OF 5)

DWG. NO. **C4.23**
CIP NO. 1-8-900-05
PROJECT NO. MT-NT-2021-02.2
SHEET NO. 64 OF 150

AS-BUILTS

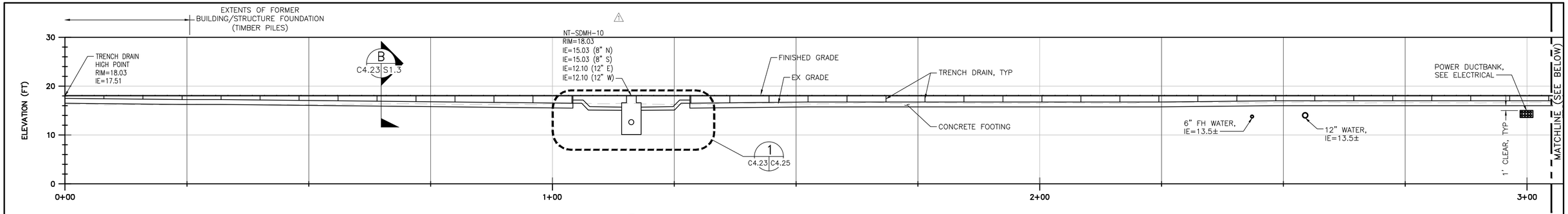

5 NT-TD-05 TRENCH DRAIN PROFILE

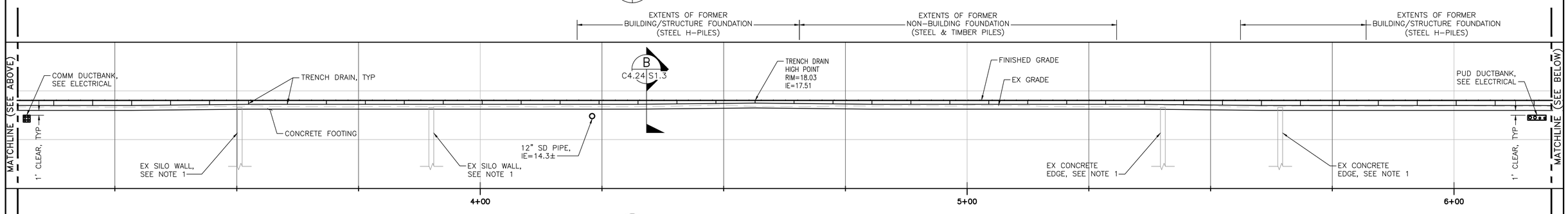

5 NT-TD-05 TRENCH DRAIN PROFILE

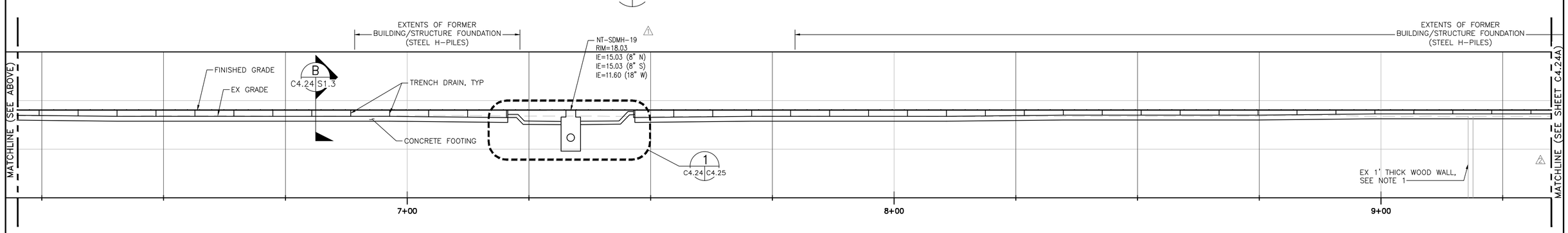

5 NT-TD-05 TRENCH DRAIN PROFILE

GENERAL NOTES

1. EXISTING FOUNDATION STRUCTURES SHOWN IN PROFILE ARE APPROXIMATE AND SHOWN FOR REFERENCE ONLY. NOT ALL FOUNDATION STRUCTURES/DEBRIS ARE SHOWN. CONTRACTOR SHALL CONFIRM EXISTING CONDITIONS PRIOR TO START OF WORK. IF CONDITIONS DIFFER FROM THOSE SHOWN IN PROFILE, THE CONTRACTOR SHALL NOTIFY THE ENGINEER AND NOT BEGIN CONSTRUCTION UNTIL CHANGED CONDITIONS HAVE BEEN EVALUATED.
2. EXISTING UTILITY LOCATIONS AND DEPTHS ARE SHOWN APPROXIMATE. CONTRACTOR SHALL POTHOLE PRIOR TO START OF WORK. PROTECT-IN-PLACE ALL EXISTING UTILITIES SHOWN IN PROFILE, UNLESS NOTED OTHERWISE.

CALL 48 HOURS BEFORE YOU DIG DIAL 811

10' 0 10' 20'
5' 15'
SCALE: 1"=10'

VERT DATUM: NAVD 88
CONV TO MLLW = NAVD88+2.03
HORZ DATUM: NAD 83/91

IF SHEET IS LESS THAN 22x34 REDUCE SCALE ACCORDINGLY

Port of EVERETT
P.O. BOX 538
EVERETT, WA 98206
(425) 259-3164

kpff
1601 5th Avenue, Suite 1300
Seattle, Washington 98101
(206) 382-0600 Fax (206) 382-0500
PROJECT NO. 1600120

NO.	DATE	BY	REVISION
3	07/05/2023	NW	AS-BUILT
2	12/02/2021	NW	2-INCH TO 9-INCH PVMT
1	09/27/2021	NW	REVISED PER RFI010
0	06/21/2021	NW	ISSUED FOR BID

RECORD CONDITIONS ILLUSTRATED IN THESE PLANS REFLECT INFORMATION PROVIDED BY THE CONTRACTOR. RECORD CONDITIONS WERE NOT VERIFIED BY ENGINEER.

PROJECT ENGINEER: N. WATSON	SCALE: 1" = 10'
DESIGNED BY: J. BECKER	DATE: 06/07/2021
DRAWN BY: K. EDWARDS, D. YU	CHECKED BY: N. WATSON
APPROVED BY:	

PORT OF EVERETT

NORTON TERMINAL DEVELOPMENT & MTCA 3RD INTERIM ACTION TRENCH DRAIN PROFILES (SHEET 4 OF 5)

DWG. NO. **C4.24**
CIP NO. 1-8-900-05
PROJECT NO. MT-NT-2021-02.2
SHEET NO. 65 OF 150

AS-BUILTS

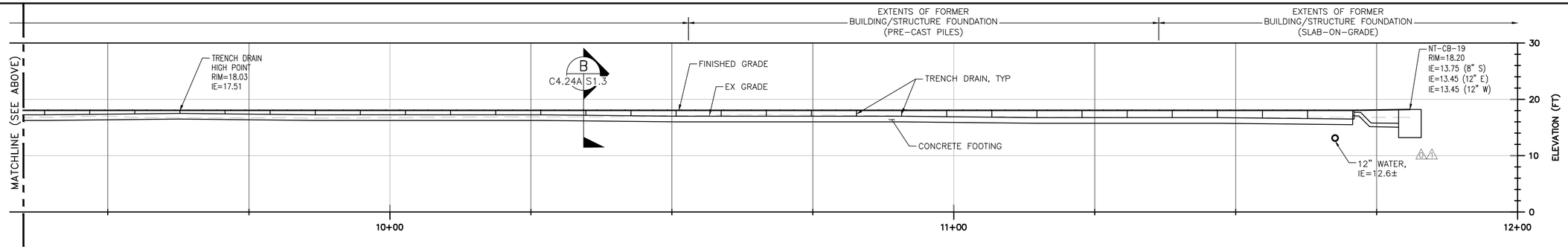

5 NT-TD-05 TRENCH DRAIN PROFILE

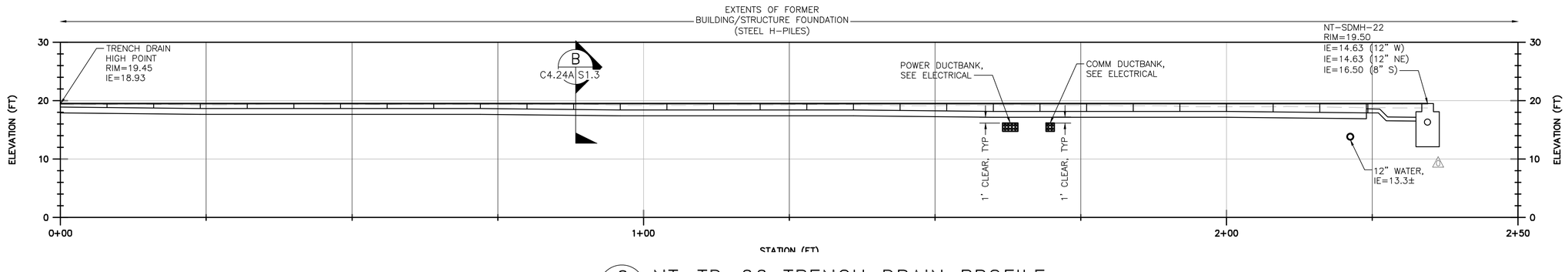

6 NT-TD-06 TRENCH DRAIN PROFILE

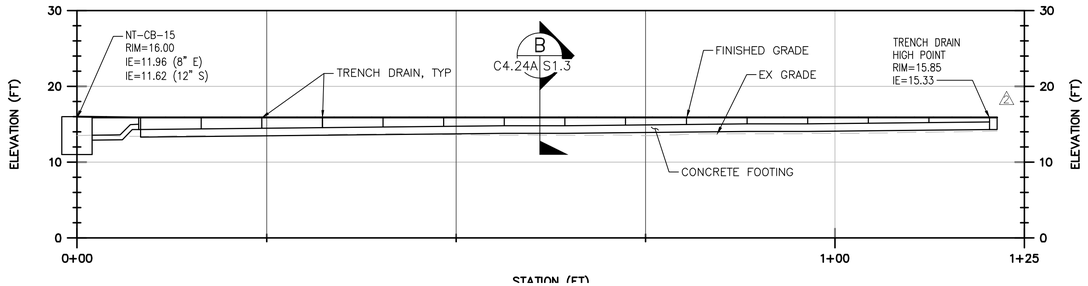

7 NT-TD-07 TRENCH DRAIN PROFILE

GENERAL NOTES

1. EXISTING FOUNDATION STRUCTURES SHOWN IN PROFILE ARE APPROXIMATE AND SHOWN FOR REFERENCE ONLY. NOT ALL FOUNDATION STRUCTURES/DEBRIS ARE SHOWN. CONTRACTOR SHALL CONFIRM EXISTING CONDITIONS PRIOR TO START OF WORK. IF CONDITIONS DIFFER FROM THOSE SHOWN IN PROFILE, THE CONTRACTOR SHALL NOTIFY THE ENGINEER AND NOT BEGIN CONSTRUCTION UNTIL CHANGED CONDITIONS HAVE BEEN EVALUATED.
2. EXISTING UTILITY LOCATIONS AND DEPTHS ARE SHOWN APPROXIMATE. CONTRACTOR SHALL POTHOLE PRIOR TO START OF WORK. PROTECT-IN-PLACE ALL EXISTING UTILITIES SHOWN IN PROFILE, UNLESS NOTED OTHERWISE.

10' 0 10' 20'
5' 15'
SCALE: 1"=10'

CALL 48 HOURS BEFORE YOU DIG DIAL 811

VERT DATUM: NAVD 88
CONV TO MLLW = NAVD88+2.03
HORZ DATUM: NAD 83/91

IF SHEET IS LESS THAN 22x34 REDUCE SCALE ACCORDINGLY

Port of EVERETT
P.O. BOX 538
EVERETT, WA 98206
(425) 259-3164

kpff
1601 5th Avenue, Suite 1300
Seattle, Washington 98101
(206) 382-0600 Fax (206) 382-0500
PROJECT NO. 1600120

NO.	DATE	BY	REVISION
3	07/05/2023	NW	AS-BUILT
2	04/08/2022	NW	MARITIME TENANT SITE DEVELOPMENT
1	01/18/2022	NW	REVISED PER RFI044
1	12/02/2021	NW	2-INCH TO 9-INCH PVMT

NO.	DATE	BY	REVISION

RECORD CONDITIONS ILLUSTRATED IN THESE PLANS REFLECT INFORMATION PROVIDED BY THE CONTRACTOR. RECORD CONDITIONS WERE NOT VERIFIED BY ENGINEER.

PROJECT ENGINEER: N. WATSON	SCALE: 1" = 10'
DESIGNED BY: J. BECKER	DATE: 06/21/2021
DRAWN BY: K. EDWARDS, D. YU	CHECKED BY: N. WATSON
APPROVED BY:	

PORT OF EVERETT

NORTON TERMINAL DEVELOPMENT & MTCA 3RD INTERIM ACTION TRENCH DRAIN PROFILES (SHEET 5 OF 5)

DWG. NO. **C4.24A**
CIP NO. 1-8-900-05
PROJECT NO. MT-NT-2021-02.2
SHEET NO. – OF –

AS-BUILTS

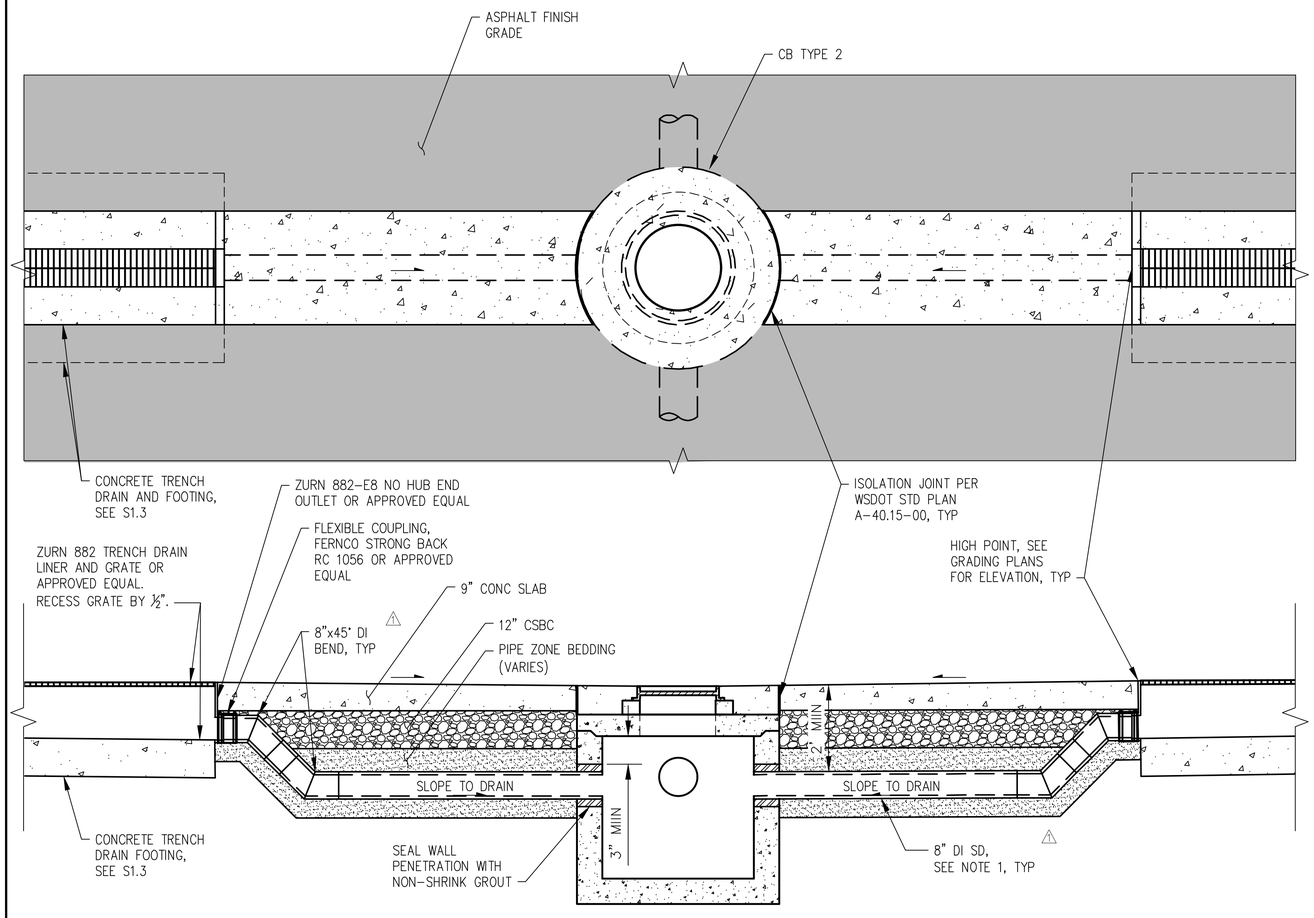

1 TRENCH DRAIN TO TYPE 2 CB CONNECTION

SCALE: NTS SDMH3, SDMH10, SDMH14, SDMH19, SDMH 23 & SDMH24

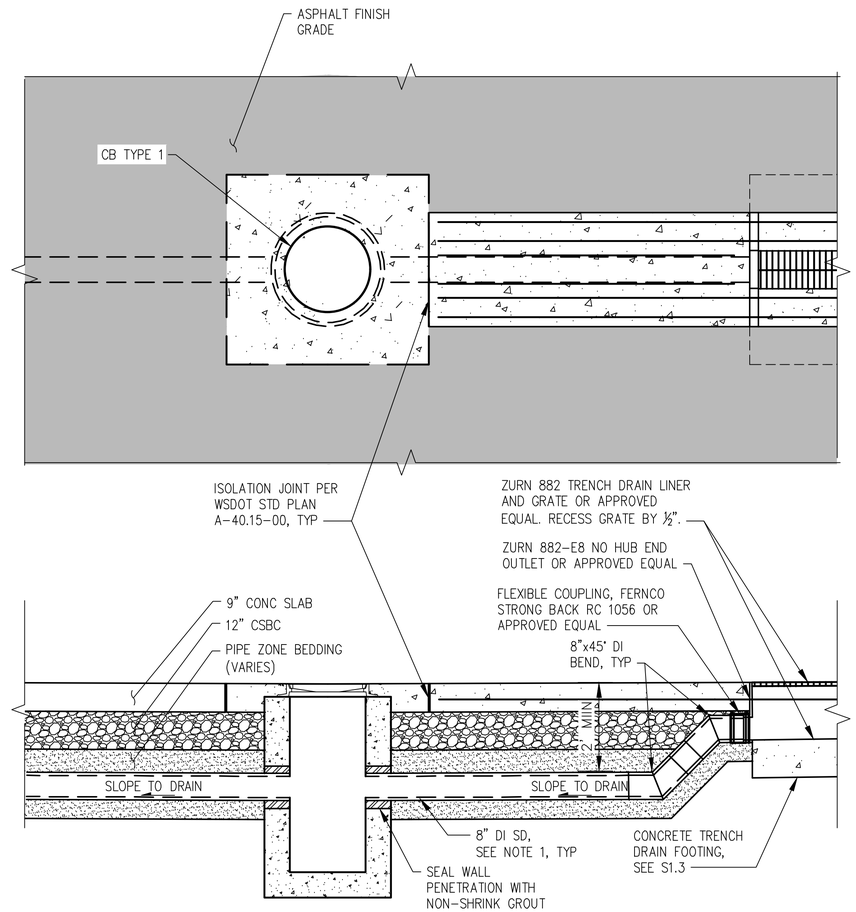

2 TRENCH DRAIN TO TYPE 1 CB CONNECTION

SCALE: NTS CB1

NOTE 1:

STORM DRAIN PIPE AND FITTINGS FOR CONNECTING TRENCH DRAINS TO CATCH BASIN OR MANHOLE STRUCTURES SHALL BE DUCTILE IRON IN CONFORMANCE WITH SPECIFICATIONS.

CALL 48 HOURS BEFORE YOU DIG DIAL 811

VERT DATUM: NAVD 88
CONV TO MLLW = NAVD88+2.03
HORZ DATUM: NAD 83/91

IF SHEET IS LESS THAN 22x34 REDUCE SCALE ACCORDINGLY

Port of EVERETT
P.O. BOX 538
EVERETT, WA 98206
(425) 259-3164

kpff
1601 5th Avenue, Suite 1300
Seattle, Washington 98101
(206) 382-0600 Fax (206) 382-0500
PROJECT NO. 1600120

NO.	DATE	BY	REVISION
3	06/30/2023	NW	AS-BUILT
2	09/27/2021	NW	REVISED PER RFI010
1	07/23/2021	NW	ADDENDUM 3
0	06/21/2021	NW	ISSUED FOR BID

NO.	DATE	BY	REVISION

RECORD CONDITIONS ILLUSTRATED IN THESE PLANS REFLECT INFORMATION PROVIDED BY THE CONTRACTOR. RECORD CONDITIONS WERE NOT VERIFIED BY ENGINEER.

PROJECT ENGINEER: N. WATSON	SCALE: AS SHOWN
DESIGNED BY: J. BECKER	DATE: 06/21/2021
DRAWN BY: K. EDWARDS, D. YU	CHECKED BY: N. WATSON
APPROVED BY:	

PORT OF EVERETT

NORTON TERMINAL DEVELOPMENT & MTCA 3RD INTERIM ACTION TRENCH DRAIN DETAILS

DWG. NO. **C4.25**

CIP NO. 1-8-900-05

PROJECT NO. MT-NT-2021-02.2

SHEET NO. 66 OF 150

AS-BUILTS

FIRE HYDRANT SCHEDULE

NORTHING AND EASTING COORDINATES ARE AT CENTER OF HYDRANT.

FH ID	NORTHING	EASTING
NT-FH-01	361888.72	1301280.66
NT-FH-02	362170.55	1301290.47
NT-FH-03	362505.28	1301292.12
NT-FH-04	362736.89	1301263.06
NT-FH-05	361655.66	1301547.90
NT-FH-06	362031.01	1301590.99
NT-FH-07	362327.83	1301601.32
NT-FH-08	362627.65	1301611.76
NT-FH-09	362927.47	1301622.19
NT-FH-10	363211.91	1301690.47
NT-FH-11	362167.67	1301890.73
NT-FH-12	362467.49	1301901.17
NT-FH-13	362767.30	1301911.61
NT-FH-14	363067.12	1301922.05
NT-FH-15	361382.02	1301593.91
NT-FH-16	363222.66	1301400.14

SEE SHEET C5.5 & C5.6 FOR FH17, FH18, FH19, & FH20 COORDINATE LOCATIONS

COORDINATE TABLE

NORTHING AND EASTING COORDINATES ARE AT CENTER OF PIPE.

ID	STATION	NORTHING	EASTING
A	W1 4+64.01	360892.93	1301545.04
B	W1 14+90.01	361918.30	1301580.74

ALIGNMENT INTERSECTION TABLE

NORTHING AND EASTING COORDINATES ARE AT CENTER OF PIPE.

INTERSECTION STATION	NORTHING	EASTING
W1 14+98.88 = W2 10+00.00	361918.61	1301571.88
W1 17+49.83 = W3 10+00.00	362169.41	1301580.61
W1 20+63.96 = W4 10+00.00	362483.35	1301591.54
W1 27+80.87 = W5 10+00.00	363199.83	1301616.48
W2 13+00.00 = W6 10+00.00	361929.05	1301272.06
W4 13+00.00 = W6 15+65.08	362493.79	1301291.72
W3 22+97.22 = W5 14+09.00	363185.60	1302025.23
W1 26+49.00 = W7 10+00.00	363067.75	1301611.88
W7 12+10.00 = W8 10+00.00	363075.06	1301402.01

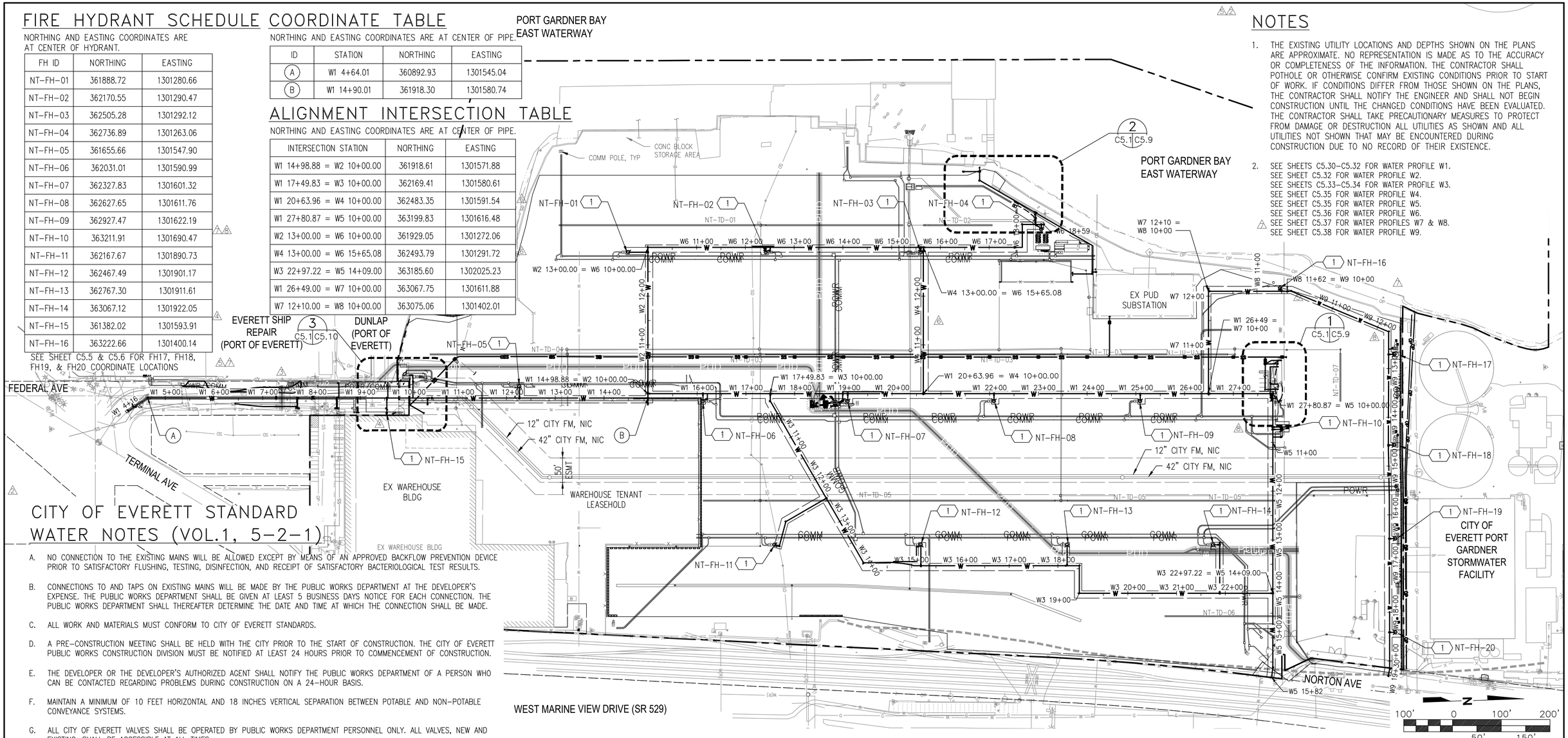

SCALE: 1"=100'

NOTES

1. THE EXISTING UTILITY LOCATIONS AND DEPTHS SHOWN ON THE PLANS ARE APPROXIMATE. NO REPRESENTATION IS MADE AS TO THE ACCURACY OR COMPLETENESS OF THE INFORMATION. THE CONTRACTOR SHALL POTHOLE OR OTHERWISE CONFIRM EXISTING CONDITIONS PRIOR TO START OF WORK. IF CONDITIONS DIFFER FROM THOSE SHOWN ON THE PLANS, THE CONTRACTOR SHALL NOTIFY THE ENGINEER AND SHALL NOT BEGIN CONSTRUCTION UNTIL THE CHANGED CONDITIONS HAVE BEEN EVALUATED. THE CONTRACTOR SHALL TAKE PRECAUTIONARY MEASURES TO PROTECT FROM DAMAGE OR DESTRUCTION ALL UTILITIES AS SHOWN AND ALL UTILITIES NOT SHOWN THAT MAY BE ENCOUNTERED DURING CONSTRUCTION DUE TO NO RECORD OF THEIR EXISTENCE.

2. SEE SHEETS C5.30–C5.32 FOR WATER PROFILE W1.
SEE SHEET C5.32 FOR WATER PROFILE W2.
SEE SHEETS C5.33–C5.34 FOR WATER PROFILE W3.
SEE SHEET C5.35 FOR WATER PROFILE W4.
SEE SHEET C5.35 FOR WATER PROFILE W5.
SEE SHEET C5.36 FOR WATER PROFILE W6.
SEE SHEETS C5.37 FOR WATER PROFILES W7 & W8.
SEE SHEET C5.38 FOR WATER PROFILE W9.

CITY OF EVERETT STANDARD WATER NOTES (VOL.1, 5–2–1)

A. NO CONNECTION TO THE EXISTING MAINS WILL BE ALLOWED EXCEPT BY MEANS OF AN APPROVED BACKFLOW PREVENTION DEVICE PRIOR TO SATISFACTORY FLUSHING, TESTING, DISINFECTION, AND RECEIPT OF SATISFACTORY BACTERIOLOGICAL TEST RESULTS.

B. CONNECTIONS TO AND TAPS ON EXISTING MAINS WILL BE MADE BY THE PUBLIC WORKS DEPARTMENT AT THE DEVELOPER'S EXPENSE. THE PUBLIC WORKS DEPARTMENT SHALL BE GIVEN AT LEAST 5 BUSINESS DAYS NOTICE FOR EACH CONNECTION. THE PUBLIC WORKS DEPARTMENT SHALL THEREAFTER DETERMINE THE DATE AND TIME AT WHICH THE CONNECTION SHALL BE MADE.

C. ALL WORK AND MATERIALS MUST CONFORM TO CITY OF EVERETT STANDARDS.

D. A PRE–CONSTRUCTION MEETING SHALL BE HELD WITH THE CITY PRIOR TO THE START OF CONSTRUCTION. THE CITY OF EVERETT PUBLIC WORKS CONSTRUCTION DIVISION MUST BE NOTIFIED AT LEAST 24 HOURS PRIOR TO COMMENCEMENT OF CONSTRUCTION.

E. THE DEVELOPER OR THE DEVELOPER'S AUTHORIZED AGENT SHALL NOTIFY THE PUBLIC WORKS DEPARTMENT OF A PERSON WHO CAN BE CONTACTED REGARDING PROBLEMS DURING CONSTRUCTION ON A 24–HOUR BASIS.

F. MAINTAIN A MINIMUM OF 10 FEET HORIZONTAL AND 18 INCHES VERTICAL SEPARATION BETWEEN POTABLE AND NON–POTABLE CONVEYANCE SYSTEMS.

G. ALL CITY OF EVERETT VALVES SHALL BE OPERATED BY PUBLIC WORKS DEPARTMENT PERSONNEL ONLY. ALL VALVES, NEW AND EXISTING, SHALL BE ACCESSIBLE AT ALL TIMES.

CITY OF EVERETT STANDARD SEWER NOTES (VOL.1, 6–3–1)

A. ALL WORK AND MATERIALS SHALL CONFORM TO THE CITY OF EVERETT STANDARDS AND WSDOT/APWA STANDARD SPECIFICATIONS.

B. NO PART OF THE SANITARY SEWER SYSTEM SHALL BE COVERED, CONCEALED, OR PUT INTO USE UNTIL IT HAS BEEN TESTED, INSPECTED, AND APPROVED BY THE CITY INSPECTOR.

C. APPROXIMATE LOCATIONS OF EXISTING UTILITIES HAVE BEEN OBTAINED FROM AVAILABLE RECORDS AND ARE SHOWN FOR CONVENIENCE. THE CONTRACTOR SHALL BE RESPONSIBLE FOR VERIFICATION OF LOCATIONS AND TO AVOID DAMAGE TO ANY ADDITIONAL UTILITIES NOT SHOWN. IF CONFLICTS WITH EXISTING UTILITIES ARISE DURING CONSTRUCTION, THE CONTRACTOR SHALL NOTIFY THE PUBLIC WORKS INSPECTOR AND ANY CHANGES REQUIRED SHALL BE APPROVED BY THE CITY ENGINEER PRIOR TO COMMENCEMENT OF RELATED CONSTRUCTION ON THE PROJECT.

D. ALL SEWER MAIN EXTENSIONS WITHIN THE PUBLIC RIGHT–OF–WAY OR IN EASEMENTS MUST BE STAKED BY SURVEY FOR LINE AND GRADE PRIOR TO START CONSTRUCTION.

CONSTRUCTION NOTES

(1) FH ASSEMBLY PER COE STD DWG 507.

LEGEND

- PROPERTY LINE
- LEASE LIMIT
- EASEMENT
- WATER
- SEWER
- STORMWATER
- TRENCH DRAIN
- FENCE
- EXISTING WATER
- EXISTING SEWER
- EXISTING STORMWATER
- EXISTING FENCE
- FIRE HYDRANT
- LIGHT POLE

CALL 48 HOURS BEFORE YOU DIG DIAL 811

VERT DATUM: NAVD 88
CONV TO MLLW = NAVD88+2.03
HORZ DATUM: NAD 83/91

IF SHEET IS LESS THAN 22x34 REDUCE SCALE ACCORDINGLY

Port of EVERETT
P.O. BOX 538
EVERETT, WA 98206
(425) 259–3164

kpff
1601 5th Avenue, Suite 1300
Seattle, Washington 98101
(206) 382-0600 Fax (206) 382-0500
PROJECT NO. 1600120

NO.	DATE	BY	REVISION
6	12/02/2021	NW	2–INCH TO 9–INCH PVMT
4	10/15/2021	NW	REVISED PER CITY PRE–CONSTRUCTION MEETING
3	08/26/2021	NW	UPDATE STORM PER CITY COMMENTS & ELEC BACKGROUND PER ADDENDUM 3
2	07/09/2021	NW	ADDENDUM 1
1	06/21/2021	NW	ISSUED FOR BID
0	05/07/2021	NW	FOR CITY REVIEW

NO.	DATE	BY	REVISION
7	07/05/2023	NW	AS–BUILT
6	06/13/2022	NW	RFI 088
5	04/08/2022	NW	MARITIME TENANT SITE DEVELOPMENT
4	12/08/2021	NW	F0001 REQUEST TO MOVE WTR LINE W4

RECORD CONDITIONS ILLUSTRATED IN THESE PLANS REFLECT INFORMATION PROVIDED BY THE CONTRACTOR. RECORD CONDITIONS WERE NOT VERIFIED BY ENGINEER.

PROJECT ENGINEER: N. WATSON	SCALE: 1" = 80'
DESIGNED BY: J. BECKER	DATE: 05/07/2021
DRAWN BY: K. EDWARDS, D. YU	CHECKED BY: N. WATSON
APPROVED BY:	

PORT OF EVERETT

NORTON TERMINAL DEVELOPMENT & MTCA 3RD INTERIM ACTION WATER AND SEWER OVERALL PLAN

DWG. NO. **C5.1**

CIP NO. 1–8–900–05

PROJECT NO. MT–NT–2021–02.2

SHEET NO. 67 OF 150

AS-BUILTS

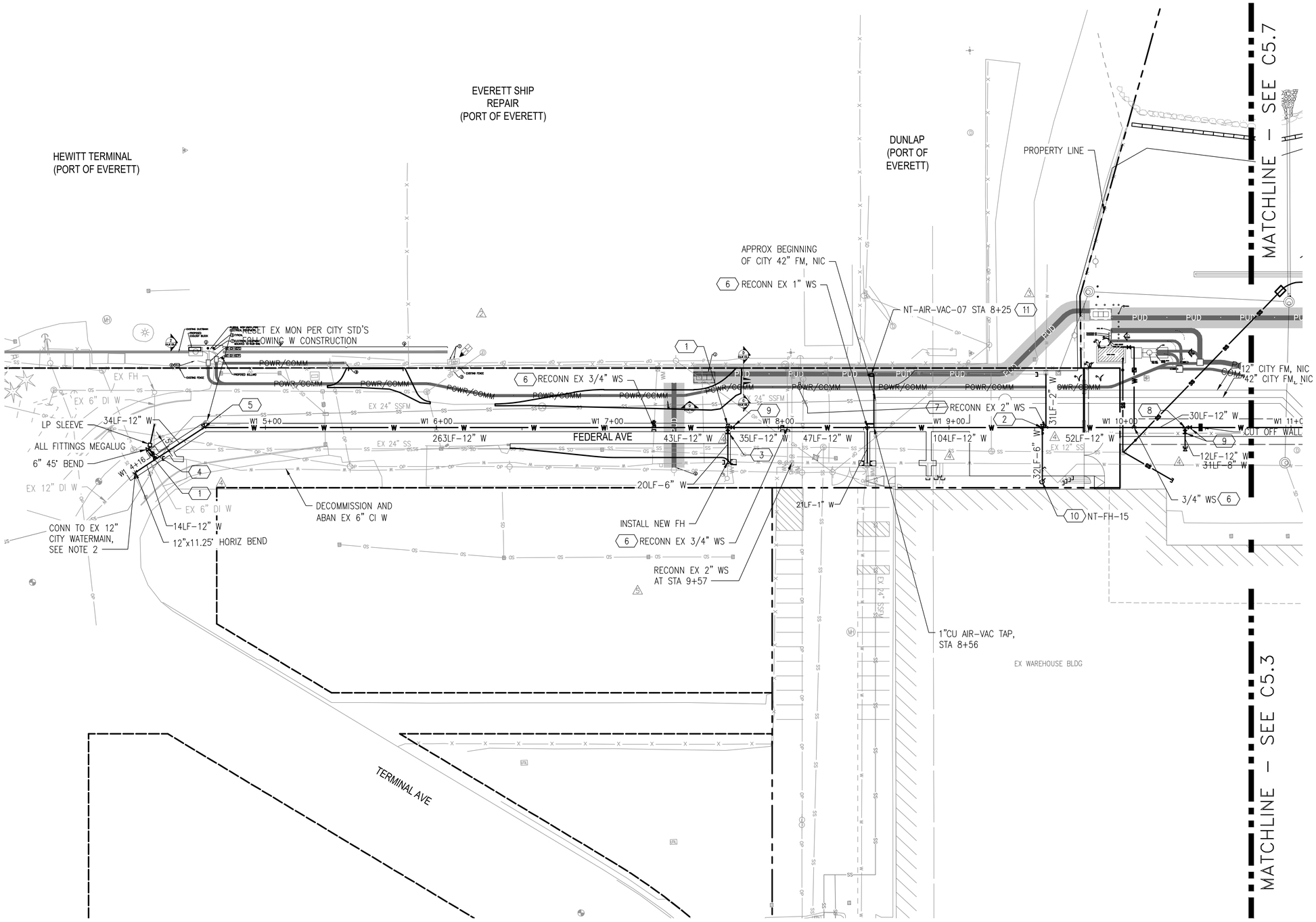

NOTES

1. CONTRACTOR SHALL RESTORE ASPHALT PAVEMENT TO MATCH EXISTING WHERE DEMOLITION OF PAVEMENT IS NECESSARY TO COMPLETE WATER PIPE INSTALLATION OR RESTORATION OF WATER SERVICES. SEE SHEET D1.2 AND D1.3 FOR RELATED DEMOLITION. △2
2. THE CONTRACTOR SHALL POTHOLE AND VERIFY THE LOCATION OF THE EXISTING 12"x6" REDUCER. THE CONTRACTOR SHALL REPLACE THE REDUCER WITH A 12"x11.25° HORIZONTAL BEND AND EXTEND THE 12" W. CITY OF EVERETT PUBLIC WORKS TO MAKE CONN TO EXISTING WATER MAIN UNDER SEPARATE UTILITY PERMIT WITH FEE BASED ON COST ESTIMATE PREPARED BY CITY. FEE TO BE PAID BY PORT (NOT CONTRACTOR).
3. 6" AND 12" WATERMAIN PIPE AND WATER PIPE ON DOWNSTREAM SIDE OF WATER METERS SHALL BE HIGH DENSITY POLYETHYLENE (HDPE), SDR 9, RATED 250 PSI PIPE AND SHALL BE LISTED AND APPROVED FOR POTABLE WATER IN ACCORDANCE WITH NSF STANDARDS 14 AND 16.

CONSTRUCTION NOTES

1. RECONN EXISTING FH PER COE STD DWG 507
2. 12"x12"x6" TEE
3. 6" GV
4. 6"x45° HORIZONTAL BEND
5. 12"x30° HORIZONTAL BEND
6. PER COE STD DWG 501
7. PER COE STD DWG 502
8. 12"x12"x12" TEE △4
9. 12" GV, SEE DETAIL 3, C5.20 △4
10. FH ASSEMBLY PER COE STD DWG 507. △5
11. AIR-VAC VALVE ASS'Y PER COE STD PLAN 512. LOCATE 2" GS RISER PIPE ON NORTH OR SOUTH SIDE OF VAULT SUCH THAT IT DOES NOT CONFLICT WITH ACCESS TO EX PERSONNEL GATE IN FENCE. PRIME AND PAINT ABOVE GROUND PORTION OF GS PIPE WITH TWO COATS OF "SAFETY YELLOW".

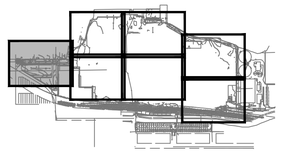

N

30' 0 30' 60'
15' 45'

SCALE: 1"=30'

CALL 48 HOURS
BEFORE YOU DIG
DIAL 811

VERT DATUM: NAVD 88
CONV TO MLLW = NAVD88+2.03
HORZ DATUM: NAD 83/91

IF SHEET IS LESS THAN 22x34
REDUCE SCALE ACCORDINGLY

Port of EVERETT
P.O. BOX 538
EVERETT, WA 98206
(425) 259-3164

kpff
1601 5th Avenue, Suite 1300
Seattle, Washington 98101
(206) 382-0600 Fax (206) 382-0500
PROJECT NO. 1600120

NO.	DATE	BY	REVISION
△3	02/25/2022	NW	REVISED PER CONTRACTOR POTHOLE FINDINGS
△2	10/15/2021	NW	REVISED PER CITY PRE-CONSTRUCTION MEETING
△1	08/26/2021	NW	UPDATE STORM PER CITY COMMENTS & ELEC BACKGROUND PER ADDENDUM 3
△2	07/09/2021	NW	ADDENDUM 1
△1	06/21/2021	NW	ISSUED FOR BID
△1	05/07/2021	NW	FOR CITY REVIEW
△1	07/05/2023	NW	AS-BUILT

RECORD CONDITIONS ILLUSTRATED IN THESE PLANS REFLECT INFORMATION PROVIDED BY THE CONTRACTOR. RECORD CONDITIONS WERE NOT VERIFIED BY ENGINEER.

PROJECT ENGINEER: N. WATSON	SCALE: 1" = 30'
DESIGNED BY: J. BECKER	DATE: 05/07/2021
DRAWN BY: K. EDWARDS, D. YU	CHECKED BY: N. WATSON
APPROVED BY:	

PORT OF EVERETT

NORTON TERMINAL DEVELOPMENT
& MTCA 3RD INTERIM ACTION
WATER AND SEWER DETAIL PLAN
(1 OF 9)

DWG. NO. **C5.2**
CIP NO. 1-8-900-05
PROJECT NO. MT-NT-2021-02.2
SHEET NO. 68 OF 150

AS-BUILTS

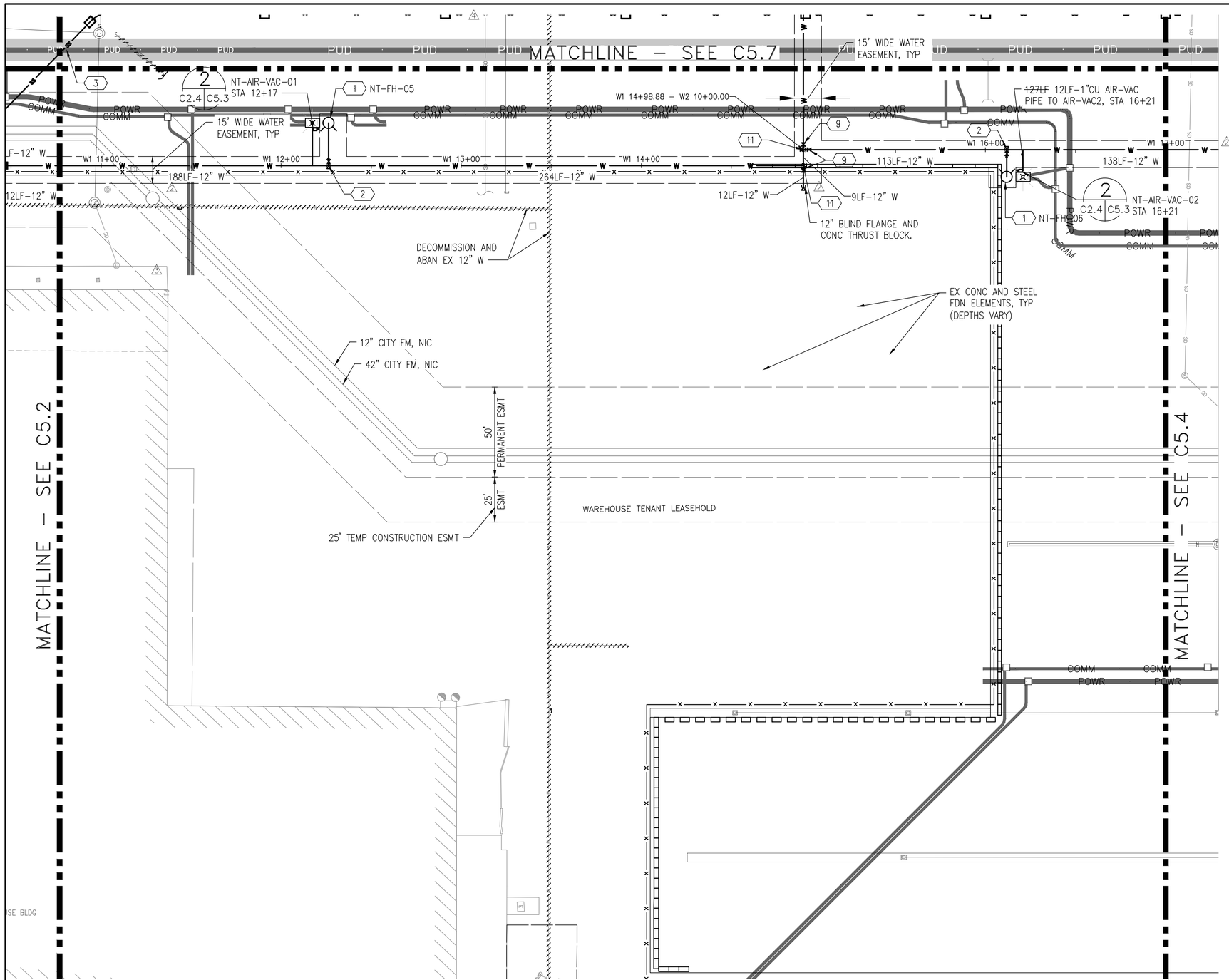

CONSTRUCTION NOTES

1. FH ASSEMBLY PER COE STD DWG 507. NORTHINGS AND EASTINGS ARE PROVIDED ON SHEET C5.1.
2. 12"x12"x6" TEE
3. CROSSING
   SNOPUD DUCTBANK BOT EL=12.5'±
   3" SSFM IE=11.2'±
4. NOT USED
5. NOT USED
6. NOT USED
7. NOT USED
8. NOT USED
9. 12" GV, SEE DETAIL 3, C5.20
10. 12"x90° HORIZONTAL BEND
11. 12"x12"x12" TEE
12. NOT USED

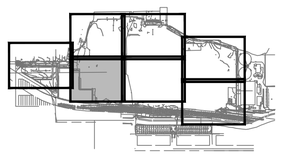

N

30' 0 30' 60'
15' 45'

SCALE: 1"=30'

CALL 48 HOURS BEFORE YOU DIG DIAL 811

VERT DATUM: NAVD 88
CONV TO MLLW = NAVD88+2.03
HORZ DATUM: NAD 83/91

IF SHEET IS LESS THAN 22x34 REDUCE SCALE ACCORDINGLY

Port of EVERETT
P.O. BOX 538
EVERETT, WA 98206
(425) 259-3164

kpff
1601 5th Avenue, Suite 1300
Seattle, Washington 98101
(206) 382-0600 Fax (206) 382-0500
PROJECT NO. 1600120

NO.	DATE	BY	REVISION
5	07/05/2023	NW	AS-BUILT
4	02/09/2022	NW	MOVE SDMH6 & SDMH23 TO AVOID WOOD STAVE PIPE
3	12/08/2021	NW	FO002 WATERMAIN AND GV UPDATES
2	10/15/2021	NW	REVISED PER CITY PRE-CONSTRUCTION MEETING
1	06/21/2021	NW	ISSUED FOR BID
0	05/07/2021	NW	FOR CITY REVIEW

RECORD CONDITIONS ILLUSTRATED IN THESE PLANS REFLECT INFORMATION PROVIDED BY THE CONTRACTOR. RECORD CONDITIONS WERE NOT VERIFIED BY ENGINEER.

PROJECT ENGINEER: N. WATSON	SCALE: AS SHOWN
DESIGNED BY: J. BECKER	DATE: 05/07/2021
DRAWN BY: K. EDWARDS, D. YU	CHECKED BY: N. WATSON
APPROVED BY:	

PORT OF EVERETT

NORTON TERMINAL DEVELOPMENT & MTCA 3RD INTERIM ACTION WATER AND SEWER DETAIL PLAN (2 OF 9)

DWG. NO. **C5.3**
CIP NO. 1-8-900-05
PROJECT NO. MT-NT-2021-02.2
SHEET NO. 69 OF 150

AS-BUILTS

CONSTRUCTION NOTES

1. FH ASSEMBLY PER COE STD DWG 507. NORTHINGS AND EASTINGS ARE PROVIDED ON SHEET C5.1.
2. 12"x12"x6" TEE
3. NOT USED
4. NOT USED
5. NOT USED
6. NOT USED
7. NOT USED
8. 12"x12"x8" TEE
9. 12" GV, SEE DETAIL 3, C5.20
10. 12"x90° HORIZONTAL BEND
11. 12"x12"x12" TEE
12. 12"x60° HORIZONTAL BEND
13. 8"x45° HORIZONTAL BEND
14. 8"x8"x6" TEE

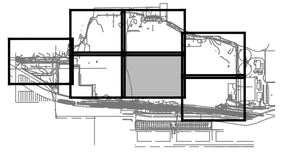

SCALE: 1"=30'

CALL 48 HOURS BEFORE YOU DIG DIAL 811

VERT DATUM: NAVD 88
CONV TO MLLW = NAVD88+2.03
HORZ DATUM: NAD 83/91

IF SHEET IS LESS THAN 22x34 REDUCE SCALE ACCORDINGLY

AS-BUILTS

Port of EVERETT
P.O. BOX 538
EVERETT, WA 98206
(425) 259-3164

kpff
1601 5th Avenue, Suite 1300
Seattle, Washington 98101
(206) 382-0600 Fax (206) 382-0500
PROJECT NO. 1600120

NO.	DATE	BY	REVISION
6	12/29/2021	NW	REVISED PER STORM DRAIN CHANGES
5	12/08/2021	NW	FO002 WATERMAIN AND GV UPDATES
4	12/08/2021	NW	FO001 REQUEST TO MOVE WTR LINE W4
3	10/15/2021	NW	REVISED PER WATER UPGRADES TO SUPPORT WAREHOUSE AND STORM DRAIN CHANGES
2	06/21/2021	NW	ISSUED FOR BID
1	05/07/2021	NW	FOR CITY REVIEW
0	07/05/2023	NW	AS-BUILT

RECORD CONDITIONS ILLUSTRATED IN THESE PLANS REFLECT INFORMATION PROVIDED BY THE CONTRACTOR. RECORD CONDITIONS WERE NOT VERIFIED BY ENGINEER.

PROJECT ENGINEER: N. WATSON	SCALE: AS SHOWN
DESIGNED BY: J. BECKER	DATE: 05/07/2021
DRAWN BY: K. EDWARDS, D. YU	CHECKED BY: N. WATSON
APPROVED BY:	

PORT OF EVERETT

NORTON TERMINAL DEVELOPMENT & MTCA 3RD INTERIM ACTION WATER AND SEWER DETAIL PLAN (3 OF 9)

DWG. NO. **C5.4**
CIP NO. 1-8-900-05
PROJECT NO. MT-NT-2021-02.2
SHEET NO. 70 OF 150

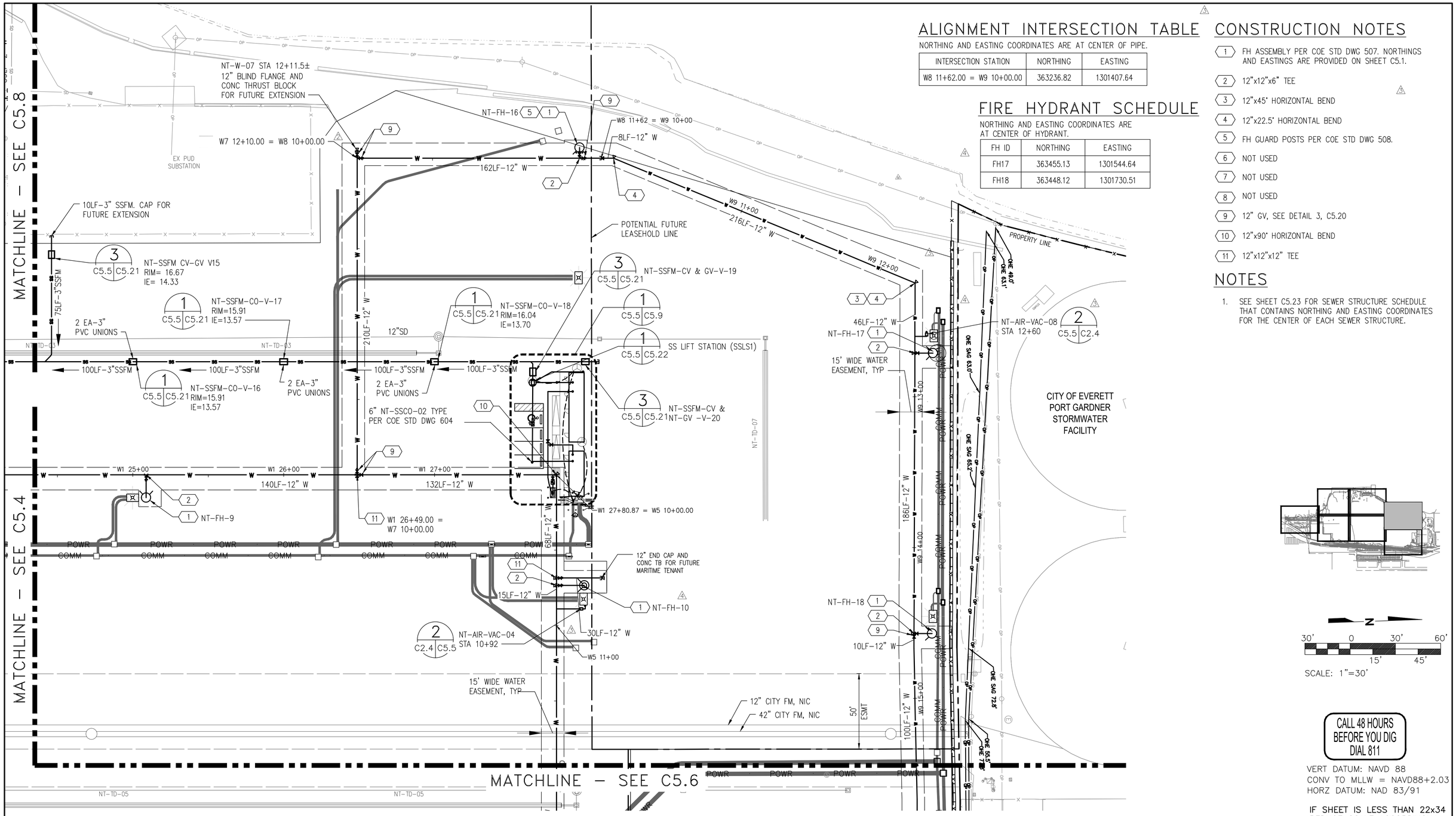

ALIGNMENT INTERSECTION TABLE

NORTHING AND EASTING COORDINATES ARE AT CENTER OF PIPE.

INTERSECTION STATION	NORTHING	EASTING
W8 11+62.00 = W9 10+00.00	363236.82	1301407.64

FIRE HYDRANT SCHEDULE

NORTHING AND EASTING COORDINATES ARE AT CENTER OF HYDRANT.

FH ID	NORTHING	EASTING
FH17	363455.13	1301544.64
FH18	363448.12	1301730.51

CONSTRUCTION NOTES

1. FH ASSEMBLY PER COE STD DWG 507. NORTHINGS AND EASTINGS ARE PROVIDED ON SHEET C5.1.
2. 12"x12"x6" TEE
3. 12"x45° HORIZONTAL BEND
4. 12"x22.5° HORIZONTAL BEND
5. FH GUARD POSTS PER COE STD DWG 508.
6. NOT USED
7. NOT USED
8. NOT USED
9. 12" GV, SEE DETAIL 3, C5.20
10. 12"x90° HORIZONTAL BEND
11. 12"x12"x12" TEE

NOTES

1. SEE SHEET C5.23 FOR SEWER STRUCTURE SCHEDULE THAT CONTAINS NORTHING AND EASTING COORDINATES FOR THE CENTER OF EACH SEWER STRUCTURE.

N

30' 0 30' 60'

15' 45'

SCALE: 1"=30'

CALL 48 HOURS BEFORE YOU DIG DIAL 811

VERT DATUM: NAVD 88
CONV TO MLLW = NAVD88+2.03
HORZ DATUM: NAD 83/91

IF SHEET IS LESS THAN 22x34 REDUCE SCALE ACCORDINGLY

Port of EVERETT
P.O. BOX 538
EVERETT, WA 98206
(425) 259-3164

kpff
1601 5th Avenue, Suite 1300
Seattle, Washington 98101
(206) 382-0600 Fax (206) 382-0500
PROJECT NO. 1600120

NO.	DATE	BY	REVISION
7	07/05/2023	NW	AS-BUILT
6	06/13/2022	NW	RFI 088
5	04/08/2022	NW	MARITIME TENANT SITE DEVELOPMENT
4	12/02/2021	NW	2-INCH TO 9-INCH PVMT
3	06/21/2021	NW	ISSUED FOR BID
2	05/07/2021	NW	FOR CITY REVIEW
1			

NO.	DATE	BY	REVISION

RECORD CONDITIONS ILLUSTRATED IN THESE PLANS REFLECT INFORMATION PROVIDED BY THE CONTRACTOR. RECORD CONDITIONS WERE NOT VERIFIED BY ENGINEER.

PROJECT ENGINEER: N. WATSON	SCALE: AS SHOWN
DESIGNED BY: J. BECKER	DATE: 05/07/2021
DRAWN BY: K. EDWARDS, D. YU	CHECKED BY: N. WATSON
APPROVED BY:	

PORT OF EVERETT

NORTON TERMINAL DEVELOPMENT & MTCA 3RD INTERIM ACTION
WATER AND SEWER DETAIL PLAN
(4 OF 9)

DWG. NO. **C5.5**

CIP NO. 1-8-900-05

PROJECT NO. MT-NT-2021-02.2

SHEET NO. 71 OF 150

AS-BUILTS

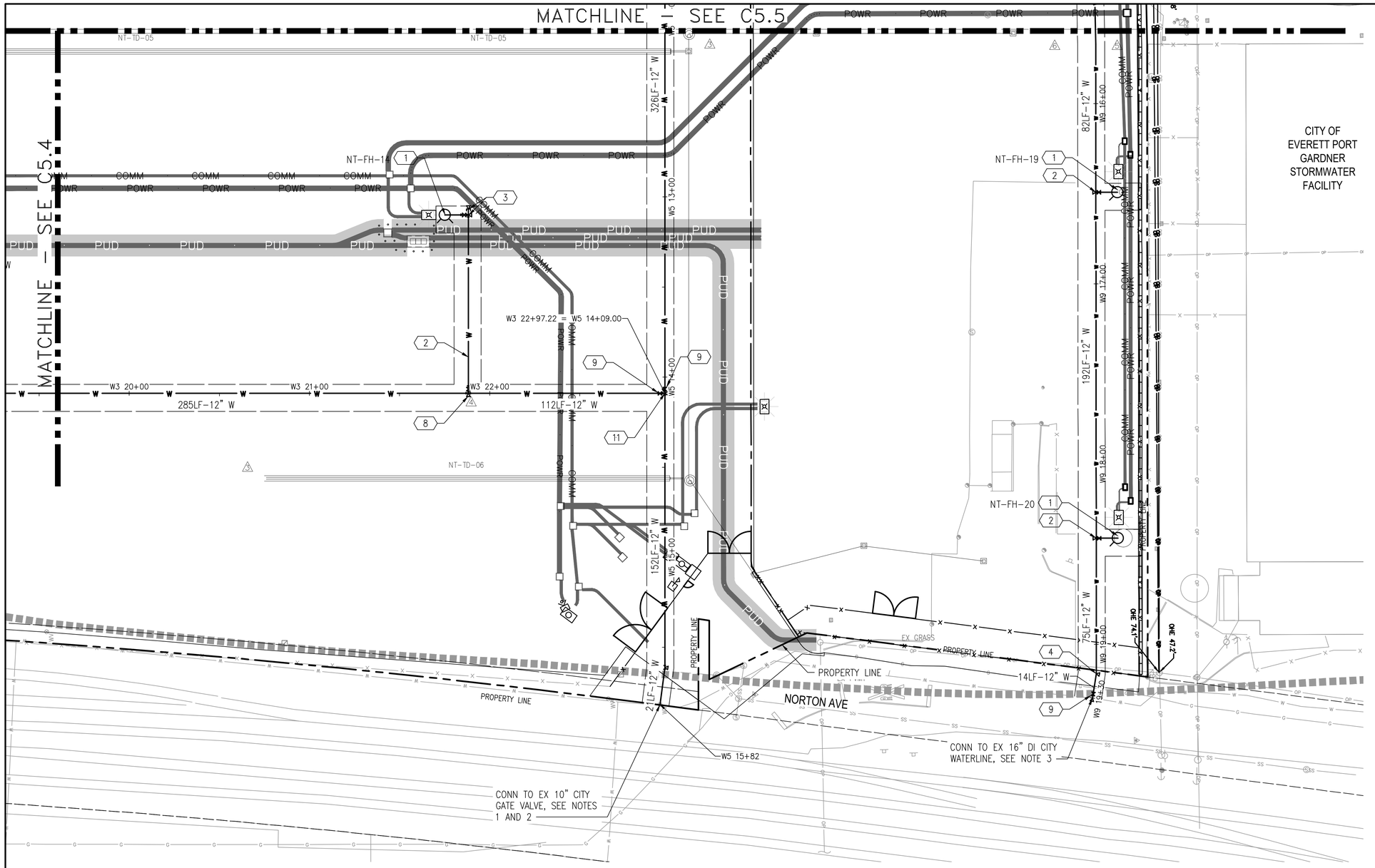

NOTES

1. CONTRACTOR SHALL LOCATE THE EXISTING 10 INCH CITY GATE VALVE AND CONNECT NEW 12 INCH PIPE TO THE GATE VALVE USING 10x12 INCH REDUCER. CITY OF EVERETT PUBLIC WORKS TO MAKE CONN TO EXISTING WATER MAIN UNDER SEPARATE UTILITY PERMIT WITH FEE BASED ON COST ESTIMATE PREPARED BY CITY. FEE TO BE PAID BY PORT (NOT CONTRACTOR).
2. THE CONTRACTOR SHALL COORDINATE WITH BURLINGTON NORTHERN SANTA FE (BNSF) RAILROAD PRIOR TO ANY CONSTRUCTION NEAR OR WITHIN BNSF RIGHT–OF–WAY. WHEN WORKING WITHIN 25 FEET FROM THE CENTERLINE OF ACTIVE BNSF RAILROAD TRACKS, THE CONTRACTOR SHALL BE REQUIRED TO HAVE A BNSF FLAGMAN, AT THE CONTRACTOR'S EXPENSE.
3. THE CONTRACTOR SHALL POTHOLE AND VERIFY THE LOCATION OF THE EXISTING 16" DI WATER MAIN. THE CONTRACTOR SHALL MAKE CONN TO EXISTING WATER MAIN UNDER SEPARATE UTILITY PERMIT WITH FEE BASED ON COST ESTIMATE PREPARED BY CITY. FEE TO BE PAID BY PORT (NOT CONTRACTOR).

CONSTRUCTION NOTES

1. FH ASSEMBLY PER COE STD DWG 507. NORTHINGS AND EASTINGS ARE PROVIDED ON SHEET C5.1.
2. IF LOCATION IS FOUND TO CONFLICT WITH EX FND, NOTIFY ENGINEER FOR POTENTIAL RELOCATION TO AVOID FND.
3. 8"x8"x6" TEE, BLIND FLANGE & CONC TB
4. 12"x11.25° HORIZONTAL BEND
5. NOT USED
6. NOT USED
7. NOT USED
8. 12"x12"x8" TEE
9. 12" GV, SEE DETAIL 3, C5.20
10. NOT USED
11. 12"x12"x12" TEE

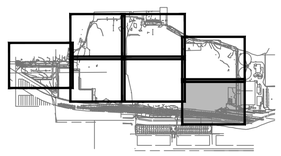

30' 0 30' 60'
15' 45'
SCALE: 1"=30'

FIRE HYDRANT SCHEDULE

NORTHING AND EASTING COORDINATES ARE AT CENTER OF HYDRANT.

FH ID	NORTHING	EASTING
FH19	363443.44	1301922.51
FH20	363437.02	1302114.40

CALL 48 HOURS BEFORE YOU DIG DIAL 811

VERT DATUM: NAVD 88
CONV TO MLLW = NAVD88+2.03
HORZ DATUM: NAD 83/91

IF SHEET IS LESS THAN 22x34 REDUCE SCALE ACCORDINGLY

Port of EVERETT
P.O. BOX 538
EVERETT, WA 98206
(425) 259–3164

kpff
1601 5th Avenue, Suite 1300
Seattle, Washington 98101
(206) 382-0600 Fax (206) 382-0500
PROJECT NO. 1600120

NO.	DATE	BY	REVISION
6	06/13/2022	NW	RFI 088
5	04/08/2022	NW	MARITIME TENANT SITE DEVELOPMENT
4	12/08/2021	NW	FO002 WATERMAIN AND GV UPDATES
3	12/02/2021	NW	2–INCH TO 9–INCH PVMT
2	07/09/2021	NW	ADDENDUM 1
1	06/21/2021	NW	ISSUED FOR BID
0	05/07/2021	NW	FOR CITY REVIEW
7	07/05/2023	NW	AS–BUILT

RECORD CONDITIONS ILLUSTRATED IN THESE PLANS REFLECT INFORMATION PROVIDED BY THE CONTRACTOR. RECORD CONDITIONS WERE NOT VERIFIED BY ENGINEER.

PROJECT ENGINEER: N. WATSON	SCALE: AS SHOWN
DESIGNED BY: J. BECKER	DATE: 05/07/2021
DRAWN BY: K. EDWARDS, D. YU	CHECKED BY: N. WATSON
APPROVED BY:	

PORT OF EVERETT

NORTON TERMINAL DEVELOPMENT & MTCA 3RD INTERIM ACTION WATER AND SEWER DETAIL PLAN (5 OF 9)

DWG. NO. **C5.6**
CIP NO. 1–8–900–05
PROJECT NO. MT–NT–2021–02.2
SHEET NO. 72 OF 150

AS-BUILTS

CONSTRUCTION NOTES

1. FH ASSEMBLY PER COE STD DWG 507. NORTHINGS AND EASTINGS ARE PROVIDED ON SHEET C5.1.
2. 12"x12"x6" TEE
3. NOT USED
4. NOT USED
5. NOT USED
6. NOT USED
7. NOT USED
8. NOT USED
9. NOT USED
10. 12"x90° HORIZONTAL BEND
11. NOT USED
12. NOT USED
13. NOT USED
14. NOT USED

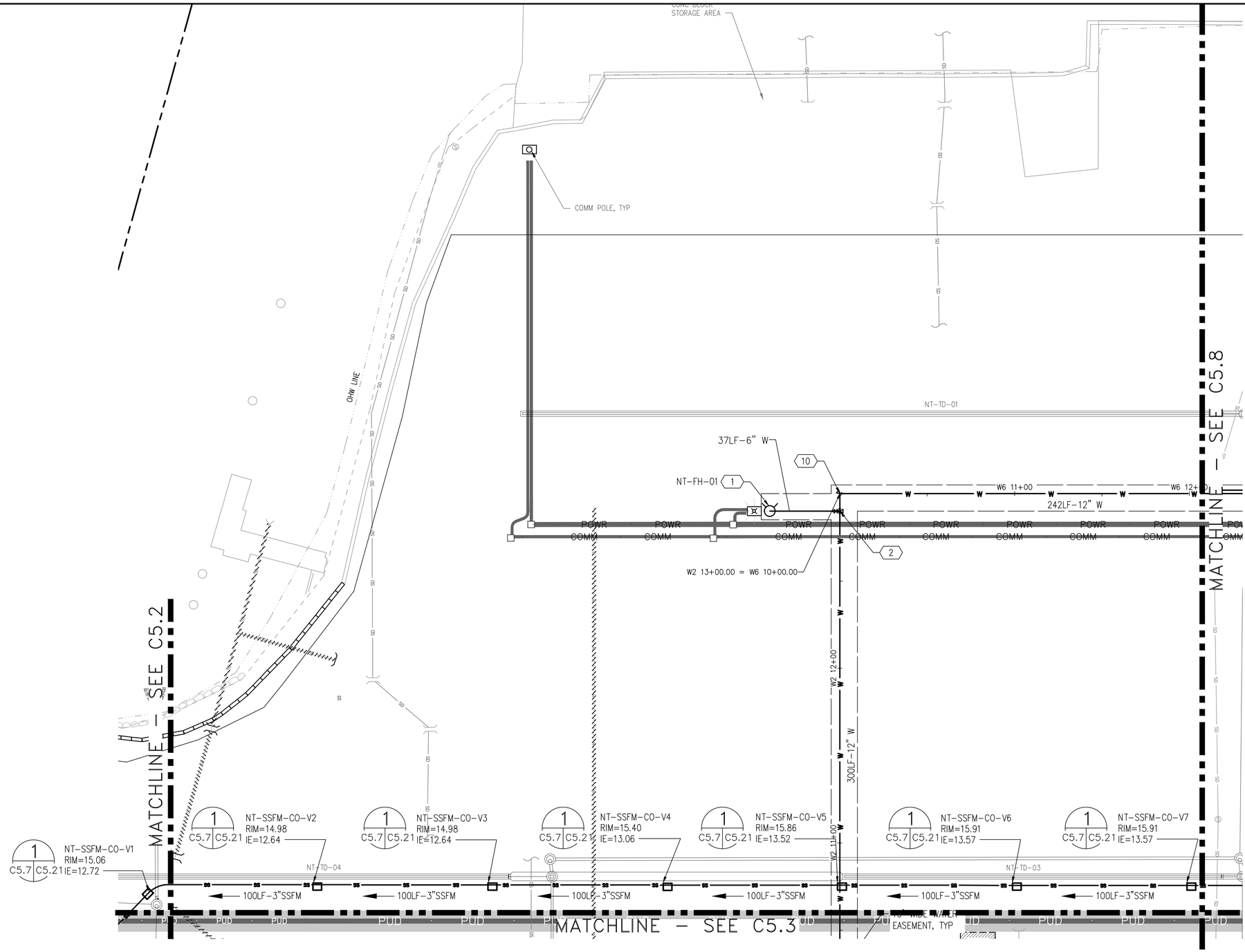

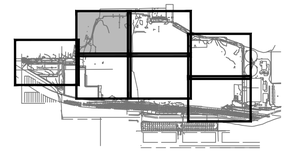

N

30' 0 30' 60'
15' 45'

SCALE: 1"=30'

CALL 48 HOURS BEFORE YOU DIG DIAL 811

VERT DATUM: NAVD 88
CONV TO MLLW = NAVD88+2.03
HORZ DATUM: NAD 83/91

IF SHEET IS LESS THAN 22x34 REDUCE SCALE ACCORDINGLY

AS-BUILTS

Port of EVERETT
P.O. BOX 538
EVERETT, WA 98206
(425) 259-3164

kpff
1601 5th Avenue, Suite 1300
Seattle, Washington 98101
(206) 382-0600 Fax (206) 382-0500
PROJECT NO. 1600120

NO.	DATE	BY	REVISION
2	07/05/2023	NW	AS-BUILT
1	06/21/2021	NW	ISSUED FOR BID
0	05/07/2021	NW	FOR CITY REVIEW

NO.	DATE	BY	REVISION

RECORD CONDITIONS ILLUSTRATED IN THESE PLANS REFLECT INFORMATION PROVIDED BY THE CONTRACTOR. RECORD CONDITIONS WERE NOT VERIFIED BY ENGINEER.

PROJECT ENGINEER: N. WATSON	SCALE: AS SHOWN
DESIGNED BY: J. BECKER	DATE: 05/07/2021
DRAWN BY: K. EDWARDS, D. YU	CHECKED BY: N. WATSON
APPROVED BY:	

PORT OF EVERETT

NORTON TERMINAL DEVELOPMENT & MTCA 3RD INTERIM ACTION
WATER AND SEWER DETAIL PLAN
(6 OF 9)

DWG. NO. **C5.7**

CIP NO. 1-8-900-05

PROJECT NO. MT-NT-2021-02.2

SHEET NO. 73 OF 150

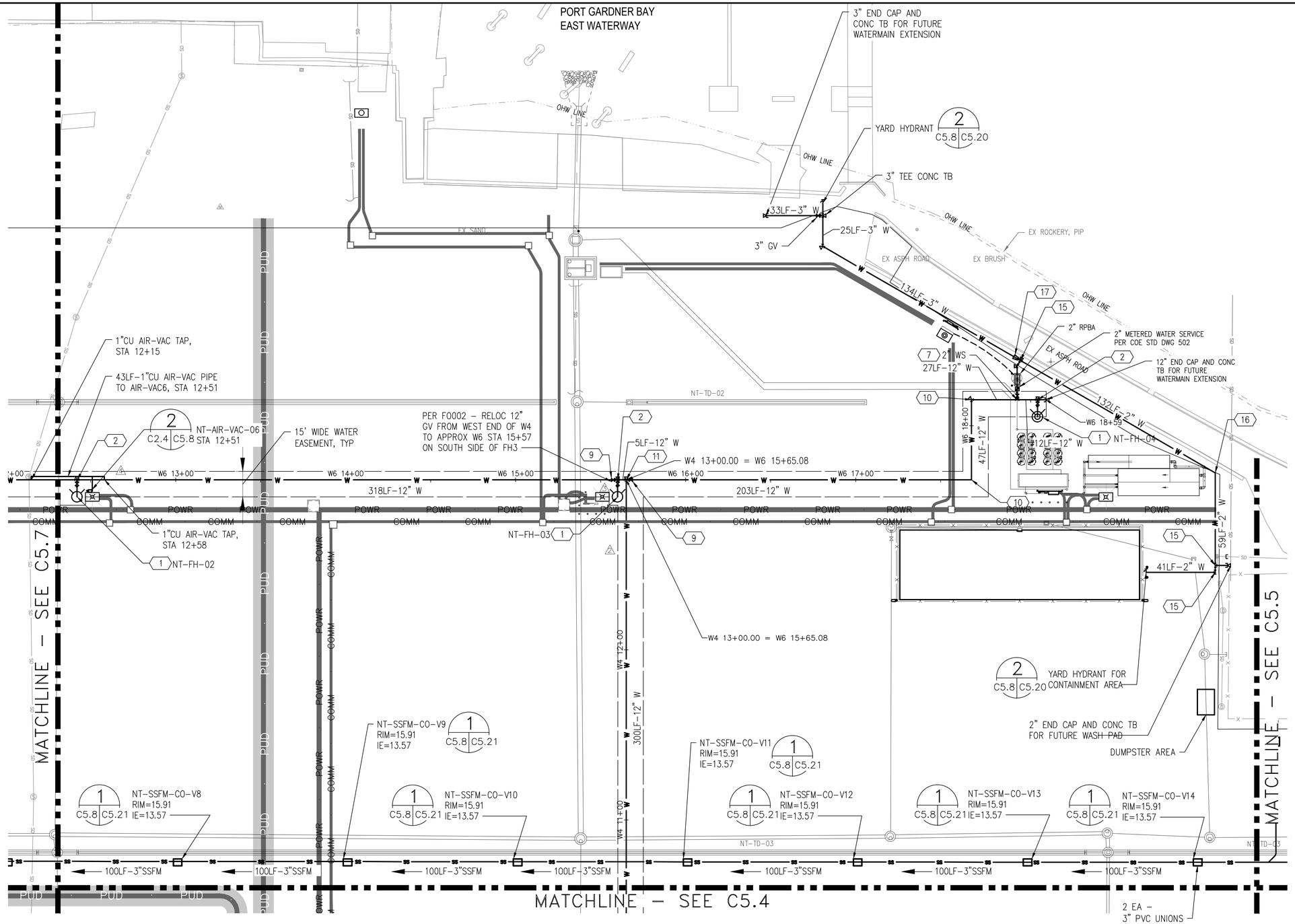

CONSTRUCTION NOTES

1. FH ASSEMBLY PER COE STD DWG 507. NORTHINGS AND EASTINGS ARE PROVIDED ON SHEET C5.1.
2. 12"x12"x6" TEE
3. NOT USED
4. NOT USED
5. NOT USED
6. NOT USED
7. 2" METERED WATER SERVICE PER COE STD DWG 502
8. NOT USED
9. 12" GV, SEE DETAIL 3, C5.20
10. 12"x90° HORIZONTAL BEND
11. 12"x12"x12" TEE
12. NOT USED
13. NOT USED
14. 8"x8"x6" TEE
15. 2"x2"x2" TEE
16. 2"x60° HORIZONTAL BEND
17. 2"x3" REDUCER

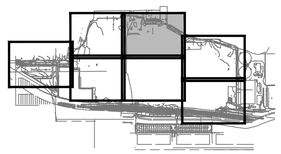

N

30' 0 30' 60'
15' 45'

SCALE: 1"=30'

CALL 48 HOURS BEFORE YOU DIG DIAL 811

VERT DATUM: NAVD 88
CONV TO MLLW = NAVD88+2.03
HORZ DATUM: NAD 83/91

IF SHEET IS LESS THAN 22x34 REDUCE SCALE ACCORDINGLY

Port of EVERETT
P.O. BOX 538
EVERETT, WA 98206
(425) 259-3164

kpff
1601 5th Avenue, Suite 1300
Seattle, Washington 98101
(206) 382-0600 Fax (206) 382-0500
PROJECT NO. 1600120

NO.	DATE	BY	REVISION
7	07/05/2023	NW	AS-BUILT
6	12/08/2021	NW	REVISED PER STORM DRAIN CHANGES
5	12/08/2021	NW	F0002 WATERMAIN AND GV UPDATES
4	12/08/2021	NW	F0001 REQUEST TO MOVE WTR LINE W4
3	06/21/2021	NW	ISSUED FOR BID
2	05/07/2021	NW	FOR CITY REVIEW
1			

NO.	DATE	BY	REVISION

RECORD CONDITIONS ILLUSTRATED IN THESE PLANS REFLECT INFORMATION PROVIDED BY THE CONTRACTOR. RECORD CONDITIONS WERE NOT VERIFIED BY ENGINEER.

PROJECT ENGINEER: N. WATSON	SCALE: AS SHOWN
DESIGNED BY: J. BECKER	DATE: 05/07/2021
DRAWN BY: K. EDWARDS, D. YU	CHECKED BY: N. WATSON
APPROVED BY:	

PORT OF EVERETT

NORTON TERMINAL DEVELOPMENT & MTCA 3RD INTERIM ACTION WATER AND SEWER DETAIL PLAN (7 OF 9)

DWG. NO. **C5.8**

CIP NO. 1-8-900-05

PROJECT NO. MT-NT-2021-02.2

SHEET NO. 74 OF 150

AS-BUILTS

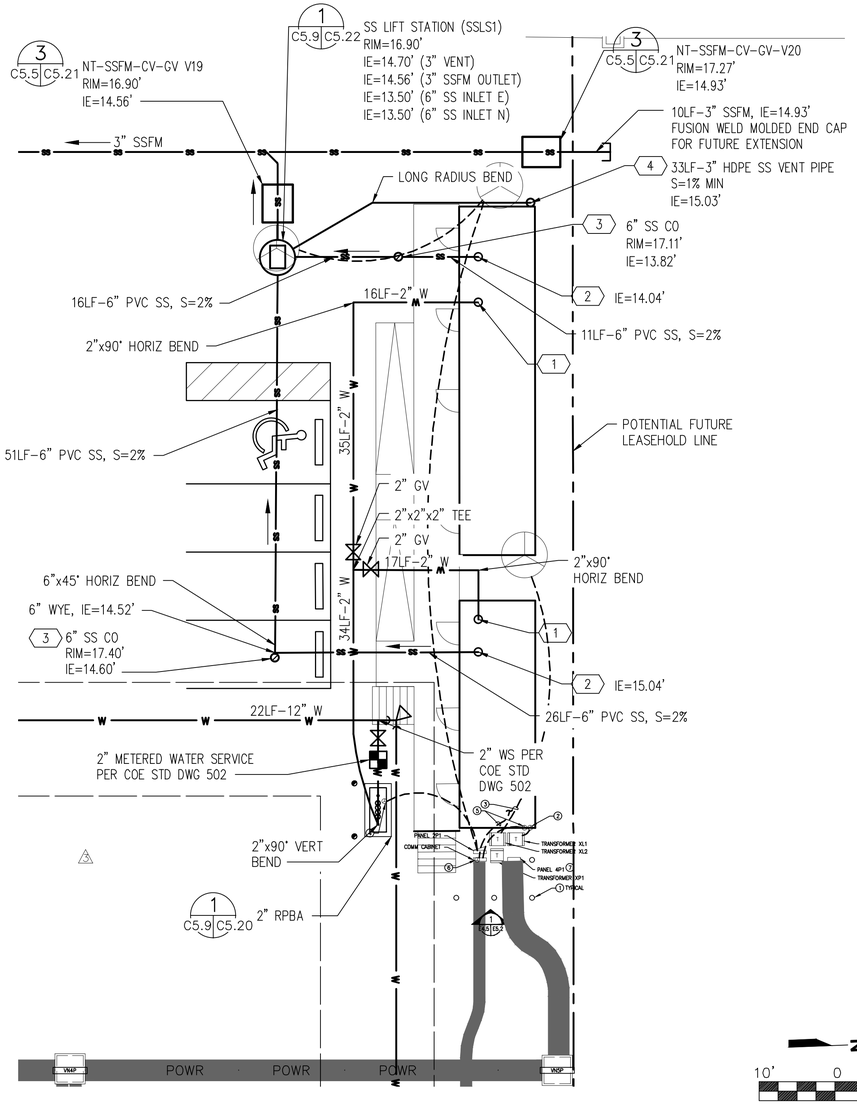

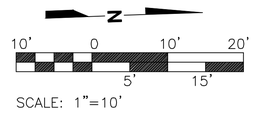

SCALE: 1"=10'

1 LONGSHOREMAN TRAILERS WATER AND SEWER PLAN

C5.1 C5.9 SCALE: 1"=10'

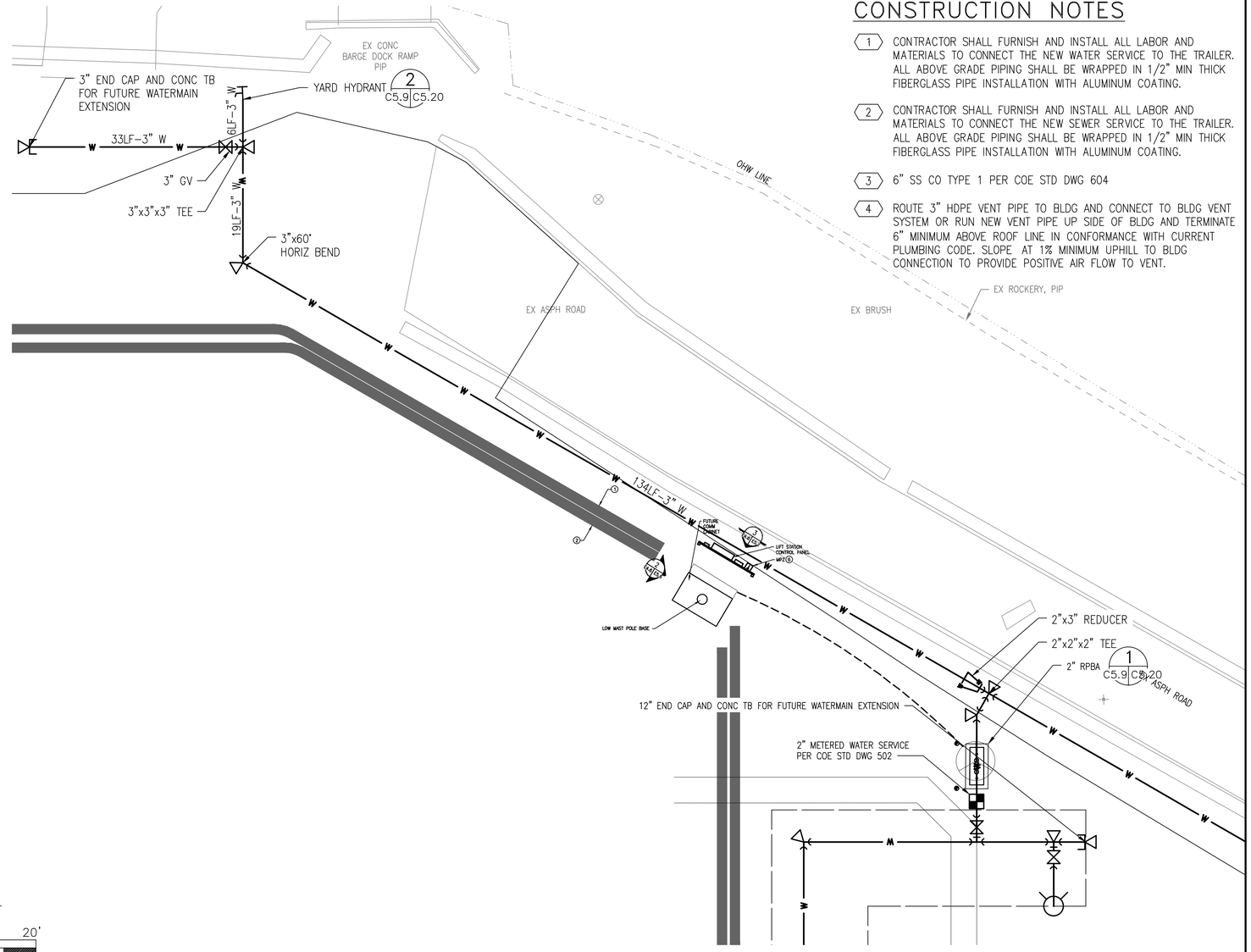

2 BARGE DOCK WATER PLAN

C5.1 C5.9 SCALE: 1"=10'

CONSTRUCTION NOTES

1. CONTRACTOR SHALL FURNISH AND INSTALL ALL LABOR AND MATERIALS TO CONNECT THE NEW WATER SERVICE TO THE TRAILER. ALL ABOVE GRADE PIPING SHALL BE WRAPPED IN 1/2" MIN THICK FIBERGLASS PIPE INSTALLATION WITH ALUMINUM COATING.
2. CONTRACTOR SHALL FURNISH AND INSTALL ALL LABOR AND MATERIALS TO CONNECT THE NEW SEWER SERVICE TO THE TRAILER. ALL ABOVE GRADE PIPING SHALL BE WRAPPED IN 1/2" MIN THICK FIBERGLASS PIPE INSTALLATION WITH ALUMINUM COATING.
3. 6" SS CO TYPE 1 PER COE STD DWG 604
4. ROUTE 3" HDPE VENT PIPE TO BLDG AND CONNECT TO BLDG VENT SYSTEM OR RUN NEW VENT PIPE UP SIDE OF BLDG AND TERMINATE 6" MINIMUM ABOVE ROOF LINE IN CONFORMANCE WITH CURRENT PLUMBING CODE. SLOPE AT 1% MINIMUM UPHILL TO BLDG CONNECTION TO PROVIDE POSITIVE AIR FLOW TO VENT.

CALL 48 HOURS BEFORE YOU DIG DIAL 811

VERT DATUM: NAVD 88
CONV TO MLLW = NAVD88+2.03
HORZ DATUM: NAD 83/91

IF SHEET IS LESS THAN 22x34 REDUCE SCALE ACCORDINGLY

Port of EVERETT
P.O. BOX 538
EVERETT, WA 98206
(425) 259-3164

kpff
1601 5th Avenue, Suite 1300
Seattle, Washington 98101
(206) 382-0600 Fax (206) 382-0500
PROJECT NO. 1600120

NO.	DATE	BY	REVISION
4	07/05/2023	NW	AS-BUILT
3	04/08/2022	NW	MARITIME TENANT SITE DEVELOPMENT
2	12/02/2021	NW	2-INCH TO 9-INCH PVMT
1	06/21/2021	NW	ISSUED FOR BID
0	05/07/2021	NW	FOR CITY REVIEW

RECORD CONDITIONS ILLUSTRATED IN THESE PLANS REFLECT INFORMATION PROVIDED BY THE CONTRACTOR. RECORD CONDITIONS WERE NOT VERIFIED BY ENGINEER.

PROJECT ENGINEER: N. WATSON	SCALE: AS SHOWN
DESIGNED BY: J. BECKER	DATE: 05/07/2021
DRAWN BY: K. EDWARDS, D. YU	CHECKED BY: N. WATSON
APPROVED BY:	

PORT OF EVERETT

NORTON TERMINAL DEVELOPMENT & MTCA 3RD INTERIM ACTION
WATER AND SEWER DETAIL PLAN
(8 OF 9)

DWG. NO. **C5.9**
CIP NO. 1-8-900-05
PROJECT NO. MT-NT-2021-02.2
SHEET NO. 75 OF 150

AS-BUILTS

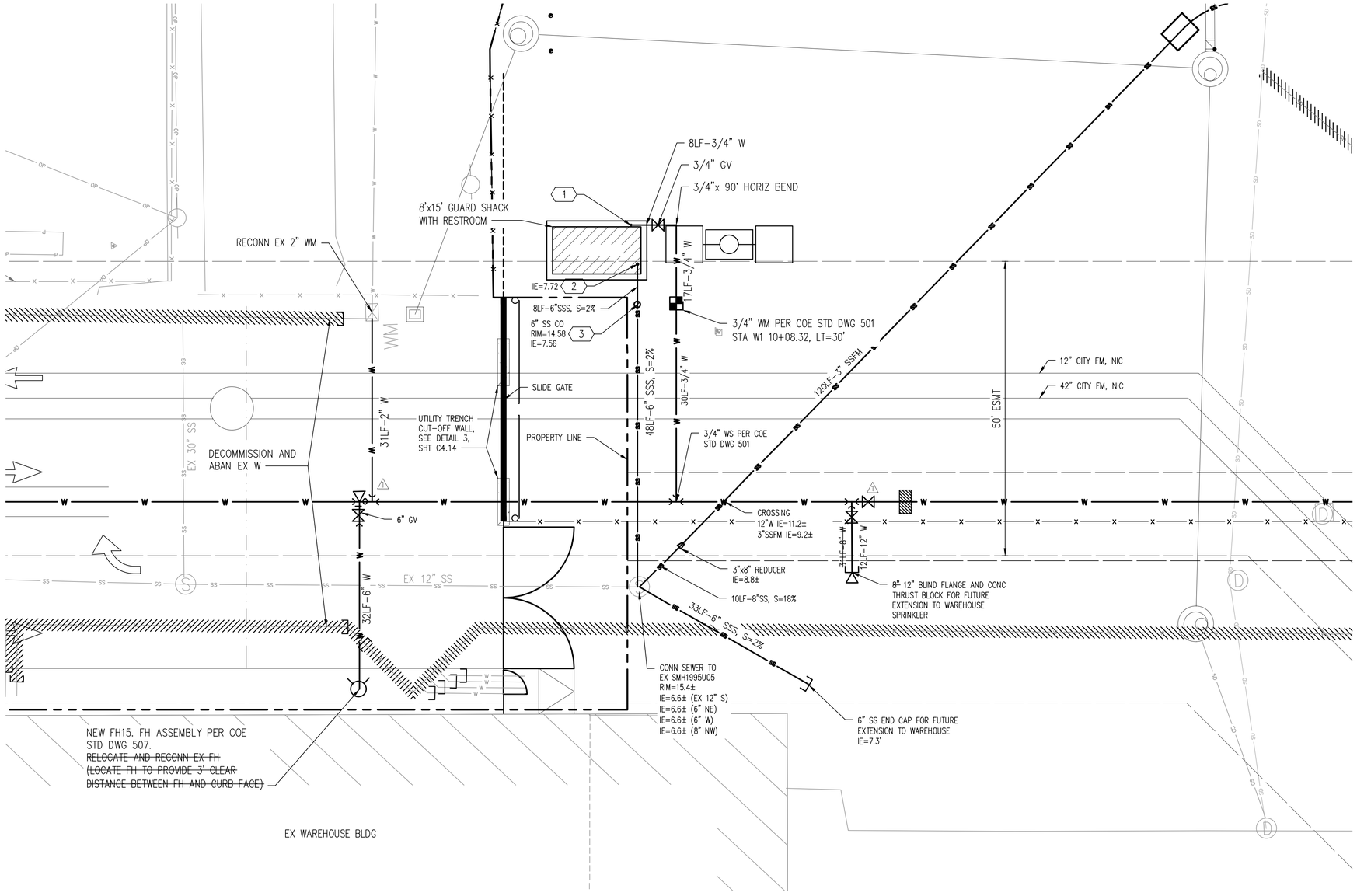

CONSTRUCTION NOTES

1. CONTRACTOR SHALL FURNISH AND INSTALL ALL LABOR AND MATERIALS TO CONNECT THE NEW WATER SERVICE TO THE GUARD SHACK. ALL ABOVE GRADE PIPING SHALL BE WRAPPED IN 1/2" MIN THICK FIBERGLASS PIPE INSTALLATION WITH ALUMINUM COATING. IT IS THE CONTRACTOR'S RESPONSIBILITY TO COORDINATE UTILITY PENETRATIONS INTO THE GUARD SHACK. CONTRACTOR SHALL COORDINATE UTILITY LOCATIONS PRIOR TO POURING CONCRETE SLAB.
2. CONTRACTOR SHALL FURNISH AND INSTALL ALL LABOR AND MATERIALS TO CONNECT THE NEW SEWER SERVICE TO THE GUARD SHACK. ALL ABOVE GRADE PIPING SHALL BE WRAPPED IN 1/2" MIN THICK FIBERGLASS PIPE INSTALLATION WITH ALUMINUM COATING. IT IS THE CONTRACTOR'S RESPONSIBILITY TO COORDINATE UTILITY PENETRATIONS INTO THE GUARD SHACK. CONTRACTOR SHALL COORDINATE UTILITY LOCATIONS PRIOR TO POURING CONCRETE SLAB.
3. 6" SS CO TYPE 1 PER COE STD DWG 604

1 SOUTH GATE AND GUARD SHACK WATER AND SEWER PLAN

C5.1 | C5.10 SCALE: 1"=10'

N

10' 0 10' 20'

5' 15'

SCALE: 1"=10'

CALL 48 HOURS BEFORE YOU DIG DIAL 811

VERT DATUM: NAVD 88
CONV TO MLLW = NAVD88+2.03
HORZ DATUM: NAD 83/91

IF SHEET IS LESS THAN 22x34 REDUCE SCALE ACCORDINGLY

Port of EVERETT
P.O. BOX 538
EVERETT, WA 98206
(425) 259-3164

kpff
1601 5th Avenue, Suite 1300
Seattle, Washington 98101
(206) 382-0600 Fax (206) 382-0500
PROJECT NO. 1600120

NO.	DATE	BY	REVISION
2	07/05/2023	NW	AS-BUILT
1	10/15/2021	NW	REVISED PER CITY PRE-CONSTRUCTION MEETING AND WATER UPGRADES TO SUPPORT WAREHOUSE AND STORM DRAIN CHANGES
0	06/21/2021	NW	ISSUED FOR BID

NO.	DATE	BY	REVISION

RECORD CONDITIONS ILLUSTRATED IN THESE PLANS REFLECT INFORMATION PROVIDED BY THE CONTRACTOR. RECORD CONDITIONS WERE NOT VERIFIED BY ENGINEER.

PROJECT ENGINEER: N. WATSON	SCALE: AS SHOWN
DESIGNED BY: J. BECKER	DATE: 06/21/2021
DRAWN BY: K. EDWARDS, D. YU	CHECKED BY: N. WATSON
APPROVED BY:	

PORT OF EVERETT

NORTON TERMINAL DEVELOPMENT & MTCA 3RD INTERIM ACTION WATER AND SEWER DETAIL PLAN (9 OF 9)

DWG. NO. **C5.10**

CIP NO. 1-8-900-05

PROJECT NO. MT-NT-2021-02.2

SHEET NO. 76 OF 150

AS-BUILTS

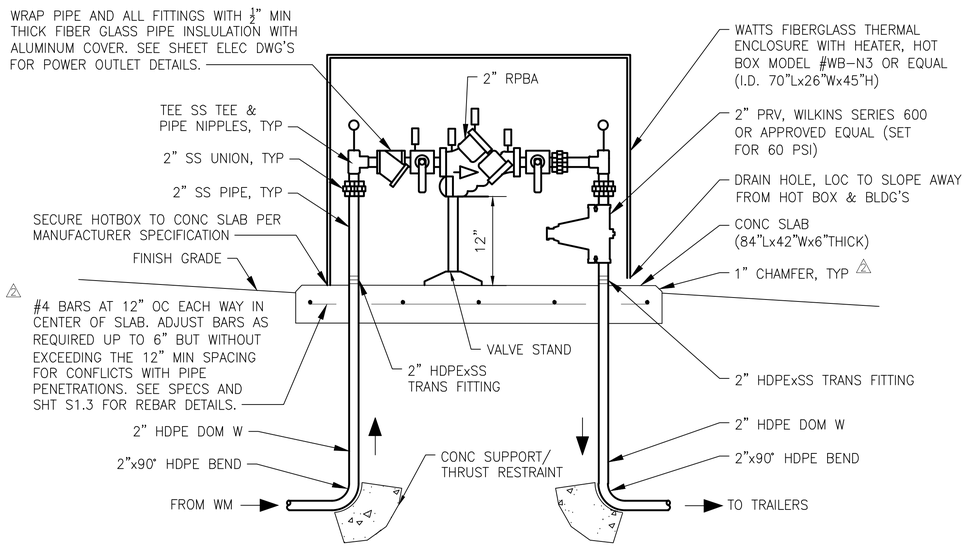

1 POTABLE WATER SERVICE RPBA AND HOTBOX DETAIL

C5.9 C5.20 SCALE: NTS

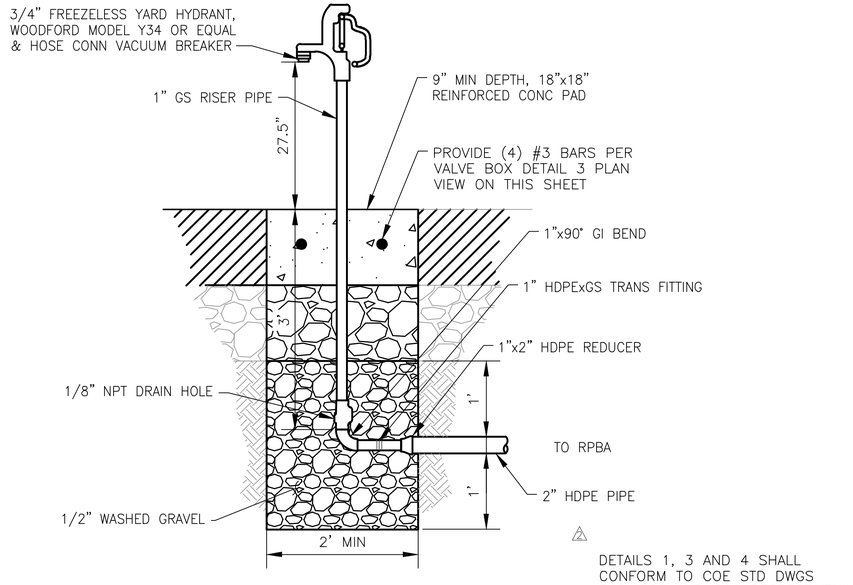

DETAILS 1, 3 AND 4 SHALL CONFORM TO COE STD DWGS 518, 505 AND 614 RESPECTIVELY.

2 YARD HYDRANT DETAIL

C5.1, C5.3 C5.20 SCALE: NTS

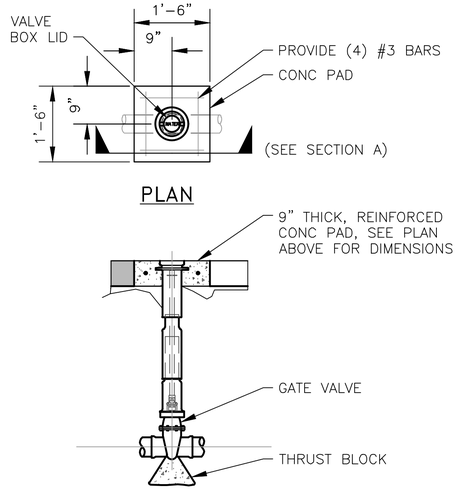

3 VALVE BOX

C5.1, C5.2 C5.20 SCALE: NTS

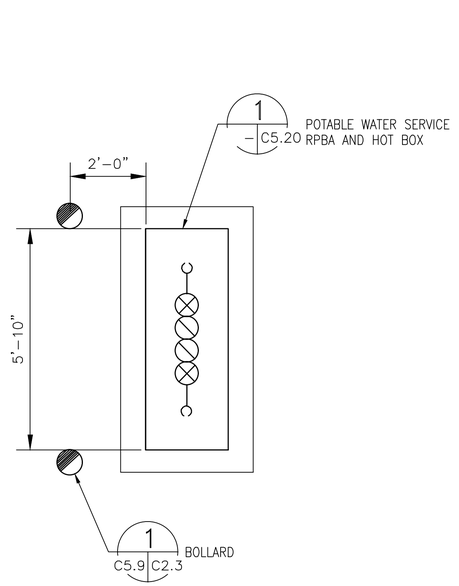

— HOT BOX BOLLARD PROTECTION

SCALE: NTS

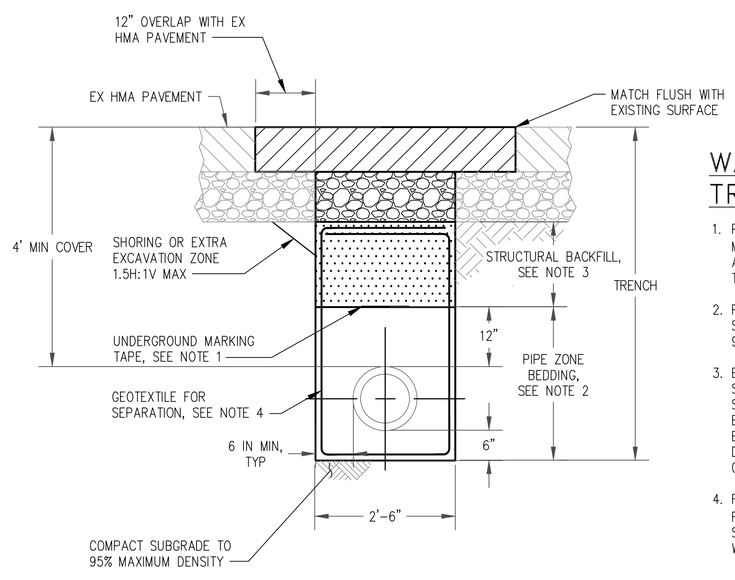

WATERMAIN TRENCH NOTES

1. PLACE THE APPROPRIATE UTILITY MARKING TAPE, WITH METAL FIBERS, 12" ABOVE THE PIPE CONTINUOUSLY ALONG THE PIPE LENGTH.
2. PIPE ZONE BEDDING SHALL BE CRUSHED SURFACING BASE COURSE, COMPACT TO 90% MAXIMUM DENSITY.
3. BACKFILL SHALL BE IMPORTED STRUCTURAL FILL OR EQUIVALENT SUITABLE NATIVE MATERIAL AS APPROVED BY THE ENGINEER OR PIPE BEDDING CAN BE EXTENDED TO PAVEMENT SUBGRADE IF DISTANCE IS 12 INCHES OR LESS COMPACT TO 95% MAXIMUM DENSITY.
4. FILTER FABRIC SHALL BE FILTER FABRIC FOR SEPARATION PER WSDOT/APWA STANDARD SPECIFICATION 9-33.2, NON WOVEN.

4 TYPICAL WATERMAIN TRENCH FOR FEDERAL AVENUE (W1 STA 4+16 THROUGH W1 10+00)

C5.1, C5.2 C5.20 SCALE: NTS

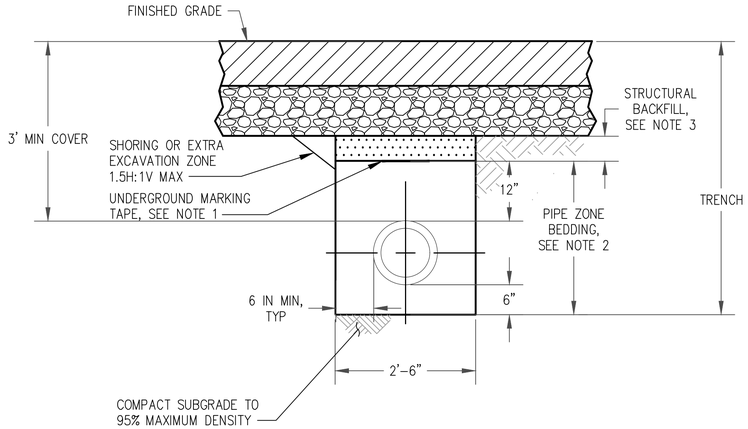

5 TYPICAL TRENCH FOR PRESSURIZED PIPE AND WATER LINES FOR NORTON TERMINAL

C5.1, C5.2 C5.20 SCALE: NTS

IF SHEET IS LESS THAN 22x34 REDUCE SCALE ACCORDINGLY

Port of EVERETT
P.O. BOX 538
EVERETT, WA 98206
(425) 259-3164

kpff
1601 5th Avenue, Suite 1300
Seattle, Washington 98101
(206) 382-0600 Fax (206) 382-0500
PROJECT NO. 1600120

NO.	DATE	BY	REVISION
3	07/05/2023	NW	AS-BUILT
2	07/09/2021	NW	ADDENDUM 1
1	06/21/2021	NW	ISSUED FOR BID
0	05/07/2021	NW	FOR CITY REVIEW

RECORD CONDITIONS ILLUSTRATED IN THESE PLANS REFLECT INFORMATION PROVIDED BY THE CONTRACTOR. RECORD CONDITIONS WERE NOT VERIFIED BY ENGINEER.

PROJECT ENGINEER: N. WATSON	SCALE: AS SHOWN
DESIGNED BY: J. BECKER	DATE: 05/07/2021
DRAWN BY: K. EDWARDS, D. YU	CHECKED BY: N. WATSON
APPROVED BY:	

PORT OF EVERETT

NORTON TERMINAL DEVELOPMENT & MTCA 3RD INTERIM ACTION WATER DETAILS

DWG. NO. **C5.20**

CIP NO. 1-8-900-05

PROJECT NO. MT-NT-2021-02.2

SHEET NO. 77 OF 150

AS-BUILTS

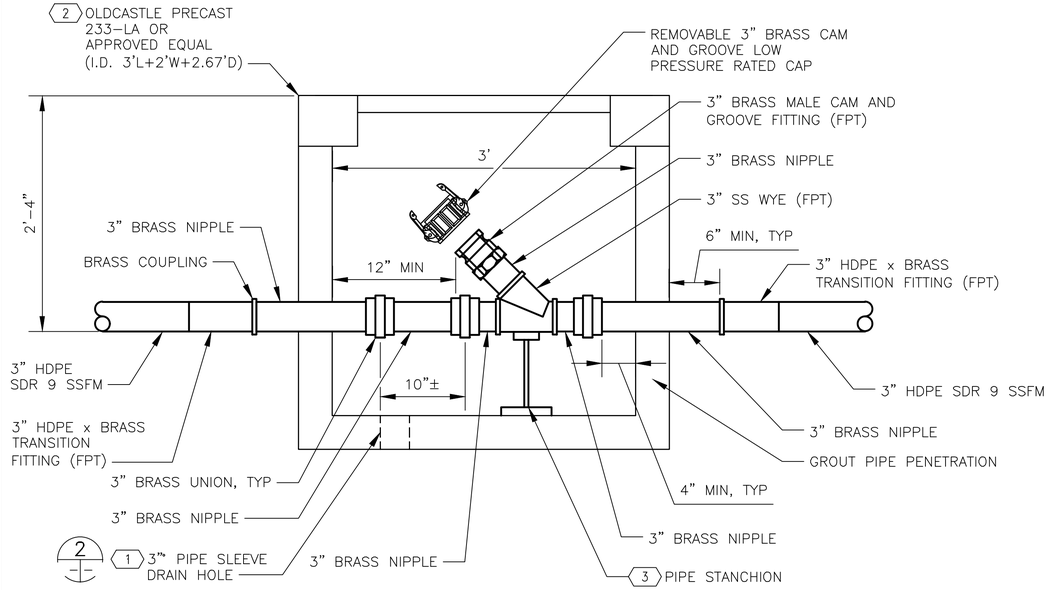

1 SSFM CO VAULT

C5.1 C5.21 SCALE: NTS

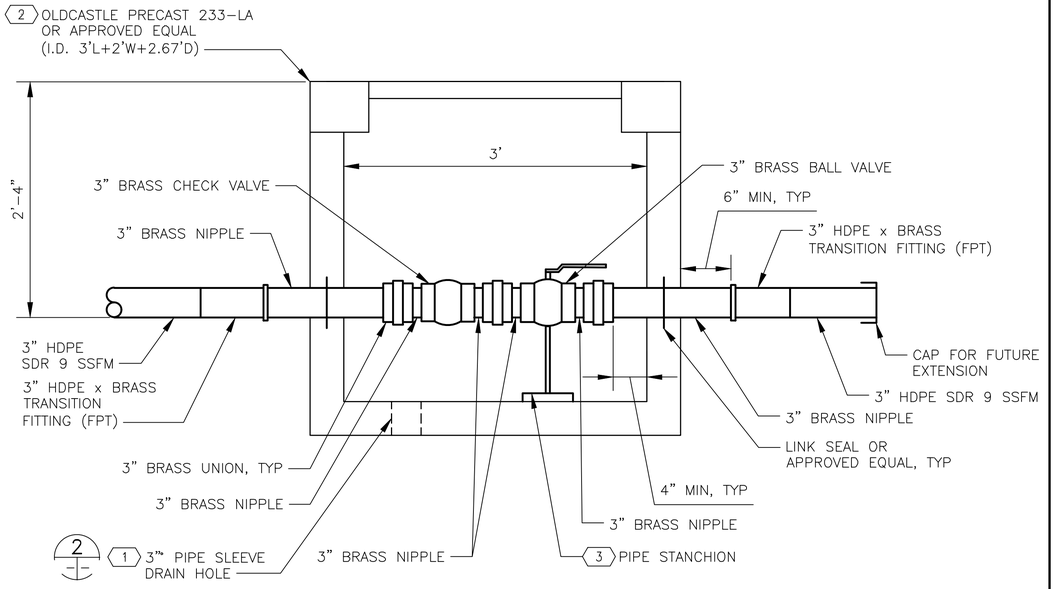

3 SSFM CHECK VALVE & SHUT–OFF VALVE VAULT

C5.1 C5.21 SCALE: NTS

NOTES:

1. PROVIDE 3"ø SCH 80 PVC PIPE SLEEVE DRAIN HOLE. CAST SLEEVE TOP FLUSH WITH INSIDE OF VAULT BOT. TRIM SLEEVE BOT FLUSH WITH OUTSIDE VAULT BOT.
2. UTILITY STRUCTURE AND LID SHALL BE CONTRACTOR DESIGNED IN CONFORMANCE WITH THE UNDERGROUND UTILITY STRUCTURES DESIGN LOADING CRITERIA NOTES AND THE TAYLOR "BIG RED" THDC–976 CONTAINER HANDLER INFORMATION ON SHEET G1.3.
3. STANCHIONS SHALL BE SECURELY FASTENED TO THE VAULT AND THE VALVE WITH CORROSION RESISTANT HARDWARE.

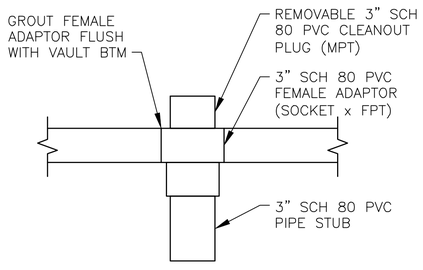

2 PIPE SLEEVE DRAIN HOLE

SCALE: NTS

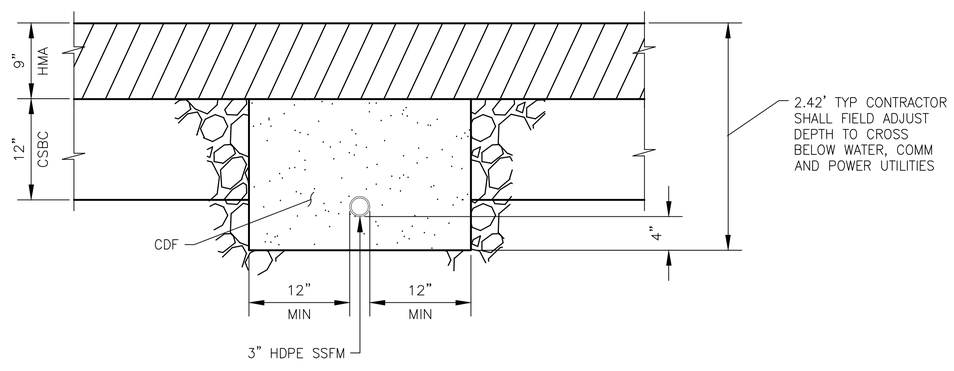

A TYPICAL SSFM TRENCH SECTION

SCALE: NTS

IF SHEET IS LESS THAN 22x34 REDUCE SCALE ACCORDINGLY

Port of EVERETT
P.O. BOX 538
EVERETT, WA 98206
(425) 259–3164

kpff
1601 5th Avenue, Suite 1300
Seattle, Washington 98101
(206) 382-0600 Fax (206) 382-0500
PROJECT NO. 1600120

NO.	DATE	BY	REVISION
3	07/05/2023	NW	AS–BUILT
2	06/21/2021	NW	ISSUED FOR BID
1	05/07/2021	NW	FOR CITY REVIEW

RECORD CONDITIONS ILLUSTRATED IN THESE PLANS REFLECT INFORMATION PROVIDED BY THE CONTRACTOR. RECORD CONDITIONS WERE NOT VERIFIED BY ENGINEER.

PROJECT ENGINEER: N. WATSON	SCALE: AS SHOWN
DESIGNED BY: J. BECKER	DATE: 05/07/2021
DRAWN BY: K. EDWARDS, D. YU	CHECKED BY: N. WATSON
APPROVED BY:	

PORT OF EVERETT

NORTON TERMINAL DEVELOPMENT & MTCA 3RD INTERIM ACTION SEWER DETAILS (1 OF 2)

DWG. NO. **C5.21**

CIP NO. 1–8–900–05

PROJECT NO. MT–NT–2021–02.2

SHEET NO. 78 OF 150

AS-BUILTS

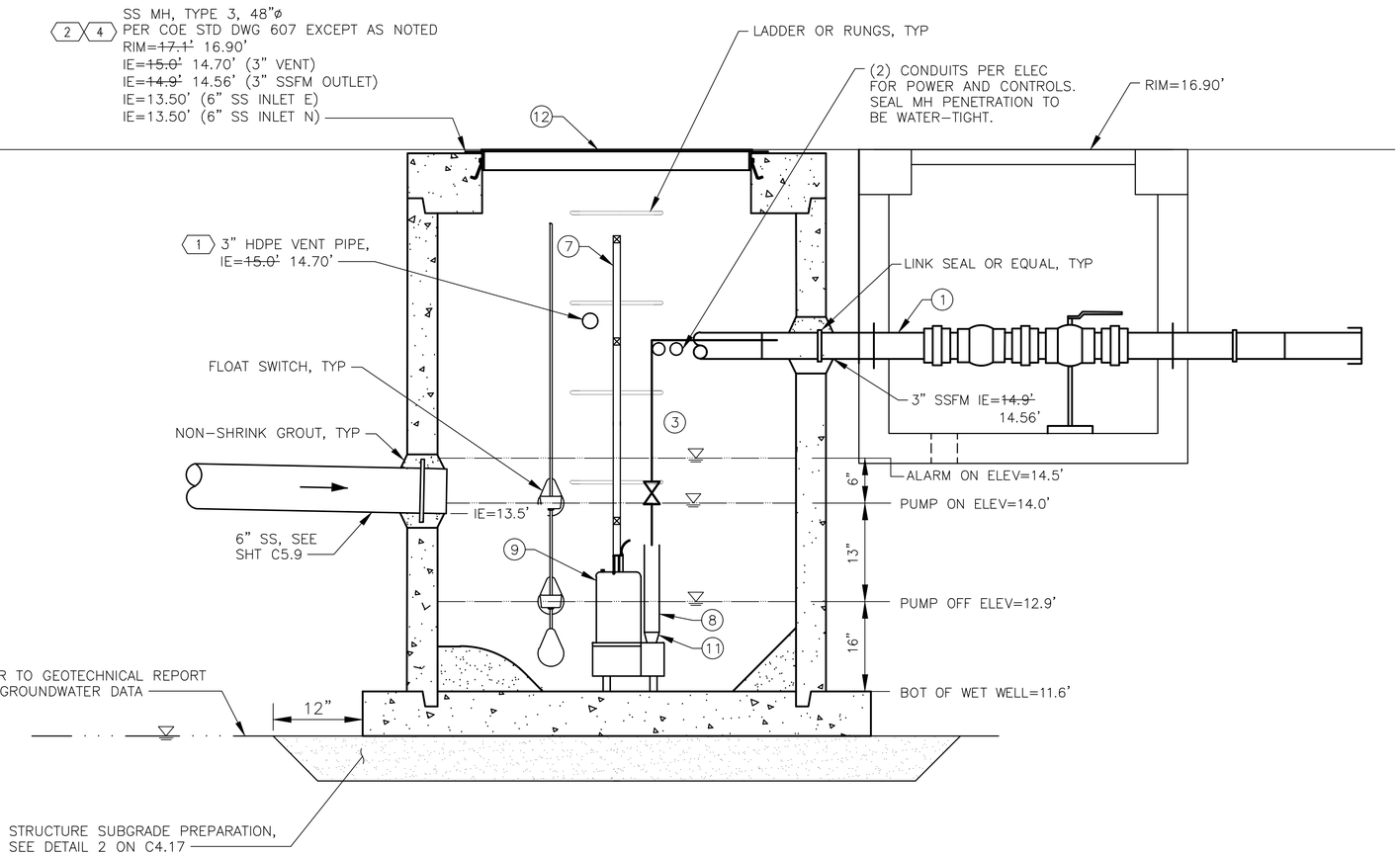

SANITARY SEWER SIMPLEX LIFT STATION DETAIL FOR LONGSHOREMAN TRAILERS

1 / C5.22 SCALE: NTS

NOTES

1. ROUTE VENT PIPE TO PORTABLE TRAILER AND CONNECT TO TRAILER VENT SYSTEM OR RUN NEW VENT PIPE UP SIDE OF TRAILER AND TERMINATE 6" MINIMUM ABOVE ROOF LINE IN CONFORMANCE WITH CURRENT PLUMBING CODE. SLOPE AT 1% MINIMUM UPHILL TO TRAILER CONNECTION TO PROVIDE POSITIVE AIR FLOW TO VENT.
2. CONTRACTOR SHALL FURNISH AND INSTALL THE PUMP SYSTEM INCLUDING RAILS, FLOAT SWITCHES AND CONTROL PANEL IN CONFORMANCE WITH THE MANUFACTURERS RECOMMENDATIONS.
3. SECURE FORCEMAIN PIPE TO MH WITH 316 SS PIPE STRAPS. SECURE PIPE STRAPS TO MANHOLE WALL WITH 5/8"ø 316 SS EXPANSION BOLTS OR EMBED STRAPS INTO MH WALL 2" WITH GROUT.
4. UTILITY STRUCTURE AND LID SHALL BE CONTRACTOR DESIGNED IN CONFORMANCE WITH THE UNDERGROUND UTILITY STRUCTURES DESIGN LOADING CRITERIA NOTES AND THE TAYLOR "BIG RED" THDC-976 CONTAINER HANDLER INFORMATION ON SHEET G1.3.

EQUIPMENT LIST

1	3" PVCxHDPE TRANSITION FITTING	
2	NOT USED	
3	3" PVC UNION	
4	3"x0.075", 316 SS FLAT BAR PIPE STRAP	SEE NOTE 3
5	3" PVC CHECK VALVE WITH DIAPHRAM	
6	3"X90 SCH 80 PVC, EL, TYP	
7	PUMP RAIL SYSTEM MODEL NO. GR20 OR EQUAL AS RECOMMENDED BY PUMP MANUFACTURER	
8	3" SCH 80 PVC SSFM	SEE NOTE 2
9	LIBERTY PUMP SUBMERSIBLE, EXPLOSION PROOF, SEWAGE GRINDER PUMP MODEL NO. XLSG202M OR APPROVED EQUAL MOTOR 2HP, VOLTAGE 230, PHASE 1 OPERATING POINT APPROX 46 GPM AT 56' OF TOTAL DYNAMIC HEAD CAP KIT: K001641 AND SIMPLEX PANEL: ISS24HS1=3-5.	
10	QUICK DISCONNECT ADAPTOR	
11	1-1/4" TO 3" REDUCER, SCH 80 PVC	
12	2'x3' HINGED DUCTILE IRON ACCESS HATCH, AS MANUFACTURED BY NEENAH FOUNDRY, MODEL NO. R-3498-J3S OR EQUAL	SEE NOTE 4

IF SHEET IS LESS THAN 22x34 REDUCE SCALE ACCORDINGLY

Port of EVERETT
P.O. BOX 538
EVERETT, WA 98206
(425) 259-3164

kpff
1601 5th Avenue, Suite 1300
Seattle, Washington 98101
(206) 382-0600 Fax (206) 382-0500
PROJECT NO. 1600120

NO.	DATE	BY	REVISION
4	07/05/2023	NW	AS-BUILT
3	12/02/2021	NW	2-INCH TO 9-INCH PVMT
2	06/21/2021	NW	ISSUED FOR BID
1	05/07/2021	NW	FOR CITY REVIEW

RECORD CONDITIONS ILLUSTRATED IN THESE PLANS REFLECT INFORMATION PROVIDED BY THE CONTRACTOR. RECORD CONDITIONS WERE NOT VERIFIED BY ENGINEER.

PROJECT ENGINEER: N. WATSON	SCALE: AS SHOWN
DESIGNED BY: J. BECKER	DATE: 05/07/2021
DRAWN BY: K. EDWARDS, D. YU	CHECKED BY: N. WATSON
APPROVED BY:	

PORT OF EVERETT

NORTON TERMINAL DEVELOPMENT & MTCA 3RD INTERIM ACTION SEWER DETAILS (2 OF 2)

DWG. NO. **C5.22**
CIP NO. 1-8-900-05
PROJECT NO. MT-NT-2021-02.2
SHEET NO. 79 OF 150

AS-BUILTS

SEWER STRUCTURE SCHEDULE

NORTHING & EASTING COORDINATES ARE TAKEN
AT THE CENTER OF EACH STRUCTURE

ID	NORTHING	EASTING
NT-SSFM-CO-V1	361527.24	1301487.70
NT-SSFM-CO-V2	361622.55	1301486.52
NT-SSFM-CO-V3	361722.49	1301490.00
NT-SSFM-CO-V4	361822.43	1301493.48
NT-SSFM-CO-V5	361922.37	1301496.96
NT-SSFM-CO-V6	362022.31	1301500.44
NT-SSFM-CO-V7	362122.25	1301503.92
NT-SSFM-CO-V8	362222.19	1301507.40
NT-SSFM-CO-V9	362322.13	1301510.88
NT-SSFM-CO-V10	362422.07	1301514.36
NT-SSFM-CO-V11	362522.00	1301517.84
NT-SSFM-CO-V12	362622.01	1301521.32
NT-SSFM-CO-V13	362721.95	1301524.80
NT-SSFM-CO-V14	362821.89	1301528.28
NT-SSFM-CO-V15	362870.47	1301458.98
NT-SSFM-CO-V16	362921.83	1301531.76
NT-SSFM-CO-V17	363021.77	1301535.23
NT-SSFM-CO-V18	363121.71	1301538.80
NT-SSFM-CV-GV-V19	363186.65	1301547.82
NT-SSFM-CV-GV-V20	363221.65	1301542.19
NT-SSCO-01	1301555.39	363202.25
NT-SSCO-02	1301608.14	363186.57
NT-SSCO-03	1301530.27	361431.48
NT-SSLS-01	1301554.92	363186.31

NOTE:

NORTHINGS AND EASTINGS OF STRUCTURES ARE BASED OFF OF CONSTRUCTION SURVEY AS-BUILTS PROVIDED BY THE CONTRACTOR.

IF SHEET IS LESS THAN 22x34
REDUCE SCALE ACCORDINGLY

Port of EVERETT
P.O. BOX 538
EVERETT, WA 98206
(425) 259-3164

kpff
1601 5th Avenue, Suite 1300
Seattle, Washington 98101
(206) 382-0600 Fax (206) 382-0500
PROJECT NO. 1600120

NO.	DATE	BY	REVISION
1	07/05/2023	NW	AS-BUILT
0	06/21/2021	NW	ISSUED FOR BID

NO.	DATE	BY	REVISION

RECORD CONDITIONS ILLUSTRATED IN THESE PLANS REFLECT INFORMATION PROVIDED BY THE CONTRACTOR. RECORD CONDITIONS WERE NOT VERIFIED BY ENGINEER.

PROJECT ENGINEER: N. WATSON	SCALE: AS SHOWN
DESIGNED BY: J. BECKER	DATE: 06/21/2021
DRAWN BY: K. EDWARDS, D. YU	CHECKED BY: N. WATSON
APPROVED BY:	

PORT OF EVERETT

NORTON TERMINAL DEVELOPMENT
& MTCA 3RD INTERIM ACTION
SEWER STRUCTURE SCHEDULE

DWG. NO. **C5.23**

CIP NO. 1-8-900-05

PROJECT NO. MT-NT-2021-02.2

SHEET NO. 80 OF 150

AS-BUILTS

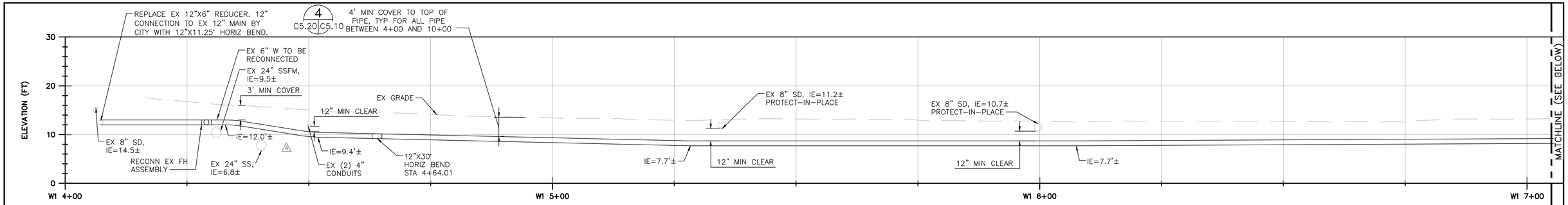

1 C5.1 C5.30 ALIGNMENT W1 – WATER PROFILE

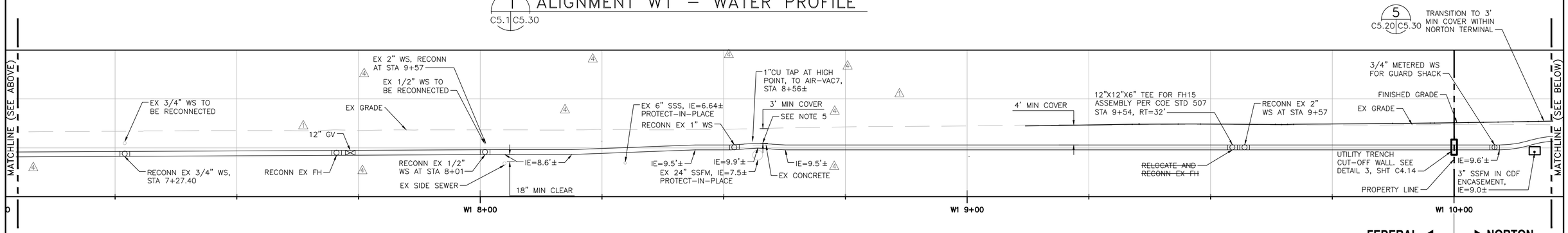

1 C5.1 C5.30 ALIGNMENT W1 – WATER PROFILE (CONTINUED)

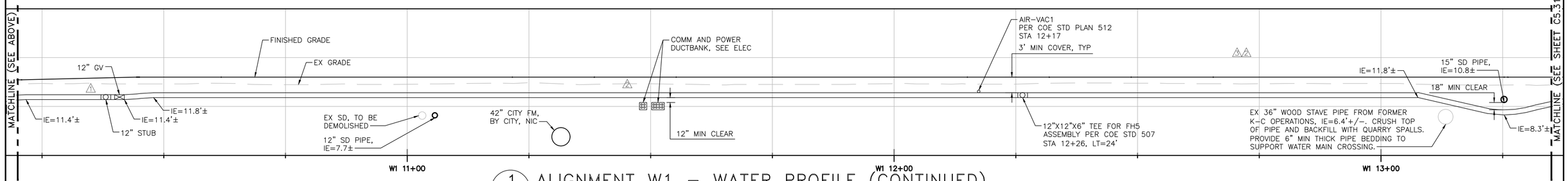

1 C5.1 C5.30 ALIGNMENT W1 – WATER PROFILE (CONTINUED)

GENERAL NOTES

1. EXISTING FOUNDATION STRUCTURES SHOWN IN PROFILE ARE APPROXIMATE AND SHOWN FOR REFERENCE ONLY. NOT ALL FOUNDATION STRUCTURES/DEBRIS ARE SHOWN. CONTRACTOR SHALL CONFIRM EXISTING CONDITIONS PRIOR TO START OF WORK. IF CONDITIONS DIFFER FROM THOSE SHOWN IN PROFILE, THE CONTRACTOR SHALL NOTIFY THE ENGINEER AND NOT BEGIN CONSTRUCTION UNTIL CHANGED CONDITIONS HAVE BEEN EVALUATED.
2. EXISTING UTILITY LOCATIONS AND DEPTHS ARE SHOWN APPROXIMATE. CONTRACTOR SHALL POTHOLE PRIOR TO START OF WORK. PROTECT-IN-PLACE ALL EXISTING UTILITIES SHOWN IN PROFILE, UNLESS NOTED OTHERWISE.
3. THE WATER MAIN DESIGN ASSUMES THAT THE EXISTING WATERMAIN WAS CONSTRUCTED WITH 5-FEET OF COVER. THE CONTRACTOR SHALL POTHOLE TO CONFIRM THE EXISTING LOCATION AND DEPTH AT BOTH ENDS PRIOR TO ORDER OF MATERIALS AND START OF WORK, INCLUDING THE CITY WORK TO CONNECT TO THE EXISTING MAIN. IF CONDITIONS DIFFER FROM THOSE SHOWN ON THE PLANS, THE CONTRACTOR SHALL NOTIFY THE ENGINEER AND SHALL NOT BEGIN CONSTRUCTION UNTIL THE CHANGED CONDITIONS HAVE BEEN EVALUATED. △4
4. POTHOLE INFORMATION PROVIDED VIA POINT FILE AND HANDWRITTEN NOTES BY STRIDER ON 02/22/22.
5. CONTRACTOR TO EXCAVATE AND VERIFY EXTENTS OF EX CONCRETE FOUND AT CROSSING AND PERFORM THE FOLLOWING:

   IF EX CONCRETE IS FOUND TO BE EX CDF TRENCH CUTOFF WALL PER CITY AS-BUILT DRAWINGS "LIFT STATION 2 FORCE MAIN EXTENSION WO#3409", CONTRACTOR TO CHIP AWAY CDF AND ROUTE WATER LINE DIRECTLY THROUGH CUTOFF WALL WHILE MAINTAINING MINIMUM OF 3' COVER OVER PIPE AT THIS LOCATION.

   ALTERNATIVELY, CONTRACTOR WILL ROUTE WATER ALIGNMENT AROUND OBSTRUCTION AND MAINTAIN A MINIMUM OF 3' COVER OVER PIPE AT THIS LOCATION. △4

CALL 48 HOURS BEFORE YOU DIG DIAL 811

10' 0 10' 20'
5' 15'
SCALE: 1"=10'

VERT DATUM: NAVD 88
CONV TO MLLW = NAVD88+2.03
HORZ DATUM: NAD 83/91

IF SHEET IS LESS THAN 22x34 REDUCE SCALE ACCORDINGLY

Port of EVERETT
P.O. BOX 538
EVERETT, WA 98206
(425) 259-3164

kpff
1601 5th Avenue, Suite 1300
Seattle, Washington 98101
(206) 382-0600 Fax (206) 382-0500
PROJECT NO. 1600120

NO.	DATE	BY	REVISION
△4	02/25/2022	NW	REVISED PER CONTRACTOR POTHOLE FINDINGS
△3	02/09/2022	NW	MOVE SDMH6 & SDMH23 TO AVOID WOOD STAVE PIPE
△2	12/08/2021	NW	FOOO2 WATERMAIN AND GV UPDATES
△1	10/15/2021	NW	REVISED PER 10-13-2021 CITY WATER PRE-CONSTRUCTION MEETING AND WATER UPGRADES TO SUPPORT WAREHOUSE
△1	06/21/2021	NW	ISSUED FOR BID
△5	07/05/2023	NW	AS-BUILT

RECORD CONDITIONS ILLUSTRATED IN THESE PLANS REFLECT INFORMATION PROVIDED BY THE CONTRACTOR. RECORD CONDITIONS WERE NOT VERIFIED BY ENGINEER.

PROJECT ENGINEER: N. WATSON	SCALE: 1" = 10'
DESIGNED BY: J. BECKER	DATE: 06/21/2021
DRAWN BY: K. EDWARDS, D. YU	CHECKED BY: N. WATSON
APPROVED BY:	

PORT OF EVERETT

NORTON TERMINAL DEVELOPMENT & MTCA 3RD INTERIM ACTION WATER PROFILES (SHEET 1 OF 9)

DWG. NO. **C5.30**
CIP NO. 1-8-900-05
PROJECT NO. MT-NT-2021-02.2
SHEET NO. 81 OF 150

AS-BUILTS

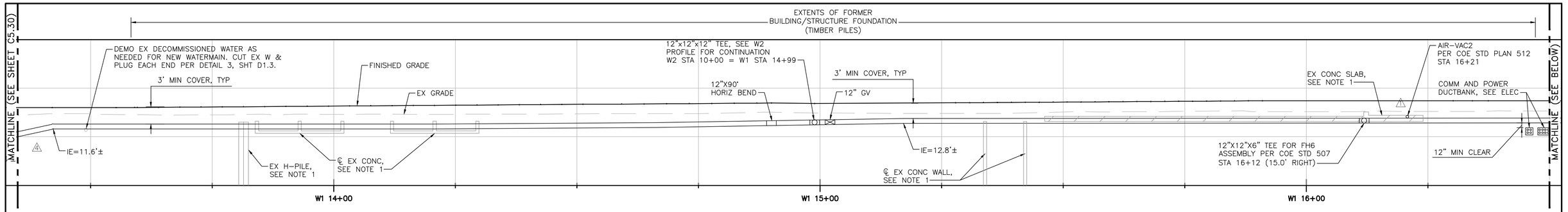

1 ALIGNMENT W1 – WATER PROFILE (CONTINUED)
C5.1 C5.31

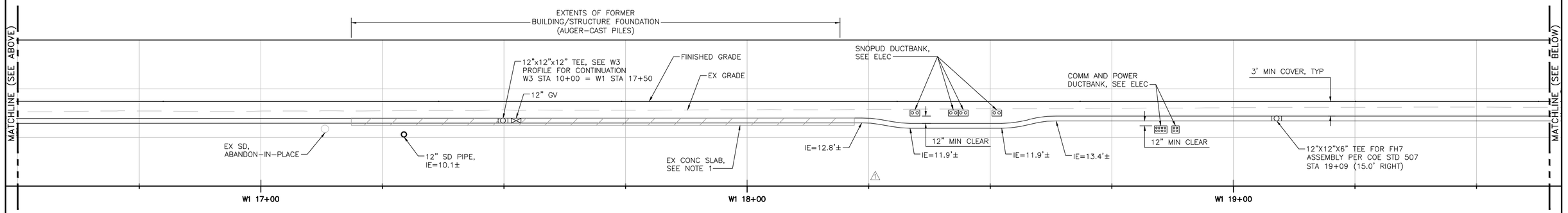

1 ALIGNMENT W1 – WATER PROFILE (CONTINUED)
C5.1 C5.31

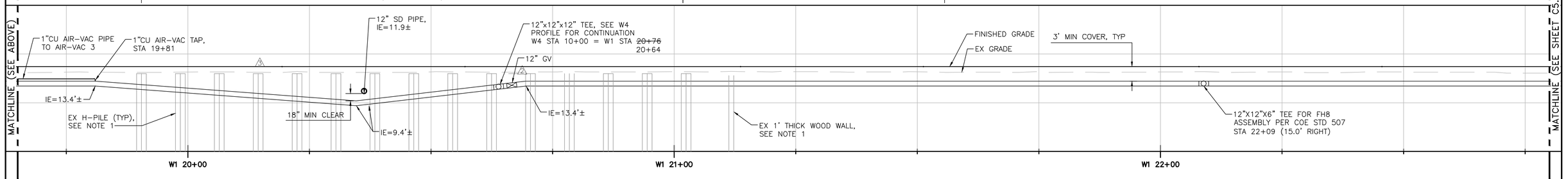

1 ALIGNMENT W1 – WATER PROFILE (CONTINUED)
C5.1 C5.31

GENERAL NOTES

1. EXISTING FOUNDATION STRUCTURES SHOWN IN PROFILE ARE APPROXIMATE AND SHOWN FOR REFERENCE ONLY. NOT ALL FOUNDATION STRUCTURES/DEBRIS ARE SHOWN. CONTRACTOR SHALL CONFIRM EXISTING CONDITIONS PRIOR TO START OF WORK. IF CONDITIONS DIFFER FROM THOSE SHOWN IN PROFILE, THE CONTRACTOR SHALL NOTIFY THE ENGINEER AND NOT BEGIN CONSTRUCTION UNTIL CHANGED CONDITIONS HAVE BEEN EVALUATED.
2. EXISTING UTILITY LOCATIONS AND DEPTHS ARE SHOWN APPROXIMATE. CONTRACTOR SHALL POTHOLE PRIOR TO START OF WORK. PROTECT-IN-PLACE ALL EXISTING UTILITIES SHOWN IN PROFILE, UNLESS NOTED OTHERWISE.

CALL 48 HOURS BEFORE YOU DIG DIAL 811

10' 0 10' 20'
5' 15'
SCALE: 1"=10'

VERT DATUM: NAVD 88
CONV TO MLLW = NAVD88+2.03
HORZ DATUM: NAD 83/91

IF SHEET IS LESS THAN 22x34 REDUCE SCALE ACCORDINGLY

Port of EVERETT
P.O. BOX 538
EVERETT, WA 98206
(425) 259-3164

kpff
1601 5th Avenue, Suite 1300
Seattle, Washington 98101
(206) 382-0600 Fax (206) 382-0500
PROJECT NO. 1600120

NO.	DATE	BY	REVISION
4	02/09/2022	NW	MOVE SDMH6 & SDMH23 TO AVOID WOOD STAVE PIPE
3	12/08/2021	NW	REVISED PER STORM DRAIN CHANGES
2	12/08/2021	NW	FO001 REQUEST TO MOVE WTR LINE W4
1	10/15/2021	NW	REVISED PER WATER UPGRADES TO SUPPORT WAREHOUSE AND STORM DRAIN CHANGES
A	06/21/2021	NW	ISSUED FOR BID
A	07/05/2023	NW	AS-BUILT

RECORD CONDITIONS ILLUSTRATED IN THESE PLANS REFLECT INFORMATION PROVIDED BY THE CONTRACTOR. RECORD CONDITIONS WERE NOT VERIFIED BY ENGINEER.

PROJECT ENGINEER: N. WATSON	SCALE: 1" = 10'
DESIGNED BY: J. BECKER	DATE: 06/21/2021
DRAWN BY: K. EDWARDS, D. YU	CHECKED BY: N. WATSON
APPROVED BY:	

PORT OF EVERETT

NORTON TERMINAL DEVELOPMENT & MTCA 3RD INTERIM ACTION
WATER PROFILES
(SHEET 2 OF 9)

DWG. NO. **C5.31**
CIP NO. 1-8-900-05
PROJECT NO. MT-NT-2021-02.2
SHEET NO. 82 OF 150

AS-BUILTS

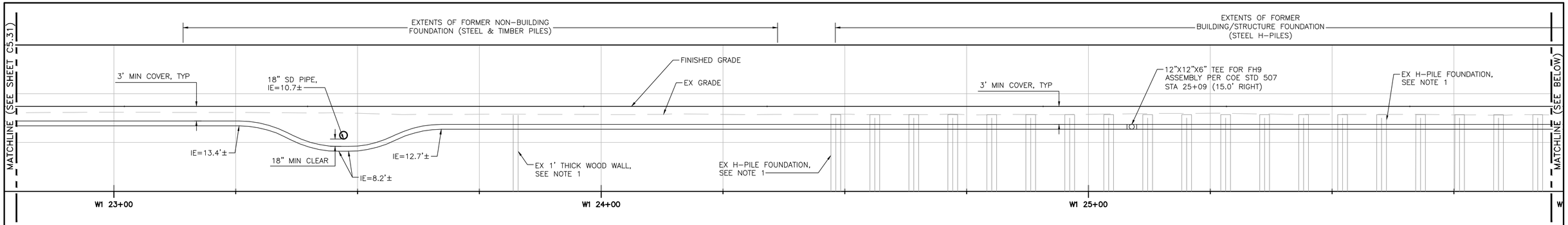

1 ALIGNMENT W1 – WATER PROFILE (CONTINUED)

C5.1 C5.32

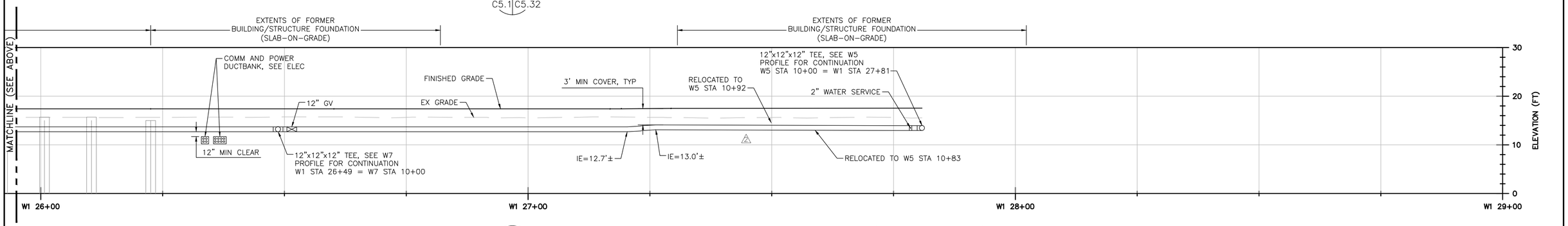

1 ALIGNMENT W1 – WATER PROFILE (CONTINUED)

C5.1 C5.32

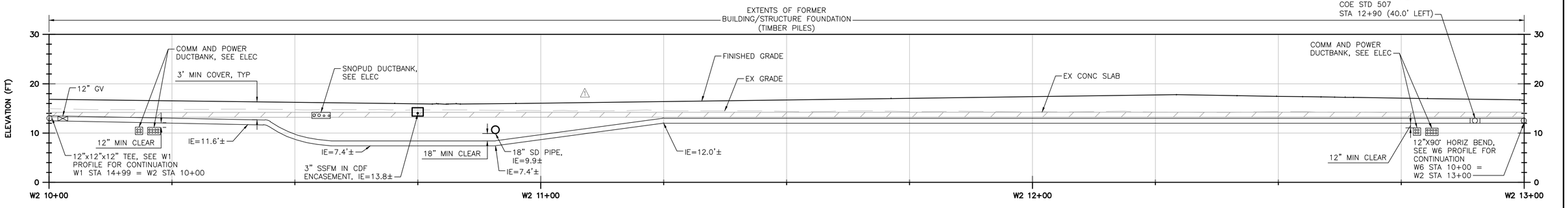

2 ALIGNMENT W2– WATER PROFILE

C5.1 C5.32

GENERAL NOTES

1. EXISTING FOUNDATION STRUCTURES SHOWN IN PROFILE ARE APPROXIMATE AND SHOWN FOR REFERENCE ONLY. NOT ALL FOUNDATION STRUCTURES/DEBRIS ARE SHOWN. CONTRACTOR SHALL CONFIRM EXISTING CONDITIONS PRIOR TO START OF WORK. IF CONDITIONS DIFFER FROM THOSE SHOWN IN PROFILE, THE CONTRACTOR SHALL NOTIFY THE ENGINEER AND NOT BEGIN CONSTRUCTION UNTIL CHANGED CONDITIONS HAVE BEEN EVALUATED.
2. EXISTING UTILITY LOCATIONS AND DEPTHS ARE SHOWN APPROXIMATE. CONTRACTOR SHALL POTHOLE PRIOR TO START OF WORK. PROTECT-IN-PLACE ALL EXISTING UTILITIES SHOWN IN PROFILE, UNLESS NOTED OTHERWISE.

CALL 48 HOURS BEFORE YOU DIG DIAL 811

10' 0 10' 20'
5' 15'
SCALE: 1"=10'

VERT DATUM: NAVD 88
CONV TO MLLW = NAVD88+2.03
HORZ DATUM: NAD 83/91

IF SHEET IS LESS THAN 22x34 REDUCE SCALE ACCORDINGLY

Port of EVERETT
P.O. BOX 538
EVERETT, WA 98206
(425) 259-3164

kpff
1601 5th Avenue, Suite 1300
Seattle, Washington 98101
(206) 382-0600 Fax (206) 382-0500
PROJECT NO. 1600120

NO.	DATE	BY	REVISION
3	07/05/2023	NW	AS-BUILT
2	04/08/2022	NW	MARITIME TENANT SITE DEVELOPMENT
1	10/15/2021	NW	REVISED PER STORM DRAIN CHANGES
0	06/21/2021	NW	ISSUED FOR BID

RECORD CONDITIONS ILLUSTRATED IN THESE PLANS REFLECT INFORMATION PROVIDED BY THE CONTRACTOR. RECORD CONDITIONS WERE NOT VERIFIED BY ENGINEER.

PROJECT ENGINEER: N. WATSON	SCALE: 1" = 10'
DESIGNED BY: J. BECKER	DATE: 06/21/2021
DRAWN BY: K. EDWARDS, D. YU	CHECKED BY: N. WATSON
APPROVED BY:	

PORT OF EVERETT

NORTON TERMINAL DEVELOPMENT & MTCA 3RD INTERIM ACTION WATER PROFILES (SHEET 3 OF 9)

DWG. NO. **C5.32**
CIP NO. 1-8-900-05
PROJECT NO. MT-NT-2021-02.2
SHEET NO. 83 OF 150

AS-BUILTS

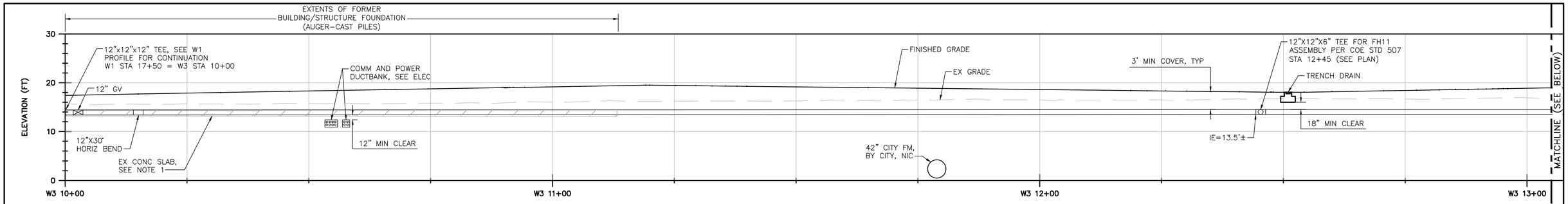

3 ALIGNMENT W3 – WATER PROFILE
C5.1 C5.33

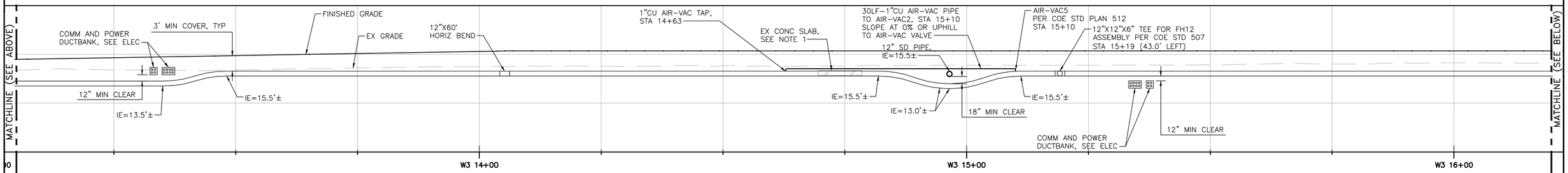

3 ALIGNMENT W3 – WATER PROFILE (CONTINUED)
C5.1 C5.33

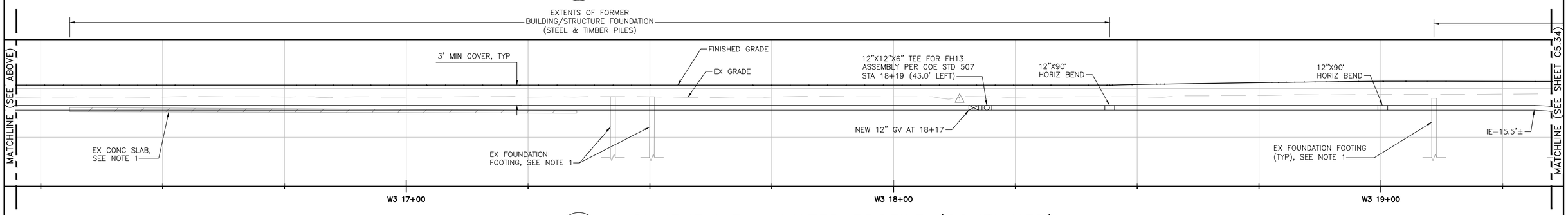

3 ALIGNMENT W3 – WATER PROFILE (CONTINUED)
C5.1 C5.33

GENERAL NOTES

1. EXISTING FOUNDATION STRUCTURES SHOWN IN PROFILE ARE APPROXIMATE AND SHOWN FOR REFERENCE ONLY. NOT ALL FOUNDATION STRUCTURES/DEBRIS ARE SHOWN. CONTRACTOR SHALL CONFIRM EXISTING CONDITIONS PRIOR TO START OF WORK. IF CONDITIONS DIFFER FROM THOSE SHOWN IN PROFILE, THE CONTRACTOR SHALL NOTIFY THE ENGINEER AND NOT BEGIN CONSTRUCTION UNTIL CHANGED CONDITIONS HAVE BEEN EVALUATED.
2. EXISTING UTILITY LOCATIONS AND DEPTHS ARE SHOWN APPROXIMATE. CONTRACTOR SHALL POTHOLE PRIOR TO START OF WORK. PROTECT-IN-PLACE ALL EXISTING UTILITIES SHOWN IN PROFILE, UNLESS NOTED OTHERWISE.

CALL 48 HOURS
BEFORE YOU DIG
DIAL 811

10' 0 10' 20'
5' 15'
SCALE: 1"=10'

VERT DATUM: NAVD 88
CONV TO MLLW = NAVD88+2.03
HORZ DATUM: NAD 83/91

IF SHEET IS LESS THAN 22x34
REDUCE SCALE ACCORDINGLY

Port of EVERETT
P.O. BOX 538
EVERETT, WA 98206
(425) 259-3164

kpff
1601 5th Avenue, Suite 1300
Seattle, Washington 98101
(206) 382-0600 Fax (206) 382-0500
PROJECT NO. 1600120

NO.	DATE	BY	REVISION
2	07/05/2023	NW	AS-BUILT
1	12/08/2021	NW	F0002 WATERMAIN AND GV UPDATES
0	06/21/2021	NW	ISSUED FOR BID

RECORD CONDITIONS ILLUSTRATED IN THESE PLANS REFLECT INFORMATION PROVIDED BY THE CONTRACTOR. RECORD CONDITIONS WERE NOT VERIFIED BY ENGINEER.

PROJECT ENGINEER: N. WATSON	SCALE: 1" = 10'
DESIGNED BY: J. BECKER	DATE: 06/21/2021
DRAWN BY: K. EDWARDS, D. YU	CHECKED BY: N. WATSON
APPROVED BY:	

PORT OF EVERETT

NORTON TERMINAL DEVELOPMENT
& MTCA 3RD INTERIM ACTION
WATER PROFILES
(SHEET 4 OF 9)

DWG. NO. **C5.33**
CIP NO. 1-8-900-05
PROJECT NO. MT-NT-2021-02.2
SHEET NO. 84 OF 150

AS-BUILTS

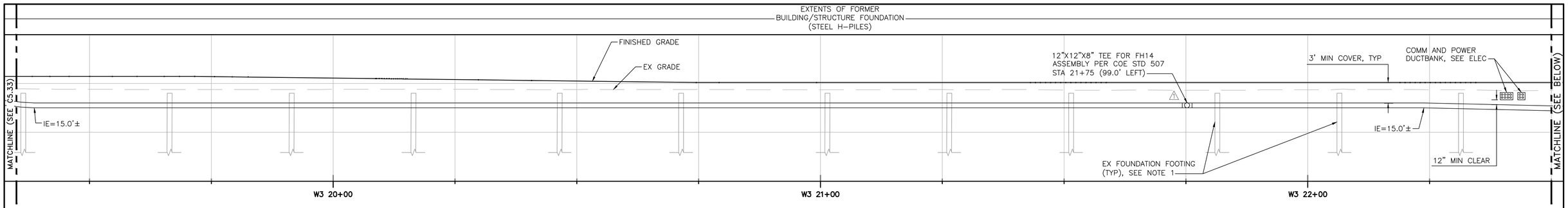

3 ALIGNMENT W3 – WATER PROFILE (CONTINUED)
C5.1 C5.34

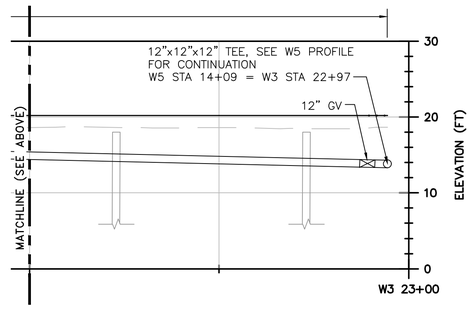

3 ALIGNMENT W3 – WATER PROFILE (CONTINUED)
C5.1 C5.34

GENERAL NOTES

1. EXISTING FOUNDATION STRUCTURES SHOWN IN PROFILE ARE APPROXIMATE. CONTRACTOR SHALL CONFIRM EXISTING CONDITIONS PRIOR TO START OF WORK. IF CONDITIONS DIFFER FROM THOSE SHOWN IN PROFILE, THE CONTRACTOR SHALL NOTIFY THE ENGINEER AND NOT BEGIN CONSTRUCTION UNTIL CHANGED CONDITIONS HAVE BEEN EVALUATED.
2. EXISTING UTILITY LOCATIONS AND DEPTHS ARE SHOWN APPROXIMATE. CONTRACTOR SHALL POTHOLE PRIOR TO START OF WORK. PROTECT-IN-PLACE ALL EXISTING UTILITIES SHOWN IN PROFILE, UNLESS NOTED OTHERWISE.

10' 0 10' 20'
5' 15'
SCALE: 1"=10'

CALL 48 HOURS BEFORE YOU DIG DIAL 811

VERT DATUM: NAVD 88
CONV TO MLLW = NAVD88+2.03
HORZ DATUM: NAD 83/91

IF SHEET IS LESS THAN 22x34 REDUCE SCALE ACCORDINGLY

Port of EVERETT
P.O. BOX 538
EVERETT, WA 98206
(425) 259-3164

kpff
1601 5th Avenue, Suite 1300
Seattle, Washington 98101
(206) 382-0600 Fax (206) 382-0500
PROJECT NO. 1600120

NO.	DATE	BY	REVISION
2	07/05/2023	NW	AS-BUILT
1	12/08/2021	NW	F0002 WATERMAIN AND GV UPDATES
0	06/21/2021	NW	ISSUED FOR BID

RECORD CONDITIONS ILLUSTRATED IN THESE PLANS REFLECT INFORMATION PROVIDED BY THE CONTRACTOR. RECORD CONDITIONS WERE NOT VERIFIED BY ENGINEER.

PROJECT ENGINEER: N. WATSON	SCALE: 1" = 10'
DESIGNED BY: J. BECKER	DATE: 06/21/2021
DRAWN BY: K. EDWARDS, D. YU	CHECKED BY: N. WATSON
APPROVED BY:	

PORT OF EVERETT

NORTON TERMINAL DEVELOPMENT
& MTCA 3RD INTERIM ACTION
WATER PROFILES
(SHEET 5 OF 9)

DWG. NO. **C5.34**
CIP NO. 1-8-900-05
PROJECT NO. MT-NT-2021-02.2
SHEET NO. 85 OF 150

AS-BUILTS

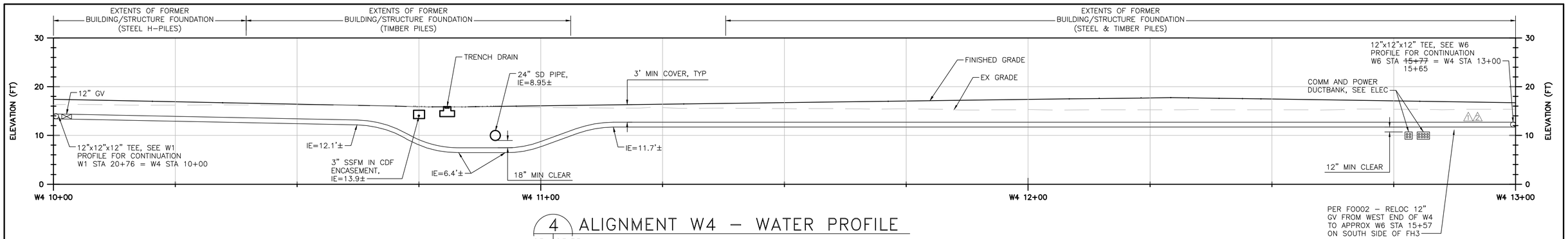

4 ALIGNMENT W4 – WATER PROFILE

C5.1 C5.35

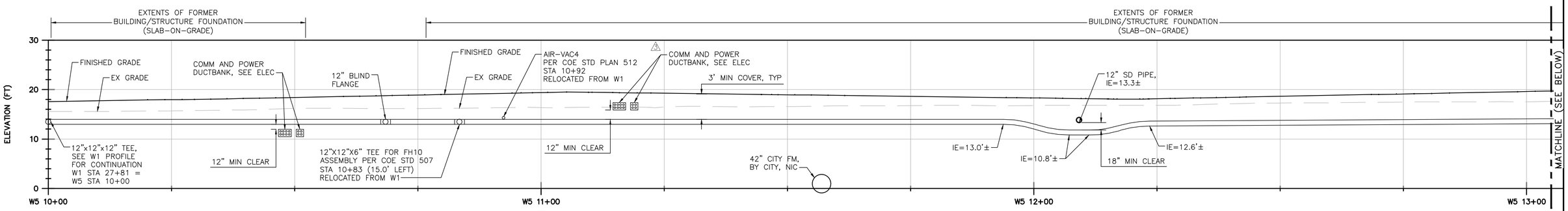

5 ALIGNMENT W5 – WATER PROFILE

C5.1 C5.35

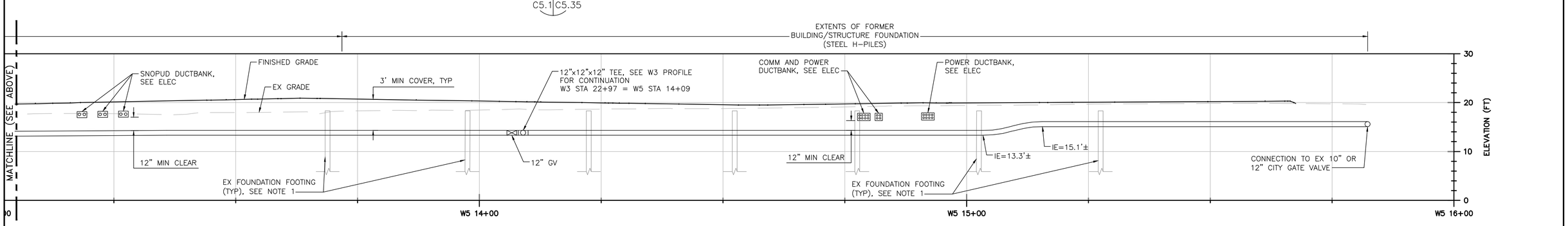

5 ALIGNMENT W5 – WATER PROFILE (CONTINUED)

C5.1 C5.35

GENERAL NOTES

1. EXISTING FOUNDATION STRUCTURES SHOWN IN PROFILE ARE APPROXIMATE AND SHOWN FOR REFERENCE ONLY. NOT ALL FOUNDATION STRUCTURES/DEBRIS ARE SHOWN. CONTRACTOR SHALL CONFIRM EXISTING CONDITIONS PRIOR TO START OF WORK. IF CONDITIONS DIFFER FROM THOSE SHOWN IN PROFILE, THE CONTRACTOR SHALL NOTIFY THE ENGINEER AND NOT BEGIN CONSTRUCTION UNTIL CHANGED CONDITIONS HAVE BEEN EVALUATED.
2. EXISTING UTILITY LOCATIONS AND DEPTHS ARE SHOWN APPROXIMATE. CONTRACTOR SHALL POTHOLE PRIOR TO START OF WORK. PROTECT-IN-PLACE ALL EXISTING UTILITIES SHOWN IN PROFILE, UNLESS NOTED OTHERWISE.

CALL 48 HOURS BEFORE YOU DIG DIAL 811

10' 0 10' 20'
5' 15'
SCALE: 1"=10'

VERT DATUM: NAVD 88
CONV TO MLLW = NAVD88+2.03
HORZ DATUM: NAD 83/91

IF SHEET IS LESS THAN 22x34 REDUCE SCALE ACCORDINGLY

Port of EVERETT
P.O. BOX 538
EVERETT, WA 98206
(425) 259-3164

kpff
1601 5th Avenue, Suite 1300
Seattle, Washington 98101
(206) 382-0600 Fax (206) 382-0500
PROJECT NO. 1600120

NO.	DATE	BY	REVISION
4	07/05/2023	NW	AS-BUILT
3	04/08/2022	NW	MARITIME TENANT SITE DEVELOPMENT
2	12/08/2021	NW	F0002 WATERMAIN AND GV UPDATES
1	12/08/2021	NW	F0001 REQUEST TO MOVE WTR LINE W4
0	06/21/2021	NW	ISSUED FOR BID

RECORD CONDITIONS ILLUSTRATED IN THESE PLANS REFLECT INFORMATION PROVIDED BY THE CONTRACTOR. RECORD CONDITIONS WERE NOT VERIFIED BY ENGINEER.

PROJECT ENGINEER: N. WATSON	SCALE: 1" = 10'
DESIGNED BY: J. BECKER	DATE: 06/21/2021
DRAWN BY: K. EDWARDS, D. YU	CHECKED BY: N. WATSON
APPROVED BY:	

PORT OF EVERETT

NORTON TERMINAL DEVELOPMENT & MTCA 3RD INTERIM ACTION WATER PROFILES (SHEET 6 OF 9)

DWG. NO. **C5.35**
CIP NO. 1-8-900-05
PROJECT NO. MT-NT-2021-02.2
SHEET NO. 86 OF 150

AS-BUILTS

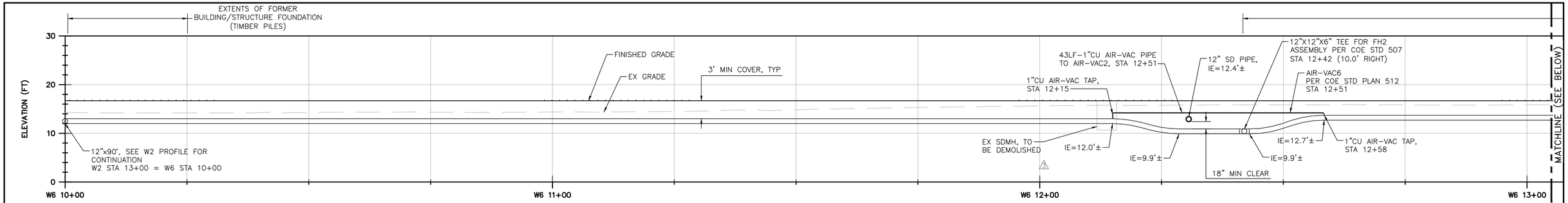

6 ALIGNMENT W6 – WATER PROFILE
C5.1|C5.36

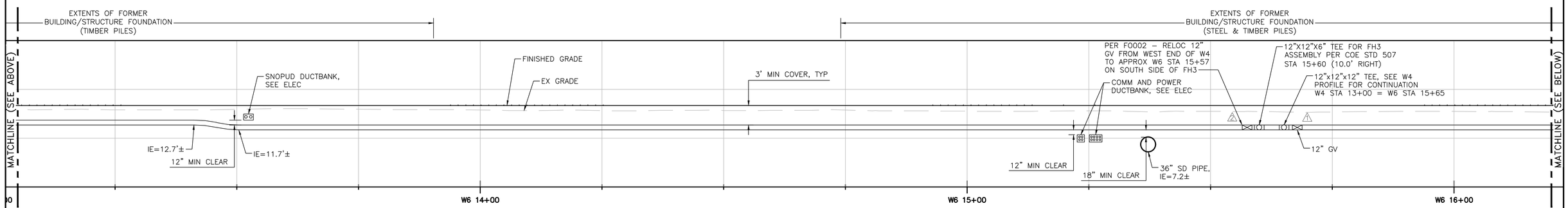

6 ALIGNMENT W6 – WATER PROFILE (CONTINUED)
C5.1|C5.36

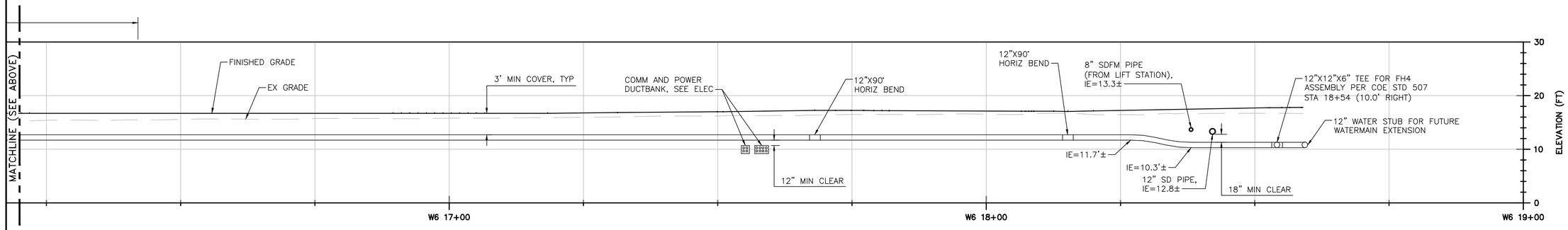

6 ALIGNMENT W6 – WATER PROFILE (CONTINUED)
C5.1|C5.36

GENERAL NOTES

1. EXISTING FOUNDATION STRUCTURES SHOWN IN PROFILE ARE APPROXIMATE AND SHOWN FOR REFERENCE ONLY. NOT ALL FOUNDATION STRUCTURES/DEBRIS ARE SHOWN. CONTRACTOR SHALL CONFIRM EXISTING CONDITIONS PRIOR TO START OF WORK. IF CONDITIONS DIFFER FROM THOSE SHOWN IN PROFILE, THE CONTRACTOR SHALL NOTIFY THE ENGINEER AND NOT BEGIN CONSTRUCTION UNTIL CHANGED CONDITIONS HAVE BEEN EVALUATED.
2. EXISTING UTILITY LOCATIONS AND DEPTHS ARE SHOWN APPROXIMATE. CONTRACTOR SHALL POTHOLE PRIOR TO START OF WORK. PROTECT-IN-PLACE ALL EXISTING UTILITIES SHOWN IN PROFILE, UNLESS NOTED OTHERWISE.

CALL 48 HOURS BEFORE YOU DIG DIAL 811

10' 0 10' 20'
5' 15'
SCALE: 1"=10'

VERT DATUM: NAVD 88
CONV TO MLLW = NAVD88+2.03
HORZ DATUM: NAD 83/91

IF SHEET IS LESS THAN 22x34 REDUCE SCALE ACCORDINGLY

Port of EVERETT
P.O. BOX 538
EVERETT, WA 98206
(425) 259-3164

kpff
1601 5th Avenue, Suite 1300
Seattle, Washington 98101
(206) 382-0600 Fax (206) 382-0500
PROJECT NO. 1600120

NO.	DATE	BY	REVISION
4	07/05/2023	NW	AS-BUILT
3	12/08/2021	NW	REVISED PER STORM DRAIN CHANGES
2	12/08/2021	NW	F0002 WATERMAIN AND GV UPDATES
1	12/08/2021	NW	F0001 REQUEST TO MOVE WTR LINE W4
0	06/21/2021	NW	ISSUED FOR BID

RECORD CONDITIONS ILLUSTRATED IN THESE PLANS REFLECT INFORMATION PROVIDED BY THE CONTRACTOR. RECORD CONDITIONS WERE NOT VERIFIED BY ENGINEER.

PROJECT ENGINEER: N. WATSON	SCALE: 1" = 10'
DESIGNED BY: J. BECKER	DATE: 06/21/2021
DRAWN BY: K. EDWARDS, D. YU	CHECKED BY: N. WATSON
APPROVED BY:	

PORT OF EVERETT

NORTON TERMINAL DEVELOPMENT & MTCA 3RD INTERIM ACTION WATER PROFILES (SHEET 7 OF 9)

DWG. NO. **C5.36**
CIP NO. 1-8-900-05
PROJECT NO. MT-NT-2021-02.2
SHEET NO. 87 OF 150

AS-BUILTS

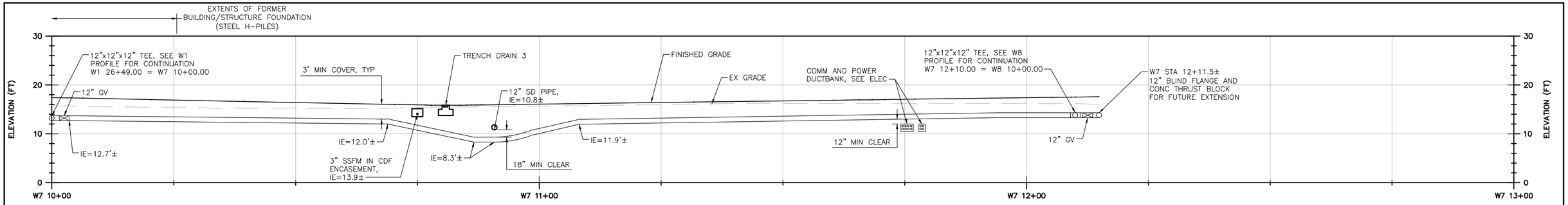

7 ALIGNMENT W7 – WATER PROFILE

C5.1 | C5.37

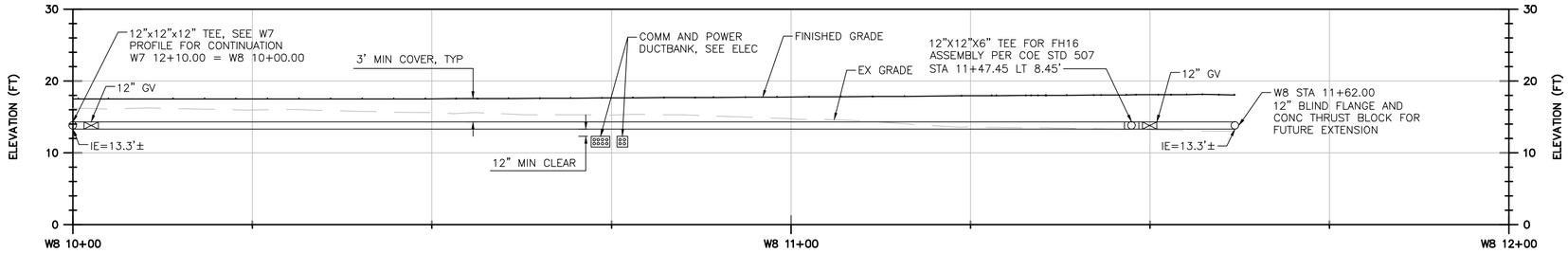

8 ALIGNMENT W8 – WATER PROFILE

C5.1 | C5.37

GENERAL NOTES

1. EXISTING FOUNDATION STRUCTURES SHOWN IN PROFILE ARE APPROXIMATE AND SHOWN FOR REFERENCE ONLY. NOT ALL FOUNDATION STRUCTURES/DEBRIS ARE SHOWN. CONTRACTOR SHALL CONFIRM EXISTING CONDITIONS PRIOR TO START OF WORK. IF CONDITIONS DIFFER FROM THOSE SHOWN IN PROFILE, THE CONTRACTOR SHALL NOTIFY THE ENGINEER AND NOT BEGIN CONSTRUCTION UNTIL CHANGED CONDITIONS HAVE BEEN EVALUATED.
2. EXISTING UTILITY LOCATIONS AND DEPTHS ARE SHOWN APPROXIMATE. CONTRACTOR SHALL POTHOLE PRIOR TO START OF WORK. PROTECT-IN-PLACE ALL EXISTING UTILITIES SHOWN IN PROFILE, UNLESS NOTED OTHERWISE.

10' 0 10' 20'
5' 15'
SCALE: 1"=10'

CALL 48 HOURS
BEFORE YOU DIG
DIAL 811

VERT DATUM: NAVD 88
CONV TO MLLW = NAVD88+2.03
HORZ DATUM: NAD 83/91

IF SHEET IS LESS THAN 22x34
REDUCE SCALE ACCORDINGLY

Port of EVERETT
P.O. BOX 538
EVERETT, WA 98206
(425) 259-3164

kpff
1601 5th Avenue, Suite 1300
Seattle, Washington 98101
(206) 382-0600 Fax (206) 382-0500
PROJECT NO. 1600120

NO.	DATE	BY	REVISION
1	07/05/2023	NW	AS-BUILT
2	12/29/2021	NW	2-INCH TO 9-INCH PVMT (NEW SHEET, ADDED W7 & W8)

RECORD CONDITIONS ILLUSTRATED IN THESE PLANS REFLECT INFORMATION PROVIDED BY THE CONTRACTOR. RECORD CONDITIONS WERE NOT VERIFIED BY ENGINEER.

PROJECT ENGINEER: N. WATSON	SCALE: 1" = 10'
DESIGNED BY: J. BECKER	DATE: 06/21/2021
DRAWN BY: K. EDWARDS, D. YU	CHECKED BY: N. WATSON
APPROVED BY:	

PORT OF EVERETT

NORTON TERMINAL DEVELOPMENT
& MTCA 3RD INTERIM ACTION
WATER PROFILES
(SHEET 8 OF 9)

DWG. NO. **C5.37**
CIP NO. 1-8-900-05
PROJECT NO. MT-NT-2021-02.2
SHEET NO. – OF –

AS-BUILTS

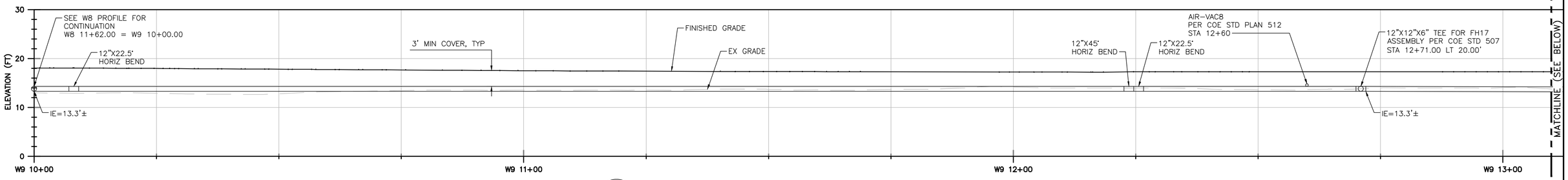

9 ALIGNMENT W9 – WATER PROFILE
C5.1 C5.38

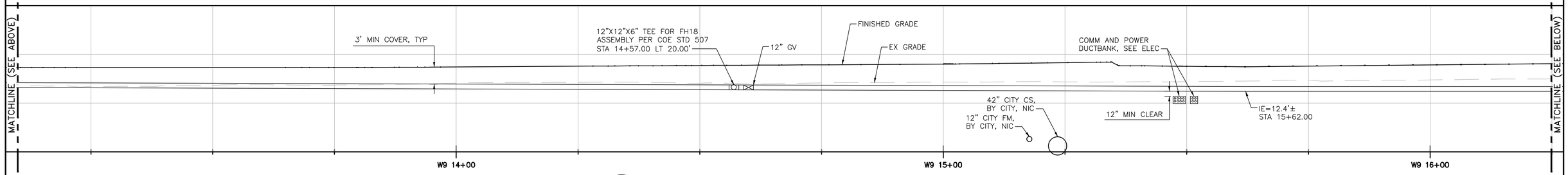

9 ALIGNMENT W9 – WATER PROFILE
C5.1 C5.38

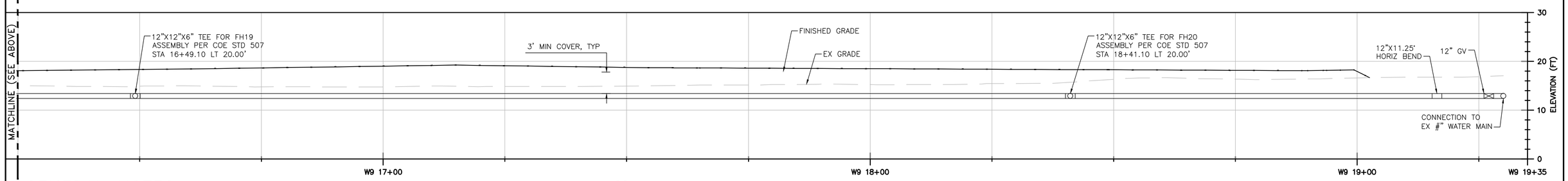

9 ALIGNMENT W9 – WATER PROFILE
C5.1 C5.38

GENERAL NOTES

1. EXISTING FOUNDATION STRUCTURES SHOWN IN PROFILE ARE APPROXIMATE AND SHOWN FOR REFERENCE ONLY. NOT ALL FOUNDATION STRUCTURES/DEBRIS ARE SHOWN. CONTRACTOR SHALL CONFIRM EXISTING CONDITIONS PRIOR TO START OF WORK. IF CONDITIONS DIFFER FROM THOSE SHOWN IN PROFILE, THE CONTRACTOR SHALL NOTIFY THE ENGINEER AND NOT BEGIN CONSTRUCTION UNTIL CHANGED CONDITIONS HAVE BEEN EVALUATED.
2. EXISTING UTILITY LOCATIONS AND DEPTHS ARE SHOWN APPROXIMATE. CONTRACTOR SHALL POTHOLE PRIOR TO START OF WORK. PROTECT-IN-PLACE ALL EXISTING UTILITIES SHOWN IN PROFILE, UNLESS NOTED OTHERWISE.

CALL 48 HOURS BEFORE YOU DIG DIAL 811

10' 0 10' 20'
5' 15'
SCALE: 1"=10'

VERT DATUM: NAVD 88
CONV TO MLLW = NAVD88+2.03
HORZ DATUM: NAD 83/91

IF SHEET IS LESS THAN 22x34 REDUCE SCALE ACCORDINGLY

Port of EVERETT
P.O. BOX 538
EVERETT, WA 98206
(425) 259-3164

kpff
1601 5th Avenue, Suite 1300
Seattle, Washington 98101
(206) 382-0600 Fax (206) 382-0500
PROJECT NO. 1600120

NO.	DATE	BY	REVISION
1	07/05/2023	NW	AS-BUILT
2	04/08/2022	NW	MARITIME TENANT SITE DEVELOPMENT (NEW SHEET, ADDED W9)

RECORD CONDITIONS ILLUSTRATED IN THESE PLANS REFLECT INFORMATION PROVIDED BY THE CONTRACTOR. RECORD CONDITIONS WERE NOT VERIFIED BY ENGINEER.

PROJECT ENGINEER: N. WATSON	SCALE: 1" = 10'
DESIGNED BY: J. BECKER	DATE: 06/21/2021
DRAWN BY: K. EDWARDS, D. YU	CHECKED BY: N. WATSON
APPROVED BY:	

PORT OF EVERETT

NORTON TERMINAL DEVELOPMENT & MTCA 3RD INTERIM ACTION WATER PROFILES (SHEET 9 OF 9)

DWG. NO. C5.38
CIP NO. 1-8-900-05
PROJECT NO. MT-NT-2021-02.2
SHEET NO. – OF 150

AS-BUILTS

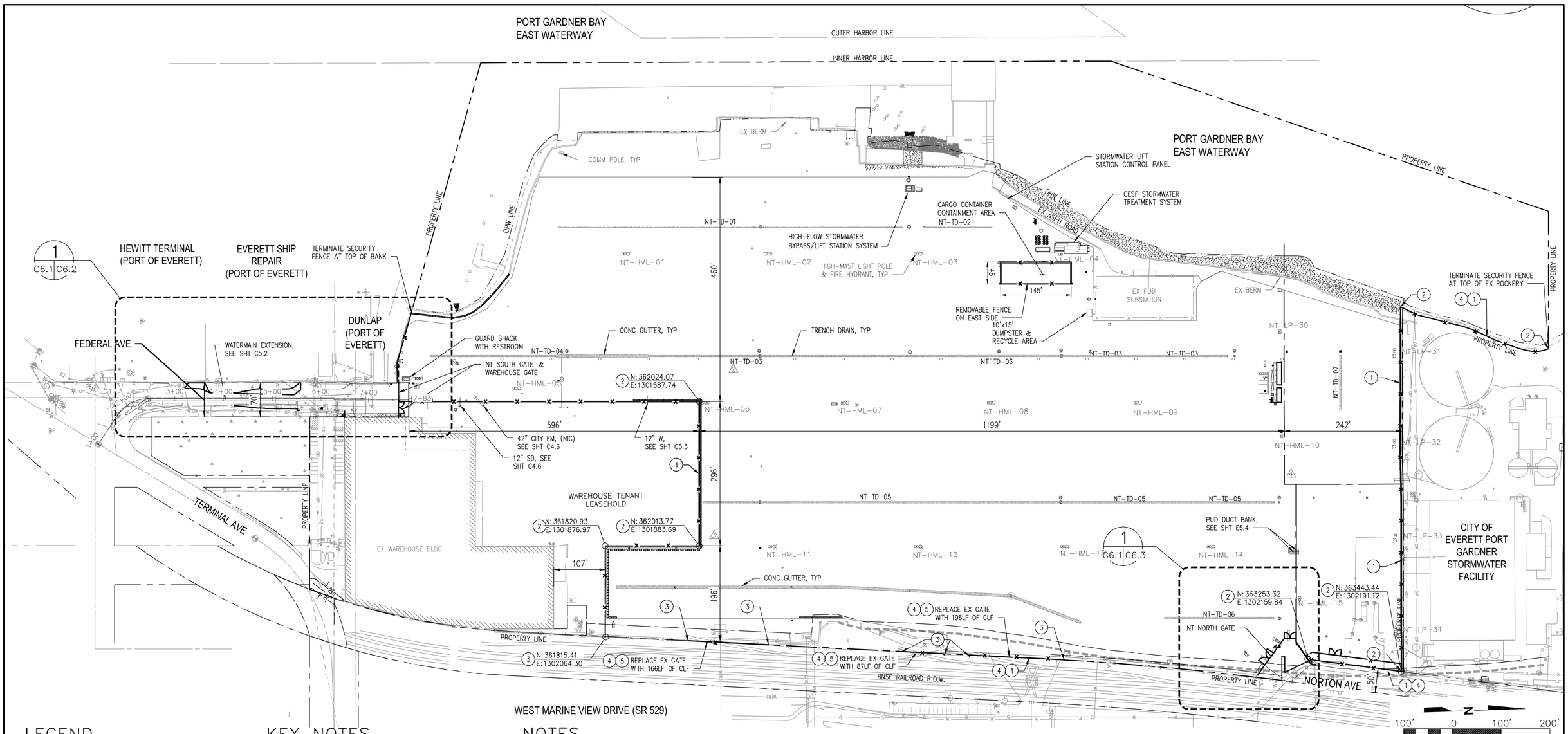

LEGEND

- SECURITY FENCE PER DETAIL 1, SHEET C6.4
- EXISTING FENCE
- SLIDE GATE
- EXISTING SLIDE GATE
- SWING GATE
- EXISTING SWING GATE

KEY NOTES

1. SECURITY FENCE PER DETAIL 1, SHEET C6.4
2. CORNER POST AND BRACE
3. SECURE TO EXISTING FENCE
4. CONSTRUCT FENCE ON PROPERTY LINE
5. NEW SECURITY FENCE THAT REPLACES EXISTING RAIL TRACK GATES ALONG EAST SIDE OF SITE SHALL BE SECURE TO THE EXISTING FENCE AT BOTH ENDS AND SHALL BE THE SAME HEIGHT AS THE EXISTING FENCE.

NOTES

1. CONTRACTOR SHALL LOCATE UTILITIES PRIOR TO FENCE CONSTRUCTION AND ADJUST THE LOCATION OF FENCE POLES TO AVOID UTILITIES.

SCALE: 1"=100'

CALL 48 HOURS BEFORE YOU DIG DIAL 811

VERT DATUM: NAVD 88
CONV TO MLLW = NAVD88+2.03
HORZ DATUM: NAD 83/91

IF SHEET IS LESS THAN 22x34 REDUCE SCALE ACCORDINGLY

Port of EVERETT
P.O. BOX 538
EVERETT, WA 98206
(425) 259-3164

kpff
1601 5th Avenue, Suite 1300
Seattle, Washington 98101
(206) 382-0600 Fax (206) 382-0500
PROJECT NO. 1600120

NO.	DATE	BY	REVISION
4	04/08/2022	NW	MARITIME TENANT SITE DEVELOPMENT
3	12/02/2021	JB	DELETE ECOLOGY BLOCK WALL, ADD EX WHS GRAVEL PAD CONTOURS AND UPDATE FINAL GRADES & PAVEMENT COORDINATES
2	07/09/2021	NW	ADDENDUM 1
1	06/21/2021	NW	ISSUED FOR BID
0	05/07/2021	NW	FOR CITY REVIEW
5	07/05/2023	NW	AS-BUILT

RECORD CONDITIONS ILLUSTRATED IN THESE PLANS REFLECT INFORMATION PROVIDED BY THE CONTRACTOR. RECORD CONDITIONS WERE NOT VERIFIED BY ENGINEER.

PROJECT ENGINEER: N. WATSON	SCALE: 1" = 100'
DESIGNED BY: J. BECKER	DATE: 05/07/2021
DRAWN BY: K. EDWARDS, D. YU	CHECKED BY: N. WATSON
APPROVED BY:	

PORT OF EVERETT

NORTON TERMINAL DEVELOPMENT & MTCA 3RD INTERIM ACTION SECURITY FENCE OVERALL SITE PLAN

DWG. NO. **C6.1**
CIP NO. 1-8-900-05
PROJECT NO. MT-NT-2021-02.2
SHEET NO. 88 OF 150

AS-BUILTS

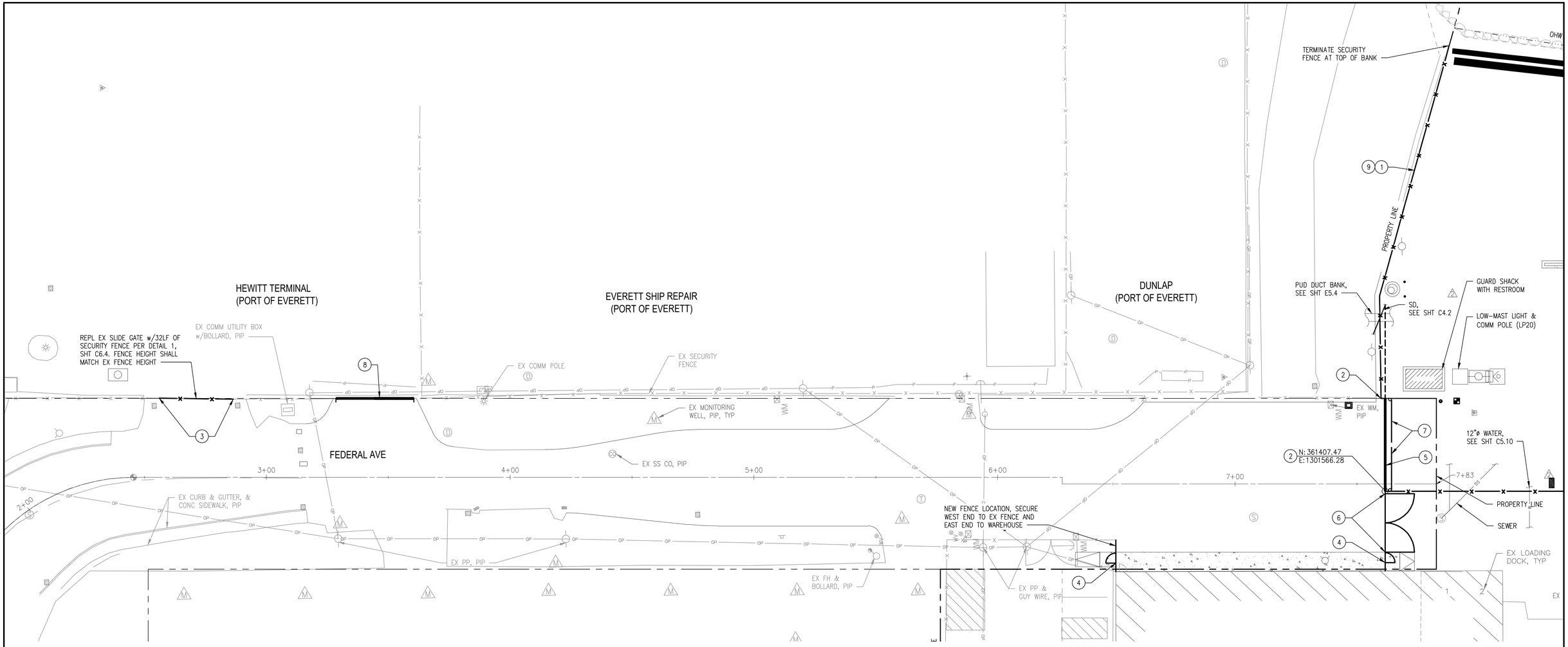

1 SECURITY FENCE DETAIL SITE PLAN – SOUTH GATE
C6.1 C6.3

SCALE: 1"=30'

LEGEND

- SECURITY FENCE PER DETAIL 1, SHEET C6.4
- EXISTING FENCE
- SLIDE GATE
- EXISTING SLIDE GATE
- SWING GATE
- EXISTING SWING GATE

KEY NOTES

1. SECURITY FENCE PER DETAIL 1, SHEET C6.4
2. CORNER POST AND BRACE
3. SECURE TO EXISTING FENCE
4. 4' WIDE GATE PER DETAIL 1, SHEET C6.5
5. 38' CLEAR OPENING MOTORIZED SLIDE GATE PER DETAIL 1, SHEET C6.6
6. 2–12' WIDE SWING GATES PER DETAIL 3, SHEET C6.5
7. BARRIER ARM GATE SHALL BE MANUFACTURED BY HY-SECURITY OR EQUAL
8. 32' CLEAR OPENING MOTORIZED SLIDE GATE PER DETAIL 1, SHEET C6.6
9. CONSTRUCT FENCE ON PROPERTY LINE

NOTES

1. CONTRACTOR SHALL LOCATE UTILITIES PRIOR TO FENCE CONSTRUCTION AND ADJUST THE LOCATION OF FENCE POLES TO AVOID UTILITIES.

CALL 48 HOURS BEFORE YOU DIG DIAL 811

VERT DATUM: NAVD 88
CONV TO MLLW = NAVD88+2.03
HORZ DATUM: NAD 83/91

IF SHEET IS LESS THAN 22x34 REDUCE SCALE ACCORDINGLY

Port of EVERETT
P.O. BOX 538
EVERETT, WA 98206
(425) 259-3164

kpff
1601 5th Avenue, Suite 1300
Seattle, Washington 98101
(206) 382-0600 Fax (206) 382-0500
PROJECT NO. 1600120

NO.	DATE	BY	REVISION
3	07/05/2023	NW	AS-BUILT
2	10/15/2021	NW	REVISED PER CITY PRE-CONSTRUCTION MEETING AND WATER UPGRADES TO SUPPORT WAREHOUSE AND STORM DRAIN CHANGES
1	06/21/2021	NW	ISSUED FOR BID
0	05/07/2021	NW	FOR CITY REVIEW

RECORD CONDITIONS ILLUSTRATED IN THESE PLANS REFLECT INFORMATION PROVIDED BY THE CONTRACTOR. RECORD CONDITIONS WERE NOT VERIFIED BY ENGINEER.

PROJECT ENGINEER: N. WATSON	SCALE: 1" = 30'
DESIGNED BY: J. BECKER	DATE: 05/07/2021
DRAWN BY: K. EDWARDS, D. YU	CHECKED BY: N. WATSON
APPROVED BY:	

PORT OF EVERETT
NORTON TERMINAL DEVELOPMENT & MTCA 3RD INTERIM ACTION
SECURITY FENCE
DETAIL SITE PLAN – SOUTH GATE

DWG. NO. C6.2
CIP NO. 1-8-900-05
PROJECT NO. MT-NT-2021-02.2
SHEET NO. 89 OF 150

AS-BUILTS

FENCE		
POINT ID	EASTING	NORTHING
A	1302186.80	363149.57
B	1302129.56	363194.73
C	1302114.79	363206.38
D	1302115.60	363230.39
E	1302135.16	363186.49
F	1302132.02	363188.96
G	1302122.94	363230.12
H	1302159.84	363253.32

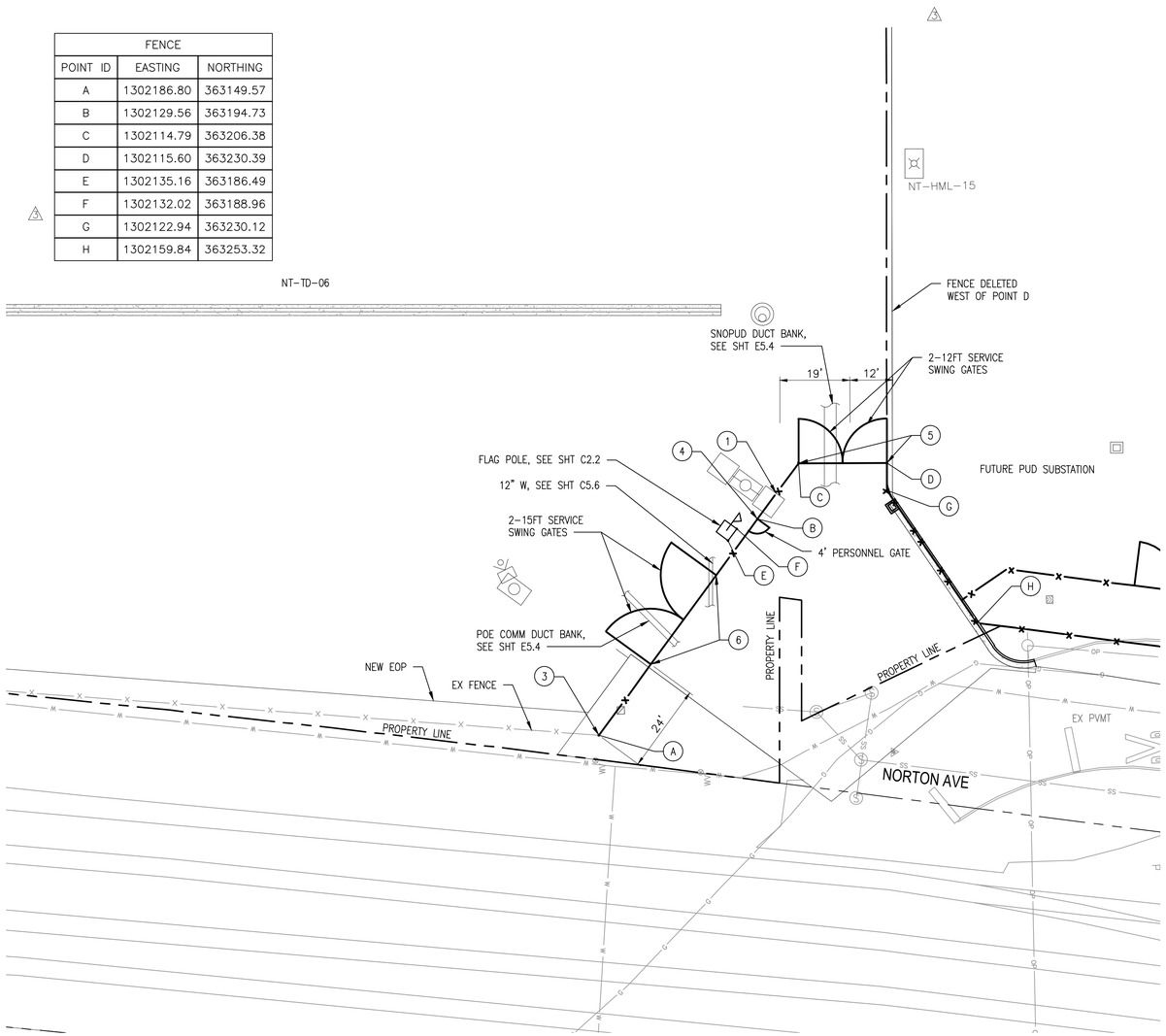

1 C6.1 C6.3 SECURITY FENCE DETAIL SITE PLAN – NORTH GATE

20' 0 20' 40'
10' 30'
SCALE: 1"=20'

LEGEND

SECURITY FENCE PER DETAIL 1, SHEET C6.4

EXISTING FENCE

SWING GATE

DETAIL 2 NOT USED

KEY NOTES

1. SECURITY FENCE PER DETAIL 1, SHEET C6.4
2. CORNER POST AND BRACE
3. SECURE TO EXISTING FENCE
4. 4' WIDE GATE PER DETAIL 1, SHEET C6.5
5. 2-12' WIDE SWING GATES PER DETAIL 3, SHEET C6.5
6. 2-15' WIDE SWING GATES PER DETAIL 3, SHEET C6.5

NOTES

1. CONTRACTOR SHALL LOCATE EXISTING UTILITIES PRIOR TO FENCE CONSTRUCTION AND ADJUST THE LOCATION OF FENCE POLES TO AVOID EXISTING UTILITIES.

N

CALL 48 HOURS BEFORE YOU DIG DIAL 811

VERT DATUM: NAVD 88
CONV TO MLLW = NAVD88+2.03
HORZ DATUM: NAD 83/91

IF SHEET IS LESS THAN 22x34 REDUCE SCALE ACCORDINGLY

Port of EVERETT
P.O. BOX 538
EVERETT, WA 98206
(425) 259-3164

kpff
1601 5th Avenue, Suite 1300
Seattle, Washington 98101
(206) 382-0600 Fax (206) 382-0500
PROJECT NO. 1600120

NO.	DATE	BY	REVISION
4	07/05/2023	NW	AS-BUILT
3	04/08/2022	NW	MARITIME TENANT SITE DEVELOPMENT
2	07/09/2021	NW	ADDENDUM 1
1	06/21/2021	NW	ISSUED FOR BID
0	05/07/2021	NW	FOR CITY REVIEW

RECORD CONDITIONS ILLUSTRATED IN THESE PLANS REFLECT INFORMATION PROVIDED BY THE CONTRACTOR. RECORD CONDITIONS WERE NOT VERIFIED BY ENGINEER.

PROJECT ENGINEER: N. WATSON	SCALE: AS SHOWN
DESIGNED BY: J. BECKER	DATE: 05/07/2021
DRAWN BY: K. EDWARDS, D. YU	CHECKED BY: N. WATSON
APPROVED BY:	

PORT OF EVERETT

NORTON TERMINAL DEVELOPMENT & MTCA 3RD INTERIM ACTION
SECURITY FENCE
DETAIL SITE PLAN – NORTH GATE

DWG. NO. C6.3
CIP NO. 1-8-900-05
PROJECT NO. MT-NT-2021-02.2
SHEET NO. 90 OF 150

AS-BUILTS

FENCING NOTES

1. UNLESS OTHERWISE NOTED ALL SECURITY FENCE SHALL BE PER DETAIL A / C6.4 | C6.4
2. ALL CHAIN LINK FENCE SHALL BE BLACK VINYL COATED, INCLUDING GATES, RAILS, RODS, EXTENSION ARMS, POSTS, CONNECTIONS, BARB WIRE, AND FABRIC.
3. WIRE TIES, RAILS, POSTS AND BRACES SHALL BE CONSTRUCTED ON THE SECURE SIDE OF THE FENCE ALIGNMENT. CHAIN LINK FABRIC SHALL BE PLACED ON THE OPPOSITE SIDE OF THE SECURE BARRIER.
4. EXTENSION ARMS SHALL BE PLACED ON ALL LINE AND CORNER FENCE POSTS. GATE END POSTS SHALL BE INSTALLED WITH POST CAPS.
5. CONTRACTOR SHALL NOT REUSE ANY EXISTING FENCING OR BARBED WIRE WITHOUT APPROVAL OF ENGINEER.
6. WHERE NEW FENCE LINE MATCHES EXISTING FENCE LINE, CONTRACTOR SHALL DEMOLISH EXISTING FENCE AND GATES ONLY WHERE PLAN INDICATES INSTALLATION OF NEW TWIC SECURITY CHAIN LINK FENCE AND GATES.
7. CONTRACTOR SHALL SALVAGE AND REUSE SIGNAGE THAT IS IN GOOD CONDITION. SIGNS THAT ARE FADED OR DAMAGED IN ANY WAY SHALL NOT BE SALVAGED OR REUSED.

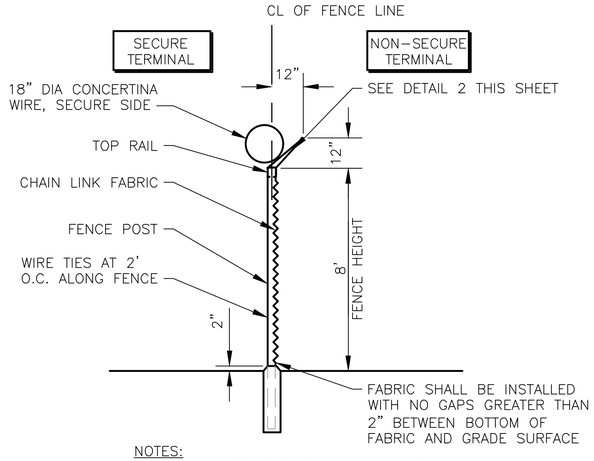

NOTES:
1. WHERE FENCING IS LOCATED ON A SLOPE GREATER THAN 2% THE CONTRACTOR SHALL INSTALL A BOTTOM RAIL.

A SECTION – TYPICAL SECURITY FENCE

A / C6.5 | C6.5 SCALE: NTS

NOTES:
1. ALL FENCING MATERIALS SHALL BE GALVANIZED, UNLESS NOTED OTHERWISE.

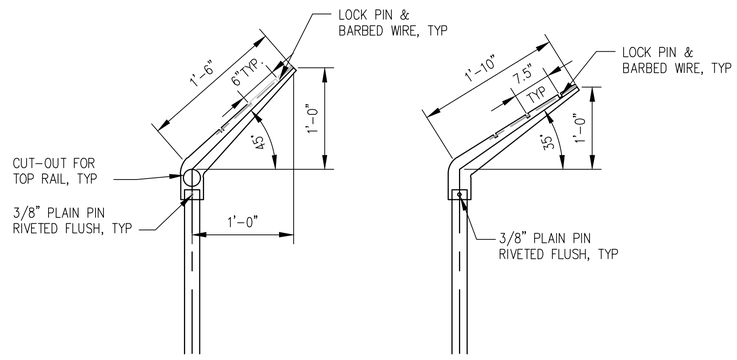

2 EXTENSION ARMS

SCALE: NTS

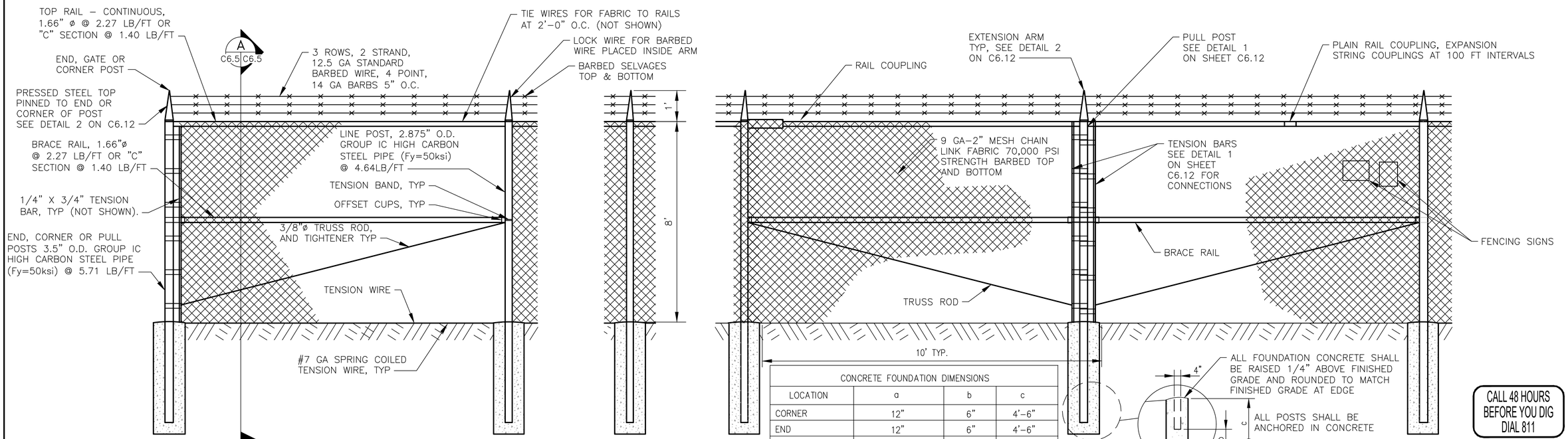

CONCRETE FOUNDATION DIMENSIONS			
LOCATION	a	b	c
CORNER	12"	6"	4'-6"
END	12"	6"	4'-6"
LINE & OTHER	10"	6"	4'-6"

1 DETAIL – TYPICAL SECURITY FENCE

C6.1, C6.2, C6.3, C6.5 | C6.5 SCALE: NTS

CALL 48 HOURS BEFORE YOU DIG DIAL 811

VERT DATUM: NAVD 88
CONV TO MLLW = NAVD88+2.03
HORZ DATUM: NAD 83/91

IF SHEET IS LESS THAN 22x34 REDUCE SCALE ACCORDINGLY

Port of Everett
P.O. BOX 538
EVERETT, WA 98206
(425) 259-3164

kpff
1601 5th Avenue, Suite 1300
Seattle, Washington 98101
(206) 382-0600 Fax (206) 382-0500
PROJECT NO. 1600120

NO.	DATE	BY	REVISION
2	07/05/2023	NW	AS-BUILT
1	06/21/2021	NW	ISSUED FOR BID
0	05/07/2021	NW	FOR CITY REVIEW

RECORD CONDITIONS ILLUSTRATED IN THESE PLANS REFLECT INFORMATION PROVIDED BY THE CONTRACTOR. RECORD CONDITIONS WERE NOT VERIFIED BY ENGINEER.

PROJECT ENGINEER: N. WATSON	SCALE: AS SHOWN
DESIGNED BY: J. BECKER	DATE: 05/07/2021
DRAWN BY: K. EDWARDS, D. YU	CHECKED BY: N. WATSON
APPROVED BY:	

PORT OF EVERETT

NORTON TERMINAL DEVELOPMENT & MTCA 3RD INTERIM ACTION
SECURITY FENCE DETAILS
(1 OF 3)

DWG. NO. **C6.4**
CIP NO. 1-8-900-05
PROJECT NO. MT-NT-2021-02.2
SHEET NO. 91 OF 150

AS-BUILTS

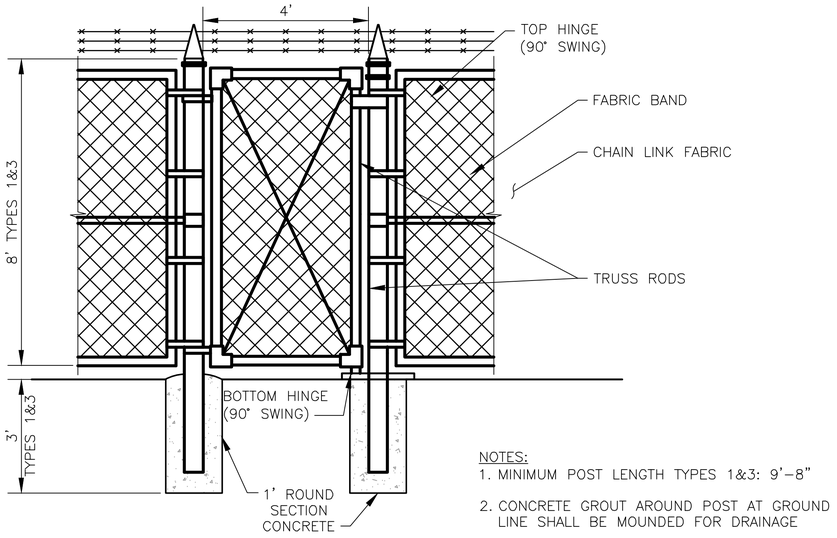

NOTES:
1. MINIMUM POST LENGTH TYPES 1&3: 9'-8"
2. CONCRETE GROUT AROUND POST AT GROUND LINE SHALL BE MOUNDED FOR DRAINAGE

1 DETAIL – PERSONNEL GATE

C6.2, C6.3 C6.6 SCALE: NTS

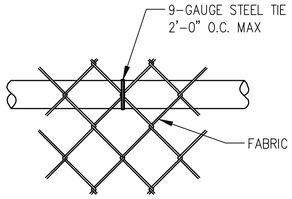

TOP OR BRACE RAIL ATTACHMENT

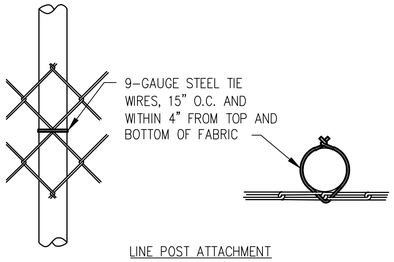

LINE POST ATTACHMENT

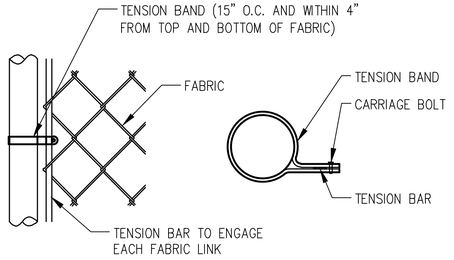

END OF GATE POST DETAIL

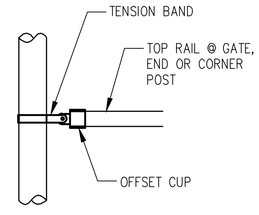

TOP RAIL

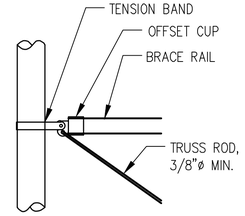

BRACE RAIL

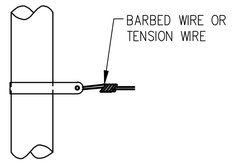

TENSION BAND DETAIL

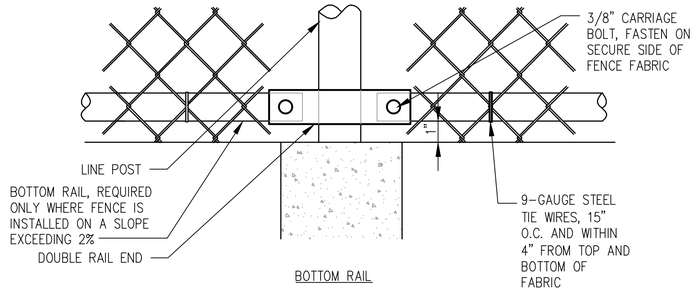

BOTTOM RAIL

2 CONNECTION DETAILS

SCALE: NTS

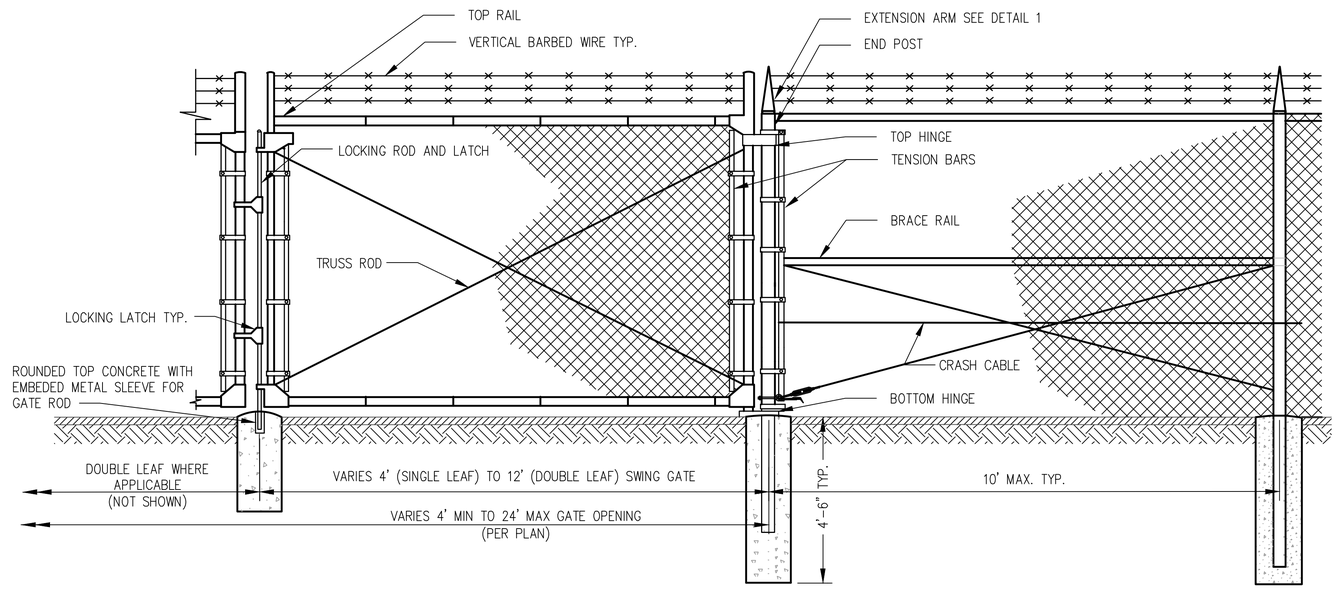

3 SWING GATE

SCALE: NTS

CALL 48 HOURS BEFORE YOU DIG DIAL 811

VERT DATUM: NAVD 88
CONV TO MLLW = NAVD88+2.03
HORZ DATUM: NAD 83/91

IF SHEET IS LESS THAN 22x34 REDUCE SCALE ACCORDINGLY

Port of EVERETT
P.O. BOX 538
EVERETT, WA 98206
(425) 259-3164

kpff
1601 5th Avenue, Suite 1300
Seattle, Washington 98101
(206) 382-0600 Fax (206) 382-0500
PROJECT NO. 1600120

NO.	DATE	BY	REVISION
2	07/05/2023	NW	AS-BUILT
1	06/21/2021	NW	ISSUED FOR BID
0	05/07/2021	NW	FOR CITY REVIEW

NO.	DATE	BY	REVISION

RECORD CONDITIONS ILLUSTRATED IN THESE PLANS REFLECT INFORMATION PROVIDED BY THE CONTRACTOR. RECORD CONDITIONS WERE NOT VERIFIED BY ENGINEER.

PROJECT ENGINEER: N. WATSON	SCALE: AS SHOWN
DESIGNED BY: J. BECKER	DATE: 05/07/2021
DRAWN BY: K. EDWARDS, D. YU	CHECKED BY: N. WATSON
APPROVED BY:	

PORT OF EVERETT

NORTON TERMINAL DEVELOPMENT & MTCA 3RD INTERIM ACTION
SECURITY FENCE DETAILS
(2 OF 3)

DWG. NO. **C6.5**
CIP NO. 1-8-900-05
PROJECT NO. MT-NT-2021-02.2
SHEET NO. 92 OF 150

AS-BUILTS

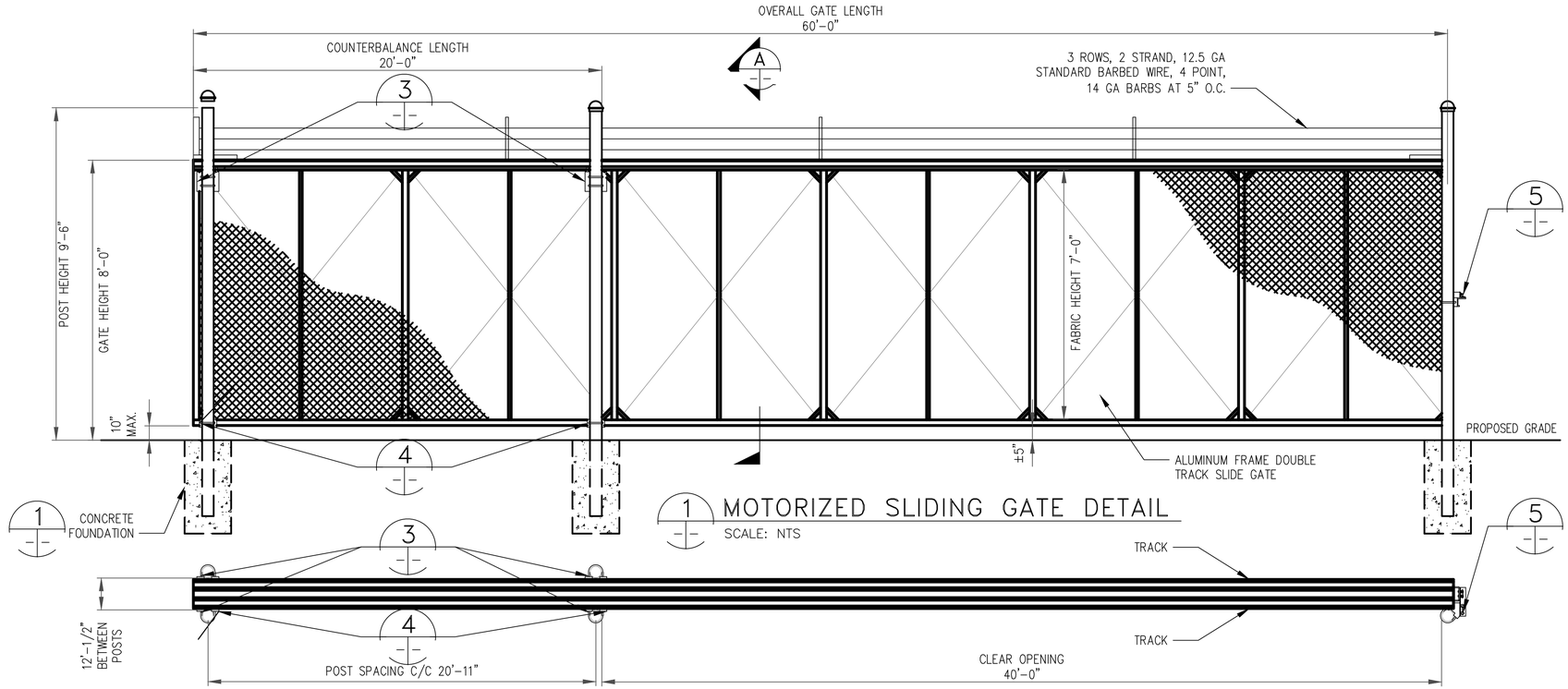

1 MOTORIZED SLIDING GATE DETAIL

SCALE: NTS

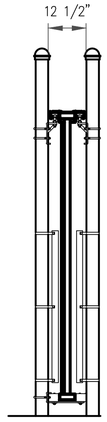

A MOTORIZED SLIDING GATE SECTION

SCALE: NTS

2 MOTORIZED SLIDING GATE PLAN DETAIL

SCALE: NTS

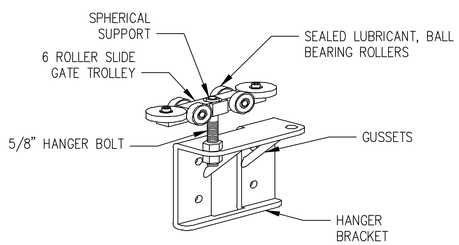

3 GATE HANGER AND TROLLEY ASSEMBLY

SCALE: NTS

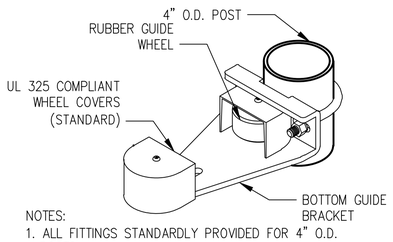

4 BOTTOM GUIDE

SCALE: NTS

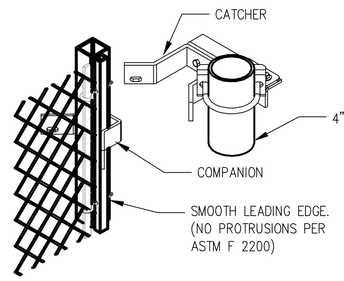

5 CATCH ASSEMBLY

SCALE: NTS

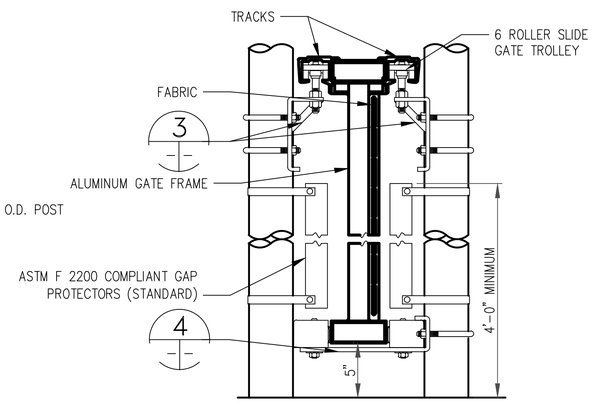

6 ENLARGED ASSEMBLY

SCALE: NTS

CALL 48 HOURS BEFORE YOU DIG DIAL 811

VERT DATUM: NAVD 88
CONV TO MLLW = NAVD88+2.03
HORZ DATUM: NAD 83/91

IF SHEET IS LESS THAN 22x34
REDUCE SCALE ACCORDINGLY

Port of EVERETT
P.O. BOX 538
EVERETT, WA 98206
(425) 259-3164

kpff
1601 5th Avenue, Suite 1300
Seattle, Washington 98101
(206) 382-0600 Fax (206) 382-0500
PROJECT NO. 1600120

NO.	DATE	BY	REVISION
1	07/05/2023	NW	AS-BUILT
0	06/21/2021	NW	ISSUED FOR BID

NO.	DATE	BY	REVISION

RECORD CONDITIONS ILLUSTRATED IN THESE PLANS REFLECT INFORMATION PROVIDED BY THE CONTRACTOR. RECORD CONDITIONS WERE NOT VERIFIED BY ENGINEER.

PROJECT ENGINEER: N. WATSON	SCALE: AS SHOWN
DESIGNED BY: J. BECKER	DATE: 06/21/2021
DRAWN BY: K. EDWARDS, D. YU	CHECKED BY: N. WATSON
APPROVED BY:	

PORT OF EVERETT

NORTON TERMINAL DEVELOPMENT
& MTCA 3RD INTERIM ACTION
SECURITY FENCE DETAILS
(3 OF 3)

DWG. NO. **C6.6**
CIP NO. 1-8-900-05
PROJECT NO. MT-NT-2021-02.2
SHEET NO. 93 OF 150

AS-BUILTS

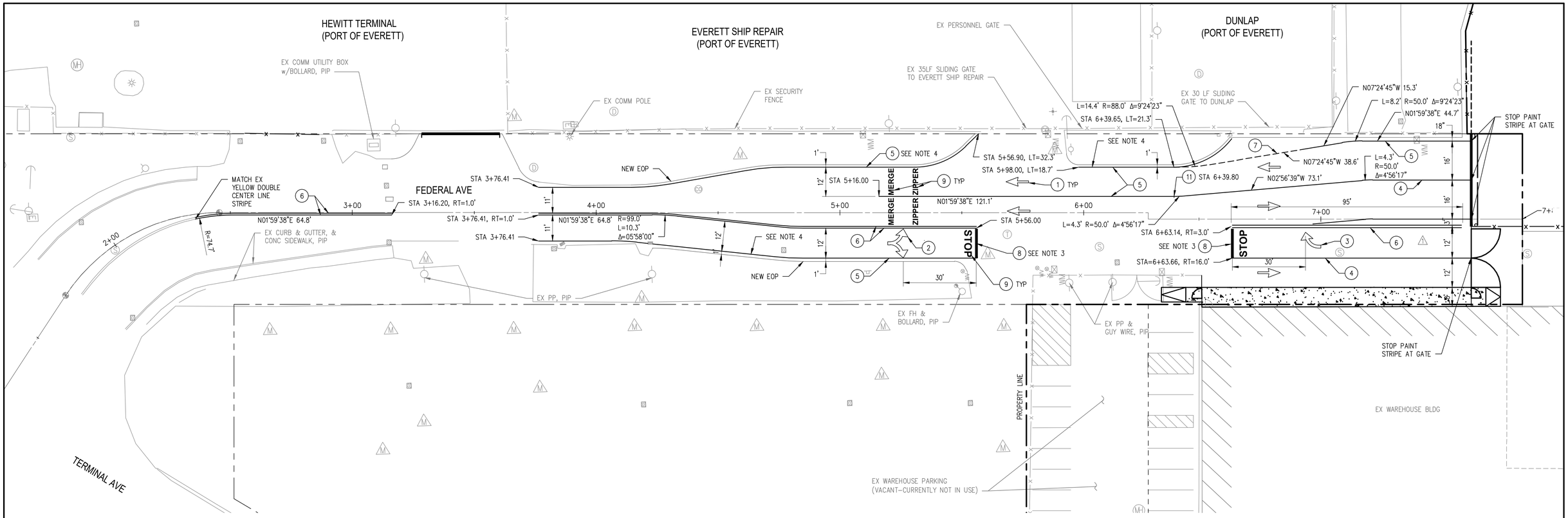

KEY NOTES

(1) TYPE 1S TRAFFIC ARROW PER WSDOT STD PLAN M–24.40–02

(2) TYPE 4S TRAFFIC ARROW PER WSDOT STD PLAN M–24.40–02

(3) TYPE 2SR TRAFFIC ARROW PER WSDOT STD PLAN M–24.40–02

(4) YELLOW CENTER & LANE LINE PER WSDOT STD PLAN M–20.10–03

(5) WHITE CENTER & LANE LINE PER WSDOT STD PLAN M–20.10–03

(6) DOUBLE YELLOW CENTER LINE PER COE STD DWG 720

(7) DOTTED EXTENSION LINE PER PER WSDOT STD PLAN M–20.10–03

(8) STOP LINE PER WSDOT STD PLAN M–24.60–04

(9) 6' HIGH LOW SPEED LETTERING PER WSDOT STD PLAN M–80.30–01 AND M–80.10–01

(10) NOT USED

(11) TRANSITION FROM 4" WHITE TO 4" YELLOW STRIPE

NOTES

1. NOTE USED.
2. DIMENSIONS ARE TO CENTERLINE OF STRIPE.
3. STOP LINE LENGTH SHALL EQUAL THE LANE WIDTH.
4. CONTRACTOR SHALL PAINT 4" STRIPE 1' FROM EDGE OF PAVEMENT.

N

20' 0 20' 40'
10' 30'
SCALE: 1"=20'

CALL 48 HOURS BEFORE YOU DIG DIAL 811

VERT DATUM: NAVD 88
CONV TO MLLW = NAVD88+2.03
HORZ DATUM: NAD 83/91

IF SHEET IS LESS THAN 22x34 REDUCE SCALE ACCORDINGLY

Port of EVERETT
P.O. BOX 538
EVERETT, WA 98206
(425) 259-3164

kpff
1601 5th Avenue, Suite 1300
Seattle, Washington 98101
(206) 382-0600 Fax (206) 382-0500
PROJECT NO. 1600120

NO.	DATE	BY	REVISION
3	07/05/2023	NW	AS–BUILT
2	08/26/2021	NW	REVISED PER CITY COMMENTS
1	06/21/2021	NW	ISSUED FOR BID

RECORD CONDITIONS ILLUSTRATED IN THESE PLANS REFLECT INFORMATION PROVIDED BY THE CONTRACTOR. RECORD CONDITIONS WERE NOT VERIFIED BY ENGINEER.

PROJECT ENGINEER: N. WATSON	SCALE: 1" = 20'
DESIGNED BY: J. BECKER	DATE: 06/21/2021
DRAWN BY: K. EDWARDS, D. YU	CHECKED BY: N. WATSON
APPROVED BY:	

PORT OF EVERETT

NORTON TERMINAL DEVELOPMENT & MTCA 3RD INTERIM ACTION
FEDERAL AVE
PAINT STRIPING PLAN

DWG. NO. C7.1
CIP NO. 1–8–900–05
PROJECT NO. MT–NT–2021–02.2
SHEET NO. 94 OF 150

AS-BUILTS

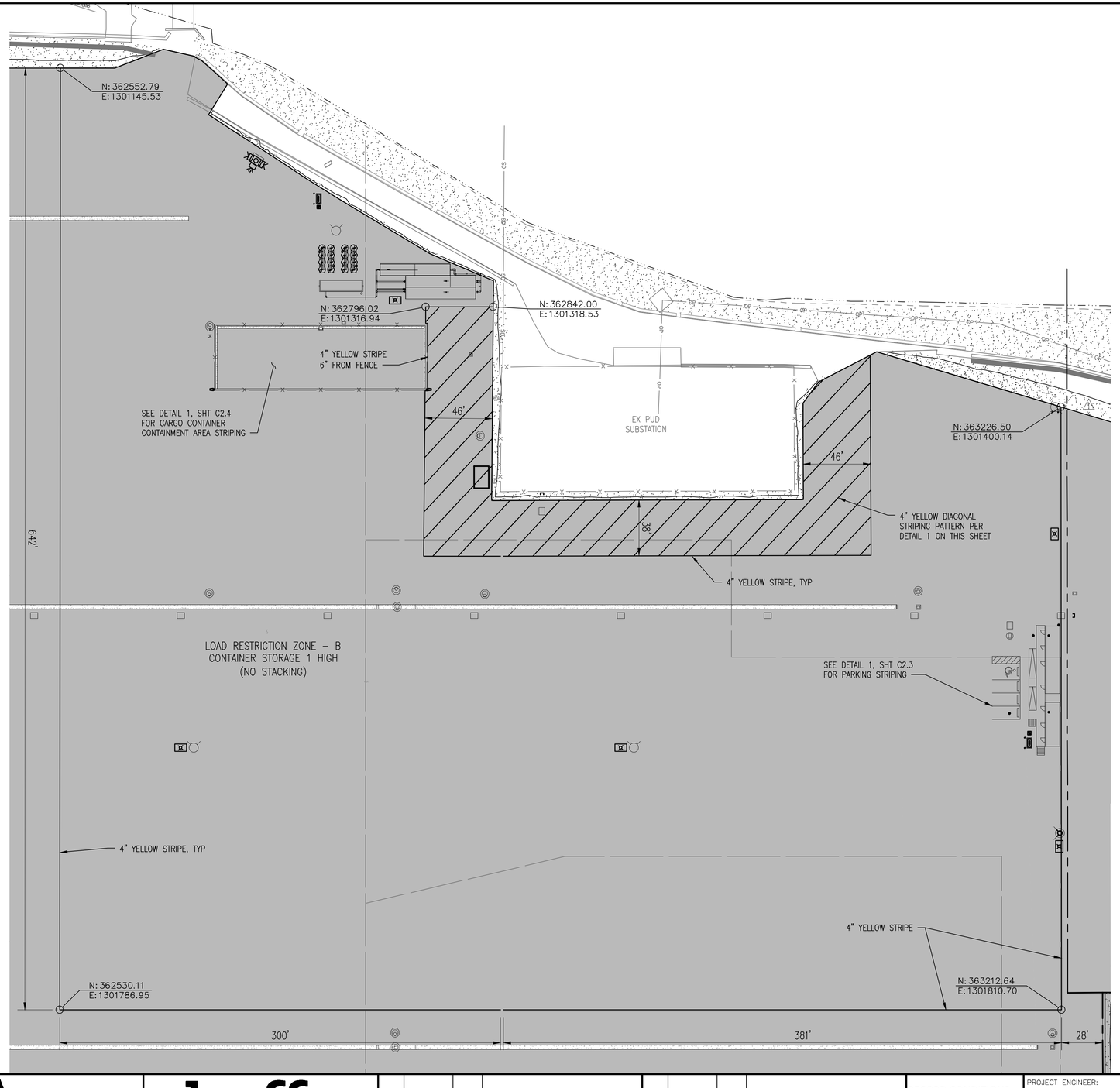

NOTES

1. ALL STRIPING SHALL BE IN ACCORDANCE WITH WSDOT STD PLAN M-20.10-03, UNLESS OTHERWISE SPECIFIED ON THIS SHEET.
2. DIMENSIONS ARE TO CENTERLINE OF STRIPE.

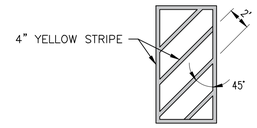

1 DIAGONAL STRIPING DETAIL
C7.2 | C7.2 SCALE: NTS

N

40' 0 40' 80'
20' 60'

SCALE: 1"=40'

CALL 48 HOURS
BEFORE YOU DIG
DIAL 811

VERT DATUM: NAVD 88
CONV TO MLLW = NAVD88+2.03
HORZ DATUM: NAD 83/91

IF SHEET IS LESS THAN 22x34
REDUCE SCALE ACCORDINGLY

Port of EVERETT
P.O. BOX 538
EVERETT, WA 98206
(425) 259-3164

kpff
1601 5th Avenue, Suite 1300
Seattle, Washington 98101
(206) 382-0600 Fax (206) 382-0500
PROJECT NO. 1600120

NO.	DATE	BY	REVISION
3	07/05/2023	NW	AS-BUILT
2	12/02/2021	NW	2-INCH TO 9-INCH PVMT
1	06/21/2021	NW	ISSUED FOR BID

RECORD CONDITIONS ILLUSTRATED IN THESE PLANS REFLECT INFORMATION PROVIDED BY THE CONTRACTOR. RECORD CONDITIONS WERE NOT VERIFIED BY ENGINEER.

PROJECT ENGINEER: N. WATSON	SCALE: 1" = 40'
DESIGNED BY: J. BECKER	DATE: 06/21/2021
DRAWN BY: K. EDWARDS, D. YU	CHECKED BY: N. WATSON
APPROVED BY:	

PORT OF EVERETT

NORTON TERMINAL DEVELOPMENT
& MTCA 3RD INTERIM ACTION
LOAD RESTRICTION ZONE
PAINT STRIPING PLAN

DWG. NO. **C7.2**
CIP NO. 1-8-900-05
PROJECT NO. MT-NT-2021-02.2
SHEET NO. 95 OF 150

AS-BUILTS

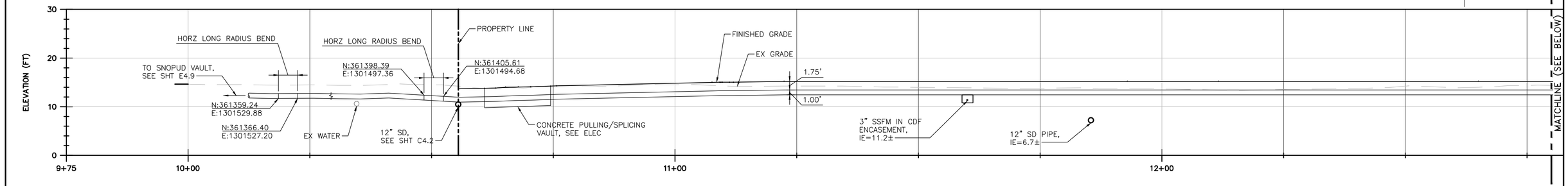

1 E1.1 C8.1 SNOHOMISH PUD DUCT BANK PROFILE

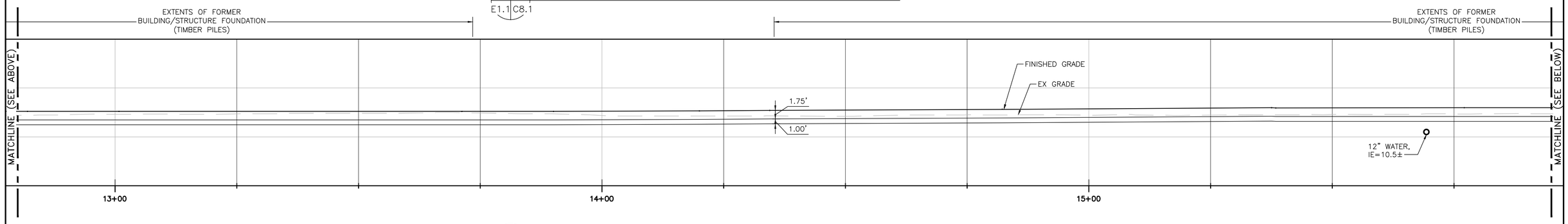

1 E1.1 C8.1 SNOHOMISH PUD DUCT BANK PROFILE (CONTINUED)

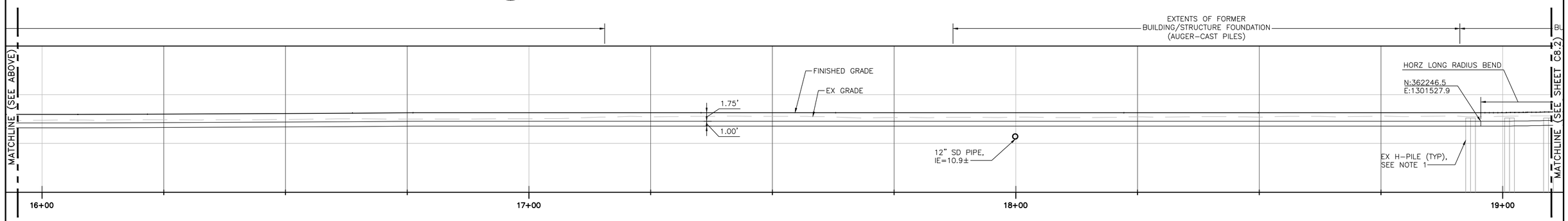

1 E1.1 C8.1 SNOHOMISH PUD DUCT BANK PROFILE (CONTINUED)

GENERAL NOTES

1. EXISTING FOUNDATION STRUCTURES SHOWN IN PROFILE ARE APPROXIMATE AND SHOWN FOR REFERENCE ONLY. NOT ALL FOUNDATION STRUCTURES/DEBRIS ARE SHOWN. CONTRACTOR SHALL CONFIRM EXISTING CONDITIONS PRIOR TO START OF WORK. IF CONDITIONS DIFFER FROM THOSE SHOWN IN PROFILE, THE CONTRACTOR SHALL NOTIFY THE ENGINEER AND NOT BEGIN CONSTRUCTION UNTIL CHANGED CONDITIONS HAVE BEEN EVALUATED.
2. EXISTING UTILITY LOCATIONS AND DEPTHS ARE SHOWN APPROXIMATE. CONTRACTOR SHALL POTHOLE PRIOR TO START OF WORK. PROTECT-IN-PLACE ALL EXISTING UTILITIES SHOWN IN PROFILE, UNLESS NOTED OTHERWISE.

CALL 48 HOURS BEFORE YOU DIG DIAL 811

10' 0 10' 20'
5' 15'
SCALE: 1"=10'

VERT DATUM: NAVD 88
CONV TO MLLW = NAVD88+2.03
HORZ DATUM: NAD 83/91

IF SHEET IS LESS THAN 22x34 REDUCE SCALE ACCORDINGLY

Port of EVERETT
P.O. BOX 538
EVERETT, WA 98206
(425) 259-3164

kpff
1601 5th Avenue, Suite 1300
Seattle, Washington 98101
(206) 382-0600 Fax (206) 382-0500
PROJECT NO. 1600120

NO.	DATE	BY	REVISION
2	07/05/2023	NW	AS-BUILT
1	07/23/2021	NW	UPDATED SNOPUD ALIGNMENT PER ADDENDUM 3
0	06/21/2021	NW	ISSUED FOR BID

NO.	DATE	BY	REVISION

RECORD CONDITIONS ILLUSTRATED IN THESE PLANS REFLECT INFORMATION PROVIDED BY THE CONTRACTOR. RECORD CONDITIONS WERE NOT VERIFIED BY ENGINEER.

PROJECT ENGINEER: N. WATSON	SCALE: 1" = 10'
DESIGNED BY: J. BECKER	DATE: 06/21/2021
DRAWN BY: K. EDWARDS, D. YU	CHECKED BY: N. WATSON
APPROVED BY:	

PORT OF EVERETT

NORTON TERMINAL DEVELOPMENT & MTCA 3RD INTERIM ACTION SNOHOMISH PUD DUCT BANK PROFILE (SHEET 1 OF 3)

DWG. NO. **C8.1**
CIP NO. 1-8-900-05
PROJECT NO. MT-NT-2021-02.2
SHEET NO. 96 OF 150

AS-BUILTS

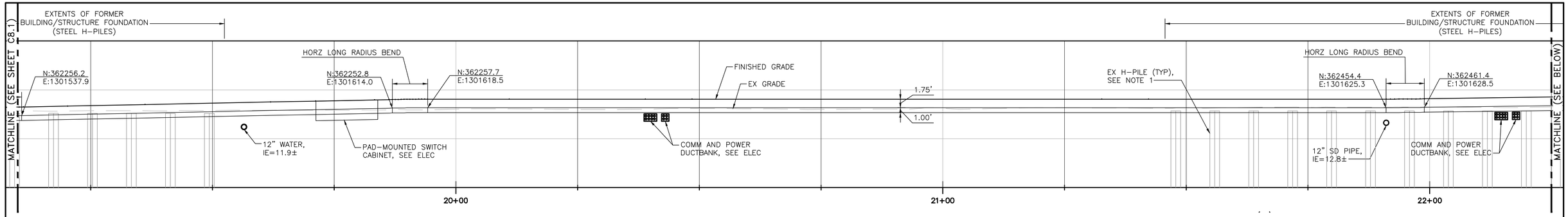

1 SNOHOMISH PUD DUCT BANK PROFILE (CONTINUED)
E1.1 C8.2

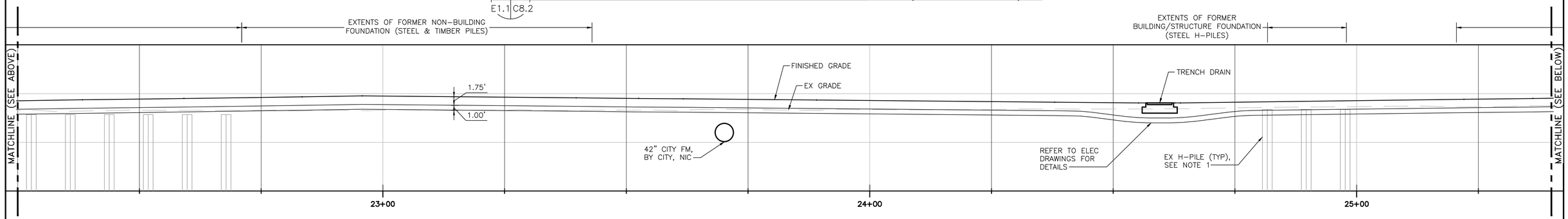

1 SNOHOMISH PUD DUCT BANK PROFILE (CONTINUED)
E1.1 C8.2

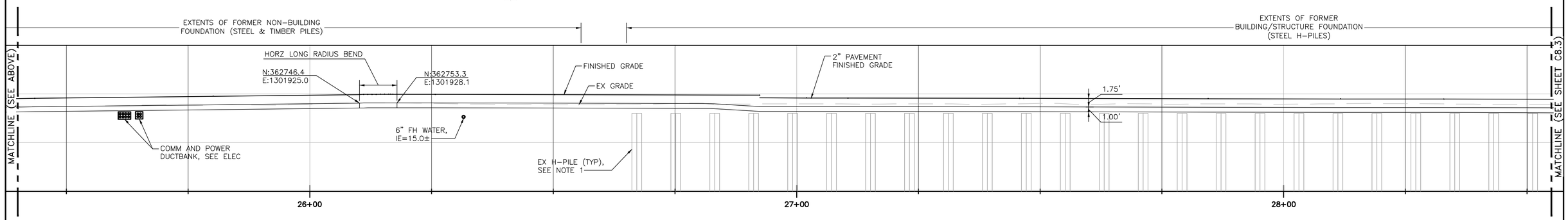

1 SNOHOMISH PUD DUCT BANK PROFILE (CONTINUED)
E1.1 C8.2

GENERAL NOTES

1. EXISTING FOUNDATION STRUCTURES SHOWN IN PROFILE ARE APPROXIMATE AND SHOWN FOR REFERENCE ONLY. NOT ALL FOUNDATION STRUCTURES/DEBRIS ARE SHOWN. CONTRACTOR SHALL CONFIRM EXISTING CONDITIONS PRIOR TO START OF WORK. IF CONDITIONS DIFFER FROM THOSE SHOWN IN PROFILE, THE CONTRACTOR SHALL NOTIFY THE ENGINEER AND NOT BEGIN CONSTRUCTION UNTIL CHANGED CONDITIONS HAVE BEEN EVALUATED.
2. EXISTING UTILITY LOCATIONS AND DEPTHS ARE SHOWN APPROXIMATE. CONTRACTOR SHALL POTHOLE PRIOR TO START OF WORK. PROTECT-IN-PLACE ALL EXISTING UTILITIES SHOWN IN PROFILE, UNLESS NOTED OTHERWISE.

CALL 48 HOURS BEFORE YOU DIG DIAL 811

10' 0 10' 20'
5' 15'
SCALE: 1"=10'

VERT DATUM: NAVD 88
CONV TO MLLW = NAVD88+2.03
HORZ DATUM: NAD 83/91

IF SHEET IS LESS THAN 22x34 REDUCE SCALE ACCORDINGLY

Port of EVERETT
P.O. BOX 538
EVERETT, WA 98206
(425) 259-3164

kpff
1601 5th Avenue, Suite 1300
Seattle, Washington 98101
(206) 382-0600 Fax (206) 382-0500
PROJECT NO. 1600120

NO.	DATE	BY	REVISION
1	07/05/2023	NW	AS-BUILT
0	06/21/2021	NW	ISSUED FOR BID

RECORD CONDITIONS ILLUSTRATED IN THESE PLANS REFLECT INFORMATION PROVIDED BY THE CONTRACTOR. RECORD CONDITIONS WERE NOT VERIFIED BY ENGINEER.

PROJECT ENGINEER: N. WATSON	SCALE: 1" = 10'
DESIGNED BY: J. BECKER	DATE: 06/21/2021
DRAWN BY: K. EDWARDS, D. YU	CHECKED BY: N. WATSON
APPROVED BY:	

PORT OF EVERETT

NORTON TERMINAL DEVELOPMENT & MTCA 3RD INTERIM ACTION SNOHOMISH PUD DUCT BANK PROFILE (SHEET 2 OF 3)

DWG. NO. **C8.2**
CIP NO. 1-8-900-05
PROJECT NO. MT-NT-2021-02.2
SHEET NO. 97 OF 150

AS-BUILTS

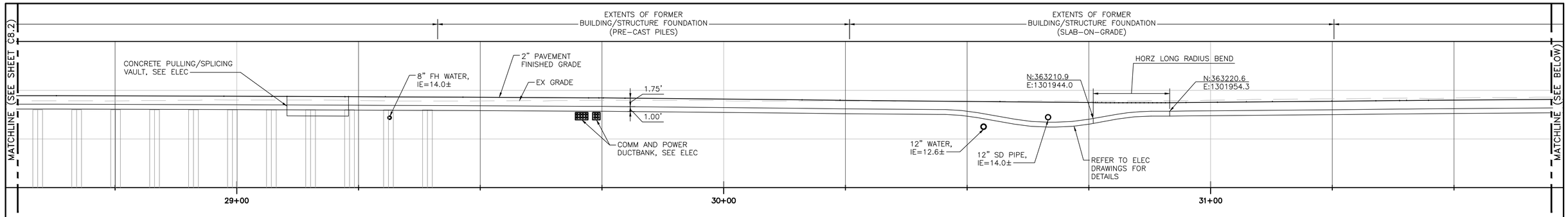

1 E1.1 C8.3 SNOHOMISH PUD DUCT BANK PROFILE (CONTINUED)

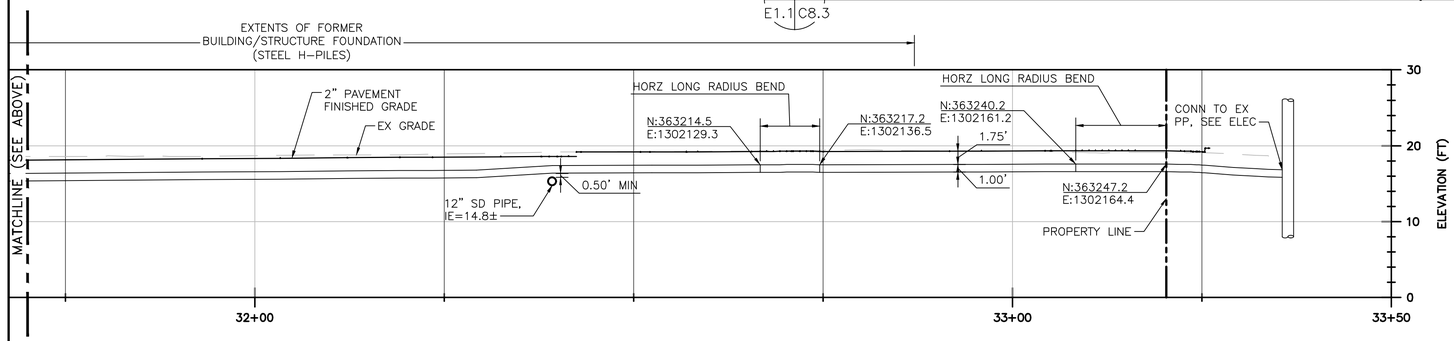

1 E1.1 C8.3 SNOHOMISH PUD DUCT BANK PROFILE (CONTINUED)

GENERAL NOTES

1. EXISTING FOUNDATION STRUCTURES SHOWN IN PROFILE ARE APPROXIMATE AND SHOWN FOR REFERENCE ONLY. NOT ALL FOUNDATION STRUCTURES/DEBRIS ARE SHOWN. CONTRACTOR SHALL CONFIRM EXISTING CONDITIONS PRIOR TO START OF WORK. IF CONDITIONS DIFFER FROM THOSE SHOWN IN PROFILE, THE CONTRACTOR SHALL NOTIFY THE ENGINEER AND NOT BEGIN CONSTRUCTION UNTIL CHANGED CONDITIONS HAVE BEEN EVALUATED.
2. EXISTING UTILITY LOCATIONS AND DEPTHS ARE SHOWN APPROXIMATE. CONTRACTOR SHALL POTHOLE PRIOR TO START OF WORK. PROTECT-IN-PLACE ALL EXISTING UTILITIES SHOWN IN PROFILE, UNLESS NOTED OTHERWISE.

10' 0 10' 20'
5' 15'
SCALE: 1"=10'

CALL 48 HOURS BEFORE YOU DIG DIAL 811

VERT DATUM: NAVD 88
CONV TO MLLW = NAVD88+2.03
HORZ DATUM: NAD 83/91

IF SHEET IS LESS THAN 22x34 REDUCE SCALE ACCORDINGLY

Port of EVERETT
P.O. BOX 538
EVERETT, WA 98206
(425) 259-3164

kpff
1601 5th Avenue, Suite 1300
Seattle, Washington 98101
(206) 382-0600 Fax (206) 382-0500
PROJECT NO. 1600120

NO.	DATE	BY	REVISION
1	07/05/2023	NW	AS-BUILT
0	06/21/2021	NW	ISSUED FOR BID

NO.	DATE	BY	REVISION

RECORD CONDITIONS ILLUSTRATED IN THESE PLANS REFLECT INFORMATION PROVIDED BY THE CONTRACTOR. RECORD CONDITIONS WERE NOT VERIFIED BY ENGINEER.

PROJECT ENGINEER: N. WATSON	SCALE: 1" = 10'
DESIGNED BY: J. BECKER	DATE: 06/21/2021
DRAWN BY: K. EDWARDS, D. YU	CHECKED BY: N. WATSON
APPROVED BY:	

PORT OF EVERETT

NORTON TERMINAL DEVELOPMENT & MTCA 3RD INTERIM ACTION SNOHOMISH PUD DUCT BANK PROFILE (SHEET 3 OF 3)

DWG. NO. **C8.3**
CIP NO. 1-8-900-05
PROJECT NO. MT-NT-2021-02.2
SHEET NO. 98 OF 150

AS-BUILTS

STRUCTURAL NOTES:

1. CODES AND STANDARDS:
   ALL MATERIALS, WORKMANSHIP, DESIGN AND CONSTRUCTION SHALL CONFORM TO THE DRAWINGS AND THE INTERNATIONAL BUILDING CODE (IBC), 2018 EDITION, WITH CITY OF EVERETT AMENDMENTS, AND THE PROJECT SPECIFICATIONS.

2. DESIGN LOADS
   A. DESIGN LOAD CRITERIA FOR LOW-MAST AND HIGH-MAST POLES:
      EARTHQUAKE LOADS: PER IBC 2018
      WIND LOADS: 98 MPH; EXPOSURE D; IMPORTANCE FACTOR OF 1.0
      ULTIMATE BASE REACTIONS FOR POLES SHALL BE CALCULATED PER AASHTO LRFD LOAD COMBINATIONS.

   B. ULTIMATE POLE BASE REACTION FOR THE HIGH-MAST POLE FOUNDATION:

OVERTURNING MOMENT	M = 50 KIP*FT
DOWNLOAD	N = 2.5 KIPS
SHEAR	V = 1.1 KIPS

   C. ULTIMATE POLE BASE REACTION FOR THE LOW-MAST POLE FOUNDATION:

OVERTURNING MOMENT	M = 23 KIP*FT
DOWNLOAD	N = 1.0 KIP
SHEAR	V = 0.4 KIPS

3. GEOTECHNICAL DESIGN CRITERIA:
   FOUNDATIONS AND RETAINING WALL DESIGN IS IN ACCORDANCE WITH LANDAU ASSOCIATES REPORT DATED JUNE 2021.

4. GENERAL:
   A. THIS DRAWING SHALL BE USED IN CONJUNCTION WITH ELECTRICAL AND CIVIL DRAWINGS FOR BIDDING AND CONSTRUCTION. CONTRACTOR SHALL VERIFY ALL DIMENSIONS AND CONDITIONS FOR COMPATIBILITY PRIOR TO COMMENCING WORK. ANY DISCREPANCIES SHALL BE BROUGHT TO THE ATTENTION OF THE ENGINEER BEFORE PROCEEDING.

   B. LIGHT POLES, ANCHOR BOLTS, NUTS AND BASE PLATES AT EACH LOCATION SHALL BE DESIGNED AND SUPPLIED BY THE POLE MANUFACTURER. CONTRACTOR SHALL COORDINATE SHOP DRAWINGS TO VERIFY COMPATIBILITY AND BRING ANY DISCREPANCIES TO THE ATTENTION OF THE ENGINEER

   C. CONTRACTOR SHALL REFER TO ELECTRICAL DRAWINGS FOR SIZE AND LOCATION OF OPENINGS AND DETAILS NOT SHOWN ON DRAWINGS.

   D. CONTRACTOR SHALL COORDINATE WITH POLE MANUFACTURER FOR ALL REQUIREMENTS OF BASE PLATE AND ANCHOR BOLTS FOR EACH POLE AND VERIFY THAT THE ULTIMATE POLE REACTIONS ARE LESS THEN OR EQUAL TO THOSE SHOWN IN NOTE 2.

   E. CONTRACTOR SHALL BE RESPONSIBLE FOR SAFETY PRECAUTION, ERECTION STABILITY AND TEMPORARY SHORING AS NECESSARY UNTIL PERMANENT SUPPORT AND STIFFENING ARE INSTALLED. CONTRACTOR SHALL PROTECT SURROUNDING BUILDINGS AND EQUIPMENT FROM AUGER DEBRIS DURING SHAFT DRILLING.

   F. ALL EXPOSED CONCRETE SURFACES SHALL BE PAINTED SAFETY YELLOW.

5. DRILLED SHAFT, BASE, AND SPREAD FOOTING MATERIAL:
   CONCRETE STRENGTH AT 28 DAYS (f'c) SHALL BE 5000 PSI. THE REINFORCING STEEL SHALL BE GRADE 60 (fy=60,000 PSI) CONFORMING TO ASTM A-615. THE MINIMUM CONCRETE COVER IS 3 INCHES UNLESS OTHERWISE INDICATED. REFER TO PROJECT SPECIFICATIONS.

6. NON-SHRINK GROUT:
   GROUT SHALL BE NON-SHRINK NON-METALLIC CEMENTITIOUS GROUT CONTAINING NATURAL AGGREGATES DELIVERED TO JOB SITE IN FACTORY PREPACKAGED CONTAINERS REQUIRING ONLY THE ADDITION OF WATER. MINIMUM 28 DAY COMPRESSIVE STRENGTH SHALL BE 10,000 PSI OR PER THE LIGHT POLE MANUFACTURER'S REQUIREMENTS, WHICHEVER IS GREATER. GROUT SHALL BE MIXED, APPLIED AND CURED STRICTLY IN ACCORDANCE WITH THE MANUFACTURER'S PRINTED INSTRUCTIONS.

7. EXCAVATION, SHORING AND BACKFILL:
   A. INSTALL AND SHORE EXCAVATION AS NECESSARY TO PROTECT WORKERS, UTILITIES, PAVEMENT AND OTHER IMPROVEMENTS AGAINST LOSS OF GROUND, ROCKS, GRAVELS OR CAVING EMBANKMENTS. BACKFILL AND COMPACT WITH NATIVE SOIL TO SUBGRADE ELEVATION NO SOONER THAN 3 DAYS AFTER COMPLETION OF FOUNDATION. LOOSE MATERIAL SHALL BE REMOVED FROM THE BOTTOM OF THE SHAFT PRIOR TO CONCRETE PLACEMENT.

   B. MATERIAL REMOVED DURING EXCAVATIONS AND DRILLING MAY BE CONTAMINATED SOIL. SEE SPECIFICATIONS FOR SOIL HANDLING AND DISPOSAL REQUIREMENTS.

   C. SHAFT INSTALLATION SHALL BE PERFORMED UTILIZING TEMPORARY CASING. PERMANENT CASING MAY ALSO BE USED IF APPROVED BY THE ENGINEER PRIOR TO BID. THE HOLE SHALL BE KEPT DRY AND FREE OF MUD PRIOR TO REINFORCING CAGE INSTALLATION AND DURING CONCRETE PLACEMENT. SEE SPECIFICATIONS FOR SOIL DISPOSAL AND DEWATERING REQUIREMENTS.

8. SPECIAL INSPECTIONS:
   A. A QUALIFIED INSPECTOR SHALL PERFORM CONTINUOUS INSPECTION ON THE FOLLOWING SHAFT AND MISCELLANEOUS FOUNDATION ITEMS:
      a. ANCHOR BOLTS AND INSERTS
      b. PREPARATION OF TEST SPECIMENS
      c. CONCRETE PLACEMENT
      d. DRILLED SHAFTS (BY PROJECT GEOTECHNICAL ENGINEER)

   B. A QUALIFIED INSPECTOR SHALL PERFORM PERIODIC INSPECTION ON THE FOLLOWING ITEMS:
      a. CONCRETE REINFORCING PLACEMENT
      b. REINFORCING COUPLING

   C. ALL SOIL GRADING, EXCAVATION, FILL, DRILLED SHAFTS AND FINAL FOUNDATION PREPARATION SHALL BE INSPECTED BY THE PROJECT GEOTECHNICAL ENGINEER.

   D. ALL INSPECTION SHALL CONFORM TO THE REQUIREMENTS OF THE IBC.

9. DRILLED SHAFT FOUNDATION:
   A. CAGE RING TEMPLATE SHALL BE DESIGNED AND SUPPLIED BY THE POLE MANUFACTURER.

   B. ADJUSTMENTS MAY BE MADE IN SPACING OF SHEAR REINFORCEMENT WHERE THERE IS CONFLICT WITH MIDDLE CAGE RING SPACING AS APPROVED BY THE ENGINEER.

   C. THE ENDS OF SHEAR REINFORCEMENT SHALL BE ANCHORED ACCORDING TO ACI 318.

DRILLED SHAFT SCHEDULE

LIGHT POLE	MIN TIP ELEVATION (FT)	TOP OF SHAFT CUT OFF ELEVATION (FT)	MIN PENETRATION INTO BEARING LAYER (FT)
NT-HML-LP-01	-29.89	15.11	45
NT-HML-LP-02	-29.89	15.11	45
NT-HML-LP-03	-29.89	15.11	45
NT-HML-LP-04	-29.29	15.71	40.75
NT-HML-LP-05	-31.04	13.96	45
NT-HML-LP-06	-29.04	15.96	45
NT-HML-LP-07	-29.04	15.96	45
NT-HML-LP-08	-34.04	15.96	46
NT-HML-LP-09	-29.04	15.96	36.25
NT-HML-LP-10	-27.49	17.51	25
NT-HML-LP-11	-26.91	18.09	44.75
NT-HML-LP-12	-26.91	18.09	44.75
NT-HML-LP-13	-26.91	18.09	31.75
NT-HML-LP-14	-31.91	18.09	33.75
NT-HML-LP-15	-27.49	18.03	25

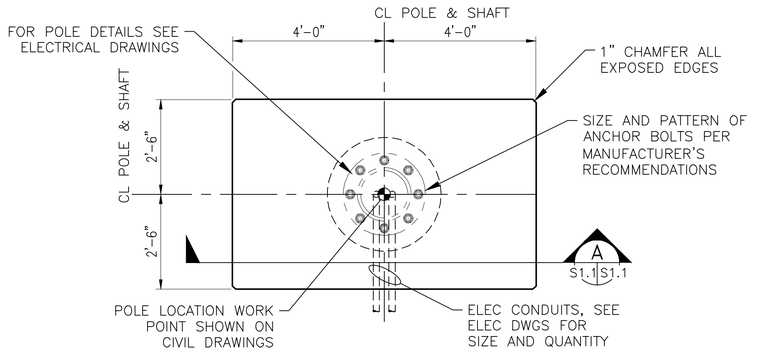

HIGH-MAST POLE FOUNDATION PLAN

SCALE: 1/2" = 1'-0"

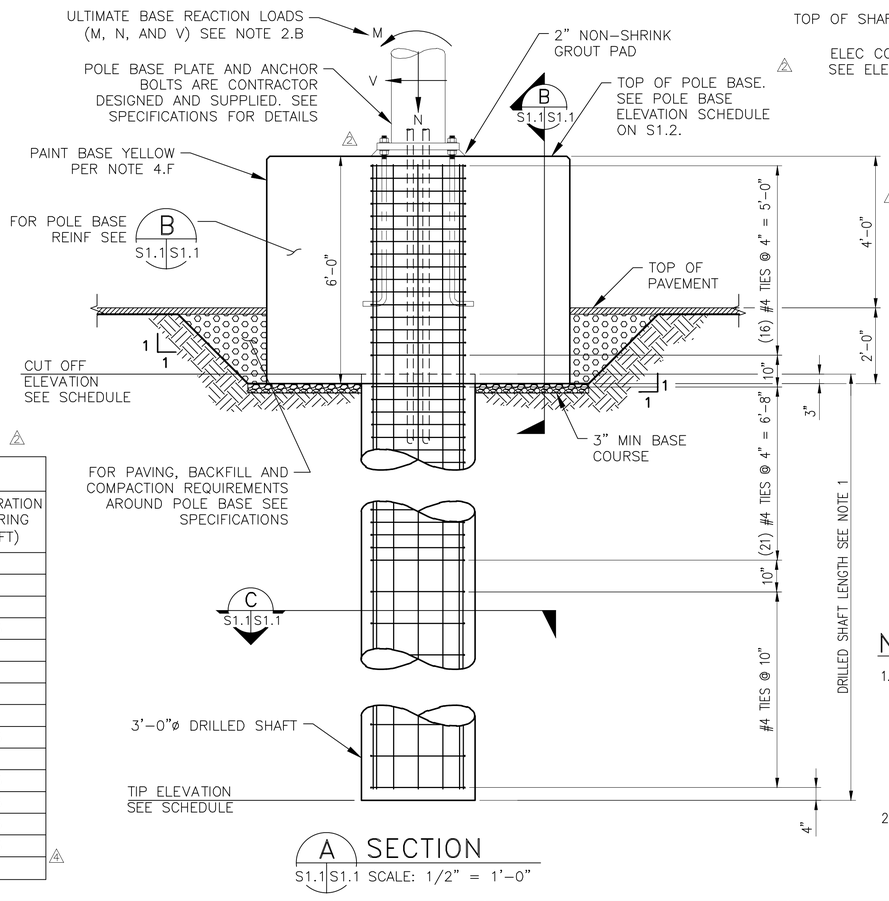

A SECTION

S1.1 S1.1 SCALE: 1/2" = 1'-0"

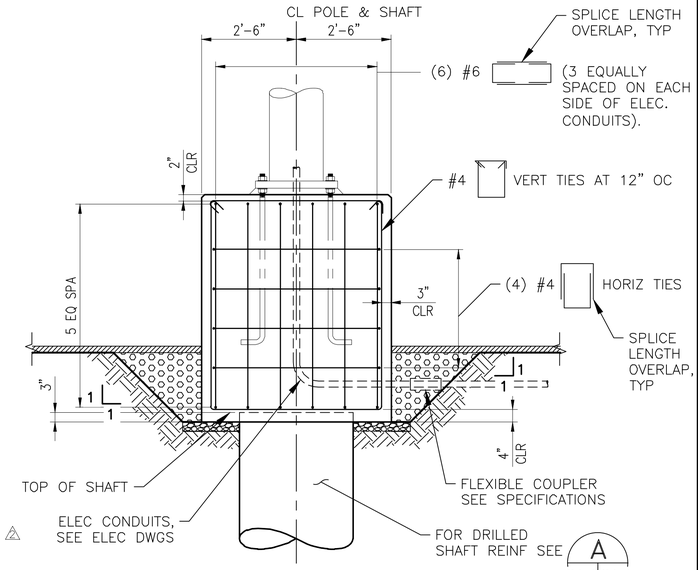

B SECTION

S1.1 S1.1 SCALE: 1/2" = 1'-0"

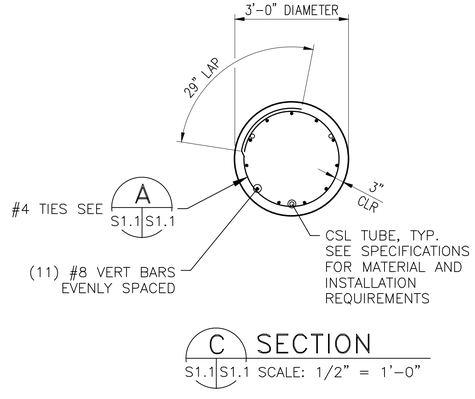

C SECTION

S1.1 S1.1 SCALE: 1/2" = 1'-0"

NOTE

1. MINIMUM TIP ELEVATION SHALL BE PER THE DRILLED SHAFT SCHEDULE SHOWN ON THIS SHEET AND THE PROJECT SPECIFICATIONS. ACTUAL DEPTH TO BE DETERMINED BY GEOTECHNICAL ENGINEER IN FIELD DURING INSTALLATION. CONTRACTOR SHALL USE TEMPORARY CASING FOR ALL SHAFT INSTALLATIONS. SEE NOTE 7.C.
2. EXISTING CONCRETE AND H-PILE FOUNDATIONS MAY BE ENCOUNTERED DURING SHAFT INSTALLATION AND MAY NEED TO BE REMOVED PRIOR TO SHAFT INSTALLATION. SEE PROJECT SPECIFICATIONS FOR DETAILS.

CALL 48 HOURS BEFORE YOU DIG DIAL 811

VERT DATUM: NAVD 88
CONV TO MLLW = NAVD88+2.03
HORZ DATUM: NAD 83/91

IF SHEET IS LESS THAN 22x34 REDUCE SCALE ACCORDINGLY

Port of EVERETT
P.O. BOX 538
EVERETT, WA 98206
(425) 259-3164

kpff
1601 5th Avenue, Suite 1300
Seattle, Washington 98101
(206) 382-0600 Fax (206) 382-0500
PROJECT NO. 1600120

NO.	DATE	BY	REVISION
5	07/05/2023	NW	AS-BUILT
4	02/10/2022	NW	UPDATED POLE BASE ELEV SCHED.
3	02/04/2022	NW	ADDED NEW LP15
2	01/13/2022	NW	2-INCH TO 9-INCH PVMT
1	06/21/2021	NW	ISSUED FOR BID
0	05/07/2021	NW	FOR CITY REVIEW

RECORD CONDITIONS ILLUSTRATED IN THESE PLANS REFLECT INFORMATION PROVIDED BY THE CONTRACTOR. RECORD CONDITIONS WERE NOT VERIFIED BY ENGINEER.

PROJECT ENGINEER: N. WATSON	SCALE: AS SHOWN
DESIGNED BY: K. PROUGH	DATE: 05/07/2021
DRAWN BY: T. LEMONS	CHECKED BY: S. STORY
APPROVED BY:	

PORT OF EVERETT

NORTON TERMINAL DEVELOPMENT & MTCA 3RD INTERIM ACTION
STRUCTURAL NOTES & HIGH-MAST LIGHT POLE FDN DETAILS

DWG. NO. **S1.1**
CIP NO. 1-8-900-05
PROJECT NO. MT-NT-2021-02.2
SHEET NO. 99 OF 150

AS-BUILTS

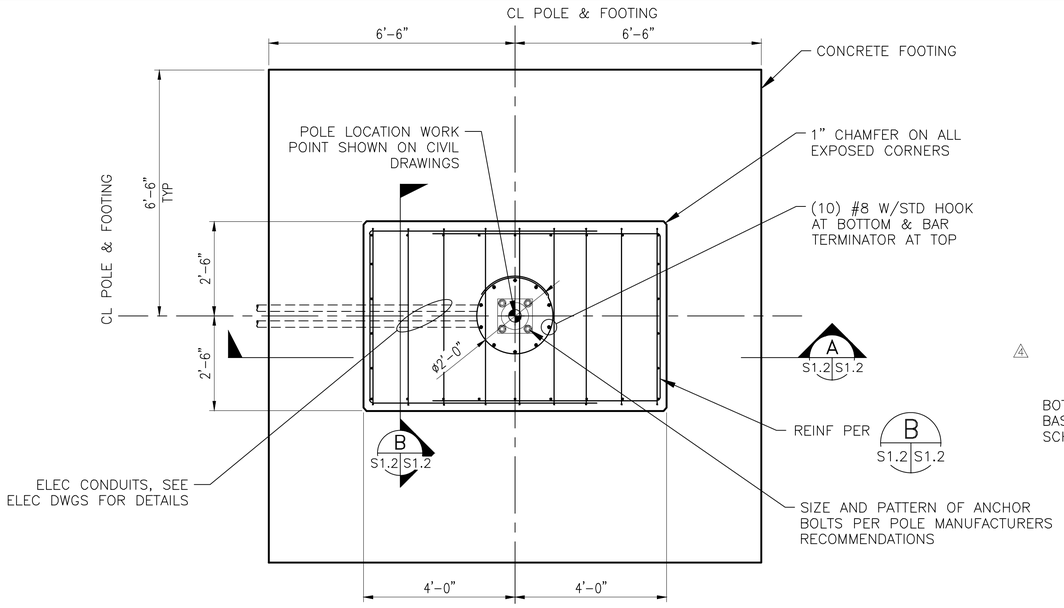

LOW-MAST POLE FOOTING PLAN

SCALE: 1/2" = 1'-0"

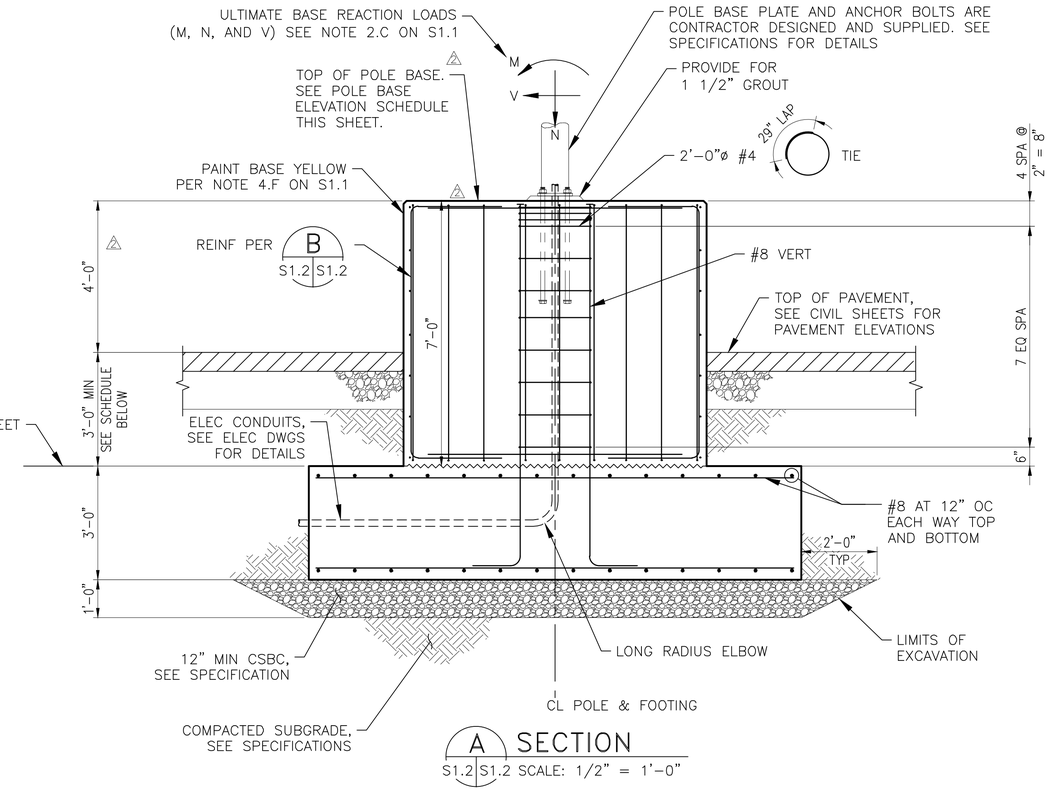

A SECTION

S1.2 S1.2 SCALE: 1/2" = 1'-0"

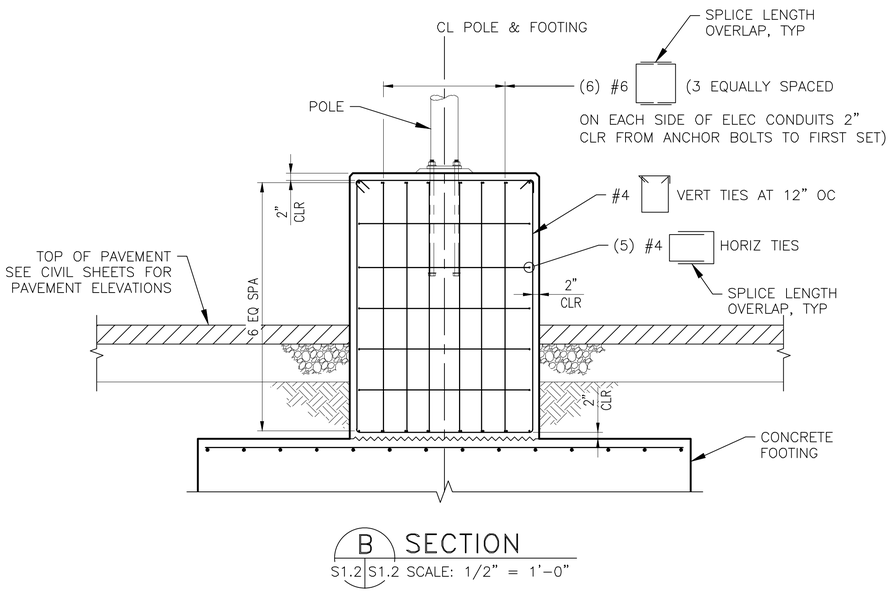

B SECTION

S1.2 S1.2 SCALE: 1/2" = 1'-0"

POLE BASE ELEVATION SCHEDULE

POLE I.D.	FINISHED GRADE ELEVATION (FT) NAVD88	BOTTOM OF POLE BASE ELEVATION (FT) NAVD88	TOP OF POLE BASE ELEVATION (FT) NAVD88
NT-HML-LP-01	16.86	14.86	20.86
NT-HML-LP-02	16.86	14.86	20.86
NT-HML-LP-03	16.86	14.86	20.86
NT-HML-LP-04	17.46	15.46	21.46
NT-HML-LP-05	15.71	13.71	19.71
NT-HML-LP-06	17.71	15.71	21.71
NT-HML-LP-07	17.71	15.71	21.71
NT-HML-LP-08	17.71	15.71	21.71
NT-HML-LP-09	17.71	15.71	21.71
NT-HML-LP-10	19.26	17.26	23.26
NT-HML-LP-11	19.84	17.84	23.84
NT-HML-LP-12	19.84	17.84	23.84
NT-HML-LP-13	19.84	17.84	23.84
NT-HML-LP-14	19.84	17.84	23.84
NT-HML-LP-15	19.78	17.78	23.78
NT-LP-20	15.04	12.04	19.04
NT-LP-21	19.82	16.82	23.82

POLE BASE ELEVATION SCHEDULE (CONTINUATION)

POLE I.D.	FINISHED GRADE ELEVATION (FT) NAVD88	BOTTOM OF POLE BASE ELEVATION (FT) NAVD88	TOP OF POLE BASE ELEVATION (FT) NAVD88
NT-LP-30	17.47	14.47	21.47
NT-LP-31	17.54	14.02	21.54
NT-LP-32	17.94	14.02	21.94
NT-LP-33	19.17	16.02	23.17 ⚠4
NT-LP-34	19.40	16.02	23.41
NT-CP-01	18.00	15.00	22.00
NT-CP-02	18.50	15.50	22.50
NT-CP-03	16.97	13.97	20.97
NT-CP-04	NT-CP-04 IS REPLACED BY NT-LP-31		
NT-CP-05	NT-CP-05 IS REPLACED BY NT-LP-32		
NT-CP-06	NT-CP-06 IS REPLACED BY NT-LP-34		
NT-CP-07	20.50	17.50	24.50
NT-CP-08	19.72	16.72	23.72
NT-CP-09	18.28	15.28	22.28
NT-CP-10	13.27	10.27	17.27
NT-CP-11	17.79	14.79	21.79

⚠4 ⚠5

SEE LIGHT POLE SCHEDULE SHEET E7.2 FOR NORTHING & EASTING COORDINATES OF POLE LOCATION AND POLE HEIGHT.

CALL 48 HOURS BEFORE YOU DIG DIAL 811

VERT DATUM: NAVD 88
CONV TO MLLW = NAVD88+2.03
HORZ DATUM: NAD 83/91

IF SHEET IS LESS THAN 22x34 REDUCE SCALE ACCORDINGLY

Port of EVERETT
P.O. BOX 538
EVERETT, WA 98206
(425) 259-3164

kpff
1601 5th Avenue, Suite 1300
Seattle, Washington 98101
(206) 382-0600 Fax (206) 382-0500
PROJECT NO. 1600120

NO.	DATE	BY	REVISION
⚠5	07/05/2023	NW	AS-BUILT
⚠4	04/08/2022	NW	MARITIME TENANT SITE DEVELOPMENT
⚠3	02/10/2022	NW	UPDATED POLE BASE ELEV SCHED.
⚠2	01/13/2022	NW	REVISED PER RFI042
⚠1	06/21/2021	NW	ISSUED FOR BID
⚠0	05/07/2021	NW	FOR CITY REVIEW

RECORD CONDITIONS ILLUSTRATED IN THESE PLANS REFLECT INFORMATION PROVIDED BY THE CONTRACTOR. RECORD CONDITIONS WERE NOT VERIFIED BY ENGINEER.

PROJECT ENGINEER: N. WATSON	SCALE: AS SHOWN
DESIGNED BY: K. PROUGH	DATE: 05/07/2021
DRAWN BY: T. LEMONS	CHECKED BY: S. STORY
APPROVED BY:	

PORT OF EVERETT

NORTON TERMINAL DEVELOPMENT & MTCA 3RD INTERIM ACTION LOW-MAST LIGHT & COMM POLE FOUNDATION

DWG. NO. **S1.2**
CIP NO. 1-8-900-05
PROJECT NO. MT-NT-2021-02.2
SHEET NO. 100 OF 150

AS-BUILTS

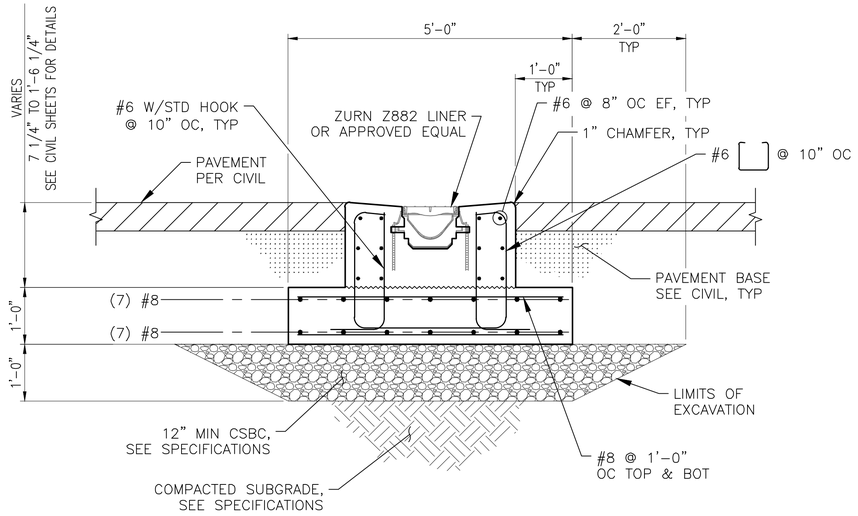

B CONCRETE TRENCH DRAIN SECTION

C4.1 S1.3 SCALE: 3/4" = 1'-0"

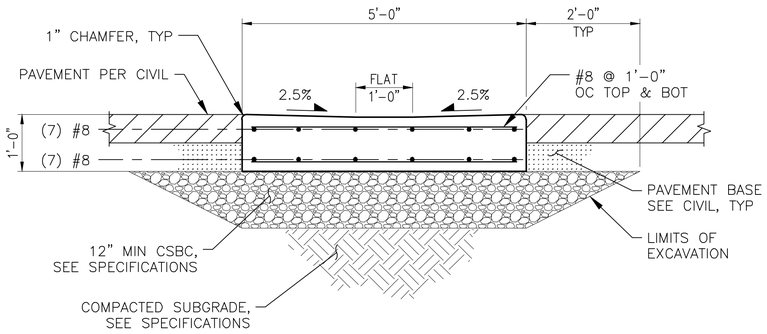

C CONCRETE GUTTER SECTION

C4.1 S1.3 SCALE: 3/4" = 1'-0"

SCHEDULE OF MINIMUM LAP SPLICE LENGTHS		
BAR SIZE	fc = 5000 PSI	
	OTHER STRAIGHT BARS	TOP BARS
#4	1'-10"	2'-5"
#6	2'-9"	3'-7"
#8	4'-7"	6'-0"

NOTES

1. LENGTHS ARE BASED ON CLASS "B" CASE 1 SPLICES (MAX OF 50% OF BARS SPLICED AT ONE LOCATION.)
2. TOP BARS ARE DEFINED AS ANY HORIZONTAL BAR PLACED SUCH THAT MORE THAN 12" OF FRESH CONCRETE IS CAST IN THE MEMBER BELOW THE BAR IN ANY SINGLE POUR.
3. STAGGER ALL LAP SPLICES IN ADJACENT BARS BY ONE LAP LENGTH + 1'-0" MINIMUM.
4. NO MORE THAN 50% OF THE REINFORCING BARS IN ANY LAYER SHALL BE SPLICED AT ONE LOCATION.
5. DEVELOPMENT & SPLICE LENGTHS ARE APPLICABLE FOR TENSION OR COMPRESSION.
6. FOR NON-CONTACT LAP SPLICES THE TRANSVERSE CENTER-TO-CENTER SPACING OF SPLICED BARS SHALL NOT EXCEED THE LESSER OF ONE-FIFTH THE REQUIRED LAP SPLICE LENGTH AND 6IN.

NOTES

1. CONCRETE COMPRESSIVE STRENGTH AT 28 DAYS (f'c) SHALL BE 5000 PSI FOR THE CONCRETE TRENCH DRAIN, CONCRETE GUTTER AND GUARD SHACK FOUNDATION

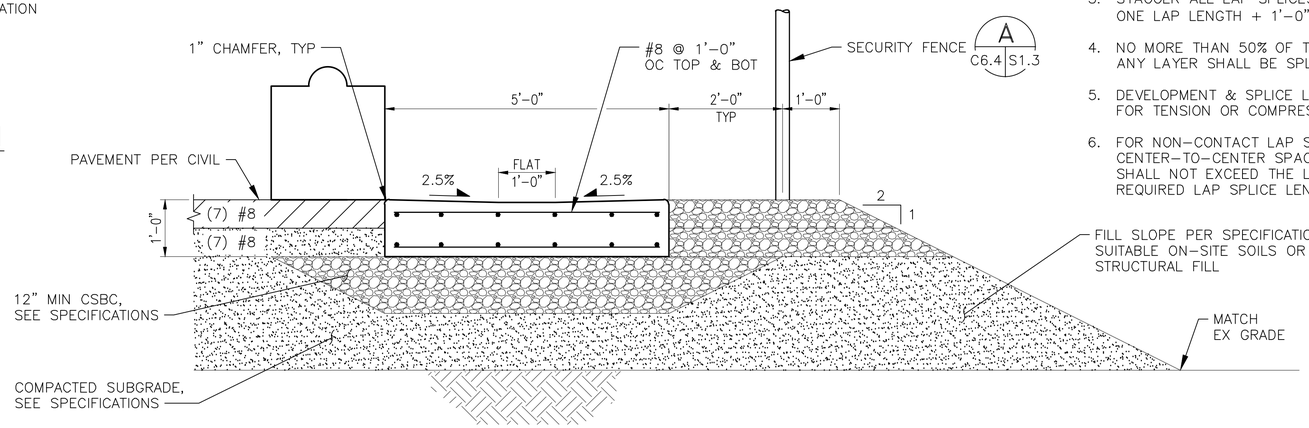

E CONCRETE GUTTER SECTION

C3.8, C4.6 S1.3 SCALE: 3/4" = 1'-0"

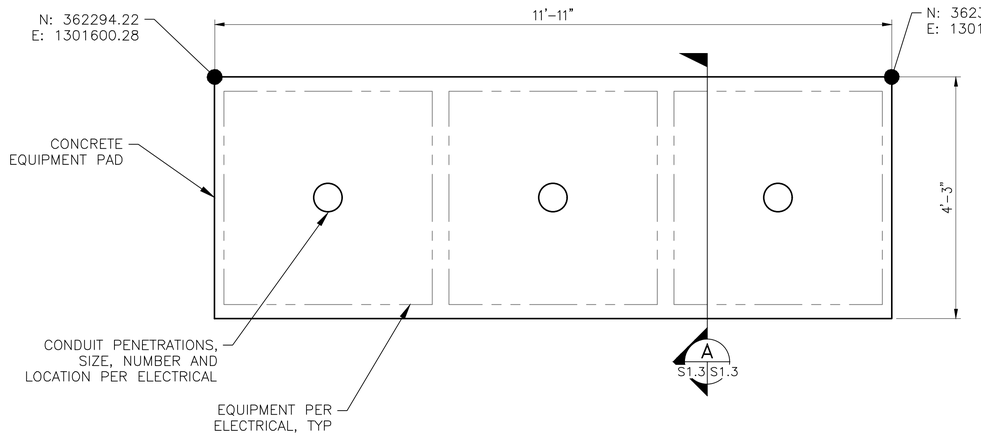

D ELECTRICAL EQUIPMENT PAD DETAIL

C3.8,E5.1 S1.3 SCALE: 3/4" = 1'-0"

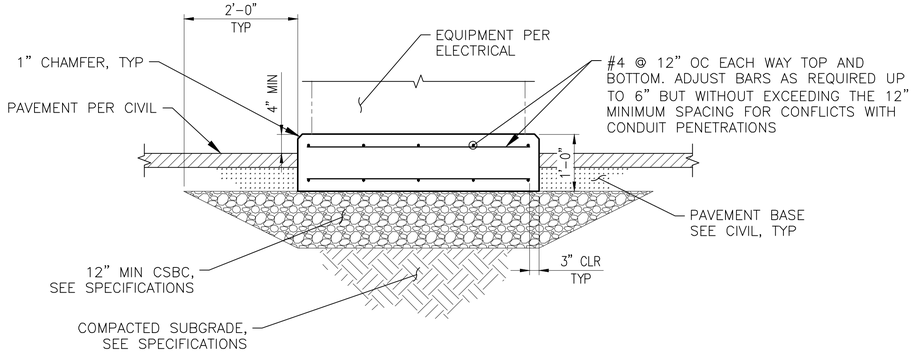

A EQUIPMENT PAD SECTION

S1.3 S1.3 SCALE: 3/4" = 1'-0"

CALL 48 HOURS BEFORE YOU DIG DIAL 811

VERT DATUM: NAVD 88
CONV TO MLLW = NAVD88+2.03
HORZ DATUM: NAD 83/91

IF SHEET IS LESS THAN 22x34 REDUCE SCALE ACCORDINGLY

Port of EVERETT
P.O. BOX 538
EVERETT, WA 98206
(425) 259-3164

kpff
1601 5th Avenue, Suite 1300
Seattle, Washington 98101
(206) 382-0600 Fax (206) 382-0500
PROJECT NO. 1600120

NO.	DATE	BY	REVISION
4	07/05/2023	NW	AS-BUILT
3	12/09/2021	NW	DELETE ECOLOGY BLOCK WALL, ADD EX WHS GRAVEL PAD CONTOURS AND UPDATE FINAL GRADES & PAVEMENT COORDINATES
2	09/30/2021	AB	CLARIFY LAP SPLICE PER RFI 018
1	06/21/2021	NW	ISSUED FOR BID
0	05/07/2021	NW	FOR CITY REVIEW

RECORD CONDITIONS ILLUSTRATED IN THESE PLANS REFLECT INFORMATION PROVIDED BY THE CONTRACTOR. RECORD CONDITIONS WERE NOT VERIFIED BY ENGINEER.

PROJECT ENGINEER: N. WATSON	SCALE: AS SHOWN
DESIGNED BY: K. PROUGH	DATE: 05/07/2021
DRAWN BY: T. LEMONS	CHECKED BY: S. STORY
APPROVED BY:	

PORT OF EVERETT

NORTON TERMINAL DEVELOPMENT & MTCA 3RD INTERIM ACTION TRENCH DRAIN AND EQUIPMENT PAD DETAILS

DWG. NO. **S1.3**

CIP NO. 1-8-900-05

PROJECT NO. MT-NT-2021-02.2

SHEET NO. 101 OF 150

AS-BUILTS

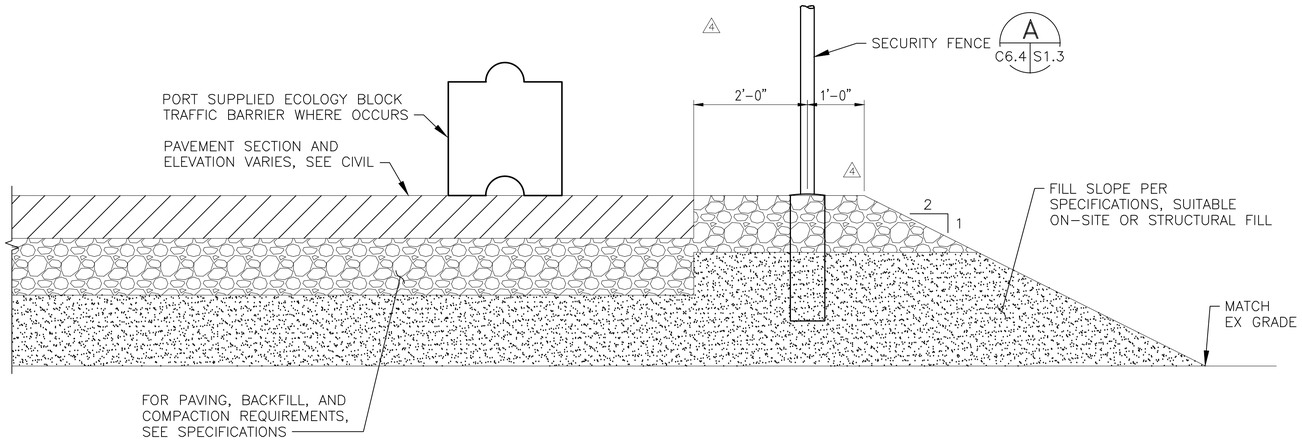

A FILL SLOPE SECTION
C3.8, C4.6 S1.4 SCALE: 3/4" = 1'-0"

SECTION B NOT USED

B SECTION
S1.4 S1.4 SCALE: 1 1/2" = 1'-0"

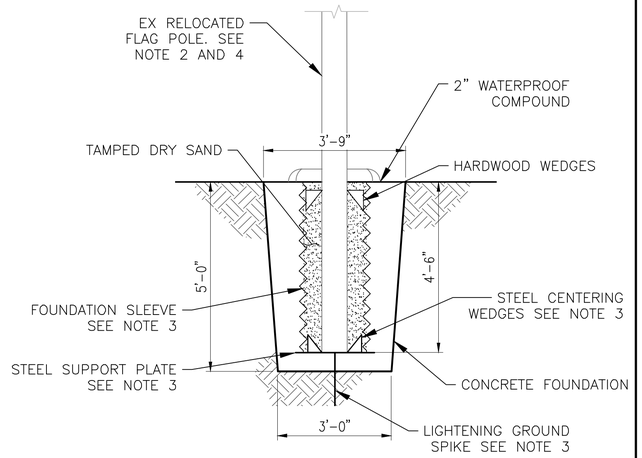

2 FLAG POLE FOUNDATION
C2.2 S1.4 SCALE: 1/2" = 1'-0"

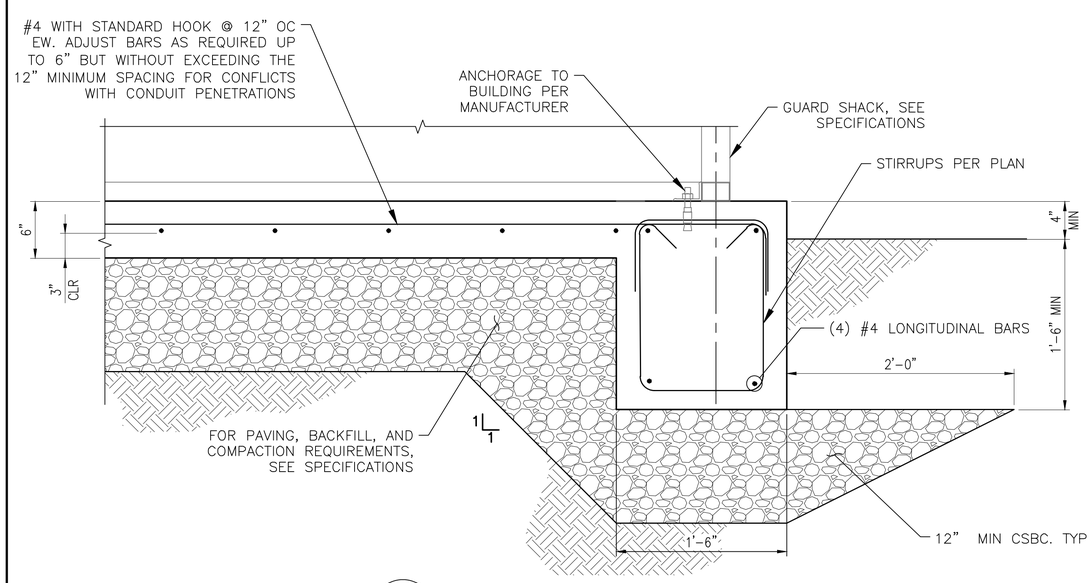

C SECTION
S1.4 S1.4 SCALE: 1 1/2" = 1'-0"

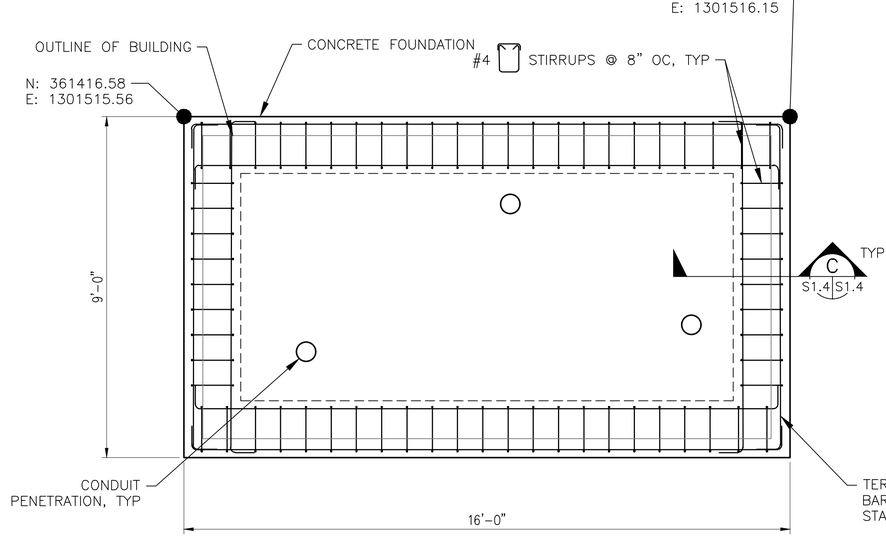

1 GUARD SHACK FOUNDATION PLAN
S1.4 S1.4 SCALE: 1/2" = 1'-0"

NOTES

1. NOT USED
2. EXISTING FLAG POLE TO BE RELOCATED PER C2.4 EXISTING FLAG POLE FOUNDATION IS UNKNOWN. IF POLE IS EMBEDDED IN GROUT, CUT OFF AT BASE, OTHERWISE REMOVE POLE AND INSTALL PER 2 S1.4 S1.4
3. FOUNDATION SLEEVE, STEEL CENTERING WEDGES, STEEL SUPPORT PLATE, AND LIGHTENING GROUND SPIKE SHALL BE PROVIDED IN A FLAG POLE FOUNDATION KIT FROM CONCORD AMERICAN FLAGPOLE OR APPROVED EQUAL.
4. CONTRACTOR SHALL VERIFY FLAG POLE HEIGHT DOES NOT EXCEED 40 FEET. IF THE FLAG POLE IS LARGER THAN 40 FEET, NOTIFY THE ENGINEER IMMEDIATELY.
5. NOT USED

CALL 48 HOURS BEFORE YOU DIG DIAL 811

VERT DATUM: NAVD 88
CONV TO MLLW = NAVD88+2.03
HORZ DATUM: NAD 83/91

IF SHEET IS LESS THAN 22x34 REDUCE SCALE ACCORDINGLY

Port of EVERETT
P.O. BOX 538
EVERETT, WA 98206
(425) 259-3164

kpff
1601 5th Avenue, Suite 1300
Seattle, Washington 98101
(206) 382-0600 Fax (206) 382-0500
PROJECT NO. 1600120

NO.	DATE	BY	REVISION
4	04/08/2022	NW	MARITIME TENANT SITE DEVELOPMENT
3	12/09/2021	NW	DELETE ECOLOGY BLOCK WALL, ADD EX WHS GRAVEL PAD CONTOURS AND UPDATE FINAL GRADES & PAVEMENT COORDINATES
2	11/11/2021	NW	REVISED PER RFI030
1	07/06/2021	AB	ADDENDUM 1
0	06/21/2021	NW	ISSUED FOR BID
A	07/05/2023	NW	AS-BUILT

RECORD CONDITIONS ILLUSTRATED IN THESE PLANS REFLECT INFORMATION PROVIDED BY THE CONTRACTOR. RECORD CONDITIONS WERE NOT VERIFIED BY ENGINEER.

PROJECT ENGINEER: N. WATSON	SCALE: AS SHOWN
DESIGNED BY: K. PROUGH	DATE: 06/21/2021
DRAWN BY: T. LEMONS	CHECKED BY: S. STORY
APPROVED BY:	

PORT OF EVERETT

NORTON TERMINAL DEVELOPMENT & MTCA 3RD INTERIM ACTION SECTIONS

DWG. NO. **S1.4**
CIP NO. 1-8-900-05
PROJECT NO. MT-NT-2021-02.2
SHEET NO. 102 OF 150

AS-BUILTS

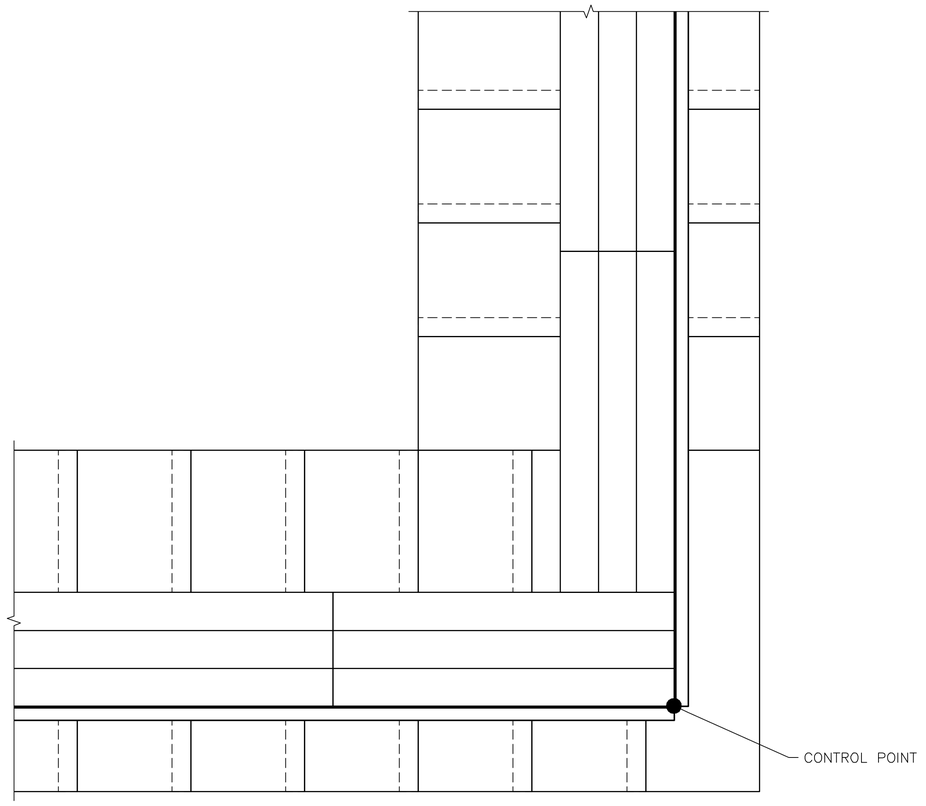

ECO BLOCK CORNER

SCALE: 3/4" = 1'-0"

CALL 48 HOURS BEFORE YOU DIG DIAL 811

VERT DATUM: NAVD 88
CONV TO MLLW = NAVD88+2.03
HORZ DATUM: NAD 83/91

IF SHEET IS LESS THAN 22x34
REDUCE SCALE ACCORDINGLY

Port of EVERETT
P.O. BOX 538
EVERETT, WA 98206
(425) 259-3164

kpff
1601 5th Avenue, Suite 1300
Seattle, Washington 98101
(206) 382-0600 Fax (206) 382-0500
PROJECT NO. 1600120

NO.	DATE	BY	REVISION
1	07/05/2023	NW	AS-BUILT

RECORD CONDITIONS ILLUSTRATED IN THESE PLANS REFLECT INFORMATION PROVIDED BY THE CONTRACTOR. RECORD CONDITIONS WERE NOT VERIFIED BY ENGINEER.

PROJECT ENGINEER: N. WATSON	SCALE: AS SHOWN
DESIGNED BY: K. PROUGH	DATE: 06/21/2021
DRAWN BY: T. LEMONS	CHECKED BY: S. STORY
APPROVED BY:	

PORT OF EVERETT

NORTON TERMINAL DEVELOPMENT & MTCA 3RD INTERIM ACTION RFI

DWG. NO. **S1.4A**

CIP NO. 1-8-900-05

PROJECT NO. MT-NT-2021-02.2

SHEET NO. 102A OF 150

AS-BUILTS

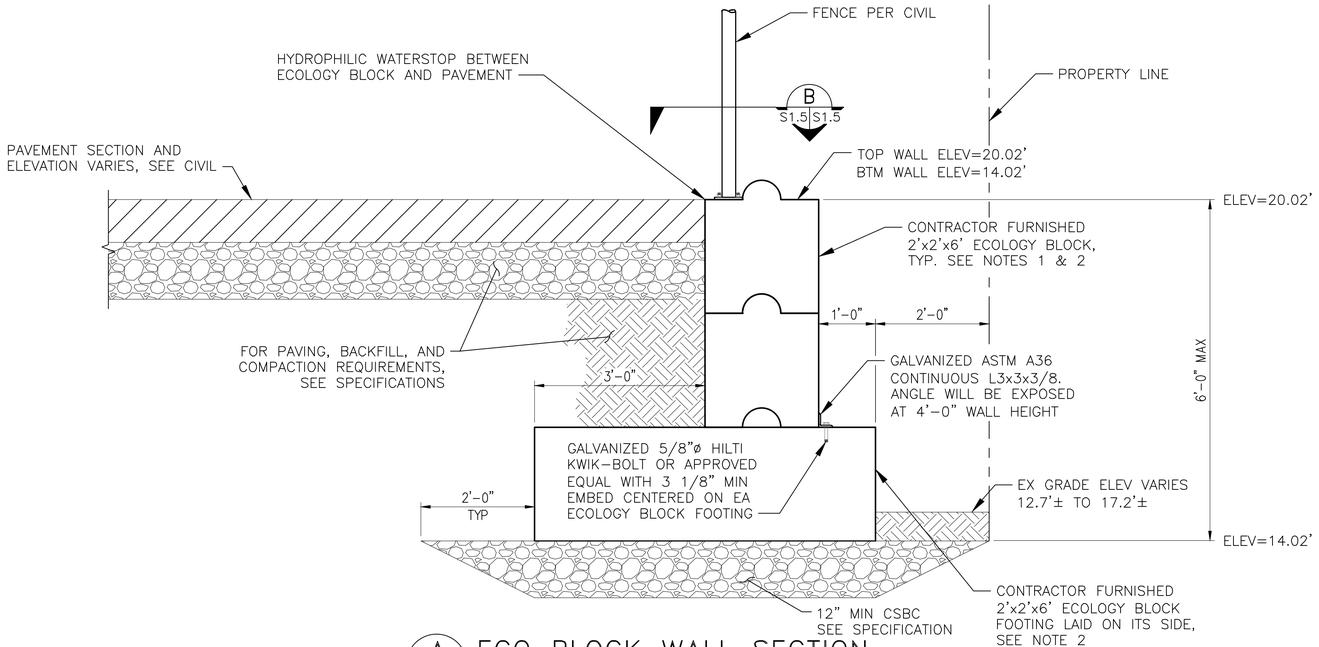

A ECO BLOCK WALL SECTION

C3.7, C3.10 | S1.5 SCALE: 3/4" = 1'-0"

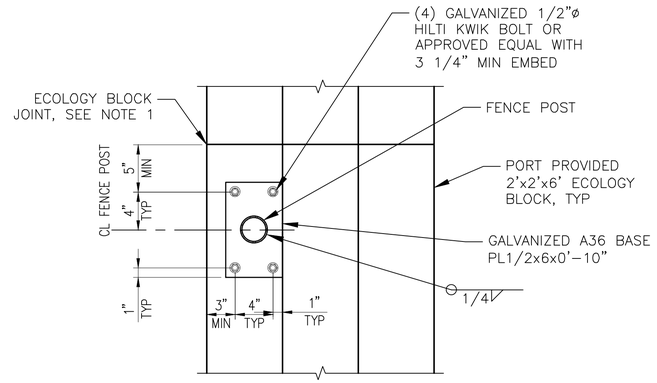

B SECTION

S1.5 | S1.5 SCALE: 1 1/2" = 1'-0"

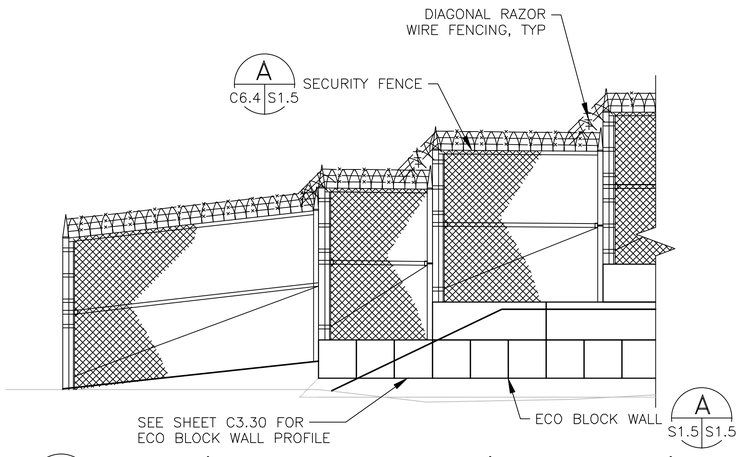

1 FENCE/WALL TRANSITION (NW CORNER)

C3.7 | S1.5 NTS

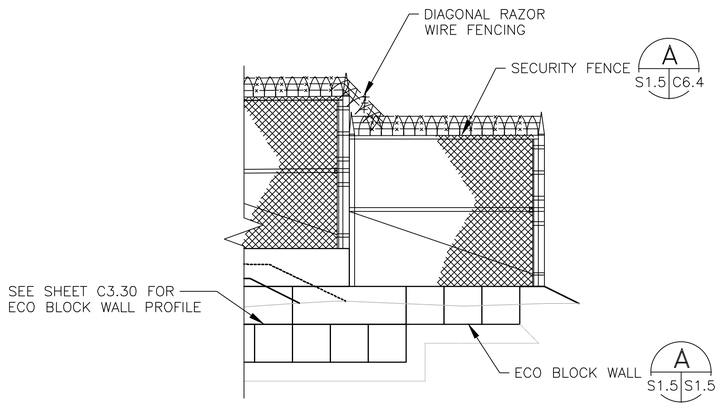

2 FENCE/WALL TRANSITION (NE CORNER)

C3.10 | S1.5 NTS

NOTES

1. STAGGER JOINTS BETWEEN TOP AND BOTTOM ROW OF ECOLOGY BLOCKS AT 3'-0".
2. CONCRETE ECOLOGY BLOCKS FOR THE CONCRETE BLOCK WALL SHALL BE FURNISHED BY THE CONTRACTOR. BLOCKS SHALL BE IN NEW CONDITION FREE OF CRACKS, SPALLS AND OTHER DAMAGE. BLOCKS SHALL HAVE A MINIMUM WEIGHT OF 3600 LBS.

CALL 48 HOURS BEFORE YOU DIG DIAL 811

VERT DATUM: NAVD 88
CONV TO MLLW = NAVD88+2.03
HORZ DATUM: NAD 83/91

IF SHEET IS LESS THAN 22x34 REDUCE SCALE ACCORDINGLY

Port of EVERETT
P.O. BOX 538
EVERETT, WA 98206
(425) 259-3164

kpff
1601 5th Avenue, Suite 1300
Seattle, Washington 98101
(206) 382-0600 Fax (206) 382-0500
PROJECT NO. 1600120

NO.	DATE	BY	REVISION
1	07/05/2023	NW	AS-BUILT
0	04/08/2022	NW	MARITIME TENANT SITE DEVELOPMENT

NO.	DATE	BY	REVISION

RECORD CONDITIONS ILLUSTRATED IN THESE PLANS REFLECT INFORMATION PROVIDED BY THE CONTRACTOR. RECORD CONDITIONS WERE NOT VERIFIED BY ENGINEER.

PROJECT ENGINEER: N. WATSON	SCALE: AS SHOWN
DESIGNED BY: K. PROUGH	DATE: 06/21/2021
DRAWN BY: T. LEMONS	CHECKED BY: S. STORY
APPROVED BY:	

PORT OF EVERETT

NORTON TERMINAL DEVELOPMENT & MTCA 3RD INTERIM ACTION
ECO BLOCK WALL SECTIONS & DETAILS

DWG. NO. **S1.5**
CIP NO. 1-8-900-05
PROJECT NO. MT-NT-2021-02.2
SHEET NO. 102A OF 150

AS-BUILTS

POWER

FOR RECEPTACLES IN THIS SECTION, WP DENOTES WEATHERPROOF WHILE-IN-USE BOX AND GFI RECEPTACLE. FOR ALL OTHER DEVICES, WP DENOTES NEMA 3R ENCLOSURE UNO.

- CONVENIENCE RECEPTACLE – DUPLEX UNO, MOUNTING HEIGHT TO BE 18" AFF UNO (3 = CIRCUIT NUMBER)
- CONVENIENCE RECEPTACLE – FOURPLEX
- SIMPLEX RECEPTACLE WITH BRASS FLOORPLATE AND SCREW CAP
- DUPLEX RECEPTACLE – FLUSH MOUNTED IN FLOOR
- FOURPLEX RECEPTACLE – FLUSH MOUNTED IN FLOOR
- JUNCTION BOX
- SPECIAL PURPOSE RECEPTACLE, DESIGNATION AND AMPERAGE AS INDICATED, OR SHOWN IN SCHEDULE, SEE SPECIFICATIONS
- CONNECTION POINT TO EQUIPMENT SPECIFIED FURNISHED AND INSTALLED BY OTHER TRADES. RACEWAY, CONDUCTOR AND CONNECTION BY ELECTRICAL CONTRACTOR.
- NONFUSED DISCONNECT SWITCH. SIZE 30A UNLESS INDICATED OTHERWISE, 3 POLE UNO
- FUSED DISCONNECT SWITCH. SIZE INDICATED, (60 = SWITCH RATING, 40 = FUSE RATING) 3 POLE UNO
- COMBINATION MOTOR STARTER AND DISCONNECT, SIZE PER MANUFACTURER REQUIREMENTS, NUMBER OF POLES AS REQUIRED
- PANEL
- TRANSFORMER
- HANDHOLE, SIZE AS NOTED
- THERMOSTAT
- GROUND ROD
- GENERATOR
- GROUND TEST WELL

LIGHTING

SEE LUMINAIRE SCHEDULE FOR FURTHER INFORMATION.

- POLE MOUNTED LUMINAIRE
- WALL SWITCH, SYMBOL INDICATED WALL SWITCH LOCATION. SEE LIGHTING CONTROL SCHEDULE FOR WALL SWITCH TYPE AND FEATURES.
- REMOTE LED DRIVER
- REMOTE 0–10V LIGHTING CONTROLLER
- PHOTOCELL CONTACTOR RELAY

ONE-LINE DIAGRAM

ALL DEVICES THIS SECTION TO BE 3 POLE UNO, RATINGS AS INDICATED.

- TRANSFORMER, SECONDARY VOLTAGE. PHASE AND RATING INDICATED AS APPLICABLE.
- GROUND
- FUSE (400)
- CIRCUIT BREAKER (400)
- SWITCH (400)
- REVENUE GRADE METER AND ENCLOSURE
- CURRENT TRANSFORMER
- TRANSFER SWITCH
- MOTOR CONNECTION
- FEEDER TAG – SEE FEEDER SCHEDULE FOR FURTHER INFORMATION

CONDUIT AND RACEWAY

ALL CONDUCTORS INCLUDING NEUTRAL AND GROUND SHALL BE SIZED TO MATCH OR EXCEED OVERCURRENT PROTECTION DEVICE PER NEC, 2#12, 1#12G MINIMUM UNO. ALL CONDUITS SHALL BE SIZED TO MATCH OR EXCEED QUANTITIES AND SIZES OF CONDUCTORS PER NEC, 3/4" MINIMUM UNO.

- HOME RUN, DESTINATION SHOWN, CIRCUIT NUMBERS PRECEDED BY PANEL NAME, SEE PANEL SCHEDULE, ARROW DOES NOT ALWAYS POINT TO PANEL. (P1–1,3)
- CONDUIT WITH MEDIUM VOLTAGE CONDUCTORS (U)
- CONDUIT WITH LINE VOLTAGE CONDUCTORS (P)
- CONDUIT WITH LOW VOLTAGE CONDUCTORS (T)
- CONDUIT DOWN
- CONDUIT UP
- CONDUIT STUBBED AND CAPPED AS SHOWN
- CONDUIT CONTINUED
- EXPOSED FLEX CONDUIT

ABBREVIATIONS

A	AMMETER, AMPERE
AC	ABOVE COUNTER
AF	AMPERE FRAME
AFF	ABOVE FINISHED FLOOR
AFG	ABOVE FINISHED GRADE
AHJ	AUTHORITY HAVING JURISDICTION
AIC	AMPERE INTERRUPTING CAPACITY
AL	ALUMINUM
ANN	ANNUNCIATOR
ASYM	ASYMMETRICAL
AT	AMPERE TRIP
ATS	AUTOMATIC TRANSFER SWITCH
AUX	AUXILIARY
BLDG	BUILDING
BRKR	BREAKER
C	CONDUIT
CATV	CABLE TELEVISION
CB	CIRCUIT BREAKER
CCTV	CLOSED CIRCUIT TELEVISION
CDF	CONTROLLED DENSITY FILL
CKT	CIRCUIT
℄	CENTER LINE
CL	CURRENT LIMITING
CLF	CURRENT LIMITING FUSE
CLR	CLEAR
CM	CIRCULAR MILS
COMM	COMMUNICATIONS
CONC	CONCRETE
CONST	CONSTRUCTION
CONT	CONTINUED
CPT	CONTROL POWER TRANSFORMER
CR	CONTROL RELAY
CT	CURRENT TRANSFORMER
CTRL	CONTROL
CU	COPPER
DDC	DEDICATED DIALER CIRCUIT
DEM	DEMAND
DEMO	DEMOLITION
DIM	DIMENSION
DISC	DISCONNECT
DN	DOWN
DS	DISCONNECT SWITCH
DWG	DRAWING
DZ	DAYLIGHT ZONE
E	EMPTY, EXISTING
EF	EXHAUST FAN
ELEC	ELECTRICAL
ELEV	ELEVATION, ELEVATOR
EMT	ELECTRICAL METALLIC TUBING
EXIST	EXISTING
F,FU	FUSE
FACP	FIRE ALARM CONTROL PANEL
FBOIC	FURNISHED BY OTHERS INSTALLED BY CONTRACTOR
FLUOR	FLUORESCENT
FSA	FIRE SYSTEM ANNUNCIATOR
FT	FOOT
FTB	FLUIDIZED THERMAL BACKFILL
FVNR	FULL VOLTAGE NON–REVERSING
G,GND	GROUND
GA	GAUGE
GALV	GALVANIZED
GFI	GROUND FAULT CIRCUIT INTERRUPTER
GFP	EQUIPMENT GROUND FAULT PROTECTION
GRC,GRS	GALVANIZED RIGID STEEL
HH	HANDHOLE
HP	HORSEPOWER
HPS	HIGH PRESSURE SODIUM
HVAC	HEATING, VENTILATION, AIR CONDITIONING
HWH	HOT WATER HEATER
IC	INTERRUPTING CAPACITY
JB,J–BOX	JUNCTION BOX
K	KELVIN
KCM	THOUSAND CIRCULAR MILS
KV	KILOVOLT
KVA	KILOVOLT AMPERE(S)
KW	KILOWATT(S)
LC	LIGHTING CONTACTOR
LED	LIGHT EMITTING DIODE
M	MAGNETIC COIL
MCB	MAIN CIRCUIT BREAKER
MCC	MOTOR CONTROL CENTER
MH	MANHOLE, METAL HALIDE
MIN	MINIMUM
MISC	MISCELLANEOUS
MLO	MAIN LUGS ONLY
MOV	METAL OXIDE VARISTOR
MPZ	COMBINATION TRANSFORMER AND PANELBOARD
MTD	MOUNTED
MTG	MOUNTING
MTS	MANUAL TRANSFER SWITCH
N	NEUTRAL, NEW
NC	NORMALLY CLOSED
NEUT	NEUTRAL
NO	NORMALLY OPEN, NUMBER
NIC	NOT IN CONTRACT
NP	NAMEPLATE
ø	PHASE, DIAMETER
P	PANEL, POLE
PB	PUSH–BUTTON
PF	POWER FACTOR
PH	PHASE
PIR	PASSIVE INFRARED
PIV	POST INDICATOR VALVE
PNL	PANEL
POMB	POSITION ORIENTED MOGUL BASE (SOCKET)
PS	PRESSURE SWITCH
PUD	SNOHOMISH PUD
R	RELAY
REC	RECEPTACLE(S), RECESSED
RM	ROOM
SCH	SCHEDULE
SD	SMOKE DETECTOR
SF	SQUARE FEET
SHT	SHEET
SNOPUD	SNOHOMISH PUD
SPD	SURGE PROTECTIVE DEVICE
SUPV	SUPERVISOR
SW	SWITCH
SWBD	SWITCHBOARD
SWGR	SWITCHGEAR
SYM	SYMMETRICAL
T	THERMOSTAT
TB	TERMINAL BLOCK, TRANSFORMER BANK
TEL	TELEPHONE
TTB	TELEPHONE TERMINAL BOARD
TYP	TYPICAL
UG	UNDERGROUND
UH	UNIT HEATER
UL	UNDERWRITERS LABORATORIES
UNO	UNLESS NOTED OTHERWISE
UPS	UNINTERRUPTIBLE POWER SUPPLY
V	VOLTMETER, VOLT
VA	VOLT AMPERE(S)
VP	VAPORPROOF
W	WIRE, WATT
W/	WITH
WAC	WASHINGTON ADMINISTRATIVE CODE
WHD	WATTHOUR DEMAND METER
W/O	WITHOUT
WP	WEATHERPROOF
WSEC	WASHINGTON STATE ENERGY CODE
XFMR	TRANSFORMER
3P	3–POLE

DRAWING CONVENTIONS

- A / TITLE / E1 / SCALE: 1/4"=1'–0" — DETAIL/SECTION TITLE UNDERLINE, E1 = SHEET WHERE REFERENCED
- A / E2 — A = DETAIL/SECTION NUMBER, E2 = SHEET WHERE SHOWN
- N — NORTH ARROW
- 3 — NOTE
- 1 — REVISION REFERENCE
- XXX / FTP–1 = FTP 1 — EQUIPMENT ID TAG – SEE EQUIPMENT SCHEDULE FOR FURTHER INFORMATION, COORDINATE EQUIPMENT LOCATION WITH ASSOCIATED MECHANICAL, CIVIL, ETC. PLANS

GENERAL NOTES

1. MEET ALL REQUIREMENTS OF THE NEC AND AHJ FOR INSTALLATION AND CONSTRUCTION.
2. VERIFY LOCATION OF ALL LIFT STATION AND TREATMENT EQUIPMENT WITH CIVIL CONTRACTOR PRIOR TO ROUGH–IN. COORDINATE EXACT CIRCUIT BREAKER, FUSE AND WIRE SIZE WITH CIVIL PRIOR TO ROUGH–IN.
3. ALL EXTERIOR DEVICES TO BE CIRCUITED WITH #10 WIRE MINIMUM UNLESS NOTED OTHERWISE.
4. ALL WIRING SHALL BE COPPER UNLESS NOTED OTHERWISE.
5. VERIFY LOCATIONS OF OTHER UTILITIES PRIOR TO COMMENCING WORK, PROVIDE REQUIRED CLEARANCES FROM OTHER UTILITIES, BUILDINGS, AND FREESTANDING STRUCTURES, DURING INSTALLATION OF CONDUITS, CABLES, ETC.
6. USE ELECTRICAL PLANS FOR DETERMINING LUMINAIRE AND DEVICE COUNTS. QUANTITIES SHOWN WITHIN CALCULATION AND CONTROL SCHEDULES SHALL NOT BE USED FOR BID COUNTS.
7. NOT ALL COMPONENTS OF THE ELECTRICAL SYSTEMS ARE SHOWN (FOR CLARITY). PROVIDE MATERIALS AND LABOR NECESSARY FOR A COMPLETE AND OPERATIONAL SYSTEM.
8. THE AIC OF THE PANELS SHOWN ARE TENTATIVE AND GIVEN FOR BIDDING PURPOSES ONLY. CONTRACTOR SHALL CALCULATE THE PANEL AIC BASED UPON FINAL CONDUIT ROUTING AND TRANSFORMERS AND FUSES SUBMITTED.
9. PROVIDE ALL SNOHOMISH COUNTY PUD (SNOPUD) VAULTS PER SNOPUD STANDARDS, SEE SHEET E6.7 FOR FURTHER INFORMATION.
10. SEE SHEET C4.17 FOR PRECAST VAULT BEDDING DETAILS AND SUBGRADE PREPARATION. ALL PRECAST VAULTS SUBJECTED TO TERMINAL LOADS SHALL BE CONTRACTOR DESIGNED TO MEET THE UNDERGROUND UTILITY STRUCTURE LOADING CRITERIA SHOWN ON SHEET G1.3. SEE SPECIFICATIONS FOR FURTHER DETAILS.
11. PROVIDE INTEGRAL LOCKS OR PADLOCK EYES FOR ALL ENCLOSURE DOORS. PROVIDE LOCKABLE HANDLES FOR ALL DISCONNECTS.
12. PROVIDE NEMA 4X STAINLESS STEEL HOUSINGS FOR ALL SWITCHBOARDS, PANELBOARDS, TRANSFORMERS, DISCONNECTS, COMMUNICATIONS CABINETS AND COMBINATION TRANSFORMER–PANELBOARDS UNLESS NOTED OTHERWISE.

811 Know what's below. Call before you dig.

IF SHEET IS LESS THAN 22x34 REDUCE SCALE ACCORDINGLY

Port of EVERETT
P.O. BOX 538
EVERETT, WA 98206
(425) 259–3164

kpff
1601 5th Avenue, Suite 1300
Seattle, Washington 98101
(206) 382-0600 Fax (206) 382-0500
PROJECT NO. 1600120

ELCON ASSOCIATES, INC.
ENGINEERS–CONSULTANTS
(206) 243-5022 www.elcon.com
16300 CHRISTENSEN ROAD, STE 330
SEATTLE, WA 98188

NO.	DATE	BY	REVISION
3	07/05/2023	DKS	AS–BUILT
2	06/21/2021	DKS	ISSUED FOR BID
1	05/07/2021	DKS	FOR CITY REVIEW

RECORD CONDITIONS ILLUSTRATED IN THESE PLANS REFLECT INFORMATION PROVIDED BY THE CONTRACTOR. RECORD CONDITIONS WERE NOT VERIFIED BY ENGINEER.

PROJECT ENGINEER: D. SIATERLIS	SCALE: NONE
DESIGNED BY: D. SIATERLIS	DATE: 05/07/2021
DRAWN BY: C. SMITH	CHECKED BY: S. BARTKOSKE
APPROVED BY:	

PORT OF EVERETT

NORTON TERMINAL DEVELOPMENT & MTCA 3RD INTERIM ACTION
ELECTRICAL LEGEND & ABBREVIATIONS

DWG. NO. **E0.1**
CIP NO. 1–8–900–05
PROJECT NO. MT–NT–2021–02.2
SHEET NO. 103 OF 150

AS-BUILTS

M:\2019\1900238 POE Maritime Industrial Expansion Engineering Services\2.18 Drawings\AS BUILTS\Incoming\2023-05-31\mie_elec\m8e01 7-05-23 10:08pm dyu

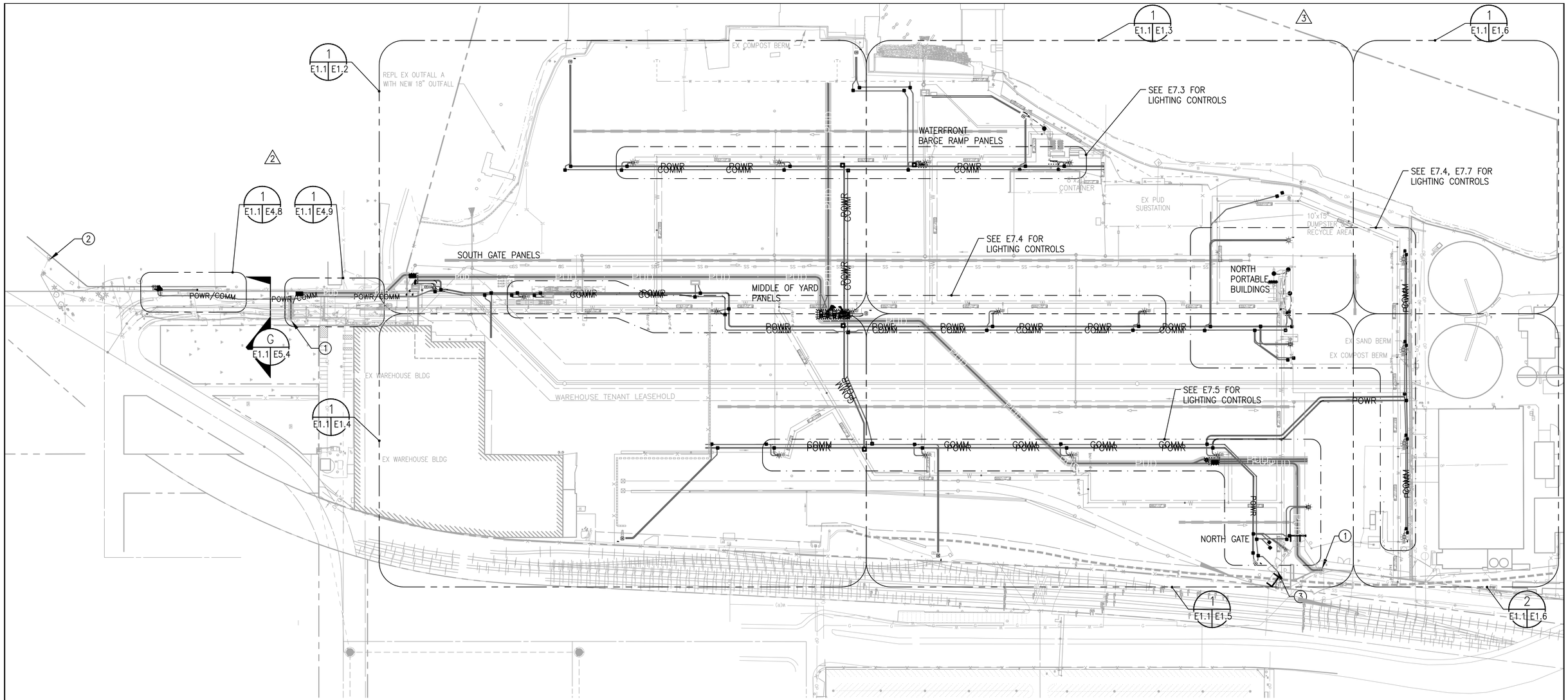

GENERAL NOTES

1. PROVIDE (2) 6" CONDUITS AND (2) 4" CONDUITS WITHIN EACH SNOHOMISH COUNTY PUD TRENCH UNLESS NOTED OTHERWISE.
2. PROVIDE (8) 4" CONDUITS WITHIN EACH PORT OF EVERETT POWER DUCT BANK UNLESS NOTED OTHERWISE.
3. PROVIDE (4) 4" CONDUITS WITHIN EACH PORT OF EVERETT TELECOM DUCT BANK UNLESS NOTED OTHERWISE.
4. FOR DUCT BANK CROSSINGS WITH OTHER CONDUITS, PIPING OR STRUCTURES REFER TO SECTIONS C, E AND F ON SHEET E5.4 UNLESS NOTED OTHERWISE.

KEYED NOTES

(1) TERMINATE AT SNOHOMISH COUNTY PUD (SNOPUD) 12.47kV DISTRIBUTION SYSTEM POLE.

(2) DEMOLISH EXISTING CIRCUIT BACK TO THIS POINT, COMMUNICATIONS POLE AT THIS POINT TO REMAIN IN SERVICE. SEE SHEET E4.8 FOR FURTHER DETAILS.

(3) STUB (2) 4" CONDUITS FOR FUTURE TELECOM UTILITY CONNECTION.

2

N

IF SHEET IS LESS THAN 22x34
REDUCE SCALE ACCORDINGLY

811 Know what's below. Call before you dig.

Port of EVERETT
P.O. BOX 538
EVERETT, WA 98206
(425) 259-3164

kpff
1601 5th Avenue, Suite 1300
Seattle, Washington 98101
(206) 382-0600 Fax (206) 382-0500
PROJECT NO. 1600120

ELCON ASSOCIATES, INC.
ENGINEERS–CONSULTANTS
(206) 243-5022 www.elcon.com
16300 CHRISTENSEN ROAD, STE 330
SEATTLE, WA 98188

NO.	DATE	BY	REVISION
4	06/02/2023	DKS	AS-BUILT
3	2/18/2022	DKS	MARITIME TENANT SITE PLAN REVISIONS
2	7/23/2021	DKS	ADDENDUM 3
1	06/21/2021	DKS	ISSUED FOR BID
0	05/07/2021	DKS	FOR CITY REVIEW

NO.	DATE	BY	REVISION

PROJECT ENGINEER: D. SIATERLIS	SCALE: AS NOTED
DESIGNED BY: D. SIATERLIS	DATE: 05/07/2021
DRAWN BY: C. SMITH	CHECKED BY: S. BARTKOSKE
APPROVED BY:	

PORT OF EVERETT

NORTON TERMINAL DEVELOPMENT & MTCA 3RD INTERIM ACTION OVERALL SITE PLAN

DWG. NO. **E1.1**

CIP NO. 1-8-900-05

PROJECT NO. MT-NT-2021-02.2

SHEET NO. 104 OF 150

AS-BUILTS

M:\2019\1900238 POE Maritime Industrial Expansion Engineering Services\2.18 Drawings\AS BUILTS\Incoming\2023-05-31\mie_elec\m8e11 7-07-23 10:15am jhollenbach

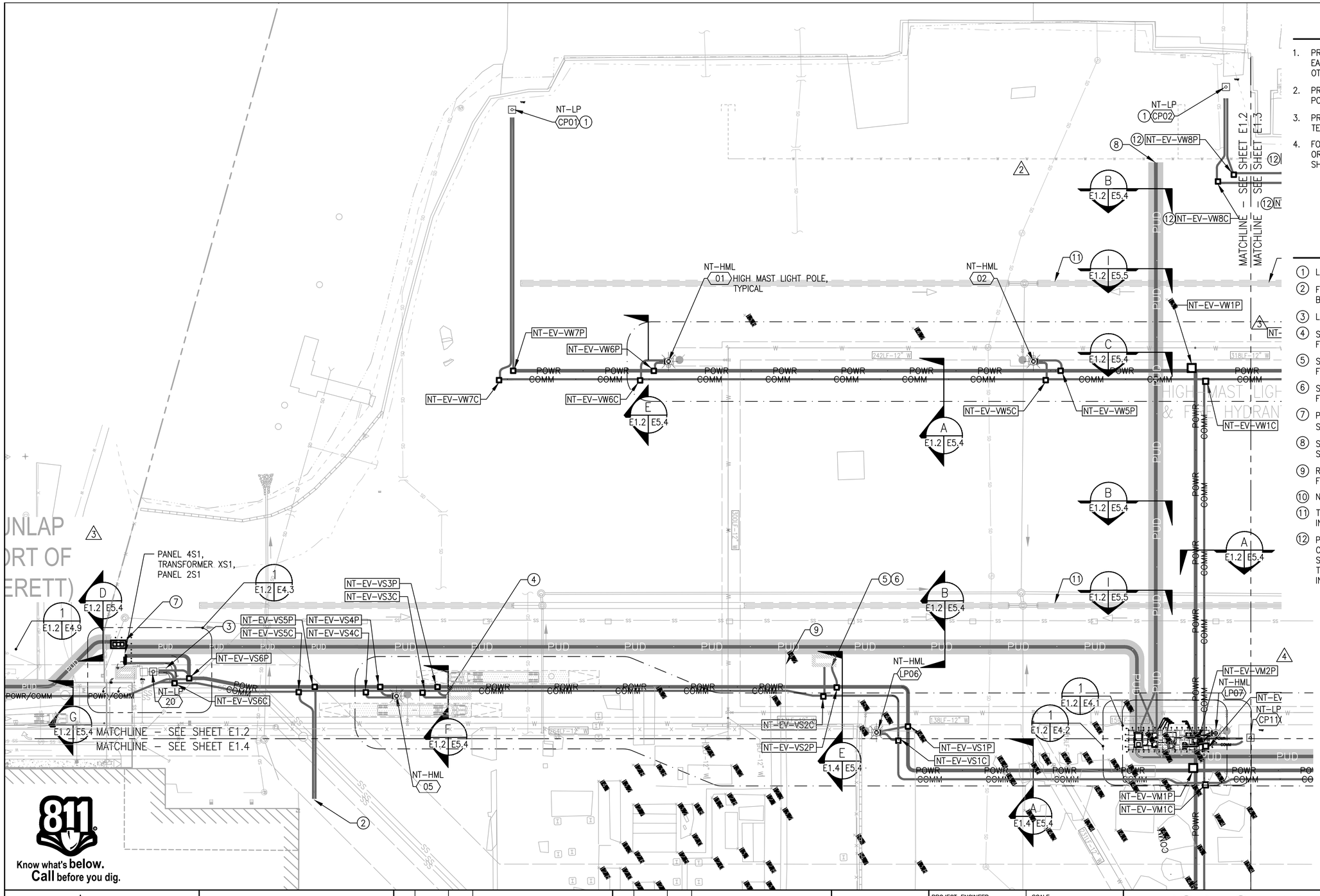

GENERAL NOTES

1. PROVIDE (2) 6" CONDUITS AND (2) 4" CONDUITS WITHIN EACH SNOHOMISH COUNTY PUD TRENCH UNLESS NOTED OTHERWISE.
2. PROVIDE (8) 4" CONDUITS WITHIN EACH PORT OF EVERETT POWER DUCT BANK UNLESS NOTED OTHERWISE.
3. PROVIDE (4) 4" CONDUITS WITHIN EACH PORT OF EVERETT TELECOM DUCT BANK UNLESS NOTED OTHERWISE.
4. FOR DUCT BANK CROSSINGS WITH OTHER CONDUITS, PIPING OR STRUCTURES REFER TO SECTIONS C, E AND F ON SHEET E5.4 UNLESS NOTED OTHERWISE.

KEYED NOTES

1. LOW MAST COMMUNICATIONS POLE.
2. FUTURE WAREHOUSE CONNECTION, STUB CONDUITS 50'–0" BEYOND EDGE OF PAVEMENT, AS SHOWN ON SHEET C3.1.
3. LOW MAST LIGHT AND COMM POLE.
4. STUB (1) 4" POWER AND (1) 4" COMM CONDUITS FOR FUTURE WEIGH SCALE AND SHACK.
5. STUB (1) 4" POWER AND (1) 4" COMM CONDUITS FOR FUTURE CUSTOMS SHACK.
6. STUB (1) 4" POWER AND (1) 4" COMM CONDUITS FOR FUTURE RADIATION PORTAL MONITOR SHACK.
7. PROVIDE CONCRETE PULLING/SPLICING VAULT PER SNOPUD STANDARD "T&D COMPATIBLE UNIT V0210".
8. STUB CONDUITS 5'–0" BEYOND EDGE OF PAVEMENT, AS SHOWN ON SHEET C3.1.
9. REMNANT BELOW GRADE FOUNDATIONS, SEE CIVIL DRAWINGS FOR FURTHER INFORMATION.
10. NOT USED.
11. TRENCH DRAIN, SEE SHEET S1.3 FOR FURTHER INFORMATION.
12. PROVIDE 24" EXTENSION RING FOR VAULT TO ALLOW FOR CONDUITS EXITING VAULT TO THE WEST TO HAVE SUFFICIENT COVER, AS GRADE SLOPES DOWN WEST OF THIS POINT, SEE SHEETS C3.5 & C3.6 FOR FURTHER INFORMATION.

Know what's below. Call before you dig.

IF SHEET IS LESS THAN 22x34 REDUCE SCALE ACCORDINGLY

Port of EVERETT
P.O. BOX 538
EVERETT, WA 98206
(425) 259–3164

kpff
1601 5th Avenue, Suite 1300
Seattle, Washington 98101
(206) 382-0600 Fax (206) 382-0500
PROJECT NO. 1600120

ELCON ASSOCIATES, INC.
ENGINEERS–CONSULTANTS
(206) 243-5022 www.elcon.com
16300 CHRISTENSEN ROAD, STE 330
SEATTLE, WA 98188

NO.	DATE	BY	REVISION
6	07/05/2023	DKS	AS–BUILT
4	12/13/2021	DKS	COP006 – NEW COMM POLE CP11
3	7/23/2021	DKS	ADDENDUM 3
2	7/9/2021	DKS	ADDENDUM 1
1	06/21/2021	DKS	ISSUED FOR BID
0	05/07/2021	DKS	FOR CITY REVIEW

RECORD CONDITIONS ILLUSTRATED IN THESE PLANS REFLECT INFORMATION PROVIDED BY THE CONTRACTOR. RECORD CONDITIONS WERE NOT VERIFIED BY ENGINEER.

PROJECT ENGINEER: D. SIATERLIS	SCALE: AS NOTED
DESIGNED BY: D. SIATERLIS	DATE: 05/07/2021
DRAWN BY: C. SMITH	CHECKED BY: S. BARTKOSKE
APPROVED BY:	

PORT OF EVERETT

NORTON TERMINAL DEVELOPMENT & MTCA 3RD INTERIM ACTION SITE PLAN (1 of 4)

DWG. NO. **E1.2**

CIP NO. 1–8–900–05

PROJECT NO. MT–NT–2021–02.2

SHEET NO. 105 OF 150

AS-BUILTS

M: \2019\1900238 POE Maritime Industrial Expansion Engineering Services\2.18 Drawings\AS BUILTS\Incoming\2023-05-31\mie_elec\m8e12 7-07-23 10:31am jhollenbach

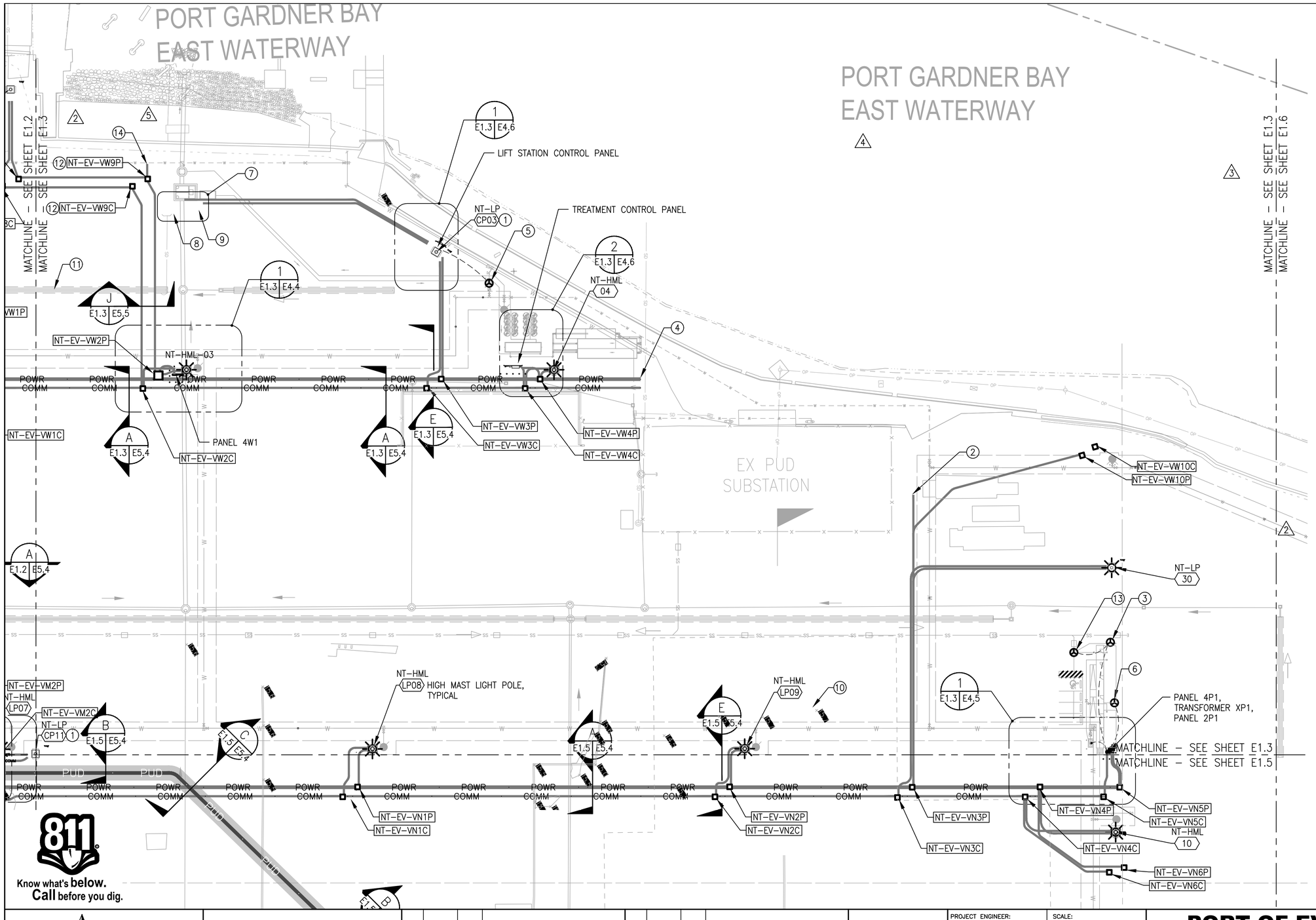

GENERAL NOTES

1. PROVIDE (2) 6" CONDUITS AND (2) 4" CONDUITS WITHIN EACH SNOHOMISH COUNTY PUD TRENCH UNLESS NOTED OTHERWISE.
2. PROVIDE (8) 4" CONDUITS WITHIN EACH PORT OF EVERETT POWER DUCT BANK UNLESS NOTED OTHERWISE.
3. PROVIDE (4) 4" CONDUITS WITHIN EACH PORT OF EVERETT TELECOM DUCT BANK UNLESS NOTED OTHERWISE.
4. FOR DUCT BANK CROSSINGS WITH OTHER CONDUITS, PIPING OR STRUCTURES REFER TO SECTIONS C, E AND F ON SHEET E5.4 UNLESS NOTED OTHERWISE.
5. FOR STORMWATER OR SEWER VAULT PENETRATIONS, PROVIDE CORE DRILL FOR EACH CONDUIT PENETRATION. CONDUITS TO ENTER VAULT BETWEEN 6"–18" BELOW THE BOTTOM OF THE VAULT LID (NOT THE ACCESS LID). PROVIDE APPROVED MECHANICAL SEAL OR PACK TIGHT WITH NON–SHRINK GROUT TO SEAL CONDUIT PENETRATIONS THROUGH VAULT WALL. SEAL FITTINGS MAY BE INSTALLED IN THE VAULT OR BELOW THE CONTROL PANEL AS SHOWN ON E5.2.

KEYED NOTES

1. LOW MAST COMMUNICATIONS POLE.
2. STUB CONDUITS FOR FUTURE HIGH MAST LIGHT POLE.
3. PROVIDE LIFT STATION CONTROL PANEL ELECTRICAL CONNECTION, SEE SHEET C5.9 FOR FURTHER LIFT STATION INFORMATION. COORDINATE WITH LIFT STATION SUPPLIER FOR CONNECTION REQUIREMENTS. CIRCUIT TO PANEL 2P1 CIRCUITS 7,9.
4. STUB CONDUITS 5'–0" BEYOND EDGE OF PAVEMENT, AS SHOWN ON SHEET C3.1.
5. PROVIDE HOT BOX ELECTRICAL CONNECTION, SEE SHEET C5.9 FOR FURTHER HOT BOX INFORMATION.
6. PROVIDE LONGSHOREMAN RESTROOM TRAILER ELECTRICAL CONNECTION. COORDINATE WITH TRAILER PROVIDER FOR EXACT CONNECTION LOCATION.
7. THE LIFT STATION AND VALVE VAULT ARE CLASSIFIED SPACES, CLASS I, DIVISION 2 PER NEC AND NFPA 820.
8. STORMWATER LIFT STATION PER SHEET C4.9.
9. VALVE VAULT PER SHEET C4.9.
10. REMNANT BELOW GRADE FOUNDATIONS, SEE CIVIL DRAWINGS FOR FURTHER INFORMATION.
11. TRENCH DRAIN, SEE SHEET S1.3 FOR FURTHER INFORMATION.
12. PROVIDE 24" EXTENSION RING FOR VAULT TO ALLOW FOR FUTURE CONDUITS EXITING VAULT TO THE WEST TO HAVE SUFFICIENT COVER, AS GRADE SLOPES DOWN WEST OF THIS POINT, SEE SHEETS C3.5 & C3.6 FOR FURTHER INFORMATION.
13. PROVIDE (3) 1–1/2" CONDUITS BETWEEN LIFT STATION AND LIFT STATION CONTROL PANEL FOR POWER CABLING, CONTROL CABLING AND SPARE. THE LIFT STATION IS A CLASSIFIED SPACE, CLASS I, DIVISION 2 PER NEC AND NFPA 820.
14. STUB CONDUITS 5'–0" BEYOND EDGE OF PAVEMENT, AS SHOWN ON SHEET C3.1. MARK LOCATION OF THE CONDUIT ENDS WITH A 4"X4" STAKE PAINTED WHITE.

N

0 40 80
scale feet

IF SHEET IS LESS THAN 22x34 REDUCE SCALE ACCORDINGLY

M:\2019\1900238 POE Maritime Industrial Expansion Engineering Services\2.18 Drawings\AS BUILTS\Incoming\2023-05-31\mie_elec\m8e13 7-07-23 10:32am jhollenbach

Port of EVERETT
P.O. BOX 538
EVERETT, WA 98206
(425) 259-3164

kpff
1601 5th Avenue, Suite 1300
Seattle, Washington 98101
(206) 382-0600 Fax (206) 382-0500
PROJECT NO. 1600120

ELCON ASSOCIATES, INC.
ENGINEERS–CONSULTANTS
(206) 243-5022 www.elcon.com
16300 CHRISTENSEN ROAD, STE 330
SEATTLE, WA 98188

NO.	DATE	BY	REVISION
6	7/05/2023	DKS	AS–BUILT
5	–/–/2022	DKS	FUTURE SHOREPOWER
4	2/18/2022	DKS	MARITIME TENANT SITE PLAN REVISIONS
3	12/9/2021	DKS	RFI 037
2	7/9/2021	DKS	ADDENDUM 1
1	06/21/2021	DKS	ISSUED FOR BID
0	05/07/2021	DKS	FOR CITY REVIEW

RECORD CONDITIONS ILLUSTRATED IN THESE PLANS REFLECT INFORMATION PROVIDED BY THE CONTRACTOR. RECORD CONDITIONS WERE NOT VERIFIED BY ENGINEER.

PROJECT ENGINEER: D. SIATERLIS	SCALE: AS NOTED
DESIGNED BY: D. SIATERLIS	DATE: 05/07/2021
DRAWN BY: C. SMITH	CHECKED BY: S. BARTKOSKE
APPROVED BY:	

PORT OF EVERETT

NORTON TERMINAL DEVELOPMENT & MTCA 3RD INTERIM ACTION SITE PLAN (2 of 4)

DWG. NO. **E1.3**

CIP NO. 1–8–900–05

PROJECT NO. MT–NT–2021–02.2

SHEET NO. 106 OF 150

AS-BUILTS

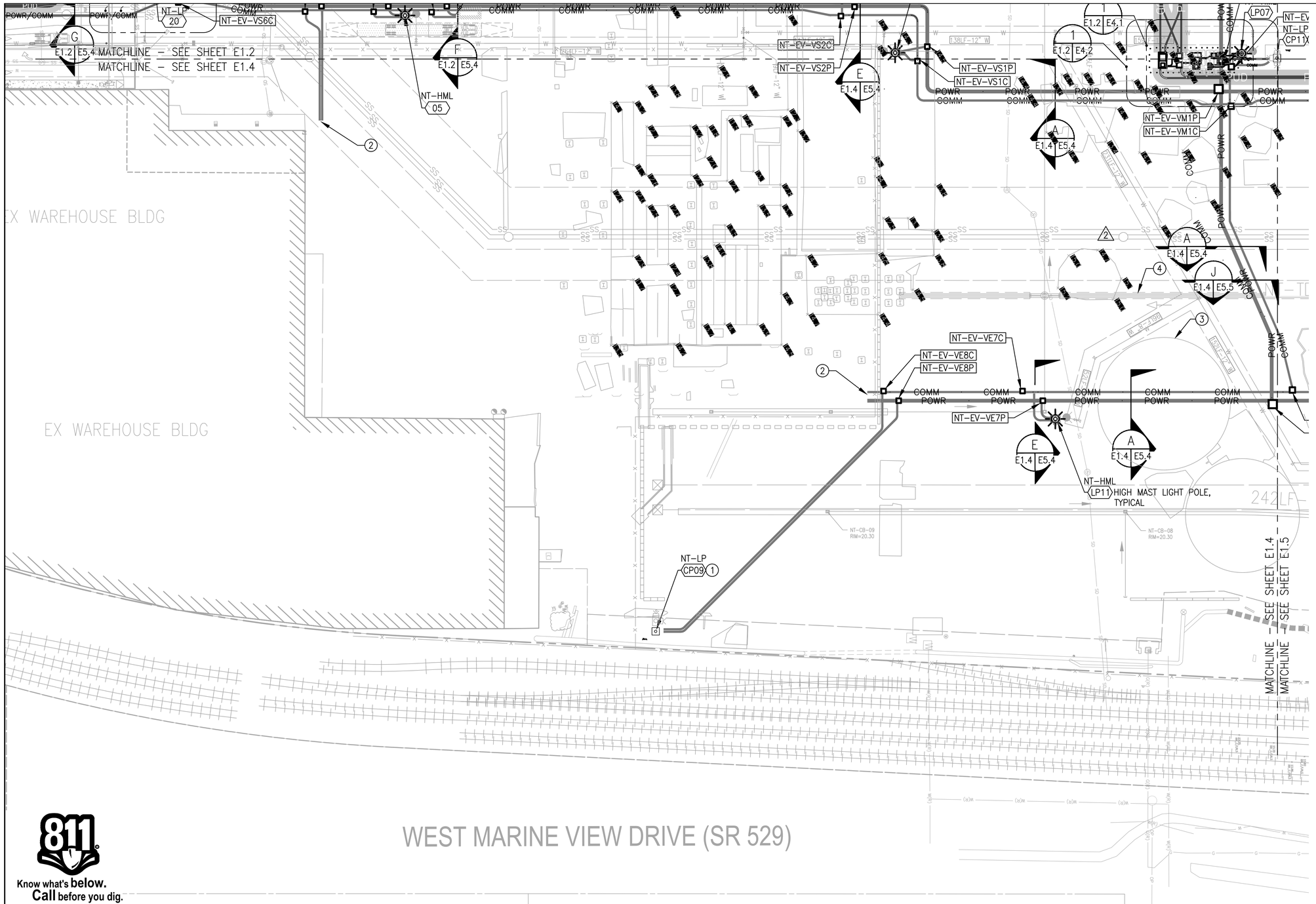

GENERAL NOTES

1. PROVIDE (2) 6" CONDUITS AND (2) 4" CONDUITS WITHIN EACH SNOHOMISH COUNTY PUD TRENCH UNLESS NOTED OTHERWISE.
2. PROVIDE (8) 4" CONDUITS WITHIN EACH PORT OF EVERETT POWER DUCT BANK UNLESS NOTED OTHERWISE.
3. PROVIDE (4) 4" CONDUITS WITHIN EACH PORT OF EVERETT TELECOM DUCT BANK UNLESS NOTED OTHERWISE.
4. FOR DUCT BANK CROSSINGS WITH OTHER CONDUITS, PIPING OR STRUCTURES REFER TO SECTIONS C, E AND F ON SHEET E5.4 UNLESS NOTED OTHERWISE.

KEYED NOTES

1. LOW MAST COMMUNICATIONS POLE.
2. FUTURE WAREHOUSE CONNECTION, STUB CONDUITS 50'-0" BEYOND EDGE OF PAVEMENT, AS SHOWN ON SHEET C3.1.
3. REMNANT BELOW GRADE FOUNDATIONS, SEE CIVIL DRAWINGS FOR FURTHER INFORMATION.
4. TRENCH DRAIN, SEE SHEET S1.3 FOR FURTHER INFORMATION.

N

0 40 80
scale feet

IF SHEET IS LESS THAN 22x34
REDUCE SCALE ACCORDINGLY

811 Know what's below. Call before you dig.

Port of EVERETT
P.O. BOX 538
EVERETT, WA 98206
(425) 259-3164

kpff
1601 5th Avenue, Suite 1300
Seattle, Washington 98101
(206) 382-0600 Fax (206) 382-0500
PROJECT NO. 1600120

ELCON ASSOCIATES, INC.
ENGINEERS–CONSULTANTS
(206) 243-5022 www.elcon.com
16300 CHRISTENSEN ROAD, STE 330
SEATTLE, WA 98188

NO.	DATE	BY	REVISION
5	7/05/2023	DKS	AS-BUILT
4	7/9/2021	DKS	ADDENDUM 1
3	06/21/2021	DKS	ISSUED FOR BID
2	05/07/2021	DKS	FOR CITY REVIEW
1			
0			

RECORD CONDITIONS ILLUSTRATED IN THESE PLANS REFLECT INFORMATION PROVIDED BY THE CONTRACTOR. RECORD CONDITIONS WERE NOT VERIFIED BY ENGINEER.

PROJECT ENGINEER: D. SIATERLIS	SCALE: AS NOTED
DESIGNED BY: D. SIATERLIS	DATE: 05/07/2021
DRAWN BY: C. SMITH	CHECKED BY: S. BARTKOSKE
APPROVED BY:	

PORT OF EVERETT

NORTON TERMINAL DEVELOPMENT & MTCA 3RD INTERIM ACTION SITE PLAN (3 of 4)

DWG. NO. **E1.4**
CIP NO. 1-8-900-05
PROJECT NO. MT-NT-2021-02.2
SHEET NO. 107 OF 150

AS-BUILTS

M:\2019\1900238 POE Maritime Industrial Expansion Engineering Services\2.18 Drawings\AS BUILTS\Incoming\2023-05-31\mie_elec\m8e14 7-07-23 10:33am jhollenbach

GENERAL NOTES

1. PROVIDE (2) 6" CONDUITS AND (2) 4" CONDUITS WITHIN EACH SNOHOMISH COUNTY PUD TRENCH UNLESS NOTED OTHERWISE.
2. PROVIDE (8) 4" CONDUITS WITHIN EACH PORT OF EVERETT POWER DUCT BANK UNLESS NOTED OTHERWISE.
3. PROVIDE (4) 4" CONDUITS WITHIN EACH PORT OF EVERETT TELECOM DUCT BANK UNLESS NOTED OTHERWISE.
4. FOR DUCT BANK CROSSINGS WITH OTHER CONDUITS, PIPING OR STRUCTURES REFER TO SECTIONS C, E AND F ON SHEET E5.4 UNLESS NOTED OTHERWISE.

KEYED NOTES

1. LOW MAST COMM POLE.
2. LOW MAST LIGHT POLE.
3. FUTURE SNOPUD CONNECTION, STUB CONDUITS 5'-0" BEYOND EDGE OF PAVEMENT, AS SHOWN ON SHEET C3.1.
4. PROVIDE CONCRETE PULLING/SPLICING VAULT PER SNOPUD STANDARD "T&D COMPATIBLE UNIT V0210".
5. FUTURE CONNECTION TO SNOPUD SUBSTATION, STUB CONDUITS 5'-0" BEYOND EDGE OF PAVEMENT, AS SHOWN ON SHEET C3.1.
6. STUB CONDUITS FOR FUTURE GUARD SHACK.
7. REMNANT BELOW GRADE FOUNDATIONS, SEE CIVIL DRAWINGS FOR FURTHER INFORMATION.
8. PROVIDE CONCRETE PULL VAULT PER SNOPUD STANDARD "T&D COMPATIBLE UNIT V0203".
9. TERMINATE CONDUITS AT EXISTING SNOPUD POLE PER SNOPUD STANDARDS.
10. TRENCH DRAIN, SEE SHEET S1.3 FOR FURTHER INFORMATION.

Know what's below. Call before you dig.

IF SHEET IS LESS THAN 22x34 REDUCE SCALE ACCORDINGLY

Port of EVERETT
P.O. BOX 538
EVERETT, WA 98206
(425) 259-3164

kpff
1601 5th Avenue, Suite 1300
Seattle, Washington 98101
(206) 382-0600 Fax (206) 382-0500
PROJECT NO. 1600120

ELCON ASSOCIATES, INC.
ENGINEERS–CONSULTANTS
(206) 243-5022 www.elcon.com
16300 CHRISTENSEN ROAD, STE 330
SEATTLE, WA 98188

NO.	DATE	BY	REVISION
5	7/05/2023	DKS	AS-BUILT
4	6/20/2022	DKS	RFI 092
3	2/18/2022	DKS	MARITIME TENANT SITE PLAN REVISIONS
2	7/9/2021	DKS	ADDENDUM 1
1	06/21/2021	DKS	ISSUED FOR BID
0	05/07/2021	DKS	FOR CITY REVIEW

RECORD CONDITIONS ILLUSTRATED IN THESE PLANS REFLECT INFORMATION PROVIDED BY THE CONTRACTOR. RECORD CONDITIONS WERE NOT VERIFIED BY ENGINEER.

PROJECT ENGINEER: D. SIATERLIS	SCALE: AS NOTED
DESIGNED BY: D. SIATERLIS	DATE: 05/07/2021
DRAWN BY: C. SMITH	CHECKED BY: S. BARTKOSKE
APPROVED BY:	

PORT OF EVERETT

NORTON TERMINAL DEVELOPMENT & MTCA 3RD INTERIM ACTION SITE PLAN (4 of 4)

DWG. NO. **E1.5**

CIP NO. 1-8-900-05

PROJECT NO. MT-NT-2021-02.2

SHEET NO. 108 OF 150

AS-BUILTS

M:\2019\1900238 POE Maritime Industrial Expansion Engineering Services\2-18 Drawings\AS BUILTS\Incoming\2023-05-31\mie_elec\m8e15 7-07-23 10:33am jhollenbach

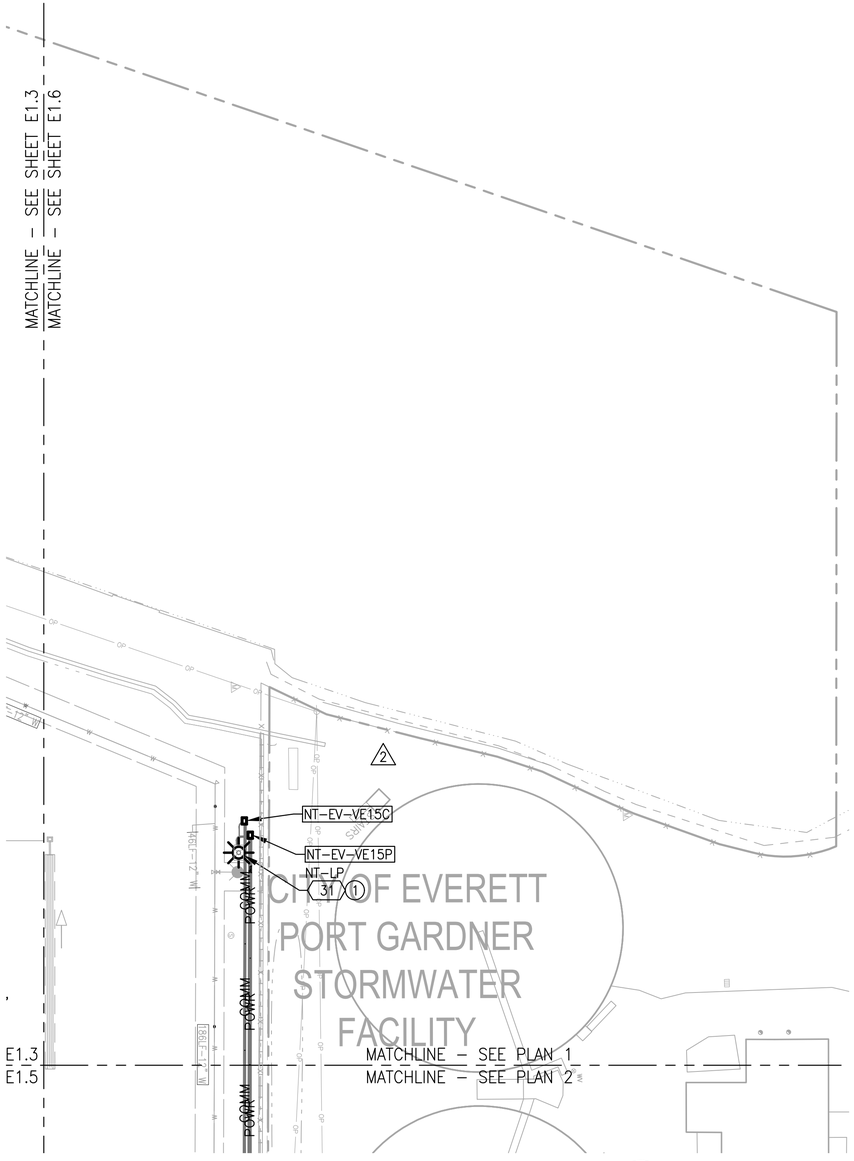

NORTH PROPERTIES SITE PLAN 1

E1.1 | E1.6

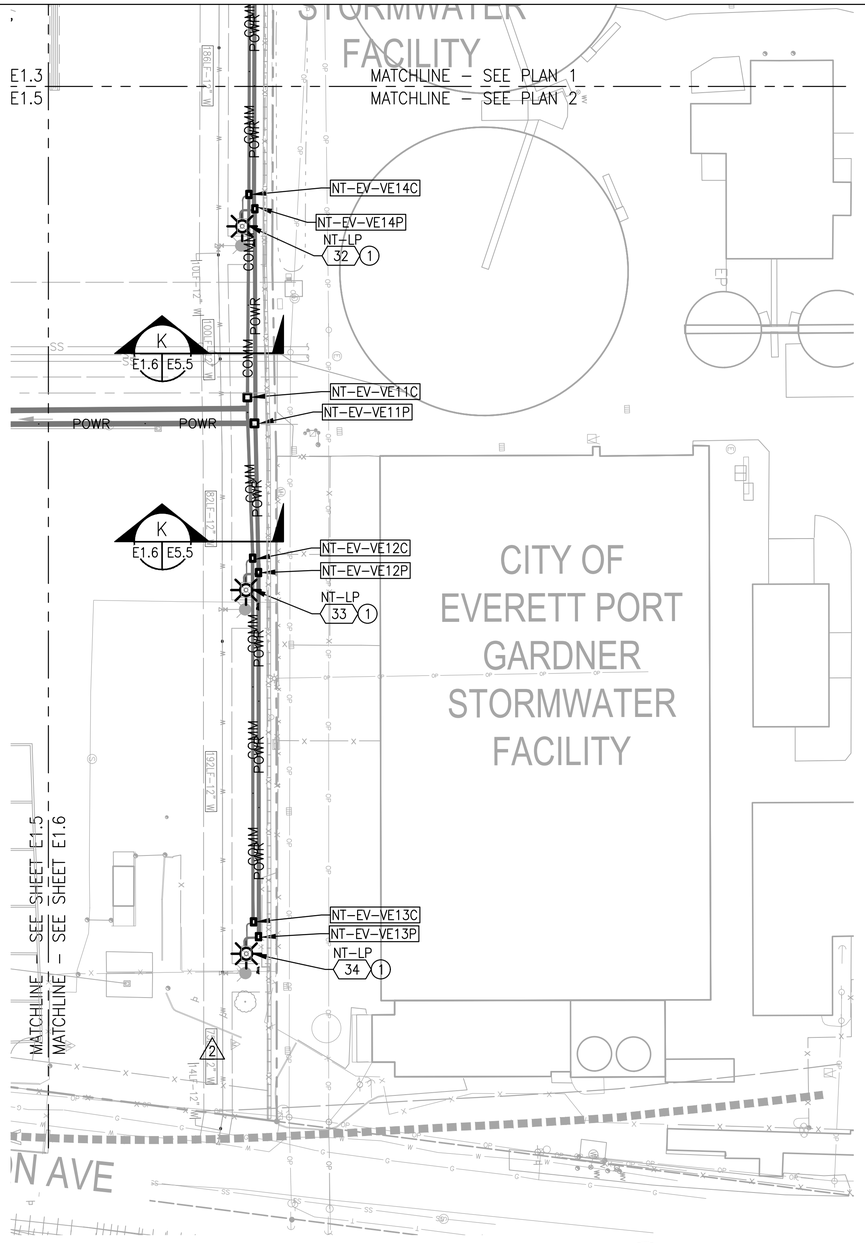

NORTH PROPERTIES SITE PLAN 2

E1.1 | E1.6

GENERAL NOTES

1. PROVIDE (2) 6" CONDUITS AND (2) 4" CONDUITS WITHIN EACH SNOHOMISH COUNTY PUD TRENCH UNLESS NOTED OTHERWISE.
2. PROVIDE (6) 3" CONDUITS WITHIN EACH PORT OF EVERETT POWER DUCT BANK UNLESS NOTED OTHERWISE.
3. PROVIDE (4) 3" CONDUITS WITHIN EACH PORT OF EVERETT TELECOM DUCT BANK UNLESS NOTED OTHERWISE.
4. FOR DUCT BANK CROSSINGS WITH OTHER CONDUITS, PIPING OR STRUCTURES REFER TO SECTIONS C, E AND F ON SHEET E5.4 UNLESS NOTED OTHERWISE.

KEYED NOTES

(1) LOW MAST LIGHT POLE.

Know what's **below.**
Call before you dig.

N

0 40 80
scale feet

IF SHEET IS LESS THAN 22x34
REDUCE SCALE ACCORDINGLY (1)

Port of EVERETT
P.O. BOX 538
EVERETT, WA 98206
(425) 259-3164

kpff
1601 5th Avenue, Suite 1300
Seattle, Washington 98101
(206) 382-0600 Fax (206) 382-0500
PROJECT NO. 1600120

ELCON ASSOCIATES, INC.
ENGINEERS–CONSULTANTS
(206) 243-5022 www.elcon.com
16300 CHRISTENSEN ROAD, STE 330
SEATTLE, WA 98188

NO.	DATE	BY	REVISION
3	7/05/2023	DKS	AS–BUILT
2	6/6/2022	DKS	POLE, DUCT BANK RELOCATION
1	2/18/2022	DKS	MARITIME TENANT SITE PLAN REVISIONS

NO.	DATE	BY	REVISION

RECORD CONDITIONS ILLUSTRATED IN THESE PLANS REFLECT INFORMATION PROVIDED BY THE CONTRACTOR. RECORD CONDITIONS WERE NOT VERIFIED BY ENGINEER.

PROJECT ENGINEER: D. SIATERLIS	SCALE: AS NOTED
DESIGNED BY: D. SIATERLIS	DATE: 05/07/2021
DRAWN BY: C. SMITH	CHECKED BY: S. BARTKOSKE
APPROVED BY:	

PORT OF EVERETT

NORTON TERMINAL DEVELOPMENT
& MTCA 3RD INTERIM ACTION
NORTH PROPERTIES SITE PLAN

DWG. NO. **E1.6**
CIP NO. 1–8–900–05
PROJECT NO. MT–NT–2021–02.2
SHEET NO. 108A OF 150

AS-BUILTS

M:\2019\1900238 POE Maritime Industrial Expansion Engineering Services\2.18 Drawings\AS BUILTS\Incoming\2023-05-31\nie_elec\n8e16 7-07-23 10:34am jhollenbach

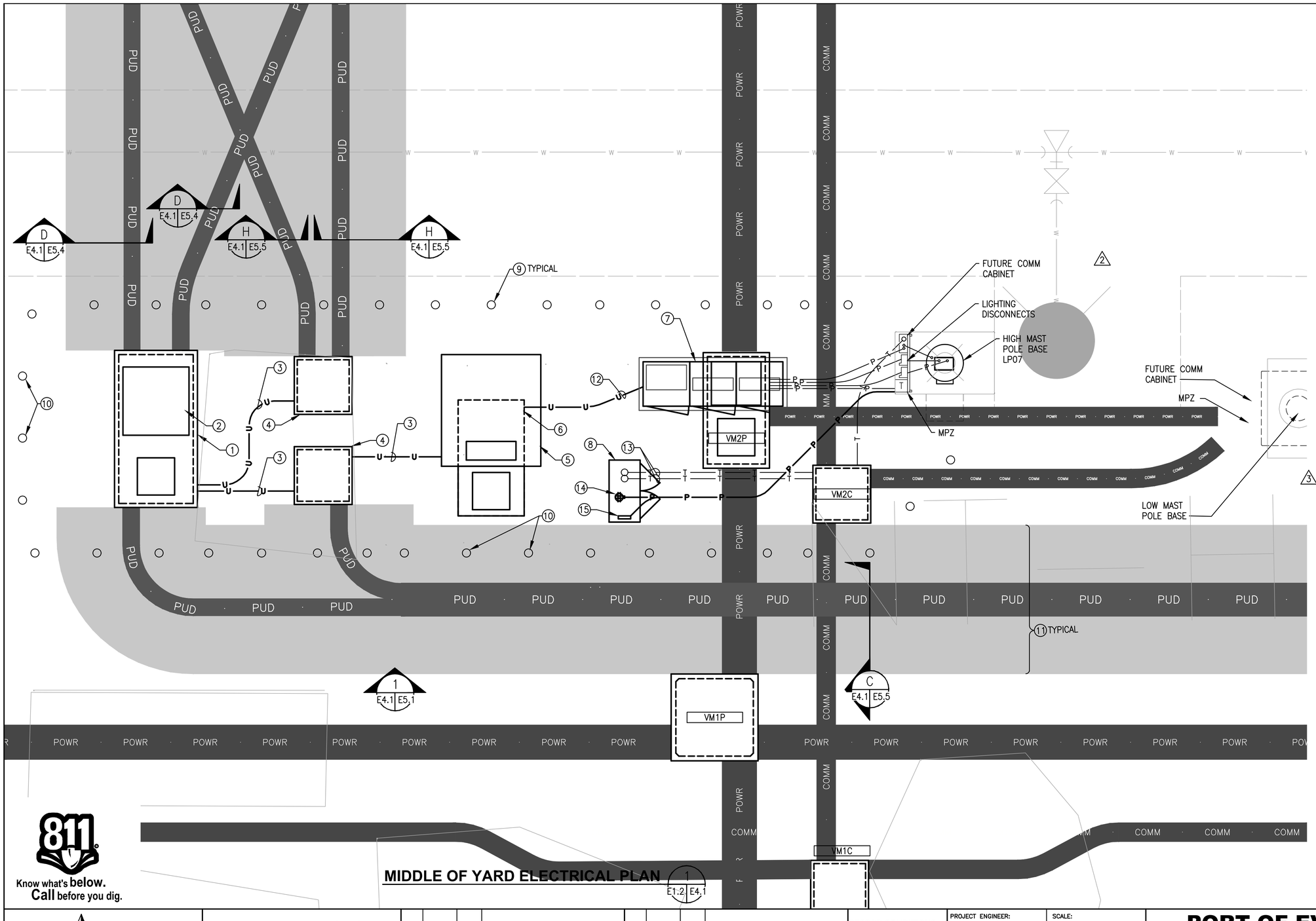

MIDDLE OF YARD ELECTRICAL PLAN

1 E1.2 E4.1

811 Know what's below. Call before you dig.

GENERAL NOTES

1. PROVIDE ALL SERVICE ENTRANCE EQUIPMENT PER SNOHOMISH COUNTY PUD (SNOPUD) ELECTRICAL SERVICE REQUIREMENTS UNLESS NOTED OTHERWISE.

KEYED NOTES

1. PROVIDE CONCRETE VAULT WITH OPENING FOR PAD-MOUNTED SWITCH PER SNOPUD STANDARD "T&D COMPATIBLE UNIT V0501".
2. PAD-MOUNTED SWITCH BY SNOPUD.
3. PROVIDE CONDUITS BETWEEN VAULTS PER SHEET E6.1. 15kV CABLES TO BE PROVIDED BY SNOPUD.
4. PROVIDE CONCRETE PULL VAULT PER SNOPUD STANDARD "T&D COMPATIBLE UNIT V0203".
5. PROVIDE PAD-MOUNTED TRANSFORMER VAULT PER SNOPUD DISTRICT CAT. ID 1001689, 1001690, 1001691.
6. PAD-MOUNTED UTILITY TRANSFORMER BY SNOPUD.
7. PROVIDE SWITCHBOARD 4M1, SEE SHEET E6.1 FOR ADDITIONAL SIZING INFORMATION.
8. INSTALL OWNER-PROVIDED COMM ENCLOSURE, HOFFMAN CAT. NO. WS72X60X30SS/SPL.
9. PROVIDE STRUCTURAL BOLLARD PER SHEET C2.3. BOLLARDS SHALL BE SPACED A MAXIMUM OF 5'-0" FROM EACH OTHER. SHOULD BELOW GRADE OBSTRUCTIONS INTERFERE WITH PLACEMENT, INCREASE QUANTITY OF BOLLARDS TO MAINTAIN SPACING REQUIREMENTS.
10. PROVIDE REMOVABLE BOLLARD PER SHEET C2.2 DETAIL 3. SEE KEYED NOTE 9 FOR FURTHER SPACING REQUIREMENTS.
11. SNOPUD EASEMENT, SEE CIVIL PLANS FOR FURTHER INFORMATION.
12. PROVIDE FEEDER PER SHEET E6.1.
13. PROVIDE (2) 4" CONDUITS.
14. PROVIDE DOUBLE DUPLEX RECEPTACLE, CIRCUITED TO MPZ AT LP07, CIRCUIT 3.
15. PROVIDE 200W HEATER WITH THERMOSTAT AND CIRCUIT TO MPZ AT LP07, CIRCUIT 5.

N

0 4 8
scale feet

IF SHEET IS LESS THAN 22x34 REDUCE SCALE ACCORDINGLY

Port of EVERETT
P.O. BOX 538
EVERETT, WA 98206
(425) 259-3164

kpff
1601 5th Avenue, Suite 1300
Seattle, Washington 98101
(206) 382-0600 Fax (206) 382-0500
PROJECT NO. 1600120

ELCON ASSOCIATES, INC.
ENGINEERS-CONSULTANTS
(206) 243-5022 www.elcon.com
16300 CHRISTENSEN ROAD, STE 330
SEATTLE, WA 98188

NO.	DATE	BY	REVISION
4	07/05/2023	DKS	AS-BUILT
3	12/27/2021	DKS	ADDED REMOVABLE BOLLARD DETAIL
2	12/13/2021	DKS	COP006 – NEW COMM POLE CP11
1	06/21/2021	DKS	ISSUED FOR BID
0	05/07/2021	DKS	FOR CITY REVIEW

RECORD CONDITIONS ILLUSTRATED IN THESE PLANS REFLECT INFORMATION PROVIDED BY THE CONTRACTOR. RECORD CONDITIONS WERE NOT VERIFIED BY ENGINEER.

PROJECT ENGINEER: D. SIATERLIS	SCALE: AS NOTED
DESIGNED BY: D. SIATERLIS	DATE: 05/07/2021
DRAWN BY: C. SMITH	CHECKED BY: S. BARTKOSKE
APPROVED BY:	

PORT OF EVERETT

NORTON TERMINAL DEVELOPMENT & MTCA 3RD INTERIM ACTION
ENLARGED ELECTRICAL PLAN
MIDDLE OF YARD

DWG. NO. **E4.1**
CIP NO. 1-8-900-05
PROJECT NO. MT-NT-2021-02.2
SHEET NO. 109 OF 150

AS-BUILTS

M:\2019\1900238 POE Maritime Industrial Expansion Engineering Services\2.18 Drawings\AS BUILTS\Incoming\2023-05-31\mie_elec\m8e41 7-06-23 11:14am dyu

M:\2019\1900238 POE Maritime Industrial Expansion Engineering Services\2.18 Drawings\AS BUILTS\Incoming\2023-05-31\mie_elec\mi8e42 7-06-23 11:14am dyu

GENERAL NOTES

1. SEE DETAIL 1 SHEET E5.8 FOR PORT VAULT GROUNDING, TYPICAL FOR ALL PORT VAULTS.
2. SEE SNOHOMISH COUNTY PUD (SNOPUD) ELECTRICAL SERVICE REQUIREMENTS FOR SNOPUD VAULT GROUNDING REQUIREMENTS.

KEYED NOTES

1. #4/0 GROUND GRID, 12" BELOW ASPHAULT.
2. EXOTHERMIC WELD CONNECTION.
3. BOLLARD CONNECTION.
4. 3/4" x 10'-0" GROUND ROD.
5. GROUND TEST WELL.
6. #4/0 PIGTAIL.

4 TYPICAL
3 TYPICAL
2 TYPICAL
1 TYPICAL
TYPICAL 6
5

PUD
POWR
COMM
U
P
T
W

Know what's below. Call before you dig.

MIDDLE OF YARD GROUNDING PLAN

1
E1.2 | E4.2

N

0 4 8
scale feet

IF SHEET IS LESS THAN 22x34 REDUCE SCALE ACCORDINGLY

Port of EVERETT
P.O. BOX 538
EVERETT, WA 98206
(425) 259-3164

kpff
1601 5th Avenue, Suite 1300
Seattle, Washington 98101
(206) 382-0600 Fax (206) 382-0500
PROJECT NO. 1600120

ELCON ASSOCIATES, INC.
ENGINEERS-CONSULTANTS
(206) 243-5022 www.elcon.com
16300 CHRISTENSEN ROAD, STE 330
SEATTLE, WA 98188

NO.	DATE	BY	REVISION
2	07/05/2023	DKS	AS-BUILT
1	06/21/2021	DKS	ISSUED FOR BID
0	05/07/2021	DKS	FOR CITY REVIEW

RECORD CONDITIONS ILLUSTRATED IN THESE PLANS REFLECT INFORMATION PROVIDED BY THE CONTRACTOR. RECORD CONDITIONS WERE NOT VERIFIED BY ENGINEER.

PROJECT ENGINEER: D. SIATERLIS	SCALE: AS NOTED
DESIGNED BY: D. SIATERLIS	DATE: 05/07/2021
DRAWN BY: C. SMITH	CHECKED BY: S. BARTKOSKE
APPROVED BY:	

PORT OF EVERETT

NORTON TERMINAL DEVELOPMENT & MTCA 3RD INTERIM ACTION ENLARGED GROUNDING PLAN MIDDLE OF YARD

DWG. NO. **E4.2**

CIP NO. 1-8-900-05

PROJECT NO. MT-NT-2021-02.2

SHEET NO. 110 OF 150

AS-BUILTS

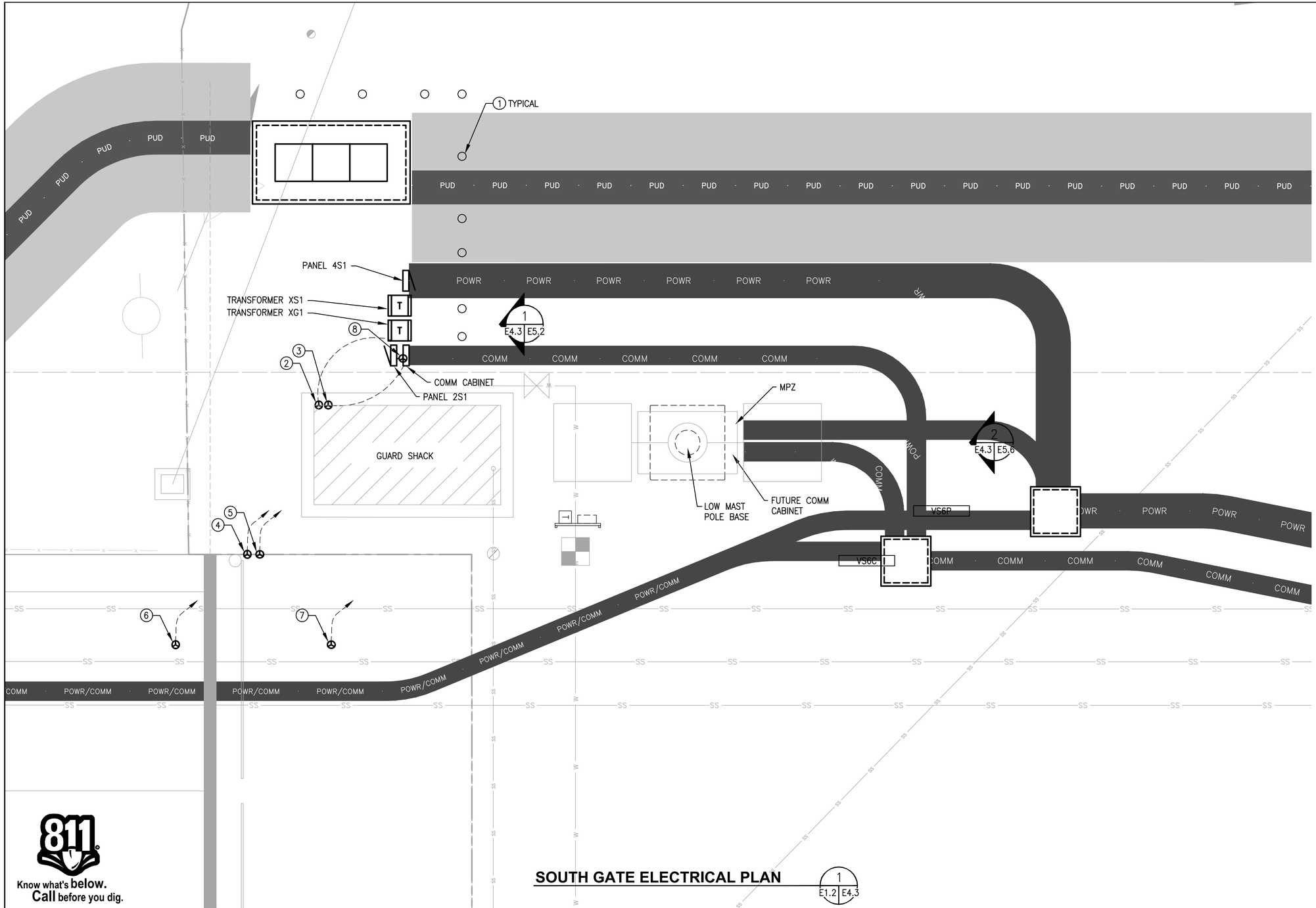

GENERAL NOTES

1. SEE SHEET E6.1 FOR CONDUIT AND WIRING BETWEEN EQUIPMENT.

KEYED NOTES

(1) PROVIDE STRUCTURAL BOLLARD PER SHEET C2.3. BOLLARDS SHALL BE SPACED A MAXIMUM OF 5'–0" FROM EACH OTHER. SHOULD BELOW GRADE OBSTRUCTIONS INTERFERE WITH PLACEMENT, INCREASE QUANTITY OF BOLLARDS TO MAINTAIN SPACING REQUIREMENTS.

(2) PROVIDE GUARD SHACK ELECTRICAL CONNECTION AS SHOWN ON SHEET E6.1. COORDINATE WITH SHACK PROVIDER FOR EXACT CONNECTION LOCATION.

(3) PROVIDE (2) 2" CONDUITS FOR GUARD SHACK COMMUNICATIONS. COORDINATE WITH SHACK PROVIDER FOR EXACT CONNECTION LOCATION.

(4) PROVIDE SLIDING GATE ELECTRICAL CONNECTION. SEE SHEET C6.2 FOR FURTHER INFORMATION. COORDINATE WITH GATE SUPPLIER FOR CONNECTION REQUIREMENTS. FOR BIDDING PURPOSES PROVIDE 4#10 IN 1"C TO PANEL 2S1.

(5) PROVIDE BARRIER ARM GATE ELECTRICAL CONNECTION. SEE SHEET C6.2 FOR FURTHER INFORMATION. COORDINATE WITH GATE SUPPLIER FOR CONNECTION REQUIREMENTS. FOR BIDDING PURPOSES PROVIDE 4#10 IN 1"C TO PANEL 2S1.

(6) PROVIDE EXTERIOR GATE CONTROLS, COORDINATE WITH GATE SUPPLIER FOR CONNECTION REQUIREMENTS.

(7) PROVIDE INTERIOR GATE CONTROLS, COORDINATE WITH GATE SUPPLIER FOR CONNECTION REQUIREMENTS.

(8) PROVIDE 200W HEATER WITH THERMOSTAT WITHIN COMM CABINET AND CIRCUIT TO PANEL 2S1–16.

Know what's below. Call before you dig.

SOUTH GATE ELECTRICAL PLAN

1 E1.2 E4.3

N

0 4 8
scale feet

IF SHEET IS LESS THAN 22x34 REDUCE SCALE ACCORDINGLY

Port of EVERETT
P.O. BOX 538
EVERETT, WA 98206
(425) 259–3164

kpff
1601 5th Avenue, Suite 1300
Seattle, Washington 98101
(206) 382-0600 Fax (206) 382-0500
PROJECT NO. 1600120

ELCON ASSOCIATES, INC.
ENGINEERS–CONSULTANTS
(206) 243-5022 www.elcon.com
16300 CHRISTENSEN ROAD, STE 330
SEATTLE, WA 98188

NO.	DATE	BY	REVISION
2	07/05/2023	DKS	AS–BUILT
1	06/21/2021	DKS	ISSUED FOR BID
0	05/07/2021	DKS	FOR CITY REVIEW

RECORD CONDITIONS ILLUSTRATED IN THESE PLANS REFLECT INFORMATION PROVIDED BY THE CONTRACTOR. RECORD CONDITIONS WERE NOT VERIFIED BY ENGINEER.

PROJECT ENGINEER: D. SIATERLIS	SCALE: AS NOTED
DESIGNED BY: D. SIATERLIS	DATE: 05/07/2021
DRAWN BY: C. SMITH	CHECKED BY: S. BARTKOSKE
APPROVED BY:	

PORT OF EVERETT

NORTON TERMINAL DEVELOPMENT & MTCA 3RD INTERIM ACTION
ENLARGED ELECTRICAL PLAN
SOUTH GATE

DWG. NO. **E4.3**
CIP NO. 1–8–900–05
PROJECT NO. MT–NT–2021–02.2
SHEET NO. 111 OF 150

AS-BUILTS

M: \2019\1900238 POE Maritime Industrial Expansion Engineering Services\2.18 Drawings\AS BUILTS\Incoming\2023-05-31\mle_elec\m8e43 7-06-23 11:15am dyu

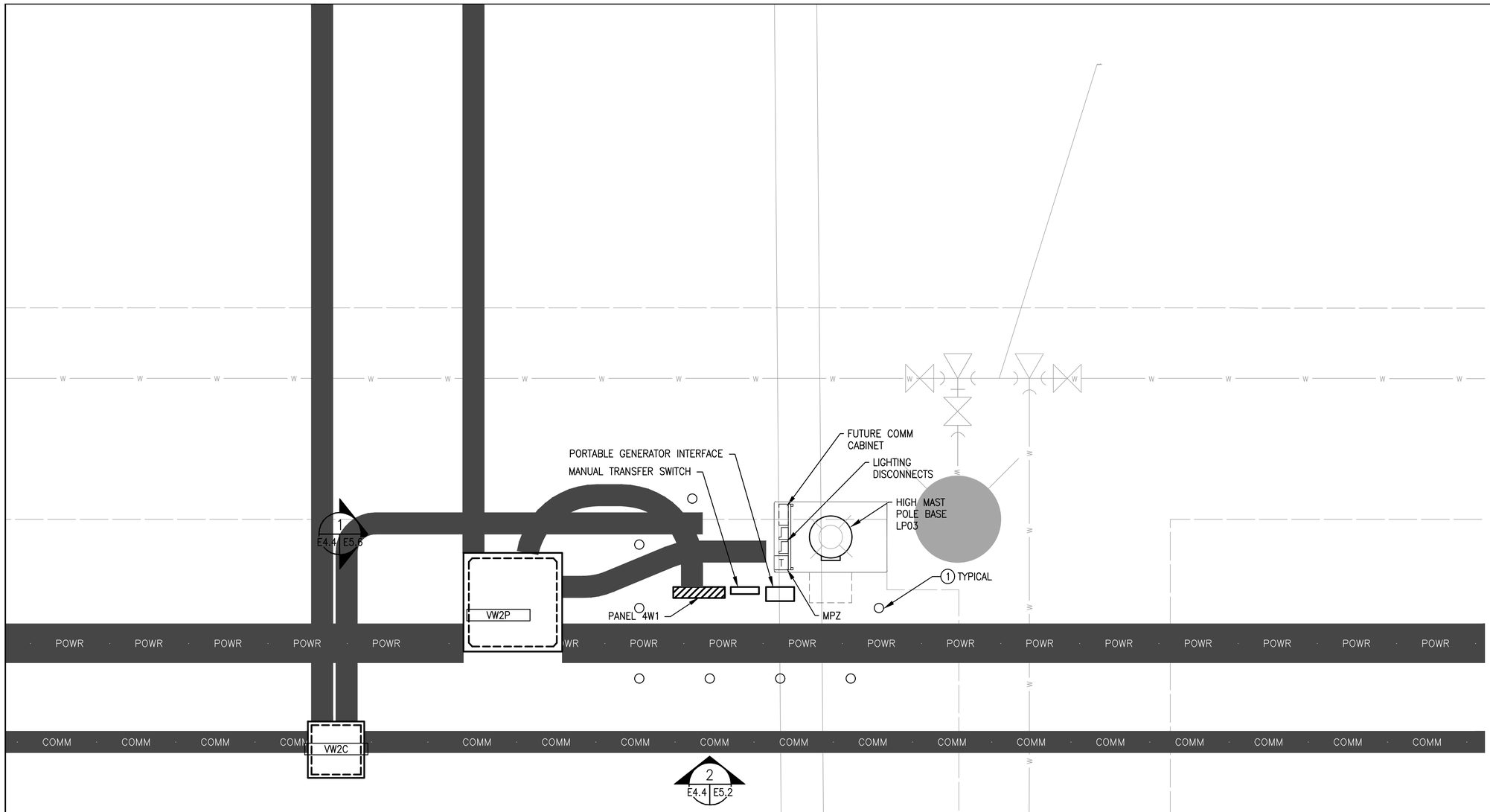

GENERAL NOTES

1. SEE SHEET E6.1 FOR CONDUIT AND WIRING BETWEEN EQUIPMENT.

KEYED NOTES

(1) PROVIDE STRUCTURAL BOLLARD PER SHEET C2.3. BOLLARDS SHALL BE SPACED A MAXIMUM OF 5'–0" FROM EACH OTHER. SHOULD BELOW GRADE OBSTRUCTIONS INTERFERE WITH PLACEMENT, INCREASE QUANTITY OF BOLLARDS TO MAINTAIN SPACING REQUIREMENTS.

811 Know what's below. Call before you dig.

WATERFRONT / BARGE RAMP ELECTRICAL PLAN

1 E1.3 E4.4

N

0 4 8
scale feet

IF SHEET IS LESS THAN 22x34 REDUCE SCALE ACCORDINGLY

Port of EVERETT
P.O. BOX 538
EVERETT, WA 98206
(425) 259-3164

kpff
1601 5th Avenue, Suite 1300
Seattle, Washington 98101
(206) 382-0600 Fax (206) 382-0500
PROJECT NO. 1600120

ELCON ASSOCIATES, INC.
ENGINEERS–CONSULTANTS
(206) 243-5022 www.elcon.com
16300 CHRISTENSEN ROAD, STE 330
SEATTLE, WA 98188

NO.	DATE	BY	REVISION
3	07/05/2023	DKS	AS–BUILT
2	06/21/2021	DKS	ISSUED FOR BID
1	05/07/2021	DKS	FOR CITY REVIEW

RECORD CONDITIONS ILLUSTRATED IN THESE PLANS REFLECT INFORMATION PROVIDED BY THE CONTRACTOR. RECORD CONDITIONS WERE NOT VERIFIED BY ENGINEER.

PROJECT ENGINEER: D. SIATERLIS	SCALE: AS NOTED
DESIGNED BY: D. SIATERLIS	DATE: 05/07/2021
DRAWN BY: C. SMITH	CHECKED BY: S. BARTKOSKE
APPROVED BY:	

PORT OF EVERETT

NORTON TERMINAL DEVELOPMENT & MTCA 3RD INTERIM ACTION
ENLARGED ELECTRICAL PLAN
WATERFRONT / BARGE RAMP

DWG. NO. **E4.4**
CIP NO. 1–8–900–05
PROJECT NO. MT–NT–2021–02.2
SHEET NO. 112 OF 150

AS-BUILTS

M:\2019\1900238 POE Maritime Industrial Expansion Engineering Services\2.18 Drawings\AS BUILTS\Incoming\2023-05-31\mle_elec\m8e44 7-06-23 11:15am dyu

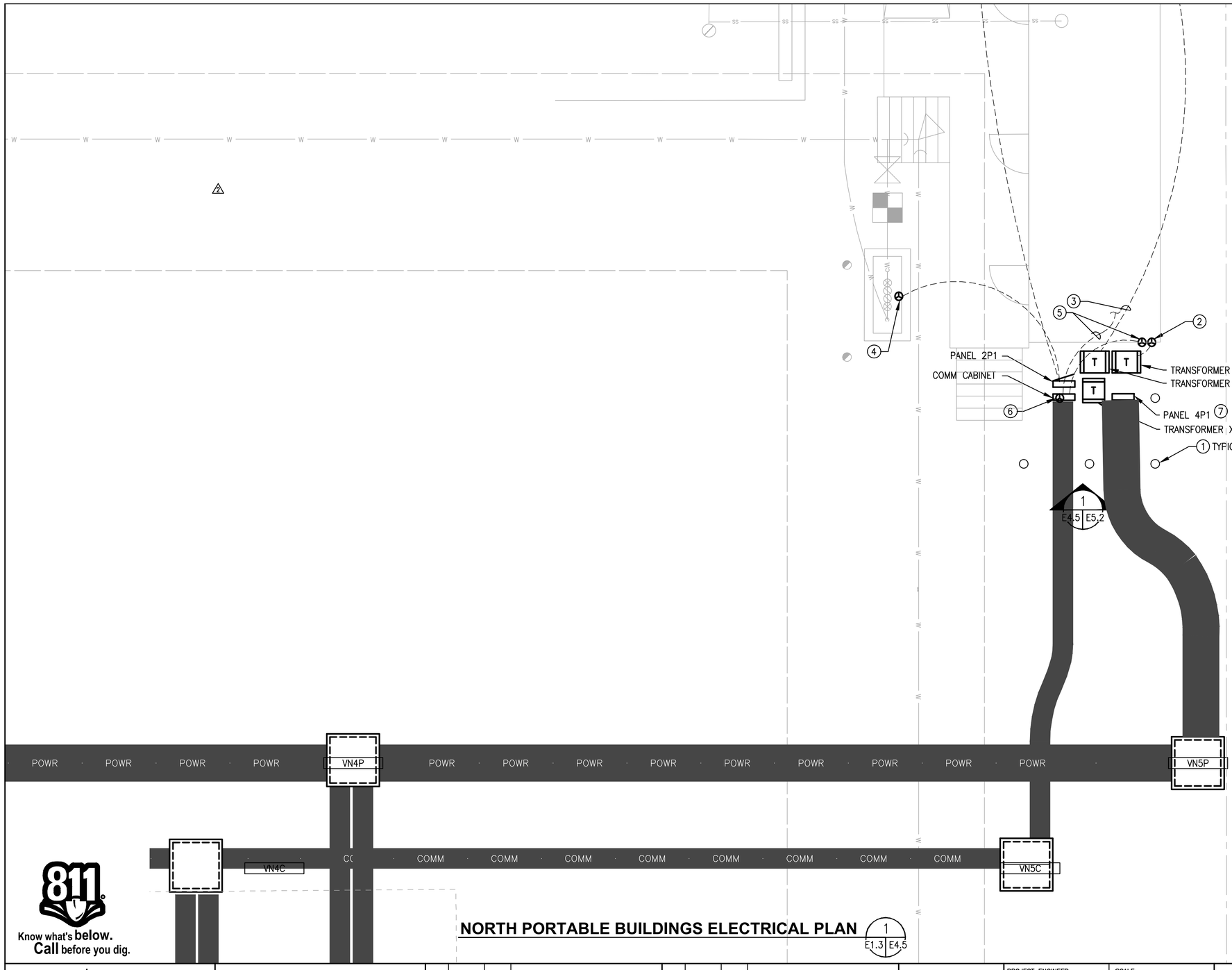

GENERAL NOTES

1. SEE SHEET E6.1 FOR CONDUIT AND WIRING BETWEEN EQUIPMENT.

KEYED NOTES

(1) PROVIDE STRUCTURAL BOLLARD PER SHEET C2.3. BOLLARDS SHALL BE SPACED A MAXIMUM OF 5'–0" FROM EACH OTHER. SHOULD BELOW GRADE OBSTRUCTIONS INTERFERE WITH PLACEMENT, INCREASE QUANTITY OF BOLLARDS TO MAINTAIN SPACING REQUIREMENTS.

(2) PROVIDE LONGSHOREMAN BREAK ROOM TRAILER ELECTRICAL CONNECTION AS SHOWN ON SHEET E6.1. COORDINATE WITH TRAILER PROVIDER FOR EXACT CONNECTION LOCATION.

(3) PROVIDE LONGSHOREMAN RESTROOM TRAILER ELECTRICAL CONNECTION AS SHOWN ON SHEET E6.1. COORDINATE WITH TRAILER PROVIDER FOR EXACT CONNECTION LOCATION.

(4) PROVIDE HOT BOX HEATER ELECTRICAL CONNECTION, SEE SHEET C5.9 FOR FURTHER HOT BOX INFORMATION. CIRCUIT 3#10 IN 1"C TO 2P1–1.

(5) PROVIDE (1) 2" CONDUIT TO EACH LONGSHOREMAN TRAILER FOR COMMUNICATIONS. COORDINATE WITH TRAILER PROVIDER FOR EXACT CONNECTION LOCATIONS.

(6) PROVIDE 200W HEATER WITH THERMOSTAT WITHIN COMM CABINET AND CIRCUIT TO PANEL 2P1–5.

(7) PROVIDE (2) 100A 480V 4P 4W RECEPTACLES ADJACENT TO PANEL FOR POWERING PORTABLE TRANSFORMER SKID SHOWN ON E5.3.

Know what's below. Call before you dig.

NORTH PORTABLE BUILDINGS ELECTRICAL PLAN

1
E1.3 E4.5

N

0 4 8
scale feet

IF SHEET IS LESS THAN 22x34
REDUCE SCALE ACCORDINGLY

Port of EVERETT
P.O. BOX 538
EVERETT, WA 98206
(425) 259–3164

kpff
1601 5th Avenue, Suite 1300
Seattle, Washington 98101
(206) 382-0600 Fax (206) 382-0500
PROJECT NO. 1600120

ELCON ASSOCIATES, INC.
ENGINEERS–CONSULTANTS
(206) 243-5022 www.elcon.com
16300 CHRISTENSEN ROAD, STE 330
SEATTLE, WA 98188

NO.	DATE	BY	REVISION
3	07/05/2023	DKS	AS–BUILT
2	2/18/2022	DKS	MARITIME TENANT SITE PLAN REVISIONS
1	06/21/2021	DKS	ISSUED FOR BID
0	05/07/2021	DKS	FOR CITY REVIEW

RECORD CONDITIONS ILLUSTRATED IN THESE PLANS REFLECT INFORMATION PROVIDED BY THE CONTRACTOR. RECORD CONDITIONS WERE NOT VERIFIED BY ENGINEER.

PROJECT ENGINEER: D. SIATERLIS	SCALE: AS NOTED
DESIGNED BY: D. SIATERLIS	DATE: 05/07/2021
DRAWN BY: C. SMITH	CHECKED BY: S. BARTKOSKE
APPROVED BY:	

PORT OF EVERETT

NORTON TERMINAL DEVELOPMENT & MTCA 3RD INTERIM ACTION
ENLARGED ELECTRICAL PLAN
NORTH PORTABLE BUILDINGS

DWG. NO. **E4.5**
CIP NO. 1–8–900–05
PROJECT NO. MT–NT–2021–02.2
SHEET NO. 113 OF 150

AS-BUILTS

M: \2019\1900238 POE Maritime Industriol Expansion Engineering Services\2.18 Drawings\AS BUILTS\Incoming\2023–05–31\mle_elec\m8e45 7–06–23 11:15am dyu

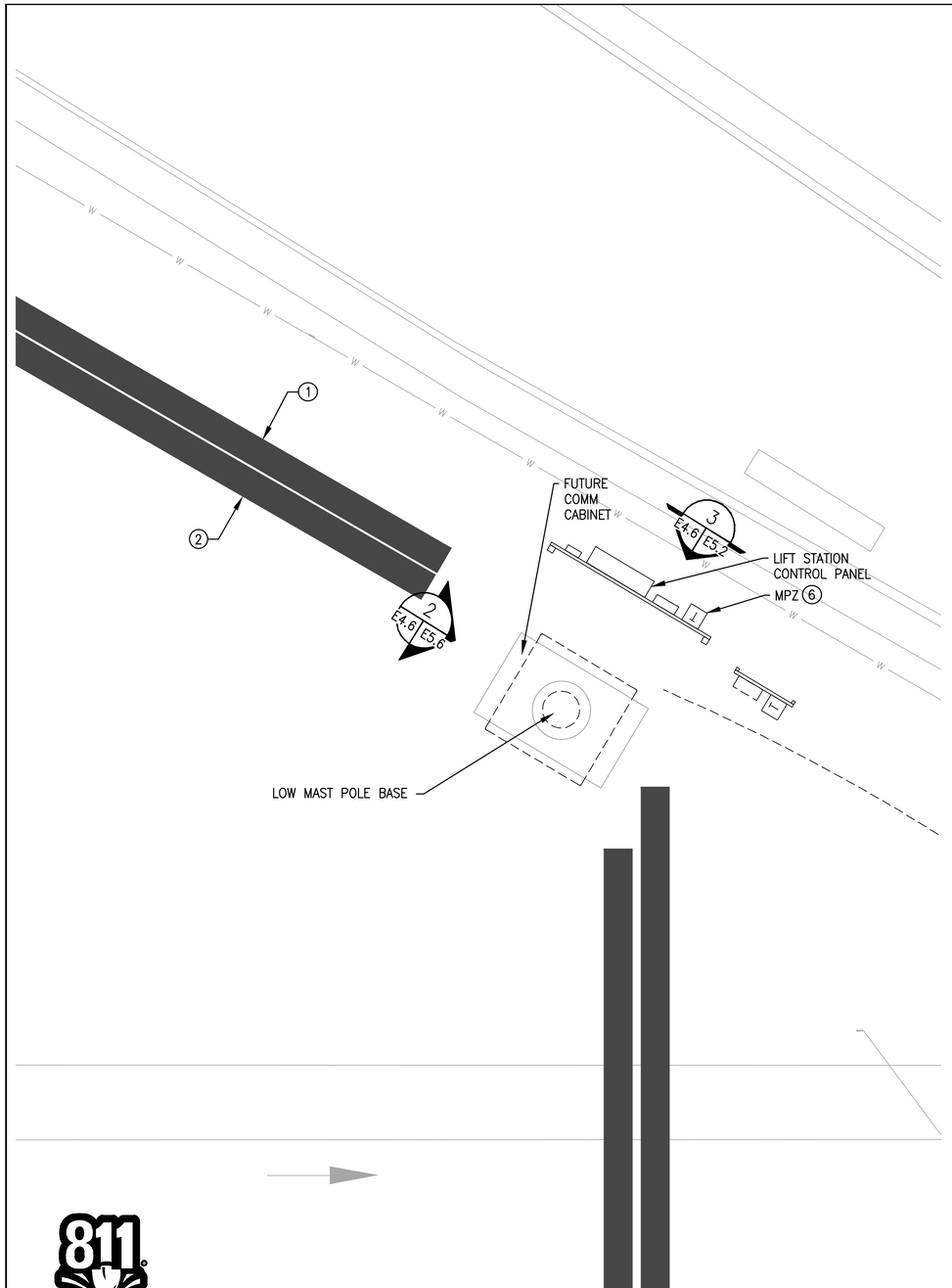

LIFT STATION CONTROL PANEL ELECTRICAL PLAN

1 | E1.3 | E4.6

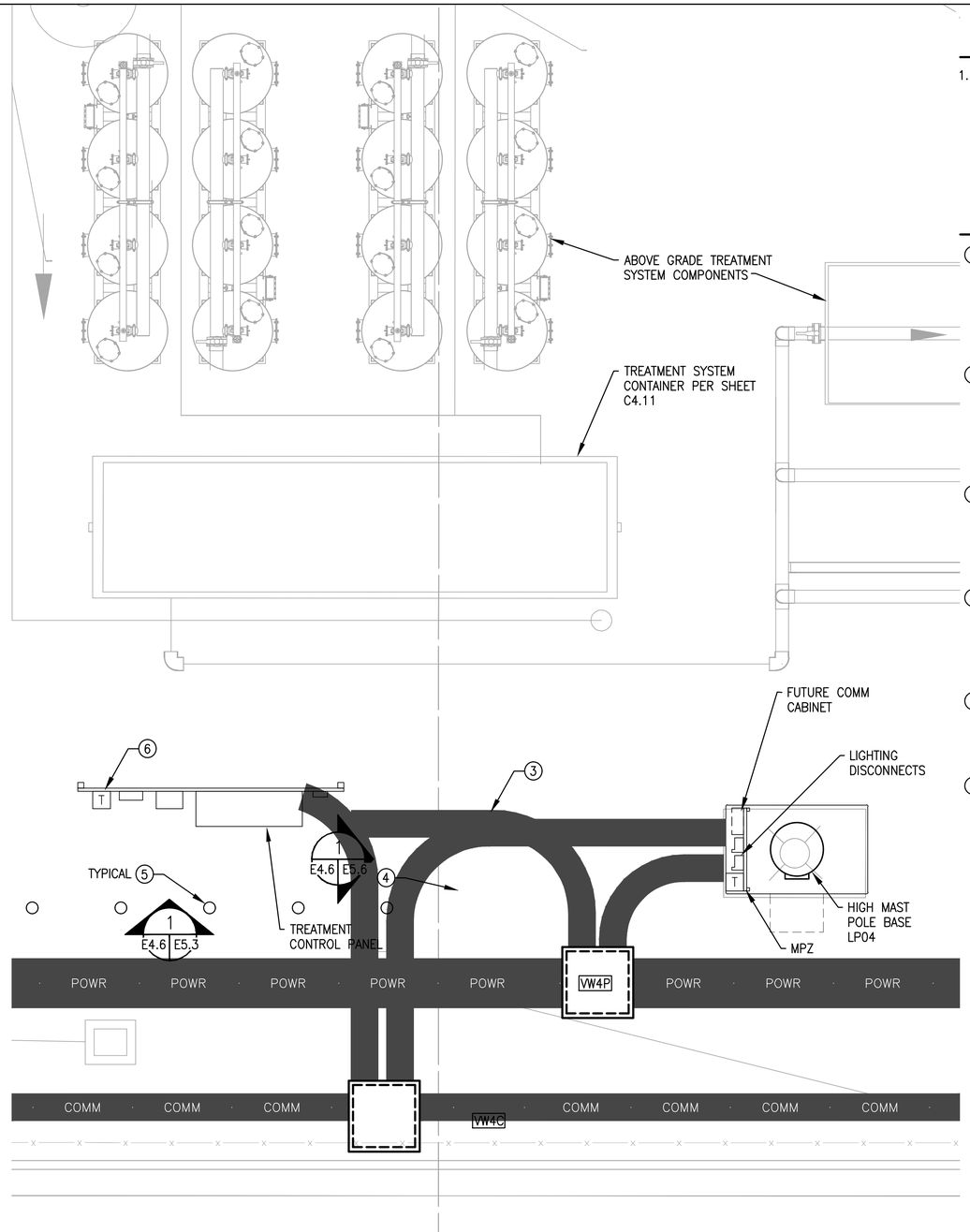

TREATMENT CONTROL PANEL ELECTRICAL PLAN

2 | E1.3 | E4.6

GENERAL NOTES

1. SEE SHEET E6.1 FOR CONDUIT AND WIRING BETWEEN EQUIPMENT.

KEYED NOTES

(1) COORDINATE WITH LIFT STATION SUPPLIER FOR CONNECTION REQUIREMENTS. FOR BIDDING PURPOSES PROVIDE DUCTBANK WITH THE FOLLOWING CONDUITS TO SERVE LIFT STATION:
(2) 2"C – POWER
(3) 2"C – CONTROL
(1) 2"C – SPARE

(2) COORDINATE WITH LIFT STATION SUPPLIER FOR CONNECTION REQUIREMENTS. FOR BIDDING PURPOSES PROVIDE DUCTBANK WITH THE FOLLOWING CONDUITS TO SERVE VALVE VAULT:
(1) 2"C – POWER
(1) 2"C – CONTROL
(1) 2"C – SPARE

(3) COORDINATE WITH LIFT STATION SUPPLIER FOR CONNECTION REQUIREMENTS. FOR BIDDING PURPOSES PROVIDE DUCTBANK WITH THE FOLLOWING CONDUITS TO SERVE TREATMENT CONTROL PANEL:
(1) 4"C – POWER
(1) 4"C – SPARE

(4) COORDINATE WITH LIFT STATION SUPPLIER FOR CONNECTION REQUIREMENTS. FOR BIDDING PURPOSES PROVIDE DUCTBANK WITH THE FOLLOWING CONDUITS TO SERVE TREATMENT CONTROL PANEL:
(1) 2"C – COMM
(1) 2"C – SPARE

(5) PROVIDE STRUCTURAL BOLLARD PER SHEET C2.3. BOLLARDS SHALL BE SPACED A MAXIMUM OF 5'–0" FROM EACH OTHER. SHOULD BELOW GRADE OBSTRUCTIONS INTERFERE WITH PLACEMENT, INCREASE QUANTITY OF BOLLARDS TO MAINTAIN SPACING REQUIREMENTS.

(6) PROVIDE COMBINATION TRANSFORMER AND PANELBOARD (MPZ). CIRCUIT 2#8, #8G IN 2"C TO 4W1–14,16.

N

0 4 8
scale feet

811 Know what's below. Call before you dig.

IF SHEET IS LESS THAN 22x34 REDUCE SCALE ACCORDINGLY

Port of EVERETT
P.O. BOX 538
EVERETT, WA 98206
(425) 259-3164

kpff
1601 5th Avenue, Suite 1300
Seattle, Washington 98101
(206) 382-0600 Fax (206) 382-0500
PROJECT NO. 1600120

ELCON ASSOCIATES, INC.
ENGINEERS–CONSULTANTS
(206) 243-5022 www.elcon.com
16300 CHRISTENSEN ROAD, STE 330
SEATTLE, WA 98188

NO.	DATE	BY	REVISION
2	06/13/2023	DKS	AS–BUILT
1	06/21/2021	DKS	ISSUED FOR BID
0	05/07/2021	DKS	FOR CITY REVIEW

PROJECT ENGINEER: D. SIATERLIS	SCALE: AS NOTED
DESIGNED BY: D. SIATERLIS	DATE: 05/07/2021
DRAWN BY: C. SMITH	CHECKED BY: S. BARTKOSKE
APPROVED BY:	

PORT OF EVERETT

NORTON TERMINAL DEVELOPMENT & MTCA 3RD INTERIM ACTION
ENLARGED ELECTRICAL PLAN
CONTROL PANELS

DWG. NO. **E4.6**
CIP NO. 1–8–900–05
PROJECT NO. MT–NT–2021–02.2
SHEET NO. 114 OF 150

AS-BUILTS

M:\2019\1900238 POE Maritime Industrial Expansion Engineering Services\2.18 Drawings\AS BUILTS\Incoming\2023–05–31\mle_elec\m8e46 7–06–23 11:16am dyu

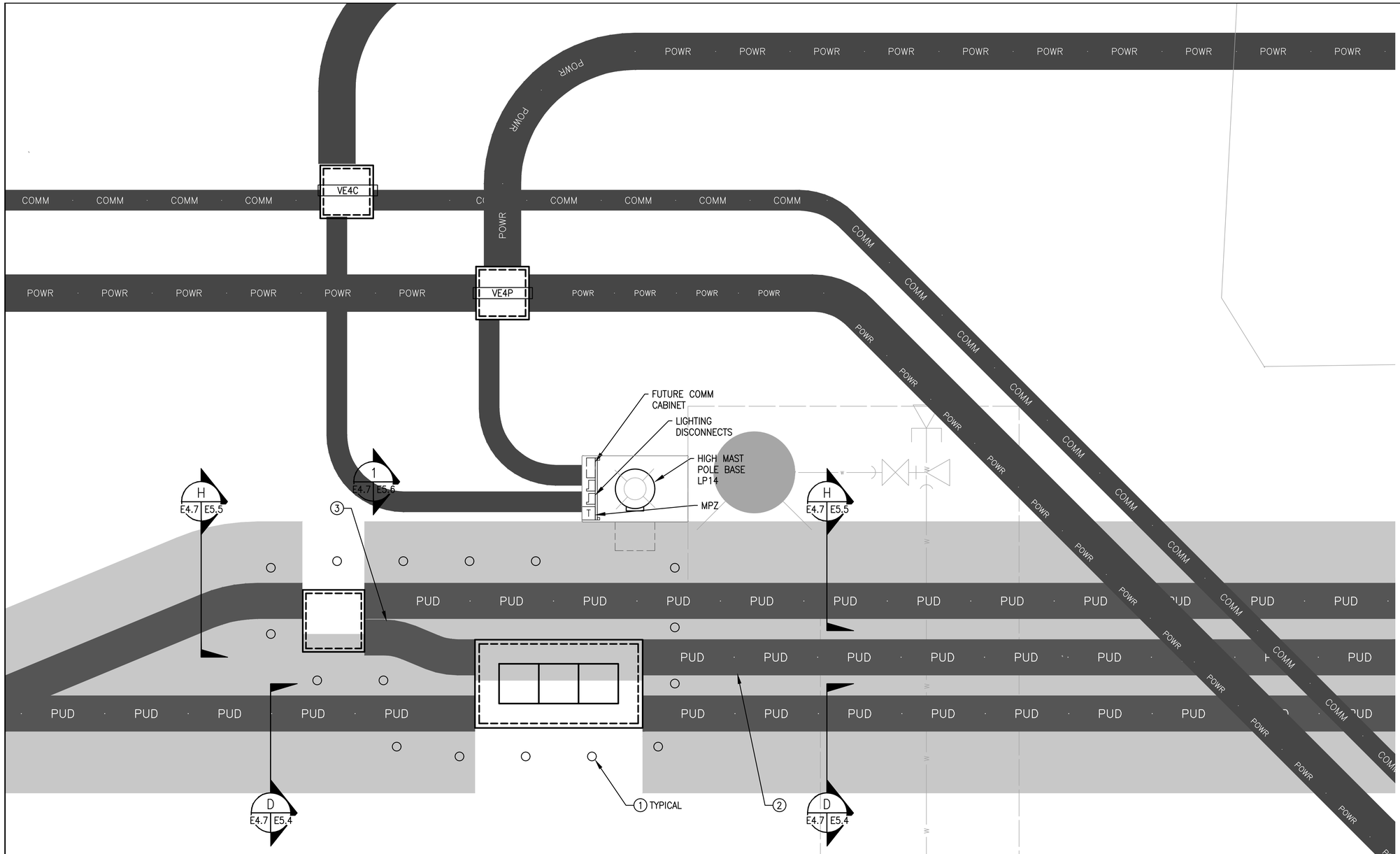

GENERAL NOTES

1. SEE SHEET E6.1 FOR CONDUIT AND WIRING BETWEEN EQUIPMENT.

KEYED NOTES

1. PROVIDE STRUCTURAL BOLLARD PER SHEET C2.3. BOLLARDS SHALL BE SPACED A MAXIMUM OF 5'–0" FROM EACH OTHER. SHOULD BELOW GRADE OBSTRUCTIONS INTERFERE WITH PLACEMENT, INCREASE QUANTITY OF BOLLARDS TO MAINTAIN SPACING REQUIREMENTS.
2. SNOPUD TRENCH WITH (2) 6" CONDUITS, SEE SECTION D SHEET E5.4 FOR FURTHER DETAILS.
3. SNOPUD TRENCH WITH (2) 4" CONDUITS, SEE SECTION G SHEET E5.5 FOR FURTHER DETAILS.

811 Know what's **below.** **Call** before you dig.

ENLARGED ELECTRICAL PLAN

1 E1.5 E4.7

N

0 4 8
scale feet

IF SHEET IS LESS THAN 22x34 REDUCE SCALE ACCORDINGLY

Port of EVERETT
P.O. BOX 538
EVERETT, WA 98206
(425) 259-3164

kpff
1601 5th Avenue, Suite 1300
Seattle, Washington 98101
(206) 382-0600 Fax (206) 382-0500
PROJECT NO. 1600120

ELCON ASSOCIATES, INC.
ENGINEERS–CONSULTANTS
(206) 243-5022 www.elcon.com
16300 CHRISTENSEN ROAD, STE 330
SEATTLE, WA 98188

NO.	DATE	BY	REVISION
2	07/05/2023	DKS	AS–BUILT
1	06/21/2021	DKS	ISSUED FOR BID
0	05/07/2021	DKS	FOR CITY REVIEW

RECORD CONDITIONS ILLUSTRATED IN THESE PLANS REFLECT INFORMATION PROVIDED BY THE CONTRACTOR. RECORD CONDITIONS WERE NOT VERIFIED BY ENGINEER.

PROJECT ENGINEER: D. SIATERLIS	SCALE: AS NOTED
DESIGNED BY: D. SIATERLIS	DATE: 05/07/2021
DRAWN BY: C. SMITH	CHECKED BY: S. BARTKOSKE
APPROVED BY:	

PORT OF EVERETT

NORTON TERMINAL DEVELOPMENT & MTCA 3RD INTERIM ACTION
ENLARGED ELECTRICAL PLAN
SNOPUD VAULTS, POLE LP14

DWG. NO. **E4.7**
CIP NO. 1–8–900–05
PROJECT NO. MT–NT–2021–02.2
SHEET NO. 115 OF 150

AS-BUILTS

M:\2019\1900238 POE Maritime Industrial Expansion Engineering Services\2.18 Drawings\AS BUILTS\Incoming\2023-05-31\mie_elec\m8e47 7-06-23 11:16am dyu

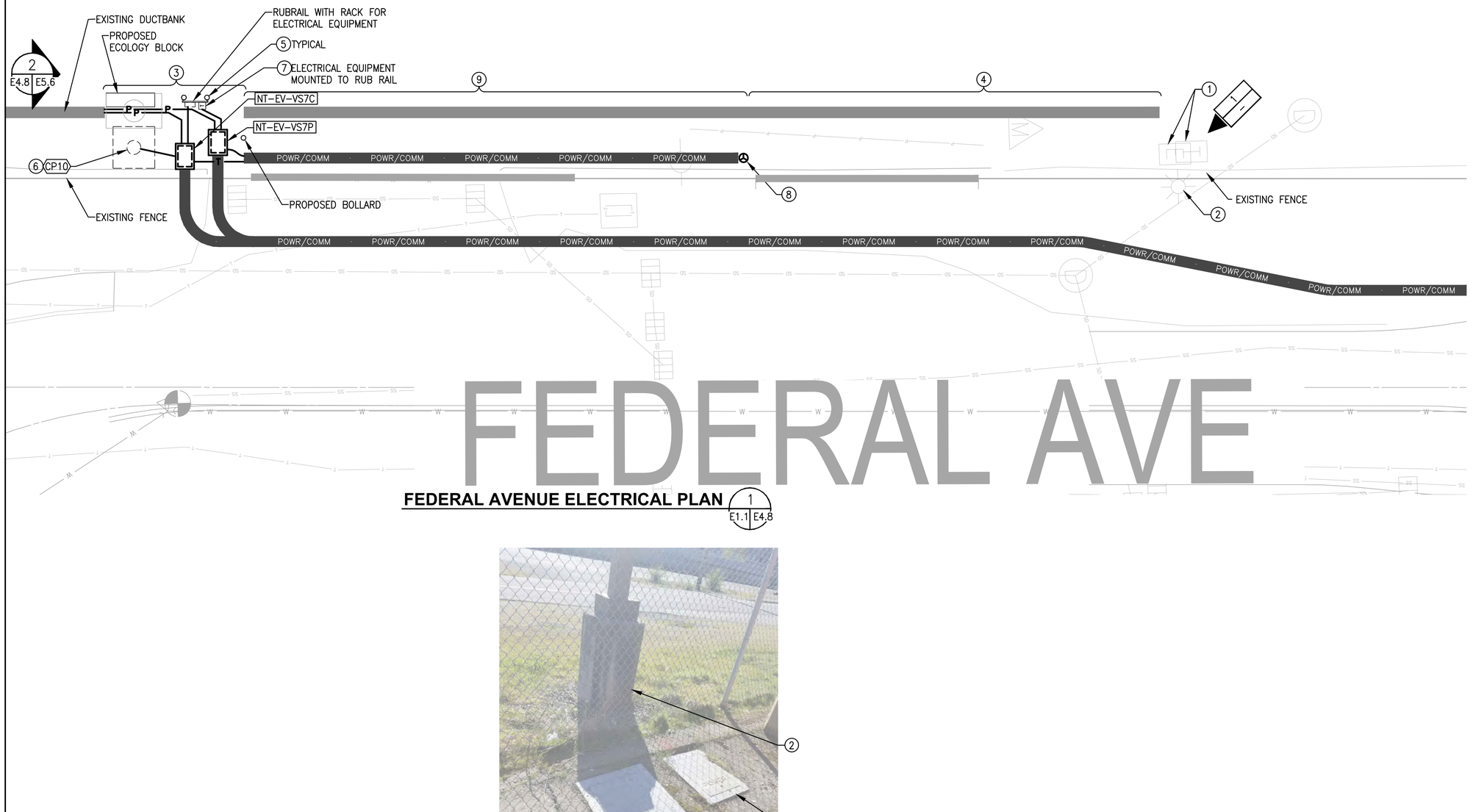

FEDERAL AVENUE ELECTRICAL PLAN 1 (E1.1 | E4.8)

EXISTING HANDHOLE PHOTO 1

GENERAL NOTES

1. THIS PORTION OF SITE IS ACTIVE, THE OPERATION OF THE FACILITY WILL TAKE PRECEDENCE OVER THE WORK OF THE CONTRACTOR. IT IS THE RESPONSIBILITY OF THE CONTRACTOR TO COORDINATE CONSTRUCTION WITH OWNER'S PERSONNEL TO MINIMIZE DISRUPTION TO THE FACILITY.
2. OUTAGES ARE TO BE MINIMIZED. PROVIDE NOTIFICATION TO OWNER'S PERSONNEL OF ANY IMMINENT POWER OR COMMUNICATIONS OUTAGES A MINIMUM OF 48 HOURS PRIOR TO OUTAGE. PROCEED WITH EACH OUTAGE ONLY AFTER APPROVAL FROM OWNER'S PERSONNEL IS GIVEN.
3. DEMOLITION OF COMMUNICATIONS CABLING TO EXISTING COMMUNICATIONS POLE BY OTHERS.
4. CLEAN AND MANDREL ANY EXISTING CONDUIT PRIOR TO RE-USE.

KEYED NOTES

1. DEMOLISH EXISTING HANDHOLES AFTER NEW COMMUNICATIONS POLE IS IN SERVICE.
2. SALVAGE EXISTING PORT COMMUNICATIONS POLE AND RETURN TO OWNER AFTER NEW COMMUNICATIONS POLE IS IN SERVICE, ABANDON POLE FOUNDATION IN PLACE.
3. DEMOLISH THIS PORTION OF EXISTING CONCRETE ENCASED DUCT BANK WITH (1) 2"C POWER AND (1) 2" COMMUNICATIONS. DEMOLISH PORTION OF CIRCUIT (2#8, 1#10G) FROM EXISTING COMMUNICATIONS POLE (KEYED NOTE 2) TO NEAREST HANDHOLE AS SHOWN ON E1.1 COORDINATE WITH OWNER FOR DE-ENERGIZING EXISTING CIRCUIT GS-N1-11 PRIOR TO DEMOLITION.
4. DEMOLISH THIS PORTION OF EXISTING DUCTBANK IF IT INTERFERES WITH NEW GATE INSTALLATION, OTHERWISE ABANDON IN PLACE.
5. PROVIDE STRUCTURAL BOLLARD PER SHEET C2.3. BOLLARDS SHALL BE SPACED A MAXIMUM OF 5'-0" FROM EACH OTHER. SHOULD BELOW GRADE OBSTRUCTIONS INTERFERE WITH PLACEMENT, INCREASE QUANTITY OF BOLLARDS TO MAINTAIN SPACING REQUIREMENTS.
6. LOW-MAST COMMUNICATIONS POLE.
7. PROVIDE COMBINATION TRANSFORMER AND PANELBOARD (MPZ). CIRCUIT 2#8, #8G IN 2"C TO 4S1-2,4.
8. PROVIDE ELECTRICAL CONNECTION TO GATE CONTROLLER. SEE SHEET C6.2 FOR FURTHER INFORMATION. COORDINATE WITH GATE SUPPLIER FOR CONNECTION REQUIREMENTS. FOR BIDDING PURPOSES PROVIDE 4#10 IN 1"C TO PANEL 4S1.
9. PROVIDE (1) 2"C POWER AND (1) 2"C COMMUNICATIONS WITHIN DUCT BANK. PORTION OF EXISTING DUCT BANK MAY BE REUSED IN LIEU OF NEW DUCT BANK IF EXISTING IS IN SATISFACTORY CONDITION.

811 Know what's below. Call before you dig.

N 0 8 16 scale feet

IF SHEET IS LESS THAN 22x34 REDUCE SCALE ACCORDINGLY

Port of EVERETT
P.O. BOX 538
EVERETT, WA 98206
(425) 259-3164

kpff
1601 5th Avenue, Suite 1300
Seattle, Washington 98101
(206) 382-0600 Fax (206) 382-0500
PROJECT NO. 1600120

ELCON ASSOCIATES, INC.
ENGINEERS-CONSULTANTS
(206) 243-5022 www.elcon.com
16300 CHRISTENSEN ROAD, STE 330
SEATTLE, WA 98188

NO.	DATE	BY	REVISION
2	07/05/2023	DKS	AS-BUILT
1	06/21/2021	DKS	ISSUED FOR BID
0	05/07/2021	DKS	FOR CITY REVIEW

RECORD CONDITIONS ILLUSTRATED IN THESE PLANS REFLECT INFORMATION PROVIDED BY THE CONTRACTOR. RECORD CONDITIONS WERE NOT VERIFIED BY ENGINEER.

PROJECT ENGINEER: D. SIATERLIS	SCALE: AS NOTED
DESIGNED BY: D. SIATERLIS	DATE: 05/07/2021
DRAWN BY: C. SMITH	CHECKED BY: S. BARTKOSKE
APPROVED BY:	

PORT OF EVERETT

NORTON TERMINAL DEVELOPMENT & MTCA 3RD INTERIM ACTION
ENLARGED ELECTRICAL PLAN
FEDERAL AVE

DWG. NO. **E4.8**
CIP NO. 1-8-900-05
PROJECT NO. MT-NT-2021-02.2
SHEET NO. 116 OF 150

AS-BUILTS

M: \2019\1900238 POE Maritime Industrial Expansion Engineering Services\2.18 Drawings\AS BUILTS\Incoming\2023-05-31\mie_elec\m8e48 7-06-23 11:17am dyu

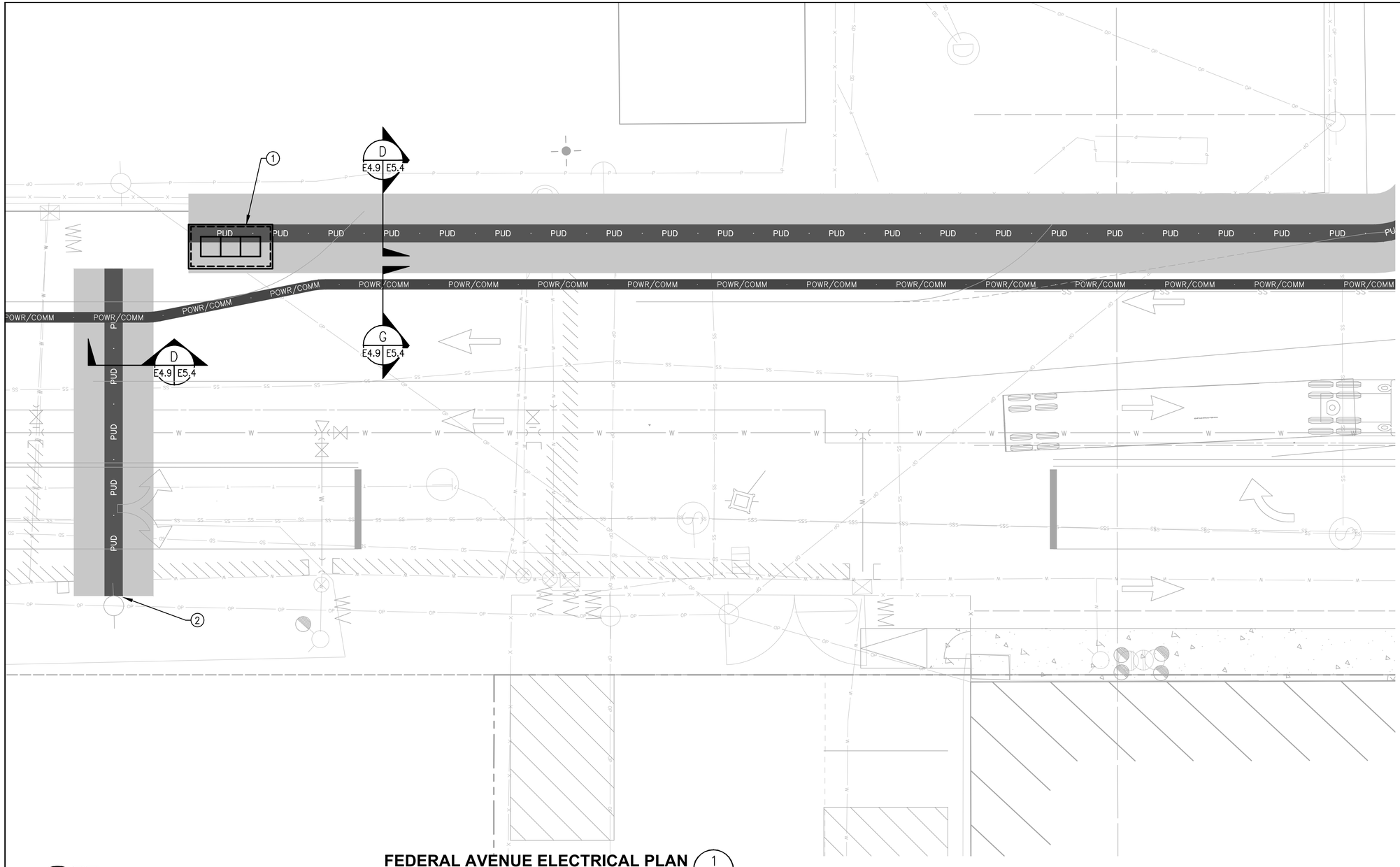

GENERAL NOTES

1. THIS PORTION OF SITE IS ACTIVE, THE OPERATION OF THE FACILITY WILL TAKE PRECEDENCE OVER THE WORK OF THE CONTRACTOR. IT IS THE RESPONSIBILITY OF THE CONTRACTOR TO COORDINATE CONSTRUCTION WITH OWNER'S PERSONNEL TO MINIMIZE DISRUPTION TO THE FACILITY.
2. SEE SHEET G5.1 FOR PHASING REQUIREMENTS FOR THIS AREA.

KEYED NOTES

(1) PROVIDE CONCRETE PULLING/SPLICING VAULT PER SNOPUD STANDARD "T&D COMPATIBLE UNIT V0210".

(2) TERMINATE CONDUITS AT NEW SNOPUD POLE PER SNOPUD STANDARDS. NEW POLE BY SNOPUD.

FEDERAL AVENUE ELECTRICAL PLAN

1
E1.1 E4.9

Know what's below. Call before you dig.

N

0 8 16
scale feet

0

IF SHEET IS LESS THAN 22x34 REDUCE SCALE ACCORDINGLY

Port of EVERETT
P.O. BOX 538
EVERETT, WA 98206
(425) 259-3164

kpff
1601 5th Avenue, Suite 1300
Seattle, Washington 98101
(206) 382-0600 Fax (206) 382-0500
PROJECT NO. 1600120

ELCON ASSOCIATES, INC.
ENGINEERS–CONSULTANTS
(206) 243-5022 www.elcon.com
16300 CHRISTENSEN ROAD, STE 330
SEATTLE, WA 98188

NO.	DATE	BY	REVISION
0	07/05/2023	DKS	AS-BUILT
0	7/23/2021	DKS	ADDENDUM 3

NO.	DATE	BY	REVISION

RECORD CONDITIONS ILLUSTRATED IN THESE PLANS REFLECT INFORMATION PROVIDED BY THE CONTRACTOR. RECORD CONDITIONS WERE NOT VERIFIED BY ENG... 7/21/21

PROJECT ENGINEER: D. SIATERLIS	SCALE: AS NOTED
DESIGNED BY: D. SIATERLIS	DATE: 05/07/2021
DRAWN BY: C. SMITH	CHECKED BY: S. BARTKOSKE
APPROVED BY:	

PORT OF EVERETT

NORTON TERMINAL DEVELOPMENT & MTCA 3RD INTERIM ACTION
ENLARGED ELECTRICAL PLAN
FEDERAL AVE

DWG. NO. **E4.9**

CIP NO. 1-8-900-05

PROJECT NO. MT-NT-2021-02.2

SHEET NO. 117 OF 150

AS-BUILTS

M:\2019\1900238 POE Maritime Industrial Expansion Engineering Services\2.18 Drawings\AS BUILTS\Incoming\2023-05-31\mie_elec\m8e49 7-06-23 11:17am dyu

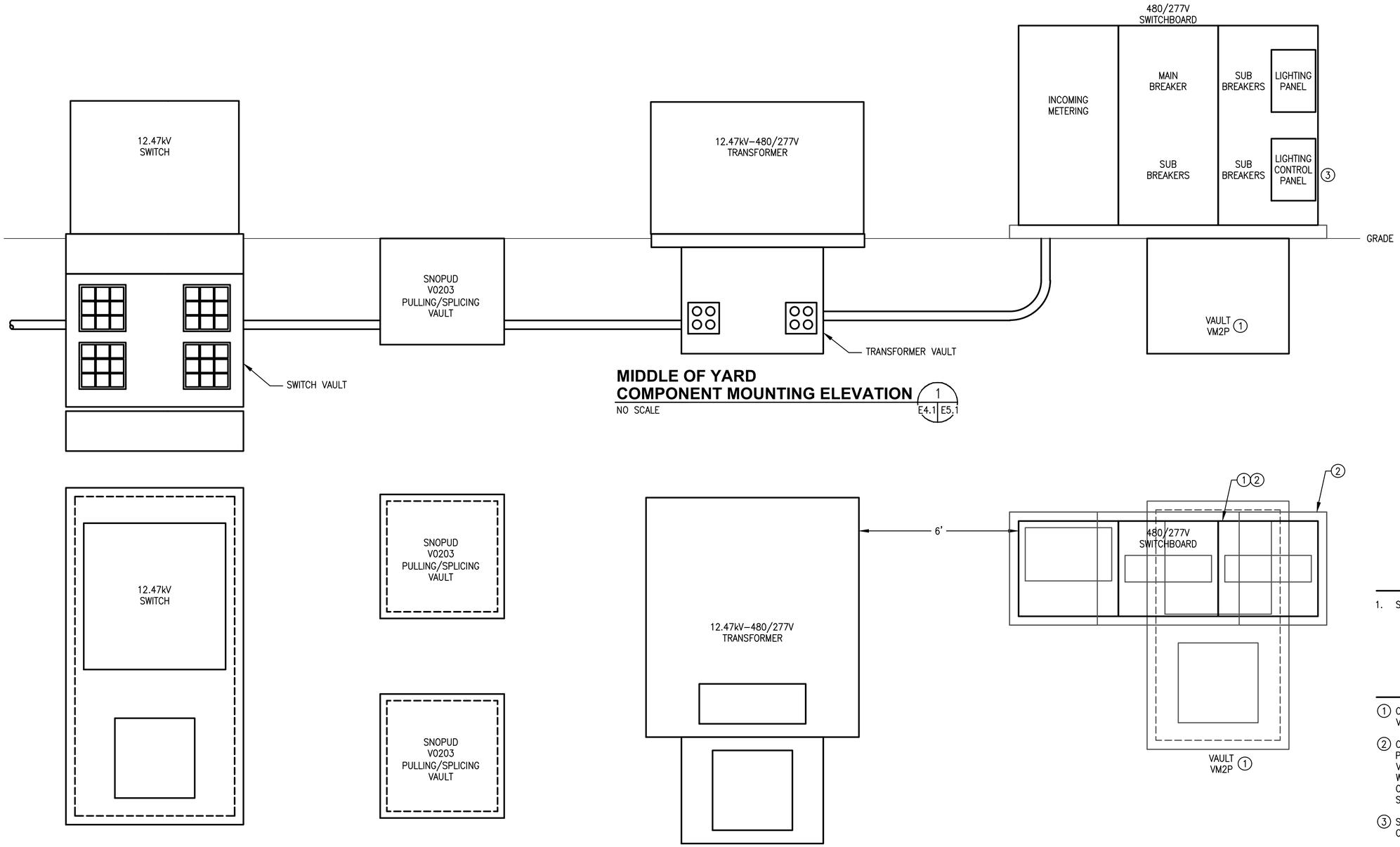

MIDDLE OF YARD
COMPONENT MOUNTING ELEVATION 1
NO SCALE E4.1 | E5.1

MIDDLE OF YARD
COMPONENT MOUNTING PLAN 2
NO SCALE –

GENERAL NOTES

1. SEE KEY NOTES ON SHEET E4.1

KEYED NOTES

1. CENTER SWITCHBOARD BRANCH CIRCUIT SECTIONS OVER VAULT VM2P.
2. COORDINATE OPENINGS WITHIN SWITCHBOARD HOUSEKEEPING PAD WITH BOTTOM OF SWITCHBOARD OPENINGS AND VAULT VM2P OPENING TO MAXIMIZE ALLOWABLE PULL SPACE FOR WIRING. ENSURE VAULT VM2P OPENING IS COMPLETELY COVERED VIA BOTH THE HOUSEKEEPING PAD AND SWITCHBOARD.
3. SEE SHEET E7.6 FOR LIGHTING CONTROLS, PROVIDE CONTROLS INSIDE OF LOCKABLE EXTERIOR DOOR.

IF SHEET IS LESS THAN 22x34
REDUCE SCALE ACCORDINGLY

Port of EVERETT
P.O. BOX 538
EVERETT, WA 98206
(425) 259-3164

kpff
1601 5th Avenue, Suite 1300
Seattle, Washington 98101
(206) 382-0600 Fax (206) 382-0500
PROJECT NO. 1600120

ELCON ASSOCIATES, INC.
ENGINEERS–CONSULTANTS
(206) 243-5022 www.elcon.com
16300 CHRISTENSEN ROAD, STE 330
SEATTLE, WA 98188

NO.	DATE	BY	REVISION
2	07/05/2023	DKS	AS–BUILT
1	06/21/2021	DKS	ISSUED FOR BID
0	05/07/2021	DKS	FOR CITY REVIEW

RECORD CONDITIONS ILLUSTRATED IN THESE PLANS REFLECT INFORMATION PROVIDED BY THE CONTRACTOR. RECORD CONDITIONS WERE NOT VERIFIED BY ENGINEER.

PROJECT ENGINEER: D. SIATERLIS	SCALE: NONE
DESIGNED BY: D. SIATERLIS	DATE: 05/07/2021
DRAWN BY: C. SMITH	CHECKED BY: S. BARTKOSKE
APPROVED BY:	

PORT OF EVERETT

NORTON TERMINAL DEVELOPMENT
& MTCA 3RD INTERIM ACTION
ELECTRICAL DETAILS

DWG. NO. **E5.1**
CIP NO. 1–8–900–05
PROJECT NO. MT–NT–2021–02.2
SHEET NO. 118 OF 150

AS-BUILTS

M:\2019\1900238 POE Maritime Industrial Expansion Engineering Services\2.18 Drawings\AS BUILTS\Incoming\2023–05–31\mle_elec\m8e51 7–05–23 10:11pm dyu

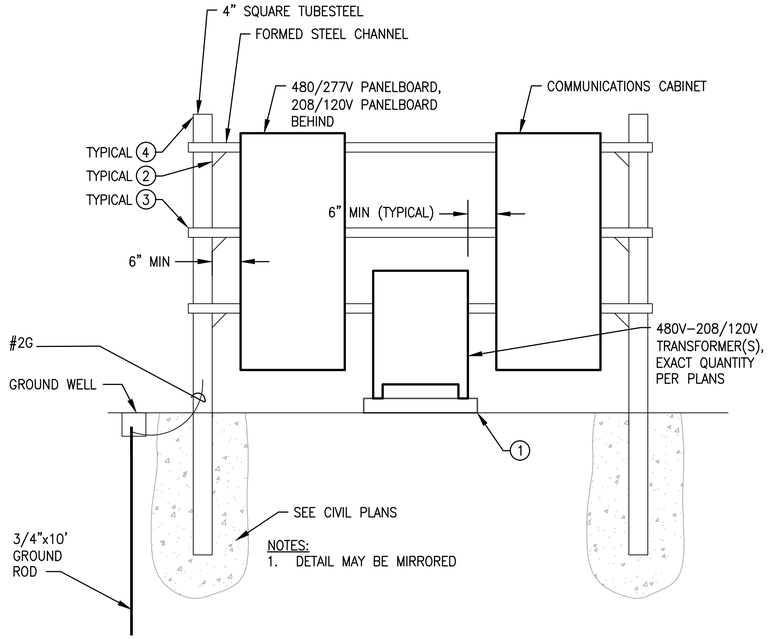

TYPICAL ELECTRICAL COMPONENT MOUNTING ELEVATION

1
E4.3,E4.5 E5,2

0 1 2
scale feet

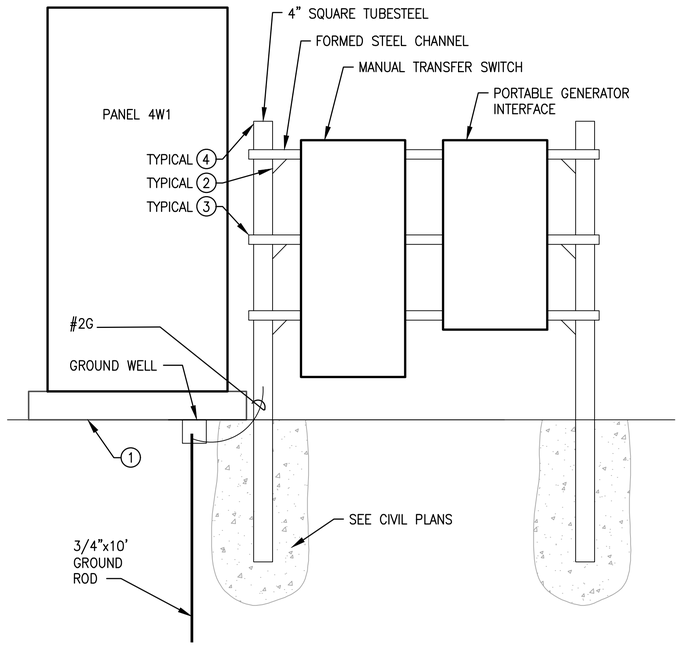

PANEL 4W1 AND TRANSFER SWITCH ELEVATION

2
E4.4 E5,2

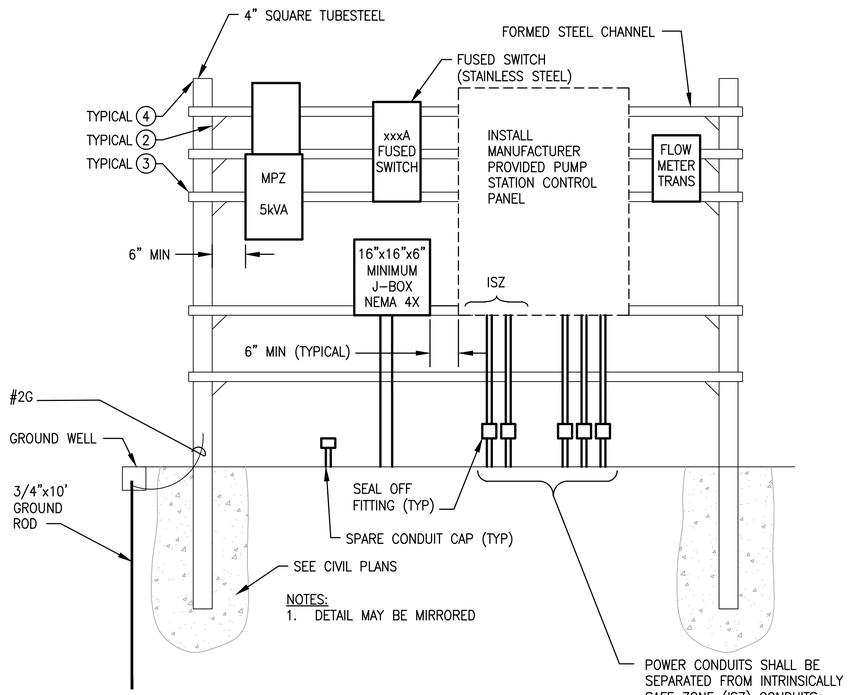

LIFT STATION ELECTRICAL COMPONENT MOUNTING ELEVATION

3
E4.6 E5,2

GENERAL NOTES

1. ALL TUBESTEEL AND FORMED STEEL CHANNEL SHALL BE HOT DIPPED GALVANIZED AFTER FABRICATION UNLESS NOTED OTHERWISE.
2. ALL BOLTS, NUTS, WASHERS AND OTHER MOUNTING HARDWARE SHALL BE STAINLESS STEEL UNLESS NOTED OTHERWISE.
3. PAINT ALL EXPOSED METAL SURFACES AND OVER TOP OF GALVANIZED ITEMS.
4. QUANTITY OF CONDUITS PER PLANS/ONE–LINE DIAGRAMS.

KEYED NOTES

1. PROVIDE CONCRETE PAD PER SHEET S1.3.
2. PROVIDE FLAT PLATE FITTINGS AS REQUIRED.
3. PROVIDE END CAPS ON ALL ENDS.
4. PROVIDE CAPS.

IF SHEET IS LESS THAN 22x34
REDUCE SCALE ACCORDINGLY

Port of EVERETT
P.O. BOX 538
EVERETT, WA 98206
(425) 259–3164

kpff
1601 5th Avenue, Suite 1300
Seattle, Washington 98101
(206) 382-0600 Fax (206) 382-0500
PROJECT NO. 1600120

ELCON ASSOCIATES, INC.
ENGINEERS–CONSULTANTS
(206) 243-5022 www.elcon.com
16300 CHRISTENSEN ROAD, STE 330
SEATTLE, WA 98188

NO.	DATE	BY	REVISION
2	07/05/2023	DKS	AS–BUILT
1	06/21/2021	DKS	ISSUED FOR BID
0	05/07/2021	DKS	FOR CITY REVIEW

RECORD CONDITIONS ILLUSTRATED IN THESE PLANS REFLECT INFORMATION PROVIDED BY THE CONTRACTOR. RECORD CONDITIONS WERE NOT VERIFIED BY ENGINEER.

PROJECT ENGINEER: D. SIATERLIS	SCALE: NONE
DESIGNED BY: D. SIATERLIS	DATE: 05/07/2021
DRAWN BY: C. SMITH	CHECKED BY: S. BARTKOSKE
APPROVED BY:	

PORT OF EVERETT

NORTON TERMINAL DEVELOPMENT & MTCA 3RD INTERIM ACTION
ELECTRICAL DETAILS

DWG. NO. **E5.2**
CIP NO. 1–8–900–05
PROJECT NO. MT–NT–2021–02.2
SHEET NO. 119 OF 150

AS-BUILTS

M:\2019\1900238 POE Maritime Industrial Expansion Engineering Services\2.18 Drawings\AS BUILTS\Incoming\2023–05–31\mie_elec\m8e52 7–05–23 10:11pm dyu

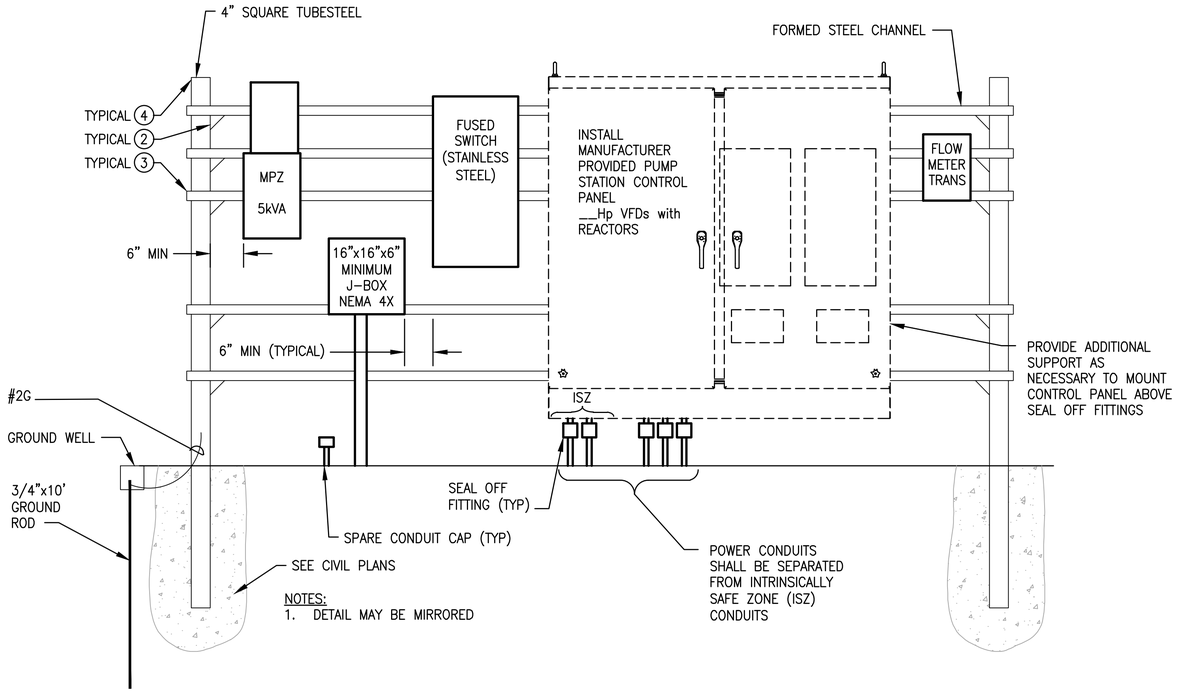

TREATMENT ELECTRICAL COMPONENT MOUNTING ELEVATION

1 | E4.6 | E5.3

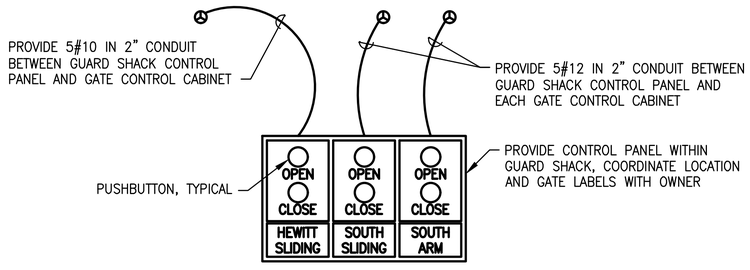

GATE CONTROL PANEL

3 | E4.3 | E5,3

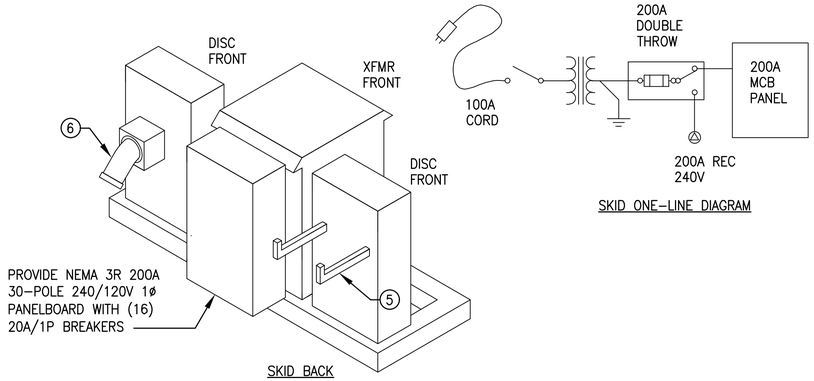

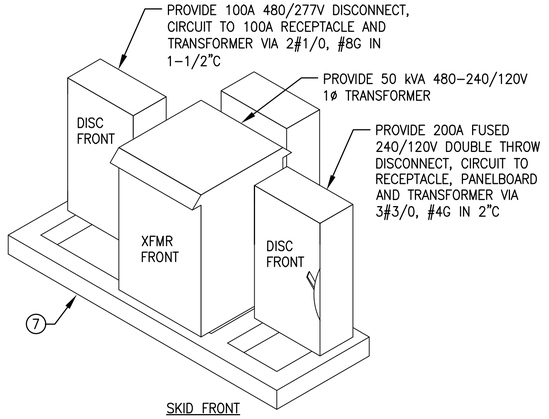

PORTABLE TRANSFORMER SKID ⑧

2 | E4.5 | E5.3

ADDITIONAL STRUT FRAMING FOR DISCONNECT, RECEPTACLE, PANELBOARD AND CORD STORAGE MOUNTING NOT SHOWN FOR SIMPLICITY

GENERAL NOTES

1. ALL TUBESTEEL AND FORMED STEEL CHANNEL SHALL BE HOT DIPPED GALVANIZED AFTER FABRICATION UNLESS NOTED OTHERWISE.
2. ALL BOLTS, NUTS, WASHERS AND OTHER MOUNTING HARDWARE SHALL BE STAINLESS STEEL UNLESS NOTED OTHERWISE.
3. PAINT ALL EXPOSED METAL SURFACES AND OVER TOP OF GALVANIZED ITEMS.
4. QUANTITY OF CONDUITS PER PLANS/ONE-LINE DIAGRAMS.

KEYED NOTES

1. PROVIDE CONCRETE PAD PER SHEET S1.3.
2. PROVIDE FLAT PLATE FITTINGS AS REQUIRED.
3. PROVIDE END CAPS ON ALL ENDS.
4. PROVIDE CAPS.
5. PROVIDE 50' OF #1/0 PORTABLE CORD, HARD WIRED TO 100A DISCONNECT ON ONE END AND A PLUG MATCHING THE RECEPTACLE AT PANEL 4P1 AT THE OTHER. PROVIDE CORD STORAGE ON THE REAR OF THE DISCONNECT.
6. PROVIDE 200A 3W 240V RECEPTACLE. PROVIDE 50' OF #3/0 PORTABLE CORD WITH MATCHING PLUG AT ONE END, COORDINATE WITH OWNER WITH CORD REQUIREMENTS FOR OTHER END.
7. PROVIDE SKID WITH GALVANIZED TYPE C STEEL CHANNEL FRAME AND DOUBLE GALVANIZED STEEL CHANNELS TO SUPPORT EQUIPMENT (TRANSFORMER AND SWITCHES), COORDINATE WITH OWNER FOR SKID REQUIREMENTS, EQUIPMENT ARRANGEMENT AND SEPARATELY DERIVED GROUND CABLING REQUIREMENTS.
   THE CONTRACTOR SHALL DESIGN A SKID FRAME THAT IS STAMPED BY A REGISTERED PROFESSIONAL ENGINEER IN THE STATE OF WASHINGTON AND SUBMITTED TO THE ENGINEER FOR APPROVAL. THE SKID FRAME SHALL BE SUFFICIENTLY RIGID TO ALLOW TRANSPORT OF THE REQUIRED ELECTRICAL EQUIPMENT BY FORKLIFT. THE SKID FRAME SHALL BE HOT-DIPPED GALVANIZED AFTER FABRICATION AND COATED WITH 2 COATS OF WHITE PAINT.
8. PROVIDE 2 COMPLETE SKID ASSEMBLIES, WITH ONE 480V AND ONE 240V PORTABLE CORDS EACH.

IF SHEET IS LESS THAN 22x34
REDUCE SCALE ACCORDINGLY

Port of EVERETT
P.O. BOX 538
EVERETT, WA 98206
(425) 259-3164

kpff
1601 5th Avenue, Suite 1300
Seattle, Washington 98101
(206) 382-0600 Fax (206) 382-0500
PROJECT NO. 1600120

ELCON ASSOCIATES, INC.
ENGINEERS-CONSULTANTS
(206) 243-5022 www.elcon.com
16300 CHRISTENSEN ROAD, STE 330
SEATTLE, WA 98188

NO.	DATE	BY	REVISION
5	07/05/2023	DKS	AS-BUILT
4	1/31/2022	DKS	PORTABLE SKID REVISIONS
3	7/28/2021	DKS	ADDENDUM 4
2	7/23/2021	DKS	ADDENDUM 3
1	06/21/2021	DKS	ISSUED FOR BID
0	05/07/2021	DKS	FOR CITY REVIEW

RECORD CONDITIONS ILLUSTRATED IN THESE PLANS REFLECT INFORMATION PROVIDED BY THE CONTRACTOR. RECORD CONDITIONS WERE NOT VERIFIED BY ENGINEER.

PROJECT ENGINEER: D. SIATERLIS	SCALE: NONE
DESIGNED BY: D. SIATERLIS	DATE: 05/07/2021
DRAWN BY: C. SMITH	CHECKED BY: S. BARTKOSKE
APPROVED BY:	

PORT OF EVERETT

NORTON TERMINAL DEVELOPMENT & MTCA 3RD INTERIM ACTION
ELECTRICAL DETAILS

DWG. NO. **E5.3**

CIP NO. 1-8-900-05

PROJECT NO. MT-NT-2021-02.2

SHEET NO. 120 OF 150

AS-BUILTS

M: \2019\1900238 POE Maritime Industrial Expansion Engineering Services\2-18 Drawings\AS BUILTS\Incoming\2023-05-31\mie_elec\m8e53 7-05-23 10:11pm dyu

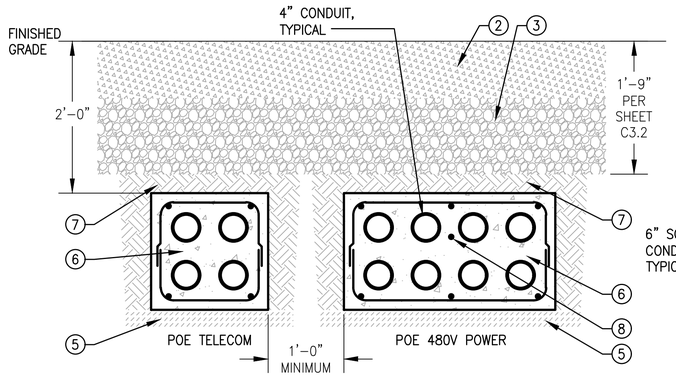

POE DUCT BANK SECTION

NO SCALE — E1.2, E1.3, E1.4, E1.5 | E5.4 — A

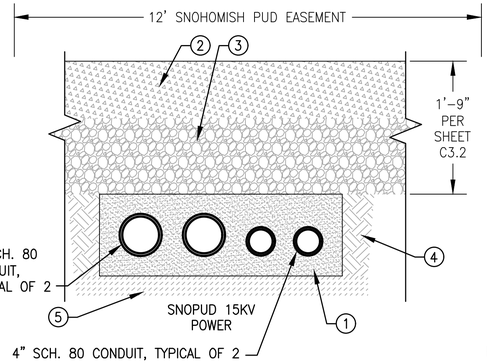

SNOPUD TRENCH SECTION

NO SCALE — E1.2, E1.3, E1.5 | E5.4 — B

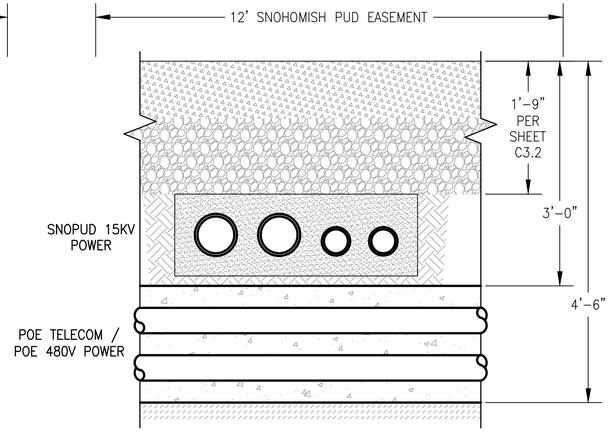

SNOPUD TRENCH SECTION (9)

NO SCALE — E1.2, E1.3, E1.5, E4.1 | E5.4 — C

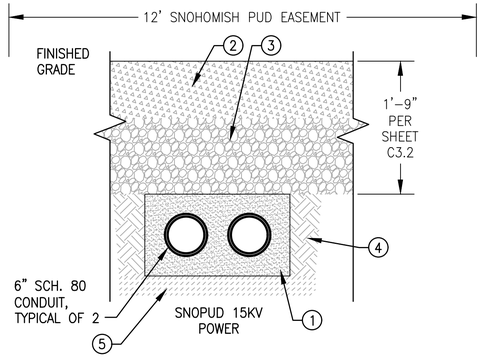

SNOPUD TRENCH SECTION

NO SCALE — E1.2, E1.5, E4.1, E4.7 | E5.4 — D

△2

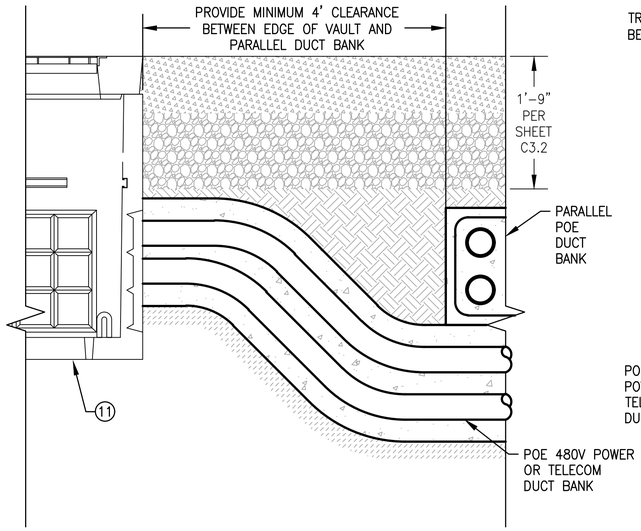

POE DUCT BANK SECTION (9)

NO SCALE — E1.2, E1.3, E1.4, E1.5 | E5.4 — E

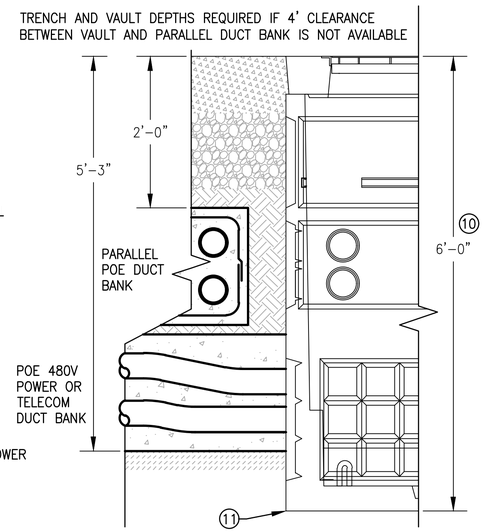

POE DUCT BANK SECTION (9)

NO SCALE — E1.2 | E5.4 — F

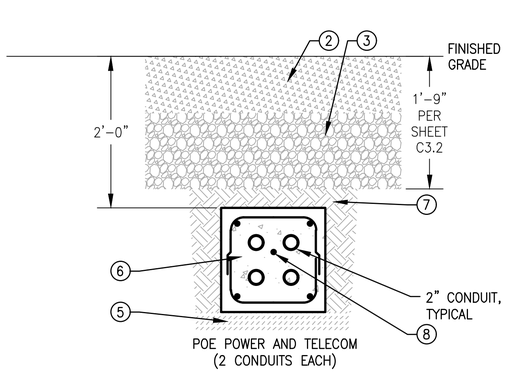

POE DUCT BANK SECTION

NO SCALE — E1.1, E1.2 | E5.4 — G

GENERAL NOTES

1. FOR ALL CONDUITS PROVIDE 2'-0" STAGGER BETWEEN ROW CONNECTION JOINTS UNLESS NOTED OTHERWISE.
2. REFER TO SNOHOMISH COUNTY PUD ELECTRICAL SERVICE REQUIREMENTS FOR MINIMUM CLEARANCES FROM DISTRICT UNDERGROUND LINES IN COUNDUIT TO OTHER CONDUITS, PIPES AND STRUCTURES.

KEYED NOTES

(1) PROVIDE LOW-STRENGTH FLUIDIZED THERMAL BACKFILL (FTB) MINIMUM 3" BEYOND CONDUIT IN ALL DIRECTIONS PER SNOPUD T&D GUIDELINE 4-24-6.0.

(2) HOT MIX ASPHALT PER SHEET C3.2.

(3) CRUSHED ROCK BASE COURSE PER SHEET C3.2.

(4) PROVIDE BACKFILL WITH 5/8" MINUS CRUSHED ROCK AND COMPACTED TO 95% OF MAXIMUM DRY DENSITY OR LOW STRENGTH FTB OR CONTROLLED DENSITY FILL (CDF) PER SNOPUD T&D GUIDELINE 4-24-6.0.

(5) COMPACTED SUBGRADE.

(6) PER STRUCTURAL ENGINEER PROVIDE 3000 PSI CONCRETE WITH #3 REBAR SPACE HOOPS AND LONGITUDINAL REINFORCEMENT AT 12" ON CENTER ALONG THE ENTIRE LENGTH OF THE DUCTBANK. CONCRETE SHALL EXTEND AT LEAST 4" PAST THE OUTER EDGE OF EACH CONDUIT.

(7) PROVIDE BACKFILL AND COMPACT TO 95% MAXIMUM DENSITY. BACKFILL SHALL BE IMPORTED STRUCTURAL FILL OR EQUIVALENT SUITABLE NATIVE MATERIAL AS APPROVED BY THE ENGINEER.

(8) PROVIDE #4/0 BARE CU GROUND.

(9) NOT ALL CONDUITS, ENCASEMENT AND BACKFILL FEATURES HAVE BEEN FULLY SHOWN IN THIS SECTION. THIS SECTION IS FOR DEMONSTRATING CLEARANCES FROM OTHER CONDUITS/STRUCTURES. REFER TO OTHER SECTION CUTS FOR ADDITIONAL CONDUIT, ENCASEMENT AND BACKFILL REQUIREMENTS.

(10) PROVIDE 24" EXTENSION RING FOR VAULT TO ALLOW FOR CONDUITS TO PASS UNDER NEIGHBORING DUCT BANK.

(11) SEE SHEET E6.6 AND SPECIFICATIONS FOR VAULT BEDDING AND SUBGRADE PREPARATIONS.

IF SHEET IS LESS THAN 22x34
REDUCE SCALE ACCORDINGLY

Port of EVERETT
P.O. BOX 538
EVERETT, WA 98206
(425) 259-3164

kpff
1601 5th Avenue, Suite 1300
Seattle, Washington 98101
(206) 382-0600 Fax (206) 382-0500
PROJECT NO. 1600120

ELCON ASSOCIATES, INC.
ENGINEERS-CONSULTANTS
(206) 243-5022 www.elcon.com
16300 CHRISTENSEN ROAD, STE 330
SEATTLE, WA 98188

NO.	DATE	BY	REVISION
3	07/05/2023	DKS	AS-BUILT
2	7/9/2021	DKS	ADDENDUM 1
1	06/21/2021	DKS	ISSUED FOR BID
0	05/07/2021	DKS	FOR CITY REVIEW

RECORD CONDITIONS ILLUSTRATED IN THESE PLANS REFLECT INFORMATION PROVIDED BY THE CONTRACTOR. RECORD CONDITIONS WERE NOT VERIFIED BY ENGINEER.

PROJECT ENGINEER: D. SIATERLIS	SCALE: NONE
DESIGNED BY: D. SIATERLIS	DATE: 05/07/2021
DRAWN BY: C. SMITH	CHECKED BY: S. BARTKOSKE
APPROVED BY:	

PORT OF EVERETT

NORTON TERMINAL DEVELOPMENT & MTCA 3RD INTERIM ACTION
ELECTRICAL DETAILS

DWG. NO. **E5.4**
CIP NO. 1-8-900-05
PROJECT NO. MT-NT-2021-02.2
SHEET NO. 121 OF 150

AS-BUILTS

M:\2019\1900238 POE Maritime Industrial Expansion Engineering Services\2.18 Drawings\AS BUILTS\Incoming\2023-05-31\mle_elec\m8e54 7-05-23 10:12pm dyu

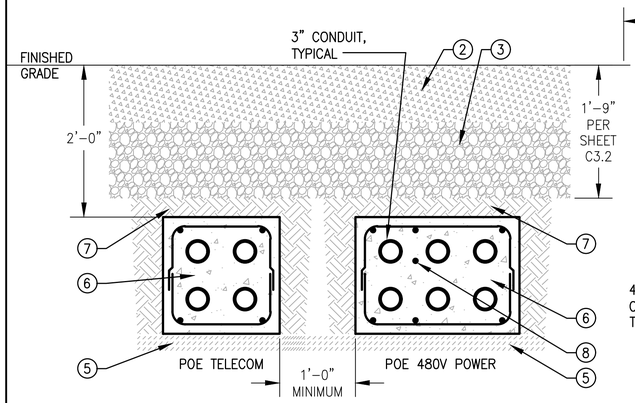

POE DUCT BANK SECTION (K)
NO SCALE — E1.6 | E5.5

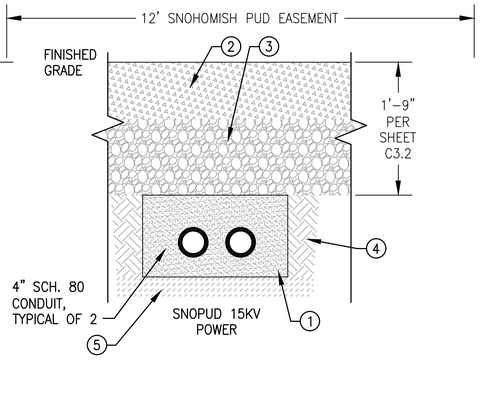

SNOPUD TRENCH SECTION (H)
NO SCALE — E4.1, E4.7 | E5.5

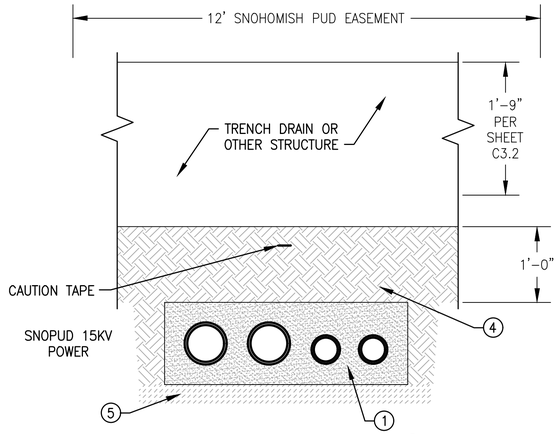

SNOPUD TRENCH SECTION (9) (I)
NO SCALE — E1.2, E1.5 | E5.5

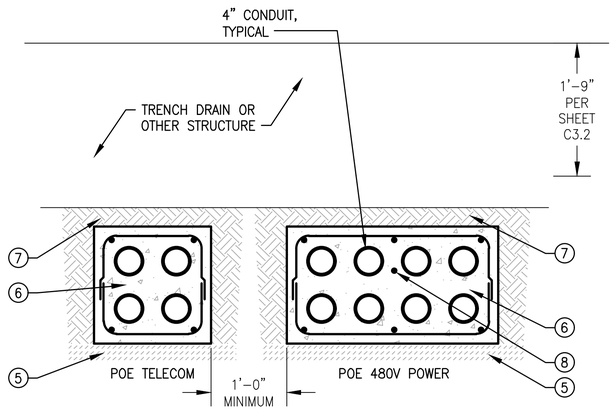

POE DUCT BANK SECTION (J)
NO SCALE — E1.3, E1.4 | E5.5

△2

△3

GENERAL NOTES

1. FOR ALL CONDUITS PROVIDE 2'-0" STAGGER BETWEEN ROW CONNECTION JOINTS UNLESS NOTED OTHERWISE.
2. REFER TO SNOHOMISH COUNTY PUD ELECTRICAL SERVICE REQUIREMENTS FOR MINIMUM CLEARANCES FROM DISTRICT UNDERGROUND LINES IN COUNDUIT TO OTHER CONDUITS, PIPES AND STRUCTURES.

KEYED NOTES

(1) PROVIDE LOW-STRENGTH FLUIDIZED THERMAL BACKFILL (FTB) MINIMUM 3" BEYOND CONDUIT IN ALL DIRECTIONS PER SNOPUD T&D GUIDELINE 4-24-6.0.

(2) HOT MIX ASPHALT PER SHEET C3.2.

(3) CRUSHED ROCK BASE COURSE PER SHEET C3.2.

(4) PROVIDE BACKFILL WITH 5/8" MINUS CRUSHED ROCK AND COMPACTED TO 95% OF MAXIMUM DRY DENSITY OR LOW STRENGTH FTB OR CONTROLLED DENSITY FILL (CDF) PER SNOPUD T&D GUIDELINE 4-24-6.0.

(5) COMPACTED SUBGRADE.

(6) PER STRUCTURAL ENGINEER PROVIDE 3000 PSI CONCRETE WITH #3 REBAR SPACE HOOPS AND LONGITUDINAL REINFORCEMENT AT 12" ON CENTER ALONG THE ENTIRE LENGTH OF THE DUCTBANK. CONCRETE SHALL EXTEND AT LEAST 4" PAST THE OUTER EDGE OF EACH CONDUIT.

(7) PROVIDE BACKFILL AND COMPACT TO 95% MAXIMUM DENSITY. BACKFILL SHALL BE IMPORTED STRUCTURAL FILL OR EQUIVALENT SUITABLE NATIVE MATERIAL AS APPROVED BY THE ENGINEER.

(8) PROVIDE #4/0 BARE CU GROUND.

(9) NOT ALL CONDUITS, ENCASEMENT AND BACKFILL FEATURES HAVE BEEN FULLY SHOWN IN THIS SECTION. THIS SECTION IS FOR DEMONSTRATING CLEARANCES FROM OTHER CONDUITS/STRUCTURES. REFER TO OTHER SECTION CUTS FOR ADDITIONAL CONDUIT, ENCASEMENT AND BACKFILL REQUIREMENTS.

(10) PROVIDE 24" EXTENSION RING FOR VAULT TO ALLOW FOR CONDUITS TO PASS UNDER NEIGHBORING DUCT BANK.

IF SHEET IS LESS THAN 22x34
REDUCE SCALE ACCORDINGLY

Port of EVERETT
P.O. BOX 538
EVERETT, WA 98206
(425) 259-3164

kpff
1601 5th Avenue, Suite 1300
Seattle, Washington 98101
(206) 382-0600 Fax (206) 382-0500
PROJECT NO. 1600120

ELCON ASSOCIATES, INC.
ENGINEERS-CONSULTANTS
(206) 243-5022 www.elcon.com
16300 CHRISTENSEN ROAD, STE 330
SEATTLE, WA 98188

NO.	DATE	BY	REVISION
△4	07/05/2023	DKS	AS-BUILT
△3	2/18/2022	DKS	MARITIME TENANT SITE PLAN REVISIONS
△2	7/9/2021	DKS	ADDENDUM 1
△1	06/21/2021	DKS	ISSUED FOR BID
△0	05/07/2021	DKS	FOR CITY REVIEW

RECORD CONDITIONS ILLUSTRATED IN THESE PLANS REFLECT INFORMATION PROVIDED BY THE CONTRACTOR. RECORD CONDITIONS WERE NOT VERIFIED BY ENGINEER.

PROJECT ENGINEER: D. SIATERLIS	SCALE: NONE
DESIGNED BY: D. SIATERLIS	DATE: 05/07/2021
DRAWN BY: C. SMITH	CHECKED BY: S. BARTKOSKE
APPROVED BY:	

PORT OF EVERETT

NORTON TERMINAL DEVELOPMENT & MTCA 3RD INTERIM ACTION ELECTRICAL DETAILS

DWG. NO. **E5.5**
CIP NO. 1-8-900-05
PROJECT NO. MT-NT-2021-02.2
SHEET NO. 122 OF 150

AS-BUILTS

M:\2019\1900238 POE Maritime Industrial Expansion Engineering Services\2.18 Drawings\A5 BUILTS\Incoming\2023-05-31\mle_elec\m8e55 7-05-23 10:12pm dyu

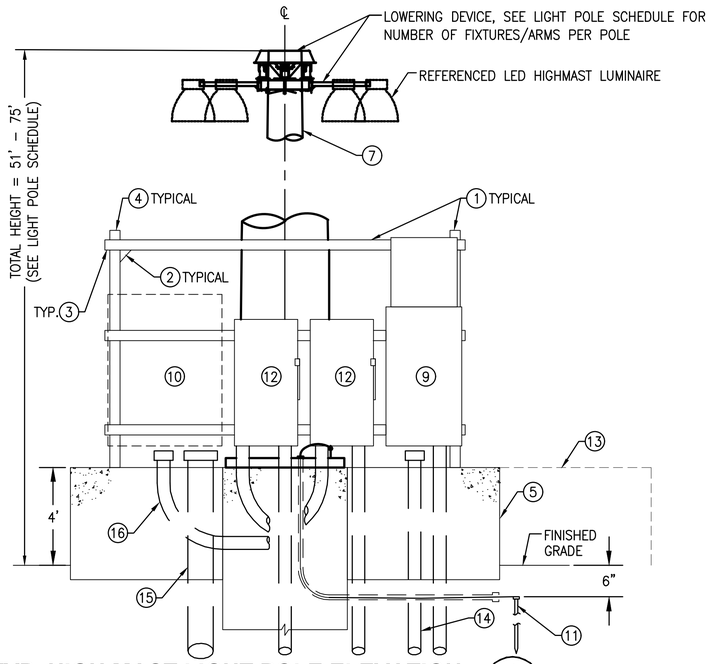

TYP. HIGH MAST LIGHT POLE ELEVATION 1

SCALE: NONE

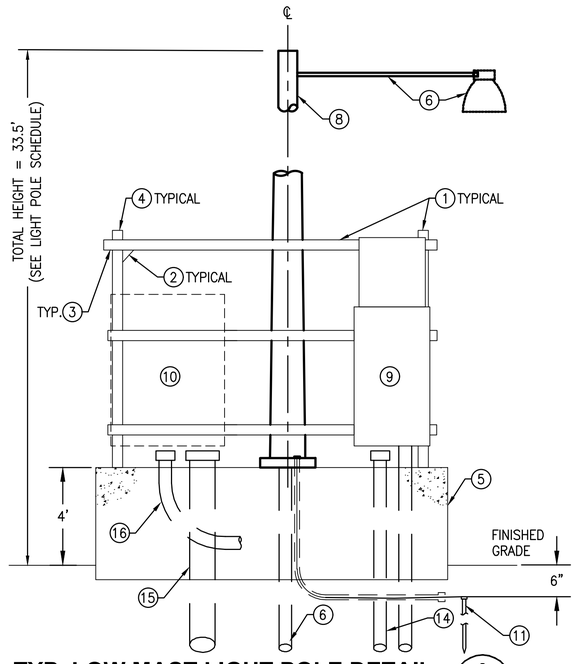

TYP. LOW MAST LIGHT POLE DETAIL 2

SCALE: NONE COMMUNICATIONS POLES SIMILAR 6

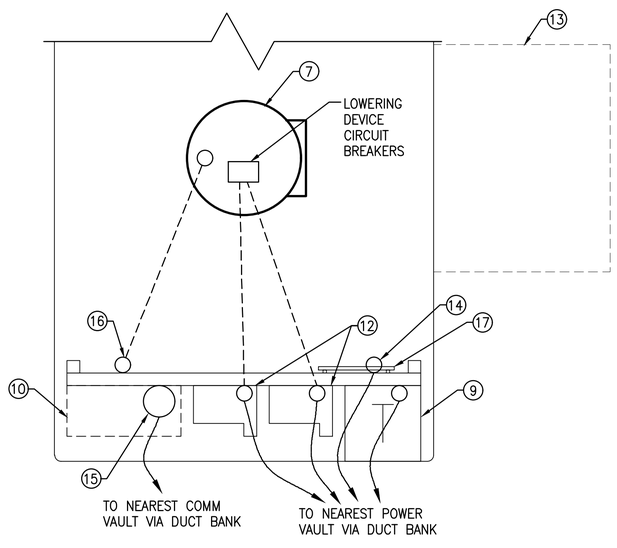

TYP. HIGH MAST LIGHT POLE PLAN 3

SCALE: NONE

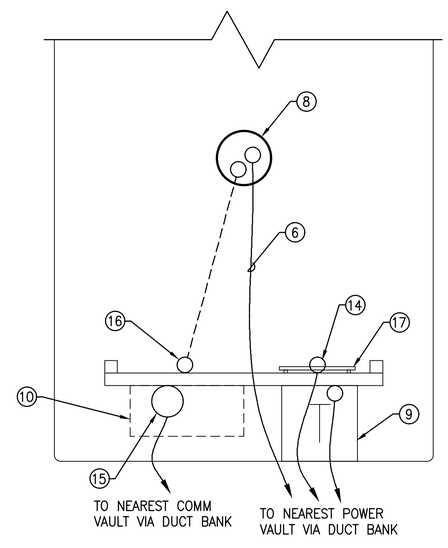

TYP. LOW MAST LIGHT POLE PLAN 4

SCALE: NONE

GENERAL NOTES

1. ALL TUBESTEEL AND FORMED STEEL CHANNEL SHALL BE HOT DIPPED GALVANIZED AFTER FABRICATION UNLESS NOTED OTHERWISE.
2. ALL BOLTS, NUTS, WASHERS AND OTHER MOUNTING HARDWARE SHALL BE STAINLESS STEEL UNLESS NOTED OTHERWISE.
3. PAINT ALL EXPOSED METAL SURFACES AND OVER TOP OF GALVANIZED ITEMS.
4. QUANTITY OF CONDUITS PER PLANS/ONE–LINE DIAGRAMS.

KEYED NOTES

(1) FORMED STEEL CHANNEL.
(2) PROVIDE FLAT PLATE FITTINGS AS REQUIRED.
(3) PROVIDE END CAPS ON ALL ENDS.
(4) PROVIDE CAPS.
(5) STRUCTURE, POLE BASE SIZE, AND POLE BASE REINFORCEMENT PER STRUCTURAL DRAWINGS.
(6) PROVIDE CONDUIT FOR POLES WITH LUMINAIRE(S) AS INDICATED ON LIGHT POLE SCHEDULE. ALL OTHER LOW MAST POLES TO BE COMM ONLY.
(7) TAPERED STEEL POLE PER LIGHT POLE SCHEDULE.
(8) TAPERED CONCRETE POLE PER LIGHT POLE SCHEDULE.
(9) COMBINATION TRANSFORMER AND PANELBOARD (MPZ).
(10) FUTURE COMMUNICATIONS CABINET, 24"x18"x8".
(11) 3/4"x10' GROUND ROD (COPPER CLAD STEEL).
(12) 30 AMP DISCONNECT.
(13) PORTABLE/TEMPORARY PLATFORM FOR LOWERING DEVICE AND CIRCUIT BREAKER ACCESS, BY OTHERS.
(14) SPARE CAPPED 2" CONDUIT.
(15) SPARE CAPPED 4" CONDUIT.
(16) SPARE CAPPED 2" CONDUIT.
(17) GROUND BUS PER DETAIL 3 SHEET E5.8.

IF SHEET IS LESS THAN 22x34 REDUCE SCALE ACCORDINGLY

Port of EVERETT
P.O. BOX 538
EVERETT, WA 98206
(425) 259-3164

kpff
1601 5th Avenue, Suite 1300
Seattle, Washington 98101
(206) 382-0600 Fax (206) 382-0500
PROJECT NO. 1600120

ELCON ASSOCIATES, INC.
ENGINEERS–CONSULTANTS
(206) 243-5022 www.elcon.com
16300 CHRISTENSEN ROAD, STE 330
SEATTLE, WA 98188

NO.	DATE	BY	REVISION
2	07/05/2023	DKS	AS–BUILT
1	06/21/2021	DKS	ISSUED FOR BID
0	05/07/2021	DKS	FOR CITY REVIEW

NO.	DATE	BY	REVISION

RECORD CONDITIONS ILLUSTRATED IN THESE PLANS REFLECT INFORMATION PROVIDED BY THE CONTRACTOR. RECORD CONDITIONS WERE NOT VERIFIED BY ENGINEER.

PROJECT ENGINEER: D. SIATERLIS	SCALE: NONE
DESIGNED BY: D. SIATERLIS	DATE: 05/07/2021
DRAWN BY: C. SMITH	CHECKED BY: S. BARTKOSKE
APPROVED BY:	

PORT OF EVERETT

NORTON TERMINAL DEVELOPMENT & MTCA 3RD INTERIM ACTION
POLE ELEVATION AND BASE DETAILS

DWG. NO. **E5.6**
CIP NO. 1–8–900–05
PROJECT NO. MT–NT–2021–02.2
SHEET NO. 123 OF 150

AS-BUILTS

M: \2019\1900238 POE Maritime Industrial Expansion Engineering Services\2.18 Drawings\AS BUILTS\Incoming\2023-05-31\mie_elec\m8e56 7-05-23 10:12pm dyu

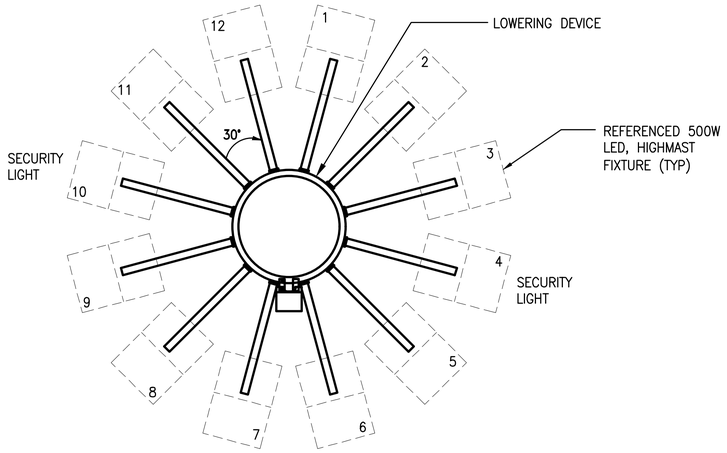

BRACKET ARM TYPE 1 - 12 FIXTURES

SCALE: NONE ARMS UNIFORMLY SPACED AROUND BRACKET ARM RING

1 / –

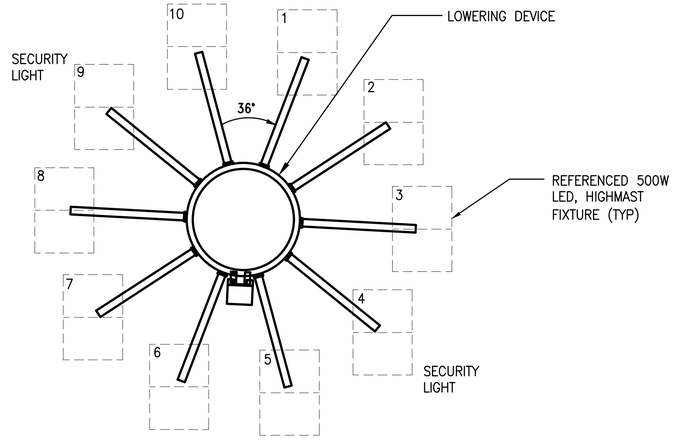

BRACKET ARM TYPE 2 - 10 FIXTURES

SCALE: NONE ARMS UNIFORMLY SPACED AROUND BRACKET ARM RING

2 / –

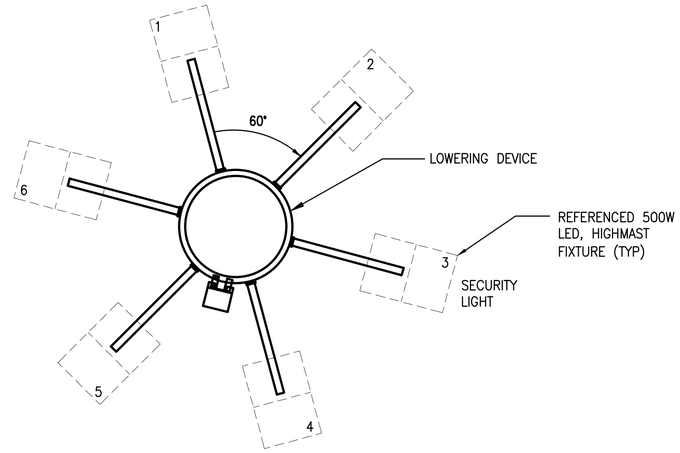

BRACKET ARM TYPE 3 - 6 FIXTURES

SCALE: NONE ARMS UNIFORMLY SPACED AROUND BRACKET ARM RING

3 / –

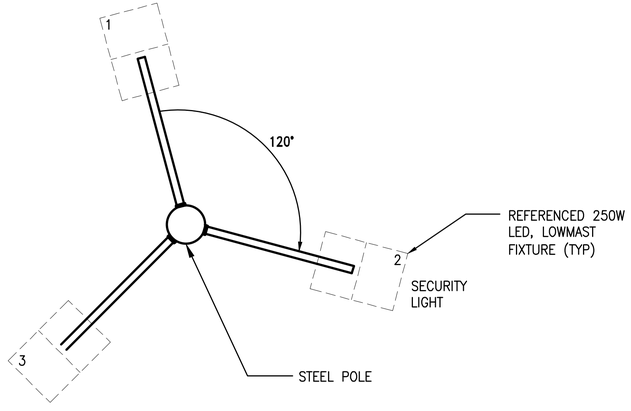

BRACKET ARM TYPE 4 - 3 FIXTURES

SCALE: NONE ARMS UNIFORMLY SPACED AROUND BRACKET ARM RING

4 / –

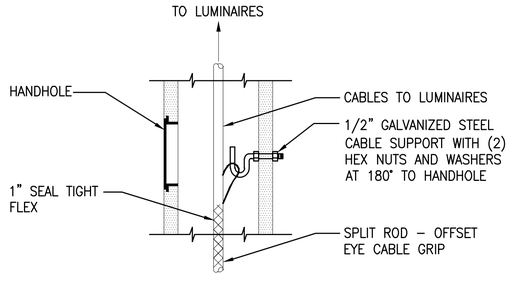

DETAIL - LIGHT POLE INTERIOR CABLE SUPPORT

SCALE: NONE

5 / –

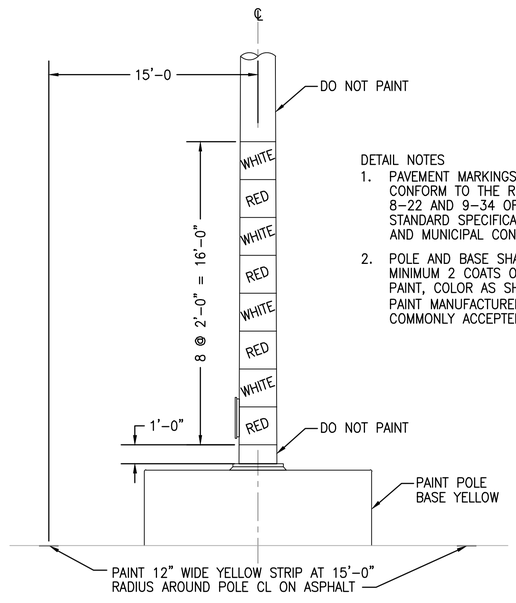

DETAIL NOTES

1. PAVEMENT MARKINGS (STRIPING) SHOULD CONFORM TO THE REQUIREMENTS OF SECTIONS 8–22 AND 9–34 OF THE 2012 WSDOT STANDARD SPECIFICATIONS FOR ROAD, BRIDGE, AND MUNICIPAL CONSTRUCTION.
2. POLE AND BASE SHALL BE PAINTED WITH A MINIMUM 2 COATS OF GLOSS OR SEMI–GLOSS PAINT, COLOR AS SHOWN, IN ACCORDANCE WITH PAINT MANUFACTURER'S RECOMMENDATIONS, A COMMONLY ACCEPTED INDUSTRY PRACTICE.

POLE STRIPING DETAIL

SCALE: NONE

6 / –

IF SHEET IS LESS THAN 22x34
REDUCE SCALE ACCORDINGLY

Port of EVERETT
P.O. BOX 538
EVERETT, WA 98206
(425) 259–3164

kpff
1601 5th Avenue, Suite 1300
Seattle, Washington 98101
(206) 382-0600 Fax (206) 382-0500
PROJECT NO. 1600120

ELCON ASSOCIATES, INC.
ENGINEERS–CONSULTANTS
(206) 243-5022 www.elcon.com
16300 CHRISTENSEN ROAD, STE 330
SEATTLE, WA 98188

NO.	DATE	BY	REVISION
2	07/05/2023	DKS	AS–BUILT
1	06/21/2021	DKS	ISSUED FOR BID
0	05/07/2021	DKS	FOR CITY REVIEW

NO.	DATE	BY	REVISION

RECORD CONDITIONS ILLUSTRATED IN THESE PLANS REFLECT INFORMATION PROVIDED BY THE CONTRACTOR. RECORD CONDITIONS WERE NOT VERIFIED BY ENGINEER.

PROJECT ENGINEER: D. SIATERLIS	SCALE: NONE
DESIGNED BY: D. SIATERLIS	DATE: 05/07/2021
DRAWN BY: C. SMITH	CHECKED BY: S. BARTKOSKE
APPROVED BY:	

PORT OF EVERETT

NORTON TERMINAL DEVELOPMENT & MTCA 3RD INTERIM ACTION BRACKET ARM CONFIGURATIONS

DWG. NO. **E5.7**

CIP NO. 1–8–900–05

PROJECT NO. MT–NT–2021–02.2

SHEET NO. 124 OF 150

AS-BUILTS

M: \2019\1900238 POE Maritime Industrial Expansion Engineering Services\2.18 Drawings\AS BUILTS\Incoming\2023-05-31\mie_elec\m8e57 7-05-23 10:12pm dyu

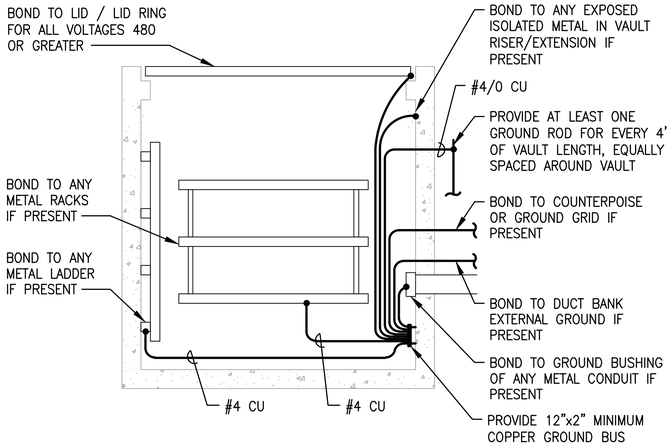

TYPICAL VAULT GROUNDING DETAIL 1 / –

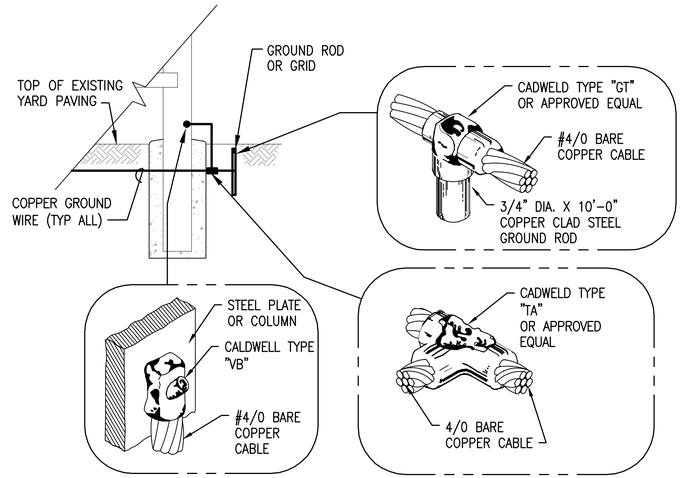

TYPICAL GROUNDING DETAILS 2 / –

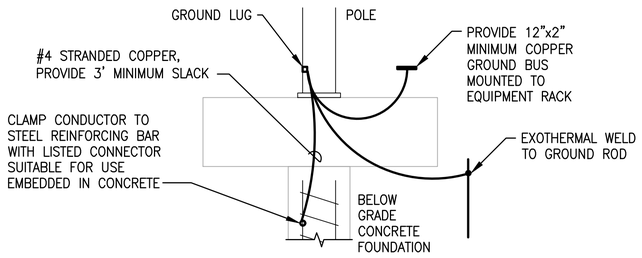

TYPICAL POLE GROUNDING DETAIL 3 / –

IF SHEET IS LESS THAN 22x34
REDUCE SCALE ACCORDINGLY

Port of EVERETT
P.O. BOX 538
EVERETT, WA 98206
(425) 259-3164

kpff
1601 5th Avenue, Suite 1300
Seattle, Washington 98101
(206) 382-0600 Fax (206) 382-0500
PROJECT NO. 1600120

ELCON ASSOCIATES, INC.
ENGINEERS–CONSULTANTS
(206) 243-5022 www.elcon.com
16300 CHRISTENSEN ROAD, STE 330
SEATTLE, WA 98188

NO.	DATE	BY	REVISION
2	07/05/2023	DKS	AS–BUILT
1	06/21/2021	DKS	ISSUED FOR BID
0	05/07/2021	DKS	FOR CITY REVIEW

NO.	DATE	BY	REVISION

RECORD CONDITIONS ILLUSTRATED IN THESE PLANS REFLECT INFORMATION PROVIDED BY THE CONTRACTOR. RECORD CONDITIONS WERE NOT VERIFIED BY ENGINEER.

PROJECT ENGINEER: D. SIATERLIS	SCALE: NONE
DESIGNED BY: D. SIATERLIS	DATE: 05/07/2021
DRAWN BY: C. SMITH	CHECKED BY: S. BARTKOSKE
APPROVED BY:	

PORT OF EVERETT

NORTON TERMINAL DEVELOPMENT & MTCA 3RD INTERIM ACTION GROUNDING DETAILS

DWG. NO. **E5.8**

CIP NO. 1–8–900–05

PROJECT NO. MT–NT–2021–02.2

SHEET NO. 125 OF 150

AS-BUILTS

M: \2019\1900238 POE Maritime Industrial Expansion Engineering Services\2.18 Drawings\AS BUILTS\Incoming\2023-05-31\mle_elec\m8e58 7-05-23 10:12pm dyu

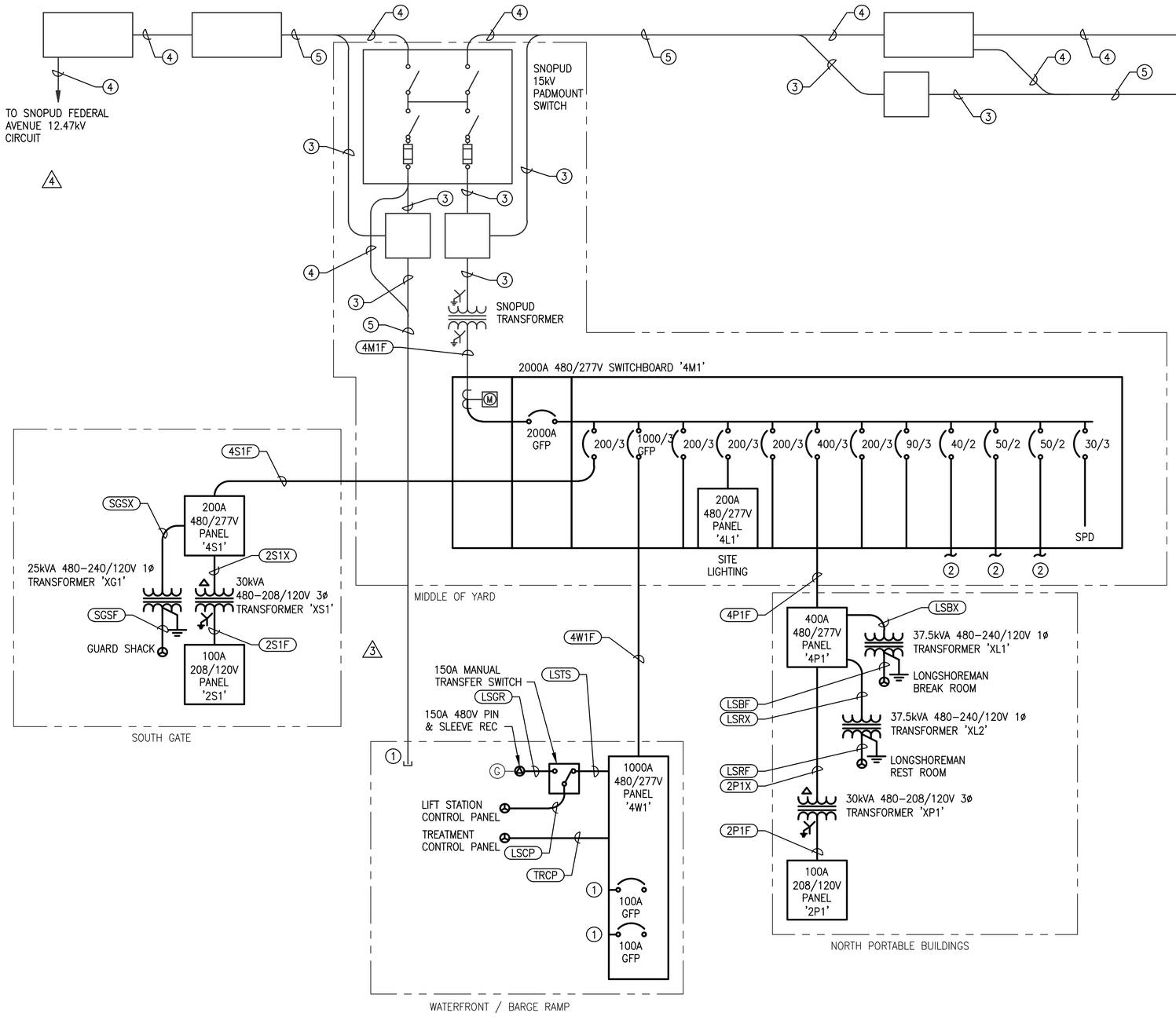

GENERAL NOTES

1. SNOHOMISH COUNTY PUD (SNOPUD) WILL PROVIDE 15kV SWITCH, 15kV-480/277V TRANSFORMER AND 15kV CABLES ONLY. CONTRACTOR SHALL PROVIDE ALL OTHER MATERIALS AND LABOR TO COMPLETE SYSTEM AS SHOWN.
2. REFER TO PANEL SCHEDULES FOR ADDITIONAL DETAILS SUCH AS MAIN BREAKER, BRANCH CIRCUIT BREAKERS AND SURGE PROTECTIVE DEVICES.

KEYED NOTES

(1) FUTURE WATERFRONT LOADS.

(2) TO MPZ PANELS, SEE E6.3 FOR FURTHER INFORMATION.

(3) PROVIDE (2) 4" CONDUITS PER SNOPUD STANDARDS.

(4) PROVIDE (2) 6" CONDUITS PER SNOPUD STANDARDS.

(5) PROVIDE (2) 4" AND (2) 6" CONDUITS PER SNOPUD STANDARDS.

IF SHEET IS LESS THAN 22x34
REDUCE SCALE ACCORDINGLY

Port of EVERETT
P.O. BOX 538
EVERETT, WA 98206
(425) 259-3164

kpff
1601 5th Avenue, Suite 1300
Seattle, Washington 98101
(206) 382-0600 Fax (206) 382-0500
PROJECT NO. 1600120

ELCON ASSOCIATES, INC.
ENGINEERS-CONSULTANTS
(206) 243-5022 www.elcon.com
16300 CHRISTENSEN ROAD, STE 330
SEATTLE, WA 98188

NO.	DATE	BY	REVISION
5	07/05/2023	DKS	AS-BUILT
4	11/23/2021	DKS	RFI 034
3	7/23/2021	DKS	ADDENDUM 3
2	7/9/2021	DKS	ADDENDUM 1
1	06/21/2021	DKS	ISSUED FOR BID
0	05/07/2021	DKS	FOR CITY REVIEW

NO.	DATE	BY	REVISION

RECORD CONDITIONS ILLUSTRATED IN THESE PLANS REFLECT INFORMATION PROVIDED BY THE CONTRACTOR. RECORD CONDITIONS WERE NOT VERIFIED BY ENGINEER.

PROJECT ENGINEER: D. SIATERLIS	SCALE: NONE
DESIGNED BY: D. SIATERLIS	DATE: 05/07/2021
DRAWN BY: C. SMITH	CHECKED BY: S. BARTKOSKE
APPROVED BY:	

PORT OF EVERETT

NORTON TERMINAL DEVELOPMENT & MTCA 3RD INTERIM ACTION ONE-LINE DIAGRAM

DWG. NO. **E6.1**

CIP NO. 1-8-900-05

PROJECT NO. MT-NT-2021-02.2

SHEET NO. 126 OF 150

AS-BUILTS

M: \2019\1900238 POE Maritime Industrial Expansion Engineering Services\2.18 Drawings\AS BUILTS\Incoming\2023-05-31\mle_elec\m8e61 7-05-23 10:12pm dyu

CIRCUIT/CONDUCTOR SCHEDULE

ID	SETS	CONDUCTORS (CU)	CONDUIT	FROM	TO	VIA VAULTS (NT-V-#) C	NOTES
4M1F	5	4#600 KCMIL	4"	SNOPUD XFMR	SWBD 4M1		SERVICE CONDUCTORS
4S1F	1	4#250 KCMIL, 1#2G	4"	SWBD 4M1	PANEL 4S1	VM2P, VM1P, VS1P, VS2P, VS3P, VS4P, VS5P, VS6P	
SGSX	1	2#4, 1#8G	1"	PANEL 4S1	XFMR XG1		
SGSF	1	3#1/0, 1#6G	1-1/2"	XFMR XG1	GUARD SHACK		
2S1X	1	2#6, 1#10G	1	PANEL 4S1	XFMR XS1		
2S1F	1	4#1, 1#6G	1-1/2"	XFMR XS1	PANEL 2S1		XFMR GROUND WIRE 1#8 CU
4W1F	3	4#600 KCMIL, 1#4/0G	4"	SWBD 4M1	PANEL 4W1	VM2P, VW1P, VW2P	
LSTS	1	3#1, 1#8G	1-1/2"	PANEL 4W1	MANUAL TRANSFER SWITCH		
LSGR	1	3#1/0, 1#8G	1-1/2"	GENERATOR SET	MANUAL TRANSFER SWITCH		CONTROL PANEL
LSCP	1	3#1/0, 1#8G	4"	GEN MTS	LIFT STATION CTRL PANEL	VW2P, VW3P	CONTROL PANEL
TRCP	1	4#250 KCMIL, 1#2G	4"	PANEL 4W1	TREATMENT CTRL PANEL	VW2P, VW3P, VW4P	CONTROL PANEL
4P1F	2	4#250 KCMIL, 1#2G	4"	SWBD 4M1	PANEL 4P1	VM2P, VM1P, VN1P, VN2P, VN3P, VN4P, VN5P	
LSBX	1	2#1/0, 1#6G	1-1/2"	PANEL 4P1	XFMR XL1		
LSBF	1	3#4/0, 1#4G	2"	XFMR XL1	LONGSHOREMAN BREAK RM		
LSRX	1	2#1/0, 1#6G	1-1/2"	PANEL 4P1	XFMR XL2		
LSRF	1	3#4/0, 1#4G	2"	XFMR XL2	LONGSHOREMAN REST RM		
2P1X	1	3#6, 1#10G	1	PANEL 4P1	XFMR XP1		
2P1F	1	4#1, 1#6G	1-1/2"	XFMR XP1	PANEL 2P1		
NT-LP01-04AF	1	3#4, 1#10G	4"	PANEL 4L1	POLES LP01-LP04	VM2P, VW1P, VW2P, VW3P, VW4P, VW5P, VW6P	
NT-LP05-10AF	1	3#4, 1#10G	4"	PANEL 4L1	POLES LP05-LP09	VM2P, VM1P, VN1P, VN2P, VN3P, VS1P, VS2P, VS3P, VS4P	
NT-LP11-14AF	1	3#4, 1#10G	4"	PANEL 4L1	POLES LP11-LP15	VM2P, VM1P, VE1P, VE2P, VE3P, VE4P, VE7P	
NT-LP30-34AF	1	3#4, 1#10G	4"	PANEL 4L1	POLES LP-10, LP30-34	VM2P, VM1P, VN1P, VN2P, VN3P, VN4P, VE1P, VE2P, VE3P, VE4P, VE11P, VE12P, VE13P, VE14P, VE15P	USE SAME 4" CONDUIT AS LP05-10AF OR LP11-14AF WHEN HOMERUNNING THROUGH THAT CIRCUIT
NT-LP01-04SF	1	2#10, 1#10G	4"	PANEL 4L1	POLES LP01-LP04	VM2P, VW1P, VW2P, VW3P, VW4P, VW5P, VW6P	USE THE SAME 4" CONDUIT AS AREA LIGHTS
NT-LP05-10SF	1	2#10, 1#10G	4"	PANEL 4L1	POLES LP05-LP10	VM2P, VM1P, VN1P, VN2P, VN3P, VN4P, VS1P, VS2P, VS3P, VS4P	USE THE SAME 4" CONDUIT AS AREA LIGHTS
NT-LP11-14SF	1	2#10, 1#10G	4"	PANEL 4L1	POLES LP11-14	VM2P, VM1P, VE1P, VE2P, VE3P, VE4P, VE7P	USE THE SAME 4" CONDUIT AS AREA LIGHTS
NT-LP30-34SF	1	2#10, 1#10G	4"	PANEL 4L1	POLES LP-10, LP30-34	VM2P, VM1P, VN1P, VN2P, VN3P, VN4P, VE1P, VE2P, VE3P, VE4P, VE11P, VE12P, VE13P, VE14P, VE15P	USE THE SAME 4" CONDUIT AS AREA LIGHTS
MPZF1	1	2#4, 1#6G	4"	SWBD 4M1	WEST POLES		
MPZF2	1	2#2, 1#4G	4"	SWBD 4M1	MIDDLE POLES		
MPZF3	1	2#2, 1#4G	4"	SWBD 4M1	EAST POLES		
MPZF4	1	2#2, 1#4G	4"	SWBD 4M1	NORTH POLES		
MPZF	1	2#10, 1#10G	2"	VAULT	MPZ		

2

IF SHEET IS LESS THAN 22x34
REDUCE SCALE ACCORDINGLY

Port of EVERETT
P.O. BOX 538
EVERETT, WA 98206
(425) 259-3164

kpff
1601 5th Avenue, Suite 1300
Seattle, Washington 98101
(206) 382-0600 Fax (206) 382-0500
PROJECT NO. 1600120

ELCON ASSOCIATES, INC.
ENGINEERS-CONSULTANTS
(206) 243-5022 www.elcon.com
16300 CHRISTENSEN ROAD, STE 330
SEATTLE, WA 98188

NO.	DATE	BY	REVISION
3	07/05/2023	DKS	AS-BUILT
2	2/18/2022	DKS	MARITIME TENANT SITE PLAN REVISIONS
1	06/21/2021	DKS	ISSUED FOR BID
0	05/07/2021	DKS	FOR CITY REVIEW

RECORD CONDITIONS ILLUSTRATED IN THESE PLANS REFLECT INFORMATION PROVIDED BY THE CONTRACTOR. RECORD CONDITIONS WERE NOT VERIFIED BY ENGINEER.

PROJECT ENGINEER: D. SIATERLIS	SCALE: NONE
DESIGNED BY: D. SIATERLIS	DATE: 05/07/2021
DRAWN BY: C. SMITH	CHECKED BY: S. BARTKOSKE
APPROVED BY:	

PORT OF EVERETT

NORTON TERMINAL DEVELOPMENT & MTCA 3RD INTERIM ACTION CIRCUIT/CONDUCTOR SCHEDULE

DWG. NO. **E6.2**
CIP NO. 1-8-900-05
PROJECT NO. MT-NT-2021-02.2
SHEET NO. 127 OF 150

AS-BUILTS

M:\2019\1900238 POE Maritime Industrial Expansion Engineering Services\2.18 Drawings\AS BUILTS\Incoming\2023-05-31\mie_elec\m8e62 7-05-23 10:13pm dyu

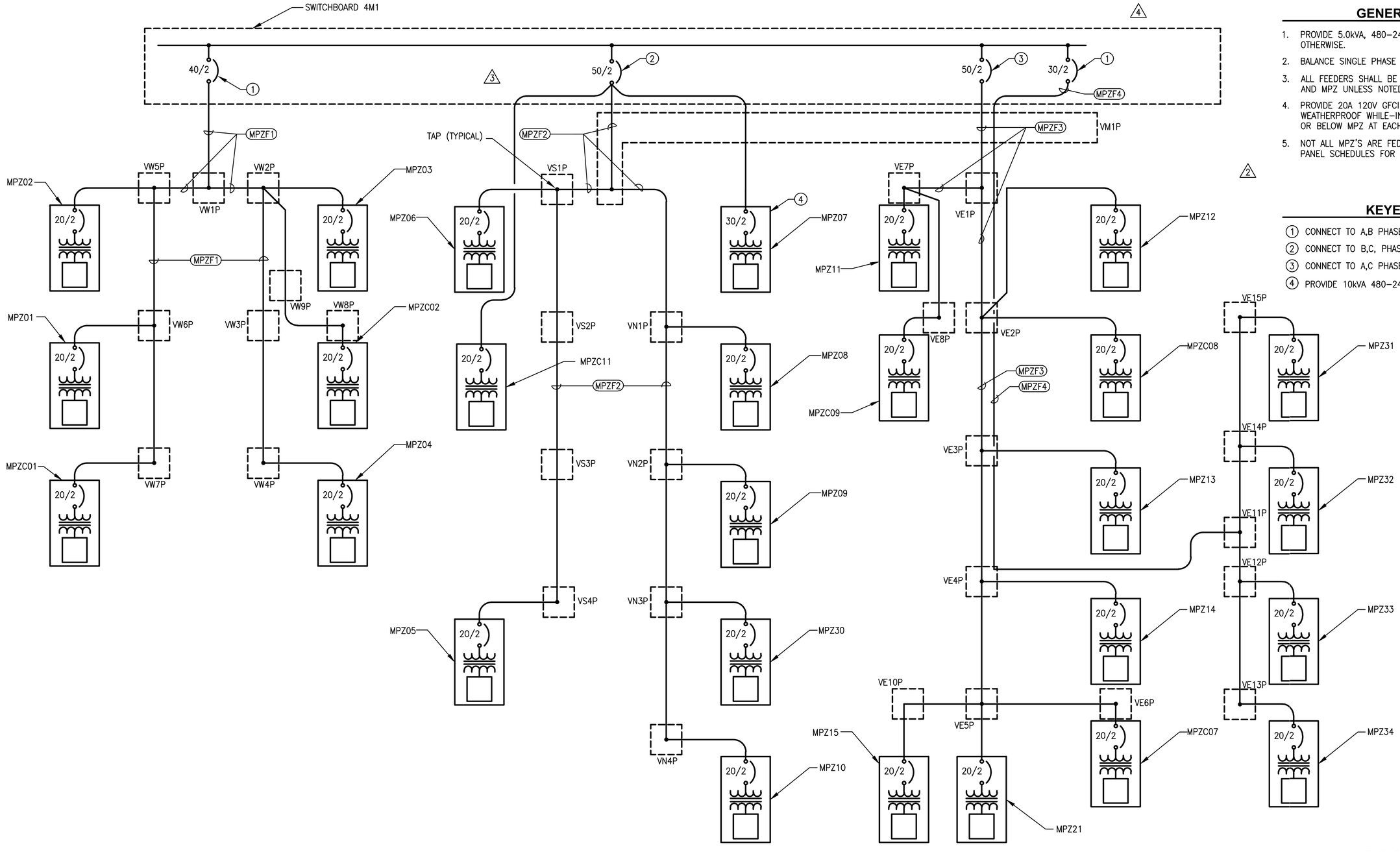

GENERAL NOTES

1. PROVIDE 5.0kVA, 480–240/120V 1ø MPZ UNLESS NOTED OTHERWISE.
2. BALANCE SINGLE PHASE MPZ LOADS BETWEEN PHASES.
3. ALL FEEDERS SHALL BE TYPE 'MPZF' BETWEEN VAULT TAP AND MPZ UNLESS NOTED OTHERWISE.
4. PROVIDE 20A 120V GFCI RECEPTACLE WITH CAST ALUMINUM WEATHERPROOF WHILE–IN–USE COVER MOUNTED ADJACENT OR BELOW MPZ AT EACH MPZ.
5. NOT ALL MPZ'S ARE FED FROM SWITCHBOARD 4M1. SEE PANEL SCHEDULES FOR ADDITIONAL MPZ CIRCUITS.

KEYED NOTES

1. CONNECT TO A,B PHASES.
2. CONNECT TO B,C, PHASES.
3. CONNECT TO A,C PHASES.
4. PROVIDE 10kVA 480–240/120V 1ø MPZ.

IF SHEET IS LESS THAN 22x34
REDUCE SCALE ACCORDINGLY

Port of EVERETT
P.O. BOX 538
EVERETT, WA 98206
(425) 259–3164

kpff
1601 5th Avenue, Suite 1300
Seattle, Washington 98101
(206) 382-0600 Fax (206) 382-0500
PROJECT NO. 1600120

ELCON ASSOCIATES, INC.
ENGINEERS–CONSULTANTS
(206) 243-5022 www.elcon.com
16300 CHRISTENSEN ROAD, STE 330
SEATTLE, WA 98188

NO.	DATE	BY	REVISION
5	07/05/2023	DKS	AS–BUILT
4	2/18/2022	DKS	MARITIME TENANT SITE PLAN REVISIONS
3	12/13/2021	DKS	COP006 – NEW COMM POLE CP11
2	7/9/2021	DKS	ADDENDUM 1
1	06/21/2021	DKS	ISSUED FOR BID
0	05/07/2021	DKS	FOR CITY REVIEW

RECORD CONDITIONS ILLUSTRATED IN THESE PLANS REFLECT INFORMATION PROVIDED BY THE CONTRACTOR. RECORD CONDITIONS WERE NOT VERIFIED BY ENGINEER.

PROJECT ENGINEER: D. SIATERLIS	SCALE: NONE
DESIGNED BY: D. SIATERLIS	DATE: 05/07/2021
DRAWN BY: C. SMITH	CHECKED BY: S. BARTKOSKE
APPROVED BY:	

PORT OF EVERETT

NORTON TERMINAL DEVELOPMENT & MTCA 3RD INTERIM ACTION MPZ ONE–LINE DIAGRAM

DWG. NO. **E6.3**

CIP NO. 1–8–900–05

PROJECT NO. MT–NT–2021–02.2

SHEET NO. 128 OF 150

AS-BUILTS

M: \2019\1900238 POE Maritime Industrial Expansion Engineering Services\2.18 Drawings\AS BUILTS\Incoming\2023–05–31\mle_elec\m8e63 7–05–23 10:13pm dyu

PANELBOARD 4M1 — 2000 A BUS — SECTIONS: 1 — PAD MOUNTED
480/ 277V 3 PHASE 4 WIRE — 2000 A MCB — LUGS: SINGLE — NEMA: PER ENVIRONMENT
LOCATION: — AIC — FEED: — NUMBER OF POLES: 42

CKT	TYPE	SERVES	C.B.	KVA	CONNECTED PHASE LOAD	KVA	C.B.	SERVES	TYPE	CKT
1	SF	PANEL 4W1	1000 / 3	174.12	100.5	127.48	200 / 3	PANEL 4L1	SF	2
3		-----	---		100.5		---	-----		4
5		-----	---		100.5		---	-----		6
7	SF	PANEL 4P1	400 / 3	76.38	34.0	25.74	200 / 3	PANEL 4S1	SF	8
9		-----	---		34.0		---	-----		10
11		-----	---		34.0		---	-----		12
13	SF	MPZ POLES WEST	40 / 2	1.08	0.5					14
15		-----	---		0.5					16
17	SF	MPZ POLES CENTER	50 / 2	1.44	0.7					18
19		-----	---		0.7					20
21	SF	MPZ POLES EAST	50 / 2	1.44	0.7					22
23		-----	---		0.7					24
25	SF	MPZ POLES NORTH	30 / 2	1.08	0.5					26
27		-----	---		0.5					28
29					0.0					30
31					0.0					32
33					0.0					34
35					0.0					36
37					0.0		30 / 3	SPD		38
39					0.0		---	-----		40
41					0.0		---	-----		42

136.4 136.4 136.0

CALCULATED LOAD **408.8 KVA**
MAXIMUM AMPS PER PHASE **492.3 AMPS**

NOTES:

1. SHOWN FOR LOAD CALCULATIONS ONLY, SEE ONE-LINE DIAGRAM FOR ALL OTHER INFORMATION.

PANELBOARD 4L1 — 225 A BUS — SECTIONS: 1 — MOUNTED
480/ 277V 3 PHASE 4 WIRE — MLO — LUGS: SINGLE — NEMA: PER ENVIRONMENT
LOCATION: WITHIN 4M1 — AIC — FEED: — NUMBER OF POLES: 30

CKT	TYPE	SERVES	C.B.	KVA	CONNECTED PHASE LOAD	KVA	C.B.	SERVES	TYPE	CKT
1	LI	NT-HML-LP01-LP04 AREA LTG	60 / 3	20.14	8.8	4.24	20 / 2	NT-HML-LP01-LP04 SECURITY LTG	LI	2
3		-----	---		8.8		---	-----		4
5		-----	---		9.6	5.83	20 / 2	NT-HML-LP05-LP10 SECURITY LTG	LI	6
7	LI	NT-HML-LP05-LP09 AREA LTG	60 / 3	26.50	11.7		---	AND LP20		8
9		-----	---		11.9	6.05	20 / 2	NT-HML-LP11-LP15 SECURITY LTG	LI	10
11		-----	---		11.9		---	AND LP21		12
13	LI	NT-HML-LP11-LP15 AREA LTG	60 / 3	21.20	8.9	3.71	20 / 2	NT-HML-LP-10, NT-LP-30-34 SEC LTG	LI	14
15		-----	---		8.9		---	-----		16
17		-----	---		7.1		/ 2	PREPARED SPACE		18
19	LI	NT-HML-LP-10, NT-LP-30-34 AREA LTG	60 / 3	14.31	4.8		---	-----		20
21		-----	---		4.8		/ 2	PREPARED SPACE		22
23		-----	---		4.8		---	-----		24
25		PREPARED SPACE	/ 3		0.0		30 / 3	SPD		26
27		-----	---		0.0		---	-----		28
29		-----	---		0.0		---	-----		30

34.3 34.4 33.3

CALCULATED LOAD **127.5 KVA**
MAXIMUM AMPS PER PHASE **155.2 AMPS**

NOTES:

1. MOUNTED WITHIN SWITCHBOARD 4M1.

PANELBOARD 4W1 — 1000 A BUS — SECTIONS: 1 — PAD MOUNTED
480/ 277V 3 PHASE 4 WIRE — 1000 A MCB — LUGS: SINGLE — NEMA: PER ENVIRONMENT
LOCATION: — AIC — FEED: — NUMBER OF POLES: 42

CKT	TYPE	SERVES	C.B.	KVA	CONNECTED PHASE LOAD	KVA	C.B.	SERVES	TYPE	CKT	
1	MO	STORMWATER TREATMENT	250 / 3	116.39	38.8		100 / 3	SPARE		2	2
3		-----	---		38.8		---	-----		4	
5		-----	---		38.8		---	-----		6	
7	MO	STORMWATER LIFT STN	125 / 3	28.27	9.4		100 / 3	SPARE		8	2
9		-----	---		9.4		---	-----		10	
11		-----	---		9.4		---	-----		12	
13		SPACE	/ 3		0.2	0.36	20 / 2	LIFT STN, TREATMENT MPZ	SF	14	
15		-----	---		0.2		---	-----		16	
17		-----	---		0.0		/ 1	SPACE		18	
19		SPACE	/ 3		0.0		/ 3	SPACE		20	
21		-----	---		0.0		---			22	
23		-----	---		0.0		---			24	
25		SPACE	/ 3		0.0		/ 3	SPACE		26	
27		-----	---		0.0		---	-----		28	
29		-----	---		0.0		---	-----		30	
31		SPARE	20 / 3		0.0		20 / 1	SPARE		32	
33		-----	---		0.0		20 / 1	SPARE		34	
35		-----	---		0.0		20 / 1	SPARE		36	
37		SPARE	20 / 3		0.0		30 / 3	SPD		38	
39		-----	---		0.0		---	-----		40	
41		-----	---		0.0		---	-----		42	

48.4 48.4 48.2

CALCULATED LOAD **174.1 KVA**
MAXIMUM AMPS PER PHASE **209.7 AMPS**

NOTES:

1. PROVIDE GROUND FAULT PROTECTION WITH MAIN CIRCUIT BREAKER.
2. FUTURE SHOREPOWER CIRCUIT, PROVIDE GROUND FAULT PROTECTION PER NEC 555.35.

PANELBOARD MPZ — 60 A BUS — SECTIONS: 1 — SURFACE MOUNTED
240/ 120V 1 PHASE 3 WIRE — 30 A MCB — LUGS: SINGLE — NEMA: PER ENVIRONMENT
LOCATION: — AIC — FEED: — NUMBER OF POLES: 12

CKT	TYPE	SERVES	C.B.	KVA	CONNECTED PHASE LOAD	KVA	C.B.	SERVES	TYPE	CKT
1	RE	RECEPTACLE	20 / 1	0.18	0.2		20 / 1	SPARE		2
3		SPARE	20 / 1		0.0		20 / 1	SPARE		4
5		SPARE	20 / 1		0.0		20 / 1	SPARE		6
7		SPARE	20 / 1		0.0		20 / 1	SPARE		8
9		SPACE	/ 1		0.0		/ 1	SPACE		10
11		SPACE	/ 1		0.0		/ 1	SPACE		12

0.2 0.0

CALCULATED LOAD **0.2 KVA**
MAXIMUM AMPS PER PHASE **1.5 AMPS**

NOTES:

1.

IF SHEET IS LESS THAN 22x34
REDUCE SCALE ACCORDINGLY

Port of EVERETT
P.O. BOX 538
EVERETT, WA 98206
(425) 259-3164

kpff
1601 5th Avenue, Suite 1300
Seattle, Washington 98101
(206) 382-0600 Fax (206) 382-0500
PROJECT NO. 1600120

ELCON ASSOCIATES, INC.
ENGINEERS-CONSULTANTS
(206) 243-5022 www.elcon.com
16300 CHRISTENSEN ROAD, STE 330
SEATTLE, WA 98188

NO.	DATE	BY	REVISION
3	07/05/2023	DKS	AS-BUILT
2	2/18/2022	DKS	MARITIME TENANT SITE PLAN REVISIONS
1	06/21/2021	DKS	ISSUED FOR BID
0	05/07/2021	DKS	FOR CITY REVIEW

RECORD CONDITIONS ILLUSTRATED IN THESE PLANS REFLECT INFORMATION PROVIDED BY THE CONTRACTOR. RECORD CONDITIONS WERE NOT VERIFIED BY ENGINEER.

PROJECT ENGINEER: D. SIATERLIS	SCALE: NONE
DESIGNED BY: D. SIATERLIS	DATE: 05/07/2021
DRAWN BY: C. SMITH	CHECKED BY: S. BARTKOSKE
APPROVED BY:	

PORT OF EVERETT

NORTON TERMINAL DEVELOPMENT
& MTCA 3RD INTERIM ACTION
PANEL SCHEDULES

DWG. NO. **E6.4**
CIP NO. 1-8-900-05
PROJECT NO. MT-NT-2021-02.2
SHEET NO. 129 OF 150

AS-BUILTS

M:\2019\1900238 POE Maritime Industrial Expansion Engineering Services\2.18 Drawings\AS BUILTS\Incoming\2023-05-31\mie_elec\m8e64 7-05-23 10:13pm dyu

PANELBOARD 4P1 — 400 A BUS — SECTIONS: 1 — SURFACE MOUNTED
480/ 277V 3 PHASE 4 WIRE — 400 A MCB — LUGS: SINGLE — NEMA: PER ENVIRONMENT
LOCATION: — AIC — FEED: — NUMBER OF POLES: 42

CKT	TYPE	SERVES	C.B.	KVA	CONNECTED PHASE LOAD	KVA	C.B.	SERVES	TYPE	CKT
1	SF	XFMR XP1, PANEL 2P1	50 / 3	1.38	0.5		100 / 2	TRANSFORMER SKID REC	SF	2
3		-----	---		0.5		---	-----		4
5		-----	---		0.5		100 / 2	TRANSFORMER SKID REC	SF	6
7	SF	XFMR XL1, LONG BREAK	100 / 2	37.50	18.8		---	-----		8
9		-----	---		18.8		20 / 2	SPARE		10
11	SF	XFMR XL1, LONG RESTR	100 / 2	37.50	18.8		---	-----		12
13		-----	---		18.8		20 / 3	SPARE		14
15		SPARE	30 / 2		0.0		---	-----		16
17		-----	---		0.0		---	-----		18
19		SPARE	20 / 1		0.0		20 / 1	SPARE		20
21		SPARE	20 / 1		0.0		20 / 1	SPARE		22
23		SPARE	20 / 1		0.0		20 / 1	SPARE		24
25		SPARE	20 / 1		0.0		20 / 1	SPARE		26
27		SPARE	20 / 1		0.0		20 / 1	SPARE		28
29		SPARE	20 / 1		0.0		20 / 1	SPARE		30
31		SPARE	20 / 1		0.0		20 / 1	SPARE		32
33		SPARE	20 / 1		0.0		20 / 1	SPARE		34
35		SPARE	20 / 1		0.0		20 / 1	SPARE		36
37		SPACE			0.0		30 / 3	SPD		38
39		SPACE			0.0		---	-----		40
41		SPACE			0.0		---	-----		42

38.0 19.2 19.2 — CALCULATED LOAD **76.4 KVA**
MAXIMUM AMPS PER PHASE **137.0 AMPS**

NOTES:
1.

PANELBOARD 4S1 — 225 A BUS — SECTIONS: 1 — SURFACE MOUNTED
480/ 277V 3 PHASE 4 WIRE — 200 A MCB — LUGS: SINGLE — NEMA: PER ENVIRONMENT
LOCATION: — AIC — FEED: — NUMBER OF POLES: 42

CKT	TYPE	SERVES	C.B.	KVA	CONNECTED PHASE LOAD	KVA	C.B.	SERVES	TYPE	CKT
1	SF	XFMR XS1, PANEL 2S1	50 / 3	0.38	0.2	0.18	20 / 2	MPZ HEWITT COMM POLE	SF	2
3		-----	---		0.2		---	-----		4
5		-----	---		0.1		20 / 3	SPARE		6
7	SF	XFMR XG1, GUARD SHACK	70 / 2	25.00	12.5		---	-----		8
9		-----	---		12.5		---	-----		10
11		SPARE	20 / 2		0.0		20 / 3	SPARE		12
13		-----	---		0.0		---	-----		14
15		SPARE	20 / 2		0.0		---	-----		16
17		-----	---		0.1	0.18	20 / 2	MPZ POLE LP20	SF	18
19		SPARE	20 / 2		0.1		---	-----		20
21		-----	---		0.0		20 / 1	SPARE		22
23		SPARE	20 / 1		0.0		20 / 1	SPARE		24
25		SPARE	20 / 1		0.0		20 / 1	SPARE		26
27		SPARE	20 / 1		0.0		20 / 1	SPARE		28
29		SPARE	20 / 1		0.0		20 / 1	SPARE		30
31		SPARE	20 / 1		0.0		20 / 1	SPARE		32
33		SPARE	20 / 1		0.0		20 / 1	SPARE		34
35		SPARE	20 / 1		0.0		20 / 1	SPARE		36
37		SPACE			0.0		30 / 3	SPD		38
39		SPACE			0.0		---	-----		40
41		SPACE			0.0		---	-----		42

12.8 12.7 0.2 — CALCULATED LOAD **25.7 KVA**
MAXIMUM AMPS PER PHASE **46.2 AMPS**

NOTES:
1.

PANELBOARD 2P1 — 100 A BUS — SECTIONS: 1 — SURFACE MOUNTED
208/ 120V 3 PHASE 4 WIRE — 100 A MCB — LUGS: SINGLE — NEMA: PER ENVIRONMENT
LOCATION: — AIC — FEED: — NUMBER OF POLES: 42

CKT	TYPE	SERVES	C.B.	KVA	CONNECTED PHASE LOAD	KVA	C.B.	SERVES	TYPE	CKT
1	EH	HOT BOX HEATER	20 / 1	1.00	1.0		30 / 3	SPARE		2
3	RE	RECEPTACLE	20 / 1	0.18	0.2		---	-----		4
5	EH	COMM CABINET HEATER	20 / 1	0.20	0.2		---	-----		6
7		SPARE	30 / 2		0.0		20 / 3	SPARE		8
9		-----	---		0.0		---	-----		10
11		SPARE	20 / 2		0.0		---	-----		12
13		-----	---		0.0		20 / 1	SPARE		14
15		SPARE	20 / 2		0.0		20 / 1	SPARE		16
17		-----	---		0.0		20 / 1	SPARE		18
19		SPARE	20 / 1		0.0		20 / 1	SPARE		20
21		SPARE	20 / 1		0.0		20 / 1	SPARE		22
23		SPARE	20 / 1		0.0		20 / 1	SPARE		24
25		SPARE	20 / 1		0.0		20 / 1	SPARE		26
27		SPARE	20 / 1		0.0		20 / 1	SPARE		28
29		SPARE	20 / 1		0.0		20 / 1	SPARE		30
31		SPARE	20 / 1		0.0		20 / 1	SPARE		32
33		SPARE	20 / 1		0.0		20 / 1	SPARE		34
35		SPARE	20 / 1		0.0		20 / 1	SPARE		36
37		SPACE			0.0		30 / 3	SPD		38
39		SPACE			0.0		---	-----		40
41		SPACE			0.0		---	-----		42

1.0 0.2 0.2 — CALCULATED LOAD **1.4 KVA**
MAXIMUM AMPS PER PHASE **8.3 AMPS**

NOTES:
1. COORDINATE WITH HOT BOX PROVIDER IF GROUND FAULT PROTECTION IS REQUIRED.

PANELBOARD 2S1 — 100 A BUS — SECTIONS: 1 — SURFACE MOUNTED
208/ 120V 3 PHASE 4 WIRE — 100 A MCB — LUGS: SINGLE — NEMA: PER ENVIRONMENT
LOCATION: — AIC — FEED: — NUMBER OF POLES: 42

CKT	TYPE	SERVES	C.B.	KVA	CONNECTED PHASE LOAD	KVA	C.B.	SERVES	TYPE	CKT
1		SPARE	20 / 3		0.0		20 / 2	SPARE		2
3		-----	---		0.0		---	-----		4
5		-----	---		0.0		20 / 2	SPARE		6
7		SPARE	20 / 3		0.0		---	-----		8
9		-----	---		0.0		20 / 2	SPARE		10
11		-----	---		0.0		---	-----		12
13		SPARE	20 / 3		0.2	0.18	20 / 1	RECEPTACLE	RE	14
15		-----	---		0.2	0.20	20 / 1	COMM CABINET HEATER	EH	16
17		-----	---		0.0		20 / 1	SPARE		18
19		SPARE	20 / 1		0.0		20 / 1	SPARE		20
21		SPARE	20 / 1		0.0		20 / 1	SPARE		22
23		SPARE	20 / 1		0.0		20 / 1	SPARE		24
25		SPARE	20 / 1		0.0		20 / 1	SPARE		26
27		SPARE	20 / 1		0.0		20 / 1	SPARE		28
29		SPARE	20 / 1		0.0		20 / 1	SPARE		30
31		SPARE	20 / 1		0.0		20 / 1	SPARE		32
33		SPARE	20 / 1		0.0		20 / 1	SPARE		34
35		SPARE	20 / 1		0.0		20 / 1	SPARE		36
37		SPACE			0.0		30 / 3	SPD		38
39		SPACE			0.0		---	-----		40
41		SPACE			0.0		---	-----		42

0.2 0.2 0.0 — CALCULATED LOAD **0.4 KVA**
MAXIMUM AMPS PER PHASE **1.7 AMPS**

NOTES:
1.

IF SHEET IS LESS THAN 22x34
REDUCE SCALE ACCORDINGLY

Port of EVERETT
P.O. BOX 538
EVERETT, WA 98206
(425) 259-3164

kpff
1601 5th Avenue, Suite 1300
Seattle, Washington 98101
(206) 382-0600 Fax (206) 382-0500
PROJECT NO. 1600120

ELCON ASSOCIATES, INC.
ENGINEERS—CONSULTANTS
(206) 243-5022 www.elcon.com
16300 CHRISTENSEN ROAD, STE 330
SEATTLE, WA 98188

NO.	DATE	BY	REVISION
3	07/05/2023	DKS	AS-BUILT
2	7/9/2021	DKS	ADDENDUM 1
1	06/21/2021	DKS	ISSUED FOR BID
0	05/07/2021	DKS	FOR CITY REVIEW

RECORD CONDITIONS ILLUSTRATED IN THESE PLANS REFLECT INFORMATION PROVIDED BY THE CONTRACTOR. RECORD CONDITIONS WERE NOT VERIFIED BY ENGINEER.

PROJECT ENGINEER: D. SIATERLIS	SCALE: NONE
DESIGNED BY: D. SIATERLIS	DATE: 05/07/2021
DRAWN BY: C. SMITH	CHECKED BY: S. BARTKOSKE
APPROVED BY:	

PORT OF EVERETT

NORTON TERMINAL DEVELOPMENT & MTCA 3RD INTERIM ACTION PANEL SCHEDULES

DWG. NO. **E6.5**
CIP NO. 1-8-900-05
PROJECT NO. MT-NT-2021-02.2
SHEET NO. 130 OF 150

AS-BUILTS

M:\2019\1900238 POE Maritime Industrial Expansion Engineering Services\2.18 Drawings\AS BUILTS\Incoming\2023-05-31\mie_elec\m8e65 7-05-23 10:13pm dyu

VAULT SCHEDULE

ID	INTERIOR DIMMENSIONS LENGTH	WIDTH	DEPTH	KIP RATING	MIN. QTY. OF 4" KNOCKOUTS NORTH	EAST	SOUTH	WEST	EASTING X	NORTHING Y
VE1C	50"	50"	42"		8	8	8	8	1301873.78	362350.24
VE1P	76"	76"	42"		16	16	16	16	1301884.54	362334.07
VE2C	42"	42"	42"		8	8	8	8	1301878.15	362437.35
VE2P	42"	42"	42"		8	8	8	8	1301886.06	362453.04
VE3C	42"	42"	42"		8	8	8	8	1301887.90	362737.16
VE3P	42"	42"	42"		8	8	8	8	1301896.36	362748.98
VE4C	42"	42"	42"		8	8	8	8	1301898.56	363037.15
VE4P	42"	42"	42"		8	8	8	8	1301906.72	363048.80
VE5C	42"	42"	42"		8	8	8	8	1302096.99	363132.17
VE5P	42"	42"	42"		8	8	8	8	1302085.82	363125.64
VE6C	42"	42"	42"		8	8	8	8	1302130.78	363134.18
VE6P	42"	42"	42"		8	8	8	8	1302124.85	363123.68
VE7C	42"	42"	42"		8	8	8	8	1301867.01	362133.07
VE7P	42"	42"	42"		8	8	8	8	1301875.37	362149.33
VE8C	42"	42"	42"		8	8	8	8	1301863.18	362021.18
VE8P	42"	42"	42"		8	8	8	8	1301871.39	362033.18
VE9C	42"	42"	42"		8	8	8	8	1302115.34	363159.01
VE9P	42"	42"	42"		8	8	8	8	1302104.27	363157.72
VE10C	42"	42"	42"		8	8	8	8	1302099.34	363193.80
VE10P	42"	42"	42"		8	8	8	8	1302092.33	363199.73
VE11C	42"	42"	42"		8	8	8	8	1301809.33	363445.71
VE11P	42"	42"	42"		8	8	8	8	1301823.19	363448.96
VE12C	36"	24"	28"		8	8	8	8	1301894.38	363445.53
VE12P	36"	24"	28"		8	8	8	8	1301901.97	363448.32
VE13C	36"	24"	28"		8	8	8	8	1302086.16	363439.31
VE13P	36"	24"	28"		8	8	8	8	1302094.07	363441.69
VE14C	36"	24"	28"		8	8	8	8	1301702.34	363450.09
VE14P	36"	24"	28"		8	8	8	8	1301710.11	363453.00
VE15C	36"	24"	28"		8	8	8	8	1301516.48	363456.73
VE15P	36"	24"	28"		8	8	8	8	1301524.04	363459.40
VM1C	50"	50"	42"		8	8	8	8	1301643.67	362308.89
VM1P	76"	76"	42"		16	16	16	16	1301629.28	362299.23
VM2C	50"	50"	42"		8	8	8	8	1301611.45	362310.10
VM2P	104"	56"	42"		8	8	8	8	1301604.80	362301.90
VN1C	42"	42"	42"		8	8	8	8	1301649.45	362593.32
VN1P	42"	42"	42"		8	8	8	8	1301641.89	362605.60
(1) VN2C	42"	42"	42"		8	8	8	8	1301659.80	362893.18
(1) VN2P	42"	42"	42"		8	8	8	8	1301652.18	362905.29
(1) VN3C	42"	42"	42"		8	8	8	8	1301665.42	363040.15
(1) VN3P	42"	42"	42"		8	8	8	8	1301657.67	363052.28
(1) VN4C	42"	42"	42"		8	8	8	8	1301668.53	363143.00
(1) VN4P	42"	42"	42"		8	8	8	8	1301660.92	363155.23
(1) VN5C	42"	42"	42"		8	8	8	8	1301670.65	363206.15
(1) VN5P	42"	42"	42"		8	8	8	8	1301663.38	363219.43
VN6C	42"	42"	42"		8	8	8	8	1301731.62	363208.66
VN6P	42"	42"	42"		8	8	8	8	1301727.91	363220.68
VS1C	42"	42"	42"		8	8	8	8	1301598.62	362057.78
VS1P	42"	42"	42"		8	8	8	8	1301587.23	362066.06
VS2C	42"	42"	42"		8	8	8	8	1301560.19	361997.43
VS2P	42"	42"	42"		8	8	8	8	1301553.11	362008.65
VS3C	42"	42"	42"		8	8	8	8	1301545.57	361668.16
VS3P	42"	42"	42"		8	8	8	8	1301541.23	361680.59
VS4C	42"	42"	42"		8	8	8	8	1301543.65	361621.58
VS4P	42"	42"	42"		8	8	8	8	1301539.61	361633.58
VS5C	42"	42"	42"		8	8	8	8	1301541.61	361566.42
VS5P	42"	42"	42"		8	8	8	8	1301537.71	361579.74
VS6C	42"	42"	42"		8	8	8	8	1301530.77	361464.63
VS6P	42"	42"	42"		8	8	8	8	1301527.20	361476.77
VS7C	36"	24"	28"		8	8	8	8	1301507.09	360896.58
VS7P	36"	24"	28"		8	8	8	8	1301505.22	360904.49

NOTE:

NORTHINGS AND EASTINGS OF STRUCTURES ARE BASED OFF OF CONSTRUCTION SURVEY AS-BUILTS PROVIDED BY THE CONTRACTOR.

VAULT SCHEDULE

ID	INTERIOR DIMMENSIONS LENGTH	WIDTH	DEPTH	KIP RATING	MIN. QTY. OF 4" KNOCKOUTS NORTH	EAST	SOUTH	WEST	EASTING X	NORTHING Y
VW1C	50"	50"	42"		8	8	8	8	1301311.95	362320.58
VW1P	76"	76"	42"		16	16	16	16	1301300.63	362309.43
VW2C	42"	42"	42"		8	8	8	8	1301315.09	362443.78
VW2P	76"	76"	42"		16	16	16	16	1301305.07	362456.67
VW3C	42"	42"	42"		8	8	8	8	1301322.81	362672.29
VW3P	42"	42"	42"		8	8	8	8	1301315.76	362684.36
VW4C	42"	42"	42"		8	8	8	8	1301325.71	362751.70
VW4P	42"	42"	42"		8	8	8	8	1301318.60	362763.99
VW5C	42"	42"	42"		8	8	8	8	1301306.44	362189.18
VW5P	42"	42"	42"		8	8	8	8	1301299.17	362201.67
VW6C	42"	42"	42"		8	8	8	8	1301295.10	361855.82
VW6P	42"	42"	42"		8	8	8	8	1301287.64	361867.38
VW7C	42"	42"	42"		8	8	8	8	1301290.89	361739.91
VW7P	42"	42"	42"		8	8	8	8	1301283.57	361751.80
VW8C	42"	42"	42"		8	8	8	8	1301148..09	362336.42
VW8P	42"	42"	42"		8	8	8	8	1301142.96	362349.56
VW9C	42"	42"	42"		8	8	8	8	1301151.97	362441.04
VW9P	42"	42"	42"		8	8	8	8	1301146.46	362453.51
VW10C	42"	42"	42"		8	8	8	8		
VW10P	42"	42"	42"		8	8	8	8		
Conc PUD Pull Vault									1301930.64	363034.80
Conc PUD Pull/Splicing Vault									1301936.24	363051.87
Conc PUD Pull/Splicing Vault									1301497.15	361419.60

NOTE:

NORTHINGS AND EASTINGS OF STRUCTURES ARE BASED OFF OF CONSTRUCTION SURVEY AS-BUILTS PROVIDED BY THE CONTRACTOR.

GENERAL NOTES

1. PROVIDE VAULT RISER/EXTENSION RINGS FOR ALL VAULTS WHERE NEIGHBORING DUCT BANKS ARE WITHIN 4'-0" OF VAULT, SEE SECTION 'F' ON SHEET E5.4 FOR FURTHER INFORMATION.
2. SEE SHEET C4.17 FOR PRECAST VAULT BEDDING DETAILS AND SUBGRADE PREPARATION. ALL PRECAST VAULTS SUBJECTED TO TERMINAL LOADS SHALL BE CONTRACTOR DESIGNED TO MEET THE UNDERGROUND UTILITY STRUCTURE LOADING CRITERIA SHOWN ON SHEET G1.3. SEE SPECIFICATIONS FOR FURTHER DETAILS.
3. LID CASTING AND FRAME SHALL MATCH KIP RATING OF VAULT. COVER SHALL READ "ELECTRIC" OR "COMMUNICATIONS" AS APPROPRIATE. PROVIDE FIELD STAMPED LABEL ON EXPOSED METAL FRAME AND LID, LABEL SHALL MATCH VAULT ID ON ELECTRICAL PLANS. LIDS WEIGHING MORE THAN 50 POUNDS SHALL BE EQUIPPED WITH EITHER STAINLESS STEEL MECHANICAL SPRING LIFT ASSIST STRUTS OR LIFTING RINGS TO ALLOW LIFTING BY A FORKLIFT, WHEN NOT IN USE THE RINGS SHALL RECESS. PROVIDE SECURITY BOLT ON ALL LIDS. LID OPENING SHALL HAVE A OPENING OF 30" DIAMETER MINIMUM.

KEYED NOTES

(1) PROVIDE VAULT RISER/EXTENSION RING FOR EITHER POWER OR COMM VAULT, PER GENERAL NOTE 1.

IF SHEET IS LESS THAN 22x34
REDUCE SCALE ACCORDINGLY

Port of EVERETT
P.O. BOX 538
EVERETT, WA 98206
(425) 259-3164

kpff
1601 5th Avenue, Suite 1300
Seattle, Washington 98101
(206) 382-0600 Fax (206) 382-0500
PROJECT NO. 1600120

ELCON ASSOCIATES, INC.
ENGINEERS-CONSULTANTS
(206) 243-5022 www.elcon.com
16300 CHRISTENSEN ROAD, STE 330
SEATTLE, WA 98188

NO.	DATE	BY	REVISION
6	07/05/2023	DKS	AS-BUILT
5	6/20/2022	DKS	RFI 092
4	6/8/2022	DKS	POLE, DUCT BANK RELOCATION
3	2/18/2022	DKS	MARITIME TENANT SITE PLAN REVISIONS
2	7/9/2021	DKS	ADDENDUM 1
1	06/21/2021	DKS	ISSUED FOR BID
0	05/07/2021	DKS	FOR CITY REVIEW

NO.	DATE	BY	REVISION

RECORD CONDITIONS ILLUSTRATED IN THESE PLANS REFLECT INFORMATION PROVIDED BY THE CONTRACTOR. RECORD CONDITIONS WERE NOT VERIFIED BY ENGINEER.

PROJECT ENGINEER: D. SIATERLIS	SCALE: NONE
DESIGNED BY: D. SIATERLIS	DATE: 05/07/2021
DRAWN BY: C. SMITH	CHECKED BY: S. BARTKOSKE
APPROVED BY:	

PORT OF EVERETT

NORTON TERMINAL DEVELOPMENT & MTCA 3RD INTERIM ACTION
VAULT SCHEDULE

DWG. NO. **E6.6**
CIP NO. 1-8-900-05
PROJECT NO. MT-NT-2021-02.2
SHEET NO. 131 OF 150

AS-BUILTS

M: \2019\1900238 POE Maritime Industrial Expansion Engineering Services\2.18 Drawings\AS BUILTS\Incoming\2023-05-31\mle_elec\m8e66 7-05-23 10:13pm dyu

Section 4. Underground Service

One 3Ø Customer, Transformer Vault

Transformer 750 — 2500 kVA.
Maximum **10** conductors per leg.
For conductor sizes 500kcmil and larger
Service conductors ***connected*** directly to transformer.

FIGURE 4-35

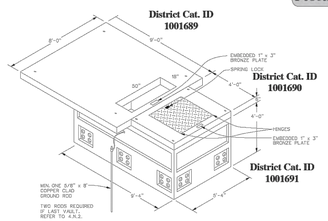

SEE CURRENT EDITION OF SNOHOMISH COUNTY PUD'S ELECTRICAL SERVICE REQUIREMENTS FOR TRANSFORMER VAULT REQUIREMENTS

T&D Compatible Unit V0203 - V0204

Vaults, 4'8"W x 4'8"L x 3'6"H with 6"H Cover

PAGE 1 OF 1
REV. 5
DEC. 28, 2016

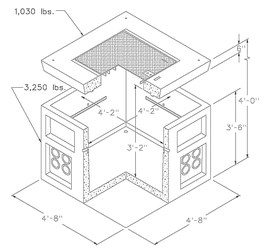

Note:
For applications requiring a vault cover with a slip-resistant steel hatch, specify SlipNOT cover MID 1002120.

C.U.	DESCRIPTION	QTY	MID
V0203	Vault, Conc 4'8"W x 4'8"L x 3'6"H & Cover, Vault 4'8"W x 4'8"L x 6"H w/ 3'W x 3'L Diamond Plate *(Cover only MID 765646)*	1	766397

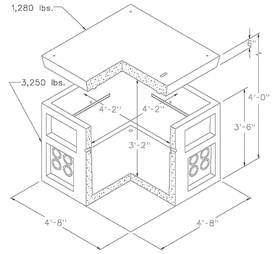

C.U.	DESCRIPTION	QTY	MID
V0204	Vault, Conc 4'8"W x 4'8"L x 3'6"H & Cover, Vault 4'8"W x 4'8"L x 6"H Solid Concrete *(Cover only MID 765547)*	1	766420

Notes:
1. The above vaults are rated for H20 loading, but are not recommended for high traffic areas.
2. For high traffic applications, i.e., full H20 loading, where vault lid will be subject to heavy impact vehicular traffic, e.g., in streets, specify a vault cover with a heavy duty ductile iron lid, MID 1003599.

T&D Compatible Unit V0210

Concrete Pulling/Splicing Vault
6'8"W x 12'8"L x 6'6"H w/ 18"H Cover

PAGE 1 OF 1
REV. 7
AUG. 5, 2014

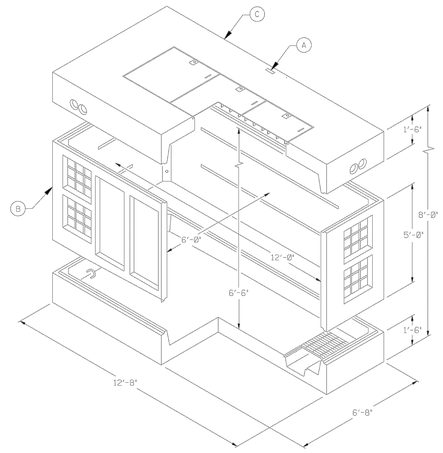

ITEM	DESCRIPTION	QTY	MID
A	Tag, Vault, Cu 1"W x 3.5"L	1	385303
B	Vault, 2-Piece Concrete Bottom: 6'8"W x 12'8"L x 1'6"H Middle: 6'8"W x 12'8"L x 5'H	1	1003601
C	Vault, Cover 6'8"W x 12'8"L x 18"H w/ (3) 3'W x 3'L Diamond Plates	1	1002247

Notes:
1. The vault dimensions shown are for Utility Vault (a division of Oldcastle Precast), historically the District's primary supplier for this vault. Equivalent vaults supplied by other manufacturers typically have slightly different dimensions. Determine which manufacturer a vault was purchased from, and check its dimensions for situations where dimensions are critical, such as in paved areas where the vault cover must be flush with the grade.
2. For Utility Vault replacement cover w/ 3-Diamond Plate doors, see MID 1002247.
3. For Utility Vault replacement cover w/ 3-SlipNOT® doors, see MID 1003024.

T&D Compatible Unit V0501

6'8"W x 12'8"L x 6'6"H Vault w/ 1'6"H Cover w/ 3'W x 3'L Diamond Plate &
64"W x 66"L Opening for PME Type Dead-Front Pad-Mounted Switchgear

PAGE 1 OF 1
REV. 5
JAN. 3, 2016

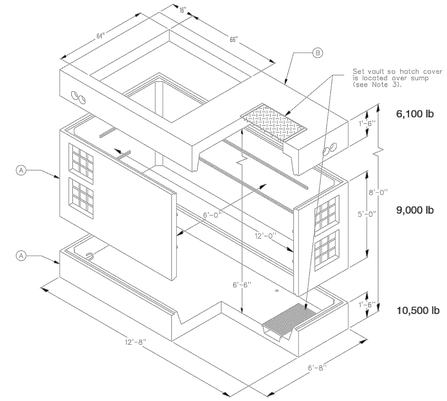

ITEM	SECTION	DESCRIPTION	QTY	MID
A		Vault, 2-Piece Concrete	1	1003601
	Bottom	6'8"W x 12'8"L x 1'6"H		
	Middle	6'8"W x 12'8"L x 5'0"H		
B	Cover	6'8"W x 12'8"L x 1'6"H w/ 3'W x 3'L Diamond Plate & 64"W x 66"L Opening	1	1002508

Notes:
1. When there is a delay between setting the vault and installing the pad-mounted switchgear, use solid cover slab MID 5000051 (6'W x 6'L x 6"H) to cover the cable blockout in the vault cover. The cover slab weighs approximately 3618 lb.
2. For the vault cover only, see MID 1002508.
3. Orient the vault base section so the pump sump is located below the hatch cover.
4. Section weights are approximate.

GENERAL NOTES

1. STANDARDS SHOWN ARE SUBJECT TO CHANGE BY SNOHOMISH COUNTY PUD AT ANY TIME AND ARE SHOWN FOR REFERENCE ONLY.

IF SHEET IS LESS THAN 22x34
REDUCE SCALE ACCORDINGLY

Port of EVERETT
P.O. BOX 538
EVERETT, WA 98206
(425) 259-3164

kpff
1601 5th Avenue, Suite 1300
Seattle, Washington 98101
(206) 382-0600 Fax (206) 382-0500
PROJECT NO. 1600120

ELCON ASSOCIATES, INC.
ENGINEERS–CONSULTANTS
(206) 243-5022 www.elcon.com
16300 CHRISTENSEN ROAD, STE 330
SEATTLE, WA 98188

NO.	DATE	BY	REVISION
2	07/05/2023	DKS	AS-BUILT
1	06/21/2021	DKS	ISSUED FOR BID
0	05/07/2021	DKS	FOR CITY REVIEW

RECORD CONDITIONS ILLUSTRATED IN THESE PLANS REFLECT INFORMATION PROVIDED BY THE CONTRACTOR. RECORD CONDITIONS WERE NOT VERIFIED BY ENGINEER.

PROJECT ENGINEER: D. SIATERLIS	SCALE: NONE
DESIGNED BY: D. SIATERLIS	DATE: 05/07/2021
DRAWN BY: C. SMITH	CHECKED BY: S. BARTKOSKE
APPROVED BY:	

PORT OF EVERETT
NORTON TERMINAL DEVELOPMENT & MTCA 3RD INTERIM ACTION
SNOHOMISH COUNTY PUD
VAULT STANDARDS

DWG. NO. **E6.7**
CIP NO. 1-8-900-05
PROJECT NO. MT-NT-2021-02.2
SHEET NO. 132 OF 150

AS-BUILTS

M:\2019\1900238 POE Maritime Industrial Expansion Engineering Services\2-18 Drawings\AS BUILTS\Incoming\2023-05-31\mle_elec\vm8e67 7-05-23 10:13pm dyu

LUMINAIRE SCHEDULE

LUMINAIRE SYMBOL	LUM TYPE	LAMP TYPE	VOLTS	LOAD (WATTS)	LUMINAIRE DESCRIPTION	LAMPS TYPE & COLOR TEMP	FINISH	MOUNTING	MANUFACTURER/SERIES #
☼	F4	LED	480V	530	HIGH STRENGTH AL5052 ALUMINUM BODY, WEATHER RESISTANT POWDER COAT, UV-RESISTANT POLYCARBONATE LENS, IP66 RATED, PIPE MOUNT, GLARE GUARD, 0-10V DIMMING DRIVER, NEMA 7-PIN RECEPTACLE WITH SHORTING CAP. SEE LIGHT POLE SCHEDULE FOR HEAD QUANTITIES PER POLE AND ARM LENGTHS. TYPE 4 DISTRIBUTION, NOMINAL 34,000 MAX CANDELA AT 280°H, 70°V 70,700 MINIMUM LUMINAIRE LUMENS	(1) LED BOARD, 3000°K	FACTORY STANDARD POWDERCOAT	POLE	PHOENIX #HL (HIGHLAND SERIES) OR APPROVED EQUAL
⁂	F4L	LED	480V	250	SAME AS F4 BUT LOWER LUMEN PACKAGE. 14,900 MAX CANDELA AT 225°H, 63°V 33,700 MINIMUM LUMINAIRE LUMENS	SEE F4	SEE F4	SEE F4	PHOENIX #HL (HIGHLAND SERIES) OR APPROVED EQUAL
☼	F5	LED	480V	530	SAME AS TYPE F4 EXCEPT WITH DIFFERENT BEAM DISTRIBUTION, SEE LIGHT POLE SCHEDULE FOR HEAD QUANTITIES PER POLE AND ARM LENGTHS. TYPE 5 DISTRIBUTION, NOMINAL 22,900 MAX CANDELA AT 270°H, 67.5°V 72,400 MINIMUM LUMINAIRE LUMENS	SEE F4	SEE F4	SEE F4	PHOENIX #HL (HIGHLAND SERIES) OR APPROVED EQUAL
	LOWERING DEVICE	--	--	--	TOP LATCHING EXTERNAL DRIVE, 2 LIGHTING CIRCUITS, WINCH LOCATED INSIDE POLE, STAINLESS STEEL, SEE LIGHT POLE SCHEDULE FOR NUMBER OF CIRCUITS PER POLE	--	FACTORY STANDARD GALVANIZE A123	--	STRATUS PRODUCTS #1060, OR APPROVED EQUAL
	POLE	--	--	--	29'-6" ROUND TAPERED PRESTRESSED STEEL AND SPUN-CAST CONCRETE POLE, 8-5/8" BASE DIA, 5-1/8" TOP DIA, 11" SQUARE BASEPLATE PRESTRESSED TO POLE, LOWER INTERIOR 1'-0" AND LOWER EXTERIOR 0'-8" FINISH: ELLIS PAINT COMPANY #690 VINYL WASH PRIMER, ENGARD #463 COAL TAR EPOXY FINISH	--	FACTORY STANDARD FINISH	--	NOV AMERON CENTRECON #MBR OR APPROVED EQUAL
	POLE	--	--	--	47' FACETED TAPERED STEEL POLE, MINIMUM 17" BASE DIA, 10.42" TOP DIA, 16 SIDES, HOT-DIPPED GALVANIZED AFTER FABRICATION INSIDE AND OUTSIDE, POLE TOP PROVISION: PLATE, SHAFT QTY: 1 EACH, DESIGN WIND: 90MPH, DESIGN CRITERIA: AASHTO LTS-6	--	FACTORY STANDARD GALVANIZE A123	--	STRUCTURAL AND STEEL PRODUCTS INC #Q-41924 SERIES OR APPROVED EQUAL
	POLE	--	--	--	71' FACETED TAPERED STEEL POLE, MINIMUM 17" BASE DIA, 7.435" TOP DIA, 16 SIDES, HOT-DIPPED GALVANIZED AFTER FABRICATION INSIDE AND OUTSIDE, POLE TOP PROVISION: PLATE, SHAFT QTY: 2 EACH, DESIGN WIND: 90MPH, DESIGN CRITERIA: AASHTO LTS-6. PROVIDE HANDHOLE COMPATIBLE WITH LOWERING DEVICE SYSTEM.	--	FACTORY STANDARD GALVANIZE A123	--	STRUCTURAL AND STEEL PRODUCTS INC #Q-41924 SERIES OR APPROVED EQUAL

GENERAL NOTES

1. SEE DRAWING E7.3 THRU E7.6 FOR LUMINAIRE COORDINATION WITH LIGHTING CONTROLS.
2. PROVIDE CONTROL WIRING AS SPECIFIED BY LIGHTING CONTROL MANUFACTURER'S RECOMMENDATIONS.
3. ALL EXTERIOR FIXTURES SHALL BE RATED FOR USE DOWN TO 10°F.
4. VERIFY VOLTAGE FROM CIRCUITRY AS INDICATED ON DRAWINGS PRIOR TO LUMINAIRE PROCUREMENT.
5. REFER TO THE LIGHT POLE SCHEDULE FOR FIXTURE QUANTITIES, POLE HEIGHTS AND OTHER INFORMATION AT EACH POLE LOCATION.
6. PROVIDE SALTWATER WEATHERPROOF GASKETING BETWEEN DISSIMILAR METALS TO PREVENT ELECTROLYSIS AND CORROSION.

811 Know what's below. Call before you dig.

IF SHEET IS LESS THAN 22x34 REDUCE SCALE ACCORDINGLY

Port of EVERETT
P.O. BOX 538
EVERETT, WA 98206
(425) 259-3164

kpff
1601 5th Avenue, Suite 1300
Seattle, Washington 98101
(206) 382-0600 Fax (206) 382-0500
PROJECT NO. 1600120

ELCON ASSOCIATES, INC.
ENGINEERS-CONSULTANTS
(206) 243-5022 www.elcon.com
16300 CHRISTENSEN ROAD, STE 330
SEATTLE, WA 98188

NO.	DATE	BY	REVISION
2	07/05/2023	DKS	AS-BUILT
1	06/21/2021	DKS	ISSUED FOR BID
0	05/07/2021	DKS	FOR CITY REVIEW

RECORD CONDITIONS ILLUSTRATED IN THESE PLANS REFLECT INFORMATION PROVIDED BY THE CONTRACTOR. RECORD CONDITIONS WERE NOT VERIFIED BY ENGINEER.

PROJECT ENGINEER: D. SIATERLIS	SCALE: NONE
DESIGNED BY: D. SIATERLIS	DATE: 05/07/2021
DRAWN BY: C. SMITH	CHECKED BY: S. BARTKOSKE
APPROVED BY:	

PORT OF EVERETT

NORTON TERMINAL DEVELOPMENT & MTCA 3RD INTERIM ACTION LUMINAIRE SCHEDULE

DWG. NO. **E7.1**
CIP NO. 1-8-900-05
PROJECT NO. MT-NT-2021-02.2
SHEET NO. 133 OF 150

AS-BUILTS

M:\2019\1900238 POE Maritime Industrial Expansion Engineering Services\2.18 Drawings\AS BUILTS\Incoming\2023-05-31\mle_elec\m8e71 7-05-23 10:14pm dyu

LIGHT POLE SCHEDULE

POLE I.D.	FIXTURES	FIXTURE ROTATION (1)	DRAWING LOCATION	POLE HEIGHT (FT)	LOWERING DEVICE	TOTAL LOAD	EASTING (X)	NORTHING (Y)	COMMENTS
NT–HML–01	(12) F5	N/A	E1.2	71'	Y	6156W	1301280.35	361879.73	
NT–HML–02	(12) F5	N/A	E1.2	71'	Y	6156W	1301290.78	362179.55	
NT–HML–03	(12) F5	N/A	E1.3	71'	Y	6156W	1301301.22	362479.37	
NT–HML–04	(10) F4	153 DEGREES	E1.3	71'	Y	5080W	1301311.66	362775.35	
NT–HML–05	(12) F4	N/A	E1.2	71'	Y	6156W	1301547.59	361646.66	
NT–HML–06	(12) F5	N/A	E1.2	71'	Y	6156W	1301591.30	362040.01	
NT–HML–07	(12) F5	N/A	E1.2	71'	Y	6156W	1301601.57	362318.82	
NT–HML–08	(12) F5	N/A	E1.3	71'	Y	6156W	1301611.70	362618.65	
NT–HML–09	(12) F5	N/A	E1.3	71'	Y	6156W	1301621.88	362918.48	
NT–HML–10	(12) F5	N/A	E1.3	71'	Y	6156W	1301699.49	363214.89	
NT–HML–11	(12) F5	N/A	E1.4	71'	Y	6156W	1301890.42	362158.67	
NT–HML–12	(12) F5	N/A	E1.5	71'	Y	6156W	1301900.86	362458.49	
NT–HML–13	(12) F5	N/A	E1.5	71'	Y	6156W	1301911.30	362758.31	
NT–HML–14	(12) F5	N/A	E1.5	71'	Y	6156W	1301921.73	363058.13	
NT–HML–15	(8) F5	N/A	E1.5	71'	Y	6156W	1302034.50	363240.61	
NT–LP–20	(1) F5	N/A	E1.2	29.5'	N	513W	1301520.64	361447.43	6' ARM LENGTH
NT–LP–21	(3) F4L	N/A	E1.5	29.5'	N	762W	1302120.29	363191.85	6' ARM LENGTH
NT–LP–30	(6) F5	N/A	E1.3	47'	Y	3078W	1301486.42	363219.09	
NT–LP–31	(4) F4	N/A	E1.6	47'	Y	2052W	1301533.05	363453.07	
NT–LP–32	(4) F4	N/A	E1.6	47'	Y	2052W	1301718.93	363446.06	
NT–LP–33	(4) F4	N/A	E1.6	47'	Y	2052W	1301910.94	363441.40	
NT–LP–34	(4) F4	N/A	E1.6	47'	Y	2052W	1302102.83	363434.93	
NT–LP–CP01	--	N/A	E1.2	29.5'	N	--	1301068.96	361758.33	COMMUNICATIONS POLE
NT–LP–CP02	--	N/A	E1.2	29.5'	N	--	1301070.62	362345.63	COMMUNICATIONS POLE
NT–LP–CP03	--	N/A	E1.3	29.5'	N	--	1301213.35	362683.87	COMMUNICATIONS POLE
NT–LP–CP07	--	N/A	E1.5	29.5'	N	--	1302146.33	363127.99	COMMUNICATIONS POLE
NT–LP–CP08	--	N/A	E1.5	29.5'	N	--	1302107.67	362477.79	COMMUNICATIONS POLE
NT–LP–CP09	--	N/A	E1.4	29.5'	N	--	1302050.24	361831.18	COMMUNICATIONS POLE
NT–LP–CP10	--	N/A	E4.8	29.5'	N	--	1301505.76	360889.42	COMMUNICATIONS POLE
NT–LP–CP11	--	N/A	E1.2	29.5'	N	--	1301606.20	362347.18	COMMUNICATIONS POLE

KEYED NOTES

(1) ANGLE IS MEASURED WITH 0° AT PROJECT NORTH, ANGLES NUMBERED COUNTERCLOCKWISE. ALL FIXTURES ON THE POLE AIMED IN THE SAME DIRECTION.

NOTE:

NORTHINGS AND EASTINGS OF STRUCTURES ARE BASED OFF OF CONSTRUCTION SURVEY AS–BUILTS PROVIDED BY THE CONTRACTOR.

811 Know what's below. Call before you dig.

IF SHEET IS LESS THAN 22x34 REDUCE SCALE ACCORDINGLY

Port of EVERETT
P.O. BOX 538
EVERETT, WA 98206
(425) 259–3164

kpff
1601 5th Avenue, Suite 1300
Seattle, Washington 98101
(206) 382-0600 Fax (206) 382-0500
PROJECT NO. 1600120

ELCON ASSOCIATES, INC.
ENGINEERS–CONSULTANTS
(206) 243-5022 www.elcon.com
16300 CHRISTENSEN ROAD, STE 330
SEATTLE, WA 98188

NO.	DATE	BY	REVISION
6	07/05/2023	DKS	AS–BUILT
5	6/8/2022	DKS	POLE, DUCT BANK RELOCATION
4	2/18/2022	DKS	MARITIME TENANT SITE PLAN REVISIONS
3	12/13/2021	DKS	COP006 – NEW COMM POLE CP11
2	7/9/2021	DKS	ADDENDUM 1
1	06/21/2021	DKS	ISSUED FOR BID
0	05/07/2021	DKS	FOR CITY REVIEW

RECORD CONDITIONS ILLUSTRATED IN THESE PLANS REFLECT INFORMATION PROVIDED BY THE CONTRACTOR. RECORD CONDITIONS WERE NOT VERIFIED BY ENGINEER.

PROJECT ENGINEER: D. SIATERLIS	SCALE: NONE
DESIGNED BY: D. SIATERLIS	DATE: 05/07/2021
DRAWN BY: C. SMITH	CHECKED BY: S. BARTKOSKE
APPROVED BY:	

PORT OF EVERETT

NORTON TERMINAL DEVELOPMENT & MTCA 3RD INTERIM ACTION
LIGHT POLE SCHEDULE

DWG. NO. **E7.2**
CIP NO. 1–8–900–05
PROJECT NO. MT–NT–2021–02.2
SHEET NO. 134 OF 150

AS-BUILTS

M:\2019\1900238 POE Maritime Industrial Expansion Engineering Services\2.18 Drawings\AS BUILTS\Incoming\2023-05-31\ynle_elec\m8e72 7-05-23 10:14pm dyu

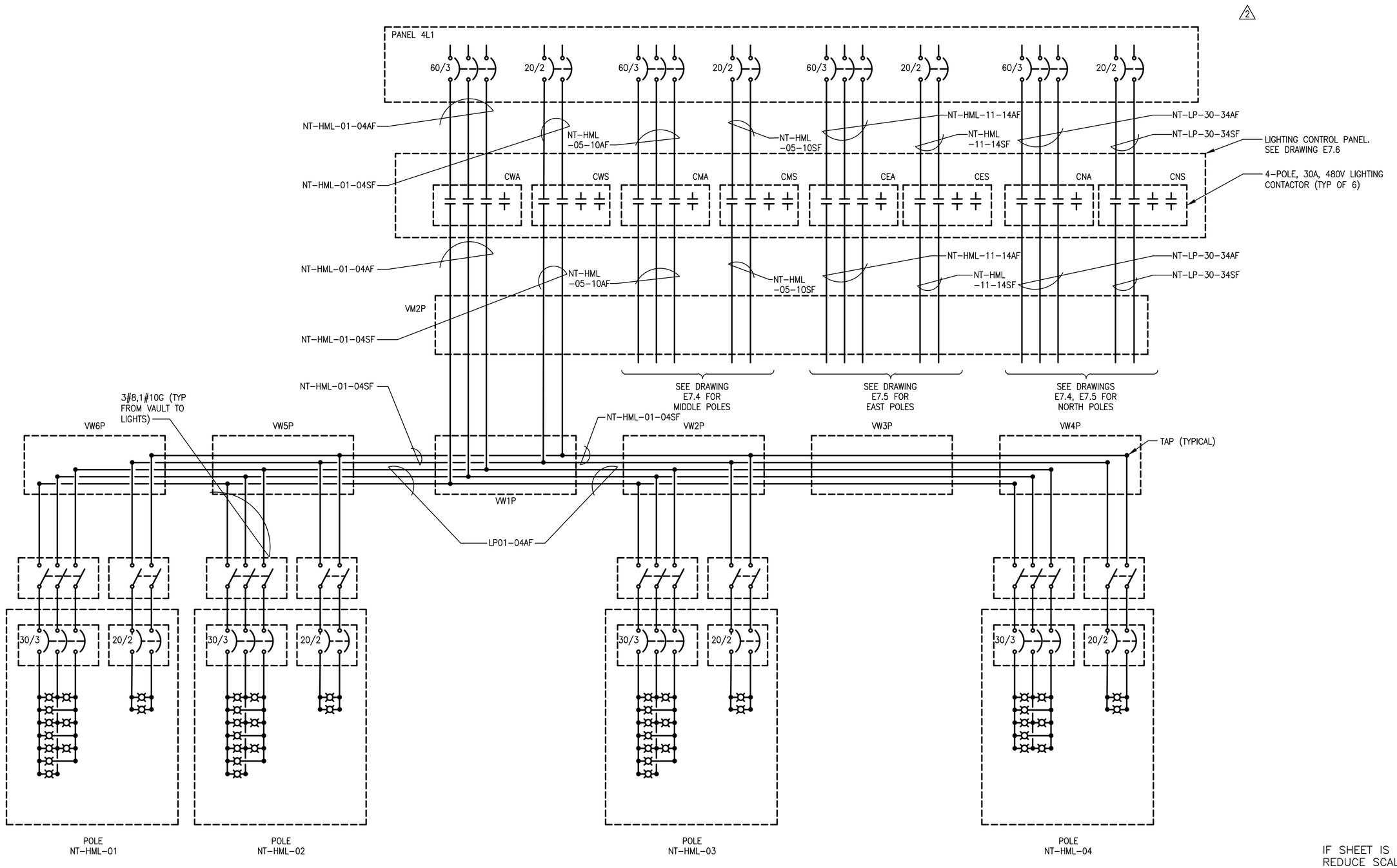

IF SHEET IS LESS THAN 22x34 REDUCE SCALE ACCORDINGLY

Port of EVERETT
P.O. BOX 538
EVERETT, WA 98206
(425) 259-3164

kpff
1601 5th Avenue, Suite 1300
Seattle, Washington 98101
(206) 382-0600 Fax (206) 382-0500
PROJECT NO. 1600120

ELCON ASSOCIATES, INC.
ENGINEERS-CONSULTANTS
(206) 243-5022 www.elcon.com
16300 CHRISTENSEN ROAD, STE 330
SEATTLE, WA 98188

NO.	DATE	BY	REVISION
3	07/05/2023	DKS	AS-BUILT
2	2/18/2022	DKS	MARITIME TENANT SITE PLAN REVISIONS
1	06/21/2021	DKS	ISSUED FOR BID
0	05/07/2021	DKS	FOR CITY REVIEW

RECORD CONDITIONS ILLUSTRATED IN THESE PLANS REFLECT INFORMATION PROVIDED BY THE CONTRACTOR. RECORD CONDITIONS WERE NOT VERIFIED BY ENGINEER.

PROJECT ENGINEER: D. SIATERLIS	SCALE: NONE
DESIGNED BY: D. SIATERLIS	DATE: 05/07/2021
DRAWN BY: C. SMITH	CHECKED BY: S. BARTKOSKE
APPROVED BY:	

PORT OF EVERETT

NORTON TERMINAL DEVELOPMENT & MTCA 3RD INTERIM ACTION WEST LIGHTING CONTROLS SCHEMATIC DIAGRAM

DWG. NO. **E7.3**

CIP NO. 1-8-900-05

PROJECT NO. MT-NT-2021-02.2

SHEET NO. 135 OF 150

AS-BUILTS

M:\2019\1900238 POE Maritime Industrial Expansion Engineering Services\2.18 Drawings\AS BUILTS\Incoming\2023-05-31\mle_elec\m8e73 7-05-23 10:14pm dyu

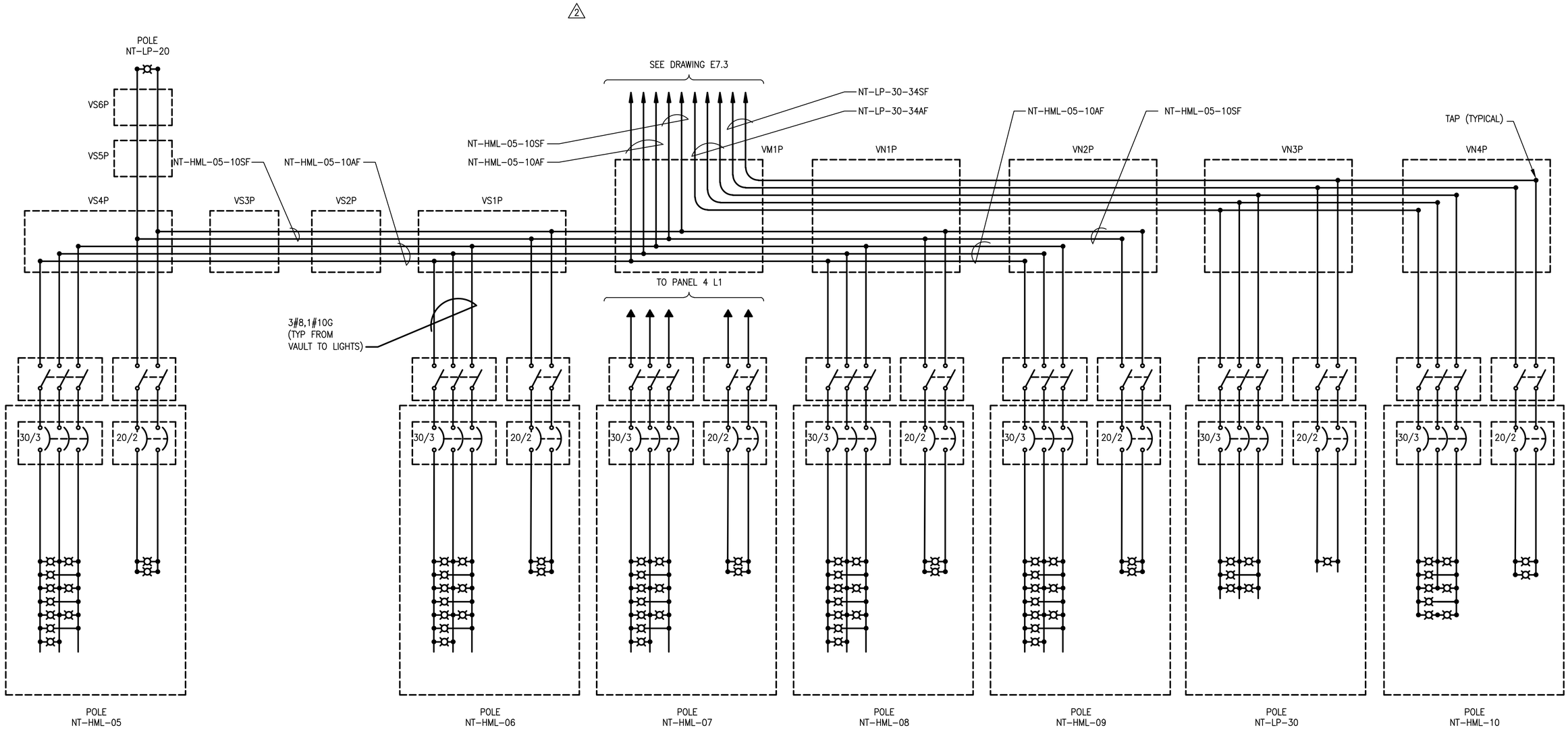

IF SHEET IS LESS THAN 22x34
REDUCE SCALE ACCORDINGLY

Port of EVERETT
P.O. BOX 538
EVERETT, WA 98206
(425) 259-3164

kpff
1601 5th Avenue, Suite 1300
Seattle, Washington 98101
(206) 382-0600 Fax (206) 382-0500
PROJECT NO. 1600120

ELCON ASSOCIATES, INC.
ENGINEERS-CONSULTANTS
(206) 243-5022 www.elcon.com
16300 CHRISTENSEN ROAD, STE 330
SEATTLE, WA 98188

NO.	DATE	BY	REVISION
3	07/05/2023	DKS	AS-BUILT
2	2/18/2022	DKS	MARITIME TENANT SITE PLAN REVISIONS
1	06/21/2021	DKS	ISSUED FOR BID
0	05/07/2021	DKS	FOR CITY REVIEW

RECORD CONDITIONS ILLUSTRATED IN THESE PLANS REFLECT INFORMATION PROVIDED BY THE CONTRACTOR. RECORD CONDITIONS WERE NOT VERIFIED BY ENGINEER.

PROJECT ENGINEER: D. SIATERLIS	SCALE: NONE
DESIGNED BY: D. SIATERLIS	DATE: 05/07/2021
DRAWN BY: C. SMITH	CHECKED BY: S. BARTKOSKE
APPROVED BY:	

PORT OF EVERETT

NORTON TERMINAL DEVELOPMENT & MTCA 3RD INTERIM ACTION MIDDLE LIGHTING CONTROLS SCHEMATIC DIAGRAM

DWG. NO. **E7.4**
CIP NO. 1-8-900-05
PROJECT NO. MT-NT-2021-02.2
SHEET NO. 136 OF 150

AS-BUILTS

M:\2019\1900238 POE Maritime Industrial Expansion Engineering Services\2.18 Drawings\AS BUILTS\Incoming\2023-05-31\mle_elec\m8e74 7-05-23 10:14pm dyu

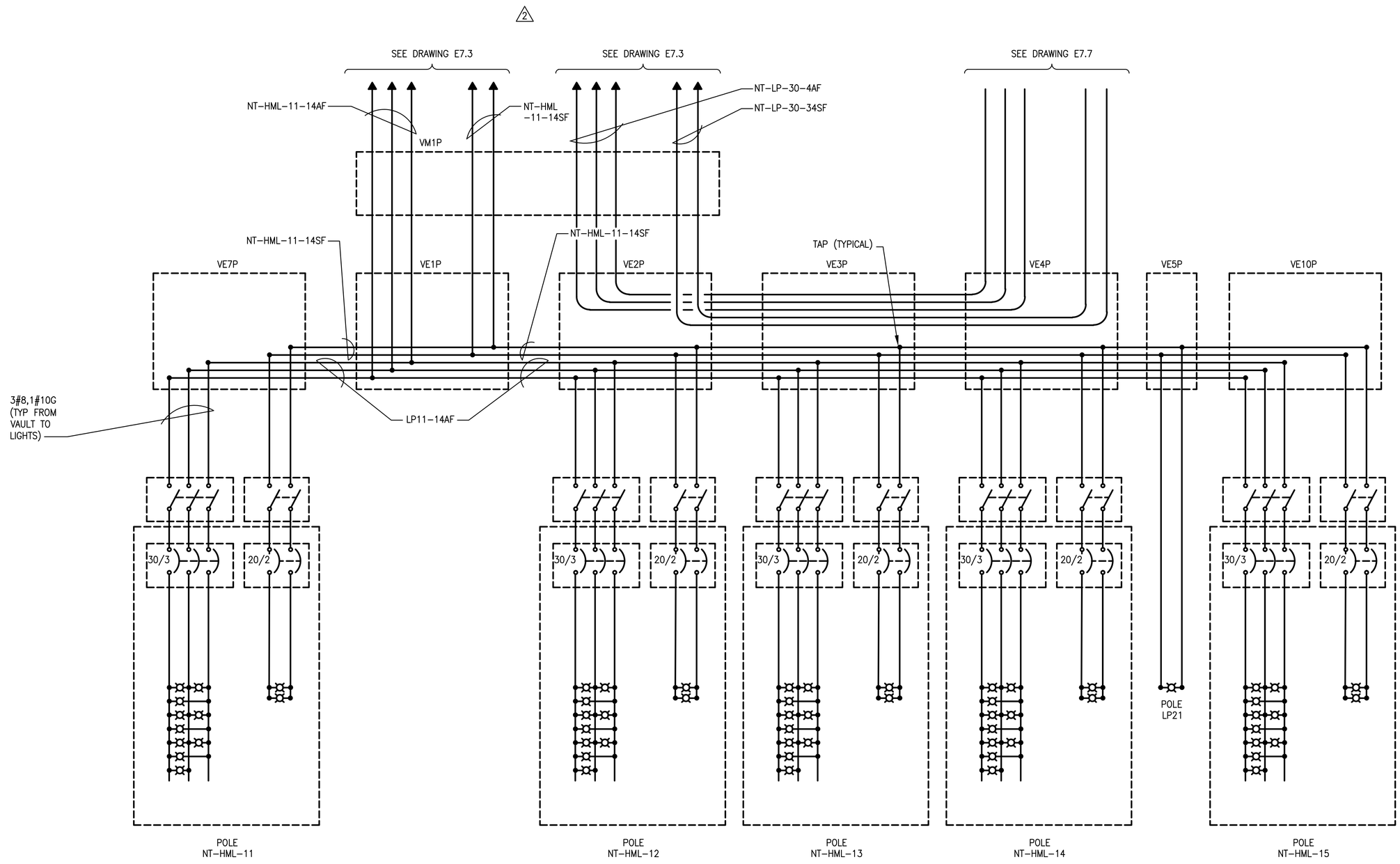

IF SHEET IS LESS THAN 22x34
REDUCE SCALE ACCORDINGLY

Port of EVERETT
P.O. BOX 538
EVERETT, WA 98206
(425) 259-3164

kpff
1601 5th Avenue, Suite 1300
Seattle, Washington 98101
(206) 382-0600 Fax (206) 382-0500
PROJECT NO. 1600120

ELCON ASSOCIATES, INC.
ENGINEERS-CONSULTANTS
(206) 243-5022 www.elcon.com
16300 CHRISTENSEN ROAD, STE 330
SEATTLE, WA 98188

NO.	DATE	BY	REVISION
3	07/05/2023	DKS	AS-BUILT
2	2/18/2022	DKS	MARITIME TENANT SITE PLAN REVISIONS
1	06/21/2021	DKS	ISSUED FOR BID
0	05/07/2021	DKS	FOR CITY REVIEW

RECORD CONDITIONS ILLUSTRATED IN THESE PLANS REFLECT INFORMATION PROVIDED BY THE CONTRACTOR. RECORD CONDITIONS WERE NOT VERIFIED BY ENGINEER.

PROJECT ENGINEER: D. SIATERLIS	SCALE: NONE
DESIGNED BY: D. SIATERLIS	DATE: 05/07/2021
DRAWN BY: C. SMITH	CHECKED BY: S. BARTKOSKE
APPROVED BY:	

PORT OF EVERETT

NORTON TERMINAL DEVELOPMENT & MTCA 3RD INTERIM ACTION EAST LIGHTING CONTROLS SCHEMATIC DIAGRAM

DWG. NO. **E7.5**

CIP NO. 1-8-900-05

PROJECT NO. MT-NT-2021-02.2

SHEET NO. 137 OF 150

AS-BUILTS

M:\2019\1900238 POE Maritime Industrial Expansion Engineering Services\2.18 Drawings\AS BUILTS\Incoming\2023-05-31\mle_elec\m8e75 7-05-23 10:14pm dyu

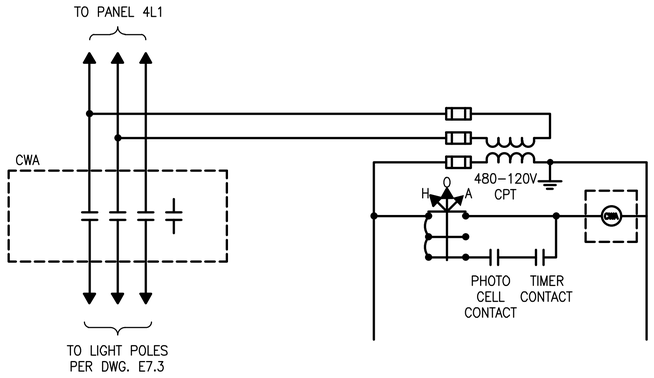

LIGHTING CONTROL SCHEMATIC DIAGRAM (AREA LTG)

FOR CONTACTORS CWA, CMA, CEA AND CNA

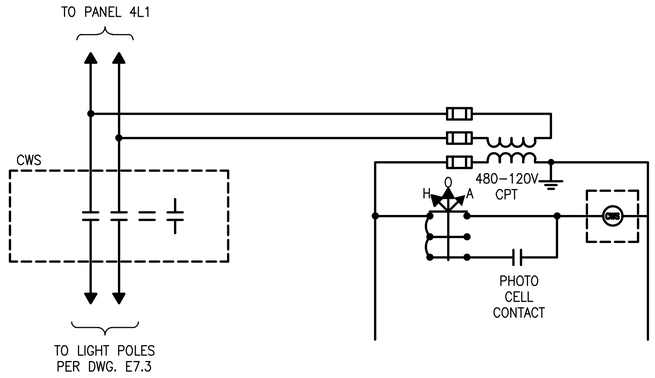

LIGHTING CONTROL SCHEMATIC DIAGRAM (SECURITY LTG)

FOR CONTACTORS CWS, CMS, CES AND CNS

△2

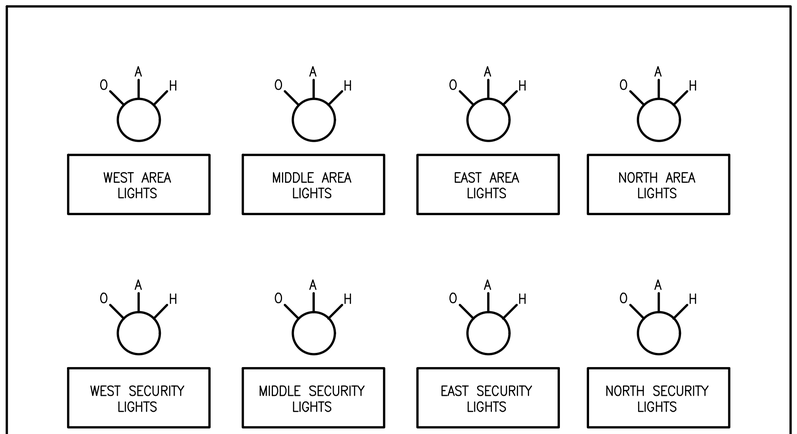

LIGHTING CONTROL PANEL (FRONT PANEL)

SCALE: NONE

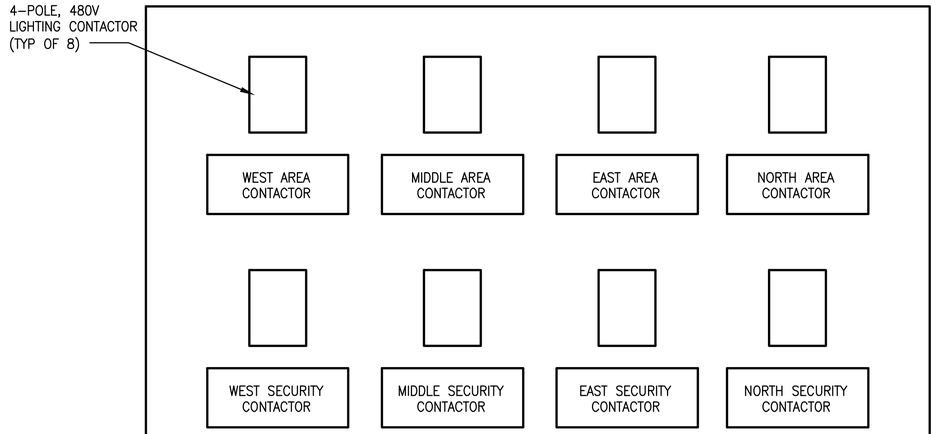

LIGHTING CONTROL PANEL (BACK PANEL)

SCALE: NONE

IF SHEET IS LESS THAN 22x34
REDUCE SCALE ACCORDINGLY

Port of EVERETT
P.O. BOX 538
EVERETT, WA 98206
(425) 259–3164

kpff
1601 5th Avenue, Suite 1300
Seattle, Washington 98101
(206) 382-0600 Fax (206) 382-0500
PROJECT NO. 1600120

ELCON ASSOCIATES, INC.
ENGINEERS–CONSULTANTS
(206) 243-5022 www.elcon.com
16300 CHRISTENSEN ROAD, STE 330
SEATTLE, WA 98188

NO.	DATE	BY	REVISION
△3	07/05/2023	DKS	AS–BUILT
△2	2/18/2022	DKS	MARITIME TENANT SITE PLAN REVISIONS
△1	06/21/2021	DKS	ISSUED FOR BID
△0	05/07/2021	DKS	FOR CITY REVIEW

RECORD CONDITIONS ILLUSTRATED IN THESE PLANS REFLECT INFORMATION PROVIDED BY THE CONTRACTOR. RECORD CONDITIONS WERE NOT VERIFIED BY ENGINEER.

PROJECT ENGINEER: D. SIATERLIS	SCALE: NONE
DESIGNED BY: D. SIATERLIS	DATE: 05/07/2021
DRAWN BY: C. SMITH	CHECKED BY: S. BARTKOSKE
APPROVED BY:	

PORT OF EVERETT

NORTON TERMINAL DEVELOPMENT & MTCA 3RD INTERIM ACTION LIGHTING CONTROLS SCHEMATIC DIAGRAM

DWG. NO. **E7.6**

CIP NO. 1–8–900–05

PROJECT NO. MT–NT–2021–02.2

SHEET NO. 138 OF 150

AS-BUILTS

M:\2019\1900238 POE Maritime Industrial Expansion Engineering Services\2.18 Drawings\AS BUILTS\Incoming\2023–05–31\mle_elec\m8e76 7–05–23 10:14pm dyu

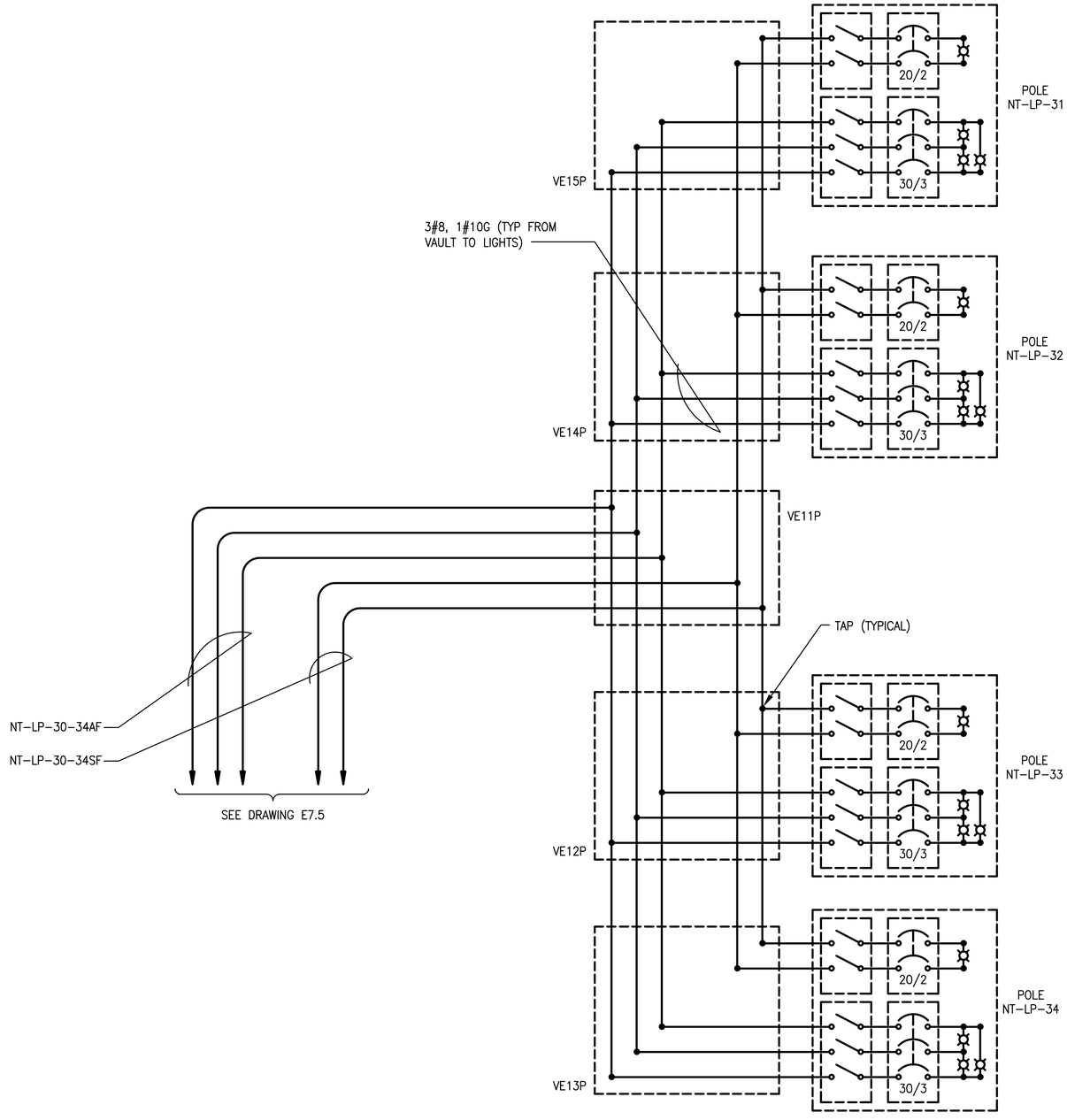

IF SHEET IS LESS THAN 22x34 REDUCE SCALE ACCORDINGLY ⚠1

Port of EVERETT
P.O. BOX 538
EVERETT, WA 98206
(425) 259-3164

kpff
1601 5th Avenue, Suite 1300
Seattle, Washington 98101
(206) 382-0600 Fax (206) 382-0500
PROJECT NO. 1600120

ELCON ASSOCIATES, INC.
ENGINEERS–CONSULTANTS
(206) 243-5022 www.elcon.com
16300 CHRISTENSEN ROAD, STE 330
SEATTLE, WA 98188

NO.	DATE	BY	REVISION
⚠2	07/05/2023	DKS	AS-BUILT
⚠1	12/18/2022	DKS	MARITIME TENANT SITE PLAN REVISIONS

RECORD CONDITIONS ILLUSTRATED IN THESE PLANS REFLECT INFORMATION PROVIDED BY THE CONTRACTOR. RECORD CONDITIONS WERE NOT VERIFIED BY ENGINEER.

PROJECT ENGINEER: D. SIATERLIS	SCALE: NONE
DESIGNED BY: D. SIATERLIS	DATE: 05/07/2021
DRAWN BY: C. SMITH	CHECKED BY: S. BARTKOSKE
APPROVED BY:	

PORT OF EVERETT

NORTON TERMINAL DEVELOPMENT & MTCA 3RD INTERIM ACTION NORTH LIGHTING CONTROLS SCHEMATIC DIAGRAM

DWG. NO. **E7.7**

CIP NO. 1-8-900-05

PROJECT NO. MT-NT-2021-02.2

SHEET NO. 137A OF 150

AS-BUILTS

M:\2019\1900238 POE Maritime Industrial Expansion Engineering Services\2.18 Drawings\AS BUILTS\Incoming\2023-05-31\mie_elec\m8e77 7-05-23 10:15pm dyu

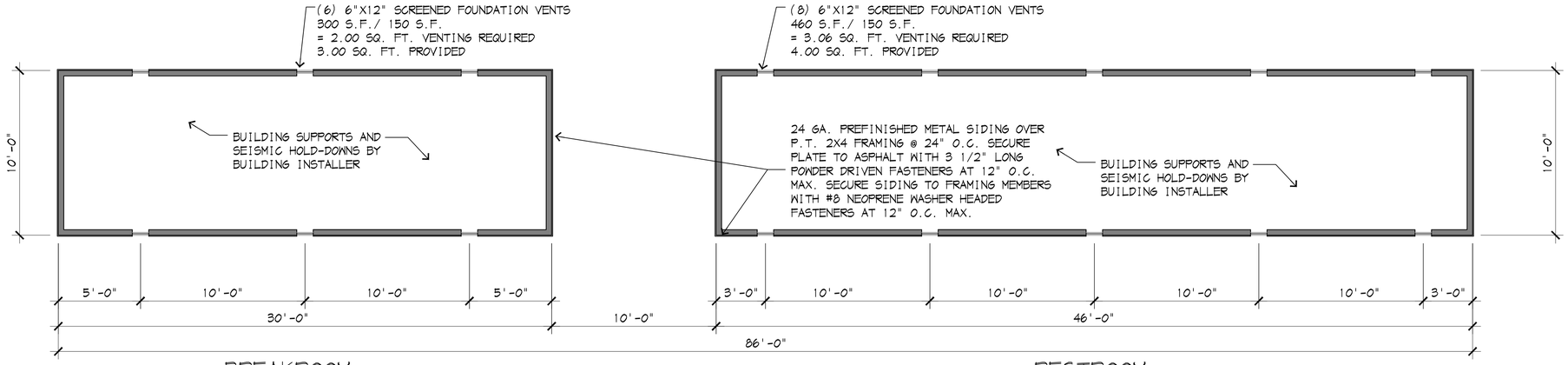

BREAKROOM BUILDING

RESTROOM BUILDING

SKIRTING PLAN

SCALE: 1/4" = 1'-0"

NORTH

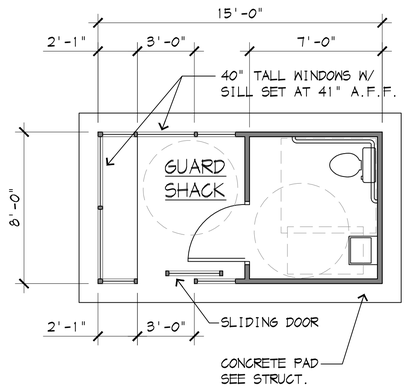

GUARD SHACK

SCALE: 1/4" = 1'-0"

NORTH

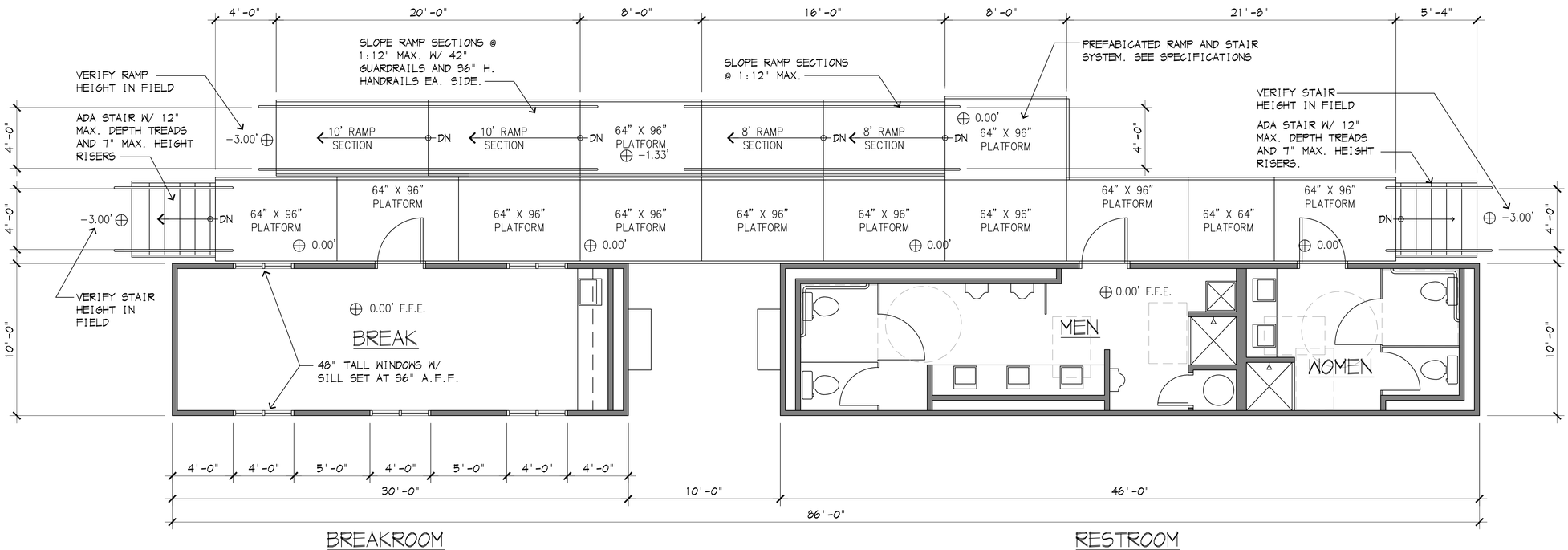

BREAKROOM BUILDING

RESTROOM BUILDING

MAIN FLOOR PLAN

SCALE: 1/4" = 1'-0"

NORTH

This drawing represents the desired configuration of the footprint/space requirements. The Contractor shall perform detailed design of these buildings and will be responsible for permit submittal of their building designs as deferred submittals to the City of Everett. See specifications for additional requirements.

VERT DATUM: NAVD 88
CONV TO MLLW = NAVD88+2.03
HORZ DATUM: NAD 83/91

IF SHEET IS LESS THAN 22x34 REDUCE SCALE ACCORDINGLY

Port of Everett
P.O. BOX 538
EVERETT, WA 98206
(425) 259-3164

kpff
1601 5th Avenue, Suite 1300
Seattle, Washington 98101
(206) 382-0600 Fax (206) 382-0500

2812 ARCHITECTURE

NO.	DATE	BY	REVISION	NO.	DATE	BY	REVISION
1 2	D7/05/2023 06/21/2021	XX	AS-BUILT ISSUED FOR BID.				

RECORD CONDITIONS ILLUSTRATED IN THESE PLANS REFLECT INFORMATION PROVIDED BY THE CONTRACTOR. RECORD CONDITIONS WERE NOT VERIFIED BY ENGINEER.

PROJECT ENGINEER: N. WATSON	SCALE: AS SHOWN
DESIGNED BY: 2812	DATE: 6/21/2021
DRAWN BY: A. CLARK	CHECKED BY: A. CLARK
APPROVED BY:	

PORT OF EVERETT

NORTON TERMINAL DEVELOPMENT & MTCA 3RD INTERIM ACTION

BREAKROOM, RESTROOM AND GUARD SHACK PLANS

DWG. NO. A1

CIP NO. 1-8-900-05

PROJECT NO. MT-ST-2021-02.2

SHEET NO. 139 OF 150

AS-BUILTS

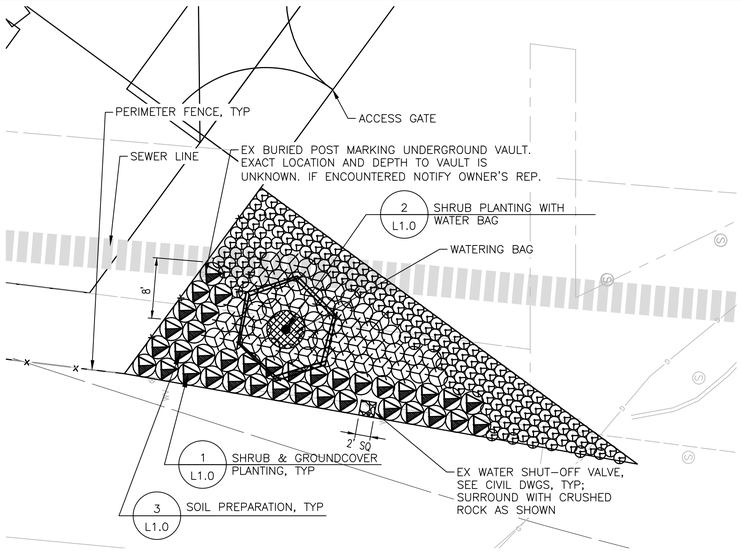

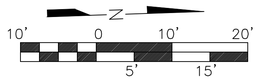

PLANTING PLAN

SCALE: 1"=10'

PLANT SCHEDULE

SYM	QTY	SCIENTIFIC/COMMON NAME	SIZE/REMARKS
		DROUGHT-TOLERANT TREE	
	1	Myrica californica / PACIFIC WAX MYRTLE	5 GAL; SYMMETRICAL, FULL , WELL BRANCHED & WELL ROOTED, NOT SHEARED
		DROUGHT-TOLERANT SHRUBS	
	50	Cistus x hybridus / WHITE ROCKROSE	2 GAL CONT; FULL, WELL BRANCHED & WELL ROOTED
	37	Thuja occidentalis 'Rheingold' / RHEINGOLD ARBORVITAE	
		DROUGHT-TOLERANT GROUNDCOVER	
	167	Potentilla fruticosa 'Goldfinger' / SHRUBBY CINQUEFOIL	2 GAL CONT; FULL, WELL BRANCHED & WELL ROOTED
	4 SF	⅝" CRUSHED ROCK	6" DEPTH ROCK ON TOP OF LANDSCAPE FABRIC WEED BARRIER TO EXTENTS SHOWN ON PLAN. DO NOT COVER SURFACE ACCESS TO WATER SHUT-OFF VALVE.

PLANTING NOTES

1. ANY DISCREPANCIES WITH THE DWGS AND/OR SPECS & SITE CONDITIONS MUST BE BROUGHT TO THE ATTENTION OF ENG PRIOR TO PROCEEDING WITH CONSTRUCTION.
2. THE CONTRACTOR IS RESPONSIBLE FOR LOCATING UTILITIES PRIOR TO BEGINNING CONSTRUCTION.
3. FIELD STAKE PLANTING LOCATIONS FOR ENG REVIEW AND APPROVAL PRIOR TO INSTALLATION.
4. HAND WATERING REQUIRED FOR ONE (1) YEAR PLANT ESTABLISHMENT

PLANTING ABBREVIATIONS

&	AND	MIN	MINIMUM
B&B	BALLED AND BURLAPPED	PREP	PREPARATION
CONT	CONTAINER	QTY	QUANTITY
DIA	DIAMETER	SCH	SCHEDULE
DWGS	DRAWINGS	SPEC	SPECIFICATION
ENG	ENGINEER	SF	SQUARE FOOT
EX	EXISTING	SQ	SQUARE
HT	HEIGHT	SYM	SYMBOL
MAX	MAXIMUM	TYP	TYPICAL

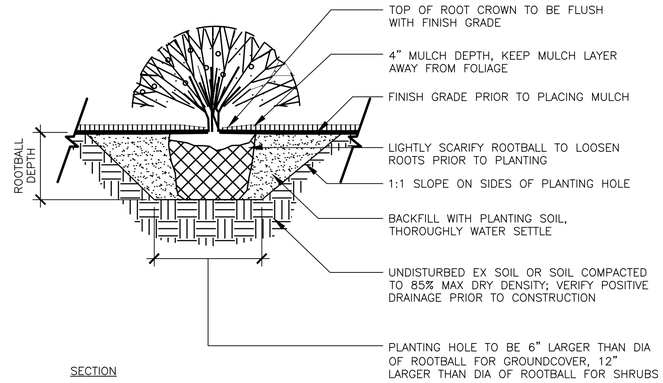

SECTION

1 SHRUB & GROUNDCOVER PLANTING
NTS

0

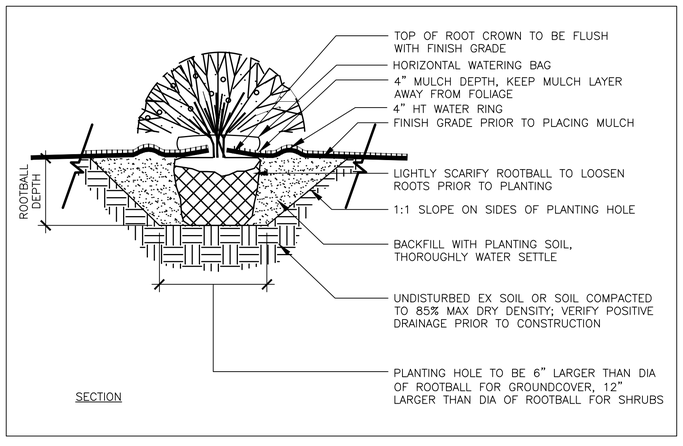

SECTION

2 SHRUB PLANTING WITH WATER BAG
NTS

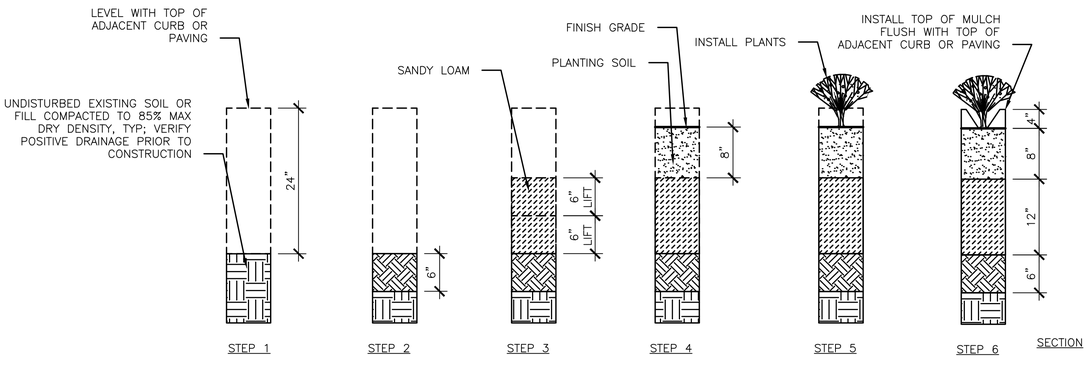

SECTION

STEP 1
EXCAVATE EXISTING SOIL. AVOID UNDERMINING ADJACENT CURB OR PAVING SUBBASE MATERIAL. PROVIDE PERCOLATION TEST PER SPECS, PRIOR TO PROCEEDING TO STEP 2.

STEP 2
THOROUGHLY SCARIFY SUBGRADE TO DEPTH SHOWN. ENG SHALL REVIEW & APPROVE WORK PRIOR TO PROCEEDING TO STEP 3.

STEP 3
INSTALL 12" DEPTH OF SANDY LOAM SOIL IN 6" LIFTS. WATER SETTLE/COMPACT EACH LIFT PRIOR TO INSTALLING THE NEXT LIFT. PROVIDE ADDITIONAL SANDY LOAM AFTER SETTLING TO MAINTAIN 12" DEPTH.

STEP 4
INSTALL PLANTING SOIL TO DEPTH SHOWN & WATER SETTLE PRIOR TO INSTALLING PLANTS. REVIEW FINISH GRADE WITH ENG PRIOR TO PLANTING.

STEP 5
INSTALL PLANTS.

STEP 6
INSTALL 4" MULCH DEPTH.

NOTES
ALL DIMENSIONS INDICATE COMPACTED DEPTHS.

3 SOIL PREPARATION
NTS

AS-BUILT

AS-BUILT CONDITIONS ILLUSTRATED IN THESE PLANS REFLECT INFORMATION PROVIDED BY THE CONTRACTOR. AS-BUILT CONDITIONS WERE NOT VERIFIED BY THE ENGINEER.

CALL 48 HOURS BEFORE YOU DIG DIAL 811

VERT DATUM: NAVD 88
CONV TO MLLW = NAVD88+2.03
HORZ DATUM: NAD 83/91

IF SHEET IS LESS THAN 22x34 REDUCE SCALE ACCORDINGLY

Port of EVERETT
P.O. BOX 538
EVERETT, WA 98206
(425) 259-3164

kpff
1601 5th Avenue, Suite 1300
Seattle, Washington 98101
(206) 382-0600 Fax (206) 382-0500
PROJECT NO. 1600120

HBB
LANDSCAPE ARCHITECTURE
2101 4TH AVENUE, SUITE 1800 206.682.3051 phone
SEATTLE, WA 98121 206.682.3345 fax

NO.	DATE	BY	REVISION
3	06/14/2023	NW	AS-BUILT
2	12/13/2022	NW	INTERNAL CONFORMED SET
1	08/12/2022	NW	SUBSTATION SITE DEVELOPMENT

STATE OF WASHINGTON · MERIT OVIR · NO. 1986 EXP. 03/2023 · LICENSED LANDSCAPE ARCHITECT

PROJECT ENGINEER:	SCALE: AS NOTED
DESIGNED BY:	DATE: 06/14/2023
DRAWN BY: E. STONE	CHECKED BY: D. KOONTS
APPROVED BY:	

PORT OF EVERETT

NORTON TERMINAL DEVELOPMENT & MTCA 3RD INTERIM ACTION
PLANTING PLAN, LEGEND, NOTES, ABBREVIATIONS & DETAILS

DWG. NO. **L1.0**
CIP NO. 1-8-900-05
PROJECT NO. MT-NT-2021-02.2
SHEET NO. 138 OF 150

AS-BUILTS

APPENDIX B

Preload Ground Improvement Summary Memorandum

Technical Memorandum

TO: Nathan Watson, PE, KPFF Consulting Engineers

FROM: Sean M. Gertz, PE and Steven R. Wright, PE

DATE: February 3, 2023

RE: **Preload Ground Improvement Summary**
Marine Industrial Expansion
Everett, Washington
Project No. 0121049.070.071

Introduction

This memorandum summarizes the results of a preload ground improvement program completed at the Port of Everett's (Port, project owner) Marine Industrial Expansion project, located at 2600 Federal Avenue in Everett, Washington (site; Figure 1).

The purpose of this memorandum is to document the intent of preload activities performed at the site, to summarize preload monitoring data, and to present information to be used in evaluating load restrictions within the preload area. This memorandum has been prepared with information provided by KPFF Consulting Engineers (KPFF, project civil engineer) and the Port and is based on work completed by Landau Associates, Inc. (Landau) in support of previous phases of the project.

Project Background

The site consists of the former Kimberly-Clark (K-C) mill property, situated on the Everett waterfront. The Port purchased the majority of the property in 2019 and has redeveloped approximately 34 acres into a marine cargo terminal. Existing docks and waterfront features were preserved for future maritime expansion. The upland portion of the site can be accessed via Federal Avenue from the south and Norton Avenue from the north.

No marine component was included in the initial redevelopment phase; however, the Port wishes to develop a flexible design plan that can accommodate future construction of marine infrastructure or reuse of the existing barge dock. Improvements associated with the initial redevelopment phase included the addition of flexible pavements, light poles, and utility corridors.

The site was the subject of a 2012 Agreed Order between the Washington State Department of Ecology and K-C. In 2013, K-C completed the first interim action cleanup at the site, during which approximately 38,000 tons of contaminated soil was removed. In 2020, K-C performed a second interim action cleanup and Crushed Material Removal project. Interim action cleanup activities included removal or capping of pipes protruding from the shoreline; removal of 250,000 tons of crushed material from the mill demolition; removal of approximately 18,000 tons of contaminated soil; and import of clean sand backfill material, which was graded and used to cover the site (Ecology; accessed March 25, 2021).

Landau previously provided geotechnical recommendations for the proposed development in geotechnical engineering reports dated December 4, 2020 and May 7, 2021; and in memoranda dated July 22, 2020 and April 15, 2021. During Landau's support of the project, significant areas of buried wood waste were identified, primarily in the northern half of the site. These areas of wood waste were anticipated to contribute to potentially large settlements under new loads. To mitigate post-construction settlement of the wood waste deposits, Landau recommended a preload ground improvement program be implemented in areas with the highest risk of settlement due to the woody material.

It is understood that the preload area may be used to store shipping containers or heavy military and agricultural equipment. For the sake of its analyses, Landau assumed that the preload area would be used to store fully-loaded shipping containers. Based on discussions with KPFF, Landau understands that an 8 ft wide by 20 ft long shipping container has a gross weight of 52,800 lbs and that an 8 ft wide by 40 ft long shipping container has a gross weight of 67,000 lbs. These gross weights correspond to a uniform ground pressure of 330 pounds per square foot (psf) and 209 psf, respectively.

From August 2021 through November 2021, crushed surfacing base course was imported to the Norton Terminal site and placed to create a preload with a height of approximately 6 feet (ft) above the existing ground surface. Landau understands the first 12 inches of preload material was placed in lifts and compacted. The remainder of the preload fill was end dumped and graded to create a relatively uniform load across the preload area. Following placement of the preload material, Landau visited the site and used a Troxler nuclear density gauge to estimate the average unit weight of the preload fill material. Landau tested the top surface of the preload at several locations and concluded that the average unit weight of the preload fill was about 115 pounds per cubic foot (pcf). The total ground pressure exerted by the preload fill is anticipated to be approximately 690 psf. Following completion of the project, the final ground surface within the preload area was brought up by about 2 ft.

Within the preload fill, a total of 25 settlement monitoring points were constructed to measure settlement of the underlying ground surface over time. Elevations of the tops of the settlement monitoring points were routinely recorded by David Evans and Associates, Inc. (DEA), and Landau plotted the elevations versus time to evaluate the settlement of the ground surface beneath the preload fill. Monitoring of the preload-induced settlement was concluded on January 28, 2022. Some existing site features and the preload ground improvement configuration are shown on Figure 2.

Wood Waste Settlement

While providing geotechnical support to the project, Landau evaluated subsurface conditions initially by reviewing previously conducted geotechnical explorations (Chase T. Main, Inc. 1952; Dames and Moore 1990, 1993, 1995; Aspect Consulting 2013; Shannon & Wilson 2014). Upon learning of the

presence of extensive buried wood waste deposits at the site, Landau's scope was expanded to include ten additional exploratory borings and a series of electrical resistivity tomography (ERT) surveys. The purpose of the additional exploration efforts was to attempt to better define the extent and characteristics of the buried wood waste deposits and evaluate the potential impacts on the proposed improvements.

Based on a review of the available subsurface information, Landau attempted to quantify the magnitude of settlement that may occur as a result of the proposed fills and new loads at the site. Landau predicted up to 14 inches of settlement may occur under the proposed loading. Several uncertainties were noted that have the potential to influence the magnitude of possible settlement. The accumulation of these uncertainties has the potential to result in an overestimation of settlement magnitude.

- **Lack of published compressibility data for soil-wood mixtures** – While buried organic soils are known to contribute to large amounts of short- and long-term settlements, little scientific data was available quantifying the magnitude of settlement to be anticipated due to consolidation of mineral soil mixed with woody material.

- **Concentration of wood waste within deposit** – Higher concentrations of woody material within the soil matrix is generally considered to contribute to larger anticipated settlements. Due to the method of deposition, the concentration of wood within the soil matrix was anticipated to be highly variable. The percentage of woody material encountered was not well documented in the exploratory borings that were reviewed during design of the proposed improvements. Some borings simply identified the material as "wood" or "wood chips," whereas other borings identified materials as "fine silty sand, shells, wood, etc." Classification of mineral soil is generally completed by comparison of the weight of the constituents that make up the soil matrix. This methodology is not easily applied to soil-wood mixtures because the weight by volume of organic particles is significantly lower than that of mineral soil particles. For example, a soil sample may visually appear to be made up of equal parts organics and mineral soil; however, when compared by weight, the actual organic concentration of the soil matrix could range from about 10 to 40 percent. The lower end of this range would generally be associated with sawdust-soil mixtures, whereas the higher end of this range would be associated with hog fuel-soil mixtures. To adequately determine the organic composition of mixed deposits, it would have been necessary to perform "loss by ignition" organic matter tests on samples obtained throughout the site.

- **Composition of wood waste within deposit** – The physical structure of the organic material is likely to significantly affect the engineering properties of the soil matrix. Fine wood particles such as sawdust are likely to behave similar to peat soils, exhibiting high rates of initial compression and secondary consolidation. Coarser wood particles such as hog fuel are likely

to experience moderately high rates of initial compression and lower levels of secondary consolidation.

- **Age of deposit** – Much of the historic fill at the site was placed in the 1800's, and therefore it has been experiencing organic decomposition and consolidation for over 100 years. It is uncertain whether a greater level of decomposition would contribute to higher or lower amounts of settlement. As the woody material becomes more decomposed, it begins to resemble peat soils more closely, and may experience higher rates of settlement associated with those soils. However, during this time, significant settlements have likely occurred, and how much settlement potential remains is uncertain.

- **Stress history of deposit** – As noted previously, much of the historic fill was placed over 100 years ago. During the time since fill placement, the soil has likely experienced many different loading scenarios as a result of the development history of the site. Because of this, it is uncertain what portion of the proposed loading is within the virgin compression curve (i.e., the portion of the loading curve that the soil had previously not experienced).

- **Poor sample recovery** – Many of the exploratory borings reviewed by Landau noted that it was not possible to recover soil samples from the borings, particularly in and around deposits of woody material. This introduced uncertainty regarding the actual extent and composition of the woody deposits.

- **Reliability of historic boring information** – Landau reviewed environmental and geotechnical explorations previously completed at the site, dating back to 1952. Over time, exploration methods and sampling procedures have evolved and oftentimes, the drilling or sampling methods were not noted on the boring logs. Geotechnical analysis relies heavily upon the penetration resistance of the sampler used during explorations, referred to as "blow counts." Modern geotechnical explorations typically use a standardized sampler that is driven using a consistent amount of energy with each blow. The number of blows required to drive the sampler a distance of 12 inches provides an indication of soil relative density or consistency. When other sampling procedures are used, it becomes difficult to correlate the blow counts with the standardized methods. This is nearly impossible to do if the sampling method was not noted on the boring logs. Additionally, several borings that were reviewed were terminated within woody debris or in material that resulted in poor sample recovery, and as a result, the full extent of the woody debris could not be determined with certainty.

  Furthermore, methods for classification of soil deposits have changed over the time period during which the previous borings were completed. Even with standardized soil classification systems that are in use today, the ability to accurately categorize soil types without

geotechnical laboratory testing is a skill that requires practice. An inexperienced field engineer or scientist could easily classify a soil deposit incorrectly.

Due to the uncertainty regarding engineering properties of the highly variable site fill, Landau recommended that areas of the site with the most significant presence of woody debris be preloaded to mitigate the potential post-construction settlement.

Preload Performance

Between commencement of preload placement in August 2021 and January 10, 2022, up to 1.6 inches of settlement had been recorded at the locations of the 25 preload monitoring points. Following review of this data, Landau concluded that at a majority of the monitoring point locations, the time rates of settlement due to the preload appeared to have stabilized and settlement induced by the preload was essentially complete. Because settlement appeared to be continuing at the locations of monitoring points 1 and 4, Landau recommended measurements continued to be collected at the locations of monitoring points 1 through 5. Following review of data collected through January 28, 2022, Landau concluded that settlement due to the preload was essentially complete at all monitoring point locations.

Plots of recorded settlement versus time for each settlement monitoring point are presented in Figures 3 through 27. It should be noted that significant variability was observed in the data over time. The source of this variability is unclear; however, the presence of the variability does not prevent Landau from concluding that the preload has performed its intended function.

Forecasting for Additional Loading

A load restriction zone was included in the original project plans for the portion of the site subjected to preloading. This restriction would only allow storage of shipping containers stored on trailer chassis or a single row of containers placed on the ground. Based on the limited preload settlement observed, Landau understands the Port is considering removal of the load restriction from this area. Upon review of the measured preload settlement, Landau estimates future settlements up to the magnitudes detailed in Table 1 for the additional loading conditions noted. It should be noted that these forecasted settlements are primary settlements and do not account for the effects of wood waste decomposition that could occur over many years.

Table 1. Anticipated Future Primary Settlement

Loading Condition	Anticipated Future Primary Settlement (inches)*
Loaded Shipping Containers, Stacked 2 High (660 psf)	<1
Loaded Shipping Containers, Stacked 4 High (1,320 psf)	<3

* Settlements do not include the up to 1.6 inches of settlement that was already observed beneath the preload.
ft = feet
psf = pounds per square foot

The nature of settlement described above may result in an uneven pavement surface, differential settlement between the pavement and adjacent structures, and premature pavement distress. Given the relatively low magnitude of settlement observed as a result of the preload, these signs of distress are likely to be fairly minimal over the short term. If the terminal loading condition exceeds fully-loaded shipping container stacked two high, settlement may exceed the observed settlement during the preload process. Because of these relatively low anticipated settlement magnitudes shown in Table 1, Landau recommends that the Port proceed with loading the preload area as desired and establish a pavement performance monitoring plan for this area. The pavement performance monitoring plan should occur on a yearly or twice-yearly basis and should document evidence of pavement distress through photographs, diagrams, and measurements as necessary to track worsening conditions. If evidence of settlement is observed, the concept of a load restriction zone should be re-evaluated.

Use of This Technical Memorandum

Landau Associates prepared this technical memorandum for the exclusive use of KPFF Consulting Engineers, the Port of Everett, and their designated representatives for specific application to the Port of Everett Marine Industrial Expansion project in Everett, Washington. No other party is entitled to rely on the information, conclusions, and recommendations included in this document without the express written consent of Landau Associates. Reuse of the information, conclusions, and recommendations provided herein for extensions of the project or for any other project, without review and authorization by Landau Associates, shall be at the user's sole risk. Landau Associates warrants that, within the limitations of scope, schedule, and budget, its services have been provided in a manner consistent with that level of skill and care ordinarily exercised by members of the profession currently practicing in the same locality, under similar conditions as this project. Landau Associates makes no other warranty, either express or implied.

Closing

We appreciate the opportunity to assist you with this project. If you have questions or comments, please contact Sean Gertz at (425) 778-0907 or at sgertz@landauinc.com.

LANDAU ASSOCIATES, INC.

Sean M. Gertz, PE
Senior Engineer



Steven R. Wright, PE
Principal

SMG/SZW
[P:\121\049\R\GEOTECH\PRELOAD SUMMARY MEMORANDUM\FINAL\MARINE INDUSTRIAL EXPANSION PRELOAD GROUND IMPROVEMENT SUMMARY MEMORANDUM_2.3.23.DOCX]

Attachments:

References

Aspect Consulting. 2020. Potential Water Ponding in Graded Depression, Former Kimberly-Clark Mill Property, Everett, Washington. November 5.

Aspect Consulting. 2013. Data Report for Phase 2 Environmental Site Assessment, Kimberly-Clark Worldwide Site Upland Area, Everett, Washington. March.

ASTM. 2017. Annual Book of ASTM Standards. In: *Soil and Rock(I).* West Conshohocken, PA: ASTM International.

Chase T. Main, Inc. 1952. Test Boring Data: Paper Mill Addition, Preliminary Site Survey. July 17.

Dames & Moore. 1995. Geotechnical Investigation, Converting Plan Addition, Scott Paper Company Plant, Everett, Washington. January 19.

Dames & Moore. 1993. Report of Geotechnical Investigation, Power Boiler No. 14 Expansion Project, Everett, Washington. June 20.

Dames & Moore. 1990. Report of Geotechnical Investigation, Proposed Hydropulper Unit, Storage Tanks and Substation, Everett, Washington. January 13.

Ecology. Toxics Cleanup, Sites, Kimberly-Clark Worldwide. Washington State Department of Ecology. Accessed March 25, 2021. Available online at: https://apps.ecology.wa.gov/gsp/Sitepage.aspx?csid=2569.

LAI. 2020. Draft 60% Design Report, Port of Everett Marine Industrial Expansion, Engineering Services, Everett, Washington. Landau Associates, Inc. December 4.

Moffatt & Nichol. 2014. Saltchuck Everett Property Due Diligence Process, Foss Maritime Shipyard Master Redevelopment Plan, Third Draft. January 23.

Shannon & Wilson, Inc. 2014. Geotechnical Evaluation of Kimberly-Clark Site, Integrated Planning Grant Support Services, Everett, Washington. March 3.

Smith, M. 1976. *Preliminary Surficial Geologic Map of the Mukilteo and Everett Quadrangles, Snohomish County, Washington.* Washington State Department of Natural Resources.

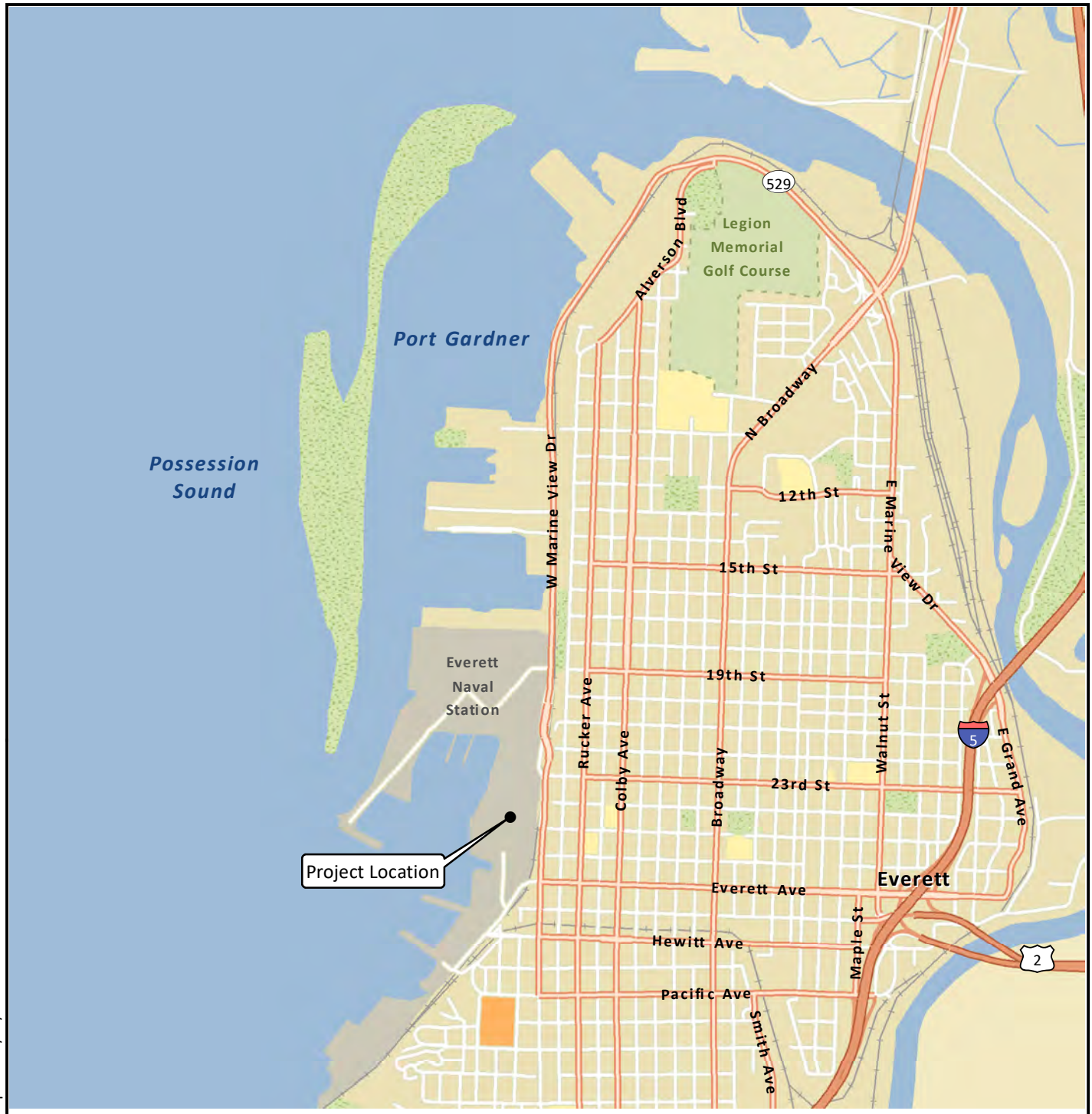







Data Source: Esri 2012

G:\Projects\121\049\070\071\F01 VicinityMap.mxd 1/20/2022

LANDAU ASSOCIATES

Norton Terminal – Preload and MTCA 3rd Interim Action Preload Ground Improvement Removal	**Vicinity Map**	Figure 1

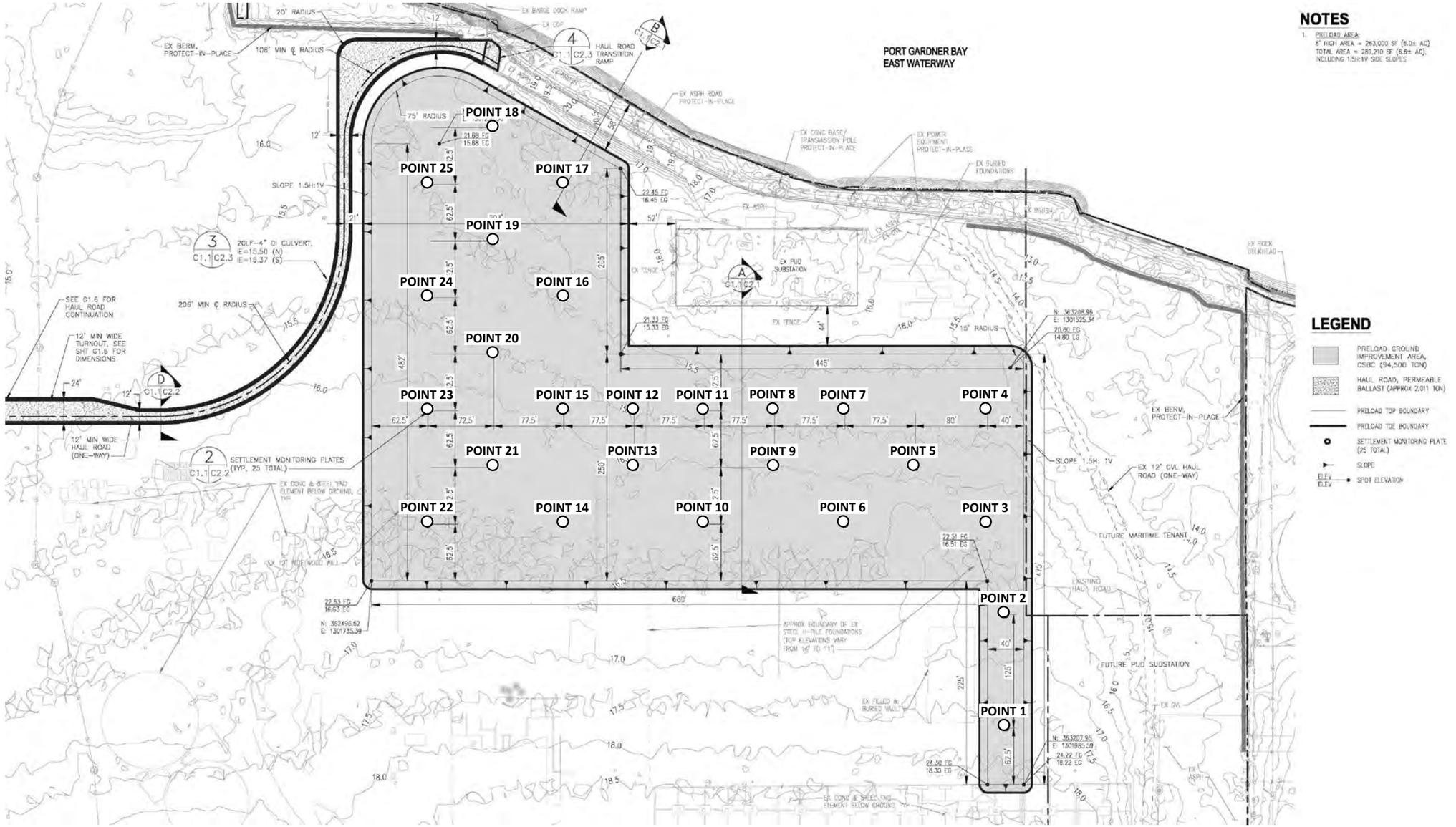

Legend

POINT 1 ○ Settlement Monitoring Point

N

0 120 240

Scale in Feet

Source: KPFF Bid Set 2021

Preload Ground Improvement Summary Marine Industrial Expansion Everett, Washington	**Site Plan**	Figure 2

Landau Associates | G:\Projects\121\049\070\071\F02 SitePlan.dwg | 4/4/2022 5:21 PM | ezick

LANDAU ASSOCIATES

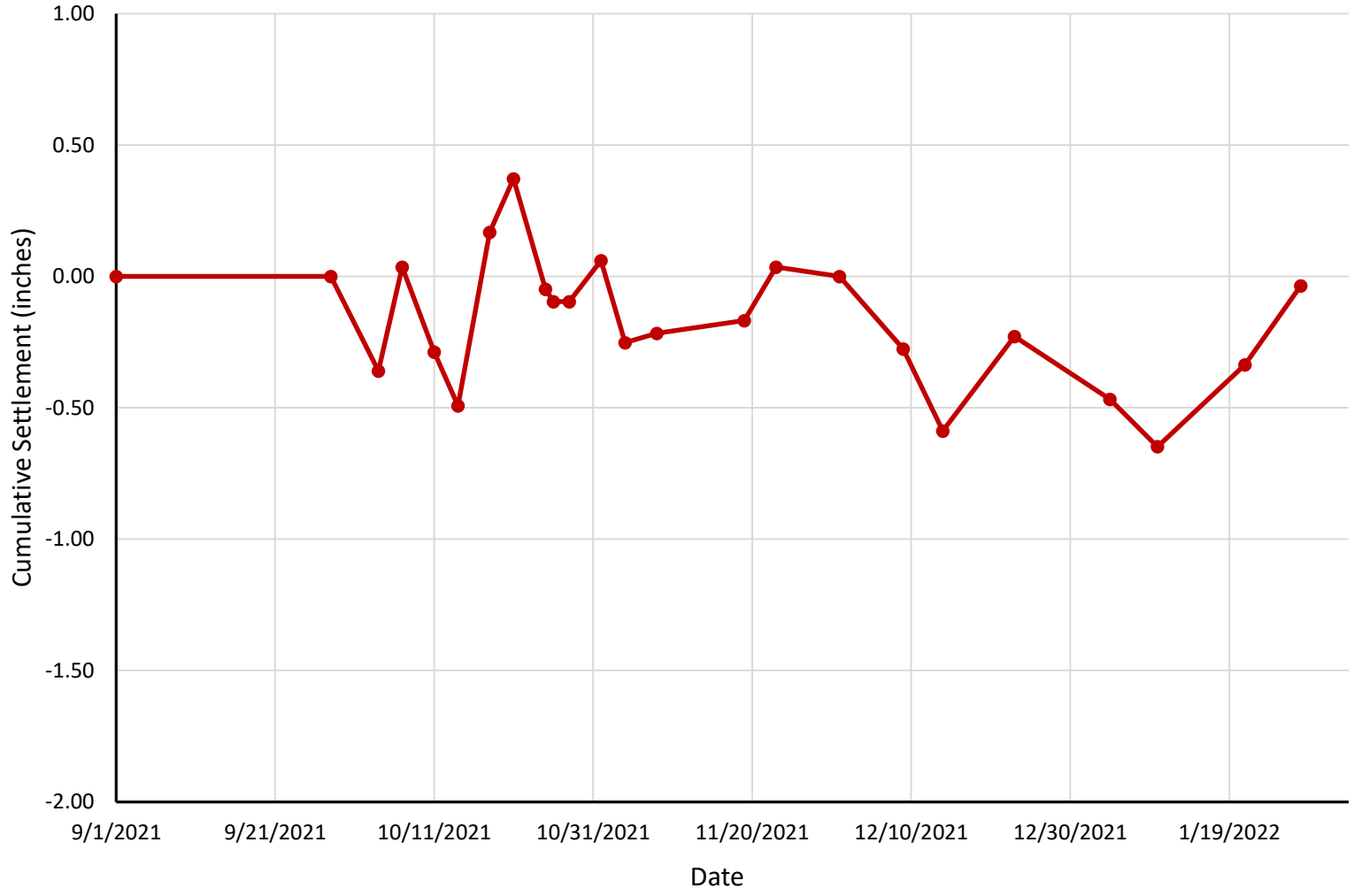

LANDAU ASSOCIATES

Port of Everett Maritime Industrial Expansion Project Everett, Washington	**Preload Settlement Point No. 1 Data Summary**	Figure 3

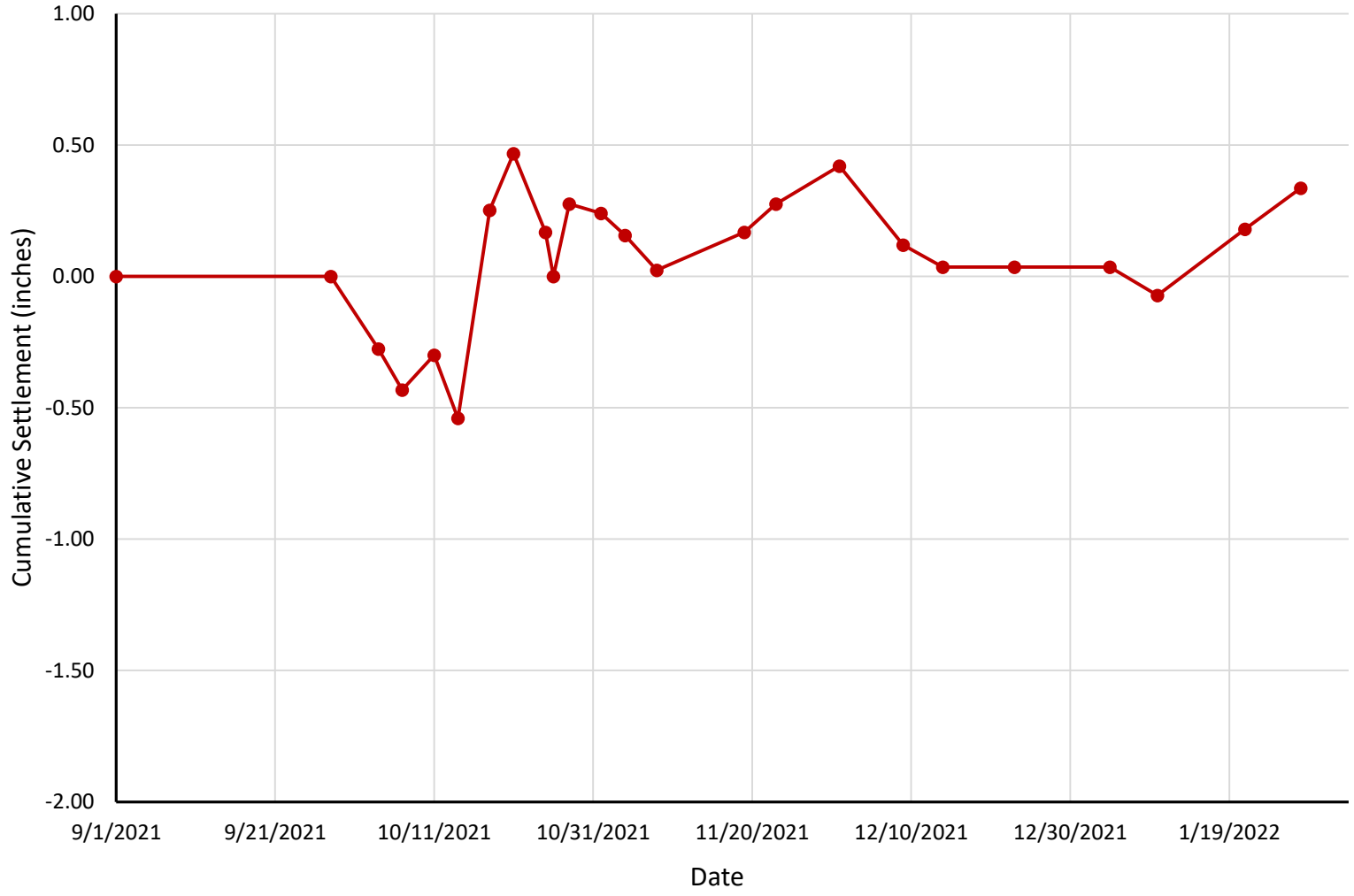

LANDAU ASSOCIATES

Port of Everett Maritime Industrial Expansion Project Everett, Washington	**Preload Settlement Point No. 2 Data Summary**	Figure 4

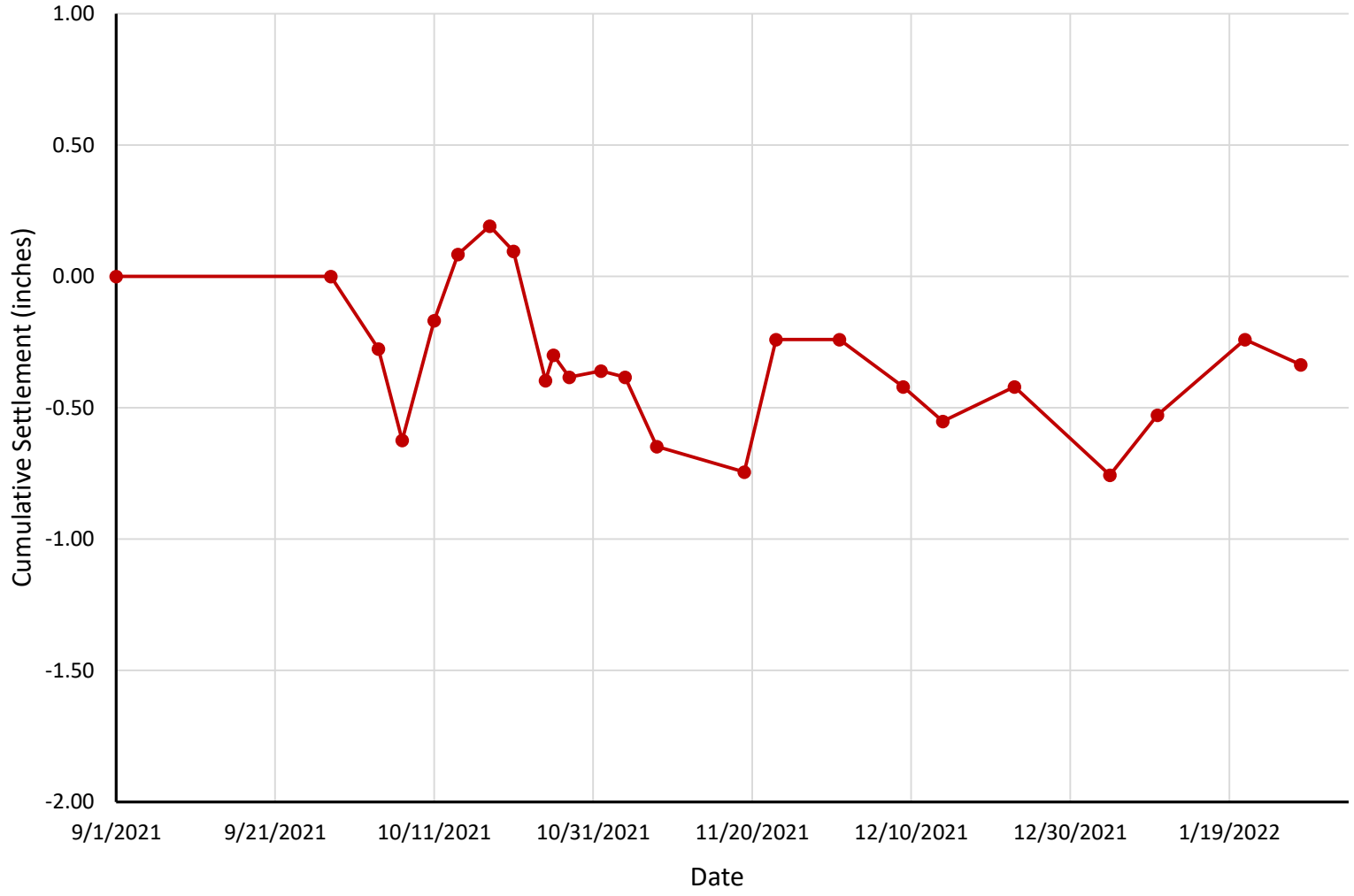

LANDAU ASSOCIATES

Port of Everett Maritime Industrial Expansion Project Everett, Washington	**Preload Settlement Point No. 3 Data Summary**	Figure 5

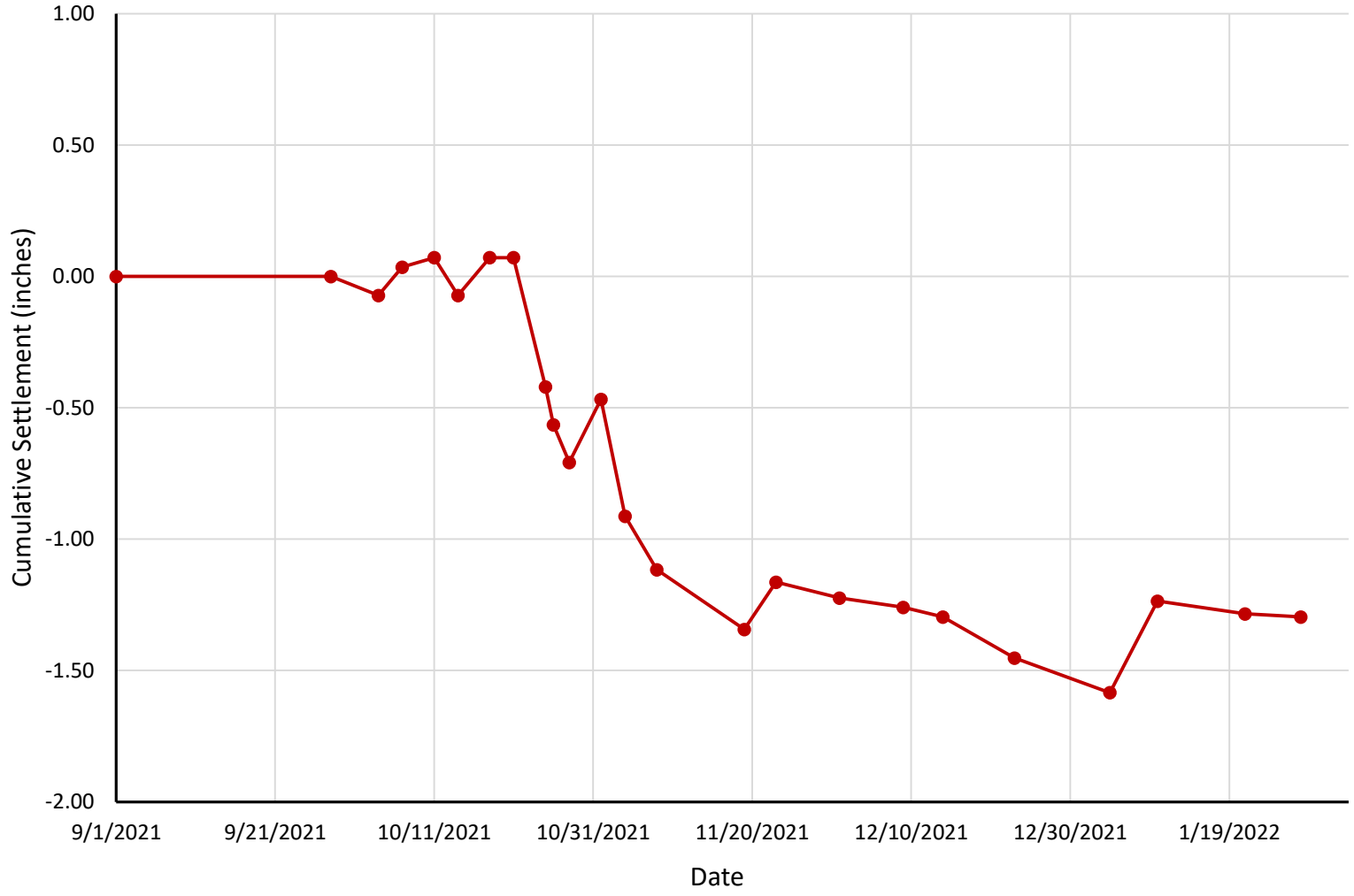

LANDAU ASSOCIATES

Port of Everett Maritime Industrial Expansion Project Everett, Washington	**Preload Settlement Point No. 4 Data Summary**	Figure 6

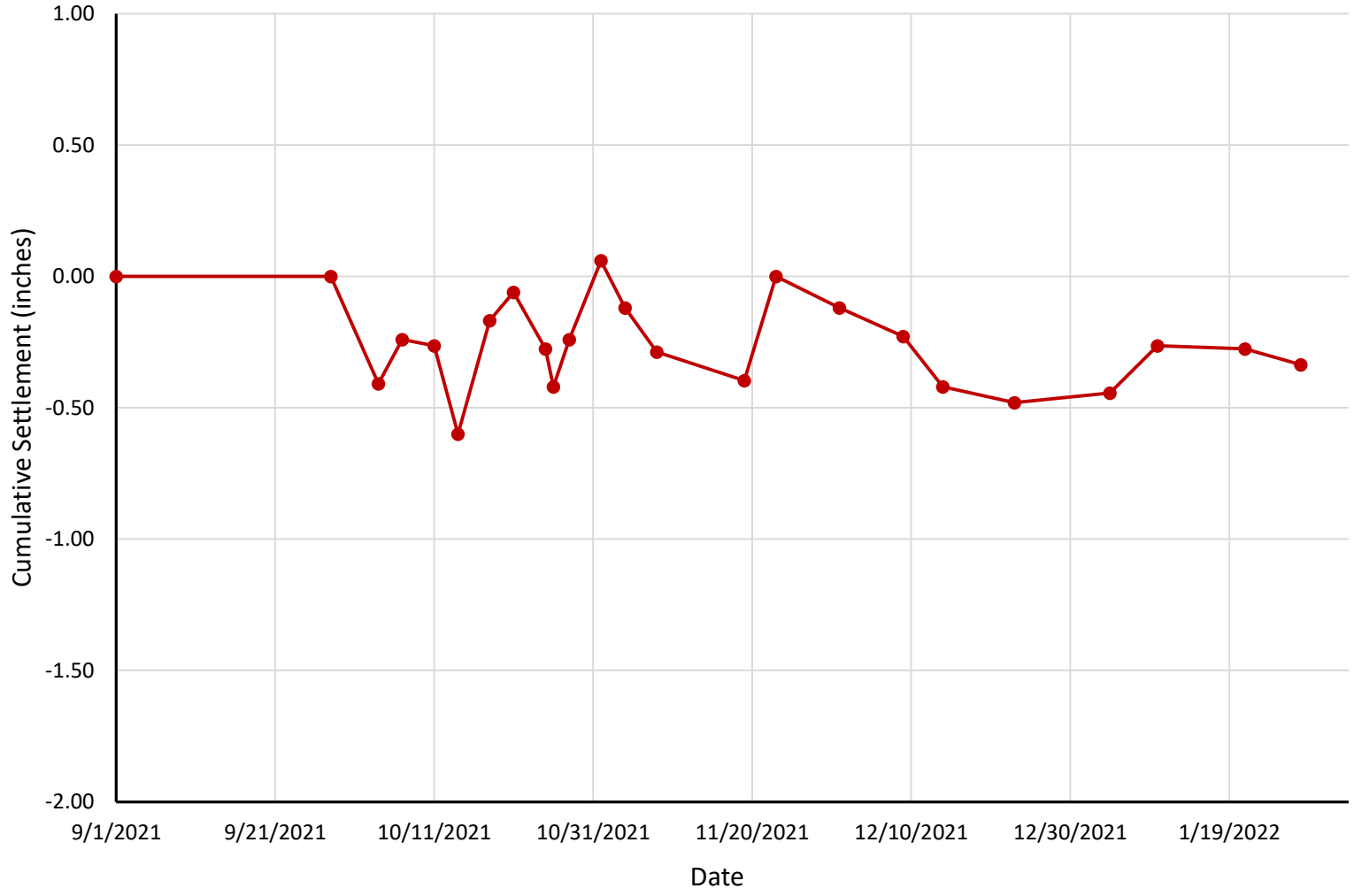

LANDAU ASSOCIATES

Port of Everett Maritime Industrial Expansion Project Everett, Washington	**Preload Settlement Point No. 5 Data Summary**	Figure 7

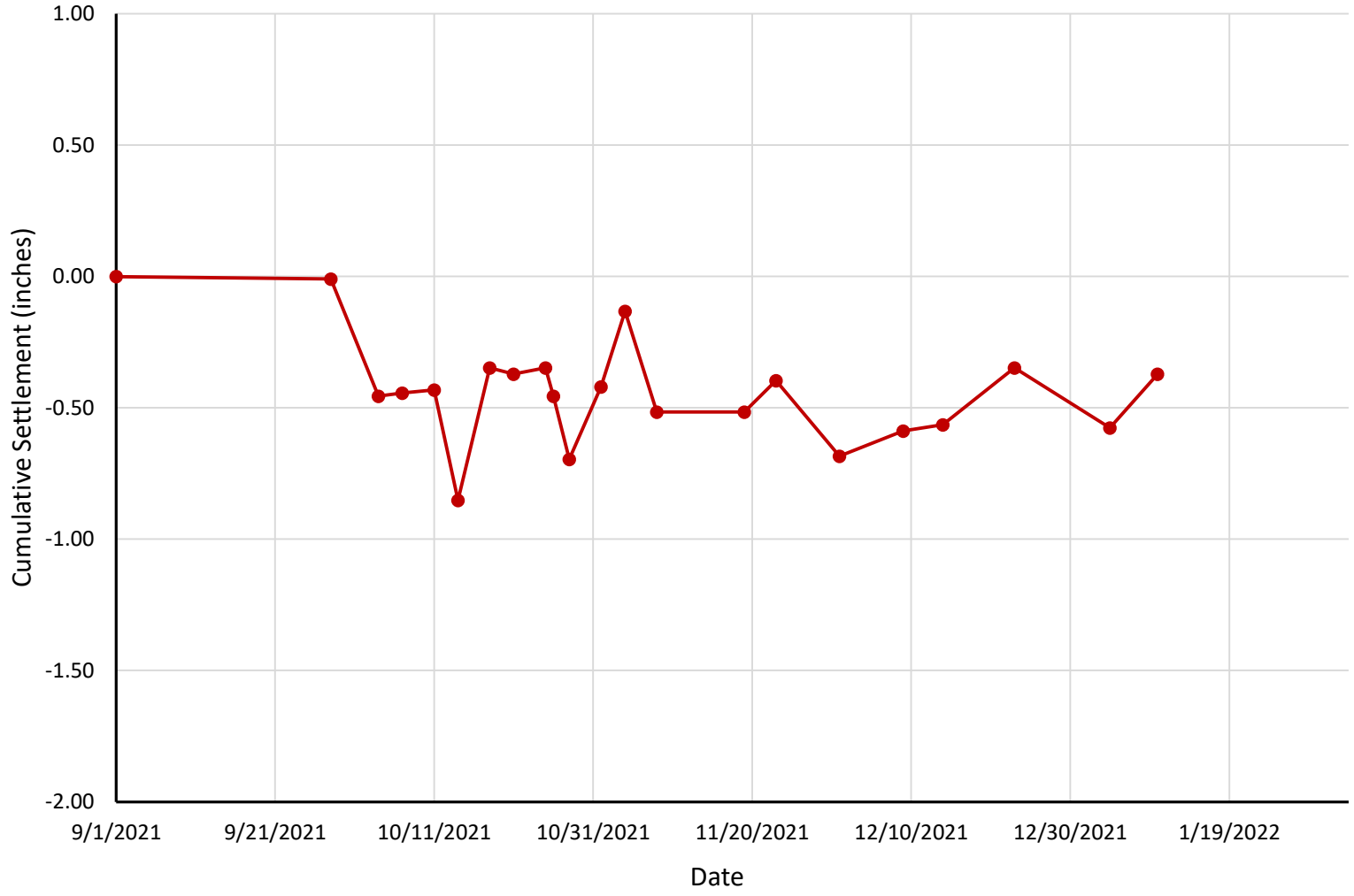

LANDAU ASSOCIATES

Port of Everett Maritime Industrial Expansion Project Everett, Washington	**Preload Settlement Point No. 6 Data Summary**	Figure 8

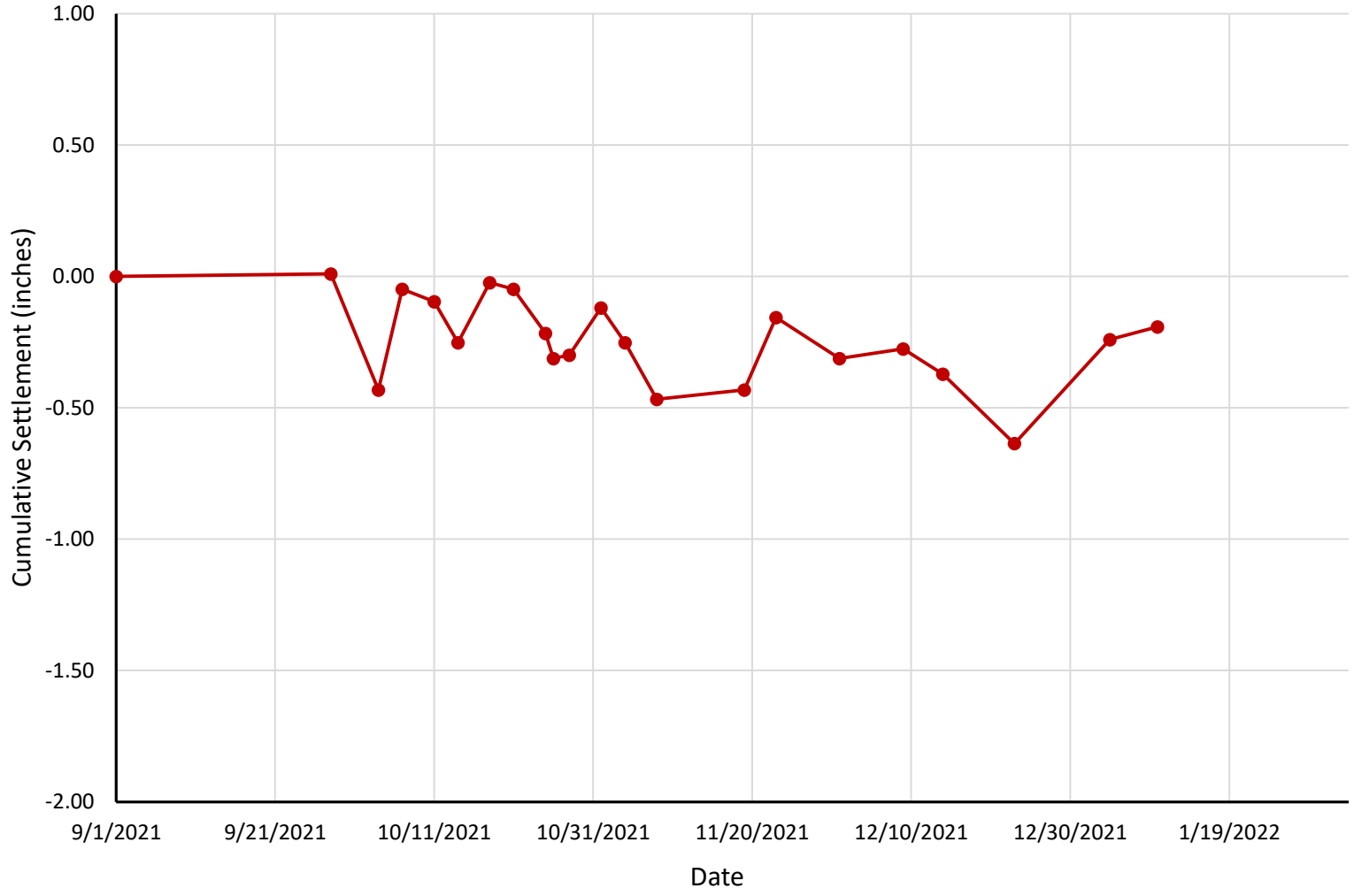

LANDAU ASSOCIATES

Port of Everett Maritime Industrial Expansion Project Everett, Washington	**Preload Settlement Point No. 7 Data Summary**	Figure 9

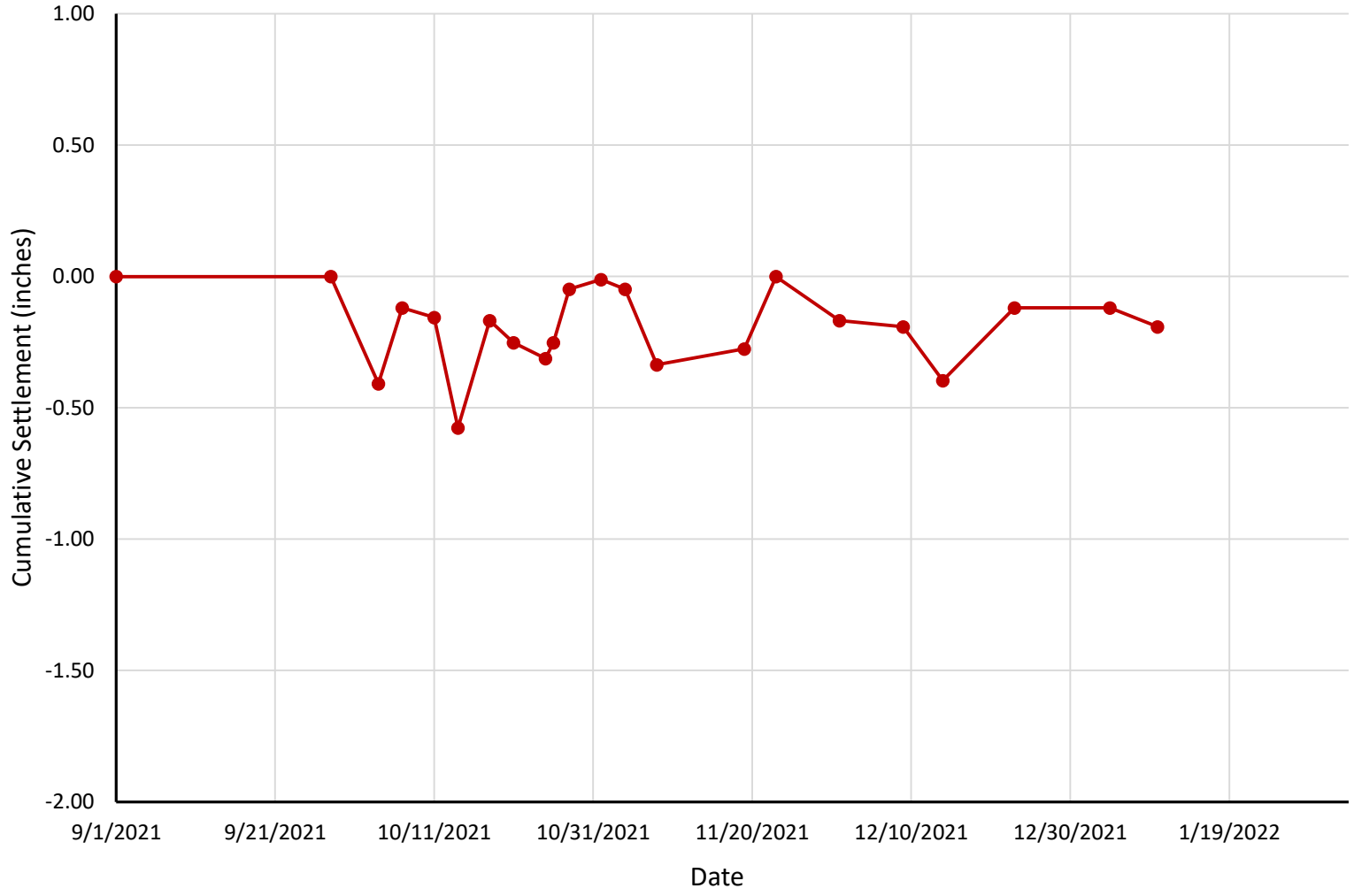

LANDAU ASSOCIATES

Port of Everett Maritime Industrial Expansion Project Everett, Washington	**Preload Settlement Point No. 8 Data Summary**	Figure 10

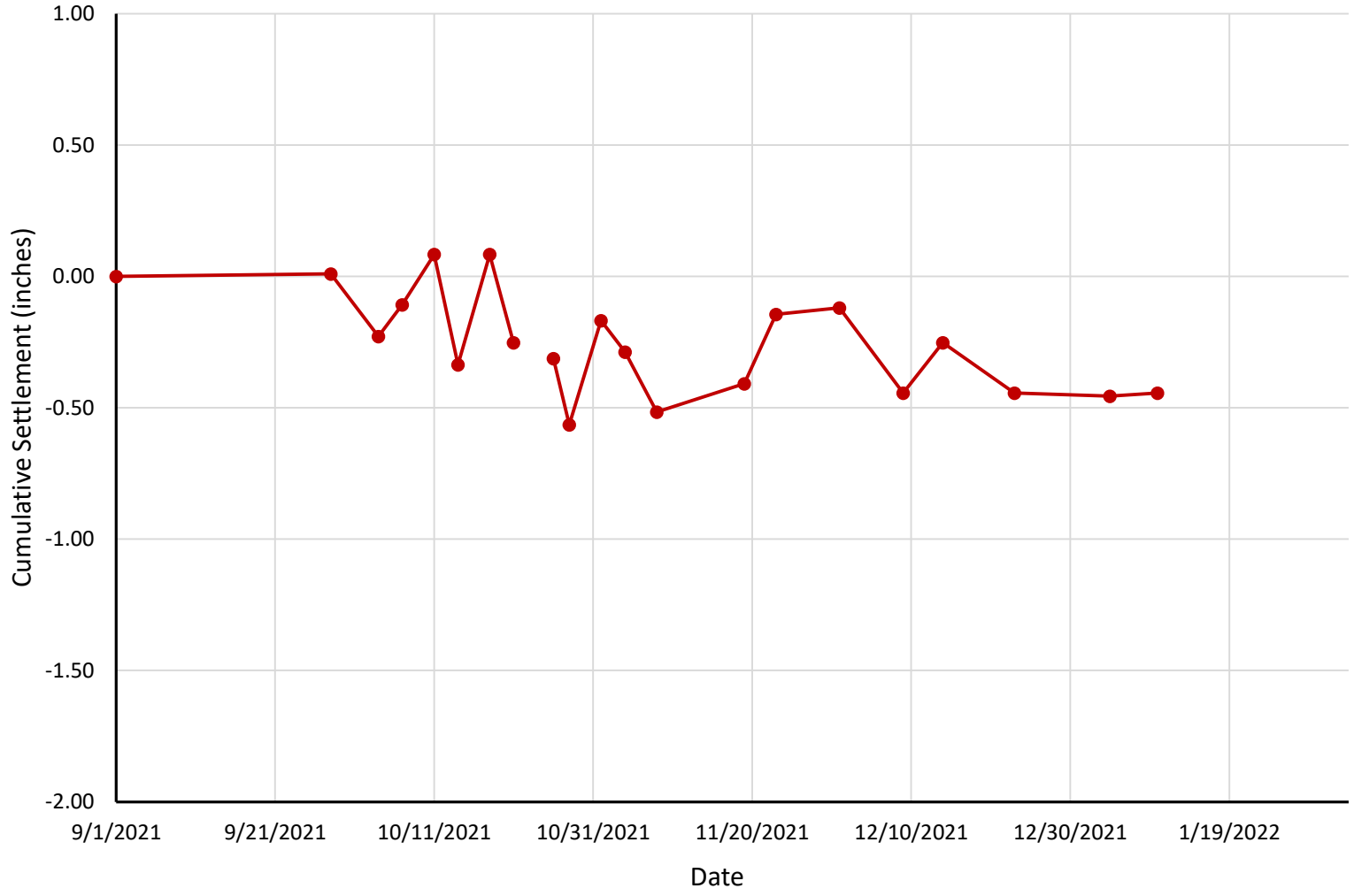

LANDAU ASSOCIATES

Port of Everett Maritime Industrial Expansion Project Everett, Washington	**Preload Settlement Point No. 9 Data Summary**	Figure 11

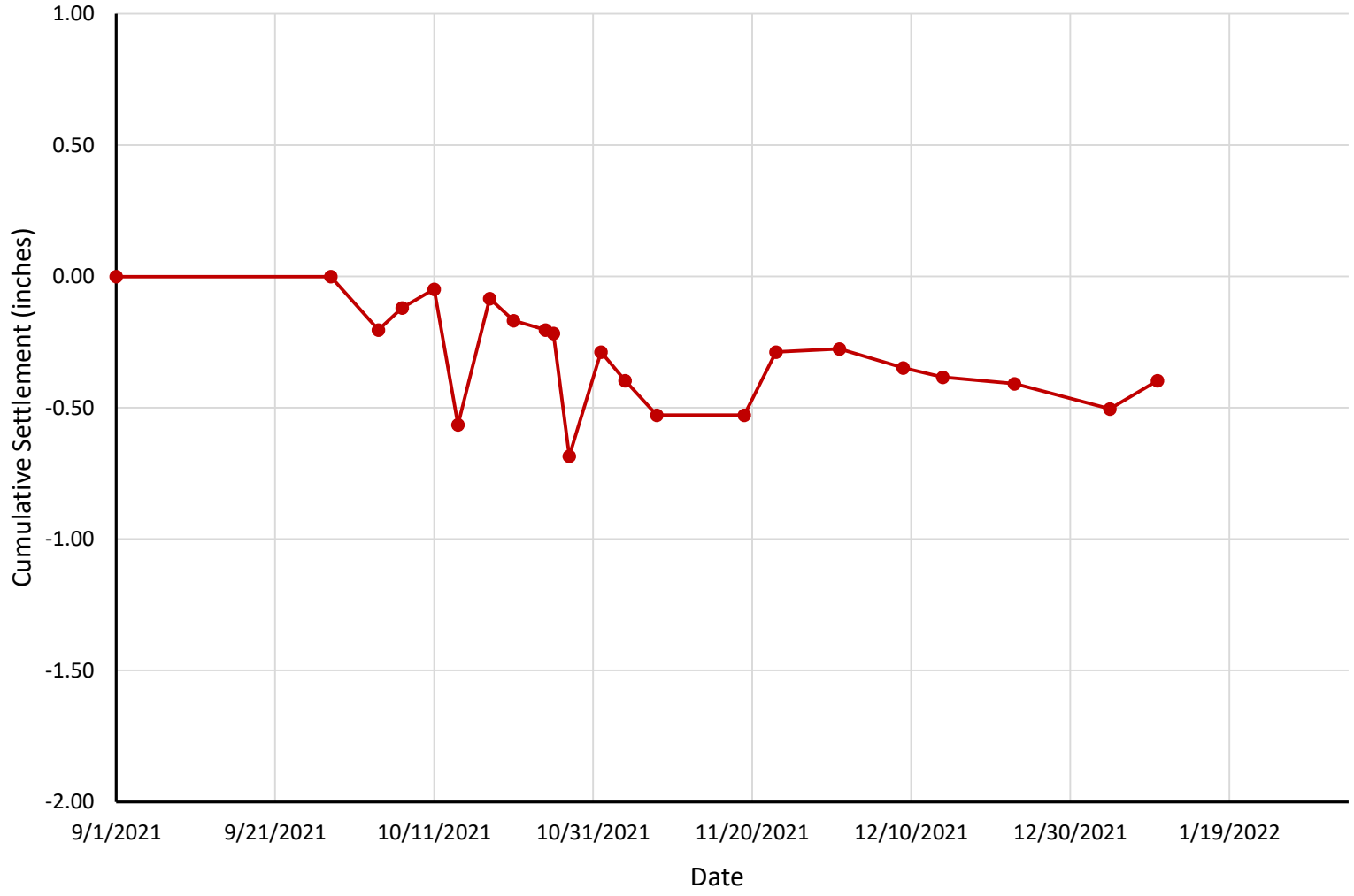

LANDAU ASSOCIATES

Port of Everett Maritime Industrial Expansion Project Everett, Washington	**Preload Settlement Point No. 10 Data Summary**	Figure 12

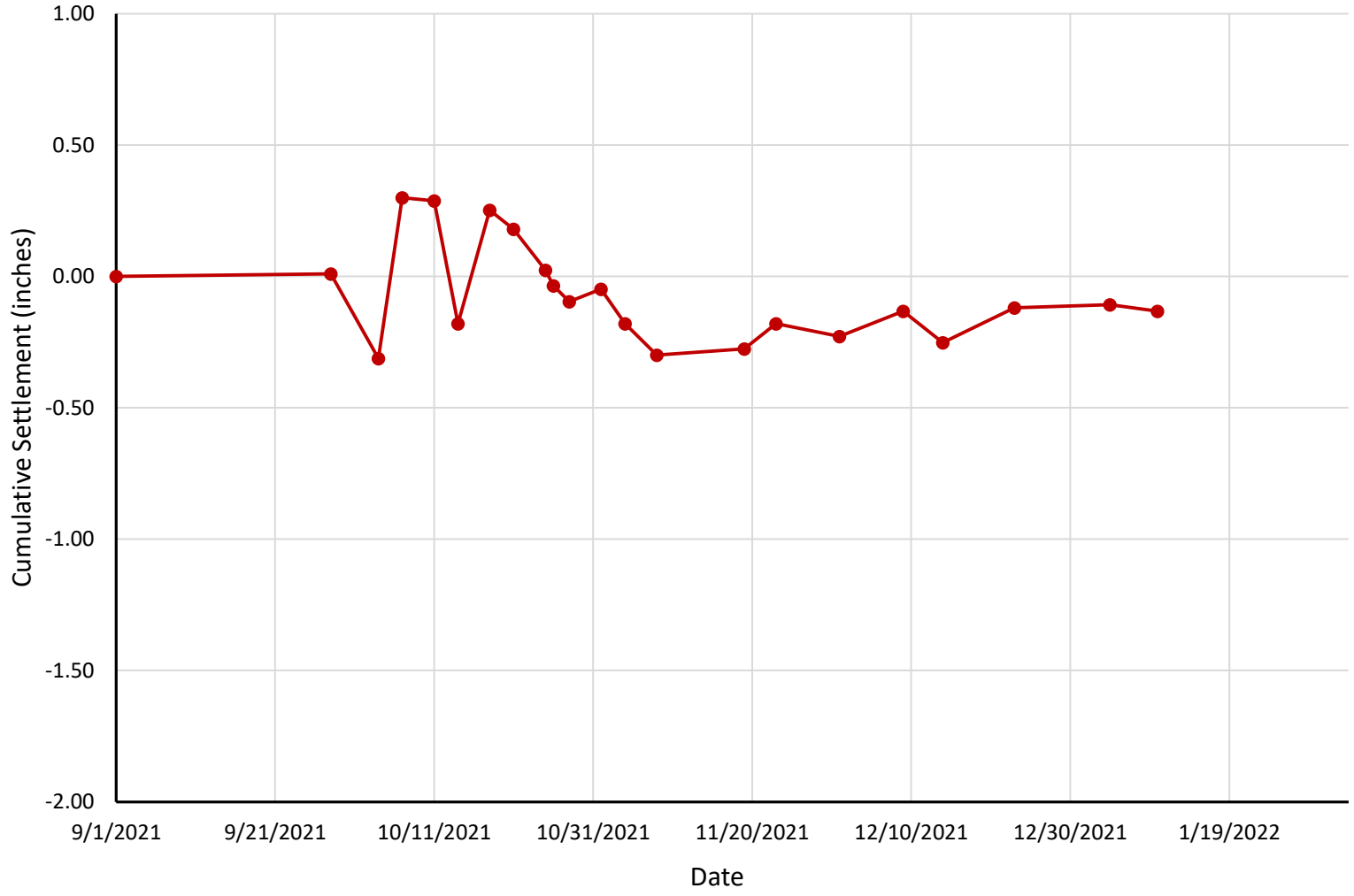

LANDAU ASSOCIATES

Port of Everett Maritime Industrial Expansion Project Everett, Washington	**Preload Settlement Point No. 11 Data Summary**	Figure 13

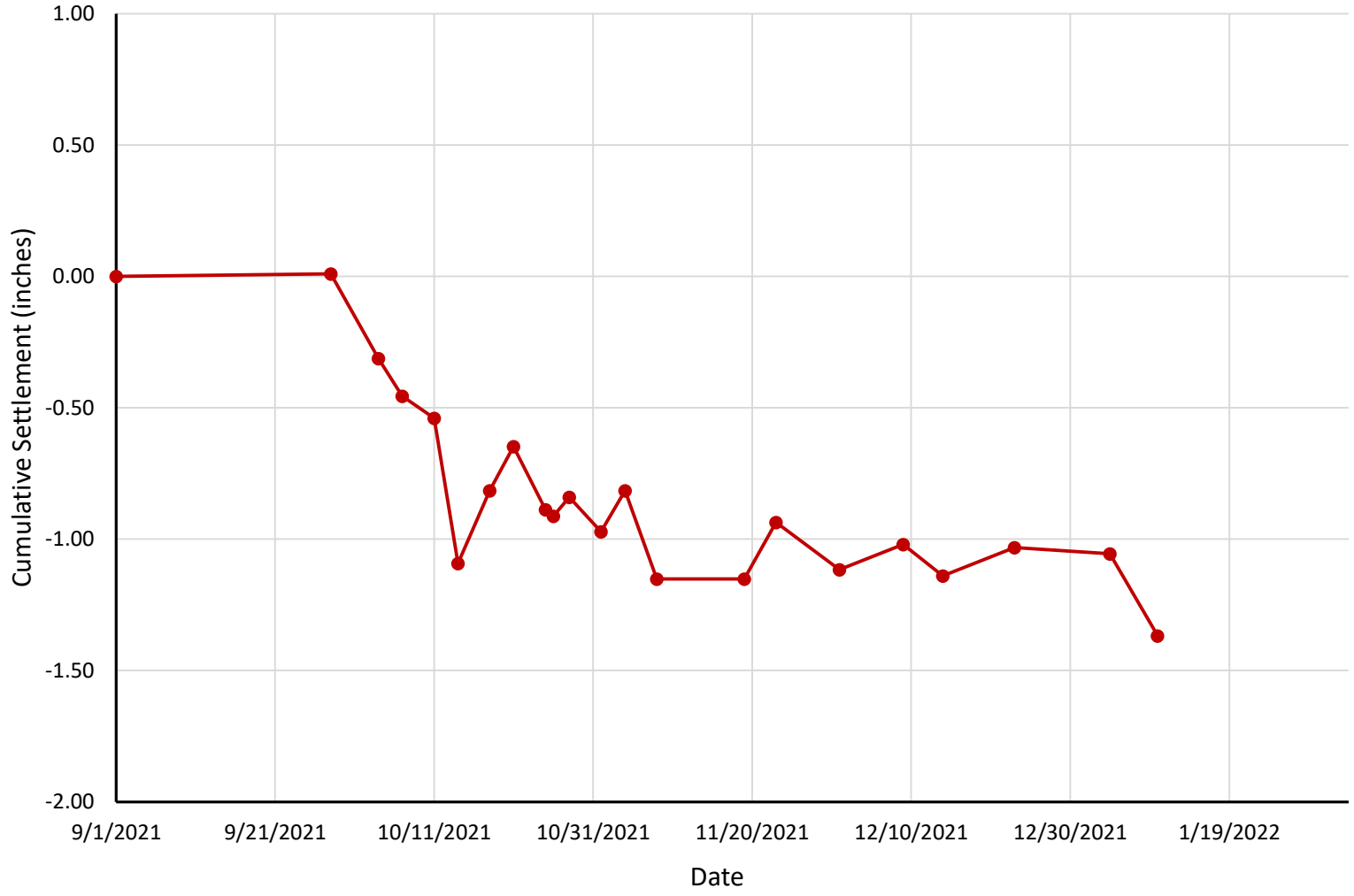

LANDAU ASSOCIATES

Port of Everett Maritime Industrial Expansion Project Everett, Washington	**Preload Settlement Point No. 12 Data Summary**	Figure 14

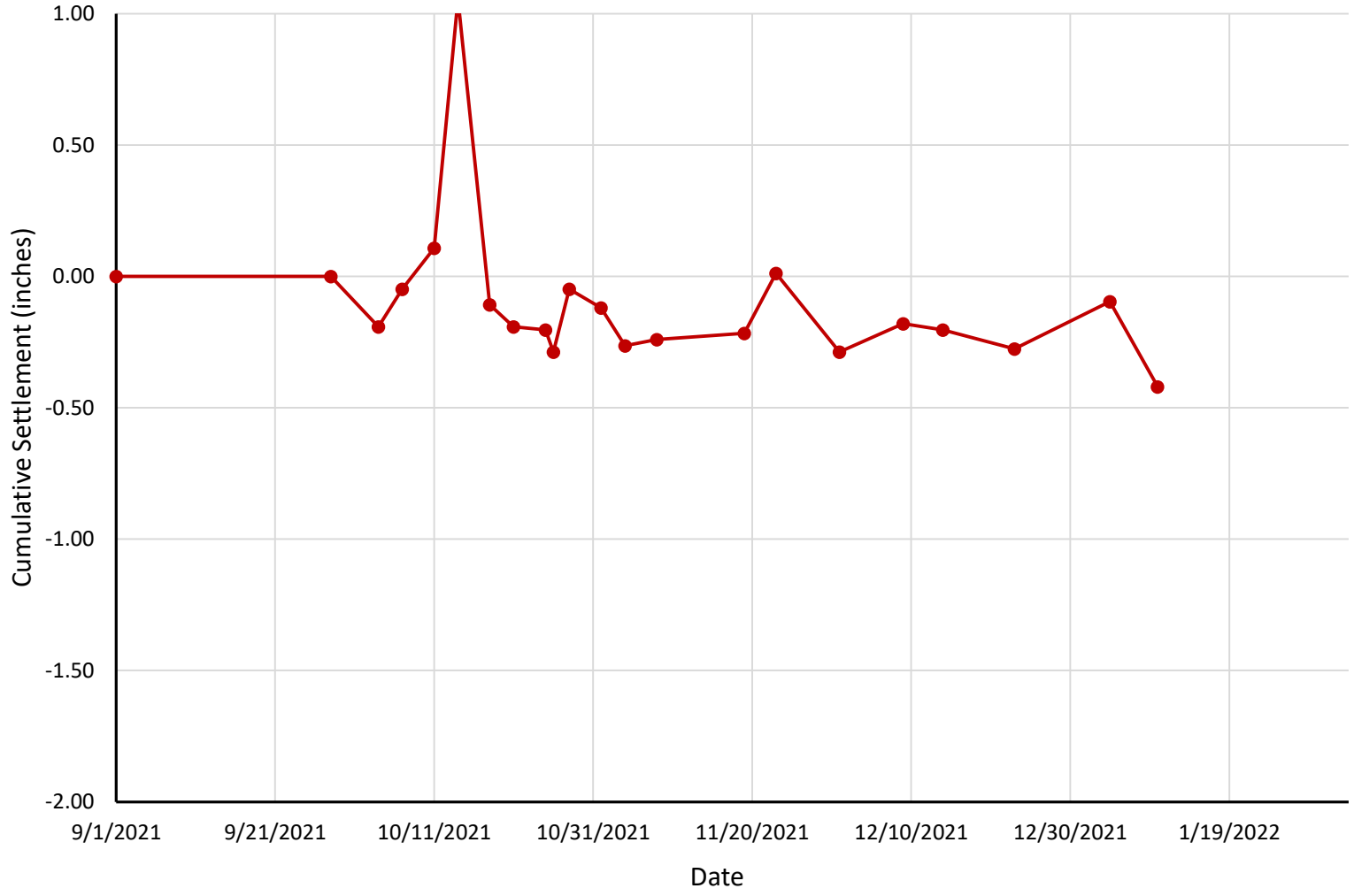

LANDAU ASSOCIATES

Port of Everett Maritime Industrial Expansion Project Everett, Washington	**Preload Settlement Point No. 13 Data Summary**	Figure 15

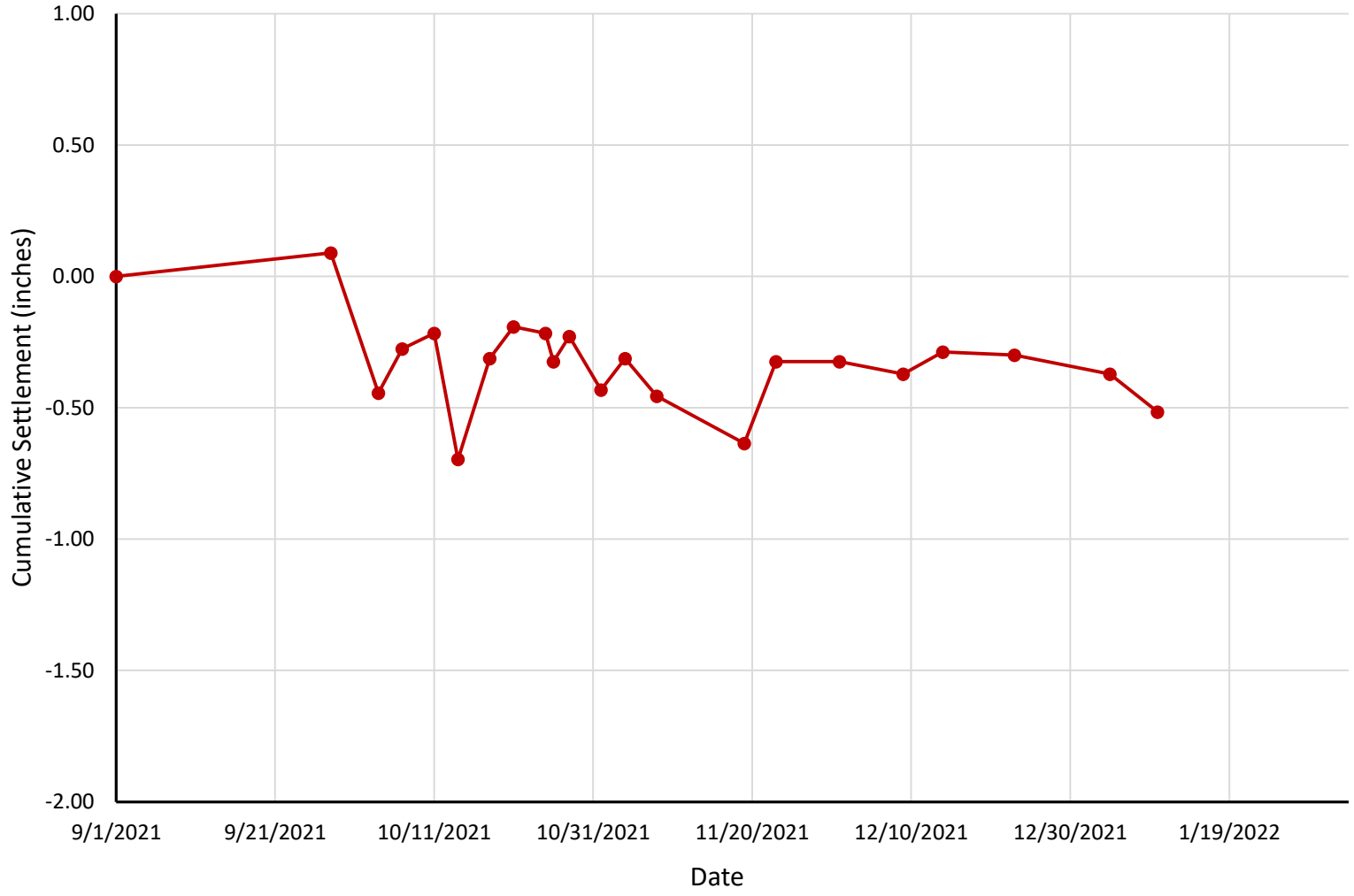

LANDAU ASSOCIATES

Port of Everett Maritime Industrial Expansion Project Everett, Washington	**Preload Settlement Point No. 14 Data Summary**	Figure 16

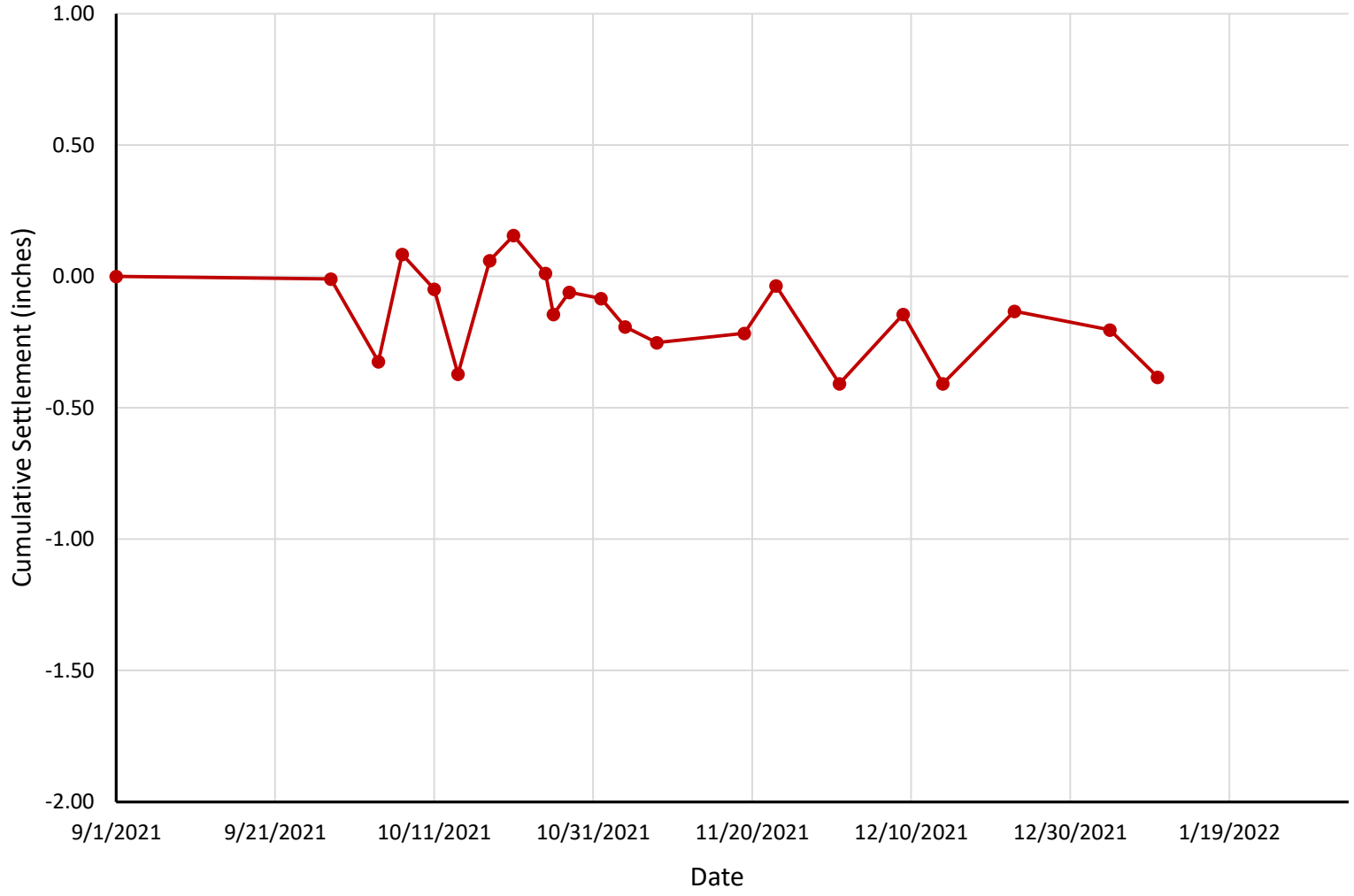

LANDAU ASSOCIATES

Port of Everett Maritime Industrial Expansion Project Everett, Washington	**Preload Settlement Point No. 15 Data Summary**	Figure 17

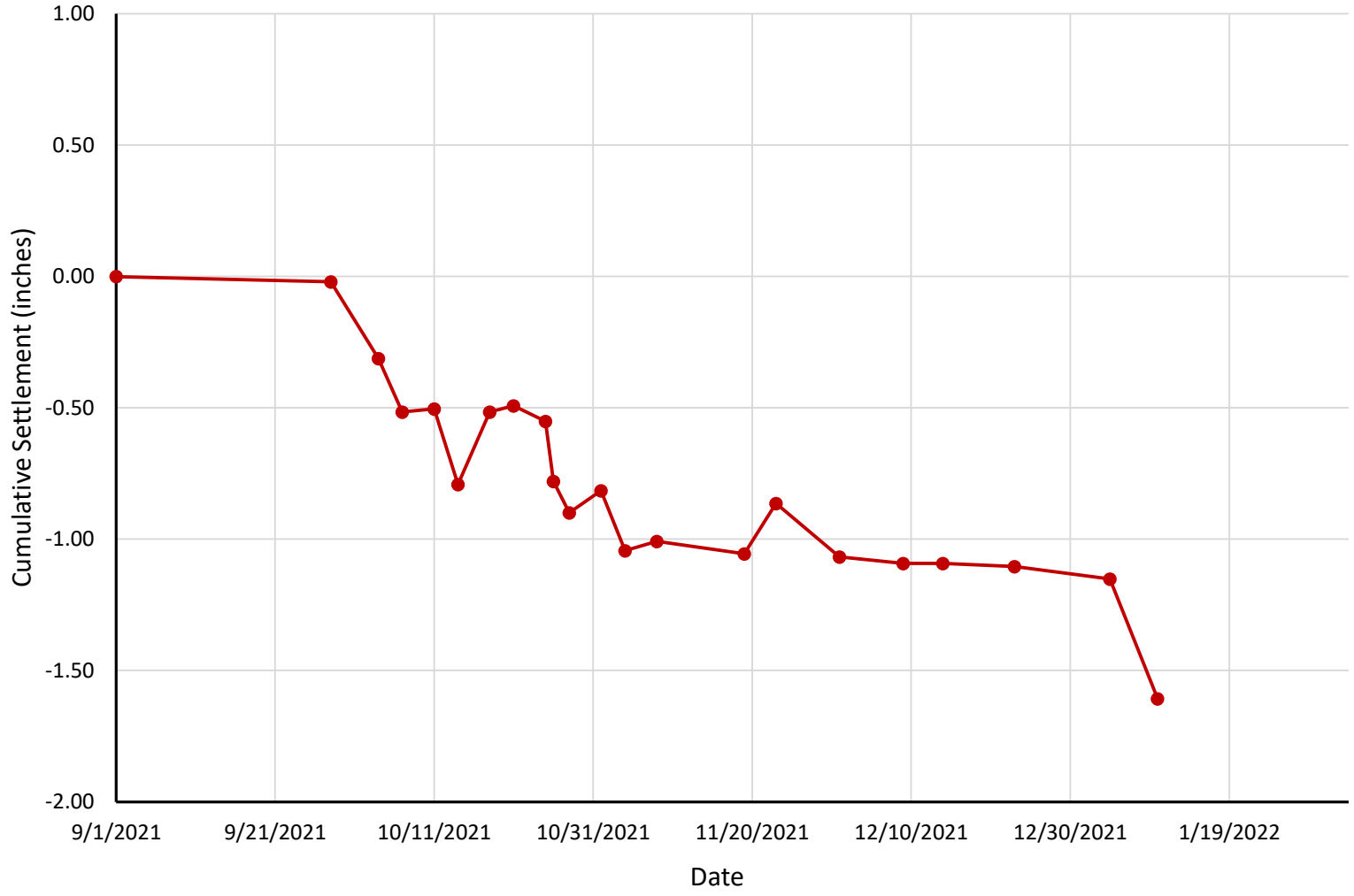

LANDAU ASSOCIATES

Port of Everett Maritime Industrial Expansion Project Everett, Washington	**Preload Settlement Point No. 16 Data Summary**	Figure 18

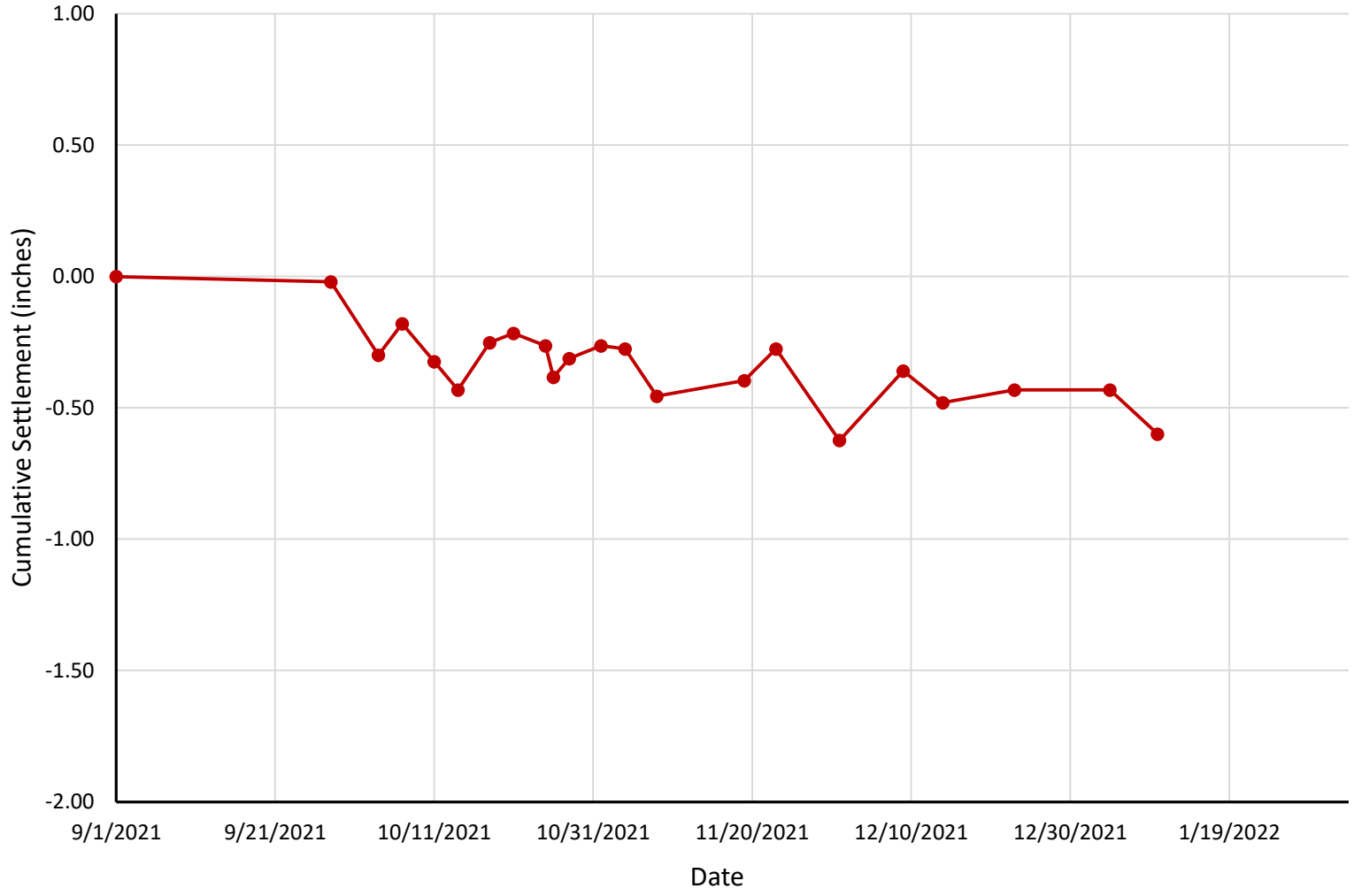

LANDAU ASSOCIATES

Port of Everett Maritime Industrial Expansion Project Everett, Washington	**Preload Settlement Point No. 17 Data Summary**	Figure 19

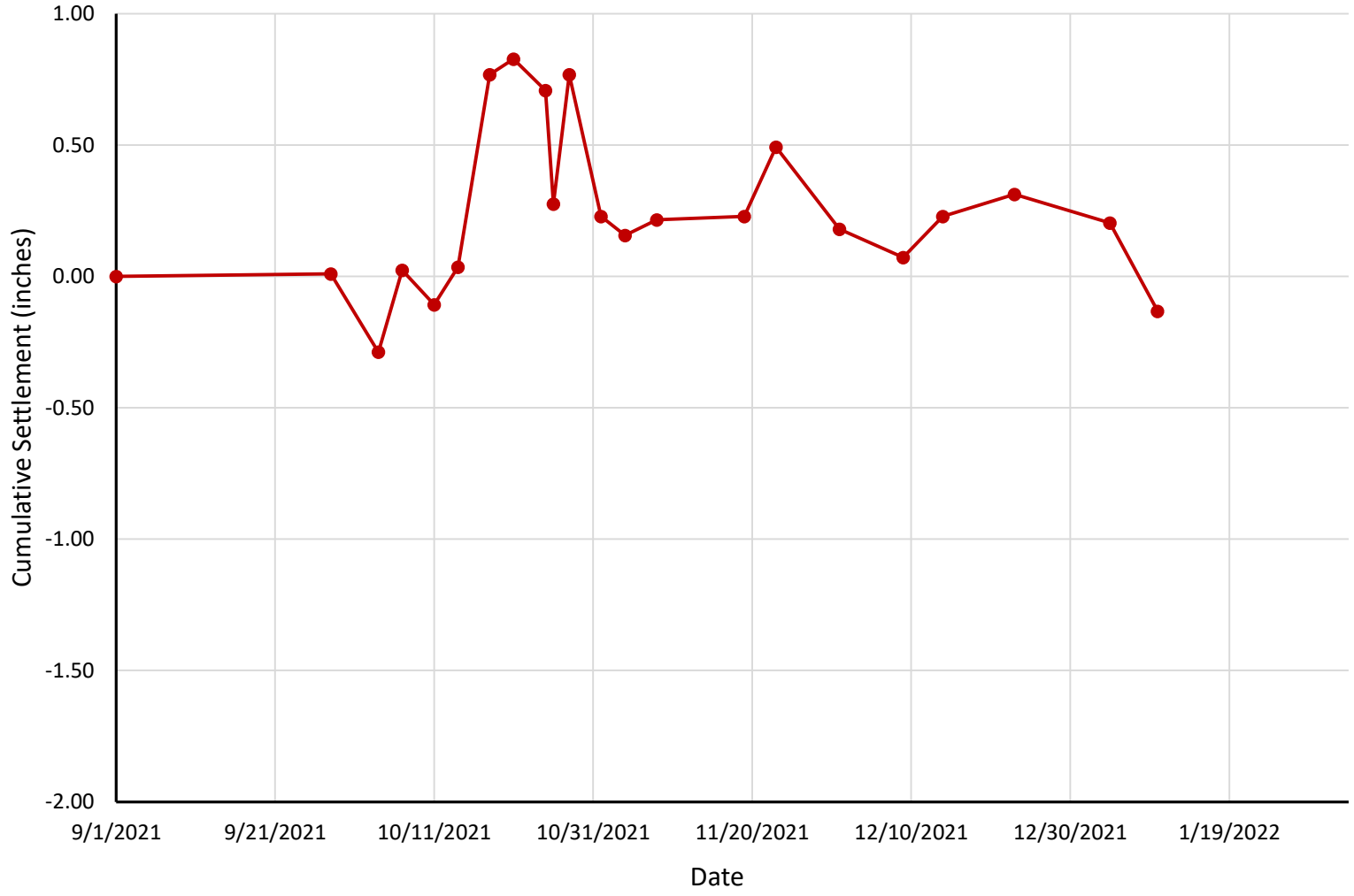

LANDAU ASSOCIATES

Port of Everett Maritime Industrial Expansion Project Everett, Washington	**Preload Settlement Point No. 18 Data Summary**	Figure 20

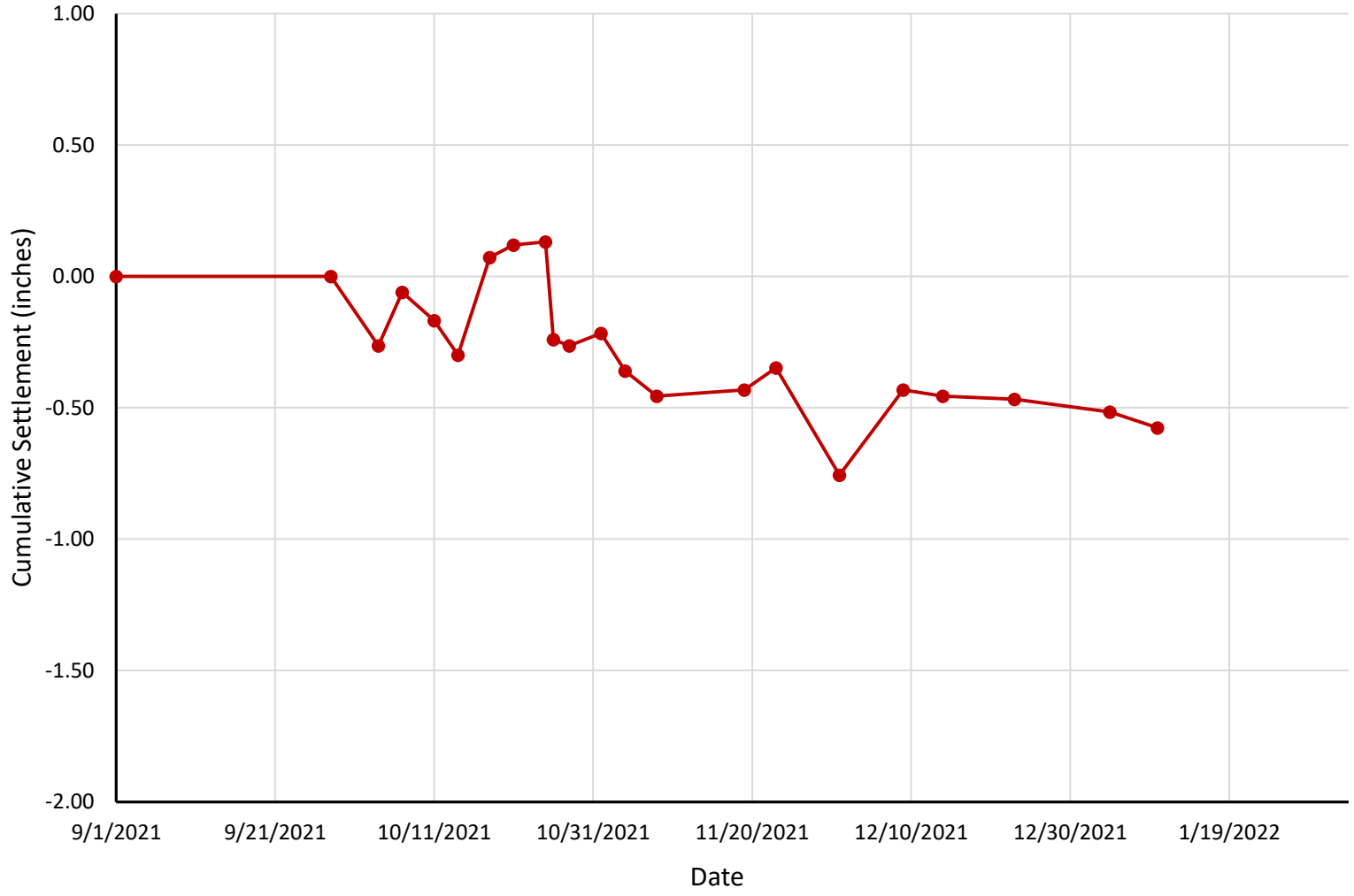

LANDAU ASSOCIATES

Port of Everett Maritime Industrial Expansion Project Everett, Washington	**Preload Settlement Point No. 19 Data Summary**	Figure 21

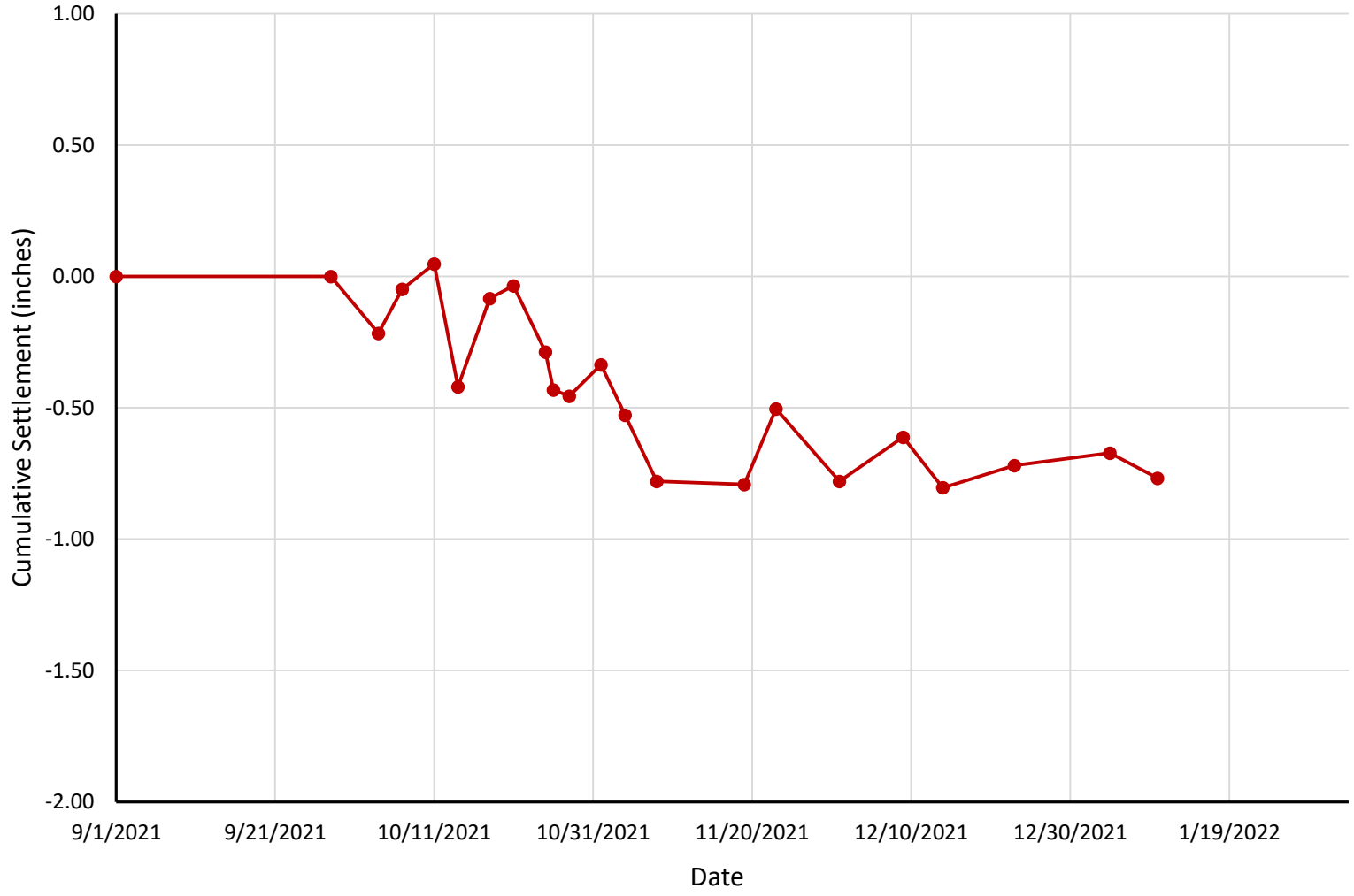

LANDAU ASSOCIATES

Port of Everett Maritime Industrial Expansion Project Everett, Washington	**Preload Settlement Point No. 20 Data Summary**	Figure 22

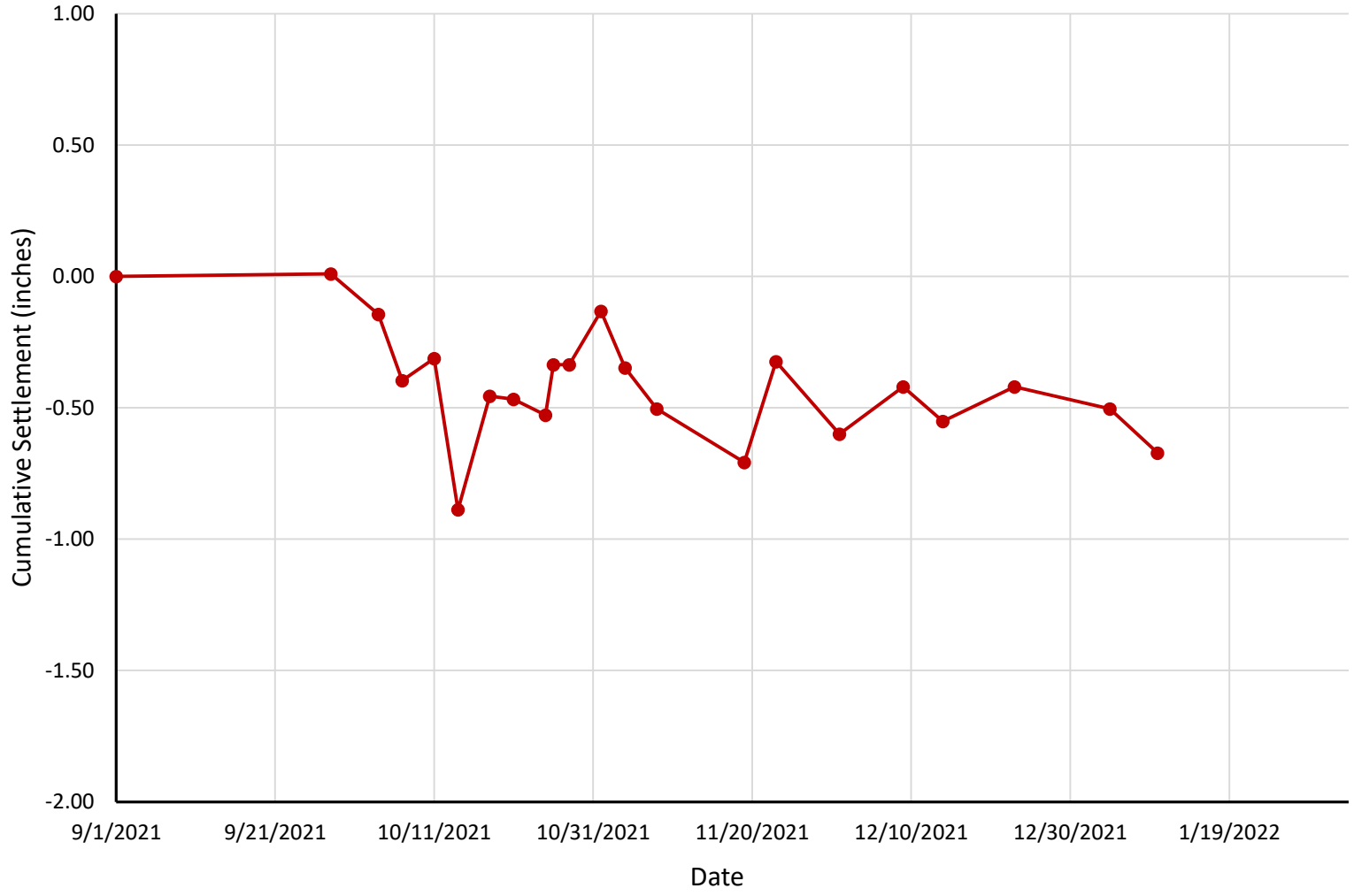

LANDAU ASSOCIATES

Port of Everett Maritime Industrial Expansion Project Everett, Washington	**Preload Settlement Point No. 21 Data Summary**	Figure 23

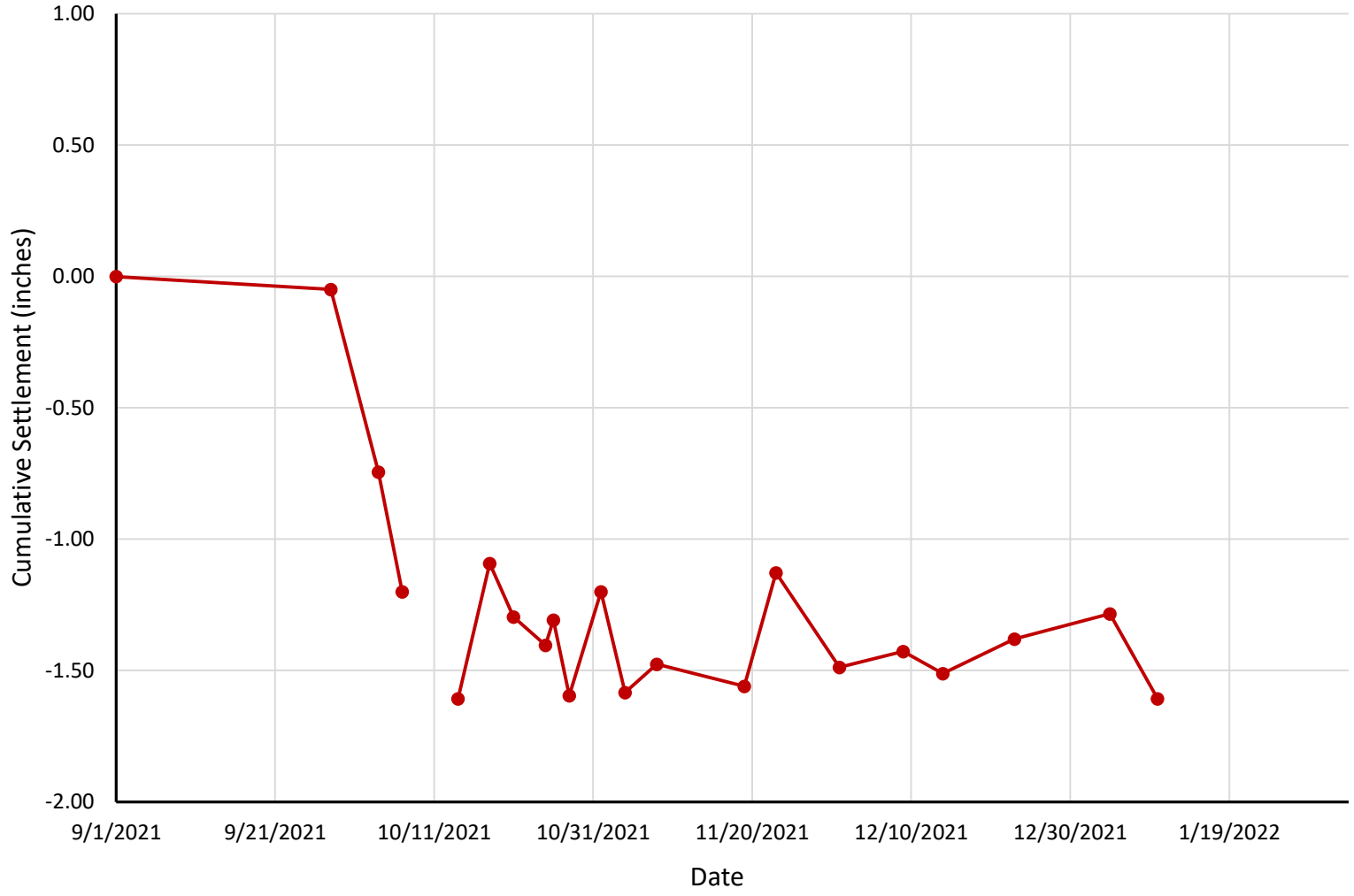

LANDAU ASSOCIATES

Port of Everett Maritime Industrial Expansion Project Everett, Washington	**Preload Settlement Point No. 22 Data Summary**	Figure 24

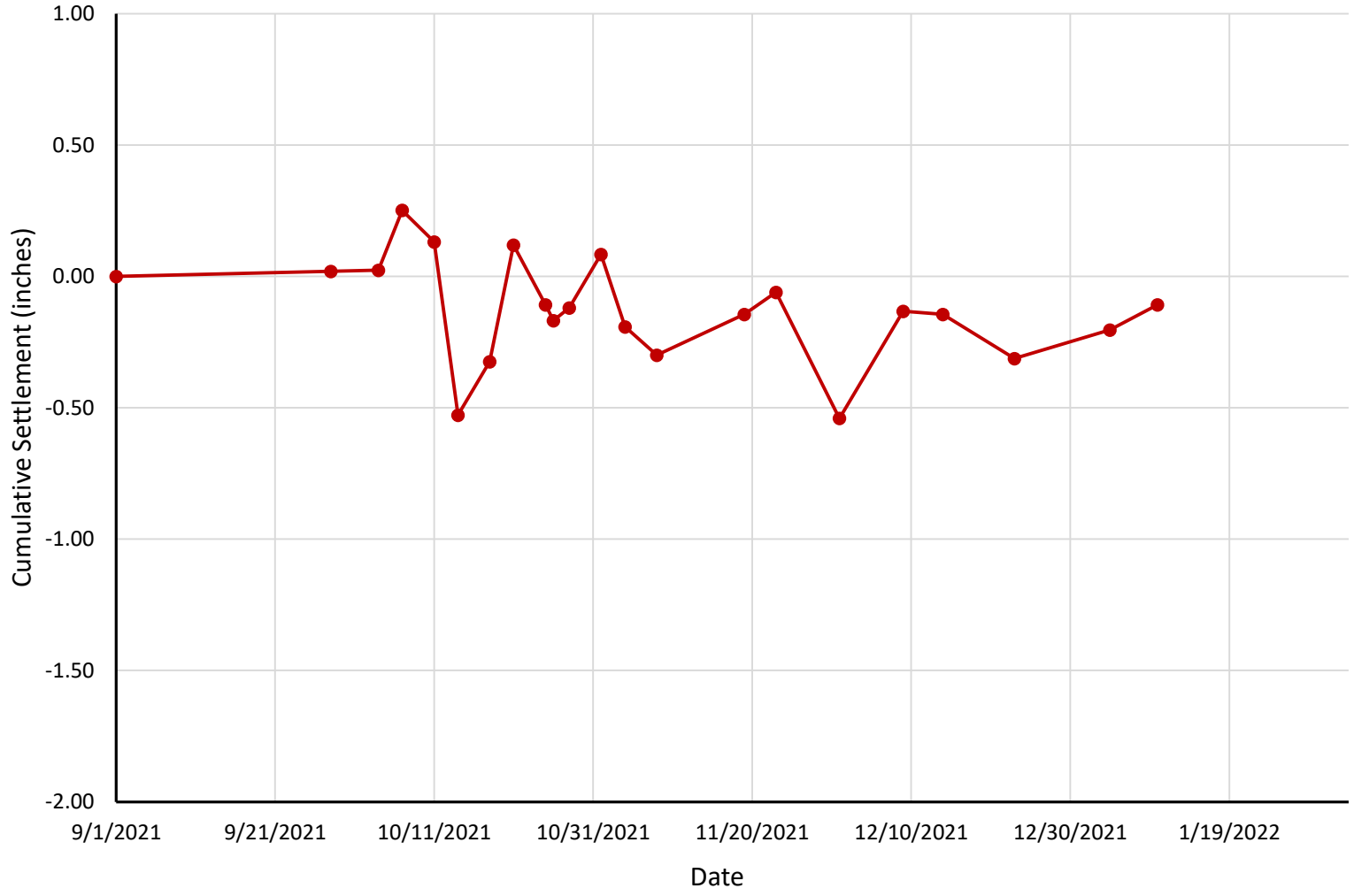

LANDAU ASSOCIATES

Port of Everett Maritime Industrial Expansion Project Everett, Washington	**Preload Settlement Point No. 23 Data Summary**	Figure 25

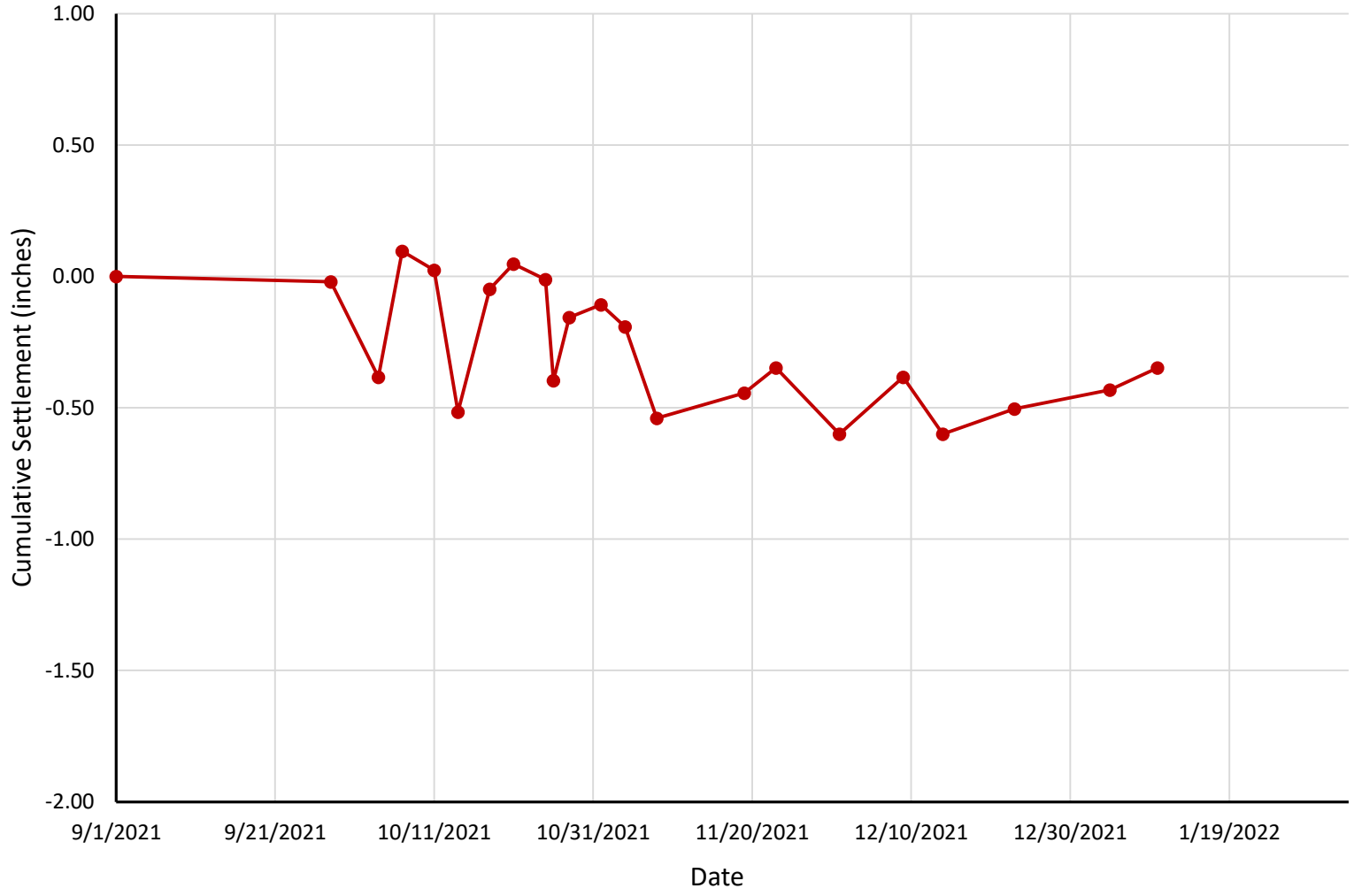

LANDAU ASSOCIATES

Port of Everett Maritime Industrial Expansion Project Everett, Washington	**Preload Settlement Point No. 24 Data Summary**	Figure 26

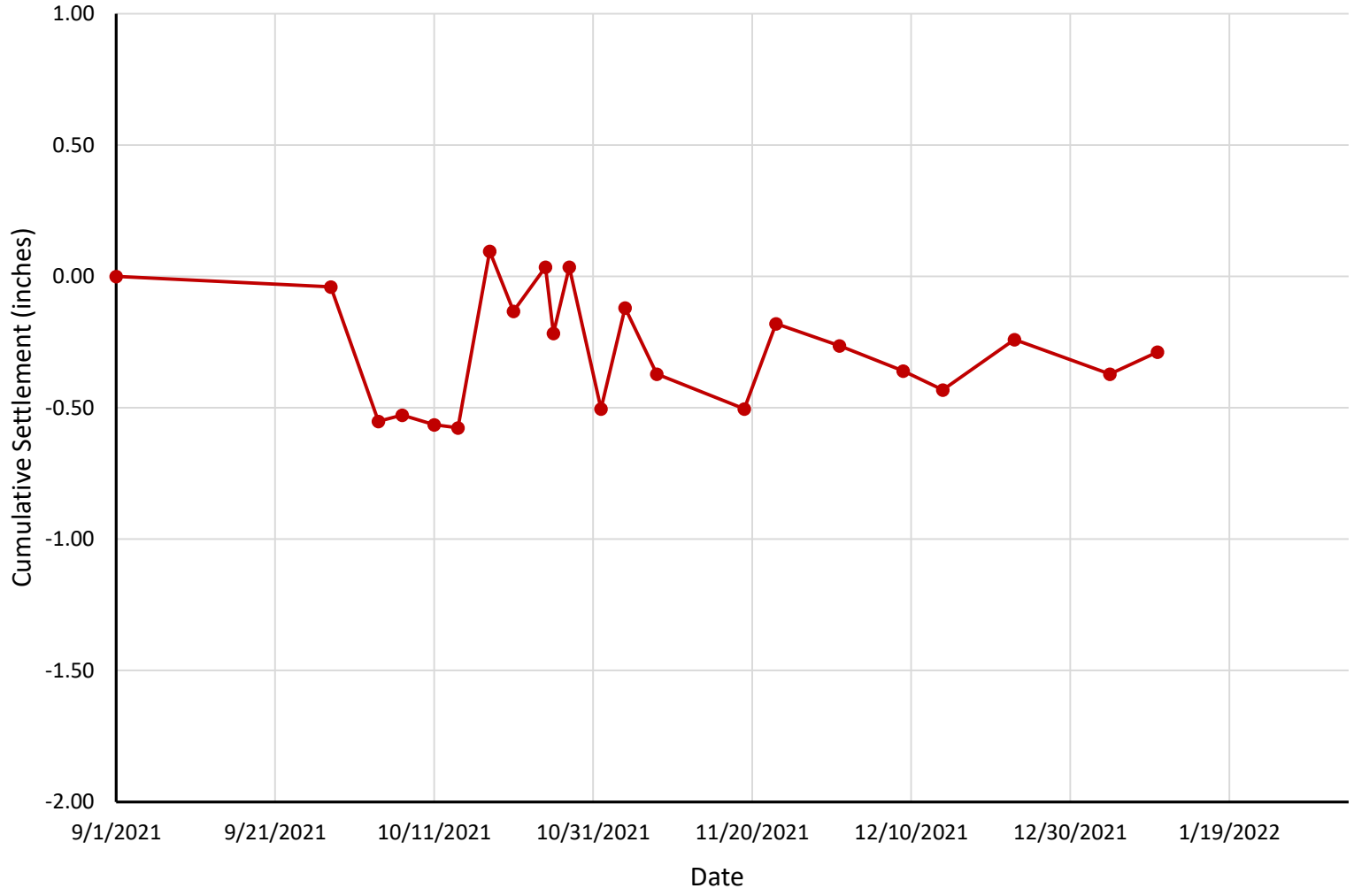

LANDAU ASSOCIATES

Port of Everett Maritime Industrial Expansion Project Everett, Washington	**Preload Settlement Point No. 25 Data Summary**	Figure 27

APPENDIX C

Import Fill Evaluation—Analytical Laboratory Reports

South Terminal Stockpile

Table 1
Stockpile Soil Analytical Results
MIE South Terminal Wharf Ballast
Everett, Washington

Analyte	CAS #	Screening Levels Unsaturated Soil	Sample ID, Laboratory Sample ID, Sample Date LAI-N-1-210311 EV21030089-01 3/11/2021	LAI-N-2-210311 EV21030089-02 3/11/2021	LAI-N-3-210311 EV21030089-03 3/11/2021	LAI-S-4-210311 EV21030089-04 3/11/2021	LAI-S-5-210311 EV21030089-05 3/11/2021	LAI-S-6-210311 EV21030089-06 3/11/2021
Total Petroleum Hydrocarbons (mg/kg; NWTPH-Gx/Dx)								
Gasoline Range Organics	--	100	3.0 U	3.0 U	3.0 U	3.0 U	3.0 U	3.0 U
Diesel Range Organics	--	2,000	25 U	25 U	25 U	25 U	25 U	25 U
Oil Range Organics	--	2,000	**97**	**100**	**94**	**95**	**120**	**120**
Polycyclic Aromatic Hydrocarbons (mg/kg; SW-846 8270 SIM)								
Naphthalene	91-20-3	17	0.020 U	0.020 U	0.020 U	0.020 U	0.020 U	0.020 U
2-Methylnaphthalene	91-57-6	13	0.020 U	0.020 U	0.020 U	0.020 U	0.020 U	0.020 U
1-Methylnaphthalene	90-12-0	4,500	0.020 U	0.020 U	0.020 U	0.020 U	0.020 U	0.020 U
Acenaphthylene	208-96-8	210,000	0.020 U	0.020 U	0.020 U	0.020 U	0.020 U	0.020 U
Acenaphthene	83-32-9	23	0.020 U	0.020 U	0.020 U	0.020 U	0.020 U	0.020 U
Fluorene	86-73-7	140,000	0.020 U	0.020 U	0.020 U	0.020 U	0.020 U	0.020 U
Phenanthrene	85-01-8	1,100,000	0.020 U	0.020 U	0.020 U	0.020 U	0.020 U	0.020 U
Anthracene	120-12-7	1,100,000	0.020 U	0.020 U	0.020 U	0.020 U	0.020 U	0.020 U
Fluoranthene	206-44-0	140,000	**0.021**	**0.032**	0.020 U	0.020 U	0.020 U	0.020 U
Pyrene	129-00-0	110,000	**0.022**	**0.028**	0.020 U	0.020 U	0.020 U	0.020 U
Benz[a]anthracene	56-55-3	NL	0.020 U	0.020 U	0.020 U	0.020 U	0.020 U	0.020 U
Chrysene	218-01-9	NL	0.020 U	0.020 U	0.020 U	0.020 U	0.020 U	0.020 U
Benzo(b)fluoranthene	205-99-2	NL	0.020 U	0.020 U	0.020 U	0.020 U	0.020 U	0.020 U
Benzo(k)fluoranthene	207-08-9	NL	0.020 U	0.020 U	0.020 U	0.020 U	0.020 U	0.020 U
Benzo(a)pyrene	50-32-8	NL	0.020 U	0.020 U	0.020 U	0.020 U	0.020 U	0.020 U
Indeno(1,2,3-cd)pyrene	193-39-5	NL	0.020 U	0.020 U	0.020 U	0.020 U	0.020 U	0.020 U
Dibenzo(a,h)anthracene	53-70-3	NL	0.020 U	0.020 U	0.020 U	0.020 U	0.020 U	0.020 U
Benzo(ghi)perylene	191-24-2	110,000	0.020 U	0.020 U	0.020 U	0.020 U	0.020 U	0.020 U
cPAH TEQ (ND = ½ RL)	--	3.2	0.0151 U	0.0151 U	0.0151 U	0.0151 U	0.0151 U	0.0151 U
Polychlorinated Biphenyls (mg/kg; SW-846 8082)								
PCB-aroclor 1016	12674-11-2	NL	0.10 U	0.10 U	0.10 U	0.10 U	0.10 U	0.10 U
PCB-aroclor 1221	11104-28-2	NL	0.10 U	0.10 U	0.10 U	0.10 U	0.10 U	0.10 U
PCB-aroclor 1232	11141-16-5	NL	0.10 U	0.10 U	0.10 U	0.10 U	0.10 U	0.10 U
PCB-aroclor 1242	53469-21-9	NL	0.10 U	0.10 U	0.10 U	0.10 U	0.10 U	0.10 U
PCB-aroclor 1248	12672-29-6	NL	0.10 U	0.10 U	0.10 U	0.10 U	0.10 U	0.10 U
PCB-aroclor 1254	11097-69-1	NL	0.10 U	0.10 U	0.10 U	0.10 U	0.10 U	0.10 U
PCB-aroclor 1260	11096-82-5	NL	0.10 U	0.10 U	0.10 U	0.10 U	0.10 U	0.10 U
PCB-aroclor 1268	11100-14-4	NL	0.10 U	0.10 U	0.10 U	0.10 U	0.10 U	0.10 U
Total PCBs	--	10	0.10 U	0.10 U	0.10 U	0.10 U	0.10 U	0.10 U
Total Metals (mg/kg; SW-846 6020/7471)								
Arsenic	7440-38-2	20	**2.5**	**2.6**	**2.5**	**2.9**	**2.4**	**2.7**
Copper	7440-50-8	36	**14**	**18**	**18**	**17**	**16**	**16**
Lead	7439-92-1	1,000	**2.8**	**4.4**	**3.7**	**3.7**	**3.6**	**3.2**
Mercury	7439-97-6	0.1	**0.039**	0.020 U	0.020 U	0.020 U	0.020 U	0.020 U
Nickel	7440-02-0	48	**28**	**33**	**34**	**33**	**30**	**30**
Zinc	7440-66-6	100	**51**	**100**	**58**	**47**	**55**	**49**

Notes:

Bold text indicates detected analyte

Green shading indicates detected analyte exceeds one or more applicable screening level

U = The analyte was analyzed for, but was not detected above the level of the reported sample quantitation limit.

NL = not listed

PCBs = polychlorinated biphenyls

RL = reporting limit

SIM = selected ion monitoring

TEQ = toxicity equivalency quotient

Preload—Cadman Pit D345a

Krazan & ASSOCIATES, INC.

GEOTECHNICAL ENGINEERING • ENVIRONMENTAL ENGINEERING
CONSTRUCTION TESTING & INSPECTION

August 18, 2021 KA No. 094-210121

Mr. John Snyder
SRV CONSRUCTION, INC.
PO Box 507
Anacortes, WA 98221

RE: SOIL ANALYTICAL ANALYSIS AND REPORTING
Cadman Sand & Gravel – Pit # D345
22022 Mountain Loop Hwy
Granite Falls, Washington

Dear Mr. Snyder

In accordance with your request and authorization, our firm performed soil sampling and analysis for the above-referenced project on August 13, 2021. The sampling was performed by Krazan and Associates, Inc. representative on August 9, 2021.

If you have any questions, or if we can be of further assistance, please do not hesitate to contact our office.

Respectfully submitted,
KRAZAN & ASSOCIATES, INC.



Jordan Kain, P.E.
Environmental Department Manager

August 18, 2021 KA Project No. 094-21021

Mr. John Snyder
SRV Construction, Inc. Tel: (360)675-7100
PO Box 507
Anacortes, WA 98221

RE: Letter Report for Soil Analytical Reporting
Cadman Sand & Gravel
22022 Mountain Loop Highway
Granite Falls, WA 98252

Dear Mr. Snyder:

Krazan and Associates is providing this Letter Report in reference to limited sampling of soil at the above referenced address located in Granite Falls, Washington. Sample collection was conducted by Krazan & Associates representative Mr. Jordan Kain on August 9, 2021. This sampling was performed in accordance with federal, state and local regulatory requirements, and was limited to the 1-¼" CSBC stock pile located at Cadman Sand & Gravel pit # D345. Contaminants of concern (C.O.C) analysis were based on Port of Everett – Norton Terminal – Preload and MTCA 3rd Interim Action specification 1.04 E Section 31 00 00.

1.0 ANALYTICAL RESULTS

1.1 Soil Sampling Locations

Twenty-two (22) discrete soil samples were collected at evenly distributed locations throughout the on-site 1-¼" CSBC stockpile. See attached figure for soil sample locations. Collected samples were delivered to a Washington State certified laboratory. The laboratory analytical report is provided in Appendix A.

1.2 Sampling Methodology

The samples were collected by carefully collecting discreet samples with a clean stainless-steel sampler. The samples were placed in laboratory supplied clean glass sample containers. Sample containers were then placed in an iced cooler for transportation to the laboratory. The sampling instrument was wiped between samples with a clean moist cloth to decontaminate the tool and minimize the potential cross contamination of subsequent samples. Data pertinent to each sample (e.g., date, sample number, material description, and material category) was recorded on a chain of custody.

1.3 Laboratory Analysis

A total of twenty-two (22) discrete soil samples were collected from the site and delivered OnSite Environmental Inc in Redmond, Washington, under chain-of-custody protocol for analysis. OnSite Environmental is a Washington State accredited laboratory. Samples were run for Total Petroleum Hydrocarbons Gasoline (TPH-Gx), Total Petroleum Hydrocarbons Diesel & Motor Oil (TPH-Dx), PAHs, PCBs, Arsenic, Nickel, Copper Mercury, Lead, Zinc and percent moisture. Samples labeled S-1 through S-10 were placed on a rushed 4-day turnaround time and samples labeled S-11 through S-22 were placed on a standard turnaround time. Laboratory analytical data reports and chain-of-custody forms are provided in Appendix A.

1.4 Laboratory Sample Results

Table 1 & 2 includes the sample number, sample location, sample description, and analyte contamination.

Table 1 – Summary of Analytical Data

Sample Number	Sample Location	Sample Material Description	TPH Gasoline	TPH Diesel	TPH Motor Oil	PCBs	Arsenic	Copper	Lead	Mercury	Nickel	Zinc
S-1	Pit #D345 Stock-Pile	Discrete Soil	ND	ND	ND	ND	ND	27	ND	ND	28	51
S-2	Pit #D345 Stock-Pile	Discrete Soil	ND	ND	ND	ND	ND	22	ND	ND	16	30
S-3	Pit #D345 Stock-Pile	Discrete Soil	ND	ND	ND	ND	ND	26	ND	ND	**54**	30
S-4	Pit #D345 Stock-Pile	Discrete Soil	ND	ND	ND	ND	ND	28	ND	ND	21	45
S-5	Pit #D345 Stock-Pile	Discrete Soil	ND	ND	ND	ND	ND	32	ND	ND	**62**	54
S-6	Pit #D345 Stock-Pile	Discrete Soil	ND	ND	ND	ND	ND	29	ND	ND	**49**	49
S-7	Pit #D345 Stock-Pile	Discrete Soil	ND	ND	ND	ND	ND	22	ND	ND	33	41
S-8	Pit #D345 Stock-Pile	Discrete Soil	ND	ND	ND	ND	ND	25	ND	ND	19	25
S-9	Pit #D345 Stock-Pile	Discrete Soil	ND	ND	ND	ND	ND	23	ND	ND	26	44
S-10	Pit #D345 Stock-Pile	Discrete Soil	ND	ND	ND	ND	ND	25	ND	ND	36	53
S-11	Pit #D345 Stock-Pile	Discrete Soil	ND	ND	ND	ND	ND	32	ND	ND	**49**	56

S-12	Pit #D345 Stock-Pile	Discrete Soil	ND	ND	ND	ND	ND	25	ND	ND	17	34
S-13	Pit #D345 Stock-Pile	Discrete Soil	ND	ND	ND	ND	ND	23	ND	ND	14	33
S-14	Pit #D345 Stock-Pile	Discrete Soil	ND	ND	ND	ND	ND	24	ND	ND	13	33
S-15	Pit #D345 Stock-Pile	Discrete Soil	ND	ND	ND	ND	ND	24	5.5	ND	25	43
S-16	Pit #D345 Stock-Pile	Discrete Soil	ND	ND	ND	ND	ND	**45**	ND	ND	42	72
S-17	Pit #D345 Stock-Pile	Discrete Soil	ND	ND	ND	ND	ND	23	ND	ND	28	37
S-18	Pit #D345 Stock-Pile	Discrete Soil	ND	ND	ND	ND	ND	36	ND	ND	41	63
S-19	Pit #D345 Stock-Pile	Discrete Soil	ND	ND	ND	ND	ND	31	ND	ND	31	24
S-20	Pit #D345 Stock-Pile	Discrete Soil	ND	ND	ND	ND	ND	22	ND	ND	22	34
S-21	Pit #D345 Stock-Pile	Discrete Soil	ND	ND	ND	ND	ND	24	ND	ND	24	39
S-22	Pit #D345 Stock-Pile	Discrete Soil	ND	ND	ND	ND	ND	**38**	ND	ND	45	47
Upper Limits		Soil	20 ppm	200 ppm	200 ppm	0.12	20	36	81	0.1	48	85

*benzo(a)pyrene = MTCA regulated PAH

All results displayed in ppm = Parts Per Million

ND = Not Detected

Table 2 – Summary of Analytical Data

Sample Number	Sample Location	Sample Material Description	Benzo(a)pyrene*	Total cPAH TEQ	Acenapthene	Acenphthylene	Anthracene	Benzo(g,h,i)perylene	Fluoranthene	Fluorene	Phenanthrene	Pyrene	1-Methylnaphthalene	2-Methylnaphthalene	Naphthalene
S-1	Pit #D345 Stock-Pile	Discrete Soil	ND	ND	ND	ND	ND	ND	ND	ND	ND	ND	ND	ND	ND
S-2	Pit #D345 Stock-Pile	Discrete Soil	ND	ND	ND	ND	ND	ND	ND	ND	ND	ND	ND	ND	ND
S-3	Pit #D345 Stock-Pile	Discrete Soil	ND	ND	ND	ND	ND	ND	ND	ND	ND	ND	ND	ND	ND
S-4	Pit #D345 Stock-Pile	Discrete Soil	ND	ND	ND	ND	ND	ND	ND	ND	ND	ND	ND	ND	ND
S-5	Pit #D345 Stock-Pile	Discrete Soil	ND	ND	ND	ND	ND	ND	ND	ND	ND	ND	ND	ND	ND
S-6	Pit #D345 Stock-Pile	Discrete Soil	ND	ND	ND	ND	ND	ND	ND	ND	ND	ND	ND	ND	ND
S-7	Pit #D345 Stock-Pile	Discrete Soil	ND	ND	ND	ND	ND	ND	ND	ND	ND	ND	ND	ND	ND
S-8	Pit #D345 Stock-Pile	Discrete Soil	ND	ND	ND	ND	ND	ND	ND	ND	ND	ND	ND	ND	ND
S-9	Pit #D345 Stock-Pile	Discrete Soil	ND	ND	ND	ND	ND	ND	ND	ND	ND	ND	ND	ND	ND
S-10	Pit #D345 Stock-Pile	Discrete Soil	ND	ND	ND	ND	ND	ND	ND	ND	0.0075	0.0083	ND	ND	ND
S-11	Pit #D345 Stock-Pile	Discrete Soil	0.012	0.01354	ND	ND	ND	0.007	0.029	ND	0.022	0.028	ND	ND	ND
S-12	Pit #D345 Stock-Pile	Discrete Soil	ND	ND	ND	ND	ND	ND	ND	ND	ND	ND	ND	ND	ND
S-13	Pit #D345 Stock-Pile	Discrete Soil	ND	ND	ND	ND	ND	ND	ND	ND	ND	ND	ND	ND	ND
S-14	Pit #D345 Stock-Pile	Discrete Soil	ND	ND	ND	ND	ND	ND	ND	ND	ND	ND	ND	ND	ND
S-15	Pit #D345 Stock-Pile	Discrete Soil	ND	ND	ND	ND	ND	ND	ND	ND	ND	ND	ND	ND	ND
S-16	Pit #D345 Stock-Pile	Discrete Soil	ND	ND	ND	ND	ND	ND	ND	ND	ND	ND	ND	ND	ND
S-17	Pit #D345 Stock-Pile	Discrete Soil	ND	ND	ND	ND	ND	ND	ND	ND	ND	ND	ND	ND	ND

S-18	Pit #D345 Stock-Pile	Discrete Soil	ND	ND	ND	ND	ND	ND	ND	ND	ND	ND	ND	ND	ND
S-19	Pit #D345 Stock-Pile	Discrete Soil	ND	ND	ND	ND	ND	ND	ND	ND	ND	ND	ND	ND	ND
S-20	Pit #D345 Stock-Pile	Discrete Soil	ND	ND	ND	ND	ND	ND	ND	ND	ND	ND	ND	ND	ND
S-21	Pit #D345 Stock-Pile	Discrete Soil	ND	ND	ND	ND	ND	ND	ND	ND	ND	ND	ND	ND	ND
S-22	Pit #D345 Stock-Pile	Discrete Soil	ND	ND	ND	ND	ND	ND	ND	ND	ND	ND	ND	ND	ND
Upper Limits		Soil	0.1	0.16	1.2	210,000	1,100,000	110,000	140,000	140,000	1,100,000	110,000	4,500	0.63	0.86

*benzo(a)pyrene = MTCA regulated PAH
ND = Not Detected

1.5 Conclusion

The soil collected from Cadman Sand and Gravel - Pit #D345 located at 22022 Mountain Loop Highway, Granite Falls, WA did not exceed the Department of Ecology and the Port of Everett concentration upper limits for TPH-Gx, TPH-Dx, PAHs, Total cPAHs TEQ, PCBs, Arsenic, Lead, Mercury and Zinc as stated in Port of Everett – Norton Terminal – Preload and MTCA 3rd Interim Action specification 1.04 E Section 31 00 00. However, samples labeled S-3, S-5, S-6, and S-11 were slightly above the 48-ppm upper limit threshold for Nickel at 54-ppm, 62-ppm, 49-ppm & 49-ppm respectively. Samples labeled S-16 and S-22 were slightly above the 36-ppm upper limit threshold for Copper at 45-ppm and 38-ppm respectively. Based on laboratory control limits and data qualifiers, all samples have been validated.

LIMITATIONS

This survey and review of the subject property has been limited in scope to those areas defined by the client. This investigation is undertaken with the risk that visual observations and random sampling alone would not reveal the presence, full nature, and extent of Contaminants of Concern (COC). Krazan makes no representation as to the COC content of materials not sampled or that were inaccessible to our inspector. The sample locations are approximate, and are based on field notes and diagrams of sample locations. The opinions presented herein apply to the site condition existing at the time of the investigation. Opinions and recommendations provided herein may not apply to future conditions that may exist at the site.

The findings presented in this report were based on field observations and sampling as defined by the client. Therefore, the data obtained are clear and accurate only to the degree implied by the sources and

methods used. The information presented herein is based on professional interpretation using presently accepted methods with a degree of conservatism deemed proper as of the report date. We do not warrant that future technical developments cannot supersede such data.

This report is provided for the exclusive use of the client noted on the cover page and is subject to the terms and conditions in the applicable contract between the client and Krazan. The client is the only party to whom Krazan has explained the risks involved and has been involved in the shaping of the scope of services needed to satisfactorily manage those risks, if any, from the client's point of view. Any third party use of this report, including use by the Client's lender, prospective purchaser, or lessee will be subject to the terms and conditions governing the contractual work between the Client and Krazan. The unauthorized use of, reliance on, or release of the information contained in this report is strictly prohibited and will be without risk or liability to Krazan.

Laboratory analysis was conducted by a laboratory accredited under the guidance of the EPA. The results of the analyses are accurate only to the degree of care exercised by the independent laboratories and the representative nature of the samples obtained.

Krazan appreciates the opportunity to provide you with this information and trusts that you will find it useful. If you have any questions or if we may be of further assistance, please do not hesitate to contact our office at (425) 485-5519.

Respectfully submitted,
KRAZAN & ASSOCIATES, INC.



Jordan Kain, P.E
Environmental Department Manager
Krazan & Associates

Soil Stockpile Sample Map

(Not to Scale)

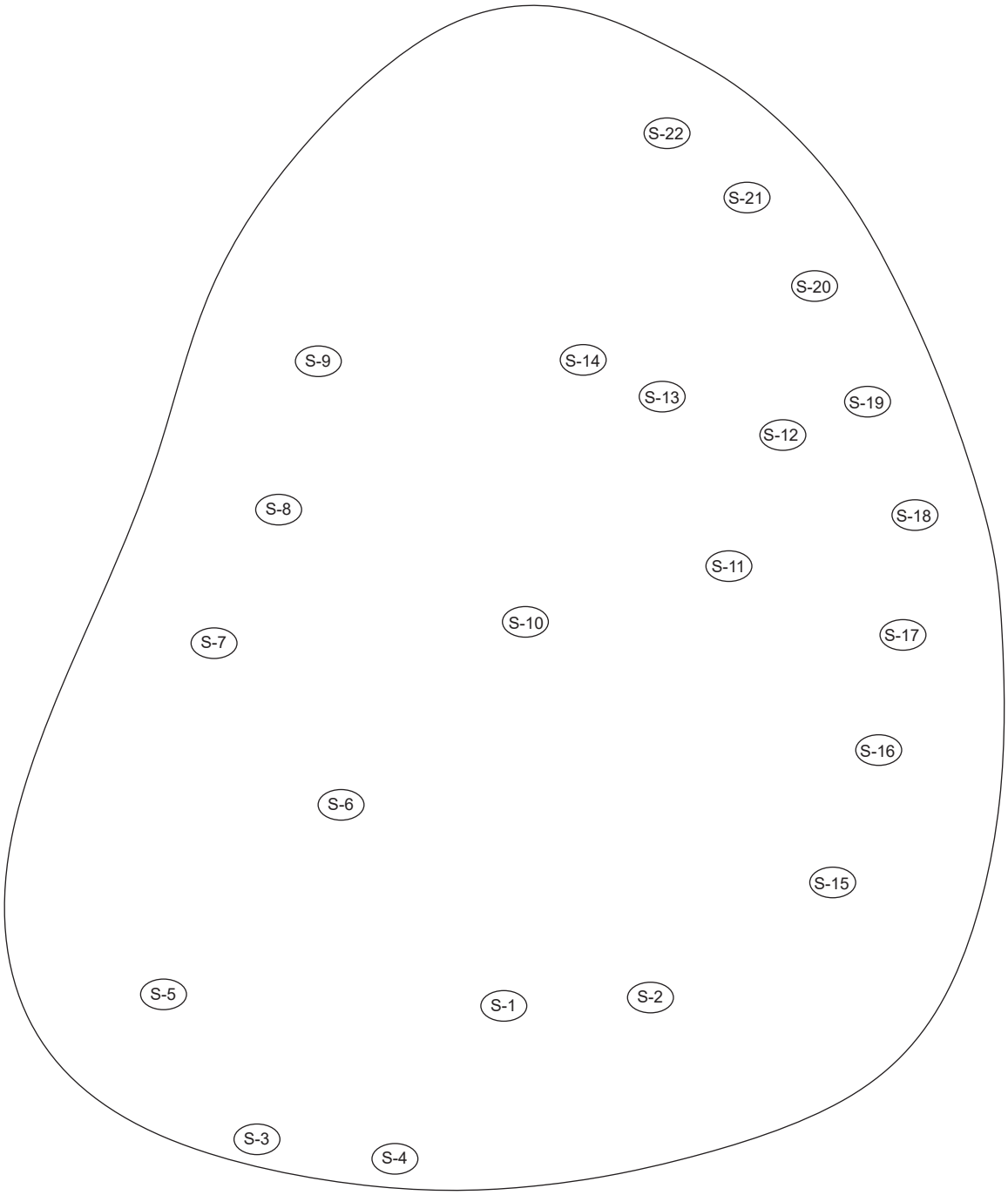

Notes

(S-1) = sample name and location

Krazan & ASSOCIATES, INC.

Cadman Sand and Gravel Pit# D345 - 22022 Mountain Loop Hwy, Granite Falls, WA 98252

Date: August 2021		
Drawn By: JJK	Sample Locations	Project Number: 094-21021

Appendix A

OnSite Environmental Inc.
14648 NE 95th Street, Redmond, WA 98052 • (425) 883-3881

August 17, 2021

Jordan Kain
Krazan Associates, Inc.
11715 North Creek Parkway South, Suite C-106
Bothell, WA 98011

Re: Analytical Data for Project 094-21021
Laboratory Reference No. 2108-092

Dear Jordan:

Enclosed are the analytical results and associated quality control data for samples submitted on August 9, 2021.

The standard policy of OnSite Environmental, Inc. is to store your samples for 30 days from the date of receipt. If you require longer storage, please contact the laboratory.

We appreciate the opportunity to be of service to you on this project. If you have any questions concerning the data, or need additional information, please feel free to call me.

Sincerely,

David Baumeister
Project Manager

Enclosures

This report pertains to the samples analyzed in accordance with the chain of custody,
and is intended only for the use of the individual or company to whom it is addressed.

Date of Report: August 17, 2021
Samples Submitted: August 9, 2021
Laboratory Reference: 2108-092
Project: 094-21021

Case Narrative

Samples were collected on August 9, 2021 and received by the laboratory on August 9, 2021. They were maintained at the laboratory at a temperature of 2°C to 6°C.

Please note that any and all soil sample results are reported on a dry-weight basis, unless otherwise noted below.

General QA/QC issues associated with the analytical data enclosed in this laboratory report will be indicated with a reference to a comment or explanation on the Data Qualifier page. More complex and involved QA/QC issues will be discussed in detail below.

This report pertains to the samples analyzed in accordance with the chain of custody,
and is intended only for the use of the individual or company to whom it is addressed.

Date of Report: August 17, 2021
Samples Submitted: August 9, 2021
Laboratory Reference: 2108-092
Project: 094-21021

GASOLINE RANGE ORGANICS
NWTPH-Gx

Matrix: Soil
Units: mg/kg (ppm)

Analyte	Result	PQL	Method	Date Prepared	Date Analyzed	Flags
Client ID:	**S-1**					
Laboratory ID:	08-092-01					
Gasoline	**ND**	3.2	NWTPH-Gx	8-10-21	8-10-21	
Surrogate:	*Percent Recovery*	*Control Limits*				
Fluorobenzene	*103*	*66-129*				
Client ID:	**S-2**					
Laboratory ID:	08-092-02					
Gasoline	**ND**	3.7	NWTPH-Gx	8-10-21	8-10-21	
Surrogate:	*Percent Recovery*	*Control Limits*				
Fluorobenzene	*106*	*66-129*				
Client ID:	**S-3**					
Laboratory ID:	08-092-03					
Gasoline	**ND**	2.8	NWTPH-Gx	8-10-21	8-10-21	
Surrogate:	*Percent Recovery*	*Control Limits*				
Fluorobenzene	*101*	*66-129*				
Client ID:	**S-4**					
Laboratory ID:	08-092-04					
Gasoline	**ND**	2.2	NWTPH-Gx	8-10-21	8-10-21	
Surrogate:	*Percent Recovery*	*Control Limits*				
Fluorobenzene	*100*	*66-129*				
Client ID:	**S-5**					
Laboratory ID:	08-092-05					
Gasoline	**ND**	2.9	NWTPH-Gx	8-10-21	8-10-21	
Surrogate:	*Percent Recovery*	*Control Limits*				
Fluorobenzene	*98*	*66-129*				
Client ID:	**S-6**					
Laboratory ID:	08-092-06					
Gasoline	**ND**	2.4	NWTPH-Gx	8-10-21	8-10-21	
Surrogate:	*Percent Recovery*	*Control Limits*				
Fluorobenzene	*104*	*66-129*				
Client ID:	**S-7**					
Laboratory ID:	08-092-07					
Gasoline	**ND**	2.5	NWTPH-Gx	8-10-21	8-10-21	
Surrogate:	*Percent Recovery*	*Control Limits*				
Fluorobenzene	*103*	*66-129*				

This report pertains to the samples analyzed in accordance with the chain of custody,
and is intended only for the use of the individual or company to whom it is addressed.

Date of Report: August 17, 2021
Samples Submitted: August 9, 2021
Laboratory Reference: 2108-092
Project: 094-21021

GASOLINE RANGE ORGANICS
NWTPH-Gx

Matrix: Soil
Units: mg/kg (ppm)

Analyte	Result	PQL	Method	Date Prepared	Date Analyzed	Flags
Client ID:	**S-8**					
Laboratory ID:	08-092-08					
Gasoline	**ND**	2.7	NWTPH-Gx	8-10-21	8-10-21	
Surrogate:	*Percent Recovery*	*Control Limits*				
Fluorobenzene	*104*	*66-129*				
Client ID:	**S-9**					
Laboratory ID:	08-092-09					
Gasoline	**ND**	2.5	NWTPH-Gx	8-10-21	8-10-21	
Surrogate:	*Percent Recovery*	*Control Limits*				
Fluorobenzene	*97*	*66-129*				
Client ID:	**S-10**					
Laboratory ID:	08-092-10					
Gasoline	**ND**	2.4	NWTPH-Gx	8-10-21	8-10-21	
Surrogate:	*Percent Recovery*	*Control Limits*				
Fluorobenzene	*103*	*66-129*				
Client ID:	**S-11**					
Laboratory ID:	08-092-11					
Gasoline	**ND**	2.2	NWTPH-Gx	8-10-21	8-10-21	
Surrogate:	*Percent Recovery*	*Control Limits*				
Fluorobenzene	*102*	*66-129*				
Client ID:	**S-12**					
Laboratory ID:	08-092-12					
Gasoline	**ND**	2.7	NWTPH-Gx	8-10-21	8-10-21	
Surrogate:	*Percent Recovery*	*Control Limits*				
Fluorobenzene	*103*	*66-129*				
Client ID:	**S-13**					
Laboratory ID:	08-092-13					
Gasoline	**ND**	3.2	NWTPH-Gx	8-10-21	8-10-21	
Surrogate:	*Percent Recovery*	*Control Limits*				
Fluorobenzene	*101*	*66-129*				
Client ID:	**S-14**					
Laboratory ID:	08-092-14					
Gasoline	**ND**	2.8	NWTPH-Gx	8-10-21	8-10-21	
Surrogate:	*Percent Recovery*	*Control Limits*				
Fluorobenzene	*105*	*66-129*				

This report pertains to the samples analyzed in accordance with the chain of custody,
and is intended only for the use of the individual or company to whom it is addressed.

Date of Report: August 17, 2021
Samples Submitted: August 9, 2021
Laboratory Reference: 2108-092
Project: 094-21021

GASOLINE RANGE ORGANICS
NWTPH-Gx
QUALITY CONTROL

Matrix: Soil
Units: mg/kg (ppm)

Analyte	Result	PQL	Method	Date Prepared	Date Analyzed	Flags
Client ID:	**S-15**					
Laboratory ID:	08-092-15					
Gasoline	**ND**	2.6	NWTPH-Gx	8-10-21	8-10-21	
Surrogate:	*Percent Recovery*	*Control Limits*				
Fluorobenzene	*102*	*66-129*				
Client ID:	**S-16**					
Laboratory ID:	08-092-16					
Gasoline	**ND**	3.1	NWTPH-Gx	8-10-21	8-10-21	
Surrogate:	*Percent Recovery*	*Control Limits*				
Fluorobenzene	*102*	*66-129*				
Client ID:	**S-17**					
Laboratory ID:	08-092-17					
Gasoline	**ND**	2.3	NWTPH-Gx	8-10-21	8-10-21	
Surrogate:	*Percent Recovery*	*Control Limits*				
Fluorobenzene	*101*	*66-129*				
Client ID:	**S-18**					
Laboratory ID:	08-092-18					
Gasoline	**ND**	2.7	NWTPH-Gx	8-10-21	8-10-21	
Surrogate:	*Percent Recovery*	*Control Limits*				
Fluorobenzene	*107*	*66-129*				
Client ID:	**S-19**					
Laboratory ID:	08-092-19					
Gasoline	**ND**	2.6	NWTPH-Gx	8-10-21	8-10-21	
Surrogate:	*Percent Recovery*	*Control Limits*				
Fluorobenzene	*101*	*66-129*				
Client ID:	**S-20**					
Laboratory ID:	08-092-20					
Gasoline	**ND**	3.2	NWTPH-Gx	8-10-21	8-10-21	
Surrogate:	*Percent Recovery*	*Control Limits*				
Fluorobenzene	*102*	*66-129*				
Client ID:	**S-21**					
Laboratory ID:	08-092-21					
Gasoline	**ND**	2.2	NWTPH-Gx	8-10-21	8-10-21	
Surrogate:	*Percent Recovery*	*Control Limits*				
Fluorobenzene	*107*	*66-129*				

This report pertains to the samples analyzed in accordance with the chain of custody,
and is intended only for the use of the individual or company to whom it is addressed.

Date of Report: August 17, 2021
Samples Submitted: August 9, 2021
Laboratory Reference: 2108-092
Project: 094-21021

GASOLINE RANGE ORGANICS
NWTPH-Gx

Matrix: Soil
Units: mg/kg (ppm)

Analyte	Result	PQL	Method	Date Prepared	Date Analyzed	Flags
Client ID:	**S-22**					
Laboratory ID:	08-092-22					
Gasoline	**ND**	2.6	NWTPH-Gx	8-10-21	8-10-21	
Surrogate:	*Percent Recovery*	*Control Limits*				
Fluorobenzene	*105*	*66-129*				

This report pertains to the samples analyzed in accordance with the chain of custody,
and is intended only for the use of the individual or company to whom it is addressed.

Date of Report: August 17, 2021
Samples Submitted: August 9, 2021
Laboratory Reference: 2108-092
Project: 094-21021

GASOLINE RANGE ORGANICS
NWTPH-Gx
QUALITY CONTROL

Matrix: Soil
Units: mg/kg (ppm)

Analyte	Result	PQL	Method	Date Prepared	Date Analyzed	Flags
METHOD BLANK						
Laboratory ID:	MB0810S2					
Gasoline	**ND**	5.0	NWTPH-Gx	8-10-21	8-10-21	
Surrogate:	*Percent Recovery*	*Control Limits*				
Fluorobenzene	*90*	*66-129*				
Laboratory ID:	MB0810S3					
Gasoline	**ND**	5.0	NWTPH-Gx	8-10-21	8-10-21	
Surrogate:	*Percent Recovery*	*Control Limits*				
Fluorobenzene	*102*	*66-129*				
Laboratory ID:	MB0810S4					
Gasoline	**ND**	5.0	NWTPH-Gx	8-10-21	8-10-21	
Surrogate:	*Percent Recovery*	*Control Limits*				
Fluorobenzene	*102*	*66-129*				

Analyte	Result		Spike Level		Source Result	Percent Recovery		Recovery Limits	RPD	RPD Limit	Flags
DUPLICATE											
Laboratory ID:	08-097-01										
	ORIG	DUP									
Gasoline	**ND**	**ND**	NA	NA		NA		NA	NA	30	
Surrogate:											
Fluorobenzene						*95*	*89*	*66-129*			
Laboratory ID:	08-049-01										
	ORIG	DUP									
Gasoline	**ND**	**ND**	NA	NA		NA		NA	NA	30	
Surrogate:											
Fluorobenzene						*97*	*106*	*66-129*			
Laboratory ID:	08-049-02										
	ORIG	DUP									
Gasoline	**ND**	**ND**	NA	NA		NA		NA	NA	30	
Surrogate:											
Fluorobenzene						*97*	*98*	*66-129*			

This report pertains to the samples analyzed in accordance with the chain of custody, and is intended only for the use of the individual or company to whom it is addressed.

Date of Report: August 17, 2021
Samples Submitted: August 9, 2021
Laboratory Reference: 2108-092
Project: 094-21021

DIESEL AND HEAVY OIL RANGE ORGANICS
NWTPH-Dx

Matrix: Soil
Units: mg/Kg (ppm)

Analyte	Result	PQL	Method	Date Prepared	Date Analyzed	Flags
Client ID:	**S-1**					
Laboratory ID:	08-092-01					
Diesel Range Organics	**ND**	27	NWTPH-Dx	8-10-21	8-10-21	
Lube Oil Range Organics	**ND**	53	NWTPH-Dx	8-10-21	8-10-21	
Surrogate:	*Percent Recovery*	*Control Limits*				
o-Terphenyl	*83*	*50-150*				
Client ID:	**S-2**					
Laboratory ID:	08-092-02					
Diesel Range Organics	**ND**	27	NWTPH-Dx	8-10-21	8-10-21	
Lube Oil Range Organics	**ND**	53	NWTPH-Dx	8-10-21	8-10-21	
Surrogate:	*Percent Recovery*	*Control Limits*				
o-Terphenyl	*78*	*50-150*				
Client ID:	**S-3**					
Laboratory ID:	08-092-03					
Diesel Range Organics	**ND**	26	NWTPH-Dx	8-10-21	8-10-21	
Lube Oil Range Organics	**ND**	51	NWTPH-Dx	8-10-21	8-10-21	
Surrogate:	*Percent Recovery*	*Control Limits*				
o-Terphenyl	*77*	*50-150*				
Client ID:	**S-4**					
Laboratory ID:	08-092-04					
Diesel Range Organics	**ND**	26	NWTPH-Dx	8-10-21	8-10-21	
Lube Oil Range Organics	**ND**	52	NWTPH-Dx	8-10-21	8-10-21	
Surrogate:	*Percent Recovery*	*Control Limits*				
o-Terphenyl	*92*	*50-150*				
Client ID:	**S-5**					
Laboratory ID:	08-092-05					
Diesel Range Organics	**ND**	26	NWTPH-Dx	8-10-21	8-10-21	
Lube Oil Range Organics	**ND**	52	NWTPH-Dx	8-10-21	8-10-21	
Surrogate:	*Percent Recovery*	*Control Limits*				
o-Terphenyl	*74*	*50-150*				
Client ID:	**S-6**					
Laboratory ID:	08-092-06					
Diesel Range Organics	**ND**	26	NWTPH-Dx	8-10-21	8-10-21	
Lube Oil Range Organics	**ND**	51	NWTPH-Dx	8-10-21	8-10-21	
Surrogate:	*Percent Recovery*	*Control Limits*				
o-Terphenyl	*80*	*50-150*				

This report pertains to the samples analyzed in accordance with the chain of custody,
and is intended only for the use of the individual or company to whom it is addressed.

Date of Report: August 17, 2021
Samples Submitted: August 9, 2021
Laboratory Reference: 2108-092
Project: 094-21021

DIESEL AND HEAVY OIL RANGE ORGANICS
NWTPH-Dx

Matrix: Soil
Units: mg/Kg (ppm)

Analyte	Result	PQL	Method	Date Prepared	Date Analyzed	Flags
Client ID:	**S-7**					
Laboratory ID:	08-092-07					
Diesel Range Organics	**ND**	26	NWTPH-Dx	8-10-21	8-10-21	
Lube Oil Range Organics	**ND**	52	NWTPH-Dx	8-10-21	8-10-21	
Surrogate:	*Percent Recovery*	*Control Limits*				
o-Terphenyl	*87*	*50-150*				
Client ID:	**S-8**					
Laboratory ID:	08-092-08					
Diesel Range Organics	**ND**	26	NWTPH-Dx	8-10-21	8-10-21	
Lube Oil Range Organics	**ND**	52	NWTPH-Dx	8-10-21	8-10-21	
Surrogate:	*Percent Recovery*	*Control Limits*				
o-Terphenyl	*82*	*50-150*				
Client ID:	**S-9**					
Laboratory ID:	08-092-09					
Diesel Range Organics	**ND**	26	NWTPH-Dx	8-10-21	8-10-21	
Lube Oil Range Organics	**ND**	51	NWTPH-Dx	8-10-21	8-10-21	
Surrogate:	*Percent Recovery*	*Control Limits*				
o-Terphenyl	*85*	*50-150*				
Client ID:	**S-10**					
Laboratory ID:	08-092-10					
Diesel Range Organics	**ND**	26	NWTPH-Dx	8-10-21	8-10-21	
Lube Oil Range Organics	**ND**	52	NWTPH-Dx	8-10-21	8-10-21	
Surrogate:	*Percent Recovery*	*Control Limits*				
o-Terphenyl	*90*	*50-150*				

This report pertains to the samples analyzed in accordance with the chain of custody,
and is intended only for the use of the individual or company to whom it is addressed.

Date of Report: August 17, 2021
Samples Submitted: August 9, 2021
Laboratory Reference: 2108-092
Project: 094-21021

DIESEL AND HEAVY OIL RANGE ORGANICS
NWTPH-Dx
QUALITY CONTROL

Matrix: Soil
Units: mg/Kg (ppm)

Analyte	Result	PQL	Method	Date Prepared	Date Analyzed	Flags
METHOD BLANK						
Laboratory ID:	MB0810S1					
Diesel Range Organics	**ND**	25	NWTPH-Dx	8-10-21	8-10-21	
Lube Oil Range Organics	**ND**	50	NWTPH-Dx	8-10-21	8-10-21	
Surrogate:	*Percent Recovery*	*Control Limits*				
o-Terphenyl	*84*	*50-150*				

Analyte	Result		Spike Level		Source Result	Percent Recovery		Recovery Limits	RPD	RPD Limit	Flags
DUPLICATE											
Laboratory ID:	08-092-01										
	ORIG	DUP									
Diesel Range	**ND**	**ND**	NA	NA		NA		NA	NA	NA	
Lube Oil Range	**ND**	**ND**	NA	NA		NA		NA	NA	NA	
Surrogate:											
o-Terphenyl						*83*	*83*	*50-150*			

This report pertains to the samples analyzed in accordance with the chain of custody,
and is intended only for the use of the individual or company to whom it is addressed.

Date of Report: August 17, 2021
Samples Submitted: August 9, 2021
Laboratory Reference: 2108-092
Project: 094-21021

DIESEL AND HEAVY OIL RANGE ORGANICS
NWTPH-Dx

Matrix: Soil
Units: mg/Kg (ppm)

Analyte	Result	PQL	Method	Date Prepared	Date Analyzed	Flags
Client ID:	**S-11**					
Laboratory ID:	08-092-11					
Diesel Range Organics	**ND**	26	NWTPH-Dx	8-12-21	8-16-21	
Lube Oil Range Organics	**ND**	52	NWTPH-Dx	8-12-21	8-16-21	
Surrogate:	*Percent Recovery*	*Control Limits*				
o-Terphenyl	*87*	*50-150*				
Client ID:	**S-12**					
Laboratory ID:	08-092-12					
Diesel Range Organics	**ND**	26	NWTPH-Dx	8-12-21	8-13-21	
Lube Oil Range Organics	**ND**	52	NWTPH-Dx	8-12-21	8-13-21	
Surrogate:	*Percent Recovery*	*Control Limits*				
o-Terphenyl	*84*	*50-150*				
Client ID:	**S-13**					
Laboratory ID:	08-092-13					
Diesel Range Organics	**ND**	26	NWTPH-Dx	8-12-21	8-16-21	
Lube Oil	**79**	52	NWTPH-Dx	8-12-21	8-16-21	
Surrogate:	*Percent Recovery*	*Control Limits*				
o-Terphenyl	*85*	*50-150*				
Client ID:	**S-14**					
Laboratory ID:	08-092-14					
Diesel Range Organics	**ND**	26	NWTPH-Dx	8-12-21	8-13-21	
Lube Oil Range Organics	**ND**	52	NWTPH-Dx	8-12-21	8-13-21	
Surrogate:	*Percent Recovery*	*Control Limits*				
o-Terphenyl	*89*	*50-150*				
Client ID:	**S-15**					
Laboratory ID:	08-092-15					
Diesel Range Organics	**ND**	27	NWTPH-Dx	8-12-21	8-16-21	
Lube Oil Range Organics	**ND**	53	NWTPH-Dx	8-12-21	8-16-21	
Surrogate:	*Percent Recovery*	*Control Limits*				
o-Terphenyl	*91*	*50-150*				
Client ID:	**S-16**					
Laboratory ID:	08-092-16					
Diesel Range Organics	**ND**	26	NWTPH-Dx	8-12-21	8-16-21	
Lube Oil Range Organics	**ND**	53	NWTPH-Dx	8-12-21	8-16-21	
Surrogate:	*Percent Recovery*	*Control Limits*				
o-Terphenyl	*86*	*50-150*				

This report pertains to the samples analyzed in accordance with the chain of custody, and is intended only for the use of the individual or company to whom it is addressed.

Date of Report: August 17, 2021
Samples Submitted: August 9, 2021
Laboratory Reference: 2108-092
Project: 094-21021

DIESEL AND HEAVY OIL RANGE ORGANICS
NWTPH-Dx

Matrix: Soil
Units: mg/Kg (ppm)

Analyte	Result	PQL	Method	Date Prepared	Date Analyzed	Flags
Client ID:	**S-17**					
Laboratory ID:	08-092-17					
Diesel Range Organics	**ND**	26	NWTPH-Dx	8-12-21	8-16-21	
Lube Oil	**57**	52	NWTPH-Dx	8-12-21	8-16-21	
Surrogate:	*Percent Recovery*	*Control Limits*				
o-Terphenyl	*87*	*50-150*				
Client ID:	**S-18**					
Laboratory ID:	08-092-18					
Diesel Range Organics	**ND**	26	NWTPH-Dx	8-12-21	8-16-21	
Lube Oil Range Organics	**ND**	52	NWTPH-Dx	8-12-21	8-16-21	
Surrogate:	*Percent Recovery*	*Control Limits*				
o-Terphenyl	*93*	*50-150*				
Client ID:	**S-19**					
Laboratory ID:	08-092-19					
Diesel Range Organics	**ND**	26	NWTPH-Dx	8-12-21	8-13-21	
Lube Oil Range Organics	**ND**	52	NWTPH-Dx	8-12-21	8-13-21	
Surrogate:	*Percent Recovery*	*Control Limits*				
o-Terphenyl	*93*	*50-150*				
Client ID:	**S-20**					
Laboratory ID:	08-092-20					
Diesel Range Organics	**ND**	26	NWTPH-Dx	8-12-21	8-13-21	
Lube Oil Range Organics	**ND**	52	NWTPH-Dx	8-12-21	8-13-21	
Surrogate:	*Percent Recovery*	*Control Limits*				
o-Terphenyl	*85*	*50-150*				
Client ID:	**S-21**					
Laboratory ID:	08-092-21					
Diesel Range Organics	**ND**	26	NWTPH-Dx	8-12-21	8-13-21	
Lube Oil Range Organics	**ND**	52	NWTPH-Dx	8-12-21	8-13-21	
Surrogate:	*Percent Recovery*	*Control Limits*				
o-Terphenyl	*84*	*50-150*				
Client ID:	**S-22**					
Laboratory ID:	08-092-22					
Diesel Range Organics	**ND**	26	NWTPH-Dx	8-12-21	8-13-21	
Lube Oil Range Organics	**ND**	53	NWTPH-Dx	8-12-21	8-13-21	
Surrogate:	*Percent Recovery*	*Control Limits*				
o-Terphenyl	*89*	*50-150*				

This report pertains to the samples analyzed in accordance with the chain of custody, and is intended only for the use of the individual or company to whom it is addressed.

Date of Report: August 17, 2021
Samples Submitted: August 9, 2021
Laboratory Reference: 2108-092
Project: 094-21021

DIESEL AND HEAVY OIL RANGE ORGANICS
NWTPH-Dx
QUALITY CONTROL

Matrix: Soil
Units: mg/Kg (ppm)

Analyte	Result	PQL	Method	Date Prepared	Date Analyzed	Flags
METHOD BLANK						
Laboratory ID:	MB0812S2					
Diesel Range Organics	**ND**	25	NWTPH-Dx	8-12-21	8-13-21	
Lube Oil Range Organics	**ND**	50	NWTPH-Dx	8-12-21	8-13-21	
Surrogate:	*Percent Recovery*	*Control Limits*				
o-Terphenyl	*98*	*50-150*				

Analyte	Result		Spike Level		Source Result	Percent Recovery	Recovery Limits	RPD	RPD Limit	Flags
DUPLICATE										
Laboratory ID:	08-092-11									
	ORIG	DUP								
Diesel Range	**ND**	**ND**	NA	NA		NA	NA	NA	NA	
Lube Oil Range	**ND**	**ND**	NA	NA		NA	NA	NA	NA	
Surrogate:										
o-Terphenyl						*87* *85*	*50-150*			
Laboratory ID:	SB0812S2									
	ORIG	DUP								
Diesel Fuel #2	**78.2**	**84.9**	NA	NA		NA	NA	8	NA	
Lube Oil Range	**ND**	**ND**	NA	NA		NA	NA	NA	NA	
Surrogate:										
o-Terphenyl						*97* *102*	*50-150*			

This report pertains to the samples analyzed in accordance with the chain of custody,
and is intended only for the use of the individual or company to whom it is addressed.

Date of Report: August 17, 2021
Samples Submitted: August 9, 2021
Laboratory Reference: 2108-092
Project: 094-21021

PAHs EPA 8270E/SIM

Matrix: Soil
Units: mg/Kg

Analyte	Result	PQL	Method	Date Prepared	Date Analyzed	Flags
Client ID:	**S-1**					
Laboratory ID:	08-092-01					
Naphthalene	**ND**	0.0071	EPA 8270E/SIM	8-10-21	8-10-21	
2-Methylnaphthalene	**ND**	0.0071	EPA 8270E/SIM	8-10-21	8-10-21	
1-Methylnaphthalene	**ND**	0.0071	EPA 8270E/SIM	8-10-21	8-10-21	
Acenaphthylene	**ND**	0.0071	EPA 8270E/SIM	8-10-21	8-10-21	
Acenaphthene	**ND**	0.0071	EPA 8270E/SIM	8-10-21	8-10-21	
Fluorene	**ND**	0.0071	EPA 8270E/SIM	8-10-21	8-10-21	
Phenanthrene	**ND**	0.0071	EPA 8270E/SIM	8-10-21	8-10-21	
Anthracene	**ND**	0.0071	EPA 8270E/SIM	8-10-21	8-10-21	
Fluoranthene	**ND**	0.0071	EPA 8270E/SIM	8-10-21	8-10-21	
Pyrene	**ND**	0.0071	EPA 8270E/SIM	8-10-21	8-10-21	
Benzo[a]anthracene	**ND**	0.0071	EPA 8270E/SIM	8-10-21	8-10-21	
Chrysene	**ND**	0.0071	EPA 8270E/SIM	8-10-21	8-10-21	
Benzo[b]fluoranthene	**ND**	0.0071	EPA 8270E/SIM	8-10-21	8-10-21	
Benzo(j,k)fluoranthene	**ND**	0.0071	EPA 8270E/SIM	8-10-21	8-10-21	
Benzo[a]pyrene	**ND**	0.0071	EPA 8270E/SIM	8-10-21	8-10-21	
Indeno(1,2,3-c,d)pyrene	**ND**	0.0071	EPA 8270E/SIM	8-10-21	8-10-21	
Dibenz[a,h]anthracene	**ND**	0.0071	EPA 8270E/SIM	8-10-21	8-10-21	
Benzo[g,h,i]perylene	**ND**	0.0071	EPA 8270E/SIM	8-10-21	8-10-21	
Surrogate:	*Percent Recovery*	*Control Limits*				
2-Fluorobiphenyl	*78*	*41 - 114*				
Pyrene-d10	*107*	*39 - 115*				
Terphenyl-d14	*114*	*44 - 125*				

This report pertains to the samples analyzed in accordance with the chain of custody,
and is intended only for the use of the individual or company to whom it is addressed.

Date of Report: August 17, 2021
Samples Submitted: August 9, 2021
Laboratory Reference: 2108-092
Project: 094-21021

PAHs EPA 8270E/SIM

Matrix: Soil
Units: mg/Kg

Analyte	Result	PQL	Method	Date Prepared	Date Analyzed	Flags
Client ID:	**S-2**					
Laboratory ID:	08-092-02					
Naphthalene	**ND**	0.0071	EPA 8270E/SIM	8-10-21	8-10-21	
2-Methylnaphthalene	**ND**	0.0071	EPA 8270E/SIM	8-10-21	8-10-21	
1-Methylnaphthalene	**ND**	0.0071	EPA 8270E/SIM	8-10-21	8-10-21	
Acenaphthylene	**ND**	0.0071	EPA 8270E/SIM	8-10-21	8-10-21	
Acenaphthene	**ND**	0.0071	EPA 8270E/SIM	8-10-21	8-10-21	
Fluorene	**ND**	0.0071	EPA 8270E/SIM	8-10-21	8-10-21	
Phenanthrene	**ND**	0.0071	EPA 8270E/SIM	8-10-21	8-10-21	
Anthracene	**ND**	0.0071	EPA 8270E/SIM	8-10-21	8-10-21	
Fluoranthene	**ND**	0.0071	EPA 8270E/SIM	8-10-21	8-10-21	
Pyrene	**ND**	0.0071	EPA 8270E/SIM	8-10-21	8-10-21	
Benzo[a]anthracene	**ND**	0.0071	EPA 8270E/SIM	8-10-21	8-10-21	
Chrysene	**ND**	0.0071	EPA 8270E/SIM	8-10-21	8-10-21	
Benzo[b]fluoranthene	**ND**	0.0071	EPA 8270E/SIM	8-10-21	8-10-21	
Benzo(j,k)fluoranthene	**ND**	0.0071	EPA 8270E/SIM	8-10-21	8-10-21	
Benzo[a]pyrene	**ND**	0.0071	EPA 8270E/SIM	8-10-21	8-10-21	
Indeno(1,2,3-c,d)pyrene	**ND**	0.0071	EPA 8270E/SIM	8-10-21	8-10-21	
Dibenz[a,h]anthracene	**ND**	0.0071	EPA 8270E/SIM	8-10-21	8-10-21	
Benzo[g,h,i]perylene	**ND**	0.0071	EPA 8270E/SIM	8-10-21	8-10-21	
Surrogate:	*Percent Recovery*	*Control Limits*				
2-Fluorobiphenyl	*76*	*41 - 114*				
Pyrene-d10	*99*	*39 - 115*				
Terphenyl-d14	*102*	*44 - 125*				

This report pertains to the samples analyzed in accordance with the chain of custody,
and is intended only for the use of the individual or company to whom it is addressed.

Date of Report: August 17, 2021
Samples Submitted: August 9, 2021
Laboratory Reference: 2108-092
Project: 094-21021

PAHs EPA 8270E/SIM

Matrix: Soil
Units: mg/Kg

Analyte	Result	PQL	Method	Date Prepared	Date Analyzed	Flags
Client ID:	**S-3**					
Laboratory ID:	08-092-03					
Naphthalene	**ND**	0.0068	EPA 8270E/SIM	8-10-21	8-10-21	
2-Methylnaphthalene	**ND**	0.0068	EPA 8270E/SIM	8-10-21	8-10-21	
1-Methylnaphthalene	**ND**	0.0068	EPA 8270E/SIM	8-10-21	8-10-21	
Acenaphthylene	**ND**	0.0068	EPA 8270E/SIM	8-10-21	8-10-21	
Acenaphthene	**ND**	0.0068	EPA 8270E/SIM	8-10-21	8-10-21	
Fluorene	**ND**	0.0068	EPA 8270E/SIM	8-10-21	8-10-21	
Phenanthrene	**ND**	0.0068	EPA 8270E/SIM	8-10-21	8-10-21	
Anthracene	**ND**	0.0068	EPA 8270E/SIM	8-10-21	8-10-21	
Fluoranthene	**ND**	0.0068	EPA 8270E/SIM	8-10-21	8-10-21	
Pyrene	**ND**	0.0068	EPA 8270E/SIM	8-10-21	8-10-21	
Benzo[a]anthracene	**ND**	0.0068	EPA 8270E/SIM	8-10-21	8-10-21	
Chrysene	**ND**	0.0068	EPA 8270E/SIM	8-10-21	8-10-21	
Benzo[b]fluoranthene	**ND**	0.0068	EPA 8270E/SIM	8-10-21	8-10-21	
Benzo(j,k)fluoranthene	**ND**	0.0068	EPA 8270E/SIM	8-10-21	8-10-21	
Benzo[a]pyrene	**ND**	0.0068	EPA 8270E/SIM	8-10-21	8-10-21	
Indeno(1,2,3-c,d)pyrene	**ND**	0.0068	EPA 8270E/SIM	8-10-21	8-10-21	
Dibenz[a,h]anthracene	**ND**	0.0068	EPA 8270E/SIM	8-10-21	8-10-21	
Benzo[g,h,i]perylene	**ND**	0.0068	EPA 8270E/SIM	8-10-21	8-10-21	
Surrogate:	*Percent Recovery*	*Control Limits*				
2-Fluorobiphenyl	*82*	*41 - 114*				
Pyrene-d10	*97*	*39 - 115*				
Terphenyl-d14	*101*	*44 - 125*				

This report pertains to the samples analyzed in accordance with the chain of custody,
and is intended only for the use of the individual or company to whom it is addressed.

Date of Report: August 17, 2021
Samples Submitted: August 9, 2021
Laboratory Reference: 2108-092
Project: 094-21021

PAHs EPA 8270E/SIM

Matrix: Soil
Units: mg/Kg

Analyte	Result	PQL	Method	Date Prepared	Date Analyzed	Flags
Client ID:	**S-4**					
Laboratory ID:	08-092-04					
Naphthalene	**ND**	0.0069	EPA 8270E/SIM	8-10-21	8-10-21	
2-Methylnaphthalene	**ND**	0.0069	EPA 8270E/SIM	8-10-21	8-10-21	
1-Methylnaphthalene	**ND**	0.0069	EPA 8270E/SIM	8-10-21	8-10-21	
Acenaphthylene	**ND**	0.0069	EPA 8270E/SIM	8-10-21	8-10-21	
Acenaphthene	**ND**	0.0069	EPA 8270E/SIM	8-10-21	8-10-21	
Fluorene	**ND**	0.0069	EPA 8270E/SIM	8-10-21	8-10-21	
Phenanthrene	**ND**	0.0069	EPA 8270E/SIM	8-10-21	8-10-21	
Anthracene	**ND**	0.0069	EPA 8270E/SIM	8-10-21	8-10-21	
Fluoranthene	**ND**	0.0069	EPA 8270E/SIM	8-10-21	8-10-21	
Pyrene	**ND**	0.0069	EPA 8270E/SIM	8-10-21	8-10-21	
Benzo[a]anthracene	**ND**	0.0069	EPA 8270E/SIM	8-10-21	8-10-21	
Chrysene	**ND**	0.0069	EPA 8270E/SIM	8-10-21	8-10-21	
Benzo[b]fluoranthene	**ND**	0.0069	EPA 8270E/SIM	8-10-21	8-10-21	
Benzo(j,k)fluoranthene	**ND**	0.0069	EPA 8270E/SIM	8-10-21	8-10-21	
Benzo[a]pyrene	**ND**	0.0069	EPA 8270E/SIM	8-10-21	8-10-21	
Indeno(1,2,3-c,d)pyrene	**ND**	0.0069	EPA 8270E/SIM	8-10-21	8-10-21	
Dibenz[a,h]anthracene	**ND**	0.0069	EPA 8270E/SIM	8-10-21	8-10-21	
Benzo[g,h,i]perylene	**ND**	0.0069	EPA 8270E/SIM	8-10-21	8-10-21	
Surrogate:	*Percent Recovery*	*Control Limits*				
2-Fluorobiphenyl	*71*	*41 - 114*				
Pyrene-d10	*92*	*39 - 115*				
Terphenyl-d14	*98*	*44 - 125*				

This report pertains to the samples analyzed in accordance with the chain of custody,
and is intended only for the use of the individual or company to whom it is addressed.

Date of Report: August 17, 2021
Samples Submitted: August 9, 2021
Laboratory Reference: 2108-092
Project: 094-21021

PAHs EPA 8270E/SIM

Matrix: Soil
Units: mg/Kg

Analyte	Result	PQL	Method	Date Prepared	Date Analyzed	Flags
Client ID:	**S-5**					
Laboratory ID:	08-092-05					
Naphthalene	**ND**	0.0069	EPA 8270E/SIM	8-10-21	8-10-21	
2-Methylnaphthalene	**ND**	0.0069	EPA 8270E/SIM	8-10-21	8-10-21	
1-Methylnaphthalene	**ND**	0.0069	EPA 8270E/SIM	8-10-21	8-10-21	
Acenaphthylene	**ND**	0.0069	EPA 8270E/SIM	8-10-21	8-10-21	
Acenaphthene	**ND**	0.0069	EPA 8270E/SIM	8-10-21	8-10-21	
Fluorene	**ND**	0.0069	EPA 8270E/SIM	8-10-21	8-10-21	
Phenanthrene	**ND**	0.0069	EPA 8270E/SIM	8-10-21	8-10-21	
Anthracene	**ND**	0.0069	EPA 8270E/SIM	8-10-21	8-10-21	
Fluoranthene	**ND**	0.0069	EPA 8270E/SIM	8-10-21	8-10-21	
Pyrene	**ND**	0.0069	EPA 8270E/SIM	8-10-21	8-10-21	
Benzo[a]anthracene	**ND**	0.0069	EPA 8270E/SIM	8-10-21	8-10-21	
Chrysene	**ND**	0.0069	EPA 8270E/SIM	8-10-21	8-10-21	
Benzo[b]fluoranthene	**ND**	0.0069	EPA 8270E/SIM	8-10-21	8-10-21	
Benzo(j,k)fluoranthene	**ND**	0.0069	EPA 8270E/SIM	8-10-21	8-10-21	
Benzo[a]pyrene	**ND**	0.0069	EPA 8270E/SIM	8-10-21	8-10-21	
Indeno(1,2,3-c,d)pyrene	**ND**	0.0069	EPA 8270E/SIM	8-10-21	8-10-21	
Dibenz[a,h]anthracene	**ND**	0.0069	EPA 8270E/SIM	8-10-21	8-10-21	
Benzo[g,h,i]perylene	**ND**	0.0069	EPA 8270E/SIM	8-10-21	8-10-21	
Surrogate:	*Percent Recovery*	*Control Limits*				
2-Fluorobiphenyl	*76*	*41 - 114*				
Pyrene-d10	*95*	*39 - 115*				
Terphenyl-d14	*96*	*44 - 125*				

This report pertains to the samples analyzed in accordance with the chain of custody,
and is intended only for the use of the individual or company to whom it is addressed.

Date of Report: August 17, 2021
Samples Submitted: August 9, 2021
Laboratory Reference: 2108-092
Project: 094-21021

PAHs EPA 8270E/SIM

Matrix: Soil
Units: mg/Kg

Analyte	Result	PQL	Method	Date Prepared	Date Analyzed	Flags
Client ID:	**S-6**					
Laboratory ID:	08-092-06					
Naphthalene	**ND**	0.0068	EPA 8270E/SIM	8-10-21	8-10-21	
2-Methylnaphthalene	**ND**	0.0068	EPA 8270E/SIM	8-10-21	8-10-21	
1-Methylnaphthalene	**ND**	0.0068	EPA 8270E/SIM	8-10-21	8-10-21	
Acenaphthylene	**ND**	0.0068	EPA 8270E/SIM	8-10-21	8-10-21	
Acenaphthene	**ND**	0.0068	EPA 8270E/SIM	8-10-21	8-10-21	
Fluorene	**ND**	0.0068	EPA 8270E/SIM	8-10-21	8-10-21	
Phenanthrene	**ND**	0.0068	EPA 8270E/SIM	8-10-21	8-10-21	
Anthracene	**ND**	0.0068	EPA 8270E/SIM	8-10-21	8-10-21	
Fluoranthene	**ND**	0.0068	EPA 8270E/SIM	8-10-21	8-10-21	
Pyrene	**ND**	0.0068	EPA 8270E/SIM	8-10-21	8-10-21	
Benzo[a]anthracene	**ND**	0.0068	EPA 8270E/SIM	8-10-21	8-10-21	
Chrysene	**ND**	0.0068	EPA 8270E/SIM	8-10-21	8-10-21	
Benzo[b]fluoranthene	**ND**	0.0068	EPA 8270E/SIM	8-10-21	8-10-21	
Benzo(j,k)fluoranthene	**ND**	0.0068	EPA 8270E/SIM	8-10-21	8-10-21	
Benzo[a]pyrene	**ND**	0.0068	EPA 8270E/SIM	8-10-21	8-10-21	
Indeno(1,2,3-c,d)pyrene	**ND**	0.0068	EPA 8270E/SIM	8-10-21	8-10-21	
Dibenz[a,h]anthracene	**ND**	0.0068	EPA 8270E/SIM	8-10-21	8-10-21	
Benzo[g,h,i]perylene	**ND**	0.0068	EPA 8270E/SIM	8-10-21	8-10-21	
Surrogate:	*Percent Recovery*	*Control Limits*				
2-Fluorobiphenyl	*76*	*41 - 114*				
Pyrene-d10	*94*	*39 - 115*				
Terphenyl-d14	*97*	*44 - 125*				

This report pertains to the samples analyzed in accordance with the chain of custody,
and is intended only for the use of the individual or company to whom it is addressed.

Date of Report: August 17, 2021
Samples Submitted: August 9, 2021
Laboratory Reference: 2108-092
Project: 094-21021

PAHs EPA 8270E/SIM

Matrix: Soil
Units: mg/Kg

Analyte	Result	PQL	Method	Date Prepared	Date Analyzed	Flags
Client ID:	**S-7**					
Laboratory ID:	08-092-07					
Naphthalene	**ND**	0.0069	EPA 8270E/SIM	8-10-21	8-10-21	
2-Methylnaphthalene	**ND**	0.0069	EPA 8270E/SIM	8-10-21	8-10-21	
1-Methylnaphthalene	**ND**	0.0069	EPA 8270E/SIM	8-10-21	8-10-21	
Acenaphthylene	**ND**	0.0069	EPA 8270E/SIM	8-10-21	8-10-21	
Acenaphthene	**ND**	0.0069	EPA 8270E/SIM	8-10-21	8-10-21	
Fluorene	**ND**	0.0069	EPA 8270E/SIM	8-10-21	8-10-21	
Phenanthrene	**ND**	0.0069	EPA 8270E/SIM	8-10-21	8-10-21	
Anthracene	**ND**	0.0069	EPA 8270E/SIM	8-10-21	8-10-21	
Fluoranthene	**ND**	0.0069	EPA 8270E/SIM	8-10-21	8-10-21	
Pyrene	**ND**	0.0069	EPA 8270E/SIM	8-10-21	8-10-21	
Benzo[a]anthracene	**ND**	0.0069	EPA 8270E/SIM	8-10-21	8-10-21	
Chrysene	**ND**	0.0069	EPA 8270E/SIM	8-10-21	8-10-21	
Benzo[b]fluoranthene	**ND**	0.0069	EPA 8270E/SIM	8-10-21	8-10-21	
Benzo(j,k)fluoranthene	**ND**	0.0069	EPA 8270E/SIM	8-10-21	8-10-21	
Benzo[a]pyrene	**ND**	0.0069	EPA 8270E/SIM	8-10-21	8-10-21	
Indeno(1,2,3-c,d)pyrene	**ND**	0.0069	EPA 8270E/SIM	8-10-21	8-10-21	
Dibenz[a,h]anthracene	**ND**	0.0069	EPA 8270E/SIM	8-10-21	8-10-21	
Benzo[g,h,i]perylene	**ND**	0.0069	EPA 8270E/SIM	8-10-21	8-10-21	
Surrogate:	*Percent Recovery*	*Control Limits*				
2-Fluorobiphenyl	*63*	*41 - 114*				
Pyrene-d10	*95*	*39 - 115*				
Terphenyl-d14	*96*	*44 - 125*				

This report pertains to the samples analyzed in accordance with the chain of custody,
and is intended only for the use of the individual or company to whom it is addressed.

Date of Report: August 17, 2021
Samples Submitted: August 9, 2021
Laboratory Reference: 2108-092
Project: 094-21021

PAHs EPA 8270E/SIM

Matrix: Soil
Units: mg/Kg

Analyte	Result	PQL	Method	Date Prepared	Date Analyzed	Flags
Client ID:	**S-8**					
Laboratory ID:	08-092-08					
Naphthalene	**ND**	0.0069	EPA 8270E/SIM	8-10-21	8-10-21	
2-Methylnaphthalene	**ND**	0.0069	EPA 8270E/SIM	8-10-21	8-10-21	
1-Methylnaphthalene	**ND**	0.0069	EPA 8270E/SIM	8-10-21	8-10-21	
Acenaphthylene	**ND**	0.0069	EPA 8270E/SIM	8-10-21	8-10-21	
Acenaphthene	**ND**	0.0069	EPA 8270E/SIM	8-10-21	8-10-21	
Fluorene	**ND**	0.0069	EPA 8270E/SIM	8-10-21	8-10-21	
Phenanthrene	**ND**	0.0069	EPA 8270E/SIM	8-10-21	8-10-21	
Anthracene	**ND**	0.0069	EPA 8270E/SIM	8-10-21	8-10-21	
Fluoranthene	**ND**	0.0069	EPA 8270E/SIM	8-10-21	8-10-21	
Pyrene	**ND**	0.0069	EPA 8270E/SIM	8-10-21	8-10-21	
Benzo[a]anthracene	**ND**	0.0069	EPA 8270E/SIM	8-10-21	8-10-21	
Chrysene	**ND**	0.0069	EPA 8270E/SIM	8-10-21	8-10-21	
Benzo[b]fluoranthene	**ND**	0.0069	EPA 8270E/SIM	8-10-21	8-10-21	
Benzo(j,k)fluoranthene	**ND**	0.0069	EPA 8270E/SIM	8-10-21	8-10-21	
Benzo[a]pyrene	**ND**	0.0069	EPA 8270E/SIM	8-10-21	8-10-21	
Indeno(1,2,3-c,d)pyrene	**ND**	0.0069	EPA 8270E/SIM	8-10-21	8-10-21	
Dibenz[a,h]anthracene	**ND**	0.0069	EPA 8270E/SIM	8-10-21	8-10-21	
Benzo[g,h,i]perylene	**ND**	0.0069	EPA 8270E/SIM	8-10-21	8-10-21	
Surrogate:	*Percent Recovery*	*Control Limits*				
2-Fluorobiphenyl	*68*	*41 - 114*				
Pyrene-d10	*90*	*39 - 115*				
Terphenyl-d14	*94*	*44 - 125*				

This report pertains to the samples analyzed in accordance with the chain of custody,
and is intended only for the use of the individual or company to whom it is addressed.

Date of Report: August 17, 2021
Samples Submitted: August 9, 2021
Laboratory Reference: 2108-092
Project: 094-21021

PAHs EPA 8270E/SIM

Matrix: Soil
Units: mg/Kg

Analyte	Result	PQL	Method	Date Prepared	Date Analyzed	Flags
Client ID:	**S-9**					
Laboratory ID:	08-092-09					
Naphthalene	**ND**	0.0068	EPA 8270E/SIM	8-10-21	8-10-21	
2-Methylnaphthalene	**ND**	0.0068	EPA 8270E/SIM	8-10-21	8-10-21	
1-Methylnaphthalene	**ND**	0.0068	EPA 8270E/SIM	8-10-21	8-10-21	
Acenaphthylene	**ND**	0.0068	EPA 8270E/SIM	8-10-21	8-10-21	
Acenaphthene	**ND**	0.0068	EPA 8270E/SIM	8-10-21	8-10-21	
Fluorene	**ND**	0.0068	EPA 8270E/SIM	8-10-21	8-10-21	
Phenanthrene	**ND**	0.0068	EPA 8270E/SIM	8-10-21	8-10-21	
Anthracene	**ND**	0.0068	EPA 8270E/SIM	8-10-21	8-10-21	
Fluoranthene	**ND**	0.0068	EPA 8270E/SIM	8-10-21	8-10-21	
Pyrene	**ND**	0.0068	EPA 8270E/SIM	8-10-21	8-10-21	
Benzo[a]anthracene	**ND**	0.0068	EPA 8270E/SIM	8-10-21	8-10-21	
Chrysene	**ND**	0.0068	EPA 8270E/SIM	8-10-21	8-10-21	
Benzo[b]fluoranthene	**ND**	0.0068	EPA 8270E/SIM	8-10-21	8-10-21	
Benzo(j,k)fluoranthene	**ND**	0.0068	EPA 8270E/SIM	8-10-21	8-10-21	
Benzo[a]pyrene	**ND**	0.0068	EPA 8270E/SIM	8-10-21	8-10-21	
Indeno(1,2,3-c,d)pyrene	**ND**	0.0068	EPA 8270E/SIM	8-10-21	8-10-21	
Dibenz[a,h]anthracene	**ND**	0.0068	EPA 8270E/SIM	8-10-21	8-10-21	
Benzo[g,h,i]perylene	**ND**	0.0068	EPA 8270E/SIM	8-10-21	8-10-21	
Surrogate:	*Percent Recovery*	*Control Limits*				
2-Fluorobiphenyl	*75*	*41 - 114*				
Pyrene-d10	*100*	*39 - 115*				
Terphenyl-d14	*106*	*44 - 125*				

This report pertains to the samples analyzed in accordance with the chain of custody,
and is intended only for the use of the individual or company to whom it is addressed.

Date of Report: August 17, 2021
Samples Submitted: August 9, 2021
Laboratory Reference: 2108-092
Project: 094-21021

PAHs EPA 8270E/SIM

Matrix: Soil
Units: mg/Kg

Analyte	Result	PQL	Method	Date Prepared	Date Analyzed	Flags
Client ID:	**S-10**					
Laboratory ID:	08-092-10					
Naphthalene	**ND**	0.0069	EPA 8270E/SIM	8-10-21	8-11-21	
2-Methylnaphthalene	**ND**	0.0069	EPA 8270E/SIM	8-10-21	8-11-21	
1-Methylnaphthalene	**ND**	0.0069	EPA 8270E/SIM	8-10-21	8-11-21	
Acenaphthylene	**ND**	0.0069	EPA 8270E/SIM	8-10-21	8-11-21	
Acenaphthene	**ND**	0.0069	EPA 8270E/SIM	8-10-21	8-11-21	
Fluorene	**ND**	0.0069	EPA 8270E/SIM	8-10-21	8-11-21	
Phenanthrene	**0.0075**	0.0069	EPA 8270E/SIM	8-10-21	8-11-21	
Anthracene	**ND**	0.0069	EPA 8270E/SIM	8-10-21	8-11-21	
Fluoranthene	**ND**	0.0069	EPA 8270E/SIM	8-10-21	8-11-21	
Pyrene	**0.0083**	0.0069	EPA 8270E/SIM	8-10-21	8-11-21	
Benzo[a]anthracene	**ND**	0.0069	EPA 8270E/SIM	8-10-21	8-11-21	
Chrysene	**ND**	0.0069	EPA 8270E/SIM	8-10-21	8-11-21	
Benzo[b]fluoranthene	**ND**	0.0069	EPA 8270E/SIM	8-10-21	8-11-21	
Benzo(j,k)fluoranthene	**ND**	0.0069	EPA 8270E/SIM	8-10-21	8-11-21	
Benzo[a]pyrene	**ND**	0.0069	EPA 8270E/SIM	8-10-21	8-11-21	
Indeno(1,2,3-c,d)pyrene	**ND**	0.0069	EPA 8270E/SIM	8-10-21	8-11-21	
Dibenz[a,h]anthracene	**ND**	0.0069	EPA 8270E/SIM	8-10-21	8-11-21	
Benzo[g,h,i]perylene	**ND**	0.0069	EPA 8270E/SIM	8-10-21	8-11-21	
Surrogate:	*Percent Recovery*	*Control Limits*				
2-Fluorobiphenyl	*79*	*41 - 114*				
Pyrene-d10	*95*	*39 - 115*				
Terphenyl-d14	*101*	*44 - 125*				

This report pertains to the samples analyzed in accordance with the chain of custody,
and is intended only for the use of the individual or company to whom it is addressed.

Date of Report: August 17, 2021
Samples Submitted: August 9, 2021
Laboratory Reference: 2108-092
Project: 094-21021

PAHs EPA 8270E/SIM

Matrix: Soil
Units: mg/Kg

Analyte	Result	PQL	Method	Date Prepared	Date Analyzed	Flags
Client ID:	**S-11**					
Laboratory ID:	08-092-11					
Naphthalene	**ND**	0.0069	EPA 8270E/SIM	8-10-21	8-11-21	
2-Methylnaphthalene	**ND**	0.0069	EPA 8270E/SIM	8-10-21	8-11-21	
1-Methylnaphthalene	**ND**	0.0069	EPA 8270E/SIM	8-10-21	8-11-21	
Acenaphthylene	**ND**	0.0069	EPA 8270E/SIM	8-10-21	8-11-21	
Acenaphthene	**ND**	0.0069	EPA 8270E/SIM	8-10-21	8-11-21	
Fluorene	**ND**	0.0069	EPA 8270E/SIM	8-10-21	8-11-21	
Phenanthrene	**0.022**	0.0069	EPA 8270E/SIM	8-10-21	8-11-21	
Anthracene	**ND**	0.0069	EPA 8270E/SIM	8-10-21	8-11-21	
Fluoranthene	**0.029**	0.0069	EPA 8270E/SIM	8-10-21	8-11-21	
Pyrene	**0.028**	0.0069	EPA 8270E/SIM	8-10-21	8-11-21	
Benzo[a]anthracene	**0.014**	0.0069	EPA 8270E/SIM	8-10-21	8-11-21	
Chrysene	**0.014**	0.0069	EPA 8270E/SIM	8-10-21	8-11-21	
Benzo[b]fluoranthene	**0.014**	0.0069	EPA 8270E/SIM	8-10-21	8-11-21	
Benzo(j,k)fluoranthene	**ND**	0.0069	EPA 8270E/SIM	8-10-21	8-11-21	
Benzo[a]pyrene	**0.012**	0.0069	EPA 8270E/SIM	8-10-21	8-11-21	
Indeno(1,2,3-c,d)pyrene	**ND**	0.0069	EPA 8270E/SIM	8-10-21	8-11-21	
Dibenz[a,h]anthracene	**ND**	0.0069	EPA 8270E/SIM	8-10-21	8-11-21	
Benzo[g,h,i]perylene	**0.0070**	0.0069	EPA 8270E/SIM	8-10-21	8-11-21	
Surrogate:	*Percent Recovery*	*Control Limits*				
2-Fluorobiphenyl	*76*	*41 - 114*				
Pyrene-d10	*103*	*39 - 115*				
Terphenyl-d14	*103*	*44 - 125*				

This report pertains to the samples analyzed in accordance with the chain of custody,
and is intended only for the use of the individual or company to whom it is addressed.

Date of Report: August 17, 2021
Samples Submitted: August 9, 2021
Laboratory Reference: 2108-092
Project: 094-21021

PAHs EPA 8270E/SIM

Matrix: Soil
Units: mg/Kg

Analyte	Result	PQL	Method	Date Prepared	Date Analyzed	Flags
Client ID:	**S-12**					
Laboratory ID:	08-092-12					
Naphthalene	**ND**	0.0070	EPA 8270E/SIM	8-10-21	8-10-21	
2-Methylnaphthalene	**ND**	0.0070	EPA 8270E/SIM	8-10-21	8-10-21	
1-Methylnaphthalene	**ND**	0.0070	EPA 8270E/SIM	8-10-21	8-10-21	
Acenaphthylene	**ND**	0.0070	EPA 8270E/SIM	8-10-21	8-10-21	
Acenaphthene	**ND**	0.0070	EPA 8270E/SIM	8-10-21	8-10-21	
Fluorene	**ND**	0.0070	EPA 8270E/SIM	8-10-21	8-10-21	
Phenanthrene	**ND**	0.0070	EPA 8270E/SIM	8-10-21	8-10-21	
Anthracene	**ND**	0.0070	EPA 8270E/SIM	8-10-21	8-10-21	
Fluoranthene	**ND**	0.0070	EPA 8270E/SIM	8-10-21	8-10-21	
Pyrene	**ND**	0.0070	EPA 8270E/SIM	8-10-21	8-10-21	
Benzo[a]anthracene	**ND**	0.0070	EPA 8270E/SIM	8-10-21	8-10-21	
Chrysene	**ND**	0.0070	EPA 8270E/SIM	8-10-21	8-10-21	
Benzo[b]fluoranthene	**ND**	0.0070	EPA 8270E/SIM	8-10-21	8-10-21	
Benzo(j,k)fluoranthene	**ND**	0.0070	EPA 8270E/SIM	8-10-21	8-10-21	
Benzo[a]pyrene	**ND**	0.0070	EPA 8270E/SIM	8-10-21	8-10-21	
Indeno(1,2,3-c,d)pyrene	**ND**	0.0070	EPA 8270E/SIM	8-10-21	8-10-21	
Dibenz[a,h]anthracene	**ND**	0.0070	EPA 8270E/SIM	8-10-21	8-10-21	
Benzo[g,h,i]perylene	**ND**	0.0070	EPA 8270E/SIM	8-10-21	8-10-21	
Surrogate:	*Percent Recovery*	*Control Limits*				
2-Fluorobiphenyl	*86*	*41 - 114*				
Pyrene-d10	*91*	*39 - 115*				
Terphenyl-d14	*94*	*44 - 125*				

This report pertains to the samples analyzed in accordance with the chain of custody,
and is intended only for the use of the individual or company to whom it is addressed.

Date of Report: August 17, 2021
Samples Submitted: August 9, 2021
Laboratory Reference: 2108-092
Project: 094-21021

PAHs EPA 8270E/SIM

Matrix: Soil
Units: mg/Kg

Analyte	Result	PQL	Method	Date Prepared	Date Analyzed	Flags
Client ID:	**S-13**					
Laboratory ID:	08-092-13					
Naphthalene	**ND**	0.0070	EPA 8270E/SIM	8-10-21	8-10-21	
2-Methylnaphthalene	**ND**	0.0070	EPA 8270E/SIM	8-10-21	8-10-21	
1-Methylnaphthalene	**ND**	0.0070	EPA 8270E/SIM	8-10-21	8-10-21	
Acenaphthylene	**ND**	0.0070	EPA 8270E/SIM	8-10-21	8-10-21	
Acenaphthene	**ND**	0.0070	EPA 8270E/SIM	8-10-21	8-10-21	
Fluorene	**ND**	0.0070	EPA 8270E/SIM	8-10-21	8-10-21	
Phenanthrene	**ND**	0.0070	EPA 8270E/SIM	8-10-21	8-10-21	
Anthracene	**ND**	0.0070	EPA 8270E/SIM	8-10-21	8-10-21	
Fluoranthene	**ND**	0.0070	EPA 8270E/SIM	8-10-21	8-10-21	
Pyrene	**ND**	0.0070	EPA 8270E/SIM	8-10-21	8-10-21	
Benzo[a]anthracene	**ND**	0.0070	EPA 8270E/SIM	8-10-21	8-10-21	
Chrysene	**ND**	0.0070	EPA 8270E/SIM	8-10-21	8-10-21	
Benzo[b]fluoranthene	**ND**	0.0070	EPA 8270E/SIM	8-10-21	8-10-21	
Benzo(j,k)fluoranthene	**ND**	0.0070	EPA 8270E/SIM	8-10-21	8-10-21	
Benzo[a]pyrene	**ND**	0.0070	EPA 8270E/SIM	8-10-21	8-10-21	
Indeno(1,2,3-c,d)pyrene	**ND**	0.0070	EPA 8270E/SIM	8-10-21	8-10-21	
Dibenz[a,h]anthracene	**ND**	0.0070	EPA 8270E/SIM	8-10-21	8-10-21	
Benzo[g,h,i]perylene	**ND**	0.0070	EPA 8270E/SIM	8-10-21	8-10-21	
Surrogate:	*Percent Recovery*	*Control Limits*				
2-Fluorobiphenyl	*77*	*41 - 114*				
Pyrene-d10	*92*	*39 - 115*				
Terphenyl-d14	*98*	*44 - 125*				

This report pertains to the samples analyzed in accordance with the chain of custody, and is intended only for the use of the individual or company to whom it is addressed.

Date of Report: August 17, 2021
Samples Submitted: August 9, 2021
Laboratory Reference: 2108-092
Project: 094-21021

PAHs EPA 8270E/SIM

Matrix: Soil
Units: mg/Kg

Analyte	Result	PQL	Method	Date Prepared	Date Analyzed	Flags
Client ID:	**S-14**					
Laboratory ID:	08-092-14					
Naphthalene	**ND**	0.0069	EPA 8270E/SIM	8-10-21	8-10-21	
2-Methylnaphthalene	**ND**	0.0069	EPA 8270E/SIM	8-10-21	8-10-21	
1-Methylnaphthalene	**ND**	0.0069	EPA 8270E/SIM	8-10-21	8-10-21	
Acenaphthylene	**ND**	0.0069	EPA 8270E/SIM	8-10-21	8-10-21	
Acenaphthene	**ND**	0.0069	EPA 8270E/SIM	8-10-21	8-10-21	
Fluorene	**ND**	0.0069	EPA 8270E/SIM	8-10-21	8-10-21	
Phenanthrene	**ND**	0.0069	EPA 8270E/SIM	8-10-21	8-10-21	
Anthracene	**ND**	0.0069	EPA 8270E/SIM	8-10-21	8-10-21	
Fluoranthene	**ND**	0.0069	EPA 8270E/SIM	8-10-21	8-10-21	
Pyrene	**ND**	0.0069	EPA 8270E/SIM	8-10-21	8-10-21	
Benzo[a]anthracene	**ND**	0.0069	EPA 8270E/SIM	8-10-21	8-10-21	
Chrysene	**ND**	0.0069	EPA 8270E/SIM	8-10-21	8-10-21	
Benzo[b]fluoranthene	**ND**	0.0069	EPA 8270E/SIM	8-10-21	8-10-21	
Benzo(j,k)fluoranthene	**ND**	0.0069	EPA 8270E/SIM	8-10-21	8-10-21	
Benzo[a]pyrene	**ND**	0.0069	EPA 8270E/SIM	8-10-21	8-10-21	
Indeno(1,2,3-c,d)pyrene	**ND**	0.0069	EPA 8270E/SIM	8-10-21	8-10-21	
Dibenz[a,h]anthracene	**ND**	0.0069	EPA 8270E/SIM	8-10-21	8-10-21	
Benzo[g,h,i]perylene	**ND**	0.0069	EPA 8270E/SIM	8-10-21	8-10-21	
Surrogate:	*Percent Recovery*	*Control Limits*				
2-Fluorobiphenyl	*70*	*41 - 114*				
Pyrene-d10	*93*	*39 - 115*				
Terphenyl-d14	*93*	*44 - 125*				

This report pertains to the samples analyzed in accordance with the chain of custody,
and is intended only for the use of the individual or company to whom it is addressed.

Date of Report: August 17, 2021
Samples Submitted: August 9, 2021
Laboratory Reference: 2108-092
Project: 094-21021

PAHs EPA 8270E/SIM

Matrix: Soil
Units: mg/Kg

Analyte	Result	PQL	Method	Date Prepared	Date Analyzed	Flags
Client ID:	**S-15**					
Laboratory ID:	08-092-15					
Naphthalene	**ND**	0.0071	EPA 8270E/SIM	8-10-21	8-11-21	
2-Methylnaphthalene	**ND**	0.0071	EPA 8270E/SIM	8-10-21	8-11-21	
1-Methylnaphthalene	**ND**	0.0071	EPA 8270E/SIM	8-10-21	8-11-21	
Acenaphthylene	**ND**	0.0071	EPA 8270E/SIM	8-10-21	8-11-21	
Acenaphthene	**ND**	0.0071	EPA 8270E/SIM	8-10-21	8-11-21	
Fluorene	**ND**	0.0071	EPA 8270E/SIM	8-10-21	8-11-21	
Phenanthrene	**ND**	0.0071	EPA 8270E/SIM	8-10-21	8-11-21	
Anthracene	**ND**	0.0071	EPA 8270E/SIM	8-10-21	8-11-21	
Fluoranthene	**ND**	0.0071	EPA 8270E/SIM	8-10-21	8-11-21	
Pyrene	**ND**	0.0071	EPA 8270E/SIM	8-10-21	8-11-21	
Benzo[a]anthracene	**ND**	0.0071	EPA 8270E/SIM	8-10-21	8-11-21	
Chrysene	**ND**	0.0071	EPA 8270E/SIM	8-10-21	8-11-21	
Benzo[b]fluoranthene	**ND**	0.0071	EPA 8270E/SIM	8-10-21	8-11-21	
Benzo(j,k)fluoranthene	**ND**	0.0071	EPA 8270E/SIM	8-10-21	8-11-21	
Benzo[a]pyrene	**ND**	0.0071	EPA 8270E/SIM	8-10-21	8-11-21	
Indeno(1,2,3-c,d)pyrene	**ND**	0.0071	EPA 8270E/SIM	8-10-21	8-11-21	
Dibenz[a,h]anthracene	**ND**	0.0071	EPA 8270E/SIM	8-10-21	8-11-21	
Benzo[g,h,i]perylene	**ND**	0.0071	EPA 8270E/SIM	8-10-21	8-11-21	
Surrogate:	*Percent Recovery*	*Control Limits*				
2-Fluorobiphenyl	*80*	*41 - 114*				
Pyrene-d10	*97*	*39 - 115*				
Terphenyl-d14	*99*	*44 - 125*				

This report pertains to the samples analyzed in accordance with the chain of custody,
and is intended only for the use of the individual or company to whom it is addressed.

Date of Report: August 17, 2021
Samples Submitted: August 9, 2021
Laboratory Reference: 2108-092
Project: 094-21021

PAHs EPA 8270E/SIM

Matrix: Soil
Units: mg/Kg

Analyte	Result	PQL	Method	Date Prepared	Date Analyzed	Flags
Client ID:	**S-16**					
Laboratory ID:	08-092-16					
Naphthalene	**ND**	0.0070	EPA 8270E/SIM	8-10-21	8-11-21	
2-Methylnaphthalene	**ND**	0.0070	EPA 8270E/SIM	8-10-21	8-11-21	
1-Methylnaphthalene	**ND**	0.0070	EPA 8270E/SIM	8-10-21	8-11-21	
Acenaphthylene	**ND**	0.0070	EPA 8270E/SIM	8-10-21	8-11-21	
Acenaphthene	**ND**	0.0070	EPA 8270E/SIM	8-10-21	8-11-21	
Fluorene	**ND**	0.0070	EPA 8270E/SIM	8-10-21	8-11-21	
Phenanthrene	**ND**	0.0070	EPA 8270E/SIM	8-10-21	8-11-21	
Anthracene	**ND**	0.0070	EPA 8270E/SIM	8-10-21	8-11-21	
Fluoranthene	**ND**	0.0070	EPA 8270E/SIM	8-10-21	8-11-21	
Pyrene	**ND**	0.0070	EPA 8270E/SIM	8-10-21	8-11-21	
Benzo[a]anthracene	**ND**	0.0070	EPA 8270E/SIM	8-10-21	8-11-21	
Chrysene	**ND**	0.0070	EPA 8270E/SIM	8-10-21	8-11-21	
Benzo[b]fluoranthene	**ND**	0.0070	EPA 8270E/SIM	8-10-21	8-11-21	
Benzo(j,k)fluoranthene	**ND**	0.0070	EPA 8270E/SIM	8-10-21	8-11-21	
Benzo[a]pyrene	**ND**	0.0070	EPA 8270E/SIM	8-10-21	8-11-21	
Indeno(1,2,3-c,d)pyrene	**ND**	0.0070	EPA 8270E/SIM	8-10-21	8-11-21	
Dibenz[a,h]anthracene	**ND**	0.0070	EPA 8270E/SIM	8-10-21	8-11-21	
Benzo[g,h,i]perylene	**ND**	0.0070	EPA 8270E/SIM	8-10-21	8-11-21	
Surrogate:	*Percent Recovery*	*Control Limits*				
2-Fluorobiphenyl	*72*	*41 - 114*				
Pyrene-d10	*93*	*39 - 115*				
Terphenyl-d14	*98*	*44 - 125*				

This report pertains to the samples analyzed in accordance with the chain of custody,
and is intended only for the use of the individual or company to whom it is addressed.

Date of Report: August 17, 2021
Samples Submitted: August 9, 2021
Laboratory Reference: 2108-092
Project: 094-21021

PAHs EPA 8270E/SIM

Matrix: Soil
Units: mg/Kg

Analyte	Result	PQL	Method	Date Prepared	Date Analyzed	Flags
Client ID:	**S-17**					
Laboratory ID:	08-092-17					
Naphthalene	**ND**	0.0069	EPA 8270E/SIM	8-10-21	8-11-21	
2-Methylnaphthalene	**ND**	0.0069	EPA 8270E/SIM	8-10-21	8-11-21	
1-Methylnaphthalene	**ND**	0.0069	EPA 8270E/SIM	8-10-21	8-11-21	
Acenaphthylene	**ND**	0.0069	EPA 8270E/SIM	8-10-21	8-11-21	
Acenaphthene	**ND**	0.0069	EPA 8270E/SIM	8-10-21	8-11-21	
Fluorene	**ND**	0.0069	EPA 8270E/SIM	8-10-21	8-11-21	
Phenanthrene	**ND**	0.0069	EPA 8270E/SIM	8-10-21	8-11-21	
Anthracene	**ND**	0.0069	EPA 8270E/SIM	8-10-21	8-11-21	
Fluoranthene	**ND**	0.0069	EPA 8270E/SIM	8-10-21	8-11-21	
Pyrene	**ND**	0.0069	EPA 8270E/SIM	8-10-21	8-11-21	
Benzo[a]anthracene	**ND**	0.0069	EPA 8270E/SIM	8-10-21	8-11-21	
Chrysene	**ND**	0.0069	EPA 8270E/SIM	8-10-21	8-11-21	
Benzo[b]fluoranthene	**ND**	0.0069	EPA 8270E/SIM	8-10-21	8-11-21	
Benzo(j,k)fluoranthene	**ND**	0.0069	EPA 8270E/SIM	8-10-21	8-11-21	
Benzo[a]pyrene	**ND**	0.0069	EPA 8270E/SIM	8-10-21	8-11-21	
Indeno(1,2,3-c,d)pyrene	**ND**	0.0069	EPA 8270E/SIM	8-10-21	8-11-21	
Dibenz[a,h]anthracene	**ND**	0.0069	EPA 8270E/SIM	8-10-21	8-11-21	
Benzo[g,h,i]perylene	**ND**	0.0069	EPA 8270E/SIM	8-10-21	8-11-21	
Surrogate:	*Percent Recovery*	*Control Limits*				
2-Fluorobiphenyl	*87*	*41 - 114*				
Pyrene-d10	*93*	*39 - 115*				
Terphenyl-d14	*96*	*44 - 125*				

This report pertains to the samples analyzed in accordance with the chain of custody,
and is intended only for the use of the individual or company to whom it is addressed.

Date of Report: August 17, 2021
Samples Submitted: August 9, 2021
Laboratory Reference: 2108-092
Project: 094-21021

PAHs EPA 8270E/SIM

Matrix: Soil
Units: mg/Kg

Analyte	Result	PQL	Method	Date Prepared	Date Analyzed	Flags
Client ID:	**S-18**					
Laboratory ID:	08-092-18					
Naphthalene	**ND**	0.0069	EPA 8270E/SIM	8-10-21	8-11-21	
2-Methylnaphthalene	**ND**	0.0069	EPA 8270E/SIM	8-10-21	8-11-21	
1-Methylnaphthalene	**ND**	0.0069	EPA 8270E/SIM	8-10-21	8-11-21	
Acenaphthylene	**ND**	0.0069	EPA 8270E/SIM	8-10-21	8-11-21	
Acenaphthene	**ND**	0.0069	EPA 8270E/SIM	8-10-21	8-11-21	
Fluorene	**ND**	0.0069	EPA 8270E/SIM	8-10-21	8-11-21	
Phenanthrene	**ND**	0.0069	EPA 8270E/SIM	8-10-21	8-11-21	
Anthracene	**ND**	0.0069	EPA 8270E/SIM	8-10-21	8-11-21	
Fluoranthene	**ND**	0.0069	EPA 8270E/SIM	8-10-21	8-11-21	
Pyrene	**ND**	0.0069	EPA 8270E/SIM	8-10-21	8-11-21	
Benzo[a]anthracene	**ND**	0.0069	EPA 8270E/SIM	8-10-21	8-11-21	
Chrysene	**ND**	0.0069	EPA 8270E/SIM	8-10-21	8-11-21	
Benzo[b]fluoranthene	**ND**	0.0069	EPA 8270E/SIM	8-10-21	8-11-21	
Benzo(j,k)fluoranthene	**ND**	0.0069	EPA 8270E/SIM	8-10-21	8-11-21	
Benzo[a]pyrene	**ND**	0.0069	EPA 8270E/SIM	8-10-21	8-11-21	
Indeno(1,2,3-c,d)pyrene	**ND**	0.0069	EPA 8270E/SIM	8-10-21	8-11-21	
Dibenz[a,h]anthracene	**ND**	0.0069	EPA 8270E/SIM	8-10-21	8-11-21	
Benzo[g,h,i]perylene	**ND**	0.0069	EPA 8270E/SIM	8-10-21	8-11-21	
Surrogate:	*Percent Recovery*	*Control Limits*				
2-Fluorobiphenyl	*73*	*41 - 114*				
Pyrene-d10	*95*	*39 - 115*				
Terphenyl-d14	*97*	*44 - 125*				

This report pertains to the samples analyzed in accordance with the chain of custody, and is intended only for the use of the individual or company to whom it is addressed.

Date of Report: August 17, 2021
Samples Submitted: August 9, 2021
Laboratory Reference: 2108-092
Project: 094-21021

PAHs EPA 8270E/SIM

Matrix: Soil
Units: mg/Kg

Analyte	Result	PQL	Method	Date Prepared	Date Analyzed	Flags
Client ID:	**S-19**					
Laboratory ID:	08-092-19					
Naphthalene	**ND**	0.0069	EPA 8270E/SIM	8-10-21	8-10-21	
2-Methylnaphthalene	**ND**	0.0069	EPA 8270E/SIM	8-10-21	8-10-21	
1-Methylnaphthalene	**ND**	0.0069	EPA 8270E/SIM	8-10-21	8-10-21	
Acenaphthylene	**ND**	0.0069	EPA 8270E/SIM	8-10-21	8-10-21	
Acenaphthene	**ND**	0.0069	EPA 8270E/SIM	8-10-21	8-10-21	
Fluorene	**ND**	0.0069	EPA 8270E/SIM	8-10-21	8-10-21	
Phenanthrene	**ND**	0.0069	EPA 8270E/SIM	8-10-21	8-10-21	
Anthracene	**ND**	0.0069	EPA 8270E/SIM	8-10-21	8-10-21	
Fluoranthene	**ND**	0.0069	EPA 8270E/SIM	8-10-21	8-10-21	
Pyrene	**ND**	0.0069	EPA 8270E/SIM	8-10-21	8-10-21	
Benzo[a]anthracene	**ND**	0.0069	EPA 8270E/SIM	8-10-21	8-10-21	
Chrysene	**ND**	0.0069	EPA 8270E/SIM	8-10-21	8-10-21	
Benzo[b]fluoranthene	**ND**	0.0069	EPA 8270E/SIM	8-10-21	8-10-21	
Benzo(j,k)fluoranthene	**ND**	0.0069	EPA 8270E/SIM	8-10-21	8-10-21	
Benzo[a]pyrene	**ND**	0.0069	EPA 8270E/SIM	8-10-21	8-10-21	
Indeno(1,2,3-c,d)pyrene	**ND**	0.0069	EPA 8270E/SIM	8-10-21	8-10-21	
Dibenz[a,h]anthracene	**ND**	0.0069	EPA 8270E/SIM	8-10-21	8-10-21	
Benzo[g,h,i]perylene	**ND**	0.0069	EPA 8270E/SIM	8-10-21	8-10-21	
Surrogate:	*Percent Recovery*	*Control Limits*				
2-Fluorobiphenyl	*83*	*41 - 114*				
Pyrene-d10	*94*	*39 - 115*				
Terphenyl-d14	*98*	*44 - 125*				

This report pertains to the samples analyzed in accordance with the chain of custody, and is intended only for the use of the individual or company to whom it is addressed.

Date of Report: August 17, 2021
Samples Submitted: August 9, 2021
Laboratory Reference: 2108-092
Project: 094-21021

PAHs EPA 8270E/SIM

Matrix: Soil
Units: mg/Kg

Analyte	Result	PQL	Method	Date Prepared	Date Analyzed	Flags
Client ID:	**S-20**					
Laboratory ID:	08-092-20					
Naphthalene	**ND**	0.0070	EPA 8270E/SIM	8-10-21	8-10-21	
2-Methylnaphthalene	**ND**	0.0070	EPA 8270E/SIM	8-10-21	8-10-21	
1-Methylnaphthalene	**ND**	0.0070	EPA 8270E/SIM	8-10-21	8-10-21	
Acenaphthylene	**ND**	0.0070	EPA 8270E/SIM	8-10-21	8-10-21	
Acenaphthene	**ND**	0.0070	EPA 8270E/SIM	8-10-21	8-10-21	
Fluorene	**ND**	0.0070	EPA 8270E/SIM	8-10-21	8-10-21	
Phenanthrene	**ND**	0.0070	EPA 8270E/SIM	8-10-21	8-10-21	
Anthracene	**ND**	0.0070	EPA 8270E/SIM	8-10-21	8-10-21	
Fluoranthene	**ND**	0.0070	EPA 8270E/SIM	8-10-21	8-10-21	
Pyrene	**ND**	0.0070	EPA 8270E/SIM	8-10-21	8-10-21	
Benzo[a]anthracene	**ND**	0.0070	EPA 8270E/SIM	8-10-21	8-10-21	
Chrysene	**ND**	0.0070	EPA 8270E/SIM	8-10-21	8-10-21	
Benzo[b]fluoranthene	**ND**	0.0070	EPA 8270E/SIM	8-10-21	8-10-21	
Benzo(j,k)fluoranthene	**ND**	0.0070	EPA 8270E/SIM	8-10-21	8-10-21	
Benzo[a]pyrene	**ND**	0.0070	EPA 8270E/SIM	8-10-21	8-10-21	
Indeno(1,2,3-c,d)pyrene	**ND**	0.0070	EPA 8270E/SIM	8-10-21	8-10-21	
Dibenz[a,h]anthracene	**ND**	0.0070	EPA 8270E/SIM	8-10-21	8-10-21	
Benzo[g,h,i]perylene	**ND**	0.0070	EPA 8270E/SIM	8-10-21	8-10-21	
Surrogate:	*Percent Recovery*	*Control Limits*				
2-Fluorobiphenyl	*87*	*41 - 114*				
Pyrene-d10	*98*	*39 - 115*				
Terphenyl-d14	*101*	*44 - 125*				

This report pertains to the samples analyzed in accordance with the chain of custody, and is intended only for the use of the individual or company to whom it is addressed.

Date of Report: August 17, 2021
Samples Submitted: August 9, 2021
Laboratory Reference: 2108-092
Project: 094-21021

PAHs EPA 8270E/SIM

Matrix: Soil
Units: mg/Kg

Analyte	Result	PQL	Method	Date Prepared	Date Analyzed	Flags
Client ID:	**S-21**					
Laboratory ID:	08-092-21					
Naphthalene	**ND**	0.0069	EPA 8270E/SIM	8-10-21	8-10-21	
2-Methylnaphthalene	**ND**	0.0069	EPA 8270E/SIM	8-10-21	8-10-21	
1-Methylnaphthalene	**ND**	0.0069	EPA 8270E/SIM	8-10-21	8-10-21	
Acenaphthylene	**ND**	0.0069	EPA 8270E/SIM	8-10-21	8-10-21	
Acenaphthene	**ND**	0.0069	EPA 8270E/SIM	8-10-21	8-10-21	
Fluorene	**ND**	0.0069	EPA 8270E/SIM	8-10-21	8-10-21	
Phenanthrene	**ND**	0.0069	EPA 8270E/SIM	8-10-21	8-10-21	
Anthracene	**ND**	0.0069	EPA 8270E/SIM	8-10-21	8-10-21	
Fluoranthene	**ND**	0.0069	EPA 8270E/SIM	8-10-21	8-10-21	
Pyrene	**ND**	0.0069	EPA 8270E/SIM	8-10-21	8-10-21	
Benzo[a]anthracene	**ND**	0.0069	EPA 8270E/SIM	8-10-21	8-10-21	
Chrysene	**ND**	0.0069	EPA 8270E/SIM	8-10-21	8-10-21	
Benzo[b]fluoranthene	**ND**	0.0069	EPA 8270E/SIM	8-10-21	8-10-21	
Benzo(j,k)fluoranthene	**ND**	0.0069	EPA 8270E/SIM	8-10-21	8-10-21	
Benzo[a]pyrene	**ND**	0.0069	EPA 8270E/SIM	8-10-21	8-10-21	
Indeno(1,2,3-c,d)pyrene	**ND**	0.0069	EPA 8270E/SIM	8-10-21	8-10-21	
Dibenz[a,h]anthracene	**ND**	0.0069	EPA 8270E/SIM	8-10-21	8-10-21	
Benzo[g,h,i]perylene	**ND**	0.0069	EPA 8270E/SIM	8-10-21	8-10-21	
Surrogate:	*Percent Recovery*	*Control Limits*				
2-Fluorobiphenyl	*79*	*41 - 114*				
Pyrene-d10	*98*	*39 - 115*				
Terphenyl-d14	*99*	*44 - 125*				

This report pertains to the samples analyzed in accordance with the chain of custody,
and is intended only for the use of the individual or company to whom it is addressed.

Date of Report: August 17, 2021
Samples Submitted: August 9, 2021
Laboratory Reference: 2108-092
Project: 094-21021

PAHs EPA 8270E/SIM

Matrix: Soil
Units: mg/Kg

Analyte	Result	PQL	Method	Date Prepared	Date Analyzed	Flags
Client ID:	**S-22**					
Laboratory ID:	08-092-22					
Naphthalene	**ND**	0.0070	EPA 8270E/SIM	8-10-21	8-10-21	
2-Methylnaphthalene	**ND**	0.0070	EPA 8270E/SIM	8-10-21	8-10-21	
1-Methylnaphthalene	**ND**	0.0070	EPA 8270E/SIM	8-10-21	8-10-21	
Acenaphthylene	**ND**	0.0070	EPA 8270E/SIM	8-10-21	8-10-21	
Acenaphthene	**ND**	0.0070	EPA 8270E/SIM	8-10-21	8-10-21	
Fluorene	**ND**	0.0070	EPA 8270E/SIM	8-10-21	8-10-21	
Phenanthrene	**ND**	0.0070	EPA 8270E/SIM	8-10-21	8-10-21	
Anthracene	**ND**	0.0070	EPA 8270E/SIM	8-10-21	8-10-21	
Fluoranthene	**ND**	0.0070	EPA 8270E/SIM	8-10-21	8-10-21	
Pyrene	**ND**	0.0070	EPA 8270E/SIM	8-10-21	8-10-21	
Benzo[a]anthracene	**ND**	0.0070	EPA 8270E/SIM	8-10-21	8-10-21	
Chrysene	**ND**	0.0070	EPA 8270E/SIM	8-10-21	8-10-21	
Benzo[b]fluoranthene	**ND**	0.0070	EPA 8270E/SIM	8-10-21	8-10-21	
Benzo(j,k)fluoranthene	**ND**	0.0070	EPA 8270E/SIM	8-10-21	8-10-21	
Benzo[a]pyrene	**ND**	0.0070	EPA 8270E/SIM	8-10-21	8-10-21	
Indeno(1,2,3-c,d)pyrene	**ND**	0.0070	EPA 8270E/SIM	8-10-21	8-10-21	
Dibenz[a,h]anthracene	**ND**	0.0070	EPA 8270E/SIM	8-10-21	8-10-21	
Benzo[g,h,i]perylene	**ND**	0.0070	EPA 8270E/SIM	8-10-21	8-10-21	
Surrogate:	*Percent Recovery*	*Control Limits*				
2-Fluorobiphenyl	*77*	*41 - 114*				
Pyrene-d10	*90*	*39 - 115*				
Terphenyl-d14	*97*	*44 - 125*				

This report pertains to the samples analyzed in accordance with the chain of custody, and is intended only for the use of the individual or company to whom it is addressed.

Date of Report: August 17, 2021
Samples Submitted: August 9, 2021
Laboratory Reference: 2108-092
Project: 094-21021

PAHs EPA 8270E/SIM
QUALITY CONTROL

Matrix: Soil
Units: mg/Kg

Analyte	Result	PQL	Method	Date Prepared	Date Analyzed	Flags
METHOD BLANK						
Laboratory ID:	MB0810S1					
Naphthalene	**ND**	0.0067	EPA 8270E/SIM	8-10-21	8-10-21	
2-Methylnaphthalene	**ND**	0.0067	EPA 8270E/SIM	8-10-21	8-10-21	
1-Methylnaphthalene	**ND**	0.0067	EPA 8270E/SIM	8-10-21	8-10-21	
Acenaphthylene	**ND**	0.0067	EPA 8270E/SIM	8-10-21	8-10-21	
Acenaphthene	**ND**	0.0067	EPA 8270E/SIM	8-10-21	8-10-21	
Fluorene	**ND**	0.0067	EPA 8270E/SIM	8-10-21	8-10-21	
Phenanthrene	**ND**	0.0067	EPA 8270E/SIM	8-10-21	8-10-21	
Anthracene	**ND**	0.0067	EPA 8270E/SIM	8-10-21	8-10-21	
Fluoranthene	**ND**	0.0067	EPA 8270E/SIM	8-10-21	8-10-21	
Pyrene	**ND**	0.0067	EPA 8270E/SIM	8-10-21	8-10-21	
Benzo[a]anthracene	**ND**	0.0067	EPA 8270E/SIM	8-10-21	8-10-21	
Chrysene	**ND**	0.0067	EPA 8270E/SIM	8-10-21	8-10-21	
Benzo[b]fluoranthene	**ND**	0.0067	EPA 8270E/SIM	8-10-21	8-10-21	
Benzo(j,k)fluoranthene	**ND**	0.0067	EPA 8270E/SIM	8-10-21	8-10-21	
Benzo[a]pyrene	**ND**	0.0067	EPA 8270E/SIM	8-10-21	8-10-21	
Indeno(1,2,3-c,d)pyrene	**ND**	0.0067	EPA 8270E/SIM	8-10-21	8-10-21	
Dibenz[a,h]anthracene	**ND**	0.0067	EPA 8270E/SIM	8-10-21	8-10-21	
Benzo[g,h,i]perylene	**ND**	0.0067	EPA 8270E/SIM	8-10-21	8-10-21	
Surrogate:	*Percent Recovery*	*Control Limits*				
2-Fluorobiphenyl	*95*	*41 - 114*				
Pyrene-d10	*96*	*39 - 115*				
Terphenyl-d14	*100*	*44 - 125*				

This report pertains to the samples analyzed in accordance with the chain of custody,
and is intended only for the use of the individual or company to whom it is addressed.

Date of Report: August 17, 2021
Samples Submitted: August 9, 2021
Laboratory Reference: 2108-092
Project: 094-21021

PAHs EPA 8270E/SIM
QUALITY CONTROL

Matrix: Soil
Units: mg/Kg

Analyte	Result	PQL	Method	Date Prepared	Date Analyzed	Flags
METHOD BLANK						
Laboratory ID:	MB0810S2					
Naphthalene	**ND**	0.0067	EPA 8270E/SIM	8-10-21	8-10-21	
2-Methylnaphthalene	**ND**	0.0067	EPA 8270E/SIM	8-10-21	8-10-21	
1-Methylnaphthalene	**ND**	0.0067	EPA 8270E/SIM	8-10-21	8-10-21	
Acenaphthylene	**ND**	0.0067	EPA 8270E/SIM	8-10-21	8-10-21	
Acenaphthene	**ND**	0.0067	EPA 8270E/SIM	8-10-21	8-10-21	
Fluorene	**ND**	0.0067	EPA 8270E/SIM	8-10-21	8-10-21	
Phenanthrene	**ND**	0.0067	EPA 8270E/SIM	8-10-21	8-10-21	
Anthracene	**ND**	0.0067	EPA 8270E/SIM	8-10-21	8-10-21	
Fluoranthene	**ND**	0.0067	EPA 8270E/SIM	8-10-21	8-10-21	
Pyrene	**ND**	0.0067	EPA 8270E/SIM	8-10-21	8-10-21	
Benzo[a]anthracene	**ND**	0.0067	EPA 8270E/SIM	8-10-21	8-10-21	
Chrysene	**ND**	0.0067	EPA 8270E/SIM	8-10-21	8-10-21	
Benzo[b]fluoranthene	**ND**	0.0067	EPA 8270E/SIM	8-10-21	8-10-21	
Benzo(j,k)fluoranthene	**ND**	0.0067	EPA 8270E/SIM	8-10-21	8-10-21	
Benzo[a]pyrene	**ND**	0.0067	EPA 8270E/SIM	8-10-21	8-10-21	
Indeno(1,2,3-c,d)pyrene	**ND**	0.0067	EPA 8270E/SIM	8-10-21	8-10-21	
Dibenz[a,h]anthracene	**ND**	0.0067	EPA 8270E/SIM	8-10-21	8-10-21	
Benzo[g,h,i]perylene	**ND**	0.0067	EPA 8270E/SIM	8-10-21	8-10-21	
Surrogate:	*Percent Recovery*	*Control Limits*				
2-Fluorobiphenyl	*94*	*41 - 114*				
Pyrene-d10	*101*	*39 - 115*				
Terphenyl-d14	*104*	*44 - 125*				

This report pertains to the samples analyzed in accordance with the chain of custody,
and is intended only for the use of the individual or company to whom it is addressed.

Date of Report: August 17, 2021
Samples Submitted: August 9, 2021
Laboratory Reference: 2108-092
Project: 094-21021

PAHs EPA 8270E/SIM
QUALITY CONTROL

Matrix: Soil
Units: mg/Kg

Analyte	Result		Spike Level		Source Result	Percent Recovery		Recovery Limits	RPD	RPD Limit	Flags
MATRIX SPIKES											
Laboratory ID:	08-092-02										
	MS	MSD	MS	MSD		MS	MSD				
Naphthalene	**0.131**	**0.129**	0.167	0.167	ND	78	77	41 - 123	2	23	
Acenaphthylene	**0.153**	**0.147**	0.167	0.167	ND	92	88	45 - 124	4	20	
Acenaphthene	**0.155**	**0.144**	0.167	0.167	ND	93	86	46 - 122	7	23	
Fluorene	**0.152**	**0.147**	0.167	0.167	ND	91	88	45 - 128	3	27	
Phenanthrene	**0.164**	**0.159**	0.167	0.167	ND	98	95	38 - 133	3	33	
Anthracene	**0.172**	**0.163**	0.167	0.167	ND	103	98	49 - 127	5	21	
Fluoranthene	**0.162**	**0.174**	0.167	0.167	ND	97	104	45 - 130	7	29	
Pyrene	**0.176**	**0.173**	0.167	0.167	ND	105	104	43 - 132	2	32	
Benzo[a]anthracene	**0.162**	**0.164**	0.167	0.167	ND	97	98	49 - 139	1	27	
Chrysene	**0.169**	**0.168**	0.167	0.167	ND	101	101	47 - 127	1	28	
Benzo[b]fluoranthene	**0.161**	**0.173**	0.167	0.167	ND	96	104	46 - 129	7	31	
Benzo(j,k)fluoranthene	**0.172**	**0.166**	0.167	0.167	ND	103	99	46 - 128	4	25	
Benzo[a]pyrene	**0.162**	**0.164**	0.167	0.167	ND	97	98	47 - 134	1	27	
Indeno(1,2,3-c,d)pyrene	**0.157**	**0.150**	0.167	0.167	ND	94	90	42 - 133	5	25	
Dibenz[a,h]anthracene	**0.158**	**0.161**	0.167	0.167	ND	95	96	46 - 129	2	24	
Benzo[g,h,i]perylene	**0.159**	**0.163**	0.167	0.167	ND	95	98	44 - 129	2	27	
Surrogate:											
2-Fluorobiphenyl						*80*	*82*	*41 - 114*			
Pyrene-d10						*98*	*94*	*39 - 115*			
Terphenyl-d14						*98*	*96*	*44 - 125*			

This report pertains to the samples analyzed in accordance with the chain of custody, and is intended only for the use of the individual or company to whom it is addressed.

Date of Report: August 17, 2021
Samples Submitted: August 9, 2021
Laboratory Reference: 2108-092
Project: 094-21021

PAHs EPA 8270E/SIM
QUALITY CONTROL

Matrix: Soil
Units: mg/Kg

Analyte	Result		Spike Level		Source Result	Percent Recovery		Recovery Limits	RPD	RPD Limit	Flags
MATRIX SPIKES											
Laboratory ID:	08-092-20										
	MS	MSD	MS	MSD		MS	MSD				
Naphthalene	**0.125**	**0.148**	0.167	0.167	ND	75	89	41 - 123	17	23	
Acenaphthylene	**0.146**	**0.172**	0.167	0.167	ND	87	103	45 - 124	16	20	
Acenaphthene	**0.143**	**0.171**	0.167	0.167	ND	86	102	46 - 122	18	23	
Fluorene	**0.145**	**0.167**	0.167	0.167	ND	87	100	45 - 128	14	27	
Phenanthrene	**0.156**	**0.169**	0.167	0.167	ND	93	101	38 - 133	8	33	
Anthracene	**0.164**	**0.180**	0.167	0.167	ND	98	108	49 - 127	9	21	
Fluoranthene	**0.159**	**0.170**	0.167	0.167	ND	95	102	45 - 130	7	29	
Pyrene	**0.158**	**0.176**	0.167	0.167	ND	95	105	43 - 132	11	32	
Benzo[a]anthracene	**0.152**	**0.167**	0.167	0.167	ND	91	100	49 - 139	9	27	
Chrysene	**0.160**	**0.174**	0.167	0.167	ND	96	104	47 - 127	8	28	
Benzo[b]fluoranthene	**0.157**	**0.172**	0.167	0.167	ND	94	103	46 - 129	9	31	
Benzo(j,k)fluoranthene	**0.160**	**0.179**	0.167	0.167	ND	96	107	46 - 128	11	25	
Benzo[a]pyrene	**0.152**	**0.170**	0.167	0.167	ND	91	102	47 - 134	11	27	
Indeno(1,2,3-c,d)pyrene	**0.146**	**0.163**	0.167	0.167	ND	87	98	42 - 133	11	25	
Dibenz[a,h]anthracene	**0.150**	**0.166**	0.167	0.167	ND	90	99	46 - 129	10	24	
Benzo[g,h,i]perylene	**0.152**	**0.168**	0.167	0.167	ND	91	101	44 - 129	10	27	
Surrogate:											
2-Fluorobiphenyl						*83*	*95*	*41 - 114*			
Pyrene-d10						*92*	*101*	*39 - 115*			
Terphenyl-d14						*93*	*100*	*44 - 125*			

This report pertains to the samples analyzed in accordance with the chain of custody, and is intended only for the use of the individual or company to whom it is addressed.

Date of Report: August 17, 2021
Samples Submitted: August 9, 2021
Laboratory Reference: 2108-092
Project: 094-21021

PCBs EPA 8082A

Matrix: Soil
Units: mg/Kg (ppm)

Analyte	Result	PQL	Method	Date Prepared	Date Analyzed	Flags
Client ID:	**S-1**					
Laboratory ID:	08-092-01					
Aroclor 1016	**ND**	0.053	EPA 8082A	8-10-21	8-10-21	
Aroclor 1221	**ND**	0.053	EPA 8082A	8-10-21	8-10-21	
Aroclor 1232	**ND**	0.053	EPA 8082A	8-10-21	8-10-21	
Aroclor 1242	**ND**	0.053	EPA 8082A	8-10-21	8-10-21	
Aroclor 1248	**ND**	0.053	EPA 8082A	8-10-21	8-10-21	
Aroclor 1254	**ND**	0.053	EPA 8082A	8-10-21	8-10-21	
Aroclor 1260	**ND**	0.053	EPA 8082A	8-10-21	8-10-21	
Surrogate:	*Percent Recovery*	*Control Limits*				
DCB	*82*	*54-135*				
Client ID:	**S-2**					
Laboratory ID:	08-092-02					
Aroclor 1016	**ND**	0.053	EPA 8082A	8-10-21	8-10-21	
Aroclor 1221	**ND**	0.053	EPA 8082A	8-10-21	8-10-21	
Aroclor 1232	**ND**	0.053	EPA 8082A	8-10-21	8-10-21	
Aroclor 1242	**ND**	0.053	EPA 8082A	8-10-21	8-10-21	
Aroclor 1248	**ND**	0.053	EPA 8082A	8-10-21	8-10-21	
Aroclor 1254	**ND**	0.053	EPA 8082A	8-10-21	8-10-21	
Aroclor 1260	**ND**	0.053	EPA 8082A	8-10-21	8-10-21	
Surrogate:	*Percent Recovery*	*Control Limits*				
DCB	*94*	*54-135*				
Client ID:	**S-3**					
Laboratory ID:	08-092-03					
Aroclor 1016	**ND**	0.051	EPA 8082A	8-10-21	8-10-21	
Aroclor 1221	**ND**	0.051	EPA 8082A	8-10-21	8-10-21	
Aroclor 1232	**ND**	0.051	EPA 8082A	8-10-21	8-10-21	
Aroclor 1242	**ND**	0.051	EPA 8082A	8-10-21	8-10-21	
Aroclor 1248	**ND**	0.051	EPA 8082A	8-10-21	8-10-21	
Aroclor 1254	**ND**	0.051	EPA 8082A	8-10-21	8-10-21	
Aroclor 1260	**ND**	0.051	EPA 8082A	8-10-21	8-10-21	
Surrogate:	*Percent Recovery*	*Control Limits*				
DCB	*103*	*54-135*				

This report pertains to the samples analyzed in accordance with the chain of custody,
and is intended only for the use of the individual or company to whom it is addressed.

Date of Report: August 17, 2021
Samples Submitted: August 9, 2021
Laboratory Reference: 2108-092
Project: 094-21021

PCBs EPA 8082A

Matrix: Soil
Units: mg/Kg (ppm)

Analyte	Result	PQL	Method	Date Prepared	Date Analyzed	Flags
Client ID:	**S-4**					
Laboratory ID:	08-092-04					
Aroclor 1016	**ND**	0.052	EPA 8082A	8-10-21	8-10-21	
Aroclor 1221	**ND**	0.052	EPA 8082A	8-10-21	8-10-21	
Aroclor 1232	**ND**	0.052	EPA 8082A	8-10-21	8-10-21	
Aroclor 1242	**ND**	0.052	EPA 8082A	8-10-21	8-10-21	
Aroclor 1248	**ND**	0.052	EPA 8082A	8-10-21	8-10-21	
Aroclor 1254	**ND**	0.052	EPA 8082A	8-10-21	8-10-21	
Aroclor 1260	**ND**	0.052	EPA 8082A	8-10-21	8-10-21	
Surrogate:	*Percent Recovery*	*Control Limits*				
DCB	*92*	*54-135*				
Client ID:	**S-5**					
Laboratory ID:	08-092-05					
Aroclor 1016	**ND**	0.052	EPA 8082A	8-10-21	8-10-21	
Aroclor 1221	**ND**	0.052	EPA 8082A	8-10-21	8-10-21	
Aroclor 1232	**ND**	0.052	EPA 8082A	8-10-21	8-10-21	
Aroclor 1242	**ND**	0.052	EPA 8082A	8-10-21	8-10-21	
Aroclor 1248	**ND**	0.052	EPA 8082A	8-10-21	8-10-21	
Aroclor 1254	**ND**	0.052	EPA 8082A	8-10-21	8-10-21	
Aroclor 1260	**ND**	0.052	EPA 8082A	8-10-21	8-10-21	
Surrogate:	*Percent Recovery*	*Control Limits*				
DCB	*104*	*54-135*				
Client ID:	**S-6**					
Laboratory ID:	08-092-06					
Aroclor 1016	**ND**	0.051	EPA 8082A	8-10-21	8-10-21	
Aroclor 1221	**ND**	0.051	EPA 8082A	8-10-21	8-10-21	
Aroclor 1232	**ND**	0.051	EPA 8082A	8-10-21	8-10-21	
Aroclor 1242	**ND**	0.051	EPA 8082A	8-10-21	8-10-21	
Aroclor 1248	**ND**	0.051	EPA 8082A	8-10-21	8-10-21	
Aroclor 1254	**ND**	0.051	EPA 8082A	8-10-21	8-10-21	
Aroclor 1260	**ND**	0.051	EPA 8082A	8-10-21	8-10-21	
Surrogate:	*Percent Recovery*	*Control Limits*				
DCB	*103*	*54-135*				

This report pertains to the samples analyzed in accordance with the chain of custody, and is intended only for the use of the individual or company to whom it is addressed.

Date of Report: August 17, 2021
Samples Submitted: August 9, 2021
Laboratory Reference: 2108-092
Project: 094-21021

PCBs EPA 8082A

Matrix: Soil
Units: mg/Kg (ppm)

Analyte	Result	PQL	Method	Date Prepared	Date Analyzed	Flags
Client ID:	**S-7**					
Laboratory ID:	08-092-07					
Aroclor 1016	**ND**	0.052	EPA 8082A	8-10-21	8-10-21	
Aroclor 1221	**ND**	0.052	EPA 8082A	8-10-21	8-10-21	
Aroclor 1232	**ND**	0.052	EPA 8082A	8-10-21	8-10-21	
Aroclor 1242	**ND**	0.052	EPA 8082A	8-10-21	8-10-21	
Aroclor 1248	**ND**	0.052	EPA 8082A	8-10-21	8-10-21	
Aroclor 1254	**ND**	0.052	EPA 8082A	8-10-21	8-10-21	
Aroclor 1260	**ND**	0.052	EPA 8082A	8-10-21	8-10-21	
Surrogate:	*Percent Recovery*	*Control Limits*				
DCB	*95*	*54-135*				
Client ID:	**S-8**					
Laboratory ID:	08-092-08					
Aroclor 1016	**ND**	0.052	EPA 8082A	8-10-21	8-10-21	
Aroclor 1221	**ND**	0.052	EPA 8082A	8-10-21	8-10-21	
Aroclor 1232	**ND**	0.052	EPA 8082A	8-10-21	8-10-21	
Aroclor 1242	**ND**	0.052	EPA 8082A	8-10-21	8-10-21	
Aroclor 1248	**ND**	0.052	EPA 8082A	8-10-21	8-10-21	
Aroclor 1254	**ND**	0.052	EPA 8082A	8-10-21	8-10-21	
Aroclor 1260	**ND**	0.052	EPA 8082A	8-10-21	8-10-21	
Surrogate:	*Percent Recovery*	*Control Limits*				
DCB	*97*	*54-135*				
Client ID:	**S-9**					
Laboratory ID:	08-092-09					
Aroclor 1016	**ND**	0.051	EPA 8082A	8-10-21	8-10-21	
Aroclor 1221	**ND**	0.051	EPA 8082A	8-10-21	8-10-21	
Aroclor 1232	**ND**	0.051	EPA 8082A	8-10-21	8-10-21	
Aroclor 1242	**ND**	0.051	EPA 8082A	8-10-21	8-10-21	
Aroclor 1248	**ND**	0.051	EPA 8082A	8-10-21	8-10-21	
Aroclor 1254	**ND**	0.051	EPA 8082A	8-10-21	8-10-21	
Aroclor 1260	**ND**	0.051	EPA 8082A	8-10-21	8-10-21	
Surrogate:	*Percent Recovery*	*Control Limits*				
DCB	*102*	*54-135*				

This report pertains to the samples analyzed in accordance with the chain of custody, and is intended only for the use of the individual or company to whom it is addressed.

Date of Report: August 17, 2021
Samples Submitted: August 9, 2021
Laboratory Reference: 2108-092
Project: 094-21021

PCBs EPA 8082A

Matrix: Soil
Units: mg/Kg (ppm)

Analyte	Result	PQL	Method	Date Prepared	Date Analyzed	Flags
Client ID:	**S-10**					
Laboratory ID:	08-092-10					
Aroclor 1016	**ND**	0.052	EPA 8082A	8-10-21	8-10-21	
Aroclor 1221	**ND**	0.052	EPA 8082A	8-10-21	8-10-21	
Aroclor 1232	**ND**	0.052	EPA 8082A	8-10-21	8-10-21	
Aroclor 1242	**ND**	0.052	EPA 8082A	8-10-21	8-10-21	
Aroclor 1248	**ND**	0.052	EPA 8082A	8-10-21	8-10-21	
Aroclor 1254	**ND**	0.052	EPA 8082A	8-10-21	8-10-21	
Aroclor 1260	**ND**	0.052	EPA 8082A	8-10-21	8-10-21	
Surrogate:	*Percent Recovery*	*Control Limits*				
DCB	*99*	*54-135*				

This report pertains to the samples analyzed in accordance with the chain of custody,
and is intended only for the use of the individual or company to whom it is addressed.

Date of Report: August 17, 2021
Samples Submitted: August 9, 2021
Laboratory Reference: 2108-092
Project: 094-21021

PCBs EPA 8082A
QUALITY CONTROL

Matrix: Soil
Units: mg/Kg (ppm)

Analyte	Result	PQL	Method	Date Prepared	Date Analyzed	Flags
METHOD BLANK						
Laboratory ID:	MB0810S1					
Aroclor 1016	**ND**	0.050	EPA 8082A	8-10-21	8-10-21	
Aroclor 1221	**ND**	0.050	EPA 8082A	8-10-21	8-10-21	
Aroclor 1232	**ND**	0.050	EPA 8082A	8-10-21	8-10-21	
Aroclor 1242	**ND**	0.050	EPA 8082A	8-10-21	8-10-21	
Aroclor 1248	**ND**	0.050	EPA 8082A	8-10-21	8-10-21	
Aroclor 1254	**ND**	0.050	EPA 8082A	8-10-21	8-10-21	
Aroclor 1260	**ND**	0.050	EPA 8082A	8-10-21	8-10-21	
Surrogate:	*Percent Recovery*	*Control Limits*				
DCB	*96*	*54-135*				

Analyte	Result		Spike Level		Source Result	Percent Recovery		Recovery Limits	RPD	RPD Limit	Flags
MATRIX SPIKES											
Laboratory ID:	08-073-01										
	MS	MSD	MS	MSD		MS	MSD				
Aroclor 1260	**0.481**	**0.482**	0.500	0.500	ND	**96**	**96**	62-129	0	15	
Surrogate:											
DCB						*117*	*117*	*54-135*			

This report pertains to the samples analyzed in accordance with the chain of custody,
and is intended only for the use of the individual or company to whom it is addressed.

Date of Report: August 17, 2021
Samples Submitted: August 9, 2021
Laboratory Reference: 2108-092
Project: 094-21021

PCBs EPA 8082A

Matrix: Soil
Units: mg/Kg (ppm)

Analyte	Result	PQL	Method	Date Prepared	Date Analyzed	Flags
Client ID:	**S-11**					
Laboratory ID:	08-092-11					
Aroclor 1016	**ND**	0.052	EPA 8082A	8-12-21	8-12-21	
Aroclor 1221	**ND**	0.052	EPA 8082A	8-12-21	8-12-21	
Aroclor 1232	**ND**	0.052	EPA 8082A	8-12-21	8-12-21	
Aroclor 1242	**ND**	0.052	EPA 8082A	8-12-21	8-12-21	
Aroclor 1248	**ND**	0.052	EPA 8082A	8-12-21	8-12-21	
Aroclor 1254	**ND**	0.052	EPA 8082A	8-12-21	8-12-21	
Aroclor 1260	**ND**	0.052	EPA 8082A	8-12-21	8-12-21	
Surrogate:	*Percent Recovery*	*Control Limits*				
DCB	*97*	*54-135*				
Client ID:	**S-12**					
Laboratory ID:	08-092-12					
Aroclor 1016	**ND**	0.052	EPA 8082A	8-12-21	8-12-21	
Aroclor 1221	**ND**	0.052	EPA 8082A	8-12-21	8-12-21	
Aroclor 1232	**ND**	0.052	EPA 8082A	8-12-21	8-12-21	
Aroclor 1242	**ND**	0.052	EPA 8082A	8-12-21	8-12-21	
Aroclor 1248	**ND**	0.052	EPA 8082A	8-12-21	8-12-21	
Aroclor 1254	**ND**	0.052	EPA 8082A	8-12-21	8-12-21	
Aroclor 1260	**ND**	0.052	EPA 8082A	8-12-21	8-12-21	
Surrogate:	*Percent Recovery*	*Control Limits*				
DCB	*91*	*54-135*				
Client ID:	**S-13**					
Laboratory ID:	08-092-13					
Aroclor 1016	**ND**	0.052	EPA 8082A	8-12-21	8-12-21	
Aroclor 1221	**ND**	0.052	EPA 8082A	8-12-21	8-12-21	
Aroclor 1232	**ND**	0.052	EPA 8082A	8-12-21	8-12-21	
Aroclor 1242	**ND**	0.052	EPA 8082A	8-12-21	8-12-21	
Aroclor 1248	**ND**	0.052	EPA 8082A	8-12-21	8-12-21	
Aroclor 1254	**ND**	0.052	EPA 8082A	8-12-21	8-12-21	
Aroclor 1260	**ND**	0.052	EPA 8082A	8-12-21	8-12-21	
Surrogate:	*Percent Recovery*	*Control Limits*				
DCB	*86*	*54-135*				

This report pertains to the samples analyzed in accordance with the chain of custody,
and is intended only for the use of the individual or company to whom it is addressed.

Date of Report: August 17, 2021
Samples Submitted: August 9, 2021
Laboratory Reference: 2108-092
Project: 094-21021

PCBs EPA 8082A

Matrix: Soil
Units: mg/Kg (ppm)

Analyte	Result	PQL	Method	Date Prepared	Date Analyzed	Flags
Client ID:	**S-14**					
Laboratory ID:	08-092-14					
Aroclor 1016	**ND**	0.052	EPA 8082A	8-12-21	8-12-21	
Aroclor 1221	**ND**	0.052	EPA 8082A	8-12-21	8-12-21	
Aroclor 1232	**ND**	0.052	EPA 8082A	8-12-21	8-12-21	
Aroclor 1242	**ND**	0.052	EPA 8082A	8-12-21	8-12-21	
Aroclor 1248	**ND**	0.052	EPA 8082A	8-12-21	8-12-21	
Aroclor 1254	**ND**	0.052	EPA 8082A	8-12-21	8-12-21	
Aroclor 1260	**ND**	0.052	EPA 8082A	8-12-21	8-12-21	
Surrogate:	*Percent Recovery*	*Control Limits*				
DCB	*100*	*54-135*				
Client ID:	**S-15**					
Laboratory ID:	08-092-15					
Aroclor 1016	**ND**	0.053	EPA 8082A	8-12-21	8-12-21	
Aroclor 1221	**ND**	0.053	EPA 8082A	8-12-21	8-12-21	
Aroclor 1232	**ND**	0.053	EPA 8082A	8-12-21	8-12-21	
Aroclor 1242	**ND**	0.053	EPA 8082A	8-12-21	8-12-21	
Aroclor 1248	**ND**	0.053	EPA 8082A	8-12-21	8-12-21	
Aroclor 1254	**ND**	0.053	EPA 8082A	8-12-21	8-12-21	
Aroclor 1260	**ND**	0.053	EPA 8082A	8-12-21	8-12-21	
Surrogate:	*Percent Recovery*	*Control Limits*				
DCB	*95*	*54-135*				
Client ID:	**S-16**					
Laboratory ID:	08-092-16					
Aroclor 1016	**ND**	0.053	EPA 8082A	8-12-21	8-12-21	
Aroclor 1221	**ND**	0.053	EPA 8082A	8-12-21	8-12-21	
Aroclor 1232	**ND**	0.053	EPA 8082A	8-12-21	8-12-21	
Aroclor 1242	**ND**	0.053	EPA 8082A	8-12-21	8-12-21	
Aroclor 1248	**ND**	0.053	EPA 8082A	8-12-21	8-12-21	
Aroclor 1254	**ND**	0.053	EPA 8082A	8-12-21	8-12-21	
Aroclor 1260	**ND**	0.053	EPA 8082A	8-12-21	8-12-21	
Surrogate:	*Percent Recovery*	*Control Limits*				
DCB	*96*	*54-135*				

This report pertains to the samples analyzed in accordance with the chain of custody, and is intended only for the use of the individual or company to whom it is addressed.

Date of Report: August 17, 2021
Samples Submitted: August 9, 2021
Laboratory Reference: 2108-092
Project: 094-21021

PCBs EPA 8082A

Matrix: Soil
Units: mg/Kg (ppm)

Analyte	Result	PQL	Method	Date Prepared	Date Analyzed	Flags
Client ID:	**S-17**					
Laboratory ID:	08-092-17					
Aroclor 1016	**ND**	0.052	EPA 8082A	8-12-21	8-12-21	
Aroclor 1221	**ND**	0.052	EPA 8082A	8-12-21	8-12-21	
Aroclor 1232	**ND**	0.052	EPA 8082A	8-12-21	8-12-21	
Aroclor 1242	**ND**	0.052	EPA 8082A	8-12-21	8-12-21	
Aroclor 1248	**ND**	0.052	EPA 8082A	8-12-21	8-12-21	
Aroclor 1254	**ND**	0.052	EPA 8082A	8-12-21	8-12-21	
Aroclor 1260	**ND**	0.052	EPA 8082A	8-12-21	8-12-21	
Surrogate:	*Percent Recovery*	*Control Limits*				
DCB	*94*	*54-135*				
Client ID:	**S-18**					
Laboratory ID:	08-092-18					
Aroclor 1016	**ND**	0.052	EPA 8082A	8-12-21	8-12-21	
Aroclor 1221	**ND**	0.052	EPA 8082A	8-12-21	8-12-21	
Aroclor 1232	**ND**	0.052	EPA 8082A	8-12-21	8-12-21	
Aroclor 1242	**ND**	0.052	EPA 8082A	8-12-21	8-12-21	
Aroclor 1248	**ND**	0.052	EPA 8082A	8-12-21	8-12-21	
Aroclor 1254	**ND**	0.052	EPA 8082A	8-12-21	8-12-21	
Aroclor 1260	**ND**	0.052	EPA 8082A	8-12-21	8-12-21	
Surrogate:	*Percent Recovery*	*Control Limits*				
DCB	*103*	*54-135*				
Client ID:	**S-19**					
Laboratory ID:	08-092-19					
Aroclor 1016	**ND**	0.052	EPA 8082A	8-12-21	8-12-21	
Aroclor 1221	**ND**	0.052	EPA 8082A	8-12-21	8-12-21	
Aroclor 1232	**ND**	0.052	EPA 8082A	8-12-21	8-12-21	
Aroclor 1242	**ND**	0.052	EPA 8082A	8-12-21	8-12-21	
Aroclor 1248	**ND**	0.052	EPA 8082A	8-12-21	8-12-21	
Aroclor 1254	**ND**	0.052	EPA 8082A	8-12-21	8-12-21	
Aroclor 1260	**ND**	0.052	EPA 8082A	8-12-21	8-12-21	
Surrogate:	*Percent Recovery*	*Control Limits*				
DCB	*99*	*54-135*				

This report pertains to the samples analyzed in accordance with the chain of custody,
and is intended only for the use of the individual or company to whom it is addressed.

Date of Report: August 17, 2021
Samples Submitted: August 9, 2021
Laboratory Reference: 2108-092
Project: 094-21021

PCBs EPA 8082A

Matrix: Soil
Units: mg/Kg (ppm)

Analyte	Result	PQL	Method	Date Prepared	Date Analyzed	Flags
Client ID:	**S-20**					
Laboratory ID:	08-092-20					
Aroclor 1016	**ND**	0.052	EPA 8082A	8-12-21	8-12-21	
Aroclor 1221	**ND**	0.052	EPA 8082A	8-12-21	8-12-21	
Aroclor 1232	**ND**	0.052	EPA 8082A	8-12-21	8-12-21	
Aroclor 1242	**ND**	0.052	EPA 8082A	8-12-21	8-12-21	
Aroclor 1248	**ND**	0.052	EPA 8082A	8-12-21	8-12-21	
Aroclor 1254	**ND**	0.052	EPA 8082A	8-12-21	8-12-21	
Aroclor 1260	**ND**	0.052	EPA 8082A	8-12-21	8-12-21	
Surrogate:	*Percent Recovery*	*Control Limits*				
DCB	*98*	*54-135*				
Client ID:	**S-21**					
Laboratory ID:	08-092-21					
Aroclor 1016	**ND**	0.052	EPA 8082A	8-12-21	8-12-21	
Aroclor 1221	**ND**	0.052	EPA 8082A	8-12-21	8-12-21	
Aroclor 1232	**ND**	0.052	EPA 8082A	8-12-21	8-12-21	
Aroclor 1242	**ND**	0.052	EPA 8082A	8-12-21	8-12-21	
Aroclor 1248	**ND**	0.052	EPA 8082A	8-12-21	8-12-21	
Aroclor 1254	**ND**	0.052	EPA 8082A	8-12-21	8-12-21	
Aroclor 1260	**ND**	0.052	EPA 8082A	8-12-21	8-12-21	
Surrogate:	*Percent Recovery*	*Control Limits*				
DCB	*98*	*54-135*				
Client ID:	**S-22**					
Laboratory ID:	08-092-22					
Aroclor 1016	**ND**	0.053	EPA 8082A	8-12-21	8-12-21	
Aroclor 1221	**ND**	0.053	EPA 8082A	8-12-21	8-12-21	
Aroclor 1232	**ND**	0.053	EPA 8082A	8-12-21	8-12-21	
Aroclor 1242	**ND**	0.053	EPA 8082A	8-12-21	8-12-21	
Aroclor 1248	**ND**	0.053	EPA 8082A	8-12-21	8-12-21	
Aroclor 1254	**ND**	0.053	EPA 8082A	8-12-21	8-12-21	
Aroclor 1260	**ND**	0.053	EPA 8082A	8-12-21	8-12-21	
Surrogate:	*Percent Recovery*	*Control Limits*				
DCB	*96*	*54-135*				

This report pertains to the samples analyzed in accordance with the chain of custody, and is intended only for the use of the individual or company to whom it is addressed.

Date of Report: August 17, 2021
Samples Submitted: August 9, 2021
Laboratory Reference: 2108-092
Project: 094-21021

PCBs EPA 8082A
QUALITY CONTROL

Matrix: Soil
Units: mg/Kg (ppm)

Analyte	Result	PQL	Method	Date Prepared	Date Analyzed	Flags
METHOD BLANK						
Laboratory ID:	MB0812S1					
Aroclor 1016	**ND**	0.050	EPA 8082A	8-12-21	8-12-21	
Aroclor 1221	**ND**	0.050	EPA 8082A	8-12-21	8-12-21	
Aroclor 1232	**ND**	0.050	EPA 8082A	8-12-21	8-12-21	
Aroclor 1242	**ND**	0.050	EPA 8082A	8-12-21	8-12-21	
Aroclor 1248	**ND**	0.050	EPA 8082A	8-12-21	8-12-21	
Aroclor 1254	**ND**	0.050	EPA 8082A	8-12-21	8-12-21	
Aroclor 1260	**ND**	0.050	EPA 8082A	8-12-21	8-12-21	
Surrogate:	*Percent Recovery*	*Control Limits*				
DCB	*95*	*54-135*				

Analyte	Result		Spike Level		Source Result	Percent Recovery		Recovery Limits	RPD	RPD Limit	Flags
MATRIX SPIKES											
Laboratory ID:	08-092-12										
	MS	MSD	MS	MSD		MS	MSD				
Aroclor 1260	**0.488**	**0.460**	0.500	0.500	ND	**98**	**92**	62-129	6	15	
Surrogate:											
DCB						*95*	*92*	*54-135*			

This report pertains to the samples analyzed in accordance with the chain of custody,
and is intended only for the use of the individual or company to whom it is addressed.

Date of Report: August 17, 2021
Samples Submitted: August 9, 2021
Laboratory Reference: 2108-092
Project: 094-21021

TOTAL METALS
EPA 6010D/7471B

Matrix: Soil
Units: mg/Kg (ppm)

Analyte	Result	PQL	Method	Date Prepared	Date Analyzed	Flags
Client ID:	**S-1**					
Laboratory ID:	08-092-01					
Arsenic	**ND**	11	EPA 6010D	8-10-21	8-12-21	
Copper	**27**	1.1	EPA 6010D	8-10-21	8-12-21	
Lead	**ND**	5.3	EPA 6010D	8-10-21	8-12-21	
Mercury	**ND**	0.27	EPA 7471B	8-12-21	8-12-21	
Nickel	**28**	13	EPA 6010D	8-10-21	8-12-21	
Zinc	**51**	13	EPA 6010D	8-10-21	8-12-21	
Client ID:	**S-2**					
Laboratory ID:	08-092-02					
Arsenic	**ND**	11	EPA 6010D	8-10-21	8-12-21	
Copper	**22**	1.1	EPA 6010D	8-10-21	8-12-21	
Lead	**ND**	5.3	EPA 6010D	8-10-21	8-12-21	
Mercury	**ND**	0.27	EPA 7471B	8-12-21	8-12-21	
Nickel	**16**	2.7	EPA 6010D	8-10-21	8-12-21	
Zinc	**30**	2.7	EPA 6010D	8-10-21	8-12-21	
Client ID:	**S-3**					
Laboratory ID:	08-092-03					
Arsenic	**ND**	10	EPA 6010D	8-10-21	8-12-21	
Copper	**26**	1.0	EPA 6010D	8-10-21	8-12-21	
Lead	**ND**	5.1	EPA 6010D	8-10-21	8-12-21	
Mercury	**ND**	0.26	EPA 7471B	8-12-21	8-12-21	
Nickel	**54**	26	EPA 6010D	8-10-21	8-12-21	
Zinc	**53**	26	EPA 6010D	8-10-21	8-12-21	
Client ID:	**S-4**					
Laboratory ID:	08-092-04					
Arsenic	**ND**	10	EPA 6010D	8-10-21	8-12-21	
Copper	**28**	1.0	EPA 6010D	8-10-21	8-12-21	
Lead	**ND**	5.2	EPA 6010D	8-10-21	8-12-21	
Mercury	**ND**	0.26	EPA 7471B	8-12-21	8-12-21	
Nickel	**21**	13	EPA 6010D	8-10-21	8-12-21	
Zinc	**45**	13	EPA 6010D	8-10-21	8-12-21	

This report pertains to the samples analyzed in accordance with the chain of custody, and is intended only for the use of the individual or company to whom it is addressed.

Date of Report: August 17, 2021
Samples Submitted: August 9, 2021
Laboratory Reference: 2108-092
Project: 094-21021

TOTAL METALS
EPA 6010D/7471B

Matrix: Soil
Units: mg/Kg (ppm)

Analyte	Result	PQL	Method	Date Prepared	Date Analyzed	Flags
Client ID:	**S-5**					
Laboratory ID:	08-092-05					
Arsenic	**ND**	10	EPA 6010D	8-10-21	8-12-21	
Copper	**32**	1.0	EPA 6010D	8-10-21	8-12-21	
Lead	**ND**	5.2	EPA 6010D	8-10-21	8-12-21	
Mercury	**ND**	0.26	EPA 7471B	8-12-21	8-12-21	
Nickel	**62**	26	EPA 6010D	8-10-21	8-12-21	
Zinc	**54**	26	EPA 6010D	8-10-21	8-12-21	
Client ID:	**S-6**					
Laboratory ID:	08-092-06					
Arsenic	**ND**	10	EPA 6010D	8-10-21	8-12-21	
Copper	**29**	1.0	EPA 6010D	8-10-21	8-12-21	
Lead	**ND**	5.1	EPA 6010D	8-10-21	8-12-21	
Mercury	**ND**	0.26	EPA 7471B	8-12-21	8-12-21	
Nickel	**49**	26	EPA 6010D	8-10-21	8-12-21	
Zinc	**49**	26	EPA 6010D	8-10-21	8-12-21	
Client ID:	**S-7**					
Laboratory ID:	08-092-07					
Arsenic	**ND**	10	EPA 6010D	8-10-21	8-12-21	
Copper	**22**	1.0	EPA 6010D	8-10-21	8-12-21	
Lead	**ND**	5.2	EPA 6010D	8-10-21	8-12-21	
Mercury	**ND**	0.26	EPA 7471B	8-12-21	8-12-21	
Nickel	**33**	2.6	EPA 6010D	8-10-21	8-12-21	
Zinc	**41**	2.6	EPA 6010D	8-10-21	8-12-21	
Client ID:	**S-8**					
Laboratory ID:	08-092-08					
Arsenic	**ND**	10	EPA 6010D	8-10-21	8-12-21	
Copper	**25**	1.0	EPA 6010D	8-10-21	8-12-21	
Lead	**ND**	5.2	EPA 6010D	8-10-21	8-12-21	
Mercury	**ND**	0.26	EPA 7471B	8-12-21	8-12-21	
Nickel	**19**	13	EPA 6010D	8-10-21	8-12-21	
Zinc	**25**	13	EPA 6010D	8-10-21	8-12-21	

This report pertains to the samples analyzed in accordance with the chain of custody, and is intended only for the use of the individual or company to whom it is addressed.

Date of Report: August 17, 2021
Samples Submitted: August 9, 2021
Laboratory Reference: 2108-092
Project: 094-21021

TOTAL METALS
EPA 6010D/7471B

Matrix: Soil
Units: mg/Kg (ppm)

Analyte	Result	PQL	Method	Date Prepared	Date Analyzed	Flags
Client ID:	**S-9**					
Laboratory ID:	08-092-09					
Arsenic	**ND**	10	EPA 6010D	8-10-21	8-12-21	
Copper	**23**	1.0	EPA 6010D	8-10-21	8-12-21	
Lead	**ND**	5.1	EPA 6010D	8-10-21	8-12-21	
Mercury	**ND**	0.26	EPA 7471B	8-12-21	8-12-21	
Nickel	**26**	13	EPA 6010D	8-10-21	8-12-21	
Zinc	**44**	13	EPA 6010D	8-10-21	8-12-21	
Client ID:	**S-10**					
Laboratory ID:	08-092-10					
Arsenic	**ND**	10	EPA 6010D	8-10-21	8-12-21	
Copper	**25**	1.0	EPA 6010D	8-10-21	8-12-21	
Lead	**ND**	5.2	EPA 6010D	8-10-21	8-12-21	
Mercury	**ND**	0.26	EPA 7471B	8-12-21	8-12-21	
Nickel	**36**	13	EPA 6010D	8-10-21	8-12-21	
Zinc	**53**	13	EPA 6010D	8-10-21	8-12-21	

This report pertains to the samples analyzed in accordance with the chain of custody,
and is intended only for the use of the individual or company to whom it is addressed.

Date of Report: August 17, 2021
Samples Submitted: August 9, 2021
Laboratory Reference: 2108-092
Project: 094-21021

TOTAL METALS
EPA 6010D/7471B
QUALITY CONTROL

Matrix: Soil
Units: mg/Kg (ppm)

Analyte	Result	PQL	Method	Date Prepared	Date Analyzed	Flags
METHOD BLANK						
Laboratory ID:	MB0810SM1					
Arsenic	**ND**	10	EPA 6010D	8-10-21	8-10-21	
Copper	**ND**	1.0	EPA 6010D	8-10-21	8-10-21	
Lead	**ND**	5.0	EPA 6010D	8-10-21	8-10-21	
Nickel	**ND**	2.5	EPA 6010D	8-10-21	8-10-21	
Zinc	**ND**	2.5	EPA 6010D	8-10-21	8-10-21	
Laboratory ID:	MB0812S1					
Mercury	**ND**	0.25	EPA 7471B	8-12-21	8-12-21	

Analyte	Result		Spike Level		Source Result	Percent Recovery	Recovery Limits	RPD	RPD Limit	Flags
DUPLICATE										
Laboratory ID:	07-285-02									
	ORIG	DUP								
Arsenic	**ND**	**ND**	NA	NA		NA	NA	NA	20	
Copper	**14.2**	**13.2**	NA	NA		NA	NA	8	20	
Lead	**6.55**	**5.35**	NA	NA		NA	NA	20	20	
Nickel	**22.8**	**22.0**	NA	NA		NA	NA	3	20	
Zinc	**37.0**	**33.9**	NA	NA		NA	NA	9	20	
Laboratory ID:	08-083-19									
Mercury	**ND**	**ND**	NA	NA		NA	NA	NA	20	
MATRIX SPIKES										
Laboratory ID:	07-285-02									
	MS	MSD	MS	MSD		MS	MSD			
Arsenic	**91.3**	**92.6**	100	100	ND	**91**	**93**	75-125	1	20
Copper	**60.5**	**61.6**	50.0	50.0	14.2	**93**	**95**	75-125	2	20
Lead	**251**	**248**	250	250	6.55	**98**	**96**	75-125	1	20
Nickel	**118**	**117**	100	100	22.8	**95**	**95**	75-125	0	20
Zinc	**128**	**126**	100	100	37.0	**91**	**89**	75-125	1	20
Laboratory ID:	08-083-19									
Mercury	**0.550**	**0.570**	0.500	0.500	0.0155	**107**	**111**	80-120	4	20

This report pertains to the samples analyzed in accordance with the chain of custody, and is intended only for the use of the individual or company to whom it is addressed.

Date of Report: August 17, 2021
Samples Submitted: August 9, 2021
Laboratory Reference: 2108-092
Project: 094-21021

TOTAL METALS
EPA 6010D/7471B

Matrix: Soil
Units: mg/Kg (ppm)

Analyte	Result	PQL	Method	Date Prepared	Date Analyzed	Flags
Client ID:	**S-11**					
Laboratory ID:	08-092-11					
Arsenic	**ND**	10	EPA 6010D	8-12-21	8-12-21	
Copper	**32**	1.0	EPA 6010D	8-12-21	8-12-21	
Lead	**ND**	5.2	EPA 6010D	8-12-21	8-12-21	
Mercury	**ND**	0.26	EPA 7471B	8-12-21	8-12-21	
Nickel	**49**	26	EPA 6010D	8-12-21	8-12-21	
Zinc	**56**	26	EPA 6010D	8-12-21	8-12-21	
Client ID:	**S-12**					
Laboratory ID:	08-092-12					
Arsenic	**ND**	10	EPA 6010D	8-12-21	8-12-21	
Copper	**25**	1.0	EPA 6010D	8-12-21	8-12-21	
Lead	**ND**	5.2	EPA 6010D	8-12-21	8-12-21	
Mercury	**ND**	0.26	EPA 7471B	8-12-21	8-12-21	
Nickel	**17**	2.6	EPA 6010D	8-12-21	8-12-21	
Zinc	**34**	2.6	EPA 6010D	8-12-21	8-12-21	
Client ID:	**S-13**					
Laboratory ID:	08-092-13					
Arsenic	**ND**	10	EPA 6010D	8-12-21	8-12-21	
Copper	**23**	1.0	EPA 6010D	8-12-21	8-12-21	
Lead	**ND**	5.2	EPA 6010D	8-12-21	8-12-21	
Mercury	**ND**	0.26	EPA 7471B	8-12-21	8-12-21	
Nickel	**14**	2.6	EPA 6010D	8-12-21	8-12-21	
Zinc	**33**	2.6	EPA 6010D	8-12-21	8-12-21	
Client ID:	**S-14**					
Laboratory ID:	08-092-14					
Arsenic	**ND**	10	EPA 6010D	8-12-21	8-12-21	
Copper	**24**	1.0	EPA 6010D	8-12-21	8-12-21	
Lead	**ND**	5.2	EPA 6010D	8-12-21	8-12-21	
Mercury	**ND**	0.26	EPA 7471B	8-12-21	8-12-21	
Nickel	**13**	2.6	EPA 6010D	8-12-21	8-12-21	
Zinc	**33**	2.6	EPA 6010D	8-12-21	8-12-21	

This report pertains to the samples analyzed in accordance with the chain of custody, and is intended only for the use of the individual or company to whom it is addressed.

Date of Report: August 17, 2021
Samples Submitted: August 9, 2021
Laboratory Reference: 2108-092
Project: 094-21021

TOTAL METALS
EPA 6010D/7471B

Matrix: Soil
Units: mg/Kg (ppm)

Analyte	Result	PQL	Method	Date Prepared	Date Analyzed	Flags
Client ID:	**S-15**					
Laboratory ID:	08-092-15					
Arsenic	**ND**	11	EPA 6010D	8-12-21	8-12-21	
Copper	**24**	1.1	EPA 6010D	8-12-21	8-12-21	
Lead	**5.5**	5.3	EPA 6010D	8-12-21	8-12-21	
Mercury	**ND**	0.27	EPA 7471B	8-12-21	8-12-21	
Nickel	**25**	2.7	EPA 6010D	8-12-21	8-12-21	
Zinc	**43**	2.7	EPA 6010D	8-12-21	8-12-21	
Client ID:	**S-16**					
Laboratory ID:	08-092-16					
Arsenic	**ND**	11	EPA 6010D	8-12-21	8-12-21	
Copper	**45**	1.1	EPA 6010D	8-12-21	8-12-21	
Lead	**ND**	5.3	EPA 6010D	8-12-21	8-12-21	
Mercury	**ND**	0.26	EPA 7471B	8-12-21	8-12-21	
Nickel	**42**	26	EPA 6010D	8-12-21	8-12-21	
Zinc	**72**	26	EPA 6010D	8-12-21	8-12-21	
Client ID:	**S-17**					
Laboratory ID:	08-092-17					
Arsenic	**ND**	10	EPA 6010D	8-12-21	8-12-21	
Copper	**23**	1.0	EPA 6010D	8-12-21	8-12-21	
Lead	**ND**	5.2	EPA 6010D	8-12-21	8-12-21	
Mercury	**ND**	0.26	EPA 7471B	8-12-21	8-12-21	
Nickel	**28**	2.6	EPA 6010D	8-12-21	8-12-21	
Zinc	**37**	2.6	EPA 6010D	8-12-21	8-12-21	
Client ID:	**S-18**					
Laboratory ID:	08-092-18					
Arsenic	**ND**	10	EPA 6010D	8-12-21	8-12-21	
Copper	**36**	1.0	EPA 6010D	8-12-21	8-12-21	
Lead	**ND**	5.2	EPA 6010D	8-12-21	8-12-21	
Mercury	**ND**	0.26	EPA 7471B	8-12-21	8-12-21	
Nickel	**41**	26	EPA 6010D	8-12-21	8-12-21	
Zinc	**63**	26	EPA 6010D	8-12-21	8-12-21	

This report pertains to the samples analyzed in accordance with the chain of custody, and is intended only for the use of the individual or company to whom it is addressed.

Date of Report: August 17, 2021
Samples Submitted: August 9, 2021
Laboratory Reference: 2108-092
Project: 094-21021

TOTAL METALS
EPA 6010D/7471B

Matrix: Soil
Units: mg/Kg (ppm)

Analyte	Result	PQL	Method	Date Prepared	Date Analyzed	Flags
Client ID:	**S-19**					
Laboratory ID:	08-092-19					
Arsenic	**ND**	10	EPA 6010D	8-12-21	8-12-21	
Copper	**31**	1.0	EPA 6010D	8-12-21	8-12-21	
Lead	**ND**	5.2	EPA 6010D	8-12-21	8-12-21	
Mercury	**ND**	0.26	EPA 7471B	8-12-21	8-12-21	
Nickel	**31**	2.6	EPA 6010D	8-12-21	8-12-21	
Zinc	**34**	2.6	EPA 6010D	8-12-21	8-12-21	
Client ID:	**S-20**					
Laboratory ID:	08-092-20					
Arsenic	**ND**	10	EPA 6010D	8-12-21	8-12-21	
Copper	**22**	1.0	EPA 6010D	8-12-21	8-12-21	
Lead	**ND**	5.2	EPA 6010D	8-12-21	8-12-21	
Mercury	**ND**	0.26	EPA 7471B	8-12-21	8-12-21	
Nickel	**22**	2.6	EPA 6010D	8-12-21	8-12-21	
Zinc	**34**	2.6	EPA 6010D	8-12-21	8-12-21	
Client ID:	**S-21**					
Laboratory ID:	08-092-21					
Arsenic	**ND**	10	EPA 6010D	8-12-21	8-12-21	
Copper	**24**	1.0	EPA 6010D	8-12-21	8-12-21	
Lead	**ND**	5.2	EPA 6010D	8-12-21	8-12-21	
Mercury	**ND**	0.26	EPA 7471B	8-12-21	8-12-21	
Nickel	**24**	2.6	EPA 6010D	8-12-21	8-12-21	
Zinc	**39**	2.6	EPA 6010D	8-12-21	8-12-21	
Client ID:	**S-22**					
Laboratory ID:	08-092-22					
Arsenic	**ND**	11	EPA 6010D	8-12-21	8-12-21	
Copper	**38**	1.1	EPA 6010D	8-12-21	8-12-21	
Lead	**ND**	5.3	EPA 6010D	8-12-21	8-12-21	
Mercury	**ND**	0.26	EPA 7471B	8-12-21	8-12-21	
Nickel	**45**	26	EPA 6010D	8-12-21	8-12-21	
Zinc	**47**	26	EPA 6010D	8-12-21	8-12-21	

This report pertains to the samples analyzed in accordance with the chain of custody, and is intended only for the use of the individual or company to whom it is addressed.

Date of Report: August 17, 2021
Samples Submitted: August 9, 2021
Laboratory Reference: 2108-092
Project: 094-21021

TOTAL METALS
EPA 6010D/7471B
QUALITY CONTROL

Matrix: Soil
Units: mg/Kg (ppm)

Analyte	Result	PQL	Method	Date Prepared	Date Analyzed	Flags
METHOD BLANK						
Laboratory ID:	MB0812SM2					
Arsenic	**ND**	10	EPA 6010D	8-12-21	8-12-21	
Copper	**ND**	1.0	EPA 6010D	8-12-21	8-12-21	
Lead	**ND**	5.0	EPA 6010D	8-12-21	8-12-21	
Nickel	**ND**	2.5	EPA 6010D	8-12-21	8-12-21	
Zinc	**ND**	2.5	EPA 6010D	8-12-21	8-12-21	
Laboratory ID:	MB0812S2					
Mercury	**ND**	0.25	EPA 7471B	8-12-21	8-12-21	

Analyte	Result		Spike Level		Source Result	Percent Recovery	Recovery Limits	RPD	RPD Limit	Flags
DUPLICATE										
Laboratory ID:	08-092-11									
	ORIG	DUP								
Arsenic	**ND**	**ND**	NA	NA		NA	NA	NA	20	
Copper	**30.8**	**33.5**	NA	NA		NA	NA	8	20	
Lead	**ND**	**ND**	NA	NA		NA	NA	NA	20	
Nickel	**47.7**	**55.0**	NA	NA		NA	NA	14	20	
Zinc	**54.5**	**51.0**	NA	NA		NA	NA	7	20	
Laboratory ID:	08-092-11									
Mercury	**ND**	**ND**	NA	NA		NA	NA	NA	20	
MATRIX SPIKES										
Laboratory ID:	08-092-11									
	MS	MSD	MS	MSD		MS	MSD			
Arsenic	**95.6**	**99.6**	100	100	ND	**96**	**100**	75-125	4	20
Copper	**76.8**	**77.0**	50.0	50.0	30.8	**92**	**92**	75-125	0	20
Lead	**236**	**236**	250	250	ND	**95**	**94**	75-125	0	20
Nickel	**137**	**140**	100	100	47.7	**89**	**92**	75-125	3	20
Zinc	**143**	**146**	100	100	54.5	**88**	**92**	75-125	2	20
Laboratory ID:	08-092-11									
Mercury	**0.608**	**0.599**	0.500	0.500	0.0644	**109**	**107**	80-120	1	20

This report pertains to the samples analyzed in accordance with the chain of custody,
and is intended only for the use of the individual or company to whom it is addressed.

Date of Report: August 17, 2021
Samples Submitted: August 9, 2021
Laboratory Reference: 2108-092
Project: 094-21021

% MOISTURE

Client ID	Lab ID	% Moisture	Date Analyzed
S-1	08-092-01	**6**	8-10-21
S-2	08-092-02	**6**	8-10-21
S-3	08-092-03	**3**	8-10-21
S-4	08-092-04	**3**	8-10-21
S-5	08-092-05	**4**	8-10-21
S-6	08-092-06	**2**	8-10-21
S-7	08-092-07	**3**	8-10-21
S-8	08-092-08	**3**	8-10-21
S-9	08-092-09	**2**	8-10-21
S-10	08-092-10	**4**	8-10-21
S-11	08-092-11	**3**	8-10-21
S-12	08-092-12	**4**	8-10-21
S-13	08-092-13	**4**	8-10-21
S-14	08-092-14	**4**	8-10-21
S-15	08-092-15	**6**	8-10-21
S-16	08-092-16	**5**	8-10-21
S-17	08-092-17	**4**	8-10-21
S-18	08-092-18	**3**	8-10-21
S-19	08-092-19	**3**	8-10-21
S-20	08-092-20	**4**	8-10-21
S-21	08-092-21	**4**	8-10-21
S-22	08-092-22	**5**	8-10-21

This report pertains to the samples analyzed in accordance with the chain of custody,
and is intended only for the use of the individual or company to whom it is addressed.

OnSite Environmental Inc.

Data Qualifiers and Abbreviations

A - Due to a high sample concentration, the amount spiked is insufficient for meaningful MS/MSD recovery data.

B - The analyte indicated was also found in the blank sample.

C - The duplicate RPD is outside control limits due to high result variability when analyte concentrations are within five times the quantitation limit.

E - The value reported exceeds the quantitation range and is an estimate.

F - Surrogate recovery data is not available due to the high concentration of coeluting target compounds.

H - The analyte indicated is a common laboratory solvent and may have been introduced during sample preparation, and be impacting the sample result.

I - Compound recovery is outside of the control limits.

J - The value reported was below the practical quantitation limit. The value is an estimate.

K - Sample duplicate RPD is outside control limits due to sample inhomogeneity. The sample was re-extracted and re-analyzed with similar results.

L - The RPD is outside of the control limits.

M - Hydrocarbons in the gasoline range are impacting the diesel range result.

M1 - Hydrocarbons in the gasoline range (toluene-naphthalene) are present in the sample.

N - Hydrocarbons in the lube oil range are impacting the diesel range result.

N1 - Hydrocarbons in diesel range are impacting lube oil range results.

O - Hydrocarbons indicative of heavier fuels are present in the sample and are impacting the gasoline result.

P - The RPD of the detected concentrations between the two columns is greater than 40.

Q - Surrogate recovery is outside of the control limits.

S - Surrogate recovery data is not available due to the necessary dilution of the sample.

T - The sample chromatogram is not similar to a typical _____.

U - The analyte was analyzed for, but was not detected above the reported sample quantitation limit.

U1 - The practical quantitation limit is elevated due to interferences present in the sample.

V - Matrix Spike/Matrix Spike Duplicate recoveries are outside control limits due to matrix effects.

W - Matrix Spike/Matrix Spike Duplicate RPD are outside control limits due to matrix effects.

X - Sample extract treated with a mercury cleanup procedure.

X1- Sample extract treated with a sulfuric acid/silica gel cleanup procedure.

Y - The calibration verification for this analyte exceeded the 20% drift specified in methods 8260 & 8270, and therefore the reported result should be considered an estimate. The overall performance of the calibration verification standard met the acceptance criteria of the method.

Y1 - Negative effects of the matrix from this sample on the instrument caused values for this analyte in the bracketing continuing calibration verification standard (CCVs) to be outside of 20% acceptance criteria. Because of this, quantitation limits and sample concentrations should be considered estimates.

Z -

ND - Not Detected at PQL
PQL - Practical Quantitation Limit
RPD - Relative Percent Difference

This report pertains to the samples analyzed in accordance with the chain of custody, and is intended only for the use of the individual or company to whom it is addressed.

Chain of Custody

Page 1 of 3

OnSite Environmental Inc.
Analytical Laboratory Testing Services
14648 NE 95th Street • Redmond, WA 98052
Phone: (425) 883-3881 • www.onsite-env.com

Company: Krazan & Associates
Project Number: 094-21021
Project Name: SRV - Port of Everett Soils
Project Manager: Jordan Kain
Sampled by: Jordan Kain

Turnaround Request (in working days)

(Check One)

☐ Same Day ☐ 1 Day
☐ 2 Days ☐ 3 Days
☐ Standard (7 Days)
☑ 1 samples 1-10 4 day
☐ (other)
Samples 11-22; Standard

Laboratory Number: 08-092

Lab ID	Sample Identification	Date Sampled	Time Sampled	Matrix	Number of Containers
1	S-1	8-4-21	9:30	S	2
2	S-2		9:30		
3	S-3		9:45		
4	S-4		9:45		
5	S-5		10:00		
6	S-6		10:00		
7	S-7		10:00		
8	S-8		10:00		
9	S-9		10:15		
10	S-10		10:15		

Lab ID	NWTPH-HCID	NWTPH-Gx [redacted] ~ no BTEX	NWTPH-Gx	NWTPH-Dx (☐ Acid / SG Clean-up)	Volatiles 8260D	Halogenated Volatiles 8260D	EDB EPA 8011 (Waters Only)	Semivolatiles 8270E/SIM (with low-level PAHs)	PAHs 8270E/SIM (low-level)	PCBs 8082A	Organochlorine Pesticides 8081B	Organophosphorus Pesticides 8270E/SIM	Chlorinated Acid Herbicides 8151A	Total RCRA Metals	Total MTCA Metals	TCLP Metals	HEM (oil and grease) 1664A	Nickel	Arsenic, Copper, Lead, Zinc	Mercury EPA 7471		% Moisture
1		X		X					X	X									X	X		X
2		X		X					X	X									X	X		X
3		X		X					X	X									X	X		X
4		X		X					X	X									X	X		X
5		X		X					X	X									X	X		X
6		X		X					X	X									X	X		X
7		X		X					X	X									X	X		X
8		X		X					X	X									X	X		X
9		X		X					X	X									X	X		X
10		X		X					X	X									X	X		X

	Signature	Company	Date	Time
Relinquished	[signature]	Krazan	8-4-21	12:30pm
Received				
Relinquished				
Received				
Relinquished				
Received				
Reviewed/Date		Reviewed/Date		

Comments/Special Instructions

4 day TAT for samples S-1 → S-10

Data Package: Standard ☑ Level III ☐ Level IV ☐

Chromatograms with final report ☐ Electronic Data Deliverables (EDDs) ☐

Chain of Custody

OnSite Environmental Inc.
Analytical Laboratory Testing Services
14648 NE 95th Street • Redmond, WA 98052
Phone: (425) 883-3881 • www.onsite-env.com

Company: Krazan
Project Number: 094-21021
Project Name: SRV- Port of Everett
Project Manager: Jordan Kain
Sampled by: Jordan Kain

Turnaround Request (in working days)
(Check One)
☐ Same Day ☐ 1 Day
☐ 2 Days ☐ 3 Days
☑ Standard (7 Days)
☐ _____ (other)

Laboratory Number: 08-092

Lab ID	Sample Identification	Date Sampled	Time Sampled	Matrix	Number of Containers	NWTPH-HCID	NWTPH-Gx/BTEX	NWTPH-Gx	NWTPH-Dx (☐ Acid / SG Clean-up)	Volatiles 8260D	Halogenated Volatiles 8260D	EDB EPA 8011 (Waters Only)	Semivolatiles 8270E/SIM (with low-level PAHs)	PAHs 8270E/SIM (low-level)	PCBs 8082A	Organochlorine Pesticides 8081B	Organophosphorus Pesticides 8270E/SIM	Chlorinated Acid Herbicides 8151A	Total RCRA Metals	Total MTCA Metals	TCLP Metals	HEM (oil and grease) 1664A	Ag, Copper, Lead, Zinc, Nickel, Mercury EPA 7471			% Moisture
11	S-11	8-9-21	10:15	S	2			X	X					X	X								X	X		X
12	S-12		10:15					X	X					X	X								X	X		X
13	S-13		10:15					X	X					X	X								X	X		X
14	S-14		10:15					X	X					X	X								X	X		X
15	S-15		10:30					X	X					X	X								X	X		X
16	S-16		10:30					X	X					X	X								X	X		X
17	S-17		10:30					X	X					X	X								X	X		X
18	S-F6		10:30					X	X					X	X								X	X		X
19	S-19		10:45					X	X					X	X								X	X		X
20	S-20		10:45					X	X					X	X								X	X		X

	Signature	Company	Date	Time
Relinquished	Jordan Kain	Krazan	8-9-21	12:30
Received				
Relinquished				
Received				
Relinquished				
Received				
Reviewed/Date		Reviewed/Date		

Comments/Special Instructions

Data Package: Standard ☐ Level III ☐ Level IV ☐

Chromatograms with final report ☐ Electronic Data Deliverables (EDDs) ☐

Chain of Custody

OnSite Environmental Inc.
Analytical Laboratory Testing Services
14648 NE 95th Street • Redmond, WA 98052
Phone: (425) 883-3881 • www.onsite-env.com

Company: Krazan & Associates
Project Number: 094-21021
Project Name: SRV-Port of Everett
Project Manager: Jordan Kain
Sampled by: Jordan Kain

Turnaround Request (in working days)

(Check One)

- ☐ Same Day
- ☐ 1 Day
- ☐ 2 Days
- ☐ 3 Days
- ☑ Standard (7 Days)
- ☐ _____ (other)

Laboratory Number: 08-092

Lab ID	Sample Identification	Date Sampled	Time Sampled	Matrix	Number of Containers	NWTPH-HCID	NWTPH-Gx/BTEX	NWTPH-Gx	NWTPH-Dx (☐ Acid / SG Clean-up)	Volatiles 8260D	Halogenated Volatiles 8260D	EDB EPA 8011 (Waters Only)	Semivolatiles 8270E/SIM (with low-level PAHs)	PAHs 8270E/SIM (low-level)	PCBs 8082A	Organochlorine Pesticides 8081B	Organophosphorus Pesticides 8270E/SIM	Chlorinated Acid Herbicides 8151A	Total RCRA Metals	Total MTCA Metals	TCLP Metals	HEM (oil and grease) 1664A	As, Copper, Lead, Zinc, Nickel, Mercury EPA 747			% Moisture
21	S-21	8-9-21	11:00	S	2			X	X					X	X								X	X		X
22	S-22	1	11:00	1	1			X	X					X	X								X	X		X

	Signature	Company	Date	Time
Relinquished	John Kain	Krazan	8-9-21	12:30
Received				
Relinquished				
Received				
Relinquished				
Received				
Reviewed/Date		Reviewed/Date		

Comments/Special Instructions

Data Package: Standard ☐ Level III ☐ Level IV ☐

Chromatograms with final report ☐ Electronic Data Deliverables (EDDs) ☐

	0	1	2
	Location ID	Nickel	Copper
1	S-1	28	27
2	S-2	16	22
3	S-3	54	26
4	S-4	21	28
5	S-5	62	32
6	S-6	49	29
7	S-7	33	22
8	S-8	19	25
9	S-9	26	23
10	S-10	36	25
11	S-11	49	32
12	S-12	17	25
13	S-13	14	23
14	S-14	13	24
15	S-15	25	24
16	S-16	42	45
17	S-17	28	23
18	S-18	41	36
19	S-19	31	31
20	S-20	22	22
21	S-21	24	24
22	S-22	45	38

	A	B	C	D	E	F	G	H	I	J	K	L
1	UCL Statistics for Uncensored Full Data Sets											
2												
3	User Selected Options											
4	Date/Time of Computation	ProUCL 5.18/18/2021 2:49:30 PM										
5	From File	WorkSheet.xls										
6	Full Precision	OFF										
7	Confidence Coefficient	95%										
8	Number of Bootstrap Operations	2000										
9												
10												
11	Nickel											
12												
13	General Statistics											
14	Total Number of Observations					22		Number of Distinct Observations				20
15								Number of Missing Observations				0
16	Minimum					13		Mean				31.59
17	Maximum					62		Median				28
18	SD					13.91		Std. Error of Mean				2.966
19	Coefficient of Variation					0.44		Skewness				0.595
20												
21	Normal GOF Test											
22	Shapiro Wilk Test Statistic					0.945		Shapiro Wilk GOF Test				
23	5% Shapiro Wilk Critical Value					0.911		Data appear Normal at 5% Significance Level				
24	Lilliefors Test Statistic					0.147		Lilliefors GOF Test				
25	5% Lilliefors Critical Value					0.184		Data appear Normal at 5% Significance Level				
26	Data appear Normal at 5% Significance Level											
27												
28	Assuming Normal Distribution											
29	95% Normal UCL							95% UCLs (Adjusted for Skewness)				
30	95% Student's-t UCL					36.69		95% Adjusted-CLT UCL (Chen-1995)				36.87
31								95% Modified-t UCL (Johnson-1978)				36.76
32												
33	Gamma GOF Test											
34	A-D Test Statistic					0.228		Anderson-Darling Gamma GOF Test				
35	5% A-D Critical Value					0.746		Detected data appear Gamma Distributed at 5% Significance Level				
36	K-S Test Statistic					0.0994		Kolmogorov-Smirnov Gamma GOF Test				
37	5% K-S Critical Value					0.186		Detected data appear Gamma Distributed at 5% Significance Level				
38	Detected data appear Gamma Distributed at 5% Significance Level											
39												
40	Gamma Statistics											
41	k hat (MLE)					5.444		k star (bias corrected MLE)				4.732
42	Theta hat (MLE)					5.803		Theta star (bias corrected MLE)				6.676
43	nu hat (MLE)					239.5		nu star (bias corrected)				208.2
44	MLE Mean (bias corrected)					31.59		MLE Sd (bias corrected)				14.52
45								Approximate Chi Square Value (0.05)				175.8
46	Adjusted Level of Significance					0.0386		Adjusted Chi Square Value				173.6
47												
48	Assuming Gamma Distribution											
49	95% Approximate Gamma UCL (use when n>=50))					37.41		95% Adjusted Gamma UCL (use when n<50)				37.89
50												
51	Lognormal GOF Test											
52	Shapiro Wilk Test Statistic					0.973		Shapiro Wilk Lognormal GOF Test				
53	5% Shapiro Wilk Critical Value					0.911		Data appear Lognormal at 5% Significance Level				

54				Lilliefors Test Statistic	0.103	Lilliefors Lognormal GOF Test					
55				5% Lilliefors Critical Value	0.184	Data appear Lognormal at 5% Significance Level					
56	Data appear Lognormal at 5% Significance Level										
57											
58	Lognormal Statistics										
59				Minimum of Logged Data	2.565			Mean of logged Data	3.358		
60				Maximum of Logged Data	4.127			SD of logged Data	0.451		
61											
62	Assuming Lognormal Distribution										
63				95% H-UCL	38.57			90% Chebyshev (MVUE) UCL	41.08		
64				95% Chebyshev (MVUE) UCL	45.35			97.5% Chebyshev (MVUE) UCL	51.28		
65				99% Chebyshev (MVUE) UCL	62.92						
66											
67	Nonparametric Distribution Free UCL Statistics										
68	Data appear to follow a Discernible Distribution at 5% Significance Level										
69											
70	Nonparametric Distribution Free UCLs										
71				95% CLT UCL	36.47			95% Jackknife UCL	36.69		
72				95% Standard Bootstrap UCL	36.32			95% Bootstrap-t UCL	36.98		
73				95% Hall's Bootstrap UCL	36.4			95% Percentile Bootstrap UCL	36.68		
74				95% BCA Bootstrap UCL	36.45						
75				90% Chebyshev(Mean, Sd) UCL	40.49			95% Chebyshev(Mean, Sd) UCL	44.52		
76				97.5% Chebyshev(Mean, Sd) UCL	50.11			99% Chebyshev(Mean, Sd) UCL	61.1		
77											
78	Suggested UCL to Use										
79				95% Student's-t UCL	36.69						
80											
81	Note: Suggestions regarding the selection of a 95% UCL are provided to help the user to select the most appropriate 95% UCL.										
82	Recommendations are based upon data size, data distribution, and skewness.										
83	These recommendations are based upon the results of the simulation studies summarized in Singh, Maichle, and Lee (2006).										
84	However, simulations results will not cover all Real World data sets; for additional insight the user may want to consult a statistician.										
85											
86											
87	Copper										
88											
89	General Statistics										
90				Total Number of Observations	22			Number of Distinct Observations	13		
91								Number of Missing Observations	0		
92				Minimum	22			Mean	27.55		
93				Maximum	45			Median	25		
94				SD	5.99			Std. Error of Mean	1.277		
95				Coefficient of Variation	0.217			Skewness	1.537		
96											
97	Normal GOF Test										
98				Shapiro Wilk Test Statistic	0.83	Shapiro Wilk GOF Test					
99				5% Shapiro Wilk Critical Value	0.911	Data Not Normal at 5% Significance Level					
100				Lilliefors Test Statistic	0.21	Lilliefors GOF Test					
101				5% Lilliefors Critical Value	0.184	Data Not Normal at 5% Significance Level					
102	Data Not Normal at 5% Significance Level										
103											
104	Assuming Normal Distribution										
105	95% Normal UCL							95% UCLs (Adjusted for Skewness)			
106				95% Student's-t UCL	29.74			95% Adjusted-CLT UCL (Chen-1995)	30.09		

107							95% Modified-t UCL (Johnson-1978)				29.81
108											
109					Gamma GOF Test						
110				A-D Test Statistic	1.036		Anderson-Darling Gamma GOF Test				
111				5% A-D Critical Value	0.741		Data Not Gamma Distributed at 5% Significance Level				
112				K-S Test Statistic	0.207		Kolmogorov-Smirnov Gamma GOF Test				
113				5% K-S Critical Value	0.185		Data Not Gamma Distributed at 5% Significance Level				
114					Data Not Gamma Distributed at 5% Significance Level						
115											
116					Gamma Statistics						
117				k hat (MLE)	25.67		k star (bias corrected MLE)				22.2
118				Theta hat (MLE)	1.073		Theta star (bias corrected MLE)				1.241
119				nu hat (MLE)	1129		nu star (bias corrected)				976.6
120				MLE Mean (bias corrected)	27.55		MLE Sd (bias corrected)				5.847
121							Approximate Chi Square Value (0.05)				905.1
122				Adjusted Level of Significance	0.0386		Adjusted Chi Square Value				900
123											
124					Assuming Gamma Distribution						
125				95% Approximate Gamma UCL (use when n>=50))	29.72		95% Adjusted Gamma UCL (use when n<50)				29.89
126											
127					Lognormal GOF Test						
128				Shapiro Wilk Test Statistic	0.881		Shapiro Wilk Lognormal GOF Test				
129				5% Shapiro Wilk Critical Value	0.911		Data Not Lognormal at 5% Significance Level				
130				Lilliefors Test Statistic	0.199		Lilliefors Lognormal GOF Test				
131				5% Lilliefors Critical Value	0.184		Data Not Lognormal at 5% Significance Level				
132					Data Not Lognormal at 5% Significance Level						
133											
134					Lognormal Statistics						
135				Minimum of Logged Data	3.091		Mean of logged Data				3.296
136				Maximum of Logged Data	3.807		SD of logged Data				0.196
137											
138					Assuming Lognormal Distribution						
139				95% H-UCL	29.71		90% Chebyshev (MVUE) UCL				30.98
140				95% Chebyshev (MVUE) UCL	32.56		97.5% Chebyshev (MVUE) UCL				34.74
141				99% Chebyshev (MVUE) UCL	39.03						
142											
143					Nonparametric Distribution Free UCL Statistics						
144					Data do not follow a Discernible Distribution (0.05)						
145											
146					Nonparametric Distribution Free UCLs						
147				95% CLT UCL	29.65		95% Jackknife UCL				29.74
148				95% Standard Bootstrap UCL	29.6		95% Bootstrap-t UCL				30.55
149				95% Hall's Bootstrap UCL	30.41		95% Percentile Bootstrap UCL				29.73
150				95% BCA Bootstrap UCL	30						
151				90% Chebyshev(Mean, Sd) UCL	31.38		95% Chebyshev(Mean, Sd) UCL				33.11
152				97.5% Chebyshev(Mean, Sd) UCL	35.52		99% Chebyshev(Mean, Sd) UCL				40.25
153											
154					Suggested UCL to Use						
155				95% Student's-t UCL	29.74		or 95% Modified-t UCL				29.81
156											
157					Note: Suggestions regarding the selection of a 95% UCL are provided to help the user to select the most appropriate 95% UCL.						
158					Recommendations are based upon data size, data distribution, and skewness.						
159					These recommendations are based upon the results of the simulation studies summarized in Singh, Maichle, and Lee (2006).						

	A	B	C	D	E	F	G	H	I	J	K	L
160	However, simulations results will not cover all Real World data sets; for additional insight the user may want to consult a statistician.											
161												

Preload—Cadman Pit D345b

Krazan & ASSOCIATES, INC.

GEOTECHNICAL ENGINEERING • ENVIRONMENTAL ENGINEERING
CONSTRUCTION TESTING & INSPECTION

September 13, 2021 KA No. 094-210121

Mr. John Snyder
SRV CONSRUCTION, INC.
PO Box 507
Anacortes, WA 98221

RE: SOIL ANALYTICAL ANALYSIS AND REPORTING
Cadman Sand & Gravel – Pit # D345
22022 Mountain Loop Hwy
Granite Falls, Washington

Dear Mr. Snyder

In accordance with your request and authorization, our firm performed soil sampling analysis for the above-referenced project on September 13, 2021. The sampling was performed by Krazan and Associates, Inc. representative on August 31, 2021.

If you have any questions, or if we can be of further assistance, please do not hesitate to contact our office.

Respectfully submitted,
KRAZAN & ASSOCIATES, INC.



Jordan Kain, P.E.
Environmental Department Manager

September 13, 2021 KA Project No. 094-21021

Mr. John Snyder
SRV Construction, Inc. Tel: (360)675-7100
PO Box 507
Anacortes, WA 98221

RE: Letter Report for Soil Analytical Reporting
Cadman Sand & Gravel
22022 Mountain Loop Highway
Granite Falls, WA 98252

Dear Mr. Snyder:

Krazan and Associates is providing this Letter Report in reference to limited sampling of soil at the above referenced address located in Granite Falls, Washington. Sample collection was conducted by Krazan & Associates representative Mr. Jordan Kain on August 31, 2021. This sampling was performed in accordance with federal, state and local regulatory requirements, and was limited to the 1-¼" CSBC stock pile located at Cadman Sand & Gravel pit # D345. Contaminants of concern (C.O.C) analysis were based on Port of Everett – Norton Terminal – Preload and MTCA 3rd Interim Action specification 1.04 E Section 31 00 00.

1.0 ANALYTICAL RESULTS

1.1 Soil Sampling Locations

Twenty-five (25) discrete soil samples were collected at evenly distributed locations throughout the on-site 1-¼" CSBC stockpile. See attached figure for soil sample locations. Collected samples were delivered to a Washington State certified laboratory. The laboratory analytical report is provided in Appendix A.

1.2 Sampling Methodology

The samples were collected by carefully collecting discreet samples with a clean stainless-steel sampler. The samples were placed in laboratory supplied clean glass sample containers. Sample containers were then placed in an iced cooler for transportation to the laboratory. The sampling instrument was wiped between samples with a clean moist cloth to decontaminate the tool and minimize the potential cross contamination of subsequent samples. Data pertinent to each sample (e.g., date, sample number, material description, and material category) was recorded on a chain of custody.

1.3 Laboratory Analysis

A total of twenty-five (25) discrete soil samples were collected from the site and delivered OnSite Environmental Inc in Redmond, Washington, under chain-of-custody protocol for analysis. OnSite Environmental is a Washington State accredited laboratory. Samples were run for Total Petroleum Hydrocarbons Gasoline (TPH-Gx), Total Petroleum Hydrocarbons Diesel & Motor Oil (TPH-Dx), PAHs, PCBs, Arsenic, Nickel, Copper Mercury, Lead, Zinc and percent moisture. Laboratory analytical data reports and chain-of-custody forms are provided in Appendix A.

1.4 Laboratory Sample Results

Table 1 & 2 includes the sample number, sample location, sample description, and analyte contamination.

Table 1 – Summary of Analytical Data

Sample Number	Sample Location	Sample Material Description	TPH Gasoline	TPH Diesel	TPH Motor Oil	PCBs	Arsenic	Copper	Lead	Mercury	Nickel	Zinc
S-23	Pit #D345 Stock-Pile	Discrete Soil	ND	ND	66	ND	ND	30	ND	ND	53	49
S-24	Pit #D345 Stock-Pile	Discrete Soil	ND	ND	ND	ND	ND	22	ND	ND	27	45
S-25	Pit #D345 Stock-Pile	Discrete Soil	ND	ND	54	ND	ND	24	ND	ND	43	40
S-26	Pit #D345 Stock-Pile	Discrete Soil	ND	ND	ND	ND	ND	25	ND	ND	21	34
S-27	Pit #D345 Stock-Pile	Discrete Soil	ND	ND	ND	ND	ND	27	ND	ND	13	34
S-28	Pit #D345 Stock-Pile	Discrete Soil	ND	ND	ND	ND	ND	21	ND	ND	16	36
S-29	Pit #D345 Stock-Pile	Discrete Soil	ND	ND	ND	ND	ND	27	ND	ND	24	43
S-30	Pit #D345 Stock-Pile	Discrete Soil	ND	ND	ND	ND	ND	22	ND	ND	17	35
S-31	Pit #D345 Stock-Pile	Discrete Soil	ND	ND	ND	ND	ND	23	ND	ND	18	38
S-32	Pit #D345 Stock-Pile	Discrete Soil	ND	ND	ND	ND	ND	25	ND	ND	20	46
S-33	Pit #D345 Stock-Pile	Discrete Soil	ND	ND	ND	ND	ND	27	ND	ND	21	33
S-34	Pit #D345 Stock-Pile	Discrete Soil	ND	ND	ND	ND	ND	20	ND	ND	18	50

S-35	Pit #D345 Stock-Pile	Discrete Soil	ND	ND	ND	ND	ND	29	ND	ND	36	43
S-36	Pit #D345 Stock-Pile	Discrete Soil	ND	ND	ND	ND	ND	24	ND	ND	27	55
S-37	Pit #D345 Stock-Pile	Discrete Soil	ND	ND	85	ND	ND	24	5.5	ND	27	44
S-38	Pit #D345 Stock-Pile	Discrete Soil	ND	ND	76	ND	ND	23	ND	ND	21	44
S-39	Pit #D345 Stock-Pile	Discrete Soil	ND	ND	ND	ND	ND	22	ND	ND	15	39
S-40	Pit #D345 Stock-Pile	Discrete Soil	ND	ND	ND	ND	ND	23	ND	ND	15	40
S-41	Pit #D345 Stock-Pile	Discrete Soil	ND	ND	ND	ND	ND	19	5.4	ND	11	73
S-42	Pit #D345 Stock-Pile	Discrete Soil	ND	ND	ND	ND	ND	24	ND	ND	20	45
S-43	Pit #D345 Stock-Pile	Discrete Soil	ND	ND	ND	ND	ND	23	ND	ND	22	34
S-44	Pit #D345 Stock-Pile	Discrete Soil	ND	ND	ND	ND	ND	22	ND	ND	22	39
S-45	Pit #D345 Stock-Pile	Discrete Soil	ND	ND	ND	ND	ND	25	ND	ND	23	40
S-46	Pit #D345 Stock-Pile	Discrete Soil	ND	ND	ND	ND	ND	30	ND	ND	33	43
S-47	Pit #D345 Stock-Pile	Discrete Soil	ND	ND	ND	ND	ND	29	ND	ND	48	48
Upper Limits	NA	Soil	20 ppm	200 ppm	200 ppm	0.12	20	36	81	0.1	48	85

*benzo(a)pyrene = MTCA regulated PAH

All results displayed in ppm = Parts Per Million

ND = Not Detected

NA = Not Applicable

Table 2 – Summary of Analytical Data

Sample Number	Sample Location	Sample Material Description	Benzo(a)pyrene*	Total cPAH TEQ	Acenapthene	Acenphthylene	Anthracene	Benzo(g,h,i)perylene	Fluoranthene	Fluorene	Phenanthrene	Pyrene	1-Methylnaphthalene	2-Methylnaphthalene	Naphthalene
S-23	Pit #D345 Stock-Pile	Discrete Soil	ND	ND	ND	ND	ND	ND	ND	ND	ND	ND	ND	ND	ND
S-24	Pit #D345 Stock-Pile	Discrete Soil	ND	ND	ND	ND	ND	ND	ND	ND	ND	ND	ND	ND	ND
S-25	Pit #D345 Stock-Pile	Discrete Soil	ND	ND	ND	ND	ND	ND	ND	ND	ND	ND	ND	ND	ND
S-26	Pit #D345 Stock-Pile	Discrete Soil	ND	ND	ND	ND	ND	ND	ND	ND	ND	ND	ND	ND	ND
S-27	Pit #D345 Stock-Pile	Discrete Soil	ND	ND	ND	ND	ND	ND	ND	ND	ND	ND	ND	ND	ND
S-28	Pit #D345 Stock-Pile	Discrete Soil	ND	ND	ND	ND	ND	ND	ND	ND	ND	ND	ND	ND	ND
S-29	Pit #D345 Stock-Pile	Discrete Soil	ND	ND	ND	ND	ND	ND	ND	ND	ND	ND	ND	ND	ND
S-30	Pit #D345 Stock-Pile	Discrete Soil	ND	ND	ND	ND	ND	ND	ND	ND	ND	ND	ND	ND	ND
S-31	Pit #D345 Stock-Pile	Discrete Soil	ND	ND	ND	ND	ND	ND	ND	ND	ND	ND	ND	ND	ND
S-32	Pit #D345 Stock-Pile	Discrete Soil	ND	ND	ND	ND	ND	ND	ND	ND	ND	ND	ND	ND	ND
S-33	Pit #D345 Stock-Pile	Discrete Soil	ND	ND	ND	ND	ND	ND	ND	ND	ND	ND	ND	ND	ND
S-34	Pit #D345 Stock-Pile	Discrete Soil	ND	ND	ND	ND	ND	ND	ND	ND	ND	ND	ND	ND	ND
S-35	Pit #D345 Stock-Pile	Discrete Soil	ND	ND	ND	ND	ND	ND	ND	ND	ND	ND	ND	ND	ND
S-36	Pit #D345 Stock-Pile	Discrete Soil	ND	ND	ND	ND	ND	ND	ND	ND	ND	ND	ND	ND	ND
S-37	Pit #D345 Stock-Pile	Discrete Soil	ND	ND	ND	ND	ND	ND	ND	ND	ND	0.0074	ND	ND	ND
S-38	Pit #D345 Stock-Pile	Discrete Soil	ND	ND	ND	ND	ND	ND	ND	ND	ND	ND	ND	ND	ND
S-39	Pit #D345 Stock-Pile	Discrete Soil	ND	ND	ND	ND	ND	ND	ND	ND	ND	ND	ND	ND	ND

S-40	Pit #D345 Stock-Pile	Discrete Soil	ND	ND	ND	ND	ND	ND	ND	ND	ND	ND	ND	ND	ND
S-41	Pit #D345 Stock-Pile	Discrete Soil	ND	ND	ND	ND	ND	ND	ND	ND	ND	ND	ND	ND	ND
S-42	Pit #D345 Stock-Pile	Discrete Soil	ND	ND	ND	ND	ND	ND	ND	ND	ND	ND	ND	ND	ND
S-43	Pit #D345 Stock-Pile	Discrete Soil	ND	ND	ND	ND	ND	ND	ND	ND	ND	ND	ND	ND	ND
S-44	Pit #D345 Stock-Pile	Discrete Soil	ND	ND	ND	ND	ND	ND	ND	ND	ND	ND	ND	ND	ND
S-45	Pit #D345 Stock-Pile	Discrete Soil	ND	ND	ND	ND	ND	ND	ND	ND	ND	ND	ND	ND	ND
S-46	Pit #D345 Stock-Pile	Discrete Soil	ND	ND	ND	ND	ND	ND	ND	ND	ND	ND	ND	ND	ND
S-47	Pit #D345 Stock-Pile	Discrete Soil	ND	ND	ND	ND	ND	ND	ND	ND	ND	ND	ND	ND	ND
Upper Limits	NA	Soil	0.1	0.16	1.2	210,000	1,100,000	110,000	140,000	140,000	1,100,000	110,000	4,500	0.63	0.86

*benzo(a)pyrene = MTCA regulated PAH
ND = Not Detected
NA = Not Applicable

1.5 Conclusion

The soil collected from Cadman Sand and Gravel - Pit #D345 located at 22022 Mountain Loop Highway, Granite Falls, WA did not exceed the Department of Ecology and the Port of Everett concentration upper limits for TPH-Gx, TPH-Dx, PAHs, Total cPAHs TEQ, PCBs, Arsenic, Lead, Mercury and Zinc as stated in Port of Everett – Norton Terminal – Preload and MTCA 3rd Interim Action specification 1.04 E Section 31 00 00. Based on laboratory control limits and data qualifiers, all samples have been validated.

LIMITATIONS

This survey and review of the subject property has been limited in scope to those areas defined by the client. This investigation is undertaken with the risk that visual observations and random sampling alone would not reveal the presence, full nature, and extent of Contaminants of Concern (COC). Krazan makes no representation as to the COC content of materials not sampled or that were inaccessible to our inspector. The sample locations are approximate, and are based on field notes and diagrams of sample locations. The opinions presented herein apply to the site condition existing at the time of the investigation. Opinions and recommendations provided herein may not apply to future conditions that may exist at the site.

The findings presented in this report were based on field observations and sampling as defined by the client. Therefore, the data obtained are clear and accurate only to the degree implied by the sources and methods used. The information presented herein is based on professional interpretation using presently accepted methods with a degree of conservatism deemed proper as of the report date. We do not warrant that future technical developments cannot supersede such data.

This report is provided for the exclusive use of the client noted on the cover page and is subject to the terms and conditions in the applicable contract between the client and Krazan. The client is the only party to whom Krazan has explained the risks involved and has been involved in the shaping of the scope of services needed to satisfactorily manage those risks, if any, from the client's point of view. Any third party use of this report, including use by the Client's lender, prospective purchaser, or lessee will be subject to the terms and conditions governing the contractual work between the Client and Krazan. The unauthorized use of, reliance on, or release of the information contained in this report is strictly prohibited and will be without risk or liability to Krazan.

Laboratory analysis was conducted by a laboratory accredited under the guidance of the EPA. The results of the analyses are accurate only to the degree of care exercised by the independent laboratories and the representative nature of the samples obtained.

Krazan appreciates the opportunity to provide you with this information and trusts that you will find it useful. If you have any questions or if we may be of further assistance, please do not hesitate to contact our office at (425) 485-5519.

Respectfully submitted,
KRAZAN & ASSOCIATES, INC.



Jordan Kain, P.E
Environmental Department Manager
Krazan & Associates

Soil Stockpile Sample Map

(Not to Scale)

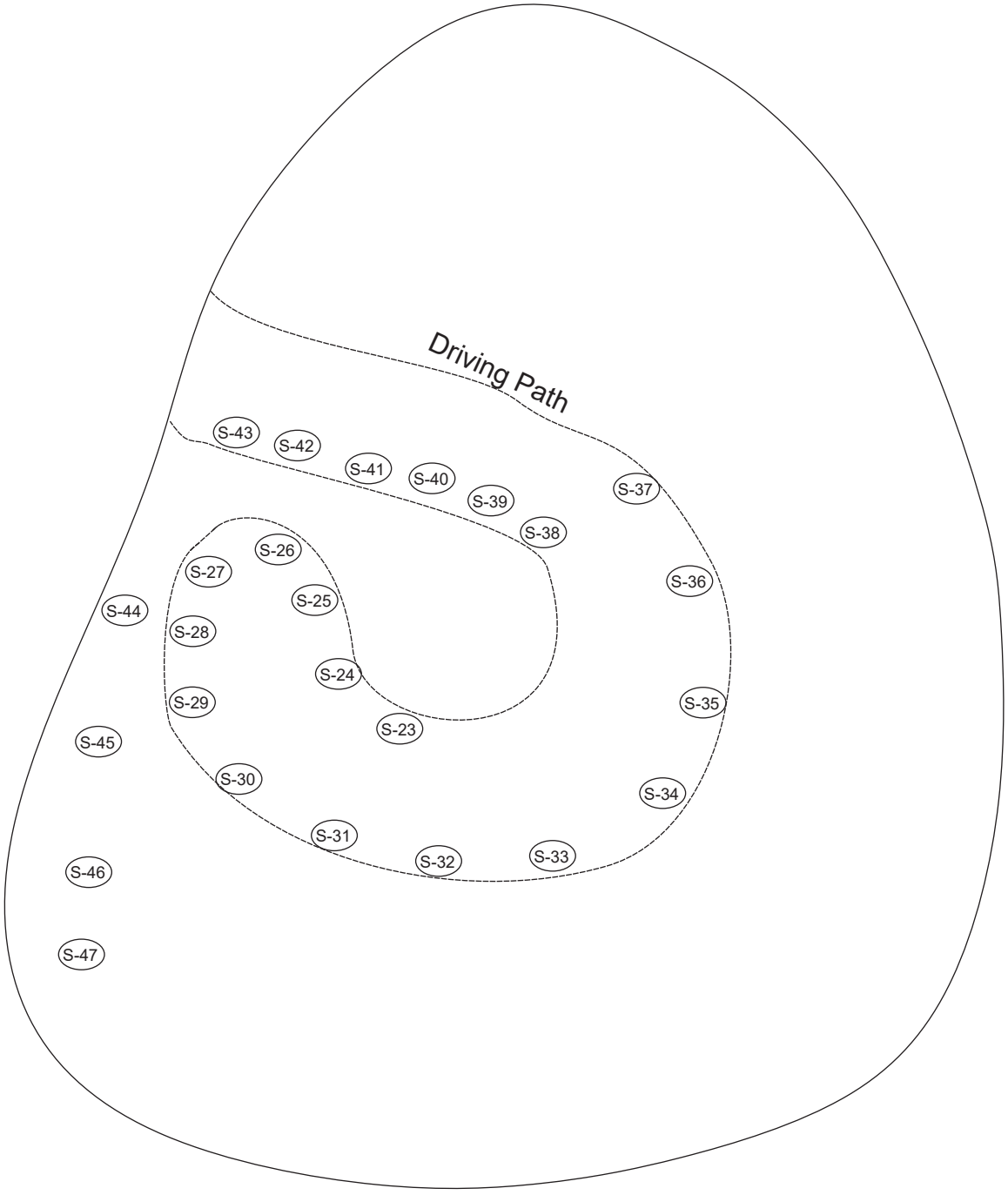

Notes

(S-1) = sample name and location

Krazan & ASSOCIATES, INC.

Cadman Sand and Gravel Pit# D345 - 22022 Mountain Loop Hwy, Granite Falls, WA 98252

Date: August 2021		
Drawn By: JJK	Sample Locations	Project Number: 094-21021

Appendix A

OnSite Environmental Inc.
14648 NE 95th Street, Redmond, WA 98052 • (425) 883-3881

September 10, 2021

Jordan Kain
Krazan Associates, Inc.
11715 North Creek Parkway South, Suite C-106
Bothell, WA 98011

Re: Analytical Data for Project 094-21021
Laboratory Reference No. 2108-312

Dear Jordan:

Enclosed are the analytical results and associated quality control data for samples submitted on August 31, 2021.

The standard policy of OnSite Environmental, Inc. is to store your samples for 30 days from the date of receipt. If you require longer storage, please contact the laboratory.

We appreciate the opportunity to be of service to you on this project. If you have any questions concerning the data, or need additional information, please feel free to call me.

Sincerely,

David Baumeister
Project Manager

Enclosures

This report pertains to the samples analyzed in accordance with the chain of custody,
and is intended only for the use of the individual or company to whom it is addressed.

Date of Report: September 10, 2021
Samples Submitted: August 31, 2021
Laboratory Reference: 2108-312
Project: 094-21021

Case Narrative

Samples were collected on August 31, 2021 and received by the laboratory on August 31, 2021. They were maintained at the laboratory at a temperature of 2°C to 6°C.

Please note that any and all soil sample results are reported on a dry-weight basis, unless otherwise noted below.

General QA/QC issues associated with the analytical data enclosed in this laboratory report will be indicated with a reference to a comment or explanation on the Data Qualifier page. More complex and involved QA/QC issues will be discussed in detail below.

This report pertains to the samples analyzed in accordance with the chain of custody,
and is intended only for the use of the individual or company to whom it is addressed.

Date of Report: September 10, 2021
Samples Submitted: August 31, 2021
Laboratory Reference: 2108-312
Project: 094-21021

GASOLINE RANGE ORGANICS
NWTPH-Gx

Matrix: Soil
Units: mg/kg (ppm)

Analyte	Result	PQL	Method	Date Prepared	Date Analyzed	Flags
Client ID:	**S-23**					
Laboratory ID:	08-312-01					
Gasoline	**ND**	2.5	NWTPH-Gx	9-1-21	9-2-21	
Surrogate:	*Percent Recovery*	*Control Limits*				
Fluorobenzene	*101*	*66-129*				
Client ID:	**S-24**					
Laboratory ID:	08-312-02					
Gasoline	**ND**	2.5	NWTPH-Gx	9-1-21	9-2-21	
Surrogate:	*Percent Recovery*	*Control Limits*				
Fluorobenzene	*69*	*66-129*				
Client ID:	**S-25**					
Laboratory ID:	08-312-03					
Gasoline	**ND**	3.0	NWTPH-Gx	9-1-21	9-2-21	
Surrogate:	*Percent Recovery*	*Control Limits*				
Fluorobenzene	*93*	*66-129*				
Client ID:	**S-26**					
Laboratory ID:	08-312-04					
Gasoline	**ND**	2.3	NWTPH-Gx	9-1-21	9-2-21	
Surrogate:	*Percent Recovery*	*Control Limits*				
Fluorobenzene	*76*	*66-129*				
Client ID:	**S-27**					
Laboratory ID:	08-312-05					
Gasoline	**ND**	2.6	NWTPH-Gx	9-1-21	9-2-21	
Surrogate:	*Percent Recovery*	*Control Limits*				
Fluorobenzene	*82*	*66-129*				
Client ID:	**S-28**					
Laboratory ID:	08-312-06					
Gasoline	**ND**	2.6	NWTPH-Gx	9-1-21	9-2-21	
Surrogate:	*Percent Recovery*	*Control Limits*				
Fluorobenzene	*88*	*66-129*				
Client ID:	**S-29**					
Laboratory ID:	08-312-07					
Gasoline	**ND**	2.4	NWTPH-Gx	9-1-21	9-2-21	
Surrogate:	*Percent Recovery*	*Control Limits*				
Fluorobenzene	*89*	*66-129*				

This report pertains to the samples analyzed in accordance with the chain of custody,
and is intended only for the use of the individual or company to whom it is addressed.

Date of Report: September 10, 2021
Samples Submitted: August 31, 2021
Laboratory Reference: 2108-312
Project: 094-21021

GASOLINE RANGE ORGANICS
NWTPH-Gx

Matrix: Soil
Units: mg/kg (ppm)

Analyte	Result	PQL	Method	Date Prepared	Date Analyzed	Flags
Client ID:	**S-30**					
Laboratory ID:	08-312-08					
Gasoline	**ND**	2.4	NWTPH-Gx	9-1-21	9-2-21	
Surrogate:	*Percent Recovery*	*Control Limits*				
Fluorobenzene	*79*	*66-129*				
Client ID:	**S-31**					
Laboratory ID:	08-312-09					
Gasoline	**ND**	2.5	NWTPH-Gx	9-1-21	9-2-21	
Surrogate:	*Percent Recovery*	*Control Limits*				
Fluorobenzene	*83*	*66-129*				
Client ID:	**S-32**					
Laboratory ID:	08-312-10					
Gasoline	**ND**	2.1	NWTPH-Gx	9-1-21	9-2-21	
Surrogate:	*Percent Recovery*	*Control Limits*				
Fluorobenzene	*82*	*66-129*				
Client ID:	**S-33**					
Laboratory ID:	08-312-11					
Gasoline	**ND**	2.2	NWTPH-Gx	9-1-21	9-2-21	
Surrogate:	*Percent Recovery*	*Control Limits*				
Fluorobenzene	*100*	*66-129*				
Client ID:	**S-34**					
Laboratory ID:	08-312-12					
Gasoline	**ND**	2.0	NWTPH-Gx	9-1-21	9-2-21	
Surrogate:	*Percent Recovery*	*Control Limits*				
Fluorobenzene	*100*	*66-129*				
Client ID:	**S-35**					
Laboratory ID:	08-312-13					
Gasoline	**ND**	2.2	NWTPH-Gx	9-1-21	9-2-21	
Surrogate:	*Percent Recovery*	*Control Limits*				
Fluorobenzene	*101*	*66-129*				
Client ID:	**S-36**					
Laboratory ID:	08-312-14					
Gasoline	**ND**	2.3	NWTPH-Gx	9-1-21	9-2-21	
Surrogate:	*Percent Recovery*	*Control Limits*				
Fluorobenzene	*99*	*66-129*				

This report pertains to the samples analyzed in accordance with the chain of custody,
and is intended only for the use of the individual or company to whom it is addressed.

Date of Report: September 10, 2021
Samples Submitted: August 31, 2021
Laboratory Reference: 2108-312
Project: 094-21021

GASOLINE RANGE ORGANICS
NWTPH-Gx

Matrix: Soil
Units: mg/kg (ppm)

Analyte	Result	PQL	Method	Date Prepared	Date Analyzed	Flags
Client ID:	**S-37**					
Laboratory ID:	08-312-15					
Gasoline	**ND**	2.4	NWTPH-Gx	9-1-21	9-2-21	
Surrogate:	*Percent Recovery*	*Control Limits*				
Fluorobenzene	*104*	*66-129*				
Client ID:	**S-38**					
Laboratory ID:	08-312-16					
Gasoline	**ND**	2.4	NWTPH-Gx	9-1-21	9-2-21	
Surrogate:	*Percent Recovery*	*Control Limits*				
Fluorobenzene	*106*	*66-129*				
Client ID:	**S-39**					
Laboratory ID:	08-312-17					
Gasoline	**ND**	2.1	NWTPH-Gx	9-1-21	9-2-21	
Surrogate:	*Percent Recovery*	*Control Limits*				
Fluorobenzene	*102*	*66-129*				
Client ID:	**S-40**					
Laboratory ID:	08-312-18					
Gasoline	**ND**	2.6	NWTPH-Gx	9-1-21	9-2-21	
Surrogate:	*Percent Recovery*	*Control Limits*				
Fluorobenzene	*105*	*66-129*				
Client ID:	**S-41**					
Laboratory ID:	08-312-19					
Gasoline	**ND**	2.4	NWTPH-Gx	9-1-21	9-2-21	
Surrogate:	*Percent Recovery*	*Control Limits*				
Fluorobenzene	*101*	*66-129*				
Client ID:	**S-42**					
Laboratory ID:	08-312-20					
Gasoline	**ND**	2.7	NWTPH-Gx	9-1-21	9-2-21	
Surrogate:	*Percent Recovery*	*Control Limits*				
Fluorobenzene	*99*	*66-129*				
Client ID:	**S-43**					
Laboratory ID:	08-312-21					
Gasoline	**ND**	2.4	NWTPH-Gx	9-1-21	9-2-21	
Surrogate:	*Percent Recovery*	*Control Limits*				
Fluorobenzene	*103*	*66-129*				

This report pertains to the samples analyzed in accordance with the chain of custody,
and is intended only for the use of the individual or company to whom it is addressed.

Date of Report: September 10, 2021
Samples Submitted: August 31, 2021
Laboratory Reference: 2108-312
Project: 094-21021

GASOLINE RANGE ORGANICS
NWTPH-Gx

Matrix: Soil
Units: mg/kg (ppm)

Analyte	Result	PQL	Method	Date Prepared	Date Analyzed	Flags
Client ID:	**S-44**					
Laboratory ID:	08-312-22					
Gasoline	**ND**	2.5	NWTPH-Gx	9-1-21	9-2-21	
Surrogate:	*Percent Recovery*	*Control Limits*				
Fluorobenzene	*98*	*66-129*				
Client ID:	**S-45**					
Laboratory ID:	08-312-23					
Gasoline	**ND**	2.3	NWTPH-Gx	9-1-21	9-2-21	
Surrogate:	*Percent Recovery*	*Control Limits*				
Fluorobenzene	*100*	*66-129*				
Client ID:	**S-46**					
Laboratory ID:	08-312-24					
Gasoline	**ND**	2.7	NWTPH-Gx	9-1-21	9-2-21	
Surrogate:	*Percent Recovery*	*Control Limits*				
Fluorobenzene	*99*	*66-129*				
Client ID:	**S-47**					
Laboratory ID:	08-312-25					
Gasoline	**ND**	2.2	NWTPH-Gx	9-1-21	9-2-21	
Surrogate:	*Percent Recovery*	*Control Limits*				
Fluorobenzene	*102*	*66-129*				

This report pertains to the samples analyzed in accordance with the chain of custody,
and is intended only for the use of the individual or company to whom it is addressed.

Date of Report: September 10, 2021
Samples Submitted: August 31, 2021
Laboratory Reference: 2108-312
Project: 094-21021

GASOLINE RANGE ORGANICS
NWTPH-Gx
QUALITY CONTROL

Matrix: Soil
Units: mg/kg (ppm)

Analyte	Result	PQL	Method	Date Prepared	Date Analyzed	Flags
METHOD BLANK						
Laboratory ID:	MB0901S2					
Gasoline	**ND**	5.0	NWTPH-Gx	9-1-21	9-1-21	
Surrogate:	*Percent Recovery*	*Control Limits*				
Fluorobenzene	*101*	*66-129*				
Laboratory ID:	MB0901S3					
Gasoline	**ND**	5.0	NWTPH-Gx	9-1-21	9-1-21	
Surrogate:	*Percent Recovery*	*Control Limits*				
Fluorobenzene	*84*	*66-129*				
Laboratory ID:	MB0901S4					
Gasoline	**ND**	5.0	NWTPH-Gx	9-1-21	9-1-21	
Surrogate:	*Percent Recovery*	*Control Limits*				
Fluorobenzene	*83*	*66-129*				

Analyte	Result		Spike Level		Source Result	Percent Recovery	Recovery Limits	RPD	RPD Limit	Flags
DUPLICATE										
Laboratory ID:	08-313-02									
	ORIG	DUP								
Gasoline	**ND**	**ND**	NA	NA		NA	NA	NA	30	
Surrogate:										
Fluorobenzene						*100* *103*	*66-129*			
Laboratory ID:	08-313-03									
	ORIG	DUP								
Gasoline	**ND**	**ND**	NA	NA		NA	NA	NA	30	
Surrogate:										
Fluorobenzene						*105* *111*	*66-129*			
Laboratory ID:	08-313-04									
	ORIG	DUP								
Gasoline	**ND**	**ND**	NA	NA		NA	NA	NA	30	
Surrogate:										
Fluorobenzene						*105* *119*	*66-129*			

This report pertains to the samples analyzed in accordance with the chain of custody, and is intended only for the use of the individual or company to whom it is addressed.

Date of Report: September 10, 2021
Samples Submitted: August 31, 2021
Laboratory Reference: 2108-312
Project: 094-21021

DIESEL AND HEAVY OIL RANGE ORGANICS
NWTPH-Dx

Matrix: Soil
Units: mg/Kg (ppm)

Analyte	Result	PQL	Method	Date Prepared	Date Analyzed	Flags
Client ID:	**S-23**					
Laboratory ID:	08-312-01					
Diesel Range Organics	**ND**	26	NWTPH-Dx	9-1-21	9-1-21	
Lube Oil	**60**	51	NWTPH-Dx	9-1-21	9-1-21	
Surrogate:	*Percent Recovery*	*Control Limits*				
o-Terphenyl	*94*	*50-150*				
Client ID:	**S-24**					
Laboratory ID:	08-312-02					
Diesel Range Organics	**ND**	26	NWTPH-Dx	9-1-21	9-1-21	
Lube Oil Range Organics	**ND**	51	NWTPH-Dx	9-1-21	9-1-21	
Surrogate:	*Percent Recovery*	*Control Limits*				
o-Terphenyl	*98*	*50-150*				
Client ID:	**S-25**					
Laboratory ID:	08-312-03					
Diesel Range Organics	**ND**	26	NWTPH-Dx	9-1-21	9-2-21	
Lube Oil	**54**	51	NWTPH-Dx	9-1-21	9-2-21	
Surrogate:	*Percent Recovery*	*Control Limits*				
o-Terphenyl	*96*	*50-150*				
Client ID:	**S-26**					
Laboratory ID:	08-312-04					
Diesel Range Organics	**ND**	26	NWTPH-Dx	9-1-21	9-2-21	
Lube Oil Range Organics	**ND**	52	NWTPH-Dx	9-1-21	9-2-21	
Surrogate:	*Percent Recovery*	*Control Limits*				
o-Terphenyl	*92*	*50-150*				
Client ID:	**S-27**					
Laboratory ID:	08-312-05					
Diesel Range Organics	**ND**	25	NWTPH-Dx	9-1-21	9-1-21	
Lube Oil Range Organics	**ND**	51	NWTPH-Dx	9-1-21	9-1-21	
Surrogate:	*Percent Recovery*	*Control Limits*				
o-Terphenyl	*86*	*50-150*				
Client ID:	**S-28**					
Laboratory ID:	08-312-06					
Diesel Range Organics	**ND**	26	NWTPH-Dx	9-1-21	9-2-21	
Lube Oil Range Organics	**ND**	52	NWTPH-Dx	9-1-21	9-2-21	
Surrogate:	*Percent Recovery*	*Control Limits*				
o-Terphenyl	*95*	*50-150*				

This report pertains to the samples analyzed in accordance with the chain of custody, and is intended only for the use of the individual or company to whom it is addressed.

Date of Report: September 10, 2021
Samples Submitted: August 31, 2021
Laboratory Reference: 2108-312
Project: 094-21021

DIESEL AND HEAVY OIL RANGE ORGANICS
NWTPH-Dx

Matrix: Soil
Units: mg/Kg (ppm)

Analyte	Result	PQL	Method	Date Prepared	Date Analyzed	Flags
Client ID:	**S-29**					
Laboratory ID:	08-312-07					
Diesel Range Organics	**ND**	26	NWTPH-Dx	9-1-21	9-2-21	
Lube Oil Range Organics	**ND**	51	NWTPH-Dx	9-1-21	9-2-21	
Surrogate:	*Percent Recovery*	*Control Limits*				
o-Terphenyl	*89*	*50-150*				
Client ID:	**S-30**					
Laboratory ID:	08-312-08					
Diesel Range Organics	**ND**	26	NWTPH-Dx	9-1-21	9-2-21	
Lube Oil Range Organics	**ND**	52	NWTPH-Dx	9-1-21	9-2-21	
Surrogate:	*Percent Recovery*	*Control Limits*				
o-Terphenyl	*90*	*50-150*				
Client ID:	**S-31**					
Laboratory ID:	08-312-09					
Diesel Range Organics	**ND**	26	NWTPH-Dx	9-1-21	9-2-21	
Lube Oil Range Organics	**ND**	52	NWTPH-Dx	9-1-21	9-2-21	
Surrogate:	*Percent Recovery*	*Control Limits*				
o-Terphenyl	*88*	*50-150*				
Client ID:	**S-32**					
Laboratory ID:	08-312-10					
Diesel Range Organics	**ND**	26	NWTPH-Dx	9-1-21	9-2-21	
Lube Oil Range Organics	**ND**	51	NWTPH-Dx	9-1-21	9-2-21	
Surrogate:	*Percent Recovery*	*Control Limits*				
o-Terphenyl	*104*	*50-150*				
Client ID:	**S-33**					
Laboratory ID:	08-312-11					
Diesel Range Organics	**ND**	25	NWTPH-Dx	9-1-21	9-2-21	
Lube Oil Range Organics	**ND**	51	NWTPH-Dx	9-1-21	9-2-21	
Surrogate:	*Percent Recovery*	*Control Limits*				
o-Terphenyl	*93*	*50-150*				
Client ID:	**S-34**					
Laboratory ID:	08-312-12					
Diesel Range Organics	**ND**	25	NWTPH-Dx	9-1-21	9-2-21	
Lube Oil Range Organics	**ND**	51	NWTPH-Dx	9-1-21	9-2-21	
Surrogate:	*Percent Recovery*	*Control Limits*				
o-Terphenyl	*100*	*50-150*				

This report pertains to the samples analyzed in accordance with the chain of custody, and is intended only for the use of the individual or company to whom it is addressed.

Date of Report: September 10, 2021
Samples Submitted: August 31, 2021
Laboratory Reference: 2108-312
Project: 094-21021

DIESEL AND HEAVY OIL RANGE ORGANICS
NWTPH-Dx

Matrix: Soil
Units: mg/Kg (ppm)

Analyte	Result	PQL	Method	Date Prepared	Date Analyzed	Flags
Client ID:	**S-35**					
Laboratory ID:	08-312-13					
Diesel Range Organics	**ND**	26	NWTPH-Dx	9-1-21	9-2-21	
Lube Oil Range Organics	**ND**	51	NWTPH-Dx	9-1-21	9-2-21	
Surrogate:	*Percent Recovery*	*Control Limits*				
o-Terphenyl	*95*	*50-150*				
Client ID:	**S-36**					
Laboratory ID:	08-312-14					
Diesel Range Organics	**ND**	26	NWTPH-Dx	9-1-21	9-2-21	
Lube Oil Range Organics	**ND**	51	NWTPH-Dx	9-1-21	9-2-21	
Surrogate:	*Percent Recovery*	*Control Limits*				
o-Terphenyl	*91*	*50-150*				
Client ID:	**S-37**					
Laboratory ID:	08-312-15					
Diesel Range Organics	**ND**	26	NWTPH-Dx	9-1-21	9-1-21	
Lube Oil	**85**	52	NWTPH-Dx	9-1-21	9-1-21	
Surrogate:	*Percent Recovery*	*Control Limits*				
o-Terphenyl	*91*	*50-150*				
Client ID:	**S-38**					
Laboratory ID:	08-312-16					
Diesel Range Organics	**ND**	27	NWTPH-Dx	9-1-21	9-2-21	
Lube Oil	**76**	53	NWTPH-Dx	9-1-21	9-2-21	
Surrogate:	*Percent Recovery*	*Control Limits*				
o-Terphenyl	*107*	*50-150*				
Client ID:	**S-39**					
Laboratory ID:	08-312-17					
Diesel Range Organics	**ND**	26	NWTPH-Dx	9-1-21	9-2-21	
Lube Oil Range Organics	**ND**	51	NWTPH-Dx	9-1-21	9-2-21	
Surrogate:	*Percent Recovery*	*Control Limits*				
o-Terphenyl	*104*	*50-150*				
Client ID:	**S-40**					
Laboratory ID:	08-312-18					
Diesel Range Organics	**ND**	26	NWTPH-Dx	9-1-21	9-2-21	
Lube Oil Range Organics	**ND**	52	NWTPH-Dx	9-1-21	9-2-21	
Surrogate:	*Percent Recovery*	*Control Limits*				
o-Terphenyl	*105*	*50-150*				

This report pertains to the samples analyzed in accordance with the chain of custody, and is intended only for the use of the individual or company to whom it is addressed.

Date of Report: September 10, 2021
Samples Submitted: August 31, 2021
Laboratory Reference: 2108-312
Project: 094-21021

DIESEL AND HEAVY OIL RANGE ORGANICS
NWTPH-Dx

Matrix: Soil
Units: mg/Kg (ppm)

Analyte	Result	PQL	Method	Date Prepared	Date Analyzed	Flags
Client ID:	**S-41**					
Laboratory ID:	08-312-19					
Diesel Range Organics	**ND**	26	NWTPH-Dx	9-1-21	9-2-21	
Lube Oil Range Organics	**ND**	51	NWTPH-Dx	9-1-21	9-2-21	
Surrogate:	*Percent Recovery*	*Control Limits*				
o-Terphenyl	*91*	*50-150*				
Client ID:	**S-42**					
Laboratory ID:	08-312-20					
Diesel Range Organics	**ND**	26	NWTPH-Dx	9-1-21	9-2-21	
Lube Oil Range Organics	**ND**	51	NWTPH-Dx	9-1-21	9-2-21	
Surrogate:	*Percent Recovery*	*Control Limits*				
o-Terphenyl	*99*	*50-150*				
Client ID:	**S-43**					
Laboratory ID:	08-312-21					
Diesel Range Organics	**ND**	26	NWTPH-Dx	9-2-21	9-3-21	
Lube Oil Range Organics	**ND**	51	NWTPH-Dx	9-2-21	9-3-21	
Surrogate:	*Percent Recovery*	*Control Limits*				
o-Terphenyl	*85*	*50-150*				
Client ID:	**S-44**					
Laboratory ID:	08-312-22					
Diesel Range Organics	**ND**	26	NWTPH-Dx	9-2-21	9-3-21	
Lube Oil Range Organics	**ND**	51	NWTPH-Dx	9-2-21	9-3-21	
Surrogate:	*Percent Recovery*	*Control Limits*				
o-Terphenyl	*82*	*50-150*				
Client ID:	**S-45**					
Laboratory ID:	08-312-23					
Diesel Range Organics	**ND**	26	NWTPH-Dx	9-2-21	9-3-21	
Lube Oil Range Organics	**ND**	51	NWTPH-Dx	9-2-21	9-3-21	
Surrogate:	*Percent Recovery*	*Control Limits*				
o-Terphenyl	*72*	*50-150*				
Client ID:	**S-46**					
Laboratory ID:	08-312-24					
Diesel Range Organics	**ND**	26	NWTPH-Dx	9-2-21	9-3-21	
Lube Oil Range Organics	**ND**	52	NWTPH-Dx	9-2-21	9-3-21	
Surrogate:	*Percent Recovery*	*Control Limits*				
o-Terphenyl	*92*	*50-150*				

This report pertains to the samples analyzed in accordance with the chain of custody, and is intended only for the use of the individual or company to whom it is addressed.

Date of Report: September 10, 2021
Samples Submitted: August 31, 2021
Laboratory Reference: 2108-312
Project: 094-21021

DIESEL AND HEAVY OIL RANGE ORGANICS
NWTPH-Dx

Matrix: Soil
Units: mg/Kg (ppm)

Analyte	Result	PQL	Method	Date Prepared	Date Analyzed	Flags
Client ID:	**S-47**					
Laboratory ID:	08-312-25					
Diesel Range Organics	**ND**	26	NWTPH-Dx	9-2-21	9-3-21	
Lube Oil Range Organics	**ND**	51	NWTPH-Dx	9-2-21	9-3-21	
Surrogate:	*Percent Recovery*	*Control Limits*				
o-Terphenyl	*88*	*50-150*				

This report pertains to the samples analyzed in accordance with the chain of custody,
and is intended only for the use of the individual or company to whom it is addressed.

Date of Report: September 10, 2021
Samples Submitted: August 31, 2021
Laboratory Reference: 2108-312
Project: 094-21021

DIESEL AND HEAVY OIL RANGE ORGANICS
NWTPH-Dx
QUALITY CONTROL

Matrix: Soil
Units: mg/Kg (ppm)

Analyte	Result	PQL	Method	Date Prepared	Date Analyzed	Flags
METHOD BLANK						
Laboratory ID:	MB0901S2					
Diesel Range Organics	**ND**	25	NWTPH-Dx	9-1-21	9-7-21	
Lube Oil Range Organics	**ND**	50	NWTPH-Dx	9-1-21	9-7-21	
Surrogate:	*Percent Recovery*	*Control Limits*				
o-Terphenyl	*94*	*50-150*				
Laboratory ID:	MB0902S1					
Diesel Range Organics	**ND**	25	NWTPH-Dx	9-2-21	9-3-21	
Lube Oil Range Organics	**ND**	50	NWTPH-Dx	9-2-21	9-3-21	
Surrogate:	*Percent Recovery*	*Control Limits*				
o-Terphenyl	*88*	*50-150*				

Analyte	Result		Spike Level		Source Result	Percent Recovery		Recovery Limits	RPD	RPD Limit	Flags
DUPLICATE											
Laboratory ID:	08-312-01										
	ORIG	DUP									
Diesel Range	**ND**	**ND**	NA	NA		NA		NA	NA	NA	
Lube Oil	**58.3**	**56.0**	NA	NA		NA		NA	4	NA	
Surrogate:											
o-Terphenyl						*94*	*83*	*50-150*			
Laboratory ID:	08-312-11										
	ORIG	DUP									
Diesel Range	**ND**	**ND**	NA	NA		NA		NA	NA	NA	
Lube Oil Range	**ND**	**ND**	NA	NA		NA		NA	NA	NA	
Surrogate:											
o-Terphenyl						*93*	*90*	*50-150*			
Laboratory ID:	08-312-21										
	ORIG	DUP									
Diesel Range	**ND**	**ND**	NA	NA		NA		NA	NA	NA	
Lube Oil Range	**ND**	**ND**	NA	NA		NA		NA	NA	NA	
Surrogate:											
o-Terphenyl						*85*	*99*	*50-150*			

This report pertains to the samples analyzed in accordance with the chain of custody,
and is intended only for the use of the individual or company to whom it is addressed.

Date of Report: September 10, 2021
Samples Submitted: August 31, 2021
Laboratory Reference: 2108-312
Project: 094-21021

PAHs EPA 8270E/SIM

Matrix: Soil
Units: mg/Kg

Analyte	Result	PQL	Method	Date Prepared	Date Analyzed	Flags
Client ID:	**S-23**					
Laboratory ID:	08-312-01					
Naphthalene	**ND**	0.0069	EPA 8270E/SIM	9-3-21	9-7-21	
2-Methylnaphthalene	**ND**	0.0069	EPA 8270E/SIM	9-3-21	9-7-21	
1-Methylnaphthalene	**ND**	0.0069	EPA 8270E/SIM	9-3-21	9-7-21	
Acenaphthylene	**ND**	0.0069	EPA 8270E/SIM	9-3-21	9-7-21	
Acenaphthene	**ND**	0.0069	EPA 8270E/SIM	9-3-21	9-7-21	
Fluorene	**ND**	0.0069	EPA 8270E/SIM	9-3-21	9-7-21	
Phenanthrene	**ND**	0.0069	EPA 8270E/SIM	9-3-21	9-7-21	
Anthracene	**ND**	0.0069	EPA 8270E/SIM	9-3-21	9-7-21	
Fluoranthene	**ND**	0.0069	EPA 8270E/SIM	9-3-21	9-7-21	
Pyrene	**ND**	0.0069	EPA 8270E/SIM	9-3-21	9-7-21	
Benzo[a]anthracene	**ND**	0.0069	EPA 8270E/SIM	9-3-21	9-7-21	
Chrysene	**ND**	0.0069	EPA 8270E/SIM	9-3-21	9-7-21	
Benzo[b]fluoranthene	**ND**	0.0069	EPA 8270E/SIM	9-3-21	9-7-21	
Benzo(j,k)fluoranthene	**ND**	0.0069	EPA 8270E/SIM	9-3-21	9-7-21	
Benzo[a]pyrene	**ND**	0.0069	EPA 8270E/SIM	9-3-21	9-7-21	
Indeno(1,2,3-c,d)pyrene	**ND**	0.0069	EPA 8270E/SIM	9-3-21	9-7-21	
Dibenz[a,h]anthracene	**ND**	0.0069	EPA 8270E/SIM	9-3-21	9-7-21	
Benzo[g,h,i]perylene	**ND**	0.0069	EPA 8270E/SIM	9-3-21	9-7-21	
Surrogate:	*Percent Recovery*	*Control Limits*				
2-Fluorobiphenyl	*83*	*41 - 114*				
Pyrene-d10	*94*	*39 - 115*				
Terphenyl-d14	*104*	*44 - 125*				

This report pertains to the samples analyzed in accordance with the chain of custody,
and is intended only for the use of the individual or company to whom it is addressed.

Date of Report: September 10, 2021
Samples Submitted: August 31, 2021
Laboratory Reference: 2108-312
Project: 094-21021

PAHs EPA 8270E/SIM

Matrix: Soil
Units: mg/Kg

Analyte	Result	PQL	Method	Date Prepared	Date Analyzed	Flags
Client ID:	**S-24**					
Laboratory ID:	08-312-02					
Naphthalene	**ND**	0.0068	EPA 8270E/SIM	9-3-21	9-8-21	
2-Methylnaphthalene	**ND**	0.0068	EPA 8270E/SIM	9-3-21	9-8-21	
1-Methylnaphthalene	**ND**	0.0068	EPA 8270E/SIM	9-3-21	9-8-21	
Acenaphthylene	**ND**	0.0068	EPA 8270E/SIM	9-3-21	9-8-21	
Acenaphthene	**ND**	0.0068	EPA 8270E/SIM	9-3-21	9-8-21	
Fluorene	**ND**	0.0068	EPA 8270E/SIM	9-3-21	9-8-21	
Phenanthrene	**ND**	0.0068	EPA 8270E/SIM	9-3-21	9-8-21	
Anthracene	**ND**	0.0068	EPA 8270E/SIM	9-3-21	9-8-21	
Fluoranthene	**ND**	0.0068	EPA 8270E/SIM	9-3-21	9-8-21	
Pyrene	**ND**	0.0068	EPA 8270E/SIM	9-3-21	9-8-21	
Benzo[a]anthracene	**ND**	0.0068	EPA 8270E/SIM	9-3-21	9-8-21	
Chrysene	**ND**	0.0068	EPA 8270E/SIM	9-3-21	9-8-21	
Benzo[b]fluoranthene	**ND**	0.0068	EPA 8270E/SIM	9-3-21	9-8-21	
Benzo(j,k)fluoranthene	**ND**	0.0068	EPA 8270E/SIM	9-3-21	9-8-21	
Benzo[a]pyrene	**ND**	0.0068	EPA 8270E/SIM	9-3-21	9-8-21	
Indeno(1,2,3-c,d)pyrene	**ND**	0.0068	EPA 8270E/SIM	9-3-21	9-8-21	
Dibenz[a,h]anthracene	**ND**	0.0068	EPA 8270E/SIM	9-3-21	9-8-21	
Benzo[g,h,i]perylene	**ND**	0.0068	EPA 8270E/SIM	9-3-21	9-8-21	
Surrogate:	*Percent Recovery*	*Control Limits*				
2-Fluorobiphenyl	*83*	*41 - 114*				
Pyrene-d10	*78*	*39 - 115*				
Terphenyl-d14	*93*	*44 - 125*				

This report pertains to the samples analyzed in accordance with the chain of custody, and is intended only for the use of the individual or company to whom it is addressed.

Date of Report: September 10, 2021
Samples Submitted: August 31, 2021
Laboratory Reference: 2108-312
Project: 094-21021

PAHs EPA 8270E/SIM

Matrix: Soil
Units: mg/Kg

Analyte	Result	PQL	Method	Date Prepared	Date Analyzed	Flags
Client ID:	**S-25**					
Laboratory ID:	08-312-03					
Naphthalene	**ND**	0.0068	EPA 8270E/SIM	9-3-21	9-8-21	
2-Methylnaphthalene	**ND**	0.0068	EPA 8270E/SIM	9-3-21	9-8-21	
1-Methylnaphthalene	**ND**	0.0068	EPA 8270E/SIM	9-3-21	9-8-21	
Acenaphthylene	**ND**	0.0068	EPA 8270E/SIM	9-3-21	9-8-21	
Acenaphthene	**ND**	0.0068	EPA 8270E/SIM	9-3-21	9-8-21	
Fluorene	**ND**	0.0068	EPA 8270E/SIM	9-3-21	9-8-21	
Phenanthrene	**ND**	0.0068	EPA 8270E/SIM	9-3-21	9-8-21	
Anthracene	**ND**	0.0068	EPA 8270E/SIM	9-3-21	9-8-21	
Fluoranthene	**ND**	0.0068	EPA 8270E/SIM	9-3-21	9-8-21	
Pyrene	**ND**	0.0068	EPA 8270E/SIM	9-3-21	9-8-21	
Benzo[a]anthracene	**ND**	0.0068	EPA 8270E/SIM	9-3-21	9-8-21	
Chrysene	**ND**	0.0068	EPA 8270E/SIM	9-3-21	9-8-21	
Benzo[b]fluoranthene	**ND**	0.0068	EPA 8270E/SIM	9-3-21	9-8-21	
Benzo(j,k)fluoranthene	**ND**	0.0068	EPA 8270E/SIM	9-3-21	9-8-21	
Benzo[a]pyrene	**ND**	0.0068	EPA 8270E/SIM	9-3-21	9-8-21	
Indeno(1,2,3-c,d)pyrene	**ND**	0.0068	EPA 8270E/SIM	9-3-21	9-8-21	
Dibenz[a,h]anthracene	**ND**	0.0068	EPA 8270E/SIM	9-3-21	9-8-21	
Benzo[g,h,i]perylene	**ND**	0.0068	EPA 8270E/SIM	9-3-21	9-8-21	
Surrogate:	*Percent Recovery*	*Control Limits*				
2-Fluorobiphenyl	*89*	*41 - 114*				
Pyrene-d10	*80*	*39 - 115*				
Terphenyl-d14	*97*	*44 - 125*				

This report pertains to the samples analyzed in accordance with the chain of custody, and is intended only for the use of the individual or company to whom it is addressed.

Date of Report: September 10, 2021
Samples Submitted: August 31, 2021
Laboratory Reference: 2108-312
Project: 094-21021

PAHs EPA 8270E/SIM

Matrix: Soil
Units: mg/Kg

Analyte	Result	PQL	Method	Date Prepared	Date Analyzed	Flags
Client ID:	**S-26**					
Laboratory ID:	08-312-04					
Naphthalene	**ND**	0.0069	EPA 8270E/SIM	9-3-21	9-7-21	
2-Methylnaphthalene	**ND**	0.0069	EPA 8270E/SIM	9-3-21	9-7-21	
1-Methylnaphthalene	**ND**	0.0069	EPA 8270E/SIM	9-3-21	9-7-21	
Acenaphthylene	**ND**	0.0069	EPA 8270E/SIM	9-3-21	9-7-21	
Acenaphthene	**ND**	0.0069	EPA 8270E/SIM	9-3-21	9-7-21	
Fluorene	**ND**	0.0069	EPA 8270E/SIM	9-3-21	9-7-21	
Phenanthrene	**ND**	0.0069	EPA 8270E/SIM	9-3-21	9-7-21	
Anthracene	**ND**	0.0069	EPA 8270E/SIM	9-3-21	9-7-21	
Fluoranthene	**ND**	0.0069	EPA 8270E/SIM	9-3-21	9-7-21	
Pyrene	**ND**	0.0069	EPA 8270E/SIM	9-3-21	9-7-21	
Benzo[a]anthracene	**ND**	0.0069	EPA 8270E/SIM	9-3-21	9-7-21	
Chrysene	**ND**	0.0069	EPA 8270E/SIM	9-3-21	9-7-21	
Benzo[b]fluoranthene	**ND**	0.0069	EPA 8270E/SIM	9-3-21	9-7-21	
Benzo(j,k)fluoranthene	**ND**	0.0069	EPA 8270E/SIM	9-3-21	9-7-21	
Benzo[a]pyrene	**ND**	0.0069	EPA 8270E/SIM	9-3-21	9-7-21	
Indeno(1,2,3-c,d)pyrene	**ND**	0.0069	EPA 8270E/SIM	9-3-21	9-7-21	
Dibenz[a,h]anthracene	**ND**	0.0069	EPA 8270E/SIM	9-3-21	9-7-21	
Benzo[g,h,i]perylene	**ND**	0.0069	EPA 8270E/SIM	9-3-21	9-7-21	
Surrogate:	*Percent Recovery*	*Control Limits*				
2-Fluorobiphenyl	*90*	*41 - 114*				
Pyrene-d10	*86*	*39 - 115*				
Terphenyl-d14	*100*	*44 - 125*				

This report pertains to the samples analyzed in accordance with the chain of custody, and is intended only for the use of the individual or company to whom it is addressed.

Date of Report: September 10, 2021
Samples Submitted: August 31, 2021
Laboratory Reference: 2108-312
Project: 094-21021

PAHs EPA 8270E/SIM

Matrix: Soil
Units: mg/Kg

Analyte	Result	PQL	Method	Date Prepared	Date Analyzed	Flags
Client ID:	**S-27**					
Laboratory ID:	08-312-05					
Naphthalene	**ND**	0.0068	EPA 8270E/SIM	9-3-21	9-7-21	
2-Methylnaphthalene	**ND**	0.0068	EPA 8270E/SIM	9-3-21	9-7-21	
1-Methylnaphthalene	**ND**	0.0068	EPA 8270E/SIM	9-3-21	9-7-21	
Acenaphthylene	**ND**	0.0068	EPA 8270E/SIM	9-3-21	9-7-21	
Acenaphthene	**ND**	0.0068	EPA 8270E/SIM	9-3-21	9-7-21	
Fluorene	**ND**	0.0068	EPA 8270E/SIM	9-3-21	9-7-21	
Phenanthrene	**ND**	0.0068	EPA 8270E/SIM	9-3-21	9-7-21	
Anthracene	**ND**	0.0068	EPA 8270E/SIM	9-3-21	9-7-21	
Fluoranthene	**ND**	0.0068	EPA 8270E/SIM	9-3-21	9-7-21	
Pyrene	**ND**	0.0068	EPA 8270E/SIM	9-3-21	9-7-21	
Benzo[a]anthracene	**ND**	0.0068	EPA 8270E/SIM	9-3-21	9-7-21	
Chrysene	**ND**	0.0068	EPA 8270E/SIM	9-3-21	9-7-21	
Benzo[b]fluoranthene	**ND**	0.0068	EPA 8270E/SIM	9-3-21	9-7-21	
Benzo(j,k)fluoranthene	**ND**	0.0068	EPA 8270E/SIM	9-3-21	9-7-21	
Benzo[a]pyrene	**ND**	0.0068	EPA 8270E/SIM	9-3-21	9-7-21	
Indeno(1,2,3-c,d)pyrene	**ND**	0.0068	EPA 8270E/SIM	9-3-21	9-7-21	
Dibenz[a,h]anthracene	**ND**	0.0068	EPA 8270E/SIM	9-3-21	9-7-21	
Benzo[g,h,i]perylene	**ND**	0.0068	EPA 8270E/SIM	9-3-21	9-7-21	
Surrogate:	*Percent Recovery*	*Control Limits*				
2-Fluorobiphenyl	*94*	*41 - 114*				
Pyrene-d10	*99*	*39 - 115*				
Terphenyl-d14	*105*	*44 - 125*				

This report pertains to the samples analyzed in accordance with the chain of custody,
and is intended only for the use of the individual or company to whom it is addressed.

Date of Report: September 10, 2021
Samples Submitted: August 31, 2021
Laboratory Reference: 2108-312
Project: 094-21021

PAHs EPA 8270E/SIM

Matrix: Soil
Units: mg/Kg

Analyte	Result	PQL	Method	Date Prepared	Date Analyzed	Flags
Client ID:	**S-28**					
Laboratory ID:	08-312-06					
Naphthalene	**ND**	0.0069	EPA 8270E/SIM	9-3-21	9-7-21	
2-Methylnaphthalene	**ND**	0.0069	EPA 8270E/SIM	9-3-21	9-7-21	
1-Methylnaphthalene	**ND**	0.0069	EPA 8270E/SIM	9-3-21	9-7-21	
Acenaphthylene	**ND**	0.0069	EPA 8270E/SIM	9-3-21	9-7-21	
Acenaphthene	**ND**	0.0069	EPA 8270E/SIM	9-3-21	9-7-21	
Fluorene	**ND**	0.0069	EPA 8270E/SIM	9-3-21	9-7-21	
Phenanthrene	**ND**	0.0069	EPA 8270E/SIM	9-3-21	9-7-21	
Anthracene	**ND**	0.0069	EPA 8270E/SIM	9-3-21	9-7-21	
Fluoranthene	**ND**	0.0069	EPA 8270E/SIM	9-3-21	9-7-21	
Pyrene	**ND**	0.0069	EPA 8270E/SIM	9-3-21	9-7-21	
Benzo[a]anthracene	**ND**	0.0069	EPA 8270E/SIM	9-3-21	9-7-21	
Chrysene	**ND**	0.0069	EPA 8270E/SIM	9-3-21	9-7-21	
Benzo[b]fluoranthene	**ND**	0.0069	EPA 8270E/SIM	9-3-21	9-7-21	
Benzo(j,k)fluoranthene	**ND**	0.0069	EPA 8270E/SIM	9-3-21	9-7-21	
Benzo[a]pyrene	**ND**	0.0069	EPA 8270E/SIM	9-3-21	9-7-21	
Indeno(1,2,3-c,d)pyrene	**ND**	0.0069	EPA 8270E/SIM	9-3-21	9-7-21	
Dibenz[a,h]anthracene	**ND**	0.0069	EPA 8270E/SIM	9-3-21	9-7-21	
Benzo[g,h,i]perylene	**ND**	0.0069	EPA 8270E/SIM	9-3-21	9-7-21	
Surrogate:	*Percent Recovery*	*Control Limits*				
2-Fluorobiphenyl	*81*	*41 - 114*				
Pyrene-d10	*83*	*39 - 115*				
Terphenyl-d14	*97*	*44 - 125*				

This report pertains to the samples analyzed in accordance with the chain of custody,
and is intended only for the use of the individual or company to whom it is addressed.

Date of Report: September 10, 2021
Samples Submitted: August 31, 2021
Laboratory Reference: 2108-312
Project: 094-21021

PAHs EPA 8270E/SIM

Matrix: Soil
Units: mg/Kg

Analyte	Result	PQL	Method	Date Prepared	Date Analyzed	Flags
Client ID:	**S-29**					
Laboratory ID:	08-312-07					
Naphthalene	**ND**	0.0068	EPA 8270E/SIM	9-3-21	9-8-21	
2-Methylnaphthalene	**ND**	0.0068	EPA 8270E/SIM	9-3-21	9-8-21	
1-Methylnaphthalene	**ND**	0.0068	EPA 8270E/SIM	9-3-21	9-8-21	
Acenaphthylene	**ND**	0.0068	EPA 8270E/SIM	9-3-21	9-8-21	
Acenaphthene	**ND**	0.0068	EPA 8270E/SIM	9-3-21	9-8-21	
Fluorene	**ND**	0.0068	EPA 8270E/SIM	9-3-21	9-8-21	
Phenanthrene	**ND**	0.0068	EPA 8270E/SIM	9-3-21	9-8-21	
Anthracene	**ND**	0.0068	EPA 8270E/SIM	9-3-21	9-8-21	
Fluoranthene	**ND**	0.0068	EPA 8270E/SIM	9-3-21	9-8-21	
Pyrene	**ND**	0.0068	EPA 8270E/SIM	9-3-21	9-8-21	
Benzo[a]anthracene	**ND**	0.0068	EPA 8270E/SIM	9-3-21	9-8-21	
Chrysene	**ND**	0.0068	EPA 8270E/SIM	9-3-21	9-8-21	
Benzo[b]fluoranthene	**ND**	0.0068	EPA 8270E/SIM	9-3-21	9-8-21	
Benzo(j,k)fluoranthene	**ND**	0.0068	EPA 8270E/SIM	9-3-21	9-8-21	
Benzo[a]pyrene	**ND**	0.0068	EPA 8270E/SIM	9-3-21	9-8-21	
Indeno(1,2,3-c,d)pyrene	**ND**	0.0068	EPA 8270E/SIM	9-3-21	9-8-21	
Dibenz[a,h]anthracene	**ND**	0.0068	EPA 8270E/SIM	9-3-21	9-8-21	
Benzo[g,h,i]perylene	**ND**	0.0068	EPA 8270E/SIM	9-3-21	9-8-21	
Surrogate:	*Percent Recovery*	*Control Limits*				
2-Fluorobiphenyl	*78*	*41 - 114*				
Pyrene-d10	*85*	*39 - 115*				
Terphenyl-d14	*90*	*44 - 125*				

This report pertains to the samples analyzed in accordance with the chain of custody, and is intended only for the use of the individual or company to whom it is addressed.

Date of Report: September 10, 2021
Samples Submitted: August 31, 2021
Laboratory Reference: 2108-312
Project: 094-21021

PAHs EPA 8270E/SIM

Matrix: Soil
Units: mg/Kg

Analyte	Result	PQL	Method	Date Prepared	Date Analyzed	Flags
Client ID:	**S-30**					
Laboratory ID:	08-312-08					
Naphthalene	**ND**	0.0069	EPA 8270E/SIM	9-3-21	9-7-21	
2-Methylnaphthalene	**ND**	0.0069	EPA 8270E/SIM	9-3-21	9-7-21	
1-Methylnaphthalene	**ND**	0.0069	EPA 8270E/SIM	9-3-21	9-7-21	
Acenaphthylene	**ND**	0.0069	EPA 8270E/SIM	9-3-21	9-7-21	
Acenaphthene	**ND**	0.0069	EPA 8270E/SIM	9-3-21	9-7-21	
Fluorene	**ND**	0.0069	EPA 8270E/SIM	9-3-21	9-7-21	
Phenanthrene	**ND**	0.0069	EPA 8270E/SIM	9-3-21	9-7-21	
Anthracene	**ND**	0.0069	EPA 8270E/SIM	9-3-21	9-7-21	
Fluoranthene	**ND**	0.0069	EPA 8270E/SIM	9-3-21	9-7-21	
Pyrene	**ND**	0.0069	EPA 8270E/SIM	9-3-21	9-7-21	
Benzo[a]anthracene	**ND**	0.0069	EPA 8270E/SIM	9-3-21	9-7-21	
Chrysene	**ND**	0.0069	EPA 8270E/SIM	9-3-21	9-7-21	
Benzo[b]fluoranthene	**ND**	0.0069	EPA 8270E/SIM	9-3-21	9-7-21	
Benzo(j,k)fluoranthene	**ND**	0.0069	EPA 8270E/SIM	9-3-21	9-7-21	
Benzo[a]pyrene	**ND**	0.0069	EPA 8270E/SIM	9-3-21	9-7-21	
Indeno(1,2,3-c,d)pyrene	**ND**	0.0069	EPA 8270E/SIM	9-3-21	9-7-21	
Dibenz[a,h]anthracene	**ND**	0.0069	EPA 8270E/SIM	9-3-21	9-7-21	
Benzo[g,h,i]perylene	**ND**	0.0069	EPA 8270E/SIM	9-3-21	9-7-21	
Surrogate:	*Percent Recovery*	*Control Limits*				
2-Fluorobiphenyl	*85*	*41 - 114*				
Pyrene-d10	*84*	*39 - 115*				
Terphenyl-d14	*94*	*44 - 125*				

This report pertains to the samples analyzed in accordance with the chain of custody, and is intended only for the use of the individual or company to whom it is addressed.

Date of Report: September 10, 2021
Samples Submitted: August 31, 2021
Laboratory Reference: 2108-312
Project: 094-21021

PAHs EPA 8270E/SIM

Matrix: Soil
Units: mg/Kg

Analyte	Result	PQL	Method	Date Prepared	Date Analyzed	Flags
Client ID:	**S-31**					
Laboratory ID:	08-312-09					
Naphthalene	**ND**	0.0069	EPA 8270E/SIM	9-3-21	9-7-21	
2-Methylnaphthalene	**ND**	0.0069	EPA 8270E/SIM	9-3-21	9-7-21	
1-Methylnaphthalene	**ND**	0.0069	EPA 8270E/SIM	9-3-21	9-7-21	
Acenaphthylene	**ND**	0.0069	EPA 8270E/SIM	9-3-21	9-7-21	
Acenaphthene	**ND**	0.0069	EPA 8270E/SIM	9-3-21	9-7-21	
Fluorene	**ND**	0.0069	EPA 8270E/SIM	9-3-21	9-7-21	
Phenanthrene	**ND**	0.0069	EPA 8270E/SIM	9-3-21	9-7-21	
Anthracene	**ND**	0.0069	EPA 8270E/SIM	9-3-21	9-7-21	
Fluoranthene	**ND**	0.0069	EPA 8270E/SIM	9-3-21	9-7-21	
Pyrene	**ND**	0.0069	EPA 8270E/SIM	9-3-21	9-7-21	
Benzo[a]anthracene	**ND**	0.0069	EPA 8270E/SIM	9-3-21	9-7-21	
Chrysene	**ND**	0.0069	EPA 8270E/SIM	9-3-21	9-7-21	
Benzo[b]fluoranthene	**ND**	0.0069	EPA 8270E/SIM	9-3-21	9-7-21	
Benzo(j,k)fluoranthene	**ND**	0.0069	EPA 8270E/SIM	9-3-21	9-7-21	
Benzo[a]pyrene	**ND**	0.0069	EPA 8270E/SIM	9-3-21	9-7-21	
Indeno(1,2,3-c,d)pyrene	**ND**	0.0069	EPA 8270E/SIM	9-3-21	9-7-21	
Dibenz[a,h]anthracene	**ND**	0.0069	EPA 8270E/SIM	9-3-21	9-7-21	
Benzo[g,h,i]perylene	**ND**	0.0069	EPA 8270E/SIM	9-3-21	9-7-21	
Surrogate:	*Percent Recovery*	*Control Limits*				
2-Fluorobiphenyl	*82*	*41 - 114*				
Pyrene-d10	*87*	*39 - 115*				
Terphenyl-d14	*99*	*44 - 125*				

This report pertains to the samples analyzed in accordance with the chain of custody,
and is intended only for the use of the individual or company to whom it is addressed.

Date of Report: September 10, 2021
Samples Submitted: August 31, 2021
Laboratory Reference: 2108-312
Project: 094-21021

PAHs EPA 8270E/SIM

Matrix: Soil
Units: mg/Kg

Analyte	Result	PQL	Method	Date Prepared	Date Analyzed	Flags
Client ID:	**S-32**					
Laboratory ID:	08-312-10					
Naphthalene	**ND**	0.0068	EPA 8270E/SIM	9-3-21	9-7-21	
2-Methylnaphthalene	**ND**	0.0068	EPA 8270E/SIM	9-3-21	9-7-21	
1-Methylnaphthalene	**ND**	0.0068	EPA 8270E/SIM	9-3-21	9-7-21	
Acenaphthylene	**ND**	0.0068	EPA 8270E/SIM	9-3-21	9-7-21	
Acenaphthene	**ND**	0.0068	EPA 8270E/SIM	9-3-21	9-7-21	
Fluorene	**ND**	0.0068	EPA 8270E/SIM	9-3-21	9-7-21	
Phenanthrene	**ND**	0.0068	EPA 8270E/SIM	9-3-21	9-7-21	
Anthracene	**ND**	0.0068	EPA 8270E/SIM	9-3-21	9-7-21	
Fluoranthene	**ND**	0.0068	EPA 8270E/SIM	9-3-21	9-7-21	
Pyrene	**ND**	0.0068	EPA 8270E/SIM	9-3-21	9-7-21	
Benzo[a]anthracene	**ND**	0.0068	EPA 8270E/SIM	9-3-21	9-7-21	
Chrysene	**ND**	0.0068	EPA 8270E/SIM	9-3-21	9-7-21	
Benzo[b]fluoranthene	**ND**	0.0068	EPA 8270E/SIM	9-3-21	9-7-21	
Benzo(j,k)fluoranthene	**ND**	0.0068	EPA 8270E/SIM	9-3-21	9-7-21	
Benzo[a]pyrene	**ND**	0.0068	EPA 8270E/SIM	9-3-21	9-7-21	
Indeno(1,2,3-c,d)pyrene	**ND**	0.0068	EPA 8270E/SIM	9-3-21	9-7-21	
Dibenz[a,h]anthracene	**ND**	0.0068	EPA 8270E/SIM	9-3-21	9-7-21	
Benzo[g,h,i]perylene	**ND**	0.0068	EPA 8270E/SIM	9-3-21	9-7-21	
Surrogate:	*Percent Recovery*	*Control Limits*				
2-Fluorobiphenyl	*90*	*41 - 114*				
Pyrene-d10	*87*	*39 - 115*				
Terphenyl-d14	*94*	*44 - 125*				

This report pertains to the samples analyzed in accordance with the chain of custody, and is intended only for the use of the individual or company to whom it is addressed.

Date of Report: September 10, 2021
Samples Submitted: August 31, 2021
Laboratory Reference: 2108-312
Project: 094-21021

PAHs EPA 8270E/SIM

Matrix: Soil
Units: mg/Kg

Analyte	Result	PQL	Method	Date Prepared	Date Analyzed	Flags
Client ID:	**S-33**					
Laboratory ID:	08-312-11					
Naphthalene	**ND**	0.0068	EPA 8270E/SIM	9-3-21	9-7-21	
2-Methylnaphthalene	**ND**	0.0068	EPA 8270E/SIM	9-3-21	9-7-21	
1-Methylnaphthalene	**ND**	0.0068	EPA 8270E/SIM	9-3-21	9-7-21	
Acenaphthylene	**ND**	0.0068	EPA 8270E/SIM	9-3-21	9-7-21	
Acenaphthene	**ND**	0.0068	EPA 8270E/SIM	9-3-21	9-7-21	
Fluorene	**ND**	0.0068	EPA 8270E/SIM	9-3-21	9-7-21	
Phenanthrene	**ND**	0.0068	EPA 8270E/SIM	9-3-21	9-7-21	
Anthracene	**ND**	0.0068	EPA 8270E/SIM	9-3-21	9-7-21	
Fluoranthene	**ND**	0.0068	EPA 8270E/SIM	9-3-21	9-7-21	
Pyrene	**ND**	0.0068	EPA 8270E/SIM	9-3-21	9-7-21	
Benzo[a]anthracene	**ND**	0.0068	EPA 8270E/SIM	9-3-21	9-7-21	
Chrysene	**ND**	0.0068	EPA 8270E/SIM	9-3-21	9-7-21	
Benzo[b]fluoranthene	**ND**	0.0068	EPA 8270E/SIM	9-3-21	9-7-21	
Benzo(j,k)fluoranthene	**ND**	0.0068	EPA 8270E/SIM	9-3-21	9-7-21	
Benzo[a]pyrene	**ND**	0.0068	EPA 8270E/SIM	9-3-21	9-7-21	
Indeno(1,2,3-c,d)pyrene	**ND**	0.0068	EPA 8270E/SIM	9-3-21	9-7-21	
Dibenz[a,h]anthracene	**ND**	0.0068	EPA 8270E/SIM	9-3-21	9-7-21	
Benzo[g,h,i]perylene	**ND**	0.0068	EPA 8270E/SIM	9-3-21	9-7-21	
Surrogate:	*Percent Recovery*	*Control Limits*				
2-Fluorobiphenyl	*48*	*41 - 114*				
Pyrene-d10	*47*	*39 - 115*				
Terphenyl-d14	*51*	*44 - 125*				

This report pertains to the samples analyzed in accordance with the chain of custody,
and is intended only for the use of the individual or company to whom it is addressed.

Date of Report: September 10, 2021
Samples Submitted: August 31, 2021
Laboratory Reference: 2108-312
Project: 094-21021

PAHs EPA 8270E/SIM

Matrix: Soil
Units: mg/Kg

Analyte	Result	PQL	Method	Date Prepared	Date Analyzed	Flags
Client ID:	**S-34**					
Laboratory ID:	08-312-12					
Naphthalene	**ND**	0.0068	EPA 8270E/SIM	9-3-21	9-7-21	
2-Methylnaphthalene	**ND**	0.0068	EPA 8270E/SIM	9-3-21	9-7-21	
1-Methylnaphthalene	**ND**	0.0068	EPA 8270E/SIM	9-3-21	9-7-21	
Acenaphthylene	**ND**	0.0068	EPA 8270E/SIM	9-3-21	9-7-21	
Acenaphthene	**ND**	0.0068	EPA 8270E/SIM	9-3-21	9-7-21	
Fluorene	**ND**	0.0068	EPA 8270E/SIM	9-3-21	9-7-21	
Phenanthrene	**ND**	0.0068	EPA 8270E/SIM	9-3-21	9-7-21	
Anthracene	**ND**	0.0068	EPA 8270E/SIM	9-3-21	9-7-21	
Fluoranthene	**ND**	0.0068	EPA 8270E/SIM	9-3-21	9-7-21	
Pyrene	**ND**	0.0068	EPA 8270E/SIM	9-3-21	9-7-21	
Benzo[a]anthracene	**ND**	0.0068	EPA 8270E/SIM	9-3-21	9-7-21	
Chrysene	**ND**	0.0068	EPA 8270E/SIM	9-3-21	9-7-21	
Benzo[b]fluoranthene	**ND**	0.0068	EPA 8270E/SIM	9-3-21	9-7-21	
Benzo(j,k)fluoranthene	**ND**	0.0068	EPA 8270E/SIM	9-3-21	9-7-21	
Benzo[a]pyrene	**ND**	0.0068	EPA 8270E/SIM	9-3-21	9-7-21	
Indeno(1,2,3-c,d)pyrene	**ND**	0.0068	EPA 8270E/SIM	9-3-21	9-7-21	
Dibenz[a,h]anthracene	**ND**	0.0068	EPA 8270E/SIM	9-3-21	9-7-21	
Benzo[g,h,i]perylene	**ND**	0.0068	EPA 8270E/SIM	9-3-21	9-7-21	
Surrogate:	*Percent Recovery*	*Control Limits*				
2-Fluorobiphenyl	*86*	*41 - 114*				
Pyrene-d10	*86*	*39 - 115*				
Terphenyl-d14	*100*	*44 - 125*				

This report pertains to the samples analyzed in accordance with the chain of custody, and is intended only for the use of the individual or company to whom it is addressed.

Date of Report: September 10, 2021
Samples Submitted: August 31, 2021
Laboratory Reference: 2108-312
Project: 094-21021

PAHs EPA 8270E/SIM

Matrix: Soil
Units: mg/Kg

Analyte	Result	PQL	Method	Date Prepared	Date Analyzed	Flags
Client ID:	**S-35**					
Laboratory ID:	08-312-13					
Naphthalene	**ND**	0.0068	EPA 8270E/SIM	9-3-21	9-7-21	
2-Methylnaphthalene	**ND**	0.0068	EPA 8270E/SIM	9-3-21	9-7-21	
1-Methylnaphthalene	**ND**	0.0068	EPA 8270E/SIM	9-3-21	9-7-21	
Acenaphthylene	**ND**	0.0068	EPA 8270E/SIM	9-3-21	9-7-21	
Acenaphthene	**ND**	0.0068	EPA 8270E/SIM	9-3-21	9-7-21	
Fluorene	**ND**	0.0068	EPA 8270E/SIM	9-3-21	9-7-21	
Phenanthrene	**ND**	0.0068	EPA 8270E/SIM	9-3-21	9-7-21	
Anthracene	**ND**	0.0068	EPA 8270E/SIM	9-3-21	9-7-21	
Fluoranthene	**ND**	0.0068	EPA 8270E/SIM	9-3-21	9-7-21	
Pyrene	**ND**	0.0068	EPA 8270E/SIM	9-3-21	9-7-21	
Benzo[a]anthracene	**ND**	0.0068	EPA 8270E/SIM	9-3-21	9-7-21	
Chrysene	**ND**	0.0068	EPA 8270E/SIM	9-3-21	9-7-21	
Benzo[b]fluoranthene	**ND**	0.0068	EPA 8270E/SIM	9-3-21	9-7-21	
Benzo(j,k)fluoranthene	**ND**	0.0068	EPA 8270E/SIM	9-3-21	9-7-21	
Benzo[a]pyrene	**ND**	0.0068	EPA 8270E/SIM	9-3-21	9-7-21	
Indeno(1,2,3-c,d)pyrene	**ND**	0.0068	EPA 8270E/SIM	9-3-21	9-7-21	
Dibenz[a,h]anthracene	**ND**	0.0068	EPA 8270E/SIM	9-3-21	9-7-21	
Benzo[g,h,i]perylene	**ND**	0.0068	EPA 8270E/SIM	9-3-21	9-7-21	
Surrogate:	*Percent Recovery*	*Control Limits*				
2-Fluorobiphenyl	*87*	*41 - 114*				
Pyrene-d10	*88*	*39 - 115*				
Terphenyl-d14	*98*	*44 - 125*				

This report pertains to the samples analyzed in accordance with the chain of custody,
and is intended only for the use of the individual or company to whom it is addressed.

Date of Report: September 10, 2021
Samples Submitted: August 31, 2021
Laboratory Reference: 2108-312
Project: 094-21021

PAHs EPA 8270E/SIM

Matrix: Soil
Units: mg/Kg

Analyte	Result	PQL	Method	Date Prepared	Date Analyzed	Flags
Client ID:	**S-36**					
Laboratory ID:	08-312-14					
Naphthalene	**ND**	0.0068	EPA 8270E/SIM	9-3-21	9-7-21	
2-Methylnaphthalene	**ND**	0.0068	EPA 8270E/SIM	9-3-21	9-7-21	
1-Methylnaphthalene	**ND**	0.0068	EPA 8270E/SIM	9-3-21	9-7-21	
Acenaphthylene	**ND**	0.0068	EPA 8270E/SIM	9-3-21	9-7-21	
Acenaphthene	**ND**	0.0068	EPA 8270E/SIM	9-3-21	9-7-21	
Fluorene	**ND**	0.0068	EPA 8270E/SIM	9-3-21	9-7-21	
Phenanthrene	**ND**	0.0068	EPA 8270E/SIM	9-3-21	9-7-21	
Anthracene	**ND**	0.0068	EPA 8270E/SIM	9-3-21	9-7-21	
Fluoranthene	**ND**	0.0068	EPA 8270E/SIM	9-3-21	9-7-21	
Pyrene	**ND**	0.0068	EPA 8270E/SIM	9-3-21	9-7-21	
Benzo[a]anthracene	**ND**	0.0068	EPA 8270E/SIM	9-3-21	9-7-21	
Chrysene	**ND**	0.0068	EPA 8270E/SIM	9-3-21	9-7-21	
Benzo[b]fluoranthene	**ND**	0.0068	EPA 8270E/SIM	9-3-21	9-7-21	
Benzo(j,k)fluoranthene	**ND**	0.0068	EPA 8270E/SIM	9-3-21	9-7-21	
Benzo[a]pyrene	**ND**	0.0068	EPA 8270E/SIM	9-3-21	9-7-21	
Indeno(1,2,3-c,d)pyrene	**ND**	0.0068	EPA 8270E/SIM	9-3-21	9-7-21	
Dibenz[a,h]anthracene	**ND**	0.0068	EPA 8270E/SIM	9-3-21	9-7-21	
Benzo[g,h,i]perylene	**ND**	0.0068	EPA 8270E/SIM	9-3-21	9-7-21	
Surrogate:	*Percent Recovery*	*Control Limits*				
2-Fluorobiphenyl	*84*	*41 - 114*				
Pyrene-d10	*85*	*39 - 115*				
Terphenyl-d14	*95*	*44 - 125*				

This report pertains to the samples analyzed in accordance with the chain of custody, and is intended only for the use of the individual or company to whom it is addressed.

Date of Report: September 10, 2021
Samples Submitted: August 31, 2021
Laboratory Reference: 2108-312
Project: 094-21021

PAHs EPA 8270E/SIM

Matrix: Soil
Units: mg/Kg

Analyte	Result	PQL	Method	Date Prepared	Date Analyzed	Flags
Client ID:	**S-37**					
Laboratory ID:	08-312-15					
Naphthalene	**ND**	0.0069	EPA 8270E/SIM	9-3-21	9-8-21	
2-Methylnaphthalene	**ND**	0.0069	EPA 8270E/SIM	9-3-21	9-8-21	
1-Methylnaphthalene	**ND**	0.0069	EPA 8270E/SIM	9-3-21	9-8-21	
Acenaphthylene	**ND**	0.0069	EPA 8270E/SIM	9-3-21	9-8-21	
Acenaphthene	**ND**	0.0069	EPA 8270E/SIM	9-3-21	9-8-21	
Fluorene	**ND**	0.0069	EPA 8270E/SIM	9-3-21	9-8-21	
Phenanthrene	**ND**	0.0069	EPA 8270E/SIM	9-3-21	9-8-21	
Anthracene	**ND**	0.0069	EPA 8270E/SIM	9-3-21	9-8-21	
Fluoranthene	**ND**	0.0069	EPA 8270E/SIM	9-3-21	9-8-21	
Pyrene	**0.0074**	0.0069	EPA 8270E/SIM	9-3-21	9-8-21	
Benzo[a]anthracene	**ND**	0.0069	EPA 8270E/SIM	9-3-21	9-8-21	
Chrysene	**ND**	0.0069	EPA 8270E/SIM	9-3-21	9-8-21	
Benzo[b]fluoranthene	**ND**	0.0069	EPA 8270E/SIM	9-3-21	9-8-21	
Benzo(j,k)fluoranthene	**ND**	0.0069	EPA 8270E/SIM	9-3-21	9-8-21	
Benzo[a]pyrene	**ND**	0.0069	EPA 8270E/SIM	9-3-21	9-8-21	
Indeno(1,2,3-c,d)pyrene	**ND**	0.0069	EPA 8270E/SIM	9-3-21	9-8-21	
Dibenz[a,h]anthracene	**ND**	0.0069	EPA 8270E/SIM	9-3-21	9-8-21	
Benzo[g,h,i]perylene	**ND**	0.0069	EPA 8270E/SIM	9-3-21	9-8-21	
Surrogate:	*Percent Recovery*	*Control Limits*				
2-Fluorobiphenyl	*87*	*41 - 114*				
Pyrene-d10	*95*	*39 - 115*				
Terphenyl-d14	*90*	*44 - 125*				

This report pertains to the samples analyzed in accordance with the chain of custody, and is intended only for the use of the individual or company to whom it is addressed.

Date of Report: September 10, 2021
Samples Submitted: August 31, 2021
Laboratory Reference: 2108-312
Project: 094-21021

PAHs EPA 8270E/SIM

Matrix: Soil
Units: mg/Kg

Analyte	Result	PQL	Method	Date Prepared	Date Analyzed	Flags
Client ID:	**S-38**					
Laboratory ID:	08-312-16					
Naphthalene	**ND**	0.0071	EPA 8270E/SIM	9-3-21	9-8-21	
2-Methylnaphthalene	**ND**	0.0071	EPA 8270E/SIM	9-3-21	9-8-21	
1-Methylnaphthalene	**ND**	0.0071	EPA 8270E/SIM	9-3-21	9-8-21	
Acenaphthylene	**ND**	0.0071	EPA 8270E/SIM	9-3-21	9-8-21	
Acenaphthene	**ND**	0.0071	EPA 8270E/SIM	9-3-21	9-8-21	
Fluorene	**ND**	0.0071	EPA 8270E/SIM	9-3-21	9-8-21	
Phenanthrene	**ND**	0.0071	EPA 8270E/SIM	9-3-21	9-8-21	
Anthracene	**ND**	0.0071	EPA 8270E/SIM	9-3-21	9-8-21	
Fluoranthene	**ND**	0.0071	EPA 8270E/SIM	9-3-21	9-8-21	
Pyrene	**ND**	0.0071	EPA 8270E/SIM	9-3-21	9-8-21	
Benzo[a]anthracene	**ND**	0.0071	EPA 8270E/SIM	9-3-21	9-8-21	
Chrysene	**ND**	0.0071	EPA 8270E/SIM	9-3-21	9-8-21	
Benzo[b]fluoranthene	**ND**	0.0071	EPA 8270E/SIM	9-3-21	9-8-21	
Benzo(j,k)fluoranthene	**ND**	0.0071	EPA 8270E/SIM	9-3-21	9-8-21	
Benzo[a]pyrene	**ND**	0.0071	EPA 8270E/SIM	9-3-21	9-8-21	
Indeno(1,2,3-c,d)pyrene	**ND**	0.0071	EPA 8270E/SIM	9-3-21	9-8-21	
Dibenz[a,h]anthracene	**ND**	0.0071	EPA 8270E/SIM	9-3-21	9-8-21	
Benzo[g,h,i]perylene	**ND**	0.0071	EPA 8270E/SIM	9-3-21	9-8-21	
Surrogate:	*Percent Recovery*	*Control Limits*				
2-Fluorobiphenyl	*85*	*41 - 114*				
Pyrene-d10	*91*	*39 - 115*				
Terphenyl-d14	*94*	*44 - 125*				

This report pertains to the samples analyzed in accordance with the chain of custody,
and is intended only for the use of the individual or company to whom it is addressed.

Date of Report: September 10, 2021
Samples Submitted: August 31, 2021
Laboratory Reference: 2108-312
Project: 094-21021

PAHs EPA 8270E/SIM

Matrix: Soil
Units: mg/Kg

Analyte	Result	PQL	Method	Date Prepared	Date Analyzed	Flags
Client ID:	**S-39**					
Laboratory ID:	08-312-17					
Naphthalene	**ND**	0.0068	EPA 8270E/SIM	9-3-21	9-7-21	
2-Methylnaphthalene	**ND**	0.0068	EPA 8270E/SIM	9-3-21	9-7-21	
1-Methylnaphthalene	**ND**	0.0068	EPA 8270E/SIM	9-3-21	9-7-21	
Acenaphthylene	**ND**	0.0068	EPA 8270E/SIM	9-3-21	9-7-21	
Acenaphthene	**ND**	0.0068	EPA 8270E/SIM	9-3-21	9-7-21	
Fluorene	**ND**	0.0068	EPA 8270E/SIM	9-3-21	9-7-21	
Phenanthrene	**ND**	0.0068	EPA 8270E/SIM	9-3-21	9-7-21	
Anthracene	**ND**	0.0068	EPA 8270E/SIM	9-3-21	9-7-21	
Fluoranthene	**ND**	0.0068	EPA 8270E/SIM	9-3-21	9-7-21	
Pyrene	**ND**	0.0068	EPA 8270E/SIM	9-3-21	9-7-21	
Benzo[a]anthracene	**ND**	0.0068	EPA 8270E/SIM	9-3-21	9-7-21	
Chrysene	**ND**	0.0068	EPA 8270E/SIM	9-3-21	9-7-21	
Benzo[b]fluoranthene	**ND**	0.0068	EPA 8270E/SIM	9-3-21	9-7-21	
Benzo(j,k)fluoranthene	**ND**	0.0068	EPA 8270E/SIM	9-3-21	9-7-21	
Benzo[a]pyrene	**ND**	0.0068	EPA 8270E/SIM	9-3-21	9-7-21	
Indeno(1,2,3-c,d)pyrene	**ND**	0.0068	EPA 8270E/SIM	9-3-21	9-7-21	
Dibenz[a,h]anthracene	**ND**	0.0068	EPA 8270E/SIM	9-3-21	9-7-21	
Benzo[g,h,i]perylene	**ND**	0.0068	EPA 8270E/SIM	9-3-21	9-7-21	
Surrogate:	*Percent Recovery*	*Control Limits*				
2-Fluorobiphenyl	*82*	*41 - 114*				
Pyrene-d10	*87*	*39 - 115*				
Terphenyl-d14	*99*	*44 - 125*				

This report pertains to the samples analyzed in accordance with the chain of custody, and is intended only for the use of the individual or company to whom it is addressed.

Date of Report: September 10, 2021
Samples Submitted: August 31, 2021
Laboratory Reference: 2108-312
Project: 094-21021

PAHs EPA 8270E/SIM

Matrix: Soil
Units: mg/Kg

Analyte	Result	PQL	Method	Date Prepared	Date Analyzed	Flags
Client ID:	**S-40**					
Laboratory ID:	08-312-18					
Naphthalene	**ND**	0.0069	EPA 8270E/SIM	9-3-21	9-7-21	
2-Methylnaphthalene	**ND**	0.0069	EPA 8270E/SIM	9-3-21	9-7-21	
1-Methylnaphthalene	**ND**	0.0069	EPA 8270E/SIM	9-3-21	9-7-21	
Acenaphthylene	**ND**	0.0069	EPA 8270E/SIM	9-3-21	9-7-21	
Acenaphthene	**ND**	0.0069	EPA 8270E/SIM	9-3-21	9-7-21	
Fluorene	**ND**	0.0069	EPA 8270E/SIM	9-3-21	9-7-21	
Phenanthrene	**ND**	0.0069	EPA 8270E/SIM	9-3-21	9-7-21	
Anthracene	**ND**	0.0069	EPA 8270E/SIM	9-3-21	9-7-21	
Fluoranthene	**ND**	0.0069	EPA 8270E/SIM	9-3-21	9-7-21	
Pyrene	**ND**	0.0069	EPA 8270E/SIM	9-3-21	9-7-21	
Benzo[a]anthracene	**ND**	0.0069	EPA 8270E/SIM	9-3-21	9-7-21	
Chrysene	**ND**	0.0069	EPA 8270E/SIM	9-3-21	9-7-21	
Benzo[b]fluoranthene	**ND**	0.0069	EPA 8270E/SIM	9-3-21	9-7-21	
Benzo(j,k)fluoranthene	**ND**	0.0069	EPA 8270E/SIM	9-3-21	9-7-21	
Benzo[a]pyrene	**ND**	0.0069	EPA 8270E/SIM	9-3-21	9-7-21	
Indeno(1,2,3-c,d)pyrene	**ND**	0.0069	EPA 8270E/SIM	9-3-21	9-7-21	
Dibenz[a,h]anthracene	**ND**	0.0069	EPA 8270E/SIM	9-3-21	9-7-21	
Benzo[g,h,i]perylene	**ND**	0.0069	EPA 8270E/SIM	9-3-21	9-7-21	
Surrogate:	*Percent Recovery*	*Control Limits*				
2-Fluorobiphenyl	*83*	*41 - 114*				
Pyrene-d10	*85*	*39 - 115*				
Terphenyl-d14	*98*	*44 - 125*				

This report pertains to the samples analyzed in accordance with the chain of custody, and is intended only for the use of the individual or company to whom it is addressed.

Date of Report: September 10, 2021
Samples Submitted: August 31, 2021
Laboratory Reference: 2108-312
Project: 094-21021

PAHs EPA 8270E/SIM

Matrix: Soil
Units: mg/Kg

Analyte	Result	PQL	Method	Date Prepared	Date Analyzed	Flags
Client ID:	**S-41**					
Laboratory ID:	08-312-19					
Naphthalene	**ND**	0.0068	EPA 8270E/SIM	9-3-21	9-7-21	
2-Methylnaphthalene	**ND**	0.0068	EPA 8270E/SIM	9-3-21	9-7-21	
1-Methylnaphthalene	**ND**	0.0068	EPA 8270E/SIM	9-3-21	9-7-21	
Acenaphthylene	**ND**	0.0068	EPA 8270E/SIM	9-3-21	9-7-21	
Acenaphthene	**ND**	0.0068	EPA 8270E/SIM	9-3-21	9-7-21	
Fluorene	**ND**	0.0068	EPA 8270E/SIM	9-3-21	9-7-21	
Phenanthrene	**ND**	0.0068	EPA 8270E/SIM	9-3-21	9-7-21	
Anthracene	**ND**	0.0068	EPA 8270E/SIM	9-3-21	9-7-21	
Fluoranthene	**ND**	0.0068	EPA 8270E/SIM	9-3-21	9-7-21	
Pyrene	**ND**	0.0068	EPA 8270E/SIM	9-3-21	9-7-21	
Benzo[a]anthracene	**ND**	0.0068	EPA 8270E/SIM	9-3-21	9-7-21	
Chrysene	**ND**	0.0068	EPA 8270E/SIM	9-3-21	9-7-21	
Benzo[b]fluoranthene	**ND**	0.0068	EPA 8270E/SIM	9-3-21	9-7-21	
Benzo(j,k)fluoranthene	**ND**	0.0068	EPA 8270E/SIM	9-3-21	9-7-21	
Benzo[a]pyrene	**ND**	0.0068	EPA 8270E/SIM	9-3-21	9-7-21	
Indeno(1,2,3-c,d)pyrene	**ND**	0.0068	EPA 8270E/SIM	9-3-21	9-7-21	
Dibenz[a,h]anthracene	**ND**	0.0068	EPA 8270E/SIM	9-3-21	9-7-21	
Benzo[g,h,i]perylene	**ND**	0.0068	EPA 8270E/SIM	9-3-21	9-7-21	
Surrogate:	*Percent Recovery*	*Control Limits*				
2-Fluorobiphenyl	*76*	*41 - 114*				
Pyrene-d10	*84*	*39 - 115*				
Terphenyl-d14	*92*	*44 - 125*				

This report pertains to the samples analyzed in accordance with the chain of custody, and is intended only for the use of the individual or company to whom it is addressed.

Date of Report: September 10, 2021
Samples Submitted: August 31, 2021
Laboratory Reference: 2108-312
Project: 094-21021

PAHs EPA 8270E/SIM

Matrix: Soil
Units: mg/Kg

Analyte	Result	PQL	Method	Date Prepared	Date Analyzed	Flags
Client ID:	**S-42**					
Laboratory ID:	08-312-20					
Naphthalene	**ND**	0.0068	EPA 8270E/SIM	9-3-21	9-7-21	
2-Methylnaphthalene	**ND**	0.0068	EPA 8270E/SIM	9-3-21	9-7-21	
1-Methylnaphthalene	**ND**	0.0068	EPA 8270E/SIM	9-3-21	9-7-21	
Acenaphthylene	**ND**	0.0068	EPA 8270E/SIM	9-3-21	9-7-21	
Acenaphthene	**ND**	0.0068	EPA 8270E/SIM	9-3-21	9-7-21	
Fluorene	**ND**	0.0068	EPA 8270E/SIM	9-3-21	9-7-21	
Phenanthrene	**ND**	0.0068	EPA 8270E/SIM	9-3-21	9-7-21	
Anthracene	**ND**	0.0068	EPA 8270E/SIM	9-3-21	9-7-21	
Fluoranthene	**ND**	0.0068	EPA 8270E/SIM	9-3-21	9-7-21	
Pyrene	**ND**	0.0068	EPA 8270E/SIM	9-3-21	9-7-21	
Benzo[a]anthracene	**ND**	0.0068	EPA 8270E/SIM	9-3-21	9-7-21	
Chrysene	**ND**	0.0068	EPA 8270E/SIM	9-3-21	9-7-21	
Benzo[b]fluoranthene	**ND**	0.0068	EPA 8270E/SIM	9-3-21	9-7-21	
Benzo(j,k)fluoranthene	**ND**	0.0068	EPA 8270E/SIM	9-3-21	9-7-21	
Benzo[a]pyrene	**ND**	0.0068	EPA 8270E/SIM	9-3-21	9-7-21	
Indeno(1,2,3-c,d)pyrene	**ND**	0.0068	EPA 8270E/SIM	9-3-21	9-7-21	
Dibenz[a,h]anthracene	**ND**	0.0068	EPA 8270E/SIM	9-3-21	9-7-21	
Benzo[g,h,i]perylene	**ND**	0.0068	EPA 8270E/SIM	9-3-21	9-7-21	
Surrogate:	*Percent Recovery*	*Control Limits*				
2-Fluorobiphenyl	*95*	*41 - 114*				
Pyrene-d10	*88*	*39 - 115*				
Terphenyl-d14	*95*	*44 - 125*				

This report pertains to the samples analyzed in accordance with the chain of custody, and is intended only for the use of the individual or company to whom it is addressed.

Date of Report: September 10, 2021
Samples Submitted: August 31, 2021
Laboratory Reference: 2108-312
Project: 094-21021

PAHs EPA 8270E/SIM

Matrix: Soil
Units: mg/Kg

Analyte	Result	PQL	Method	Date Prepared	Date Analyzed	Flags
Client ID:	**S-43**					
Laboratory ID:	08-312-21					
Naphthalene	**ND**	0.0068	EPA 8270E/SIM	9-7-21	9-8-21	
2-Methylnaphthalene	**ND**	0.0068	EPA 8270E/SIM	9-7-21	9-8-21	
1-Methylnaphthalene	**ND**	0.0068	EPA 8270E/SIM	9-7-21	9-8-21	
Acenaphthylene	**ND**	0.0068	EPA 8270E/SIM	9-7-21	9-8-21	
Acenaphthene	**ND**	0.0068	EPA 8270E/SIM	9-7-21	9-8-21	
Fluorene	**ND**	0.0068	EPA 8270E/SIM	9-7-21	9-8-21	
Phenanthrene	**ND**	0.0068	EPA 8270E/SIM	9-7-21	9-8-21	
Anthracene	**ND**	0.0068	EPA 8270E/SIM	9-7-21	9-8-21	
Fluoranthene	**ND**	0.0068	EPA 8270E/SIM	9-7-21	9-8-21	
Pyrene	**ND**	0.0068	EPA 8270E/SIM	9-7-21	9-8-21	
Benzo[a]anthracene	**ND**	0.0068	EPA 8270E/SIM	9-7-21	9-8-21	
Chrysene	**ND**	0.0068	EPA 8270E/SIM	9-7-21	9-8-21	
Benzo[b]fluoranthene	**ND**	0.0068	EPA 8270E/SIM	9-7-21	9-8-21	
Benzo(j,k)fluoranthene	**ND**	0.0068	EPA 8270E/SIM	9-7-21	9-8-21	
Benzo[a]pyrene	**ND**	0.0068	EPA 8270E/SIM	9-7-21	9-8-21	
Indeno(1,2,3-c,d)pyrene	**ND**	0.0068	EPA 8270E/SIM	9-7-21	9-8-21	
Dibenz[a,h]anthracene	**ND**	0.0068	EPA 8270E/SIM	9-7-21	9-8-21	
Benzo[g,h,i]perylene	**ND**	0.0068	EPA 8270E/SIM	9-7-21	9-8-21	
Surrogate:	*Percent Recovery*	*Control Limits*				
2-Fluorobiphenyl	*80*	*41 - 114*				
Pyrene-d10	*83*	*39 - 115*				
Terphenyl-d14	*97*	*44 - 125*				

This report pertains to the samples analyzed in accordance with the chain of custody,
and is intended only for the use of the individual or company to whom it is addressed.

Date of Report: September 10, 2021
Samples Submitted: August 31, 2021
Laboratory Reference: 2108-312
Project: 094-21021

PAHs EPA 8270E/SIM

Matrix: Soil
Units: mg/Kg

Analyte	Result	PQL	Method	Date Prepared	Date Analyzed	Flags
Client ID:	**S-44**					
Laboratory ID:	08-312-22					
Naphthalene	**ND**	0.0068	EPA 8270E/SIM	9-7-21	9-8-21	
2-Methylnaphthalene	**ND**	0.0068	EPA 8270E/SIM	9-7-21	9-8-21	
1-Methylnaphthalene	**ND**	0.0068	EPA 8270E/SIM	9-7-21	9-8-21	
Acenaphthylene	**ND**	0.0068	EPA 8270E/SIM	9-7-21	9-8-21	
Acenaphthene	**ND**	0.0068	EPA 8270E/SIM	9-7-21	9-8-21	
Fluorene	**ND**	0.0068	EPA 8270E/SIM	9-7-21	9-8-21	
Phenanthrene	**ND**	0.0068	EPA 8270E/SIM	9-7-21	9-8-21	
Anthracene	**ND**	0.0068	EPA 8270E/SIM	9-7-21	9-8-21	
Fluoranthene	**ND**	0.0068	EPA 8270E/SIM	9-7-21	9-8-21	
Pyrene	**ND**	0.0068	EPA 8270E/SIM	9-7-21	9-8-21	
Benzo[a]anthracene	**ND**	0.0068	EPA 8270E/SIM	9-7-21	9-8-21	
Chrysene	**ND**	0.0068	EPA 8270E/SIM	9-7-21	9-8-21	
Benzo[b]fluoranthene	**ND**	0.0068	EPA 8270E/SIM	9-7-21	9-8-21	
Benzo(j,k)fluoranthene	**ND**	0.0068	EPA 8270E/SIM	9-7-21	9-8-21	
Benzo[a]pyrene	**ND**	0.0068	EPA 8270E/SIM	9-7-21	9-8-21	
Indeno(1,2,3-c,d)pyrene	**ND**	0.0068	EPA 8270E/SIM	9-7-21	9-8-21	
Dibenz[a,h]anthracene	**ND**	0.0068	EPA 8270E/SIM	9-7-21	9-8-21	
Benzo[g,h,i]perylene	**ND**	0.0068	EPA 8270E/SIM	9-7-21	9-8-21	
Surrogate:	*Percent Recovery*	*Control Limits*				
2-Fluorobiphenyl	*93*	*41 - 114*				
Pyrene-d10	*89*	*39 - 115*				
Terphenyl-d14	*98*	*44 - 125*				

This report pertains to the samples analyzed in accordance with the chain of custody, and is intended only for the use of the individual or company to whom it is addressed.

Date of Report: September 10, 2021
Samples Submitted: August 31, 2021
Laboratory Reference: 2108-312
Project: 094-21021

PAHs EPA 8270E/SIM

Matrix: Soil
Units: mg/Kg

Analyte	Result	PQL	Method	Date Prepared	Date Analyzed	Flags
Client ID:	**S-45**					
Laboratory ID:	08-312-23					
Naphthalene	**ND**	0.0068	EPA 8270E/SIM	9-7-21	9-8-21	
2-Methylnaphthalene	**ND**	0.0068	EPA 8270E/SIM	9-7-21	9-8-21	
1-Methylnaphthalene	**ND**	0.0068	EPA 8270E/SIM	9-7-21	9-8-21	
Acenaphthylene	**ND**	0.0068	EPA 8270E/SIM	9-7-21	9-8-21	
Acenaphthene	**ND**	0.0068	EPA 8270E/SIM	9-7-21	9-8-21	
Fluorene	**ND**	0.0068	EPA 8270E/SIM	9-7-21	9-8-21	
Phenanthrene	**ND**	0.0068	EPA 8270E/SIM	9-7-21	9-8-21	
Anthracene	**ND**	0.0068	EPA 8270E/SIM	9-7-21	9-8-21	
Fluoranthene	**ND**	0.0068	EPA 8270E/SIM	9-7-21	9-8-21	
Pyrene	**ND**	0.0068	EPA 8270E/SIM	9-7-21	9-8-21	
Benzo[a]anthracene	**ND**	0.0068	EPA 8270E/SIM	9-7-21	9-8-21	
Chrysene	**ND**	0.0068	EPA 8270E/SIM	9-7-21	9-8-21	
Benzo[b]fluoranthene	**ND**	0.0068	EPA 8270E/SIM	9-7-21	9-8-21	
Benzo(j,k)fluoranthene	**ND**	0.0068	EPA 8270E/SIM	9-7-21	9-8-21	
Benzo[a]pyrene	**ND**	0.0068	EPA 8270E/SIM	9-7-21	9-8-21	
Indeno(1,2,3-c,d)pyrene	**ND**	0.0068	EPA 8270E/SIM	9-7-21	9-8-21	
Dibenz[a,h]anthracene	**ND**	0.0068	EPA 8270E/SIM	9-7-21	9-8-21	
Benzo[g,h,i]perylene	**ND**	0.0068	EPA 8270E/SIM	9-7-21	9-8-21	
Surrogate:	*Percent Recovery*	*Control Limits*				
2-Fluorobiphenyl	*74*	*41 - 114*				
Pyrene-d10	*80*	*39 - 115*				
Terphenyl-d14	*93*	*44 - 125*				

This report pertains to the samples analyzed in accordance with the chain of custody, and is intended only for the use of the individual or company to whom it is addressed.

Date of Report: September 10, 2021
Samples Submitted: August 31, 2021
Laboratory Reference: 2108-312
Project: 094-21021

PAHs EPA 8270E/SIM

Matrix: Soil
Units: mg/Kg

Analyte	Result	PQL	Method	Date Prepared	Date Analyzed	Flags
Client ID:	**S-46**					
Laboratory ID:	08-312-24					
Naphthalene	**ND**	0.0069	EPA 8270E/SIM	9-7-21	9-8-21	
2-Methylnaphthalene	**ND**	0.0069	EPA 8270E/SIM	9-7-21	9-8-21	
1-Methylnaphthalene	**ND**	0.0069	EPA 8270E/SIM	9-7-21	9-8-21	
Acenaphthylene	**ND**	0.0069	EPA 8270E/SIM	9-7-21	9-8-21	
Acenaphthene	**ND**	0.0069	EPA 8270E/SIM	9-7-21	9-8-21	
Fluorene	**ND**	0.0069	EPA 8270E/SIM	9-7-21	9-8-21	
Phenanthrene	**ND**	0.0069	EPA 8270E/SIM	9-7-21	9-8-21	
Anthracene	**ND**	0.0069	EPA 8270E/SIM	9-7-21	9-8-21	
Fluoranthene	**ND**	0.0069	EPA 8270E/SIM	9-7-21	9-8-21	
Pyrene	**ND**	0.0069	EPA 8270E/SIM	9-7-21	9-8-21	
Benzo[a]anthracene	**ND**	0.0069	EPA 8270E/SIM	9-7-21	9-8-21	
Chrysene	**ND**	0.0069	EPA 8270E/SIM	9-7-21	9-8-21	
Benzo[b]fluoranthene	**ND**	0.0069	EPA 8270E/SIM	9-7-21	9-8-21	
Benzo(j,k)fluoranthene	**ND**	0.0069	EPA 8270E/SIM	9-7-21	9-8-21	
Benzo[a]pyrene	**ND**	0.0069	EPA 8270E/SIM	9-7-21	9-8-21	
Indeno(1,2,3-c,d)pyrene	**ND**	0.0069	EPA 8270E/SIM	9-7-21	9-8-21	
Dibenz[a,h]anthracene	**ND**	0.0069	EPA 8270E/SIM	9-7-21	9-8-21	
Benzo[g,h,i]perylene	**ND**	0.0069	EPA 8270E/SIM	9-7-21	9-8-21	
Surrogate:	*Percent Recovery*	*Control Limits*				
2-Fluorobiphenyl	*84*	*41 - 114*				
Pyrene-d10	*83*	*39 - 115*				
Terphenyl-d14	*97*	*44 - 125*				

This report pertains to the samples analyzed in accordance with the chain of custody, and is intended only for the use of the individual or company to whom it is addressed.

Date of Report: September 10, 2021
Samples Submitted: August 31, 2021
Laboratory Reference: 2108-312
Project: 094-21021

PAHs EPA 8270E/SIM

Matrix: Soil
Units: mg/Kg

Analyte	Result	PQL	Method	Date Prepared	Date Analyzed	Flags
Client ID:	**S-47**					
Laboratory ID:	08-312-25					
Naphthalene	**ND**	0.0068	EPA 8270E/SIM	9-7-21	9-8-21	
2-Methylnaphthalene	**ND**	0.0068	EPA 8270E/SIM	9-7-21	9-8-21	
1-Methylnaphthalene	**ND**	0.0068	EPA 8270E/SIM	9-7-21	9-8-21	
Acenaphthylene	**ND**	0.0068	EPA 8270E/SIM	9-7-21	9-8-21	
Acenaphthene	**ND**	0.0068	EPA 8270E/SIM	9-7-21	9-8-21	
Fluorene	**ND**	0.0068	EPA 8270E/SIM	9-7-21	9-8-21	
Phenanthrene	**ND**	0.0068	EPA 8270E/SIM	9-7-21	9-8-21	
Anthracene	**ND**	0.0068	EPA 8270E/SIM	9-7-21	9-8-21	
Fluoranthene	**ND**	0.0068	EPA 8270E/SIM	9-7-21	9-8-21	
Pyrene	**ND**	0.0068	EPA 8270E/SIM	9-7-21	9-8-21	
Benzo[a]anthracene	**ND**	0.0068	EPA 8270E/SIM	9-7-21	9-8-21	
Chrysene	**ND**	0.0068	EPA 8270E/SIM	9-7-21	9-8-21	
Benzo[b]fluoranthene	**ND**	0.0068	EPA 8270E/SIM	9-7-21	9-8-21	
Benzo(j,k)fluoranthene	**ND**	0.0068	EPA 8270E/SIM	9-7-21	9-8-21	
Benzo[a]pyrene	**ND**	0.0068	EPA 8270E/SIM	9-7-21	9-8-21	
Indeno(1,2,3-c,d)pyrene	**ND**	0.0068	EPA 8270E/SIM	9-7-21	9-8-21	
Dibenz[a,h]anthracene	**ND**	0.0068	EPA 8270E/SIM	9-7-21	9-8-21	
Benzo[g,h,i]perylene	**ND**	0.0068	EPA 8270E/SIM	9-7-21	9-8-21	
Surrogate:	*Percent Recovery*	*Control Limits*				
2-Fluorobiphenyl	*83*	*41 - 114*				
Pyrene-d10	*86*	*39 - 115*				
Terphenyl-d14	*98*	*44 - 125*				

This report pertains to the samples analyzed in accordance with the chain of custody,
and is intended only for the use of the individual or company to whom it is addressed.

Date of Report: September 10, 2021
Samples Submitted: August 31, 2021
Laboratory Reference: 2108-312
Project: 094-21021

PAHs EPA 8270E/SIM
QUALITY CONTROL

Matrix: Soil
Units: mg/Kg

Analyte	Result	PQL	Method	Date Prepared	Date Analyzed	Flags
METHOD BLANK						
Laboratory ID:	MB0903S1					
Naphthalene	**ND**	0.0067	EPA 8270E/SIM	9-3-21	9-7-21	
2-Methylnaphthalene	**ND**	0.0067	EPA 8270E/SIM	9-3-21	9-7-21	
1-Methylnaphthalene	**ND**	0.0067	EPA 8270E/SIM	9-3-21	9-7-21	
Acenaphthylene	**ND**	0.0067	EPA 8270E/SIM	9-3-21	9-7-21	
Acenaphthene	**ND**	0.0067	EPA 8270E/SIM	9-3-21	9-7-21	
Fluorene	**ND**	0.0067	EPA 8270E/SIM	9-3-21	9-7-21	
Phenanthrene	**ND**	0.0067	EPA 8270E/SIM	9-3-21	9-7-21	
Anthracene	**ND**	0.0067	EPA 8270E/SIM	9-3-21	9-7-21	
Fluoranthene	**ND**	0.0067	EPA 8270E/SIM	9-3-21	9-7-21	
Pyrene	**ND**	0.0067	EPA 8270E/SIM	9-3-21	9-7-21	
Benzo[a]anthracene	**ND**	0.0067	EPA 8270E/SIM	9-3-21	9-7-21	
Chrysene	**ND**	0.0067	EPA 8270E/SIM	9-3-21	9-7-21	
Benzo[b]fluoranthene	**ND**	0.0067	EPA 8270E/SIM	9-3-21	9-7-21	
Benzo(j,k)fluoranthene	**ND**	0.0067	EPA 8270E/SIM	9-3-21	9-7-21	
Benzo[a]pyrene	**ND**	0.0067	EPA 8270E/SIM	9-3-21	9-7-21	
Indeno(1,2,3-c,d)pyrene	**ND**	0.0067	EPA 8270E/SIM	9-3-21	9-7-21	
Dibenz[a,h]anthracene	**ND**	0.0067	EPA 8270E/SIM	9-3-21	9-7-21	
Benzo[g,h,i]perylene	**ND**	0.0067	EPA 8270E/SIM	9-3-21	9-7-21	
Surrogate:	*Percent Recovery*	*Control Limits*				
2-Fluorobiphenyl	*92*	*41 - 114*				
Pyrene-d10	*97*	*39 - 115*				
Terphenyl-d14	*104*	*44 - 125*				

This report pertains to the samples analyzed in accordance with the chain of custody,
and is intended only for the use of the individual or company to whom it is addressed.

Date of Report: September 10, 2021
Samples Submitted: August 31, 2021
Laboratory Reference: 2108-312
Project: 094-21021

PAHs EPA 8270E/SIM
QUALITY CONTROL

Matrix: Soil
Units: mg/Kg

Analyte	Result	PQL	Method	Date Prepared	Date Analyzed	Flags
METHOD BLANK						
Laboratory ID:	MB0907S1					
Naphthalene	**ND**	0.0067	EPA 8270E/SIM	9-7-21	9-8-21	
2-Methylnaphthalene	**ND**	0.0067	EPA 8270E/SIM	9-7-21	9-8-21	
1-Methylnaphthalene	**ND**	0.0067	EPA 8270E/SIM	9-7-21	9-8-21	
Acenaphthylene	**ND**	0.0067	EPA 8270E/SIM	9-7-21	9-8-21	
Acenaphthene	**ND**	0.0067	EPA 8270E/SIM	9-7-21	9-8-21	
Fluorene	**ND**	0.0067	EPA 8270E/SIM	9-7-21	9-8-21	
Phenanthrene	**ND**	0.0067	EPA 8270E/SIM	9-7-21	9-8-21	
Anthracene	**ND**	0.0067	EPA 8270E/SIM	9-7-21	9-8-21	
Fluoranthene	**ND**	0.0067	EPA 8270E/SIM	9-7-21	9-8-21	
Pyrene	**ND**	0.0067	EPA 8270E/SIM	9-7-21	9-8-21	
Benzo[a]anthracene	**ND**	0.0067	EPA 8270E/SIM	9-7-21	9-8-21	
Chrysene	**ND**	0.0067	EPA 8270E/SIM	9-7-21	9-8-21	
Benzo[b]fluoranthene	**ND**	0.0067	EPA 8270E/SIM	9-7-21	9-8-21	
Benzo(j,k)fluoranthene	**ND**	0.0067	EPA 8270E/SIM	9-7-21	9-8-21	
Benzo[a]pyrene	**ND**	0.0067	EPA 8270E/SIM	9-7-21	9-8-21	
Indeno(1,2,3-c,d)pyrene	**ND**	0.0067	EPA 8270E/SIM	9-7-21	9-8-21	
Dibenz[a,h]anthracene	**ND**	0.0067	EPA 8270E/SIM	9-7-21	9-8-21	
Benzo[g,h,i]perylene	**ND**	0.0067	EPA 8270E/SIM	9-7-21	9-8-21	
Surrogate:	*Percent Recovery*	*Control Limits*				
2-Fluorobiphenyl	*89*	*41 - 114*				
Pyrene-d10	*92*	*39 - 115*				
Terphenyl-d14	*102*	*44 - 125*				

This report pertains to the samples analyzed in accordance with the chain of custody,
and is intended only for the use of the individual or company to whom it is addressed.

Date of Report: September 10, 2021
Samples Submitted: August 31, 2021
Laboratory Reference: 2108-312
Project: 094-21021

PAHs EPA 8270E/SIM
QUALITY CONTROL

Matrix: Soil
Units: mg/Kg

Analyte	Result		Spike Level		Source Result	Percent Recovery		Recovery Limits	RPD	RPD Limit	Flags
MATRIX SPIKES											
Laboratory ID:	08-312-01										
	MS	MSD	MS	MSD		MS	MSD				
Naphthalene	**0.146**	**0.161**	0.167	0.167	ND	87	96	41 - 123	10	23	
Acenaphthylene	**0.162**	**0.162**	0.167	0.167	ND	97	97	45 - 124	0	20	
Acenaphthene	**0.153**	**0.157**	0.167	0.167	ND	92	94	46 - 122	3	23	
Fluorene	**0.131**	**0.140**	0.167	0.167	ND	78	84	45 - 128	7	27	
Phenanthrene	**0.169**	**0.169**	0.167	0.167	ND	101	101	38 - 133	0	33	
Anthracene	**0.174**	**0.175**	0.167	0.167	ND	104	105	49 - 127	1	21	
Fluoranthene	**0.181**	**0.178**	0.167	0.167	ND	108	107	45 - 130	2	29	
Pyrene	**0.179**	**0.175**	0.167	0.167	ND	107	105	43 - 132	2	32	
Benzo[a]anthracene	**0.169**	**0.160**	0.167	0.167	ND	101	96	49 - 139	5	27	
Chrysene	**0.174**	**0.174**	0.167	0.167	ND	104	104	47 - 127	0	28	
Benzo[b]fluoranthene	**0.177**	**0.176**	0.167	0.167	ND	106	105	46 - 129	1	31	
Benzo(j,k)fluoranthene	**0.186**	**0.175**	0.167	0.167	ND	111	105	46 - 128	6	25	
Benzo[a]pyrene	**0.181**	**0.176**	0.167	0.167	ND	108	105	47 - 134	3	27	
Indeno(1,2,3-c,d)pyrene	**0.175**	**0.171**	0.167	0.167	ND	105	102	42 - 133	2	25	
Dibenz[a,h]anthracene	**0.181**	**0.178**	0.167	0.167	ND	108	107	46 - 129	2	24	
Benzo[g,h,i]perylene	**0.179**	**0.174**	0.167	0.167	ND	107	104	44 - 129	3	27	
Surrogate:											
2-Fluorobiphenyl						*86*	*90*	*41 - 114*			
Pyrene-d10						*91*	*89*	*39 - 115*			
Terphenyl-d14						*103*	*101*	*44 - 125*			
Laboratory ID:	08-312-22										
	MS	MSD	MS	MSD		MS	MSD				
Naphthalene	**0.153**	**0.139**	0.167	0.167	ND	92	83	41 - 123	10	23	
Acenaphthylene	**0.156**	**0.151**	0.167	0.167	ND	93	90	45 - 124	3	20	
Acenaphthene	**0.152**	**0.142**	0.167	0.167	ND	91	85	46 - 122	7	23	
Fluorene	**0.137**	**0.130**	0.167	0.167	ND	82	78	45 - 128	5	27	
Phenanthrene	**0.164**	**0.158**	0.167	0.167	ND	98	95	38 - 133	4	33	
Anthracene	**0.172**	**0.165**	0.167	0.167	ND	103	99	49 - 127	4	21	
Fluoranthene	**0.164**	**0.156**	0.167	0.167	ND	98	93	45 - 130	5	29	
Pyrene	**0.149**	**0.146**	0.167	0.167	ND	89	87	43 - 132	2	32	
Benzo[a]anthracene	**0.158**	**0.153**	0.167	0.167	ND	95	92	49 - 139	3	27	
Chrysene	**0.171**	**0.167**	0.167	0.167	ND	102	100	47 - 127	2	28	
Benzo[b]fluoranthene	**0.167**	**0.163**	0.167	0.167	ND	100	98	46 - 129	2	31	
Benzo(j,k)fluoranthene	**0.175**	**0.169**	0.167	0.167	ND	105	101	46 - 128	3	25	
Benzo[a]pyrene	**0.169**	**0.165**	0.167	0.167	ND	101	99	47 - 134	2	27	
Indeno(1,2,3-c,d)pyrene	**0.165**	**0.161**	0.167	0.167	ND	99	96	42 - 133	2	25	
Dibenz[a,h]anthracene	**0.180**	**0.176**	0.167	0.167	ND	108	105	46 - 129	2	24	
Benzo[g,h,i]perylene	**0.172**	**0.166**	0.167	0.167	ND	103	99	44 - 129	4	27	
Surrogate:											
2-Fluorobiphenyl						*88*	*85*	*41 - 114*			
Pyrene-d10						*83*	*82*	*39 - 115*			
Terphenyl-d14						*98*	*99*	*44 - 125*			

This report pertains to the samples analyzed in accordance with the chain of custody, and is intended only for the use of the individual or company to whom it is addressed.

Date of Report: September 10, 2021
Samples Submitted: August 31, 2021
Laboratory Reference: 2108-312
Project: 094-21021

PCBs EPA 8082A

Matrix: Soil
Units: mg/Kg (ppm)

Analyte	Result	PQL	Method	Date Prepared	Date Analyzed	Flags
Client ID:	**S-23**					
Laboratory ID:	08-312-01					
Aroclor 1016	**ND**	0.051	EPA 8082A	9-8-21	9-8-21	
Aroclor 1221	**ND**	0.051	EPA 8082A	9-8-21	9-8-21	
Aroclor 1232	**ND**	0.051	EPA 8082A	9-8-21	9-8-21	
Aroclor 1242	**ND**	0.051	EPA 8082A	9-8-21	9-8-21	
Aroclor 1248	**ND**	0.051	EPA 8082A	9-8-21	9-8-21	
Aroclor 1254	**ND**	0.051	EPA 8082A	9-8-21	9-8-21	
Aroclor 1260	**ND**	0.051	EPA 8082A	9-8-21	9-8-21	
Surrogate:	*Percent Recovery*	*Control Limits*				
DCB	*94*	*54-135*				
Client ID:	**S-24**					
Laboratory ID:	08-312-02					
Aroclor 1016	**ND**	0.051	EPA 8082A	9-8-21	9-8-21	
Aroclor 1221	**ND**	0.051	EPA 8082A	9-8-21	9-8-21	
Aroclor 1232	**ND**	0.051	EPA 8082A	9-8-21	9-8-21	
Aroclor 1242	**ND**	0.051	EPA 8082A	9-8-21	9-8-21	
Aroclor 1248	**ND**	0.051	EPA 8082A	9-8-21	9-8-21	
Aroclor 1254	**ND**	0.051	EPA 8082A	9-8-21	9-8-21	
Aroclor 1260	**ND**	0.051	EPA 8082A	9-8-21	9-8-21	
Surrogate:	*Percent Recovery*	*Control Limits*				
DCB	*92*	*54-135*				
Client ID:	**S-25**					
Laboratory ID:	08-312-03					
Aroclor 1016	**ND**	0.051	EPA 8082A	9-8-21	9-8-21	
Aroclor 1221	**ND**	0.051	EPA 8082A	9-8-21	9-8-21	
Aroclor 1232	**ND**	0.051	EPA 8082A	9-8-21	9-8-21	
Aroclor 1242	**ND**	0.051	EPA 8082A	9-8-21	9-8-21	
Aroclor 1248	**ND**	0.051	EPA 8082A	9-8-21	9-8-21	
Aroclor 1254	**ND**	0.051	EPA 8082A	9-8-21	9-8-21	
Aroclor 1260	**ND**	0.051	EPA 8082A	9-8-21	9-8-21	
Surrogate:	*Percent Recovery*	*Control Limits*				
DCB	*96*	*54-135*				

This report pertains to the samples analyzed in accordance with the chain of custody,
and is intended only for the use of the individual or company to whom it is addressed.

Date of Report: September 10, 2021
Samples Submitted: August 31, 2021
Laboratory Reference: 2108-312
Project: 094-21021

PCBs EPA 8082A

Matrix: Soil
Units: mg/Kg (ppm)

Analyte	Result	PQL	Method	Date Prepared	Date Analyzed	Flags
Client ID:	**S-26**					
Laboratory ID:	08-312-04					
Aroclor 1016	**ND**	0.052	EPA 8082A	9-8-21	9-8-21	
Aroclor 1221	**ND**	0.052	EPA 8082A	9-8-21	9-8-21	
Aroclor 1232	**ND**	0.052	EPA 8082A	9-8-21	9-8-21	
Aroclor 1242	**ND**	0.052	EPA 8082A	9-8-21	9-8-21	
Aroclor 1248	**ND**	0.052	EPA 8082A	9-8-21	9-8-21	
Aroclor 1254	**ND**	0.052	EPA 8082A	9-8-21	9-8-21	
Aroclor 1260	**ND**	0.052	EPA 8082A	9-8-21	9-8-21	
Surrogate:	*Percent Recovery*	*Control Limits*				
DCB	*86*	*54-135*				
Client ID:	**S-27**					
Laboratory ID:	08-312-05					
Aroclor 1016	**ND**	0.051	EPA 8082A	9-8-21	9-8-21	
Aroclor 1221	**ND**	0.051	EPA 8082A	9-8-21	9-8-21	
Aroclor 1232	**ND**	0.051	EPA 8082A	9-8-21	9-8-21	
Aroclor 1242	**ND**	0.051	EPA 8082A	9-8-21	9-8-21	
Aroclor 1248	**ND**	0.051	EPA 8082A	9-8-21	9-8-21	
Aroclor 1254	**ND**	0.051	EPA 8082A	9-8-21	9-8-21	
Aroclor 1260	**ND**	0.051	EPA 8082A	9-8-21	9-8-21	
Surrogate:	*Percent Recovery*	*Control Limits*				
DCB	*87*	*54-135*				
Client ID:	**S-28**					
Laboratory ID:	08-312-06					
Aroclor 1016	**ND**	0.052	EPA 8082A	9-8-21	9-8-21	
Aroclor 1221	**ND**	0.052	EPA 8082A	9-8-21	9-8-21	
Aroclor 1232	**ND**	0.052	EPA 8082A	9-8-21	9-8-21	
Aroclor 1242	**ND**	0.052	EPA 8082A	9-8-21	9-8-21	
Aroclor 1248	**ND**	0.052	EPA 8082A	9-8-21	9-8-21	
Aroclor 1254	**ND**	0.052	EPA 8082A	9-8-21	9-8-21	
Aroclor 1260	**ND**	0.052	EPA 8082A	9-8-21	9-8-21	
Surrogate:	*Percent Recovery*	*Control Limits*				
DCB	*91*	*54-135*				

This report pertains to the samples analyzed in accordance with the chain of custody,
and is intended only for the use of the individual or company to whom it is addressed.

Date of Report: September 10, 2021
Samples Submitted: August 31, 2021
Laboratory Reference: 2108-312
Project: 094-21021

PCBs EPA 8082A

Matrix: Soil
Units: mg/Kg (ppm)

Analyte	Result	PQL	Method	Date Prepared	Date Analyzed	Flags
Client ID:	**S-29**					
Laboratory ID:	08-312-07					
Aroclor 1016	**ND**	0.051	EPA 8082A	9-8-21	9-8-21	
Aroclor 1221	**ND**	0.051	EPA 8082A	9-8-21	9-8-21	
Aroclor 1232	**ND**	0.051	EPA 8082A	9-8-21	9-8-21	
Aroclor 1242	**ND**	0.051	EPA 8082A	9-8-21	9-8-21	
Aroclor 1248	**ND**	0.051	EPA 8082A	9-8-21	9-8-21	
Aroclor 1254	**ND**	0.051	EPA 8082A	9-8-21	9-8-21	
Aroclor 1260	**ND**	0.051	EPA 8082A	9-8-21	9-8-21	
Surrogate:	*Percent Recovery*	*Control Limits*				
DCB	*100*	*54-135*				
Client ID:	**S-30**					
Laboratory ID:	08-312-08					
Aroclor 1016	**ND**	0.052	EPA 8082A	9-8-21	9-8-21	
Aroclor 1221	**ND**	0.052	EPA 8082A	9-8-21	9-8-21	
Aroclor 1232	**ND**	0.052	EPA 8082A	9-8-21	9-8-21	
Aroclor 1242	**ND**	0.052	EPA 8082A	9-8-21	9-8-21	
Aroclor 1248	**ND**	0.052	EPA 8082A	9-8-21	9-8-21	
Aroclor 1254	**ND**	0.052	EPA 8082A	9-8-21	9-8-21	
Aroclor 1260	**ND**	0.052	EPA 8082A	9-8-21	9-8-21	
Surrogate:	*Percent Recovery*	*Control Limits*				
DCB	*85*	*54-135*				
Client ID:	**S-31**					
Laboratory ID:	08-312-09					
Aroclor 1016	**ND**	0.052	EPA 8082A	9-8-21	9-8-21	
Aroclor 1221	**ND**	0.052	EPA 8082A	9-8-21	9-8-21	
Aroclor 1232	**ND**	0.052	EPA 8082A	9-8-21	9-8-21	
Aroclor 1242	**ND**	0.052	EPA 8082A	9-8-21	9-8-21	
Aroclor 1248	**ND**	0.052	EPA 8082A	9-8-21	9-8-21	
Aroclor 1254	**ND**	0.052	EPA 8082A	9-8-21	9-8-21	
Aroclor 1260	**ND**	0.052	EPA 8082A	9-8-21	9-8-21	
Surrogate:	*Percent Recovery*	*Control Limits*				
DCB	*86*	*54-135*				

This report pertains to the samples analyzed in accordance with the chain of custody,
and is intended only for the use of the individual or company to whom it is addressed.

Date of Report: September 10, 2021
Samples Submitted: August 31, 2021
Laboratory Reference: 2108-312
Project: 094-21021

PCBs EPA 8082A

Matrix: Soil
Units: mg/Kg (ppm)

Analyte	Result	PQL	Method	Date Prepared	Date Analyzed	Flags
Client ID:	**S-32**					
Laboratory ID:	08-312-10					
Aroclor 1016	**ND**	0.051	EPA 8082A	9-8-21	9-8-21	
Aroclor 1221	**ND**	0.051	EPA 8082A	9-8-21	9-8-21	
Aroclor 1232	**ND**	0.051	EPA 8082A	9-8-21	9-8-21	
Aroclor 1242	**ND**	0.051	EPA 8082A	9-8-21	9-8-21	
Aroclor 1248	**ND**	0.051	EPA 8082A	9-8-21	9-8-21	
Aroclor 1254	**ND**	0.051	EPA 8082A	9-8-21	9-8-21	
Aroclor 1260	**ND**	0.051	EPA 8082A	9-8-21	9-8-21	
Surrogate:	*Percent Recovery*	*Control Limits*				
DCB	*95*	*54-135*				
Client ID:	**S-33**					
Laboratory ID:	08-312-11					
Aroclor 1016	**ND**	0.051	EPA 8082A	9-8-21	9-8-21	
Aroclor 1221	**ND**	0.051	EPA 8082A	9-8-21	9-8-21	
Aroclor 1232	**ND**	0.051	EPA 8082A	9-8-21	9-8-21	
Aroclor 1242	**ND**	0.051	EPA 8082A	9-8-21	9-8-21	
Aroclor 1248	**ND**	0.051	EPA 8082A	9-8-21	9-8-21	
Aroclor 1254	**ND**	0.051	EPA 8082A	9-8-21	9-8-21	
Aroclor 1260	**ND**	0.051	EPA 8082A	9-8-21	9-8-21	
Surrogate:	*Percent Recovery*	*Control Limits*				
DCB	*89*	*54-135*				
Client ID:	**S-34**					
Laboratory ID:	08-312-12					
Aroclor 1016	**ND**	0.051	EPA 8082A	9-8-21	9-8-21	
Aroclor 1221	**ND**	0.051	EPA 8082A	9-8-21	9-8-21	
Aroclor 1232	**ND**	0.051	EPA 8082A	9-8-21	9-8-21	
Aroclor 1242	**ND**	0.051	EPA 8082A	9-8-21	9-8-21	
Aroclor 1248	**ND**	0.051	EPA 8082A	9-8-21	9-8-21	
Aroclor 1254	**ND**	0.051	EPA 8082A	9-8-21	9-8-21	
Aroclor 1260	**ND**	0.051	EPA 8082A	9-8-21	9-8-21	
Surrogate:	*Percent Recovery*	*Control Limits*				
DCB	*98*	*54-135*				

This report pertains to the samples analyzed in accordance with the chain of custody,
and is intended only for the use of the individual or company to whom it is addressed.

Date of Report: September 10, 2021
Samples Submitted: August 31, 2021
Laboratory Reference: 2108-312
Project: 094-21021

PCBs EPA 8082A

Matrix: Soil
Units: mg/Kg (ppm)

Analyte	Result	PQL	Method	Date Prepared	Date Analyzed	Flags
Client ID:	**S-35**					
Laboratory ID:	08-312-13					
Aroclor 1016	**ND**	0.051	EPA 8082A	9-8-21	9-8-21	
Aroclor 1221	**ND**	0.051	EPA 8082A	9-8-21	9-8-21	
Aroclor 1232	**ND**	0.051	EPA 8082A	9-8-21	9-8-21	
Aroclor 1242	**ND**	0.051	EPA 8082A	9-8-21	9-8-21	
Aroclor 1248	**ND**	0.051	EPA 8082A	9-8-21	9-8-21	
Aroclor 1254	**ND**	0.051	EPA 8082A	9-8-21	9-8-21	
Aroclor 1260	**ND**	0.051	EPA 8082A	9-8-21	9-8-21	
Surrogate:	*Percent Recovery*	*Control Limits*				
DCB	*92*	*54-135*				
Client ID:	**S-36**					
Laboratory ID:	08-312-14					
Aroclor 1016	**ND**	0.051	EPA 8082A	9-8-21	9-8-21	
Aroclor 1221	**ND**	0.051	EPA 8082A	9-8-21	9-8-21	
Aroclor 1232	**ND**	0.051	EPA 8082A	9-8-21	9-8-21	
Aroclor 1242	**ND**	0.051	EPA 8082A	9-8-21	9-8-21	
Aroclor 1248	**ND**	0.051	EPA 8082A	9-8-21	9-8-21	
Aroclor 1254	**ND**	0.051	EPA 8082A	9-8-21	9-8-21	
Aroclor 1260	**ND**	0.051	EPA 8082A	9-8-21	9-8-21	
Surrogate:	*Percent Recovery*	*Control Limits*				
DCB	*97*	*54-135*				
Client ID:	**S-37**					
Laboratory ID:	08-312-15					
Aroclor 1016	**ND**	0.052	EPA 8082A	9-8-21	9-8-21	
Aroclor 1221	**ND**	0.052	EPA 8082A	9-8-21	9-8-21	
Aroclor 1232	**ND**	0.052	EPA 8082A	9-8-21	9-8-21	
Aroclor 1242	**ND**	0.052	EPA 8082A	9-8-21	9-8-21	
Aroclor 1248	**ND**	0.052	EPA 8082A	9-8-21	9-8-21	
Aroclor 1254	**ND**	0.052	EPA 8082A	9-8-21	9-8-21	
Aroclor 1260	**ND**	0.052	EPA 8082A	9-8-21	9-8-21	
Surrogate:	*Percent Recovery*	*Control Limits*				
DCB	*92*	*54-135*				

This report pertains to the samples analyzed in accordance with the chain of custody,
and is intended only for the use of the individual or company to whom it is addressed.

Date of Report: September 10, 2021
Samples Submitted: August 31, 2021
Laboratory Reference: 2108-312
Project: 094-21021

PCBs EPA 8082A

Matrix: Soil
Units: mg/Kg (ppm)

Analyte	Result	PQL	Method	Date Prepared	Date Analyzed	Flags
Client ID:	**S-38**					
Laboratory ID:	08-312-16					
Aroclor 1016	**ND**	0.053	EPA 8082A	9-8-21	9-8-21	
Aroclor 1221	**ND**	0.053	EPA 8082A	9-8-21	9-8-21	
Aroclor 1232	**ND**	0.053	EPA 8082A	9-8-21	9-8-21	
Aroclor 1242	**ND**	0.053	EPA 8082A	9-8-21	9-8-21	
Aroclor 1248	**ND**	0.053	EPA 8082A	9-8-21	9-8-21	
Aroclor 1254	**ND**	0.053	EPA 8082A	9-8-21	9-8-21	
Aroclor 1260	**ND**	0.053	EPA 8082A	9-8-21	9-8-21	
Surrogate:	*Percent Recovery*	*Control Limits*				
DCB	*87*	*54-135*				
Client ID:	**S-39**					
Laboratory ID:	08-312-17					
Aroclor 1016	**ND**	0.051	EPA 8082A	9-8-21	9-8-21	
Aroclor 1221	**ND**	0.051	EPA 8082A	9-8-21	9-8-21	
Aroclor 1232	**ND**	0.051	EPA 8082A	9-8-21	9-8-21	
Aroclor 1242	**ND**	0.051	EPA 8082A	9-8-21	9-8-21	
Aroclor 1248	**ND**	0.051	EPA 8082A	9-8-21	9-8-21	
Aroclor 1254	**ND**	0.051	EPA 8082A	9-8-21	9-8-21	
Aroclor 1260	**ND**	0.051	EPA 8082A	9-8-21	9-8-21	
Surrogate:	*Percent Recovery*	*Control Limits*				
DCB	*88*	*54-135*				
Client ID:	**S-40**					
Laboratory ID:	08-312-18					
Aroclor 1016	**ND**	0.052	EPA 8082A	9-8-21	9-8-21	
Aroclor 1221	**ND**	0.052	EPA 8082A	9-8-21	9-8-21	
Aroclor 1232	**ND**	0.052	EPA 8082A	9-8-21	9-8-21	
Aroclor 1242	**ND**	0.052	EPA 8082A	9-8-21	9-8-21	
Aroclor 1248	**ND**	0.052	EPA 8082A	9-8-21	9-8-21	
Aroclor 1254	**ND**	0.052	EPA 8082A	9-8-21	9-8-21	
Aroclor 1260	**ND**	0.052	EPA 8082A	9-8-21	9-8-21	
Surrogate:	*Percent Recovery*	*Control Limits*				
DCB	*89*	*54-135*				

This report pertains to the samples analyzed in accordance with the chain of custody, and is intended only for the use of the individual or company to whom it is addressed.

Date of Report: September 10, 2021
Samples Submitted: August 31, 2021
Laboratory Reference: 2108-312
Project: 094-21021

PCBs EPA 8082A

Matrix: Soil
Units: mg/Kg (ppm)

Analyte	Result	PQL	Method	Date Prepared	Date Analyzed	Flags
Client ID:	**S-41**					
Laboratory ID:	08-312-19					
Aroclor 1016	**ND**	0.051	EPA 8082A	9-8-21	9-8-21	
Aroclor 1221	**ND**	0.051	EPA 8082A	9-8-21	9-8-21	
Aroclor 1232	**ND**	0.051	EPA 8082A	9-8-21	9-8-21	
Aroclor 1242	**ND**	0.051	EPA 8082A	9-8-21	9-8-21	
Aroclor 1248	**ND**	0.051	EPA 8082A	9-8-21	9-8-21	
Aroclor 1254	**ND**	0.051	EPA 8082A	9-8-21	9-8-21	
Aroclor 1260	**ND**	0.051	EPA 8082A	9-8-21	9-8-21	
Surrogate:	*Percent Recovery*	*Control Limits*				
DCB	*87*	*54-135*				
Client ID:	**S-42**					
Laboratory ID:	08-312-20					
Aroclor 1016	**ND**	0.051	EPA 8082A	9-8-21	9-8-21	
Aroclor 1221	**ND**	0.051	EPA 8082A	9-8-21	9-8-21	
Aroclor 1232	**ND**	0.051	EPA 8082A	9-8-21	9-8-21	
Aroclor 1242	**ND**	0.051	EPA 8082A	9-8-21	9-8-21	
Aroclor 1248	**ND**	0.051	EPA 8082A	9-8-21	9-8-21	
Aroclor 1254	**ND**	0.051	EPA 8082A	9-8-21	9-8-21	
Aroclor 1260	**ND**	0.051	EPA 8082A	9-8-21	9-8-21	
Surrogate:	*Percent Recovery*	*Control Limits*				
DCB	*86*	*54-135*				
Client ID:	**S-43**					
Laboratory ID:	08-312-21					
Aroclor 1016	**ND**	0.051	EPA 8082A	9-7-21	9-7-21	
Aroclor 1221	**ND**	0.051	EPA 8082A	9-7-21	9-7-21	
Aroclor 1232	**ND**	0.051	EPA 8082A	9-7-21	9-7-21	
Aroclor 1242	**ND**	0.051	EPA 8082A	9-7-21	9-7-21	
Aroclor 1248	**ND**	0.051	EPA 8082A	9-7-21	9-7-21	
Aroclor 1254	**ND**	0.051	EPA 8082A	9-7-21	9-7-21	
Aroclor 1260	**ND**	0.051	EPA 8082A	9-7-21	9-7-21	
Surrogate:	*Percent Recovery*	*Control Limits*				
DCB	*94*	*54-135*				

This report pertains to the samples analyzed in accordance with the chain of custody,
and is intended only for the use of the individual or company to whom it is addressed.

Date of Report: September 10, 2021
Samples Submitted: August 31, 2021
Laboratory Reference: 2108-312
Project: 094-21021

PCBs EPA 8082A

Matrix: Soil
Units: mg/Kg (ppm)

Analyte	Result	PQL	Method	Date Prepared	Date Analyzed	Flags
Client ID:	**S-44**					
Laboratory ID:	08-312-22					
Aroclor 1016	**ND**	0.051	EPA 8082A	9-7-21	9-7-21	
Aroclor 1221	**ND**	0.051	EPA 8082A	9-7-21	9-7-21	
Aroclor 1232	**ND**	0.051	EPA 8082A	9-7-21	9-7-21	
Aroclor 1242	**ND**	0.051	EPA 8082A	9-7-21	9-7-21	
Aroclor 1248	**ND**	0.051	EPA 8082A	9-7-21	9-7-21	
Aroclor 1254	**ND**	0.051	EPA 8082A	9-7-21	9-7-21	
Aroclor 1260	**ND**	0.051	EPA 8082A	9-7-21	9-7-21	
Surrogate:	*Percent Recovery*	*Control Limits*				
DCB	*86*	*54-135*				
Client ID:	**S-45**					
Laboratory ID:	08-312-23					
Aroclor 1016	**ND**	0.051	EPA 8082A	9-7-21	9-7-21	
Aroclor 1221	**ND**	0.051	EPA 8082A	9-7-21	9-7-21	
Aroclor 1232	**ND**	0.051	EPA 8082A	9-7-21	9-7-21	
Aroclor 1242	**ND**	0.051	EPA 8082A	9-7-21	9-7-21	
Aroclor 1248	**ND**	0.051	EPA 8082A	9-7-21	9-7-21	
Aroclor 1254	**ND**	0.051	EPA 8082A	9-7-21	9-7-21	
Aroclor 1260	**ND**	0.051	EPA 8082A	9-7-21	9-7-21	
Surrogate:	*Percent Recovery*	*Control Limits*				
DCB	*87*	*54-135*				
Client ID:	**S-46**					
Laboratory ID:	08-312-24					
Aroclor 1016	**ND**	0.052	EPA 8082A	9-7-21	9-7-21	
Aroclor 1221	**ND**	0.052	EPA 8082A	9-7-21	9-7-21	
Aroclor 1232	**ND**	0.052	EPA 8082A	9-7-21	9-7-21	
Aroclor 1242	**ND**	0.052	EPA 8082A	9-7-21	9-7-21	
Aroclor 1248	**ND**	0.052	EPA 8082A	9-7-21	9-7-21	
Aroclor 1254	**ND**	0.052	EPA 8082A	9-7-21	9-7-21	
Aroclor 1260	**ND**	0.052	EPA 8082A	9-7-21	9-7-21	
Surrogate:	*Percent Recovery*	*Control Limits*				
DCB	*94*	*54-135*				

This report pertains to the samples analyzed in accordance with the chain of custody,
and is intended only for the use of the individual or company to whom it is addressed.

Date of Report: September 10, 2021
Samples Submitted: August 31, 2021
Laboratory Reference: 2108-312
Project: 094-21021

PCBs EPA 8082A

Matrix: Soil
Units: mg/Kg (ppm)

Analyte	Result	PQL	Method	Date Prepared	Date Analyzed	Flags
Client ID:	**S-47**					
Laboratory ID:	08-312-25					
Aroclor 1016	**ND**	0.051	EPA 8082A	9-7-21	9-7-21	
Aroclor 1221	**ND**	0.051	EPA 8082A	9-7-21	9-7-21	
Aroclor 1232	**ND**	0.051	EPA 8082A	9-7-21	9-7-21	
Aroclor 1242	**ND**	0.051	EPA 8082A	9-7-21	9-7-21	
Aroclor 1248	**ND**	0.051	EPA 8082A	9-7-21	9-7-21	
Aroclor 1254	**ND**	0.051	EPA 8082A	9-7-21	9-7-21	
Aroclor 1260	**ND**	0.051	EPA 8082A	9-7-21	9-7-21	
Surrogate:	*Percent Recovery*	*Control Limits*				
DCB	*86*	*54-135*				

This report pertains to the samples analyzed in accordance with the chain of custody,
and is intended only for the use of the individual or company to whom it is addressed.

Date of Report: September 10, 2021
Samples Submitted: August 31, 2021
Laboratory Reference: 2108-312
Project: 094-21021

PCBs EPA 8082A
QUALITY CONTROL

Matrix: Soil
Units: mg/Kg (ppm)

Analyte	Result	PQL	Method	Date Prepared	Date Analyzed	Flags
METHOD BLANK						
Laboratory ID:	MB0907S1					
Aroclor 1016	**ND**	0.050	EPA 8082A	9-7-21	9-7-21	
Aroclor 1221	**ND**	0.050	EPA 8082A	9-7-21	9-7-21	
Aroclor 1232	**ND**	0.050	EPA 8082A	9-7-21	9-7-21	
Aroclor 1242	**ND**	0.050	EPA 8082A	9-7-21	9-7-21	
Aroclor 1248	**ND**	0.050	EPA 8082A	9-7-21	9-7-21	
Aroclor 1254	**ND**	0.050	EPA 8082A	9-7-21	9-7-21	
Aroclor 1260	**ND**	0.050	EPA 8082A	9-7-21	9-7-21	
Surrogate:	*Percent Recovery*	*Control Limits*				
DCB	*91*	*54-135*				
Laboratory ID:	MB0908S3					
Aroclor 1016	**ND**	0.050	EPA 8082A	9-8-21	9-8-21	
Aroclor 1221	**ND**	0.050	EPA 8082A	9-8-21	9-8-21	
Aroclor 1232	**ND**	0.050	EPA 8082A	9-8-21	9-8-21	
Aroclor 1242	**ND**	0.050	EPA 8082A	9-8-21	9-8-21	
Aroclor 1248	**ND**	0.050	EPA 8082A	9-8-21	9-8-21	
Aroclor 1254	**ND**	0.050	EPA 8082A	9-8-21	9-8-21	
Aroclor 1260	**ND**	0.050	EPA 8082A	9-8-21	9-8-21	
Surrogate:	*Percent Recovery*	*Control Limits*				
DCB	*92*	*54-135*				

Analyte	Result		Spike Level		Source Result	Percent Recovery		Recovery Limits	RPD	RPD Limit	Flags
MATRIX SPIKES											
Laboratory ID:	09-046-01										
	MS	MSD	MS	MSD		MS	MSD				
Aroclor 1260	**3.90**	**3.83**	4.97	4.97	ND	**78**	**77**	63-126	2	15	
Surrogate:											
DCB						*75*	*77*	*66-130*			
Laboratory ID:	08-312-03										
	MS	MSD	MS	MSD		MS	MSD				
Aroclor 1260	**0.488**	**0.516**	0.500	0.500	ND	**98**	**103**	62-129	6	15	
Surrogate:											
DCB						*89*	*93*	*54-135*			

This report pertains to the samples analyzed in accordance with the chain of custody, and is intended only for the use of the individual or company to whom it is addressed.

Date of Report: September 10, 2021
Samples Submitted: August 31, 2021
Laboratory Reference: 2108-312
Project: 094-21021

TOTAL METALS
EPA 6010D/7471B

Matrix: Soil
Units: mg/Kg (ppm)

Analyte	Result	PQL	Method	Date Prepared	Date Analyzed	Flags
Client ID:	**S-23**					
Laboratory ID:	08-312-01					
Arsenic	**ND**	10	EPA 6010D	9-1-21	9-1-21	
Copper	**30**	1.0	EPA 6010D	9-1-21	9-1-21	
Lead	**ND**	5.1	EPA 6010D	9-1-21	9-1-21	
Mercury	**ND**	0.26	EPA 7471B	9-2-21	9-2-21	
Nickel	**53**	26	EPA 6010D	9-1-21	9-1-21	
Zinc	**49**	26	EPA 6010D	9-1-21	9-1-21	
Client ID:	**S-24**					
Laboratory ID:	08-312-02					
Arsenic	**ND**	10	EPA 6010D	9-1-21	9-1-21	
Copper	**22**	1.0	EPA 6010D	9-1-21	9-1-21	
Lead	**ND**	5.1	EPA 6010D	9-1-21	9-1-21	
Mercury	**ND**	0.26	EPA 7471B	9-2-21	9-2-21	
Nickel	**27**	13	EPA 6010D	9-1-21	9-1-21	
Zinc	**45**	13	EPA 6010D	9-1-21	9-1-21	
Client ID:	**S-25**					
Laboratory ID:	08-312-03					
Arsenic	**ND**	10	EPA 6010D	9-1-21	9-1-21	
Copper	**24**	1.0	EPA 6010D	9-1-21	9-1-21	
Lead	**ND**	5.1	EPA 6010D	9-1-21	9-1-21	
Mercury	**ND**	0.26	EPA 7471B	9-2-21	9-2-21	
Nickel	**43**	13	EPA 6010D	9-1-21	9-2-21	
Zinc	**40**	13	EPA 6010D	9-1-21	9-2-21	
Client ID:	**S-26**					
Laboratory ID:	08-312-04					
Arsenic	**ND**	10	EPA 6010D	9-1-21	9-1-21	
Copper	**25**	1.0	EPA 6010D	9-1-21	9-1-21	
Lead	**ND**	5.2	EPA 6010D	9-1-21	9-1-21	
Mercury	**ND**	0.26	EPA 7471B	9-2-21	9-2-21	
Nickel	**21**	13	EPA 6010D	9-1-21	9-2-21	
Zinc	**34**	13	EPA 6010D	9-1-21	9-2-21	

This report pertains to the samples analyzed in accordance with the chain of custody, and is intended only for the use of the individual or company to whom it is addressed.

Date of Report: September 10, 2021
Samples Submitted: August 31, 2021
Laboratory Reference: 2108-312
Project: 094-21021

TOTAL METALS
EPA 6010D/7471B

Matrix: Soil
Units: mg/Kg (ppm)

Analyte	Result	PQL	Method	Date Prepared	Date Analyzed	Flags
Client ID:	**S-27**					
Laboratory ID:	08-312-05					
Arsenic	**ND**	10	EPA 6010D	9-1-21	9-1-21	
Copper	**27**	1.0	EPA 6010D	9-1-21	9-1-21	
Lead	**ND**	5.1	EPA 6010D	9-1-21	9-1-21	
Mercury	**ND**	0.25	EPA 7471B	9-2-21	9-2-21	
Nickel	**13**	2.5	EPA 6010D	9-1-21	9-1-21	
Zinc	**34**	2.5	EPA 6010D	9-1-21	9-1-21	
Client ID:	**S-28**					
Laboratory ID:	08-312-06					
Arsenic	**ND**	10	EPA 6010D	9-1-21	9-1-21	
Copper	**21**	1.0	EPA 6010D	9-1-21	9-1-21	
Lead	**ND**	5.2	EPA 6010D	9-1-21	9-1-21	
Mercury	**ND**	0.26	EPA 7471B	9-7-21	9-7-21	
Nickel	**16**	13	EPA 6010D	9-1-21	9-2-21	
Zinc	**36**	13	EPA 6010D	9-1-21	9-2-21	
Client ID:	**S-29**					
Laboratory ID:	08-312-07					
Arsenic	**ND**	10	EPA 6010D	9-1-21	9-1-21	
Copper	**27**	1.0	EPA 6010D	9-1-21	9-1-21	
Lead	**ND**	5.1	EPA 6010D	9-1-21	9-1-21	
Mercury	**ND**	0.26	EPA 7471B	9-7-21	9-7-21	
Nickel	**24**	2.6	EPA 6010D	9-1-21	9-1-21	
Zinc	**43**	2.6	EPA 6010D	9-1-21	9-1-21	
Client ID:	**S-30**					
Laboratory ID:	08-312-08					
Arsenic	**ND**	10	EPA 6010D	9-1-21	9-1-21	
Copper	**22**	1.0	EPA 6010D	9-1-21	9-1-21	
Lead	**ND**	5.2	EPA 6010D	9-1-21	9-1-21	
Mercury	**ND**	0.26	EPA 7471B	9-7-21	9-7-21	
Nickel	**17**	13	EPA 6010D	9-1-21	9-2-21	
Zinc	**35**	13	EPA 6010D	9-1-21	9-2-21	

This report pertains to the samples analyzed in accordance with the chain of custody, and is intended only for the use of the individual or company to whom it is addressed.

Date of Report: September 10, 2021
Samples Submitted: August 31, 2021
Laboratory Reference: 2108-312
Project: 094-21021

TOTAL METALS
EPA 6010D/7471B

Matrix: Soil
Units: mg/Kg (ppm)

Analyte	Result	PQL	Method	Date Prepared	Date Analyzed	Flags
Client ID:	**S-31**					
Laboratory ID:	08-312-09					
Arsenic	**ND**	10	EPA 6010D	9-1-21	9-1-21	
Copper	**23**	1.0	EPA 6010D	9-1-21	9-1-21	
Lead	**ND**	5.2	EPA 6010D	9-1-21	9-1-21	
Mercury	**ND**	0.26	EPA 7471B	9-7-21	9-7-21	
Nickel	**18**	13	EPA 6010D	9-1-21	9-9-21	
Zinc	**38**	13	EPA 6010D	9-1-21	9-9-21	
Client ID:	**S-32**					
Laboratory ID:	08-312-10					
Arsenic	**ND**	10	EPA 6010D	9-1-21	9-1-21	
Copper	**25**	1.0	EPA 6010D	9-1-21	9-1-21	
Lead	**ND**	5.1	EPA 6010D	9-1-21	9-1-21	
Mercury	**ND**	0.25	EPA 7471B	9-7-21	9-7-21	
Nickel	**20**	13	EPA 6010D	9-1-21	9-9-21	
Zinc	**46**	13	EPA 6010D	9-1-21	9-9-21	
Client ID:	**S-33**					
Laboratory ID:	08-312-11					
Arsenic	**ND**	10	EPA 6010D	9-1-21	9-1-21	
Copper	**27**	1.0	EPA 6010D	9-1-21	9-1-21	
Lead	**ND**	5.1	EPA 6010D	9-1-21	9-1-21	
Mercury	**ND**	0.25	EPA 7471B	9-7-21	9-7-21	
Nickel	**21**	13	EPA 6010D	9-1-21	9-9-21	
Zinc	**33**	13	EPA 6010D	9-1-21	9-9-21	
Client ID:	**S-34**					
Laboratory ID:	08-312-12					
Arsenic	**ND**	10	EPA 6010D	9-1-21	9-1-21	
Copper	**20**	1.0	EPA 6010D	9-1-21	9-1-21	
Lead	**ND**	5.1	EPA 6010D	9-1-21	9-1-21	
Mercury	**ND**	0.25	EPA 7471B	9-7-21	9-7-21	
Nickel	**18**	13	EPA 6010D	9-1-21	9-9-21	
Zinc	**50**	13	EPA 6010D	9-1-21	9-9-21	

This report pertains to the samples analyzed in accordance with the chain of custody, and is intended only for the use of the individual or company to whom it is addressed.

Date of Report: September 10, 2021
Samples Submitted: August 31, 2021
Laboratory Reference: 2108-312
Project: 094-21021

TOTAL METALS
EPA 6010D/7471B

Matrix: Soil
Units: mg/Kg (ppm)

Analyte	Result	PQL	Method	Date Prepared	Date Analyzed	Flags
Client ID:	**S-35**					
Laboratory ID:	08-312-13					
Arsenic	**ND**	10	EPA 6010D	9-1-21	9-1-21	
Copper	**29**	1.0	EPA 6010D	9-1-21	9-1-21	
Lead	**ND**	5.1	EPA 6010D	9-1-21	9-1-21	
Mercury	**ND**	0.26	EPA 7471B	9-7-21	9-7-21	
Nickel	**36**	13	EPA 6010D	9-1-21	9-2-21	
Zinc	**43**	13	EPA 6010D	9-1-21	9-2-21	
Client ID:	**S-36**					
Laboratory ID:	08-312-14					
Arsenic	**ND**	10	EPA 6010D	9-1-21	9-1-21	
Copper	**24**	1.0	EPA 6010D	9-1-21	9-1-21	
Lead	**ND**	5.1	EPA 6010D	9-1-21	9-1-21	
Mercury	**ND**	0.26	EPA 7471B	9-7-21	9-7-21	
Nickel	**27**	2.6	EPA 6010D	9-1-21	9-1-21	
Zinc	**55**	2.6	EPA 6010D	9-1-21	9-1-21	
Client ID:	**S-37**					
Laboratory ID:	08-312-15					
Arsenic	**ND**	10	EPA 6010D	9-1-21	9-1-21	
Copper	**24**	1.0	EPA 6010D	9-1-21	9-1-21	
Lead	**ND**	5.2	EPA 6010D	9-1-21	9-1-21	
Mercury	**ND**	0.26	EPA 7471B	9-7-21	9-7-21	
Nickel	**27**	13	EPA 6010D	9-1-21	9-2-21	
Zinc	**44**	13	EPA 6010D	9-1-21	9-2-21	
Client ID:	**S-38**					
Laboratory ID:	08-312-16					
Arsenic	**ND**	11	EPA 6010D	9-1-21	9-1-21	
Copper	**23**	1.1	EPA 6010D	9-1-21	9-1-21	
Lead	**ND**	5.3	EPA 6010D	9-1-21	9-1-21	
Mercury	**ND**	0.27	EPA 7471B	9-7-21	9-7-21	
Nickel	**21**	2.7	EPA 6010D	9-1-21	9-1-21	
Zinc	**44**	2.7	EPA 6010D	9-1-21	9-1-21	

This report pertains to the samples analyzed in accordance with the chain of custody, and is intended only for the use of the individual or company to whom it is addressed.

Date of Report: September 10, 2021
Samples Submitted: August 31, 2021
Laboratory Reference: 2108-312
Project: 094-21021

TOTAL METALS
EPA 6010D/7471B

Matrix: Soil
Units: mg/Kg (ppm)

Analyte	Result	PQL	Method	Date Prepared	Date Analyzed	Flags
Client ID:	**S-39**					
Laboratory ID:	08-312-17					
Arsenic	**ND**	10	EPA 6010D	9-1-21	9-1-21	
Copper	**22**	1.0	EPA 6010D	9-1-21	9-1-21	
Lead	**ND**	5.1	EPA 6010D	9-1-21	9-1-21	
Mercury	**ND**	0.26	EPA 7471B	9-7-21	9-7-21	
Nickel	**15**	2.6	EPA 6010D	9-1-21	9-1-21	
Zinc	**39**	2.6	EPA 6010D	9-1-21	9-1-21	
Client ID:	**S-40**					
Laboratory ID:	08-312-18					
Arsenic	**ND**	10	EPA 6010D	9-1-21	9-1-21	
Copper	**23**	1.0	EPA 6010D	9-1-21	9-1-21	
Lead	**ND**	5.2	EPA 6010D	9-1-21	9-1-21	
Mercury	**ND**	0.26	EPA 7471B	9-7-21	9-7-21	
Nickel	**15**	2.6	EPA 6010D	9-1-21	9-1-21	
Zinc	**40**	2.6	EPA 6010D	9-1-21	9-1-21	
Client ID:	**S-41**					
Laboratory ID:	08-312-19					
Arsenic	**ND**	10	EPA 6010D	9-1-21	9-1-21	
Copper	**19**	1.0	EPA 6010D	9-1-21	9-1-21	
Lead	**5.4**	5.1	EPA 6010D	9-1-21	9-1-21	
Mercury	**ND**	0.26	EPA 7471B	9-7-21	9-7-21	
Nickel	**11**	2.6	EPA 6010D	9-1-21	9-1-21	
Zinc	**73**	2.6	EPA 6010D	9-1-21	9-1-21	
Client ID:	**S-42**					
Laboratory ID:	08-312-20					
Arsenic	**ND**	10	EPA 6010D	9-1-21	9-1-21	
Copper	**24**	1.0	EPA 6010D	9-1-21	9-1-21	
Lead	**ND**	5.1	EPA 6010D	9-1-21	9-1-21	
Mercury	**ND**	0.26	EPA 7471B	9-7-21	9-7-21	
Nickel	**20**	13	EPA 6010D	9-1-21	9-2-21	
Zinc	**45**	13	EPA 6010D	9-1-21	9-2-21	

This report pertains to the samples analyzed in accordance with the chain of custody, and is intended only for the use of the individual or company to whom it is addressed.

Date of Report: September 10, 2021
Samples Submitted: August 31, 2021
Laboratory Reference: 2108-312
Project: 094-21021

TOTAL METALS
EPA 6010D/7471B

Matrix: Soil
Units: mg/Kg (ppm)

Analyte	Result	PQL	Method	Date Prepared	Date Analyzed	Flags
Client ID:	**S-43**					
Laboratory ID:	08-312-21					
Arsenic	**ND**	10	EPA 6010D	9-1-21	9-1-21	
Copper	**23**	1.0	EPA 6010D	9-1-21	9-1-21	
Lead	**ND**	5.1	EPA 6010D	9-1-21	9-1-21	
Mercury	**ND**	0.25	EPA 7471B	9-7-21	9-7-21	
Nickel	**22**	13	EPA 6010D	9-1-21	9-2-21	
Zinc	**34**	13	EPA 6010D	9-1-21	9-2-21	
Client ID:	**S-44**					
Laboratory ID:	08-312-22					
Arsenic	**ND**	10	EPA 6010D	9-1-21	9-1-21	
Copper	**22**	1.0	EPA 6010D	9-1-21	9-1-21	
Lead	**ND**	5.1	EPA 6010D	9-1-21	9-1-21	
Mercury	**ND**	0.25	EPA 7471B	9-7-21	9-7-21	
Nickel	**22**	13	EPA 6010D	9-1-21	9-2-21	
Zinc	**39**	13	EPA 6010D	9-1-21	9-2-21	
Client ID:	**S-45**					
Laboratory ID:	08-312-23					
Arsenic	**ND**	10	EPA 6010D	9-1-21	9-1-21	
Copper	**25**	1.0	EPA 6010D	9-1-21	9-1-21	
Lead	**ND**	5.1	EPA 6010D	9-1-21	9-1-21	
Mercury	**ND**	0.26	EPA 7471B	9-7-21	9-7-21	
Nickel	**23**	13	EPA 6010D	9-1-21	9-2-21	
Zinc	**40**	13	EPA 6010D	9-1-21	9-2-21	
Client ID:	**S-46**					
Laboratory ID:	08-312-24					
Arsenic	**ND**	10	EPA 6010D	9-1-21	9-1-21	
Copper	**30**	1.0	EPA 6010D	9-1-21	9-1-21	
Lead	**ND**	5.2	EPA 6010D	9-1-21	9-1-21	
Mercury	**ND**	0.26	EPA 7471B	9-7-21	9-7-21	
Nickel	**33**	13	EPA 6010D	9-1-21	9-2-21	
Zinc	**43**	13	EPA 6010D	9-1-21	9-2-21	

This report pertains to the samples analyzed in accordance with the chain of custody, and is intended only for the use of the individual or company to whom it is addressed.

Date of Report: September 10, 2021
Samples Submitted: August 31, 2021
Laboratory Reference: 2108-312
Project: 094-21021

TOTAL METALS
EPA 6010D/7471B

Matrix: Soil
Units: mg/Kg (ppm)

Analyte	Result	PQL	Method	Date Prepared	Date Analyzed	Flags
Client ID:	**S-47**					
Laboratory ID:	08-312-25					
Arsenic	**ND**	10	EPA 6010D	9-1-21	9-1-21	
Copper	**29**	1.0	EPA 6010D	9-1-21	9-1-21	
Lead	**ND**	5.1	EPA 6010D	9-1-21	9-1-21	
Mercury	**ND**	0.26	EPA 7471B	9-7-21	9-7-21	
Nickel	**48**	13	EPA 6010D	9-1-21	9-2-21	
Zinc	**48**	13	EPA 6010D	9-1-21	9-2-21	

This report pertains to the samples analyzed in accordance with the chain of custody,
and is intended only for the use of the individual or company to whom it is addressed.

Date of Report: September 10, 2021
Samples Submitted: August 31, 2021
Laboratory Reference: 2108-312
Project: 094-21021

TOTAL METALS
EPA 6010D/7471B
QUALITY CONTROL

Matrix: Soil
Units: mg/Kg (ppm)

Analyte	Result	PQL	Method	Date Prepared	Date Analyzed	Flags
METHOD BLANK						
Laboratory ID:	MB0901SM1					
Arsenic	**ND**	10	EPA 6010D	9-1-21	9-1-21	
Copper	**ND**	1.0	EPA 6010D	9-1-21	9-1-21	
Lead	**ND**	5.0	EPA 6010D	9-1-21	9-1-21	
Nickel	**ND**	2.5	EPA 6010D	9-1-21	9-1-21	
Zinc	**ND**	2.5	EPA 6010D	9-1-21	9-1-21	
Laboratory ID:	MB0902S2					
Mercury	**ND**	0.25	EPA 7471B	9-2-21	9-2-21	
Laboratory ID:	MB0901SM2					
Arsenic	**ND**	10	EPA 6010D	9-1-21	9-1-21	
Copper	**ND**	1.0	EPA 6010D	9-1-21	9-1-21	
Lead	**ND**	5.0	EPA 6010D	9-1-21	9-1-21	
Nickel	**ND**	2.5	EPA 6010D	9-1-21	9-1-21	
Zinc	**ND**	2.5	EPA 6010D	9-1-21	9-1-21	
Laboratory ID:	MB0907S2					
Mercury	**ND**	0.25	EPA 7471B	9-7-21	9-7-21	

This report pertains to the samples analyzed in accordance with the chain of custody, and is intended only for the use of the individual or company to whom it is addressed.

Date of Report: September 10, 2021
Samples Submitted: August 31, 2021
Laboratory Reference: 2108-312
Project: 094-21021

TOTAL METALS
EPA 6010D/7471B
QUALITY CONTROL

Matrix: Soil
Units: mg/Kg (ppm)

Analyte	Result		Spike Level	Source Result	Percent Recovery	Recovery Limits	RPD	RPD Limit	Flags
DUPLICATE									
Laboratory ID:	08-313-05								
	ORIG	DUP							
Arsenic	**ND**	**ND**	NA	NA	NA	NA	NA	20	
Copper	**15.0**	**15.2**	NA	NA	NA	NA	1	20	
Lead	**9.80**	**10.1**	NA	NA	NA	NA	3	20	
Nickel	**32.6**	**31.4**	NA	NA	NA	NA	4	20	
Zinc	**31.1**	**30.4**	NA	NA	NA	NA	2	20	
Laboratory ID:	08-313-10								
Mercury	**ND**	**ND**	NA	NA	NA	NA	NA	20	
Laboratory ID:	08-312-01								
	ORIG	DUP							
Arsenic	**ND**	**ND**	NA	NA	NA	NA	NA	20	
Copper	**28.9**	**26.1**	NA	NA	NA	NA	10	20	
Lead	**ND**	**ND**	NA	NA	NA	NA	NA	20	
Nickel	**51.5**	**46.1**	NA	NA	NA	NA	11	20	
Zinc	**47.6**	**45.2**	NA	NA	NA	NA	5	20	
Laboratory ID:	09-017-02								
Mercury	**ND**	**ND**	NA	NA	NA	NA	NA	20	

This report pertains to the samples analyzed in accordance with the chain of custody,
and is intended only for the use of the individual or company to whom it is addressed.

Date of Report: September 10, 2021
Samples Submitted: August 31, 2021
Laboratory Reference: 2108-312
Project: 094-21021

TOTAL METALS
EPA 6010D/7471B
QUALITY CONTROL

Matrix: Soil
Units: mg/Kg (ppm)

Analyte	Result		Spike Level		Source Result	Percent Recovery		Recovery Limits	RPD	RPD Limit	Flags
MATRIX SPIKES											
Laboratory ID:	08-313-05										
	MS	MSD	MS	MSD		MS	MSD				
Arsenic	**96.1**	**93.5**	100	100	ND	**96**	**94**	75-125	3	20	
Copper	**64.5**	**63.9**	50.0	50.0	15.0	**99**	**98**	75-125	1	20	
Lead	**259**	**259**	250	250	9.80	**100**	**100**	75-125	0	20	
Nickel	**129**	**128**	100	100	32.6	**97**	**96**	75-125	0	20	
Zinc	**130**	**132**	100	100	31.1	**99**	**101**	75-125	2	20	
Laboratory ID:	08-313-10										
Mercury	**0.581**	**0.619**	0.500	0.500	0.0650	**103**	**111**	80-120	6	20	
Laboratory ID:	08-312-01										
	MS	MSD	MS	MSD		MS	MSD				
Arsenic	**94.3**	**94.4**	100	100	ND	**94**	**94**	75-125	0	20	
Copper	**80.4**	**75.8**	50.0	50.0	28.9	**103**	**94**	75-125	6	20	
Lead	**228**	**228**	250	250	ND	**91**	**91**	75-125	0	20	
Nickel	**149**	**135**	100	100	51.5	**97**	**84**	75-125	10	20	
Zinc	**158**	**152**	100	100	47.6	**110**	**104**	75-125	4	20	
Laboratory ID:	09-017-02										
Mercury	**0.638**	**0.605**	0.500	0.500	0.118	**104**	**97**	80-120	5	20	

This report pertains to the samples analyzed in accordance with the chain of custody,
and is intended only for the use of the individual or company to whom it is addressed.

Date of Report: September 10, 2021
Samples Submitted: August 31, 2021
Laboratory Reference: 2108-312
Project: 094-21021

% MOISTURE

Client ID	Lab ID	% Moisture	Date Analyzed
S-23	08-312-01	**3**	9-1-21
S-24	08-312-02	**3**	9-1-21
S-25	08-312-03	**2**	9-1-21
S-26	08-312-04	**3**	9-1-21
S-27	08-312-05	**2**	9-1-21
S-28	08-312-06	**3**	9-1-21
S-29	08-312-07	**2**	9-1-21
S-30	08-312-08	**3**	9-1-21
S-31	08-312-09	**3**	9-1-21
S-32	08-312-10	**2**	9-1-21
S-33	08-312-11	**2**	9-1-21
S-34	08-312-12	**2**	9-1-21
S-35	08-312-13	**2**	9-1-21
S-36	08-312-14	**3**	9-1-21
S-37	08-312-15	**3**	9-1-21
S-38	08-312-16	**6**	9-1-21
S-39	08-312-17	**2**	9-1-21
S-40	08-312-18	**4**	9-1-21
S-41	08-312-19	**2**	9-1-21
S-42	08-312-20	**2**	9-1-21
S-43	08-312-21	**2**	9-1-21
S-44	08-312-22	**2**	9-1-21
S-45	08-312-23	**3**	9-1-21
S-46	08-312-24	**3**	9-1-21
S-47	08-312-25	**2**	9-1-21

This report pertains to the samples analyzed in accordance with the chain of custody,
and is intended only for the use of the individual or company to whom it is addressed.

OnSite Environmental Inc.

Data Qualifiers and Abbreviations

A - Due to a high sample concentration, the amount spiked is insufficient for meaningful MS/MSD recovery data.

B - The analyte indicated was also found in the blank sample.

C - The duplicate RPD is outside control limits due to high result variability when analyte concentrations are within five times the quantitation limit.

E - The value reported exceeds the quantitation range and is an estimate.

F - Surrogate recovery data is not available due to the high concentration of coeluting target compounds.

H - The analyte indicated is a common laboratory solvent and may have been introduced during sample preparation, and be impacting the sample result.

I - Compound recovery is outside of the control limits.

J - The value reported was below the practical quantitation limit. The value is an estimate.

K - Sample duplicate RPD is outside control limits due to sample inhomogeneity. The sample was re-extracted and re-analyzed with similar results.

L - The RPD is outside of the control limits.

M - Hydrocarbons in the gasoline range are impacting the diesel range result.

M1 - Hydrocarbons in the gasoline range (toluene-naphthalene) are present in the sample.

N - Hydrocarbons in the lube oil range are impacting the diesel range result.

N1 - Hydrocarbons in diesel range are impacting lube oil range results.

O - Hydrocarbons indicative of heavier fuels are present in the sample and are impacting the gasoline result.

P - The RPD of the detected concentrations between the two columns is greater than 40.

Q - Surrogate recovery is outside of the control limits.

S - Surrogate recovery data is not available due to the necessary dilution of the sample.

T - The sample chromatogram is not similar to a typical _____.

U - The analyte was analyzed for, but was not detected above the reported sample quantitation limit.

U1 - The practical quantitation limit is elevated due to interferences present in the sample.

V - Matrix Spike/Matrix Spike Duplicate recoveries are outside control limits due to matrix effects.

W - Matrix Spike/Matrix Spike Duplicate RPD are outside control limits due to matrix effects.

X - Sample extract treated with a mercury cleanup procedure.

X1- Sample extract treated with a sulfuric acid/silica gel cleanup procedure.

Y - The calibration verification for this analyte exceeded the 20% drift specified in methods 8260 & 8270, and therefore the reported result should be considered an estimate. The overall performance of the calibration verification standard met the acceptance criteria of the method.

Y1 - Negative effects of the matrix from this sample on the instrument caused values for this analyte in the bracketing continuing calibration verification standard (CCVs) to be outside of 20% acceptance criteria. Because of this, quantitation limits and sample concentrations should be considered estimates.

Z -

ND - Not Detected at PQL
PQL - Practical Quantitation Limit
RPD - Relative Percent Difference

This report pertains to the samples analyzed in accordance with the chain of custody, and is intended only for the use of the individual or company to whom it is addressed.

Chain of Custody

OnSite Environmental Inc.
Analytical Laboratory Testing Services
14648 NE 95th Street • Redmond, WA 98052
Phone: (425) 883-3881 • www.onsite-env.com

Company: Krazan & Associates
Project Number: 094-21021
Project Name: SRV- Port of Everett
Project Manager: Jordan Kain
Sampled by: Jordan Kain

Turnaround Request (in working days)
(Check One)
☐ Same Day ☐ 1 Day
☐ 2 Days ☐ 3 Days
☑ Standard (7 Days)
☐ _____ (other)

Laboratory Number: 08-312

Lab ID	Sample Identification	Date Sampled	Time Sampled	Matrix	Number of Containers
1	S-23	8-31-21	11:30am	S	2
2	S-24				
3	S-25				
4	S-26				
5	S-27				
6	S-28				
7	S-29				
8	S-30				
9	S-31				
10	S-32				

Lab ID	NWTPH-HCID	NWTPH-Gx/BTEX	NWTPH-Gx	NWTPH-Dx (☐ Acid / SG Clean-up)	Volatiles 8260D	Halogenated Volatiles 8260D	EDB EPA 8011 (Waters Only)	Semivolatiles 8270E/SIM (with low-level PAHs)	PAHs 8270E/SIM (low-level)	PCBs 8082A	Organochlorine Pesticides 8081B	Organophosphorus Pesticides 8270E/SIM	Chlorinated Acid Herbicides 8151A	Total RCRA Metals	Total MTCA Metals	TCLP Metals	HEM (oil and grease) 1664A	Arsenic, copper, Lead, Zinc, Nickel	Mercury EPA 7471			% Moisture
1			X	X					⊗	⊗								X	X			X
2			X	X					⊗	⊗								X	X			X
3			X	X					⊗	⊗								X	X			X
4			X	X					⊗	⊗								X	X			X
5			X	X					⊗	⊗								X	X			X
6			X	X					⊗	⊗								X	X			X
7			X	X					⊗	⊗								X	X			X
8			X	X					⊗	⊗								X	X			X
9			X	X					⊗	⊗								X	X			X
10			X	X					⊗	⊗								X	X			X

	Signature	Company	Date	Time
Relinquished		Krazan	8-31-21	1:40pm
Received		OSE	8/31/21	1340
Relinquished				
Received				
Relinquished				
Received				
Reviewed/Date		Reviewed/Date		

Comments/Special Instructions
⊗ Added 9/1/21. DB (STA)

Data Package: Standard ☐ Level III ☐ Level IV ☐
Chromatograms with final report ☐ Electronic Data Deliverables (EDDs) ☐

Chain of Custody

OnSite Environmental Inc.
Analytical Laboratory Testing Services
14648 NE 95th Street • Redmond, WA 98052
Phone: (425) 883-3881 • www.onsite-env.com

Company: Krazan & Associates
Project Number: 094-21021
Project Name: SRV- Port of Everett
Project Manager: Jordan Kain
Sampled by: Jordan Kain

Turnaround Request (in working days)
(Check One)
☐ Same Day ☐ 1 Day
☐ 2 Days ☐ 3 Days
☑ Standard (7 Days)
☐ _____ (other)

Laboratory Number: 08-312

Lab ID	Sample Identification	Date Sampled	Time Sampled	Matrix	Number of Containers	NWTPH-HCID	NWTPH-Gx/BTEX	NWTPH-Gx	NWTPH-Dx (☐ Acid / SG Clean-up)	Volatiles 8260D	Halogenated Volatiles 8260D	EDB EPA 8011 (Waters Only)	Semivolatiles 8270E/SIM (with low-level PAHs)	PAHs 8270E/SIM (low-level)	PCBs 8082A	Organochlorine Pesticides 8081B	Organophosphorus Pesticides 8270E/SIM	Chlorinated Acid Herbicides 8151A	Total RCRA Metals	Total MTCA Metals	TCLP Metals	HEM (oil and grease) 1664A	Arsenic, Copper, Lead, Zinc, Nickel	Mercury EPA 7471			% Moisture
11	S-33	8-31-21	12:00pm	S	2			X	X					⊗	⊗								X	X			X
12	S-34							X	X					⊗	⊗								X	X			X
13	S-35							X	X					⊗	⊗								X	X			X
14	S-36							X	X					⊗	⊗								X	X			X
15	S-37							X	X					⊗	⊗								X	X			X
16	S-38							X	X					⊗	⊗								X	X			X
17	S-39							X	X					⊗	⊗								X	X			X
18	S-40							X	X					⊗	⊗								X	X			X
19	S-41							X	X					⊗	⊗								X	X			X
20	S-42							X	X					⊗	⊗								X	X			X

	Signature	Company	Date	Time	Comments/Special Instructions
Relinquished		Krazan	8-31-21	1:40pm	
Received		OSE	8/31/21	1340	
Relinquished					
Received					
Relinquished					
Received					Data Package: Standard ☐ Level III ☐ Level IV ☐
Reviewed/Date		Reviewed/Date			Chromatograms with final report ☐ Electronic Data Deliverables (EDDs) ☐

Chain of Custody

OnSite Environmental Inc.
Analytical Laboratory Testing Services
14648 NE 95th Street • Redmond, WA 98052
Phone: (425) 883-3881 • www.onsite-env.com

Company: Krazan & Associates
Project Number: 094-2021
Project Name: SRV- Port of Everett
Project Manager: Jordan Kain
Sampled by: Jordan Kain

Turnaround Request (in working days)
(Check One)
☐ Same Day ☐ 1 Day
☐ 2 Days ☐ 3 Days
☑ Standard (7 Days)
☐ _____ (other)

Laboratory Number: 08-312

Lab ID	Sample Identification	Date Sampled	Time Sampled	Matrix	Number of Containers	NWTPH-HCID	NWTPH-Gx/BTEX	NWTPH-Gx	NWTPH-Dx (☐ Acid / SG Clean-up)	Volatiles 8260D	Halogenated Volatiles 8260D	EDB EPA 8011 (Waters Only)	Semivolatiles 8270E/SIM (with low-level PAHs)	PAHs 8270E/SIM (low-level)	PCBs 8082A	Organochlorine Pesticides 8081B	Organophosphorus Pesticides 8270E/SIM	Chlorinated Acid Herbicides 8151A	Total RCRA Metals	Total MTCA Metals	TCLP Metals	HEM (oil and grease) 1664A	Arsenic, copper, lead, zinc, Nickel	Mercury EAA 7471			% Moisture
21	S-43	8-31-21	12:30pm	S	2			X	X					⊗	⊗								X	X			X
22	S-44							X	X					⊗	⊗								X	X			X
23	S-45							X	X					⊗	⊗								X	X			X
24	S-46							X	X					⊗	⊗								X	X			X
25	S-47							X	X					⊗	⊗								X	X			X
								X																			
								X																			
								X																			

	Signature	Company	Date	Time
Relinquished	Jordan Kain	Krazan	8-31-21	1:40pm
Received	Nicholas Shin	OSE	8/31/21	1540
Relinquished				
Received				
Relinquished				
Received				
Reviewed/Date		Reviewed/Date		

Comments/Special Instructions

Data Package: Standard ☐ Level III ☐ Level IV ☐

Chromatograms with final report ☐ Electronic Data Deliverables (EDDs) ☐

	A	B
1	Location ID	Nickel
2	S-23	53
3	S-24	27
4	S-25	43
5	S-26	21
6	S-27	13
7	S-28	16
8	S-29	24
9	S-30	17
10	S-31	18
11	S-32	20
12	S-33	21
13	S-34	18
14	S-35	36
15	S-36	27
16	S-37	27
17	S-38	21
18	S-39	15
19	S-40	15
20	S-41	11
21	S-42	20
22	S-43	22
23	S-44	22
24	S-45	23
25	S-46	33
26	S-47	48

1	**Normal UCL Statistics for Uncensored Full Data Sets**											
2												
3				User Selected Options								
4				Date/Time of Computation	ProUCL 5.19/15/2021 4:38:05 PM							
5				From File	WorkSheet.xls							
6				Full Precision	OFF							
7				Confidence Coefficient	95%							
8												
9												
10	**C0**											
11												
12	**General Statistics**											
13						Total Number of Observations	25			Number of Distinct Observations	17	
14										Number of Missing Observations	0	
15						Minimum	11			Mean	24.44	
16						Maximum	53			Median	21	
17						SD	10.67			SD of logged Data	0.391	
18						Coefficient of Variation	0.436			Skewness	1.4	
19												
20	**Normal GOF Test**											
21						Shapiro Wilk Test Statistic	0.857		**Shapiro Wilk GOF Test**			
22						5% Shapiro Wilk Critical Value	0.918		Data Not Normal at 5% Significance Level			
23						Lilliefors Test Statistic	0.205		**Lilliefors GOF Test**			
24						5% Lilliefors Critical Value	0.173		Data Not Normal at 5% Significance Level			
25	**Data Not Normal at 5% Significance Level**											
26												
27	**Assuming Normal Distribution**											
28						**95% Normal UCL**				**95% UCLs (Adjusted for Skewness)**		
29						95% Student's-t UCL	28.09			95% Adjusted-CLT UCL (Chen-1995)	28.59	
30										95% Modified-t UCL (Johnson-1978)	28.19	
31												
32	**Suggested UCL to Use**											
33	**Data appear Gamma, May want to try Gamma Distribution**											
34												
35	Note: Suggestions regarding the selection of a 95% UCL are provided to help the user to select the most appropriate 95% UCL.											
36	Recommendations are based upon data size, data distribution, and skewness.											
37	These recommendations are based upon the results of the simulation studies summarized in Singh, Maichle, and Lee (2006).											
38	However, simulations results will not cover all Real World data sets; for additional insight the user may want to consult a statistician.											
39												

Gamma UCL Statistics for Uncensored Full Data Sets

User Selected Options	
Date/Time of Computation	ProUCL 5.19/15/2021 4:46:57 PM
From File	WorkSheet.xls
Full Precision	OFF
Confidence Coefficient	95%
Number of Bootstrap Operations	2000

C0

General Statistics

Total Number of Observations	25	Number of Distinct Observations	17
		Number of Missing Observations	0
Minimum	11	Mean	24.44
Maximum	53	Median	21
SD	10.67	SD of logged Data	0.391
Coefficient of Variation	0.436	Skewness	1.4

Gamma GOF Test

A-D Test Statistic	0.659	**Anderson-Darling Gamma GOF Test**
5% A-D Critical Value	0.746	Data appear Gamma Distributed at 5% Significance Level
K-S Test Statistic	0.153	**Kolmogorov-Smirnov Gamma GOF Test**
5% K-S Critical Value	0.175	Data appear Gamma Distributed at 5% Significance Level

Data appear Gamma Distributed at 5% Significance Level

Gamma Statistics

k hat (MLE)	6.575	k star (bias corrected MLE)	5.813
Theta hat (MLE)	3.717	Theta star (bias corrected MLE)	4.204
nu hat (MLE)	328.8	nu star (bias corrected)	290.6
MLE Mean (bias corrected)	24.44	MLE Sd (bias corrected)	10.14
		Approximate Chi Square Value (0.05)	252.2
Adjusted Level of Significance	0.0395	Adjusted Chi Square Value	249.7

Assuming Gamma Distribution

95% Approximate Gamma UCL (use when n>=50)	28.17	95% Adjusted Gamma UCL (use when n<50)	28.45

Suggested UCL to Use

95% Adjusted Gamma UCL	28.45		

Note: Suggestions regarding the selection of a 95% UCL are provided to help the user to select the most appropriate 95% UCL.

Recommendations are based upon data size, data distribution, and skewness.

These recommendations are based upon the results of the simulation studies summarized in Singh, Maichle, and Lee (2006).

However, simulations results will not cover all Real World data sets; for additional insight the user may want to consult a statistician.

UCL Statistics for Uncensored Full Data Sets

User Selected Options	
Date/Time of Computation	ProUCL 5.19/17/2021 10:24:34 AM
From File	WorkSheet.xls
Full Precision	OFF
Confidence Coefficient	95%
Number of Bootstrap Operations	2000

C1

General Statistics

Total Number of Observations	47	Number of Distinct Observations	29
		Number of Missing Observations	0
Minimum	11	Mean	27.79
Maximum	62	Median	24
SD	12.68	Std. Error of Mean	1.849
Coefficient of Variation	0.456	Skewness	0.973

Normal GOF Test

Shapiro Wilk Test Statistic	0.894	**Shapiro Wilk GOF Test**
5% Shapiro Wilk Critical Value	0.946	Data Not Normal at 5% Significance Level
Lilliefors Test Statistic	0.174	**Lilliefors GOF Test**
5% Lilliefors Critical Value	0.128	Data Not Normal at 5% Significance Level

Data Not Normal at 5% Significance Level

Assuming Normal Distribution

95% Normal UCL		**95% UCLs (Adjusted for Skewness)**	
95% Student's-t UCL	30.89	95% Adjusted-CLT UCL (Chen-1995)	31.11
		95% Modified-t UCL (Johnson-1978)	30.93

Gamma GOF Test

A-D Test Statistic	0.79	**Anderson-Darling Gamma GOF Test**
5% A-D Critical Value	0.753	Data Not Gamma Distributed at 5% Significance Level
K-S Test Statistic	0.117	**Kolmogorov-Smirnov Gamma GOF Test**
5% K-S Critical Value	0.129	Detected data appear Gamma Distributed at 5% Significance Level

Detected data follow Appr. Gamma Distribution at 5% Significance Level

Gamma Statistics

k hat (MLE)	5.481	k star (bias corrected MLE)	5.145
Theta hat (MLE)	5.07	Theta star (bias corrected MLE)	5.401
nu hat (MLE)	515.2	nu star (bias corrected)	483.6
MLE Mean (bias corrected)	27.79	MLE Sd (bias corrected)	12.25
		Approximate Chi Square Value (0.05)	433.6
Adjusted Level of Significance	0.0449	Adjusted Chi Square Value	432.1

Assuming Gamma Distribution

95% Approximate Gamma UCL (use when n>=50)	30.99	95% Adjusted Gamma UCL (use when n<50)	31.1

Lognormal GOF Test

Shapiro Wilk Test Statistic	0.963	**Shapiro Wilk Lognormal GOF Test**

53	5% Shapiro Wilk Critical Value					0.946	Data appear Lognormal at 5% Significance Level					
54	Lilliefors Test Statistic					0.0944	**Lilliefors Lognormal GOF Test**					
55	5% Lilliefors Critical Value					0.128	Data appear Lognormal at 5% Significance Level					
56	**Data appear Lognormal at 5% Significance Level**											
57												
58	**Lognormal Statistics**											
59	Minimum of Logged Data					2.398	Mean of logged Data					3.231
60	Maximum of Logged Data					4.127	SD of logged Data					0.433
61												
62	**Assuming Lognormal Distribution**											
63	95% H-UCL					31.25	90% Chebyshev (MVUE) UCL					33.17
64	95% Chebyshev (MVUE) UCL					35.64	97.5% Chebyshev (MVUE) UCL					39.07
65	99% Chebyshev (MVUE) UCL					45.8						
66												
67	**Nonparametric Distribution Free UCL Statistics**											
68	**Data appear to follow a Discernible Distribution at 5% Significance Level**											
69												
70	**Nonparametric Distribution Free UCLs**											
71	95% CLT UCL					30.83	95% Jackknife UCL					30.89
72	95% Standard Bootstrap UCL					30.77	95% Bootstrap-t UCL					31.21
73	95% Hall's Bootstrap UCL					31.12	95% Percentile Bootstrap UCL					30.7
74	95% BCA Bootstrap UCL					31						
75	90% Chebyshev(Mean, Sd) UCL					33.33	95% Chebyshev(Mean, Sd) UCL					35.85
76	97.5% Chebyshev(Mean, Sd) UCL					39.33	99% Chebyshev(Mean, Sd) UCL					46.19
77												
78	**Suggested UCL to Use**											
79	95% Adjusted Gamma UCL					31.1						
80												
81	When a data set follows an approximate (e.g., normal) distribution passing one of the GOF test											
82	When applicable, it is suggested to use a UCL based upon a distribution (e.g., gamma) passing both GOF tests in ProUCL											
83												
84	Note: Suggestions regarding the selection of a 95% UCL are provided to help the user to select the most appropriate 95% UCL.											
85	Recommendations are based upon data size, data distribution, and skewness.											
86	These recommendations are based upon the results of the simulation studies summarized in Singh, Maichle, and Lee (2006).											
87	However, simulations results will not cover all Real World data sets; for additional insight the user may want to consult a statistician.											
88												

Preload—Getchell Pit

Krazan & ASSOCIATES, INC.

GEOTECHNICAL ENGINEERING • ENVIRONMENTAL ENGINEERING
CONSTRUCTION TESTING & INSPECTION

July 26, 2021 KA No. 094-21018

Mr. John Snyder
SRV CONSRUCTION, INC.
PO Box 507
Anacortes, WA 98221

RE: SOIL ANALYTICAL ANALYSIS AND REPORTING
Miles Sand and Gravel – Getchell Pit #15415
15415 84th St NE
Lake Stevens, Washington

Dear Mr. Snyder

In accordance with your request and authorization, our firm performed analytical analysis and reporting for the above-referenced project on July 22, 2021. The sampling was performed by SRV Construction representative and analysis and reporting was performed by Krazan & Associates.

If you have any questions, or if we can be of further assistance, please do not hesitate to contact our office.

Respectfully submitted,
KRAZAN & ASSOCIATES, INC.



Jordan Kain, P.E.
Environmental Department Manager

July 26, 2021 KA Project No. 094-21018

Mr. John Snyder
SRV Construction, Inc. Tel: (360)675-7100
PO Box 507
Anacortes, WA 98221

RE: Letter Report for Soil Analytical Reporting
Miles Sand and Gravel – Getchell Pit #15415
15415 84th St NE
Lake Stevens, Washington 98258

Dear Mr. Snyder:

Krazan and Associates is providing this Letter Report in reference to limited sampling of soil at the above referenced address located in Lake Stevens, Washington. Sample collection was conducted by SRV Construction Inc. (SRV) representative Mr. Steve Verbarendse on July 12, 2021. This sampling was performed in accordance with federal, state and local regulatory requirements, and was limited to the 1-¼" CSBC stock pile located at Getchell Pit #15415. Contaminants of concern (C.O.C) analysis were based on Port of Everett – Norton Terminal – Preload and MTCA 3rd Interim Action specification 1.04 E Section 31 00 00.

1.0 ANALYTICAL RESULTS

1.1 Soil Sampling Locations

Fifteen (15) discrete soil samples were collected at evenly distributed locations throughout the on-site 1-¼" CSBC stockpile totaling approximately 150'x150'x25' in size. See attached figure for soil sample locations. Collected samples were delivered to a Washington State certified laboratory. The laboratory analytical report is provided in Appendix A.

1.2 Sampling Methodology

The samples were collected by carefully collecting discreet samples with a clean stainless-steel sampler. The samples were placed in clean glass sample containers. Sample containers were then placed in an iced cooler for transportation to the laboratory. The sampling instrument was wiped between samples with a clean moist cloth to decontaminate the tool and minimize the potential cross contamination of subsequent samples. Data pertinent to each sample (e.g., date, sample number, material description, and material category) was recorded on a chain of custody.

1.3 Laboratory Analysis

A total of fifteen (15) discrete soil samples were collected from the site and delivered OnSite Environmental Inc. in Redmond, Washington, under chain-of-custody protocol for analysis. OnSite Environmental Inc. is a Washington State accredited laboratory. Samples were run for Total Petroleum Hydrocarbons Gasoline (TPH-Gx), Total Petroleum Hydrocarbons Diesel & Motor Oil (TPH-Dx), PAHs, PCBs, Arsenic, Nickel, Copper Mercury, Lead, Zinc and percent moisture. Laboratory analytical data reports and chain-of-custody forms are provided in Appendix A.

1.4 Laboratory Sample Results

Table 1 & 2 include the sample number, sample location, sample description, and analyte contamination.

Table 1 – Summary of Analytical Data

Sample Number	Sample Location	Sample Material Description	TPH Gasoline	TPH Diesel	TPH Motor Oil	PCBs	Arsenic	Copper	Lead	Mercury	Nickel	Zinc	Percent Moisture
G-1	Pit #15415 Stock-Pile	Discrete Soil	ND	ND	ND	ND	ND	16	ND	ND	21	21	3
G-2	Pit #15415 Stock-Pile	Discrete Soil	ND	ND	ND	ND	ND	18	ND	ND	27	26	3
G-3	Pit #15415 Stock-Pile	Discrete Soil	ND	ND	ND	ND	ND	21	ND	ND	27	28	1
G-4	Pit #15415 Stock-Pile	Discrete Soil	ND	ND	ND	ND	ND	16	ND	ND	24	22	2
G-5	Pit #15415 Stock-Pile	Discrete Soil	ND	ND	ND	ND	ND	17	ND	ND	21	20	1
G-6	Pit #15415 Stock-Pile	Discrete Soil	ND	ND	ND	ND	ND	17	ND	ND	29	26	0
G-7	Pit #15415 Stock-Pile	Discrete Soil	ND	ND	ND	ND	ND	23	ND	ND	31	32	1
G-8	Pit #15415 Stock-Pile	Discrete Soil	ND	ND	ND	ND	ND	21	ND	ND	32	32	1
G-9	Pit #15415 Stock-Pile	Discrete Soil	ND	ND	ND	ND	ND	18	ND	ND	27	27	1
G-10	Pit #15415 Stock-Pile	Discrete Soil	ND	ND	ND	ND	ND	17	ND	ND	24	23	1
G-11	Pit #15415 Stock-Pile	Discrete Soil	ND	ND	ND	ND	ND	21	ND	ND	29	31	0

G-12	Pit #15415 Stock-Pile	Discrete Soil	ND	ND	ND	ND	ND	16	ND	ND	21	21	1
G-13	Pit #15415 Stock-Pile	Discrete Soil	ND	ND	ND	ND	ND	15	ND	ND	21	20	1
G-14	Pit #15415 Stock-Pile	Discrete Soil	ND	ND	ND	ND	ND	18	ND	ND	25	27	0
G-15	Pit #15415 Stock-Pile	Discrete Soil	ND	ND	ND	ND	ND	22	ND	ND	27	29	0
Upper Limits	NA	Soil	20 ppm	200 ppm	200 ppm	0.12	20	36	81	0.1	48	85	NA

*benzo(a)pyrene = MTCA regulated PAH

All results displayed in ppm = Parts Per Million

ND = Not Detected

NA = Not Applicable

Table 2 – Summary of Analytical Data

Sample Number	Sample Location	Sample Material Description	Benzo(a)pyrene*	Total cPAH TEQ	Acenapthene	Acenphthylene	Anthracene	Benzo(g,h,i)perylene	Fluoranthene	Fluorene	Phenanthrene	Pyrene	1-Methylnaphthalene	2-Methylnaphthalene	Naphthalene
G-1	Pit #15415 Stock-Pile	Discrete Soil	ND	ND	ND	ND	ND	ND	ND	ND	ND	0.0079	ND	ND	ND
G-2	Pit #15415 Stock-Pile	Discrete Soil	ND	ND	ND	ND	ND	ND	ND	ND	ND	ND	ND	ND	ND
G-3	Pit #15415 Stock-Pile	Discrete Soil	ND	ND	ND	ND	ND	ND	ND	ND	ND	ND	ND	ND	ND
G-4	Pit #15415 Stock-Pile	Discrete Soil	ND	ND	0.015	ND	ND	ND	ND	0.0094	0.013	ND	ND	ND	ND
G-5	Pit #15415 Stock-Pile	Discrete Soil	ND	ND	ND	ND	ND	ND	ND	ND	ND	ND	ND	ND	ND
G-6	Pit #15415 Stock-Pile	Discrete Soil	ND	ND	ND	ND	ND	ND	ND	ND	ND	ND	ND	ND	ND
G-7	Pit #15415 Stock-Pile	Discrete Soil	ND	ND	0.0077	ND	ND	ND	ND	ND	ND	ND	ND	ND	ND
G-8	Pit #15415 Stock-Pile	Discrete Soil	ND	ND	ND	ND	ND	ND	ND	ND	ND	ND	ND	ND	ND
G-9	Pit #15415 Stock-Pile	Discrete Soil	ND	ND	ND	ND	ND	ND	ND	ND	ND	ND	ND	ND	ND
G-10	Pit #15415 Stock-Pile	Discrete Soil	ND	ND	ND	ND	ND	ND	ND	ND	ND	ND	ND	ND	ND

G-11	Pit #15415 Stock-Pile	Discrete Soil	ND	ND	ND	ND	ND	ND	0.0082	ND	0.011	0.0098	ND	ND	ND
G-12	Pit #15415 Stock-Pile	Discrete Soil	ND	ND	ND	ND	ND	ND	ND	ND	ND	ND	ND	ND	ND
G-13	Pit #15415 Stock-Pile	Discrete Soil	ND	ND	ND	ND	ND	ND	ND	ND	ND	ND	ND	ND	ND
G-14	Pit #15415 Stock-Pile	Discrete Soil	ND	ND	ND	ND	ND	ND	ND	ND	ND	ND	ND	ND	ND
G-15	Pit #15415 Stock-Pile	Discrete Soil	ND	ND	ND	ND	ND	ND	ND	ND	ND	ND	ND	ND	ND
Upper Limits	NA	Soil	0.1	0.16	1.2	210,000	1,100,000	110,000	140,000	140,000	1,100,000	110,000	4,500	0.63	0.86

*benzo(a)pyrene = MTCA regulated PAH
ND = Not Detected
NT = Not Tested
NA = Not Applicable

1.5 Conclusion

The soil collected from Miles Sand and Gravel - Getchell Pit #15415 located at 15415 84th Street NE, Lake Stevens, WA **did not** exceed the Department of Ecology and the Port of Everett concentration upper limits for TPH-Gx, TPH-Dx, PAHs, Total cPAHs TEQ, PCBs, and Metals as stated in Port of Everett – Norton Terminal – Preload and MTCA 3rd Interim Action specification 1.04 E Section 31 00 00. Based on laboratory control limits and data qualifiers, all samples have been validated.

LIMITATIONS

This survey and review of the subject property has been limited in scope to those areas defined by the client. This investigation is undertaken with the risk that visual observations and random sampling alone would not reveal the presence, full nature, and extent of Contaminants of Concern (COC). Krazan makes no representation as to the COC content of materials not sampled or that were inaccessible to our inspector. The sample locations are approximate, and are based on field notes and diagrams of sample locations. The opinions presented herein apply to the site condition existing at the time of the investigation. Opinions and recommendations provided herein may not apply to future conditions that may exist at the site.

The findings presented in this report were based on field observations and sampling as defined by the client. Therefore, the data obtained are clear and accurate only to the degree implied by the sources and methods used. The information presented herein is based on professional interpretation using presently

accepted methods with a degree of conservatism deemed proper as of the report date. We do not warrant that future technical developments cannot supersede such data.

This report is provided for the exclusive use of the client noted on the cover page and is subject to the terms and conditions in the applicable contract between the client and Krazan. The client is the only party to whom Krazan has explained the risks involved and has been involved in the shaping of the scope of services needed to satisfactorily manage those risks, if any, from the client's point of view. Any third party use of this report, including use by the Client's lender, prospective purchaser, or lessee will be subject to the terms and conditions governing the contractual work between the Client and Krazan. The unauthorized use of, reliance on, or release of the information contained in this report is strictly prohibited and will be without risk or liability to Krazan.

Laboratory analysis was conducted by a laboratory accredited under the guidance of the EPA. The results of the analyses are accurate only to the degree of care exercised by the independent laboratories and the representative nature of the samples obtained.

Krazan appreciates the opportunity to provide you with this information and trusts that you will find it useful. If you have any questions or if we may be of further assistance, please do not hesitate to contact our office at (425) 485-5519.

Respectfully submitted,
KRAZAN & ASSOCIATES, INC.



Jordan Kain, P.E
Environmental Department Manager
Krazan & Associates

Soil Stockpile Sample Map

(Not to Scale)

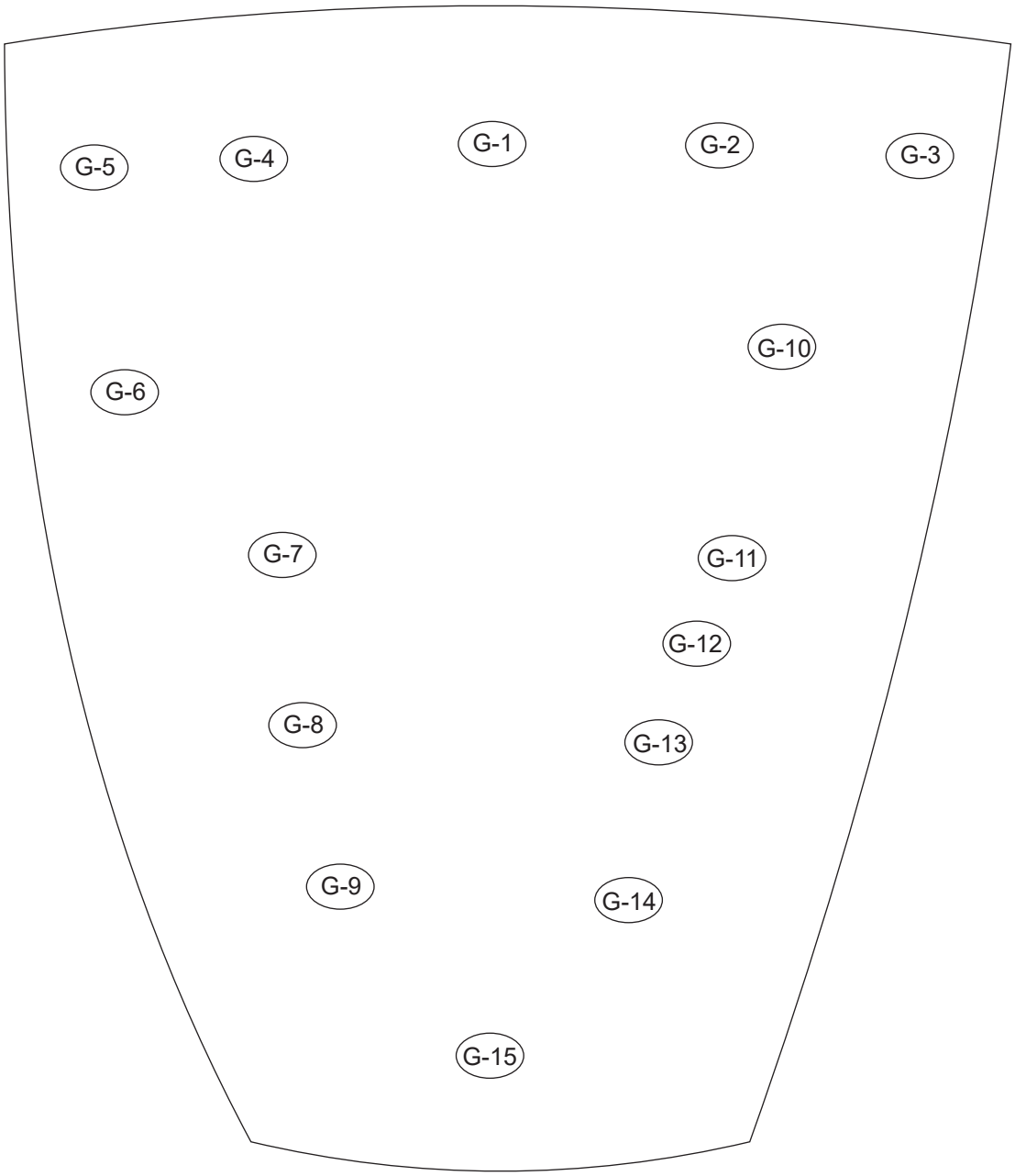

Notes

G-1 = sample name and location

Krazan & ASSOCIATES, INC.

Miles Sand and Gravel Getchell Pit # 15415, 15415 84th St NE, Lake Stevens, WA

Date: July 2021		
Drawn By: JJK	Sample Locations	Project Number: 094-21018

Appendix A

OnSite Environmental Inc.
14648 NE 95th Street, Redmond, WA 98052 • (425) 883-3881

July 21, 2021

John Snyder
SRV Construction, Inc.
P.O. Box 507
Anacortes, WA 98221

Re: Analytical Data for Project CIP No. 1-8-900-OS
Laboratory Reference No. 2107-102

Dear John:

Enclosed are the analytical results and associated quality control data for samples submitted on July 13, 2021.

The standard policy of OnSite Environmental, Inc. is to store your samples for 30 days from the date of receipt. If you require longer storage, please contact the laboratory.

We appreciate the opportunity to be of service to you on this project. If you have any questions concerning the data, or need additional information, please feel free to call me.

Sincerely,

David Baumeister
Project Manager

Enclosures

This report pertains to the samples analyzed in accordance with the chain of custody, and is intended only for the use of the individual or company to whom it is addressed.

Date of Report: July 21, 2021
Samples Submitted: July 13, 2021
Laboratory Reference: 2107-102
Project: CIP No. 1-8-900-OS

Case Narrative

Samples were collected on July 12, 2021 and received by the laboratory on July 13, 2021. They were maintained at the laboratory at a temperature of 2°C to 6°C.

Please note that any and all soil sample results are reported on a dry-weight basis, unless otherwise noted below.

General QA/QC issues associated with the analytical data enclosed in this laboratory report will be indicated with a reference to a comment or explanation on the Data Qualifier page. More complex and involved QA/QC issues will be discussed in detail below.

This report pertains to the samples analyzed in accordance with the chain of custody,
and is intended only for the use of the individual or company to whom it is addressed.

Date of Report: July 21, 2021
Samples Submitted: July 13, 2021
Laboratory Reference: 2107-102
Project: CIP No. 1-8-900-OS

GASOLINE RANGE ORGANICS
NWTPH-Gx

Matrix: Soil
Units: mg/kg (ppm)

Analyte	Result	PQL	Method	Date Prepared	Date Analyzed	Flags
Client ID:	**G-1**					
Laboratory ID:	07-102-01					
Gasoline	**ND**	2.0	NWTPH-Gx	7-15-21	7-16-21	
Surrogate:	*Percent Recovery*	*Control Limits*				
Fluorobenzene	*112*	*66-129*				
Client ID:	**G-2**					
Laboratory ID:	07-102-02					
Gasoline	**ND**	2.1	NWTPH-Gx	7-15-21	7-16-21	
Surrogate:	*Percent Recovery*	*Control Limits*				
Fluorobenzene	*110*	*66-129*				
Client ID:	**G-3**					
Laboratory ID:	07-102-03					
Gasoline	**ND**	2.0	NWTPH-Gx	7-15-21	7-16-21	
Surrogate:	*Percent Recovery*	*Control Limits*				
Fluorobenzene	*115*	*66-129*				
Client ID:	**G-4**					
Laboratory ID:	07-102-04					
Gasoline	**ND**	2.1	NWTPH-Gx	7-15-21	7-16-21	
Surrogate:	*Percent Recovery*	*Control Limits*				
Fluorobenzene	*108*	*66-129*				
Client ID:	**G-5**					
Laboratory ID:	07-102-05					
Gasoline	**ND**	2.0	NWTPH-Gx	7-15-21	7-16-21	
Surrogate:	*Percent Recovery*	*Control Limits*				
Fluorobenzene	*119*	*66-129*				
Client ID:	**G-6**					
Laboratory ID:	07-102-06					
Gasoline	**ND**	1.5	NWTPH-Gx	7-15-21	7-16-21	
Surrogate:	*Percent Recovery*	*Control Limits*				
Fluorobenzene	*105*	*66-129*				
Client ID:	**G-7**					
Laboratory ID:	07-102-07					
Gasoline	**ND**	1.5	NWTPH-Gx	7-15-21	7-16-21	
Surrogate:	*Percent Recovery*	*Control Limits*				
Fluorobenzene	*110*	*66-129*				

This report pertains to the samples analyzed in accordance with the chain of custody,
and is intended only for the use of the individual or company to whom it is addressed.

Date of Report: July 21, 2021
Samples Submitted: July 13, 2021
Laboratory Reference: 2107-102
Project: CIP No. 1-8-900-OS

GASOLINE RANGE ORGANICS
NWTPH-Gx

Matrix: Soil
Units: mg/kg (ppm)

Analyte	Result	PQL	Method	Date Prepared	Date Analyzed	Flags
Client ID:	**G-8**					
Laboratory ID:	07-102-08					
Gasoline	**ND**	2.1	NWTPH-Gx	7-15-21	7-16-21	
Surrogate:	*Percent Recovery*	*Control Limits*				
Fluorobenzene	*107*	*66-129*				
Client ID:	**G-9**					
Laboratory ID:	07-102-09					
Gasoline	**ND**	1.7	NWTPH-Gx	7-15-21	7-16-21	
Surrogate:	*Percent Recovery*	*Control Limits*				
Fluorobenzene	*107*	*66-129*				
Client ID:	**G-10**					
Laboratory ID:	07-102-10					
Gasoline	**ND**	1.8	NWTPH-Gx	7-15-21	7-16-21	
Surrogate:	*Percent Recovery*	*Control Limits*				
Fluorobenzene	*113*	*66-129*				
Client ID:	**G-11**					
Laboratory ID:	07-102-11					
Gasoline	**ND**	1.7	NWTPH-Gx	7-15-21	7-16-21	
Surrogate:	*Percent Recovery*	*Control Limits*				
Fluorobenzene	*112*	*66-129*				
Client ID:	**G-12**					
Laboratory ID:	07-102-12					
Gasoline	**ND**	1.6	NWTPH-Gx	7-15-21	7-16-21	
Surrogate:	*Percent Recovery*	*Control Limits*				
Fluorobenzene	*108*	*66-129*				
Client ID:	**G-13**					
Laboratory ID:	07-102-13					
Gasoline	**ND**	1.6	NWTPH-Gx	7-15-21	7-16-21	
Surrogate:	*Percent Recovery*	*Control Limits*				
Fluorobenzene	*109*	*66-129*				
Client ID:	**G-14**					
Laboratory ID:	07-102-14					
Gasoline	**ND**	1.5	NWTPH-Gx	7-15-21	7-16-21	
Surrogate:	*Percent Recovery*	*Control Limits*				
Fluorobenzene	*107*	*66-129*				

This report pertains to the samples analyzed in accordance with the chain of custody,
and is intended only for the use of the individual or company to whom it is addressed.

Date of Report: July 21, 2021
Samples Submitted: July 13, 2021
Laboratory Reference: 2107-102
Project: CIP No. 1-8-900-OS

GASOLINE RANGE ORGANICS
NWTPH-Gx

Matrix: Soil
Units: mg/kg (ppm)

Analyte	Result	PQL	Method	Date Prepared	Date Analyzed	Flags
Client ID:	**G-15**					
Laboratory ID:	07-102-15					
Gasoline	**ND**	2.0	NWTPH-Gx	7-15-21	7-16-21	
Surrogate:	*Percent Recovery*	*Control Limits*				
Fluorobenzene	*109*	*66-129*				

This report pertains to the samples analyzed in accordance with the chain of custody, and is intended only for the use of the individual or company to whom it is addressed.

Date of Report: July 21, 2021
Samples Submitted: July 13, 2021
Laboratory Reference: 2107-102
Project: CIP No. 1-8-900-OS

GASOLINE RANGE ORGANICS
NWTPH-Gx
QUALITY CONTROL

Matrix: Soil
Units: mg/kg (ppm)

Analyte	Result	PQL	Method	Date Prepared	Date Analyzed	Flags
METHOD BLANK						
Laboratory ID:	MB0715S2					
Gasoline	**ND**	5.0	NWTPH-Gx	7-15-21	7-15-21	
Surrogate:	*Percent Recovery*	*Control Limits*				
Fluorobenzene	*94*	*66-129*				
Laboratory ID:	MB0715S3					
Gasoline	**ND**	5.0	NWTPH-Gx	7-15-21	7-15-21	
Surrogate:	*Percent Recovery*	*Control Limits*				
Fluorobenzene	*97*	*66-129*				

Analyte	Result		Spike Level		Source Result	Percent Recovery		Recovery Limits	RPD	RPD Limit	Flags
DUPLICATE											
Laboratory ID:	07-144-02										
	ORIG	DUP									
Gasoline	**ND**	**ND**	NA	NA		NA		NA	NA	30	
Surrogate:											
Fluorobenzene						*112*	*112*	*66-129*			
Laboratory ID:	07-155-02										
	ORIG	DUP									
Gasoline	**ND**	**ND**	NA	NA		NA		NA	NA	30	
Surrogate:											
Fluorobenzene						*88*	*94*	*66-129*			

This report pertains to the samples analyzed in accordance with the chain of custody, and is intended only for the use of the individual or company to whom it is addressed.

Date of Report: July 21, 2021
Samples Submitted: July 13, 2021
Laboratory Reference: 2107-102
Project: CIP No. 1-8-900-OS

DIESEL AND HEAVY OIL RANGE ORGANICS
NWTPH-Dx

Matrix: Soil
Units: mg/Kg (ppm)

Analyte	Result	PQL	Method	Date Prepared	Date Analyzed	Flags
Client ID:	**G-1**					
Laboratory ID:	07-102-01					
Diesel Range Organics	**ND**	26	NWTPH-Dx	7-14-21	7-14-21	
Lube Oil Range Organics	**ND**	52	NWTPH-Dx	7-14-21	7-14-21	
Surrogate:	*Percent Recovery*	*Control Limits*				
o-Terphenyl	*86*	*50-150*				
Client ID:	**G-2**					
Laboratory ID:	07-102-02					
Diesel Range Organics	**ND**	26	NWTPH-Dx	7-14-21	7-14-21	
Lube Oil Range Organics	**ND**	52	NWTPH-Dx	7-14-21	7-14-21	
Surrogate:	*Percent Recovery*	*Control Limits*				
o-Terphenyl	*89*	*50-150*				
Client ID:	**G-3**					
Laboratory ID:	07-102-03					
Diesel Range Organics	**ND**	25	NWTPH-Dx	7-14-21	7-14-21	
Lube Oil Range Organics	**ND**	50	NWTPH-Dx	7-14-21	7-14-21	
Surrogate:	*Percent Recovery*	*Control Limits*				
o-Terphenyl	*84*	*50-150*				
Client ID:	**G-4**					
Laboratory ID:	07-102-04					
Diesel Range Organics	**ND**	26	NWTPH-Dx	7-14-21	7-14-21	
Lube Oil Range Organics	**ND**	51	NWTPH-Dx	7-14-21	7-14-21	
Surrogate:	*Percent Recovery*	*Control Limits*				
o-Terphenyl	*93*	*50-150*				
Client ID:	**G-5**					
Laboratory ID:	07-102-05					
Diesel Range Organics	**ND**	25	NWTPH-Dx	7-14-21	7-14-21	
Lube Oil Range Organics	**ND**	50	NWTPH-Dx	7-14-21	7-14-21	
Surrogate:	*Percent Recovery*	*Control Limits*				
o-Terphenyl	*98*	*50-150*				
Client ID:	**G-6**					
Laboratory ID:	07-102-06					
Diesel Range Organics	**ND**	25	NWTPH-Dx	7-14-21	7-14-21	
Lube Oil Range Organics	**ND**	50	NWTPH-Dx	7-14-21	7-14-21	
Surrogate:	*Percent Recovery*	*Control Limits*				
o-Terphenyl	*93*	*50-150*				

This report pertains to the samples analyzed in accordance with the chain of custody,
and is intended only for the use of the individual or company to whom it is addressed.

Date of Report: July 21, 2021
Samples Submitted: July 13, 2021
Laboratory Reference: 2107-102
Project: CIP No. 1-8-900-OS

DIESEL AND HEAVY OIL RANGE ORGANICS
NWTPH-Dx

Matrix: Soil
Units: mg/Kg (ppm)

Analyte	Result	PQL	Method	Date Prepared	Date Analyzed	Flags
Client ID:	**G-7**					
Laboratory ID:	07-102-07					
Diesel Range Organics	**ND**	25	NWTPH-Dx	7-14-21	7-14-21	
Lube Oil Range Organics	**ND**	50	NWTPH-Dx	7-14-21	7-14-21	
Surrogate:	*Percent Recovery*	*Control Limits*				
o-Terphenyl	*94*	*50-150*				
Client ID:	**G-8**					
Laboratory ID:	07-102-08					
Diesel Range Organics	**ND**	25	NWTPH-Dx	7-14-21	7-14-21	
Lube Oil Range Organics	**ND**	50	NWTPH-Dx	7-14-21	7-14-21	
Surrogate:	*Percent Recovery*	*Control Limits*				
o-Terphenyl	*101*	*50-150*				
Client ID:	**G-9**					
Laboratory ID:	07-102-09					
Diesel Range Organics	**ND**	25	NWTPH-Dx	7-14-21	7-14-21	
Lube Oil Range Organics	**ND**	51	NWTPH-Dx	7-14-21	7-14-21	
Surrogate:	*Percent Recovery*	*Control Limits*				
o-Terphenyl	*93*	*50-150*				
Client ID:	**G-10**					
Laboratory ID:	07-102-10					
Diesel Range Organics	**ND**	25	NWTPH-Dx	7-14-21	7-14-21	
Lube Oil Range Organics	**ND**	51	NWTPH-Dx	7-14-21	7-14-21	
Surrogate:	*Percent Recovery*	*Control Limits*				
o-Terphenyl	*97*	*50-150*				
Client ID:	**G-11**					
Laboratory ID:	07-102-11					
Diesel Range Organics	**ND**	25	NWTPH-Dx	7-14-21	7-14-21	
Lube Oil Range Organics	**ND**	50	NWTPH-Dx	7-14-21	7-14-21	
Surrogate:	*Percent Recovery*	*Control Limits*				
o-Terphenyl	*93*	*50-150*				
Client ID:	**G-12**					
Laboratory ID:	07-102-12					
Diesel Range Organics	**ND**	25	NWTPH-Dx	7-14-21	7-14-21	
Lube Oil Range Organics	**ND**	51	NWTPH-Dx	7-14-21	7-14-21	
Surrogate:	*Percent Recovery*	*Control Limits*				
o-Terphenyl	*93*	*50-150*				

This report pertains to the samples analyzed in accordance with the chain of custody,
and is intended only for the use of the individual or company to whom it is addressed.

Date of Report: July 21, 2021
Samples Submitted: July 13, 2021
Laboratory Reference: 2107-102
Project: CIP No. 1-8-900-OS

DIESEL AND HEAVY OIL RANGE ORGANICS
NWTPH-Dx

Matrix: Soil
Units: mg/Kg (ppm)

Analyte	Result	PQL	Method	Date Prepared	Date Analyzed	Flags
Client ID:	**G-13**					
Laboratory ID:	07-102-13					
Diesel Range Organics	**ND**	25	NWTPH-Dx	7-14-21	7-14-21	
Lube Oil Range Organics	**ND**	50	NWTPH-Dx	7-14-21	7-14-21	
Surrogate:	*Percent Recovery*	*Control Limits*				
o-Terphenyl	*103*	*50-150*				
Client ID:	**G-14**					
Laboratory ID:	07-102-14					
Diesel Range Organics	**ND**	25	NWTPH-Dx	7-14-21	7-14-21	
Lube Oil Range Organics	**ND**	50	NWTPH-Dx	7-14-21	7-14-21	
Surrogate:	*Percent Recovery*	*Control Limits*				
o-Terphenyl	*91*	*50-150*				
Client ID:	**G-15**					
Laboratory ID:	07-102-15					
Diesel Range Organics	**ND**	25	NWTPH-Dx	7-14-21	7-14-21	
Lube Oil Range Organics	**ND**	50	NWTPH-Dx	7-14-21	7-14-21	
Surrogate:	*Percent Recovery*	*Control Limits*				
o-Terphenyl	*104*	*50-150*				

This report pertains to the samples analyzed in accordance with the chain of custody, and is intended only for the use of the individual or company to whom it is addressed.

Date of Report: July 21, 2021
Samples Submitted: July 13, 2021
Laboratory Reference: 2107-102
Project: CIP No. 1-8-900-OS

DIESEL AND HEAVY OIL RANGE ORGANICS
NWTPH-Dx
QUALITY CONTROL

Matrix: Soil
Units: mg/Kg (ppm)

Analyte	Result	PQL	Method	Date Prepared	Date Analyzed	Flags
METHOD BLANK						
Laboratory ID:	MB0714S2					
Diesel Range Organics	**ND**	25	NWTPH-Dx	7-14-21	7-14-21	
Lube Oil Range Organics	**ND**	50	NWTPH-Dx	7-14-21	7-14-21	
Surrogate:	*Percent Recovery*	*Control Limits*				
o-Terphenyl	*93*	*50-150*				

Analyte	Result		Spike Level		Source Result	Percent Recovery	Recovery Limits	RPD	RPD Limit	Flags
DUPLICATE										
Laboratory ID:	07-102-01									
	ORIG	DUP								
Diesel Range	**ND**	**ND**	NA	NA		NA	NA	NA	NA	
Lube Oil Range	**ND**	**ND**	NA	NA		NA	NA	NA	NA	
Surrogate:										
o-Terphenyl						*86* *93*	*50-150*			
Laboratory ID:	SB0714S2									
	ORIG	DUP								
Diesel Fuel #2	**83.6**	**74.9**	NA	NA		NA	NA	11	NA	
Surrogate:										
o-Terphenyl						*99* *105*	*50-150*			

This report pertains to the samples analyzed in accordance with the chain of custody, and is intended only for the use of the individual or company to whom it is addressed.

Date of Report: July 21, 2021
Samples Submitted: July 13, 2021
Laboratory Reference: 2107-102
Project: CIP No. 1-8-900-OS

PAHs EPA 8270E/SIM

Matrix: Soil
Units: mg/Kg

Analyte	Result	PQL	Method	Date Prepared	Date Analyzed	Flags
Client ID:	**G-1**					
Laboratory ID:	07-102-01					
Naphthalene	**ND**	0.0069	EPA 8270E/SIM	7-13-21	7-13-21	
2-Methylnaphthalene	**ND**	0.0069	EPA 8270E/SIM	7-13-21	7-13-21	
1-Methylnaphthalene	**ND**	0.0069	EPA 8270E/SIM	7-13-21	7-13-21	
Acenaphthylene	**ND**	0.0069	EPA 8270E/SIM	7-13-21	7-13-21	
Acenaphthene	**ND**	0.0069	EPA 8270E/SIM	7-13-21	7-13-21	
Fluorene	**ND**	0.0069	EPA 8270E/SIM	7-13-21	7-13-21	
Phenanthrene	**ND**	0.0069	EPA 8270E/SIM	7-13-21	7-13-21	
Anthracene	**ND**	0.0069	EPA 8270E/SIM	7-13-21	7-13-21	
Fluoranthene	**ND**	0.0069	EPA 8270E/SIM	7-13-21	7-13-21	
Pyrene	**0.0079**	0.0069	EPA 8270E/SIM	7-13-21	7-13-21	
Benzo[a]anthracene	**ND**	0.0069	EPA 8270E/SIM	7-13-21	7-13-21	
Chrysene	**ND**	0.0069	EPA 8270E/SIM	7-13-21	7-13-21	
Benzo[b]fluoranthene	**ND**	0.0069	EPA 8270E/SIM	7-13-21	7-13-21	
Benzo(j,k)fluoranthene	**ND**	0.0069	EPA 8270E/SIM	7-13-21	7-13-21	
Benzo[a]pyrene	**ND**	0.0069	EPA 8270E/SIM	7-13-21	7-13-21	
Indeno(1,2,3-c,d)pyrene	**ND**	0.0069	EPA 8270E/SIM	7-13-21	7-13-21	
Dibenz[a,h]anthracene	**ND**	0.0069	EPA 8270E/SIM	7-13-21	7-13-21	
Benzo[g,h,i]perylene	**ND**	0.0069	EPA 8270E/SIM	7-13-21	7-13-21	
Surrogate:	*Percent Recovery*	*Control Limits*				
2-Fluorobiphenyl	*82*	*41 - 114*				
Pyrene-d10	*94*	*39 - 115*				
Terphenyl-d14	*97*	*44 - 125*				

This report pertains to the samples analyzed in accordance with the chain of custody, and is intended only for the use of the individual or company to whom it is addressed.

Date of Report: July 21, 2021
Samples Submitted: July 13, 2021
Laboratory Reference: 2107-102
Project: CIP No. 1-8-900-OS

PAHs EPA 8270E/SIM

Matrix: Soil
Units: mg/Kg

Analyte	Result	PQL	Method	Date Prepared	Date Analyzed	Flags
Client ID:	**G-2**					
Laboratory ID:	07-102-02					
Naphthalene	**ND**	0.0069	EPA 8270E/SIM	7-13-21	7-13-21	
2-Methylnaphthalene	**ND**	0.0069	EPA 8270E/SIM	7-13-21	7-13-21	
1-Methylnaphthalene	**ND**	0.0069	EPA 8270E/SIM	7-13-21	7-13-21	
Acenaphthylene	**ND**	0.0069	EPA 8270E/SIM	7-13-21	7-13-21	
Acenaphthene	**ND**	0.0069	EPA 8270E/SIM	7-13-21	7-13-21	
Fluorene	**ND**	0.0069	EPA 8270E/SIM	7-13-21	7-13-21	
Phenanthrene	**ND**	0.0069	EPA 8270E/SIM	7-13-21	7-13-21	
Anthracene	**ND**	0.0069	EPA 8270E/SIM	7-13-21	7-13-21	
Fluoranthene	**ND**	0.0069	EPA 8270E/SIM	7-13-21	7-13-21	
Pyrene	**ND**	0.0069	EPA 8270E/SIM	7-13-21	7-13-21	
Benzo[a]anthracene	**ND**	0.0069	EPA 8270E/SIM	7-13-21	7-13-21	
Chrysene	**ND**	0.0069	EPA 8270E/SIM	7-13-21	7-13-21	
Benzo[b]fluoranthene	**ND**	0.0069	EPA 8270E/SIM	7-13-21	7-13-21	
Benzo(j,k)fluoranthene	**ND**	0.0069	EPA 8270E/SIM	7-13-21	7-13-21	
Benzo[a]pyrene	**ND**	0.0069	EPA 8270E/SIM	7-13-21	7-13-21	
Indeno(1,2,3-c,d)pyrene	**ND**	0.0069	EPA 8270E/SIM	7-13-21	7-13-21	
Dibenz[a,h]anthracene	**ND**	0.0069	EPA 8270E/SIM	7-13-21	7-13-21	
Benzo[g,h,i]perylene	**ND**	0.0069	EPA 8270E/SIM	7-13-21	7-13-21	
Surrogate:	*Percent Recovery*	*Control Limits*				
2-Fluorobiphenyl	*89*	*41 - 114*				
Pyrene-d10	*94*	*39 - 115*				
Terphenyl-d14	*93*	*44 - 125*				

This report pertains to the samples analyzed in accordance with the chain of custody, and is intended only for the use of the individual or company to whom it is addressed.

Date of Report: July 21, 2021
Samples Submitted: July 13, 2021
Laboratory Reference: 2107-102
Project: CIP No. 1-8-900-OS

PAHs EPA 8270E/SIM

Matrix: Soil
Units: mg/Kg

Analyte	Result	PQL	Method	Date Prepared	Date Analyzed	Flags
Client ID:	**G-3**					
Laboratory ID:	07-102-03					
Naphthalene	**ND**	0.0067	EPA 8270E/SIM	7-13-21	7-13-21	
2-Methylnaphthalene	**ND**	0.0067	EPA 8270E/SIM	7-13-21	7-13-21	
1-Methylnaphthalene	**ND**	0.0067	EPA 8270E/SIM	7-13-21	7-13-21	
Acenaphthylene	**ND**	0.0067	EPA 8270E/SIM	7-13-21	7-13-21	
Acenaphthene	**ND**	0.0067	EPA 8270E/SIM	7-13-21	7-13-21	
Fluorene	**ND**	0.0067	EPA 8270E/SIM	7-13-21	7-13-21	
Phenanthrene	**ND**	0.0067	EPA 8270E/SIM	7-13-21	7-13-21	
Anthracene	**ND**	0.0067	EPA 8270E/SIM	7-13-21	7-13-21	
Fluoranthene	**ND**	0.0067	EPA 8270E/SIM	7-13-21	7-13-21	
Pyrene	**ND**	0.0067	EPA 8270E/SIM	7-13-21	7-13-21	
Benzo[a]anthracene	**ND**	0.0067	EPA 8270E/SIM	7-13-21	7-13-21	
Chrysene	**ND**	0.0067	EPA 8270E/SIM	7-13-21	7-13-21	
Benzo[b]fluoranthene	**ND**	0.0067	EPA 8270E/SIM	7-13-21	7-13-21	
Benzo(j,k)fluoranthene	**ND**	0.0067	EPA 8270E/SIM	7-13-21	7-13-21	
Benzo[a]pyrene	**ND**	0.0067	EPA 8270E/SIM	7-13-21	7-13-21	
Indeno(1,2,3-c,d)pyrene	**ND**	0.0067	EPA 8270E/SIM	7-13-21	7-13-21	
Dibenz[a,h]anthracene	**ND**	0.0067	EPA 8270E/SIM	7-13-21	7-13-21	
Benzo[g,h,i]perylene	**ND**	0.0067	EPA 8270E/SIM	7-13-21	7-13-21	
Surrogate:	*Percent Recovery*	*Control Limits*				
2-Fluorobiphenyl	*90*	*41 - 114*				
Pyrene-d10	*89*	*39 - 115*				
Terphenyl-d14	*93*	*44 - 125*				

This report pertains to the samples analyzed in accordance with the chain of custody, and is intended only for the use of the individual or company to whom it is addressed.

Date of Report: July 21, 2021
Samples Submitted: July 13, 2021
Laboratory Reference: 2107-102
Project: CIP No. 1-8-900-OS

PAHs EPA 8270E/SIM

Matrix: Soil
Units: mg/Kg

Analyte	Result	PQL	Method	Date Prepared	Date Analyzed	Flags
Client ID:	**G-4**					
Laboratory ID:	07-102-04					
Naphthalene	**ND**	0.0068	EPA 8270E/SIM	7-13-21	7-13-21	
2-Methylnaphthalene	**ND**	0.0068	EPA 8270E/SIM	7-13-21	7-13-21	
1-Methylnaphthalene	**ND**	0.0068	EPA 8270E/SIM	7-13-21	7-13-21	
Acenaphthylene	**ND**	0.0068	EPA 8270E/SIM	7-13-21	7-13-21	
Acenaphthene	**0.015**	0.0068	EPA 8270E/SIM	7-13-21	7-13-21	
Fluorene	**0.0094**	0.0068	EPA 8270E/SIM	7-13-21	7-13-21	
Phenanthrene	**0.013**	0.0068	EPA 8270E/SIM	7-13-21	7-13-21	
Anthracene	**ND**	0.0068	EPA 8270E/SIM	7-13-21	7-13-21	
Fluoranthene	**ND**	0.0068	EPA 8270E/SIM	7-13-21	7-13-21	
Pyrene	**ND**	0.0068	EPA 8270E/SIM	7-13-21	7-13-21	
Benzo[a]anthracene	**ND**	0.0068	EPA 8270E/SIM	7-13-21	7-13-21	
Chrysene	**ND**	0.0068	EPA 8270E/SIM	7-13-21	7-13-21	
Benzo[b]fluoranthene	**ND**	0.0068	EPA 8270E/SIM	7-13-21	7-13-21	
Benzo(j,k)fluoranthene	**ND**	0.0068	EPA 8270E/SIM	7-13-21	7-13-21	
Benzo[a]pyrene	**ND**	0.0068	EPA 8270E/SIM	7-13-21	7-13-21	
Indeno(1,2,3-c,d)pyrene	**ND**	0.0068	EPA 8270E/SIM	7-13-21	7-13-21	
Dibenz[a,h]anthracene	**ND**	0.0068	EPA 8270E/SIM	7-13-21	7-13-21	
Benzo[g,h,i]perylene	**ND**	0.0068	EPA 8270E/SIM	7-13-21	7-13-21	
Surrogate:	*Percent Recovery*	*Control Limits*				
2-Fluorobiphenyl	*84*	*41 - 114*				
Pyrene-d10	*89*	*39 - 115*				
Terphenyl-d14	*88*	*44 - 125*				

This report pertains to the samples analyzed in accordance with the chain of custody, and is intended only for the use of the individual or company to whom it is addressed.

Date of Report: July 21, 2021
Samples Submitted: July 13, 2021
Laboratory Reference: 2107-102
Project: CIP No. 1-8-900-OS

PAHs EPA 8270E/SIM

Matrix: Soil
Units: mg/Kg

Analyte	Result	PQL	Method	Date Prepared	Date Analyzed	Flags
Client ID:	**G-5**					
Laboratory ID:	07-102-05					
Naphthalene	**ND**	0.0067	EPA 8270E/SIM	7-13-21	7-13-21	
2-Methylnaphthalene	**ND**	0.0067	EPA 8270E/SIM	7-13-21	7-13-21	
1-Methylnaphthalene	**ND**	0.0067	EPA 8270E/SIM	7-13-21	7-13-21	
Acenaphthylene	**ND**	0.0067	EPA 8270E/SIM	7-13-21	7-13-21	
Acenaphthene	**ND**	0.0067	EPA 8270E/SIM	7-13-21	7-13-21	
Fluorene	**ND**	0.0067	EPA 8270E/SIM	7-13-21	7-13-21	
Phenanthrene	**ND**	0.0067	EPA 8270E/SIM	7-13-21	7-13-21	
Anthracene	**ND**	0.0067	EPA 8270E/SIM	7-13-21	7-13-21	
Fluoranthene	**ND**	0.0067	EPA 8270E/SIM	7-13-21	7-13-21	
Pyrene	**ND**	0.0067	EPA 8270E/SIM	7-13-21	7-13-21	
Benzo[a]anthracene	**ND**	0.0067	EPA 8270E/SIM	7-13-21	7-13-21	
Chrysene	**ND**	0.0067	EPA 8270E/SIM	7-13-21	7-13-21	
Benzo[b]fluoranthene	**ND**	0.0067	EPA 8270E/SIM	7-13-21	7-13-21	
Benzo(j,k)fluoranthene	**ND**	0.0067	EPA 8270E/SIM	7-13-21	7-13-21	
Benzo[a]pyrene	**ND**	0.0067	EPA 8270E/SIM	7-13-21	7-13-21	
Indeno(1,2,3-c,d)pyrene	**ND**	0.0067	EPA 8270E/SIM	7-13-21	7-13-21	
Dibenz[a,h]anthracene	**ND**	0.0067	EPA 8270E/SIM	7-13-21	7-13-21	
Benzo[g,h,i]perylene	**ND**	0.0067	EPA 8270E/SIM	7-13-21	7-13-21	
Surrogate:	*Percent Recovery*	*Control Limits*				
2-Fluorobiphenyl	*80*	*41 - 114*				
Pyrene-d10	*83*	*39 - 115*				
Terphenyl-d14	*81*	*44 - 125*				

This report pertains to the samples analyzed in accordance with the chain of custody, and is intended only for the use of the individual or company to whom it is addressed.

Date of Report: July 21, 2021
Samples Submitted: July 13, 2021
Laboratory Reference: 2107-102
Project: CIP No. 1-8-900-OS

PAHs EPA 8270E/SIM

Matrix: Soil
Units: mg/Kg

Analyte	Result	PQL	Method	Date Prepared	Date Analyzed	Flags
Client ID:	**G-6**					
Laboratory ID:	07-102-06					
Naphthalene	**ND**	0.0067	EPA 8270E/SIM	7-13-21	7-13-21	
2-Methylnaphthalene	**ND**	0.0067	EPA 8270E/SIM	7-13-21	7-13-21	
1-Methylnaphthalene	**ND**	0.0067	EPA 8270E/SIM	7-13-21	7-13-21	
Acenaphthylene	**ND**	0.0067	EPA 8270E/SIM	7-13-21	7-13-21	
Acenaphthene	**ND**	0.0067	EPA 8270E/SIM	7-13-21	7-13-21	
Fluorene	**ND**	0.0067	EPA 8270E/SIM	7-13-21	7-13-21	
Phenanthrene	**ND**	0.0067	EPA 8270E/SIM	7-13-21	7-13-21	
Anthracene	**ND**	0.0067	EPA 8270E/SIM	7-13-21	7-13-21	
Fluoranthene	**ND**	0.0067	EPA 8270E/SIM	7-13-21	7-13-21	
Pyrene	**ND**	0.0067	EPA 8270E/SIM	7-13-21	7-13-21	
Benzo[a]anthracene	**ND**	0.0067	EPA 8270E/SIM	7-13-21	7-13-21	
Chrysene	**ND**	0.0067	EPA 8270E/SIM	7-13-21	7-13-21	
Benzo[b]fluoranthene	**ND**	0.0067	EPA 8270E/SIM	7-13-21	7-13-21	
Benzo(j,k)fluoranthene	**ND**	0.0067	EPA 8270E/SIM	7-13-21	7-13-21	
Benzo[a]pyrene	**ND**	0.0067	EPA 8270E/SIM	7-13-21	7-13-21	
Indeno(1,2,3-c,d)pyrene	**ND**	0.0067	EPA 8270E/SIM	7-13-21	7-13-21	
Dibenz[a,h]anthracene	**ND**	0.0067	EPA 8270E/SIM	7-13-21	7-13-21	
Benzo[g,h,i]perylene	**ND**	0.0067	EPA 8270E/SIM	7-13-21	7-13-21	
Surrogate:	*Percent Recovery*	*Control Limits*				
2-Fluorobiphenyl	*78*	*41 - 114*				
Pyrene-d10	*82*	*39 - 115*				
Terphenyl-d14	*81*	*44 - 125*				

This report pertains to the samples analyzed in accordance with the chain of custody, and is intended only for the use of the individual or company to whom it is addressed.

Date of Report: July 21, 2021
Samples Submitted: July 13, 2021
Laboratory Reference: 2107-102
Project: CIP No. 1-8-900-OS

PAHs EPA 8270E/SIM

Matrix: Soil
Units: mg/Kg

Analyte	Result	PQL	Method	Date Prepared	Date Analyzed	Flags
Client ID:	**G-7**					
Laboratory ID:	07-102-07					
Naphthalene	**ND**	0.0067	EPA 8270E/SIM	7-13-21	7-13-21	
2-Methylnaphthalene	**ND**	0.0067	EPA 8270E/SIM	7-13-21	7-13-21	
1-Methylnaphthalene	**ND**	0.0067	EPA 8270E/SIM	7-13-21	7-13-21	
Acenaphthylene	**ND**	0.0067	EPA 8270E/SIM	7-13-21	7-13-21	
Acenaphthene	**0.0077**	0.0067	EPA 8270E/SIM	7-13-21	7-13-21	
Fluorene	**ND**	0.0067	EPA 8270E/SIM	7-13-21	7-13-21	
Phenanthrene	**ND**	0.0067	EPA 8270E/SIM	7-13-21	7-13-21	
Anthracene	**ND**	0.0067	EPA 8270E/SIM	7-13-21	7-13-21	
Fluoranthene	**ND**	0.0067	EPA 8270E/SIM	7-13-21	7-13-21	
Pyrene	**ND**	0.0067	EPA 8270E/SIM	7-13-21	7-13-21	
Benzo[a]anthracene	**ND**	0.0067	EPA 8270E/SIM	7-13-21	7-13-21	
Chrysene	**ND**	0.0067	EPA 8270E/SIM	7-13-21	7-13-21	
Benzo[b]fluoranthene	**ND**	0.0067	EPA 8270E/SIM	7-13-21	7-13-21	
Benzo(j,k)fluoranthene	**ND**	0.0067	EPA 8270E/SIM	7-13-21	7-13-21	
Benzo[a]pyrene	**ND**	0.0067	EPA 8270E/SIM	7-13-21	7-13-21	
Indeno(1,2,3-c,d)pyrene	**ND**	0.0067	EPA 8270E/SIM	7-13-21	7-13-21	
Dibenz[a,h]anthracene	**ND**	0.0067	EPA 8270E/SIM	7-13-21	7-13-21	
Benzo[g,h,i]perylene	**ND**	0.0067	EPA 8270E/SIM	7-13-21	7-13-21	
Surrogate:	*Percent Recovery*	*Control Limits*				
2-Fluorobiphenyl	*86*	*41 - 114*				
Pyrene-d10	*86*	*39 - 115*				
Terphenyl-d14	*84*	*44 - 125*				

This report pertains to the samples analyzed in accordance with the chain of custody, and is intended only for the use of the individual or company to whom it is addressed.

Date of Report: July 21, 2021
Samples Submitted: July 13, 2021
Laboratory Reference: 2107-102
Project: CIP No. 1-8-900-OS

PAHs EPA 8270E/SIM

Matrix: Soil
Units: mg/Kg

Analyte	Result	PQL	Method	Date Prepared	Date Analyzed	Flags
Client ID:	**G-8**					
Laboratory ID:	07-102-08					
Naphthalene	**ND**	0.0067	EPA 8270E/SIM	7-13-21	7-13-21	
2-Methylnaphthalene	**ND**	0.0067	EPA 8270E/SIM	7-13-21	7-13-21	
1-Methylnaphthalene	**ND**	0.0067	EPA 8270E/SIM	7-13-21	7-13-21	
Acenaphthylene	**ND**	0.0067	EPA 8270E/SIM	7-13-21	7-13-21	
Acenaphthene	**ND**	0.0067	EPA 8270E/SIM	7-13-21	7-13-21	
Fluorene	**ND**	0.0067	EPA 8270E/SIM	7-13-21	7-13-21	
Phenanthrene	**ND**	0.0067	EPA 8270E/SIM	7-13-21	7-13-21	
Anthracene	**ND**	0.0067	EPA 8270E/SIM	7-13-21	7-13-21	
Fluoranthene	**ND**	0.0067	EPA 8270E/SIM	7-13-21	7-13-21	
Pyrene	**ND**	0.0067	EPA 8270E/SIM	7-13-21	7-13-21	
Benzo[a]anthracene	**ND**	0.0067	EPA 8270E/SIM	7-13-21	7-13-21	
Chrysene	**ND**	0.0067	EPA 8270E/SIM	7-13-21	7-13-21	
Benzo[b]fluoranthene	**ND**	0.0067	EPA 8270E/SIM	7-13-21	7-13-21	
Benzo(j,k)fluoranthene	**ND**	0.0067	EPA 8270E/SIM	7-13-21	7-13-21	
Benzo[a]pyrene	**ND**	0.0067	EPA 8270E/SIM	7-13-21	7-13-21	
Indeno(1,2,3-c,d)pyrene	**ND**	0.0067	EPA 8270E/SIM	7-13-21	7-13-21	
Dibenz[a,h]anthracene	**ND**	0.0067	EPA 8270E/SIM	7-13-21	7-13-21	
Benzo[g,h,i]perylene	**ND**	0.0067	EPA 8270E/SIM	7-13-21	7-13-21	
Surrogate:	*Percent Recovery*	*Control Limits*				
2-Fluorobiphenyl	*69*	*41 - 114*				
Pyrene-d10	*80*	*39 - 115*				
Terphenyl-d14	*80*	*44 - 125*				

This report pertains to the samples analyzed in accordance with the chain of custody, and is intended only for the use of the individual or company to whom it is addressed.

Date of Report: July 21, 2021
Samples Submitted: July 13, 2021
Laboratory Reference: 2107-102
Project: CIP No. 1-8-900-OS

PAHs EPA 8270E/SIM

Matrix: Soil
Units: mg/Kg

Analyte	Result	PQL	Method	Date Prepared	Date Analyzed	Flags
Client ID:	**G-9**					
Laboratory ID:	07-102-09					
Naphthalene	**ND**	0.0067	EPA 8270E/SIM	7-13-21	7-13-21	
2-Methylnaphthalene	**ND**	0.0067	EPA 8270E/SIM	7-13-21	7-13-21	
1-Methylnaphthalene	**ND**	0.0067	EPA 8270E/SIM	7-13-21	7-13-21	
Acenaphthylene	**ND**	0.0067	EPA 8270E/SIM	7-13-21	7-13-21	
Acenaphthene	**ND**	0.0067	EPA 8270E/SIM	7-13-21	7-13-21	
Fluorene	**ND**	0.0067	EPA 8270E/SIM	7-13-21	7-13-21	
Phenanthrene	**ND**	0.0067	EPA 8270E/SIM	7-13-21	7-13-21	
Anthracene	**ND**	0.0067	EPA 8270E/SIM	7-13-21	7-13-21	
Fluoranthene	**ND**	0.0067	EPA 8270E/SIM	7-13-21	7-13-21	
Pyrene	**ND**	0.0067	EPA 8270E/SIM	7-13-21	7-13-21	
Benzo[a]anthracene	**ND**	0.0067	EPA 8270E/SIM	7-13-21	7-13-21	
Chrysene	**ND**	0.0067	EPA 8270E/SIM	7-13-21	7-13-21	
Benzo[b]fluoranthene	**ND**	0.0067	EPA 8270E/SIM	7-13-21	7-13-21	
Benzo(j,k)fluoranthene	**ND**	0.0067	EPA 8270E/SIM	7-13-21	7-13-21	
Benzo[a]pyrene	**ND**	0.0067	EPA 8270E/SIM	7-13-21	7-13-21	
Indeno(1,2,3-c,d)pyrene	**ND**	0.0067	EPA 8270E/SIM	7-13-21	7-13-21	
Dibenz[a,h]anthracene	**ND**	0.0067	EPA 8270E/SIM	7-13-21	7-13-21	
Benzo[g,h,i]perylene	**ND**	0.0067	EPA 8270E/SIM	7-13-21	7-13-21	
Surrogate:	*Percent Recovery*	*Control Limits*				
2-Fluorobiphenyl	*74*	*41 - 114*				
Pyrene-d10	*92*	*39 - 115*				
Terphenyl-d14	*90*	*44 - 125*				

This report pertains to the samples analyzed in accordance with the chain of custody, and is intended only for the use of the individual or company to whom it is addressed.

Date of Report: July 21, 2021
Samples Submitted: July 13, 2021
Laboratory Reference: 2107-102
Project: CIP No. 1-8-900-OS

PAHs EPA 8270E/SIM

Matrix: Soil
Units: mg/Kg

Analyte	Result	PQL	Method	Date Prepared	Date Analyzed	Flags
Client ID:	**G-10**					
Laboratory ID:	07-102-10					
Naphthalene	**ND**	0.0067	EPA 8270E/SIM	7-13-21	7-13-21	
2-Methylnaphthalene	**ND**	0.0067	EPA 8270E/SIM	7-13-21	7-13-21	
1-Methylnaphthalene	**ND**	0.0067	EPA 8270E/SIM	7-13-21	7-13-21	
Acenaphthylene	**ND**	0.0067	EPA 8270E/SIM	7-13-21	7-13-21	
Acenaphthene	**ND**	0.0067	EPA 8270E/SIM	7-13-21	7-13-21	
Fluorene	**ND**	0.0067	EPA 8270E/SIM	7-13-21	7-13-21	
Phenanthrene	**ND**	0.0067	EPA 8270E/SIM	7-13-21	7-13-21	
Anthracene	**ND**	0.0067	EPA 8270E/SIM	7-13-21	7-13-21	
Fluoranthene	**ND**	0.0067	EPA 8270E/SIM	7-13-21	7-13-21	
Pyrene	**ND**	0.0067	EPA 8270E/SIM	7-13-21	7-13-21	
Benzo[a]anthracene	**ND**	0.0067	EPA 8270E/SIM	7-13-21	7-13-21	
Chrysene	**ND**	0.0067	EPA 8270E/SIM	7-13-21	7-13-21	
Benzo[b]fluoranthene	**ND**	0.0067	EPA 8270E/SIM	7-13-21	7-13-21	
Benzo(j,k)fluoranthene	**ND**	0.0067	EPA 8270E/SIM	7-13-21	7-13-21	
Benzo[a]pyrene	**ND**	0.0067	EPA 8270E/SIM	7-13-21	7-13-21	
Indeno(1,2,3-c,d)pyrene	**ND**	0.0067	EPA 8270E/SIM	7-13-21	7-13-21	
Dibenz[a,h]anthracene	**ND**	0.0067	EPA 8270E/SIM	7-13-21	7-13-21	
Benzo[g,h,i]perylene	**ND**	0.0067	EPA 8270E/SIM	7-13-21	7-13-21	
Surrogate:	*Percent Recovery*	*Control Limits*				
2-Fluorobiphenyl	*89*	*41 - 114*				
Pyrene-d10	*94*	*39 - 115*				
Terphenyl-d14	*92*	*44 - 125*				

This report pertains to the samples analyzed in accordance with the chain of custody, and is intended only for the use of the individual or company to whom it is addressed.

Date of Report: July 21, 2021
Samples Submitted: July 13, 2021
Laboratory Reference: 2107-102
Project: CIP No. 1-8-900-OS

PAHs EPA 8270E/SIM

Matrix: Soil
Units: mg/Kg

Analyte	Result	PQL	Method	Date Prepared	Date Analyzed	Flags
Client ID:	**G-11**					
Laboratory ID:	07-102-11					
Naphthalene	**ND**	0.0067	EPA 8270E/SIM	7-13-21	7-13-21	
2-Methylnaphthalene	**ND**	0.0067	EPA 8270E/SIM	7-13-21	7-13-21	
1-Methylnaphthalene	**ND**	0.0067	EPA 8270E/SIM	7-13-21	7-13-21	
Acenaphthylene	**ND**	0.0067	EPA 8270E/SIM	7-13-21	7-13-21	
Acenaphthene	**ND**	0.0067	EPA 8270E/SIM	7-13-21	7-13-21	
Fluorene	**ND**	0.0067	EPA 8270E/SIM	7-13-21	7-13-21	
Phenanthrene	**0.011**	0.0067	EPA 8270E/SIM	7-13-21	7-13-21	
Anthracene	**ND**	0.0067	EPA 8270E/SIM	7-13-21	7-13-21	
Fluoranthene	**0.0082**	0.0067	EPA 8270E/SIM	7-13-21	7-13-21	
Pyrene	**0.0098**	0.0067	EPA 8270E/SIM	7-13-21	7-13-21	
Benzo[a]anthracene	**ND**	0.0067	EPA 8270E/SIM	7-13-21	7-13-21	
Chrysene	**ND**	0.0067	EPA 8270E/SIM	7-13-21	7-13-21	
Benzo[b]fluoranthene	**ND**	0.0067	EPA 8270E/SIM	7-13-21	7-13-21	
Benzo(j,k)fluoranthene	**ND**	0.0067	EPA 8270E/SIM	7-13-21	7-13-21	
Benzo[a]pyrene	**ND**	0.0067	EPA 8270E/SIM	7-13-21	7-13-21	
Indeno(1,2,3-c,d)pyrene	**ND**	0.0067	EPA 8270E/SIM	7-13-21	7-13-21	
Dibenz[a,h]anthracene	**ND**	0.0067	EPA 8270E/SIM	7-13-21	7-13-21	
Benzo[g,h,i]perylene	**ND**	0.0067	EPA 8270E/SIM	7-13-21	7-13-21	
Surrogate:	*Percent Recovery*	*Control Limits*				
2-Fluorobiphenyl	*81*	*41 - 114*				
Pyrene-d10	*92*	*39 - 115*				
Terphenyl-d14	*90*	*44 - 125*				

This report pertains to the samples analyzed in accordance with the chain of custody, and is intended only for the use of the individual or company to whom it is addressed.

Date of Report: July 21, 2021
Samples Submitted: July 13, 2021
Laboratory Reference: 2107-102
Project: CIP No. 1-8-900-OS

PAHs EPA 8270E/SIM

Matrix: Soil
Units: mg/Kg

Analyte	Result	PQL	Method	Date Prepared	Date Analyzed	Flags
Client ID:	**G-12**					
Laboratory ID:	07-102-12					
Naphthalene	**ND**	0.0067	EPA 8270E/SIM	7-13-21	7-13-21	
2-Methylnaphthalene	**ND**	0.0067	EPA 8270E/SIM	7-13-21	7-13-21	
1-Methylnaphthalene	**ND**	0.0067	EPA 8270E/SIM	7-13-21	7-13-21	
Acenaphthylene	**ND**	0.0067	EPA 8270E/SIM	7-13-21	7-13-21	
Acenaphthene	**ND**	0.0067	EPA 8270E/SIM	7-13-21	7-13-21	
Fluorene	**ND**	0.0067	EPA 8270E/SIM	7-13-21	7-13-21	
Phenanthrene	**ND**	0.0067	EPA 8270E/SIM	7-13-21	7-13-21	
Anthracene	**ND**	0.0067	EPA 8270E/SIM	7-13-21	7-13-21	
Fluoranthene	**ND**	0.0067	EPA 8270E/SIM	7-13-21	7-13-21	
Pyrene	**ND**	0.0067	EPA 8270E/SIM	7-13-21	7-13-21	
Benzo[a]anthracene	**ND**	0.0067	EPA 8270E/SIM	7-13-21	7-13-21	
Chrysene	**ND**	0.0067	EPA 8270E/SIM	7-13-21	7-13-21	
Benzo[b]fluoranthene	**ND**	0.0067	EPA 8270E/SIM	7-13-21	7-13-21	
Benzo(j,k)fluoranthene	**ND**	0.0067	EPA 8270E/SIM	7-13-21	7-13-21	
Benzo[a]pyrene	**ND**	0.0067	EPA 8270E/SIM	7-13-21	7-13-21	
Indeno(1,2,3-c,d)pyrene	**ND**	0.0067	EPA 8270E/SIM	7-13-21	7-13-21	
Dibenz[a,h]anthracene	**ND**	0.0067	EPA 8270E/SIM	7-13-21	7-13-21	
Benzo[g,h,i]perylene	**ND**	0.0067	EPA 8270E/SIM	7-13-21	7-13-21	
Surrogate:	*Percent Recovery*	*Control Limits*				
2-Fluorobiphenyl	*59*	*41 - 114*				
Pyrene-d10	*91*	*39 - 115*				
Terphenyl-d14	*92*	*44 - 125*				

This report pertains to the samples analyzed in accordance with the chain of custody, and is intended only for the use of the individual or company to whom it is addressed.

Date of Report: July 21, 2021
Samples Submitted: July 13, 2021
Laboratory Reference: 2107-102
Project: CIP No. 1-8-900-OS

PAHs EPA 8270E/SIM

Matrix: Soil
Units: mg/Kg

Analyte	Result	PQL	Method	Date Prepared	Date Analyzed	Flags
Client ID:	**G-13**					
Laboratory ID:	07-102-13					
Naphthalene	**ND**	0.0067	EPA 8270E/SIM	7-13-21	7-13-21	
2-Methylnaphthalene	**ND**	0.0067	EPA 8270E/SIM	7-13-21	7-13-21	
1-Methylnaphthalene	**ND**	0.0067	EPA 8270E/SIM	7-13-21	7-13-21	
Acenaphthylene	**ND**	0.0067	EPA 8270E/SIM	7-13-21	7-13-21	
Acenaphthene	**ND**	0.0067	EPA 8270E/SIM	7-13-21	7-13-21	
Fluorene	**ND**	0.0067	EPA 8270E/SIM	7-13-21	7-13-21	
Phenanthrene	**ND**	0.0067	EPA 8270E/SIM	7-13-21	7-13-21	
Anthracene	**ND**	0.0067	EPA 8270E/SIM	7-13-21	7-13-21	
Fluoranthene	**ND**	0.0067	EPA 8270E/SIM	7-13-21	7-13-21	
Pyrene	**ND**	0.0067	EPA 8270E/SIM	7-13-21	7-13-21	
Benzo[a]anthracene	**ND**	0.0067	EPA 8270E/SIM	7-13-21	7-13-21	
Chrysene	**ND**	0.0067	EPA 8270E/SIM	7-13-21	7-13-21	
Benzo[b]fluoranthene	**ND**	0.0067	EPA 8270E/SIM	7-13-21	7-13-21	
Benzo(j,k)fluoranthene	**ND**	0.0067	EPA 8270E/SIM	7-13-21	7-13-21	
Benzo[a]pyrene	**ND**	0.0067	EPA 8270E/SIM	7-13-21	7-13-21	
Indeno(1,2,3-c,d)pyrene	**ND**	0.0067	EPA 8270E/SIM	7-13-21	7-13-21	
Dibenz[a,h]anthracene	**ND**	0.0067	EPA 8270E/SIM	7-13-21	7-13-21	
Benzo[g,h,i]perylene	**ND**	0.0067	EPA 8270E/SIM	7-13-21	7-13-21	
Surrogate:	*Percent Recovery*	*Control Limits*				
2-Fluorobiphenyl	*67*	*41 - 114*				
Pyrene-d10	*86*	*39 - 115*				
Terphenyl-d14	*87*	*44 - 125*				

This report pertains to the samples analyzed in accordance with the chain of custody, and is intended only for the use of the individual or company to whom it is addressed.

Date of Report: July 21, 2021
Samples Submitted: July 13, 2021
Laboratory Reference: 2107-102
Project: CIP No. 1-8-900-OS

PAHs EPA 8270E/SIM

Matrix: Soil
Units: mg/Kg

Analyte	Result	PQL	Method	Date Prepared	Date Analyzed	Flags
Client ID:	**G-14**					
Laboratory ID:	07-102-14					
Naphthalene	**ND**	0.0067	EPA 8270E/SIM	7-13-21	7-13-21	
2-Methylnaphthalene	**ND**	0.0067	EPA 8270E/SIM	7-13-21	7-13-21	
1-Methylnaphthalene	**ND**	0.0067	EPA 8270E/SIM	7-13-21	7-13-21	
Acenaphthylene	**ND**	0.0067	EPA 8270E/SIM	7-13-21	7-13-21	
Acenaphthene	**ND**	0.0067	EPA 8270E/SIM	7-13-21	7-13-21	
Fluorene	**ND**	0.0067	EPA 8270E/SIM	7-13-21	7-13-21	
Phenanthrene	**ND**	0.0067	EPA 8270E/SIM	7-13-21	7-13-21	
Anthracene	**ND**	0.0067	EPA 8270E/SIM	7-13-21	7-13-21	
Fluoranthene	**ND**	0.0067	EPA 8270E/SIM	7-13-21	7-13-21	
Pyrene	**ND**	0.0067	EPA 8270E/SIM	7-13-21	7-13-21	
Benzo[a]anthracene	**ND**	0.0067	EPA 8270E/SIM	7-13-21	7-13-21	
Chrysene	**ND**	0.0067	EPA 8270E/SIM	7-13-21	7-13-21	
Benzo[b]fluoranthene	**ND**	0.0067	EPA 8270E/SIM	7-13-21	7-13-21	
Benzo(j,k)fluoranthene	**ND**	0.0067	EPA 8270E/SIM	7-13-21	7-13-21	
Benzo[a]pyrene	**ND**	0.0067	EPA 8270E/SIM	7-13-21	7-13-21	
Indeno(1,2,3-c,d)pyrene	**ND**	0.0067	EPA 8270E/SIM	7-13-21	7-13-21	
Dibenz[a,h]anthracene	**ND**	0.0067	EPA 8270E/SIM	7-13-21	7-13-21	
Benzo[g,h,i]perylene	**ND**	0.0067	EPA 8270E/SIM	7-13-21	7-13-21	
Surrogate:	*Percent Recovery*	*Control Limits*				
2-Fluorobiphenyl	*81*	*41 - 114*				
Pyrene-d10	*87*	*39 - 115*				
Terphenyl-d14	*88*	*44 - 125*				

This report pertains to the samples analyzed in accordance with the chain of custody, and is intended only for the use of the individual or company to whom it is addressed.

Date of Report: July 21, 2021
Samples Submitted: July 13, 2021
Laboratory Reference: 2107-102
Project: CIP No. 1-8-900-OS

PAHs EPA 8270E/SIM

Matrix: Soil
Units: mg/Kg

Analyte	Result	PQL	Method	Date Prepared	Date Analyzed	Flags
Client ID:	**G-15**					
Laboratory ID:	07-102-15					
Naphthalene	**ND**	0.0067	EPA 8270E/SIM	7-13-21	7-13-21	
2-Methylnaphthalene	**ND**	0.0067	EPA 8270E/SIM	7-13-21	7-13-21	
1-Methylnaphthalene	**ND**	0.0067	EPA 8270E/SIM	7-13-21	7-13-21	
Acenaphthylene	**ND**	0.0067	EPA 8270E/SIM	7-13-21	7-13-21	
Acenaphthene	**ND**	0.0067	EPA 8270E/SIM	7-13-21	7-13-21	
Fluorene	**ND**	0.0067	EPA 8270E/SIM	7-13-21	7-13-21	
Phenanthrene	**ND**	0.0067	EPA 8270E/SIM	7-13-21	7-13-21	
Anthracene	**ND**	0.0067	EPA 8270E/SIM	7-13-21	7-13-21	
Fluoranthene	**ND**	0.0067	EPA 8270E/SIM	7-13-21	7-13-21	
Pyrene	**ND**	0.0067	EPA 8270E/SIM	7-13-21	7-13-21	
Benzo[a]anthracene	**ND**	0.0067	EPA 8270E/SIM	7-13-21	7-13-21	
Chrysene	**ND**	0.0067	EPA 8270E/SIM	7-13-21	7-13-21	
Benzo[b]fluoranthene	**ND**	0.0067	EPA 8270E/SIM	7-13-21	7-13-21	
Benzo(j,k)fluoranthene	**ND**	0.0067	EPA 8270E/SIM	7-13-21	7-13-21	
Benzo[a]pyrene	**ND**	0.0067	EPA 8270E/SIM	7-13-21	7-13-21	
Indeno(1,2,3-c,d)pyrene	**ND**	0.0067	EPA 8270E/SIM	7-13-21	7-13-21	
Dibenz[a,h]anthracene	**ND**	0.0067	EPA 8270E/SIM	7-13-21	7-13-21	
Benzo[g,h,i]perylene	**ND**	0.0067	EPA 8270E/SIM	7-13-21	7-13-21	
Surrogate:	*Percent Recovery*	*Control Limits*				
2-Fluorobiphenyl	*74*	*41 - 114*				
Pyrene-d10	*91*	*39 - 115*				
Terphenyl-d14	*91*	*44 - 125*				

This report pertains to the samples analyzed in accordance with the chain of custody,
and is intended only for the use of the individual or company to whom it is addressed.

Date of Report: July 21, 2021
Samples Submitted: July 13, 2021
Laboratory Reference: 2107-102
Project: CIP No. 1-8-900-OS

PAHs EPA 8270E/SIM
QUALITY CONTROL

Matrix: Soil
Units: mg/Kg

Analyte	Result	PQL	Method	Date Prepared	Date Analyzed	Flags
METHOD BLANK						
Laboratory ID:	MB0713S1					
Naphthalene	**ND**	0.0067	EPA 8270E/SIM	7-13-21	7-13-21	
2-Methylnaphthalene	**ND**	0.0067	EPA 8270E/SIM	7-13-21	7-13-21	
1-Methylnaphthalene	**ND**	0.0067	EPA 8270E/SIM	7-13-21	7-13-21	
Acenaphthylene	**ND**	0.0067	EPA 8270E/SIM	7-13-21	7-13-21	
Acenaphthene	**ND**	0.0067	EPA 8270E/SIM	7-13-21	7-13-21	
Fluorene	**ND**	0.0067	EPA 8270E/SIM	7-13-21	7-13-21	
Phenanthrene	**ND**	0.0067	EPA 8270E/SIM	7-13-21	7-13-21	
Anthracene	**ND**	0.0067	EPA 8270E/SIM	7-13-21	7-13-21	
Fluoranthene	**ND**	0.0067	EPA 8270E/SIM	7-13-21	7-13-21	
Pyrene	**ND**	0.0067	EPA 8270E/SIM	7-13-21	7-13-21	
Benzo[a]anthracene	**ND**	0.0067	EPA 8270E/SIM	7-13-21	7-13-21	
Chrysene	**ND**	0.0067	EPA 8270E/SIM	7-13-21	7-13-21	
Benzo[b]fluoranthene	**ND**	0.0067	EPA 8270E/SIM	7-13-21	7-13-21	
Benzo(j,k)fluoranthene	**ND**	0.0067	EPA 8270E/SIM	7-13-21	7-13-21	
Benzo[a]pyrene	**ND**	0.0067	EPA 8270E/SIM	7-13-21	7-13-21	
Indeno(1,2,3-c,d)pyrene	**ND**	0.0067	EPA 8270E/SIM	7-13-21	7-13-21	
Dibenz[a,h]anthracene	**ND**	0.0067	EPA 8270E/SIM	7-13-21	7-13-21	
Benzo[g,h,i]perylene	**ND**	0.0067	EPA 8270E/SIM	7-13-21	7-13-21	
Surrogate:	*Percent Recovery*	*Control Limits*				
2-Fluorobiphenyl	*105*	*41 - 114*				
Pyrene-d10	*100*	*39 - 115*				
Terphenyl-d14	*110*	*44 - 125*				

This report pertains to the samples analyzed in accordance with the chain of custody, and is intended only for the use of the individual or company to whom it is addressed.

Date of Report: July 21, 2021
Samples Submitted: July 13, 2021
Laboratory Reference: 2107-102
Project: CIP No. 1-8-900-OS

PAHs EPA 8270E/SIM
QUALITY CONTROL

Matrix: Soil
Units: mg/Kg

Analyte	Result		Spike Level		Percent Recovery		Recovery Limits	RPD	RPD Limit	Flags
SPIKE BLANKS										
Laboratory ID:	SB0713S1									
	SB	SBD	SB	SBD	SB	SBD				
Naphthalene	**0.0899**	**0.0783**	0.0833	0.0833	108	94	57 - 117	14	16	
Acenaphthylene	**0.0959**	**0.0945**	0.0833	0.0833	115	113	58 - 126	1	15	
Acenaphthene	**0.0942**	**0.0933**	0.0833	0.0833	113	112	61 - 122	1	15	
Fluorene	**0.0957**	**0.0921**	0.0833	0.0833	115	111	59 - 127	4	15	
Phenanthrene	**0.0906**	**0.0898**	0.0833	0.0833	109	108	58 - 124	1	15	
Anthracene	**0.0967**	**0.0916**	0.0833	0.0833	116	110	64 - 128	5	15	
Fluoranthene	**0.0907**	**0.0870**	0.0833	0.0833	109	104	63 - 128	4	15	
Pyrene	**0.0919**	**0.0880**	0.0833	0.0833	110	106	62 - 129	4	15	
Benzo[a]anthracene	**0.0892**	**0.0916**	0.0833	0.0833	107	110	64 - 138	3	15	
Chrysene	**0.0956**	**0.0890**	0.0833	0.0833	115	107	63 - 128	7	15	
Benzo[b]fluoranthene	**0.0998**	**0.0977**	0.0833	0.0833	120	117	62 - 129	2	15	
Benzo(j,k)fluoranthene	**0.0921**	**0.0896**	0.0833	0.0833	111	108	59 - 134	3	16	
Benzo[a]pyrene	**0.0958**	**0.0984**	0.0833	0.0833	115	118	63 - 132	3	15	
Indeno(1,2,3-c,d)pyrene	**0.0942**	**0.0967**	0.0833	0.0833	113	116	58 - 132	3	15	
Dibenz[a,h]anthracene	**0.0962**	**0.0935**	0.0833	0.0833	115	112	60 - 130	3	15	
Benzo[g,h,i]perylene	**0.0959**	**0.0934**	0.0833	0.0833	115	112	61 - 129	3	15	
Surrogate:										
2-Fluorobiphenyl					*105*	*104*	*41 - 114*			
Pyrene-d10					*102*	*98*	*39 - 115*			
Terphenyl-d14					*101*	*96*	*44 - 125*			

This report pertains to the samples analyzed in accordance with the chain of custody, and is intended only for the use of the individual or company to whom it is addressed.

Date of Report: July 21, 2021
Samples Submitted: July 13, 2021
Laboratory Reference: 2107-102
Project: CIP No. 1-8-900-OS

PCBs EPA 8082A

Matrix: Soil
Units: mg/Kg (ppm)

Analyte	Result	PQL	Method	Date Prepared	Date Analyzed	Flags
Client ID:	**G-1**					
Laboratory ID:	07-102-01					
Aroclor 1016	**ND**	0.052	EPA 8082A	7-14-21	7-14-21	
Aroclor 1221	**ND**	0.052	EPA 8082A	7-14-21	7-14-21	
Aroclor 1232	**ND**	0.052	EPA 8082A	7-14-21	7-14-21	
Aroclor 1242	**ND**	0.052	EPA 8082A	7-14-21	7-14-21	
Aroclor 1248	**ND**	0.052	EPA 8082A	7-14-21	7-14-21	
Aroclor 1254	**ND**	0.052	EPA 8082A	7-14-21	7-14-21	
Aroclor 1260	**ND**	0.052	EPA 8082A	7-14-21	7-14-21	
Surrogate:	*Percent Recovery*	*Control Limits*				
DCB	*77*	*54-135*				
Client ID:	**G-2**					
Laboratory ID:	07-102-02					
Aroclor 1016	**ND**	0.052	EPA 8082A	7-14-21	7-14-21	
Aroclor 1221	**ND**	0.052	EPA 8082A	7-14-21	7-14-21	
Aroclor 1232	**ND**	0.052	EPA 8082A	7-14-21	7-14-21	
Aroclor 1242	**ND**	0.052	EPA 8082A	7-14-21	7-14-21	
Aroclor 1248	**ND**	0.052	EPA 8082A	7-14-21	7-14-21	
Aroclor 1254	**ND**	0.052	EPA 8082A	7-14-21	7-14-21	
Aroclor 1260	**ND**	0.052	EPA 8082A	7-14-21	7-14-21	
Surrogate:	*Percent Recovery*	*Control Limits*				
DCB	*76*	*54-135*				
Client ID:	**G-3**					
Laboratory ID:	07-102-03					
Aroclor 1016	**ND**	0.050	EPA 8082A	7-14-21	7-14-21	
Aroclor 1221	**ND**	0.050	EPA 8082A	7-14-21	7-14-21	
Aroclor 1232	**ND**	0.050	EPA 8082A	7-14-21	7-14-21	
Aroclor 1242	**ND**	0.050	EPA 8082A	7-14-21	7-14-21	
Aroclor 1248	**ND**	0.050	EPA 8082A	7-14-21	7-14-21	
Aroclor 1254	**ND**	0.050	EPA 8082A	7-14-21	7-14-21	
Aroclor 1260	**ND**	0.050	EPA 8082A	7-14-21	7-14-21	
Surrogate:	*Percent Recovery*	*Control Limits*				
DCB	*60*	*54-135*				

This report pertains to the samples analyzed in accordance with the chain of custody,
and is intended only for the use of the individual or company to whom it is addressed.

Date of Report: July 21, 2021
Samples Submitted: July 13, 2021
Laboratory Reference: 2107-102
Project: CIP No. 1-8-900-OS

PCBs EPA 8082A

Matrix: Soil
Units: mg/Kg (ppm)

Analyte	Result	PQL	Method	Date Prepared	Date Analyzed	Flags
Client ID:	**G-4**					
Laboratory ID:	07-102-04					
Aroclor 1016	**ND**	0.051	EPA 8082A	7-14-21	7-15-21	
Aroclor 1221	**ND**	0.051	EPA 8082A	7-14-21	7-15-21	
Aroclor 1232	**ND**	0.051	EPA 8082A	7-14-21	7-15-21	
Aroclor 1242	**ND**	0.051	EPA 8082A	7-14-21	7-15-21	
Aroclor 1248	**ND**	0.051	EPA 8082A	7-14-21	7-15-21	
Aroclor 1254	**ND**	0.051	EPA 8082A	7-14-21	7-15-21	
Aroclor 1260	**ND**	0.051	EPA 8082A	7-14-21	7-15-21	
Surrogate:	*Percent Recovery*	*Control Limits*				
DCB	*82*	*54-135*				
Client ID:	**G-5**					
Laboratory ID:	07-102-05					
Aroclor 1016	**ND**	0.050	EPA 8082A	7-14-21	7-15-21	
Aroclor 1221	**ND**	0.050	EPA 8082A	7-14-21	7-15-21	
Aroclor 1232	**ND**	0.050	EPA 8082A	7-14-21	7-15-21	
Aroclor 1242	**ND**	0.050	EPA 8082A	7-14-21	7-15-21	
Aroclor 1248	**ND**	0.050	EPA 8082A	7-14-21	7-15-21	
Aroclor 1254	**ND**	0.050	EPA 8082A	7-14-21	7-15-21	
Aroclor 1260	**ND**	0.050	EPA 8082A	7-14-21	7-15-21	
Surrogate:	*Percent Recovery*	*Control Limits*				
DCB	*84*	*54-135*				
Client ID:	**G-6**					
Laboratory ID:	07-102-06					
Aroclor 1016	**ND**	0.050	EPA 8082A	7-14-21	7-14-21	
Aroclor 1221	**ND**	0.050	EPA 8082A	7-14-21	7-14-21	
Aroclor 1232	**ND**	0.050	EPA 8082A	7-14-21	7-14-21	
Aroclor 1242	**ND**	0.050	EPA 8082A	7-14-21	7-14-21	
Aroclor 1248	**ND**	0.050	EPA 8082A	7-14-21	7-14-21	
Aroclor 1254	**ND**	0.050	EPA 8082A	7-14-21	7-14-21	
Aroclor 1260	**ND**	0.050	EPA 8082A	7-14-21	7-14-21	
Surrogate:	*Percent Recovery*	*Control Limits*				
DCB	*72*	*54-135*				

This report pertains to the samples analyzed in accordance with the chain of custody,
and is intended only for the use of the individual or company to whom it is addressed.

Date of Report: July 21, 2021
Samples Submitted: July 13, 2021
Laboratory Reference: 2107-102
Project: CIP No. 1-8-900-OS

PCBs EPA 8082A

Matrix: Soil
Units: mg/Kg (ppm)

Analyte	Result	PQL	Method	Date Prepared	Date Analyzed	Flags
Client ID:	**G-7**					
Laboratory ID:	07-102-07					
Aroclor 1016	**ND**	0.050	EPA 8082A	7-14-21	7-14-21	
Aroclor 1221	**ND**	0.050	EPA 8082A	7-14-21	7-14-21	
Aroclor 1232	**ND**	0.050	EPA 8082A	7-14-21	7-14-21	
Aroclor 1242	**ND**	0.050	EPA 8082A	7-14-21	7-14-21	
Aroclor 1248	**ND**	0.050	EPA 8082A	7-14-21	7-14-21	
Aroclor 1254	**ND**	0.050	EPA 8082A	7-14-21	7-14-21	
Aroclor 1260	**ND**	0.050	EPA 8082A	7-14-21	7-14-21	
Surrogate:	*Percent Recovery*	*Control Limits*				
DCB	*84*	*54-135*				
Client ID:	**G-8**					
Laboratory ID:	07-102-08					
Aroclor 1016	**ND**	0.050	EPA 8082A	7-14-21	7-14-21	
Aroclor 1221	**ND**	0.050	EPA 8082A	7-14-21	7-14-21	
Aroclor 1232	**ND**	0.050	EPA 8082A	7-14-21	7-14-21	
Aroclor 1242	**ND**	0.050	EPA 8082A	7-14-21	7-14-21	
Aroclor 1248	**ND**	0.050	EPA 8082A	7-14-21	7-14-21	
Aroclor 1254	**ND**	0.050	EPA 8082A	7-14-21	7-14-21	
Aroclor 1260	**ND**	0.050	EPA 8082A	7-14-21	7-14-21	
Surrogate:	*Percent Recovery*	*Control Limits*				
DCB	*85*	*54-135*				
Client ID:	**G-9**					
Laboratory ID:	07-102-09					
Aroclor 1016	**ND**	0.050	EPA 8082A	7-14-21	7-14-21	
Aroclor 1221	**ND**	0.050	EPA 8082A	7-14-21	7-14-21	
Aroclor 1232	**ND**	0.050	EPA 8082A	7-14-21	7-14-21	
Aroclor 1242	**ND**	0.050	EPA 8082A	7-14-21	7-14-21	
Aroclor 1248	**ND**	0.050	EPA 8082A	7-14-21	7-14-21	
Aroclor 1254	**ND**	0.050	EPA 8082A	7-14-21	7-14-21	
Aroclor 1260	**ND**	0.050	EPA 8082A	7-14-21	7-14-21	
Surrogate:	*Percent Recovery*	*Control Limits*				
DCB	*92*	*54-135*				

This report pertains to the samples analyzed in accordance with the chain of custody,
and is intended only for the use of the individual or company to whom it is addressed.

Date of Report: July 21, 2021
Samples Submitted: July 13, 2021
Laboratory Reference: 2107-102
Project: CIP No. 1-8-900-OS

PCBs EPA 8082A

Matrix: Soil
Units: mg/Kg (ppm)

Analyte	Result	PQL	Method	Date Prepared	Date Analyzed	Flags
Client ID:	**G-10**					
Laboratory ID:	07-102-10					
Aroclor 1016	**ND**	0.051	EPA 8082A	7-14-21	7-14-21	
Aroclor 1221	**ND**	0.051	EPA 8082A	7-14-21	7-14-21	
Aroclor 1232	**ND**	0.051	EPA 8082A	7-14-21	7-14-21	
Aroclor 1242	**ND**	0.051	EPA 8082A	7-14-21	7-14-21	
Aroclor 1248	**ND**	0.051	EPA 8082A	7-14-21	7-14-21	
Aroclor 1254	**ND**	0.051	EPA 8082A	7-14-21	7-14-21	
Aroclor 1260	**ND**	0.051	EPA 8082A	7-14-21	7-14-21	
Surrogate:	*Percent Recovery*	*Control Limits*				
DCB	*81*	*54-135*				
Client ID:	**G-11**					
Laboratory ID:	07-102-11					
Aroclor 1016	**ND**	0.050	EPA 8082A	7-14-21	7-14-21	
Aroclor 1221	**ND**	0.050	EPA 8082A	7-14-21	7-14-21	
Aroclor 1232	**ND**	0.050	EPA 8082A	7-14-21	7-14-21	
Aroclor 1242	**ND**	0.050	EPA 8082A	7-14-21	7-14-21	
Aroclor 1248	**ND**	0.050	EPA 8082A	7-14-21	7-14-21	
Aroclor 1254	**ND**	0.050	EPA 8082A	7-14-21	7-14-21	
Aroclor 1260	**ND**	0.050	EPA 8082A	7-14-21	7-14-21	
Surrogate:	*Percent Recovery*	*Control Limits*				
DCB	*79*	*54-135*				
Client ID:	**G-12**					
Laboratory ID:	07-102-12					
Aroclor 1016	**ND**	0.051	EPA 8082A	7-14-21	7-14-21	
Aroclor 1221	**ND**	0.051	EPA 8082A	7-14-21	7-14-21	
Aroclor 1232	**ND**	0.051	EPA 8082A	7-14-21	7-14-21	
Aroclor 1242	**ND**	0.051	EPA 8082A	7-14-21	7-14-21	
Aroclor 1248	**ND**	0.051	EPA 8082A	7-14-21	7-14-21	
Aroclor 1254	**ND**	0.051	EPA 8082A	7-14-21	7-14-21	
Aroclor 1260	**ND**	0.051	EPA 8082A	7-14-21	7-14-21	
Surrogate:	*Percent Recovery*	*Control Limits*				
DCB	*84*	*54-135*				

This report pertains to the samples analyzed in accordance with the chain of custody,
and is intended only for the use of the individual or company to whom it is addressed.

Date of Report: July 21, 2021
Samples Submitted: July 13, 2021
Laboratory Reference: 2107-102
Project: CIP No. 1-8-900-OS

PCBs EPA 8082A

Matrix: Soil
Units: mg/Kg (ppm)

Analyte	Result	PQL	Method	Date Prepared	Date Analyzed	Flags
Client ID:	**G-13**					
Laboratory ID:	07-102-13					
Aroclor 1016	**ND**	0.050	EPA 8082A	7-14-21	7-14-21	
Aroclor 1221	**ND**	0.050	EPA 8082A	7-14-21	7-14-21	
Aroclor 1232	**ND**	0.050	EPA 8082A	7-14-21	7-14-21	
Aroclor 1242	**ND**	0.050	EPA 8082A	7-14-21	7-14-21	
Aroclor 1248	**ND**	0.050	EPA 8082A	7-14-21	7-14-21	
Aroclor 1254	**ND**	0.050	EPA 8082A	7-14-21	7-14-21	
Aroclor 1260	**ND**	0.050	EPA 8082A	7-14-21	7-14-21	
Surrogate:	*Percent Recovery*	*Control Limits*				
DCB	*91*	*54-135*				
Client ID:	**G-14**					
Laboratory ID:	07-102-14					
Aroclor 1016	**ND**	0.050	EPA 8082A	7-14-21	7-14-21	
Aroclor 1221	**ND**	0.050	EPA 8082A	7-14-21	7-14-21	
Aroclor 1232	**ND**	0.050	EPA 8082A	7-14-21	7-14-21	
Aroclor 1242	**ND**	0.050	EPA 8082A	7-14-21	7-14-21	
Aroclor 1248	**ND**	0.050	EPA 8082A	7-14-21	7-14-21	
Aroclor 1254	**ND**	0.050	EPA 8082A	7-14-21	7-14-21	
Aroclor 1260	**ND**	0.050	EPA 8082A	7-14-21	7-14-21	
Surrogate:	*Percent Recovery*	*Control Limits*				
DCB	*77*	*54-135*				
Client ID:	**G-15**					
Laboratory ID:	07-102-15					
Aroclor 1016	**ND**	0.050	EPA 8082A	7-14-21	7-14-21	
Aroclor 1221	**ND**	0.050	EPA 8082A	7-14-21	7-14-21	
Aroclor 1232	**ND**	0.050	EPA 8082A	7-14-21	7-14-21	
Aroclor 1242	**ND**	0.050	EPA 8082A	7-14-21	7-14-21	
Aroclor 1248	**ND**	0.050	EPA 8082A	7-14-21	7-14-21	
Aroclor 1254	**ND**	0.050	EPA 8082A	7-14-21	7-14-21	
Aroclor 1260	**ND**	0.050	EPA 8082A	7-14-21	7-14-21	
Surrogate:	*Percent Recovery*	*Control Limits*				
DCB	*84*	*54-135*				

This report pertains to the samples analyzed in accordance with the chain of custody,
and is intended only for the use of the individual or company to whom it is addressed.

Date of Report: July 21, 2021
Samples Submitted: July 13, 2021
Laboratory Reference: 2107-102
Project: CIP No. 1-8-900-OS

PCBs EPA 8082A
QUALITY CONTROL

Matrix: Soil
Units: mg/Kg (ppm)

Analyte	Result	PQL	Method	Date Prepared	Date Analyzed	Flags
METHOD BLANK						
Laboratory ID:	MB0714S2					
Aroclor 1016	**ND**	0.050	EPA 8082A	7-14-21	7-14-21	
Aroclor 1221	**ND**	0.050	EPA 8082A	7-14-21	7-14-21	
Aroclor 1232	**ND**	0.050	EPA 8082A	7-14-21	7-14-21	
Aroclor 1242	**ND**	0.050	EPA 8082A	7-14-21	7-14-21	
Aroclor 1248	**ND**	0.050	EPA 8082A	7-14-21	7-14-21	
Aroclor 1254	**ND**	0.050	EPA 8082A	7-14-21	7-14-21	
Aroclor 1260	**ND**	0.050	EPA 8082A	7-14-21	7-14-21	
Surrogate:	*Percent Recovery*	*Control Limits*				
DCB	*76*	*54-135*				

Analyte	Result		Spike Level		Source Result	Percent Recovery		Recovery Limits	RPD	RPD Limit	Flags
SPIKE BLANKS											
Laboratory ID:	SB0714S2										
	SB	SBD	SB	SBD		SB	SBD				
Aroclor 1260	**0.459**	**0.447**	0.500	0.500	N/A	**92**	**89**	65-134	3	18	
Surrogate:											
DCB						*73*	*70*	*54-135*			

This report pertains to the samples analyzed in accordance with the chain of custody, and is intended only for the use of the individual or company to whom it is addressed.

Date of Report: July 21, 2021
Samples Submitted: July 13, 2021
Laboratory Reference: 2107-102
Project: CIP No. 1-8-900-OS

TOTAL METALS
EPA 6010D/7471B

Matrix: Soil
Units: mg/Kg (ppm)

Analyte	Result	PQL	Method	Date Prepared	Date Analyzed	Flags
Client ID:	**G-1**					
Laboratory ID:	07-102-01					
Arsenic	**ND**	10	EPA 6010D	7-19-21	7-19-21	
Copper	**16**	1.0	EPA 6010D	7-19-21	7-19-21	
Lead	**ND**	5.2	EPA 6010D	7-19-21	7-19-21	
Mercury	**ND**	0.26	EPA 7471B	7-19-21	7-19-21	
Nickel	**21**	2.6	EPA 6010D	7-19-21	7-19-21	
Zinc	**21**	2.6	EPA 6010D	7-19-21	7-19-21	
Client ID:	**G-2**					
Laboratory ID:	07-102-02					
Arsenic	**ND**	10	EPA 6010D	7-19-21	7-19-21	
Copper	**18**	1.0	EPA 6010D	7-19-21	7-19-21	
Lead	**ND**	5.2	EPA 6010D	7-19-21	7-19-21	
Mercury	**ND**	0.26	EPA 7471B	7-19-21	7-19-21	
Nickel	**27**	2.6	EPA 6010D	7-19-21	7-19-21	
Zinc	**26**	2.6	EPA 6010D	7-19-21	7-19-21	
Client ID:	**G-3**					
Laboratory ID:	07-102-03					
Arsenic	**ND**	10	EPA 6010D	7-19-21	7-19-21	
Copper	**21**	1.0	EPA 6010D	7-19-21	7-19-21	
Lead	**ND**	5.0	EPA 6010D	7-19-21	7-19-21	
Mercury	**ND**	0.25	EPA 7471B	7-19-21	7-19-21	
Nickel	**27**	2.5	EPA 6010D	7-19-21	7-19-21	
Zinc	**28**	2.5	EPA 6010D	7-19-21	7-19-21	
Client ID:	**G-4**					
Laboratory ID:	07-102-04					
Arsenic	**ND**	10	EPA 6010D	7-19-21	7-19-21	
Copper	**16**	1.0	EPA 6010D	7-19-21	7-19-21	
Lead	**ND**	5.1	EPA 6010D	7-19-21	7-19-21	
Mercury	**ND**	0.26	EPA 7471B	7-19-21	7-19-21	
Nickel	**24**	2.6	EPA 6010D	7-19-21	7-19-21	
Zinc	**22**	2.6	EPA 6010D	7-19-21	7-19-21	

This report pertains to the samples analyzed in accordance with the chain of custody, and is intended only for the use of the individual or company to whom it is addressed.

Date of Report: July 21, 2021
Samples Submitted: July 13, 2021
Laboratory Reference: 2107-102
Project: CIP No. 1-8-900-OS

TOTAL METALS
EPA 6010D/7471B

Matrix: Soil
Units: mg/Kg (ppm)

Analyte	Result	PQL	Method	Date Prepared	Date Analyzed	Flags
Client ID:	**G-5**					
Laboratory ID:	07-102-05					
Arsenic	**ND**	10	EPA 6010D	7-19-21	7-19-21	
Copper	**17**	1.0	EPA 6010D	7-19-21	7-19-21	
Lead	**ND**	5.0	EPA 6010D	7-19-21	7-19-21	
Mercury	**ND**	0.25	EPA 7471B	7-19-21	7-19-21	
Nickel	**21**	2.5	EPA 6010D	7-19-21	7-19-21	
Zinc	**20**	2.5	EPA 6010D	7-19-21	7-19-21	
Client ID:	**G-6**					
Laboratory ID:	07-102-06					
Arsenic	**ND**	10	EPA 6010D	7-19-21	7-19-21	
Copper	**17**	1.0	EPA 6010D	7-19-21	7-19-21	
Lead	**ND**	5.0	EPA 6010D	7-19-21	7-19-21	
Mercury	**ND**	0.25	EPA 7471B	7-19-21	7-19-21	
Nickel	**29**	2.5	EPA 6010D	7-19-21	7-19-21	
Zinc	**26**	2.5	EPA 6010D	7-19-21	7-19-21	
Client ID:	**G-7**					
Laboratory ID:	07-102-07					
Arsenic	**ND**	10	EPA 6010D	7-19-21	7-19-21	
Copper	**23**	1.0	EPA 6010D	7-19-21	7-19-21	
Lead	**ND**	5.0	EPA 6010D	7-19-21	7-19-21	
Mercury	**ND**	0.25	EPA 7471B	7-19-21	7-19-21	
Nickel	**31**	2.5	EPA 6010D	7-19-21	7-19-21	
Zinc	**32**	2.5	EPA 6010D	7-19-21	7-19-21	
Client ID:	**G-8**					
Laboratory ID:	07-102-08					
Arsenic	**ND**	10	EPA 6010D	7-19-21	7-19-21	
Copper	**21**	1.0	EPA 6010D	7-19-21	7-19-21	
Lead	**ND**	5.0	EPA 6010D	7-19-21	7-19-21	
Mercury	**ND**	0.25	EPA 7471B	7-19-21	7-19-21	
Nickel	**32**	2.5	EPA 6010D	7-19-21	7-19-21	
Zinc	**32**	2.5	EPA 6010D	7-19-21	7-19-21	

This report pertains to the samples analyzed in accordance with the chain of custody, and is intended only for the use of the individual or company to whom it is addressed.

Date of Report: July 21, 2021
Samples Submitted: July 13, 2021
Laboratory Reference: 2107-102
Project: CIP No. 1-8-900-OS

TOTAL METALS
EPA 6010D/7471B

Matrix: Soil
Units: mg/Kg (ppm)

Analyte	Result	PQL	Method	Date Prepared	Date Analyzed	Flags
Client ID:	**G-9**					
Laboratory ID:	07-102-09					
Arsenic	**ND**	10	EPA 6010D	7-19-21	7-19-21	
Copper	**18**	1.0	EPA 6010D	7-19-21	7-19-21	
Lead	**ND**	5.0	EPA 6010D	7-19-21	7-19-21	
Mercury	**ND**	0.25	EPA 7471B	7-19-21	7-19-21	
Nickel	**27**	2.5	EPA 6010D	7-19-21	7-19-21	
Zinc	**27**	2.5	EPA 6010D	7-19-21	7-19-21	
Client ID:	**G-10**					
Laboratory ID:	07-102-10					
Arsenic	**ND**	10	EPA 6010D	7-19-21	7-19-21	
Copper	**17**	1.0	EPA 6010D	7-19-21	7-19-21	
Lead	**ND**	5.1	EPA 6010D	7-19-21	7-19-21	
Mercury	**ND**	0.25	EPA 7471B	7-19-21	7-19-21	
Nickel	**24**	2.5	EPA 6010D	7-19-21	7-19-21	
Zinc	**23**	2.5	EPA 6010D	7-19-21	7-19-21	
Client ID:	**G-11**					
Laboratory ID:	07-102-11					
Arsenic	**ND**	10	EPA 6010D	7-19-21	7-19-21	
Copper	**21**	1.0	EPA 6010D	7-19-21	7-19-21	
Lead	**ND**	5.0	EPA 6010D	7-19-21	7-19-21	
Mercury	**ND**	0.25	EPA 7471B	7-19-21	7-19-21	
Nickel	**29**	2.5	EPA 6010D	7-19-21	7-19-21	
Zinc	**31**	2.5	EPA 6010D	7-19-21	7-19-21	
Client ID:	**G-12**					
Laboratory ID:	07-102-12					
Arsenic	**ND**	10	EPA 6010D	7-19-21	7-19-21	
Copper	**16**	1.0	EPA 6010D	7-19-21	7-19-21	
Lead	**ND**	5.1	EPA 6010D	7-19-21	7-19-21	
Mercury	**ND**	0.25	EPA 7471B	7-19-21	7-19-21	
Nickel	**21**	2.5	EPA 6010D	7-19-21	7-19-21	
Zinc	**21**	2.5	EPA 6010D	7-19-21	7-19-21	

This report pertains to the samples analyzed in accordance with the chain of custody, and is intended only for the use of the individual or company to whom it is addressed.

Date of Report: July 21, 2021
Samples Submitted: July 13, 2021
Laboratory Reference: 2107-102
Project: CIP No. 1-8-900-OS

TOTAL METALS
EPA 6010D/7471B

Matrix: Soil
Units: mg/Kg (ppm)

Analyte	Result	PQL	Method	Date Prepared	Date Analyzed	Flags
Client ID:	**G-13**					
Laboratory ID:	07-102-13					
Arsenic	**ND**	10	EPA 6010D	7-19-21	7-19-21	
Copper	**15**	1.0	EPA 6010D	7-19-21	7-19-21	
Lead	**ND**	5.0	EPA 6010D	7-19-21	7-19-21	
Mercury	**ND**	0.25	EPA 7471B	7-19-21	7-19-21	
Nickel	**21**	2.5	EPA 6010D	7-19-21	7-19-21	
Zinc	**20**	2.5	EPA 6010D	7-19-21	7-19-21	
Client ID:	**G-14**					
Laboratory ID:	07-102-14					
Arsenic	**ND**	10	EPA 6010D	7-19-21	7-19-21	
Copper	**18**	1.0	EPA 6010D	7-19-21	7-19-21	
Lead	**ND**	5.0	EPA 6010D	7-19-21	7-19-21	
Mercury	**ND**	0.25	EPA 7471B	7-19-21	7-19-21	
Nickel	**25**	2.5	EPA 6010D	7-19-21	7-19-21	
Zinc	**27**	2.5	EPA 6010D	7-19-21	7-19-21	
Client ID:	**G-15**					
Laboratory ID:	07-102-15					
Arsenic	**ND**	10	EPA 6010D	7-19-21	7-19-21	
Copper	**22**	1.0	EPA 6010D	7-19-21	7-19-21	
Lead	**ND**	5.0	EPA 6010D	7-19-21	7-19-21	
Mercury	**ND**	0.25	EPA 7471B	7-19-21	7-19-21	
Nickel	**27**	2.5	EPA 6010D	7-19-21	7-19-21	
Zinc	**29**	2.5	EPA 6010D	7-19-21	7-19-21	

This report pertains to the samples analyzed in accordance with the chain of custody, and is intended only for the use of the individual or company to whom it is addressed.

Date of Report: July 21, 2021
Samples Submitted: July 13, 2021
Laboratory Reference: 2107-102
Project: CIP No. 1-8-900-OS

TOTAL METALS
EPA 6010D/7471B
QUALITY CONTROL

Matrix: Soil
Units: mg/Kg (ppm)

Analyte	Result	PQL	Method	Date Prepared	Date Analyzed	Flags
METHOD BLANK						
Laboratory ID:	MB0719SM1					
Arsenic	**ND**	10	EPA 6010D	7-19-21	7-19-21	
Copper	**ND**	1.0	EPA 6010D	7-19-21	7-19-21	
Lead	**ND**	5.0	EPA 6010D	7-19-21	7-19-21	
Nickel	**ND**	2.5	EPA 6010D	7-19-21	7-19-21	
Zinc	**ND**	2.5	EPA 6010D	7-19-21	7-19-21	
Laboratory ID:	MB0719S2					
Mercury	**ND**	0.25	EPA 7471B	7-19-21	7-19-21	

Analyte	Result		Spike Level		Source Result	Percent Recovery		Recovery Limits	RPD	RPD Limit	Flags
DUPLICATE											
Laboratory ID:	07-102-11										
	ORIG	DUP									
Arsenic	**ND**	**ND**	NA	NA		NA		NA	NA	20	
Copper	**21.4**	**24.2**	NA	NA		NA		NA	12	20	
Lead	**ND**	**ND**	NA	NA		NA		NA	NA	20	
Nickel	**29.1**	**25.7**	NA	NA		NA		NA	13	20	
Zinc	**30.8**	**28.3**	NA	NA		NA		NA	8	20	
Laboratory ID:	07-102-11										
Mercury	**ND**	**ND**	NA	NA		NA		NA	NA	20	
MATRIX SPIKES											
Laboratory ID:	07-102-11										
	MS	MSD	MS	MSD		MS	MSD				
Arsenic	**97.9**	**95.6**	100	100	ND	**98**	**96**	75-125	2	20	
Copper	**66.4**	**65.3**	50.0	50.0	21.4	**90**	**88**	75-125	2	20	
Lead	**235**	**234**	250	250	ND	**94**	**94**	75-125	1	20	
Nickel	**117**	**119**	100	100	29.1	**88**	**90**	75-125	2	20	
Zinc	**115**	**118**	100	100	30.8	**84**	**87**	75-125	3	20	
Laboratory ID:	07-102-11										
Mercury	**0.531**	**0.523**	0.500	0.500	0.0252	**101**	**100**	80-120	2	20	

This report pertains to the samples analyzed in accordance with the chain of custody, and is intended only for the use of the individual or company to whom it is addressed.

Date of Report: July 21, 2021
Samples Submitted: July 13, 2021
Laboratory Reference: 2107-102
Project: CIP No. 1-8-900-OS

% MOISTURE

Client ID	Lab ID	% Moisture	Date Analyzed
G-1	07-102-01	**3**	7-13-21
G-2	07-102-02	**3**	7-13-21
G-3	07-102-03	**1**	7-13-21
G-4	07-102-04	**2**	7-13-21
G-5	07-102-05	**1**	7-13-21
G-6	07-102-06	**0**	7-13-21
G-7	07-102-07	**1**	7-13-21
G-8	07-102-08	**1**	7-13-21
G-9	07-102-09	**1**	7-13-21
G-10	07-102-10	**1**	7-13-21
G-11	07-102-11	**0**	7-13-21
G-12	07-102-12	**1**	7-13-21
G-13	07-102-13	**1**	7-13-21
G-14	07-102-14	**0**	7-13-21
G-15	07-102-15	**0**	7-13-21

This report pertains to the samples analyzed in accordance with the chain of custody,
and is intended only for the use of the individual or company to whom it is addressed.

OnSite Environmental Inc.

Data Qualifiers and Abbreviations

A - Due to a high sample concentration, the amount spiked is insufficient for meaningful MS/MSD recovery data.

B - The analyte indicated was also found in the blank sample.

C - The duplicate RPD is outside control limits due to high result variability when analyte concentrations are within five times the quantitation limit.

E - The value reported exceeds the quantitation range and is an estimate.

F - Surrogate recovery data is not available due to the high concentration of coeluting target compounds.

H - The analyte indicated is a common laboratory solvent and may have been introduced during sample preparation, and be impacting the sample result.

I - Compound recovery is outside of the control limits.

J - The value reported was below the practical quantitation limit. The value is an estimate.

K - Sample duplicate RPD is outside control limits due to sample inhomogeneity. The sample was re-extracted and re-analyzed with similar results.

L - The RPD is outside of the control limits.

M - Hydrocarbons in the gasoline range are impacting the diesel range result.

M1 - Hydrocarbons in the gasoline range (toluene-naphthalene) are present in the sample.

N - Hydrocarbons in the lube oil range are impacting the diesel range result.

N1 - Hydrocarbons in diesel range are impacting lube oil range results.

O - Hydrocarbons indicative of heavier fuels are present in the sample and are impacting the gasoline result.

P - The RPD of the detected concentrations between the two columns is greater than 40.

Q - Surrogate recovery is outside of the control limits.

S - Surrogate recovery data is not available due to the necessary dilution of the sample.

T - The sample chromatogram is not similar to a typical _____.

U - The analyte was analyzed for, but was not detected above the reported sample quantitation limit.

U1 - The practical quantitation limit is elevated due to interferences present in the sample.

V - Matrix Spike/Matrix Spike Duplicate recoveries are outside control limits due to matrix effects.

W - Matrix Spike/Matrix Spike Duplicate RPD are outside control limits due to matrix effects.

X - Sample extract treated with a mercury cleanup procedure.

X1- Sample extract treated with a sulfuric acid/silica gel cleanup procedure.

Y - The calibration verification for this analyte exceeded the 20% drift specified in methods 8260 & 8270, and therefore the reported result should be considered an estimate. The overall performance of the calibration verification standard met the acceptance criteria of the method.

Y1 - Negative effects of the matrix from this sample on the instrument caused values for this analyte in the bracketing continuing calibration verification standard (CCVs) to be outside of 20% acceptance criteria. Because of this, quantitation limits and sample concentrations should be considered estimates.

Z -

ND - Not Detected at PQL
PQL - Practical Quantitation Limit
RPD - Relative Percent Difference

This report pertains to the samples analyzed in accordance with the chain of custody, and is intended only for the use of the individual or company to whom it is addressed.

Chain of Custody

OnSite Environmental Inc.
Analytical Laboratory Testing Services
14648 NE 95th Street • Redmond, WA 98052
Phone: (425) 883-3881 • www.onsite-env.com

Company: SRV CONSTRUCTION, INC.
Project Number: CIP NO. 1-8-900-05
Project Name: NORTON TERMINAL
Project Manager: John Snyder
Sampled by: Steve Verbarendse

Turnaround Request (in working days)
(Check One)
☐ Same Day ☐ 1 Day
☐ 2 Days ☐ 3 Days
☒ Standard (7 Days)
☐ _____ (other)

Laboratory Number: 07-102

Lab ID	Sample Identification	Date Sampled	Time Sampled	Matrix	Number of Containers	NWTPH-HCID	NWTPH-Gx/BTEX	NWTPH-Gx	NWTPH-Dx (☐ Acid / SG Clean-up)	Volatiles 8260D	Halogenated Volatiles 8260D	EDB EPA 8011 (Waters Only)	Semivolatiles 8270E/SIM (with low-level PAHs)	PAHs 8270E/SIM (low-level)	PCBs 8082A	Organochlorine Pesticides 8081B	Organophosphorus Pesticides 8270E/SIM	Chlorinated Acid Herbicides 8151A	Total RCRA Metals ~~As~~, Ni, Cu, Hg, Pb, Zn	Total MTCA Metals	TCLP Metals	HEM (oil and grease) 1664A					% Moisture
1	G-1	7-12-21	4:00PM	S	2			X	X					X	X				X								10
2	G-2																										
3	G-3																										
4	G-4																										
5	G-5																										
6	G-6																										
7	G-7																										
8	G-8																										
9	G-9																										
10	G-10																										

	Signature	Company	Date	Time
Relinquished		SRV CONSTRUCTION	7/13/21	11:08
Received		CORE	7/13/21	1408
Relinquished				
Received				
Relinquished				
Received				
Reviewed/Date		Reviewed/Date		

Comments/Special Instructions

Data Package: Standard ☐ Level III ☐ Level IV ☐
Chromatograms with final report ☐ Electronic Data Deliverables (EDDs) ☐

Chain of Custody

OnSite Environmental Inc.
Analytical Laboratory Testing Services
14648 NE 95th Street • Redmond, WA 98052
Phone: (425) 883-3881 • www.onsite-env.com

Company: SRV Construction Inc.
Project Number: CIP no. 1-8-900-05
Project Name: Norton Terminal
Project Manager: John Snyder
Sampled by: Steve Verbarendse

Turnaround Request (in working days)
(Check One)
☐ Same Day ☐ 1 Day
☐ 2 Days ☐ 3 Days
☒ Standard (7 Days)
☐ _____ (other)

Laboratory Number: 07-102

Lab ID	Sample Identification	Date Sampled	Time Sampled	Matrix	Number of Containers	NWTPH-HCID	NWTPH-Gx/BTEX	NWTPH-Gx	NWTPH-Dx (☐ Acid / SG Clean-up)	Volatiles 8260D	Halogenated Volatiles 8260D	EDB EPA 8011 (Waters Only)	Semivolatiles 8270E/SIM (with low-level PAHs)	PAHs 8270E/SIM (low-level)	PCBs 8082A	Organochlorine Pesticides 8081B	Organophosphorus Pesticides 8270E/SIM	Chlorinated Acid Herbicides 8151A	Total RCRA Metals As, Ni, Cu, Hg, Pb, Zn	Total MTCA Metals	TCLP Metals	HEM (oil and grease) 1664A					% Moisture
11	G-11	7-12-21	4:00pm	S	2			X	X					X	X				X								10
12	G-12	↓	↓	↓	↓			↓	↓					↓	↓				↓								↓
13	G-13																										
14	G-14																										
15	G-15																										

	Signature	Company	Date	Time
Relinquished		SRV Construction	7/13/21	11:08
Received		CORE	7/13/21	1108
Relinquished				
Received				
Relinquished				
Received				
Reviewed/Date		Reviewed/Date		

Comments/Special Instructions

Data Package: Standard ☐ Level III ☐ Level IV ☐

Chromatograms with final report ☐ Electronic Data Deliverables (EDDs) ☐

STATE OF WASHINGTON

PROFESSIONAL ENGINEER
Civil

Jordan J Kain
7235 W GREEN LAKE DR N
SEATTLE, WA 98103-4827

21018895
License Number

2022-07-17
Expiration Date



Development—Mandan Pit D217

Elise Gronewald

From: Kallus, Andrew (ECY) <akal461@ECY.WA.GOV>
Sent: Wednesday, December 8, 2021 4:37 PM
To: Elise Gronewald
Cc: Erik Gerking; Carla Brock; Dylan Frazer; Steve J. Germiat
Subject: RE: Norton Terminal: Import Chemical Testing Results

Hi – I agree with Aspect's conclusions and the nickel appears to be naturally occurring. The 95 UCL of 48.6 mg/kg compared to 48 mg/kg is not that different. Since both populations are normally distributed, I ran a couple of t-tests showing that the population mean of the structural fill is not statistically different than the background level of 48 mg/kg, and both population means are not statistically different.

Let me know when you have time to discuss.

Andy

One sample t-test – Concludes that the structural fill population mean is less than or equal to 48 mg/kg

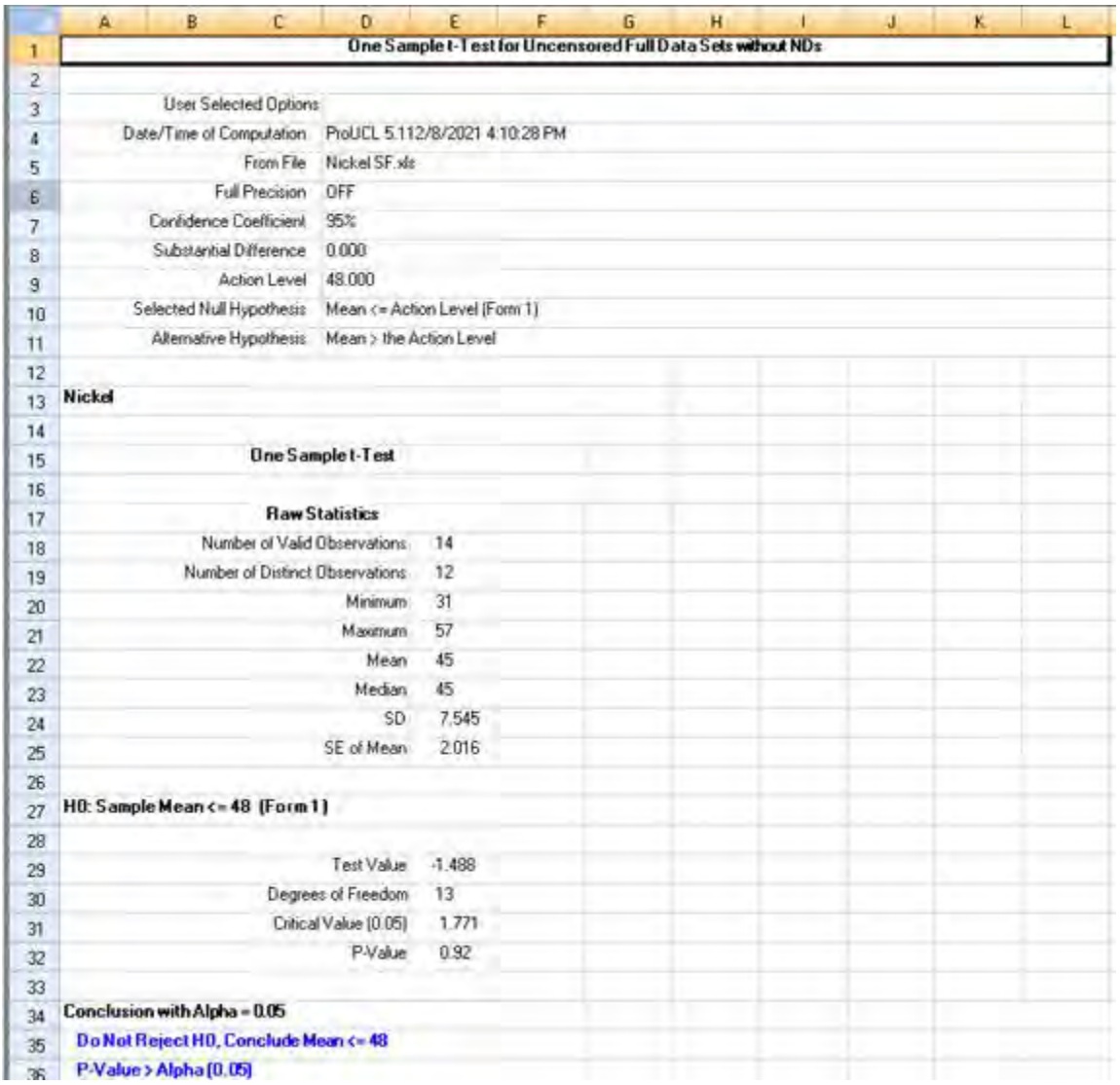

One Sample t-Test for Uncensored Full Data Sets without NDs		
User Selected Options		
Date/Time of Computation	ProUCL 5.112/8/2021 4:10:28 PM	
From File	Nickel SF.xls	
Full Precision	OFF	
Confidence Coefficient	95%	
Substantial Difference	0.000	
Action Level	48.000	
Selected Null Hypothesis	Mean <= Action Level (Form 1)	
Alternative Hypothesis	Mean > the Action Level	
Nickel		
One Sample t-Test		
Raw Statistics		
Number of Valid Observations	14	
Number of Distinct Observations	12	
Minimum	31	
Maximum	57	
Mean	45	
Median	45	
SD	7.545	
SE of Mean	2.016	
H0: Sample Mean <= 48 (Form 1)		
Test Value	-1.488	
Degrees of Freedom	13	
Critical Value (0.05)	1.771	
P-Value	0.92	
Conclusion with Alpha = 0.05		
Do Not Reject H0, Conclude Mean <= 48		
P-Value > Alpha (0.05)		

Two sample t-test – concludes that the structural fill population mean is not significantly different than the base coarse mean.



t-Test Sample 1 vs Sample 2 Comparison for Uncensored Full Data Sets without NDs

User Selected Options	
Date/Time of Computation	ProUCL 5.112/8/2021 4:05:24 PM
From File	Nickel Both.xls
Full Precision	OFF
Confidence Coefficient	95%
Substantial Difference (S)	0.000
Selected Null Hypothesis	Sample 1 Mean <= Sample 2 Mean (Form 1)
Alternative Hypothesis	Sample 1 Mean > the Sample 2 Mean

Sample 1 Data: Nickel_SF
Sample 2 Data: Nickel_BC

Raw Statistics

	Sample 1	Sample 2
Number of Valid Observations	14	14
Number of Distinct Observations	12	11
Minimum	31	28
Maximum	57	68
Mean	45	39.64
Median	45	37.5
SD	7.545	10.06
SE of Mean	2.016	2.688

Sample 1 vs Sample 2 Two-Sample t-Test

H0: Mean of Sample 1 - Mean of Sample 2 <= 0

		t-Test	Critical	
Method	DF	Value	t (0.05)	P-Value
Pooled (Equal Variance)	26	1.594	1.706	0.061
Welch-Satterthwaite (Unequal Varian	24.1	1.594	1.711	0.062

Pooled SD 8.891

Conclusion with Alpha = 0.050

Student t (Pooled) Test: Do Not Reject H0, Conclude Sample 1 <= Sample 2

Welch-Satterthwaite Test: Do Not Reject H0, Conclude Sample 1 <= Sample 2

From: Elise Gronewald <eliseg@portofeverett.com>
Sent: Wednesday, December 8, 2021 1:35 PM
To: Kallus, Andrew (ECY) <akal461@ECY.WA.GOV>
Cc: Erik Gerking <erikg@portofeverett.com>; Steve Hager <steveh@portofeverett.com>; Carla Brock <cbrock@aspectconsulting.com>; Dylan Frazer <dfrazer@landauinc.com>; Steve J. Germiat <sgermiat@aspectconsulting.com>; Cole Potter <colep@striderconstruction.com>; Kyle Gebhardt <kyleg@striderconstruction.com>
Subject: Norton Terminal: Import Chemical Testing Results
Importance: High

THIS EMAIL ORIGINATED FROM OUTSIDE THE WASHINGTON STATE EMAIL SYSTEM - Take caution not to open attachments or links unless you know the sender AND were expecting the attachment or the link

Hi Andy,

Please see the attached memo by Aspect Consulting that presents the import testing results for structural fill and the CSBC material for the MIE K-C 3rd Interim Action site. They had some screening level exceedances of a few metals, and as a result provided some statistical analysis. We would like to discuss the results and how we move forward once you have had a chance to review. The memo and analysis of the produced by Aspect (Steve G and Carla) under contract with Strider. Their proposal is to allow the material.

Can you let me know your availability to discuss the results? Thanks!

Elise Gronewald, P.E., PMP
Project Manager
O:425.388.0630 | **C**: 425.922.8032
eliseg@portofeverett.com

MEMORANDUM

Project No. 210550-A-01

December 7, 2021

To: Taylor Lenderman, Strider Construction Co, Inc.

From:

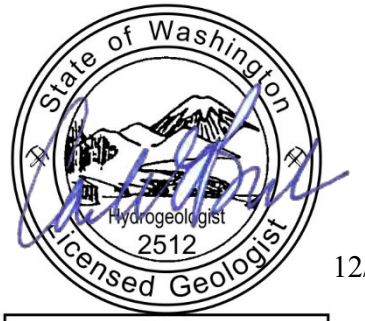

12/7/2021

Amy Tice, LG
Project Geologist
atice@aspectconsulting.com

Carla Brock, LHG
Sr. Associate Geologist
cbrock@aspectconsulting.com

Re: **Import Chemical Testing Results – Mandan Pit**
Norton Terminal Development at the K-C Worldwide Site
2600 Federal Avenue, Everett, WA

Aspect Consulting, LLC (Aspect) has conducted chemical testing of potential import materials in support of the 3rd Interim Action (IA) at the KC Upland Area, to be conducted concurrently with the Port of Everett Norton Terminal Development. Aspect was retained by Strider Construction (Strider) to meet requirements for testing and evaluation of imported fill material that was provided in the Earthwork specification, Section 31. Strider selected the Mandan Pit, located at 11423 Jordan Road in Arlington, Snohomish County, Washington, as a potential source for import materials. The Mandan Pit is a 185-acre sand and gravel quarry operated by Granite Construction with mining of Quaternary (Pleistocene) glacial drift (Qgd) that includes glacial till and outwash (DNR, 2021).

On November 4, 2021, Aspect collected samples from two stockpiles at the Mandan Pit; one of which contains material that meets the specifications for use as crushed surfacing base course (CSBC) and another that contains material that meets the specifications for use as structural fill (SF). The sample collection and analysis were conducted to meet the specified requirement for frequency of five samples for the first 1,000 cubic yards of imported material, and one sample for each additional 1,000 cubic yards. Strider estimates the total volume of import material to be approximately 10,000 cubic yards each of CSBC and SF.

This memo describes the sample collection procedures, analytical testing methods and result, a comparison of data to the site preliminary soil cleanup levels (PCLs), results of a statistical

evaluation of sample data for metals, and conclusions regarding the suitability of the proposed import material to meet the chemical criteria.

Sample Collection

In November 2021, Aspect collected 14 samples representing approximately 10,000 cubic yards of CSBC and 14 samples representing approximately 10,000 cubic yards of SF, from stockpiles of each material at the Mandan Pit. The samples that represent soils to be used as backfill were collected with approximate 10-foot lateral spacing between samples in a radial pattern around each stockpile. The locations of the stockpiles at the time of sampling, and the approximate locations from where samples were collected from each stockpile, is shown in Figure 1. At each sample location, the top 6 inches of soil was removed, and a sample of freshly exposed soil was collected.

The CSBC consisted primarily of brown gravel with well-graded sand. The SF consisted primarily of brown well-graded sand with gravel. Each soil sample was field sieved to remove gravel in order to provide the fine constituents to the laboratory for analysis. The sieved fines were placed into laboratory-prepared and -supplied sample jars, placed in a cooler with ice, and transported to the laboratory under proper chain of custody protocols.

Analytical Testing

The aggregate samples were submitted to ALS Environmental in Everett, Washington for laboratory analysis of the following:

- Gasoline-range petroleum hydrocarbons by Northwest Method NWTPH-Gx
- Diesel-/oil-range petroleum hydrocarbons by Northwest Method NWTPH-Dx
- Arsenic, copper, lead, nickel, and zinc by EPA Method 6020
- Mercury by EPA Method 7471
- Polycyclic aromatic hydrocarbons (PAHs) by EPA Method 8270 SIM
- Polychlorinated biphenyls (PCBs) by EPA Method 8082

The laboratory analytical reports are provided as Appendix A. Aspect completed a Level 2a data quality validation of the analytical data and concluded that all data are of known quality and are acceptable for use in this evaluation. The Data Validation Report is provided in Appendix B.

Results

Laboratory Analytical Data

The sample results were compared to the PCLs for the 3rd IA. The PCLs and soil sampling results are included in Tables 1 and 2 for CSBC and SF, respectively. The results are summarized by material in the following subsections.

Results for Crushed Surfacing Base Course

The laboratory analytical results for the CSBC stockpile samples indicate that concentrations of petroleum hydrocarbons, PAHs, and PCBs are below the laboratory reporting limits, all of which are below the PCLs (Table 1). All the analyzed metals were detected in each of the CSBC samples at concentrations above the laboratory reporting limits. The following metals were detected in one

or more CSBC samples at concentrations above the PCLs, which are based on natural background levels:

- Copper – three samples, with concentrations reported at 38 milligrams per kilogram (mg/kg) to 58 mg/kg, as compared to the copper PCL of 36 mg/kg.
- Mercury – one sample at 0.11 mg/kg, which only slightly exceeds the PCL of 0.1 mg/kg.
- Nickel – two samples, at concentrations of 49 mg/kg and 68 mg/kg, relative to the nickel PCL of 48 mg/kg.

Results for Structural Fill

The laboratory analytical results for the SF stockpile samples indicate that concentrations of petroleum hydrocarbons, PAHs, and PCBs are below the laboratory reporting limits, all of which are below the PCLs (Table 1). All the analyzed metals were detected in each of the CSBC samples at concentrations above the laboratory reporting limits. The following metals were detected in one or more SF samples at concentrations above the PCLs, which are based on natural background levels:

- Copper – three samples, with concentrations exceeding the 36 mg/kg PCL ranging from 37 mg/kg to 67 mg/kg.
- Nickel – five samples with concentrations ranging from 50 mg/kg to 57 mg/kg, relative to the nickel PCL of 48 mg/kg.

Statistical Data Evaluation

Because of the exceedance of the PCLs for naturally-occurring metals in the CSBC and SF, a statistical analysis was performed to evaluate whether the material, as a whole, would meet the chemical criteria specifications for the import material following the three-fold compliance criteria in the Washington State Model Toxics Control Act cleanup regulation (MTCA), which consist of the following:

- The 95 percent upper confidence limit (UCL) is below the PCL.
- No single sample concentration is greater than two times the PCL.
- No more than 21.4 percent of the sample concentrations are above the PCL, which is revised from the default of 10 percent to account for background following statistical procedures outlined in Ecology's Statistical Guidance for Ecology Site Managers (Ecology, 1992).

The soil metals data was statistically analyzed using EPA's ProUCL 5.1 to identify outliers, evaluate distribution, and calculate a 95 percent UCL. The results of the three-fold evaluation are as follows:

- For copper in the CSBC, Dixon's Outlier Test identified a single outlier at the 1 percent, 5 percent, and 10 percent significance level. The outlier, with a concentration of 58 mg/kg, was removed from the dataset and the 95 percent UCL of the remaining data is below the PCL of 36 mg/kg. ProUCL suggests using the 95 percent UCL of 34.5 mg/kg based on a normal distribution but the 95 percent UCL based on a lognormal distribution is almost the same at 34.6 mg/kg. Copper was not detected at more than two times the PCL in the CSBC

and 21.4 percent of the samples (3 of 14) have copper above the PCL, which meets the revised compliance statistic requirement that no more than 21.4 percent of samples have copper above the PCL.

- For mercury in the CSBC, the single exceedance of the PCL at 0.11 mg/kg was identified by Dixon's Outlier Test as an outlier. With the outlier removed, none of the reported concentrations of mercury exceed the PCL. The 95 percent UCL of the remaining dataset is 0.0551 mg/kg (which is below the PCL of 0.1 mg/kg), less than 10 percent of the samples exceed the criteria, and there are no detections that are more than two times the criteria.
- For nickel in the CSBC, one outlier (68 mg/kg) was identified by the Dixon's Outlier Test and removed from the dataset. The 95 percent UCL for the remaining data is 40.5 mg/kg or 40.8 mg/kg, assuming a normal or lognormal distribution, respectively. None of the nickel concentrations exceed two times the cleanup level and 14 percent of the samples (2 of 14) exceed the PCL, which is below the revised compliance statistical requirement of 21.4 percent.
- For copper in the SF, Dixon's Outlier Test identified a single outlier at the 1 percent, 5 percent, and 10 percent significance level. The outlier, with a concentration of 67 mg/kg, was removed from the dataset and the 95 percent UCL of the remaining data is below the PCL of 36 mg/kg. ProUCL suggests using the 95 percent UCL of 34.7 mg/kg based on a normal distribution but the 95 percent UCL based on a lognormal distribution is almost the same at 34.9 mg/kg. Copper was not detected at more than two times the PCL in the CSBC and 21.4 percent of the samples (3 of 14) have copper above the PCL, which meets the revised compliance statistic requirement that no more than 21.4 percent of samples have copper above the PCL.
- For nickel in the SF, no outliers were identified at any significance level. The 95 percent UCL is 48.6 mg/kg, which only slightly exceeds the PCL of 48 mg/kg. There are no samples with nickel at greater than two times the PCL; however, 35.7 percent of samples exceed the PCL, which is above the revised compliance statistic requirements that take into account natural background and allow for a frequency of exceedance of 21.4 percent.

The backup for these statistics is provided in Appendix C. The results of the evaluation indicate that all metals in the CSBC and SF meet the statistical requirements for compliance with the PCL except for nickel in the SF material. However, the reported concentrations of nickel in the SF range from 31 mg/kg to 57 mg/kg (Table 2), relative to the Puget Sound natural background concentration of 48 mg/kg and are likely representative of naturally occurring nickel concentrations in the source geologic unit at the Mandan Pit.

Conclusions

The proposed aggregate import sources at the Mandan Pit were sampled in accordance with the specification for earthwork and compared to the project chemical criteria. The results indicate that both the CSBC and SF materials meet the PCLs, either through direct comparison of sample data to the PCLs or through statistical analysis of the data representing the material, with one exception:

- Nickel in the structural fill does not meet compliance requirements for soil; however, the reported concentrations of nickel are suspected to be naturally occurring at only slightly higher statistical concentrations than the PCL.

References

Washington State Department of Natural Resources (DNR), 2021, Washington Geologic Information Portal, https://www.dnr.wa.gov/geologyportal, accessed on 12/6/2021.

Limitations

Work for this project was performed for the Strider Construction Co, Inc. (Client), and this memorandum was prepared in accordance with generally accepted professional practices for the nature and conditions of work completed in the same or similar localities, at the time the work was performed. This memorandum does not represent a legal opinion. No other warranty, expressed or implied, is made.

All reports prepared by Aspect Consulting for the Client apply only to the services described in the Agreement(s) with the Client. Any use or reuse by any party other than the Client is at the sole risk of that party, and without liability to Aspect Consulting. Aspect Consulting's original files/reports shall govern in the event of any dispute regarding the content of electronic documents furnished to others.

Please refer to Appendix D titled "Report Limitations and Guidelines for Use" for additional information governing the use of this report.

Attachments:
Table 1 – Crushed Surfacing Base Course Results
Table 2 – Structural Fill Results
Figure 1 – Exploration Map
Appendix A – Laboratory Report
Appendix B – Data Validation Report
Appendix C – Statistical Backup
Appendix D – Report Limitations and Guidelines for Use

V:\210550 Port of Everett Norton Terminal\Deliverables\Import Chem Testing Results\Import Chemical Testing Results Memo.docx

TABLES

Table 1. Crushed Surfacing Base Course Results

Project No. 210550-A-01, K-C Worldwide Site, Everett, Washington

			Location	Mandan Pit Crushed Surfacing Base Course Stock Pile													
			Sample	CSBC-1	CSBC-2	CSBC-3	CSBC-4	CSBC-5	CSBC-6	CSBC-7	CSBC-8	CSBC-9	CSBC-10	CSBC-11	CSBC-12	CSBC-13	CSBC-14
			Date	11/04/2021	11/04/2021	11/04/2021	11/04/2021	11/04/2021	11/04/2021	11/04/2021	11/04/2021	11/04/2021	11/04/2021	11/04/2021	11/04/2021	11/04/2021	11/04/2021
Analyte	Unit	Port of Everett Site Preliminary Soil CUL															
Metals																	
Arsenic	mg/kg	20		**4.4**	**3.8**	**4.2**	**3.9**	**3.1**	**3.9**	**4.0**	**3.4**	**3.6**	**3.1**	**4.2**	**4.8**	**4.1**	**6.9**
Copper	mg/kg	36		**35**	**32**	**31**	**31**	**26**	**33**	**31**	**33**	**29**	**36**	**38**	**58**	**38**	**33**
Lead	mg/kg	56		**3.7**	**3.6**	**3.7**	**3.1**	**3.0**	**3.1**	**3.8**	**4.2**	**5.0**	**3.4**	**4.9**	**3.9**	**3.9**	**3.2**
Mercury	mg/kg	0.1		**0.059**	**0.053**	**0.044**	**0.045**	**0.051**	**0.044**	**0.070**	**0.042**	**0.056**	**0.042**	**0.058**	**0.11**	**0.053**	**0.045**
Nickel	mg/kg	48		**38**	**44**	**35**	**42**	**31**	**32**	**35**	**32**	**68**	**28**	**40**	**44**	**37**	**49**
Zinc	mg/kg	85		**40**	**44**	**48**	**48**	**46**	**42**	**40**	**42**	**43**	**42**	**50**	**45**	**52**	**45**
PAHs																	
1-Methylnaphthalene	ug/kg	4500000		< 20 U	< 20 U	< 20 U	< 20 U	< 20 U	< 20 U	< 20 U	< 20 U	< 20 U	< 20 U	< 20 U	< 20 U	< 20 U	< 20 U
2-Methylnaphthalene	ug/kg	640		< 20 U	< 20 U	< 20 U	< 20 U	< 20 U	< 20 U	< 20 U	< 20 U	< 20 U	< 20 U	< 20 U	< 20 U	< 20 U	< 20 U
Acenaphthene	ug/kg	1200		< 20 U	< 20 U	< 20 U	< 20 U	< 20 U	< 20 U	< 20 U	< 20 U	< 20 U	< 20 U	< 20 U	< 20 U	< 20 U	< 20 U
Acenaphthylene	ug/kg	210000000		< 20 U	< 20 U	< 20 U	< 20 U	< 20 U	< 20 U	< 20 U	< 20 U	< 20 U	< 20 U	< 20 U	< 20 U	< 20 U	< 20 U
Anthracene	ug/kg	1100000000		< 20 U	< 20 U	< 20 U	< 20 U	< 20 U	< 20 U	< 20 U	< 20 U	< 20 U	< 20 U	< 20 U	< 20 U	< 20 U	< 20 U
Benzo(g,h,i)perylene	ug/kg	110000000		< 20 U	< 20 U	< 20 U	< 20 U	< 20 U	< 20 U	< 20 U	< 20 U	< 20 U	< 20 U	< 20 U	< 20 U	< 20 U	< 20 U
Fluoranthene	ug/kg	140000000		< 20 U	< 20 U	< 20 U	< 20 U	< 20 U	< 20 U	< 20 U	< 20 U	< 20 U	< 20 U	< 20 U	< 20 U	< 20 U	< 20 U
Fluorene	ug/kg	140000000		< 20 U	< 20 U	< 20 U	< 20 U	< 20 U	< 20 U	< 20 U	< 20 U	< 20 U	< 20 U	< 20 U	< 20 U	< 20 U	< 20 U
Naphthalene	ug/kg	870		< 20 U	< 20 U	< 20 U	< 20 U	< 20 U	< 20 U	< 20 U	< 20 U	< 20 U	< 20 U	< 20 U	< 20 U	< 20 U	< 20 U
Phenanthrene	ug/kg	1100000000		< 20 U	< 20 U	< 20 U	< 20 U	< 20 U	< 20 U	< 20 U	< 20 U	< 20 U	< 20 U	< 20 U	< 20 U	< 20 U	< 20 U
Pyrene	ug/kg	110000000		< 20 U	< 20 U	< 20 U	< 20 U	< 20 U	< 20 U	< 20 U	< 20 U	< 20 U	< 20 U	< 20 U	< 20 U	< 20 U	< 20 U
Benz(a)anthracene	ug/kg			< 20 U	< 20 U	< 20 U	< 20 U	< 20 U	< 20 U	< 20 U	< 20 U	< 20 U	< 20 U	< 20 U	< 20 U	< 20 U	< 20 U
Benzo(a)pyrene	ug/kg			< 20 U	< 20 U	< 20 U	< 20 U	< 20 U	< 20 U	< 20 U	< 20 U	< 20 U	< 20 U	< 20 U	< 20 U	< 20 U	< 20 U
Benzo(b)fluoranthene	ug/kg			< 20 U	< 20 U	< 20 U	< 20 U	< 20 U	< 20 U	< 20 U	< 20 U	< 20 U	< 20 U	< 20 U	< 20 U	< 20 U	< 20 U
Benzo(k)fluoranthene	ug/kg			< 20 U	< 20 U	< 20 U	< 20 U	< 20 U	< 20 U	< 20 U	< 20 U	< 20 U	< 20 U	< 20 U	< 20 U	< 20 U	< 20 U
Chrysene	ug/kg			< 20 U	< 20 U	< 20 U	< 20 U	< 20 U	< 20 U	< 20 U	< 20 U	< 20 U	< 20 U	< 20 U	< 20 U	< 20 U	< 20 U
Dibenzo(a,h)anthracene	ug/kg			< 20 U	< 20 U	< 20 U	< 20 U	< 20 U	< 20 U	< 20 U	< 20 U	< 20 U	< 20 U	< 20 U	< 20 U	< 20 U	< 20 U
Indeno(1,2,3-cd)pyrene	ug/kg			< 20 U	< 20 U	< 20 U	< 20 U	< 20 U	< 20 U	< 20 U	< 20 U	< 20 U	< 20 U	< 20 U	< 20 U	< 20 U	< 20 U
Total cPAHs TEQ (ND = 1/2 RDL)	ug/kg	160		< 15.1 U	< 15.1 U	< 15.1 U	< 15.1 U	< 15.1 U	< 15.1 U	< 15.1 U	< 15.1 U	< 15.1 U	< 15.1 U	< 15.1 U	< 15.1 U	< 15.1 U	< 15.1 U
PCBAro																	
Aroclor 1016	mg/kg			< 0.10 U	< 0.10 U	< 0.10 U	< 0.10 U	< 0.10 U	< 0.10 U	< 0.10 U	< 0.10 U	< 0.10 U	< 0.10 U	< 0.10 U	< 0.10 U	< 0.10 U	< 0.10 U
Aroclor 1221	mg/kg			< 0.10 U	< 0.10 U	< 0.10 U	< 0.10 U	< 0.10 U	< 0.10 U	< 0.10 U	< 0.10 U	< 0.10 U	< 0.10 U	< 0.10 U	< 0.10 U	< 0.10 U	< 0.10 U
Aroclor 1232	mg/kg			< 0.10 U	< 0.10 U	< 0.10 U	< 0.10 U	< 0.10 U	< 0.10 U	< 0.10 U	< 0.10 U	< 0.10 U	< 0.10 U	< 0.10 U	< 0.10 U	< 0.10 U	< 0.10 U
Aroclor 1242	mg/kg			< 0.10 U	< 0.10 U	< 0.10 U	< 0.10 U	< 0.10 U	< 0.10 U	< 0.10 U	< 0.10 U	< 0.10 U	< 0.10 U	< 0.10 U	< 0.10 U	< 0.10 U	< 0.10 U
Aroclor 1248	mg/kg			< 0.10 U	< 0.10 U	< 0.10 U	< 0.10 U	< 0.10 U	< 0.10 U	< 0.10 U	< 0.10 U	< 0.10 U	< 0.10 U	< 0.10 U	< 0.10 U	< 0.10 U	< 0.10 U
Aroclor 1254	mg/kg			< 0.10 U	< 0.10 U	< 0.10 U	< 0.10 U	< 0.10 U	< 0.10 U	< 0.10 U	< 0.10 U	< 0.10 U	< 0.10 U	< 0.10 U	< 0.10 U	< 0.10 U	< 0.10 U
Aroclor 1260	mg/kg			< 0.10 U	< 0.10 U	< 0.10 U	< 0.10 U	< 0.10 U	< 0.10 U	< 0.10 U	< 0.10 U	< 0.10 U	< 0.10 U	< 0.10 U	< 0.10 U	< 0.10 U	< 0.10 U
Aroclor 1268	mg/kg			< 0.10 U	< 0.10 U	< 0.10 U	< 0.10 U	< 0.10 U	< 0.10 U	< 0.10 U	< 0.10 U	< 0.10 U	< 0.10 U	< 0.10 U	< 0.10 U	< 0.10 U	< 0.10 U
Total PCBs (Sum of Aroclors)	mg/kg	0.12		< 0.1 U	< 0.1 U	< 0.1 U	< 0.1 U	< 0.1 U	< 0.1 U	< 0.1 U	< 0.1 U	< 0.1 U	< 0.1 U	< 0.1 U	< 0.1 U	< 0.1 U	< 0.1 U
TPHs																	
Gasoline Range Organics	mg/kg	20		< 3.0 U	< 3.0 U	< 3.0 U	< 3.0 U	< 3.0 U	< 3.0 U	< 3.0 U	< 3.0 U	< 3.0 U	< 3.0 U	< 3.0 U	< 3.0 U	< 3.0 U	< 3.0 U
Diesel Range Organics	mg/kg	200		< 25 U	< 25 U	< 25 U	< 25 U	< 25 U	< 25 U	< 25 U	< 25 U	< 25 U	< 25 U	< 25 U	< 25 U	< 25 U	< 25 U
Motor Oil Range Organics	mg/kg	200		< 50 U	< 50 U	< 50 U	< 50 U	< 50 U	< 50 U	< 50 U	< 50 U	< 50 U	< 50 U	< 50 U	< 50 U	< 50 U	< 50 U

Bold - detected
Blue Shaded - Detected result or non-detected RL exceeded screening level
U - Analyte not detected at or above Reporting Limit (RL) shown
cPAHs = carcinogenic polycyclic aromatic hydrocarbons
ND = 1/2 RDL - calculated using 1/2 the reporting limit for non-detected components
CUL - Cleanup Level

Table 2. Structural Fill Resilts

Project No. 210550-A-01, K-C Worldwide Site, Everett, Washington

		Location	Mandan Pit Structural Fill Stockpile												
		Sample	SF-1	SF-2	SF-3	SF-4	SF-5	SF-6	SF-7	SF-8	SF-9	SF-10	SF-11	SF-12	SF-13	SF-14
		Date	11/04/2021	11/04/2021	11/04/2021	11/04/2021	11/04/2021	11/04/2021	11/04/2021	11/04/2021	11/04/2021	11/04/2021	11/04/2021	11/04/2021	11/04/2021	11/04/2021
Analyte	Unit	Port of Everett Site Preliminary Soil CUL														
Metals																
Arsenic	mg/kg	20	**4.7**	**3.8**	**4.0**	**3.7**	**5.2**	**4.6**	**3.7**	**4.5**	**3.9**	**5.6**	**3.7**	**3.3**	**4.3**	**4.2**
Copper	mg/kg	36	**35**	**34**	**34**	**32**	**37**	**67**	**31**	**29**	**33**	**36**	**30**	**26**	**38**	**34**
Lead	mg/kg	56	**4.1**	**5.0**	**3.2**	**3.5**	**3.7**	**3.2**	**3.0**	**3.1**	**3.4**	**3.3**	**2.9**	**2.5**	**3.4**	**3.5**
Mercury	mg/kg	0.1	**0.053**	**0.059**	**0.053**	**0.049**	**0.069**	**0.065**	**0.045**	**0.047**	**0.051**	**0.050**	**0.049**	**0.052**	**0.042**	**0.065**
Nickel	mg/kg	48	**51**	**51**	**46**	**44**	**57**	**41**	**39**	**39**	**48**	**43**	**35**	**31**	**55**	**50**
Zinc	mg/kg	85	**51**	**50**	**51**	**46**	**53**	**46**	**46**	**46**	**50**	**49**	**46**	**39**	**55**	**50**
PAHs																
1-Methylnaphthalene	ug/kg	4500000	< 20 U	< 20 U	< 20 U	< 20 U	< 20 U	< 20 U	< 20 U	< 20 U	< 20 U	< 20 U	< 20 U	< 20 U	< 20 U	< 20 U
2-Methylnaphthalene	ug/kg	640	< 20 U	< 20 U	< 20 U	< 20 U	< 20 U	< 20 U	< 20 U	< 20 U	< 20 U	< 20 U	< 20 U	< 20 U	< 20 U	< 20 U
Acenaphthene	ug/kg	1200	< 20 U	< 20 U	< 20 U	< 20 U	< 20 U	< 20 U	< 20 U	< 20 U	< 20 U	< 20 U	< 20 U	< 20 U	< 20 U	< 20 U
Acenaphthylene	ug/kg	210000000	< 20 U	< 20 U	< 20 U	< 20 U	< 20 U	< 20 U	< 20 U	< 20 U	< 20 U	< 20 U	< 20 U	< 20 U	< 20 U	< 20 U
Anthracene	ug/kg	1100000000	< 20 U	< 20 U	< 20 U	< 20 U	< 20 U	< 20 U	< 20 U	< 20 U	< 20 U	< 20 U	< 20 U	< 20 U	< 20 U	< 20 U
Benzo(g,h,i)perylene	ug/kg	110000000	< 20 U	< 20 U	< 20 U	< 20 U	< 20 U	< 20 U	< 20 U	< 20 U	< 20 U	< 20 U	< 20 U	< 20 U	< 20 U	< 20 U
Fluoranthene	ug/kg	140000000	< 20 U	< 20 U	< 20 U	< 20 U	< 20 U	< 20 U	< 20 U	< 20 U	< 20 U	< 20 U	< 20 U	< 20 U	< 20 U	< 20 U
Fluorene	ug/kg	140000000	< 20 U	< 20 U	< 20 U	< 20 U	< 20 U	< 20 U	< 20 U	< 20 U	< 20 U	< 20 U	< 20 U	< 20 U	< 20 U	< 20 U
Naphthalene	ug/kg	870	< 20 U	< 20 U	< 20 U	< 20 U	< 20 U	< 20 U	< 20 U	< 20 U	< 20 U	< 20 U	< 20 U	< 20 U	< 20 U	< 20 U
Phenanthrene	ug/kg	1100000000	< 20 U	< 20 U	< 20 U	< 20 U	< 20 U	< 20 U	< 20 U	< 20 U	< 20 U	< 20 U	< 20 U	< 20 U	< 20 U	< 20 U
Pyrene	ug/kg	110000000	< 20 U	< 20 U	< 20 U	< 20 U	< 20 U	< 20 U	< 20 U	< 20 U	< 20 U	< 20 U	< 20 U	< 20 U	< 20 U	< 20 U
Benz(a)anthracene	ug/kg		< 20 U	< 20 U	< 20 U	< 20 U	< 20 U	< 20 U	< 20 U	< 20 U	< 20 U	< 20 U	< 20 U	< 20 U	< 20 U	< 20 U
Benzo(a)pyrene	ug/kg		< 20 U	< 20 U	< 20 U	< 20 U	< 20 U	< 20 U	< 20 U	< 20 U	< 20 U	< 20 U	< 20 U	< 20 U	< 20 U	< 20 U
Benzo(b)fluoranthene	ug/kg		< 20 U	< 20 U	< 20 U	< 20 U	< 20 U	< 20 U	< 20 U	< 20 U	< 20 U	< 20 U	< 20 U	< 20 U	< 20 U	< 20 U
Benzo(k)fluoranthene	ug/kg		< 20 U	< 20 U	< 20 U	< 20 U	< 20 U	< 20 U	< 20 U	< 20 U	< 20 U	< 20 U	< 20 U	< 20 U	< 20 U	< 20 U
Chrysene	ug/kg		< 20 U	< 20 U	< 20 U	< 20 U	< 20 U	< 20 U	< 20 U	< 20 U	< 20 U	< 20 U	< 20 U	< 20 U	< 20 U	< 20 U
Dibenzo(a,h)anthracene	ug/kg		< 20 U	< 20 U	< 20 U	< 20 U	< 20 U	< 20 U	< 20 U	< 20 U	< 20 U	< 20 U	< 20 U	< 20 U	< 20 U	< 20 U
Indeno(1,2,3-cd)pyrene	ug/kg		< 20 U	< 20 U	< 20 U	< 20 U	< 20 U	< 20 U	< 20 U	< 20 U	< 20 U	< 20 U	< 20 U	< 20 U	< 20 U	< 20 U
Total cPAHs TEQ (ND = 1/2 RDL)	ug/kg	160	< 15.1 U	< 15.1 U	< 15.1 U	< 15.1 U	< 15.1 U	< 15.1 U	< 15.1 U	< 15.1 U	< 15.1 U	< 15.1 U	< 15.1 U	< 15.1 U	< 15.1 U	< 15.1 U
PCBAro																
Aroclor 1016	mg/kg		< 0.10 U	< 0.10 U	< 0.10 U	< 0.10 U	< 0.10 U	< 0.10 U	< 0.10 U	< 0.10 U	< 0.10 U	< 0.10 U	< 0.10 U	< 0.10 U	< 0.10 U	< 0.10 U
Aroclor 1221	mg/kg		< 0.10 U	< 0.10 U	< 0.10 U	< 0.10 U	< 0.10 U	< 0.10 U	< 0.10 U	< 0.10 U	< 0.10 U	< 0.10 U	< 0.10 U	< 0.10 U	< 0.10 U	< 0.10 U
Aroclor 1232	mg/kg		< 0.10 U	< 0.10 U	< 0.10 U	< 0.10 U	< 0.10 U	< 0.10 U	< 0.10 U	< 0.10 U	< 0.10 U	< 0.10 U	< 0.10 U	< 0.10 U	< 0.10 U	< 0.10 U
Aroclor 1242	mg/kg		< 0.10 U	< 0.10 U	< 0.10 U	< 0.10 U	< 0.10 U	< 0.10 U	< 0.10 U	< 0.10 U	< 0.10 U	< 0.10 U	< 0.10 U	< 0.10 U	< 0.10 U	< 0.10 U
Aroclor 1248	mg/kg		< 0.10 U	< 0.10 U	< 0.10 U	< 0.10 U	< 0.10 U	< 0.10 U	< 0.10 U	< 0.10 U	< 0.10 U	< 0.10 U	< 0.10 U	< 0.10 U	< 0.10 U	< 0.10 U
Aroclor 1254	mg/kg		< 0.10 U	< 0.10 U	< 0.10 U	< 0.10 U	< 0.10 U	< 0.10 U	< 0.10 U	< 0.10 U	< 0.10 U	< 0.10 U	< 0.10 U	< 0.10 U	< 0.10 U	< 0.10 U
Aroclor 1260	mg/kg		< 0.10 U	< 0.10 U	< 0.10 U	< 0.10 U	< 0.10 U	< 0.10 U	< 0.10 U	< 0.10 U	< 0.10 U	< 0.10 U	< 0.10 U	< 0.10 U	< 0.10 U	< 0.10 U
Aroclor 1268	mg/kg		< 0.10 U	< 0.10 U	< 0.10 U	< 0.10 U	< 0.10 U	< 0.10 U	< 0.10 U	< 0.10 U	< 0.10 U	< 0.10 U	< 0.10 U	< 0.10 U	< 0.10 U	< 0.10 U
Total PCBs (Sum of Aroclors)	mg/kg	0.12	< 0.1 U	< 0.1 U	< 0.1 U	< 0.1 U	< 0.1 U	< 0.1 U	< 0.1 U	< 0.1 U	< 0.1 U	< 0.1 U	< 0.1 U	< 0.1 U	< 0.1 U	< 0.1 U
TPHs																
Gasoline Range Organics	mg/kg	20	< 3.0 U	< 3.0 U	< 3.0 U	< 3.0 U	< 3.0 U	< 3.0 U	< 3.0 U	< 3.0 U	< 3.0 U	< 3.0 U	< 3.0 U	< 3.0 U	< 3.0 U	< 3.0 U
Diesel Range Organics	mg/kg	200	< 25 U	< 25 U	< 25 U	< 25 U	< 25 U	< 25 U	< 25 U	< 25 U	< 25 U	< 25 U	< 25 U	< 25 U	< 25 U	< 25 U
Motor Oil Range Organics	mg/kg	200	< 50 U	< 50 U	< 50 U	< 50 U	< 50 U	< 50 U	< 50 U	< 50 U	< 50 U	< 50 U	< 50 U	< 50 U	< 50 U	< 50 U

Bold - detected
Blue Shaded - Detected result or non-detected RL exceeded screening level
U - Analyte not detected at or above Reporting Limit (RL) shown
cPAHs = carcinogenic polycyclic aromatic hydrocarbons
ND = 1/2 RDL - calculated using 1/2 the reporting limit for non-detected components

FIGURES

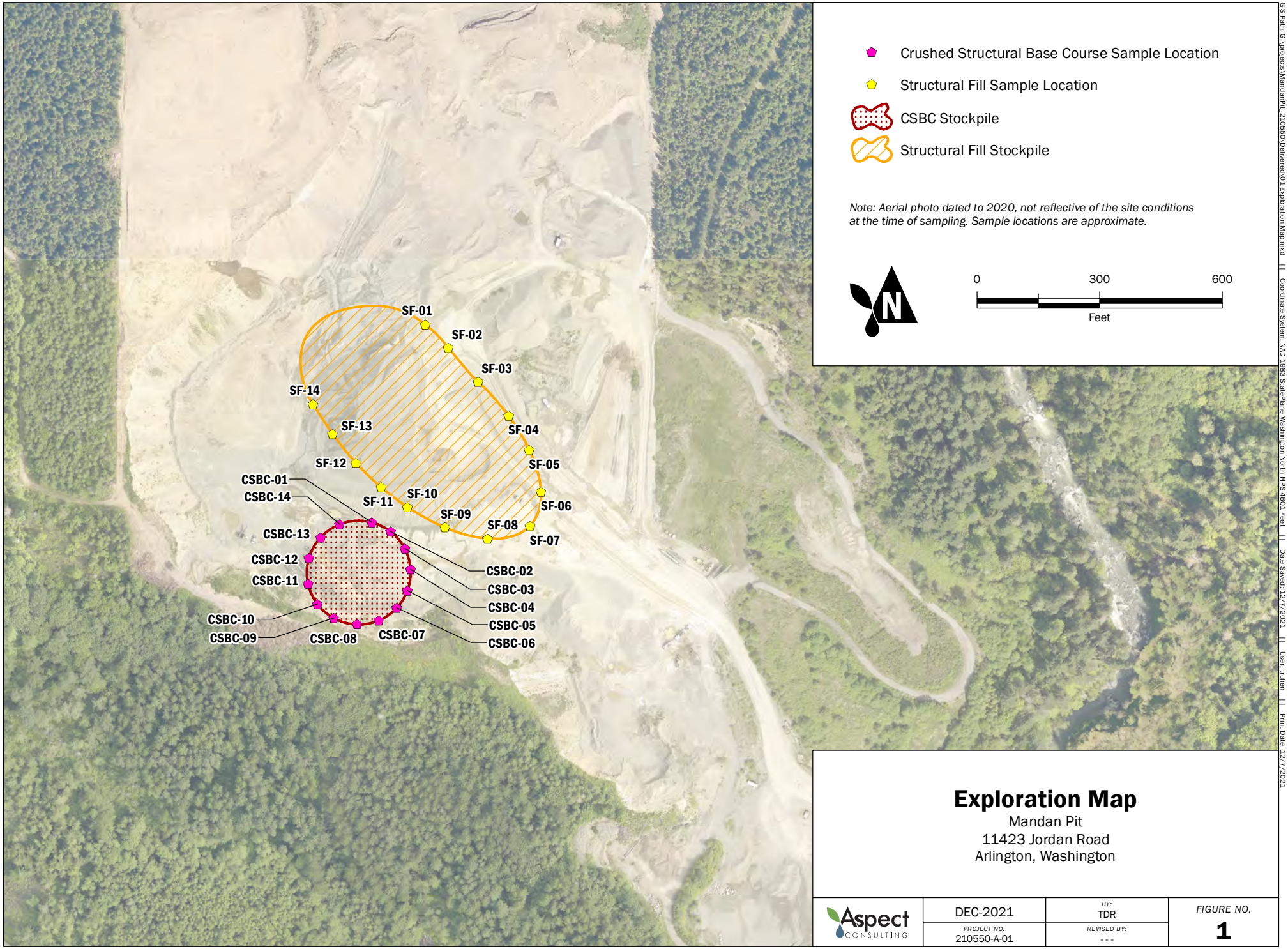

Exploration Map

Mandan Pit
11423 Jordan Road
Arlington, Washington

Aspect Consulting	DEC-2021	BY: TDR	FIGURE NO. 1
	PROJECT NO. 210550-A-01	REVISED BY: ---	

GIS Path: G:\projects\MandanPit_210550\Delivered\01 Exploration Map.mxd || Coordinate System: NAD 1983 StatePlane Washington North FIPS 4601 Feet || Date Saved: 12/7/2021 || User: trulien || Print Date: 12/7/2021

APPENDIX A

Laboratory Report

November 16, 2021

Ms. Amy Tice
Aspect Consulting, LLC
710 - 2nd Ave, Suite 550
Seattle, WA 98104

Dear Ms. Tice,

On November 4th, 28 samples were received by our laboratory and assigned our laboratory project number EV21110033. The project was identified as your KC Stockpile. The sample identification and requested analyses are outlined on the attached chain of custody record.

No abnormalities or nonconformances were observed during the analyses of the project samples.

Please do not hesitate to call me if you have any questions or if I can be of further assistance.

Sincerely,

ALS Laboratory Group

Glen Perry
Laboratory Director

ADDRESS 8620 Holly Drive, Suite 100, Everett, WA 98208 | PHONE 425-356-2600 | FAX 425-356-2626
ALS Group USA, Corp dba ALS Environmental

Environmental www.alsglobal.com
RIGHT SOLUTIONS RIGHT PARTNER

ALS Environmental

CERTIFICATE OF ANALYSIS

CLIENT:	Aspect Consulting, LLC 710 - 2nd Ave, Suite 550 Seattle, WA 98104	DATE:	11/16/2021
		ALS JOB#:	EV21110033
		ALS SAMPLE#:	EV21110033-01
CLIENT CONTACT:	Amy Tice	DATE RECEIVED:	11/04/2021
CLIENT PROJECT:	KC Stockpile	COLLECTION DATE:	11/4/2021 9:45:00 AM
CLIENT SAMPLE ID	CSBC-1	WDOE ACCREDITATION:	C601

SAMPLE DATA RESULTS

ANALYTE	METHOD	RESULTS	REPORTING LIMITS	DILUTION FACTOR	UNITS	ANALYSIS DATE	ANALYSIS BY
TPH-Volatile Range	NWTPH-GX	U	3.0	1	MG/KG	11/05/2021	KLS
TPH-Diesel Range	NWTPH-DX	U	25	1	MG/KG	11/05/2021	JNF
TPH-Oil Range	NWTPH-DX	U	50	1	MG/KG	11/05/2021	JNF
Naphthalene	EPA-8270 SIM	U	20	1	UG/KG	11/09/2021	JMK
2-Methylnaphthalene	EPA-8270 SIM	U	20	1	UG/KG	11/09/2021	JMK
1-Methylnaphthalene	EPA-8270 SIM	U	20	1	UG/KG	11/09/2021	JMK
Acenaphthylene	EPA-8270 SIM	U	20	1	UG/KG	11/09/2021	JMK
Acenaphthene	EPA-8270 SIM	U	20	1	UG/KG	11/09/2021	JMK
Fluorene	EPA-8270 SIM	U	20	1	UG/KG	11/09/2021	JMK
Phenanthrene	EPA-8270 SIM	U	20	1	UG/KG	11/09/2021	JMK
Anthracene	EPA-8270 SIM	U	20	1	UG/KG	11/09/2021	JMK
Fluoranthene	EPA-8270 SIM	U	20	1	UG/KG	11/09/2021	JMK
Pyrene	EPA-8270 SIM	U	20	1	UG/KG	11/09/2021	JMK
Benzo[A]Anthracene	EPA-8270 SIM	U	20	1	UG/KG	11/09/2021	JMK
Chrysene	EPA-8270 SIM	U	20	1	UG/KG	11/09/2021	JMK
Benzo[B]Fluoranthene	EPA-8270 SIM	U	20	1	UG/KG	11/09/2021	JMK
Benzo[K]Fluoranthene	EPA-8270 SIM	U	20	1	UG/KG	11/09/2021	JMK
Benzo[A]Pyrene	EPA-8270 SIM	U	20	1	UG/KG	11/09/2021	JMK
Indeno[1,2,3-Cd]Pyrene	EPA-8270 SIM	U	20	1	UG/KG	11/09/2021	JMK
Dibenz[A,H]Anthracene	EPA-8270 SIM	U	20	1	UG/KG	11/09/2021	JMK
Benzo[G,H,I]Perylene	EPA-8270 SIM	U	20	1	UG/KG	11/09/2021	JMK
PCB-1016	EPA-8082	U	0.10	1	MG/KG	11/08/2021	JMK
PCB-1221	EPA-8082	U	0.10	1	MG/KG	11/08/2021	JMK
PCB-1232	EPA-8082	U	0.10	1	MG/KG	11/08/2021	JMK
PCB-1242	EPA-8082	U	0.10	1	MG/KG	11/08/2021	JMK
PCB-1248	EPA-8082	U	0.10	1	MG/KG	11/08/2021	JMK
PCB-1254	EPA-8082	U	0.10	1	MG/KG	11/08/2021	JMK
PCB-1260	EPA-8082	U	0.10	1	MG/KG	11/08/2021	JMK
PCB-1268	EPA-8082	U	0.10	1	MG/KG	11/08/2021	JMK
Mercury	EPA-7471	**0.059**	0.020	1	MG/KG	11/08/2021	RAL
Arsenic	EPA-6020	**4.4**	0.20	1	MG/KG	11/08/2021	EBS
Copper	EPA-6020	**35**	0.10	1	MG/KG	11/08/2021	EBS
Lead	EPA-6020	**3.7**	0.10	1	MG/KG	11/08/2021	EBS
Nickel	EPA-6020	**38**	0.10	1	MG/KG	11/08/2021	EBS
Zinc	EPA-6020	**40**	0.50	1	MG/KG	11/08/2021	EBS

ADDRESS 8620 Holly Drive, Suite 100, Everett, WA 98208 | PHONE 425-356-2600 | FAX 425-356-2626
ALS Group USA, Corp dba ALS Environmental

Environmental www.alsglobal.com
RIGHT SOLUTIONS RIGHT PARTNER

CERTIFICATE OF ANALYSIS

CLIENT:	Aspect Consulting, LLC 710 - 2nd Ave, Suite 550 Seattle, WA 98104	DATE: ALS JOB#: ALS SAMPLE#:	11/16/2021 EV21110033 EV21110033-01
CLIENT CONTACT:	Amy Tice	DATE RECEIVED:	11/04/2021
CLIENT PROJECT:	KC Stockpile	COLLECTION DATE:	11/4/2021 9:45:00 AM
CLIENT SAMPLE ID	CSBC-1	WDOE ACCREDITATION:	C601

SAMPLE DATA RESULTS

SURROGATE	METHOD	%REC	ANALYSIS DATE	ANALYSIS BY
TFT	NWTPH-GX	**72.0**	11/05/2021	KLS
C25	NWTPH-DX	**81.4**	11/05/2021	JNF
Terphenyl-d14	EPA-8270 SIM	**126**	11/09/2021	JMK
TCMX	EPA-8082	**104**	11/08/2021	JMK
DCB	EPA-8082	**122**	11/08/2021	JMK

U - Analyte analyzed for but not detected at level above reporting limit.

ADDRESS 8620 Holly Drive, Suite 100, Everett, WA 98208 | PHONE 425-356-2600 | FAX 425-356-2626
ALS Group USA, Corp dba ALS Environmental

Environmental www.alsglobal.com
RIGHT SOLUTIONS RIGHT PARTNER

ALS Environmental

CERTIFICATE OF ANALYSIS

CLIENT:	Aspect Consulting, LLC 710 - 2nd Ave, Suite 550 Seattle, WA 98104	DATE:	11/16/2021
		ALS JOB#:	EV21110033
		ALS SAMPLE#:	EV21110033-02
CLIENT CONTACT:	Amy Tice	DATE RECEIVED:	11/04/2021
CLIENT PROJECT:	KC Stockpile	COLLECTION DATE:	11/4/2021 9:55:00 AM
CLIENT SAMPLE ID	CSBC-2	WDOE ACCREDITATION:	C601

SAMPLE DATA RESULTS

ANALYTE	METHOD	RESULTS	REPORTING LIMITS	DILUTION FACTOR	UNITS	ANALYSIS DATE	ANALYSIS BY
TPH-Volatile Range	NWTPH-GX	U	3.0	1	MG/KG	11/05/2021	KLS
TPH-Diesel Range	NWTPH-DX	U	25	1	MG/KG	11/05/2021	JNF
TPH-Oil Range	NWTPH-DX	U	50	1	MG/KG	11/05/2021	JNF
Naphthalene	EPA-8270 SIM	U	20	1	UG/KG	11/09/2021	JMK
2-Methylnaphthalene	EPA-8270 SIM	U	20	1	UG/KG	11/09/2021	JMK
1-Methylnaphthalene	EPA-8270 SIM	U	20	1	UG/KG	11/09/2021	JMK
Acenaphthylene	EPA-8270 SIM	U	20	1	UG/KG	11/09/2021	JMK
Acenaphthene	EPA-8270 SIM	U	20	1	UG/KG	11/09/2021	JMK
Fluorene	EPA-8270 SIM	U	20	1	UG/KG	11/09/2021	JMK
Phenanthrene	EPA-8270 SIM	U	20	1	UG/KG	11/09/2021	JMK
Anthracene	EPA-8270 SIM	U	20	1	UG/KG	11/09/2021	JMK
Fluoranthene	EPA-8270 SIM	U	20	1	UG/KG	11/09/2021	JMK
Pyrene	EPA-8270 SIM	U	20	1	UG/KG	11/09/2021	JMK
Benzo[A]Anthracene	EPA-8270 SIM	U	20	1	UG/KG	11/09/2021	JMK
Chrysene	EPA-8270 SIM	U	20	1	UG/KG	11/09/2021	JMK
Benzo[B]Fluoranthene	EPA-8270 SIM	U	20	1	UG/KG	11/09/2021	JMK
Benzo[K]Fluoranthene	EPA-8270 SIM	U	20	1	UG/KG	11/09/2021	JMK
Benzo[A]Pyrene	EPA-8270 SIM	U	20	1	UG/KG	11/09/2021	JMK
Indeno[1,2,3-Cd]Pyrene	EPA-8270 SIM	U	20	1	UG/KG	11/09/2021	JMK
Dibenz[A,H]Anthracene	EPA-8270 SIM	U	20	1	UG/KG	11/09/2021	JMK
Benzo[G,H,I]Perylene	EPA-8270 SIM	U	20	1	UG/KG	11/09/2021	JMK
PCB-1016	EPA-8082	U	0.10	1	MG/KG	11/08/2021	JMK
PCB-1221	EPA-8082	U	0.10	1	MG/KG	11/08/2021	JMK
PCB-1232	EPA-8082	U	0.10	1	MG/KG	11/08/2021	JMK
PCB-1242	EPA-8082	U	0.10	1	MG/KG	11/08/2021	JMK
PCB-1248	EPA-8082	U	0.10	1	MG/KG	11/08/2021	JMK
PCB-1254	EPA-8082	U	0.10	1	MG/KG	11/08/2021	JMK
PCB-1260	EPA-8082	U	0.10	1	MG/KG	11/08/2021	JMK
PCB-1268	EPA-8082	U	0.10	1	MG/KG	11/08/2021	JMK
Mercury	EPA-7471	**0.053**	0.020	1	MG/KG	11/08/2021	RAL
Arsenic	EPA-6020	**3.8**	0.20	1	MG/KG	11/08/2021	EBS
Copper	EPA-6020	**32**	0.10	1	MG/KG	11/08/2021	EBS
Lead	EPA-6020	**3.6**	0.10	1	MG/KG	11/08/2021	EBS
Nickel	EPA-6020	**44**	0.10	1	MG/KG	11/08/2021	EBS
Zinc	EPA-6020	**44**	0.50	1	MG/KG	11/08/2021	EBS

SURROGATE	METHOD	%REC	ANALYSIS DATE	ANALYSIS BY

ADDRESS 8620 Holly Drive, Suite 100, Everett, WA 98208 | PHONE 425-356-2600 | FAX 425-356-2626
ALS Group USA, Corp dba ALS Environmental

Environmental www.alsglobal.com
RIGHT SOLUTIONS RIGHT PARTNER

CERTIFICATE OF ANALYSIS

CLIENT:	Aspect Consulting, LLC 710 - 2nd Ave, Suite 550 Seattle, WA 98104	DATE: ALS JOB#: ALS SAMPLE#:	11/16/2021 EV21110033 EV21110033-02
CLIENT CONTACT:	Amy Tice	DATE RECEIVED:	11/04/2021
CLIENT PROJECT:	KC Stockpile	COLLECTION DATE:	11/4/2021 9:55:00 AM
CLIENT SAMPLE ID	CSBC-2	WDOE ACCREDITATION:	C601

SAMPLE DATA RESULTS

SURROGATE	METHOD	%REC	ANALYSIS DATE	ANALYSIS BY
TFT	NWTPH-GX	**71.0**	11/05/2021	KLS
C25	NWTPH-DX	**83.5**	11/05/2021	JNF
Terphenyl-d14	EPA-8270 SIM	**130**	11/09/2021	JMK
TCMX	EPA-8082	**93.8**	11/08/2021	JMK
DCB	EPA-8082	**109**	11/08/2021	JMK

U - Analyte analyzed for but not detected at level above reporting limit.

ADDRESS 8620 Holly Drive, Suite 100, Everett, WA 98208 | PHONE 425-356-2600 | FAX 425-356-2626
ALS Group USA, Corp dba ALS Environmental

Environmental www.alsglobal.com
RIGHT SOLUTIONS RIGHT PARTNER

ALS Environmental

CERTIFICATE OF ANALYSIS

CLIENT:	Aspect Consulting, LLC 710 - 2nd Ave, Suite 550 Seattle, WA 98104	DATE: ALS JOB#: ALS SAMPLE#:	11/16/2021 EV21110033 EV21110033-03
CLIENT CONTACT:	Amy Tice	DATE RECEIVED:	11/04/2021
CLIENT PROJECT:	KC Stockpile	COLLECTION DATE:	11/4/2021 10:05:00 AM
CLIENT SAMPLE ID	CSBC-3	WDOE ACCREDITATION:	C601

SAMPLE DATA RESULTS

ANALYTE	METHOD	RESULTS	REPORTING LIMITS	DILUTION FACTOR	UNITS	ANALYSIS DATE	ANALYSIS BY
TPH-Volatile Range	NWTPH-GX	U	3.0	1	MG/KG	11/05/2021	KLS
TPH-Diesel Range	NWTPH-DX	U	25	1	MG/KG	11/05/2021	JNF
TPH-Oil Range	NWTPH-DX	U	50	1	MG/KG	11/05/2021	JNF
Naphthalene	EPA-8270 SIM	U	20	1	UG/KG	11/09/2021	JMK
2-Methylnaphthalene	EPA-8270 SIM	U	20	1	UG/KG	11/09/2021	JMK
1-Methylnaphthalene	EPA-8270 SIM	U	20	1	UG/KG	11/09/2021	JMK
Acenaphthylene	EPA-8270 SIM	U	20	1	UG/KG	11/09/2021	JMK
Acenaphthene	EPA-8270 SIM	U	20	1	UG/KG	11/09/2021	JMK
Fluorene	EPA-8270 SIM	U	20	1	UG/KG	11/09/2021	JMK
Phenanthrene	EPA-8270 SIM	U	20	1	UG/KG	11/09/2021	JMK
Anthracene	EPA-8270 SIM	U	20	1	UG/KG	11/09/2021	JMK
Fluoranthene	EPA-8270 SIM	U	20	1	UG/KG	11/09/2021	JMK
Pyrene	EPA-8270 SIM	U	20	1	UG/KG	11/09/2021	JMK
Benzo[A]Anthracene	EPA-8270 SIM	U	20	1	UG/KG	11/09/2021	JMK
Chrysene	EPA-8270 SIM	U	20	1	UG/KG	11/09/2021	JMK
Benzo[B]Fluoranthene	EPA-8270 SIM	U	20	1	UG/KG	11/09/2021	JMK
Benzo[K]Fluoranthene	EPA-8270 SIM	U	20	1	UG/KG	11/09/2021	JMK
Benzo[A]Pyrene	EPA-8270 SIM	U	20	1	UG/KG	11/09/2021	JMK
Indeno[1,2,3-Cd]Pyrene	EPA-8270 SIM	U	20	1	UG/KG	11/09/2021	JMK
Dibenz[A,H]Anthracene	EPA-8270 SIM	U	20	1	UG/KG	11/09/2021	JMK
Benzo[G,H,I]Perylene	EPA-8270 SIM	U	20	1	UG/KG	11/09/2021	JMK
PCB-1016	EPA-8082	U	0.10	1	MG/KG	11/08/2021	JMK
PCB-1221	EPA-8082	U	0.10	1	MG/KG	11/08/2021	JMK
PCB-1232	EPA-8082	U	0.10	1	MG/KG	11/08/2021	JMK
PCB-1242	EPA-8082	U	0.10	1	MG/KG	11/08/2021	JMK
PCB-1248	EPA-8082	U	0.10	1	MG/KG	11/08/2021	JMK
PCB-1254	EPA-8082	U	0.10	1	MG/KG	11/08/2021	JMK
PCB-1260	EPA-8082	U	0.10	1	MG/KG	11/08/2021	JMK
PCB-1268	EPA-8082	U	0.10	1	MG/KG	11/08/2021	JMK
Mercury	EPA-7471	**0.044**	0.020	1	MG/KG	11/08/2021	RAL
Arsenic	EPA-6020	**4.2**	0.20	1	MG/KG	11/08/2021	EBS
Copper	EPA-6020	**31**	0.10	1	MG/KG	11/08/2021	EBS
Lead	EPA-6020	**3.7**	0.10	1	MG/KG	11/08/2021	EBS
Nickel	EPA-6020	**35**	0.10	1	MG/KG	11/08/2021	EBS
Zinc	EPA-6020	**48**	0.50	1	MG/KG	11/08/2021	EBS

SURROGATE	METHOD	%REC	ANALYSIS DATE	ANALYSIS BY

ADDRESS 8620 Holly Drive, Suite 100, Everett, WA 98208 | PHONE 425-356-2600 | FAX 425-356-2626
ALS Group USA, Corp dba ALS Environmental

Environmental www.alsglobal.com
RIGHT SOLUTIONS RIGHT PARTNER

CERTIFICATE OF ANALYSIS

CLIENT:	Aspect Consulting, LLC 710 - 2nd Ave, Suite 550 Seattle, WA 98104	DATE: ALS JOB#: ALS SAMPLE#:	11/16/2021 EV21110033 EV21110033-03
CLIENT CONTACT:	Amy Tice	DATE RECEIVED:	11/04/2021
CLIENT PROJECT:	KC Stockpile	COLLECTION DATE:	11/4/2021 10:05:00 AM
CLIENT SAMPLE ID	CSBC-3	WDOE ACCREDITATION:	C601

SAMPLE DATA RESULTS

SURROGATE	METHOD	%REC	ANALYSIS DATE	ANALYSIS BY
TFT	NWTPH-GX	**72.9**	11/05/2021	KLS
C25	NWTPH-DX	**84.8**	11/05/2021	JNF
Terphenyl-d14	EPA-8270 SIM	**123**	11/09/2021	JMK
TCMX	EPA-8082	**91.1**	11/08/2021	JMK
DCB	EPA-8082	**109**	11/08/2021	JMK

U - Analyte analyzed for but not detected at level above reporting limit.

ADDRESS 8620 Holly Drive, Suite 100, Everett, WA 98208 | PHONE 425-356-2600 | FAX 425-356-2626
ALS Group USA, Corp dba ALS Environmental

Environmental www.alsglobal.com
RIGHT SOLUTIONS RIGHT PARTNER

ALS Environmental

CERTIFICATE OF ANALYSIS

CLIENT:	Aspect Consulting, LLC 710 - 2nd Ave, Suite 550 Seattle, WA 98104	DATE: ALS JOB#: ALS SAMPLE#:	11/16/2021 EV21110033 EV21110033-04
CLIENT CONTACT:	Amy Tice	DATE RECEIVED:	11/04/2021
CLIENT PROJECT:	KC Stockpile	COLLECTION DATE:	11/4/2021 10:15:00 AM
CLIENT SAMPLE ID	CSBC-4	WDOE ACCREDITATION:	C601

SAMPLE DATA RESULTS

ANALYTE	METHOD	RESULTS	REPORTING LIMITS	DILUTION FACTOR	UNITS	ANALYSIS DATE	ANALYSIS BY
TPH-Volatile Range	NWTPH-GX	U	3.0	1	MG/KG	11/05/2021	KLS
TPH-Diesel Range	NWTPH-DX	U	25	1	MG/KG	11/05/2021	JNF
TPH-Oil Range	NWTPH-DX	U	50	1	MG/KG	11/05/2021	JNF
Naphthalene	EPA-8270 SIM	U	20	1	UG/KG	11/09/2021	JMK
2-Methylnaphthalene	EPA-8270 SIM	U	20	1	UG/KG	11/09/2021	JMK
1-Methylnaphthalene	EPA-8270 SIM	U	20	1	UG/KG	11/09/2021	JMK
Acenaphthylene	EPA-8270 SIM	U	20	1	UG/KG	11/09/2021	JMK
Acenaphthene	EPA-8270 SIM	U	20	1	UG/KG	11/09/2021	JMK
Fluorene	EPA-8270 SIM	U	20	1	UG/KG	11/09/2021	JMK
Phenanthrene	EPA-8270 SIM	U	20	1	UG/KG	11/09/2021	JMK
Anthracene	EPA-8270 SIM	U	20	1	UG/KG	11/09/2021	JMK
Fluoranthene	EPA-8270 SIM	U	20	1	UG/KG	11/09/2021	JMK
Pyrene	EPA-8270 SIM	U	20	1	UG/KG	11/09/2021	JMK
Benzo[A]Anthracene	EPA-8270 SIM	U	20	1	UG/KG	11/09/2021	JMK
Chrysene	EPA-8270 SIM	U	20	1	UG/KG	11/09/2021	JMK
Benzo[B]Fluoranthene	EPA-8270 SIM	U	20	1	UG/KG	11/09/2021	JMK
Benzo[K]Fluoranthene	EPA-8270 SIM	U	20	1	UG/KG	11/09/2021	JMK
Benzo[A]Pyrene	EPA-8270 SIM	U	20	1	UG/KG	11/09/2021	JMK
Indeno[1,2,3-Cd]Pyrene	EPA-8270 SIM	U	20	1	UG/KG	11/09/2021	JMK
Dibenz[A,H]Anthracene	EPA-8270 SIM	U	20	1	UG/KG	11/09/2021	JMK
Benzo[G,H,I]Perylene	EPA-8270 SIM	U	20	1	UG/KG	11/09/2021	JMK
PCB-1016	EPA-8082	U	0.10	1	MG/KG	11/08/2021	JMK
PCB-1221	EPA-8082	U	0.10	1	MG/KG	11/08/2021	JMK
PCB-1232	EPA-8082	U	0.10	1	MG/KG	11/08/2021	JMK
PCB-1242	EPA-8082	U	0.10	1	MG/KG	11/08/2021	JMK
PCB-1248	EPA-8082	U	0.10	1	MG/KG	11/08/2021	JMK
PCB-1254	EPA-8082	U	0.10	1	MG/KG	11/08/2021	JMK
PCB-1260	EPA-8082	U	0.10	1	MG/KG	11/08/2021	JMK
PCB-1268	EPA-8082	U	0.10	1	MG/KG	11/08/2021	JMK
Mercury	EPA-7471	**0.045**	0.020	1	MG/KG	11/08/2021	RAL
Arsenic	EPA-6020	**3.9**	0.20	1	MG/KG	11/08/2021	EBS
Copper	EPA-6020	**31**	0.10	1	MG/KG	11/08/2021	EBS
Lead	EPA-6020	**3.1**	0.10	1	MG/KG	11/08/2021	EBS
Nickel	EPA-6020	**42**	0.10	1	MG/KG	11/08/2021	EBS
Zinc	EPA-6020	**48**	0.50	1	MG/KG	11/08/2021	EBS

SURROGATE	METHOD	%REC	ANALYSIS DATE	ANALYSIS BY

ADDRESS 8620 Holly Drive, Suite 100, Everett, WA 98208 | PHONE 425-356-2600 | FAX 425-356-2626
ALS Group USA, Corp dba ALS Environmental

Environmental www.alsglobal.com
RIGHT SOLUTIONS RIGHT PARTNER

CERTIFICATE OF ANALYSIS

CLIENT:	Aspect Consulting, LLC 710 - 2nd Ave, Suite 550 Seattle, WA 98104	DATE: ALS JOB#: ALS SAMPLE#:	11/16/2021 EV21110033 EV21110033-04
CLIENT CONTACT:	Amy Tice	DATE RECEIVED:	11/04/2021
CLIENT PROJECT:	KC Stockpile	COLLECTION DATE:	11/4/2021 10:15:00 AM
CLIENT SAMPLE ID	CSBC-4	WDOE ACCREDITATION:	C601

SAMPLE DATA RESULTS

SURROGATE	METHOD	%REC	ANALYSIS DATE	ANALYSIS BY
TFT	NWTPH-GX	**77.8**	11/05/2021	KLS
C25	NWTPH-DX	**87.2**	11/05/2021	JNF
Terphenyl-d14	EPA-8270 SIM	**141**	11/09/2021	JMK
TCMX	EPA-8082	**105**	11/08/2021	JMK
DCB	EPA-8082	**122**	11/08/2021	JMK

U - Analyte analyzed for but not detected at level above reporting limit.

ADDRESS 8620 Holly Drive, Suite 100, Everett, WA 98208 | PHONE 425-356-2600 | FAX 425-356-2626
ALS Group USA, Corp dba ALS Environmental

Environmental www.alsglobal.com
RIGHT SOLUTIONS RIGHT PARTNER

ALS Environmental

CERTIFICATE OF ANALYSIS

CLIENT:	Aspect Consulting, LLC 710 - 2nd Ave, Suite 550 Seattle, WA 98104	DATE: ALS JOB#: ALS SAMPLE#:	11/16/2021 EV21110033 EV21110033-05
CLIENT CONTACT:	Amy Tice	DATE RECEIVED:	11/04/2021
CLIENT PROJECT:	KC Stockpile	COLLECTION DATE:	11/4/2021 10:25:00 AM
CLIENT SAMPLE ID	CSBC-5	WDOE ACCREDITATION:	C601

SAMPLE DATA RESULTS

ANALYTE	METHOD	RESULTS	REPORTING LIMITS	DILUTION FACTOR	UNITS	ANALYSIS DATE	ANALYSIS BY
TPH-Volatile Range	NWTPH-GX	U	3.0	1	MG/KG	11/05/2021	KLS
TPH-Diesel Range	NWTPH-DX	U	25	1	MG/KG	11/05/2021	JNF
TPH-Oil Range	NWTPH-DX	U	50	1	MG/KG	11/05/2021	JNF
Naphthalene	EPA-8270 SIM	U	20	1	UG/KG	11/09/2021	JMK
2-Methylnaphthalene	EPA-8270 SIM	U	20	1	UG/KG	11/09/2021	JMK
1-Methylnaphthalene	EPA-8270 SIM	U	20	1	UG/KG	11/09/2021	JMK
Acenaphthylene	EPA-8270 SIM	U	20	1	UG/KG	11/09/2021	JMK
Acenaphthene	EPA-8270 SIM	U	20	1	UG/KG	11/09/2021	JMK
Fluorene	EPA-8270 SIM	U	20	1	UG/KG	11/09/2021	JMK
Phenanthrene	EPA-8270 SIM	U	20	1	UG/KG	11/09/2021	JMK
Anthracene	EPA-8270 SIM	U	20	1	UG/KG	11/09/2021	JMK
Fluoranthene	EPA-8270 SIM	U	20	1	UG/KG	11/09/2021	JMK
Pyrene	EPA-8270 SIM	U	20	1	UG/KG	11/09/2021	JMK
Benzo[A]Anthracene	EPA-8270 SIM	U	20	1	UG/KG	11/09/2021	JMK
Chrysene	EPA-8270 SIM	U	20	1	UG/KG	11/09/2021	JMK
Benzo[B]Fluoranthene	EPA-8270 SIM	U	20	1	UG/KG	11/09/2021	JMK
Benzo[K]Fluoranthene	EPA-8270 SIM	U	20	1	UG/KG	11/09/2021	JMK
Benzo[A]Pyrene	EPA-8270 SIM	U	20	1	UG/KG	11/09/2021	JMK
Indeno[1,2,3-Cd]Pyrene	EPA-8270 SIM	U	20	1	UG/KG	11/09/2021	JMK
Dibenz[A,H]Anthracene	EPA-8270 SIM	U	20	1	UG/KG	11/09/2021	JMK
Benzo[G,H,I]Perylene	EPA-8270 SIM	U	20	1	UG/KG	11/09/2021	JMK
PCB-1016	EPA-8082	U	0.10	1	MG/KG	11/08/2021	JMK
PCB-1221	EPA-8082	U	0.10	1	MG/KG	11/08/2021	JMK
PCB-1232	EPA-8082	U	0.10	1	MG/KG	11/08/2021	JMK
PCB-1242	EPA-8082	U	0.10	1	MG/KG	11/08/2021	JMK
PCB-1248	EPA-8082	U	0.10	1	MG/KG	11/08/2021	JMK
PCB-1254	EPA-8082	U	0.10	1	MG/KG	11/08/2021	JMK
PCB-1260	EPA-8082	U	0.10	1	MG/KG	11/08/2021	JMK
PCB-1268	EPA-8082	U	0.10	1	MG/KG	11/08/2021	JMK
Mercury	EPA-7471	**0.051**	0.020	1	MG/KG	11/08/2021	RAL
Arsenic	EPA-6020	**3.1**	0.20	1	MG/KG	11/08/2021	EBS
Copper	EPA-6020	**26**	0.10	1	MG/KG	11/08/2021	EBS
Lead	EPA-6020	**3.0**	0.10	1	MG/KG	11/08/2021	EBS
Nickel	EPA-6020	**31**	0.10	1	MG/KG	11/08/2021	EBS
Zinc	EPA-6020	**46**	0.50	1	MG/KG	11/08/2021	EBS

SURROGATE	METHOD	%REC	ANALYSIS DATE	ANALYSIS BY

ADDRESS 8620 Holly Drive, Suite 100, Everett, WA 98208 | PHONE 425-356-2600 | FAX 425-356-2626
ALS Group USA, Corp dba ALS Environmental

Environmental www.alsglobal.com
RIGHT SOLUTIONS RIGHT PARTNER

CERTIFICATE OF ANALYSIS

CLIENT:	Aspect Consulting, LLC 710 - 2nd Ave, Suite 550 Seattle, WA 98104	DATE: ALS JOB#: ALS SAMPLE#:	11/16/2021 EV21110033 EV21110033-05
CLIENT CONTACT:	Amy Tice	DATE RECEIVED:	11/04/2021
CLIENT PROJECT:	KC Stockpile	COLLECTION DATE:	11/4/2021 10:25:00 AM
CLIENT SAMPLE ID	CSBC-5	WDOE ACCREDITATION:	C601

SAMPLE DATA RESULTS

SURROGATE	METHOD	%REC	ANALYSIS DATE	ANALYSIS BY
TFT	NWTPH-GX	**74.9**	11/05/2021	KLS
C25	NWTPH-DX	**79.2**	11/05/2021	JNF
Terphenyl-d14	EPA-8270 SIM	**142**	11/09/2021	JMK
TCMX	EPA-8082	**103**	11/08/2021	JMK
DCB	EPA-8082	**116**	11/08/2021	JMK

U - Analyte analyzed for but not detected at level above reporting limit.

ADDRESS 8620 Holly Drive, Suite 100, Everett, WA 98208 | PHONE 425-356-2600 | FAX 425-356-2626
ALS Group USA, Corp dba ALS Environmental

Environmental www.alsglobal.com
RIGHT SOLUTIONS RIGHT PARTNER

ALS Environmental

CERTIFICATE OF ANALYSIS

CLIENT:	Aspect Consulting, LLC 710 - 2nd Ave, Suite 550 Seattle, WA 98104	DATE: ALS JOB#: ALS SAMPLE#:	11/16/2021 EV21110033 EV21110033-06
CLIENT CONTACT:	Amy Tice	DATE RECEIVED:	11/04/2021
CLIENT PROJECT:	KC Stockpile	COLLECTION DATE:	11/4/2021 10:35:00 AM
CLIENT SAMPLE ID	CSBC-6	WDOE ACCREDITATION:	C601

SAMPLE DATA RESULTS

ANALYTE	METHOD	RESULTS	REPORTING LIMITS	DILUTION FACTOR	UNITS	ANALYSIS DATE	ANALYSIS BY
TPH-Volatile Range	NWTPH-GX	U	3.0	1	MG/KG	11/05/2021	KLS
TPH-Diesel Range	NWTPH-DX	U	25	1	MG/KG	11/05/2021	JNF
TPH-Oil Range	NWTPH-DX	U	50	1	MG/KG	11/05/2021	JNF
Naphthalene	EPA-8270 SIM	U	20	1	UG/KG	11/09/2021	JMK
2-Methylnaphthalene	EPA-8270 SIM	U	20	1	UG/KG	11/09/2021	JMK
1-Methylnaphthalene	EPA-8270 SIM	U	20	1	UG/KG	11/09/2021	JMK
Acenaphthylene	EPA-8270 SIM	U	20	1	UG/KG	11/09/2021	JMK
Acenaphthene	EPA-8270 SIM	U	20	1	UG/KG	11/09/2021	JMK
Fluorene	EPA-8270 SIM	U	20	1	UG/KG	11/09/2021	JMK
Phenanthrene	EPA-8270 SIM	U	20	1	UG/KG	11/09/2021	JMK
Anthracene	EPA-8270 SIM	U	20	1	UG/KG	11/09/2021	JMK
Fluoranthene	EPA-8270 SIM	U	20	1	UG/KG	11/09/2021	JMK
Pyrene	EPA-8270 SIM	U	20	1	UG/KG	11/09/2021	JMK
Benzo[A]Anthracene	EPA-8270 SIM	U	20	1	UG/KG	11/09/2021	JMK
Chrysene	EPA-8270 SIM	U	20	1	UG/KG	11/09/2021	JMK
Benzo[B]Fluoranthene	EPA-8270 SIM	U	20	1	UG/KG	11/09/2021	JMK
Benzo[K]Fluoranthene	EPA-8270 SIM	U	20	1	UG/KG	11/09/2021	JMK
Benzo[A]Pyrene	EPA-8270 SIM	U	20	1	UG/KG	11/09/2021	JMK
Indeno[1,2,3-Cd]Pyrene	EPA-8270 SIM	U	20	1	UG/KG	11/09/2021	JMK
Dibenz[A,H]Anthracene	EPA-8270 SIM	U	20	1	UG/KG	11/09/2021	JMK
Benzo[G,H,I]Perylene	EPA-8270 SIM	U	20	1	UG/KG	11/09/2021	JMK
PCB-1016	EPA-8082	U	0.10	1	MG/KG	11/08/2021	JMK
PCB-1221	EPA-8082	U	0.10	1	MG/KG	11/08/2021	JMK
PCB-1232	EPA-8082	U	0.10	1	MG/KG	11/08/2021	JMK
PCB-1242	EPA-8082	U	0.10	1	MG/KG	11/08/2021	JMK
PCB-1248	EPA-8082	U	0.10	1	MG/KG	11/08/2021	JMK
PCB-1254	EPA-8082	U	0.10	1	MG/KG	11/08/2021	JMK
PCB-1260	EPA-8082	U	0.10	1	MG/KG	11/08/2021	JMK
PCB-1268	EPA-8082	U	0.10	1	MG/KG	11/08/2021	JMK
Mercury	EPA-7471	**0.044**	0.020	1	MG/KG	11/08/2021	RAL
Arsenic	EPA-6020	**3.9**	0.20	1	MG/KG	11/08/2021	EBS
Copper	EPA-6020	**33**	0.10	1	MG/KG	11/08/2021	EBS
Lead	EPA-6020	**3.1**	0.10	1	MG/KG	11/08/2021	EBS
Nickel	EPA-6020	**32**	0.10	1	MG/KG	11/08/2021	EBS
Zinc	EPA-6020	**42**	0.50	1	MG/KG	11/08/2021	EBS

SURROGATE	METHOD	%REC	ANALYSIS DATE	ANALYSIS BY

ADDRESS 8620 Holly Drive, Suite 100, Everett, WA 98208 | PHONE 425-356-2600 | FAX 425-356-2626
ALS Group USA, Corp dba ALS Environmental

Environmental www.alsglobal.com
RIGHT SOLUTIONS RIGHT PARTNER

CERTIFICATE OF ANALYSIS

CLIENT:	Aspect Consulting, LLC 710 - 2nd Ave, Suite 550 Seattle, WA 98104	DATE: ALS JOB#: ALS SAMPLE#:	11/16/2021 EV21110033 EV21110033-06
CLIENT CONTACT:	Amy Tice	DATE RECEIVED:	11/04/2021
CLIENT PROJECT:	KC Stockpile	COLLECTION DATE:	11/4/2021 10:35:00 AM
CLIENT SAMPLE ID	CSBC-6	WDOE ACCREDITATION:	C601

SAMPLE DATA RESULTS

SURROGATE	METHOD	%REC	ANALYSIS DATE	ANALYSIS BY
TFT	NWTPH-GX	**74.2**	11/05/2021	KLS
C25	NWTPH-DX	**83.2**	11/05/2021	JNF
Terphenyl-d14	EPA-8270 SIM	**131**	11/09/2021	JMK
TCMX	EPA-8082	**103**	11/08/2021	JMK
DCB	EPA-8082	**121**	11/08/2021	JMK

U - Analyte analyzed for but not detected at level above reporting limit.

ADDRESS 8620 Holly Drive, Suite 100, Everett, WA 98208 | PHONE 425-356-2600 | FAX 425-356-2626
ALS Group USA, Corp dba ALS Environmental

Environmental www.alsglobal.com
RIGHT SOLUTIONS RIGHT PARTNER

ALS Environmental

CERTIFICATE OF ANALYSIS

CLIENT:	Aspect Consulting, LLC 710 - 2nd Ave, Suite 550 Seattle, WA 98104	DATE: ALS JOB#: ALS SAMPLE#:	11/16/2021 EV21110033 EV21110033-07
CLIENT CONTACT:	Amy Tice	DATE RECEIVED:	11/04/2021
CLIENT PROJECT:	KC Stockpile	COLLECTION DATE:	11/4/2021 10:45:00 AM
CLIENT SAMPLE ID	CSBC-7	WDOE ACCREDITATION:	C601

SAMPLE DATA RESULTS

ANALYTE	METHOD	RESULTS	REPORTING LIMITS	DILUTION FACTOR	UNITS	ANALYSIS DATE	ANALYSIS BY
TPH-Volatile Range	NWTPH-GX	U	3.0	1	MG/KG	11/05/2021	KLS
TPH-Diesel Range	NWTPH-DX	U	25	1	MG/KG	11/05/2021	JNF
TPH-Oil Range	NWTPH-DX	U	50	1	MG/KG	11/05/2021	JNF
Naphthalene	EPA-8270 SIM	U	20	1	UG/KG	11/09/2021	JMK
2-Methylnaphthalene	EPA-8270 SIM	U	20	1	UG/KG	11/09/2021	JMK
1-Methylnaphthalene	EPA-8270 SIM	U	20	1	UG/KG	11/09/2021	JMK
Acenaphthylene	EPA-8270 SIM	U	20	1	UG/KG	11/09/2021	JMK
Acenaphthene	EPA-8270 SIM	U	20	1	UG/KG	11/09/2021	JMK
Fluorene	EPA-8270 SIM	U	20	1	UG/KG	11/09/2021	JMK
Phenanthrene	EPA-8270 SIM	U	20	1	UG/KG	11/09/2021	JMK
Anthracene	EPA-8270 SIM	U	20	1	UG/KG	11/09/2021	JMK
Fluoranthene	EPA-8270 SIM	U	20	1	UG/KG	11/09/2021	JMK
Pyrene	EPA-8270 SIM	U	20	1	UG/KG	11/09/2021	JMK
Benzo[A]Anthracene	EPA-8270 SIM	U	20	1	UG/KG	11/09/2021	JMK
Chrysene	EPA-8270 SIM	U	20	1	UG/KG	11/09/2021	JMK
Benzo[B]Fluoranthene	EPA-8270 SIM	U	20	1	UG/KG	11/09/2021	JMK
Benzo[K]Fluoranthene	EPA-8270 SIM	U	20	1	UG/KG	11/09/2021	JMK
Benzo[A]Pyrene	EPA-8270 SIM	U	20	1	UG/KG	11/09/2021	JMK
Indeno[1,2,3-Cd]Pyrene	EPA-8270 SIM	U	20	1	UG/KG	11/09/2021	JMK
Dibenz[A,H]Anthracene	EPA-8270 SIM	U	20	1	UG/KG	11/09/2021	JMK
Benzo[G,H,I]Perylene	EPA-8270 SIM	U	20	1	UG/KG	11/09/2021	JMK
PCB-1016	EPA-8082	U	0.10	1	MG/KG	11/08/2021	JMK
PCB-1221	EPA-8082	U	0.10	1	MG/KG	11/08/2021	JMK
PCB-1232	EPA-8082	U	0.10	1	MG/KG	11/08/2021	JMK
PCB-1242	EPA-8082	U	0.10	1	MG/KG	11/08/2021	JMK
PCB-1248	EPA-8082	U	0.10	1	MG/KG	11/08/2021	JMK
PCB-1254	EPA-8082	U	0.10	1	MG/KG	11/08/2021	JMK
PCB-1260	EPA-8082	U	0.10	1	MG/KG	11/08/2021	JMK
PCB-1268	EPA-8082	U	0.10	1	MG/KG	11/08/2021	JMK
Mercury	EPA-7471	**0.070**	0.020	1	MG/KG	11/08/2021	RAL
Arsenic	EPA-6020	**4.0**	0.20	1	MG/KG	11/08/2021	EBS
Copper	EPA-6020	**31**	0.10	1	MG/KG	11/08/2021	EBS
Lead	EPA-6020	**3.8**	0.10	1	MG/KG	11/08/2021	EBS
Nickel	EPA-6020	**35**	0.10	1	MG/KG	11/08/2021	EBS
Zinc	EPA-6020	**40**	0.50	1	MG/KG	11/08/2021	EBS

SURROGATE	METHOD	%REC	ANALYSIS DATE	ANALYSIS BY

ADDRESS 8620 Holly Drive, Suite 100, Everett, WA 98208 | PHONE 425-356-2600 | FAX 425-356-2626
ALS Group USA, Corp dba ALS Environmental

Environmental www.alsglobal.com
RIGHT SOLUTIONS RIGHT PARTNER

CERTIFICATE OF ANALYSIS

CLIENT:	Aspect Consulting, LLC 710 - 2nd Ave, Suite 550 Seattle, WA 98104	DATE: ALS JOB#: ALS SAMPLE#:	11/16/2021 EV21110033 EV21110033-07
CLIENT CONTACT:	Amy Tice	DATE RECEIVED:	11/04/2021
CLIENT PROJECT:	KC Stockpile	COLLECTION DATE:	11/4/2021 10:45:00 AM
CLIENT SAMPLE ID	CSBC-7	WDOE ACCREDITATION:	C601

SAMPLE DATA RESULTS

SURROGATE	METHOD	%REC	ANALYSIS DATE	ANALYSIS BY
TFT	NWTPH-GX	**72.0**	11/05/2021	KLS
C25	NWTPH-DX	**84.5**	11/05/2021	JNF
Terphenyl-d14	EPA-8270 SIM	**105**	11/09/2021	JMK
TCMX	EPA-8082	**99.6**	11/08/2021	JMK
DCB	EPA-8082	**120**	11/08/2021	JMK

U - Analyte analyzed for but not detected at level above reporting limit.

ADDRESS 8620 Holly Drive, Suite 100, Everett, WA 98208 | PHONE 425-356-2600 | FAX 425-356-2626
ALS Group USA, Corp dba ALS Environmental

Environmental www.alsglobal.com
RIGHT SOLUTIONS RIGHT PARTNER

ALS Environmental

CERTIFICATE OF ANALYSIS

CLIENT:	Aspect Consulting, LLC 710 - 2nd Ave, Suite 550 Seattle, WA 98104	DATE: ALS JOB#: ALS SAMPLE#:	11/16/2021 EV21110033 EV21110033-08
CLIENT CONTACT:	Amy Tice	DATE RECEIVED:	11/04/2021
CLIENT PROJECT:	KC Stockpile	COLLECTION DATE:	11/4/2021 10:55:00 AM
CLIENT SAMPLE ID	CSBC-8	WDOE ACCREDITATION:	C601

SAMPLE DATA RESULTS

ANALYTE	METHOD	RESULTS	REPORTING LIMITS	DILUTION FACTOR	UNITS	ANALYSIS DATE	ANALYSIS BY
TPH-Volatile Range	NWTPH-GX	U	3.0	1	MG/KG	11/05/2021	KLS
TPH-Diesel Range	NWTPH-DX	U	25	1	MG/KG	11/05/2021	JNF
TPH-Oil Range	NWTPH-DX	U	50	1	MG/KG	11/05/2021	JNF
Naphthalene	EPA-8270 SIM	U	20	1	UG/KG	11/09/2021	JMK
2-Methylnaphthalene	EPA-8270 SIM	U	20	1	UG/KG	11/09/2021	JMK
1-Methylnaphthalene	EPA-8270 SIM	U	20	1	UG/KG	11/09/2021	JMK
Acenaphthylene	EPA-8270 SIM	U	20	1	UG/KG	11/09/2021	JMK
Acenaphthene	EPA-8270 SIM	U	20	1	UG/KG	11/09/2021	JMK
Fluorene	EPA-8270 SIM	U	20	1	UG/KG	11/09/2021	JMK
Phenanthrene	EPA-8270 SIM	U	20	1	UG/KG	11/09/2021	JMK
Anthracene	EPA-8270 SIM	U	20	1	UG/KG	11/09/2021	JMK
Fluoranthene	EPA-8270 SIM	U	20	1	UG/KG	11/09/2021	JMK
Pyrene	EPA-8270 SIM	U	20	1	UG/KG	11/09/2021	JMK
Benzo[A]Anthracene	EPA-8270 SIM	U	20	1	UG/KG	11/09/2021	JMK
Chrysene	EPA-8270 SIM	U	20	1	UG/KG	11/09/2021	JMK
Benzo[B]Fluoranthene	EPA-8270 SIM	U	20	1	UG/KG	11/09/2021	JMK
Benzo[K]Fluoranthene	EPA-8270 SIM	U	20	1	UG/KG	11/09/2021	JMK
Benzo[A]Pyrene	EPA-8270 SIM	U	20	1	UG/KG	11/09/2021	JMK
Indeno[1,2,3-Cd]Pyrene	EPA-8270 SIM	U	20	1	UG/KG	11/09/2021	JMK
Dibenz[A,H]Anthracene	EPA-8270 SIM	U	20	1	UG/KG	11/09/2021	JMK
Benzo[G,H,I]Perylene	EPA-8270 SIM	U	20	1	UG/KG	11/09/2021	JMK
PCB-1016	EPA-8082	U	0.10	1	MG/KG	11/08/2021	JMK
PCB-1221	EPA-8082	U	0.10	1	MG/KG	11/08/2021	JMK
PCB-1232	EPA-8082	U	0.10	1	MG/KG	11/08/2021	JMK
PCB-1242	EPA-8082	U	0.10	1	MG/KG	11/08/2021	JMK
PCB-1248	EPA-8082	U	0.10	1	MG/KG	11/08/2021	JMK
PCB-1254	EPA-8082	U	0.10	1	MG/KG	11/08/2021	JMK
PCB-1260	EPA-8082	U	0.10	1	MG/KG	11/08/2021	JMK
PCB-1268	EPA-8082	U	0.10	1	MG/KG	11/08/2021	JMK
Mercury	EPA-7471	**0.042**	0.020	1	MG/KG	11/08/2021	RAL
Arsenic	EPA-6020	**3.4**	0.20	1	MG/KG	11/08/2021	EBS
Copper	EPA-6020	**33**	0.10	1	MG/KG	11/08/2021	EBS
Lead	EPA-6020	**4.2**	0.10	1	MG/KG	11/08/2021	EBS
Nickel	EPA-6020	**32**	0.10	1	MG/KG	11/08/2021	EBS
Zinc	EPA-6020	**42**	0.50	1	MG/KG	11/08/2021	EBS

SURROGATE	METHOD	%REC	ANALYSIS DATE	ANALYSIS BY

ADDRESS 8620 Holly Drive, Suite 100, Everett, WA 98208 | PHONE 425-356-2600 | FAX 425-356-2626
ALS Group USA, Corp dba ALS Environmental

Environmental www.alsglobal.com
RIGHT SOLUTIONS RIGHT PARTNER

CERTIFICATE OF ANALYSIS

CLIENT:	Aspect Consulting, LLC 710 - 2nd Ave, Suite 550 Seattle, WA 98104	DATE: ALS JOB#: ALS SAMPLE#:	11/16/2021 EV21110033 EV21110033-08
CLIENT CONTACT:	Amy Tice	DATE RECEIVED:	11/04/2021
CLIENT PROJECT:	KC Stockpile	COLLECTION DATE:	11/4/2021 10:55:00 AM
CLIENT SAMPLE ID	CSBC-8	WDOE ACCREDITATION:	C601

SAMPLE DATA RESULTS

SURROGATE	METHOD	%REC	ANALYSIS DATE	ANALYSIS BY
TFT	NWTPH-GX	**70.5**	11/05/2021	KLS
C25	NWTPH-DX	**87.1**	11/05/2021	JNF
Terphenyl-d14	EPA-8270 SIM	**109**	11/09/2021	JMK
TCMX	EPA-8082	**101**	11/08/2021	JMK
DCB	EPA-8082	**119**	11/08/2021	JMK

U - Analyte analyzed for but not detected at level above reporting limit.

ADDRESS 8620 Holly Drive, Suite 100, Everett, WA 98208 | PHONE 425-356-2600 | FAX 425-356-2626
ALS Group USA, Corp dba ALS Environmental

Environmental www.alsglobal.com
RIGHT SOLUTIONS RIGHT PARTNER

ALS Environmental

CERTIFICATE OF ANALYSIS

CLIENT:	Aspect Consulting, LLC 710 - 2nd Ave, Suite 550 Seattle, WA 98104	DATE: ALS JOB#: ALS SAMPLE#:	11/16/2021 EV21110033 EV21110033-09
CLIENT CONTACT:	Amy Tice	DATE RECEIVED:	11/04/2021
CLIENT PROJECT:	KC Stockpile	COLLECTION DATE:	11/4/2021 11:05:00 AM
CLIENT SAMPLE ID	CSBC-9	WDOE ACCREDITATION:	C601

SAMPLE DATA RESULTS

ANALYTE	METHOD	RESULTS	REPORTING LIMITS	DILUTION FACTOR	UNITS	ANALYSIS DATE	ANALYSIS BY
TPH-Volatile Range	NWTPH-GX	U	3.0	1	MG/KG	11/05/2021	KLS
TPH-Diesel Range	NWTPH-DX	U	25	1	MG/KG	11/05/2021	JNF
TPH-Oil Range	NWTPH-DX	U	50	1	MG/KG	11/05/2021	JNF
Naphthalene	EPA-8270 SIM	U	20	1	UG/KG	11/09/2021	JMK
2-Methylnaphthalene	EPA-8270 SIM	U	20	1	UG/KG	11/09/2021	JMK
1-Methylnaphthalene	EPA-8270 SIM	U	20	1	UG/KG	11/09/2021	JMK
Acenaphthylene	EPA-8270 SIM	U	20	1	UG/KG	11/09/2021	JMK
Acenaphthene	EPA-8270 SIM	U	20	1	UG/KG	11/09/2021	JMK
Fluorene	EPA-8270 SIM	U	20	1	UG/KG	11/09/2021	JMK
Phenanthrene	EPA-8270 SIM	U	20	1	UG/KG	11/09/2021	JMK
Anthracene	EPA-8270 SIM	U	20	1	UG/KG	11/09/2021	JMK
Fluoranthene	EPA-8270 SIM	U	20	1	UG/KG	11/09/2021	JMK
Pyrene	EPA-8270 SIM	U	20	1	UG/KG	11/09/2021	JMK
Benzo[A]Anthracene	EPA-8270 SIM	U	20	1	UG/KG	11/09/2021	JMK
Chrysene	EPA-8270 SIM	U	20	1	UG/KG	11/09/2021	JMK
Benzo[B]Fluoranthene	EPA-8270 SIM	U	20	1	UG/KG	11/09/2021	JMK
Benzo[K]Fluoranthene	EPA-8270 SIM	U	20	1	UG/KG	11/09/2021	JMK
Benzo[A]Pyrene	EPA-8270 SIM	U	20	1	UG/KG	11/09/2021	JMK
Indeno[1,2,3-Cd]Pyrene	EPA-8270 SIM	U	20	1	UG/KG	11/09/2021	JMK
Dibenz[A,H]Anthracene	EPA-8270 SIM	U	20	1	UG/KG	11/09/2021	JMK
Benzo[G,H,I]Perylene	EPA-8270 SIM	U	20	1	UG/KG	11/09/2021	JMK
PCB-1016	EPA-8082	U	0.10	1	MG/KG	11/12/2021	JMK
PCB-1221	EPA-8082	U	0.10	1	MG/KG	11/12/2021	JMK
PCB-1232	EPA-8082	U	0.10	1	MG/KG	11/12/2021	JMK
PCB-1242	EPA-8082	U	0.10	1	MG/KG	11/12/2021	JMK
PCB-1248	EPA-8082	U	0.10	1	MG/KG	11/12/2021	JMK
PCB-1254	EPA-8082	U	0.10	1	MG/KG	11/12/2021	JMK
PCB-1260	EPA-8082	U	0.10	1	MG/KG	11/12/2021	JMK
PCB-1268	EPA-8082	U	0.10	1	MG/KG	11/12/2021	JMK
Mercury	EPA-7471	**0.056**	0.020	1	MG/KG	11/08/2021	RAL
Arsenic	EPA-6020	**3.6**	0.20	1	MG/KG	11/08/2021	EBS
Copper	EPA-6020	**29**	0.10	1	MG/KG	11/08/2021	EBS
Lead	EPA-6020	**5.0**	0.10	1	MG/KG	11/08/2021	EBS
Nickel	EPA-6020	**68**	0.10	1	MG/KG	11/08/2021	EBS
Zinc	EPA-6020	**43**	0.50	1	MG/KG	11/08/2021	EBS

SURROGATE	METHOD	%REC	ANALYSIS DATE	ANALYSIS BY

ADDRESS 8620 Holly Drive, Suite 100, Everett, WA 98208 | PHONE 425-356-2600 | FAX 425-356-2626
ALS Group USA, Corp dba ALS Environmental

Environmental www.alsglobal.com
RIGHT SOLUTIONS RIGHT PARTNER

CERTIFICATE OF ANALYSIS

CLIENT:	Aspect Consulting, LLC 710 - 2nd Ave, Suite 550 Seattle, WA 98104	DATE: ALS JOB#: ALS SAMPLE#:	11/16/2021 EV21110033 EV21110033-09
CLIENT CONTACT:	Amy Tice	DATE RECEIVED:	11/04/2021
CLIENT PROJECT:	KC Stockpile	COLLECTION DATE:	11/4/2021 11:05:00 AM
CLIENT SAMPLE ID	CSBC-9	WDOE ACCREDITATION:	C601

SAMPLE DATA RESULTS

SURROGATE	METHOD	%REC	ANALYSIS DATE	ANALYSIS BY
TFT	NWTPH-GX	**69.1**	11/05/2021	KLS
C25	NWTPH-DX	**78.1**	11/05/2021	JNF
Terphenyl-d14	EPA-8270 SIM	**123**	11/09/2021	JMK
TCMX	EPA-8082	**109**	11/12/2021	JMK
DCB	EPA-8082	**134**	11/12/2021	JMK

U - Analyte analyzed for but not detected at level above reporting limit.

ADDRESS 8620 Holly Drive, Suite 100, Everett, WA 98208 | PHONE 425-356-2600 | FAX 425-356-2626
ALS Group USA, Corp dba ALS Environmental

Environmental www.alsglobal.com
RIGHT SOLUTIONS RIGHT PARTNER

ALS Environmental

CERTIFICATE OF ANALYSIS

CLIENT:	Aspect Consulting, LLC 710 - 2nd Ave, Suite 550 Seattle, WA 98104	DATE: ALS JOB#: ALS SAMPLE#:	11/16/2021 EV21110033 EV21110033-10
CLIENT CONTACT:	Amy Tice	DATE RECEIVED:	11/04/2021
CLIENT PROJECT:	KC Stockpile	COLLECTION DATE:	11/4/2021 11:15:00 AM
CLIENT SAMPLE ID	CSBC-10	WDOE ACCREDITATION:	C601

SAMPLE DATA RESULTS

ANALYTE	METHOD	RESULTS	REPORTING LIMITS	DILUTION FACTOR	UNITS	ANALYSIS DATE	ANALYSIS BY
TPH-Volatile Range	NWTPH-GX	U	3.0	1	MG/KG	11/05/2021	KLS
TPH-Diesel Range	NWTPH-DX	U	25	1	MG/KG	11/05/2021	JNF
TPH-Oil Range	NWTPH-DX	U	50	1	MG/KG	11/05/2021	JNF
Naphthalene	EPA-8270 SIM	U	20	1	UG/KG	11/09/2021	JMK
2-Methylnaphthalene	EPA-8270 SIM	U	20	1	UG/KG	11/09/2021	JMK
1-Methylnaphthalene	EPA-8270 SIM	U	20	1	UG/KG	11/09/2021	JMK
Acenaphthylene	EPA-8270 SIM	U	20	1	UG/KG	11/09/2021	JMK
Acenaphthene	EPA-8270 SIM	U	20	1	UG/KG	11/09/2021	JMK
Fluorene	EPA-8270 SIM	U	20	1	UG/KG	11/09/2021	JMK
Phenanthrene	EPA-8270 SIM	U	20	1	UG/KG	11/09/2021	JMK
Anthracene	EPA-8270 SIM	U	20	1	UG/KG	11/09/2021	JMK
Fluoranthene	EPA-8270 SIM	U	20	1	UG/KG	11/09/2021	JMK
Pyrene	EPA-8270 SIM	U	20	1	UG/KG	11/09/2021	JMK
Benzo[A]Anthracene	EPA-8270 SIM	U	20	1	UG/KG	11/09/2021	JMK
Chrysene	EPA-8270 SIM	U	20	1	UG/KG	11/09/2021	JMK
Benzo[B]Fluoranthene	EPA-8270 SIM	U	20	1	UG/KG	11/09/2021	JMK
Benzo[K]Fluoranthene	EPA-8270 SIM	U	20	1	UG/KG	11/09/2021	JMK
Benzo[A]Pyrene	EPA-8270 SIM	U	20	1	UG/KG	11/09/2021	JMK
Indeno[1,2,3-Cd]Pyrene	EPA-8270 SIM	U	20	1	UG/KG	11/09/2021	JMK
Dibenz[A,H]Anthracene	EPA-8270 SIM	U	20	1	UG/KG	11/09/2021	JMK
Benzo[G,H,I]Perylene	EPA-8270 SIM	U	20	1	UG/KG	11/09/2021	JMK
PCB-1016	EPA-8082	U	0.10	1	MG/KG	11/12/2021	JMK
PCB-1221	EPA-8082	U	0.10	1	MG/KG	11/12/2021	JMK
PCB-1232	EPA-8082	U	0.10	1	MG/KG	11/12/2021	JMK
PCB-1242	EPA-8082	U	0.10	1	MG/KG	11/12/2021	JMK
PCB-1248	EPA-8082	U	0.10	1	MG/KG	11/12/2021	JMK
PCB-1254	EPA-8082	U	0.10	1	MG/KG	11/12/2021	JMK
PCB-1260	EPA-8082	U	0.10	1	MG/KG	11/12/2021	JMK
PCB-1268	EPA-8082	U	0.10	1	MG/KG	11/12/2021	JMK
Mercury	EPA-7471	**0.042**	0.020	1	MG/KG	11/08/2021	RAL
Arsenic	EPA-6020	**3.1**	0.20	1	MG/KG	11/08/2021	EBS
Copper	EPA-6020	**36**	0.10	1	MG/KG	11/08/2021	EBS
Lead	EPA-6020	**3.4**	0.10	1	MG/KG	11/08/2021	EBS
Nickel	EPA-6020	**28**	0.10	1	MG/KG	11/08/2021	EBS
Zinc	EPA-6020	**42**	0.50	1	MG/KG	11/08/2021	EBS

SURROGATE	METHOD	%REC	ANALYSIS DATE	ANALYSIS BY

ADDRESS 8620 Holly Drive, Suite 100, Everett, WA 98208 | PHONE 425-356-2600 | FAX 425-356-2626
ALS Group USA, Corp dba ALS Environmental

Environmental www.alsglobal.com
RIGHT SOLUTIONS RIGHT PARTNER

CERTIFICATE OF ANALYSIS

CLIENT:	Aspect Consulting, LLC 710 - 2nd Ave, Suite 550 Seattle, WA 98104	DATE: ALS JOB#: ALS SAMPLE#:	11/16/2021 EV21110033 EV21110033-10
CLIENT CONTACT:	Amy Tice	DATE RECEIVED:	11/04/2021
CLIENT PROJECT:	KC Stockpile	COLLECTION DATE:	11/4/2021 11:15:00 AM
CLIENT SAMPLE ID	CSBC-10	WDOE ACCREDITATION:	C601

SAMPLE DATA RESULTS

SURROGATE	METHOD	%REC	ANALYSIS DATE	ANALYSIS BY
TFT	NWTPH-GX	**62.3**	11/05/2021	KLS
C25	NWTPH-DX	**79.5**	11/05/2021	JNF
Terphenyl-d14	EPA-8270 SIM	**137**	11/09/2021	JMK
TCMX	EPA-8082	**103**	11/12/2021	JMK
DCB	EPA-8082	**128**	11/12/2021	JMK

U - Analyte analyzed for but not detected at level above reporting limit.

ADDRESS 8620 Holly Drive, Suite 100, Everett, WA 98208 | PHONE 425-356-2600 | FAX 425-356-2626
ALS Group USA, Corp dba ALS Environmental

Environmental www.alsglobal.com
RIGHT SOLUTIONS RIGHT PARTNER

ALS Environmental

CERTIFICATE OF ANALYSIS

CLIENT:	Aspect Consulting, LLC 710 - 2nd Ave, Suite 550 Seattle, WA 98104	DATE:	11/16/2021
		ALS JOB#:	EV21110033
		ALS SAMPLE#:	EV21110033-11
CLIENT CONTACT:	Amy Tice	DATE RECEIVED:	11/04/2021
CLIENT PROJECT:	KC Stockpile	COLLECTION DATE:	11/4/2021 11:25:00 AM
CLIENT SAMPLE ID	CSBC-11	WDOE ACCREDITATION:	C601

SAMPLE DATA RESULTS

ANALYTE	METHOD	RESULTS	REPORTING LIMITS	DILUTION FACTOR	UNITS	ANALYSIS DATE	ANALYSIS BY
TPH-Volatile Range	NWTPH-GX	U	3.0	1	MG/KG	11/05/2021	KLS
TPH-Diesel Range	NWTPH-DX	U	25	1	MG/KG	11/05/2021	JNF
TPH-Oil Range	NWTPH-DX	U	50	1	MG/KG	11/05/2021	JNF
Naphthalene	EPA-8270 SIM	U	20	1	UG/KG	11/09/2021	JMK
2-Methylnaphthalene	EPA-8270 SIM	U	20	1	UG/KG	11/09/2021	JMK
1-Methylnaphthalene	EPA-8270 SIM	U	20	1	UG/KG	11/09/2021	JMK
Acenaphthylene	EPA-8270 SIM	U	20	1	UG/KG	11/09/2021	JMK
Acenaphthene	EPA-8270 SIM	U	20	1	UG/KG	11/09/2021	JMK
Fluorene	EPA-8270 SIM	U	20	1	UG/KG	11/09/2021	JMK
Phenanthrene	EPA-8270 SIM	U	20	1	UG/KG	11/09/2021	JMK
Anthracene	EPA-8270 SIM	U	20	1	UG/KG	11/09/2021	JMK
Fluoranthene	EPA-8270 SIM	U	20	1	UG/KG	11/09/2021	JMK
Pyrene	EPA-8270 SIM	U	20	1	UG/KG	11/09/2021	JMK
Benzo[A]Anthracene	EPA-8270 SIM	U	20	1	UG/KG	11/09/2021	JMK
Chrysene	EPA-8270 SIM	U	20	1	UG/KG	11/09/2021	JMK
Benzo[B]Fluoranthene	EPA-8270 SIM	U	20	1	UG/KG	11/09/2021	JMK
Benzo[K]Fluoranthene	EPA-8270 SIM	U	20	1	UG/KG	11/09/2021	JMK
Benzo[A]Pyrene	EPA-8270 SIM	U	20	1	UG/KG	11/09/2021	JMK
Indeno[1,2,3-Cd]Pyrene	EPA-8270 SIM	U	20	1	UG/KG	11/09/2021	JMK
Dibenz[A,H]Anthracene	EPA-8270 SIM	U	20	1	UG/KG	11/09/2021	JMK
Benzo[G,H,I]Perylene	EPA-8270 SIM	U	20	1	UG/KG	11/09/2021	JMK
PCB-1016	EPA-8082	U	0.10	1	MG/KG	11/12/2021	JMK
PCB-1221	EPA-8082	U	0.10	1	MG/KG	11/12/2021	JMK
PCB-1232	EPA-8082	U	0.10	1	MG/KG	11/12/2021	JMK
PCB-1242	EPA-8082	U	0.10	1	MG/KG	11/12/2021	JMK
PCB-1248	EPA-8082	U	0.10	1	MG/KG	11/12/2021	JMK
PCB-1254	EPA-8082	U	0.10	1	MG/KG	11/12/2021	JMK
PCB-1260	EPA-8082	U	0.10	1	MG/KG	11/12/2021	JMK
PCB-1268	EPA-8082	U	0.10	1	MG/KG	11/12/2021	JMK
Mercury	EPA-7471	**0.058**	0.020	1	MG/KG	11/08/2021	RAL
Arsenic	EPA-6020	**4.2**	0.20	1	MG/KG	11/08/2021	EBS
Copper	EPA-6020	**38**	0.10	1	MG/KG	11/08/2021	EBS
Lead	EPA-6020	**4.9**	0.10	1	MG/KG	11/08/2021	EBS
Nickel	EPA-6020	**40**	0.10	1	MG/KG	11/08/2021	EBS
Zinc	EPA-6020	**50**	0.50	1	MG/KG	11/08/2021	EBS

SURROGATE	METHOD	%REC	ANALYSIS DATE	ANALYSIS BY

ADDRESS 8620 Holly Drive, Suite 100, Everett, WA 98208 | PHONE 425-356-2600 | FAX 425-356-2626
ALS Group USA, Corp dba ALS Environmental

Environmental www.alsglobal.com
RIGHT SOLUTIONS RIGHT PARTNER

CERTIFICATE OF ANALYSIS

CLIENT:	Aspect Consulting, LLC 710 - 2nd Ave, Suite 550 Seattle, WA 98104	DATE:	11/16/2021
		ALS JOB#:	EV21110033
		ALS SAMPLE#:	EV21110033-11
CLIENT CONTACT:	Amy Tice	DATE RECEIVED:	11/04/2021
CLIENT PROJECT:	KC Stockpile	COLLECTION DATE:	11/4/2021 11:25:00 AM
CLIENT SAMPLE ID	CSBC-11	WDOE ACCREDITATION:	C601

SAMPLE DATA RESULTS

SURROGATE	METHOD	%REC	ANALYSIS DATE	ANALYSIS BY
TFT	NWTPH-GX	**64.5**	11/05/2021	KLS
C25	NWTPH-DX	**78.6**	11/05/2021	JNF
Terphenyl-d14	EPA-8270 SIM	**117**	11/09/2021	JMK
TCMX	EPA-8082	**106**	11/12/2021	JMK
DCB	EPA-8082	**126**	11/12/2021	JMK

U - Analyte analyzed for but not detected at level above reporting limit.

ADDRESS 8620 Holly Drive, Suite 100, Everett, WA 98208 | PHONE 425-356-2600 | FAX 425-356-2626
ALS Group USA, Corp dba ALS Environmental

Environmental www.alsglobal.com
RIGHT SOLUTIONS RIGHT PARTNER

ALS Environmental

CERTIFICATE OF ANALYSIS

CLIENT:	Aspect Consulting, LLC 710 - 2nd Ave, Suite 550 Seattle, WA 98104	DATE:	11/16/2021
		ALS JOB#:	EV21110033
		ALS SAMPLE#:	EV21110033-12
CLIENT CONTACT:	Amy Tice	DATE RECEIVED:	11/04/2021
CLIENT PROJECT:	KC Stockpile	COLLECTION DATE:	11/4/2021 11:35:00 AM
CLIENT SAMPLE ID	CSBC-12	WDOE ACCREDITATION:	C601

SAMPLE DATA RESULTS

ANALYTE	METHOD	RESULTS	REPORTING LIMITS	DILUTION FACTOR	UNITS	ANALYSIS DATE	ANALYSIS BY
TPH-Volatile Range	NWTPH-GX	U	3.0	1	MG/KG	11/05/2021	KLS
TPH-Diesel Range	NWTPH-DX	U	25	1	MG/KG	11/05/2021	JNF
TPH-Oil Range	NWTPH-DX	U	50	1	MG/KG	11/05/2021	JNF
Naphthalene	EPA-8270 SIM	U	20	1	UG/KG	11/09/2021	JMK
2-Methylnaphthalene	EPA-8270 SIM	U	20	1	UG/KG	11/09/2021	JMK
1-Methylnaphthalene	EPA-8270 SIM	U	20	1	UG/KG	11/09/2021	JMK
Acenaphthylene	EPA-8270 SIM	U	20	1	UG/KG	11/09/2021	JMK
Acenaphthene	EPA-8270 SIM	U	20	1	UG/KG	11/09/2021	JMK
Fluorene	EPA-8270 SIM	U	20	1	UG/KG	11/09/2021	JMK
Phenanthrene	EPA-8270 SIM	U	20	1	UG/KG	11/09/2021	JMK
Anthracene	EPA-8270 SIM	U	20	1	UG/KG	11/09/2021	JMK
Fluoranthene	EPA-8270 SIM	U	20	1	UG/KG	11/09/2021	JMK
Pyrene	EPA-8270 SIM	U	20	1	UG/KG	11/09/2021	JMK
Benzo[A]Anthracene	EPA-8270 SIM	U	20	1	UG/KG	11/09/2021	JMK
Chrysene	EPA-8270 SIM	U	20	1	UG/KG	11/09/2021	JMK
Benzo[B]Fluoranthene	EPA-8270 SIM	U	20	1	UG/KG	11/09/2021	JMK
Benzo[K]Fluoranthene	EPA-8270 SIM	U	20	1	UG/KG	11/09/2021	JMK
Benzo[A]Pyrene	EPA-8270 SIM	U	20	1	UG/KG	11/09/2021	JMK
Indeno[1,2,3-Cd]Pyrene	EPA-8270 SIM	U	20	1	UG/KG	11/09/2021	JMK
Dibenz[A,H]Anthracene	EPA-8270 SIM	U	20	1	UG/KG	11/09/2021	JMK
Benzo[G,H,I]Perylene	EPA-8270 SIM	U	20	1	UG/KG	11/09/2021	JMK
PCB-1016	EPA-8082	U	0.10	1	MG/KG	11/12/2021	JMK
PCB-1221	EPA-8082	U	0.10	1	MG/KG	11/12/2021	JMK
PCB-1232	EPA-8082	U	0.10	1	MG/KG	11/12/2021	JMK
PCB-1242	EPA-8082	U	0.10	1	MG/KG	11/12/2021	JMK
PCB-1248	EPA-8082	U	0.10	1	MG/KG	11/12/2021	JMK
PCB-1254	EPA-8082	U	0.10	1	MG/KG	11/12/2021	JMK
PCB-1260	EPA-8082	U	0.10	1	MG/KG	11/12/2021	JMK
PCB-1268	EPA-8082	U	0.10	1	MG/KG	11/12/2021	JMK
Mercury	EPA-7471	**0.11**	0.020	1	MG/KG	11/08/2021	RAL
Arsenic	EPA-6020	**4.8**	0.20	1	MG/KG	11/08/2021	EBS
Copper	EPA-6020	**58**	0.10	1	MG/KG	11/08/2021	EBS
Lead	EPA-6020	**3.9**	0.10	1	MG/KG	11/08/2021	EBS
Nickel	EPA-6020	**44**	0.10	1	MG/KG	11/08/2021	EBS
Zinc	EPA-6020	**45**	0.50	1	MG/KG	11/08/2021	EBS

SURROGATE	METHOD	%REC	ANALYSIS DATE	ANALYSIS BY

ADDRESS 8620 Holly Drive, Suite 100, Everett, WA 98208 | PHONE 425-356-2600 | FAX 425-356-2626
ALS Group USA, Corp dba ALS Environmental

Environmental www.alsglobal.com
RIGHT SOLUTIONS RIGHT PARTNER

CERTIFICATE OF ANALYSIS

CLIENT:	Aspect Consulting, LLC 710 - 2nd Ave, Suite 550 Seattle, WA 98104	DATE: ALS JOB#: ALS SAMPLE#:	11/16/2021 EV21110033 EV21110033-12
CLIENT CONTACT:	Amy Tice	DATE RECEIVED:	11/04/2021
CLIENT PROJECT:	KC Stockpile	COLLECTION DATE:	11/4/2021 11:35:00 AM
CLIENT SAMPLE ID	CSBC-12	WDOE ACCREDITATION:	C601

SAMPLE DATA RESULTS

SURROGATE	METHOD	%REC	ANALYSIS DATE	ANALYSIS BY
TFT	NWTPH-GX	**62.6**	11/05/2021	KLS
C25	NWTPH-DX	**76.2**	11/05/2021	JNF
Terphenyl-d14	EPA-8270 SIM	**134**	11/09/2021	JMK
TCMX	EPA-8082	**94.2**	11/12/2021	JMK
DCB	EPA-8082	**120**	11/12/2021	JMK

U - Analyte analyzed for but not detected at level above reporting limit.

ADDRESS 8620 Holly Drive, Suite 100, Everett, WA 98208 | PHONE 425-356-2600 | FAX 425-356-2626
ALS Group USA, Corp dba ALS Environmental

Environmental www.alsglobal.com
RIGHT SOLUTIONS RIGHT PARTNER

ALS Environmental

CERTIFICATE OF ANALYSIS

CLIENT:	Aspect Consulting, LLC 710 - 2nd Ave, Suite 550 Seattle, WA 98104	DATE: ALS JOB#: ALS SAMPLE#:	11/16/2021 EV21110033 EV21110033-13
CLIENT CONTACT:	Amy Tice	DATE RECEIVED:	11/04/2021
CLIENT PROJECT:	KC Stockpile	COLLECTION DATE:	11/4/2021 11:45:00 AM
CLIENT SAMPLE ID	CSBC-13	WDOE ACCREDITATION:	C601

SAMPLE DATA RESULTS

ANALYTE	METHOD	RESULTS	REPORTING LIMITS	DILUTION FACTOR	UNITS	ANALYSIS DATE	ANALYSIS BY
TPH-Volatile Range	NWTPH-GX	U	3.0	1	MG/KG	11/05/2021	KLS
TPH-Diesel Range	NWTPH-DX	U	25	1	MG/KG	11/08/2021	JNF
TPH-Oil Range	NWTPH-DX	U	50	1	MG/KG	11/08/2021	JNF
Naphthalene	EPA-8270 SIM	U	20	1	UG/KG	11/10/2021	JMK
2-Methylnaphthalene	EPA-8270 SIM	U	20	1	UG/KG	11/10/2021	JMK
1-Methylnaphthalene	EPA-8270 SIM	U	20	1	UG/KG	11/10/2021	JMK
Acenaphthylene	EPA-8270 SIM	U	20	1	UG/KG	11/10/2021	JMK
Acenaphthene	EPA-8270 SIM	U	20	1	UG/KG	11/10/2021	JMK
Fluorene	EPA-8270 SIM	U	20	1	UG/KG	11/10/2021	JMK
Phenanthrene	EPA-8270 SIM	U	20	1	UG/KG	11/10/2021	JMK
Anthracene	EPA-8270 SIM	U	20	1	UG/KG	11/10/2021	JMK
Fluoranthene	EPA-8270 SIM	U	20	1	UG/KG	11/10/2021	JMK
Pyrene	EPA-8270 SIM	U	20	1	UG/KG	11/10/2021	JMK
Benzo[A]Anthracene	EPA-8270 SIM	U	20	1	UG/KG	11/10/2021	JMK
Chrysene	EPA-8270 SIM	U	20	1	UG/KG	11/10/2021	JMK
Benzo[B]Fluoranthene	EPA-8270 SIM	U	20	1	UG/KG	11/10/2021	JMK
Benzo[K]Fluoranthene	EPA-8270 SIM	U	20	1	UG/KG	11/10/2021	JMK
Benzo[A]Pyrene	EPA-8270 SIM	U	20	1	UG/KG	11/10/2021	JMK
Indeno[1,2,3-Cd]Pyrene	EPA-8270 SIM	U	20	1	UG/KG	11/10/2021	JMK
Dibenz[A,H]Anthracene	EPA-8270 SIM	U	20	1	UG/KG	11/10/2021	JMK
Benzo[G,H,I]Perylene	EPA-8270 SIM	U	20	1	UG/KG	11/10/2021	JMK
PCB-1016	EPA-8082	U	0.10	1	MG/KG	11/12/2021	JMK
PCB-1221	EPA-8082	U	0.10	1	MG/KG	11/12/2021	JMK
PCB-1232	EPA-8082	U	0.10	1	MG/KG	11/12/2021	JMK
PCB-1242	EPA-8082	U	0.10	1	MG/KG	11/12/2021	JMK
PCB-1248	EPA-8082	U	0.10	1	MG/KG	11/12/2021	JMK
PCB-1254	EPA-8082	U	0.10	1	MG/KG	11/12/2021	JMK
PCB-1260	EPA-8082	U	0.10	1	MG/KG	11/12/2021	JMK
PCB-1268	EPA-8082	U	0.10	1	MG/KG	11/12/2021	JMK
Mercury	EPA-7471	**0.053**	0.020	1	MG/KG	11/08/2021	RAL
Arsenic	EPA-6020	**4.1**	0.20	1	MG/KG	11/08/2021	EBS
Copper	EPA-6020	**38**	0.10	1	MG/KG	11/08/2021	EBS
Lead	EPA-6020	**3.9**	0.10	1	MG/KG	11/08/2021	EBS
Nickel	EPA-6020	**37**	0.10	1	MG/KG	11/08/2021	EBS
Zinc	EPA-6020	**52**	0.50	1	MG/KG	11/08/2021	EBS

SURROGATE	METHOD	%REC	ANALYSIS DATE	ANALYSIS BY

ADDRESS 8620 Holly Drive, Suite 100, Everett, WA 98208 | PHONE 425-356-2600 | FAX 425-356-2626
ALS Group USA, Corp dba ALS Environmental

Environmental www.alsglobal.com
RIGHT SOLUTIONS RIGHT PARTNER

CERTIFICATE OF ANALYSIS

CLIENT:	Aspect Consulting, LLC 710 - 2nd Ave, Suite 550 Seattle, WA 98104	DATE: ALS JOB#: ALS SAMPLE#:	11/16/2021 EV21110033 EV21110033-13
CLIENT CONTACT:	Amy Tice	DATE RECEIVED:	11/04/2021
CLIENT PROJECT:	KC Stockpile	COLLECTION DATE:	11/4/2021 11:45:00 AM
CLIENT SAMPLE ID	CSBC-13	WDOE ACCREDITATION:	C601

SAMPLE DATA RESULTS

SURROGATE	METHOD	%REC	ANALYSIS DATE	ANALYSIS BY
TFT	NWTPH-GX	**63.5**	11/05/2021	KLS
C25	NWTPH-DX	**94.8**	11/08/2021	JNF
Terphenyl-d14	EPA-8270 SIM	**98.0**	11/10/2021	JMK
TCMX	EPA-8082	**97.7**	11/12/2021	JMK
DCB	EPA-8082	**119**	11/12/2021	JMK

U - Analyte analyzed for but not detected at level above reporting limit.

ADDRESS 8620 Holly Drive, Suite 100, Everett, WA 98208 | PHONE 425-356-2600 | FAX 425-356-2626
ALS Group USA, Corp dba ALS Environmental

Environmental www.alsglobal.com
RIGHT SOLUTIONS RIGHT PARTNER

ALS Environmental

CERTIFICATE OF ANALYSIS

CLIENT:	Aspect Consulting, LLC 710 - 2nd Ave, Suite 550 Seattle, WA 98104	DATE: ALS JOB#: ALS SAMPLE#:	11/16/2021 EV21110033 EV21110033-14
CLIENT CONTACT:	Amy Tice	DATE RECEIVED:	11/04/2021
CLIENT PROJECT:	KC Stockpile	COLLECTION DATE:	11/4/2021 11:55:00 AM
CLIENT SAMPLE ID	CSBC-14	WDOE ACCREDITATION:	C601

SAMPLE DATA RESULTS

ANALYTE	METHOD	RESULTS	REPORTING LIMITS	DILUTION FACTOR	UNITS	ANALYSIS DATE	ANALYSIS BY
TPH-Volatile Range	NWTPH-GX	U	3.0	1	MG/KG	11/05/2021	KLS
TPH-Diesel Range	NWTPH-DX	U	25	1	MG/KG	11/08/2021	JNF
TPH-Oil Range	NWTPH-DX	U	50	1	MG/KG	11/08/2021	JNF
Naphthalene	EPA-8270 SIM	U	20	1	UG/KG	11/09/2021	JMK
2-Methylnaphthalene	EPA-8270 SIM	U	20	1	UG/KG	11/09/2021	JMK
1-Methylnaphthalene	EPA-8270 SIM	U	20	1	UG/KG	11/09/2021	JMK
Acenaphthylene	EPA-8270 SIM	U	20	1	UG/KG	11/09/2021	JMK
Acenaphthene	EPA-8270 SIM	U	20	1	UG/KG	11/09/2021	JMK
Fluorene	EPA-8270 SIM	U	20	1	UG/KG	11/09/2021	JMK
Phenanthrene	EPA-8270 SIM	U	20	1	UG/KG	11/09/2021	JMK
Anthracene	EPA-8270 SIM	U	20	1	UG/KG	11/09/2021	JMK
Fluoranthene	EPA-8270 SIM	U	20	1	UG/KG	11/09/2021	JMK
Pyrene	EPA-8270 SIM	U	20	1	UG/KG	11/09/2021	JMK
Benzo[A]Anthracene	EPA-8270 SIM	U	20	1	UG/KG	11/09/2021	JMK
Chrysene	EPA-8270 SIM	U	20	1	UG/KG	11/09/2021	JMK
Benzo[B]Fluoranthene	EPA-8270 SIM	U	20	1	UG/KG	11/09/2021	JMK
Benzo[K]Fluoranthene	EPA-8270 SIM	U	20	1	UG/KG	11/09/2021	JMK
Benzo[A]Pyrene	EPA-8270 SIM	U	20	1	UG/KG	11/09/2021	JMK
Indeno[1,2,3-Cd]Pyrene	EPA-8270 SIM	U	20	1	UG/KG	11/09/2021	JMK
Dibenz[A,H]Anthracene	EPA-8270 SIM	U	20	1	UG/KG	11/09/2021	JMK
Benzo[G,H,I]Perylene	EPA-8270 SIM	U	20	1	UG/KG	11/09/2021	JMK
PCB-1016	EPA-8082	U	0.10	1	MG/KG	11/12/2021	JMK
PCB-1221	EPA-8082	U	0.10	1	MG/KG	11/12/2021	JMK
PCB-1232	EPA-8082	U	0.10	1	MG/KG	11/12/2021	JMK
PCB-1242	EPA-8082	U	0.10	1	MG/KG	11/12/2021	JMK
PCB-1248	EPA-8082	U	0.10	1	MG/KG	11/12/2021	JMK
PCB-1254	EPA-8082	U	0.10	1	MG/KG	11/12/2021	JMK
PCB-1260	EPA-8082	U	0.10	1	MG/KG	11/12/2021	JMK
PCB-1268	EPA-8082	U	0.10	1	MG/KG	11/12/2021	JMK
Mercury	EPA-7471	**0.045**	0.020	1	MG/KG	11/08/2021	RAL
Arsenic	EPA-6020	**6.9**	0.20	1	MG/KG	11/08/2021	EBS
Copper	EPA-6020	**33**	0.10	1	MG/KG	11/08/2021	EBS
Lead	EPA-6020	**3.2**	0.10	1	MG/KG	11/08/2021	EBS
Nickel	EPA-6020	**49**	0.10	1	MG/KG	11/08/2021	EBS
Zinc	EPA-6020	**45**	0.50	1	MG/KG	11/08/2021	EBS

SURROGATE	METHOD	%REC	ANALYSIS DATE	ANALYSIS BY

ADDRESS 8620 Holly Drive, Suite 100, Everett, WA 98208 | PHONE 425-356-2600 | FAX 425-356-2626
ALS Group USA, Corp dba ALS Environmental

Environmental www.alsglobal.com
RIGHT SOLUTIONS RIGHT PARTNER

CERTIFICATE OF ANALYSIS

CLIENT:	Aspect Consulting, LLC 710 - 2nd Ave, Suite 550 Seattle, WA 98104	DATE: ALS JOB#: ALS SAMPLE#:	11/16/2021 EV21110033 EV21110033-14
CLIENT CONTACT:	Amy Tice	DATE RECEIVED:	11/04/2021
CLIENT PROJECT:	KC Stockpile	COLLECTION DATE:	11/4/2021 11:55:00 AM
CLIENT SAMPLE ID	CSBC-14	WDOE ACCREDITATION:	C601

SAMPLE DATA RESULTS

SURROGATE	METHOD	%REC	ANALYSIS DATE	ANALYSIS BY
TFT	NWTPH-GX	**67.8**	11/05/2021	KLS
C25	NWTPH-DX	**82.9**	11/08/2021	JNF
Terphenyl-d14	EPA-8270 SIM	**121**	11/09/2021	JMK
TCMX	EPA-8082	**105**	11/12/2021	JMK
DCB	EPA-8082	**129**	11/12/2021	JMK

U - Analyte analyzed for but not detected at level above reporting limit.

ADDRESS 8620 Holly Drive, Suite 100, Everett, WA 98208 | PHONE 425-356-2600 | FAX 425-356-2626
ALS Group USA, Corp dba ALS Environmental

Environmental www.alsglobal.com
RIGHT SOLUTIONS RIGHT PARTNER

ALS Environmental

CERTIFICATE OF ANALYSIS

CLIENT:	Aspect Consulting, LLC 710 - 2nd Ave, Suite 550 Seattle, WA 98104	DATE: ALS JOB#: ALS SAMPLE#:	11/16/2021 EV21110033 EV21110033-15
CLIENT CONTACT:	Amy Tice	DATE RECEIVED:	11/04/2021
CLIENT PROJECT:	KC Stockpile	COLLECTION DATE:	11/4/2021 12:30:00 PM
CLIENT SAMPLE ID	SF-1	WDOE ACCREDITATION:	C601

SAMPLE DATA RESULTS

ANALYTE	METHOD	RESULTS	REPORTING LIMITS	DILUTION FACTOR	UNITS	ANALYSIS DATE	ANALYSIS BY
TPH-Volatile Range	NWTPH-GX	U	3.0	1	MG/KG	11/05/2021	KLS
TPH-Diesel Range	NWTPH-DX	U	25	1	MG/KG	11/08/2021	JNF
TPH-Oil Range	NWTPH-DX	U	50	1	MG/KG	11/08/2021	JNF
Naphthalene	EPA-8270 SIM	U	20	1	UG/KG	11/09/2021	JMK
2-Methylnaphthalene	EPA-8270 SIM	U	20	1	UG/KG	11/09/2021	JMK
1-Methylnaphthalene	EPA-8270 SIM	U	20	1	UG/KG	11/09/2021	JMK
Acenaphthylene	EPA-8270 SIM	U	20	1	UG/KG	11/09/2021	JMK
Acenaphthene	EPA-8270 SIM	U	20	1	UG/KG	11/09/2021	JMK
Fluorene	EPA-8270 SIM	U	20	1	UG/KG	11/09/2021	JMK
Phenanthrene	EPA-8270 SIM	U	20	1	UG/KG	11/09/2021	JMK
Anthracene	EPA-8270 SIM	U	20	1	UG/KG	11/09/2021	JMK
Fluoranthene	EPA-8270 SIM	U	20	1	UG/KG	11/09/2021	JMK
Pyrene	EPA-8270 SIM	U	20	1	UG/KG	11/09/2021	JMK
Benzo[A]Anthracene	EPA-8270 SIM	U	20	1	UG/KG	11/09/2021	JMK
Chrysene	EPA-8270 SIM	U	20	1	UG/KG	11/09/2021	JMK
Benzo[B]Fluoranthene	EPA-8270 SIM	U	20	1	UG/KG	11/09/2021	JMK
Benzo[K]Fluoranthene	EPA-8270 SIM	U	20	1	UG/KG	11/09/2021	JMK
Benzo[A]Pyrene	EPA-8270 SIM	U	20	1	UG/KG	11/09/2021	JMK
Indeno[1,2,3-Cd]Pyrene	EPA-8270 SIM	U	20	1	UG/KG	11/09/2021	JMK
Dibenz[A,H]Anthracene	EPA-8270 SIM	U	20	1	UG/KG	11/09/2021	JMK
Benzo[G,H,I]Perylene	EPA-8270 SIM	U	20	1	UG/KG	11/09/2021	JMK
PCB-1016	EPA-8082	U	0.10	1	MG/KG	11/12/2021	JMK
PCB-1221	EPA-8082	U	0.10	1	MG/KG	11/12/2021	JMK
PCB-1232	EPA-8082	U	0.10	1	MG/KG	11/12/2021	JMK
PCB-1242	EPA-8082	U	0.10	1	MG/KG	11/12/2021	JMK
PCB-1248	EPA-8082	U	0.10	1	MG/KG	11/12/2021	JMK
PCB-1254	EPA-8082	U	0.10	1	MG/KG	11/12/2021	JMK
PCB-1260	EPA-8082	U	0.10	1	MG/KG	11/12/2021	JMK
PCB-1268	EPA-8082	U	0.10	1	MG/KG	11/12/2021	JMK
Mercury	EPA-7471	**0.053**	0.020	1	MG/KG	11/08/2021	RAL
Arsenic	EPA-6020	**4.7**	0.20	1	MG/KG	11/08/2021	EBS
Copper	EPA-6020	**35**	0.10	1	MG/KG	11/08/2021	EBS
Lead	EPA-6020	**4.1**	0.10	1	MG/KG	11/08/2021	EBS
Nickel	EPA-6020	**51**	0.10	1	MG/KG	11/08/2021	EBS
Zinc	EPA-6020	**51**	0.50	1	MG/KG	11/08/2021	EBS

SURROGATE	METHOD	%REC	ANALYSIS DATE	ANALYSIS BY

ADDRESS 8620 Holly Drive, Suite 100, Everett, WA 98208 | PHONE 425-356-2600 | FAX 425-356-2626
ALS Group USA, Corp dba ALS Environmental

Environmental www.alsglobal.com
RIGHT SOLUTIONS RIGHT PARTNER

CERTIFICATE OF ANALYSIS

CLIENT:	Aspect Consulting, LLC 710 - 2nd Ave, Suite 550 Seattle, WA 98104	DATE: ALS JOB#: ALS SAMPLE#:	11/16/2021 EV21110033 EV21110033-15
CLIENT CONTACT:	Amy Tice	DATE RECEIVED:	11/04/2021
CLIENT PROJECT:	KC Stockpile	COLLECTION DATE:	11/4/2021 12:30:00 PM
CLIENT SAMPLE ID	SF-1	WDOE ACCREDITATION:	C601

SAMPLE DATA RESULTS

SURROGATE	METHOD	%REC	ANALYSIS DATE	ANALYSIS BY
TFT	NWTPH-GX	**102**	11/05/2021	KLS
C25	NWTPH-DX	**92.7**	11/08/2021	JNF
Terphenyl-d14	EPA-8270 SIM	**125**	11/09/2021	JMK
TCMX	EPA-8082	**110**	11/12/2021	JMK
DCB	EPA-8082	**133**	11/12/2021	JMK

U - Analyte analyzed for but not detected at level above reporting limit.

ADDRESS 8620 Holly Drive, Suite 100, Everett, WA 98208 | PHONE 425-356-2600 | FAX 425-356-2626
ALS Group USA, Corp dba ALS Environmental

Environmental www.alsglobal.com
RIGHT SOLUTIONS RIGHT PARTNER

ALS Environmental

CERTIFICATE OF ANALYSIS

CLIENT:	Aspect Consulting, LLC 710 - 2nd Ave, Suite 550 Seattle, WA 98104	DATE: ALS JOB#: ALS SAMPLE#:	11/16/2021 EV21110033 EV21110033-16
CLIENT CONTACT:	Amy Tice	DATE RECEIVED:	11/04/2021
CLIENT PROJECT:	KC Stockpile	COLLECTION DATE:	11/4/2021 12:40:00 PM
CLIENT SAMPLE ID	SF-2	WDOE ACCREDITATION:	C601

SAMPLE DATA RESULTS

ANALYTE	METHOD	RESULTS	REPORTING LIMITS	DILUTION FACTOR	UNITS	ANALYSIS DATE	ANALYSIS BY
TPH-Volatile Range	NWTPH-GX	U	3.0	1	MG/KG	11/05/2021	KLS
TPH-Diesel Range	NWTPH-DX	U	25	1	MG/KG	11/06/2021	JNF
TPH-Oil Range	NWTPH-DX	U	50	1	MG/KG	11/06/2021	JNF
Naphthalene	EPA-8270 SIM	U	20	1	UG/KG	11/09/2021	JMK
2-Methylnaphthalene	EPA-8270 SIM	U	20	1	UG/KG	11/09/2021	JMK
1-Methylnaphthalene	EPA-8270 SIM	U	20	1	UG/KG	11/09/2021	JMK
Acenaphthylene	EPA-8270 SIM	U	20	1	UG/KG	11/09/2021	JMK
Acenaphthene	EPA-8270 SIM	U	20	1	UG/KG	11/09/2021	JMK
Fluorene	EPA-8270 SIM	U	20	1	UG/KG	11/09/2021	JMK
Phenanthrene	EPA-8270 SIM	U	20	1	UG/KG	11/09/2021	JMK
Anthracene	EPA-8270 SIM	U	20	1	UG/KG	11/09/2021	JMK
Fluoranthene	EPA-8270 SIM	U	20	1	UG/KG	11/09/2021	JMK
Pyrene	EPA-8270 SIM	U	20	1	UG/KG	11/09/2021	JMK
Benzo[A]Anthracene	EPA-8270 SIM	U	20	1	UG/KG	11/09/2021	JMK
Chrysene	EPA-8270 SIM	U	20	1	UG/KG	11/09/2021	JMK
Benzo[B]Fluoranthene	EPA-8270 SIM	U	20	1	UG/KG	11/09/2021	JMK
Benzo[K]Fluoranthene	EPA-8270 SIM	U	20	1	UG/KG	11/09/2021	JMK
Benzo[A]Pyrene	EPA-8270 SIM	U	20	1	UG/KG	11/09/2021	JMK
Indeno[1,2,3-Cd]Pyrene	EPA-8270 SIM	U	20	1	UG/KG	11/09/2021	JMK
Dibenz[A,H]Anthracene	EPA-8270 SIM	U	20	1	UG/KG	11/09/2021	JMK
Benzo[G,H,I]Perylene	EPA-8270 SIM	U	20	1	UG/KG	11/09/2021	JMK
PCB-1016	EPA-8082	U	0.10	1	MG/KG	11/12/2021	JMK
PCB-1221	EPA-8082	U	0.10	1	MG/KG	11/12/2021	JMK
PCB-1232	EPA-8082	U	0.10	1	MG/KG	11/12/2021	JMK
PCB-1242	EPA-8082	U	0.10	1	MG/KG	11/12/2021	JMK
PCB-1248	EPA-8082	U	0.10	1	MG/KG	11/12/2021	JMK
PCB-1254	EPA-8082	U	0.10	1	MG/KG	11/12/2021	JMK
PCB-1260	EPA-8082	U	0.10	1	MG/KG	11/12/2021	JMK
PCB-1268	EPA-8082	U	0.10	1	MG/KG	11/12/2021	JMK
Mercury	EPA-7471	**0.059**	0.020	1	MG/KG	11/08/2021	RAL
Arsenic	EPA-6020	**3.8**	0.20	1	MG/KG	11/08/2021	EBS
Copper	EPA-6020	**34**	0.10	1	MG/KG	11/08/2021	EBS
Lead	EPA-6020	**5.0**	0.10	1	MG/KG	11/08/2021	EBS
Nickel	EPA-6020	**51**	0.10	1	MG/KG	11/08/2021	EBS
Zinc	EPA-6020	**50**	0.50	1	MG/KG	11/08/2021	EBS

SURROGATE	METHOD	%REC	ANALYSIS DATE	ANALYSIS BY

ADDRESS 8620 Holly Drive, Suite 100, Everett, WA 98208 | PHONE 425-356-2600 | FAX 425-356-2626
ALS Group USA, Corp dba ALS Environmental

Environmental www.alsglobal.com
RIGHT SOLUTIONS RIGHT PARTNER

CERTIFICATE OF ANALYSIS

CLIENT:	Aspect Consulting, LLC 710 - 2nd Ave, Suite 550 Seattle, WA 98104	DATE: ALS JOB#: ALS SAMPLE#:	11/16/2021 EV21110033 EV21110033-16
CLIENT CONTACT:	Amy Tice	DATE RECEIVED:	11/04/2021
CLIENT PROJECT:	KC Stockpile	COLLECTION DATE:	11/4/2021 12:40:00 PM
CLIENT SAMPLE ID	SF-2	WDOE ACCREDITATION:	C601

SAMPLE DATA RESULTS

SURROGATE	METHOD	%REC	ANALYSIS DATE	ANALYSIS BY
TFT	NWTPH-GX	**72.1**	11/05/2021	KLS
C25	NWTPH-DX	**84.0**	11/06/2021	JNF
Terphenyl-d14	EPA-8270 SIM	**93.2**	11/09/2021	JMK
TCMX	EPA-8082	**112**	11/12/2021	JMK
DCB	EPA-8082	**137**	11/12/2021	JMK

U - Analyte analyzed for but not detected at level above reporting limit.

ADDRESS 8620 Holly Drive, Suite 100, Everett, WA 98208 | PHONE 425-356-2600 | FAX 425-356-2626
ALS Group USA, Corp dba ALS Environmental

Environmental www.alsglobal.com
RIGHT SOLUTIONS RIGHT PARTNER

ALS Environmental

CERTIFICATE OF ANALYSIS

CLIENT:	Aspect Consulting, LLC 710 - 2nd Ave, Suite 550 Seattle, WA 98104	DATE: ALS JOB#: ALS SAMPLE#:	11/16/2021 EV21110033 EV21110033-17
CLIENT CONTACT:	Amy Tice	DATE RECEIVED:	11/04/2021
CLIENT PROJECT:	KC Stockpile	COLLECTION DATE:	11/4/2021 12:50:00 PM
CLIENT SAMPLE ID	SF-3	WDOE ACCREDITATION:	C601

SAMPLE DATA RESULTS

ANALYTE	METHOD	RESULTS	REPORTING LIMITS	DILUTION FACTOR	UNITS	ANALYSIS DATE	ANALYSIS BY
TPH-Volatile Range	NWTPH-GX	U	3.0	1	MG/KG	11/05/2021	KLS
TPH-Diesel Range	NWTPH-DX	U	25	1	MG/KG	11/06/2021	JNF
TPH-Oil Range	NWTPH-DX	U	50	1	MG/KG	11/06/2021	JNF
Naphthalene	EPA-8270 SIM	U	20	1	UG/KG	11/09/2021	JMK
2-Methylnaphthalene	EPA-8270 SIM	U	20	1	UG/KG	11/09/2021	JMK
1-Methylnaphthalene	EPA-8270 SIM	U	20	1	UG/KG	11/09/2021	JMK
Acenaphthylene	EPA-8270 SIM	U	20	1	UG/KG	11/09/2021	JMK
Acenaphthene	EPA-8270 SIM	U	20	1	UG/KG	11/09/2021	JMK
Fluorene	EPA-8270 SIM	U	20	1	UG/KG	11/09/2021	JMK
Phenanthrene	EPA-8270 SIM	U	20	1	UG/KG	11/09/2021	JMK
Anthracene	EPA-8270 SIM	U	20	1	UG/KG	11/09/2021	JMK
Fluoranthene	EPA-8270 SIM	U	20	1	UG/KG	11/09/2021	JMK
Pyrene	EPA-8270 SIM	U	20	1	UG/KG	11/09/2021	JMK
Benzo[A]Anthracene	EPA-8270 SIM	U	20	1	UG/KG	11/09/2021	JMK
Chrysene	EPA-8270 SIM	U	20	1	UG/KG	11/09/2021	JMK
Benzo[B]Fluoranthene	EPA-8270 SIM	U	20	1	UG/KG	11/09/2021	JMK
Benzo[K]Fluoranthene	EPA-8270 SIM	U	20	1	UG/KG	11/09/2021	JMK
Benzo[A]Pyrene	EPA-8270 SIM	U	20	1	UG/KG	11/09/2021	JMK
Indeno[1,2,3-Cd]Pyrene	EPA-8270 SIM	U	20	1	UG/KG	11/09/2021	JMK
Dibenz[A,H]Anthracene	EPA-8270 SIM	U	20	1	UG/KG	11/09/2021	JMK
Benzo[G,H,I]Perylene	EPA-8270 SIM	U	20	1	UG/KG	11/09/2021	JMK
PCB-1016	EPA-8082	U	0.10	1	MG/KG	11/12/2021	JMK
PCB-1221	EPA-8082	U	0.10	1	MG/KG	11/12/2021	JMK
PCB-1232	EPA-8082	U	0.10	1	MG/KG	11/12/2021	JMK
PCB-1242	EPA-8082	U	0.10	1	MG/KG	11/12/2021	JMK
PCB-1248	EPA-8082	U	0.10	1	MG/KG	11/12/2021	JMK
PCB-1254	EPA-8082	U	0.10	1	MG/KG	11/12/2021	JMK
PCB-1260	EPA-8082	U	0.10	1	MG/KG	11/12/2021	JMK
PCB-1268	EPA-8082	U	0.10	1	MG/KG	11/12/2021	JMK
Mercury	EPA-7471	**0.053**	0.020	1	MG/KG	11/08/2021	RAL
Arsenic	EPA-6020	**4.0**	0.20	1	MG/KG	11/08/2021	EBS
Copper	EPA-6020	**34**	0.10	1	MG/KG	11/08/2021	EBS
Lead	EPA-6020	**3.2**	0.10	1	MG/KG	11/08/2021	EBS
Nickel	EPA-6020	**46**	0.10	1	MG/KG	11/08/2021	EBS
Zinc	EPA-6020	**51**	0.50	1	MG/KG	11/08/2021	EBS

SURROGATE	METHOD	%REC	ANALYSIS DATE	ANALYSIS BY

ADDRESS 8620 Holly Drive, Suite 100, Everett, WA 98208 | PHONE 425-356-2600 | FAX 425-356-2626
ALS Group USA, Corp dba ALS Environmental

Environmental www.alsglobal.com
RIGHT SOLUTIONS RIGHT PARTNER

CERTIFICATE OF ANALYSIS

CLIENT:	Aspect Consulting, LLC 710 - 2nd Ave, Suite 550 Seattle, WA 98104	DATE: ALS JOB#: ALS SAMPLE#:	11/16/2021 EV21110033 EV21110033-17
CLIENT CONTACT:	Amy Tice	DATE RECEIVED:	11/04/2021
CLIENT PROJECT:	KC Stockpile	COLLECTION DATE:	11/4/2021 12:50:00 PM
CLIENT SAMPLE ID	SF-3	WDOE ACCREDITATION:	C601

SAMPLE DATA RESULTS

SURROGATE	METHOD	%REC	ANALYSIS DATE	ANALYSIS BY
TFT	NWTPH-GX	**74.2**	11/05/2021	KLS
C25	NWTPH-DX	**82.0**	11/06/2021	JNF
Terphenyl-d14	EPA-8270 SIM	**108**	11/09/2021	JMK
TCMX	EPA-8082	**106**	11/12/2021	JMK
DCB	EPA-8082	**131**	11/12/2021	JMK

U - Analyte analyzed for but not detected at level above reporting limit.

ADDRESS 8620 Holly Drive, Suite 100, Everett, WA 98208 | PHONE 425-356-2600 | FAX 425-356-2626
ALS Group USA, Corp dba ALS Environmental

Environmental www.alsglobal.com
RIGHT SOLUTIONS RIGHT PARTNER

ALS Environmental

CERTIFICATE OF ANALYSIS

CLIENT:	Aspect Consulting, LLC 710 - 2nd Ave, Suite 550 Seattle, WA 98104	DATE: ALS JOB#: ALS SAMPLE#:	11/16/2021 EV21110033 EV21110033-18
CLIENT CONTACT:	Amy Tice	DATE RECEIVED:	11/04/2021
CLIENT PROJECT:	KC Stockpile	COLLECTION DATE:	11/4/2021 1:00:00 PM
CLIENT SAMPLE ID	SF-4	WDOE ACCREDITATION:	C601

SAMPLE DATA RESULTS

ANALYTE	METHOD	RESULTS	REPORTING LIMITS	DILUTION FACTOR	UNITS	ANALYSIS DATE	ANALYSIS BY
TPH-Volatile Range	NWTPH-GX	U	3.0	1	MG/KG	11/05/2021	KLS
TPH-Diesel Range	NWTPH-DX	U	25	1	MG/KG	11/08/2021	JNF
TPH-Oil Range	NWTPH-DX	U	50	1	MG/KG	11/08/2021	JNF
Naphthalene	EPA-8270 SIM	U	20	1	UG/KG	11/09/2021	JMK
2-Methylnaphthalene	EPA-8270 SIM	U	20	1	UG/KG	11/09/2021	JMK
1-Methylnaphthalene	EPA-8270 SIM	U	20	1	UG/KG	11/09/2021	JMK
Acenaphthylene	EPA-8270 SIM	U	20	1	UG/KG	11/09/2021	JMK
Acenaphthene	EPA-8270 SIM	U	20	1	UG/KG	11/09/2021	JMK
Fluorene	EPA-8270 SIM	U	20	1	UG/KG	11/09/2021	JMK
Phenanthrene	EPA-8270 SIM	U	20	1	UG/KG	11/09/2021	JMK
Anthracene	EPA-8270 SIM	U	20	1	UG/KG	11/09/2021	JMK
Fluoranthene	EPA-8270 SIM	U	20	1	UG/KG	11/09/2021	JMK
Pyrene	EPA-8270 SIM	U	20	1	UG/KG	11/09/2021	JMK
Benzo[A]Anthracene	EPA-8270 SIM	U	20	1	UG/KG	11/09/2021	JMK
Chrysene	EPA-8270 SIM	U	20	1	UG/KG	11/09/2021	JMK
Benzo[B]Fluoranthene	EPA-8270 SIM	U	20	1	UG/KG	11/09/2021	JMK
Benzo[K]Fluoranthene	EPA-8270 SIM	U	20	1	UG/KG	11/09/2021	JMK
Benzo[A]Pyrene	EPA-8270 SIM	U	20	1	UG/KG	11/09/2021	JMK
Indeno[1,2,3-Cd]Pyrene	EPA-8270 SIM	U	20	1	UG/KG	11/09/2021	JMK
Dibenz[A,H]Anthracene	EPA-8270 SIM	U	20	1	UG/KG	11/09/2021	JMK
Benzo[G,H,I]Perylene	EPA-8270 SIM	U	20	1	UG/KG	11/09/2021	JMK
PCB-1016	EPA-8082	U	0.10	1	MG/KG	11/12/2021	JMK
PCB-1221	EPA-8082	U	0.10	1	MG/KG	11/12/2021	JMK
PCB-1232	EPA-8082	U	0.10	1	MG/KG	11/12/2021	JMK
PCB-1242	EPA-8082	U	0.10	1	MG/KG	11/12/2021	JMK
PCB-1248	EPA-8082	U	0.10	1	MG/KG	11/12/2021	JMK
PCB-1254	EPA-8082	U	0.10	1	MG/KG	11/12/2021	JMK
PCB-1260	EPA-8082	U	0.10	1	MG/KG	11/12/2021	JMK
PCB-1268	EPA-8082	U	0.10	1	MG/KG	11/12/2021	JMK
Mercury	EPA-7471	**0.049**	0.020	1	MG/KG	11/08/2021	RAL
Arsenic	EPA-6020	**3.7**	0.20	1	MG/KG	11/08/2021	EBS
Copper	EPA-6020	**32**	0.10	1	MG/KG	11/08/2021	EBS
Lead	EPA-6020	**3.5**	0.10	1	MG/KG	11/08/2021	EBS
Nickel	EPA-6020	**44**	0.10	1	MG/KG	11/08/2021	EBS
Zinc	EPA-6020	**46**	0.50	1	MG/KG	11/08/2021	EBS

SURROGATE	METHOD	%REC	ANALYSIS DATE	ANALYSIS BY

ADDRESS 8620 Holly Drive, Suite 100, Everett, WA 98208 | PHONE 425-356-2600 | FAX 425-356-2626
ALS Group USA, Corp dba ALS Environmental

Environmental www.alsglobal.com
RIGHT SOLUTIONS RIGHT PARTNER

CERTIFICATE OF ANALYSIS

CLIENT:	Aspect Consulting, LLC 710 - 2nd Ave, Suite 550 Seattle, WA 98104	DATE: ALS JOB#: ALS SAMPLE#:	11/16/2021 EV21110033 EV21110033-18
CLIENT CONTACT:	Amy Tice	DATE RECEIVED:	11/04/2021
CLIENT PROJECT:	KC Stockpile	COLLECTION DATE:	11/4/2021 1:00:00 PM
CLIENT SAMPLE ID	SF-4	WDOE ACCREDITATION:	C601

SAMPLE DATA RESULTS

SURROGATE	METHOD	%REC	ANALYSIS DATE	ANALYSIS BY
TFT	NWTPH-GX	**73.5**	11/05/2021	KLS
C25	NWTPH-DX	**87.3**	11/08/2021	JNF
Terphenyl-d14	EPA-8270 SIM	**119**	11/09/2021	JMK
TCMX	EPA-8082	**117**	11/12/2021	JMK
DCB	EPA-8082	**145**	11/12/2021	JMK

U - Analyte analyzed for but not detected at level above reporting limit.

ADDRESS 8620 Holly Drive, Suite 100, Everett, WA 98208 | PHONE 425-356-2600 | FAX 425-356-2626
ALS Group USA, Corp dba ALS Environmental

Environmental www.alsglobal.com
RIGHT SOLUTIONS RIGHT PARTNER

ALS Environmental

CERTIFICATE OF ANALYSIS

CLIENT:	Aspect Consulting, LLC 710 - 2nd Ave, Suite 550 Seattle, WA 98104	DATE:	11/16/2021
		ALS JOB#:	EV21110033
		ALS SAMPLE#:	EV21110033-19
CLIENT CONTACT:	Amy Tice	DATE RECEIVED:	11/04/2021
CLIENT PROJECT:	KC Stockpile	COLLECTION DATE:	11/4/2021 1:10:00 PM
CLIENT SAMPLE ID	SF-5	WDOE ACCREDITATION:	C601

SAMPLE DATA RESULTS

ANALYTE	METHOD	RESULTS	REPORTING LIMITS	DILUTION FACTOR	UNITS	ANALYSIS DATE	ANALYSIS BY
TPH-Volatile Range	NWTPH-GX	U	3.0	1	MG/KG	11/05/2021	KLS
TPH-Diesel Range	NWTPH-DX	U	25	1	MG/KG	11/08/2021	JNF
TPH-Oil Range	NWTPH-DX	U	50	1	MG/KG	11/08/2021	JNF
Naphthalene	EPA-8270 SIM	U	20	1	UG/KG	11/09/2021	JMK
2-Methylnaphthalene	EPA-8270 SIM	U	20	1	UG/KG	11/09/2021	JMK
1-Methylnaphthalene	EPA-8270 SIM	U	20	1	UG/KG	11/09/2021	JMK
Acenaphthylene	EPA-8270 SIM	U	20	1	UG/KG	11/09/2021	JMK
Acenaphthene	EPA-8270 SIM	U	20	1	UG/KG	11/09/2021	JMK
Fluorene	EPA-8270 SIM	U	20	1	UG/KG	11/09/2021	JMK
Phenanthrene	EPA-8270 SIM	U	20	1	UG/KG	11/09/2021	JMK
Anthracene	EPA-8270 SIM	U	20	1	UG/KG	11/09/2021	JMK
Fluoranthene	EPA-8270 SIM	U	20	1	UG/KG	11/09/2021	JMK
Pyrene	EPA-8270 SIM	U	20	1	UG/KG	11/09/2021	JMK
Benzo[A]Anthracene	EPA-8270 SIM	U	20	1	UG/KG	11/09/2021	JMK
Chrysene	EPA-8270 SIM	U	20	1	UG/KG	11/09/2021	JMK
Benzo[B]Fluoranthene	EPA-8270 SIM	U	20	1	UG/KG	11/09/2021	JMK
Benzo[K]Fluoranthene	EPA-8270 SIM	U	20	1	UG/KG	11/09/2021	JMK
Benzo[A]Pyrene	EPA-8270 SIM	U	20	1	UG/KG	11/09/2021	JMK
Indeno[1,2,3-Cd]Pyrene	EPA-8270 SIM	U	20	1	UG/KG	11/09/2021	JMK
Dibenz[A,H]Anthracene	EPA-8270 SIM	U	20	1	UG/KG	11/09/2021	JMK
Benzo[G,H,I]Perylene	EPA-8270 SIM	U	20	1	UG/KG	11/09/2021	JMK
PCB-1016	EPA-8082	U	0.10	1	MG/KG	11/12/2021	JMK
PCB-1221	EPA-8082	U	0.10	1	MG/KG	11/12/2021	JMK
PCB-1232	EPA-8082	U	0.10	1	MG/KG	11/12/2021	JMK
PCB-1242	EPA-8082	U	0.10	1	MG/KG	11/12/2021	JMK
PCB-1248	EPA-8082	U	0.10	1	MG/KG	11/12/2021	JMK
PCB-1254	EPA-8082	U	0.10	1	MG/KG	11/12/2021	JMK
PCB-1260	EPA-8082	U	0.10	1	MG/KG	11/12/2021	JMK
PCB-1268	EPA-8082	U	0.10	1	MG/KG	11/12/2021	JMK
Mercury	EPA-7471	**0.069**	0.020	1	MG/KG	11/08/2021	RAL
Arsenic	EPA-6020	**5.2**	0.20	1	MG/KG	11/08/2021	EBS
Copper	EPA-6020	**37**	0.10	1	MG/KG	11/08/2021	EBS
Lead	EPA-6020	**3.7**	0.10	1	MG/KG	11/08/2021	EBS
Nickel	EPA-6020	**57**	0.10	1	MG/KG	11/08/2021	EBS
Zinc	EPA-6020	**53**	0.50	1	MG/KG	11/08/2021	EBS

SURROGATE	METHOD	%REC	ANALYSIS DATE	ANALYSIS BY

ADDRESS 8620 Holly Drive, Suite 100, Everett, WA 98208 | PHONE 425-356-2600 | FAX 425-356-2626
ALS Group USA, Corp dba ALS Environmental

Environmental www.alsglobal.com
RIGHT SOLUTIONS RIGHT PARTNER

CERTIFICATE OF ANALYSIS

CLIENT:	Aspect Consulting, LLC 710 - 2nd Ave, Suite 550 Seattle, WA 98104	DATE: ALS JOB#: ALS SAMPLE#:	11/16/2021 EV21110033 EV21110033-19
CLIENT CONTACT:	Amy Tice	DATE RECEIVED:	11/04/2021
CLIENT PROJECT:	KC Stockpile	COLLECTION DATE:	11/4/2021 1:10:00 PM
CLIENT SAMPLE ID	SF-5	WDOE ACCREDITATION:	C601

SAMPLE DATA RESULTS

SURROGATE	METHOD	%REC	ANALYSIS DATE	ANALYSIS BY
TFT	NWTPH-GX	**70.6**	11/05/2021	KLS
C25	NWTPH-DX	**87.2**	11/08/2021	JNF
Terphenyl-d14	EPA-8270 SIM	**106**	11/09/2021	JMK
TCMX	EPA-8082	**113**	11/12/2021	JMK
DCB	EPA-8082	**140**	11/12/2021	JMK

U - Analyte analyzed for but not detected at level above reporting limit.

ADDRESS 8620 Holly Drive, Suite 100, Everett, WA 98208 | PHONE 425-356-2600 | FAX 425-356-2626
ALS Group USA, Corp dba ALS Environmental

Environmental www.alsglobal.com
RIGHT SOLUTIONS RIGHT PARTNER

ALS Environmental

CERTIFICATE OF ANALYSIS

CLIENT:	Aspect Consulting, LLC 710 - 2nd Ave, Suite 550 Seattle, WA 98104	DATE: ALS JOB#: ALS SAMPLE#:	11/16/2021 EV21110033 EV21110033-20
CLIENT CONTACT:	Amy Tice	DATE RECEIVED:	11/04/2021
CLIENT PROJECT:	KC Stockpile	COLLECTION DATE:	11/4/2021 1:20:00 PM
CLIENT SAMPLE ID	SF-6	WDOE ACCREDITATION:	C601

SAMPLE DATA RESULTS

ANALYTE	METHOD	RESULTS	REPORTING LIMITS	DILUTION FACTOR	UNITS	ANALYSIS DATE	ANALYSIS BY
TPH-Volatile Range	NWTPH-GX	U	3.0	1	MG/KG	11/05/2021	KLS
TPH-Diesel Range	NWTPH-DX	U	25	1	MG/KG	11/08/2021	JNF
TPH-Oil Range	NWTPH-DX	U	50	1	MG/KG	11/08/2021	JNF
Naphthalene	EPA-8270 SIM	U	20	1	UG/KG	11/09/2021	JMK
2-Methylnaphthalene	EPA-8270 SIM	U	20	1	UG/KG	11/09/2021	JMK
1-Methylnaphthalene	EPA-8270 SIM	U	20	1	UG/KG	11/09/2021	JMK
Acenaphthylene	EPA-8270 SIM	U	20	1	UG/KG	11/09/2021	JMK
Acenaphthene	EPA-8270 SIM	U	20	1	UG/KG	11/09/2021	JMK
Fluorene	EPA-8270 SIM	U	20	1	UG/KG	11/09/2021	JMK
Phenanthrene	EPA-8270 SIM	U	20	1	UG/KG	11/09/2021	JMK
Anthracene	EPA-8270 SIM	U	20	1	UG/KG	11/09/2021	JMK
Fluoranthene	EPA-8270 SIM	U	20	1	UG/KG	11/09/2021	JMK
Pyrene	EPA-8270 SIM	U	20	1	UG/KG	11/09/2021	JMK
Benzo[A]Anthracene	EPA-8270 SIM	U	20	1	UG/KG	11/09/2021	JMK
Chrysene	EPA-8270 SIM	U	20	1	UG/KG	11/09/2021	JMK
Benzo[B]Fluoranthene	EPA-8270 SIM	U	20	1	UG/KG	11/09/2021	JMK
Benzo[K]Fluoranthene	EPA-8270 SIM	U	20	1	UG/KG	11/09/2021	JMK
Benzo[A]Pyrene	EPA-8270 SIM	U	20	1	UG/KG	11/09/2021	JMK
Indeno[1,2,3-Cd]Pyrene	EPA-8270 SIM	U	20	1	UG/KG	11/09/2021	JMK
Dibenz[A,H]Anthracene	EPA-8270 SIM	U	20	1	UG/KG	11/09/2021	JMK
Benzo[G,H,I]Perylene	EPA-8270 SIM	U	20	1	UG/KG	11/09/2021	JMK
PCB-1016	EPA-8082	U	0.10	1	MG/KG	11/12/2021	JMK
PCB-1221	EPA-8082	U	0.10	1	MG/KG	11/12/2021	JMK
PCB-1232	EPA-8082	U	0.10	1	MG/KG	11/12/2021	JMK
PCB-1242	EPA-8082	U	0.10	1	MG/KG	11/12/2021	JMK
PCB-1248	EPA-8082	U	0.10	1	MG/KG	11/12/2021	JMK
PCB-1254	EPA-8082	U	0.10	1	MG/KG	11/12/2021	JMK
PCB-1260	EPA-8082	U	0.10	1	MG/KG	11/12/2021	JMK
PCB-1268	EPA-8082	U	0.10	1	MG/KG	11/12/2021	JMK
Mercury	EPA-7471	**0.065**	0.020	1	MG/KG	11/08/2021	RAL
Arsenic	EPA-6020	**4.6**	0.20	1	MG/KG	11/08/2021	EBS
Copper	EPA-6020	**67**	0.10	1	MG/KG	11/08/2021	EBS
Lead	EPA-6020	**3.2**	0.10	1	MG/KG	11/08/2021	EBS
Nickel	EPA-6020	**41**	0.10	1	MG/KG	11/08/2021	EBS
Zinc	EPA-6020	**46**	0.50	1	MG/KG	11/08/2021	EBS

SURROGATE	METHOD	%REC	ANALYSIS DATE	ANALYSIS BY

ADDRESS 8620 Holly Drive, Suite 100, Everett, WA 98208 | PHONE 425-356-2600 | FAX 425-356-2626
ALS Group USA, Corp dba ALS Environmental

Environmental www.alsglobal.com
RIGHT SOLUTIONS RIGHT PARTNER

CERTIFICATE OF ANALYSIS

CLIENT:	Aspect Consulting, LLC 710 - 2nd Ave, Suite 550 Seattle, WA 98104	DATE: ALS JOB#: ALS SAMPLE#:	11/16/2021 EV21110033 EV21110033-20
CLIENT CONTACT:	Amy Tice	DATE RECEIVED:	11/04/2021
CLIENT PROJECT:	KC Stockpile	COLLECTION DATE:	11/4/2021 1:20:00 PM
CLIENT SAMPLE ID	SF-6	WDOE ACCREDITATION:	C601

SAMPLE DATA RESULTS

SURROGATE	METHOD	%REC	ANALYSIS DATE	ANALYSIS BY
TFT	NWTPH-GX	**73.1**	11/05/2021	KLS
C25	NWTPH-DX	**79.2**	11/08/2021	JNF
Terphenyl-d14	EPA-8270 SIM	**107**	11/09/2021	JMK
TCMX	EPA-8082	**113**	11/12/2021	JMK
DCB	EPA-8082	**143**	11/12/2021	JMK

U - Analyte analyzed for but not detected at level above reporting limit.

ADDRESS 8620 Holly Drive, Suite 100, Everett, WA 98208 | PHONE 425-356-2600 | FAX 425-356-2626
ALS Group USA, Corp dba ALS Environmental

Environmental www.alsglobal.com
RIGHT SOLUTIONS RIGHT PARTNER

ALS Environmental

CERTIFICATE OF ANALYSIS

CLIENT:	Aspect Consulting, LLC 710 - 2nd Ave, Suite 550 Seattle, WA 98104	DATE: ALS JOB#: ALS SAMPLE#:	11/16/2021 EV21110033 EV21110033-21
CLIENT CONTACT:	Amy Tice	DATE RECEIVED:	11/04/2021
CLIENT PROJECT:	KC Stockpile	COLLECTION DATE:	11/4/2021 1:30:00 PM
CLIENT SAMPLE ID	SF-7	WDOE ACCREDITATION:	C601

SAMPLE DATA RESULTS

ANALYTE	METHOD	RESULTS	REPORTING LIMITS	DILUTION FACTOR	UNITS	ANALYSIS DATE	ANALYSIS BY
TPH-Volatile Range	NWTPH-GX	U	3.0	1	MG/KG	11/05/2021	KLS
TPH-Diesel Range	NWTPH-DX	U	25	1	MG/KG	11/08/2021	JNF
TPH-Oil Range	NWTPH-DX	U	50	1	MG/KG	11/08/2021	JNF
Naphthalene	EPA-8270 SIM	U	20	1	UG/KG	11/10/2021	JMK
2-Methylnaphthalene	EPA-8270 SIM	U	20	1	UG/KG	11/10/2021	JMK
1-Methylnaphthalene	EPA-8270 SIM	U	20	1	UG/KG	11/10/2021	JMK
Acenaphthylene	EPA-8270 SIM	U	20	1	UG/KG	11/10/2021	JMK
Acenaphthene	EPA-8270 SIM	U	20	1	UG/KG	11/10/2021	JMK
Fluorene	EPA-8270 SIM	U	20	1	UG/KG	11/10/2021	JMK
Phenanthrene	EPA-8270 SIM	U	20	1	UG/KG	11/10/2021	JMK
Anthracene	EPA-8270 SIM	U	20	1	UG/KG	11/10/2021	JMK
Fluoranthene	EPA-8270 SIM	U	20	1	UG/KG	11/10/2021	JMK
Pyrene	EPA-8270 SIM	U	20	1	UG/KG	11/10/2021	JMK
Benzo[A]Anthracene	EPA-8270 SIM	U	20	1	UG/KG	11/10/2021	JMK
Chrysene	EPA-8270 SIM	U	20	1	UG/KG	11/10/2021	JMK
Benzo[B]Fluoranthene	EPA-8270 SIM	U	20	1	UG/KG	11/10/2021	JMK
Benzo[K]Fluoranthene	EPA-8270 SIM	U	20	1	UG/KG	11/10/2021	JMK
Benzo[A]Pyrene	EPA-8270 SIM	U	20	1	UG/KG	11/10/2021	JMK
Indeno[1,2,3-Cd]Pyrene	EPA-8270 SIM	U	20	1	UG/KG	11/10/2021	JMK
Dibenz[A,H]Anthracene	EPA-8270 SIM	U	20	1	UG/KG	11/10/2021	JMK
Benzo[G,H,I]Perylene	EPA-8270 SIM	U	20	1	UG/KG	11/10/2021	JMK
PCB-1016	EPA-8082	U	0.10	1	MG/KG	11/12/2021	JMK
PCB-1221	EPA-8082	U	0.10	1	MG/KG	11/12/2021	JMK
PCB-1232	EPA-8082	U	0.10	1	MG/KG	11/12/2021	JMK
PCB-1242	EPA-8082	U	0.10	1	MG/KG	11/12/2021	JMK
PCB-1248	EPA-8082	U	0.10	1	MG/KG	11/12/2021	JMK
PCB-1254	EPA-8082	U	0.10	1	MG/KG	11/12/2021	JMK
PCB-1260	EPA-8082	U	0.10	1	MG/KG	11/12/2021	JMK
PCB-1268	EPA-8082	U	0.10	1	MG/KG	11/12/2021	JMK
Mercury	EPA-7471	**0.045**	0.020	1	MG/KG	11/05/2021	RAL
Arsenic	EPA-6020	**3.7**	0.20	1	MG/KG	11/05/2021	EBS
Copper	EPA-6020	**31**	0.10	1	MG/KG	11/05/2021	EBS
Lead	EPA-6020	**3.0**	0.10	1	MG/KG	11/05/2021	EBS
Nickel	EPA-6020	**39**	0.20	1	MG/KG	11/05/2021	EBS
Zinc	EPA-6020	**46**	2.0	1	MG/KG	11/05/2021	EBS

SURROGATE	METHOD	%REC	ANALYSIS DATE	ANALYSIS BY

ADDRESS 8620 Holly Drive, Suite 100, Everett, WA 98208 | PHONE 425-356-2600 | FAX 425-356-2626
ALS Group USA, Corp dba ALS Environmental

Environmental www.alsglobal.com
RIGHT SOLUTIONS RIGHT PARTNER

CERTIFICATE OF ANALYSIS

CLIENT:	Aspect Consulting, LLC 710 - 2nd Ave, Suite 550 Seattle, WA 98104	DATE: ALS JOB#: ALS SAMPLE#:	11/16/2021 EV21110033 EV21110033-21
CLIENT CONTACT:	Amy Tice	DATE RECEIVED:	11/04/2021
CLIENT PROJECT:	KC Stockpile	COLLECTION DATE:	11/4/2021 1:30:00 PM
CLIENT SAMPLE ID	SF-7	WDOE ACCREDITATION:	C601

SAMPLE DATA RESULTS

SURROGATE	METHOD	%REC	ANALYSIS DATE	ANALYSIS BY
TFT	NWTPH-GX	**73.2**	11/05/2021	KLS
C25	NWTPH-DX	**86.1**	11/08/2021	JNF
Terphenyl-d14	EPA-8270 SIM	**107**	11/10/2021	JMK
TCMX	EPA-8082	**118**	11/12/2021	JMK
DCB	EPA-8082	**143**	11/12/2021	JMK

U - Analyte analyzed for but not detected at level above reporting limit.

ADDRESS 8620 Holly Drive, Suite 100, Everett, WA 98208 | PHONE 425-356-2600 | FAX 425-356-2626
ALS Group USA, Corp dba ALS Environmental

Environmental www.alsglobal.com
RIGHT SOLUTIONS RIGHT PARTNER

ALS Environmental

CERTIFICATE OF ANALYSIS

CLIENT:	Aspect Consulting, LLC 710 - 2nd Ave, Suite 550 Seattle, WA 98104	DATE: ALS JOB#: ALS SAMPLE#:	11/16/2021 EV21110033 EV21110033-22
CLIENT CONTACT:	Amy Tice	DATE RECEIVED:	11/04/2021
CLIENT PROJECT:	KC Stockpile	COLLECTION DATE:	11/4/2021 1:40:00 PM
CLIENT SAMPLE ID	SF-8	WDOE ACCREDITATION:	C601

SAMPLE DATA RESULTS

ANALYTE	METHOD	RESULTS	REPORTING LIMITS	DILUTION FACTOR	UNITS	ANALYSIS DATE	ANALYSIS BY
TPH-Volatile Range	NWTPH-GX	U	3.0	1	MG/KG	11/05/2021	KLS
TPH-Diesel Range	NWTPH-DX	U	25	1	MG/KG	11/08/2021	JNF
TPH-Oil Range	NWTPH-DX	U	50	1	MG/KG	11/08/2021	JNF
Naphthalene	EPA-8270 SIM	U	20	1	UG/KG	11/10/2021	JMK
2-Methylnaphthalene	EPA-8270 SIM	U	20	1	UG/KG	11/10/2021	JMK
1-Methylnaphthalene	EPA-8270 SIM	U	20	1	UG/KG	11/10/2021	JMK
Acenaphthylene	EPA-8270 SIM	U	20	1	UG/KG	11/10/2021	JMK
Acenaphthene	EPA-8270 SIM	U	20	1	UG/KG	11/10/2021	JMK
Fluorene	EPA-8270 SIM	U	20	1	UG/KG	11/10/2021	JMK
Phenanthrene	EPA-8270 SIM	U	20	1	UG/KG	11/10/2021	JMK
Anthracene	EPA-8270 SIM	U	20	1	UG/KG	11/10/2021	JMK
Fluoranthene	EPA-8270 SIM	U	20	1	UG/KG	11/10/2021	JMK
Pyrene	EPA-8270 SIM	U	20	1	UG/KG	11/10/2021	JMK
Benzo[A]Anthracene	EPA-8270 SIM	U	20	1	UG/KG	11/10/2021	JMK
Chrysene	EPA-8270 SIM	U	20	1	UG/KG	11/10/2021	JMK
Benzo[B]Fluoranthene	EPA-8270 SIM	U	20	1	UG/KG	11/10/2021	JMK
Benzo[K]Fluoranthene	EPA-8270 SIM	U	20	1	UG/KG	11/10/2021	JMK
Benzo[A]Pyrene	EPA-8270 SIM	U	20	1	UG/KG	11/10/2021	JMK
Indeno[1,2,3-Cd]Pyrene	EPA-8270 SIM	U	20	1	UG/KG	11/10/2021	JMK
Dibenz[A,H]Anthracene	EPA-8270 SIM	U	20	1	UG/KG	11/10/2021	JMK
Benzo[G,H,I]Perylene	EPA-8270 SIM	U	20	1	UG/KG	11/10/2021	JMK
PCB-1016	EPA-8082	U	0.10	1	MG/KG	11/12/2021	JMK
PCB-1221	EPA-8082	U	0.10	1	MG/KG	11/12/2021	JMK
PCB-1232	EPA-8082	U	0.10	1	MG/KG	11/12/2021	JMK
PCB-1242	EPA-8082	U	0.10	1	MG/KG	11/12/2021	JMK
PCB-1248	EPA-8082	U	0.10	1	MG/KG	11/12/2021	JMK
PCB-1254	EPA-8082	U	0.10	1	MG/KG	11/12/2021	JMK
PCB-1260	EPA-8082	U	0.10	1	MG/KG	11/12/2021	JMK
PCB-1268	EPA-8082	U	0.10	1	MG/KG	11/12/2021	JMK
Mercury	EPA-7471	**0.047**	0.020	1	MG/KG	11/05/2021	RAL
Arsenic	EPA-6020	**4.5**	0.20	1	MG/KG	11/05/2021	EBS
Copper	EPA-6020	**29**	0.10	1	MG/KG	11/05/2021	EBS
Lead	EPA-6020	**3.1**	0.10	1	MG/KG	11/05/2021	EBS
Nickel	EPA-6020	**39**	0.20	1	MG/KG	11/05/2021	EBS
Zinc	EPA-6020	**46**	2.0	1	MG/KG	11/05/2021	EBS

SURROGATE	METHOD	%REC	ANALYSIS DATE	ANALYSIS BY

ADDRESS 8620 Holly Drive, Suite 100, Everett, WA 98208 | PHONE 425-356-2600 | FAX 425-356-2626
ALS Group USA, Corp dba ALS Environmental

Environmental www.alsglobal.com
RIGHT SOLUTIONS RIGHT PARTNER

CERTIFICATE OF ANALYSIS

CLIENT:	Aspect Consulting, LLC 710 - 2nd Ave, Suite 550 Seattle, WA 98104	DATE: ALS JOB#: ALS SAMPLE#:	11/16/2021 EV21110033 EV21110033-22
CLIENT CONTACT:	Amy Tice	DATE RECEIVED:	11/04/2021
CLIENT PROJECT:	KC Stockpile	COLLECTION DATE:	11/4/2021 1:40:00 PM
CLIENT SAMPLE ID	SF-8	WDOE ACCREDITATION:	C601

SAMPLE DATA RESULTS

SURROGATE	METHOD	%REC	ANALYSIS DATE	ANALYSIS BY
TFT	NWTPH-GX	**75.3**	11/05/2021	KLS
C25	NWTPH-DX	**83.9**	11/08/2021	JNF
Terphenyl-d14	EPA-8270 SIM	**118**	11/10/2021	JMK
TCMX	EPA-8082	**108**	11/12/2021	JMK
DCB	EPA-8082	**130**	11/12/2021	JMK

U - Analyte analyzed for but not detected at level above reporting limit.

ADDRESS 8620 Holly Drive, Suite 100, Everett, WA 98208 | PHONE 425-356-2600 | FAX 425-356-2626
ALS Group USA, Corp dba ALS Environmental

Environmental www.alsglobal.com
RIGHT SOLUTIONS RIGHT PARTNER

ALS Environmental

CERTIFICATE OF ANALYSIS

CLIENT:	Aspect Consulting, LLC 710 - 2nd Ave, Suite 550 Seattle, WA 98104	DATE: ALS JOB#: ALS SAMPLE#:	11/16/2021 EV21110033 EV21110033-23
CLIENT CONTACT:	Amy Tice	DATE RECEIVED:	11/04/2021
CLIENT PROJECT:	KC Stockpile	COLLECTION DATE:	11/4/2021 1:50:00 PM
CLIENT SAMPLE ID	SF-9	WDOE ACCREDITATION:	C601

SAMPLE DATA RESULTS

ANALYTE	METHOD	RESULTS	REPORTING LIMITS	DILUTION FACTOR	UNITS	ANALYSIS DATE	ANALYSIS BY
TPH-Volatile Range	NWTPH-GX	U	3.0	1	MG/KG	11/06/2021	KLS
TPH-Diesel Range	NWTPH-DX	U	25	1	MG/KG	11/08/2021	JNF
TPH-Oil Range	NWTPH-DX	U	50	1	MG/KG	11/08/2021	JNF
Naphthalene	EPA-8270 SIM	U	20	1	UG/KG	11/10/2021	JMK
2-Methylnaphthalene	EPA-8270 SIM	U	20	1	UG/KG	11/10/2021	JMK
1-Methylnaphthalene	EPA-8270 SIM	U	20	1	UG/KG	11/10/2021	JMK
Acenaphthylene	EPA-8270 SIM	U	20	1	UG/KG	11/10/2021	JMK
Acenaphthene	EPA-8270 SIM	U	20	1	UG/KG	11/10/2021	JMK
Fluorene	EPA-8270 SIM	U	20	1	UG/KG	11/10/2021	JMK
Phenanthrene	EPA-8270 SIM	U	20	1	UG/KG	11/10/2021	JMK
Anthracene	EPA-8270 SIM	U	20	1	UG/KG	11/10/2021	JMK
Fluoranthene	EPA-8270 SIM	U	20	1	UG/KG	11/10/2021	JMK
Pyrene	EPA-8270 SIM	U	20	1	UG/KG	11/10/2021	JMK
Benzo[A]Anthracene	EPA-8270 SIM	U	20	1	UG/KG	11/10/2021	JMK
Chrysene	EPA-8270 SIM	U	20	1	UG/KG	11/10/2021	JMK
Benzo[B]Fluoranthene	EPA-8270 SIM	U	20	1	UG/KG	11/10/2021	JMK
Benzo[K]Fluoranthene	EPA-8270 SIM	U	20	1	UG/KG	11/10/2021	JMK
Benzo[A]Pyrene	EPA-8270 SIM	U	20	1	UG/KG	11/10/2021	JMK
Indeno[1,2,3-Cd]Pyrene	EPA-8270 SIM	U	20	1	UG/KG	11/10/2021	JMK
Dibenz[A,H]Anthracene	EPA-8270 SIM	U	20	1	UG/KG	11/10/2021	JMK
Benzo[G,H,I]Perylene	EPA-8270 SIM	U	20	1	UG/KG	11/10/2021	JMK
PCB-1016	EPA-8082	U	0.10	1	MG/KG	11/12/2021	JMK
PCB-1221	EPA-8082	U	0.10	1	MG/KG	11/12/2021	JMK
PCB-1232	EPA-8082	U	0.10	1	MG/KG	11/12/2021	JMK
PCB-1242	EPA-8082	U	0.10	1	MG/KG	11/12/2021	JMK
PCB-1248	EPA-8082	U	0.10	1	MG/KG	11/12/2021	JMK
PCB-1254	EPA-8082	U	0.10	1	MG/KG	11/12/2021	JMK
PCB-1260	EPA-8082	U	0.10	1	MG/KG	11/12/2021	JMK
PCB-1268	EPA-8082	U	0.10	1	MG/KG	11/12/2021	JMK
Mercury	EPA-7471	**0.051**	0.020	1	MG/KG	11/05/2021	RAL
Arsenic	EPA-6020	**3.9**	0.20	1	MG/KG	11/05/2021	EBS
Copper	EPA-6020	**33**	0.10	1	MG/KG	11/05/2021	EBS
Lead	EPA-6020	**3.4**	0.10	1	MG/KG	11/05/2021	EBS
Nickel	EPA-6020	**48**	0.20	1	MG/KG	11/05/2021	EBS
Zinc	EPA-6020	**50**	2.0	1	MG/KG	11/05/2021	EBS

SURROGATE	METHOD	%REC	ANALYSIS DATE	ANALYSIS BY

ADDRESS 8620 Holly Drive, Suite 100, Everett, WA 98208 | PHONE 425-356-2600 | FAX 425-356-2626
ALS Group USA, Corp dba ALS Environmental

Environmental www.alsglobal.com
RIGHT SOLUTIONS RIGHT PARTNER

CERTIFICATE OF ANALYSIS

CLIENT:	Aspect Consulting, LLC 710 - 2nd Ave, Suite 550 Seattle, WA 98104	DATE: ALS JOB#: ALS SAMPLE#:	11/16/2021 EV21110033 EV21110033-23
CLIENT CONTACT:	Amy Tice	DATE RECEIVED:	11/04/2021
CLIENT PROJECT:	KC Stockpile	COLLECTION DATE:	11/4/2021 1:50:00 PM
CLIENT SAMPLE ID	SF-9	WDOE ACCREDITATION:	C601

SAMPLE DATA RESULTS

SURROGATE	METHOD	%REC	ANALYSIS DATE	ANALYSIS BY
TFT	NWTPH-GX	**79.8**	11/06/2021	KLS
C25	NWTPH-DX	**84.9**	11/08/2021	JNF
Terphenyl-d14	EPA-8270 SIM	**116**	11/10/2021	JMK
TCMX	EPA-8082	**116**	11/12/2021	JMK
DCB	EPA-8082	**146**	11/12/2021	JMK

U - Analyte analyzed for but not detected at level above reporting limit.

ADDRESS 8620 Holly Drive, Suite 100, Everett, WA 98208 | PHONE 425-356-2600 | FAX 425-356-2626
ALS Group USA, Corp dba ALS Environmental

Environmental www.alsglobal.com
RIGHT SOLUTIONS RIGHT PARTNER

ALS Environmental

CERTIFICATE OF ANALYSIS

CLIENT:	Aspect Consulting, LLC 710 - 2nd Ave, Suite 550 Seattle, WA 98104	DATE: ALS JOB#: ALS SAMPLE#:	11/16/2021 EV21110033 EV21110033-24
CLIENT CONTACT:	Amy Tice	DATE RECEIVED:	11/04/2021
CLIENT PROJECT:	KC Stockpile	COLLECTION DATE:	11/4/2021 2:00:00 PM
CLIENT SAMPLE ID	SF-10	WDOE ACCREDITATION:	C601

SAMPLE DATA RESULTS

ANALYTE	METHOD	RESULTS	REPORTING LIMITS	DILUTION FACTOR	UNITS	ANALYSIS DATE	ANALYSIS BY
TPH-Volatile Range	NWTPH-GX	U	3.0	1	MG/KG	11/06/2021	KLS
TPH-Diesel Range	NWTPH-DX	U	25	1	MG/KG	11/08/2021	JNF
TPH-Oil Range	NWTPH-DX	U	50	1	MG/KG	11/08/2021	JNF
Naphthalene	EPA-8270 SIM	U	20	1	UG/KG	11/10/2021	JMK
2-Methylnaphthalene	EPA-8270 SIM	U	20	1	UG/KG	11/10/2021	JMK
1-Methylnaphthalene	EPA-8270 SIM	U	20	1	UG/KG	11/10/2021	JMK
Acenaphthylene	EPA-8270 SIM	U	20	1	UG/KG	11/10/2021	JMK
Acenaphthene	EPA-8270 SIM	U	20	1	UG/KG	11/10/2021	JMK
Fluorene	EPA-8270 SIM	U	20	1	UG/KG	11/10/2021	JMK
Phenanthrene	EPA-8270 SIM	U	20	1	UG/KG	11/10/2021	JMK
Anthracene	EPA-8270 SIM	U	20	1	UG/KG	11/10/2021	JMK
Fluoranthene	EPA-8270 SIM	U	20	1	UG/KG	11/10/2021	JMK
Pyrene	EPA-8270 SIM	U	20	1	UG/KG	11/10/2021	JMK
Benzo[A]Anthracene	EPA-8270 SIM	U	20	1	UG/KG	11/10/2021	JMK
Chrysene	EPA-8270 SIM	U	20	1	UG/KG	11/10/2021	JMK
Benzo[B]Fluoranthene	EPA-8270 SIM	U	20	1	UG/KG	11/10/2021	JMK
Benzo[K]Fluoranthene	EPA-8270 SIM	U	20	1	UG/KG	11/10/2021	JMK
Benzo[A]Pyrene	EPA-8270 SIM	U	20	1	UG/KG	11/10/2021	JMK
Indeno[1,2,3-Cd]Pyrene	EPA-8270 SIM	U	20	1	UG/KG	11/10/2021	JMK
Dibenz[A,H]Anthracene	EPA-8270 SIM	U	20	1	UG/KG	11/10/2021	JMK
Benzo[G,H,I]Perylene	EPA-8270 SIM	U	20	1	UG/KG	11/10/2021	JMK
PCB-1016	EPA-8082	U	0.10	1	MG/KG	11/12/2021	JMK
PCB-1221	EPA-8082	U	0.10	1	MG/KG	11/12/2021	JMK
PCB-1232	EPA-8082	U	0.10	1	MG/KG	11/12/2021	JMK
PCB-1242	EPA-8082	U	0.10	1	MG/KG	11/12/2021	JMK
PCB-1248	EPA-8082	U	0.10	1	MG/KG	11/12/2021	JMK
PCB-1254	EPA-8082	U	0.10	1	MG/KG	11/12/2021	JMK
PCB-1260	EPA-8082	U	0.10	1	MG/KG	11/12/2021	JMK
PCB-1268	EPA-8082	U	0.10	1	MG/KG	11/12/2021	JMK
Mercury	EPA-7471	**0.050**	0.020	1	MG/KG	11/05/2021	RAL
Arsenic	EPA-6020	**5.6**	0.20	1	MG/KG	11/05/2021	EBS
Copper	EPA-6020	**36**	0.10	1	MG/KG	11/05/2021	EBS
Lead	EPA-6020	**3.3**	0.10	1	MG/KG	11/05/2021	EBS
Nickel	EPA-6020	**43**	0.20	1	MG/KG	11/05/2021	EBS
Zinc	EPA-6020	**49**	2.0	1	MG/KG	11/05/2021	EBS

SURROGATE	METHOD	%REC	ANALYSIS DATE	ANALYSIS BY

ADDRESS 8620 Holly Drive, Suite 100, Everett, WA 98208 | PHONE 425-356-2600 | FAX 425-356-2626
ALS Group USA, Corp dba ALS Environmental

Environmental www.alsglobal.com
RIGHT SOLUTIONS RIGHT PARTNER

CERTIFICATE OF ANALYSIS

CLIENT:	Aspect Consulting, LLC 710 - 2nd Ave, Suite 550 Seattle, WA 98104	DATE: ALS JOB#: ALS SAMPLE#:	11/16/2021 EV21110033 EV21110033-24
CLIENT CONTACT:	Amy Tice	DATE RECEIVED:	11/04/2021
CLIENT PROJECT:	KC Stockpile	COLLECTION DATE:	11/4/2021 2:00:00 PM
CLIENT SAMPLE ID	SF-10	WDOE ACCREDITATION:	C601

SAMPLE DATA RESULTS

SURROGATE	METHOD	%REC	ANALYSIS DATE	ANALYSIS BY
TFT	NWTPH-GX	**78.8**	11/06/2021	KLS
C25	NWTPH-DX	**90.1**	11/08/2021	JNF
Terphenyl-d14	EPA-8270 SIM	**113**	11/10/2021	JMK
TCMX	EPA-8082	**118**	11/12/2021	JMK
DCB	EPA-8082	**147**	11/12/2021	JMK

U - Analyte analyzed for but not detected at level above reporting limit.

ADDRESS 8620 Holly Drive, Suite 100, Everett, WA 98208 | PHONE 425-356-2600 | FAX 425-356-2626
ALS Group USA, Corp dba ALS Environmental

Environmental www.alsglobal.com
RIGHT SOLUTIONS RIGHT PARTNER

ALS Environmental

CERTIFICATE OF ANALYSIS

CLIENT:	Aspect Consulting, LLC 710 - 2nd Ave, Suite 550 Seattle, WA 98104	DATE: ALS JOB#: ALS SAMPLE#:	11/16/2021 EV21110033 EV21110033-25
CLIENT CONTACT:	Amy Tice	DATE RECEIVED:	11/04/2021
CLIENT PROJECT:	KC Stockpile	COLLECTION DATE:	11/4/2021 2:10:00 PM
CLIENT SAMPLE ID	SF-11	WDOE ACCREDITATION:	C601

SAMPLE DATA RESULTS

ANALYTE	METHOD	RESULTS	REPORTING LIMITS	DILUTION FACTOR	UNITS	ANALYSIS DATE	ANALYSIS BY
TPH-Volatile Range	NWTPH-GX	U	3.0	1	MG/KG	11/06/2021	KLS
TPH-Diesel Range	NWTPH-DX	U	25	1	MG/KG	11/08/2021	JNF
TPH-Oil Range	NWTPH-DX	U	50	1	MG/KG	11/08/2021	JNF
Naphthalene	EPA-8270 SIM	U	20	1	UG/KG	11/10/2021	JMK
2-Methylnaphthalene	EPA-8270 SIM	U	20	1	UG/KG	11/10/2021	JMK
1-Methylnaphthalene	EPA-8270 SIM	U	20	1	UG/KG	11/10/2021	JMK
Acenaphthylene	EPA-8270 SIM	U	20	1	UG/KG	11/10/2021	JMK
Acenaphthene	EPA-8270 SIM	U	20	1	UG/KG	11/10/2021	JMK
Fluorene	EPA-8270 SIM	U	20	1	UG/KG	11/10/2021	JMK
Phenanthrene	EPA-8270 SIM	U	20	1	UG/KG	11/10/2021	JMK
Anthracene	EPA-8270 SIM	U	20	1	UG/KG	11/10/2021	JMK
Fluoranthene	EPA-8270 SIM	U	20	1	UG/KG	11/10/2021	JMK
Pyrene	EPA-8270 SIM	U	20	1	UG/KG	11/10/2021	JMK
Benzo[A]Anthracene	EPA-8270 SIM	U	20	1	UG/KG	11/10/2021	JMK
Chrysene	EPA-8270 SIM	U	20	1	UG/KG	11/10/2021	JMK
Benzo[B]Fluoranthene	EPA-8270 SIM	U	20	1	UG/KG	11/10/2021	JMK
Benzo[K]Fluoranthene	EPA-8270 SIM	U	20	1	UG/KG	11/10/2021	JMK
Benzo[A]Pyrene	EPA-8270 SIM	U	20	1	UG/KG	11/10/2021	JMK
Indeno[1,2,3-Cd]Pyrene	EPA-8270 SIM	U	20	1	UG/KG	11/10/2021	JMK
Dibenz[A,H]Anthracene	EPA-8270 SIM	U	20	1	UG/KG	11/10/2021	JMK
Benzo[G,H,I]Perylene	EPA-8270 SIM	U	20	1	UG/KG	11/10/2021	JMK
PCB-1016	EPA-8082	U	0.10	1	MG/KG	11/12/2021	JMK
PCB-1221	EPA-8082	U	0.10	1	MG/KG	11/12/2021	JMK
PCB-1232	EPA-8082	U	0.10	1	MG/KG	11/12/2021	JMK
PCB-1242	EPA-8082	U	0.10	1	MG/KG	11/12/2021	JMK
PCB-1248	EPA-8082	U	0.10	1	MG/KG	11/12/2021	JMK
PCB-1254	EPA-8082	U	0.10	1	MG/KG	11/12/2021	JMK
PCB-1260	EPA-8082	U	0.10	1	MG/KG	11/12/2021	JMK
PCB-1268	EPA-8082	U	0.10	1	MG/KG	11/12/2021	JMK
Mercury	EPA-7471	**0.049**	0.020	1	MG/KG	11/05/2021	RAL
Arsenic	EPA-6020	**3.7**	0.20	1	MG/KG	11/05/2021	EBS
Copper	EPA-6020	**30**	0.10	1	MG/KG	11/05/2021	EBS
Lead	EPA-6020	**2.9**	0.10	1	MG/KG	11/05/2021	EBS
Nickel	EPA-6020	**35**	0.20	1	MG/KG	11/05/2021	EBS
Zinc	EPA-6020	**46**	2.0	1	MG/KG	11/05/2021	EBS

SURROGATE	METHOD	%REC	ANALYSIS DATE	ANALYSIS BY

ADDRESS 8620 Holly Drive, Suite 100, Everett, WA 98208 | PHONE 425-356-2600 | FAX 425-356-2626
ALS Group USA, Corp dba ALS Environmental

Environmental www.alsglobal.com
RIGHT SOLUTIONS RIGHT PARTNER

CERTIFICATE OF ANALYSIS

CLIENT:	Aspect Consulting, LLC 710 - 2nd Ave, Suite 550 Seattle, WA 98104	DATE: ALS JOB#: ALS SAMPLE#:	11/16/2021 EV21110033 EV21110033-25
CLIENT CONTACT:	Amy Tice	DATE RECEIVED:	11/04/2021
CLIENT PROJECT:	KC Stockpile	COLLECTION DATE:	11/4/2021 2:10:00 PM
CLIENT SAMPLE ID	SF-11	WDOE ACCREDITATION:	C601

SAMPLE DATA RESULTS

SURROGATE	METHOD	%REC	ANALYSIS DATE	ANALYSIS BY
TFT	NWTPH-GX	**78.8**	11/06/2021	KLS
C25	NWTPH-DX	**92.4**	11/08/2021	JNF
Terphenyl-d14	EPA-8270 SIM	**118**	11/10/2021	JMK
TCMX	EPA-8082	**114**	11/12/2021	JMK
DCB	EPA-8082	**141**	11/12/2021	JMK

U - Analyte analyzed for but not detected at level above reporting limit.

ADDRESS 8620 Holly Drive, Suite 100, Everett, WA 98208 | PHONE 425-356-2600 | FAX 425-356-2626
ALS Group USA, Corp dba ALS Environmental

Environmental www.alsglobal.com
RIGHT SOLUTIONS RIGHT PARTNER

ALS Environmental

CERTIFICATE OF ANALYSIS

CLIENT:	Aspect Consulting, LLC 710 - 2nd Ave, Suite 550 Seattle, WA 98104	DATE: ALS JOB#: ALS SAMPLE#:	11/16/2021 EV21110033 EV21110033-26
CLIENT CONTACT:	Amy Tice	DATE RECEIVED:	11/04/2021
CLIENT PROJECT:	KC Stockpile	COLLECTION DATE:	11/4/2021 2:20:00 PM
CLIENT SAMPLE ID	SF-12	WDOE ACCREDITATION:	C601

SAMPLE DATA RESULTS

ANALYTE	METHOD	RESULTS	REPORTING LIMITS	DILUTION FACTOR	UNITS	ANALYSIS DATE	ANALYSIS BY
TPH-Volatile Range	NWTPH-GX	U	3.0	1	MG/KG	11/06/2021	KLS
TPH-Diesel Range	NWTPH-DX	U	25	1	MG/KG	11/08/2021	JNF
TPH-Oil Range	NWTPH-DX	U	50	1	MG/KG	11/08/2021	JNF
Naphthalene	EPA-8270 SIM	U	20	1	UG/KG	11/10/2021	JMK
2-Methylnaphthalene	EPA-8270 SIM	U	20	1	UG/KG	11/10/2021	JMK
1-Methylnaphthalene	EPA-8270 SIM	U	20	1	UG/KG	11/10/2021	JMK
Acenaphthylene	EPA-8270 SIM	U	20	1	UG/KG	11/10/2021	JMK
Acenaphthene	EPA-8270 SIM	U	20	1	UG/KG	11/10/2021	JMK
Fluorene	EPA-8270 SIM	U	20	1	UG/KG	11/10/2021	JMK
Phenanthrene	EPA-8270 SIM	U	20	1	UG/KG	11/10/2021	JMK
Anthracene	EPA-8270 SIM	U	20	1	UG/KG	11/10/2021	JMK
Fluoranthene	EPA-8270 SIM	U	20	1	UG/KG	11/10/2021	JMK
Pyrene	EPA-8270 SIM	U	20	1	UG/KG	11/10/2021	JMK
Benzo[A]Anthracene	EPA-8270 SIM	U	20	1	UG/KG	11/10/2021	JMK
Chrysene	EPA-8270 SIM	U	20	1	UG/KG	11/10/2021	JMK
Benzo[B]Fluoranthene	EPA-8270 SIM	U	20	1	UG/KG	11/10/2021	JMK
Benzo[K]Fluoranthene	EPA-8270 SIM	U	20	1	UG/KG	11/10/2021	JMK
Benzo[A]Pyrene	EPA-8270 SIM	U	20	1	UG/KG	11/10/2021	JMK
Indeno[1,2,3-Cd]Pyrene	EPA-8270 SIM	U	20	1	UG/KG	11/10/2021	JMK
Dibenz[A,H]Anthracene	EPA-8270 SIM	U	20	1	UG/KG	11/10/2021	JMK
Benzo[G,H,I]Perylene	EPA-8270 SIM	U	20	1	UG/KG	11/10/2021	JMK
PCB-1016	EPA-8082	U	0.10	1	MG/KG	11/12/2021	JMK
PCB-1221	EPA-8082	U	0.10	1	MG/KG	11/12/2021	JMK
PCB-1232	EPA-8082	U	0.10	1	MG/KG	11/12/2021	JMK
PCB-1242	EPA-8082	U	0.10	1	MG/KG	11/12/2021	JMK
PCB-1248	EPA-8082	U	0.10	1	MG/KG	11/12/2021	JMK
PCB-1254	EPA-8082	U	0.10	1	MG/KG	11/12/2021	JMK
PCB-1260	EPA-8082	U	0.10	1	MG/KG	11/12/2021	JMK
PCB-1268	EPA-8082	U	0.10	1	MG/KG	11/12/2021	JMK
Mercury	EPA-7471	**0.052**	0.020	1	MG/KG	11/05/2021	RAL
Arsenic	EPA-6020	**3.3**	0.20	1	MG/KG	11/05/2021	EBS
Copper	EPA-6020	**26**	0.10	1	MG/KG	11/05/2021	EBS
Lead	EPA-6020	**2.5**	0.10	1	MG/KG	11/05/2021	EBS
Nickel	EPA-6020	**31**	0.20	1	MG/KG	11/05/2021	EBS
Zinc	EPA-6020	**39**	2.0	1	MG/KG	11/05/2021	EBS

SURROGATE	METHOD	%REC	ANALYSIS DATE	ANALYSIS BY

ADDRESS 8620 Holly Drive, Suite 100, Everett, WA 98208 | PHONE 425-356-2600 | FAX 425-356-2626
ALS Group USA, Corp dba ALS Environmental

Environmental www.alsglobal.com
RIGHT SOLUTIONS RIGHT PARTNER

CERTIFICATE OF ANALYSIS

CLIENT:	Aspect Consulting, LLC 710 - 2nd Ave, Suite 550 Seattle, WA 98104	DATE: ALS JOB#: ALS SAMPLE#:	11/16/2021 EV21110033 EV21110033-26
CLIENT CONTACT:	Amy Tice	DATE RECEIVED:	11/04/2021
CLIENT PROJECT:	KC Stockpile	COLLECTION DATE:	11/4/2021 2:20:00 PM
CLIENT SAMPLE ID	SF-12	WDOE ACCREDITATION:	C601

SAMPLE DATA RESULTS

SURROGATE	METHOD	%REC	ANALYSIS DATE	ANALYSIS BY
TFT	NWTPH-GX	**82.4**	11/06/2021	KLS
C25	NWTPH-DX	**94.8**	11/08/2021	JNF
Terphenyl-d14	EPA-8270 SIM	**99.5**	11/10/2021	JMK
TCMX	EPA-8082	**120**	11/12/2021	JMK
DCB	EPA-8082	**148**	11/12/2021	JMK

U - Analyte analyzed for but not detected at level above reporting limit.

ADDRESS 8620 Holly Drive, Suite 100, Everett, WA 98208 | PHONE 425-356-2600 | FAX 425-356-2626
ALS Group USA, Corp dba ALS Environmental

Environmental www.alsglobal.com
RIGHT SOLUTIONS RIGHT PARTNER

ALS Environmental

CERTIFICATE OF ANALYSIS

CLIENT:	Aspect Consulting, LLC 710 - 2nd Ave, Suite 550 Seattle, WA 98104	DATE: ALS JOB#: ALS SAMPLE#:	11/16/2021 EV21110033 EV21110033-27
CLIENT CONTACT:	Amy Tice	DATE RECEIVED:	11/04/2021
CLIENT PROJECT:	KC Stockpile	COLLECTION DATE:	11/4/2021 2:30:00 PM
CLIENT SAMPLE ID	SF-13	WDOE ACCREDITATION:	C601

SAMPLE DATA RESULTS

ANALYTE	METHOD	RESULTS	REPORTING LIMITS	DILUTION FACTOR	UNITS	ANALYSIS DATE	ANALYSIS BY
TPH-Volatile Range	NWTPH-GX	U	3.0	1	MG/KG	11/06/2021	KLS
TPH-Diesel Range	NWTPH-DX	U	25	1	MG/KG	11/08/2021	JNF
TPH-Oil Range	NWTPH-DX	U	50	1	MG/KG	11/08/2021	JNF
Naphthalene	EPA-8270 SIM	U	20	1	UG/KG	11/10/2021	JMK
2-Methylnaphthalene	EPA-8270 SIM	U	20	1	UG/KG	11/10/2021	JMK
1-Methylnaphthalene	EPA-8270 SIM	U	20	1	UG/KG	11/10/2021	JMK
Acenaphthylene	EPA-8270 SIM	U	20	1	UG/KG	11/10/2021	JMK
Acenaphthene	EPA-8270 SIM	U	20	1	UG/KG	11/10/2021	JMK
Fluorene	EPA-8270 SIM	U	20	1	UG/KG	11/10/2021	JMK
Phenanthrene	EPA-8270 SIM	U	20	1	UG/KG	11/10/2021	JMK
Anthracene	EPA-8270 SIM	U	20	1	UG/KG	11/10/2021	JMK
Fluoranthene	EPA-8270 SIM	U	20	1	UG/KG	11/10/2021	JMK
Pyrene	EPA-8270 SIM	U	20	1	UG/KG	11/10/2021	JMK
Benzo[A]Anthracene	EPA-8270 SIM	U	20	1	UG/KG	11/10/2021	JMK
Chrysene	EPA-8270 SIM	U	20	1	UG/KG	11/10/2021	JMK
Benzo[B]Fluoranthene	EPA-8270 SIM	U	20	1	UG/KG	11/10/2021	JMK
Benzo[K]Fluoranthene	EPA-8270 SIM	U	20	1	UG/KG	11/10/2021	JMK
Benzo[A]Pyrene	EPA-8270 SIM	U	20	1	UG/KG	11/10/2021	JMK
Indeno[1,2,3-Cd]Pyrene	EPA-8270 SIM	U	20	1	UG/KG	11/10/2021	JMK
Dibenz[A,H]Anthracene	EPA-8270 SIM	U	20	1	UG/KG	11/10/2021	JMK
Benzo[G,H,I]Perylene	EPA-8270 SIM	U	20	1	UG/KG	11/10/2021	JMK
PCB-1016	EPA-8082	U	0.10	1	MG/KG	11/12/2021	JMK
PCB-1221	EPA-8082	U	0.10	1	MG/KG	11/12/2021	JMK
PCB-1232	EPA-8082	U	0.10	1	MG/KG	11/12/2021	JMK
PCB-1242	EPA-8082	U	0.10	1	MG/KG	11/12/2021	JMK
PCB-1248	EPA-8082	U	0.10	1	MG/KG	11/12/2021	JMK
PCB-1254	EPA-8082	U	0.10	1	MG/KG	11/12/2021	JMK
PCB-1260	EPA-8082	U	0.10	1	MG/KG	11/12/2021	JMK
PCB-1268	EPA-8082	U	0.10	1	MG/KG	11/12/2021	JMK
Mercury	EPA-7471	**0.042**	0.020	1	MG/KG	11/05/2021	RAL
Arsenic	EPA-6020	**4.3**	0.20	1	MG/KG	11/05/2021	EBS
Copper	EPA-6020	**38**	0.10	1	MG/KG	11/05/2021	EBS
Lead	EPA-6020	**3.4**	0.10	1	MG/KG	11/05/2021	EBS
Nickel	EPA-6020	**55**	0.20	1	MG/KG	11/05/2021	EBS
Zinc	EPA-6020	**55**	2.0	1	MG/KG	11/05/2021	EBS

SURROGATE	METHOD	%REC	ANALYSIS DATE	ANALYSIS BY

ADDRESS 8620 Holly Drive, Suite 100, Everett, WA 98208 | PHONE 425-356-2600 | FAX 425-356-2626
ALS Group USA, Corp dba ALS Environmental

Environmental www.alsglobal.com
RIGHT SOLUTIONS RIGHT PARTNER

CERTIFICATE OF ANALYSIS

CLIENT:	Aspect Consulting, LLC 710 - 2nd Ave, Suite 550 Seattle, WA 98104	DATE: ALS JOB#: ALS SAMPLE#:	11/16/2021 EV21110033 EV21110033-27
CLIENT CONTACT:	Amy Tice	DATE RECEIVED:	11/04/2021
CLIENT PROJECT:	KC Stockpile	COLLECTION DATE:	11/4/2021 2:30:00 PM
CLIENT SAMPLE ID	SF-13	WDOE ACCREDITATION:	C601

SAMPLE DATA RESULTS

SURROGATE	METHOD	%REC	ANALYSIS DATE	ANALYSIS BY
TFT	NWTPH-GX	**79.9**	11/06/2021	KLS
C25	NWTPH-DX	**91.2**	11/08/2021	JNF
Terphenyl-d14	EPA-8270 SIM	**111**	11/10/2021	JMK
TCMX	EPA-8082	**117**	11/12/2021	JMK
DCB	EPA-8082	**145**	11/12/2021	JMK

U - Analyte analyzed for but not detected at level above reporting limit.

ADDRESS 8620 Holly Drive, Suite 100, Everett, WA 98208 | PHONE 425-356-2600 | FAX 425-356-2626
ALS Group USA, Corp dba ALS Environmental

Environmental www.alsglobal.com
RIGHT SOLUTIONS RIGHT PARTNER

ALS Environmental

CERTIFICATE OF ANALYSIS

CLIENT:	Aspect Consulting, LLC 710 - 2nd Ave, Suite 550 Seattle, WA 98104	DATE: ALS JOB#: ALS SAMPLE#:	11/16/2021 EV21110033 EV21110033-28
CLIENT CONTACT:	Amy Tice	DATE RECEIVED:	11/04/2021
CLIENT PROJECT:	KC Stockpile	COLLECTION DATE:	11/4/2021 2:40:00 PM
CLIENT SAMPLE ID	SF-14	WDOE ACCREDITATION:	C601

SAMPLE DATA RESULTS

ANALYTE	METHOD	RESULTS	REPORTING LIMITS	DILUTION FACTOR	UNITS	ANALYSIS DATE	ANALYSIS BY
TPH-Volatile Range	NWTPH-GX	U	3.0	1	MG/KG	11/06/2021	KLS
TPH-Diesel Range	NWTPH-DX	U	25	1	MG/KG	11/08/2021	JNF
TPH-Oil Range	NWTPH-DX	U	50	1	MG/KG	11/08/2021	JNF
Naphthalene	EPA-8270 SIM	U	20	1	UG/KG	11/10/2021	JMK
2-Methylnaphthalene	EPA-8270 SIM	U	20	1	UG/KG	11/10/2021	JMK
1-Methylnaphthalene	EPA-8270 SIM	U	20	1	UG/KG	11/10/2021	JMK
Acenaphthylene	EPA-8270 SIM	U	20	1	UG/KG	11/10/2021	JMK
Acenaphthene	EPA-8270 SIM	U	20	1	UG/KG	11/10/2021	JMK
Fluorene	EPA-8270 SIM	U	20	1	UG/KG	11/10/2021	JMK
Phenanthrene	EPA-8270 SIM	U	20	1	UG/KG	11/10/2021	JMK
Anthracene	EPA-8270 SIM	U	20	1	UG/KG	11/10/2021	JMK
Fluoranthene	EPA-8270 SIM	U	20	1	UG/KG	11/10/2021	JMK
Pyrene	EPA-8270 SIM	U	20	1	UG/KG	11/10/2021	JMK
Benzo[A]Anthracene	EPA-8270 SIM	U	20	1	UG/KG	11/10/2021	JMK
Chrysene	EPA-8270 SIM	U	20	1	UG/KG	11/10/2021	JMK
Benzo[B]Fluoranthene	EPA-8270 SIM	U	20	1	UG/KG	11/10/2021	JMK
Benzo[K]Fluoranthene	EPA-8270 SIM	U	20	1	UG/KG	11/10/2021	JMK
Benzo[A]Pyrene	EPA-8270 SIM	U	20	1	UG/KG	11/10/2021	JMK
Indeno[1,2,3-Cd]Pyrene	EPA-8270 SIM	U	20	1	UG/KG	11/10/2021	JMK
Dibenz[A,H]Anthracene	EPA-8270 SIM	U	20	1	UG/KG	11/10/2021	JMK
Benzo[G,H,I]Perylene	EPA-8270 SIM	U	20	1	UG/KG	11/10/2021	JMK
PCB-1016	EPA-8082	U	0.10	1	MG/KG	11/12/2021	JMK
PCB-1221	EPA-8082	U	0.10	1	MG/KG	11/12/2021	JMK
PCB-1232	EPA-8082	U	0.10	1	MG/KG	11/12/2021	JMK
PCB-1242	EPA-8082	U	0.10	1	MG/KG	11/12/2021	JMK
PCB-1248	EPA-8082	U	0.10	1	MG/KG	11/12/2021	JMK
PCB-1254	EPA-8082	U	0.10	1	MG/KG	11/12/2021	JMK
PCB-1260	EPA-8082	U	0.10	1	MG/KG	11/12/2021	JMK
PCB-1268	EPA-8082	U	0.10	1	MG/KG	11/12/2021	JMK
Mercury	EPA-7471	**0.065**	0.020	1	MG/KG	11/05/2021	RAL
Arsenic	EPA-6020	**4.2**	0.20	1	MG/KG	11/05/2021	EBS
Copper	EPA-6020	**34**	0.10	1	MG/KG	11/05/2021	EBS
Lead	EPA-6020	**3.5**	0.10	1	MG/KG	11/05/2021	EBS
Nickel	EPA-6020	**50**	0.20	1	MG/KG	11/05/2021	EBS
Zinc	EPA-6020	**50**	2.0	1	MG/KG	11/05/2021	EBS

SURROGATE	METHOD	%REC	ANALYSIS DATE	ANALYSIS BY

ADDRESS 8620 Holly Drive, Suite 100, Everett, WA 98208 | PHONE 425-356-2600 | FAX 425-356-2626
ALS Group USA, Corp dba ALS Environmental

Environmental www.alsglobal.com
RIGHT SOLUTIONS RIGHT PARTNER

CERTIFICATE OF ANALYSIS

CLIENT:	Aspect Consulting, LLC 710 - 2nd Ave, Suite 550 Seattle, WA 98104	DATE: ALS JOB#: ALS SAMPLE#:	11/16/2021 EV21110033 EV21110033-28
CLIENT CONTACT:	Amy Tice	DATE RECEIVED:	11/04/2021
CLIENT PROJECT:	KC Stockpile	COLLECTION DATE:	11/4/2021 2:40:00 PM
CLIENT SAMPLE ID	SF-14	WDOE ACCREDITATION:	C601

SAMPLE DATA RESULTS

SURROGATE	METHOD	%REC	ANALYSIS DATE	ANALYSIS BY
TFT	NWTPH-GX	**77.1**	11/06/2021	KLS
C25	NWTPH-DX	**86.3**	11/08/2021	JNF
Terphenyl-d14	EPA-8270 SIM	**123**	11/10/2021	JMK
TCMX	EPA-8082	**121**	11/12/2021	JMK
DCB	EPA-8082	**151**	11/12/2021	JMK

U - Analyte analyzed for but not detected at level above reporting limit.

ADDRESS 8620 Holly Drive, Suite 100, Everett, WA 98208 | PHONE 425-356-2600 | FAX 425-356-2626
ALS Group USA, Corp dba ALS Environmental

Environmental www.alsglobal.com
RIGHT SOLUTIONS RIGHT PARTNER

CERTIFICATE OF ANALYSIS

CLIENT:	Aspect Consulting, LLC 710 - 2nd Ave, Suite 550 Seattle, WA 98104	DATE:	11/16/2021
		ALS SDG#:	EV21110033
		WDOE ACCREDITATION:	C601
CLIENT CONTACT:	Amy Tice		
CLIENT PROJECT:	KC Stockpile		

LABORATORY BLANK RESULTS

MBG-110521S - Batch 172176 - Soil by NWTPH-GX

ANALYTE	METHOD	RESULTS	UNITS	REPORTING LIMITS	ANALYSIS DATE	ANALYSIS BY
TPH-Volatile Range	NWTPH-GX	U	MG/KG	3.0	11/05/2021	KLS

U - Analyte analyzed for but not detected at level above reporting limit.

MBG-110521S2 - Batch 172177 - Soil by NWTPH-GX

ANALYTE	METHOD	RESULTS	UNITS	REPORTING LIMITS	ANALYSIS DATE	ANALYSIS BY
TPH-Volatile Range	NWTPH-GX	U	MG/KG	3.0	11/05/2021	KLS

U - Analyte analyzed for but not detected at level above reporting limit.

MB-110521S - Batch 172295 - Soil by NWTPH-DX

ANALYTE	METHOD	RESULTS	UNITS	REPORTING LIMITS	ANALYSIS DATE	ANALYSIS BY
TPH-Diesel Range	NWTPH-DX	U	MG/KG	25	11/05/2021	JNF
TPH-Oil Range	NWTPH-DX	U	MG/KG	50	11/05/2021	JNF

U - Analyte analyzed for but not detected at level above reporting limit.

MB-110821S - Batch 172296 - Soil by NWTPH-DX

ANALYTE	METHOD	RESULTS	UNITS	REPORTING LIMITS	ANALYSIS DATE	ANALYSIS BY
TPH-Diesel Range	NWTPH-DX	U	MG/KG	25	11/08/2021	JNF
TPH-Oil Range	NWTPH-DX	U	MG/KG	50	11/08/2021	JNF

U - Analyte analyzed for but not detected at level above reporting limit.

MB-110921S - Batch 172335 - Soil by EPA-8270 SIM

ANALYTE	METHOD	RESULTS	UNITS	REPORTING LIMITS	ANALYSIS DATE	ANALYSIS BY
Naphthalene	EPA-8270 SIM	U	UG/KG	20	11/09/2021	JMK
2-Methylnaphthalene	EPA-8270 SIM	U	UG/KG	20	11/09/2021	JMK
1-Methylnaphthalene	EPA-8270 SIM	U	UG/KG	20	11/09/2021	JMK
Acenaphthylene	EPA-8270 SIM	U	UG/KG	20	11/09/2021	JMK
Acenaphthene	EPA-8270 SIM	U	UG/KG	20	11/09/2021	JMK
Fluorene	EPA-8270 SIM	U	UG/KG	20	11/09/2021	JMK
Phenanthrene	EPA-8270 SIM	U	UG/KG	20	11/09/2021	JMK
Anthracene	EPA-8270 SIM	U	UG/KG	20	11/09/2021	JMK
Fluoranthene	EPA-8270 SIM	U	UG/KG	20	11/09/2021	JMK
Pyrene	EPA-8270 SIM	U	UG/KG	20	11/09/2021	JMK
Benzo[A]Anthracene	EPA-8270 SIM	U	UG/KG	20	11/09/2021	JMK
Chrysene	EPA-8270 SIM	U	UG/KG	20	11/09/2021	JMK

ADDRESS 8620 Holly Drive, Suite 100, Everett, WA 98208 | PHONE 425-356-2600 | FAX 425-356-2626
ALS Group USA, Corp dba ALS Environmental

Environmental www.alsglobal.com
RIGHT SOLUTIONS RIGHT PARTNER

ALS Environmental

CERTIFICATE OF ANALYSIS

CLIENT: Aspect Consulting, LLC
710 - 2nd Ave, Suite 550
Seattle, WA 98104
CLIENT CONTACT: Amy Tice
CLIENT PROJECT: KC Stockpile

DATE: 11/16/2021
ALS SDG#: EV21110033
WDOE ACCREDITATION: C601

LABORATORY BLANK RESULTS

MB-110921S - Batch 172335 - Soil by EPA-8270 SIM

Benzo[B]Fluoranthene	EPA-8270 SIM	U	UG/KG	20	11/09/2021	JMK
Benzo[K]Fluoranthene	EPA-8270 SIM	U	UG/KG	20	11/09/2021	JMK
Benzo[A]Pyrene	EPA-8270 SIM	U	UG/KG	20	11/09/2021	JMK
Indeno[1,2,3-Cd]Pyrene	EPA-8270 SIM	U	UG/KG	20	11/09/2021	JMK
Dibenz[A,H]Anthracene	EPA-8270 SIM	U	UG/KG	20	11/09/2021	JMK
Benzo[G,H,I]Perylene	EPA-8270 SIM	U	UG/KG	20	11/09/2021	JMK

			CONTROL LIMITS			
SURROGATE	METHOD	%REC	MIN	MAX	ANALYSIS DATE	ANALYSIS BY
Terphenyl-d14	EPA-8270 SIM	**168 S**	**28.9**	**157**	11/09/2021	JMK

S - Outside of control limits.

U - Analyte analyzed for but not detected at level above reporting limit.

MB-111021S - Batch 172397 - Soil by EPA-8270 SIM

ANALYTE	METHOD	RESULTS	UNITS	REPORTING LIMITS	ANALYSIS DATE	ANALYSIS BY
Naphthalene	EPA-8270 SIM	U	UG/KG	20	11/10/2021	JMK
2-Methylnaphthalene	EPA-8270 SIM	U	UG/KG	20	11/10/2021	JMK
1-Methylnaphthalene	EPA-8270 SIM	U	UG/KG	20	11/10/2021	JMK
Acenaphthylene	EPA-8270 SIM	U	UG/KG	20	11/10/2021	JMK
Acenaphthene	EPA-8270 SIM	U	UG/KG	20	11/10/2021	JMK
Fluorene	EPA-8270 SIM	U	UG/KG	20	11/10/2021	JMK
Phenanthrene	EPA-8270 SIM	U	UG/KG	20	11/10/2021	JMK
Anthracene	EPA-8270 SIM	U	UG/KG	20	11/10/2021	JMK
Fluoranthene	EPA-8270 SIM	U	UG/KG	20	11/10/2021	JMK
Pyrene	EPA-8270 SIM	U	UG/KG	20	11/10/2021	JMK
Benzo[A]Anthracene	EPA-8270 SIM	U	UG/KG	20	11/10/2021	JMK
Chrysene	EPA-8270 SIM	U	UG/KG	20	11/10/2021	JMK
Benzo[B]Fluoranthene	EPA-8270 SIM	U	UG/KG	20	11/10/2021	JMK
Benzo[K]Fluoranthene	EPA-8270 SIM	U	UG/KG	20	11/10/2021	JMK
Benzo[A]Pyrene	EPA-8270 SIM	U	UG/KG	20	11/10/2021	JMK
Indeno[1,2,3-Cd]Pyrene	EPA-8270 SIM	U	UG/KG	20	11/10/2021	JMK
Dibenz[A,H]Anthracene	EPA-8270 SIM	U	UG/KG	20	11/10/2021	JMK
Benzo[G,H,I]Perylene	EPA-8270 SIM	U	UG/KG	20	11/10/2021	JMK

U - Analyte analyzed for but not detected at level above reporting limit.

MB-110521S - Batch 172245 - Soil by EPA-8082

ANALYTE	METHOD	RESULTS	UNITS	REPORTING LIMITS	ANALYSIS DATE	ANALYSIS BY
PCB-1016	EPA-8082	U	MG/KG	0.10	11/08/2021	JMK
PCB-1221	EPA-8082	U	MG/KG	0.10	11/08/2021	JMK

ADDRESS 8620 Holly Drive, Suite 100, Everett, WA 98208 | PHONE 425-356-2600 | FAX 425-356-2626
ALS Group USA, Corp dba ALS Environmental

Environmental www.alsglobal.com
RIGHT SOLUTIONS RIGHT PARTNER

ALS Environmental

CERTIFICATE OF ANALYSIS

CLIENT: Aspect Consulting, LLC
710 - 2nd Ave, Suite 550
Seattle, WA 98104

CLIENT CONTACT: Amy Tice
CLIENT PROJECT: KC Stockpile

DATE: 11/16/2021
ALS SDG#: EV21110033
WDOE ACCREDITATION: C601

LABORATORY BLANK RESULTS

MB-110521S - Batch 172245 - Soil by EPA-8082

PCB-1232	EPA-8082	U	MG/KG	0.10	11/08/2021	JMK
PCB-1242	EPA-8082	U	MG/KG	0.10	11/08/2021	JMK
PCB-1248	EPA-8082	U	MG/KG	0.10	11/08/2021	JMK
PCB-1254	EPA-8082	U	MG/KG	0.10	11/08/2021	JMK
PCB-1260	EPA-8082	U	MG/KG	0.10	11/08/2021	JMK
PCB-1268	EPA-8082	U	MG/KG	0.10	11/08/2021	JMK

U - Analyte analyzed for but not detected at level above reporting limit.

MB-111121S - Batch 172471 - Soil by EPA-8082

ANALYTE	METHOD	RESULTS	UNITS	REPORTING LIMITS	ANALYSIS DATE	ANALYSIS BY
PCB-1016	EPA-8082	U	MG/KG	0.10	11/12/2021	JMK
PCB-1221	EPA-8082	U	MG/KG	0.10	11/12/2021	JMK
PCB-1232	EPA-8082	U	MG/KG	0.10	11/12/2021	JMK
PCB-1242	EPA-8082	U	MG/KG	0.10	11/12/2021	JMK
PCB-1248	EPA-8082	U	MG/KG	0.10	11/12/2021	JMK
PCB-1254	EPA-8082	U	MG/KG	0.10	11/12/2021	JMK
PCB-1260	EPA-8082	U	MG/KG	0.10	11/12/2021	JMK
PCB-1268	EPA-8082	U	MG/KG	0.10	11/12/2021	JMK

U - Analyte analyzed for but not detected at level above reporting limit.

MBLK-R395275 - Batch R395275 - Soil by EPA-7471

ANALYTE	METHOD	RESULTS	UNITS	REPORTING LIMITS	ANALYSIS DATE	ANALYSIS BY
Mercury	EPA-7471	U	MG/KG	0.020	11/05/2021	RAL

U - Analyte analyzed for but not detected at level above reporting limit.

MBLK-R395774 - Batch R395774 - Soil by EPA-7471

ANALYTE	METHOD	RESULTS	UNITS	REPORTING LIMITS	ANALYSIS DATE	ANALYSIS BY
Mercury	EPA-7471	U	MG/KG	0.020	11/08/2021	RAL

U - Analyte analyzed for but not detected at level above reporting limit.

MB-110521S - Batch 172208 - Soil by EPA-6020

ANALYTE	METHOD	RESULTS	UNITS	REPORTING LIMITS	ANALYSIS DATE	ANALYSIS BY
Arsenic	EPA-6020	U	MG/KG	0.20	11/05/2021	EBS
Copper	EPA-6020	U	MG/KG	0.10	11/05/2021	EBS
Lead	EPA-6020	U	MG/KG	0.10	11/05/2021	EBS
Nickel	EPA-6020	U	MG/KG	0.20	11/05/2021	EBS

ADDRESS 8620 Holly Drive, Suite 100, Everett, WA 98208 | PHONE 425-356-2600 | FAX 425-356-2626
ALS Group USA, Corp dba ALS Environmental

Environmental www.alsglobal.com
RIGHT SOLUTIONS RIGHT PARTNER

CERTIFICATE OF ANALYSIS

CLIENT:	Aspect Consulting, LLC 710 - 2nd Ave, Suite 550 Seattle, WA 98104	DATE:	11/16/2021
		ALS SDG#:	EV21110033
		WDOE ACCREDITATION:	C601
CLIENT CONTACT:	Amy Tice		
CLIENT PROJECT:	KC Stockpile		

LABORATORY BLANK RESULTS

MB-110521S - Batch 172208 - Soil by EPA-6020

Zinc	EPA-6020	U	MG/KG	2.0	11/05/2021	EBS

U - Analyte analyzed for but not detected at level above reporting limit.

MB-110821S - Batch 172250 - Soil by EPA-6020

ANALYTE	METHOD	RESULTS	UNITS	REPORTING LIMITS	ANALYSIS DATE	ANALYSIS BY
Arsenic	EPA-6020	U	MG/KG	0.20	11/08/2021	EBS
Copper	EPA-6020	U	MG/KG	0.10	11/08/2021	EBS
Lead	EPA-6020	U	MG/KG	0.10	11/08/2021	EBS
Nickel	EPA-6020	U	MG/KG	0.10	11/08/2021	EBS
Zinc	EPA-6020	U	MG/KG	0.88	11/08/2021	EBS

U - Analyte analyzed for but not detected at level above reporting limit.

ADDRESS 8620 Holly Drive, Suite 100, Everett, WA 98208 | PHONE 425-356-2600 | FAX 425-356-2626
ALS Group USA, Corp dba ALS Environmental

Environmental www.alsglobal.com
RIGHT SOLUTIONS RIGHT PARTNER

CERTIFICATE OF ANALYSIS

CLIENT: Aspect Consulting, LLC
710 - 2nd Ave, Suite 550
Seattle, WA 98104
CLIENT CONTACT: Amy Tice
CLIENT PROJECT: KC Stockpile

DATE: 11/16/2021
ALS SDG#: EV21110033
WDOE ACCREDITATION: C601

LABORATORY CONTROL SAMPLE RESULTS

ALS Test Batch ID: 172176 - Soil by NWTPH-GX

SPIKED COMPOUND	METHOD	%REC	RPD	QUAL	LIMITS MIN	LIMITS MAX	ANALYSIS DATE	ANALYSIS BY
TPH-Volatile Range - BS	NWTPH-GX	**83.7**			66.5	122.7	11/05/2021	KLS
TPH-Volatile Range - BSD	NWTPH-GX	**85.2**	**2**		66.5	122.7	11/05/2021	KLS

ALS Test Batch ID: 172177 - Soil by NWTPH-GX

SPIKED COMPOUND	METHOD	%REC	RPD	QUAL	LIMITS MIN	LIMITS MAX	ANALYSIS DATE	ANALYSIS BY
TPH-Volatile Range - BS	NWTPH-GX	**82.0**			66.5	122.7	11/05/2021	KLS
TPH-Volatile Range - BSD	NWTPH-GX	**82.5**	**1**		66.5	122.7	11/05/2021	KLS

ALS Test Batch ID: 172295 - Soil by NWTPH-DX

SPIKED COMPOUND	METHOD	%REC	RPD	QUAL	LIMITS MIN	LIMITS MAX	ANALYSIS DATE	ANALYSIS BY
TPH-Diesel Range - BS	NWTPH-DX	**112**			75.5	122.1	11/05/2021	JNF
TPH-Diesel Range - BSD	NWTPH-DX	**115**	**3**		75.5	122.1	11/05/2021	JNF

ALS Test Batch ID: 172296 - Soil by NWTPH-DX

SPIKED COMPOUND	METHOD	%REC	RPD	QUAL	LIMITS MIN	LIMITS MAX	ANALYSIS DATE	ANALYSIS BY
TPH-Diesel Range - BS	NWTPH-DX	**103**			75.5	122.1	11/08/2021	JNF
TPH-Diesel Range - BSD	NWTPH-DX	**104**	**1**		75.5	122.1	11/08/2021	JNF

ALS Test Batch ID: 172335 - Soil by EPA-8270 SIM

SPIKED COMPOUND	METHOD	%REC	RPD	QUAL	LIMITS MIN	LIMITS MAX	ANALYSIS DATE	ANALYSIS BY
Naphthalene - BS	EPA-8270 SIM	**79.6**			20	150	11/09/2021	JMK
Naphthalene - BSD	EPA-8270 SIM	**101**	**24**		20	150	11/09/2021	JMK
2-Methylnaphthalene - BS	EPA-8270 SIM	**79.0**			20	150	11/09/2021	JMK
2-Methylnaphthalene - BSD	EPA-8270 SIM	**99.9**	**23**		20	150	11/09/2021	JMK
1-Methylnaphthalene - BS	EPA-8270 SIM	**81.8**			20	150	11/09/2021	JMK
1-Methylnaphthalene - BSD	EPA-8270 SIM	**103**	**23**		20	150	11/09/2021	JMK
Acenaphthylene - BS	EPA-8270 SIM	**79.2**			20	150	11/09/2021	JMK
Acenaphthylene - BSD	EPA-8270 SIM	**101**	**24**		20	150	11/09/2021	JMK
Acenaphthene - BS	EPA-8270 SIM	**76.4**			41	107	11/09/2021	JMK
Acenaphthene - BSD	EPA-8270 SIM	**97.7**	**24**	SR1	41	107	11/09/2021	JMK
Fluorene - BS	EPA-8270 SIM	**78.4**			20	150	11/09/2021	JMK
Fluorene - BSD	EPA-8270 SIM	**99.8**	**24**		20	150	11/09/2021	JMK
Phenanthrene - BS	EPA-8270 SIM	**77.9**			20	150	11/09/2021	JMK
Phenanthrene - BSD	EPA-8270 SIM	**99.3**	**24**		20	150	11/09/2021	JMK
Anthracene - BS	EPA-8270 SIM	**76.9**			20	150	11/09/2021	JMK

ADDRESS 8620 Holly Drive, Suite 100, Everett, WA 98208 | PHONE 425-356-2600 | FAX 425-356-2626
ALS Group USA, Corp dba ALS Environmental

Environmental www.alsglobal.com
RIGHT SOLUTIONS RIGHT PARTNER

ALS Environmental

CERTIFICATE OF ANALYSIS

CLIENT: Aspect Consulting, LLC
710 - 2nd Ave, Suite 550
Seattle, WA 98104

CLIENT CONTACT: Amy Tice
CLIENT PROJECT: KC Stockpile

DATE: 11/16/2021
ALS SDG#: EV21110033
WDOE ACCREDITATION: C601

LABORATORY CONTROL SAMPLE RESULTS

SPIKED COMPOUND	METHOD	%REC	RPD	QUAL	LIMITS MIN	LIMITS MAX	ANALYSIS DATE	ANALYSIS BY
Anthracene - BSD	EPA-8270 SIM	**98.1**	**24**		20	150	11/09/2021	JMK
Fluoranthene - BS	EPA-8270 SIM	**79.1**			20	150	11/09/2021	JMK
Fluoranthene - BSD	EPA-8270 SIM	**100**	**24**		20	150	11/09/2021	JMK
Pyrene - BS	EPA-8270 SIM	**91.5**			18	136	11/09/2021	JMK
Pyrene - BSD	EPA-8270 SIM	**112**	**21**	SR1	18	136	11/09/2021	JMK
Benzo[A]Anthracene - BS	EPA-8270 SIM	**67.8**			20	150	11/09/2021	JMK
Benzo[A]Anthracene - BSD	EPA-8270 SIM	**91.3**	**30**		20	150	11/09/2021	JMK
Chrysene - BS	EPA-8270 SIM	**78.4**			20	150	11/09/2021	JMK
Chrysene - BSD	EPA-8270 SIM	**103**	**27**		20	150	11/09/2021	JMK
Benzo[B]Fluoranthene - BS	EPA-8270 SIM	**75.6**			20	150	11/09/2021	JMK
Benzo[B]Fluoranthene - BSD	EPA-8270 SIM	**103**	**31**	SR1	20	150	11/09/2021	JMK
Benzo[K]Fluoranthene - BS	EPA-8270 SIM	**85.4**			20	150	11/09/2021	JMK
Benzo[K]Fluoranthene - BSD	EPA-8270 SIM	**116**	**30**	SR1	20	150	11/09/2021	JMK
Benzo[A]Pyrene - BS	EPA-8270 SIM	**73.3**			20	150	11/09/2021	JMK
Benzo[A]Pyrene - BSD	EPA-8270 SIM	**98.5**	**29**		20	150	11/09/2021	JMK
Indeno[1,2,3-Cd]Pyrene - BS	EPA-8270 SIM	**73.5**			20	150	11/09/2021	JMK
Indeno[1,2,3-Cd]Pyrene - BSD	EPA-8270 SIM	**88.3**	**18**		20	150	11/09/2021	JMK
Dibenz[A,H]Anthracene - BS	EPA-8270 SIM	**75.8**			20	150	11/09/2021	JMK
Dibenz[A,H]Anthracene - BSD	EPA-8270 SIM	**90.0**	**17**		20	150	11/09/2021	JMK
Benzo[G,H,I]Perylene - BS	EPA-8270 SIM	**76.9**			20	150	11/09/2021	JMK
Benzo[G,H,I]Perylene - BSD	EPA-8270 SIM	**91.9**	**18**		20	150	11/09/2021	JMK

SR1 - RPD outside of control limits.

ALS Test Batch ID: 172397 - Soil by EPA-8270 SIM

SPIKED COMPOUND	METHOD	%REC	RPD	QUAL	LIMITS MIN	LIMITS MAX	ANALYSIS DATE	ANALYSIS BY
Naphthalene - BS	EPA-8270 SIM	**76.1**			20	150	11/10/2021	JMK
Naphthalene - BSD	EPA-8270 SIM	**81.4**	**7**		20	150	11/10/2021	JMK
2-Methylnaphthalene - BS	EPA-8270 SIM	**75.6**			20	150	11/10/2021	JMK
2-Methylnaphthalene - BSD	EPA-8270 SIM	**81.7**	**8**		20	150	11/10/2021	JMK
1-Methylnaphthalene - BS	EPA-8270 SIM	**77.6**			20	150	11/10/2021	JMK
1-Methylnaphthalene - BSD	EPA-8270 SIM	**83.7**	**8**		20	150	11/10/2021	JMK
Acenaphthylene - BS	EPA-8270 SIM	**75.9**			20	150	11/10/2021	JMK
Acenaphthylene - BSD	EPA-8270 SIM	**83.2**	**9**		20	150	11/10/2021	JMK
Acenaphthene - BS	EPA-8270 SIM	**73.8**			41	107	11/10/2021	JMK
Acenaphthene - BSD	EPA-8270 SIM	**80.4**	**9**		41	107	11/10/2021	JMK
Fluorene - BS	EPA-8270 SIM	**76.7**			20	150	11/10/2021	JMK
Fluorene - BSD	EPA-8270 SIM	**84.5**	**10**		20	150	11/10/2021	JMK
Phenanthrene - BS	EPA-8270 SIM	**73.9**			20	150	11/10/2021	JMK
Phenanthrene - BSD	EPA-8270 SIM	**83.2**	**12**		20	150	11/10/2021	JMK

ADDRESS 8620 Holly Drive, Suite 100, Everett, WA 98208 | PHONE 425-356-2600 | FAX 425-356-2626
ALS Group USA, Corp dba ALS Environmental

Environmental www.alsglobal.com
RIGHT SOLUTIONS RIGHT PARTNER

ALS Environmental

CERTIFICATE OF ANALYSIS

CLIENT: Aspect Consulting, LLC
710 - 2nd Ave, Suite 550
Seattle, WA 98104

CLIENT CONTACT: Amy Tice
CLIENT PROJECT: KC Stockpile

DATE: 11/16/2021
ALS SDG#: EV21110033
WDOE ACCREDITATION: C601

LABORATORY CONTROL SAMPLE RESULTS

SPIKED COMPOUND	METHOD	%REC	RPD	QUAL	LIMITS MIN	LIMITS MAX	ANALYSIS DATE	ANALYSIS BY
Anthracene - BS	EPA-8270 SIM	**73.2**			20	150	11/10/2021	JMK
Anthracene - BSD	EPA-8270 SIM	**82.8**	**12**		20	150	11/10/2021	JMK
Fluoranthene - BS	EPA-8270 SIM	**75.7**			20	150	11/10/2021	JMK
Fluoranthene - BSD	EPA-8270 SIM	**86.1**	**13**		20	150	11/10/2021	JMK
Pyrene - BS	EPA-8270 SIM	**79.2**			18	136	11/10/2021	JMK
Pyrene - BSD	EPA-8270 SIM	**82.9**	**5**		18	136	11/10/2021	JMK
Benzo[A]Anthracene - BS	EPA-8270 SIM	**65.7**			20	150	11/10/2021	JMK
Benzo[A]Anthracene - BSD	EPA-8270 SIM	**77.6**	**17**		20	150	11/10/2021	JMK
Chrysene - BS	EPA-8270 SIM	**77.9**			20	150	11/10/2021	JMK
Chrysene - BSD	EPA-8270 SIM	**84.9**	**9**		20	150	11/10/2021	JMK
Benzo[B]Fluoranthene - BS	EPA-8270 SIM	**73.7**			20	150	11/10/2021	JMK
Benzo[B]Fluoranthene - BSD	EPA-8270 SIM	**82.2**	**11**		20	150	11/10/2021	JMK
Benzo[K]Fluoranthene - BS	EPA-8270 SIM	**81.4**			20	150	11/10/2021	JMK
Benzo[K]Fluoranthene - BSD	EPA-8270 SIM	**88.4**	**8**		20	150	11/10/2021	JMK
Benzo[A]Pyrene - BS	EPA-8270 SIM	**85.7**			20	150	11/10/2021	JMK
Benzo[A]Pyrene - BSD	EPA-8270 SIM	**98.6**	**14**		20	150	11/10/2021	JMK
Indeno[1,2,3-Cd]Pyrene - BS	EPA-8270 SIM	**80.8**			20	150	11/10/2021	JMK
Indeno[1,2,3-Cd]Pyrene - BSD	EPA-8270 SIM	**92.9**	**14**		20	150	11/10/2021	JMK
Dibenz[A,H]Anthracene - BS	EPA-8270 SIM	**82.0**			20	150	11/10/2021	JMK
Dibenz[A,H]Anthracene - BSD	EPA-8270 SIM	**95.6**	**15**		20	150	11/10/2021	JMK
Benzo[G,H,I]Perylene - BS	EPA-8270 SIM	**93.4**			20	150	11/10/2021	JMK
Benzo[G,H,I]Perylene - BSD	EPA-8270 SIM	**106**	**12**		20	150	11/10/2021	JMK

ALS Test Batch ID: 172245 - Soil by EPA-8082

SPIKED COMPOUND	METHOD	%REC	RPD	QUAL	LIMITS MIN	LIMITS MAX	ANALYSIS DATE	ANALYSIS BY
PCB-1016 - BS	EPA-8082	**70.7**			50	150	11/08/2021	JMK
PCB-1016 - BSD	EPA-8082	**86.5**	**20**		50	150	11/08/2021	JMK
PCB-1260 - BS	EPA-8082	**79.4**			50	150	11/08/2021	JMK
PCB-1260 - BSD	EPA-8082	**90.0**	**13**		50	150	11/08/2021	JMK

ALS Test Batch ID: 172471 - Soil by EPA-8082

SPIKED COMPOUND	METHOD	%REC	RPD	QUAL	LIMITS MIN	LIMITS MAX	ANALYSIS DATE	ANALYSIS BY
PCB-1016 - BS	EPA-8082	**97.0**			50	150	11/12/2021	JMK
PCB-1016 - BSD	EPA-8082	**97.9**	**1**		50	150	11/12/2021	JMK
PCB-1260 - BS	EPA-8082	**102**			50	150	11/12/2021	JMK
PCB-1260 - BSD	EPA-8082	**106**	**3**		50	150	11/12/2021	JMK

ADDRESS 8620 Holly Drive, Suite 100, Everett, WA 98208 | PHONE 425-356-2600 | FAX 425-356-2626
ALS Group USA, Corp dba ALS Environmental

Environmental www.alsglobal.com
RIGHT SOLUTIONS RIGHT PARTNER

CERTIFICATE OF ANALYSIS

CLIENT: Aspect Consulting, LLC
710 - 2nd Ave, Suite 550
Seattle, WA 98104
CLIENT CONTACT: Amy Tice
CLIENT PROJECT: KC Stockpile

DATE: 11/16/2021
ALS SDG#: EV21110033
WDOE ACCREDITATION: C601

LABORATORY CONTROL SAMPLE RESULTS

ALS Test Batch ID: R395275 - Soil by EPA-7471

SPIKED COMPOUND	METHOD	%REC	RPD	QUAL	LIMITS MIN	LIMITS MAX	ANALYSIS DATE	ANALYSIS BY
Mercury - BS	EPA-7471	**105**			81.8	117	11/05/2021	RAL
Mercury - BSD	EPA-7471	**105**	**0**		81.8	117	11/05/2021	RAL

ALS Test Batch ID: R395774 - Soil by EPA-7471

SPIKED COMPOUND	METHOD	%REC	RPD	QUAL	LIMITS MIN	LIMITS MAX	ANALYSIS DATE	ANALYSIS BY
Mercury - BS	EPA-7471	**108**			81.8	117	11/08/2021	RAL
Mercury - BSD	EPA-7471	**108**	**0**		81.8	117	11/08/2021	RAL

ALS Test Batch ID: 172208 - Soil by EPA-6020

SPIKED COMPOUND	METHOD	%REC	RPD	QUAL	LIMITS MIN	LIMITS MAX	ANALYSIS DATE	ANALYSIS BY
Arsenic - BS	EPA-6020	**101**			80	120	11/05/2021	EBS
Arsenic - BSD	EPA-6020	**104**	**3**		80	120	11/05/2021	EBS
Copper - BS	EPA-6020	**104**			80	120	11/05/2021	EBS
Copper - BSD	EPA-6020	**106**	**2**		80	120	11/05/2021	EBS
Lead - BS	EPA-6020	**98.0**			80	120	11/05/2021	EBS
Lead - BSD	EPA-6020	**100**	**2**		80	120	11/05/2021	EBS
Nickel - BS	EPA-6020	**100**			80	120	11/05/2021	EBS
Nickel - BSD	EPA-6020	**103**	**3**		80	120	11/05/2021	EBS
Zinc - BS	EPA-6020	**109**			80	119	11/05/2021	EBS
Zinc - BSD	EPA-6020	**111**	**2**		80	119	11/05/2021	EBS

ALS Test Batch ID: 172250 - Soil by EPA-6020

SPIKED COMPOUND	METHOD	%REC	RPD	QUAL	LIMITS MIN	LIMITS MAX	ANALYSIS DATE	ANALYSIS BY
Arsenic - BS	EPA-6020	**100**			80	120	11/08/2021	EBS
Arsenic - BSD	EPA-6020	**99.0**	**1**		80	120	11/08/2021	EBS
Copper - BS	EPA-6020	**103**			80	120	11/08/2021	EBS
Copper - BSD	EPA-6020	**102**	**1**		80	120	11/08/2021	EBS
Lead - BS	EPA-6020	**98.2**			80	120	11/08/2021	EBS
Lead - BSD	EPA-6020	**97.1**	**1**		80	120	11/08/2021	EBS
Nickel - BS	EPA-6020	**101**			80	120	11/08/2021	EBS
Nickel - BSD	EPA-6020	**99.9**	**1**		80	120	11/08/2021	EBS
Zinc - BS	EPA-6020	**103**			80	119	11/08/2021	EBS
Zinc - BSD	EPA-6020	**101**	**2**		80	119	11/08/2021	EBS

ADDRESS 8620 Holly Drive, Suite 100, Everett, WA 98208 | PHONE 425-356-2600 | FAX 425-356-2626
ALS Group USA, Corp dba ALS Environmental

Environmental www.alsglobal.com
RIGHT SOLUTIONS RIGHT PARTNER

CERTIFICATE OF ANALYSIS

APPROVED BY



Laboratory Director

ADDRESS 8620 Holly Drive, Suite 100, Everett, WA 98208 | PHONE 425-356-2600 | FAX 425-356-2626
ALS Group USA, Corp dba ALS Environmental

Environmental www.alsglobal.com
RIGHT SOLUTIONS RIGHT PARTNER

ALS Environmental
8620 Holly Drive, Suite 100
Everett, WA 98208
Phone (425) 356-2600
Fax (425) 356-2626
http://www.alsglobal.com

Chain Of Custody/ Laboratory Analysis Request

ALS Job# (Laboratory Use Only): EV2111 0033

Date 11/4/21 Page 1 Of 3

PROJECT ID: ~~210550~~ KC Stockpile
REPORT TO COMPANY: Aspect Consulting
PROJECT MANAGER: Amy Tice
ADDRESS: 710 2nd Ave Ste 550
Seattle, WA 98104
PHONE: 2068386585 P.O. #: 210550
E-MAIL: atice@aspectconsulting.com
INVOICE TO COMPANY: J.H. Cowden Inc.
ATTENTION: Jeff Van Beek
ADDRESS: jeff@cowdeninc.com
360-746-4428

ANALYSIS REQUESTED

SAMPLE I.D.	DATE	TIME	TYPE	LAB#	NWTPH-HCID	NWTPH-DX	NWTPH-GX	BTEX by EPA 8021 ☐	BTEX by EPA 8260 ☐	MTBE by EPA 8021 ☐	MTBE by EPA 8260 ☐	Halogenated Volatiles by EPA 8260	Volatile Organic Compounds by EPA 8260	EDB / EDC by EPA 8260 SIM (water)	EDB / EDC by EPA 8260 (soil)	Semivolatile Organic Compounds by EPA 8270	Polycyclic Aromatic Hydrocarbons (PAH) by EPA 8270 SIM	PCB by EPA 8082 X	Pesticides by EPA 8081 ☐	Metals-MTCA-5 ☐	RCRA-8 ☐	Pri Pol ☐	TAL ☐	Metals Other (Specify) arsenic, copper, lead, mercury, nickel, zinc	TCLP-Metals ☐	VOA ☐	Semi-Vol ☐	Pest ☐	Herbs ☐	OTHER (Specify)	NUMBER OF CONTAINERS	RECEIVED IN GOOD CONDITION?
1. CSBC-1	11/4/21	0945	S	1		X	X										X	X					X									
2. CSBC-2		0955		2																												
3. CSBC-3		1005		3																												
4. CSBC-4		1015		4																												
5. CSBC-5		1025		5																												
6. CSBC-6		1035		6																												
7. CSBC-7		1045		7																												
8. CSBC-8		1055		8																												
9. CSBC-9		1105		9																												
10. CSBC-10		1115		10																												

SPECIAL INSTRUCTIONS

SIGNATURES (Name, Company, Date, Time):

1. Relinquished By: Rachel Aspect 11/4/21 1645
Received By: Ken Perry ALS 11/4/21 16:45
2. Relinquished By:
Received By:

TURNAROUND REQUESTED in Business Days*

Organic, Metals & Inorganic Analysis: 10 Standard | 5 | 3 | 2 | 1 | SAME DAY

Fuels & Hydrocarbon Analysis: 5 Standard | 3 | 1 | SAME DAY

OTHER: Specify:

ALS Environmental
8620 Holly Drive, Suite 100
Everett, WA 98208
Phone (425) 356-2600
Fax (425) 356-2626
http://www.alsglobal.com

Chain Of Custody/ Laboratory Analysis Request

ALS Job# (Laboratory Use Only): EV2111033

Date 11/4/21 Page 2 Of 3

PROJECT ID:	KC Stockpile
REPORT TO COMPANY:	Aspect
PROJECT MANAGER:	Amy Tice
ADDRESS:	710 2nd Ave Ste 550 Seattle WA 98104
PHONE:	2068386585 P.O. #: 210550
E-MAIL:	atice@aspectconsulting.com
INVOICE TO COMPANY:	Cardno Inc
ATTENTION:	~~Jeff~~ VanBeek
ADDRESS:	jeff@cardnoinc.com 360-746-4428

ANALYSIS REQUESTED

SAMPLE I.D.	DATE	TIME	TYPE	LAB#	NWTPH-HCID	NWTPH-DX	NWTPH-GX	BTEX by EPA 8021 ☐	BTEX by EPA 8260 ☐	MTBE by EPA 8021 ☐	MTBE by EPA 8260 ☐	Halogenated Volatiles by EPA 8260	Volatile Organic Compounds by EPA 8260	EDB / EDC by EPA 8260 SIM (water)	EDB / EDC by EPA 8260 (soil)	Semivolatile Organic Compounds by EPA 8270	Polycyclic Aromatic Hydrocarbons (PAH) by EPA 8270 SIM	PCB by EPA 8082 ~~X~~	Pesticides by EPA 8081 ☐	Metals-MTCA-5 ☐	RCRA-8 ☐	Pri Pol ☐	TAL ☐	Metals Other (Specify) arsenic, copper, lead, mercury, nickel, zinc	TCLP-Metals ☐	VOA ☐	Semi-Vol ☐	Pest ☐	Herbs ☐	NUMBER OF CONTAINERS	RECEIVED IN GOOD CONDITION?
1. CSBC-11	11/4/21	1125	S	11		X	X										X	X					X								
2. CSBC-12		1135		12																											
3. CSBC-13		1145		13																											
4. CSBC-14		1155		14																											
5. SF-1		1230		15																											
6. SF-2		1240		16																											
7. SF-3		1250		17																											
8. SF-4		1300		18																											
9. SF-5		1310		19																											
10. SF-6		1320		20																											

OTHER (Specify)

SPECIAL INSTRUCTIONS

SIGNATURES (Name, Company, Date, Time):

1. Relinquished By: Radue Aspect 11/4/21 1645
   Received By: ALS 11/4/21 4:45PM
2. Relinquished By:
   Received By:

TURNAROUND REQUESTED in Business Days*

Organic, Metals & Inorganic Analysis: [10] Standard | 5 | 3 | 2 | 1 | SAME DAY

Fuels & Hydrocarbon Analysis: 5 Standard | 3 | 1 | SAME DAY

OTHER: Specify:

*Turnaround request less than standard may incur Rush Charges

ALS Environmental
8620 Holly Drive, Suite 100
Everett, WA 98208
Phone (425) 356-2600
Fax (425) 356-2626
http://www.alsglobal.com

Chain Of Custody/ Laboratory Analysis Request

ALS Job# (Laboratory Use Only): EV2111033

Date 11/4/21 Page 3 Of 3

PROJECT ID: EC Stockpile
REPORT TO COMPANY: Aspect
PROJECT MANAGER: Amytico
ADDRESS: 710 2nd Ave Ste 550
Seattle, WA 98104
PHONE: 2068386585 P.O. #: 210550
E-MAIL: amica@aspectconsulting.com
INVOICE TO COMPANY: Cowden Inc
ATTENTION: Jeff VanBeek
ADDRESS: jeff@cowdeninc.com
360-746-4428

SAMPLE I.D.	DATE	TIME	TYPE	LAB#	NWTPH-HCID	NWTPH-DX	NWTPH-GX	BTEX by EPA 8021 ☐	BTEX by EPA 8260 ☐	MTBE by EPA 8021 ☐	MTBE by EPA 8260 ☐	Halogenated Volatiles by EPA 8260	Volatile Organic Compounds by EPA 8260	EDB / EDC by EPA 8260 SIM (water)	EDB / EDC by EPA 8260 (soil)	Semivolatile Organic Compounds by EPA 8270	Polycyclic Aromatic Hydrocarbons (PAH) by EPA 8270 SIM	PCB by EPA 8082 ☒	Pesticides by EPA 8081 ☐	Metals-MTCA-5 ☐	RCRA-8 ☐	Pri Pol ☐	TAL ☐	Metals Other (Specify) arsenic, copper, mercury, nickel, zinc	TCLP-Metals ☐	VOA ☐	Semi-Vol ☐	Pest ☐	Herbs ☐	NUMBER OF CONTAINERS	RECEIVED IN GOOD CONDITION?
1. SF-7	11/4/21	1390	S	21		X	X										X	X						X							
2. SF-8		1340		22																											
3. SF-9		1350		23																											
4. SF-10		1400		24																											
5. SF-11		1410		25																											
6. SF-12		1420		26																											
7. SF-13		1430		27																											
8. SF-14		1440		28																											
9.																															
10.																															

OTHER (Specify)

SPECIAL INSTRUCTIONS

SIGNATURES (Name, Company, Date, Time):

1. Relinquished By: Rachel Aspect 11/4/21 1645
Received By: Ben Rees ALS 11/4/21 4:45pm
2. Relinquished By: _____
Received By: _____

TURNAROUND REQUESTED in Business Days*

Organic, Metals & Inorganic Analysis: 10 Standard | 5 | 3 | 2 | 1 | SAME DAY

Fuels & Hydrocarbon Analysis: 5 Standard | 3 | 1 | SAME DAY

OTHER: Specify: _____

*Turnaround request less than standard may incur Rush Charges

APPENDIX B

Data Validation Report

DATA VALIDATION REPORT

Norton Terminal Development at the K-C Worldwide Site

Import Material Soil Sampling

November 2021

Sample Delivery Group EV21110033

Prepared by:
Aspect Consulting, LLC
710 2nd Ave, Suite 550
Seattle, WA 98104

Project No. 210550-A-01 • December 7, 2021

1 Introduction

This report summarizes the findings of the U.S. Environmental Protection Agency (USEPA) Level 2A data validation performed on analytical data for the potential import material soil samples collected in November 2021 from the Mandan Pit in support of the 3rd Interim Action (IA) and the KC Upland Area.

Samples were analyzed for gasoline-, diesel-, and oil-range Total petroleum hydrocarbons (TPH), select metals, Polycyclic aromatic hydrocarbons (PAHs), and Polychlorinated biphenyls (PCBs) by ALS Environmental (ALS). The analytical methods are summarized below:

Table 1. Analytical Methods

Analysis	Method	Laboratory
Gasoline-range TPH	NWTPH-Gx	ALS
Diesel- and oil-range TPH	NWTPH-Dx	ALS
Metals (arsenic, copper, lead, nickel, zinc)	EPA 6020	ALS
Metals (mercury)	EPA 7471	ALS
PAHs	EPA 8270-SIM	ALS
PCBs	EPA 8082	ALS

The validation followed the procedures documented in the analytical methods, and the *National Functional Guidelines for Organic Data Review* (USEPA, 2017), and *Contract Laboratory Program SOW* (USEPA, 2016).

Data assigned a J qualifier (estimated) may be used for site evaluation purposes but the reasons for qualification should be considered when interpreting sample concentrations. Data marked as rejected (R) should not be used under any circumstances. Values without qualification meet all data measurement quality objectives and are suitable for use.

Data qualifier definitions and a summary table of the qualified data are included in the Qualified Data Summary at the end of this report. Data qualifiers have been incorporated into the project chemistry database to reflect the validation in this report.

2 Data Validation Findings for Sample Delivery Group EV21110033

Soil samples in this sample delivery group (SDG), and the chemical analyses performed on them, are tabulated below. The sections below describe the results of the data quality review by analyte group (analysis).

Table 2. Sample Index

Sample Name	Sample Date	Sample Matrix	Analysis					
			Gasoline-Range TPH	Diesel- and oil-range TPH	Metals (As, Cu, Pb, Ni, Zn)	Metals (Mercury)	PAHs	PCBs
CSBC-1	11/14/2021	Soil	x	x	x	x	x	x
CSBC-2	11/14/2021	Soil	x	x	x	x	x	x
CSBC-3	11/14/2021	Soil	x	x	x	x	x	x
CSBC-4	11/14/2021	Soil	x	x	x	x	x	x
CSBC-5	11/14/2021	Soil	x	x	x	x	x	x
CSBC-6	11/14/2021	Soil	x	x	x	x	x	x
CSBC-7	11/14/2021	Soil	x	x	x	x	x	x
CSBC-8	11/14/2021	Soil	x	x	x	x	x	x
CSBC-9	11/14/2021	Soil	x	x	x	x	x	x
CSBC-10	11/14/2021	Soil	x	x	x	x	x	x
CSBC-11	11/14/2021	Soil	x	x	x	x	x	x
CSBC-12	11/14/2021	Soil	x	x	x	x	x	x
CSBC-13	11/14/2021	Soil	x	x	x	x	x	x
CSBC-14	11/14/2021	Soil	x	x	x	x	x	x
SF-1	11/14/2021	Soil	x	x	x	x	x	x
SF-2	11/14/2021	Soil	x	x	x	x	x	x
SF-3	11/14/2021	Soil	x	x	x	x	x	x
SF-4	11/14/2021	Soil	x	x	x	x	x	x
SF-5	11/14/2021	Soil	x	x	x	x	x	x
SF-6	11/14/2021	Soil	x	x	x	x	x	x
SF-7	11/14/2021	Soil	x	x	x	x	x	x
SF-8	11/14/2021	Soil	x	x	x	x	x	x
SF-9	11/14/2021	Soil	x	x	x	x	x	x
SF-10	11/14/2021	Soil	x	x	x	x	x	x
SF-11	11/14/2021	Soil	x	x	x	x	x	x
SF-12	11/14/2021	Soil	x	x	x	x	x	x
SF-13	11/14/2021	Soil	x	x	x	x	x	x
SF-14	11/14/2021	Soil	x	x	x	x	x	x

2.1 Gasoline-range TPH (NWTPH-Gx)

2.1.1 Sample Receipt, Preservation, and Holding Times

Sample receipt and preservation (2-6 degrees C) were acceptable. Samples were analyzed within the requisite holding time limit.

2.1.2 Method Blanks/Detection Levels

Target analytes were not detected at or above the reporting levels in the method blank. No qualification or action was needed.

2.1.3 Laboratory Control Samples/Laboratory Control Sample Duplicates (LCS/LCSD)

All laboratory control samples (LCS) and laboratory control sample duplicates (LCSD), percent recovery (%R) and relative percent difference (RPD) were within the laboratory specified control limits for requested analytes. No qualification or action was needed.

2.1.4 Surrogates

All surrogate %R values were within laboratory specified control limit. No qualification or action was needed.

2.1.5 Overall Assessment

Accuracy was acceptable based on the LCS/LCSD, and precision was acceptable based on the LCS/LCSD RPD values. The data are of known quality and are acceptable for use.

2.2 Diesel-range TPH (NWTPH-Dx)

2.2.1 Sample Receipt, Preservation, and Holding Times

Sample receipt and preservation (2-6 degrees C) were acceptable. Samples were analyzed within the requisite holding time limit.

2.2.2 Method Blanks/Detection Levels

Target analytes were not detected at or above the reporting levels in the method blank. No qualification or action was needed.

2.2.3 Laboratory Control Samples/Laboratory Control Sample Duplicates (LCS/LCSD)

All laboratory control samples (LCS) and laboratory control sample duplicates (LCSD), percent recovery (%R) and relative percent difference (RPD) were within the laboratory specified control limits for requested analytes. No qualification or action was needed.

2.2.4 Surrogates

All surrogate %R values were within laboratory specified control limit. No qualification or action was needed.

2.2.5 Overall Assessment

Accuracy was acceptable based on the LCS/LCSD and precision was acceptable based on the LCS/LCSD RPD values. The data are of known quality and are acceptable for use.

2.3 Metals (EPA 6020)

2.3.1 Sample Receipt, Preservation, and Holding Times

Sample receipt and preservation (2-6 degrees C) were acceptable. Samples were analyzed within the requisite holding time limit.

2.3.2 Method Blanks/Detection Levels

Target analytes were not detected at or above the reporting levels in the method blank. No qualification or action was needed.

2.3.3 Laboratory Control Samples/Laboratory Control Sample Duplicates (LCS/LCSD)

All laboratory control samples (LCS) and laboratory control sample duplicates (LCSD), percent recovery (%R) and relative percent difference (RPD) were within the laboratory specified control limits for requested analytes. No qualification or action was needed.

2.3.4 Overall Assessment

Accuracy was acceptable based on the LCS/LCSD and precision was acceptable based on the LCS/LCSD RPD values. The data are of known quality and are acceptable for use.

2.4 Mercury (EPA 7471)

2.4.1 Sample Receipt, Preservation, and Holding Times

Sample receipt and preservation (2-6 degrees C) were acceptable. Samples were analyzed within the requisite holding time limit.

2.4.2 Method Blanks/Detection Levels

Target analytes were not detected at or above the reporting levels in the method blank. No qualification or action was needed.

2.4.3 Laboratory Control Samples/Laboratory Control Sample Duplicates (LCS/LCSD)

All laboratory control samples (LCS) and laboratory control sample duplicates (LCSD), percent recovery (%R) and relative percent difference (RPD) were within the laboratory specified control limits for requested analytes. No qualification or action was needed.

2.4.4 Overall Assessment

Accuracy was acceptable based on the LCS/LCSD and precision was acceptable based on the LCS/LCSD RPD values. The data are of known quality and are acceptable for use.

2.5 PAHs (EPA 8270 SIM)

2.5.1 Sample Receipt, Preservation, and Holding Times

Sample receipt and preservation (2-6 degrees C) were acceptable. Samples were analyzed within the requisite holding time limit.

2.5.2 Method Blanks/Detection Levels

Target analytes were not detected at or above the reporting levels in the method blank. The surrogate %R value in the method blank was above the specified control limit, but because the target analytes were non-detect, no qualification or action was needed.

2.5.3 Laboratory Control Samples/Laboratory Control Sample Duplicates (LCS/LCSD)

All laboratory control samples (LCS) and laboratory control sample duplicates (LCSD), percent recovery (%R) were within the laboratory specified control limits for requested analytes. Relative percent difference (RPD) were within the laboratory specified control limits for requested analytes, with the following exceptions:

- Acenapthene
- Pyrene
- Benzo(b)fluoranthene
- Benzo(k)fluoranthene

All associated sample results were non-detect, therefore no qualification or action was needed.

2.5.4 Surrogates

All surrogate %R values were within laboratory specified control limit. No qualification or action was needed.

2.5.5 Overall Assessment

Accuracy was acceptable based on the LCS/LCSD and precision was acceptable based on the LCS/LCSD RPD values except as noted above. The data are of known quality and are acceptable for use.

2.6 PCBs (EPA 8082)

2.6.1 Sample Receipt, Preservation, and Holding Times

Sample receipt and preservation (2-6 degrees C) were acceptable. Samples were analyzed within the requisite holding time limit.

2.6.2 Method Blanks/Detection Levels

Target analytes were not detected at or above the reporting levels in the method blank. No qualification or action was needed.

2.6.3 Laboratory Control Samples/Laboratory Control Sample Duplicates (LCS/LCSD)

All laboratory control samples (LCS) and laboratory control sample duplicates (LCSD), percent recovery (%R) and relative percent difference (RPD) were within the laboratory specified control limits for requested analytes. No qualification or action was needed.

2.6.4 Surrogates

All surrogate %R values were within laboratory specified control limit. No qualification or action was needed.

2.6.5 Overall Assessment

Accuracy was acceptable based on the LCS/LCSD, and precision was acceptable based on the LCS/LCSD RPD values. The data are of known quality and are acceptable for use.

3 Qualified Data Summary

No sample results were qualified as part of this validation report. This list does not include non-detected values simply qualified U.

4 Data Qualifier Definitions

Data Qualifier	Definition
J	The analyte was detected above the reported quantitation limit, and the reported concentration was an estimated value.
R	The sample results are unusable due to the quality of the data generated because certain criteria were not met. The analyte may or may not be present in the sample.
U	The analyte was analyzed for but was considered not detected at the reporting limit or reported value.
UJ	The analyte was analyzed for, and the associated quantitation limit was an estimated value.

5 References

U.S. Environmental Protection Agency (USEPA), 2017 National Functional Guidelines for Organic Methods Data Review, Office of Superfund Remediation and Technology Innovation (OSRTI), USEPA Publication No. 540-R-2017-002, January.

U.S. Environmental Protection Agency (USEPA), 2016, Contract Laboratory Program (CLP) Statement of Work (SOW) for Organic Superfund Methods, Multi-Media, Multi-Concentration, SOM02.4, October.

APPENDIX C

Statistical Backup

1	**UCL Statistics for Uncensored Full Data Sets**											
2												
3	User Selected Options	Strider Import Aggregate Testing										
4	Date/Time of Computation	ProUCL 5.112/1/2021 6:28:06 PM										
5	From File	WorkSheet.xls										
6	Full Precision	OFF										
7	Confidence Coefficient	95%										
8	Number of Bootstrap Operations	2000										
9												
10												
11	**CSBC_copper**											
12												
13	**General Statistics**											
14	Total Number of Observations	13			Number of Distinct Observations	8						
15					Number of Missing Observations	1						
16	Minimum	26			Mean	32.77						
17	Maximum	38			Median	33						
18	SD	3.419			Std. Error of Mean	0.948						
19	Coefficient of Variation	0.104			Skewness	-0.122						
20												
21	**Normal GOF Test**											
22	Shapiro Wilk Test Statistic	0.957			**Shapiro Wilk GOF Test**							
23	5% Shapiro Wilk Critical Value	0.866			Data appear Normal at 5% Significance Level							
24	Lilliefors Test Statistic	0.165			**Lilliefors GOF Test**							
25	5% Lilliefors Critical Value	0.234			Data appear Normal at 5% Significance Level							
26	Data appear Normal at 5% Significance Level											
27												
28	**Assuming Normal Distribution**											
29	**95% Normal UCL**				**95% UCLs (Adjusted for Skewness)**							
30	95% Student's-t UCL	34.46			95% Adjusted-CLT UCL (Chen-1995)	34.29						
31					95% Modified-t UCL (Johnson-1978)	34.45						
32												
33	**Gamma GOF Test**											
34	A-D Test Statistic	0.291			**Anderson-Darling Gamma GOF Test**							
35	5% A-D Critical Value	0.732			Detected data appear Gamma Distributed at 5% Significance Level							
36	K-S Test Statistic	0.151			**Kolmogorov-Smirnov Gamma GOF Test**							
37	5% K-S Critical Value	0.236			Detected data appear Gamma Distributed at 5% Significance Level							
38	Detected data appear Gamma Distributed at 5% Significance Level											
39												
40	**Gamma Statistics**											
41	k hat (MLE)	97.59			k star (bias corrected MLE)	75.12						
42	Theta hat (MLE)	0.336			Theta star (bias corrected MLE)	0.436						
43	nu hat (MLE)	2537			nu star (bias corrected)	1953						
44	MLE Mean (bias corrected)	32.77			MLE Sd (bias corrected)	3.781						
45					Approximate Chi Square Value (0.05)	1852						
46	Adjusted Level of Significance	0.0301			Adjusted Chi Square Value	1837						
47												
48	**Assuming Gamma Distribution**											
49	95% Approximate Gamma UCL (use when n>=50))	34.57			95% Adjusted Gamma UCL (use when n<50)	34.83						
50												
51	**Lognormal GOF Test**											
52	Shapiro Wilk Test Statistic	0.951			**Shapiro Wilk Lognormal GOF Test**							

53	5% Shapiro Wilk Critical Value					0.866	Data appear Lognormal at 5% Significance Level					
54	Lilliefors Test Statistic					0.164	**Lilliefors Lognormal GOF Test**					
55	5% Lilliefors Critical Value					0.234	Data appear Lognormal at 5% Significance Level					
56	Data appear Lognormal at 5% Significance Level											
57												
58	**Lognormal Statistics**											
59	Minimum of Logged Data					3.258	Mean of logged Data					3.484
60	Maximum of Logged Data					3.638	SD of logged Data					0.106
61												
62	**Assuming Lognormal Distribution**											
63	95% H-UCL					34.61	90% Chebyshev (MVUE) UCL					35.67
64	95% Chebyshev (MVUE) UCL					36.98	97.5% Chebyshev (MVUE) UCL					38.8
65	99% Chebyshev (MVUE) UCL					42.38						
66												
67	**Nonparametric Distribution Free UCL Statistics**											
68	Data appear to follow a Discernible Distribution at 5% Significance Level											
69												
70	**Nonparametric Distribution Free UCLs**											
71	95% CLT UCL					34.33	95% Jackknife UCL					34.46
72	95% Standard Bootstrap UCL					34.28	95% Bootstrap-t UCL					34.34
73	95% Hall's Bootstrap UCL					34.31	95% Percentile Bootstrap UCL					34.23
74	95% BCA Bootstrap UCL					34.15						
75	90% Chebyshev(Mean, Sd) UCL					35.61	95% Chebyshev(Mean, Sd) UCL					36.9
76	97.5% Chebyshev(Mean, Sd) UCL					38.69	99% Chebyshev(Mean, Sd) UCL					42.21
77												
78	**Suggested UCL to Use**											
79	95% Student's-t UCL					34.46						
80												
81	Note: Suggestions regarding the selection of a 95% UCL are provided to help the user to select the most appropriate 95% UCL.											
82	Recommendations are based upon data size, data distribution, and skewness.											
83	These recommendations are based upon the results of the simulation studies summarized in Singh, Maichle, and Lee (2006).											
84	However, simulations results will not cover all Real World data sets; for additional insight the user may want to consult a statistician.											
85												
86	**Note: For highly negatively-skewed data, confidence limits (e.g., Chen, Johnson, Lognormal, and Gamma) may not be**											
87	**reliable. Chen's and Johnson's methods provide adjustments for positvely skewed data sets.**											
88												

1	**UCL Statistics for Uncensored Full Data Sets**											
2												
3	User Selected Options	Strider Import Aggregate Testing										
4	Date/Time of Computation	ProUCL 5.112/1/2021 6:26:56 PM										
5	From File	WorkSheet.xls										
6	Full Precision	OFF										
7	Confidence Coefficient	95%										
8	Number of Bootstrap Operations	2000										
9												
10												
11	**CSBC_mercury**											
12												
13	**General Statistics**											
14	Total Number of Observations	13				Number of Distinct Observations	9					
15						Number of Missing Observations	1					
16	Minimum	0.042				Mean	0.0509					
17	Maximum	0.07				Median	0.051					
18	SD	0.00836				Std. Error of Mean	0.00232					
19	Coefficient of Variation	0.164				Skewness	0.922					
20												
21	**Normal GOF Test**											
22	Shapiro Wilk Test Statistic	0.894				**Shapiro Wilk GOF Test**						
23	5% Shapiro Wilk Critical Value	0.866				Data appear Normal at 5% Significance Level						
24	Lilliefors Test Statistic	0.222				**Lilliefors GOF Test**						
25	5% Lilliefors Critical Value	0.234				Data appear Normal at 5% Significance Level						
26	Data appear Normal at 5% Significance Level											
27												
28	**Assuming Normal Distribution**											
29	**95% Normal UCL**					**95% UCLs (Adjusted for Skewness)**						
30	95% Student's-t UCL	0.0551				95% Adjusted-CLT UCL (Chen-1995)	0.0554					
31						95% Modified-t UCL (Johnson-1978)	0.0552					
32												
33	**Gamma GOF Test**											
34	A-D Test Statistic	0.504				**Anderson-Darling Gamma GOF Test**						
35	5% A-D Critical Value	0.733				Detected data appear Gamma Distributed at 5% Significance Level						
36	K-S Test Statistic	0.232				**Kolmogorov-Smirnov Gamma GOF Test**						
37	5% K-S Critical Value	0.236				Detected data appear Gamma Distributed at 5% Significance Level						
38	Detected data appear Gamma Distributed at 5% Significance Level											
39												
40	**Gamma Statistics**											
41	k hat (MLE)	42.7				k star (bias corrected MLE)	32.9					
42	Theta hat (MLE)	0.00119				Theta star (bias corrected MLE)	0.00155					
43	nu hat (MLE)	1110				nu star (bias corrected)	855.3					
44	MLE Mean (bias corrected)	0.0509				MLE Sd (bias corrected)	0.00888					
45						Approximate Chi Square Value (0.05)	788.4					
46	Adjusted Level of Significance	0.0301				Adjusted Chi Square Value	779.2					
47												
48	**Assuming Gamma Distribution**											
49	95% Approximate Gamma UCL (use when n>=50))	0.0552				95% Adjusted Gamma UCL (use when n<50)	0.0559					
50												
51	**Lognormal GOF Test**											
52	Shapiro Wilk Test Statistic	0.913				**Shapiro Wilk Lognormal GOF Test**						

53	5% Shapiro Wilk Critical Value					0.866	Data appear Lognormal at 5% Significance Level					
54	Lilliefors Test Statistic					0.223	**Lilliefors Lognormal GOF Test**					
55	5% Lilliefors Critical Value					0.234	Data appear Lognormal at 5% Significance Level					
56	Data appear Lognormal at 5% Significance Level											
57												
58	**Lognormal Statistics**											
59	Minimum of Logged Data					-3.17	Mean of logged Data					-2.989
60	Maximum of Logged Data					-2.659	SD of logged Data					0.158
61												
62	**Assuming Lognormal Distribution**											
63	95% H-UCL					0.0553	90% Chebyshev (MVUE) UCL					0.0576
64	95% Chebyshev (MVUE) UCL					0.0606	97.5% Chebyshev (MVUE) UCL					0.0648
65	99% Chebyshev (MVUE) UCL					0.0731						
66												
67	**Nonparametric Distribution Free UCL Statistics**											
68	Data appear to follow a Discernible Distribution at 5% Significance Level											
69												
70	**Nonparametric Distribution Free UCLs**											
71	95% CLT UCL					0.0547	95% Jackknife UCL					0.0551
72	95% Standard Bootstrap UCL					0.0546	95% Bootstrap-t UCL					0.0562
73	95% Hall's Bootstrap UCL					0.0559	95% Percentile Bootstrap UCL					0.0549
74	95% BCA Bootstrap UCL					0.0548						
75	90% Chebyshev(Mean, Sd) UCL					0.0579	95% Chebyshev(Mean, Sd) UCL					0.061
76	97.5% Chebyshev(Mean, Sd) UCL					0.0654	99% Chebyshev(Mean, Sd) UCL					0.074
77												
78	**Suggested UCL to Use**											
79	95% Student's-t UCL					0.0551						
80												
81	Note: Suggestions regarding the selection of a 95% UCL are provided to help the user to select the most appropriate 95% UCL.											
82	Recommendations are based upon data size, data distribution, and skewness.											
83	These recommendations are based upon the results of the simulation studies summarized in Singh, Maichle, and Lee (2006).											
84	However, simulations results will not cover all Real World data sets; for additional insight the user may want to consult a statistician.											
85												

1	**UCL Statistics for Uncensored Full Data Sets**											
2												
3	User Selected Options	Strider Import Aggregate Testing										
4	Date/Time of Computation	ProUCL 5.112/1/2021 6:31:26 PM										
5	From File	WorkSheet.xls										
6	Full Precision	OFF										
7	Confidence Coefficient	95%										
8	Number of Bootstrap Operations	2000										
9												
10												
11	**CSBC_nickel**											
12												
13	**General Statistics**											
14	Total Number of Observations	13				Number of Distinct Observations	10					
15						Number of Missing Observations	1					
16	Minimum	28				Mean	37.46					
17	Maximum	49				Median	37					
18	SD	6.118				Std. Error of Mean	1.697					
19	Coefficient of Variation	0.163				Skewness	0.315					
20												
21	**Normal GOF Test**											
22	Shapiro Wilk Test Statistic	0.971				**Shapiro Wilk GOF Test**						
23	5% Shapiro Wilk Critical Value	0.866				Data appear Normal at 5% Significance Level						
24	Lilliefors Test Statistic	0.122				**Lilliefors GOF Test**						
25	5% Lilliefors Critical Value	0.234				Data appear Normal at 5% Significance Level						
26	Data appear Normal at 5% Significance Level											
27												
28	**Assuming Normal Distribution**											
29	**95% Normal UCL**					**95% UCLs (Adjusted for Skewness)**						
30	95% Student's-t UCL	40.49				95% Adjusted-CLT UCL (Chen-1995)	40.41					
31						95% Modified-t UCL (Johnson-1978)	40.51					
32												
33	**Gamma GOF Test**											
34	A-D Test Statistic	0.196				**Anderson-Darling Gamma GOF Test**						
35	5% A-D Critical Value	0.733				Detected data appear Gamma Distributed at 5% Significance Level						
36	K-S Test Statistic	0.131				**Kolmogorov-Smirnov Gamma GOF Test**						
37	5% K-S Critical Value	0.236				Detected data appear Gamma Distributed at 5% Significance Level						
38	Detected data appear Gamma Distributed at 5% Significance Level											
39												
40	**Gamma Statistics**											
41	k hat (MLE)	40.92				k star (bias corrected MLE)	31.53					
42	Theta hat (MLE)	0.915				Theta star (bias corrected MLE)	1.188					
43	nu hat (MLE)	1064				nu star (bias corrected)	819.8					
44	MLE Mean (bias corrected)	37.46				MLE Sd (bias corrected)	6.671					
45						Approximate Chi Square Value (0.05)	754.4					
46	Adjusted Level of Significance	0.0301				Adjusted Chi Square Value	745.4					
47												
48	**Assuming Gamma Distribution**											
49	95% Approximate Gamma UCL (use when n>=50))	40.71				95% Adjusted Gamma UCL (use when n<50)	41.2					
50												
51	**Lognormal GOF Test**											
52	Shapiro Wilk Test Statistic	0.978				**Shapiro Wilk Lognormal GOF Test**						

53	5% Shapiro Wilk Critical Value					0.866	Data appear Lognormal at 5% Significance Level					
54	Lilliefors Test Statistic					0.121	**Lilliefors Lognormal GOF Test**					
55	5% Lilliefors Critical Value					0.234	Data appear Lognormal at 5% Significance Level					
56	Data appear Lognormal at 5% Significance Level											
57												
58	**Lognormal Statistics**											
59	Minimum of Logged Data					3.332	Mean of logged Data					3.611
60	Maximum of Logged Data					3.892	SD of logged Data					0.163
61												
62	**Assuming Lognormal Distribution**											
63	95% H-UCL					40.82	90% Chebyshev (MVUE) UCL					42.56
64	95% Chebyshev (MVUE) UCL					44.87	97.5% Chebyshev (MVUE) UCL					48.07
65	99% Chebyshev (MVUE) UCL					54.37						
66												
67	**Nonparametric Distribution Free UCL Statistics**											
68	Data appear to follow a Discernible Distribution at 5% Significance Level											
69												
70	**Nonparametric Distribution Free UCLs**											
71	95% CLT UCL					40.25	95% Jackknife UCL					40.49
72	95% Standard Bootstrap UCL					40.22	95% Bootstrap-t UCL					40.57
73	95% Hall's Bootstrap UCL					40.43	95% Percentile Bootstrap UCL					40.15
74	95% BCA Bootstrap UCL					40.08						
75	90% Chebyshev(Mean, Sd) UCL					42.55	95% Chebyshev(Mean, Sd) UCL					44.86
76	97.5% Chebyshev(Mean, Sd) UCL					48.06	99% Chebyshev(Mean, Sd) UCL					54.35
77												
78	**Suggested UCL to Use**											
79	95% Student's-t UCL					40.49						
80												
81	Note: Suggestions regarding the selection of a 95% UCL are provided to help the user to select the most appropriate 95% UCL.											
82	Recommendations are based upon data size, data distribution, and skewness.											
83	These recommendations are based upon the results of the simulation studies summarized in Singh, Maichle, and Lee (2006).											
84	However, simulations results will not cover all Real World data sets; for additional insight the user may want to consult a statistician.											
85												

1	**UCL Statistics for Uncensored Full Data Sets**											
2												
3				User Selected Options	Strider Import Aggregate Testing							
4				Date/Time of Computation	ProUCL 5.112/1/2021 6:34:42 PM							
5				From File	WorkSheet.xls							
6				Full Precision	OFF							
7				Confidence Coefficient	95%							
8				Number of Bootstrap Operations	2000							
9												
10												
11	**SF_copper**											
12												
13	**General Statistics**											
14						Total Number of Observations	13		Number of Distinct Observations	11			
15									Number of Missing Observations	1		
16						Minimum	26		Mean	33		
17						Maximum	38		Median	34		
18						SD	3.367		Std. Error of Mean	0.934		
19						Coefficient of Variation	0.102		Skewness	-0.558		
20												
21	**Normal GOF Test**											
22						Shapiro Wilk Test Statistic	0.971		**Shapiro Wilk GOF Test**			
23						5% Shapiro Wilk Critical Value	0.866		Data appear Normal at 5% Significance Level			
24						Lilliefors Test Statistic	0.155		**Lilliefors GOF Test**			
25						5% Lilliefors Critical Value	0.234		Data appear Normal at 5% Significance Level			
26	Data appear Normal at 5% Significance Level											
27												
28	**Assuming Normal Distribution**											
29	**95% Normal UCL**								**95% UCLs (Adjusted for Skewness)**			
30						95% Student's-t UCL	34.66		95% Adjusted-CLT UCL (Chen-1995)	34.38		
31									95% Modified-t UCL (Johnson-1978)	34.64		
32												
33	**Gamma GOF Test**											
34						A-D Test Statistic	0.247		**Anderson-Darling Gamma GOF Test**			
35						5% A-D Critical Value	0.732		Detected data appear Gamma Distributed at 5% Significance Level			
36						K-S Test Statistic	0.169		**Kolmogorov-Smirnov Gamma GOF Test**			
37						5% K-S Critical Value	0.236		Detected data appear Gamma Distributed at 5% Significance Level			
38	Detected data appear Gamma Distributed at 5% Significance Level											
39												
40	**Gamma Statistics**											
41						k hat (MLE)	99.67		k star (bias corrected MLE)	76.72		
42						Theta hat (MLE)	0.331		Theta star (bias corrected MLE)	0.43		
43						nu hat (MLE)	2591		nu star (bias corrected)	1995		
44						MLE Mean (bias corrected)	33		MLE Sd (bias corrected)	3.768		
45									Approximate Chi Square Value (0.05)	1892		
46						Adjusted Level of Significance	0.0301		Adjusted Chi Square Value	1878		
47												
48	**Assuming Gamma Distribution**											
49						95% Approximate Gamma UCL (use when n>=50))	34.79		95% Adjusted Gamma UCL (use when n<50)	35.06		
50												
51	**Lognormal GOF Test**											
52						Shapiro Wilk Test Statistic	0.954		**Shapiro Wilk Lognormal GOF Test**			

53	5% Shapiro Wilk Critical Value					0.866	Data appear Lognormal at 5% Significance Level					
54	Lilliefors Test Statistic					0.168	**Lilliefors Lognormal GOF Test**					
55	5% Lilliefors Critical Value					0.234	Data appear Lognormal at 5% Significance Level					
56	Data appear Lognormal at 5% Significance Level											
57												
58	**Lognormal Statistics**											
59	Minimum of Logged Data					3.258	Mean of logged Data					3.491
60	Maximum of Logged Data					3.638	SD of logged Data					0.106
61												
62	**Assuming Lognormal Distribution**											
63	95% H-UCL					34.85	90% Chebyshev (MVUE) UCL					35.91
64	95% Chebyshev (MVUE) UCL					37.22	97.5% Chebyshev (MVUE) UCL					39.05
65	99% Chebyshev (MVUE) UCL					42.64						
66												
67	**Nonparametric Distribution Free UCL Statistics**											
68	Data appear to follow a Discernible Distribution at 5% Significance Level											
69												
70	**Nonparametric Distribution Free UCLs**											
71	95% CLT UCL					34.54	95% Jackknife UCL					34.66
72	95% Standard Bootstrap UCL					34.51	95% Bootstrap-t UCL					34.53
73	95% Hall's Bootstrap UCL					34.39	95% Percentile Bootstrap UCL					34.38
74	95% BCA Bootstrap UCL					34.38						
75	90% Chebyshev(Mean, Sd) UCL					35.8	95% Chebyshev(Mean, Sd) UCL					37.07
76	97.5% Chebyshev(Mean, Sd) UCL					38.83	99% Chebyshev(Mean, Sd) UCL					42.29
77												
78	**Suggested UCL to Use**											
79	95% Student's-t UCL					34.66						
80												
81	Note: Suggestions regarding the selection of a 95% UCL are provided to help the user to select the most appropriate 95% UCL.											
82	Recommendations are based upon data size, data distribution, and skewness.											
83	These recommendations are based upon the results of the simulation studies summarized in Singh, Maichle, and Lee (2006).											
84	However, simulations results will not cover all Real World data sets; for additional insight the user may want to consult a statistician.											
85												
86	Note: For highly negatively-skewed data, confidence limits (e.g., Chen, Johnson, Lognormal, and Gamma) may not be											
87	reliable. Chen's and Johnson's methods provide adjustments for positvely skewed data sets.											
88												

1	**UCL Statistics for Uncensored Full Data Sets**											
2												
3	User Selected Options	Strider Import Aggregate Testing										
4	Date/Time of Computation	ProUCL 5.112/1/2021 6:36:34 PM										
5	From File	WorkSheet.xls										
6	Full Precision	OFF										
7	Confidence Coefficient	95%										
8	Number of Bootstrap Operations	2000										
9												
10												
11	**SF_nickel**											
12												
13	**General Statistics**											
14	Total Number of Observations	14			Number of Distinct Observations	12						
15					Number of Missing Observations	0						
16	Minimum	31			Mean	45						
17	Maximum	57			Median	45						
18	SD	7.545			Std. Error of Mean	2.016						
19	Coefficient of Variation	0.168			Skewness	-0.196						
20												
21	**Normal GOF Test**											
22	Shapiro Wilk Test Statistic	0.98			**Shapiro Wilk GOF Test**							
23	5% Shapiro Wilk Critical Value	0.874			Data appear Normal at 5% Significance Level							
24	Lilliefors Test Statistic	0.103			**Lilliefors GOF Test**							
25	5% Lilliefors Critical Value	0.226			Data appear Normal at 5% Significance Level							
26	Data appear Normal at 5% Significance Level											
27												
28	**Assuming Normal Distribution**											
29	**95% Normal UCL**				**95% UCLs (Adjusted for Skewness)**							
30	95% Student's-t UCL	48.57			95% Adjusted-CLT UCL (Chen-1995)	48.2						
31					95% Modified-t UCL (Johnson-1978)	48.55						
32												
33	**Gamma GOF Test**											
34	A-D Test Statistic	0.187			**Anderson-Darling Gamma GOF Test**							
35	5% A-D Critical Value	0.733			Detected data appear Gamma Distributed at 5% Significance Level							
36	K-S Test Statistic	0.116			**Kolmogorov-Smirnov Gamma GOF Test**							
37	5% K-S Critical Value	0.228			Detected data appear Gamma Distributed at 5% Significance Level							
38	Detected data appear Gamma Distributed at 5% Significance Level											
39												
40	**Gamma Statistics**											
41	k hat (MLE)	36.63			k star (bias corrected MLE)	28.83						
42	Theta hat (MLE)	1.228			Theta star (bias corrected MLE)	1.561						
43	nu hat (MLE)	1026			nu star (bias corrected)	807.3						
44	MLE Mean (bias corrected)	45			MLE Sd (bias corrected)	8.381						
45					Approximate Chi Square Value (0.05)	742.3						
46	Adjusted Level of Significance	0.0312			Adjusted Chi Square Value	734.1						
47												
48	**Assuming Gamma Distribution**											
49	95% Approximate Gamma UCL (use when n>=50))	48.94			95% Adjusted Gamma UCL (use when n<50)	49.49						
50												
51	**Lognormal GOF Test**											
52	Shapiro Wilk Test Statistic	0.967			**Shapiro Wilk Lognormal GOF Test**							

53	5% Shapiro Wilk Critical Value					0.874	Data appear Lognormal at 5% Significance Level					
54	Lilliefors Test Statistic					0.11	**Lilliefors Lognormal GOF Test**					
55	5% Lilliefors Critical Value					0.226	Data appear Lognormal at 5% Significance Level					
56	Data appear Lognormal at 5% Significance Level											
57												
58	**Lognormal Statistics**											
59	Minimum of Logged Data					3.434	Mean of logged Data					3.793
60	Maximum of Logged Data					4.043	SD of logged Data					0.174
61												
62	**Assuming Lognormal Distribution**											
63	95% H-UCL					49.16	90% Chebyshev (MVUE) UCL					51.33
64	95% Chebyshev (MVUE) UCL					54.19	97.5% Chebyshev (MVUE) UCL					58.16
65	99% Chebyshev (MVUE) UCL					65.96						
66												
67	**Nonparametric Distribution Free UCL Statistics**											
68	Data appear to follow a Discernible Distribution at 5% Significance Level											
69												
70	**Nonparametric Distribution Free UCLs**											
71	95% CLT UCL					48.32	95% Jackknife UCL					48.57
72	95% Standard Bootstrap UCL					48.19	95% Bootstrap-t UCL					48.38
73	95% Hall's Bootstrap UCL					48.06	95% Percentile Bootstrap UCL					48.21
74	95% BCA Bootstrap UCL					48.14						
75	90% Chebyshev(Mean, Sd) UCL					51.05	95% Chebyshev(Mean, Sd) UCL					53.79
76	97.5% Chebyshev(Mean, Sd) UCL					57.59	99% Chebyshev(Mean, Sd) UCL					65.06
77												
78	**Suggested UCL to Use**											
79	95% Student's-t UCL					48.57						
80												
81	Note: Suggestions regarding the selection of a 95% UCL are provided to help the user to select the most appropriate 95% UCL.											
82	Recommendations are based upon data size, data distribution, and skewness.											
83	These recommendations are based upon the results of the simulation studies summarized in Singh, Maichle, and Lee (2006).											
84	However, simulations results will not cover all Real World data sets; for additional insight the user may want to consult a statistician.											
85												
86	Note: For highly negatively-skewed data, confidence limits (e.g., Chen, Johnson, Lognormal, and Gamma) may not be											
87	reliable. Chen's and Johnson's methods provide adjustments for positvely skewed data sets.											
88												

	Outlier Tests for Selected Uncensored Variables	
User Selected Options	**Strider Import Aggregate Testing**	
Date/Time of Computation	ProUCL 5.112/1/2021 6:16:13 PM	
From File	WorkSheet.xls	
Full Precision	OFF	

Dixon's Outlier Test for CSBC_copper

Number of Observations = 14

10% critical value: 0.492

5% critical value: 0.546

1% critical value: 0.641

1. Observation Value 58 is a Potential Outlier (Upper Tail)?

Test Statistic: 0.741

For 10% significance level, 58 is an outlier.

For 5% significance level, 58 is an outlier.

For 1% significance level, 58 is an outlier.

2. Observation Value 26 is a Potential Outlier (Lower Tail)?

Test Statistic: 0.417

For 10% significance level, 26 is not an outlier.

For 5% significance level, 26 is not an outlier.

For 1% significance level, 26 is not an outlier.

	Outlier Tests for Selected Uncensored Variables	
User Selected Options	**Strider Import Aggregate Testing**	
Date/Time of Computation	ProUCL 5.112/1/2021 6:26:11 PM	
From File	WorkSheet.xls	
Full Precision	OFF	

Dixon's Outlier Test for CSBC_mercury

Number of Observations = 14

10% critical value: 0.492

5% critical value: 0.546

1% critical value: 0.641

1. Observation Value 0.11 is a Potential Outlier (Upper Tail)?

Test Statistic: 0.773

For 10% significance level, 0.11 is an outlier.

For 5% significance level, 0.11 is an outlier.

For 1% significance level, 0.11 is an outlier.

2. Observation Value 0.042 is a Potential Outlier (Lower Tail)?

Test Statistic: 0.118

For 10% significance level, 0.042 is not an outlier.

For 5% significance level, 0.042 is not an outlier.

For 1% significance level, 0.042 is not an outlier.

	Outlier Tests for Selected Uncensored Variables	
User Selected Options	**Strider Import Aggregate Testing**	
Date/Time of Computation	ProUCL 5.112/1/2021 6:31:09 PM	
From File	WorkSheet.xls	
Full Precision	OFF	

Dixon's Outlier Test for CSBC_nickel

Number of Observations = 14

10% critical value: 0.492

5% critical value: 0.546

1% critical value: 0.641

1. Observation Value 68 is a Potential Outlier (Upper Tail)?

Test Statistic: 0.667

For 10% significance level, 68 is an outlier.

For 5% significance level, 68 is an outlier.

For 1% significance level, 68 is an outlier.

2. Observation Value 28 is a Potential Outlier (Lower Tail)?

Test Statistic: 0.250

For 10% significance level, 28 is not an outlier.

For 5% significance level, 28 is not an outlier.

For 1% significance level, 28 is not an outlier.

	Outlier Tests for Selected Uncensored Variables	
User Selected Options	**Strider Import Aggregate Testing**	
Date/Time of Computation	ProUCL 5.112/1/2021 6:34:22 PM	
From File	WorkSheet.xls	
Full Precision	OFF	

Dixon's Outlier Test for SF_copper

Number of Observations = 14

10% critical value: 0.492

5% critical value: 0.546

1% critical value: 0.641

1. Observation Value 67 is a Potential Outlier (Upper Tail)?

Test Statistic: 0.811

For 10% significance level, 67 is an outlier.

For 5% significance level, 67 is an outlier.

For 1% significance level, 67 is an outlier.

2. Observation Value 26 is a Potential Outlier (Lower Tail)?

Test Statistic: 0.364

For 10% significance level, 26 is not an outlier.

For 5% significance level, 26 is not an outlier.

For 1% significance level, 26 is not an outlier.

Outlier Tests for Selected Uncensored Variables		
User Selected Options	**Strider Import Aggregate Testing**	
Date/Time of Computation	ProUCL 5.112/1/2021 6:36:27 PM	
From File	WorkSheet.xls	
Full Precision	OFF	

Dixon's Outlier Test for SF_nickel

Number of Observations = 14

10% critical value: 0.492

5% critical value: 0.546

1% critical value: 0.641

1. Observation Value 57 is a Potential Outlier (Upper Tail)?

Test Statistic: 0.333

For 10% significance level, 57 is not an outlier.

For 5% significance level, 57 is not an outlier.

For 1% significance level, 57 is not an outlier.

2. Observation Value 31 is a Potential Outlier (Lower Tail)?

Test Statistic: 0.400

For 10% significance level, 31 is not an outlier.

For 5% significance level, 31 is not an outlier.

For 1% significance level, 31 is not an outlier.

APPENDIX D

Report Limitations and Guidelines for Use

REPORT LIMITATIONS AND USE GUIDELINES

Reliance Conditions for Third Parties

This report was prepared for the exclusive use of the Client. No other party may rely on this report or the product of our services without the express written consent of Aspect Consulting, LLC (Aspect). This limitation is to provide our firm with reasonable protection against liability claims by third parties with whom there would otherwise be no contractual conditions or limitations and guidelines governing their use of the report. Within the limitations of scope, schedule and budget, our services have been executed in accordance with our Agreement with the Client and recognized standards of professionals in the same locality and involving similar conditions.

Services for Specific Purposes, Persons and Projects

Aspect has performed the services in general accordance with the scope and limitations of our Agreement. This report has been prepared for the exclusive use of the Client and their authorized third parties, approved in writing by Aspect. This report is not intended for use by others, and the information contained herein is not applicable to other properties.

This report is not, and should not, be construed as a warranty or guarantee regarding the presence or absence of hazardous substances or petroleum products that may affect the subject property. The report is not intended to make any representation concerning title or ownership to the subject property. If real property records were reviewed, they were reviewed for the sole purpose of determining the subject property's historical uses. All findings, conclusions, and recommendations stated in this report are based on the data and information provided to Aspect, current use of the subject property, and observations and conditions that existed on the date and time of the report.

Aspect structures its services to meet the specific needs of our clients. Because each environmental study is unique, each environmental report is unique, prepared solely for the specific client and subject property. This report should not be applied for any purpose or project except the purpose described in the Agreement.

This Report Is Project-Specific

Aspect considered a number of unique, project-specific factors when establishing the Scope of Work for this project and report. You should not rely on this report if it was:

- Not prepared for you
- Not prepared for the specific purpose identified in the Agreement
- Not prepared for the specific real property assessed
- Completed before important changes occurred concerning the subject property, project or governmental regulatory actions

If changes are made to the project or subject property after the date of this report, Aspect should be retained to assess the impact of the changes with respect to the conclusions contained in the report.

Geoscience Interpretations

The geoscience practices (geotechnical engineering, geology, and environmental science) require interpretation of spatial information that can make them less exact than other engineering and natural science disciplines. It is important to recognize this limitation in evaluating the content of the report. If you are unclear how these "Report Limitations and Use Guidelines" apply to your project or site, you should contact Aspect.

Discipline-Specific Reports Are Not Interchangeable

The equipment, techniques and personnel used to perform an environmental study differ significantly from those used to perform a geotechnical or geologic study and vice versa. For that reason, a geotechnical engineering or geologic report does not usually address any environmental findings, conclusions or recommendations; e.g., about the likelihood of encountering underground storage tanks or regulated contaminants. Similarly, environmental reports are not used to address geotechnical or geologic concerns regarding the subject property.

Environmental Regulations Are Not Static

Some hazardous substances or petroleum products may be present near the subject property in quantities or under conditions that may have led, or may lead, to contamination of the subject property, but are not included in current local, state or federal regulatory definitions of hazardous substances or petroleum products or do not otherwise present potential liability. Changes may occur in the standards for appropriate inquiry or regulatory definitions of hazardous substance and petroleum products; therefore, this report has a limited useful life.

Property Conditions Change Over Time

This report is based on conditions that existed at the time the study was performed. The findings and conclusions of this report may be affected by the passage of time (for example, Phase I ESA reports are applicable for 180 days), by events such as a change in property use or occupancy, or by natural events, such as floods, earthquakes, slope failure or groundwater fluctuations. If more than six months have passed since issuance of our report, or if any of the described events may have occurred following the issuance of the report, you should contact Aspect so that we may evaluate whether changed conditions affect the continued reliability or applicability of our conclusions and recommendations.

Phase I ESAs – Uncertainty Remains After Completion

Aspect has performed the services in general accordance with the scope and limitations of our Agreement and the current version of the "Standard Practice for Environmental Site Assessments: Phase I Environmental Site Assessment Process", ASTM E1527, and U.S. Environmental Protection Agency (EPA)'s Federal Standard 40 CFR Part 312 "Innocent Landowners, Standards for Conducting All Appropriate Inquiries".

No ESA can wholly eliminate uncertainty regarding the potential for recognized environmental conditions in connection with subject property. Performance of an ESA study is intended to reduce, but not eliminate, uncertainty regarding the potential for environmental conditions affecting the subject property. There is always a potential that areas with contamination that were not identified during this ESA exist at the subject property or in the study area. Further evaluation of such potential would require additional research, subsurface exploration, sampling and/or testing.

Historical Information Provided by Others

Aspect has relied upon information provided by others in our description of historical conditions and in our review of regulatory databases and files. The available data does not provide definitive information with regard to all past uses, operations or incidents affecting the subject property or adjacent properties. Aspect makes no warranties or guarantees regarding the accuracy or completeness of information provided or compiled by others.

Exclusion of Mold, Fungus, Radon, Lead, and HBM

Aspect's services do not include the investigation, detection, prevention or assessment of the presence of molds, fungi, spores, bacteria, and viruses, and/or any of their byproducts. Accordingly, this report does not include any interpretations, recommendations, findings, or conclusions regarding the detection, assessment, prevention or abatement of molds, fungi, spores, bacteria, and viruses, and/or any of their byproducts. Aspect's services also do not include the investigation or assessment of hazardous building materials (HBM) such as asbestos, polychlorinated biphenyls (PCBs) in light ballasts, lead based paint, asbestos-containing building materials, urea-formaldehyde insulation in on-site structures or debris or any other HBMs. Aspect's services do not include an evaluation of radon or lead in drinking water, unless specifically requested.

MEMORANDUM

Project No. 210550-A-01

March 29, 2022

To: Taylor Lenderman, Strider Construction Co, Inc.

From:



3/29/2022

CARLA E. BROCK

Matthew Eddy, EIT
Project Engineer
meddy@aspectconsulting.com

Carla Brock, LHG
Sr. Associate Geologist
cbrock@aspectconsulting.com

Re: **March 2022 Import Chemical Testing Results – Mandan Pit**
Norton Terminal Development at the K-C Worldwide Site
2600 Federal Avenue, Everett, WA

Aspect Consulting, LLC (Aspect) has conducted chemical testing of potential import materials in support of the 3rd Interim Action (IA) at the KC Upland Area, to be conducted concurrently with the Port of Everett Norton Terminal Development. Aspect was retained by Strider Construction (Strider) to meet requirements for testing and evaluation of imported fill material that was provided in the Earthwork specification, Section 31. The work was conducted to supplement previous import material sampling and analysis because of an increase in the volume of subgrade to be placed on the site.

Strider requested that Aspect collect samples from two stockpiles at the Mandan Pit, located at 11423 Jordan Road in Arlington, Snohomish County, Washington. The Mandan Pit is a 185-acre gravel quarry operated by Granite Construction with mining of Quaternary (Pleistocene) glacial drift (Qgd) that includes glacial till and outwash (DNR, 2021). The requested stockpiles include one that contains material that meets the specifications for use as crushed surfacing base course (CSBC) and another that contains material that meets the specifications for use as structural fill (SF). Strider requested that Aspect collect 4 samples of CSBC and 10 samples of SF. Sampling activities were conducted on March 11, 2022.

This memo describes the sample collection procedures, analytical testing methods and results, a comparison of data to the site preliminary soil cleanup levels (PCLs), and conclusions regarding the suitability of the proposed import material to meet the chemical criteria.

Sample Collection

On March 11, 2022, Aspect collected 4 samples of CSBC and 10 samples of SF. Samples were collected in a radial pattern around each stockpile, with approximate even spacing around the respective stockpile circumferences. The locations of the stockpiles and associated sample locations (CSBC-15 through CSBC-18, and SF-15 through SF-24) are shown in Figure 1. At each location, a sample of freshly exposed soil was collected by removing a few inches of soil from the surface.

Samples of CSBC were field sieved to remove gravel prior to sample collection. Samples of SF and CSBC were placed into laboratory-prepared and -supplied sample jars, placed in a cooler with ice, and transported to Friedman & Bruya, Inc. (F&B) under proper chain of custody (COC) protocols. F&B is a National Environmental Laboratory Accreditation Program (NELAP)- accredited lab located in Seattle, Washington.

Analytical Testing

The aggregate samples were submitted to F&B for laboratory analysis of the following:

- Gasoline-range petroleum hydrocarbons by Northwest Method NWTPH-Gx
- Diesel-/oil-range petroleum hydrocarbons by Northwest Method NWTPH-Dx
- Arsenic, copper, lead, nickel, and zinc by EPA Method 6020B
- Mercury by EPA Method 1631E
- Polycyclic aromatic hydrocarbons (PAHs) by EPA Method 8270E
- Polychlorinated biphenyls (PCBs) by EPA Method 8082A

The laboratory analytical report is provided as Appendix A. Aspect completed a Level 2a data quality validation of the analytical data and concluded that all data are of known quality and are acceptable for use in this evaluation. The Data Validation Report is provided in Appendix B.

Results

Laboratory Analytical Data

The sample results were compared to the PCLs for the 3rd IA. The PCLs and soil sampling results are included in Tables 1 and 2 for CSBC and SF, respectively. The results are summarized by material in the following subsections.

Results for Crushed Surfacing Base Course – Table 1

The laboratory analytical results for the CSBC stockpile samples indicate that concentrations of petroleum hydrocarbons, PAHs, and PCBs are below the laboratory reporting limits, all of which are below the PCLs.

Concentrations of arsenic, copper, lead, nickel, and zinc were detected in each of the CSBC samples at concentrations above respective laboratory reporting limits, but below respective PCLs.

The laboratory reporting limit for mercury was equivalent to the PCL of 0.1 mg/kg; three of the CSBC samples did not contain mercury at concentrations above the reporting limit and PCL. Mercury was detected at a concentration of 0.15 mg/kg in sample CSBC-17, which slightly exceeds the PCL but is less than two times the PCL.

Results for Structural Fill – Table 2

The laboratory analytical results for the SF stockpile samples indicate that concentrations of petroleum hydrocarbons, PAHs, and PCBs are below the laboratory reporting limits, all of which are below the PCLs.

Concentrations of arsenic, copper, lead, nickel, and zinc were detected in each of the SF samples at concentrations above respective laboratory reporting limits, but below respective PCLs. Mercury was not detected in SF samples above the laboratory reporting limit (and PCL) of 0.1 mg/kg.

Conclusions

The proposed aggregate import sources at the Mandan Pit were sampled in accordance with the specification for earthwork and compared to the project chemical criteria. The results indicate that both the CSBC and SF materials meet the respective PCLs, with one exception:

- Mercury was detected at a concentration of 0.15 mg/kg in sample CSBC-17. The reported mercury concentration is less than two times the PCL and is within the range of natural background concentrations noted in the Washington State Department of Ecology (Ecology) Natural Background Soil Metals Concentrations in Washington State for western Washington of 0.01 to 0.19 mg/kg (Ecology, 1994). The single detection of mercury above the PCL in sample CSBC-17 is suspected to be naturally occurring.

References

Washington State Department of Natural Resources (DNR), 2021, Washington Geologic Information Portal, https://www.dnr.wa.gov/geologyportal, accessed on 12/6/2021.

Washington State Department of Ecology (Ecology), 1994. Natural Background Soil Metals Concentrations in Washington State. October 1994.

Limitations

Work for this project was performed for Strider Construction Co, Inc. (Client), and this memorandum was prepared in accordance with generally accepted professional practices for the nature and conditions of work completed in the same or similar localities, at the time the work was performed. This memorandum does not represent a legal opinion. No other warranty, expressed or implied, is made.

All reports prepared by Aspect Consulting for the Client apply only to the services described in the Agreement(s) with the Client. Any use or reuse by any party other than the Client is at the sole risk of that party, and without liability to Aspect Consulting. Aspect Consulting's original files/reports shall govern in the event of any dispute regarding the content of electronic documents furnished to others.

Please refer to Appendix C titled "Report Limitations and Guidelines for Use" for additional information governing the use of this report.

Attachments: Table 1 – Crushed Surfacing Base Course Stockpile Results
Table 2 – Structural Fill Stockpile Results
Figure 1 – Exploration Map
Appendix A – Laboratory Report
Appendix B – Data Validation Report
Appendix C – Report Limitations and Guidelines for Use

V:\210550 Port of Everett Norton Terminal\Deliverables\March 2022 Import Chemical Testing Results\March 2022 Import Chemical Testing Results – Mandan Pit .docx

TABLES

Table 1. Crushed Surfacing Base Course Stockpile Results

Project No. 210550 , Seattle, Washington

	Sample Location	Mandan Pit Crushed Surfacing Base Course Stockpile			
	Sample Identification	**CSBC-15**	**CSBC-16**	**CSBC-17**	**CSBC-18**
	Sample Date	**03/11/2022**	**03/11/2022**	**03/11/2022**	**03/11/2022**
Analyte	**Port of Everett Site Preliminary Soil CUL**				
Metals					
Arsenic	20	**3.2**	**2.74**	**2.91**	**3.34**
Copper	36	**24.4**	**20.8**	**24.1**	**22.4**
Lead	56	**2.84**	**2.87**	**3.29**	**2.75**
Mercury	0.1	< 0.1 U	< 0.1 U	**0.15**	< 0.1 U
Nickel	48	**21.5**	**21.7**	**22.2**	**30.8**
Zinc	85	**29.9**	**31.8**	**29.2**	**32.2**
Polycyclic Aromatic Hydrocarbons					
1-Methylnaphthalene	4500	< 0.05 U	< 0.05 U	< 0.01 U	< 0.01 U
2-Methylnaphthalene	0.64	< 0.05 U	< 0.05 U	< 0.01 U	< 0.01 U
Acenaphthene	1.2	< 0.05 U	< 0.05 U	< 0.01 U	< 0.01 U
Acenaphthylene	210000	< 0.05 U	< 0.05 U	< 0.01 U	< 0.01 U
Anthracene	1100000	< 0.05 U	< 0.05 U	< 0.01 U	< 0.01 U
Benzo(g,h,i)perylene	110000	< 0.05 U	< 0.05 U	< 0.01 U	< 0.01 U
Fluoranthene	140000	< 0.05 U	< 0.05 U	< 0.01 U	< 0.01 U
Fluorene	140000	< 0.05 U	< 0.05 U	< 0.01 U	< 0.01 U
Naphthalene	0.87	< 0.05 U	< 0.05 U	< 0.01 U	< 0.01 U
Phenanthrene	1100000	< 0.05 U	< 0.05 U	< 0.01 U	< 0.01 U
Pyrene	110000	< 0.05 U	< 0.05 U	< 0.01 U	< 0.01 U
Benz(a)anthracene		< 0.05 U	< 0.05 U	< 0.01 U	< 0.01 U
Benzo(a)pyrene		< 0.05 U	< 0.05 U	< 0.01 U	< 0.01 U
Benzo(b)fluoranthene		< 0.05 U	< 0.05 U	< 0.01 U	< 0.01 U
Benzo(k)fluoranthene		< 0.05 U	< 0.05 U	< 0.01 U	< 0.01 U
Chrysene		< 0.05 U	< 0.05 U	< 0.01 U	< 0.01 U
Dibenzo(a,h)anthracene		< 0.05 U	< 0.05 U	< 0.01 U	< 0.01 U
Indeno(1,2,3-cd)pyrene		< 0.05 U	< 0.05 U	< 0.01 U	< 0.01 U
Total cPAHs TEQ[1]	0.16	< 0.05 U	< 0.05 U	< 0.01 U	< 0.01 U
Polychlorinated Biphenyls					
Aroclor 1016		< 0.02 U	< 0.02 U	< 0.02 U	< 0.02 U
Aroclor 1221		< 0.02 U	< 0.02 U	< 0.02 U	< 0.02 U
Aroclor 1232		< 0.02 U	< 0.02 U	< 0.02 U	< 0.02 U
Aroclor 1242		< 0.02 U	< 0.02 U	< 0.02 U	< 0.02 U
Aroclor 1248		< 0.02 U	< 0.02 U	< 0.02 U	< 0.02 U
Aroclor 1254		< 0.02 U	< 0.02 U	< 0.02 U	< 0.02 U
Aroclor 1260		< 0.02 U	< 0.02 U	< 0.02 U	< 0.02 U
Aroclor 1262		< 0.02 U	< 0.02 U	< 0.02 U	< 0.02 U
Aroclor 1268		< 0.02 U	< 0.02 U	< 0.02 U	< 0.02 U
Total PCBs (Sum of Aroclors)	0.12	< 0.02 U	< 0.02 U	< 0.02 U	< 0.02 U
Total Petroleum Hydrocarbons					
Gasoline Range Organics	20	< 5 U	< 5 U	< 5 U	< 5 U
Diesel Range Organics	200	< 25 U	< 25 U	< 25 U	< 25 U
Motor Oil Range Organics	200	< 120 U	< 120 U	< 120 U	< 120 U

Notes:

All data in milligrams per kilogram

Bold - indicates an analyte was detected above the laboratory reporting limit

Blue Shaded - indicates an analyte was detected above the Site Preliminary Soil Cleanup Level (CUL)

[1]Total carcinogenic polycyclic aromatic hydrocarbon (cPAH) toxicity equivalent concentration (TEQ) calculated per WAC 173-34-708(8) using 1/2 the reporting limit for non-detect results

U - Analyte not detected at or above Reporting Limit (RL) shown

Table 2. Structural Fill Stockpile Results

Project No. 210550, Seattle, Washington

	Sample Location	Mandan Pit Structural Fill Stockpile									
	Sample Identificaiton	**SF-15**	**SF-16**	**SF-17**	**SF-18**	**SF-19**	**SF-20**	**SF-21**	**SF-22**	**SF-23**	**SF-24**
	Sample Date	**03/11/2022**	**03/11/2022**	**03/11/2022**	**03/11/2022**	**03/11/2022**	**03/11/2022**	**03/11/2022**	**03/11/2022**	**03/11/2022**	**03/11/2022**
Analyte	**Port of Everett Site Preliminary Soil CUL**										
Metals											
Arsenic	20	**3.82**	**3.37**	**3.66**	**3.83**	**3.01**	**2.99**	**3.53**	**3.46**	**3.12**	**2.98**
Copper	36	**25**	**22.1**	**22**	**22.1**	**17.3**	**21.4**	**23.5**	**22**	**21.6**	**21**
Lead	56	**2.53**	**2.32**	**2.67**	**3.07**	**2.01**	**2.48**	**2.35**	**2.22**	**2.34**	**2.34**
Mercury	0.1	< 0.1 U	< 0.1 U	< 0.1 U	< 0.1 U	< 0.1 U	< 0.1 U	< 0.1 U	< 0.1 U	< 0.1 U	< 0.1 U
Nickel	48	**30.7**	**28.1**	**26.5**	**25.5**	**21.6**	**24.9**	**24.5**	**27.2**	**25.9**	**24.6**
Zinc	85	**33.5**	**29.7**	**31.3**	**31**	**26**	**28.2**	**30.2**	**30.1**	**27.3**	**27.9**
Polycyclic Aromatic Hydrocarbons											
1-Methylnaphthalene	4500	< 0.01 U	< 0.01 U	< 0.01 U	< 0.01 U	< 0.01 U	< 0.01 U	< 0.01 U	< 0.01 U	< 0.01 U	< 0.01 U
2-Methylnaphthalene	0.64	< 0.01 U	< 0.01 U	< 0.01 U	< 0.01 U	< 0.01 U	< 0.01 U	< 0.01 U	< 0.01 U	< 0.01 U	< 0.01 U
Acenaphthene	1.2	< 0.01 U	< 0.01 U	< 0.01 U	< 0.01 U	< 0.01 U	< 0.01 U	< 0.01 U	< 0.01 U	< 0.01 U	< 0.01 U
Acenaphthylene	210000	< 0.01 U	< 0.01 U	< 0.01 U	< 0.01 U	< 0.01 U	< 0.01 U	< 0.01 U	< 0.01 U	< 0.01 U	< 0.01 U
Anthracene	1100000	< 0.01 U	< 0.01 U	< 0.01 U	< 0.01 U	< 0.01 U	< 0.01 U	< 0.01 U	< 0.01 U	< 0.01 U	< 0.01 U
Benzo(g,h,i)perylene	110000	< 0.01 U	< 0.01 U	< 0.01 U	< 0.01 U	< 0.01 U	< 0.01 U	< 0.01 U	< 0.01 U	< 0.01 U	< 0.01 U
Fluoranthene	140000	< 0.01 U	< 0.01 U	< 0.01 U	< 0.01 U	< 0.01 U	< 0.01 U	< 0.01 U	< 0.01 U	< 0.01 U	< 0.01 U
Fluorene	140000	< 0.01 U	< 0.01 U	< 0.01 U	< 0.01 U	< 0.01 U	< 0.01 U	< 0.01 U	< 0.01 U	< 0.01 U	< 0.01 U
Naphthalene	0.87	< 0.01 U	< 0.01 U	< 0.01 U	< 0.01 U	< 0.01 U	< 0.01 U	< 0.01 U	< 0.01 U	< 0.01 U	< 0.01 U
Phenanthrene	1100000	< 0.01 U	< 0.01 U	< 0.01 U	< 0.01 U	< 0.01 U	< 0.01 U	< 0.01 U	< 0.01 U	< 0.01 U	< 0.01 U
Pyrene	110000	< 0.01 U	< 0.01 U	< 0.01 U	< 0.01 U	< 0.01 U	< 0.01 U	< 0.01 U	< 0.01 U	< 0.01 U	< 0.01 U
Benz(a)anthracene		< 0.01 U	< 0.01 U	< 0.01 U	< 0.01 U	< 0.01 U	< 0.01 U	< 0.01 U	< 0.01 U	< 0.01 U	< 0.01 U
Benzo(a)pyrene		< 0.01 U	< 0.01 U	< 0.01 U	< 0.01 U	< 0.01 U	< 0.01 U	< 0.01 U	< 0.01 U	< 0.01 U	< 0.01 U
Benzo(b)fluoranthene		< 0.01 U	< 0.01 U	< 0.01 U	< 0.01 U	< 0.01 U	< 0.01 U	< 0.01 U	< 0.01 U	< 0.01 U	< 0.01 U
Benzo(k)fluoranthene		< 0.01 U	< 0.01 U	< 0.01 U	< 0.01 U	< 0.01 U	< 0.01 U	< 0.01 U	< 0.01 U	< 0.01 U	< 0.01 U
Chrysene		< 0.01 U	< 0.01 U	< 0.01 U	< 0.01 U	< 0.01 U	< 0.01 U	< 0.01 U	< 0.01 U	< 0.01 U	< 0.01 U
Dibenzo(a,h)anthracene		< 0.01 U	< 0.01 U	< 0.01 U	< 0.01 U	< 0.01 U	< 0.01 U	< 0.01 U	< 0.01 U	< 0.01 U	< 0.01 U
Indeno(1,2,3-cd)pyrene		< 0.01 U	< 0.01 U	< 0.01 U	< 0.01 U	< 0.01 U	< 0.01 U	< 0.01 U	< 0.01 U	< 0.01 U	< 0.01 U
Total cPAHs TEQ[1]	0.16	< 0.01 U	< 0.01 U	< 0.01 U	< 0.01 U	< 0.01 U	< 0.01 U	< 0.01 U	< 0.01 U	< 0.01 U	< 0.01 U
Polychlorinated Biphenyls											
Aroclor 1016		< 0.02 U	< 0.02 U	< 0.02 U	< 0.02 U	< 0.02 U	< 0.02 U	< 0.02 U	< 0.02 U	< 0.02 U	< 0.02 U
Aroclor 1221		< 0.02 U	< 0.02 U	< 0.02 U	< 0.02 U	< 0.02 U	< 0.02 U	< 0.02 U	< 0.02 U	< 0.02 U	< 0.02 U
Aroclor 1232		< 0.02 U	< 0.02 U	< 0.02 U	< 0.02 U	< 0.02 U	< 0.02 U	< 0.02 U	< 0.02 U	< 0.02 U	< 0.02 U
Aroclor 1242		< 0.02 U	< 0.02 U	< 0.02 U	< 0.02 U	< 0.02 U	< 0.02 U	< 0.02 U	< 0.02 U	< 0.02 U	< 0.02 U
Aroclor 1248		< 0.02 U	< 0.02 U	< 0.02 U	< 0.02 U	< 0.02 U	< 0.02 U	< 0.02 U	< 0.02 U	< 0.02 U	< 0.02 U
Aroclor 1254		< 0.02 U	< 0.02 U	< 0.02 U	< 0.02 U	< 0.02 U	< 0.02 U	< 0.02 U	< 0.02 U	< 0.02 U	< 0.02 U
Aroclor 1260		< 0.02 U	< 0.02 U	< 0.02 U	< 0.02 U	< 0.02 U	< 0.02 U	< 0.02 U	< 0.02 U	< 0.02 U	< 0.02 U
Aroclor 1262		< 0.02 U	< 0.02 U	< 0.02 U	< 0.02 U	< 0.02 U	< 0.02 U	< 0.02 U	< 0.02 U	< 0.02 U	< 0.02 U
Aroclor 1268		< 0.02 U	< 0.02 U	< 0.02 U	< 0.02 U	< 0.02 U	< 0.02 U	< 0.02 U	< 0.02 U	< 0.02 U	< 0.02 U
Total PCBs (Sum of Aroclors)	0.12	< 0.02 U	< 0.02 U	< 0.02 U	< 0.02 U	< 0.02 U	< 0.02 U	< 0.02 U	< 0.02 U	< 0.02 U	< 0.02 U
Total Petroleum Hydrocarbons											
Gasoline Range Organics	20	< 5 U	< 5 U	< 5 U	< 5 U	< 5 U	< 5 U	< 5 U	< 5 U	< 5 U	< 5 U
Diesel Range Organics	200	< 25 U	< 25 U	< 25 U	< 25 U	< 25 U	< 25 U	< 25 U	< 25 U	< 25 U	< 25 U
Motor Oil Range Organics	200	< 120 U	< 120 U	< 120 U	< 120 U	< 120 U	< 120 U	< 120 U	< 120 U	< 120 U	< 120 U

Notes:

All data in milligrams per kilogram

Bold - indicates an analyte was detected above the laboratory reporting limit

[1]Total carcinogenic polycyclic aromatic hydrocarbon (cPAH) toxicity equivalent concentration (TEQ) calculated per WAC 173-34-708(8) using 1/2 the reporting limit for non-detect results

U - Analyte not detected at or above Reporting Limit (RL) shown

FIGURE

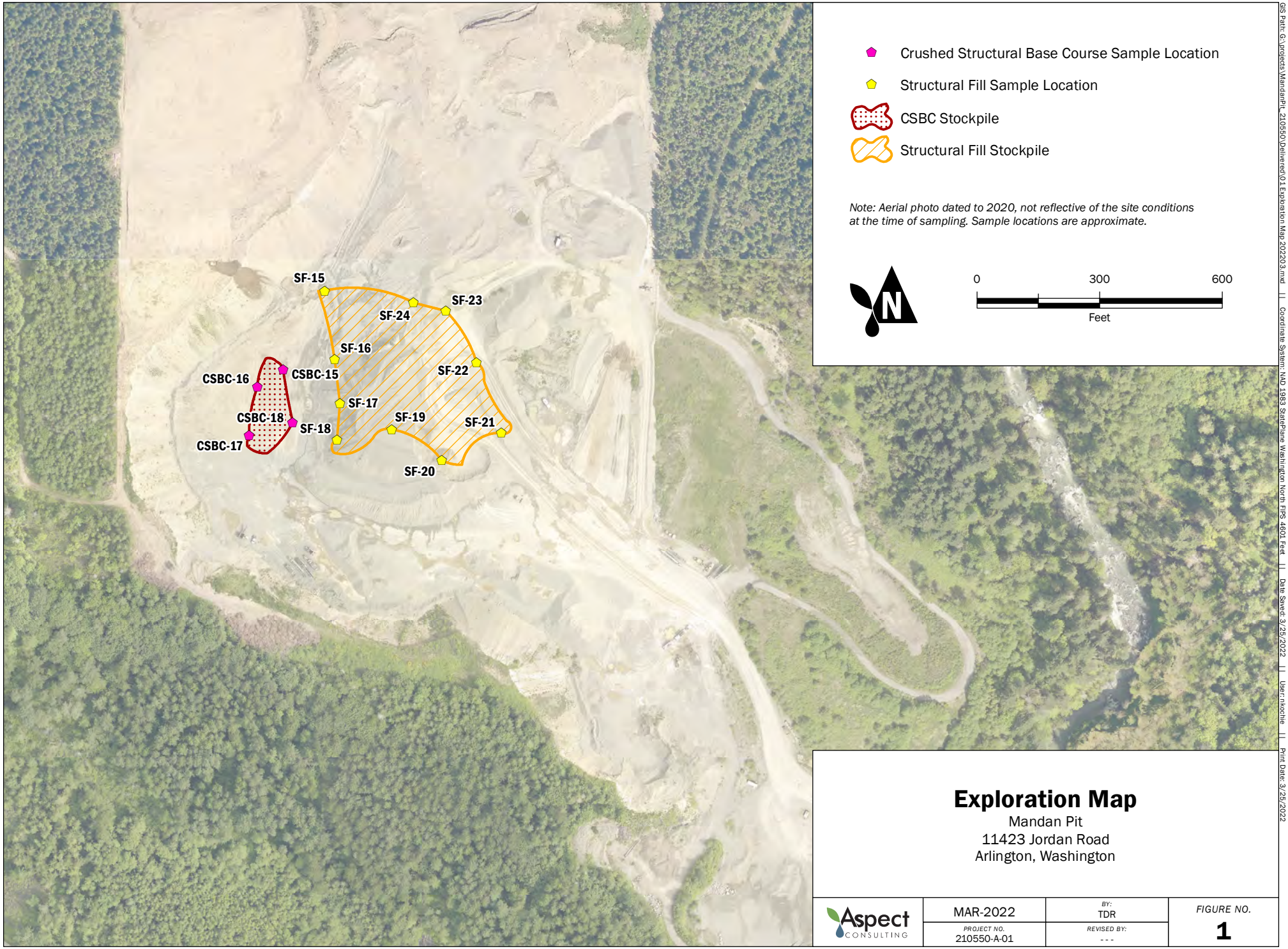

Crushed Structural Base Course Sample Location

Structural Fill Sample Location

CSBC Stockpile

Structural Fill Stockpile

Note: Aerial photo dated to 2020, not reflective of the site conditions at the time of sampling. Sample locations are approximate.

N

0 300 600

Feet

Exploration Map

Mandan Pit
11423 Jordan Road
Arlington, Washington

Aspect Consulting	MAR-2022	BY: TDR	FIGURE NO. 1
	PROJECT NO. 210550-A-01	REVISED BY: ---	

GIS Path: G:\projects\MandanPit_210550\Deliverables\01 Exploration Map 202203.mxd || Coordinate System: NAD 1983 StatePlane Washington North FIPS 4601 Feet || Date Saved: 3/25/2022 || User: hkochie || Print Date: 3/25/2022

APPENDIX A

Laboratory Report

FRIEDMAN & BRUYA, INC.

ENVIRONMENTAL CHEMISTS

James E. Bruya, Ph.D.
Yelena Aravkina, M.S.
Michael Erdahl, B.S.
Vineta Mills, M.S.
Eric Young, B.S.

3012 16th Avenue West
Seattle, WA 98119-2029
(206) 285-8282
fbi@isomedia.com
www.friedmanandbruya.com

March 18, 2022

Matthew Eddy, Project Manager
Aspect Consulting, LLC
350 Madison Ave. N.
Bainbridge Island, WA 98110-1810

Dear Mr Eddy:

Included are the results from the testing of material submitted on March 11, 2022 from the Port of Everett Soils 210550-A-01, F&BI 203243 project. There are 59 pages included in this report. Any samples that may remain are currently scheduled for disposal in 30 days, or as directed by the Chain of Custody document. If you would like us to return your samples or arrange for long term storage at our offices, please contact us as soon as possible.

We appreciate this opportunity to be of service to you and hope you will call if you have any questions.

Sincerely,

FRIEDMAN & BRUYA, INC.



Michael Erdahl
Project Manager

Enclosures
c: Aspect Data
ASP0318R.DOC

CASE NARRATIVE

This case narrative encompasses samples received on March 11, 2022 by Friedman & Bruya, Inc. from the Aspect Consulting, LLC Port of Everett Soils 210550-A-01, F&BI 203243 project. Samples were logged in under the laboratory ID's listed below.

Laboratory ID	Aspect Consulting, LLC
203243 -01	CSBC-15
203243 -02	CSBC-16
203243 -03	CSBC-17
203243 -04	CSBC-18
203243 -05	SF-15
203243 -06	SF-16
203243 -07	SF-17
203243 -08	SF-18
203243 -09	SF-19
203243 -10	SF-20
203243 -11	SF-21
203243 -12	SF-22
203243 -13	SF-23
203243 -14	SF-24

All quality control requirements were acceptable.

Date of Report: 03/18/22
Date Received: 03/11/22
Project: Port of Everett Soils 210550-A-01, F&BI 203243
Date Extracted: 03/16/22
Date Analyzed: 03/16/22

RESULTS FROM THE ANALYSIS OF SOIL SAMPLES FOR TOTAL PETROLEUM HYDROCARBONS AS GASOLINE USING METHOD NWTPH-Gx

Results Reported on a Dry Weight Basis
Results Reported as mg/kg (ppm)

Sample ID Laboratory ID	Gasoline Range	Surrogate (% Recovery) (Limit 50-150)
CSBC-15 203243-01	<5	92
CSBC-16 203243-02	<5	91
CSBC-17 203243-03	<5	75
CSBC-18 203243-04	<5	98
SF-15 203243-05	<5	97
SF-16 203243-06	<5	99
SF-17 203243-07	<5	95
SF-18 203243-08	<5	101
SF-19 203243-09	<5	99
SF-20 203243-10	<5	96
SF-21 203243-11	<5	96

Date of Report: 03/18/22
Date Received: 03/11/22
Project: Port of Everett Soils 210550-A-01, F&BI 203243
Date Extracted: 03/16/22
Date Analyzed: 03/16/22

RESULTS FROM THE ANALYSIS OF SOIL SAMPLES FOR TOTAL PETROLEUM HYDROCARBONS AS GASOLINE USING METHOD NWTPH-Gx

Results Reported on a Dry Weight Basis
Results Reported as mg/kg (ppm)

Sample ID Laboratory ID	Gasoline Range	Surrogate (% Recovery) (Limit 50-150)
SF-22 203243-12	<5	78
SF-23 203243-13	<5	95
SF-24 203243-14	<5	100
Method Blank 02-601 MB	<5	90

Date of Report: 03/18/22
Date Received: 03/11/22
Project: Port of Everett Soils 210550-A-01, F&BI 203243
Date Extracted: 03/14/22
Date Analyzed: 03/14/22

RESULTS FROM THE ANALYSIS OF SOIL SAMPLES FOR TOTAL PETROLEUM HYDROCARBONS AS DIESEL AND MOTOR OIL USING METHOD NWTPH-Dx

Results Reported on a Dry Weight Basis
Results Reported as mg/kg (ppm)

Sample ID Laboratory ID	Diesel Range (C_{10}-C_{25})	Motor Oil Range (C_{25}-C_{36})	Surrogate (% Recovery) (Limit 53-144)
CSBC-15 203243-01	<25	<120	98
CSBC-16 203243-02	<25	<120	98
CSBC-17 203243-03	<25	<120	97
CSBC-18 203243-04	<25	<120	98
SF-15 203243-05	<25	<120	98
SF-16 203243-06	<25	<120	98
SF-17 203243-07	<25	<120	96
SF-18 203243-08	<25	<120	97
SF-19 203243-09	<25	<120	99
SF-20 203243-10	<25	<120	96
SF-21 203243-11	<25	<120	96

Date of Report: 03/18/22
Date Received: 03/11/22
Project: Port of Everett Soils 210550-A-01, F&BI 203243
Date Extracted: 03/14/22
Date Analyzed: 03/14/22

RESULTS FROM THE ANALYSIS OF SOIL SAMPLES FOR TOTAL PETROLEUM HYDROCARBONS AS DIESEL AND MOTOR OIL USING METHOD NWTPH-Dx

Results Reported on a Dry Weight Basis
Results Reported as mg/kg (ppm)

Sample ID Laboratory ID	Diesel Range (C_{10}-C_{25})	Motor Oil Range (C_{25}-C_{36})	Surrogate (% Recovery) (Limit 53-144)
SF-22 203243-12	<25	<120	95
SF-23 203243-13	<25	<120	95
SF-24 203243-14	<25	<120	106
Method Blank 02-648 MB	<25	<120	97

Analysis For Total Metals By EPA Method 6020B

Client ID:	CSBC-15	Client:	Aspect Consulting, LLC
Date Received:	03/11/22	Project:	210550-A-01, F&BI 203243
Date Extracted:	03/14/22	Lab ID:	203243-01
Date Analyzed:	03/14/22	Data File:	203243-01.109
Matrix:	Soil	Instrument:	ICPMS2
Units:	mg/kg (ppm) Dry Weight	Operator:	SP

Analyte:	Concentration mg/kg (ppm)
Arsenic	3.20
Copper	24.4
Lead	2.84
Nickel	21.5
Zinc	29.9

Analysis For Total Metals By EPA Method 6020B

Client ID:	CSBC-16	Client:	Aspect Consulting, LLC
Date Received:	03/11/22	Project:	210550-A-01, F&BI 203243
Date Extracted:	03/14/22	Lab ID:	203243-02
Date Analyzed:	03/14/22	Data File:	203243-02.112
Matrix:	Soil	Instrument:	ICPMS2
Units:	mg/kg (ppm) Dry Weight	Operator:	SP

Analyte:	Concentration mg/kg (ppm)
Arsenic	2.74
Copper	20.8
Lead	2.87
Nickel	21.7
Zinc	31.8

Analysis For Total Metals By EPA Method 6020B

Client ID:	CSBC-17	Client:	Aspect Consulting, LLC
Date Received:	03/11/22	Project:	210550-A-01, F&BI 203243
Date Extracted:	03/14/22	Lab ID:	203243-03
Date Analyzed:	03/14/22	Data File:	203243-03.113
Matrix:	Soil	Instrument:	ICPMS2
Units:	mg/kg (ppm) Dry Weight	Operator:	SP

Analyte:	Concentration mg/kg (ppm)
Arsenic	2.91
Copper	24.1
Lead	3.29
Nickel	22.2
Zinc	29.2

Analysis For Total Metals By EPA Method 6020B

Client ID:	CSBC-18	Client:	Aspect Consulting, LLC
Date Received:	03/11/22	Project:	210550-A-01, F&BI 203243
Date Extracted:	03/14/22	Lab ID:	203243-04
Date Analyzed:	03/14/22	Data File:	203243-04.114
Matrix:	Soil	Instrument:	ICPMS2
Units:	mg/kg (ppm) Dry Weight	Operator:	SP

Analyte:	Concentration mg/kg (ppm)
Arsenic	3.34
Copper	22.4
Lead	2.75
Nickel	30.8
Zinc	32.2

Analysis For Total Metals By EPA Method 6020B

Client ID:	SF-15	Client:	Aspect Consulting, LLC
Date Received:	03/11/22	Project:	210550-A-01, F&BI 203243
Date Extracted:	03/14/22	Lab ID:	203243-05
Date Analyzed:	03/14/22	Data File:	203243-05.115
Matrix:	Soil	Instrument:	ICPMS2
Units:	mg/kg (ppm) Dry Weight	Operator:	SP

Analyte:	Concentration mg/kg (ppm)
Arsenic	3.82
Copper	25.0
Lead	2.53
Nickel	30.7
Zinc	33.5

Analysis For Total Metals By EPA Method 6020B

Client ID:	SF-16	Client:	Aspect Consulting, LLC
Date Received:	03/11/22	Project:	210550-A-01, F&BI 203243
Date Extracted:	03/14/22	Lab ID:	203243-06
Date Analyzed:	03/14/22	Data File:	203243-06.116
Matrix:	Soil	Instrument:	ICPMS2
Units:	mg/kg (ppm) Dry Weight	Operator:	SP

Analyte:	Concentration mg/kg (ppm)
Arsenic	3.37
Copper	22.1
Lead	2.32
Nickel	28.1
Zinc	29.7

Analysis For Total Metals By EPA Method 6020B

Client ID:	SF-17	Client:	Aspect Consulting, LLC
Date Received:	03/11/22	Project:	210550-A-01, F&BI 203243
Date Extracted:	03/14/22	Lab ID:	203243-07
Date Analyzed:	03/14/22	Data File:	203243-07.121
Matrix:	Soil	Instrument:	ICPMS2
Units:	mg/kg (ppm) Dry Weight	Operator:	SP

Analyte:	Concentration mg/kg (ppm)
Arsenic	3.66
Copper	22.0
Lead	2.67
Nickel	26.5
Zinc	31.3

Analysis For Total Metals By EPA Method 6020B

Client ID:	SF-18	Client:	Aspect Consulting, LLC
Date Received:	03/11/22	Project:	210550-A-01, F&BI 203243
Date Extracted:	03/14/22	Lab ID:	203243-08
Date Analyzed:	03/14/22	Data File:	203243-08.126
Matrix:	Soil	Instrument:	ICPMS2
Units:	mg/kg (ppm) Dry Weight	Operator:	SP

Analyte:	Concentration mg/kg (ppm)
Arsenic	3.83
Copper	22.1
Lead	3.07
Nickel	25.5
Zinc	31.0

Analysis For Total Metals By EPA Method 6020B

Client ID:	SF-19	Client:	Aspect Consulting, LLC
Date Received:	03/11/22	Project:	210550-A-01, F&BI 203243
Date Extracted:	03/14/22	Lab ID:	203243-09
Date Analyzed:	03/14/22	Data File:	203243-09.127
Matrix:	Soil	Instrument:	ICPMS2
Units:	mg/kg (ppm) Dry Weight	Operator:	SP

Analyte:	Concentration mg/kg (ppm)
Arsenic	3.01
Copper	17.3
Lead	2.01
Nickel	21.6
Zinc	26.0

Analysis For Total Metals By EPA Method 6020B

Client ID:	SF-20	Client:	Aspect Consulting, LLC
Date Received:	03/11/22	Project:	210550-A-01, F&BI 203243
Date Extracted:	03/14/22	Lab ID:	203243-10
Date Analyzed:	03/14/22	Data File:	203243-10.128
Matrix:	Soil	Instrument:	ICPMS2
Units:	mg/kg (ppm) Dry Weight	Operator:	SP

Analyte:	Concentration mg/kg (ppm)
Arsenic	2.99
Copper	21.4
Lead	2.48
Nickel	24.9
Zinc	28.2

Analysis For Total Metals By EPA Method 6020B

Client ID:	SF-21	Client:	Aspect Consulting, LLC
Date Received:	03/11/22	Project:	210550-A-01, F&BI 203243
Date Extracted:	03/14/22	Lab ID:	203243-11
Date Analyzed:	03/14/22	Data File:	203243-11.129
Matrix:	Soil	Instrument:	ICPMS2
Units:	mg/kg (ppm) Dry Weight	Operator:	SP

Analyte:	Concentration mg/kg (ppm)
Arsenic	3.53
Copper	23.5
Lead	2.35
Nickel	24.5
Zinc	30.2

Analysis For Total Metals By EPA Method 6020B

Client ID:	SF-22	Client:	Aspect Consulting, LLC
Date Received:	03/11/22	Project:	210550-A-01, F&BI 203243
Date Extracted:	03/14/22	Lab ID:	203243-12
Date Analyzed:	03/14/22	Data File:	203243-12.130
Matrix:	Soil	Instrument:	ICPMS2
Units:	mg/kg (ppm) Dry Weight	Operator:	SP

Analyte:	Concentration mg/kg (ppm)
Arsenic	3.46
Copper	22.0
Lead	2.22
Nickel	27.2
Zinc	30.1

Analysis For Total Metals By EPA Method 6020B

Client ID:	SF-23	Client:	Aspect Consulting, LLC
Date Received:	03/11/22	Project:	210550-A-01, F&BI 203243
Date Extracted:	03/14/22	Lab ID:	203243-13
Date Analyzed:	03/14/22	Data File:	203243-13.138
Matrix:	Soil	Instrument:	ICPMS2
Units:	mg/kg (ppm) Dry Weight	Operator:	SP

Analyte:	Concentration mg/kg (ppm)
Arsenic	3.12
Copper	21.6
Lead	2.34
Nickel	25.9
Zinc	27.3

Analysis For Total Metals By EPA Method 6020B

Client ID:	SF-24	Client:	Aspect Consulting, LLC
Date Received:	03/11/22	Project:	210550-A-01, F&BI 203243
Date Extracted:	03/14/22	Lab ID:	203243-14
Date Analyzed:	03/14/22	Data File:	203243-14.139
Matrix:	Soil	Instrument:	ICPMS2
Units:	mg/kg (ppm) Dry Weight	Operator:	SP

Analyte:	Concentration mg/kg (ppm)
Arsenic	2.98
Copper	21.0
Lead	2.34
Nickel	24.6
Zinc	27.9

Analysis For Total Metals By EPA Method 6020B

Client ID:	Method Blank	Client:	Aspect Consulting, LLC
Date Received:	NA	Project:	210550-A-01, F&BI 203243
Date Extracted:	03/14/22	Lab ID:	I2-199 mb
Date Analyzed:	03/14/22	Data File:	I2-199 mb.107
Matrix:	Soil	Instrument:	ICPMS2
Units:	mg/kg (ppm) Dry Weight	Operator:	SP

Analyte:	Concentration mg/kg (ppm)
Arsenic	<1
Copper	<5
Lead	<1
Nickel	<1
Zinc	<5

Date of Report: 03/18/22
Date Received: 03/11/22
Project: Port of Everett Soils 210550-A-01, F&BI 203243
Date Extracted: 03/14/22
Date Analyzed: 03/15/22 and 03/16/22

RESULTS FROM THE ANALYSIS OF SOIL SAMPLES
FOR TOTAL MERCURY
USING EPA METHOD 1631E
Results Reported on a Dry Weight Basis
Results Reported as mg/kg (ppm)

Sample ID Laboratory ID	Total Mercury
CSBC-15 203243-01 0	<0.1
CSBC-16 203243-02	<0.1
CSBC-17 203243-03	0.15
CSBC-18 203243-04	<0.1
SF-15 203243-05	<0.1
SF-16 203243-06	<0.1
SF-17 203243-07	<0.1
SF-18 203243-08	<0.1
SF-19 203243-09	<0.1
SF-20 203243-10	<0.1
SF-21 203243-11	<0.1

Date of Report: 03/18/22
Date Received: 03/11/22
Project: Port of Everett Soils 210550-A-01, F&BI 203243
Date Extracted: 03/14/22
Date Analyzed: 03/15/22 and 03/16/22

RESULTS FROM THE ANALYSIS OF SOIL SAMPLES
FOR TOTAL MERCURY
USING EPA METHOD 1631E
Results Reported on a Dry Weight Basis
Results Reported as mg/kg (ppm)

Sample ID Laboratory ID	Total Mercury
SF-22 203243-12	<0.1
SF-23 203243-13	<0.1
SF-24 203243-14	<0.1
Method Blank 203243-mb 0	<0.1

Analysis For Semivolatile Compounds By EPA Method 8270E

Client Sample ID:	CSBC-15	Client:	Aspect Consulting, LLC
Date Received:	03/11/22	Project:	210550-A-01, F&BI 203243
Date Extracted:	03/14/22	Lab ID:	203243-01 1/25
Date Analyzed:	03/15/22	Data File:	031422.D
Matrix:	Soil	Instrument:	GCMS9
Units:	mg/kg (ppm) Dry Weight	Operator:	YA

Surrogates:	% Recovery:	Lower Limit:	Upper Limit:
2-Fluorophenol	77 d	24	111
Phenol-d6	83 d	37	116
Nitrobenzene-d5	73 d	38	117
2-Fluorobiphenyl	86 d	45	117
2,4,6-Tribromophenol	78 d	11	158
Terphenyl-d14	92 d	50	124

Compounds:	Concentration mg/kg (ppm)
Naphthalene	<0.05
2-Methylnaphthalene	<0.05
1-Methylnaphthalene	<0.05
Acenaphthylene	<0.05
Acenaphthene	<0.05
Fluorene	<0.05
Phenanthrene	<0.05
Anthracene	<0.05
Fluoranthene	<0.05
Pyrene	<0.05
Benz(a)anthracene	<0.05
Chrysene	<0.05
Benzo(a)pyrene	<0.05
Benzo(b)fluoranthene	<0.05
Benzo(k)fluoranthene	<0.05
Indeno(1,2,3-cd)pyrene	<0.05
Dibenz(a,h)anthracene	<0.05
Benzo(g,h,i)perylene	<0.05

Analysis For Semivolatile Compounds By EPA Method 8270E

Client Sample ID:	CSBC-16	Client:	Aspect Consulting, LLC
Date Received:	03/11/22	Project:	210550-A-01, F&BI 203243
Date Extracted:	03/14/22	Lab ID:	203243-02 1/25
Date Analyzed:	03/15/22	Data File:	031423.D
Matrix:	Soil	Instrument:	GCMS9
Units:	mg/kg (ppm) Dry Weight	Operator:	YA

Surrogates:	% Recovery:	Lower Limit:	Upper Limit:
2-Fluorophenol	77 d	24	111
Phenol-d6	85 d	37	116
Nitrobenzene-d5	81 d	38	117
2-Fluorobiphenyl	86 d	45	117
2,4,6-Tribromophenol	83 d	11	158
Terphenyl-d14	98 d	50	124

Compounds:	Concentration mg/kg (ppm)
Naphthalene	<0.05
2-Methylnaphthalene	<0.05
1-Methylnaphthalene	<0.05
Acenaphthylene	<0.05
Acenaphthene	<0.05
Fluorene	<0.05
Phenanthrene	<0.05
Anthracene	<0.05
Fluoranthene	<0.05
Pyrene	<0.05
Benz(a)anthracene	<0.05
Chrysene	<0.05
Benzo(a)pyrene	<0.05
Benzo(b)fluoranthene	<0.05
Benzo(k)fluoranthene	<0.05
Indeno(1,2,3-cd)pyrene	<0.05
Dibenz(a,h)anthracene	<0.05
Benzo(g,h,i)perylene	<0.05

Analysis For Semivolatile Compounds By EPA Method 8270E

Client Sample ID:	CSBC-17	Client:	Aspect Consulting, LLC
Date Received:	03/11/22	Project:	210550-A-01, F&BI 203243
Date Extracted:	03/14/22	Lab ID:	203243-03 1/5
Date Analyzed:	03/14/22	Data File:	031410.D
Matrix:	Soil	Instrument:	GCMS9
Units:	mg/kg (ppm) Dry Weight	Operator:	YA

Surrogates:	% Recovery:	Lower Limit:	Upper Limit:
2-Fluorophenol	72	24	111
Phenol-d6	80	37	116
Nitrobenzene-d5	82	38	117
2-Fluorobiphenyl	79	45	117
2,4,6-Tribromophenol	74	11	158
Terphenyl-d14	93	50	124

Compounds:	Concentration mg/kg (ppm)
Naphthalene	<0.01
2-Methylnaphthalene	<0.01
1-Methylnaphthalene	<0.01
Acenaphthylene	<0.01
Acenaphthene	<0.01
Fluorene	<0.01
Phenanthrene	<0.01
Anthracene	<0.01
Fluoranthene	<0.01
Pyrene	<0.01
Benz(a)anthracene	<0.01
Chrysene	<0.01
Benzo(a)pyrene	<0.01
Benzo(b)fluoranthene	<0.01
Benzo(k)fluoranthene	<0.01
Indeno(1,2,3-cd)pyrene	<0.01
Dibenz(a,h)anthracene	<0.01
Benzo(g,h,i)perylene	<0.01

Analysis For Semivolatile Compounds By EPA Method 8270E

Client Sample ID:	CSBC-18	Client:	Aspect Consulting, LLC
Date Received:	03/11/22	Project:	210550-A-01, F&BI 203243
Date Extracted:	03/14/22	Lab ID:	203243-04 1/5
Date Analyzed:	03/14/22	Data File:	031411.D
Matrix:	Soil	Instrument:	GCMS9
Units:	mg/kg (ppm) Dry Weight	Operator:	YA

Surrogates:	% Recovery:	Lower Limit:	Upper Limit:
2-Fluorophenol	61	24	111
Phenol-d6	73	37	116
Nitrobenzene-d5	75	38	117
2-Fluorobiphenyl	80	45	117
2,4,6-Tribromophenol	76	11	158
Terphenyl-d14	99	50	124

Compounds:	Concentration mg/kg (ppm)
Naphthalene	<0.01
2-Methylnaphthalene	<0.01
1-Methylnaphthalene	<0.01
Acenaphthylene	<0.01
Acenaphthene	<0.01
Fluorene	<0.01
Phenanthrene	<0.01
Anthracene	<0.01
Fluoranthene	<0.01
Pyrene	<0.01
Benz(a)anthracene	<0.01
Chrysene	<0.01
Benzo(a)pyrene	<0.01
Benzo(b)fluoranthene	<0.01
Benzo(k)fluoranthene	<0.01
Indeno(1,2,3-cd)pyrene	<0.01
Dibenz(a,h)anthracene	<0.01
Benzo(g,h,i)perylene	<0.01

Analysis For Semivolatile Compounds By EPA Method 8270E

Client Sample ID:	SF-15	Client:	Aspect Consulting, LLC
Date Received:	03/11/22	Project:	210550-A-01, F&BI 203243
Date Extracted:	03/14/22	Lab ID:	203243-05 1/5
Date Analyzed:	03/14/22	Data File:	031412.D
Matrix:	Soil	Instrument:	GCMS9
Units:	mg/kg (ppm) Dry Weight	Operator:	YA

Surrogates:	% Recovery:	Lower Limit:	Upper Limit:
2-Fluorophenol	71	24	111
Phenol-d6	80	37	116
Nitrobenzene-d5	84	38	117
2-Fluorobiphenyl	81	45	117
2,4,6-Tribromophenol	80	11	158
Terphenyl-d14	93	50	124

Compounds:	Concentration mg/kg (ppm)
Naphthalene	<0.01
2-Methylnaphthalene	<0.01
1-Methylnaphthalene	<0.01
Acenaphthylene	<0.01
Acenaphthene	<0.01
Fluorene	<0.01
Phenanthrene	<0.01
Anthracene	<0.01
Fluoranthene	<0.01
Pyrene	<0.01
Benz(a)anthracene	<0.01
Chrysene	<0.01
Benzo(a)pyrene	<0.01
Benzo(b)fluoranthene	<0.01
Benzo(k)fluoranthene	<0.01
Indeno(1,2,3-cd)pyrene	<0.01
Dibenz(a,h)anthracene	<0.01
Benzo(g,h,i)perylene	<0.01

Analysis For Semivolatile Compounds By EPA Method 8270E

Client Sample ID:	SF-16	Client:	Aspect Consulting, LLC
Date Received:	03/11/22	Project:	210550-A-01, F&BI 203243
Date Extracted:	03/14/22	Lab ID:	203243-06 1/5
Date Analyzed:	03/14/22	Data File:	031413.D
Matrix:	Soil	Instrument:	GCMS9
Units:	mg/kg (ppm) Dry Weight	Operator:	YA

Surrogates:	% Recovery:	Lower Limit:	Upper Limit:
2-Fluorophenol	49	24	111
Phenol-d6	64	37	116
Nitrobenzene-d5	65	38	117
2-Fluorobiphenyl	74	45	117
2,4,6-Tribromophenol	73	11	158
Terphenyl-d14	93	50	124

Compounds:	Concentration mg/kg (ppm)
Naphthalene	<0.01
2-Methylnaphthalene	<0.01
1-Methylnaphthalene	<0.01
Acenaphthylene	<0.01
Acenaphthene	<0.01
Fluorene	<0.01
Phenanthrene	<0.01
Anthracene	<0.01
Fluoranthene	<0.01
Pyrene	<0.01
Benz(a)anthracene	<0.01
Chrysene	<0.01
Benzo(a)pyrene	<0.01
Benzo(b)fluoranthene	<0.01
Benzo(k)fluoranthene	<0.01
Indeno(1,2,3-cd)pyrene	<0.01
Dibenz(a,h)anthracene	<0.01
Benzo(g,h,i)perylene	<0.01

Analysis For Semivolatile Compounds By EPA Method 8270E

Client Sample ID:	SF-17	Client:	Aspect Consulting, LLC
Date Received:	03/11/22	Project:	210550-A-01, F&BI 203243
Date Extracted:	03/14/22	Lab ID:	203243-07 1/5
Date Analyzed:	03/14/22	Data File:	031414.D
Matrix:	Soil	Instrument:	GCMS9
Units:	mg/kg (ppm) Dry Weight	Operator:	YA

Surrogates:	% Recovery:	Lower Limit:	Upper Limit:
2-Fluorophenol	68	24	111
Phenol-d6	78	37	116
Nitrobenzene-d5	80	38	117
2-Fluorobiphenyl	79	45	117
2,4,6-Tribromophenol	78	11	158
Terphenyl-d14	96	50	124

Compounds:	Concentration mg/kg (ppm)
Naphthalene	<0.01
2-Methylnaphthalene	<0.01
1-Methylnaphthalene	<0.01
Acenaphthylene	<0.01
Acenaphthene	<0.01
Fluorene	<0.01
Phenanthrene	<0.01
Anthracene	<0.01
Fluoranthene	<0.01
Pyrene	<0.01
Benz(a)anthracene	<0.01
Chrysene	<0.01
Benzo(a)pyrene	<0.01
Benzo(b)fluoranthene	<0.01
Benzo(k)fluoranthene	<0.01
Indeno(1,2,3-cd)pyrene	<0.01
Dibenz(a,h)anthracene	<0.01
Benzo(g,h,i)perylene	<0.01

Analysis For Semivolatile Compounds By EPA Method 8270E

Client Sample ID:	SF-18	Client:	Aspect Consulting, LLC
Date Received:	03/11/22	Project:	210550-A-01, F&BI 203243
Date Extracted:	03/14/22	Lab ID:	203243-08 1/5
Date Analyzed:	03/14/22	Data File:	031415.D
Matrix:	Soil	Instrument:	GCMS9
Units:	mg/kg (ppm) Dry Weight	Operator:	YA

Surrogates:	% Recovery:	Lower Limit:	Upper Limit:
2-Fluorophenol	70	24	111
Phenol-d6	76	37	116
Nitrobenzene-d5	73	38	117
2-Fluorobiphenyl	81	45	117
2,4,6-Tribromophenol	73	11	158
Terphenyl-d14	92	50	124

Compounds:	Concentration mg/kg (ppm)
Naphthalene	<0.01
2-Methylnaphthalene	<0.01
1-Methylnaphthalene	<0.01
Acenaphthylene	<0.01
Acenaphthene	<0.01
Fluorene	<0.01
Phenanthrene	<0.01
Anthracene	<0.01
Fluoranthene	<0.01
Pyrene	<0.01
Benz(a)anthracene	<0.01
Chrysene	<0.01
Benzo(a)pyrene	<0.01
Benzo(b)fluoranthene	<0.01
Benzo(k)fluoranthene	<0.01
Indeno(1,2,3-cd)pyrene	<0.01
Dibenz(a,h)anthracene	<0.01
Benzo(g,h,i)perylene	<0.01

Analysis For Semivolatile Compounds By EPA Method 8270E

Client Sample ID:	SF-19	Client:	Aspect Consulting, LLC
Date Received:	03/11/22	Project:	210550-A-01, F&BI 203243
Date Extracted:	03/14/22	Lab ID:	203243-09 1/5
Date Analyzed:	03/14/22	Data File:	031416.D
Matrix:	Soil	Instrument:	GCMS9
Units:	mg/kg (ppm) Dry Weight	Operator:	YA

Surrogates:	% Recovery:	Lower Limit:	Upper Limit:
2-Fluorophenol	57	24	111
Phenol-d6	69	37	116
Nitrobenzene-d5	73	38	117
2-Fluorobiphenyl	77	45	117
2,4,6-Tribromophenol	77	11	158
Terphenyl-d14	94	50	124

Compounds:	Concentration mg/kg (ppm)
Naphthalene	<0.01
2-Methylnaphthalene	<0.01
1-Methylnaphthalene	<0.01
Acenaphthylene	<0.01
Acenaphthene	<0.01
Fluorene	<0.01
Phenanthrene	<0.01
Anthracene	<0.01
Fluoranthene	<0.01
Pyrene	<0.01
Benz(a)anthracene	<0.01
Chrysene	<0.01
Benzo(a)pyrene	<0.01
Benzo(b)fluoranthene	<0.01
Benzo(k)fluoranthene	<0.01
Indeno(1,2,3-cd)pyrene	<0.01
Dibenz(a,h)anthracene	<0.01
Benzo(g,h,i)perylene	<0.01

Analysis For Semivolatile Compounds By EPA Method 8270E

Client Sample ID:	SF-20	Client:	Aspect Consulting, LLC
Date Received:	03/11/22	Project:	210550-A-01, F&BI 203243
Date Extracted:	03/14/22	Lab ID:	203243-10 1/5
Date Analyzed:	03/15/22	Data File:	031417.D
Matrix:	Soil	Instrument:	GCMS9
Units:	mg/kg (ppm) Dry Weight	Operator:	YA

Surrogates:	% Recovery:	Lower Limit:	Upper Limit:
2-Fluorophenol	76	24	111
Phenol-d6	82	37	116
Nitrobenzene-d5	76	38	117
2-Fluorobiphenyl	81	45	117
2,4,6-Tribromophenol	75	11	158
Terphenyl-d14	88	50	124

Compounds:	Concentration mg/kg (ppm)
Naphthalene	<0.01
2-Methylnaphthalene	<0.01
1-Methylnaphthalene	<0.01
Acenaphthylene	<0.01
Acenaphthene	<0.01
Fluorene	<0.01
Phenanthrene	<0.01
Anthracene	<0.01
Fluoranthene	<0.01
Pyrene	<0.01
Benz(a)anthracene	<0.01
Chrysene	<0.01
Benzo(a)pyrene	<0.01
Benzo(b)fluoranthene	<0.01
Benzo(k)fluoranthene	<0.01
Indeno(1,2,3-cd)pyrene	<0.01
Dibenz(a,h)anthracene	<0.01
Benzo(g,h,i)perylene	<0.01

Analysis For Semivolatile Compounds By EPA Method 8270E

Client Sample ID:	SF-21	Client:	Aspect Consulting, LLC
Date Received:	03/11/22	Project:	210550-A-01, F&BI 203243
Date Extracted:	03/14/22	Lab ID:	203243-11 1/5
Date Analyzed:	03/15/22	Data File:	031418.D
Matrix:	Soil	Instrument:	GCMS9
Units:	mg/kg (ppm) Dry Weight	Operator:	YA

Surrogates:	% Recovery:	Lower Limit:	Upper Limit:
2-Fluorophenol	74	24	111
Phenol-d6	82	37	116
Nitrobenzene-d5	78	38	117
2-Fluorobiphenyl	82	45	117
2,4,6-Tribromophenol	75	11	158
Terphenyl-d14	96	50	124

Compounds:	Concentration mg/kg (ppm)
Naphthalene	<0.01
2-Methylnaphthalene	<0.01
1-Methylnaphthalene	<0.01
Acenaphthylene	<0.01
Acenaphthene	<0.01
Fluorene	<0.01
Phenanthrene	<0.01
Anthracene	<0.01
Fluoranthene	<0.01
Pyrene	<0.01
Benz(a)anthracene	<0.01
Chrysene	<0.01
Benzo(a)pyrene	<0.01
Benzo(b)fluoranthene	<0.01
Benzo(k)fluoranthene	<0.01
Indeno(1,2,3-cd)pyrene	<0.01
Dibenz(a,h)anthracene	<0.01
Benzo(g,h,i)perylene	<0.01

Analysis For Semivolatile Compounds By EPA Method 8270E

Client Sample ID:	SF-22	Client:	Aspect Consulting, LLC
Date Received:	03/11/22	Project:	210550-A-01, F&BI 203243
Date Extracted:	03/14/22	Lab ID:	203243-12 1/5
Date Analyzed:	03/15/22	Data File:	031419.D
Matrix:	Soil	Instrument:	GCMS9
Units:	mg/kg (ppm) Dry Weight	Operator:	YA

Surrogates:	% Recovery:	Lower Limit:	Upper Limit:
2-Fluorophenol	68	24	111
Phenol-d6	77	37	116
Nitrobenzene-d5	71	38	117
2-Fluorobiphenyl	77	45	117
2,4,6-Tribromophenol	73	11	158
Terphenyl-d14	91	50	124

Compounds:	Concentration mg/kg (ppm)
Naphthalene	<0.01
2-Methylnaphthalene	<0.01
1-Methylnaphthalene	<0.01
Acenaphthylene	<0.01
Acenaphthene	<0.01
Fluorene	<0.01
Phenanthrene	<0.01
Anthracene	<0.01
Fluoranthene	<0.01
Pyrene	<0.01
Benz(a)anthracene	<0.01
Chrysene	<0.01
Benzo(a)pyrene	<0.01
Benzo(b)fluoranthene	<0.01
Benzo(k)fluoranthene	<0.01
Indeno(1,2,3-cd)pyrene	<0.01
Dibenz(a,h)anthracene	<0.01
Benzo(g,h,i)perylene	<0.01

Analysis For Semivolatile Compounds By EPA Method 8270E

Client Sample ID:	SF-23	Client:	Aspect Consulting, LLC
Date Received:	03/11/22	Project:	210550-A-01, F&BI 203243
Date Extracted:	03/14/22	Lab ID:	203243-13 1/5
Date Analyzed:	03/15/22	Data File:	031420.D
Matrix:	Soil	Instrument:	GCMS9
Units:	mg/kg (ppm) Dry Weight	Operator:	YA

Surrogates:	% Recovery:	Lower Limit:	Upper Limit:
2-Fluorophenol	75	24	111
Phenol-d6	85	37	116
Nitrobenzene-d5	76	38	117
2-Fluorobiphenyl	82	45	117
2,4,6-Tribromophenol	80	11	158
Terphenyl-d14	96	50	124

Compounds:	Concentration mg/kg (ppm)
Naphthalene	<0.01
2-Methylnaphthalene	<0.01
1-Methylnaphthalene	<0.01
Acenaphthylene	<0.01
Acenaphthene	<0.01
Fluorene	<0.01
Phenanthrene	<0.01
Anthracene	<0.01
Fluoranthene	<0.01
Pyrene	<0.01
Benz(a)anthracene	<0.01
Chrysene	<0.01
Benzo(a)pyrene	<0.01
Benzo(b)fluoranthene	<0.01
Benzo(k)fluoranthene	<0.01
Indeno(1,2,3-cd)pyrene	<0.01
Dibenz(a,h)anthracene	<0.01
Benzo(g,h,i)perylene	<0.01

Analysis For Semivolatile Compounds By EPA Method 8270E

Client Sample ID:	SF-24	Client:	Aspect Consulting, LLC
Date Received:	03/11/22	Project:	210550-A-01, F&BI 203243
Date Extracted:	03/14/22	Lab ID:	203243-14 1/5
Date Analyzed:	03/15/22	Data File:	031421.D
Matrix:	Soil	Instrument:	GCMS9
Units:	mg/kg (ppm) Dry Weight	Operator:	YA

Surrogates:	% Recovery:	Lower Limit:	Upper Limit:
2-Fluorophenol	75	24	111
Phenol-d6	85	37	116
Nitrobenzene-d5	83	38	117
2-Fluorobiphenyl	81	45	117
2,4,6-Tribromophenol	78	11	158
Terphenyl-d14	91	50	124

Compounds:	Concentration mg/kg (ppm)
Naphthalene	<0.01
2-Methylnaphthalene	<0.01
1-Methylnaphthalene	<0.01
Acenaphthylene	<0.01
Acenaphthene	<0.01
Fluorene	<0.01
Phenanthrene	<0.01
Anthracene	<0.01
Fluoranthene	<0.01
Pyrene	<0.01
Benz(a)anthracene	<0.01
Chrysene	<0.01
Benzo(a)pyrene	<0.01
Benzo(b)fluoranthene	<0.01
Benzo(k)fluoranthene	<0.01
Indeno(1,2,3-cd)pyrene	<0.01
Dibenz(a,h)anthracene	<0.01
Benzo(g,h,i)perylene	<0.01

Analysis For Semivolatile Compounds By EPA Method 8270E

Client Sample ID:	Method Blank	Client:	Aspect Consulting, LLC
Date Received:	Not Applicable	Project:	210550-A-01, F&BI 203243
Date Extracted:	03/14/22	Lab ID:	02-646 mb 1/5
Date Analyzed:	03/14/22	Data File:	031407.D
Matrix:	Soil	Instrument:	GCMS9
Units:	mg/kg (ppm) Dry Weight	Operator:	YA

Surrogates:	% Recovery:	Lower Limit:	Upper Limit:
2-Fluorophenol	79	24	111
Phenol-d6	88	37	116
Nitrobenzene-d5	91	38	117
2-Fluorobiphenyl	92	45	117
2,4,6-Tribromophenol	77	11	158
Terphenyl-d14	99	50	124

Compounds:	Concentration mg/kg (ppm)
Naphthalene	<0.01
2-Methylnaphthalene	<0.01
1-Methylnaphthalene	<0.01
Acenaphthylene	<0.01
Acenaphthene	<0.01
Fluorene	<0.01
Phenanthrene	<0.01
Anthracene	<0.01
Fluoranthene	<0.01
Pyrene	<0.01
Benz(a)anthracene	<0.01
Chrysene	<0.01
Benzo(a)pyrene	<0.01
Benzo(b)fluoranthene	<0.01
Benzo(k)fluoranthene	<0.01
Indeno(1,2,3-cd)pyrene	<0.01
Dibenz(a,h)anthracene	<0.01
Benzo(g,h,i)perylene	<0.01

Analysis For PCBs By EPA Method 8082A

Client Sample ID:	CSBC-15	Client:	Aspect Consulting, LLC
Date Received:	03/11/22	Project:	210550-A-01, F&BI 203243
Date Extracted:	03/14/22	Lab ID:	203243-01 1/6
Date Analyzed:	03/14/22	Data File:	031410.D
Matrix:	Soil	Instrument:	GC7
Units:	mg/kg (ppm) Dry Weight	Operator:	MG

Surrogates:	% Recovery:	Lower Limit:	Upper Limit:
TCMX	73	23	127

Compounds:	Concentration mg/kg (ppm)
Aroclor 1221	<0.02
Aroclor 1232	<0.02
Aroclor 1016	<0.02
Aroclor 1242	<0.02
Aroclor 1248	<0.02
Aroclor 1254	<0.02
Aroclor 1260	<0.02
Aroclor 1262	<0.02
Aroclor 1268	<0.02

Analysis For PCBs By EPA Method 8082A

Client Sample ID:	CSBC-16	Client:	Aspect Consulting, LLC
Date Received:	03/11/22	Project:	210550-A-01, F&BI 203243
Date Extracted:	03/14/22	Lab ID:	203243-02 1/6
Date Analyzed:	03/14/22	Data File:	031411.D
Matrix:	Soil	Instrument:	GC7
Units:	mg/kg (ppm) Dry Weight	Operator:	MG

Surrogates:	% Recovery:	Lower Limit:	Upper Limit:
TCMX	77	23	127

Compounds:	Concentration mg/kg (ppm)
Aroclor 1221	<0.02
Aroclor 1232	<0.02
Aroclor 1016	<0.02
Aroclor 1242	<0.02
Aroclor 1248	<0.02
Aroclor 1254	<0.02
Aroclor 1260	<0.02
Aroclor 1262	<0.02
Aroclor 1268	<0.02

Analysis For PCBs By EPA Method 8082A

Client Sample ID:	CSBC-17	Client:	Aspect Consulting, LLC
Date Received:	03/11/22	Project:	210550-A-01, F&BI 203243
Date Extracted:	03/14/22	Lab ID:	203243-03 1/6
Date Analyzed:	03/14/22	Data File:	031412.D
Matrix:	Soil	Instrument:	GC7
Units:	mg/kg (ppm) Dry Weight	Operator:	MG

Surrogates:	% Recovery:	Lower Limit:	Upper Limit:
TCMX	65	23	127

Compounds:	Concentration mg/kg (ppm)
Aroclor 1221	<0.02
Aroclor 1232	<0.02
Aroclor 1016	<0.02
Aroclor 1242	<0.02
Aroclor 1248	<0.02
Aroclor 1254	<0.02
Aroclor 1260	<0.02
Aroclor 1262	<0.02
Aroclor 1268	<0.02

Analysis For PCBs By EPA Method 8082A

Client Sample ID:	CSBC-18	Client:	Aspect Consulting, LLC
Date Received:	03/11/22	Project:	210550-A-01, F&BI 203243
Date Extracted:	03/14/22	Lab ID:	203243-04 1/6
Date Analyzed:	03/14/22	Data File:	031413.D
Matrix:	Soil	Instrument:	GC7
Units:	mg/kg (ppm) Dry Weight	Operator:	MG

Surrogates:	% Recovery:	Lower Limit:	Upper Limit:
TCMX	70	23	127

Compounds:	Concentration mg/kg (ppm)
Aroclor 1221	<0.02
Aroclor 1232	<0.02
Aroclor 1016	<0.02
Aroclor 1242	<0.02
Aroclor 1248	<0.02
Aroclor 1254	<0.02
Aroclor 1260	<0.02
Aroclor 1262	<0.02
Aroclor 1268	<0.02

Analysis For PCBs By EPA Method 8082A

Client Sample ID:	SF-15	Client:	Aspect Consulting, LLC
Date Received:	03/11/22	Project:	210550-A-01, F&BI 203243
Date Extracted:	03/14/22	Lab ID:	203243-05 1/6
Date Analyzed:	03/14/22	Data File:	031414.D
Matrix:	Soil	Instrument:	GC7
Units:	mg/kg (ppm) Dry Weight	Operator:	MG

Surrogates:	% Recovery:	Lower Limit:	Upper Limit:
TCMX	69	23	127

Compounds:	Concentration mg/kg (ppm)
Aroclor 1221	<0.02
Aroclor 1232	<0.02
Aroclor 1016	<0.02
Aroclor 1242	<0.02
Aroclor 1248	<0.02
Aroclor 1254	<0.02
Aroclor 1260	<0.02
Aroclor 1262	<0.02
Aroclor 1268	<0.02

Analysis For PCBs By EPA Method 8082A

Client Sample ID:	SF-16	Client:	Aspect Consulting, LLC
Date Received:	03/11/22	Project:	210550-A-01, F&BI 203243
Date Extracted:	03/14/22	Lab ID:	203243-06 1/6
Date Analyzed:	03/14/22	Data File:	031416.D
Matrix:	Soil	Instrument:	GC7
Units:	mg/kg (ppm) Dry Weight	Operator:	MG

Surrogates:	% Recovery:	Lower Limit:	Upper Limit:
TCMX	73 ca	23	127

Compounds:	Concentration mg/kg (ppm)
Aroclor 1221	<0.02
Aroclor 1232	<0.02
Aroclor 1016	<0.02
Aroclor 1242	<0.02
Aroclor 1248	<0.02
Aroclor 1254	<0.02
Aroclor 1260	<0.02
Aroclor 1262	<0.02
Aroclor 1268	<0.02

Analysis For PCBs By EPA Method 8082A

Client Sample ID:	SF-17	Client:	Aspect Consulting, LLC
Date Received:	03/11/22	Project:	210550-A-01, F&BI 203243
Date Extracted:	03/14/22	Lab ID:	203243-07 1/6
Date Analyzed:	03/14/22	Data File:	031417.D
Matrix:	Soil	Instrument:	GC7
Units:	mg/kg (ppm) Dry Weight	Operator:	MG

Surrogates:	% Recovery:	Lower Limit:	Upper Limit:
TCMX	62 ca	23	127

Compounds:	Concentration mg/kg (ppm)
Aroclor 1221	<0.02
Aroclor 1232	<0.02
Aroclor 1016	<0.02
Aroclor 1242	<0.02
Aroclor 1248	<0.02
Aroclor 1254	<0.02
Aroclor 1260	<0.02
Aroclor 1262	<0.02
Aroclor 1268	<0.02

Analysis For PCBs By EPA Method 8082A

Client Sample ID:	SF-18	Client:	Aspect Consulting, LLC
Date Received:	03/11/22	Project:	210550-A-01, F&BI 203243
Date Extracted:	03/14/22	Lab ID:	203243-08 1/6
Date Analyzed:	03/14/22	Data File:	031418.D
Matrix:	Soil	Instrument:	GC7
Units:	mg/kg (ppm) Dry Weight	Operator:	MG

Surrogates:	% Recovery:	Lower Limit:	Upper Limit:
TCMX	66 ca	23	127

Compounds:	Concentration mg/kg (ppm)
Aroclor 1221	<0.02
Aroclor 1232	<0.02
Aroclor 1016	<0.02
Aroclor 1242	<0.02
Aroclor 1248	<0.02
Aroclor 1254	<0.02
Aroclor 1260	<0.02
Aroclor 1262	<0.02
Aroclor 1268	<0.02

Analysis For PCBs By EPA Method 8082A

Client Sample ID:	SF-19	Client:	Aspect Consulting, LLC
Date Received:	03/11/22	Project:	210550-A-01, F&BI 203243
Date Extracted:	03/14/22	Lab ID:	203243-09 1/6
Date Analyzed:	03/14/22	Data File:	031419.D
Matrix:	Soil	Instrument:	GC7
Units:	mg/kg (ppm) Dry Weight	Operator:	MG

Surrogates:	% Recovery:	Lower Limit:	Upper Limit:
TCMX	69 ca	23	127

Compounds:	Concentration mg/kg (ppm)
Aroclor 1221	<0.02
Aroclor 1232	<0.02
Aroclor 1016	<0.02
Aroclor 1242	<0.02
Aroclor 1248	<0.02
Aroclor 1254	<0.02
Aroclor 1260	<0.02
Aroclor 1262	<0.02
Aroclor 1268	<0.02

Analysis For PCBs By EPA Method 8082A

Client Sample ID:	SF-20	Client:	Aspect Consulting, LLC
Date Received:	03/11/22	Project:	210550-A-01, F&BI 203243
Date Extracted:	03/14/22	Lab ID:	203243-10 1/6
Date Analyzed:	03/14/22	Data File:	031420.D
Matrix:	Soil	Instrument:	GC7
Units:	mg/kg (ppm) Dry Weight	Operator:	MG

Surrogates:	% Recovery:	Lower Limit:	Upper Limit:
TCMX	66 ca	23	127

Compounds:	Concentration mg/kg (ppm)
Aroclor 1221	<0.02
Aroclor 1232	<0.02
Aroclor 1016	<0.02
Aroclor 1242	<0.02
Aroclor 1248	<0.02
Aroclor 1254	<0.02
Aroclor 1260	<0.02
Aroclor 1262	<0.02
Aroclor 1268	<0.02

Analysis For PCBs By EPA Method 8082A

Client Sample ID:	SF-21	Client:	Aspect Consulting, LLC
Date Received:	03/11/22	Project:	210550-A-01, F&BI 203243
Date Extracted:	03/14/22	Lab ID:	203243-11 1/6
Date Analyzed:	03/14/22	Data File:	031421.D
Matrix:	Soil	Instrument:	GC7
Units:	mg/kg (ppm) Dry Weight	Operator:	MG

Surrogates:	% Recovery:	Lower Limit:	Upper Limit:
TCMX	68 ca	23	127

Compounds:	Concentration mg/kg (ppm)
Aroclor 1221	<0.02
Aroclor 1232	<0.02
Aroclor 1016	<0.02
Aroclor 1242	<0.02
Aroclor 1248	<0.02
Aroclor 1254	<0.02
Aroclor 1260	<0.02
Aroclor 1262	<0.02
Aroclor 1268	<0.02

Analysis For PCBs By EPA Method 8082A

Client Sample ID:	SF-22	Client:	Aspect Consulting, LLC
Date Received:	03/11/22	Project:	210550-A-01, F&BI 203243
Date Extracted:	03/14/22	Lab ID:	203243-12 1/6
Date Analyzed:	03/14/22	Data File:	031422.D
Matrix:	Soil	Instrument:	GC7
Units:	mg/kg (ppm) Dry Weight	Operator:	MG

Surrogates:	% Recovery:	Lower Limit:	Upper Limit:
TCMX	67 ca	23	127

Compounds:	Concentration mg/kg (ppm)
Aroclor 1221	<0.02
Aroclor 1232	<0.02
Aroclor 1016	<0.02
Aroclor 1242	<0.02
Aroclor 1248	<0.02
Aroclor 1254	<0.02
Aroclor 1260	<0.02
Aroclor 1262	<0.02
Aroclor 1268	<0.02

Analysis For PCBs By EPA Method 8082A

Client Sample ID:	SF-23	Client:	Aspect Consulting, LLC
Date Received:	03/11/22	Project:	210550-A-01, F&BI 203243
Date Extracted:	03/14/22	Lab ID:	203243-13 1/6
Date Analyzed:	03/14/22	Data File:	031423.D
Matrix:	Soil	Instrument:	GC7
Units:	mg/kg (ppm) Dry Weight	Operator:	MG

Surrogates:	% Recovery:	Lower Limit:	Upper Limit:
TCMX	63 ca	23	127

Compounds:	Concentration mg/kg (ppm)
Aroclor 1221	<0.02
Aroclor 1232	<0.02
Aroclor 1016	<0.02
Aroclor 1242	<0.02
Aroclor 1248	<0.02
Aroclor 1254	<0.02
Aroclor 1260	<0.02
Aroclor 1262	<0.02
Aroclor 1268	<0.02

Analysis For PCBs By EPA Method 8082A

Client Sample ID:	SF-24	Client:	Aspect Consulting, LLC
Date Received:	03/11/22	Project:	210550-A-01, F&BI 203243
Date Extracted:	03/14/22	Lab ID:	203243-14 1/6
Date Analyzed:	03/14/22	Data File:	031425.D
Matrix:	Soil	Instrument:	GC7
Units:	mg/kg (ppm) Dry Weight	Operator:	MG

Surrogates:	% Recovery:	Lower Limit:	Upper Limit:
TCMX	66 ca	23	127

Compounds:	Concentration mg/kg (ppm)
Aroclor 1221	<0.02
Aroclor 1232	<0.02
Aroclor 1016	<0.02
Aroclor 1242	<0.02
Aroclor 1248	<0.02
Aroclor 1254	<0.02
Aroclor 1260	<0.02
Aroclor 1262	<0.02
Aroclor 1268	<0.02

Analysis For PCBs By EPA Method 8082A

Client Sample ID:	Method Blank	Client:	Aspect Consulting, LLC
Date Received:	Not Applicable	Project:	210550-A-01, F&BI 203243
Date Extracted:	03/14/22	Lab ID:	02-645 mb 1/6
Date Analyzed:	03/14/22	Data File:	031408.D
Matrix:	Soil	Instrument:	GC7
Units:	mg/kg (ppm) Dry Weight	Operator:	MG

Surrogates:	% Recovery:	Lower Limit:	Upper Limit:
TCMX	82	23	127

Compounds:	Concentration mg/kg (ppm)
Aroclor 1221	<0.02
Aroclor 1232	<0.02
Aroclor 1016	<0.02
Aroclor 1242	<0.02
Aroclor 1248	<0.02
Aroclor 1254	<0.02
Aroclor 1260	<0.02
Aroclor 1262	<0.02
Aroclor 1268	<0.02

Date of Report: 03/18/22
Date Received: 03/11/22
Project: Port of Everett Soils 210550-A-01, F&BI 203243

QUALITY ASSURANCE RESULTS FOR THE ANALYSIS OF SOIL SAMPLES FOR TPH AS GASOLINE USING METHOD NWTPH-Gx

Laboratory Code: 203243-01 (Duplicate)

Analyte	Reporting Units	Sample Result (Wet Wt)	Duplicate Result (Wet Wt)	RPD (Limit 20)
Gasoline	mg/kg (ppm)	<5	<5	nm

Laboratory Code: Laboratory Control Sample

Analyte	Reporting Units	Spike Level	Percent Recovery LCS	Acceptance Criteria
Gasoline	mg/kg (ppm)	20	85	71-131

Date of Report: 03/18/22
Date Received: 03/11/22
Project: Port of Everett Soils 210550-A-01, F&BI 203243

QUALITY ASSURANCE RESULTS FROM THE ANALYSIS OF SOIL SAMPLES FOR TOTAL PETROLEUM HYDROCARBONS AS DIESEL EXTENDED USING METHOD NWTPH-Dx

Laboratory Code: 203243-01 (Matrix Spike)

Analyte	Reporting Units	Spike Level	Sample Result (Wet Wt)	Percent Recovery MS	Percent Recovery MSD	Acceptance Criteria	RPD (Limit 20)
Diesel Extended	mg/kg (ppm)	2,500	<50	88	92	64-133	4

Laboratory Code: Laboratory Control Sample

Analyte	Reporting Units	Spike Level	Percent Recovery LCS	Acceptance Criteria
Diesel Extended	mg/kg (ppm)	2,500	88	58-147

Date of Report: 03/18/22
Date Received: 03/11/22
Project: Port of Everett Soils 210550-A-01, F&BI 203243

QUALITY ASSURANCE RESULTS FOR THE ANALYSIS OF SOIL SAMPLES FOR TOTAL METALS USING EPA METHOD 6020B

Laboratory Code: 203243-01 x5 (Matrix Spike)

Analyte	Reporting Units	Spike Level	Sample Result (Wet wt)	Percent Recovery MS	Percent Recovery MSD	Acceptance Criteria	RPD (Limit 20)
Arsenic	mg/kg (ppm)	10	<5	88	94	75-125	7
Copper	mg/kg (ppm)	50	27.1	83	79	75-125	5
Lead	mg/kg (ppm)	50	<5	95	91	75-125	4
Nickel	mg/kg (ppm)	25	22.6	91	99	75-125	8
Zinc	mg/kg (ppm)	50	32.7	91	90	75-125	1

Laboratory Code: Laboratory Control Sample

Analyte	Reporting Units	Spike Level	Percent Recovery LCS	Acceptance Criteria
Arsenic	mg/kg (ppm)	10	91	80-120
Copper	mg/kg (ppm)	50	97	80-120
Lead	mg/kg (ppm)	50	94	80-120
Nickel	mg/kg (ppm)	25	97	80-120
Zinc	mg/kg (ppm)	50	92	80-120

Date of Report: 03/18/22
Date Received: 03/11/22
Project: Port of Everett Soils 210550-A-01, F&BI 203243

QUALITY ASSURANCE RESULTS FOR THE ANALYSIS OF SOIL SAMPLES FOR TOTAL MERCURY USING EPA METHOD 1631E

Laboratory Code: 203243-01 (Matrix Spike)

Analyte	Reporting Units	Spike Level	Sample Result	Percent Recovery MS	Percent Recovery MSD	Acceptance Criteria	RPD (Limit 20)
Mercury	mg/kg (ppm)	5	<0.1	77	79	71-125	3

Laboratory Code: Laboratory Control Sample

Analyte	Reporting Units	Spike Level	Percent Recovery LCS	Acceptance Criteria
Mercury	mg/kg (ppm)	5	103	78-125

Date of Report: 03/18/22
Date Received: 03/11/22
Project: Port of Everett Soils 210550-A-01, F&BI 203243

QUALITY ASSURANCE RESULTS FOR THE ANALYSIS OF SOIL SAMPLES FOR SEMIVOLATILES BY EPA METHOD 8270E

Laboratory Code: 203243-03 1/5 (Matrix Spike)

Analyte	Reporting Units	Spike Level	Sample Result (Wet wt)	Percent Recovery MS	Percent Recovery MSD	Acceptance Criteria	RPD (Limit 20)
Naphthalene	mg/kg (ppm)	0.83	<0.01	72	74	34-118	3
2-Methylnaphthalene	mg/kg (ppm)	0.83	<0.01	77	80	29-130	4
1-Methylnaphthalene	mg/kg (ppm)	0.83	<0.01	75	79	37-119	5
Acenaphthylene	mg/kg (ppm)	0.83	<0.01	84	86	45-128	2
Acenaphthene	mg/kg (ppm)	0.83	<0.01	80	82	36-125	2
Fluorene	mg/kg (ppm)	0.83	<0.01	86	87	48-121	1
Phenanthrene	mg/kg (ppm)	0.83	<0.01	89	87	50-150	2
Anthracene	mg/kg (ppm)	0.83	<0.01	92	90	50-150	2
Fluoranthene	mg/kg (ppm)	0.83	<0.01	98	94	50-150	4
Pyrene	mg/kg (ppm)	0.83	<0.01	93	94	50-150	1
Benz(a)anthracene	mg/kg (ppm)	0.83	<0.01	91	90	50-150	1
Chrysene	mg/kg (ppm)	0.83	<0.01	89	88	50-150	1
Benzo(a)pyrene	mg/kg (ppm)	0.83	<0.01	97	95	50-150	2
Benzo(b)fluoranthene	mg/kg (ppm)	0.83	<0.01	99	96	50-150	3
Benzo(k)fluoranthene	mg/kg (ppm)	0.83	<0.01	98	96	50-150	2
Indeno(1,2,3-cd)pyrene	mg/kg (ppm)	0.83	<0.01	83	78	41-134	6
Dibenz(a,h)anthracene	mg/kg (ppm)	0.83	<0.01	84	80	44-130	5
Benzo(g,h,i)perylene	mg/kg (ppm)	0.83	<0.01	78	72	33-131	8

Laboratory Code: Laboratory Control Sample 1/5

Analyte	Reporting Units	Spike Level	Percent Recovery LCS	Acceptance Criteria
Naphthalene	mg/kg (ppm)	0.83	86	58-108
2-Methylnaphthalene	mg/kg (ppm)	0.83	93	67-108
1-Methylnaphthalene	mg/kg (ppm)	0.83	91	66-107
Acenaphthylene	mg/kg (ppm)	0.83	96	70-130
Acenaphthene	mg/kg (ppm)	0.83	91	66-112
Fluorene	mg/kg (ppm)	0.83	95	67-117
Phenanthrene	mg/kg (ppm)	0.83	93	70-130
Anthracene	mg/kg (ppm)	0.83	97	70-130
Fluoranthene	mg/kg (ppm)	0.83	100	70-130
Pyrene	mg/kg (ppm)	0.83	99	70-130
Benz(a)anthracene	mg/kg (ppm)	0.83	97	70-130
Chrysene	mg/kg (ppm)	0.83	97	70-130
Benzo(a)pyrene	mg/kg (ppm)	0.83	101	68-120
Benzo(b)fluoranthene	mg/kg (ppm)	0.83	106	69-125
Benzo(k)fluoranthene	mg/kg (ppm)	0.83	102	70-130
Indeno(1,2,3-cd)pyrene	mg/kg (ppm)	0.83	89	67-129
Dibenz(a,h)anthracene	mg/kg (ppm)	0.83	94	67-128
Benzo(g,h,i)perylene	mg/kg (ppm)	0.83	87	64-127

Date of Report: 03/18/22
Date Received: 03/11/22
Project: Port of Everett Soils 210550-A-01, F&BI 203243

QUALITY ASSURANCE RESULTS FOR THE ANALYSIS OF SOIL SAMPLES FOR POLYCHLORINATED BIPHENYLS AS AROCLOR 1016/1260 BY EPA METHOD 8082A

Laboratory Code: 203243-01 1/6 (Matrix Spike) 1/6

Analyte	Reporting Units	Spike Level	Sample Result (Wet Wt)	Percent Recovery MS	Percent Recovery MSD	Control Limits	RPD (Limit 20)
Aroclor 1016	mg/kg (ppm)	0.25	<0.02	93	88	29-125	6
Aroclor 1260	mg/kg (ppm)	0.25	<0.02	89	89	25-137	0

Laboratory Code: Laboratory Control Sample 1/6

Analyte	Reporting Units	Spike Level	Percent Recovery LCS	Acceptance Criteria
Aroclor 1016	mg/kg (ppm)	0.25	87	55-137
Aroclor 1260	mg/kg (ppm)	0.25	94	51-150

Data Qualifiers & Definitions

a - The analyte was detected at a level less than five times the reporting limit. The RPD results may not provide reliable information on the variability of the analysis.

b - The analyte was spiked at a level that was less than five times that present in the sample. Matrix spike recoveries may not be meaningful.

ca - The calibration results for the analyte were outside of acceptance criteria. The value reported is an estimate.

c - The presence of the analyte may be due to carryover from previous sample injections.

cf - The sample was centrifuged prior to analysis.

d - The sample was diluted. Detection limits were raised and surrogate recoveries may not be meaningful.

dv - Insufficient sample volume was available to achieve normal reporting limits.

f - The sample was laboratory filtered prior to analysis.

fb - The analyte was detected in the method blank.

fc - The analyte is a common laboratory and field contaminant.

hr - The sample and duplicate were reextracted and reanalyzed. RPD results were still outside of control limits. Variability is attributed to sample inhomogeneity.

hs - Headspace was present in the container used for analysis.

ht – The analysis was performed outside the method or client-specified holding time requirement.

ip - Recovery fell outside of control limits due to sample matrix effects.

j - The analyte concentration is reported below the lowest calibration standard. The value reported is an estimate.

J - The internal standard associated with the analyte is out of control limits. The reported concentration is an estimate.

jl - The laboratory control sample(s) percent recovery and/or RPD were out of control limits. The reported concentration should be considered an estimate.

js - The surrogate associated with the analyte is out of control limits. The reported concentration should be considered an estimate.

lc - The presence of the analyte is likely due to laboratory contamination.

L - The reported concentration was generated from a library search.

nm - The analyte was not detected in one or more of the duplicate analyses. Therefore, calculation of the RPD is not applicable.

pc - The sample was received with incorrect preservation or in a container not approved by the method. The value reported should be considered an estimate.

ve - The analyte response exceeded the valid instrument calibration range. The value reported is an estimate.

vo - The value reported fell outside the control limits established for this analyte.

x - The sample chromatographic pattern does not resemble the fuel standard used for quantitation.

203243

SAMPLE CHAIN OF CUSTODY

03-11-22

BI4/VSA2

Page # 1 of 2

Report To Matthew Eddy

Company Aspect Consulting

Address 710 2nd Ave, Suite 550

City, State, ZIP Seattle, WA 98104

Phone 415 497 2741 Email meddy@aspectconsulting.com

SAMPLERS (signature) David Mackay

PROJECT NAME: Port of Everett Soils

PO #: 210550-A-01

REMARKS: Project specific RLs? - Yes / No

INVOICE TO: Aspect Consulting

TURNAROUND TIME
- [x] Standard turnaround
- [ ] RUSH
- Rush charges authorized by:

SAMPLE DISPOSAL
- [ ] Archive samples
- [ ] Other
- Default: Dispose after 30 days

Sample ID	Lab ID	Date Sampled	Time Sampled	Sample Type	# of Jars	ANALYSES REQUESTED: NWTPH-Dx	NWTPH-Gx	BTEX EPA 8021	NWTPH-HCID	VOCs EPA 8260	PAHs EPA 8270	PCBs EPA 8082	Hg	Metals - As, Cu, Pb, Ni, Zn		Notes
CS BC - 15	01 A-F	3/11/22	1015	Soil	6	X	X				X	X	X	X		
CS BC - 16	02		1030													
CS BC - 17	03		1100													
CS BC - 18	04		1125													
SF - 15	05		1220													
SF - 16	06		1235													
SF - 17	07		1245													
SF - 18	08		1300													
SF - 19	09		1315													
SF - 20	10		1325													

SIGNATURE	PRINT NAME	COMPANY	DATE	TIME
Relinquished by: David Mackay	David Mackay	Aspect	3/11/22	7:45
Received by:	Eric Young	FCB	3/11/22	1945
Relinquished by:				
Received by:		Samples received at 4 °C		

Friedman & Bruya, Inc.
Ph. (206) 285-8282

203243

SAMPLE CHAIN OF CUSTODY

03-11-22

BJ4/VSA2

Page # 2 of 2

Report To Matthew Eddy

Company Aspect consulting

Address

City, State, ZIP Seattle, WA

Phone 415 497 2741 Email meddy@aspectconsulting.com

SAMPLERS (signature) [signature]

PROJECT NAME: Port of Everett Soils

PO #: 210550-A-01

REMARKS

Project specific RLs? - Yes / No

INVOICE TO: Aspect consulting

TURNAROUND TIME
- [x] Standard turnaround
- [ ] RUSH
- Rush charges authorized by:

SAMPLE DISPOSAL
- [ ] Archive samples
- [ ] Other
- Default: Dispose after 30 days

Sample ID	Lab ID	Date Sampled	Time Sampled	Sample Type	# of Jars	ANALYSES REQUESTED: NWTPH-Dx	NWTPH-Gx	BTEX EPA 8021	NWTPH-HCID	VOCs EPA 8260	PAHs EPA 8270	PCBs EPA 8082	Hg	Metals, As, Cu, Pb, Ni, Zn			Notes
SF-21	11A-F	3/11/22	1335	Soil	6	X	X				X	X	X	X			
SF-22	12		1350														
SF-23	13		1405														
SF-24	14		1415														

SIGNATURE	PRINT NAME	COMPANY	DATE	TIME
Relinquished by: [signature]	David Mackay	Aspect	3/11/22	7:45
Received by: [signature]	Eric Crown	FCB	3/11/22	1945
Relinquished by:				
Received by:		Samples received at 4 °C		

Friedman & Bruya, Inc.
Ph. (206) 285-8282

APPENDIX B

Data Validation Report

DATA VALIDATION REPORT

Port of Everett
Soil Sampling
March 2022
Sample Delivery Group 203243

Prepared by:
Aspect Consulting, LLC
710 2nd Ave, Suite 550
Seattle, WA 98104

Project No. 210550-A-01 • March 29, 2022

1 Introduction

This report summarizes the findings of the U.S. Environmental Protection Agency (USEPA) Level 2A data validation performed on analytical data for the soil samples collected in March 2022 from the Mandan Pit.

Samples were analyzed for gasoline-, diesel-, and oil-range Total petroleum hydrocarbons (TPH), select metals, Polycyclic aromatic hydrocarbons (PAHs), and Polychlorinated biphenyls (PCBs) by Friedman and Bruya (F&B). The analytical methods are summarized below:

Table 1. Analytical Methods

Analysis	Method	Laboratory
Gasoline-range TPH	NWTPH-Gx	F&B
Diesel- and oil-range TPH	NWTPH-Dx	F&B
Metals (arsenic, copper, lead, nickel, zinc)	EPA 6020B	F&B
Metals (mercury)	EPA 1631E	F&B
PAHs	EPA 8270E	F&B
PCBs	EPA 8082	F&B

The validation followed the procedures documented in the analytical methods, and the *National Functional Guidelines for Organic Data Review* (USEPA, 2017), and *Contract Laboratory Program SOW* (USEPA, 2016).

Data assigned a J qualifier (estimated) may be used for site evaluation purposes but the reasons for qualification should be considered when interpreting sample concentrations. Data marked as rejected (R) should not be used under any circumstances. Values without qualification meet all data measurement quality objectives and are suitable for use.

Data qualifier definitions and a summary table of the qualified data are included in the Qualified Data Summary at the end of this report. Data qualifiers have been incorporated into the project chemistry database to reflect the validation in this report.

2 Data Validation Findings for Sample Delivery Group 203243

Soil samples in this sample delivery group (SDG), and the chemical analyses performed on them, are tabulated below. The sections below describe the results of the data quality review by analyte group (analysis).

Table 2. Sample Index

			Analyses					
Sample Name	**Sample Date**	**Sample Matrix**	**EPA1631E**	**NWTPH -DX**	**NWTPH -GX**	**SW6020B**	**SW8082**	**SW8270E**
CSBC-15	03/11/2022	Soil	X	X	X	X	X	X
CSBC-16	03/11/2022	Soil	X	X	X	X	X	X
CSBC-17	03/11/2022	Soil	X	X	X	X	X	X
CSBC-18	03/11/2022	Soil	X	X	X	X	X	X
SF-15	03/11/2022	Soil	X	X	X	X	X	X
SF-16	03/11/2022	Soil	X	X	X	X	X	X
SF-17	03/11/2022	Soil	X	X	X	X	X	X
SF-18	03/11/2022	Soil	X	X	X	X	X	X
SF-19	03/11/2022	Soil	X	X	X	X	X	X
SF-20	03/11/2022	Soil	X	X	X	X	X	X
SF-21	03/11/2022	Soil	X	X	X	X	X	X
SF-22	03/11/2022	Soil	X	X	X	X	X	X
SF-23	03/11/2022	Soil	X	X	X	X	X	X
SF-24	03/11/2022	Soil	X	X	X	X	X	X

2.1 Gasoline-range TPH (NWTPH-Gx)

2.1.1 Sample Receipt, Preservation, and Holding Times

Sample receipt and preservation (2-6 degrees C) were acceptable. Samples were analyzed within the requisite holding time limit.

2.1.2 Method Blanks/Detection Levels

Target analytes were not detected at or above the reporting levels in the method blank. No qualification or action was needed.

2.1.3 Laboratory Control Samples (LCS)

All laboratory control samples (LCS) percent recovery (%R) were within the laboratory specified control limits for requested analytes. No qualification or action was needed.

2.1.4 Surrogates

All surrogate %R values were within laboratory specified control limit. No qualification or action was needed.

2.1.5 Laboratory Duplicates (LD)

All LD RPD were within the laboratory specified control limits. No qualification or action was needed.

2.1.6 Overall Assessment

Accuracy was acceptable based on the LCS, and precision was acceptable based on the LD RPD values. The data are of known quality and are acceptable for use.

2.2 Diesel-range TPH (NWTPH-Dx)

2.2.1 Sample Receipt, Preservation, and Holding Times

Sample receipt and preservation (2-6 degrees C) were acceptable. Samples were analyzed within the requisite holding time limit.

2.2.2 Method Blanks/Detection Levels

Target analytes were not detected at or above the reporting levels in the method blank. No qualification or action was needed.

2.2.3 Laboratory Control Samples (LCS)

All laboratory control samples (LCS) percent recovery (%R) were within the laboratory specified control limits for requested analytes. No qualification or action was needed.

2.2.4 Matrix Spikes/Matrix Spike Duplicates (MS/MSD)

All MS and MSD %R and RPD were within the laboratory specified control limits. No qualification or action was needed.

2.2.5 Surrogates

All surrogate %R values were within laboratory specified control limit. No qualification or action was needed.

2.2.6 Overall Assessment

Accuracy was acceptable based on the LCS an MS/MSD %R and precision was acceptable based on the MS/MSD RPD values. The data are of known quality and are acceptable for use.

2.3 Metals (EPA 6020)

2.3.1 Sample Receipt, Preservation, and Holding Times

Sample receipt and preservation (2-6 degrees C) were acceptable. Samples were analyzed within the requisite holding time limit.

2.3.2 Method Blanks/Detection Levels

Target analytes were not detected at or above the reporting levels in the method blank. No qualification or action was needed.

2.3.3 Laboratory Control Samples (LCS)

All laboratory control samples (LCS) percent recovery (%R) were within the laboratory specified control limits for requested analytes. No qualification or action was needed.

2.3.4 Matrix Spikes/Matrix Spike Duplicates (MS/MSD)

All MS and MSD %R and RPD were within the laboratory specified control limits. No qualification or action was needed.

2.3.5 Overall Assessment

Accuracy was acceptable based on the LCS an MS/MSD %R and precision was acceptable based on the MS/MSD RPD values. The data are of known quality and are acceptable for use.

2.4 Mercury (EPA 1631E)

2.4.1 Sample Receipt, Preservation, and Holding Times

Sample receipt and preservation (2-6 degrees C) were acceptable. Samples were analyzed within the requisite holding time limit.

2.4.2 Method Blanks/Detection Levels

Target analytes were not detected at or above the reporting levels in the method blank. No qualification or action was needed.

2.4.3 Laboratory Control Samples (LCS)

All laboratory control samples (LCS) percent recovery (%R) were within the laboratory specified control limits for requested analytes. No qualification or action was needed.

2.4.4 Matrix Spikes/Matrix Spike Duplicates (MS/MSD)

All MS and MSD %R and RPD were within the laboratory specified control limits. No qualification or action was needed.

2.4.5 Overall Assessment

Accuracy was acceptable based on the LCS an MS/MSD %R and precision was acceptable based on the MS/MSD RPD values. The data are of known quality and are acceptable for use.

2.5 PAHs (EPA 8270 E)

2.5.1 \Sample Receipt, Preservation, and Holding Times

Sample receipt and preservation (2-6 degrees C) were acceptable. Samples were analyzed within the requisite holding time limit.

2.5.2 Method Blanks/Detection Levels

Target analytes were not detected at or above the reporting levels in the method blank. No qualification or action was needed.

2.5.3 Laboratory Control Samples (LCS)

All laboratory control samples (LCS) percent recovery (%R) were within the laboratory specified control limits for requested analytes. No qualification or action was needed.

2.5.4 Matrix Spikes/Matrix Spike Duplicates (MS/MSD)

All MS and MSD %R and RPD were within the laboratory specified control limits. No qualification or action was needed.

2.5.5 Surrogates

All surrogate %R values were within laboratory specified control limit. No qualification or action was needed.

2.5.6 Overall Assessment

Accuracy was acceptable based on the LCS an MS/MSD %R and precision was acceptable based on the MS/MSD RPD values. The data are of known quality and are acceptable for use.

2.6 PCBs (EPA 8082)

2.6.1 Sample Receipt, Preservation, and Holding Times

Sample receipt and preservation (2-6 degrees C) were acceptable. Samples were analyzed within the requisite holding time limit.

2.6.2 Method Blanks/Detection Levels

Target analytes were not detected at or above the reporting levels in the method blank. No qualification or action was needed.

2.6.3 Laboratory Control Samples (LCS)

All laboratory control samples (LCS) percent recovery (%R) and relative percent difference (RPD) were within the laboratory specified control limits for requested analytes. No qualification or action was needed.

2.6.4 Matrix Spikes/Matrix Spike Duplicates (MS/MSD)

All MS and MSD %R and RPD were within the laboratory specified control limits. No qualification or action was needed.

2.6.5 Surrogates

All surrogate %R values were within laboratory specified control limit. No qualification or action was needed. Lab report noted that some surrogates were out in some calibration checks. This would not have impacted out analytical results, and no action was needed.

2.6.6 Overall Assessment

Accuracy was acceptable based on the LCS and MS/MSD percent recoveries, and precision was acceptable based on the MS/MSD RPD values. The data are of known quality and are acceptable for use.

3 Qualified Data Summary

No sample results were qualified as part of this validation report. This list does not include non-detected values simply qualified U.

4 Data Qualifier Definitions

Data Qualifier	Definition
U	The analyte was analyzed for but was considered not detected at the reporting limit or reported value.

5 References

U.S. Environmental Protection Agency (USEPA), 2017 National Functional Guidelines for Organic Methods Data Review, Office of Superfund Remediation and Technology Innovation (OSRTI), USEPA Publication No. 540-R-2017-002, January.

U.S. Environmental Protection Agency (USEPA), 2016, Contract Laboratory Program (CLP) Statement of Work (SOW) for Organic Superfund Methods, Multi-Media, Multi-Concentration, SOM02.4, October.

APPENDIX C

Report Limitations and Guidelines for Use

REPORT LIMITATIONS AND USE GUIDELINES

Reliance Conditions for Third Parties

This report was prepared for the exclusive use of the Client. No other party may rely on this report or the product of our services without the express written consent of Aspect Consulting, LLC (Aspect). This limitation is to provide our firm with reasonable protection against liability claims by third parties with whom there would otherwise be no contractual conditions or limitations and guidelines governing their use of the report. Within the limitations of scope, schedule and budget, our services have been executed in accordance with our Agreement with the Client and recognized standards of professionals in the same locality and involving similar conditions.

Services for Specific Purposes, Persons and Projects

Aspect has performed the services in general accordance with the scope and limitations of our Agreement. This report has been prepared for the exclusive use of the Client and their authorized third parties, approved in writing by Aspect. This report is not intended for use by others, and the information contained herein is not applicable to other properties.

This report is not, and should not, be construed as a warranty or guarantee regarding the presence or absence of hazardous substances or petroleum products that may affect the subject property. The report is not intended to make any representation concerning title or ownership to the subject property. If real property records were reviewed, they were reviewed for the sole purpose of determining the subject property's historical uses. All findings, conclusions, and recommendations stated in this report are based on the data and information provided to Aspect, current use of the subject property, and observations and conditions that existed on the date and time of the report.

Aspect structures its services to meet the specific needs of our clients. Because each environmental study is unique, each environmental report is unique, prepared solely for the specific client and subject property. This report should not be applied for any purpose or project except the purpose described in the Agreement.

This Report Is Project-Specific

Aspect considered a number of unique, project-specific factors when establishing the Scope of Work for this project and report. You should not rely on this report if it was:

- Not prepared for you
- Not prepared for the specific purpose identified in the Agreement
- Not prepared for the specific real property assessed
- Completed before important changes occurred concerning the subject property, project or governmental regulatory actions

If changes are made to the project or subject property after the date of this report, Aspect should be retained to assess the impact of the changes with respect to the conclusions contained in the report.

Geoscience Interpretations

The geoscience practices (geotechnical engineering, geology, and environmental science) require interpretation of spatial information that can make them less exact than other engineering and natural science disciplines. It is important to recognize this limitation in evaluating the content of the report. If you are unclear how these "Report Limitations and Use Guidelines" apply to your project or site, you should contact Aspect.

Discipline-Specific Reports Are Not Interchangeable

The equipment, techniques and personnel used to perform an environmental study differ significantly from those used to perform a geotechnical or geologic study and vice versa. For that reason, a geotechnical engineering or geologic report does not usually address any environmental findings, conclusions or recommendations; e.g., about the likelihood of encountering underground storage tanks or regulated contaminants. Similarly, environmental reports are not used to address geotechnical or geologic concerns regarding the subject property.

Environmental Regulations Are Not Static

Some hazardous substances or petroleum products may be present near the subject property in quantities or under conditions that may have led, or may lead, to contamination of the subject property, but are not included in current local, state or federal regulatory definitions of hazardous substances or petroleum products or do not otherwise present potential liability. Changes may occur in the standards for appropriate inquiry or regulatory definitions of hazardous substance and petroleum products; therefore, this report has a limited useful life.

Property Conditions Change Over Time

This report is based on conditions that existed at the time the study was performed. The findings and conclusions of this report may be affected by the passage of time (for example, Phase I ESA reports are applicable for 180 days), by events such as a change in property use or occupancy, or by natural events, such as floods, earthquakes, slope failure or groundwater fluctuations. If more than six months have passed since issuance of our report, or if any of the described events may have occurred following the issuance of the report, you should contact Aspect so that we may evaluate whether changed conditions affect the continued reliability or applicability of our conclusions and recommendations.

Phase I ESAs – Uncertainty Remains After Completion

Aspect has performed the services in general accordance with the scope and limitations of our Agreement and the current version of the "Standard Practice for Environmental Site Assessments: Phase I Environmental Site Assessment Process", ASTM E1527, and U.S. Environmental Protection Agency (EPA)'s Federal Standard 40 CFR Part 312 "Innocent Landowners, Standards for Conducting All Appropriate Inquiries".

No ESA can wholly eliminate uncertainty regarding the potential for recognized environmental conditions in connection with subject property. Performance of an ESA study is intended to reduce, but not eliminate, uncertainty regarding the potential for environmental conditions affecting the subject property. There is always a potential that areas with contamination that were not identified during this ESA exist at the subject property or in the study area. Further evaluation of such potential would require additional research, subsurface exploration, sampling and/or testing.

Historical Information Provided by Others

Aspect has relied upon information provided by others in our description of historical conditions and in our review of regulatory databases and files. The available data does not provide definitive information with regard to all past uses, operations or incidents affecting the subject property or adjacent properties. Aspect makes no warranties or guarantees regarding the accuracy or completeness of information provided or compiled by others.

Exclusion of Mold, Fungus, Radon, Lead, and HBM

Aspect's services do not include the investigation, detection, prevention or assessment of the presence of molds, fungi, spores, bacteria, and viruses, and/or any of their byproducts. Accordingly, this report does not include any interpretations, recommendations, findings, or conclusions regarding the detection, assessment, prevention or abatement of molds, fungi, spores, bacteria, and viruses, and/or any of their byproducts. Aspect's services also do not include the investigation or assessment of hazardous building materials (HBM) such as asbestos, polychlorinated biphenyls (PCBs) in light ballasts, lead based paint, asbestos-containing building materials, urea-formaldehyde insulation in on-site structures or debris or any other HBMs. Aspect's services do not include an evaluation of radon or lead in drinking water, unless specifically requested.

APPENDIX D

Selected Site Photographs

Pipe Abandonment



1. 36-inch wood stave pipe.



2. 36-inch wood stave pipe with hydrogen sulfide odor being filled with controlled density fill.

LANDAU ASSOCIATES

MIE—Norton Terminal
Port of Everett, Washington

Selected Site Photographs

Figure
D-1



3. 36-inch wood stave pipe with hydrogen sulfide odor.



4. 48-inch steel pipe.

LANDAU ASSOCIATES

MIE—Norton Terminal
Port of Everett, Washington

Selected Site Photographs

Figure
D-2

Outfall Reconstruction



5. Locating and abandoning former Outfall A pipe.



6. Outfall A after backfill.

8/14/23 P:\121\049\R\3rd IA Implementation Report\Appendices\App D_Photos\2-Outfall Reconstruction\D-3.docx

LANDAU ASSOCIATES

MIE—Norton Terminal
Port of Everett, Washington

Selected Site Photographs

Figure
D-3



7. Outfall A reconstruction excavation.



8. Outfall M reconstruction excavation.

8/14/23 P:\121\049\R\3rd IA Implementation Report\Appendices\App D_Photos\2-Outfall Reconstruction\D-4.docx

LANDAU ASSOCIATES

MIE—Norton Terminal
Port of Everett, Washington

Selected Site Photographs

Figure
D-4



9. Tracing former Outfall A pipe with downhole camera and locating equipment.

Potentially Contaminated Material



10. LP6 excavation with heavy sheen.



11. Soil with sheen and creosote odor in stormwater lift station excavation.

LANDAU ASSOCIATES

MIE—Norton Terminal
Port of Everett, Washington

Selected Site Photographs

Figure
D-6



12. Soil with sheen and petroleum odor north of existing warehouse.



13. Stained soil with petroleum odor at LP7.

LANDAU ASSOCIATES

MIE—Norton Terminal
Port of Everett, Washington

Selected Site Photographs

Figure
D-7

Debris and Other Excavated Materials



14. Debris excavated from south entrance of Site determined not to be crushed demolition debris.



15. Excavated wood chips southwest of PUD substation.

8/14/23 P:\121\049\R\3rd IA Implementation Report\Appendices\App D_Photos\4- Debris and other excavated materials\D-8.docx

LANDAU ASSOCIATES

MIE—Norton Terminal
Port of Everett, Washington

Selected Site Photographs

Figure
D-8



16. Wood and debris observed in the eastern portion of the site.



17. Wood chip layer excavated in area southwest of PID substation.

8/14/23 P:\121\049\R\3rd IA Implementation Report\Appendices\App D_Photos\4- Debris and other excavated materials\D-9.docx

LANDAU ASSOCIATES

MIE—Norton Terminal
Port of Everett, Washington

Selected Site Photographs

Figure
D-9

Below-grade Concrete Structures



18. Below-grade concrete structures observed north of existing warehouse.



19. Removal of concrete slab along east edge of site.

Completed Cap



20. Completed cap.

LANDAU ASSOCIATES

MIE—Norton Terminal Port of Everett, Washington	**Selected Site Photographs**	Figure D-11

APPENDIX E

Waste Disposal Documentation

Waste Profiling Analytical Data

December 30, 2021

Mr. Dylan Frazer
Landau Associates, Inc.
155 NE 100th St, Ste 302
Seattle, WA 98125

Dear Mr. Frazer,

On December 21st, 3 samples were received by our laboratory and assigned our laboratory project number EV21120140. The project was identified as your POE - MIE / 121049.080.081. The sample identification and requested analyses are outlined on the attached chain of custody record.

No abnormalities or nonconformances were observed during the analyses of the project samples.

Please do not hesitate to call me if you have any questions or if I can be of further assistance.

Sincerely,

ALS Laboratory Group

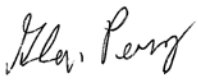

Glen Perry
Laboratory Director

ADDRESS 8620 Holly Drive, Suite 100, Everett, WA 98208 | PHONE 425-356-2600 | FAX 425-356-2626
ALS Group USA, Corp dba ALS Environmental

Environmental www.alsglobal.com
RIGHT SOLUTIONS RIGHT PARTNER

ALS Environmental

CERTIFICATE OF ANALYSIS

CLIENT:	Landau Associates, Inc. 155 NE 100th St, Ste 302 Seattle, WA 98125	DATE: ALS JOB#: ALS SAMPLE#:	12/30/2021 EV21120140 EV21120140-01
CLIENT CONTACT:	Dylan Frazer	DATE RECEIVED:	12/21/2021
CLIENT PROJECT:	POE - MIE / 121049.080.081	COLLECTION DATE:	12/21/2021 12:40:00 PM
CLIENT SAMPLE ID	MIE-DP-1-211221	WDOE ACCREDITATION:	C601

SAMPLE DATA RESULTS

ANALYTE	METHOD	RESULTS	REPORTING LIMITS	DILUTION FACTOR	UNITS	ANALYSIS DATE	ANALYSIS BY
Benzene	EPA-8021	U	0.030	1	MG/KG	12/23/2021	JMK
Toluene	EPA-8021	U	0.050	1	MG/KG	12/23/2021	JMK
Ethylbenzene	EPA-8021	U	0.050	1	MG/KG	12/23/2021	JMK
Xylenes	EPA-8021	U	0.20	1	MG/KG	12/23/2021	JMK
TPH-Diesel Range (C12-C24)	NWTPH-DX	**380**	25	1	MG/KG	12/23/2021	JNF
TPH-Oil Range (C24-C40)	NWTPH-DX	**440**	50	1	MG/KG	12/23/2021	JNF
Pyridine	EPA-8270	U	200	1	UG/KG	12/29/2021	JMK
N-Nitrosodimethylamine	EPA-8270	U	100	1	UG/KG	12/29/2021	JMK
Phenol	EPA-8270	U	100	1	UG/KG	12/29/2021	JMK
Aniline	EPA-8270	U	100	1	UG/KG	12/29/2021	JMK
Bis(2-Chloroethyl)Ether	EPA-8270	U	250	1	UG/KG	12/29/2021	JMK
2-Chlorophenol	EPA-8270	U	250	1	UG/KG	12/29/2021	JMK
1,3-Dichlorobenzene	EPA-8270	U	100	1	UG/KG	12/29/2021	JMK
1,4-Dichlorobenzene	EPA-8270	U	100	1	UG/KG	12/29/2021	JMK
Benzyl Alcohol	EPA-8270	**1600**	100	1	UG/KG	12/29/2021	JMK
1,2-Dichlorobenzene	EPA-8270	U	100	1	UG/KG	12/29/2021	JMK
2-Methylphenol	EPA-8270	U	100	1	UG/KG	12/29/2021	JMK
Bis(2-Chloroisopropyl)Ether	EPA-8270	U	250	1	UG/KG	12/29/2021	JMK
3&4-Methylphenol	EPA-8270	U	100	1	UG/KG	12/29/2021	JMK
N-Nitroso-Di-N-Propylamine	EPA-8270	U	250	1	UG/KG	12/29/2021	JMK
Hexachloroethane	EPA-8270	U	100	1	UG/KG	12/29/2021	JMK
Nitrobenzene	EPA-8270	U	100	1	UG/KG	12/29/2021	JMK
Isophorone	EPA-8270	U	130	1	UG/KG	12/29/2021	JMK
2-Nitrophenol	EPA-8270	U	100	1	UG/KG	12/29/2021	JMK
2,4-Dimethylphenol	EPA-8270	U	120	1	UG/KG	12/29/2021	JMK
Benzoic Acid	EPA-8270	U	1400	1	UG/KG	12/29/2021	JMK
Bis(2-Chloroethoxy)Methane	EPA-8270	U	250	1	UG/KG	12/29/2021	JMK
2,4-Dichlorophenol	EPA-8270	U	500	1	UG/KG	12/29/2021	JMK
1,2,4-Trichlorobenzene	EPA-8270	U	140	1	UG/KG	12/29/2021	JMK
Naphthalene	EPA-8270	U	100	1	UG/KG	12/29/2021	JMK
4-Chloroaniline	EPA-8270	U	1100	1	UG/KG	12/29/2021	JMK
2,6-Dichlorophenol	EPA-8270	U	350	1	UG/KG	12/29/2021	JMK
Hexachlorobutadiene	EPA-8270	U	500	1	UG/KG	12/29/2021	JMK
4-Chloro-3-Methylphenol	EPA-8270	U	620	1	UG/KG	12/29/2021	JMK
2-Methylnaphthalene	EPA-8270	U	290	1	UG/KG	12/29/2021	JMK
1-Methylnaphthalene	EPA-8270	U	340	1	UG/KG	12/29/2021	JMK
Hexachlorocyclopentadiene	EPA-8270	U	100	1	UG/KG	12/29/2021	JMK
2,4,6-Trichlorophenol	EPA-8270	U	100	1	UG/KG	12/29/2021	JMK

ADDRESS 8620 Holly Drive, Suite 100, Everett, WA 98208 | PHONE 425-356-2600 | FAX 425-356-2626
ALS Group USA, Corp dba ALS Environmental

Environmental www.alsglobal.com
RIGHT SOLUTIONS RIGHT PARTNER

ALS Environmental

CERTIFICATE OF ANALYSIS

CLIENT:	Landau Associates, Inc. 155 NE 100th St, Ste 302 Seattle, WA 98125	DATE: ALS JOB#: ALS SAMPLE#:	12/30/2021 EV21120140 EV21120140-01
CLIENT CONTACT:	Dylan Frazer	DATE RECEIVED:	12/21/2021
CLIENT PROJECT:	POE - MIE / 121049.080.081	COLLECTION DATE:	12/21/2021 12:40:00 PM
CLIENT SAMPLE ID	MIE-DP-1-211221	WDOE ACCREDITATION:	C601

SAMPLE DATA RESULTS

ANALYTE	METHOD	RESULTS	REPORTING LIMITS	DILUTION FACTOR	UNITS	ANALYSIS DATE	ANALYSIS BY
2,4,5-Trichlorophenol	EPA-8270	U	100	1	UG/KG	12/29/2021	JMK
2-Chloronaphthalene	EPA-8270	U	100	1	UG/KG	12/29/2021	JMK
2-Nitroaniline	EPA-8270	U	100	1	UG/KG	12/29/2021	JMK
Acenaphthylene	EPA-8270	U	100	1	UG/KG	12/29/2021	JMK
Dimethylphthalate	EPA-8270	U	100	1	UG/KG	12/29/2021	JMK
2,6-Dinitrotoluene	EPA-8270	U	100	1	UG/KG	12/29/2021	JMK
Acenaphthene	EPA-8270	U	100	1	UG/KG	12/29/2021	JMK
3-Nitroaniline	EPA-8270	U	1100	1	UG/KG	12/29/2021	JMK
2,4-Dinitrophenol	EPA-8270	U	100	1	UG/KG	12/29/2021	JMK
4-Nitrophenol	EPA-8270	U	100	1	UG/KG	12/29/2021	JMK
Dibenzofuran	EPA-8270	U	100	1	UG/KG	12/29/2021	JMK
2,4-Dinitrotoluene	EPA-8270	U	100	1	UG/KG	12/29/2021	JMK
2,3,4,6-Tetrachlorophenol	EPA-8270	U	100	1	UG/KG	12/29/2021	JMK
Diethylphthalate	EPA-8270	U	100	1	UG/KG	12/29/2021	JMK
Fluorene	EPA-8270	U	100	1	UG/KG	12/29/2021	JMK
4-Chlorophenyl-Phenylether	EPA-8270	U	100	1	UG/KG	12/29/2021	JMK
4-Nitroaniline	EPA-8270	U	250	1	UG/KG	12/29/2021	JMK
4,6-Dinitro-2-Methylphenol	EPA-8270	U	100	1	UG/KG	12/29/2021	JMK
N-Nitrosodiphenylamine	EPA-8270	U	100	1	UG/KG	12/29/2021	JMK
Azobenzene	EPA-8270	U	100	1	UG/KG	12/29/2021	JMK
4-Bromophenyl-Phenylether	EPA-8270	U	100	1	UG/KG	12/29/2021	JMK
Hexachlorobenzene	EPA-8270	U	100	1	UG/KG	12/29/2021	JMK
Pentachlorophenol	EPA-8270	U	500	1	UG/KG	12/29/2021	JMK
Phenanthrene	EPA-8270	U	100	1	UG/KG	12/29/2021	JMK
Anthracene	EPA-8270	U	100	1	UG/KG	12/29/2021	JMK
Carbazole	EPA-8270	U	250	1	UG/KG	12/29/2021	JMK
Di-N-Butylphthalate	EPA-8270	U	100	1	UG/KG	12/29/2021	JMK
Fluoranthene	EPA-8270	U	100	1	UG/KG	12/29/2021	JMK
Pyrene	EPA-8270	U	100	1	UG/KG	12/29/2021	JMK
Butylbenzylphthalate	EPA-8270	U	100	1	UG/KG	12/29/2021	JMK
3,3-Dichlorobenzidine	EPA-8270	U	330	1	UG/KG	12/29/2021	JMK
Benzo[A]Anthracene	EPA-8270	U	100	1	UG/KG	12/29/2021	JMK
Chrysene	EPA-8270	U	100	1	UG/KG	12/29/2021	JMK
Bis(2-Ethylhexyl)Phthalate	EPA-8270	**110**	100	1	UG/KG	12/29/2021	JMK
Di-N-Octylphthalate	EPA-8270	U	100	1	UG/KG	12/29/2021	JMK
Benzo[B]Fluoranthene	EPA-8270	U	100	1	UG/KG	12/29/2021	JMK
Benzo[K]Fluoranthene	EPA-8270	U	100	1	UG/KG	12/29/2021	JMK
Benzo[A]Pyrene	EPA-8270	U	100	1	UG/KG	12/29/2021	JMK
Indeno[1,2,3-Cd]Pyrene	EPA-8270	U	100	1	UG/KG	12/29/2021	JMK

ADDRESS 8620 Holly Drive, Suite 100, Everett, WA 98208 | PHONE 425-356-2600 | FAX 425-356-2626
ALS Group USA, Corp dba ALS Environmental

Environmental www.alsglobal.com
RIGHT SOLUTIONS RIGHT PARTNER

ALS Environmental

CERTIFICATE OF ANALYSIS

CLIENT:	Landau Associates, Inc. 155 NE 100th St, Ste 302 Seattle, WA 98125	DATE: ALS JOB#: ALS SAMPLE#:	12/30/2021 EV21120140 EV21120140-01
CLIENT CONTACT:	Dylan Frazer	DATE RECEIVED:	12/21/2021
CLIENT PROJECT:	POE - MIE / 121049.080.081	COLLECTION DATE:	12/21/2021 12:40:00 PM
CLIENT SAMPLE ID	MIE-DP-1-211221	WDOE ACCREDITATION:	C601

SAMPLE DATA RESULTS

ANALYTE	METHOD	RESULTS	REPORTING LIMITS	DILUTION FACTOR	UNITS	ANALYSIS DATE	ANALYSIS BY
Dibenz[A,H]Anthracene	EPA-8270	U	100	1	UG/KG	12/29/2021	JMK
Benzo[G,H,I]Perylene	EPA-8270	U	100	1	UG/KG	12/29/2021	JMK
PCB-1016	EPA-8082	U	0.10	1	MG/KG	12/23/2021	JMK
PCB-1221	EPA-8082	U	0.10	1	MG/KG	12/23/2021	JMK
PCB-1232	EPA-8082	U	0.10	1	MG/KG	12/23/2021	JMK
PCB-1242	EPA-8082	U	0.10	1	MG/KG	12/23/2021	JMK
PCB-1248	EPA-8082	U	0.10	1	MG/KG	12/23/2021	JMK
PCB-1254	EPA-8082	U	0.10	1	MG/KG	12/23/2021	JMK
PCB-1260	EPA-8082	U	0.10	1	MG/KG	12/23/2021	JMK
PCB-1268	EPA-8082	U	0.10	1	MG/KG	12/23/2021	JMK
Sulfate	EPA-300.0M	**1600**	50	25	MG/KG	12/28/2021	EBS
Mercury	EPA-7471	**1.2**	0.10	5	MG/KG	12/28/2021	RAL
Arsenic	EPA-6020	**9.5**	0.20	1	MG/KG	12/28/2021	EBS
Barium	EPA-6020	**93**	0.10	1	MG/KG	12/28/2021	EBS
Cadmium	EPA-6020	**0.36**	0.10	1	MG/KG	12/28/2021	EBS
Chromium	EPA-6020	**29**	0.10	1	MG/KG	12/28/2021	EBS
Copper	EPA-6020	**85**	0.10	1	MG/KG	12/28/2021	EBS
Lead	EPA-6020	**130**	0.10	1	MG/KG	12/28/2021	EBS
Selenium	EPA-6020	U	1.0	1	MG/KG	12/28/2021	EBS
Silver	EPA-6020	U	0.10	1	MG/KG	12/28/2021	EBS
Zinc	EPA-6020	**140**	0.50	1	MG/KG	12/28/2021	EBS

SURROGATE	METHOD	%REC	ANALYSIS DATE	ANALYSIS BY
TFT	EPA-8021	**64.5**	12/23/2021	JMK
C25	NWTPH-DX	**107**	12/23/2021	JNF
2-Fluorophenol	EPA-8270	**93.5**	12/29/2021	JMK
Phenol-d5	EPA-8270	**81.5**	12/29/2021	JMK
Nitrobenzene-d5	EPA-8270	**76.3**	12/29/2021	JMK
2-Fluorobiphenyl	EPA-8270	**78.2**	12/29/2021	JMK
2,4,6-Tribromophenol	EPA-8270	**78.9**	12/29/2021	JMK
Terphenyl-d14	EPA-8270	**77.5**	12/29/2021	JMK
TCMX	EPA-8082	**110**	12/23/2021	JMK
DCB	EPA-8082	**99.2**	12/23/2021	JMK

U - Analyte analyzed for but not detected at level above reporting limit.
Chromatogram indicates that it is likely that sample contains an unidentified diesel range product and lube oil.

ADDRESS 8620 Holly Drive, Suite 100, Everett, WA 98208 | PHONE 425-356-2600 | FAX 425-356-2626
ALS Group USA, Corp dba ALS Environmental

Environmental www.alsglobal.com
RIGHT SOLUTIONS RIGHT PARTNER

ALS Environmental

CERTIFICATE OF ANALYSIS

CLIENT:	Landau Associates, Inc. 155 NE 100th St, Ste 302 Seattle, WA 98125	DATE: ALS JOB#: ALS SAMPLE#:	12/30/2021 EV21120140 EV21120140-02
CLIENT CONTACT:	Dylan Frazer	DATE RECEIVED:	12/21/2021
CLIENT PROJECT:	POE - MIE / 121049.080.081	COLLECTION DATE:	12/21/2021 12:45:00 PM
CLIENT SAMPLE ID	MIE-DP-2-211221	WDOE ACCREDITATION:	C601

SAMPLE DATA RESULTS

ANALYTE	METHOD	RESULTS	REPORTING LIMITS	DILUTION FACTOR	UNITS	ANALYSIS DATE	ANALYSIS BY
Benzene	EPA-8021	U	0.030	1	MG/KG	12/29/2021	JMK
Toluene	EPA-8021	U	0.050	1	MG/KG	12/29/2021	JMK
Ethylbenzene	EPA-8021	U	0.050	1	MG/KG	12/29/2021	JMK
Xylenes	EPA-8021	U	0.20	1	MG/KG	12/29/2021	JMK
TPH-Diesel Range (C12-C24)	NWTPH-DX	**290**	25	1	MG/KG	12/23/2021	JNF
TPH-Oil Range (C24-C40)	NWTPH-DX	**340**	50	1	MG/KG	12/23/2021	JNF
Pyridine	EPA-8270	U	200	1	UG/KG	12/29/2021	JMK
N-Nitrosodimethylamine	EPA-8270	U	100	1	UG/KG	12/29/2021	JMK
Phenol	EPA-8270	U	100	1	UG/KG	12/29/2021	JMK
Aniline	EPA-8270	U	100	1	UG/KG	12/29/2021	JMK
Bis(2-Chloroethyl)Ether	EPA-8270	U	250	1	UG/KG	12/29/2021	JMK
2-Chlorophenol	EPA-8270	U	250	1	UG/KG	12/29/2021	JMK
1,3-Dichlorobenzene	EPA-8270	U	100	1	UG/KG	12/29/2021	JMK
1,4-Dichlorobenzene	EPA-8270	U	100	1	UG/KG	12/29/2021	JMK
Benzyl Alcohol	EPA-8270	**1200**	100	1	UG/KG	12/29/2021	JMK
1,2-Dichlorobenzene	EPA-8270	U	100	1	UG/KG	12/29/2021	JMK
2-Methylphenol	EPA-8270	U	100	1	UG/KG	12/29/2021	JMK
Bis(2-Chloroisopropyl)Ether	EPA-8270	U	250	1	UG/KG	12/29/2021	JMK
3&4-Methylphenol	EPA-8270	U	100	1	UG/KG	12/29/2021	JMK
N-Nitroso-Di-N-Propylamine	EPA-8270	U	250	1	UG/KG	12/29/2021	JMK
Hexachloroethane	EPA-8270	U	100	1	UG/KG	12/29/2021	JMK
Nitrobenzene	EPA-8270	U	100	1	UG/KG	12/29/2021	JMK
Isophorone	EPA-8270	U	110	1	UG/KG	12/29/2021	JMK
2-Nitrophenol	EPA-8270	U	100	1	UG/KG	12/29/2021	JMK
2,4-Dimethylphenol	EPA-8270	U	100	1	UG/KG	12/29/2021	JMK
Benzoic Acid	EPA-8270	U	1100	1	UG/KG	12/29/2021	JMK
Bis(2-Chloroethoxy)Methane	EPA-8270	U	250	1	UG/KG	12/29/2021	JMK
2,4-Dichlorophenol	EPA-8270	U	500	1	UG/KG	12/29/2021	JMK
1,2,4-Trichlorobenzene	EPA-8270	U	110	1	UG/KG	12/29/2021	JMK
Naphthalene	EPA-8270	U	100	1	UG/KG	12/29/2021	JMK
4-Chloroaniline	EPA-8270	U	1000	1	UG/KG	12/29/2021	JMK
2,6-Dichlorophenol	EPA-8270	U	280	1	UG/KG	12/29/2021	JMK
Hexachlorobutadiene	EPA-8270	U	500	1	UG/KG	12/29/2021	JMK
4-Chloro-3-Methylphenol	EPA-8270	U	500	1	UG/KG	12/29/2021	JMK
2-Methylnaphthalene	EPA-8270	U	250	1	UG/KG	12/29/2021	JMK
1-Methylnaphthalene	EPA-8270	U	270	1	UG/KG	12/29/2021	JMK
Hexachlorocyclopentadiene	EPA-8270	U	100	1	UG/KG	12/29/2021	JMK
2,4,6-Trichlorophenol	EPA-8270	U	100	1	UG/KG	12/29/2021	JMK
2,4,5-Trichlorophenol	EPA-8270	U	100	1	UG/KG	12/29/2021	JMK

ADDRESS 8620 Holly Drive, Suite 100, Everett, WA 98208 | PHONE 425-356-2600 | FAX 425-356-2626
ALS Group USA, Corp dba ALS Environmental

Environmental www.alsglobal.com
RIGHT SOLUTIONS RIGHT PARTNER

ALS Environmental

CERTIFICATE OF ANALYSIS

CLIENT:	Landau Associates, Inc. 155 NE 100th St, Ste 302 Seattle, WA 98125	DATE: ALS JOB#: ALS SAMPLE#:	12/30/2021 EV21120140 EV21120140-02
CLIENT CONTACT:	Dylan Frazer	DATE RECEIVED:	12/21/2021
CLIENT PROJECT:	POE - MIE / 121049.080.081	COLLECTION DATE:	12/21/2021 12:45:00 PM
CLIENT SAMPLE ID	MIE-DP-2-211221	WDOE ACCREDITATION:	C601

SAMPLE DATA RESULTS

ANALYTE	METHOD	RESULTS	REPORTING LIMITS	DILUTION FACTOR	UNITS	ANALYSIS DATE	ANALYSIS BY
2-Chloronaphthalene	EPA-8270	U	100	1	UG/KG	12/29/2021	JMK
2-Nitroaniline	EPA-8270	U	100	1	UG/KG	12/29/2021	JMK
Acenaphthylene	EPA-8270	U	100	1	UG/KG	12/29/2021	JMK
Dimethylphthalate	EPA-8270	U	100	1	UG/KG	12/29/2021	JMK
2,6-Dinitrotoluene	EPA-8270	U	100	1	UG/KG	12/29/2021	JMK
Acenaphthene	EPA-8270	U	100	1	UG/KG	12/29/2021	JMK
3-Nitroaniline	EPA-8270	U	1000	1	UG/KG	12/29/2021	JMK
2,4-Dinitrophenol	EPA-8270	U	100	1	UG/KG	12/29/2021	JMK
4-Nitrophenol	EPA-8270	U	100	1	UG/KG	12/29/2021	JMK
Dibenzofuran	EPA-8270	U	100	1	UG/KG	12/29/2021	JMK
2,4-Dinitrotoluene	EPA-8270	U	100	1	UG/KG	12/29/2021	JMK
2,3,4,6-Tetrachlorophenol	EPA-8270	U	100	1	UG/KG	12/29/2021	JMK
Diethylphthalate	EPA-8270	U	100	1	UG/KG	12/29/2021	JMK
Fluorene	EPA-8270	U	100	1	UG/KG	12/29/2021	JMK
4-Chlorophenyl-Phenylether	EPA-8270	U	100	1	UG/KG	12/29/2021	JMK
4-Nitroaniline	EPA-8270	U	250	1	UG/KG	12/29/2021	JMK
4,6-Dinitro-2-Methylphenol	EPA-8270	U	100	1	UG/KG	12/29/2021	JMK
N-Nitrosodiphenylamine	EPA-8270	U	100	1	UG/KG	12/29/2021	JMK
Azobenzene	EPA-8270	U	100	1	UG/KG	12/29/2021	JMK
4-Bromophenyl-Phenylether	EPA-8270	U	100	1	UG/KG	12/29/2021	JMK
Hexachlorobenzene	EPA-8270	U	100	1	UG/KG	12/29/2021	JMK
Pentachlorophenol	EPA-8270	U	500	1	UG/KG	12/29/2021	JMK
Phenanthrene	EPA-8270	U	100	1	UG/KG	12/29/2021	JMK
Anthracene	EPA-8270	U	100	1	UG/KG	12/29/2021	JMK
Carbazole	EPA-8270	U	250	1	UG/KG	12/29/2021	JMK
Di-N-Butylphthalate	EPA-8270	U	100	1	UG/KG	12/29/2021	JMK
Fluoranthene	EPA-8270	U	100	1	UG/KG	12/29/2021	JMK
Pyrene	EPA-8270	U	100	1	UG/KG	12/29/2021	JMK
Butylbenzylphthalate	EPA-8270	U	100	1	UG/KG	12/29/2021	JMK
3,3-Dichlorobenzidine	EPA-8270	U	260	1	UG/KG	12/29/2021	JMK
Benzo[A]Anthracene	EPA-8270	U	100	1	UG/KG	12/29/2021	JMK
Chrysene	EPA-8270	U	100	1	UG/KG	12/29/2021	JMK
Bis(2-Ethylhexyl)Phthalate	EPA-8270	U	100	1	UG/KG	12/29/2021	JMK
Di-N-Octylphthalate	EPA-8270	U	100	1	UG/KG	12/29/2021	JMK
Benzo[B]Fluoranthene	EPA-8270	U	100	1	UG/KG	12/29/2021	JMK
Benzo[K]Fluoranthene	EPA-8270	U	100	1	UG/KG	12/29/2021	JMK
Benzo[A]Pyrene	EPA-8270	U	100	1	UG/KG	12/29/2021	JMK
Indeno[1,2,3-Cd]Pyrene	EPA-8270	U	100	1	UG/KG	12/29/2021	JMK
Dibenz[A,H]Anthracene	EPA-8270	U	100	1	UG/KG	12/29/2021	JMK

ADDRESS 8620 Holly Drive, Suite 100, Everett, WA 98208 | PHONE 425-356-2600 | FAX 425-356-2626
ALS Group USA, Corp dba ALS Environmental

Environmental www.alsglobal.com
RIGHT SOLUTIONS RIGHT PARTNER

ALS Environmental

CERTIFICATE OF ANALYSIS

CLIENT:	Landau Associates, Inc. 155 NE 100th St, Ste 302 Seattle, WA 98125	DATE: ALS JOB#: ALS SAMPLE#:	12/30/2021 EV21120140 EV21120140-02
CLIENT CONTACT:	Dylan Frazer	DATE RECEIVED:	12/21/2021
CLIENT PROJECT:	POE - MIE / 121049.080.081	COLLECTION DATE:	12/21/2021 12:45:00 PM
CLIENT SAMPLE ID	MIE-DP-2-211221	WDOE ACCREDITATION:	C601

SAMPLE DATA RESULTS

ANALYTE	METHOD	RESULTS	REPORTING LIMITS	DILUTION FACTOR	UNITS	ANALYSIS DATE	ANALYSIS BY
Benzo[G,H,I]Perylene	EPA-8270	U	100	1	UG/KG	12/29/2021	JMK
PCB-1016	EPA-8082	U	0.10	1	MG/KG	12/23/2021	JMK
PCB-1221	EPA-8082	U	0.10	1	MG/KG	12/23/2021	JMK
PCB-1232	EPA-8082	U	0.10	1	MG/KG	12/23/2021	JMK
PCB-1242	EPA-8082	U	0.10	1	MG/KG	12/23/2021	JMK
PCB-1248	EPA-8082	U	0.10	1	MG/KG	12/23/2021	JMK
PCB-1254	EPA-8082	U	0.10	1	MG/KG	12/23/2021	JMK
PCB-1260	EPA-8082	U	0.10	1	MG/KG	12/23/2021	JMK
PCB-1268	EPA-8082	U	0.10	1	MG/KG	12/23/2021	JMK
Sulfate	EPA-300.0M	**780**	20	10	MG/KG	12/28/2021	EBS
Mercury	EPA-7471	**0.94**	0.10	5	MG/KG	12/28/2021	RAL
Arsenic	EPA-6020	**8.7**	0.20	1	MG/KG	12/28/2021	EBS
Barium	EPA-6020	**91**	0.10	1	MG/KG	12/28/2021	EBS
Cadmium	EPA-6020	**0.30**	0.10	1	MG/KG	12/28/2021	EBS
Chromium	EPA-6020	**30**	0.10	1	MG/KG	12/28/2021	EBS
Copper	EPA-6020	**67**	0.10	1	MG/KG	12/28/2021	EBS
Lead	EPA-6020	**100**	0.10	1	MG/KG	12/28/2021	EBS
Selenium	EPA-6020	U	1.0	1	MG/KG	12/28/2021	EBS
Silver	EPA-6020	U	0.10	1	MG/KG	12/28/2021	EBS
Zinc	EPA-6020	**98**	0.50	1	MG/KG	12/28/2021	EBS

SURROGATE	METHOD	%REC	ANALYSIS DATE	ANALYSIS BY
TFT	EPA-8021	**69.2**	12/29/2021	JMK
C25	NWTPH-DX	**99.8**	12/23/2021	JNF
2-Fluorophenol	EPA-8270	**89.8**	12/29/2021	JMK
Phenol-d5	EPA-8270	**78.9**	12/29/2021	JMK
Nitrobenzene-d5	EPA-8270	**73.3**	12/29/2021	JMK
2-Fluorobiphenyl	EPA-8270	**73.8**	12/29/2021	JMK
2,4,6-Tribromophenol	EPA-8270	**72.8**	12/29/2021	JMK
Terphenyl-d14	EPA-8270	**70.6**	12/29/2021	JMK
TCMX	EPA-8082	**67.5**	12/23/2021	JMK
DCB	EPA-8082	**94.0**	12/23/2021	JMK

U - Analyte analyzed for but not detected at level above reporting limit.
Chromatogram indicates that it is likely that sample contains an unidentified diesel range product and lube oil.

ADDRESS 8620 Holly Drive, Suite 100, Everett, WA 98208 | PHONE 425-356-2600 | FAX 425-356-2626
ALS Group USA, Corp dba ALS Environmental

Environmental www.alsglobal.com
RIGHT SOLUTIONS RIGHT PARTNER

ALS Environmental

CERTIFICATE OF ANALYSIS

CLIENT:	Landau Associates, Inc. 155 NE 100th St, Ste 302 Seattle, WA 98125	DATE: ALS JOB#: ALS SAMPLE#:	12/30/2021 EV21120140 EV21120140-03
CLIENT CONTACT:	Dylan Frazer	DATE RECEIVED:	12/21/2021
CLIENT PROJECT:	POE - MIE / 121049.080.081	COLLECTION DATE:	12/21/2021 12:50:00 PM
CLIENT SAMPLE ID	MIE-DP-3-211221	WDOE ACCREDITATION:	C601

SAMPLE DATA RESULTS

ANALYTE	METHOD	RESULTS	REPORTING LIMITS	DILUTION FACTOR	UNITS	ANALYSIS DATE	ANALYSIS BY
Benzene	EPA-8021	U	0.030	1	MG/KG	12/23/2021	JMK
Toluene	EPA-8021	U	0.050	1	MG/KG	12/23/2021	JMK
Ethylbenzene	EPA-8021	U	0.050	1	MG/KG	12/23/2021	JMK
Xylenes	EPA-8021	U	0.20	1	MG/KG	12/23/2021	JMK
TPH-Diesel Range (C12-C24)	NWTPH-DX	**390**	25	1	MG/KG	12/23/2021	JNF
TPH-Oil Range (C24-C40)	NWTPH-DX	**460**	50	1	MG/KG	12/23/2021	JNF
Pyridine	EPA-8270	U	200	1	UG/KG	12/29/2021	JMK
N-Nitrosodimethylamine	EPA-8270	U	100	1	UG/KG	12/29/2021	JMK
Phenol	EPA-8270	U	100	1	UG/KG	12/29/2021	JMK
Aniline	EPA-8270	U	100	1	UG/KG	12/29/2021	JMK
Bis(2-Chloroethyl)Ether	EPA-8270	U	250	1	UG/KG	12/29/2021	JMK
2-Chlorophenol	EPA-8270	U	250	1	UG/KG	12/29/2021	JMK
1,3-Dichlorobenzene	EPA-8270	U	100	1	UG/KG	12/29/2021	JMK
1,4-Dichlorobenzene	EPA-8270	U	100	1	UG/KG	12/29/2021	JMK
Benzyl Alcohol	EPA-8270	**590**	100	1	UG/KG	12/29/2021	JMK
1,2-Dichlorobenzene	EPA-8270	U	100	1	UG/KG	12/29/2021	JMK
2-Methylphenol	EPA-8270	U	100	1	UG/KG	12/29/2021	JMK
Bis(2-Chloroisopropyl)Ether	EPA-8270	U	250	1	UG/KG	12/29/2021	JMK
3&4-Methylphenol	EPA-8270	U	100	1	UG/KG	12/29/2021	JMK
N-Nitroso-Di-N-Propylamine	EPA-8270	U	250	1	UG/KG	12/29/2021	JMK
Hexachloroethane	EPA-8270	U	100	1	UG/KG	12/29/2021	JMK
Nitrobenzene	EPA-8270	U	100	1	UG/KG	12/29/2021	JMK
Isophorone	EPA-8270	U	140	1	UG/KG	12/29/2021	JMK
2-Nitrophenol	EPA-8270	U	100	1	UG/KG	12/29/2021	JMK
2,4-Dimethylphenol	EPA-8270	U	130	1	UG/KG	12/29/2021	JMK
Benzoic Acid	EPA-8270	U	1400	1	UG/KG	12/29/2021	JMK
Bis(2-Chloroethoxy)Methane	EPA-8270	U	250	1	UG/KG	12/29/2021	JMK
2,4-Dichlorophenol	EPA-8270	U	500	1	UG/KG	12/29/2021	JMK
1,2,4-Trichlorobenzene	EPA-8270	U	140	1	UG/KG	12/29/2021	JMK
Naphthalene	EPA-8270	U	100	1	UG/KG	12/29/2021	JMK
4-Chloroaniline	EPA-8270	U	1100	1	UG/KG	12/29/2021	JMK
2,6-Dichlorophenol	EPA-8270	U	370	1	UG/KG	12/29/2021	JMK
Hexachlorobutadiene	EPA-8270	U	500	1	UG/KG	12/29/2021	JMK
4-Chloro-3-Methylphenol	EPA-8270	U	640	1	UG/KG	12/29/2021	JMK
2-Methylnaphthalene	EPA-8270	U	300	1	UG/KG	12/29/2021	JMK
1-Methylnaphthalene	EPA-8270	U	350	1	UG/KG	12/29/2021	JMK
Hexachlorocyclopentadiene	EPA-8270	U	100	1	UG/KG	12/29/2021	JMK
2,4,6-Trichlorophenol	EPA-8270	U	100	1	UG/KG	12/29/2021	JMK
2,4,5-Trichlorophenol	EPA-8270	U	100	1	UG/KG	12/29/2021	JMK

ADDRESS 8620 Holly Drive, Suite 100, Everett, WA 98208 | PHONE 425-356-2600 | FAX 425-356-2626
ALS Group USA, Corp dba ALS Environmental

Environmental www.alsglobal.com
RIGHT SOLUTIONS RIGHT PARTNER

ALS Environmental

CERTIFICATE OF ANALYSIS

CLIENT:	Landau Associates, Inc. 155 NE 100th St, Ste 302 Seattle, WA 98125	DATE: ALS JOB#: ALS SAMPLE#:	12/30/2021 EV21120140 EV21120140-03
CLIENT CONTACT:	Dylan Frazer	DATE RECEIVED:	12/21/2021
CLIENT PROJECT:	POE - MIE / 121049.080.081	COLLECTION DATE:	12/21/2021 12:50:00 PM
CLIENT SAMPLE ID	MIE-DP-3-211221	WDOE ACCREDITATION:	C601

SAMPLE DATA RESULTS

ANALYTE	METHOD	RESULTS	REPORTING LIMITS	DILUTION FACTOR	UNITS	ANALYSIS DATE	ANALYSIS BY
2-Chloronaphthalene	EPA-8270	U	100	1	UG/KG	12/29/2021	JMK
2-Nitroaniline	EPA-8270	U	100	1	UG/KG	12/29/2021	JMK
Acenaphthylene	EPA-8270	U	100	1	UG/KG	12/29/2021	JMK
Dimethylphthalate	EPA-8270	U	100	1	UG/KG	12/29/2021	JMK
2,6-Dinitrotoluene	EPA-8270	U	100	1	UG/KG	12/29/2021	JMK
Acenaphthene	EPA-8270	U	100	1	UG/KG	12/29/2021	JMK
3-Nitroaniline	EPA-8270	U	1200	1	UG/KG	12/29/2021	JMK
2,4-Dinitrophenol	EPA-8270	U	110	1	UG/KG	12/29/2021	JMK
4-Nitrophenol	EPA-8270	U	110	1	UG/KG	12/29/2021	JMK
Dibenzofuran	EPA-8270	U	100	1	UG/KG	12/29/2021	JMK
2,4-Dinitrotoluene	EPA-8270	U	100	1	UG/KG	12/29/2021	JMK
2,3,4,6-Tetrachlorophenol	EPA-8270	U	100	1	UG/KG	12/29/2021	JMK
Diethylphthalate	EPA-8270	U	100	1	UG/KG	12/29/2021	JMK
Fluorene	EPA-8270	U	100	1	UG/KG	12/29/2021	JMK
4-Chlorophenyl-Phenylether	EPA-8270	U	100	1	UG/KG	12/29/2021	JMK
4-Nitroaniline	EPA-8270	U	250	1	UG/KG	12/29/2021	JMK
4,6-Dinitro-2-Methylphenol	EPA-8270	U	100	1	UG/KG	12/29/2021	JMK
N-Nitrosodiphenylamine	EPA-8270	U	100	1	UG/KG	12/29/2021	JMK
Azobenzene	EPA-8270	U	100	1	UG/KG	12/29/2021	JMK
4-Bromophenyl-Phenylether	EPA-8270	U	100	1	UG/KG	12/29/2021	JMK
Hexachlorobenzene	EPA-8270	U	100	1	UG/KG	12/29/2021	JMK
Pentachlorophenol	EPA-8270	U	500	1	UG/KG	12/29/2021	JMK
Phenanthrene	EPA-8270	U	100	1	UG/KG	12/29/2021	JMK
Anthracene	EPA-8270	U	100	1	UG/KG	12/29/2021	JMK
Carbazole	EPA-8270	U	250	1	UG/KG	12/29/2021	JMK
Di-N-Butylphthalate	EPA-8270	**230**	100	1	UG/KG	12/29/2021	JMK
Fluoranthene	EPA-8270	U	100	1	UG/KG	12/29/2021	JMK
Pyrene	EPA-8270	U	100	1	UG/KG	12/29/2021	JMK
Butylbenzylphthalate	EPA-8270	U	100	1	UG/KG	12/29/2021	JMK
3,3-Dichlorobenzidine	EPA-8270	U	340	1	UG/KG	12/29/2021	JMK
Benzo[A]Anthracene	EPA-8270	U	100	1	UG/KG	12/29/2021	JMK
Chrysene	EPA-8270	U	100	1	UG/KG	12/29/2021	JMK
Bis(2-Ethylhexyl)Phthalate	EPA-8270	U	100	1	UG/KG	12/29/2021	JMK
Di-N-Octylphthalate	EPA-8270	U	100	1	UG/KG	12/29/2021	JMK
Benzo[B]Fluoranthene	EPA-8270	U	100	1	UG/KG	12/29/2021	JMK
Benzo[K]Fluoranthene	EPA-8270	U	100	1	UG/KG	12/29/2021	JMK
Benzo[A]Pyrene	EPA-8270	U	100	1	UG/KG	12/29/2021	JMK
Indeno[1,2,3-Cd]Pyrene	EPA-8270	U	100	1	UG/KG	12/29/2021	JMK
Dibenz[A,H]Anthracene	EPA-8270	U	100	1	UG/KG	12/29/2021	JMK

ADDRESS 8620 Holly Drive, Suite 100, Everett, WA 98208 | PHONE 425-356-2600 | FAX 425-356-2626
ALS Group USA, Corp dba ALS Environmental

Environmental www.alsglobal.com
RIGHT SOLUTIONS RIGHT PARTNER

ALS Environmental

CERTIFICATE OF ANALYSIS

CLIENT:	Landau Associates, Inc. 155 NE 100th St, Ste 302 Seattle, WA 98125	DATE: ALS JOB#: ALS SAMPLE#:	12/30/2021 EV21120140 EV21120140-03
CLIENT CONTACT:	Dylan Frazer	DATE RECEIVED:	12/21/2021
CLIENT PROJECT:	POE - MIE / 121049.080.081	COLLECTION DATE:	12/21/2021 12:50:00 PM
CLIENT SAMPLE ID	MIE-DP-3-211221	WDOE ACCREDITATION:	C601

SAMPLE DATA RESULTS

ANALYTE	METHOD	RESULTS	REPORTING LIMITS	DILUTION FACTOR	UNITS	ANALYSIS DATE	ANALYSIS BY
Benzo[G,H,I]Perylene	EPA-8270	U	100	1	UG/KG	12/29/2021	JMK
PCB-1016	EPA-8082	U	0.10	1	MG/KG	12/23/2021	JMK
PCB-1221	EPA-8082	U	0.10	1	MG/KG	12/23/2021	JMK
PCB-1232	EPA-8082	U	0.10	1	MG/KG	12/23/2021	JMK
PCB-1242	EPA-8082	U	0.10	1	MG/KG	12/23/2021	JMK
PCB-1248	EPA-8082	U	0.10	1	MG/KG	12/23/2021	JMK
PCB-1254	EPA-8082	U	0.10	1	MG/KG	12/23/2021	JMK
PCB-1260	EPA-8082	U	0.10	1	MG/KG	12/23/2021	JMK
PCB-1268	EPA-8082	U	0.10	1	MG/KG	12/23/2021	JMK
Sulfate	EPA-300.0M	**520**	10	5	MG/KG	12/28/2021	EBS
Mercury	EPA-7471	**1.2**	0.10	5	MG/KG	12/28/2021	RAL
Arsenic	EPA-6020	**10**	0.20	1	MG/KG	12/28/2021	EBS
Barium	EPA-6020	**140**	0.10	1	MG/KG	12/28/2021	EBS
Cadmium	EPA-6020	**0.44**	0.10	1	MG/KG	12/28/2021	EBS
Chromium	EPA-6020	**32**	0.10	1	MG/KG	12/28/2021	EBS
Copper	EPA-6020	**84**	0.10	1	MG/KG	12/28/2021	EBS
Lead	EPA-6020	**170**	0.10	1	MG/KG	12/28/2021	EBS
Selenium	EPA-6020	U	1.0	1	MG/KG	12/28/2021	EBS
Silver	EPA-6020	U	0.10	1	MG/KG	12/28/2021	EBS
Zinc	EPA-6020	**120**	0.50	1	MG/KG	12/28/2021	EBS

SURROGATE	METHOD	%REC	ANALYSIS DATE	ANALYSIS BY
TFT	EPA-8021	**62.7**	12/23/2021	JMK
C25	NWTPH-DX	**109**	12/23/2021	JNF
2-Fluorophenol	EPA-8270	**70.6**	12/29/2021	JMK
Phenol-d5	EPA-8270	**61.9**	12/29/2021	JMK
Nitrobenzene-d5	EPA-8270	**58.6**	12/29/2021	JMK
2-Fluorobiphenyl	EPA-8270	**61.5**	12/29/2021	JMK
2,4,6-Tribromophenol	EPA-8270	**60.8**	12/29/2021	JMK
Terphenyl-d14	EPA-8270	**58.6**	12/29/2021	JMK
TCMX	EPA-8082	**84.0**	12/23/2021	JMK
DCB	EPA-8082	**96.7**	12/23/2021	JMK

U - Analyte analyzed for but not detected at level above reporting limit.
Chromatogram indicates that it is likely that sample contains an unidentified diesel range product and lube oil.

ADDRESS 8620 Holly Drive, Suite 100, Everett, WA 98208 | PHONE 425-356-2600 | FAX 425-356-2626
ALS Group USA, Corp dba ALS Environmental

Environmental www.alsglobal.com
RIGHT SOLUTIONS RIGHT PARTNER

ALS Environmental

CERTIFICATE OF ANALYSIS

CLIENT: Landau Associates, Inc.
155 NE 100th St, Ste 302
Seattle, WA 98125

DATE: 12/30/2021
ALS SDG#: EV21120140
WDOE ACCREDITATION: C601

CLIENT CONTACT: Dylan Frazer
CLIENT PROJECT: POE - MIE / 121049.080.081

LABORATORY BLANK RESULTS

MB-122221S - Batch 173945 - Soil by EPA-8021

ANALYTE	METHOD	RESULTS	UNITS	REPORTING LIMITS	ANALYSIS DATE	ANALYSIS BY
Benzene	EPA-8021	U	MG/KG	0.030	12/22/2021	JMK
Toluene	EPA-8021	U	MG/KG	0.050	12/22/2021	JMK
Ethylbenzene	EPA-8021	U	MG/KG	0.050	12/22/2021	JMK
Xylenes	EPA-8021	U	MG/KG	0.20	12/22/2021	JMK

U - Analyte analyzed for but not detected at level above reporting limit.

MB-122321S - Batch 173980 - Soil by NWTPH-DX

ANALYTE	METHOD	RESULTS	UNITS	REPORTING LIMITS	ANALYSIS DATE	ANALYSIS BY
TPH-Diesel Range (C12-C24)	NWTPH-DX	U	MG/KG	25	12/23/2021	JNF
TPH-Oil Range (C24-C40)	NWTPH-DX	U	MG/KG	50	12/23/2021	JNF

U - Analyte analyzed for but not detected at level above reporting limit.

MB-122221S - Batch 174061 - Soil by EPA-8270

ANALYTE	METHOD	RESULTS	UNITS	REPORTING LIMITS	ANALYSIS DATE	ANALYSIS BY
Pyridine	EPA-8270	U	UG/KG	200	12/29/2021	JMK
N-Nitrosodimethylamine	EPA-8270	U	UG/KG	100	12/29/2021	JMK
Phenol	EPA-8270	U	UG/KG	100	12/29/2021	JMK
Aniline	EPA-8270	U	UG/KG	100	12/29/2021	JMK
Bis(2-Chloroethyl)Ether	EPA-8270	U	UG/KG	250	12/29/2021	JMK
2-Chlorophenol	EPA-8270	U	UG/KG	250	12/29/2021	JMK
1,3-Dichlorobenzene	EPA-8270	U	UG/KG	100	12/29/2021	JMK
1,4-Dichlorobenzene	EPA-8270	U	UG/KG	100	12/29/2021	JMK
Benzyl Alcohol	EPA-8270	U	UG/KG	100	12/29/2021	JMK
1,2-Dichlorobenzene	EPA-8270	U	UG/KG	100	12/29/2021	JMK
2-Methylphenol	EPA-8270	U	UG/KG	100	12/29/2021	JMK
Bis(2-Chloroisopropyl)Ether	EPA-8270	U	UG/KG	250	12/29/2021	JMK
3&4-Methylphenol	EPA-8270	U	UG/KG	100	12/29/2021	JMK
N-Nitroso-Di-N-Propylamine	EPA-8270	U	UG/KG	250	12/29/2021	JMK
Hexachloroethane	EPA-8270	U	UG/KG	100	12/29/2021	JMK
Nitrobenzene	EPA-8270	U	UG/KG	100	12/29/2021	JMK
Isophorone	EPA-8270	U	UG/KG	100	12/29/2021	JMK
2-Nitrophenol	EPA-8270	U	UG/KG	100	12/29/2021	JMK
2,4-Dimethylphenol	EPA-8270	U	UG/KG	100	12/29/2021	JMK
Benzoic Acid	EPA-8270	U	UG/KG	1000	12/29/2021	JMK
Bis(2-Chloroethoxy)Methane	EPA-8270	U	UG/KG	250	12/29/2021	JMK
2,4-Dichlorophenol	EPA-8270	U	UG/KG	500	12/29/2021	JMK

ADDRESS 8620 Holly Drive, Suite 100, Everett, WA 98208 | PHONE 425-356-2600 | FAX 425-356-2626
ALS Group USA, Corp dba ALS Environmental

Environmental www.alsglobal.com
RIGHT SOLUTIONS RIGHT PARTNER

CERTIFICATE OF ANALYSIS

CLIENT:	Landau Associates, Inc. 155 NE 100th St, Ste 302 Seattle, WA 98125	DATE:	12/30/2021
		ALS SDG#:	EV21120140
		WDOE ACCREDITATION:	C601
CLIENT CONTACT:	Dylan Frazer		
CLIENT PROJECT:	POE - MIE / 121049.080.081		

LABORATORY BLANK RESULTS

MB-122221S - Batch 174061 - Soil by EPA-8270

1,2,4-Trichlorobenzene	EPA-8270	U	UG/KG	100	12/29/2021	JMK
Naphthalene	EPA-8270	U	UG/KG	100	12/29/2021	JMK
4-Chloroaniline	EPA-8270	U	UG/KG	1000	12/29/2021	JMK
2,6-Dichlorophenol	EPA-8270	U	UG/KG	250	12/29/2021	JMK
Hexachlorobutadiene	EPA-8270	U	UG/KG	500	12/29/2021	JMK
4-Chloro-3-Methylphenol	EPA-8270	U	UG/KG	500	12/29/2021	JMK
2-Methylnaphthalene	EPA-8270	U	UG/KG	250	12/29/2021	JMK
1-Methylnaphthalene	EPA-8270	U	UG/KG	250	12/29/2021	JMK
Hexachlorocyclopentadiene	EPA-8270	U	UG/KG	100	12/29/2021	JMK
2,4,6-Trichlorophenol	EPA-8270	U	UG/KG	100	12/29/2021	JMK
2,4,5-Trichlorophenol	EPA-8270	U	UG/KG	100	12/29/2021	JMK
2-Chloronaphthalene	EPA-8270	U	UG/KG	100	12/29/2021	JMK
2-Nitroaniline	EPA-8270	U	UG/KG	100	12/29/2021	JMK
Acenaphthylene	EPA-8270	U	UG/KG	100	12/29/2021	JMK
Dimethylphthalate	EPA-8270	U	UG/KG	100	12/29/2021	JMK
2,6-Dinitrotoluene	EPA-8270	U	UG/KG	100	12/29/2021	JMK
Acenaphthene	EPA-8270	U	UG/KG	100	12/29/2021	JMK
3-Nitroaniline	EPA-8270	U	UG/KG	1000	12/29/2021	JMK
2,4-Dinitrophenol	EPA-8270	U	UG/KG	100	12/29/2021	JMK
4-Nitrophenol	EPA-8270	U	UG/KG	100	12/29/2021	JMK
Dibenzofuran	EPA-8270	U	UG/KG	100	12/29/2021	JMK
2,4-Dinitrotoluene	EPA-8270	U	UG/KG	100	12/29/2021	JMK
2,3,4,6-Tetrachlorophenol	EPA-8270	U	UG/KG	100	12/29/2021	JMK
Diethylphthalate	EPA-8270	U	UG/KG	100	12/29/2021	JMK
Fluorene	EPA-8270	U	UG/KG	100	12/29/2021	JMK
4-Chlorophenyl-Phenylether	EPA-8270	U	UG/KG	100	12/29/2021	JMK
4-Nitroaniline	EPA-8270	U	UG/KG	250	12/29/2021	JMK
4,6-Dinitro-2-Methylphenol	EPA-8270	U	UG/KG	100	12/29/2021	JMK
N-Nitrosodiphenylamine	EPA-8270	U	UG/KG	100	12/29/2021	JMK
Azobenzene	EPA-8270	U	UG/KG	100	12/29/2021	JMK
4-Bromophenyl-Phenylether	EPA-8270	U	UG/KG	100	12/29/2021	JMK
Hexachlorobenzene	EPA-8270	U	UG/KG	100	12/29/2021	JMK
Pentachlorophenol	EPA-8270	U	UG/KG	500	12/29/2021	JMK
Phenanthrene	EPA-8270	U	UG/KG	100	12/29/2021	JMK
Anthracene	EPA-8270	U	UG/KG	100	12/29/2021	JMK
Carbazole	EPA-8270	U	UG/KG	250	12/29/2021	JMK
Di-N-Butylphthalate	EPA-8270	U	UG/KG	100	12/29/2021	JMK
Fluoranthene	EPA-8270	U	UG/KG	100	12/29/2021	JMK
Pyrene	EPA-8270	U	UG/KG	100	12/29/2021	JMK
Butylbenzylphthalate	EPA-8270	U	UG/KG	100	12/29/2021	JMK
3,3-Dichlorobenzidine	EPA-8270	U	UG/KG	250	12/29/2021	JMK

ADDRESS 8620 Holly Drive, Suite 100, Everett, WA 98208 | PHONE 425-356-2600 | FAX 425-356-2626
ALS Group USA, Corp dba ALS Environmental

Environmental www.alsglobal.com
RIGHT SOLUTIONS RIGHT PARTNER

ALS Environmental

CERTIFICATE OF ANALYSIS

CLIENT: Landau Associates, Inc.
155 NE 100th St, Ste 302
Seattle, WA 98125
CLIENT CONTACT: Dylan Frazer
CLIENT PROJECT: POE - MIE / 121049.080.081

DATE: 12/30/2021
ALS SDG#: EV21120140
WDOE ACCREDITATION: C601

LABORATORY BLANK RESULTS

MB-122221S - Batch 174061 - Soil by EPA-8270

Benzo[A]Anthracene	EPA-8270	U	UG/KG	100	12/29/2021	JMK
Chrysene	EPA-8270	U	UG/KG	100	12/29/2021	JMK
Bis(2-Ethylhexyl)Phthalate	EPA-8270	U	UG/KG	100	12/29/2021	JMK
Di-N-Octylphthalate	EPA-8270	U	UG/KG	100	12/29/2021	JMK
Benzo[B]Fluoranthene	EPA-8270	U	UG/KG	100	12/29/2021	JMK
Benzo[K]Fluoranthene	EPA-8270	U	UG/KG	100	12/29/2021	JMK
Benzo[A]Pyrene	EPA-8270	U	UG/KG	100	12/29/2021	JMK
Indeno[1,2,3-Cd]Pyrene	EPA-8270	U	UG/KG	100	12/29/2021	JMK
Dibenz[A,H]Anthracene	EPA-8270	U	UG/KG	100	12/29/2021	JMK
Benzo[G,H,I]Perylene	EPA-8270	U	UG/KG	100	12/29/2021	JMK

U - Analyte analyzed for but not detected at level above reporting limit.

MB-122321S - Batch 174019 - Soil by EPA-8082

ANALYTE	METHOD	RESULTS	UNITS	REPORTING LIMITS	ANALYSIS DATE	ANALYSIS BY
PCB-1016	EPA-8082	U	MG/KG	0.10	12/23/2021	JMK
PCB-1221	EPA-8082	U	MG/KG	0.10	12/23/2021	JMK
PCB-1232	EPA-8082	U	MG/KG	0.10	12/23/2021	JMK
PCB-1242	EPA-8082	U	MG/KG	0.10	12/23/2021	JMK
PCB-1248	EPA-8082	U	MG/KG	0.10	12/23/2021	JMK
PCB-1254	EPA-8082	U	MG/KG	0.10	12/23/2021	JMK
PCB-1260	EPA-8082	U	MG/KG	0.10	12/23/2021	JMK
PCB-1268	EPA-8082	U	MG/KG	0.10	12/23/2021	JMK

U - Analyte analyzed for but not detected at level above reporting limit.

MBLK-R398568 - Batch R398568 - Soil by EPA-300.0M

ANALYTE	METHOD	RESULTS	UNITS	REPORTING LIMITS	ANALYSIS DATE	ANALYSIS BY
Sulfate	EPA-300.0M	U	MG/KG	2.0	12/28/2021	EBS

U - Analyte analyzed for but not detected at level above reporting limit.

MBLK-R398571 - Batch R398571 - Soil by EPA-7471

ANALYTE	METHOD	RESULTS	UNITS	REPORTING LIMITS	ANALYSIS DATE	ANALYSIS BY
Mercury	EPA-7471	U	MG/KG	0.020	12/28/2021	RAL

U - Analyte analyzed for but not detected at level above reporting limit.

ADDRESS 8620 Holly Drive, Suite 100, Everett, WA 98208 | PHONE 425-356-2600 | FAX 425-356-2626
ALS Group USA, Corp dba ALS Environmental

Environmental www.alsglobal.com
RIGHT SOLUTIONS RIGHT PARTNER

CERTIFICATE OF ANALYSIS

CLIENT:	Landau Associates, Inc. 155 NE 100th St, Ste 302 Seattle, WA 98125	DATE:	12/30/2021
		ALS SDG#:	EV21120140
		WDOE ACCREDITATION:	C601
CLIENT CONTACT:	Dylan Frazer		
CLIENT PROJECT:	POE - MIE / 121049.080.081		

LABORATORY BLANK RESULTS

MB-122821S - Batch 174026 - Soil by EPA-6020

ANALYTE	METHOD	RESULTS	UNITS	REPORTING LIMITS	ANALYSIS DATE	ANALYSIS BY
Arsenic	EPA-6020	U	MG/KG	0.20	12/28/2021	EBS
Barium	EPA-6020	U	MG/KG	0.12	12/28/2021	EBS
Cadmium	EPA-6020	U	MG/KG	0.10	12/28/2021	EBS
Chromium	EPA-6020	U	MG/KG	0.10	12/28/2021	EBS
Copper	EPA-6020	U	MG/KG	0.10	12/28/2021	EBS
Lead	EPA-6020	U	MG/KG	0.10	12/28/2021	EBS
Selenium	EPA-6020	U	MG/KG	1.0	12/28/2021	EBS
Silver	EPA-6020	U	MG/KG	0.10	12/28/2021	EBS
Zinc	EPA-6020	U	MG/KG	0.88	12/28/2021	EBS

U - Analyte analyzed for but not detected at level above reporting limit.

ADDRESS 8620 Holly Drive, Suite 100, Everett, WA 98208 | PHONE 425-356-2600 | FAX 425-356-2626
ALS Group USA, Corp dba ALS Environmental

Environmental www.alsglobal.com
RIGHT SOLUTIONS RIGHT PARTNER

ALS Environmental

CERTIFICATE OF ANALYSIS

CLIENT: Landau Associates, Inc.
155 NE 100th St, Ste 302
Seattle, WA 98125
CLIENT CONTACT: Dylan Frazer
CLIENT PROJECT: POE - MIE / 121049.080.081

DATE: 12/30/2021
ALS SDG#: EV21120140
WDOE ACCREDITATION: C601

LABORATORY CONTROL SAMPLE RESULTS

ALS Test Batch ID: 173945 - Soil by EPA-8021

SPIKED COMPOUND	METHOD	%REC	RPD	QUAL	LIMITS MIN	LIMITS MAX	ANALYSIS DATE	ANALYSIS BY
Benzene - BS	EPA-8021	**79.9**			67.7	124	12/23/2021	JMK
Benzene - BSD	EPA-8021	**80.6**	**1**		67.7	124	12/23/2021	JMK
Toluene - BS	EPA-8021	**86.5**			71	123	12/23/2021	JMK
Toluene - BSD	EPA-8021	**86.5**	**0**		71	123	12/23/2021	JMK
Ethylbenzene - BS	EPA-8021	**82.8**			69.8	117	12/23/2021	JMK
Ethylbenzene - BSD	EPA-8021	**83.5**	**1**		69.8	117	12/23/2021	JMK
Xylenes - BS	EPA-8021	**83.7**			70	119	12/23/2021	JMK
Xylenes - BSD	EPA-8021	**84.5**	**1**		70	119	12/23/2021	JMK

ALS Test Batch ID: 173980 - Soil by NWTPH-DX

SPIKED COMPOUND	METHOD	%REC	RPD	QUAL	LIMITS MIN	LIMITS MAX	ANALYSIS DATE	ANALYSIS BY
TPH-Diesel Range (C12-C24) - BS	NWTPH-DX	**108**			75.5	122.1	12/23/2021	JNF
TPH-Diesel Range (C12-C24) - BSD	NWTPH-DX	**106**	**2**		75.5	122.1	12/23/2021	JNF

ALS Test Batch ID: 174061 - Soil by EPA-8270

SPIKED COMPOUND	METHOD	%REC	RPD	QUAL	LIMITS MIN	LIMITS MAX	ANALYSIS DATE	ANALYSIS BY
Pyridine - BS	EPA-8270	**50.0**			20	150	12/29/2021	JMK
Pyridine - BSD	EPA-8270	**50.1**	**0**		20	150	12/29/2021	JMK
N-Nitrosodimethylamine - BS	EPA-8270	**69.0**			20	150	12/29/2021	JMK
N-Nitrosodimethylamine - BSD	EPA-8270	**62.2**	**10**		20	150	12/29/2021	JMK
Phenol - BS	EPA-8270	**90.3**			36.1	131	12/29/2021	JMK
Phenol - BSD	EPA-8270	**98.9**	**9**		36.1	131	12/29/2021	JMK
Aniline - BS	EPA-8270	**85.9**			20	150	12/29/2021	JMK
Aniline - BSD	EPA-8270	**102**	**17**		20	150	12/29/2021	JMK
Bis(2-Chloroethyl)Ether - BS	EPA-8270	**69.7**			20	150	12/29/2021	JMK
Bis(2-Chloroethyl)Ether - BSD	EPA-8270	**70.6**	**1**		20	150	12/29/2021	JMK
2-Chlorophenol - BS	EPA-8270	**78.0**			59.9	111	12/29/2021	JMK
2-Chlorophenol - BSD	EPA-8270	**80.9**	**4**		59.9	111	12/29/2021	JMK
1,3-Dichlorobenzene - BS	EPA-8270	**71.8**			20	150	12/29/2021	JMK
1,3-Dichlorobenzene - BSD	EPA-8270	**69.5**	**3**		20	150	12/29/2021	JMK
1,4-Dichlorobenzene - BS	EPA-8270	**79.5**			44.3	122	12/29/2021	JMK
1,4-Dichlorobenzene - BSD	EPA-8270	**69.9**	**13**		44.3	122	12/29/2021	JMK
Benzyl Alcohol - BS	EPA-8270	**80.2**			20	150	12/29/2021	JMK
Benzyl Alcohol - BSD	EPA-8270	**86.4**	**7**		20	150	12/29/2021	JMK
1,2-Dichlorobenzene - BS	EPA-8270	**77.2**			20	150	12/29/2021	JMK
1,2-Dichlorobenzene - BSD	EPA-8270	**72.6**	**6**		20	150	12/29/2021	JMK
2-Methylphenol - BS	EPA-8270	**75.7**			20	150	12/29/2021	JMK

ADDRESS 8620 Holly Drive, Suite 100, Everett, WA 98208 | PHONE 425-356-2600 | FAX 425-356-2626
ALS Group USA, Corp dba ALS Environmental

Environmental www.alsglobal.com
RIGHT SOLUTIONS RIGHT PARTNER

ALS Environmental

CERTIFICATE OF ANALYSIS

CLIENT: Landau Associates, Inc.
155 NE 100th St, Ste 302
Seattle, WA 98125

DATE: 12/30/2021
ALS SDG#: EV21120140
WDOE ACCREDITATION: C601

CLIENT CONTACT: Dylan Frazer
CLIENT PROJECT: POE - MIE / 121049.080.081

LABORATORY CONTROL SAMPLE RESULTS

SPIKED COMPOUND	METHOD	%REC	RPD	QUAL	LIMITS MIN	LIMITS MAX	ANALYSIS DATE	ANALYSIS BY
2-Methylphenol - BSD	EPA-8270	**83.6**	**10**		20	150	12/29/2021	JMK
Bis(2-Chloroisopropyl)Ether - BS	EPA-8270	**74.6**			20	150	12/29/2021	JMK
Bis(2-Chloroisopropyl)Ether - BSD	EPA-8270	**73.6**	**1**		20	150	12/29/2021	JMK
3&4-Methylphenol - BS	EPA-8270	**78.0**			20	150	12/29/2021	JMK
3&4-Methylphenol - BSD	EPA-8270	**87.6**	**12**		20	150	12/29/2021	JMK
N-Nitroso-Di-N-Propylamine - BS	EPA-8270	**79.1**			31.6	134	12/29/2021	JMK
N-Nitroso-Di-N-Propylamine - BSD	EPA-8270	**84.5**	**7**		31.6	134	12/29/2021	JMK
Hexachloroethane - BS	EPA-8270	**75.5**			20	150	12/29/2021	JMK
Hexachloroethane - BSD	EPA-8270	**68.7**	**9**		20	150	12/29/2021	JMK
Nitrobenzene - BS	EPA-8270	**80.9**			20	150	12/29/2021	JMK
Nitrobenzene - BSD	EPA-8270	**80.8**	**0**		20	150	12/29/2021	JMK
Isophorone - BS	EPA-8270	**66.0**			20	150	12/29/2021	JMK
Isophorone - BSD	EPA-8270	**67.7**	**3**		20	150	12/29/2021	JMK
2-Nitrophenol - BS	EPA-8270	**69.9**			20	150	12/29/2021	JMK
2-Nitrophenol - BSD	EPA-8270	**72.4**	**4**		20	150	12/29/2021	JMK
2,4-Dimethylphenol - BS	EPA-8270	**65.5**			20	150	12/29/2021	JMK
2,4-Dimethylphenol - BSD	EPA-8270	**77.2**	**16**		20	150	12/29/2021	JMK
Bis(2-Chloroethoxy)Methane - BS	EPA-8270	**80.2**			20	150	12/29/2021	JMK
Bis(2-Chloroethoxy)Methane - BSD	EPA-8270	**81.9**	**2**		20	150	12/29/2021	JMK
2,4-Dichlorophenol - BS	EPA-8270	**82.6**			20	150	12/29/2021	JMK
2,4-Dichlorophenol - BSD	EPA-8270	**87.7**	**6**		20	150	12/29/2021	JMK
1,2,4-Trichlorobenzene - BS	EPA-8270	**79.4**			44.6	122	12/29/2021	JMK
1,2,4-Trichlorobenzene - BSD	EPA-8270	**77.4**	**3**		44.6	122	12/29/2021	JMK
Naphthalene - BS	EPA-8270	**81.5**			20	150	12/29/2021	JMK
Naphthalene - BSD	EPA-8270	**81.9**	**0**		20	150	12/29/2021	JMK
4-Chloroaniline - BS	EPA-8270	**797**		SQ1	20	150	12/29/2021	JMK
4-Chloroaniline - BSD	EPA-8270	**890**	**11**	DUP05	20	150	12/29/2021	JMK
Hexachlorobutadiene - BS	EPA-8270	**78.0**			20	150	12/29/2021	JMK
Hexachlorobutadiene - BSD	EPA-8270	**74.4**	**5**		20	150	12/29/2021	JMK
4-Chloro-3-Methylphenol - BS	EPA-8270	**76.4**			49.2	135	12/29/2021	JMK
4-Chloro-3-Methylphenol - BSD	EPA-8270	**84.7**	**10**		49.2	135	12/29/2021	JMK
2-Methylnaphthalene - BS	EPA-8270	**78.9**			20	150	12/29/2021	JMK
2-Methylnaphthalene - BSD	EPA-8270	**82.0**	**4**		20	150	12/29/2021	JMK
1-Methylnaphthalene - BS	EPA-8270	**79.9**			20	150	12/29/2021	JMK
1-Methylnaphthalene - BSD	EPA-8270	**85.1**	**6**		20	150	12/29/2021	JMK
Hexachlorocyclopentadiene - BS	EPA-8270	**68.1**			20	150	12/29/2021	JMK
Hexachlorocyclopentadiene - BSD	EPA-8270	**53.1**	**25**		20	150	12/29/2021	JMK
2,4,6-Trichlorophenol - BS	EPA-8270	**74.8**			20	150	12/29/2021	JMK
2,4,6-Trichlorophenol - BSD	EPA-8270	**83.2**	**11**		20	150	12/29/2021	JMK
2,4,5-Trichlorophenol - BS	EPA-8270	**80.2**			20	150	12/29/2021	JMK

ADDRESS 8620 Holly Drive, Suite 100, Everett, WA 98208 | PHONE 425-356-2600 | FAX 425-356-2626
ALS Group USA, Corp dba ALS Environmental

Environmental www.alsglobal.com
RIGHT SOLUTIONS RIGHT PARTNER

CERTIFICATE OF ANALYSIS

CLIENT: Landau Associates, Inc.
155 NE 100th St, Ste 302
Seattle, WA 98125

CLIENT CONTACT: Dylan Frazer
CLIENT PROJECT: POE - MIE / 121049.080.081

DATE: 12/30/2021
ALS SDG#: EV21120140
WDOE ACCREDITATION: C601

LABORATORY CONTROL SAMPLE RESULTS

SPIKED COMPOUND	METHOD	%REC	RPD	QUAL	LIMITS MIN	LIMITS MAX	ANALYSIS DATE	ANALYSIS BY
2,4,5-Trichlorophenol - BSD	EPA-8270	**90.4**	**12**		20	150	12/29/2021	JMK
2-Chloronaphthalene - BS	EPA-8270	**81.6**			20	150	12/29/2021	JMK
2-Chloronaphthalene - BSD	EPA-8270	**85.7**	**5**		20	150	12/29/2021	JMK
2-Nitroaniline - BS	EPA-8270	**138**			20	150	12/29/2021	JMK
2-Nitroaniline - BSD	EPA-8270	**156**	**12**	DUP05	20	150	12/29/2021	JMK
Acenaphthylene - BS	EPA-8270	**80.4**			20	150	12/29/2021	JMK
Acenaphthylene - BSD	EPA-8270	**85.2**	**6**		20	150	12/29/2021	JMK
Dimethylphthalate - BS	EPA-8270	**83.9**			20	150	12/29/2021	JMK
Dimethylphthalate - BSD	EPA-8270	**91.9**	**9**		20	150	12/29/2021	JMK
2,6-Dinitrotoluene - BS	EPA-8270	**83.2**			20	150	12/29/2021	JMK
2,6-Dinitrotoluene - BSD	EPA-8270	**92.8**	**11**		20	150	12/29/2021	JMK
Acenaphthene - BS	EPA-8270	**83.9**			49.3	117	12/29/2021	JMK
Acenaphthene - BSD	EPA-8270	**90.6**	**8**		49.3	117	12/29/2021	JMK
3-Nitroaniline - BS	EPA-8270	**138**			20	150	12/29/2021	JMK
3-Nitroaniline - BSD	EPA-8270	**156**	**12**	DUP05	20	150	12/29/2021	JMK
2,4-Dinitrophenol - BS	EPA-8270	**80.5**			20	150	12/29/2021	JMK
2,4-Dinitrophenol - BSD	EPA-8270	**95.2**	**17**		20	150	12/29/2021	JMK
4-Nitrophenol - BS	EPA-8270	**88.1**			29.8	137	12/29/2021	JMK
4-Nitrophenol - BSD	EPA-8270	**109**	**21**	SR1	29.8	137	12/29/2021	JMK
Dibenzofuran - BS	EPA-8270	**83.2**			20	150	12/29/2021	JMK
Dibenzofuran - BSD	EPA-8270	**91.2**	**9**		20	150	12/29/2021	JMK
2,4-Dinitrotoluene - BS	EPA-8270	**82.5**			55.3	130	12/29/2021	JMK
2,4-Dinitrotoluene - BSD	EPA-8270	**94.9**	**14**	SR1	55.3	130	12/29/2021	JMK
2,3,4,6-Tetrachlorophenol - BS	EPA-8270	**85.9**			20	150	12/29/2021	JMK
2,3,4,6-Tetrachlorophenol - BSD	EPA-8270	**99.5**	**15**		20	150	12/29/2021	JMK
Diethylphthalate - BS	EPA-8270	**86.1**			20	150	12/29/2021	JMK
Diethylphthalate - BSD	EPA-8270	**94.3**	**9**		20	150	12/29/2021	JMK
Fluorene - BS	EPA-8270	**84.4**			20	150	12/29/2021	JMK
Fluorene - BSD	EPA-8270	**92.4**	**9**		20	150	12/29/2021	JMK
4-Chlorophenyl-Phenylether - BS	EPA-8270	**84.8**			20	150	12/29/2021	JMK
4-Chlorophenyl-Phenylether - BSD	EPA-8270	**92.9**	**9**		20	150	12/29/2021	JMK
4-Nitroaniline - BS	EPA-8270	**34.7**			20	150	12/29/2021	JMK
4-Nitroaniline - BSD	EPA-8270	**258**	**153**	SQ1	20	150	12/29/2021	JMK
4,6-Dinitro-2-Methylphenol - BS	EPA-8270	**86.9**			20	150	12/29/2021	JMK
4,6-Dinitro-2-Methylphenol - BSD	EPA-8270	**100**	**14**		20	150	12/29/2021	JMK
Azobenzene - BS	EPA-8270	**81.0**			20	150	12/29/2021	JMK
Azobenzene - BSD	EPA-8270	**88.3**	**9**		20	150	12/29/2021	JMK
4-Bromophenyl-Phenylether - BS	EPA-8270	**81.9**			20	150	12/29/2021	JMK
4-Bromophenyl-Phenylether - BSD	EPA-8270	**89.7**	**9**		20	150	12/29/2021	JMK
Hexachlorobenzene - BS	EPA-8270	**80.6**			20	150	12/29/2021	JMK

ADDRESS 8620 Holly Drive, Suite 100, Everett, WA 98208 | PHONE 425-356-2600 | FAX 425-356-2626
ALS Group USA, Corp dba ALS Environmental

Environmental www.alsglobal.com
RIGHT SOLUTIONS RIGHT PARTNER

ALS Environmental

CERTIFICATE OF ANALYSIS

CLIENT: Landau Associates, Inc.
155 NE 100th St, Ste 302
Seattle, WA 98125

DATE: 12/30/2021
ALS SDG#: EV21120140
WDOE ACCREDITATION: C601

CLIENT CONTACT: Dylan Frazer
CLIENT PROJECT: POE - MIE / 121049.080.081

LABORATORY CONTROL SAMPLE RESULTS

SPIKED COMPOUND	METHOD	%REC	RPD	QUAL	LIMITS MIN	LIMITS MAX	ANALYSIS DATE	ANALYSIS BY
Hexachlorobenzene - BSD	EPA-8270	**88.5**	**9**		20	150	12/29/2021	JMK
Pentachlorophenol - BS	EPA-8270	**74.3**			41.3	113	12/29/2021	JMK
Pentachlorophenol - BSD	EPA-8270	**92.1**	**21**	SR1	41.3	113	12/29/2021	JMK
Phenanthrene - BS	EPA-8270	**84.9**			20	150	12/29/2021	JMK
Phenanthrene - BSD	EPA-8270	**95.5**	**12**		20	150	12/29/2021	JMK
Anthracene - BS	EPA-8270	**83.1**			20	150	12/29/2021	JMK
Anthracene - BSD	EPA-8270	**91.2**	**9**		20	150	12/29/2021	JMK
Carbazole - BS	EPA-8270	**106**			20	150	12/29/2021	JMK
Carbazole - BSD	EPA-8270	**119**	**12**		20	150	12/29/2021	JMK
Di-N-Butylphthalate - BS	EPA-8270	**87.7**			20	150	12/29/2021	JMK
Di-N-Butylphthalate - BSD	EPA-8270	**97.4**	**10**		20	150	12/29/2021	JMK
Fluoranthene - BS	EPA-8270	**87.1**			20	150	12/29/2021	JMK
Fluoranthene - BSD	EPA-8270	**99.1**	**13**		20	150	12/29/2021	JMK
Pyrene - BS	EPA-8270	**88.7**			57.4	145	12/29/2021	JMK
Pyrene - BSD	EPA-8270	**97.0**	**9**		57.4	145	12/29/2021	JMK
Butylbenzylphthalate - BS	EPA-8270	**84.0**			20	150	12/29/2021	JMK
Butylbenzylphthalate - BSD	EPA-8270	**92.9**	**10**		20	150	12/29/2021	JMK
Benzo[A]Anthracene - BS	EPA-8270	**81.6**			20	150	12/29/2021	JMK
Benzo[A]Anthracene - BSD	EPA-8270	**91.7**	**12**		20	150	12/29/2021	JMK
Chrysene - BS	EPA-8270	**81.3**			20	150	12/29/2021	JMK
Chrysene - BSD	EPA-8270	**90.8**	**11**		20	150	12/29/2021	JMK
Bis(2-Ethylhexyl)Phthalate - BS	EPA-8270	**86.3**			20	150	12/29/2021	JMK
Bis(2-Ethylhexyl)Phthalate - BSD	EPA-8270	**94.4**	**9**		20	150	12/29/2021	JMK
Di-N-Octylphthalate - BS	EPA-8270	**82.1**			20	150	12/29/2021	JMK
Di-N-Octylphthalate - BSD	EPA-8270	**91.2**	**10**		20	150	12/29/2021	JMK
Benzo[B]Fluoranthene - BS	EPA-8270	**73.1**			20	150	12/29/2021	JMK
Benzo[B]Fluoranthene - BSD	EPA-8270	**86.6**	**17**		20	150	12/29/2021	JMK
Benzo[K]Fluoranthene - BS	EPA-8270	**84.0**			20	150	12/29/2021	JMK
Benzo[K]Fluoranthene - BSD	EPA-8270	**89.5**	**6**		20	150	12/29/2021	JMK
Benzo[A]Pyrene - BS	EPA-8270	**75.7**			20	150	12/29/2021	JMK
Benzo[A]Pyrene - BSD	EPA-8270	**86.3**	**13**		20	150	12/29/2021	JMK
Indeno[1,2,3-Cd]Pyrene - BS	EPA-8270	**80.3**			20	150	12/29/2021	JMK
Indeno[1,2,3-Cd]Pyrene - BSD	EPA-8270	**95.0**	**17**		20	150	12/29/2021	JMK
Dibenz[A,H]Anthracene - BS	EPA-8270	**81.7**			20	150	12/29/2021	JMK
Dibenz[A,H]Anthracene - BSD	EPA-8270	**97.0**	**17**		20	150	12/29/2021	JMK
Benzo[G,H,I]Perylene - BS	EPA-8270	**80.3**			20	150	12/29/2021	JMK
Benzo[G,H,I]Perylene - BSD	EPA-8270	**93.6**	**15**		20	150	12/29/2021	JMK

ADDRESS 8620 Holly Drive, Suite 100, Everett, WA 98208 | PHONE 425-356-2600 | FAX 425-356-2626
ALS Group USA, Corp dba ALS Environmental

Environmental www.alsglobal.com
RIGHT SOLUTIONS RIGHT PARTNER

CERTIFICATE OF ANALYSIS

CLIENT:	Landau Associates, Inc. 155 NE 100th St, Ste 302 Seattle, WA 98125	DATE:	12/30/2021
		ALS SDG#:	EV21120140
		WDOE ACCREDITATION:	C601
CLIENT CONTACT:	Dylan Frazer		
CLIENT PROJECT:	POE - MIE / 121049.080.081		

LABORATORY CONTROL SAMPLE RESULTS

DUP05 - LCS/LCSD RPD exceeded the laboratory acceptance limit. Recovery met acceptance criteria.
SQ1 - Spike outside of control limits with a high bias. Associated compounds non-detect. No corrective action taken.
SR1 - RPD outside of control limits.

ALS Test Batch ID: 174019 - Soil by EPA-8082

SPIKED COMPOUND	METHOD	%REC	RPD	QUAL	LIMITS MIN	LIMITS MAX	ANALYSIS DATE	ANALYSIS BY
PCB-1016 - BS	EPA-8082	**85.2**			50	150	12/23/2021	JMK
PCB-1016 - BSD	EPA-8082	**82.2**	**4**		50	150	12/23/2021	JMK
PCB-1260 - BS	EPA-8082	**88.3**			50	150	12/23/2021	JMK
PCB-1260 - BSD	EPA-8082	**92.5**	**5**		50	150	12/23/2021	JMK

ALS Test Batch ID: R398568 - Soil by EPA-300.0M

SPIKED COMPOUND	METHOD	%REC	RPD	QUAL	LIMITS MIN	LIMITS MAX	ANALYSIS DATE	ANALYSIS BY
Sulfate - BS	EPA-300.0M	**100**			80	120	12/28/2021	EBS
Sulfate - BSD	EPA-300.0M	**101**	**1**		80	120	12/28/2021	EBS

ALS Test Batch ID: R398571 - Soil by EPA-7471

SPIKED COMPOUND	METHOD	%REC	RPD	QUAL	LIMITS MIN	LIMITS MAX	ANALYSIS DATE	ANALYSIS BY
Mercury - BS	EPA-7471	**108**			81.8	117	12/28/2021	RAL
Mercury - BSD	EPA-7471	**108**	**0**		81.8	117	12/28/2021	RAL

ALS Test Batch ID: 174026 - Soil by EPA-6020

SPIKED COMPOUND	METHOD	%REC	RPD	QUAL	LIMITS MIN	LIMITS MAX	ANALYSIS DATE	ANALYSIS BY
Arsenic - BS	EPA-6020	**93.0**			80	120	12/28/2021	EBS
Arsenic - BSD	EPA-6020	**94.7**	**2**		80	120	12/28/2021	EBS
Barium - BS	EPA-6020	**94.8**			80	120	12/28/2021	EBS
Barium - BSD	EPA-6020	**94.2**	**1**		80	120	12/28/2021	EBS
Cadmium - BS	EPA-6020	**96.8**			80	120	12/28/2021	EBS
Cadmium - BSD	EPA-6020	**99.7**	**3**		80	120	12/28/2021	EBS
Chromium - BS	EPA-6020	**91.7**			80	120	12/28/2021	EBS
Chromium - BSD	EPA-6020	**94.0**	**2**		80	120	12/28/2021	EBS
Copper - BS	EPA-6020	**95.8**			80	120	12/28/2021	EBS
Copper - BSD	EPA-6020	**97.5**	**2**		80	120	12/28/2021	EBS
Lead - BS	EPA-6020	**90.8**			80	120	12/28/2021	EBS
Lead - BSD	EPA-6020	**95.4**	**5**		80	120	12/28/2021	EBS
Selenium - BS	EPA-6020	**93.3**			80	120	12/28/2021	EBS
Selenium - BSD	EPA-6020	**95.6**	**2**		80	120	12/28/2021	EBS
Silver - BS	EPA-6020	**95.9**			80	120	12/28/2021	EBS
Silver - BSD	EPA-6020	**98.2**	**2**		80	120	12/28/2021	EBS

ADDRESS 8620 Holly Drive, Suite 100, Everett, WA 98208 | PHONE 425-356-2600 | FAX 425-356-2626
ALS Group USA, Corp dba ALS Environmental

Environmental www.alsglobal.com
RIGHT SOLUTIONS RIGHT PARTNER

CERTIFICATE OF ANALYSIS

CLIENT:	Landau Associates, Inc. 155 NE 100th St, Ste 302 Seattle, WA 98125	DATE:	12/30/2021
		ALS SDG#:	EV21120140
		WDOE ACCREDITATION:	C601
CLIENT CONTACT:	Dylan Frazer		
CLIENT PROJECT:	POE - MIE / 121049.080.081		

LABORATORY CONTROL SAMPLE RESULTS

SPIKED COMPOUND	METHOD	%REC	RPD	QUAL	LIMITS MIN	LIMITS MAX	ANALYSIS DATE	ANALYSIS BY
Zinc - BS	EPA-6020	**96.9**			80	119	12/28/2021	EBS
Zinc - BSD	EPA-6020	**98.9**	**2**		80	119	12/28/2021	EBS

APPROVED BY

Laboratory Director

ADDRESS 8620 Holly Drive, Suite 100, Everett, WA 98208 | PHONE 425-356-2600 | FAX 425-356-2626
ALS Group USA, Corp dba ALS Environmental

Environmental www.alsglobal.com
RIGHT SOLUTIONS RIGHT PARTNER

EV2112O140

Chain-of-Custody Record

LANDAU ASSOCIATES

- [x] North Seattle (206) 631-8660
- [ ] Tacoma (253) 926-2493
- [ ] Olympia (360) 791-3178
- [ ] Spokane (509) 327-9737
- [ ] Portland (503) 542-1080
- [ ] _____

Date 12/21/21

Page 1 of 1

Turnaround Time:
Standard _____
Accelerated 12/31/21

Project Name POE - MIE Project No. 121049.050.081

Project Location/Event Port of Everett, WA / Waste Disposal Profiling

Sampler's Name Devan Brandt

Project Contact Dylan Frazer

Send Results To Dylan Frazer, Elise Gronewald & Devan Brandt

Special Handling Requirements: _____

Shipment Method: _____

Stored on ice: (Yes) / No

Sample I.D.	Date	Time	Matrix	No. of Containers	TPH-D/O	PCBs	SVOCs	RCRA 8 metals *	Sulfide	BTEX (8021)	CoV						Observations/Comments
MIE-DP-1-211221	12/21/21	1240	Soil	4	x	x	x	x	x	x							
MIE-DP-2-211221	↓	1245	↓	4	x	x	x	x	x	x							
MIE-DP-3-211221	↓	1250	↓	4	x	x	x	x	x	x							

- ___ Allow water samples to settle, collect aliquot from clear portion ☐
- ___ NWTPH-Dx - Acid wash cleanup ☐
  - Silica gel cleanup ☐
- ___ Dissolved metal samples were field filtered

Other * plus copper & zinc

Relinquished by	Received by	Relinquished by	Received by
Signature	Signature	Signature	Signature
Printed Name Devan Brandt	Printed Name Shannon Huffman	Printed Name	Printed Name
Company LAI	Company ALS	Company	Company
Date 12/21/21 Time 1510	Date 12/24/2021 Time 1510	Date Time	Date Time

WHITE COPY - Laboratory YELLOW COPY - Project File PINK COPY - Client Representative

ALS ENVIRONMENTAL

Sample Receiving Checklist

Client: Landau ALS Job #: EVWR0140

Project: POE-MLE

Received Date: 12/21/21 Received Time: 15:10 By: SM FH

Type of shipping container: Cooler X Box ___ Other ___

Shipped via: FedEx Ground ___ UPS ___ Mail ___ Courier ___ Hand Delivered X
FedEx Express ___

	Yes	No	N/A
Were custody seals on outside of shipping container?	___	X	___
If yes, how many? ___ Where? ___			
Custody seal date: ___ Seal name: ___			
Was Chain of Custody properly filled out (ink, signed, dated, etc.)?	X	___	___
Did all bottles have labels?	X	___	___
Did all bottle labels and tags agree with Chain of Custody?	X	___	___
Were samples received within hold time?	X	___	___
Did all bottles arrive in good condition (unbroken, etc.)?	X	___	___
Was sufficient amount of sample sent for the tests indicated?	X	___	___
Was correct preservation added to samples?	X	___	___

If no, Sample Control added preservative to the following: 3 Low kits

Sample Number	Reagent	Analyte

Were VOA vials checked for absence of air bubbles?	___	___	X
Bubbles present in sample #: ___			

Temperature of cooler upon receipt: 6.3°C on Ice Cold Cool Ambient N/A

Explain any discrepancies: ___

Was client contacted? ___ Who was called? ___ By whom? ___ Date: ___

Outcome of call: ___

January 5, 2022

Mr. Dylan Frazer
Landau Associates, Inc.
155 NE 100th St, Ste 302
Seattle, WA 98125

Dear Mr. Frazer,

On January 3rd, 3 samples were received by our laboratory and assigned our laboratory project number EV22010002. The project was identified as your POE - MIE / 121049.080.081. The sample identification and requested analyses are outlined on the attached chain of custody record.

No abnormalities or nonconformances were observed during the analyses of the project samples.

Please do not hesitate to call me if you have any questions or if I can be of further assistance.

Sincerely,

ALS Laboratory Group

Glen Perry
Laboratory Director

ADDRESS 8620 Holly Drive, Suite 100, Everett, WA 9820 | PHONE 425-356-2600 | FAX 425-356-2626
ALS Group USA, Corp dba ALS Environmental

Environmental www.alsglobal.com
RIGHT SOLUTIONS RIGHT PARTNER

ALS Environmental

CERTIFICATE OF ANALYSIS

CLIENT:	Landau Associates, Inc. 155 NE 100th St, Ste 302 Seattle, WA 98125	DATE:	1/5/2022
		ALS JOB#:	EV22010002
		ALS SAMPLE#:	EV22010002-01
CLIENT CONTACT:	Dylan Frazer	DATE RECEIVED:	01/03/2022
CLIENT PROJECT:	POE - MIE / 121049.080.081	COLLECTION DATE:	12/21/2021 12:50:00 PM
CLIENT SAMPLE ID	MIE-DP-1-211221	WDOE ACCREDITATION:	C601

SAMPLE DATA RESULTS

ANALYTE	METHOD	RESULTS	REPORTING LIMITS	DILUTION FACTOR	UNITS	ANALYSIS DATE	ANALYSIS BY
Lead (TCLP)	EPA-6020/1311	**0.070**	0.031	6.25	MG/L	01/04/2022	RAL

ADDRESS 8620 Holly Drive, Suite 100, Everett, WA 9820 | PHONE 425-356-2600 | FAX 425-356-2626
ALS Group USA, Corp dba ALS Environmental

Environmental www.alsglobal.com
RIGHT SOLUTIONS RIGHT PARTNER

CERTIFICATE OF ANALYSIS

CLIENT:	Landau Associates, Inc. 155 NE 100th St, Ste 302 Seattle, WA 98125	DATE: ALS JOB#: ALS SAMPLE#:	1/5/2022 EV22010002 EV22010002-02
CLIENT CONTACT:	Dylan Frazer	DATE RECEIVED:	01/03/2022
CLIENT PROJECT:	POE - MIE / 121049.080.081	COLLECTION DATE:	12/21/2021 12:50:00 PM
CLIENT SAMPLE ID	MIE-DP-2-211221	WDOE ACCREDITATION:	C601

SAMPLE DATA RESULTS

ANALYTE	METHOD	RESULTS	REPORTING LIMITS	DILUTION FACTOR	UNITS	ANALYSIS DATE	ANALYSIS BY
Lead (TCLP)	EPA-6020/1311	**0.091**	0.031	6.25	MG/L	01/04/2022	RAL

ADDRESS 8620 Holly Drive, Suite 100, Everett, WA 9820 | PHONE 425-356-2600 | FAX 425-356-2626
ALS Group USA, Corp dba ALS Environmental

Environmental www.alsglobal.com
RIGHT SOLUTIONS RIGHT PARTNER

CERTIFICATE OF ANALYSIS

CLIENT:	Landau Associates, Inc. 155 NE 100th St, Ste 302 Seattle, WA 98125	DATE: ALS JOB#: ALS SAMPLE#:	1/5/2022 EV22010002 EV22010002-03
CLIENT CONTACT:	Dylan Frazer	DATE RECEIVED:	01/03/2022
CLIENT PROJECT:	POE - MIE / 121049.080.081	COLLECTION DATE:	12/21/2021 12:50:00 PM
CLIENT SAMPLE ID	MIE-DP-3-211221	WDOE ACCREDITATION:	C601

SAMPLE DATA RESULTS

ANALYTE	METHOD	RESULTS	REPORTING LIMITS	DILUTION FACTOR	UNITS	ANALYSIS DATE	ANALYSIS BY
Lead (TCLP)	EPA-6020/1311	**0.083**	0.031	6.25	MG/L	01/04/2022	RAL

ADDRESS 8620 Holly Drive, Suite 100, Everett, WA 9820 | PHONE 425-356-2600 | FAX 425-356-2626
ALS Group USA, Corp dba ALS Environmental

Environmental www.alsglobal.com
RIGHT SOLUTIONS RIGHT PARTNER

CERTIFICATE OF ANALYSIS

CLIENT:	Landau Associates, Inc. 155 NE 100th St, Ste 302 Seattle, WA 98125	DATE:	1/5/2022
		ALS SDG#:	EV22010002
		WDOE ACCREDITATION:	C601
CLIENT CONTACT:	Dylan Frazer		
CLIENT PROJECT:	POE - MIE / 121049.080.081		

LABORATORY BLANK RESULTS

MBLK-R398923 - Batch R398923 - TCLP Extract by EPA-6020

ANALYTE	METHOD	RESULTS	UNITS	REPORTING LIMITS	ANALYSIS DATE	ANALYSIS BY
Lead	EPA-6020	U	MG/L	0.0050	01/04/2022	RAL

U - Analyte analyzed for but not detected at level above reporting limit.

ADDRESS 8620 Holly Drive, Suite 100, Everett, WA 9820 | PHONE 425-356-2600 | FAX 425-356-2626
ALS Group USA, Corp dba ALS Environmental

Environmental www.alsglobal.com
RIGHT SOLUTIONS RIGHT PARTNER

ALS Environmental

CERTIFICATE OF ANALYSIS

CLIENT: Landau Associates, Inc.
155 NE 100th St, Ste 302
Seattle, WA 98125
CLIENT CONTACT: Dylan Frazer
CLIENT PROJECT: POE - MIE / 121049.080.081

DATE: 1/5/2022
ALS SDG#: EV22010002
WDOE ACCREDITATION: C601

LABORATORY CONTROL SAMPLE RESULTS

ALS Test Batch ID: R398923 - TCLP Extract by EPA-6020

SPIKED COMPOUND	METHOD	%REC	RPD	QUAL	LIMITS MIN	LIMITS MAX	ANALYSIS DATE	ANALYSIS BY
Lead - BS	EPA-6020	**90.0**			87.5	107	01/04/2022	RAL
Lead - BSD	EPA-6020	**91.0**	**1**		87.5	107	01/04/2022	RAL

APPROVED BY

Laboratory Director

ADDRESS 8620 Holly Drive, Suite 100, Everett, WA 9820 | PHONE 425-356-2600 | FAX 425-356-2626
ALS Group USA, Corp dba ALS Environmental

Environmental www.alsglobal.com
RIGHT SOLUTIONS RIGHT PARTNER

EV2201002 EV2112014U

LANDAU ASSOCIATES — Chain-of-Custody Record

☒ North Seattle (206) 631-8660 ☐ Spokane (509) 327-9737
☐ Tacoma (253) 926-2493 ☐ Portland (503) 542-1080
☐ Olympia (360) 791-3178 ☐ _____

Date 12/21/21 Page 1 of 1

Turnaround Time: Standard _____ Accelerated 12/31/21

Project Name POE - MIE Project No. 171049.050.081

Project Location/Event Port of Everett, WA / Waste Disposal Profiling

Sampler's Name Devan Brandt

Project Contact Dylan Frazer

Send Results To Dylan Frazer, Elise Gronewald & Devan Brandt

1/7/22 SM

Special Handling Requirements: _____

Shipment Method: _____

Stored on ice: (Yes) / No

Sample I.D.	Date	Time	Matrix	No. of Containers	NWTPH-Dx	RCRA 8	SVOCs	BCRAs + Metals + Sulfide	BTEX (8021)	CaCO3	Pb TCLP	Observations/Comments
MIE-DP-1-211221	12/21/21	1240	Soil	4	X	X	X	X	X		X	
MIE-DP-2-211221	↓	1245	↓	4	X	X	X	X	X		X	
MIE-DP-3-211221	↓	1250	↓	4	X	X	X	X	X		X	

Testing Parameters

Observations/Comments

___ Allow water samples to settle, collect aliquot from clear portion ☐

___ NWTPH-Dx - Acid wash cleanup ☐
- Silica gel cleanup ☐

___ Dissolved metal samples were field filtered

Other * plus copper & zinc

1/3/21 -
⊗ Devan added Pb TCLP. SM

Relinquished by	Received by	Relinquished by	Received by
Signature	Signature	Signature	Signature
Printed Name Devan Brandt	Printed Name Shannon Huffman	Printed Name	Printed Name
Company LAI	Company ALS	Company	Company
Date 12/21/21 Time 1510	Date 12/24/2021 Time 1510	Date Time	Date Time

WHITE COPY - Laboratory YELLOW COPY - Project File PINK COPY - Client Representative

10/2018

ALS ENVIRONMENTAL

Sample Receiving Checklist

EV2201002

Client: Landau ALS Job #: ~~EV2201~~ 0140

Project: POE-MIE

Received Date: 12/21/21 Received Time: 15:10 By: SM

Type of shipping container: Cooler X Box ___ Other ___

Shipped via: FedEx Ground ___ UPS ___ Mail ___ Courier ___ Hand Delivered X
FedEx Express ___

	Yes	No	N/A
Were custody seals on outside of shipping container?	___	X	___
If yes, how many? ___ Where? ___			
Custody seal date: ___ Seal name: ___			
Was Chain of Custody properly filled out (ink, signed, dated, etc.)?	X	___	___
Did all bottles have labels?	X	___	___
Did all bottle labels and tags agree with Chain of Custody?	X	___	___
Were samples received within hold time?	X	___	___
Did all bottles arrive in good condition (unbroken, etc.)?	X	___	___
Was sufficient amount of sample sent for the tests indicated?	X	___	___
Was correct preservation added to samples?	X	___	___

If no, Sample Control added preservative to the following: 3 Low kits

Sample Number	Reagent	Analyte

Were VOA vials checked for absence of air bubbles?	___	___	X
Bubbles present in sample #: ___			

Temperature of cooler upon receipt: 6.3°C on Ice Cold Cool Ambient N/A

Explain any discrepancies: ___

Was client contacted? ___ Who was called? ___ By whom? ___ Date: ___

Outcome of call: ___

January 19, 2022

Mr. Dylan Frazer
Landau Associates, Inc.
155 NE 100th St, Ste 302
Seattle, WA 98125

Dear Mr. Frazer,

On January 12th, 3 samples were received by our laboratory and assigned our laboratory project number EV22010034. The project was identified as your POE - MIE / 121049.080.083. The sample identification and requested analyses are outlined on the attached chain of custody record.

No abnormalities or nonconformances were observed during the analyses of the project samples.

Please do not hesitate to call me if you have any questions or if I can be of further assistance.

Sincerely,

ALS Laboratory Group

Glen Perry
Laboratory Director

ADDRESS 8620 Holly Drive, Suite 100, Everett, WA 98208 | PHONE 425-356-2600 | FAX 425-356-2626
ALS Group USA, Corp dba ALS Environmental

Environmental www.alsglobal.com
RIGHT SOLUTIONS RIGHT PARTNER

ALS Environmental

CERTIFICATE OF ANALYSIS

CLIENT:	Landau Associates, Inc. 155 NE 100th St, Ste 302 Seattle, WA 98125	DATE: ALS JOB#: ALS SAMPLE#:	1/19/2022 EV22010034 EV22010034-01
CLIENT CONTACT:	Dylan Frazer	DATE RECEIVED:	01/12/2022
CLIENT PROJECT:	POE - MIE / 121049.080.083	COLLECTION DATE:	1/11/2022 4:30:00 PM
CLIENT SAMPLE ID	MIE-DP-4-220111	WDOE ACCREDITATION:	C601

SAMPLE DATA RESULTS

ANALYTE	METHOD	RESULTS	REPORTING LIMITS	DILUTION FACTOR	UNITS	ANALYSIS DATE	ANALYSIS BY
Benzene	EPA-8021	U	0.030	1	MG/KG	01/13/2022	KLS
Toluene	EPA-8021	U	0.050	1	MG/KG	01/13/2022	KLS
Ethylbenzene	EPA-8021	U	0.050	1	MG/KG	01/13/2022	KLS
Xylenes	EPA-8021	U	0.20	1	MG/KG	01/13/2022	KLS
TPH-Diesel Range (C12-C24)	NWTPH-DX	U	25	1	MG/KG	01/14/2022	JNF
TPH-Oil Range (C24-C40)	NWTPH-DX	U	50	1	MG/KG	01/14/2022	JNF
Dichlorodifluoromethane	EPA-8260	U	10	1	UG/KG	01/18/2022	DLC
Chloromethane	EPA-8260	U	10	1	UG/KG	01/18/2022	DLC
Vinyl Chloride	EPA-8260	U	10	1	UG/KG	01/18/2022	DLC
Bromomethane	EPA-8260	U	10	1	UG/KG	01/18/2022	DLC
Chloroethane	EPA-8260	U	10	1	UG/KG	01/18/2022	DLC
Carbon Tetrachloride	EPA-8260	U	10	1	UG/KG	01/18/2022	DLC
Trichlorofluoromethane	EPA-8260	U	10	1	UG/KG	01/18/2022	DLC
Carbon Disulfide	EPA-8260	U	10	1	UG/KG	01/18/2022	DLC
Acetone	EPA-8260	U	50	1	UG/KG	01/18/2022	DLC
1,1-Dichloroethene	EPA-8260	U	10	1	UG/KG	01/18/2022	DLC
Methylene Chloride	EPA-8260	U	20	1	UG/KG	01/18/2022	DLC
Acrylonitrile	EPA-8260	U	50	1	UG/KG	01/18/2022	DLC
Methyl T-Butyl Ether	EPA-8260	U	10	1	UG/KG	01/18/2022	DLC
Trans-1,2-Dichloroethene	EPA-8260	U	10	1	UG/KG	01/18/2022	DLC
1,1-Dichloroethane	EPA-8260	U	10	1	UG/KG	01/18/2022	DLC
2-Butanone	EPA-8260	U	50	1	UG/KG	01/18/2022	DLC
Cis-1,2-Dichloroethene	EPA-8260	U	10	1	UG/KG	01/18/2022	DLC
2,2-Dichloropropane	EPA-8260	U	10	1	UG/KG	01/18/2022	DLC
Bromochloromethane	EPA-8260	U	10	1	UG/KG	01/18/2022	DLC
Chloroform	EPA-8260	U	10	1	UG/KG	01/18/2022	DLC
1,1,1-Trichloroethane	EPA-8260	U	10	1	UG/KG	01/18/2022	DLC
1,1-Dichloropropene	EPA-8260	U	10	1	UG/KG	01/18/2022	DLC
1,2-Dichloroethane	EPA-8260	U	10	1	UG/KG	01/18/2022	DLC
Benzene	EPA-8260	U	5.0	1	UG/KG	01/18/2022	DLC
Trichloroethene	EPA-8260	U	10	1	UG/KG	01/18/2022	DLC
1,2-Dichloropropane	EPA-8260	U	10	1	UG/KG	01/18/2022	DLC
Dibromomethane	EPA-8260	U	10	1	UG/KG	01/18/2022	DLC
Bromodichloromethane	EPA-8260	U	10	1	UG/KG	01/18/2022	DLC
Trans-1,3-Dichloropropene	EPA-8260	U	10	1	UG/KG	01/18/2022	DLC
4-Methyl-2-Pentanone	EPA-8260	U	50	1	UG/KG	01/18/2022	DLC
Toluene	EPA-8260	U	10	1	UG/KG	01/18/2022	DLC
Cis-1,3-Dichloropropene	EPA-8260	U	10	1	UG/KG	01/18/2022	DLC

ADDRESS 8620 Holly Drive, Suite 100, Everett, WA 98208 | PHONE 425-356-2600 | FAX 425-356-2626
ALS Group USA, Corp dba ALS Environmental

Environmental www.alsglobal.com
RIGHT SOLUTIONS RIGHT PARTNER

ALS Environmental

CERTIFICATE OF ANALYSIS

CLIENT:	Landau Associates, Inc. 155 NE 100th St, Ste 302 Seattle, WA 98125	DATE: ALS JOB#: ALS SAMPLE#:	1/19/2022 EV22010034 EV22010034-01
CLIENT CONTACT:	Dylan Frazer	DATE RECEIVED:	01/12/2022
CLIENT PROJECT:	POE - MIE / 121049.080.083	COLLECTION DATE:	1/11/2022 4:30:00 PM
CLIENT SAMPLE ID	MIE-DP-4-220111	WDOE ACCREDITATION:	C601

SAMPLE DATA RESULTS

ANALYTE	METHOD	RESULTS	REPORTING LIMITS	DILUTION FACTOR	UNITS	ANALYSIS DATE	ANALYSIS BY
1,1,2-Trichloroethane	EPA-8260	U	10	1	UG/KG	01/18/2022	DLC
2-Hexanone	EPA-8260	U	50	1	UG/KG	01/18/2022	DLC
1,3-Dichloropropane	EPA-8260	U	10	1	UG/KG	01/18/2022	DLC
Tetrachloroethylene	EPA-8260	U	10	1	UG/KG	01/18/2022	DLC
Dibromochloromethane	EPA-8260	U	10	1	UG/KG	01/18/2022	DLC
1,2-Dibromoethane	EPA-8260	U	5.0	1	UG/KG	01/18/2022	DLC
Chlorobenzene	EPA-8260	U	10	1	UG/KG	01/18/2022	DLC
1,1,1,2-Tetrachloroethane	EPA-8260	U	10	1	UG/KG	01/18/2022	DLC
Ethylbenzene	EPA-8260	U	10	1	UG/KG	01/18/2022	DLC
m,p-Xylene	EPA-8260	U	20	1	UG/KG	01/18/2022	DLC
Styrene	EPA-8260	U	10	1	UG/KG	01/18/2022	DLC
o-Xylene	EPA-8260	U	10	1	UG/KG	01/18/2022	DLC
Bromoform	EPA-8260	U	10	1	UG/KG	01/18/2022	DLC
Isopropylbenzene	EPA-8260	U	10	1	UG/KG	01/18/2022	DLC
1,1,2,2-Tetrachloroethane	EPA-8260	U	10	1	UG/KG	01/18/2022	DLC
1,2,3-Trichloropropane	EPA-8260	U	10	1	UG/KG	01/18/2022	DLC
Bromobenzene	EPA-8260	U	10	1	UG/KG	01/18/2022	DLC
N-Propyl Benzene	EPA-8260	U	10	1	UG/KG	01/18/2022	DLC
2-Chlorotoluene	EPA-8260	U	10	1	UG/KG	01/18/2022	DLC
1,3,5-Trimethylbenzene	EPA-8260	U	10	1	UG/KG	01/18/2022	DLC
4-Chlorotoluene	EPA-8260	U	10	1	UG/KG	01/18/2022	DLC
T-Butyl Benzene	EPA-8260	U	10	1	UG/KG	01/18/2022	DLC
1,2,4-Trimethylbenzene	EPA-8260	U	10	1	UG/KG	01/18/2022	DLC
S-Butyl Benzene	EPA-8260	U	10	1	UG/KG	01/18/2022	DLC
P-Isopropyltoluene	EPA-8260	U	10	1	UG/KG	01/18/2022	DLC
1,3-Dichlorobenzene	EPA-8260	U	10	1	UG/KG	01/18/2022	DLC
1,4-Dichlorobenzene	EPA-8260	U	10	1	UG/KG	01/18/2022	DLC
N-Butylbenzene	EPA-8260	U	10	1	UG/KG	01/18/2022	DLC
1,2-Dichlorobenzene	EPA-8260	U	10	1	UG/KG	01/18/2022	DLC
1,2-Dibromo 3-Chloropropane	EPA-8260	U	50	1	UG/KG	01/18/2022	DLC
1,2,4-Trichlorobenzene	EPA-8260	U	10	1	UG/KG	01/18/2022	DLC
Hexachlorobutadiene	EPA-8260	U	10	1	UG/KG	01/18/2022	DLC
Naphthalene	EPA-8260	U	10	1	UG/KG	01/18/2022	DLC
1,2,3-Trichlorobenzene	EPA-8260	U	10	1	UG/KG	01/18/2022	DLC
Pyridine	EPA-8270	U	200	1	UG/KG	01/17/2022	JMK
N-Nitrosodimethylamine	EPA-8270	U	100	1	UG/KG	01/17/2022	JMK
Phenol	EPA-8270	U	100	1	UG/KG	01/17/2022	JMK
Aniline	EPA-8270	U	100	1	UG/KG	01/17/2022	JMK
Bis(2-Chloroethyl)Ether	EPA-8270	U	250	1	UG/KG	01/17/2022	JMK

ADDRESS 8620 Holly Drive, Suite 100, Everett, WA 98208 | PHONE 425-356-2600 | FAX 425-356-2626
ALS Group USA, Corp dba ALS Environmental

Environmental www.alsglobal.com
RIGHT SOLUTIONS RIGHT PARTNER

ALS Environmental

CERTIFICATE OF ANALYSIS

CLIENT:	Landau Associates, Inc. 155 NE 100th St, Ste 302 Seattle, WA 98125	DATE: ALS JOB#: ALS SAMPLE#:	1/19/2022 EV22010034 EV22010034-01
CLIENT CONTACT:	Dylan Frazer	DATE RECEIVED:	01/12/2022
CLIENT PROJECT:	POE - MIE / 121049.080.083	COLLECTION DATE:	1/11/2022 4:30:00 PM
CLIENT SAMPLE ID	MIE-DP-4-220111	WDOE ACCREDITATION:	C601

SAMPLE DATA RESULTS

ANALYTE	METHOD	RESULTS	REPORTING LIMITS	DILUTION FACTOR	UNITS	ANALYSIS DATE	ANALYSIS BY
2-Chlorophenol	EPA-8270	U	250	1	UG/KG	01/17/2022	JMK
1,3-Dichlorobenzene	EPA-8270	U	100	1	UG/KG	01/17/2022	JMK
1,4-Dichlorobenzene	EPA-8270	U	100	1	UG/KG	01/17/2022	JMK
Benzyl Alcohol	EPA-8270	U	100	1	UG/KG	01/17/2022	JMK
1,2-Dichlorobenzene	EPA-8270	U	100	1	UG/KG	01/17/2022	JMK
2-Methylphenol	EPA-8270	U	100	1	UG/KG	01/17/2022	JMK
Bis(2-Chloroisopropyl)Ether	EPA-8270	U	250	1	UG/KG	01/17/2022	JMK
3&4-Methylphenol	EPA-8270	U	100	1	UG/KG	01/17/2022	JMK
N-Nitroso-Di-N-Propylamine	EPA-8270	U	250	1	UG/KG	01/17/2022	JMK
Hexachloroethane	EPA-8270	U	100	1	UG/KG	01/17/2022	JMK
Nitrobenzene	EPA-8270	U	100	1	UG/KG	01/17/2022	JMK
Isophorone	EPA-8270	U	100	1	UG/KG	01/17/2022	JMK
2-Nitrophenol	EPA-8270	U	100	1	UG/KG	01/17/2022	JMK
2,4-Dimethylphenol	EPA-8270	U	100	1	UG/KG	01/17/2022	JMK
Benzoic Acid	EPA-8270	U	1000	1	UG/KG	01/17/2022	JMK
Bis(2-Chloroethoxy)Methane	EPA-8270	U	250	1	UG/KG	01/17/2022	JMK
2,4-Dichlorophenol	EPA-8270	U	500	1	UG/KG	01/17/2022	JMK
1,2,4-Trichlorobenzene	EPA-8270	U	100	1	UG/KG	01/17/2022	JMK
Naphthalene	EPA-8270	U	100	1	UG/KG	01/17/2022	JMK
4-Chloroaniline	EPA-8270	U	1000	1	UG/KG	01/17/2022	JMK
2,6-Dichlorophenol	EPA-8270	U	250	1	UG/KG	01/17/2022	JMK
Hexachlorobutadiene	EPA-8270	U	500	1	UG/KG	01/17/2022	JMK
4-Chloro-3-Methylphenol	EPA-8270	U	500	1	UG/KG	01/17/2022	JMK
2-Methylnaphthalene	EPA-8270	U	250	1	UG/KG	01/17/2022	JMK
1-Methylnaphthalene	EPA-8270	U	250	1	UG/KG	01/17/2022	JMK
Hexachlorocyclopentadiene	EPA-8270	U	100	1	UG/KG	01/17/2022	JMK
2,4,6-Trichlorophenol	EPA-8270	U	100	1	UG/KG	01/17/2022	JMK
2,4,5-Trichlorophenol	EPA-8270	U	100	1	UG/KG	01/17/2022	JMK
2-Chloronaphthalene	EPA-8270	U	100	1	UG/KG	01/17/2022	JMK
2-Nitroaniline	EPA-8270	U	100	1	UG/KG	01/17/2022	JMK
Acenaphthylene	EPA-8270	U	100	1	UG/KG	01/17/2022	JMK
Dimethylphthalate	EPA-8270	U	100	1	UG/KG	01/17/2022	JMK
2,6-Dinitrotoluene	EPA-8270	U	100	1	UG/KG	01/17/2022	JMK
Acenaphthene	EPA-8270	U	100	1	UG/KG	01/17/2022	JMK
3-Nitroaniline	EPA-8270	U	1000	1	UG/KG	01/17/2022	JMK
2,4-Dinitrophenol	EPA-8270	U	100	1	UG/KG	01/17/2022	JMK
4-Nitrophenol	EPA-8270	U	100	1	UG/KG	01/17/2022	JMK
Dibenzofuran	EPA-8270	U	100	1	UG/KG	01/17/2022	JMK
2,4-Dinitrotoluene	EPA-8270	U	100	1	UG/KG	01/17/2022	JMK

ADDRESS 8620 Holly Drive, Suite 100, Everett, WA 98208 | PHONE 425-356-2600 | FAX 425-356-2626
ALS Group USA, Corp dba ALS Environmental

Environmental www.alsglobal.com
RIGHT SOLUTIONS RIGHT PARTNER

ALS Environmental

CERTIFICATE OF ANALYSIS

CLIENT:	Landau Associates, Inc. 155 NE 100th St, Ste 302 Seattle, WA 98125	DATE: ALS JOB#: ALS SAMPLE#:	1/19/2022 EV22010034 EV22010034-01
CLIENT CONTACT:	Dylan Frazer	DATE RECEIVED:	01/12/2022
CLIENT PROJECT:	POE - MIE / 121049.080.083	COLLECTION DATE:	1/11/2022 4:30:00 PM
CLIENT SAMPLE ID	MIE-DP-4-220111	WDOE ACCREDITATION:	C601

SAMPLE DATA RESULTS

ANALYTE	METHOD	RESULTS	REPORTING LIMITS	DILUTION FACTOR	UNITS	ANALYSIS DATE	ANALYSIS BY
2,3,4,6-Tetrachlorophenol	EPA-8270	U	100	1	UG/KG	01/17/2022	JMK
Diethylphthalate	EPA-8270	U	100	1	UG/KG	01/17/2022	JMK
Fluorene	EPA-8270	U	100	1	UG/KG	01/17/2022	JMK
4-Chlorophenyl-Phenylether	EPA-8270	U	100	1	UG/KG	01/17/2022	JMK
4-Nitroaniline	EPA-8270	U	250	1	UG/KG	01/17/2022	JMK
4,6-Dinitro-2-Methylphenol	EPA-8270	U	100	1	UG/KG	01/17/2022	JMK
N-Nitrosodiphenylamine	EPA-8270	U	100	1	UG/KG	01/17/2022	JMK
Azobenzene	EPA-8270	U	100	1	UG/KG	01/17/2022	JMK
4-Bromophenyl-Phenylether	EPA-8270	U	100	1	UG/KG	01/17/2022	JMK
Hexachlorobenzene	EPA-8270	U	100	1	UG/KG	01/17/2022	JMK
Pentachlorophenol	EPA-8270	U	500	1	UG/KG	01/17/2022	JMK
Phenanthrene	EPA-8270	U	100	1	UG/KG	01/17/2022	JMK
Anthracene	EPA-8270	U	100	1	UG/KG	01/17/2022	JMK
Carbazole	EPA-8270	U	250	1	UG/KG	01/17/2022	JMK
Di-N-Butylphthalate	EPA-8270	U	100	1	UG/KG	01/17/2022	JMK
Fluoranthene	EPA-8270	U	100	1	UG/KG	01/17/2022	JMK
Pyrene	EPA-8270	U	100	1	UG/KG	01/17/2022	JMK
Butylbenzylphthalate	EPA-8270	U	100	1	UG/KG	01/17/2022	JMK
3,3-Dichlorobenzidine	EPA-8270	U	250	1	UG/KG	01/17/2022	JMK
Benzo[A]Anthracene	EPA-8270	U	100	1	UG/KG	01/17/2022	JMK
Chrysene	EPA-8270	U	100	1	UG/KG	01/17/2022	JMK
Bis(2-Ethylhexyl)Phthalate	EPA-8270	U	100	1	UG/KG	01/17/2022	JMK
Di-N-Octylphthalate	EPA-8270	U	100	1	UG/KG	01/17/2022	JMK
Benzo[B]Fluoranthene	EPA-8270	U	100	1	UG/KG	01/17/2022	JMK
Benzo[K]Fluoranthene	EPA-8270	U	100	1	UG/KG	01/17/2022	JMK
Benzo[A]Pyrene	EPA-8270	U	100	1	UG/KG	01/17/2022	JMK
Indeno[1,2,3-Cd]Pyrene	EPA-8270	U	100	1	UG/KG	01/17/2022	JMK
Dibenz[A,H]Anthracene	EPA-8270	U	100	1	UG/KG	01/17/2022	JMK
Benzo[G,H,I]Perylene	EPA-8270	U	100	1	UG/KG	01/17/2022	JMK
PCB-1016	EPA-8082	U	0.10	1	MG/KG	01/17/2022	JMK
PCB-1221	EPA-8082	U	0.10	1	MG/KG	01/17/2022	JMK
PCB-1232	EPA-8082	U	0.10	1	MG/KG	01/17/2022	JMK
PCB-1242	EPA-8082	U	0.10	1	MG/KG	01/17/2022	JMK
PCB-1248	EPA-8082	U	0.10	1	MG/KG	01/17/2022	JMK
PCB-1254	EPA-8082	**0.13**	0.10	1	MG/KG	01/17/2022	JMK
PCB-1260	EPA-8082	U	0.10	1	MG/KG	01/17/2022	JMK
PCB-1268	EPA-8082	U	0.10	1	MG/KG	01/17/2022	JMK
Sulfate	EPA-300.0M	**38**	2.0	1	MG/KG	01/13/2022	EBS
Mercury	EPA-7471	**0.11**	0.020	1	MG/KG	01/12/2022	RAL

ADDRESS 8620 Holly Drive, Suite 100, Everett, WA 98208 | PHONE 425-356-2600 | FAX 425-356-2626
ALS Group USA, Corp dba ALS Environmental

Environmental www.alsglobal.com
RIGHT SOLUTIONS RIGHT PARTNER

ALS Environmental

CERTIFICATE OF ANALYSIS

CLIENT:	Landau Associates, Inc. 155 NE 100th St, Ste 302 Seattle, WA 98125	DATE: ALS JOB#: ALS SAMPLE#:	1/19/2022 EV22010034 EV22010034-01
CLIENT CONTACT:	Dylan Frazer	DATE RECEIVED:	01/12/2022
CLIENT PROJECT:	POE - MIE / 121049.080.083	COLLECTION DATE:	1/11/2022 4:30:00 PM
CLIENT SAMPLE ID	MIE-DP-4-220111	WDOE ACCREDITATION:	C601

SAMPLE DATA RESULTS

ANALYTE	METHOD	RESULTS	REPORTING LIMITS	DILUTION FACTOR	UNITS	ANALYSIS DATE	ANALYSIS BY
Arsenic	EPA-6020	**4.3**	0.20	1	MG/KG	01/12/2022	EBS
Barium	EPA-6020	**33**	0.10	1	MG/KG	01/12/2022	EBS
Cadmium	EPA-6020	**0.18**	0.10	1	MG/KG	01/12/2022	EBS
Chromium	EPA-6020	**30**	0.10	1	MG/KG	01/12/2022	EBS
Copper	EPA-6020	**25**	0.20	1	MG/KG	01/12/2022	EBS
Lead	EPA-6020	**15**	0.10	1	MG/KG	01/12/2022	EBS
Selenium	EPA-6020	U	1.0	1	MG/KG	01/12/2022	EBS
Silver	EPA-6020	U	0.10	1	MG/KG	01/12/2022	EBS
Zinc	EPA-6020	**54**	0.50	1	MG/KG	01/12/2022	EBS

SURROGATE	METHOD	%REC	ANALYSIS DATE	ANALYSIS BY
TFT	EPA-8021	**79.5**	01/13/2022	KLS
C25	NWTPH-DX	**89.0**	01/14/2022	JNF
1,2-Dichloroethane-d4	EPA-8260	**103**	01/18/2022	DLC
Toluene-d8	EPA-8260	**98.4**	01/18/2022	DLC
4-Bromofluorobenzene	EPA-8260	**105**	01/18/2022	DLC
2-Fluorophenol	EPA-8270	**83.6**	01/17/2022	JMK
Phenol-d5	EPA-8270	**77.3**	01/17/2022	JMK
Nitrobenzene-d5	EPA-8270	**66.9**	01/17/2022	JMK
2-Fluorobiphenyl	EPA-8270	**71.2**	01/17/2022	JMK
2,4,6-Tribromophenol	EPA-8270	**64.5**	01/17/2022	JMK
Terphenyl-d14	EPA-8270	**72.4**	01/17/2022	JMK
TCMX	EPA-8082	**98.1**	01/17/2022	JMK
DCB	EPA-8082	**114**	01/17/2022	JMK

U - Analyte analyzed for but not detected at level above reporting limit.

ADDRESS 8620 Holly Drive, Suite 100, Everett, WA 98208 | PHONE 425-356-2600 | FAX 425-356-2626
ALS Group USA, Corp dba ALS Environmental

Environmental www.alsglobal.com
RIGHT SOLUTIONS RIGHT PARTNER

ALS Environmental

CERTIFICATE OF ANALYSIS

CLIENT:	Landau Associates, Inc. 155 NE 100th St, Ste 302 Seattle, WA 98125	DATE: ALS JOB#: ALS SAMPLE#:	1/19/2022 EV22010034 EV22010034-02
CLIENT CONTACT:	Dylan Frazer	DATE RECEIVED:	01/12/2022
CLIENT PROJECT:	POE - MIE / 121049.080.083	COLLECTION DATE:	1/11/2022 4:35:00 PM
CLIENT SAMPLE ID	MIE-DP-5-220111	WDOE ACCREDITATION:	C601

SAMPLE DATA RESULTS

ANALYTE	METHOD	RESULTS	REPORTING LIMITS	DILUTION FACTOR	UNITS	ANALYSIS DATE	ANALYSIS BY
Benzene	EPA-8021	U	0.030	1	MG/KG	01/13/2022	KLS
Toluene	EPA-8021	U	0.050	1	MG/KG	01/13/2022	KLS
Ethylbenzene	EPA-8021	U	0.050	1	MG/KG	01/13/2022	KLS
Xylenes	EPA-8021	U	0.20	1	MG/KG	01/13/2022	KLS
TPH-Diesel Range (C12-C24)	NWTPH-DX	**45**	25	1	MG/KG	01/14/2022	JNF
TPH-Oil Range (C24-C40)	NWTPH-DX	**100**	50	1	MG/KG	01/14/2022	JNF
Dichlorodifluoromethane	EPA-8260	U	10	1	UG/KG	01/18/2022	DLC
Chloromethane	EPA-8260	U	10	1	UG/KG	01/18/2022	DLC
Vinyl Chloride	EPA-8260	U	10	1	UG/KG	01/18/2022	DLC
Bromomethane	EPA-8260	U	10	1	UG/KG	01/18/2022	DLC
Chloroethane	EPA-8260	U	10	1	UG/KG	01/18/2022	DLC
Carbon Tetrachloride	EPA-8260	U	10	1	UG/KG	01/18/2022	DLC
Trichlorofluoromethane	EPA-8260	U	10	1	UG/KG	01/18/2022	DLC
Carbon Disulfide	EPA-8260	U	10	1	UG/KG	01/18/2022	DLC
Acetone	EPA-8260	U	50	1	UG/KG	01/18/2022	DLC
1,1-Dichloroethene	EPA-8260	U	10	1	UG/KG	01/18/2022	DLC
Methylene Chloride	EPA-8260	U	20	1	UG/KG	01/18/2022	DLC
Acrylonitrile	EPA-8260	U	50	1	UG/KG	01/18/2022	DLC
Methyl T-Butyl Ether	EPA-8260	U	10	1	UG/KG	01/18/2022	DLC
Trans-1,2-Dichloroethene	EPA-8260	U	10	1	UG/KG	01/18/2022	DLC
1,1-Dichloroethane	EPA-8260	U	10	1	UG/KG	01/18/2022	DLC
2-Butanone	EPA-8260	U	50	1	UG/KG	01/18/2022	DLC
Cis-1,2-Dichloroethene	EPA-8260	U	10	1	UG/KG	01/18/2022	DLC
2,2-Dichloropropane	EPA-8260	U	10	1	UG/KG	01/18/2022	DLC
Bromochloromethane	EPA-8260	U	10	1	UG/KG	01/18/2022	DLC
Chloroform	EPA-8260	U	10	1	UG/KG	01/18/2022	DLC
1,1,1-Trichloroethane	EPA-8260	U	10	1	UG/KG	01/18/2022	DLC
1,1-Dichloropropene	EPA-8260	U	10	1	UG/KG	01/18/2022	DLC
1,2-Dichloroethane	EPA-8260	U	10	1	UG/KG	01/18/2022	DLC
Benzene	EPA-8260	U	5.0	1	UG/KG	01/18/2022	DLC
Trichloroethene	EPA-8260	U	10	1	UG/KG	01/18/2022	DLC
1,2-Dichloropropane	EPA-8260	U	10	1	UG/KG	01/18/2022	DLC
Dibromomethane	EPA-8260	U	10	1	UG/KG	01/18/2022	DLC
Bromodichloromethane	EPA-8260	U	10	1	UG/KG	01/18/2022	DLC
Trans-1,3-Dichloropropene	EPA-8260	U	10	1	UG/KG	01/18/2022	DLC
4-Methyl-2-Pentanone	EPA-8260	U	50	1	UG/KG	01/18/2022	DLC
Toluene	EPA-8260	U	10	1	UG/KG	01/18/2022	DLC
Cis-1,3-Dichloropropene	EPA-8260	U	10	1	UG/KG	01/18/2022	DLC
1,1,2-Trichloroethane	EPA-8260	U	10	1	UG/KG	01/18/2022	DLC

ADDRESS 8620 Holly Drive, Suite 100, Everett, WA 98208 | PHONE 425-356-2600 | FAX 425-356-2626
ALS Group USA, Corp dba ALS Environmental

Environmental www.alsglobal.com
RIGHT SOLUTIONS RIGHT PARTNER

ALS Environmental

CERTIFICATE OF ANALYSIS

CLIENT:	Landau Associates, Inc. 155 NE 100th St, Ste 302 Seattle, WA 98125	DATE: ALS JOB#: ALS SAMPLE#:	1/19/2022 EV22010034 EV22010034-02
CLIENT CONTACT:	Dylan Frazer	DATE RECEIVED:	01/12/2022
CLIENT PROJECT:	POE - MIE / 121049.080.083	COLLECTION DATE:	1/11/2022 4:35:00 PM
CLIENT SAMPLE ID	MIE-DP-5-220111	WDOE ACCREDITATION:	C601

SAMPLE DATA RESULTS

ANALYTE	METHOD	RESULTS	REPORTING LIMITS	DILUTION FACTOR	UNITS	ANALYSIS DATE	ANALYSIS BY
2-Hexanone	EPA-8260	U	50	1	UG/KG	01/18/2022	DLC
1,3-Dichloropropane	EPA-8260	U	10	1	UG/KG	01/18/2022	DLC
Tetrachloroethylene	EPA-8260	U	10	1	UG/KG	01/18/2022	DLC
Dibromochloromethane	EPA-8260	U	10	1	UG/KG	01/18/2022	DLC
1,2-Dibromoethane	EPA-8260	U	5.0	1	UG/KG	01/18/2022	DLC
Chlorobenzene	EPA-8260	U	10	1	UG/KG	01/18/2022	DLC
1,1,1,2-Tetrachloroethane	EPA-8260	U	10	1	UG/KG	01/18/2022	DLC
Ethylbenzene	EPA-8260	U	10	1	UG/KG	01/18/2022	DLC
m,p-Xylene	EPA-8260	U	20	1	UG/KG	01/18/2022	DLC
Styrene	EPA-8260	U	10	1	UG/KG	01/18/2022	DLC
o-Xylene	EPA-8260	U	10	1	UG/KG	01/18/2022	DLC
Bromoform	EPA-8260	U	10	1	UG/KG	01/18/2022	DLC
Isopropylbenzene	EPA-8260	U	10	1	UG/KG	01/18/2022	DLC
1,1,2,2-Tetrachloroethane	EPA-8260	U	10	1	UG/KG	01/18/2022	DLC
1,2,3-Trichloropropane	EPA-8260	U	10	1	UG/KG	01/18/2022	DLC
Bromobenzene	EPA-8260	U	10	1	UG/KG	01/18/2022	DLC
N-Propyl Benzene	EPA-8260	U	10	1	UG/KG	01/18/2022	DLC
2-Chlorotoluene	EPA-8260	U	10	1	UG/KG	01/18/2022	DLC
1,3,5-Trimethylbenzene	EPA-8260	U	10	1	UG/KG	01/18/2022	DLC
4-Chlorotoluene	EPA-8260	U	10	1	UG/KG	01/18/2022	DLC
T-Butyl Benzene	EPA-8260	U	10	1	UG/KG	01/18/2022	DLC
1,2,4-Trimethylbenzene	EPA-8260	U	10	1	UG/KG	01/18/2022	DLC
S-Butyl Benzene	EPA-8260	U	10	1	UG/KG	01/18/2022	DLC
P-Isopropyltoluene	EPA-8260	U	10	1	UG/KG	01/18/2022	DLC
1,3-Dichlorobenzene	EPA-8260	U	10	1	UG/KG	01/18/2022	DLC
1,4-Dichlorobenzene	EPA-8260	U	10	1	UG/KG	01/18/2022	DLC
N-Butylbenzene	EPA-8260	U	10	1	UG/KG	01/18/2022	DLC
1,2-Dichlorobenzene	EPA-8260	U	10	1	UG/KG	01/18/2022	DLC
1,2-Dibromo 3-Chloropropane	EPA-8260	U	50	1	UG/KG	01/18/2022	DLC
1,2,4-Trichlorobenzene	EPA-8260	U	10	1	UG/KG	01/18/2022	DLC
Hexachlorobutadiene	EPA-8260	U	10	1	UG/KG	01/18/2022	DLC
Naphthalene	EPA-8260	U	10	1	UG/KG	01/18/2022	DLC
1,2,3-Trichlorobenzene	EPA-8260	U	10	1	UG/KG	01/18/2022	DLC
Pyridine	EPA-8270	U	200	1	UG/KG	01/17/2022	JMK
N-Nitrosodimethylamine	EPA-8270	U	100	1	UG/KG	01/17/2022	JMK
Phenol	EPA-8270	U	100	1	UG/KG	01/17/2022	JMK
Aniline	EPA-8270	U	100	1	UG/KG	01/17/2022	JMK
Bis(2-Chloroethyl)Ether	EPA-8270	U	250	1	UG/KG	01/17/2022	JMK
2-Chlorophenol	EPA-8270	U	250	1	UG/KG	01/17/2022	JMK

ADDRESS 8620 Holly Drive, Suite 100, Everett, WA 98208 | PHONE 425-356-2600 | FAX 425-356-2626
ALS Group USA, Corp dba ALS Environmental

Environmental www.alsglobal.com
RIGHT SOLUTIONS RIGHT PARTNER

ALS Environmental

CERTIFICATE OF ANALYSIS

CLIENT:	Landau Associates, Inc. 155 NE 100th St, Ste 302 Seattle, WA 98125	DATE: ALS JOB#: ALS SAMPLE#:	1/19/2022 EV22010034 EV22010034-02
CLIENT CONTACT:	Dylan Frazer	DATE RECEIVED:	01/12/2022
CLIENT PROJECT:	POE - MIE / 121049.080.083	COLLECTION DATE:	1/11/2022 4:35:00 PM
CLIENT SAMPLE ID	MIE-DP-5-220111	WDOE ACCREDITATION:	C601

SAMPLE DATA RESULTS

ANALYTE	METHOD	RESULTS	REPORTING LIMITS	DILUTION FACTOR	UNITS	ANALYSIS DATE	ANALYSIS BY
1,3-Dichlorobenzene	EPA-8270	U	100	1	UG/KG	01/17/2022	JMK
1,4-Dichlorobenzene	EPA-8270	U	100	1	UG/KG	01/17/2022	JMK
Benzyl Alcohol	EPA-8270	U	100	1	UG/KG	01/17/2022	JMK
1,2-Dichlorobenzene	EPA-8270	U	100	1	UG/KG	01/17/2022	JMK
2-Methylphenol	EPA-8270	U	100	1	UG/KG	01/17/2022	JMK
Bis(2-Chloroisopropyl)Ether	EPA-8270	U	250	1	UG/KG	01/17/2022	JMK
3&4-Methylphenol	EPA-8270	**220**	100	1	UG/KG	01/17/2022	JMK
N-Nitroso-Di-N-Propylamine	EPA-8270	U	250	1	UG/KG	01/17/2022	JMK
Hexachloroethane	EPA-8270	U	100	1	UG/KG	01/17/2022	JMK
Nitrobenzene	EPA-8270	U	100	1	UG/KG	01/17/2022	JMK
Isophorone	EPA-8270	U	100	1	UG/KG	01/17/2022	JMK
2-Nitrophenol	EPA-8270	U	100	1	UG/KG	01/17/2022	JMK
2,4-Dimethylphenol	EPA-8270	U	100	1	UG/KG	01/17/2022	JMK
Benzoic Acid	EPA-8270	U	1000	1	UG/KG	01/17/2022	JMK
Bis(2-Chloroethoxy)Methane	EPA-8270	U	250	1	UG/KG	01/17/2022	JMK
2,4-Dichlorophenol	EPA-8270	U	500	1	UG/KG	01/17/2022	JMK
1,2,4-Trichlorobenzene	EPA-8270	U	100	1	UG/KG	01/17/2022	JMK
Naphthalene	EPA-8270	U	100	1	UG/KG	01/17/2022	JMK
4-Chloroaniline	EPA-8270	U	1000	1	UG/KG	01/17/2022	JMK
2,6-Dichlorophenol	EPA-8270	U	250	1	UG/KG	01/17/2022	JMK
Hexachlorobutadiene	EPA-8270	U	500	1	UG/KG	01/17/2022	JMK
4-Chloro-3-Methylphenol	EPA-8270	U	500	1	UG/KG	01/17/2022	JMK
2-Methylnaphthalene	EPA-8270	U	250	1	UG/KG	01/17/2022	JMK
1-Methylnaphthalene	EPA-8270	U	250	1	UG/KG	01/17/2022	JMK
Hexachlorocyclopentadiene	EPA-8270	U	100	1	UG/KG	01/17/2022	JMK
2,4,6-Trichlorophenol	EPA-8270	U	100	1	UG/KG	01/17/2022	JMK
2,4,5-Trichlorophenol	EPA-8270	U	100	1	UG/KG	01/17/2022	JMK
2-Chloronaphthalene	EPA-8270	U	100	1	UG/KG	01/17/2022	JMK
2-Nitroaniline	EPA-8270	U	100	1	UG/KG	01/17/2022	JMK
Acenaphthylene	EPA-8270	U	100	1	UG/KG	01/17/2022	JMK
Dimethylphthalate	EPA-8270	U	100	1	UG/KG	01/17/2022	JMK
2,6-Dinitrotoluene	EPA-8270	U	100	1	UG/KG	01/17/2022	JMK
Acenaphthene	EPA-8270	U	100	1	UG/KG	01/17/2022	JMK
3-Nitroaniline	EPA-8270	U	1000	1	UG/KG	01/17/2022	JMK
2,4-Dinitrophenol	EPA-8270	U	100	1	UG/KG	01/17/2022	JMK
4-Nitrophenol	EPA-8270	U	100	1	UG/KG	01/17/2022	JMK
Dibenzofuran	EPA-8270	U	100	1	UG/KG	01/17/2022	JMK
2,4-Dinitrotoluene	EPA-8270	U	100	1	UG/KG	01/17/2022	JMK
2,3,4,6-Tetrachlorophenol	EPA-8270	U	100	1	UG/KG	01/17/2022	JMK

ADDRESS 8620 Holly Drive, Suite 100, Everett, WA 98208 | PHONE 425-356-2600 | FAX 425-356-2626
ALS Group USA, Corp dba ALS Environmental

Environmental www.alsglobal.com
RIGHT SOLUTIONS RIGHT PARTNER

ALS Environmental

CERTIFICATE OF ANALYSIS

CLIENT:	Landau Associates, Inc. 155 NE 100th St, Ste 302 Seattle, WA 98125	DATE: ALS JOB#: ALS SAMPLE#:	1/19/2022 EV22010034 EV22010034-02
CLIENT CONTACT:	Dylan Frazer	DATE RECEIVED:	01/12/2022
CLIENT PROJECT:	POE - MIE / 121049.080.083	COLLECTION DATE:	1/11/2022 4:35:00 PM
CLIENT SAMPLE ID	MIE-DP-5-220111	WDOE ACCREDITATION:	C601

SAMPLE DATA RESULTS

ANALYTE	METHOD	RESULTS	REPORTING LIMITS	DILUTION FACTOR	UNITS	ANALYSIS DATE	ANALYSIS BY
Diethylphthalate	EPA-8270	U	100	1	UG/KG	01/17/2022	JMK
Fluorene	EPA-8270	U	100	1	UG/KG	01/17/2022	JMK
4-Chlorophenyl-Phenylether	EPA-8270	U	100	1	UG/KG	01/17/2022	JMK
4-Nitroaniline	EPA-8270	U	250	1	UG/KG	01/17/2022	JMK
4,6-Dinitro-2-Methylphenol	EPA-8270	U	100	1	UG/KG	01/17/2022	JMK
N-Nitrosodiphenylamine	EPA-8270	U	100	1	UG/KG	01/17/2022	JMK
Azobenzene	EPA-8270	U	100	1	UG/KG	01/17/2022	JMK
4-Bromophenyl-Phenylether	EPA-8270	U	100	1	UG/KG	01/17/2022	JMK
Hexachlorobenzene	EPA-8270	U	100	1	UG/KG	01/17/2022	JMK
Pentachlorophenol	EPA-8270	U	500	1	UG/KG	01/17/2022	JMK
Phenanthrene	EPA-8270	U	100	1	UG/KG	01/17/2022	JMK
Anthracene	EPA-8270	U	100	1	UG/KG	01/17/2022	JMK
Carbazole	EPA-8270	U	250	1	UG/KG	01/17/2022	JMK
Di-N-Butylphthalate	EPA-8270	U	100	1	UG/KG	01/17/2022	JMK
Fluoranthene	EPA-8270	**100**	100	1	UG/KG	01/17/2022	JMK
Pyrene	EPA-8270	U	100	1	UG/KG	01/17/2022	JMK
Butylbenzylphthalate	EPA-8270	U	100	1	UG/KG	01/17/2022	JMK
3,3-Dichlorobenzidine	EPA-8270	U	250	1	UG/KG	01/17/2022	JMK
Benzo[A]Anthracene	EPA-8270	U	100	1	UG/KG	01/17/2022	JMK
Chrysene	EPA-8270	U	100	1	UG/KG	01/17/2022	JMK
Bis(2-Ethylhexyl)Phthalate	EPA-8270	U	100	1	UG/KG	01/17/2022	JMK
Di-N-Octylphthalate	EPA-8270	U	100	1	UG/KG	01/17/2022	JMK
Benzo[B]Fluoranthene	EPA-8270	U	100	1	UG/KG	01/17/2022	JMK
Benzo[K]Fluoranthene	EPA-8270	U	100	1	UG/KG	01/17/2022	JMK
Benzo[A]Pyrene	EPA-8270	U	100	1	UG/KG	01/17/2022	JMK
Indeno[1,2,3-Cd]Pyrene	EPA-8270	U	100	1	UG/KG	01/17/2022	JMK
Dibenz[A,H]Anthracene	EPA-8270	U	100	1	UG/KG	01/17/2022	JMK
Benzo[G,H,I]Perylene	EPA-8270	U	100	1	UG/KG	01/17/2022	JMK
PCB-1016	EPA-8082	U	0.10	1	MG/KG	01/17/2022	JMK
PCB-1221	EPA-8082	U	0.10	1	MG/KG	01/17/2022	JMK
PCB-1232	EPA-8082	U	0.10	1	MG/KG	01/17/2022	JMK
PCB-1242	EPA-8082	U	0.10	1	MG/KG	01/17/2022	JMK
PCB-1248	EPA-8082	U	0.10	1	MG/KG	01/17/2022	JMK
PCB-1254	EPA-8082	**0.14**	0.10	1	MG/KG	01/17/2022	JMK
PCB-1260	EPA-8082	U	0.10	1	MG/KG	01/17/2022	JMK
PCB-1268	EPA-8082	U	0.10	1	MG/KG	01/17/2022	JMK
Sulfate	EPA-300.0M	**12**	2.0	1	MG/KG	01/13/2022	EBS
Mercury	EPA-7471	**0.095**	0.020	1	MG/KG	01/12/2022	RAL
Arsenic	EPA-6020	**4.5**	0.20	1	MG/KG	01/12/2022	EBS

ADDRESS 8620 Holly Drive, Suite 100, Everett, WA 98208 | PHONE 425-356-2600 | FAX 425-356-2626
ALS Group USA, Corp dba ALS Environmental

Environmental www.alsglobal.com
RIGHT SOLUTIONS RIGHT PARTNER

ALS Environmental

CERTIFICATE OF ANALYSIS

CLIENT:	Landau Associates, Inc. 155 NE 100th St, Ste 302 Seattle, WA 98125	DATE: ALS JOB#: ALS SAMPLE#:	1/19/2022 EV22010034 EV22010034-02
CLIENT CONTACT:	Dylan Frazer	DATE RECEIVED:	01/12/2022
CLIENT PROJECT:	POE - MIE / 121049.080.083	COLLECTION DATE:	1/11/2022 4:35:00 PM
CLIENT SAMPLE ID	MIE-DP-5-220111	WDOE ACCREDITATION:	C601

SAMPLE DATA RESULTS

ANALYTE	METHOD	RESULTS	REPORTING LIMITS	DILUTION FACTOR	UNITS	ANALYSIS DATE	ANALYSIS BY
Barium	EPA-6020	**41**	0.10	1	MG/KG	01/12/2022	EBS
Cadmium	EPA-6020	**0.25**	0.10	1	MG/KG	01/12/2022	EBS
Chromium	EPA-6020	**34**	0.10	1	MG/KG	01/12/2022	EBS
Copper	EPA-6020	**27**	0.20	1	MG/KG	01/12/2022	EBS
Lead	EPA-6020	**17**	0.10	1	MG/KG	01/12/2022	EBS
Selenium	EPA-6020	U	1.0	1	MG/KG	01/12/2022	EBS
Silver	EPA-6020	U	0.10	1	MG/KG	01/12/2022	EBS
Zinc	EPA-6020	**58**	0.50	1	MG/KG	01/12/2022	EBS

SURROGATE	METHOD	%REC	ANALYSIS DATE	ANALYSIS BY
TFT	EPA-8021	**84.8**	01/13/2022	KLS
C25	NWTPH-DX	**100**	01/14/2022	JNF
1,2-Dichloroethane-d4	EPA-8260	**98.4**	01/18/2022	DLC
Toluene-d8	EPA-8260	**99.4**	01/18/2022	DLC
4-Bromofluorobenzene	EPA-8260	**105**	01/18/2022	DLC
2-Fluorophenol	EPA-8270	**98.4**	01/17/2022	JMK
Phenol-d5	EPA-8270	**90.6**	01/17/2022	JMK
Nitrobenzene-d5	EPA-8270	**77.2**	01/17/2022	JMK
2-Fluorobiphenyl	EPA-8270	**81.3**	01/17/2022	JMK
2,4,6-Tribromophenol	EPA-8270	**78.0**	01/17/2022	JMK
Terphenyl-d14	EPA-8270	**79.9**	01/17/2022	JMK
TCMX	EPA-8082	**95.2**	01/17/2022	JMK
DCB	EPA-8082	**116**	01/17/2022	JMK

U - Analyte analyzed for but not detected at level above reporting limit.
Chromatogram indicates that it is likely that sample contains an unidentified diesel range product and an unidentified oil range product.

ADDRESS 8620 Holly Drive, Suite 100, Everett, WA 98208 | PHONE 425-356-2600 | FAX 425-356-2626
ALS Group USA, Corp dba ALS Environmental

Environmental www.alsglobal.com
RIGHT SOLUTIONS RIGHT PARTNER

ALS Environmental

CERTIFICATE OF ANALYSIS

CLIENT:	Landau Associates, Inc. 155 NE 100th St, Ste 302 Seattle, WA 98125	DATE: ALS JOB#: ALS SAMPLE#:	1/19/2022 EV22010034 EV22010034-03
CLIENT CONTACT:	Dylan Frazer	DATE RECEIVED:	01/12/2022
CLIENT PROJECT:	POE - MIE / 121049.080.083	COLLECTION DATE:	1/11/2022 4:40:00 PM
CLIENT SAMPLE ID	MIE-DP-6-220111	WDOE ACCREDITATION:	C601

SAMPLE DATA RESULTS

ANALYTE	METHOD	RESULTS	REPORTING LIMITS	DILUTION FACTOR	UNITS	ANALYSIS DATE	ANALYSIS BY
Benzene	EPA-8021	U	0.030	1	MG/KG	01/13/2022	KLS
Toluene	EPA-8021	U	0.050	1	MG/KG	01/13/2022	KLS
Ethylbenzene	EPA-8021	U	0.050	1	MG/KG	01/13/2022	KLS
Xylenes	EPA-8021	U	0.20	1	MG/KG	01/13/2022	KLS
TPH-Diesel Range (C12-C24)	NWTPH-DX	**54**	25	1	MG/KG	01/14/2022	JNF
TPH-Oil Range (C24-C40)	NWTPH-DX	**180**	50	1	MG/KG	01/14/2022	JNF
Dichlorodifluoromethane	EPA-8260	U	10	1	UG/KG	01/18/2022	DLC
Chloromethane	EPA-8260	U	10	1	UG/KG	01/18/2022	DLC
Vinyl Chloride	EPA-8260	U	10	1	UG/KG	01/18/2022	DLC
Bromomethane	EPA-8260	U	10	1	UG/KG	01/18/2022	DLC
Chloroethane	EPA-8260	U	10	1	UG/KG	01/18/2022	DLC
Carbon Tetrachloride	EPA-8260	U	10	1	UG/KG	01/18/2022	DLC
Trichlorofluoromethane	EPA-8260	U	10	1	UG/KG	01/18/2022	DLC
Carbon Disulfide	EPA-8260	U	10	1	UG/KG	01/18/2022	DLC
Acetone	EPA-8260	U	50	1	UG/KG	01/18/2022	DLC
1,1-Dichloroethene	EPA-8260	U	10	1	UG/KG	01/18/2022	DLC
Methylene Chloride	EPA-8260	U	20	1	UG/KG	01/18/2022	DLC
Acrylonitrile	EPA-8260	U	50	1	UG/KG	01/18/2022	DLC
Methyl T-Butyl Ether	EPA-8260	U	10	1	UG/KG	01/18/2022	DLC
Trans-1,2-Dichloroethene	EPA-8260	U	10	1	UG/KG	01/18/2022	DLC
1,1-Dichloroethane	EPA-8260	U	10	1	UG/KG	01/18/2022	DLC
2-Butanone	EPA-8260	U	50	1	UG/KG	01/18/2022	DLC
Cis-1,2-Dichloroethene	EPA-8260	U	10	1	UG/KG	01/18/2022	DLC
2,2-Dichloropropane	EPA-8260	U	10	1	UG/KG	01/18/2022	DLC
Bromochloromethane	EPA-8260	U	10	1	UG/KG	01/18/2022	DLC
Chloroform	EPA-8260	U	10	1	UG/KG	01/18/2022	DLC
1,1,1-Trichloroethane	EPA-8260	U	10	1	UG/KG	01/18/2022	DLC
1,1-Dichloropropene	EPA-8260	U	10	1	UG/KG	01/18/2022	DLC
1,2-Dichloroethane	EPA-8260	U	10	1	UG/KG	01/18/2022	DLC
Benzene	EPA-8260	U	5.0	1	UG/KG	01/18/2022	DLC
Trichloroethene	EPA-8260	U	10	1	UG/KG	01/18/2022	DLC
1,2-Dichloropropane	EPA-8260	U	10	1	UG/KG	01/18/2022	DLC
Dibromomethane	EPA-8260	U	10	1	UG/KG	01/18/2022	DLC
Bromodichloromethane	EPA-8260	U	10	1	UG/KG	01/18/2022	DLC
Trans-1,3-Dichloropropene	EPA-8260	U	10	1	UG/KG	01/18/2022	DLC
4-Methyl-2-Pentanone	EPA-8260	U	50	1	UG/KG	01/18/2022	DLC
Toluene	EPA-8260	U	10	1	UG/KG	01/18/2022	DLC
Cis-1,3-Dichloropropene	EPA-8260	U	10	1	UG/KG	01/18/2022	DLC
1,1,2-Trichloroethane	EPA-8260	U	10	1	UG/KG	01/18/2022	DLC

ADDRESS 8620 Holly Drive, Suite 100, Everett, WA 98208 | PHONE 425-356-2600 | FAX 425-356-2626
ALS Group USA, Corp dba ALS Environmental

Environmental www.alsglobal.com
RIGHT SOLUTIONS RIGHT PARTNER

ALS Environmental

CERTIFICATE OF ANALYSIS

CLIENT:	Landau Associates, Inc. 155 NE 100th St, Ste 302 Seattle, WA 98125	DATE: ALS JOB#: ALS SAMPLE#:	1/19/2022 EV22010034 EV22010034-03
CLIENT CONTACT:	Dylan Frazer	DATE RECEIVED:	01/12/2022
CLIENT PROJECT:	POE - MIE / 121049.080.083	COLLECTION DATE:	1/11/2022 4:40:00 PM
CLIENT SAMPLE ID	MIE-DP-6-220111	WDOE ACCREDITATION:	C601

SAMPLE DATA RESULTS

ANALYTE	METHOD	RESULTS	REPORTING LIMITS	DILUTION FACTOR	UNITS	ANALYSIS DATE	ANALYSIS BY
2-Hexanone	EPA-8260	U	50	1	UG/KG	01/18/2022	DLC
1,3-Dichloropropane	EPA-8260	U	10	1	UG/KG	01/18/2022	DLC
Tetrachloroethylene	EPA-8260	U	10	1	UG/KG	01/18/2022	DLC
Dibromochloromethane	EPA-8260	U	10	1	UG/KG	01/18/2022	DLC
1,2-Dibromoethane	EPA-8260	U	5.0	1	UG/KG	01/18/2022	DLC
Chlorobenzene	EPA-8260	U	10	1	UG/KG	01/18/2022	DLC
1,1,1,2-Tetrachloroethane	EPA-8260	U	10	1	UG/KG	01/18/2022	DLC
Ethylbenzene	EPA-8260	U	10	1	UG/KG	01/18/2022	DLC
m,p-Xylene	EPA-8260	U	20	1	UG/KG	01/18/2022	DLC
Styrene	EPA-8260	U	10	1	UG/KG	01/18/2022	DLC
o-Xylene	EPA-8260	U	10	1	UG/KG	01/18/2022	DLC
Bromoform	EPA-8260	U	10	1	UG/KG	01/18/2022	DLC
Isopropylbenzene	EPA-8260	U	10	1	UG/KG	01/18/2022	DLC
1,1,2,2-Tetrachloroethane	EPA-8260	U	10	1	UG/KG	01/18/2022	DLC
1,2,3-Trichloropropane	EPA-8260	U	10	1	UG/KG	01/18/2022	DLC
Bromobenzene	EPA-8260	U	10	1	UG/KG	01/18/2022	DLC
N-Propyl Benzene	EPA-8260	U	10	1	UG/KG	01/18/2022	DLC
2-Chlorotoluene	EPA-8260	U	10	1	UG/KG	01/18/2022	DLC
1,3,5-Trimethylbenzene	EPA-8260	U	10	1	UG/KG	01/18/2022	DLC
4-Chlorotoluene	EPA-8260	U	10	1	UG/KG	01/18/2022	DLC
T-Butyl Benzene	EPA-8260	U	10	1	UG/KG	01/18/2022	DLC
1,2,4-Trimethylbenzene	EPA-8260	U	10	1	UG/KG	01/18/2022	DLC
S-Butyl Benzene	EPA-8260	U	10	1	UG/KG	01/18/2022	DLC
P-Isopropyltoluene	EPA-8260	U	10	1	UG/KG	01/18/2022	DLC
1,3-Dichlorobenzene	EPA-8260	U	10	1	UG/KG	01/18/2022	DLC
1,4-Dichlorobenzene	EPA-8260	U	10	1	UG/KG	01/18/2022	DLC
N-Butylbenzene	EPA-8260	U	10	1	UG/KG	01/18/2022	DLC
1,2-Dichlorobenzene	EPA-8260	U	10	1	UG/KG	01/18/2022	DLC
1,2-Dibromo 3-Chloropropane	EPA-8260	U	50	1	UG/KG	01/18/2022	DLC
1,2,4-Trichlorobenzene	EPA-8260	U	10	1	UG/KG	01/18/2022	DLC
Hexachlorobutadiene	EPA-8260	U	10	1	UG/KG	01/18/2022	DLC
Naphthalene	EPA-8260	U	10	1	UG/KG	01/18/2022	DLC
1,2,3-Trichlorobenzene	EPA-8260	U	10	1	UG/KG	01/18/2022	DLC
Pyridine	EPA-8270	U	200	1	UG/KG	01/17/2022	JMK
N-Nitrosodimethylamine	EPA-8270	U	100	1	UG/KG	01/17/2022	JMK
Phenol	EPA-8270	U	100	1	UG/KG	01/17/2022	JMK
Aniline	EPA-8270	U	100	1	UG/KG	01/17/2022	JMK
Bis(2-Chloroethyl)Ether	EPA-8270	U	250	1	UG/KG	01/17/2022	JMK
2-Chlorophenol	EPA-8270	U	250	1	UG/KG	01/17/2022	JMK

ADDRESS 8620 Holly Drive, Suite 100, Everett, WA 98208 | PHONE 425-356-2600 | FAX 425-356-2626
ALS Group USA, Corp dba ALS Environmental

Environmental www.alsglobal.com
RIGHT SOLUTIONS RIGHT PARTNER

ALS Environmental

CERTIFICATE OF ANALYSIS

CLIENT:	Landau Associates, Inc. 155 NE 100th St, Ste 302 Seattle, WA 98125	DATE: ALS JOB#: ALS SAMPLE#:	1/19/2022 EV22010034 EV22010034-03
CLIENT CONTACT:	Dylan Frazer	DATE RECEIVED:	01/12/2022
CLIENT PROJECT:	POE - MIE / 121049.080.083	COLLECTION DATE:	1/11/2022 4:40:00 PM
CLIENT SAMPLE ID	MIE-DP-6-220111	WDOE ACCREDITATION:	C601

SAMPLE DATA RESULTS

ANALYTE	METHOD	RESULTS	REPORTING LIMITS	DILUTION FACTOR	UNITS	ANALYSIS DATE	ANALYSIS BY
1,3-Dichlorobenzene	EPA-8270	U	100	1	UG/KG	01/17/2022	JMK
1,4-Dichlorobenzene	EPA-8270	U	100	1	UG/KG	01/17/2022	JMK
Benzyl Alcohol	EPA-8270	U	100	1	UG/KG	01/17/2022	JMK
1,2-Dichlorobenzene	EPA-8270	U	100	1	UG/KG	01/17/2022	JMK
2-Methylphenol	EPA-8270	U	100	1	UG/KG	01/17/2022	JMK
Bis(2-Chloroisopropyl)Ether	EPA-8270	U	250	1	UG/KG	01/17/2022	JMK
3&4-Methylphenol	EPA-8270	U	100	1	UG/KG	01/17/2022	JMK
N-Nitroso-Di-N-Propylamine	EPA-8270	U	250	1	UG/KG	01/17/2022	JMK
Hexachloroethane	EPA-8270	U	100	1	UG/KG	01/17/2022	JMK
Nitrobenzene	EPA-8270	U	100	1	UG/KG	01/17/2022	JMK
Isophorone	EPA-8270	U	100	1	UG/KG	01/17/2022	JMK
2-Nitrophenol	EPA-8270	U	100	1	UG/KG	01/17/2022	JMK
2,4-Dimethylphenol	EPA-8270	U	100	1	UG/KG	01/17/2022	JMK
Benzoic Acid	EPA-8270	U	1000	1	UG/KG	01/17/2022	JMK
Bis(2-Chloroethoxy)Methane	EPA-8270	U	250	1	UG/KG	01/17/2022	JMK
2,4-Dichlorophenol	EPA-8270	U	500	1	UG/KG	01/17/2022	JMK
1,2,4-Trichlorobenzene	EPA-8270	U	100	1	UG/KG	01/17/2022	JMK
Naphthalene	EPA-8270	U	100	1	UG/KG	01/17/2022	JMK
4-Chloroaniline	EPA-8270	U	1000	1	UG/KG	01/17/2022	JMK
2,6-Dichlorophenol	EPA-8270	U	250	1	UG/KG	01/17/2022	JMK
Hexachlorobutadiene	EPA-8270	U	500	1	UG/KG	01/17/2022	JMK
4-Chloro-3-Methylphenol	EPA-8270	U	500	1	UG/KG	01/17/2022	JMK
2-Methylnaphthalene	EPA-8270	U	250	1	UG/KG	01/17/2022	JMK
1-Methylnaphthalene	EPA-8270	U	250	1	UG/KG	01/17/2022	JMK
Hexachlorocyclopentadiene	EPA-8270	U	100	1	UG/KG	01/17/2022	JMK
2,4,6-Trichlorophenol	EPA-8270	U	100	1	UG/KG	01/17/2022	JMK
2,4,5-Trichlorophenol	EPA-8270	U	100	1	UG/KG	01/17/2022	JMK
2-Chloronaphthalene	EPA-8270	U	100	1	UG/KG	01/17/2022	JMK
2-Nitroaniline	EPA-8270	U	100	1	UG/KG	01/17/2022	JMK
Acenaphthylene	EPA-8270	U	100	1	UG/KG	01/17/2022	JMK
Dimethylphthalate	EPA-8270	U	100	1	UG/KG	01/17/2022	JMK
2,6-Dinitrotoluene	EPA-8270	U	100	1	UG/KG	01/17/2022	JMK
Acenaphthene	EPA-8270	U	100	1	UG/KG	01/17/2022	JMK
3-Nitroaniline	EPA-8270	U	1000	1	UG/KG	01/17/2022	JMK
2,4-Dinitrophenol	EPA-8270	U	100	1	UG/KG	01/17/2022	JMK
4-Nitrophenol	EPA-8270	U	100	1	UG/KG	01/17/2022	JMK
Dibenzofuran	EPA-8270	U	100	1	UG/KG	01/17/2022	JMK
2,4-Dinitrotoluene	EPA-8270	U	100	1	UG/KG	01/17/2022	JMK
2,3,4,6-Tetrachlorophenol	EPA-8270	U	100	1	UG/KG	01/17/2022	JMK

ADDRESS 8620 Holly Drive, Suite 100, Everett, WA 98208 | PHONE 425-356-2600 | FAX 425-356-2626
ALS Group USA, Corp dba ALS Environmental

Environmental www.alsglobal.com
RIGHT SOLUTIONS RIGHT PARTNER

ALS Environmental

CERTIFICATE OF ANALYSIS

CLIENT:	Landau Associates, Inc. 155 NE 100th St, Ste 302 Seattle, WA 98125	DATE: ALS JOB#: ALS SAMPLE#:	1/19/2022 EV22010034 EV22010034-03
CLIENT CONTACT:	Dylan Frazer	DATE RECEIVED:	01/12/2022
CLIENT PROJECT:	POE - MIE / 121049.080.083	COLLECTION DATE:	1/11/2022 4:40:00 PM
CLIENT SAMPLE ID	MIE-DP-6-220111	WDOE ACCREDITATION:	C601

SAMPLE DATA RESULTS

ANALYTE	METHOD	RESULTS	REPORTING LIMITS	DILUTION FACTOR	UNITS	ANALYSIS DATE	ANALYSIS BY
Diethylphthalate	EPA-8270	U	100	1	UG/KG	01/17/2022	JMK
Fluorene	EPA-8270	U	100	1	UG/KG	01/17/2022	JMK
4-Chlorophenyl-Phenylether	EPA-8270	U	100	1	UG/KG	01/17/2022	JMK
4-Nitroaniline	EPA-8270	U	250	1	UG/KG	01/17/2022	JMK
4,6-Dinitro-2-Methylphenol	EPA-8270	U	100	1	UG/KG	01/17/2022	JMK
N-Nitrosodiphenylamine	EPA-8270	U	100	1	UG/KG	01/17/2022	JMK
Azobenzene	EPA-8270	U	100	1	UG/KG	01/17/2022	JMK
4-Bromophenyl-Phenylether	EPA-8270	U	100	1	UG/KG	01/17/2022	JMK
Hexachlorobenzene	EPA-8270	U	100	1	UG/KG	01/17/2022	JMK
Pentachlorophenol	EPA-8270	U	500	1	UG/KG	01/17/2022	JMK
Phenanthrene	EPA-8270	**250**	100	1	UG/KG	01/17/2022	JMK
Anthracene	EPA-8270	U	100	1	UG/KG	01/17/2022	JMK
Carbazole	EPA-8270	U	250	1	UG/KG	01/17/2022	JMK
Di-N-Butylphthalate	EPA-8270	U	100	1	UG/KG	01/17/2022	JMK
Fluoranthene	EPA-8270	**270**	100	1	UG/KG	01/17/2022	JMK
Pyrene	EPA-8270	**280**	100	1	UG/KG	01/17/2022	JMK
Butylbenzylphthalate	EPA-8270	U	100	1	UG/KG	01/17/2022	JMK
3,3-Dichlorobenzidine	EPA-8270	U	250	1	UG/KG	01/17/2022	JMK
Benzo[A]Anthracene	EPA-8270	**120**	100	1	UG/KG	01/17/2022	JMK
Chrysene	EPA-8270	**130**	100	1	UG/KG	01/17/2022	JMK
Bis(2-Ethylhexyl)Phthalate	EPA-8270	**110**	100	1	UG/KG	01/17/2022	JMK
Di-N-Octylphthalate	EPA-8270	U	100	1	UG/KG	01/17/2022	JMK
Benzo[B]Fluoranthene	EPA-8270	**100**	100	1	UG/KG	01/17/2022	JMK
Benzo[K]Fluoranthene	EPA-8270	U	100	1	UG/KG	01/17/2022	JMK
Benzo[A]Pyrene	EPA-8270	U	100	1	UG/KG	01/17/2022	JMK
Indeno[1,2,3-Cd]Pyrene	EPA-8270	U	100	1	UG/KG	01/17/2022	JMK
Dibenz[A,H]Anthracene	EPA-8270	U	100	1	UG/KG	01/17/2022	JMK
Benzo[G,H,I]Perylene	EPA-8270	U	100	1	UG/KG	01/17/2022	JMK
PCB-1016	EPA-8082	U	0.10	1	MG/KG	01/17/2022	JMK
PCB-1221	EPA-8082	U	0.10	1	MG/KG	01/17/2022	JMK
PCB-1232	EPA-8082	U	0.10	1	MG/KG	01/17/2022	JMK
PCB-1242	EPA-8082	U	0.10	1	MG/KG	01/17/2022	JMK
PCB-1248	EPA-8082	U	0.10	1	MG/KG	01/17/2022	JMK
PCB-1254	EPA-8082	U	0.10	1	MG/KG	01/17/2022	JMK
PCB-1260	EPA-8082	U	0.10	1	MG/KG	01/17/2022	JMK
PCB-1268	EPA-8082	U	0.10	1	MG/KG	01/17/2022	JMK
Sulfate	EPA-300.0M	**230**	2.0	1	MG/KG	01/13/2022	EBS
Mercury	EPA-7471	**0.14**	0.020	1	MG/KG	01/12/2022	RAL
Arsenic	EPA-6020	**5.3**	0.20	1	MG/KG	01/12/2022	EBS

ADDRESS 8620 Holly Drive, Suite 100, Everett, WA 98208 | PHONE 425-356-2600 | FAX 425-356-2626
ALS Group USA, Corp dba ALS Environmental

Environmental www.alsglobal.com
RIGHT SOLUTIONS RIGHT PARTNER

ALS Environmental

CERTIFICATE OF ANALYSIS

CLIENT:	Landau Associates, Inc. 155 NE 100th St, Ste 302 Seattle, WA 98125	DATE: ALS JOB#: ALS SAMPLE#:	1/19/2022 EV22010034 EV22010034-03
CLIENT CONTACT:	Dylan Frazer	DATE RECEIVED:	01/12/2022
CLIENT PROJECT:	POE - MIE / 121049.080.083	COLLECTION DATE:	1/11/2022 4:40:00 PM
CLIENT SAMPLE ID	MIE-DP-6-220111	WDOE ACCREDITATION:	C601

SAMPLE DATA RESULTS

ANALYTE	METHOD	RESULTS	REPORTING LIMITS	DILUTION FACTOR	UNITS	ANALYSIS DATE	ANALYSIS BY
Barium	EPA-6020	**46**	0.10	1	MG/KG	01/12/2022	EBS
Cadmium	EPA-6020	**0.35**	0.10	1	MG/KG	01/12/2022	EBS
Chromium	EPA-6020	**31**	0.10	1	MG/KG	01/12/2022	EBS
Copper	EPA-6020	**27**	0.20	1	MG/KG	01/12/2022	EBS
Lead	EPA-6020	**32**	0.10	1	MG/KG	01/12/2022	EBS
Selenium	EPA-6020	U	1.0	1	MG/KG	01/12/2022	EBS
Silver	EPA-6020	U	0.10	1	MG/KG	01/12/2022	EBS
Zinc	EPA-6020	**84**	0.50	1	MG/KG	01/12/2022	EBS

SURROGATE	METHOD	%REC	ANALYSIS DATE	ANALYSIS BY
TFT	EPA-8021	**73.3**	01/13/2022	KLS
C25	NWTPH-DX	**105**	01/14/2022	JNF
1,2-Dichloroethane-d4	EPA-8260	**98.9**	01/18/2022	DLC
Toluene-d8	EPA-8260	**103**	01/18/2022	DLC
4-Bromofluorobenzene	EPA-8260	**106**	01/18/2022	DLC
2-Fluorophenol	EPA-8270	**98.6**	01/17/2022	JMK
Phenol-d5	EPA-8270	**90.4**	01/17/2022	JMK
Nitrobenzene-d5	EPA-8270	**78.1**	01/17/2022	JMK
2-Fluorobiphenyl	EPA-8270	**81.5**	01/17/2022	JMK
2,4,6-Tribromophenol	EPA-8270	**75.3**	01/17/2022	JMK
Terphenyl-d14	EPA-8270	**80.4**	01/17/2022	JMK
TCMX	EPA-8082	**84.2**	01/17/2022	JMK
DCB	EPA-8082	**102**	01/17/2022	JMK

U - Analyte analyzed for but not detected at level above reporting limit.
Chromatogram indicates that it is likely that sample contains an unidentified diesel range product and lube oil.
Diesel range product results biased high due to oil range product overlap.

ADDRESS 8620 Holly Drive, Suite 100, Everett, WA 98208 | PHONE 425-356-2600 | FAX 425-356-2626
ALS Group USA, Corp dba ALS Environmental

Environmental www.alsglobal.com
RIGHT SOLUTIONS RIGHT PARTNER

ALS Environmental

CERTIFICATE OF ANALYSIS

CLIENT: Landau Associates, Inc.
155 NE 100th St, Ste 302
Seattle, WA 98125
CLIENT CONTACT: Dylan Frazer
CLIENT PROJECT: POE - MIE / 121049.080.083

DATE: 1/19/2022
ALS SDG#: EV22010034
WDOE ACCREDITATION: C601

LABORATORY BLANK RESULTS

MB-011222S - Batch 174392 - Soil by EPA-8021

ANALYTE	METHOD	RESULTS	UNITS	REPORTING LIMITS	ANALYSIS DATE	ANALYSIS BY
Benzene	EPA-8021	U	MG/KG	0.030	01/12/2022	KLS
Toluene	EPA-8021	U	MG/KG	0.050	01/12/2022	KLS
Ethylbenzene	EPA-8021	U	MG/KG	0.050	01/12/2022	KLS
Xylenes	EPA-8021	U	MG/KG	0.20	01/12/2022	KLS

U - Analyte analyzed for but not detected at level above reporting limit.

MB-011322S - Batch 174437 - Soil by NWTPH-DX

ANALYTE	METHOD	RESULTS	UNITS	REPORTING LIMITS	ANALYSIS DATE	ANALYSIS BY
TPH-Diesel Range (C12-C24)	NWTPH-DX	U	MG/KG	25	01/14/2022	JNF
TPH-Oil Range (C24-C40)	NWTPH-DX	U	MG/KG	50	01/14/2022	JNF

U - Analyte analyzed for but not detected at level above reporting limit.

MB-011822S - Batch 174557 - Soil by EPA-8260

ANALYTE	METHOD	RESULTS	UNITS	REPORTING LIMITS	ANALYSIS DATE	ANALYSIS BY
Dichlorodifluoromethane	EPA-8260	U	UG/KG	10	01/18/2022	DLC
Chloromethane	EPA-8260	U	UG/KG	10	01/18/2022	DLC
Vinyl Chloride	EPA-8260	U	UG/KG	10	01/18/2022	DLC
Bromomethane	EPA-8260	U	UG/KG	10	01/18/2022	DLC
Chloroethane	EPA-8260	U	UG/KG	10	01/18/2022	DLC
Carbon Tetrachloride	EPA-8260	U	UG/KG	10	01/18/2022	DLC
Trichlorofluoromethane	EPA-8260	U	UG/KG	10	01/18/2022	DLC
Carbon Disulfide	EPA-8260	U	UG/KG	10	01/18/2022	DLC
Acetone	EPA-8260	U	UG/KG	50	01/18/2022	DLC
1,1-Dichloroethene	EPA-8260	U	UG/KG	10	01/18/2022	DLC
Methylene Chloride	EPA-8260	U	UG/KG	20	01/18/2022	DLC
Acrylonitrile	EPA-8260	U	UG/KG	50	01/18/2022	DLC
Methyl T-Butyl Ether	EPA-8260	U	UG/KG	10	01/18/2022	DLC
Trans-1,2-Dichloroethene	EPA-8260	U	UG/KG	10	01/18/2022	DLC
1,1-Dichloroethane	EPA-8260	U	UG/KG	10	01/18/2022	DLC
2-Butanone	EPA-8260	U	UG/KG	50	01/18/2022	DLC
Cis-1,2-Dichloroethene	EPA-8260	U	UG/KG	10	01/18/2022	DLC
2,2-Dichloropropane	EPA-8260	U	UG/KG	10	01/18/2022	DLC
Bromochloromethane	EPA-8260	U	UG/KG	10	01/18/2022	DLC
Chloroform	EPA-8260	U	UG/KG	10	01/18/2022	DLC
1,1,1-Trichloroethane	EPA-8260	U	UG/KG	10	01/18/2022	DLC
1,1-Dichloropropene	EPA-8260	U	UG/KG	10	01/18/2022	DLC

ADDRESS 8620 Holly Drive, Suite 100, Everett, WA 98208 | PHONE 425-356-2600 | FAX 425-356-2626
ALS Group USA, Corp dba ALS Environmental

Environmental www.alsglobal.com
RIGHT SOLUTIONS RIGHT PARTNER

CERTIFICATE OF ANALYSIS

CLIENT:	Landau Associates, Inc. 155 NE 100th St, Ste 302 Seattle, WA 98125	DATE:	1/19/2022
		ALS SDG#:	EV22010034
		WDOE ACCREDITATION:	C601
CLIENT CONTACT:	Dylan Frazer		
CLIENT PROJECT:	POE - MIE / 121049.080.083		

LABORATORY BLANK RESULTS

MB-011822S - Batch 174557 - Soil by EPA-8260

1,2-Dichloroethane	EPA-8260	U	UG/KG	10	01/18/2022	DLC
Benzene	EPA-8260	U	UG/KG	5.0	01/18/2022	DLC
Trichloroethene	EPA-8260	U	UG/KG	10	01/18/2022	DLC
1,2-Dichloropropane	EPA-8260	U	UG/KG	10	01/18/2022	DLC
Dibromomethane	EPA-8260	U	UG/KG	10	01/18/2022	DLC
Bromodichloromethane	EPA-8260	U	UG/KG	10	01/18/2022	DLC
Trans-1,3-Dichloropropene	EPA-8260	U	UG/KG	10	01/18/2022	DLC
4-Methyl-2-Pentanone	EPA-8260	U	UG/KG	50	01/18/2022	DLC
Toluene	EPA-8260	U	UG/KG	10	01/18/2022	DLC
Cis-1,3-Dichloropropene	EPA-8260	U	UG/KG	10	01/18/2022	DLC
1,1,2-Trichloroethane	EPA-8260	U	UG/KG	10	01/18/2022	DLC
2-Hexanone	EPA-8260	U	UG/KG	50	01/18/2022	DLC
1,3-Dichloropropane	EPA-8260	U	UG/KG	10	01/18/2022	DLC
Tetrachloroethylene	EPA-8260	U	UG/KG	10	01/18/2022	DLC
Dibromochloromethane	EPA-8260	U	UG/KG	10	01/18/2022	DLC
1,2-Dibromoethane	EPA-8260	U	UG/KG	5.0	01/18/2022	DLC
Chlorobenzene	EPA-8260	U	UG/KG	10	01/18/2022	DLC
1,1,1,2-Tetrachloroethane	EPA-8260	U	UG/KG	10	01/18/2022	DLC
Ethylbenzene	EPA-8260	U	UG/KG	10	01/18/2022	DLC
m,p-Xylene	EPA-8260	U	UG/KG	20	01/18/2022	DLC
Styrene	EPA-8260	U	UG/KG	10	01/18/2022	DLC
o-Xylene	EPA-8260	U	UG/KG	10	01/18/2022	DLC
Bromoform	EPA-8260	U	UG/KG	10	01/18/2022	DLC
Isopropylbenzene	EPA-8260	U	UG/KG	10	01/18/2022	DLC
1,1,2,2-Tetrachloroethane	EPA-8260	U	UG/KG	10	01/18/2022	DLC
1,2,3-Trichloropropane	EPA-8260	U	UG/KG	10	01/18/2022	DLC
Bromobenzene	EPA-8260	U	UG/KG	10	01/18/2022	DLC
N-Propyl Benzene	EPA-8260	U	UG/KG	10	01/18/2022	DLC
2-Chlorotoluene	EPA-8260	U	UG/KG	10	01/18/2022	DLC
1,3,5-Trimethylbenzene	EPA-8260	U	UG/KG	10	01/18/2022	DLC
4-Chlorotoluene	EPA-8260	U	UG/KG	10	01/18/2022	DLC
T-Butyl Benzene	EPA-8260	U	UG/KG	10	01/18/2022	DLC
1,2,4-Trimethylbenzene	EPA-8260	U	UG/KG	10	01/18/2022	DLC
S-Butyl Benzene	EPA-8260	U	UG/KG	10	01/18/2022	DLC
P-Isopropyltoluene	EPA-8260	U	UG/KG	10	01/18/2022	DLC
1,3-Dichlorobenzene	EPA-8260	U	UG/KG	10	01/18/2022	DLC
1,4-Dichlorobenzene	EPA-8260	U	UG/KG	10	01/18/2022	DLC
N-Butylbenzene	EPA-8260	U	UG/KG	10	01/18/2022	DLC
1,2-Dichlorobenzene	EPA-8260	U	UG/KG	10	01/18/2022	DLC
1,2-Dibromo 3-Chloropropane	EPA-8260	U	UG/KG	50	01/18/2022	DLC
1,2,4-Trichlorobenzene	EPA-8260	U	UG/KG	10	01/18/2022	DLC

ADDRESS 8620 Holly Drive, Suite 100, Everett, WA 98208 | PHONE 425-356-2600 | FAX 425-356-2626
ALS Group USA, Corp dba ALS Environmental

Environmental www.alsglobal.com
RIGHT SOLUTIONS RIGHT PARTNER

ALS Environmental

CERTIFICATE OF ANALYSIS

CLIENT: Landau Associates, Inc.
155 NE 100th St, Ste 302
Seattle, WA 98125

DATE: 1/19/2022
ALS SDG#: EV22010034
WDOE ACCREDITATION: C601

CLIENT CONTACT: Dylan Frazer
CLIENT PROJECT: POE - MIE / 121049.080.083

LABORATORY BLANK RESULTS

MB-011822S - Batch 174557 - Soil by EPA-8260

Hexachlorobutadiene	EPA-8260	U	UG/KG	10	01/18/2022	DLC
Naphthalene	EPA-8260	U	UG/KG	10	01/18/2022	DLC
1,2,3-Trichlorobenzene	EPA-8260	U	UG/KG	10	01/18/2022	DLC

U - Analyte analyzed for but not detected at level above reporting limit.

MB-011322S - Batch 174514 - Soil by EPA-8270

ANALYTE	METHOD	RESULTS	UNITS	REPORTING LIMITS	ANALYSIS DATE	ANALYSIS BY
Pyridine	EPA-8270	U	UG/KG	200	01/17/2022	JMK
N-Nitrosodimethylamine	EPA-8270	U	UG/KG	100	01/17/2022	JMK
Phenol	EPA-8270	U	UG/KG	100	01/17/2022	JMK
Aniline	EPA-8270	U	UG/KG	100	01/17/2022	JMK
Bis(2-Chloroethyl)Ether	EPA-8270	U	UG/KG	250	01/17/2022	JMK
2-Chlorophenol	EPA-8270	U	UG/KG	250	01/17/2022	JMK
1,3-Dichlorobenzene	EPA-8270	U	UG/KG	100	01/17/2022	JMK
1,4-Dichlorobenzene	EPA-8270	U	UG/KG	100	01/17/2022	JMK
Benzyl Alcohol	EPA-8270	U	UG/KG	100	01/17/2022	JMK
1,2-Dichlorobenzene	EPA-8270	U	UG/KG	100	01/17/2022	JMK
2-Methylphenol	EPA-8270	U	UG/KG	100	01/17/2022	JMK
Bis(2-Chloroisopropyl)Ether	EPA-8270	U	UG/KG	250	01/17/2022	JMK
3&4-Methylphenol	EPA-8270	U	UG/KG	100	01/17/2022	JMK
N-Nitroso-Di-N-Propylamine	EPA-8270	U	UG/KG	250	01/17/2022	JMK
Hexachloroethane	EPA-8270	U	UG/KG	100	01/17/2022	JMK
Nitrobenzene	EPA-8270	U	UG/KG	100	01/17/2022	JMK
Isophorone	EPA-8270	U	UG/KG	100	01/17/2022	JMK
2-Nitrophenol	EPA-8270	U	UG/KG	100	01/17/2022	JMK
2,4-Dimethylphenol	EPA-8270	U	UG/KG	100	01/17/2022	JMK
Benzoic Acid	EPA-8270	U	UG/KG	1000	01/17/2022	JMK
Bis(2-Chloroethoxy)Methane	EPA-8270	U	UG/KG	250	01/17/2022	JMK
2,4-Dichlorophenol	EPA-8270	U	UG/KG	500	01/17/2022	JMK
1,2,4-Trichlorobenzene	EPA-8270	U	UG/KG	100	01/17/2022	JMK
Naphthalene	EPA-8270	U	UG/KG	100	01/17/2022	JMK
4-Chloroaniline	EPA-8270	U	UG/KG	1000	01/17/2022	JMK
2,6-Dichlorophenol	EPA-8270	U	UG/KG	250	01/17/2022	JMK
Hexachlorobutadiene	EPA-8270	U	UG/KG	500	01/17/2022	JMK
4-Chloro-3-Methylphenol	EPA-8270	U	UG/KG	500	01/17/2022	JMK
2-Methylnaphthalene	EPA-8270	U	UG/KG	250	01/17/2022	JMK
1-Methylnaphthalene	EPA-8270	U	UG/KG	250	01/17/2022	JMK
Hexachlorocyclopentadiene	EPA-8270	U	UG/KG	100	01/17/2022	JMK
2,4,6-Trichlorophenol	EPA-8270	U	UG/KG	100	01/17/2022	JMK
2,4,5-Trichlorophenol	EPA-8270	U	UG/KG	100	01/17/2022	JMK

ADDRESS 8620 Holly Drive, Suite 100, Everett, WA 98208 | PHONE 425-356-2600 | FAX 425-356-2626
ALS Group USA, Corp dba ALS Environmental

Environmental www.alsglobal.com
RIGHT SOLUTIONS RIGHT PARTNER

CERTIFICATE OF ANALYSIS

CLIENT:	Landau Associates, Inc. 155 NE 100th St, Ste 302 Seattle, WA 98125	DATE:	1/19/2022
		ALS SDG#:	EV22010034
		WDOE ACCREDITATION:	C601
CLIENT CONTACT:	Dylan Frazer		
CLIENT PROJECT:	POE - MIE / 121049.080.083		

LABORATORY BLANK RESULTS

MB-011322S - Batch 174514 - Soil by EPA-8270

2-Chloronaphthalene	EPA-8270	U	UG/KG	100	01/17/2022	JMK
2-Nitroaniline	EPA-8270	U	UG/KG	100	01/17/2022	JMK
Acenaphthylene	EPA-8270	U	UG/KG	100	01/17/2022	JMK
Dimethylphthalate	EPA-8270	U	UG/KG	100	01/17/2022	JMK
2,6-Dinitrotoluene	EPA-8270	U	UG/KG	100	01/17/2022	JMK
Acenaphthene	EPA-8270	U	UG/KG	100	01/17/2022	JMK
3-Nitroaniline	EPA-8270	U	UG/KG	1000	01/17/2022	JMK
2,4-Dinitrophenol	EPA-8270	U	UG/KG	100	01/17/2022	JMK
4-Nitrophenol	EPA-8270	U	UG/KG	100	01/17/2022	JMK
Dibenzofuran	EPA-8270	U	UG/KG	100	01/17/2022	JMK
2,4-Dinitrotoluene	EPA-8270	U	UG/KG	100	01/17/2022	JMK
2,3,4,6-Tetrachlorophenol	EPA-8270	U	UG/KG	100	01/17/2022	JMK
Diethylphthalate	EPA-8270	U	UG/KG	100	01/17/2022	JMK
Fluorene	EPA-8270	U	UG/KG	100	01/17/2022	JMK
4-Chlorophenyl-Phenylether	EPA-8270	U	UG/KG	100	01/17/2022	JMK
4-Nitroaniline	EPA-8270	U	UG/KG	250	01/17/2022	JMK
4,6-Dinitro-2-Methylphenol	EPA-8270	U	UG/KG	100	01/17/2022	JMK
N-Nitrosodiphenylamine	EPA-8270	U	UG/KG	100	01/17/2022	JMK
Azobenzene	EPA-8270	U	UG/KG	100	01/17/2022	JMK
4-Bromophenyl-Phenylether	EPA-8270	U	UG/KG	100	01/17/2022	JMK
Hexachlorobenzene	EPA-8270	U	UG/KG	100	01/17/2022	JMK
Pentachlorophenol	EPA-8270	U	UG/KG	500	01/17/2022	JMK
Phenanthrene	EPA-8270	U	UG/KG	100	01/17/2022	JMK
Anthracene	EPA-8270	U	UG/KG	100	01/17/2022	JMK
Carbazole	EPA-8270	U	UG/KG	250	01/17/2022	JMK
Di-N-Butylphthalate	EPA-8270	U	UG/KG	100	01/17/2022	JMK
Fluoranthene	EPA-8270	U	UG/KG	100	01/17/2022	JMK
Pyrene	EPA-8270	U	UG/KG	100	01/17/2022	JMK
Butylbenzylphthalate	EPA-8270	U	UG/KG	100	01/17/2022	JMK
3,3-Dichlorobenzidine	EPA-8270	U	UG/KG	250	01/17/2022	JMK
Benzo[A]Anthracene	EPA-8270	U	UG/KG	100	01/17/2022	JMK
Chrysene	EPA-8270	U	UG/KG	100	01/17/2022	JMK
Bis(2-Ethylhexyl)Phthalate	EPA-8270	U	UG/KG	100	01/17/2022	JMK
Di-N-Octylphthalate	EPA-8270	U	UG/KG	100	01/17/2022	JMK
Benzo[B]Fluoranthene	EPA-8270	U	UG/KG	100	01/17/2022	JMK
Benzo[K]Fluoranthene	EPA-8270	U	UG/KG	100	01/17/2022	JMK
Benzo[A]Pyrene	EPA-8270	U	UG/KG	100	01/17/2022	JMK
Indeno[1,2,3-Cd]Pyrene	EPA-8270	U	UG/KG	100	01/17/2022	JMK
Dibenz[A,H]Anthracene	EPA-8270	U	UG/KG	100	01/17/2022	JMK
Benzo[G,H,I]Perylene	EPA-8270	U	UG/KG	100	01/17/2022	JMK

ADDRESS 8620 Holly Drive, Suite 100, Everett, WA 98208 | PHONE 425-356-2600 | FAX 425-356-2626
ALS Group USA, Corp dba ALS Environmental

Environmental www.alsglobal.com
RIGHT SOLUTIONS RIGHT PARTNER

ALS Environmental

CERTIFICATE OF ANALYSIS

CLIENT: Landau Associates, Inc.
155 NE 100th St, Ste 302
Seattle, WA 98125
CLIENT CONTACT: Dylan Frazer
CLIENT PROJECT: POE - MIE / 121049.080.083

DATE: 1/19/2022
ALS SDG#: EV22010034
WDOE ACCREDITATION: C601

LABORATORY BLANK RESULTS

MB-011322S - Batch 174514 - Soil by EPA-8270

U - Analyte analyzed for but not detected at level above reporting limit.

MB-011422S - Batch 174532 - Soil by EPA-8082

ANALYTE	METHOD	RESULTS	UNITS	REPORTING LIMITS	ANALYSIS DATE	ANALYSIS BY
PCB-1016	EPA-8082	U	MG/KG	0.10	01/17/2022	JMK
PCB-1221	EPA-8082	U	MG/KG	0.10	01/17/2022	JMK
PCB-1232	EPA-8082	U	MG/KG	0.10	01/17/2022	JMK
PCB-1242	EPA-8082	U	MG/KG	0.10	01/17/2022	JMK
PCB-1248	EPA-8082	U	MG/KG	0.10	01/17/2022	JMK
PCB-1254	EPA-8082	U	MG/KG	0.10	01/17/2022	JMK
PCB-1260	EPA-8082	U	MG/KG	0.10	01/17/2022	JMK
PCB-1268	EPA-8082	U	MG/KG	0.10	01/17/2022	JMK

U - Analyte analyzed for but not detected at level above reporting limit.

MBLK-R400602 - Batch R400602 - Soil by EPA-300.0M

ANALYTE	METHOD	RESULTS	UNITS	REPORTING LIMITS	ANALYSIS DATE	ANALYSIS BY
Sulfate	EPA-300.0M	U	MG/KG	2.0	01/13/2022	EBS

U - Analyte analyzed for but not detected at level above reporting limit.

MBLK-R400537 - Batch R400537 - Soil by EPA-7471

ANALYTE	METHOD	RESULTS	UNITS	REPORTING LIMITS	ANALYSIS DATE	ANALYSIS BY
Mercury	EPA-7471	U	MG/KG	0.020	01/12/2022	RAL

U - Analyte analyzed for but not detected at level above reporting limit.

MB-011222S - Batch 174364 - Soil by EPA-6020

ANALYTE	METHOD	RESULTS	UNITS	REPORTING LIMITS	ANALYSIS DATE	ANALYSIS BY
Arsenic	EPA-6020	U	MG/KG	0.20	01/12/2022	EBS
Barium	EPA-6020	U	MG/KG	0.12	01/12/2022	EBS
Cadmium	EPA-6020	U	MG/KG	0.10	01/12/2022	EBS
Chromium	EPA-6020	U	MG/KG	0.10	01/12/2022	EBS
Copper	EPA-6020	U	MG/KG	0.20	01/12/2022	EBS
Lead	EPA-6020	U	MG/KG	0.10	01/12/2022	EBS
Selenium	EPA-6020	U	MG/KG	1.0	01/12/2022	EBS
Silver	EPA-6020	U	MG/KG	0.10	01/12/2022	EBS
Zinc	EPA-6020	U	MG/KG	0.88	01/12/2022	EBS

U - Analyte analyzed for but not detected at level above reporting limit.

ADDRESS 8620 Holly Drive, Suite 100, Everett, WA 98208 | PHONE 425-356-2600 | FAX 425-356-2626
ALS Group USA, Corp dba ALS Environmental

Environmental www.alsglobal.com
RIGHT SOLUTIONS RIGHT PARTNER

ALS Environmental

CERTIFICATE OF ANALYSIS

CLIENT: Landau Associates, Inc.
155 NE 100th St, Ste 302
Seattle, WA 98125

CLIENT CONTACT: Dylan Frazer
CLIENT PROJECT: POE - MIE / 121049.080.083

DATE: 1/19/2022
ALS SDG#: EV22010034
WDOE ACCREDITATION: C601

LABORATORY CONTROL SAMPLE RESULTS

ALS Test Batch ID: 174392 - Soil by EPA-8021

SPIKED COMPOUND	METHOD	%REC	RPD	QUAL	LIMITS MIN	LIMITS MAX	ANALYSIS DATE	ANALYSIS BY
Benzene - BS	EPA-8021	**101**			67.7	124	01/12/2022	KLS
Benzene - BSD	EPA-8021	**99.4**	**2**		67.7	124	01/12/2022	KLS
Toluene - BS	EPA-8021	**102**			71	123	01/12/2022	KLS
Toluene - BSD	EPA-8021	**101**	**1**		71	123	01/12/2022	KLS
Ethylbenzene - BS	EPA-8021	**107**			69.8	117	01/12/2022	KLS
Ethylbenzene - BSD	EPA-8021	**107**	**0**		69.8	117	01/12/2022	KLS
Xylenes - BS	EPA-8021	**112**			70	119	01/12/2022	KLS
Xylenes - BSD	EPA-8021	**112**	**0**		70	119	01/12/2022	KLS

ALS Test Batch ID: 174437 - Soil by NWTPH-DX

SPIKED COMPOUND	METHOD	%REC	RPD	QUAL	LIMITS MIN	LIMITS MAX	ANALYSIS DATE	ANALYSIS BY
TPH-Diesel Range (C12-C24) - BS	NWTPH-DX	**119**			75.5	122.1	01/14/2022	JNF
TPH-Diesel Range (C12-C24) - BSD	NWTPH-DX	**120**	**1**		75.5	122.1	01/14/2022	JNF

ALS Test Batch ID: 174557 - Soil by EPA-8260

SPIKED COMPOUND	METHOD	%REC	RPD	QUAL	LIMITS MIN	LIMITS MAX	ANALYSIS DATE	ANALYSIS BY
Dichlorodifluoromethane - BS	EPA-8260	**87.9**			50	150	01/18/2022	DLC
Dichlorodifluoromethane - BSD	EPA-8260	**82.8**	**6**		50	150	01/18/2022	DLC
Chloromethane - BS	EPA-8260	**94.4**			50	150	01/18/2022	DLC
Chloromethane - BSD	EPA-8260	**98.4**	**4**		50	150	01/18/2022	DLC
Vinyl Chloride - BS	EPA-8260	**86.8**			50	150	01/18/2022	DLC
Vinyl Chloride - BSD	EPA-8260	**84.5**	**3**		50	150	01/18/2022	DLC
Bromomethane - BS	EPA-8260	**96.0**			50	150	01/18/2022	DLC
Bromomethane - BSD	EPA-8260	**93.0**	**3**		50	150	01/18/2022	DLC
Chloroethane - BS	EPA-8260	**88.0**			50	150	01/18/2022	DLC
Chloroethane - BSD	EPA-8260	**86.4**	**2**		50	150	01/18/2022	DLC
Carbon Tetrachloride - BS	EPA-8260	**91.6**			50	150	01/18/2022	DLC
Carbon Tetrachloride - BSD	EPA-8260	**92.2**	**1**		50	150	01/18/2022	DLC
Trichlorofluoromethane - BS	EPA-8260	**90.9**			50	150	01/18/2022	DLC
Trichlorofluoromethane - BSD	EPA-8260	**88.4**	**3**		50	150	01/18/2022	DLC
Carbon Disulfide - BS	EPA-8260	**91.0**			50	150	01/18/2022	DLC
Carbon Disulfide - BSD	EPA-8260	**88.7**	**3**		50	150	01/18/2022	DLC
Acetone - BS	EPA-8260	**94.1**			50	150	01/18/2022	DLC
Acetone - BSD	EPA-8260	**93.5**	**1**		50	150	01/18/2022	DLC
1,1-Dichloroethene - BS	EPA-8260	**93.5**			70	130	01/18/2022	DLC
1,1-Dichloroethene - BSD	EPA-8260	**90.4**	**3**		70	130	01/18/2022	DLC
Methylene Chloride - BS	EPA-8260	**97.9**			50	150	01/18/2022	DLC

ADDRESS 8620 Holly Drive, Suite 100, Everett, WA 98208 | PHONE 425-356-2600 | FAX 425-356-2626
ALS Group USA, Corp dba ALS Environmental

Environmental www.alsglobal.com
RIGHT SOLUTIONS RIGHT PARTNER

ALS Environmental

CERTIFICATE OF ANALYSIS

CLIENT: Landau Associates, Inc.
155 NE 100th St, Ste 302
Seattle, WA 98125

CLIENT CONTACT: Dylan Frazer
CLIENT PROJECT: POE - MIE / 121049.080.083

DATE: 1/19/2022
ALS SDG#: EV22010034
WDOE ACCREDITATION: C601

LABORATORY CONTROL SAMPLE RESULTS

SPIKED COMPOUND	METHOD	%REC	RPD	QUAL	LIMITS MIN	LIMITS MAX	ANALYSIS DATE	ANALYSIS BY
Methylene Chloride - BSD	EPA-8260	**90.0**	**8**		50	150	01/18/2022	DLC
Acrylonitrile - BS	EPA-8260	**96.2**			50	150	01/18/2022	DLC
Acrylonitrile - BSD	EPA-8260	**95.8**	**0**		50	150	01/18/2022	DLC
Methyl T-Butyl Ether - BS	EPA-8260	**98.7**			50	150	01/18/2022	DLC
Methyl T-Butyl Ether - BSD	EPA-8260	**95.1**	**4**		50	150	01/18/2022	DLC
Trans-1,2-Dichloroethene - BS	EPA-8260	**93.5**			50	150	01/18/2022	DLC
Trans-1,2-Dichloroethene - BSD	EPA-8260	**95.6**	**2**		50	150	01/18/2022	DLC
1,1-Dichloroethane - BS	EPA-8260	**94.2**			50	150	01/18/2022	DLC
1,1-Dichloroethane - BSD	EPA-8260	**92.2**	**2**		50	150	01/18/2022	DLC
2-Butanone - BS	EPA-8260	**93.2**			50	150	01/18/2022	DLC
2-Butanone - BSD	EPA-8260	**97.0**	**4**		50	150	01/18/2022	DLC
Cis-1,2-Dichloroethene - BS	EPA-8260	**95.5**			50	150	01/18/2022	DLC
Cis-1,2-Dichloroethene - BSD	EPA-8260	**90.0**	**6**		50	150	01/18/2022	DLC
2,2-Dichloropropane - BS	EPA-8260	**89.1**			50	150	01/18/2022	DLC
2,2-Dichloropropane - BSD	EPA-8260	**88.0**	**1**		50	150	01/18/2022	DLC
Bromochloromethane - BS	EPA-8260	**96.2**			50	150	01/18/2022	DLC
Bromochloromethane - BSD	EPA-8260	**96.7**	**1**		50	150	01/18/2022	DLC
Chloroform - BS	EPA-8260	**94.3**			50	150	01/18/2022	DLC
Chloroform - BSD	EPA-8260	**97.0**	**3**		50	150	01/18/2022	DLC
1,1,1-Trichloroethane - BS	EPA-8260	**88.7**			50	150	01/18/2022	DLC
1,1,1-Trichloroethane - BSD	EPA-8260	**89.9**	**1**		50	150	01/18/2022	DLC
1,1-Dichloropropene - BS	EPA-8260	**90.9**			50	150	01/18/2022	DLC
1,1-Dichloropropene - BSD	EPA-8260	**87.2**	**4**		50	150	01/18/2022	DLC
1,2-Dichloroethane - BS	EPA-8260	**95.6**			50	150	01/18/2022	DLC
1,2-Dichloroethane - BSD	EPA-8260	**98.5**	**3**		50	150	01/18/2022	DLC
Benzene - BS	EPA-8260	**96.4**			75	138	01/18/2022	DLC
Benzene - BSD	EPA-8260	**94.4**	**2**		75	138	01/18/2022	DLC
Trichloroethene - BS	EPA-8260	**96.8**			75	136	01/18/2022	DLC
Trichloroethene - BSD	EPA-8260	**93.8**	**3**		75	136	01/18/2022	DLC
1,2-Dichloropropane - BS	EPA-8260	**96.1**			50	150	01/18/2022	DLC
1,2-Dichloropropane - BSD	EPA-8260	**96.9**	**1**		50	150	01/18/2022	DLC
Dibromomethane - BS	EPA-8260	**92.2**			50	150	01/18/2022	DLC
Dibromomethane - BSD	EPA-8260	**96.4**	**4**		50	150	01/18/2022	DLC
Bromodichloromethane - BS	EPA-8260	**99.1**			50	150	01/18/2022	DLC
Bromodichloromethane - BSD	EPA-8260	**97.9**	**1**		50	150	01/18/2022	DLC
Trans-1,3-Dichloropropene - BS	EPA-8260	**101**			50	150	01/18/2022	DLC
Trans-1,3-Dichloropropene - BSD	EPA-8260	**96.6**	**4**		50	150	01/18/2022	DLC
4-Methyl-2-Pentanone - BS	EPA-8260	**105**			50	150	01/18/2022	DLC
4-Methyl-2-Pentanone - BSD	EPA-8260	**109**	**5**		50	150	01/18/2022	DLC
Toluene - BS	EPA-8260	**97.9**			71.6	122.1	01/18/2022	DLC

ADDRESS 8620 Holly Drive, Suite 100, Everett, WA 98208 | PHONE 425-356-2600 | FAX 425-356-2626
ALS Group USA, Corp dba ALS Environmental

Environmental www.alsglobal.com
RIGHT SOLUTIONS RIGHT PARTNER

ALS Environmental

CERTIFICATE OF ANALYSIS

CLIENT: Landau Associates, Inc.
155 NE 100th St, Ste 302
Seattle, WA 98125

DATE: 1/19/2022
ALS SDG#: EV22010034
WDOE ACCREDITATION: C601

CLIENT CONTACT: Dylan Frazer
CLIENT PROJECT: POE - MIE / 121049.080.083

LABORATORY CONTROL SAMPLE RESULTS

SPIKED COMPOUND	METHOD	%REC	RPD	QUAL	LIMITS MIN	LIMITS MAX	ANALYSIS DATE	ANALYSIS BY
Toluene - BSD	EPA-8260	**91.5**	**7**		71.6	122.1	01/18/2022	DLC
Cis-1,3-Dichloropropene - BS	EPA-8260	**98.4**			50	150	01/18/2022	DLC
Cis-1,3-Dichloropropene - BSD	EPA-8260	**94.1**	**4**		50	150	01/18/2022	DLC
1,1,2-Trichloroethane - BS	EPA-8260	**95.5**			50	150	01/18/2022	DLC
1,1,2-Trichloroethane - BSD	EPA-8260	**92.5**	**3**		50	150	01/18/2022	DLC
2-Hexanone - BS	EPA-8260	**98.3**			50	150	01/18/2022	DLC
2-Hexanone - BSD	EPA-8260	**99.3**	**1**		50	150	01/18/2022	DLC
1,3-Dichloropropane - BS	EPA-8260	**98.7**			50	150	01/18/2022	DLC
1,3-Dichloropropane - BSD	EPA-8260	**97.2**	**2**		50	150	01/18/2022	DLC
Tetrachloroethylene - BS	EPA-8260	**101**			50	150	01/18/2022	DLC
Tetrachloroethylene - BSD	EPA-8260	**90.4**	**11**		50	150	01/18/2022	DLC
Dibromochloromethane - BS	EPA-8260	**100**			50	150	01/18/2022	DLC
Dibromochloromethane - BSD	EPA-8260	**99.8**	**1**		50	150	01/18/2022	DLC
1,2-Dibromoethane - BS	EPA-8260	**93.0**			50	150	01/18/2022	DLC
1,2-Dibromoethane - BSD	EPA-8260	**96.2**	**3**		50	150	01/18/2022	DLC
Chlorobenzene - BS	EPA-8260	**93.2**			79	128	01/18/2022	DLC
Chlorobenzene - BSD	EPA-8260	**90.9**	**2**		79	128	01/18/2022	DLC
1,1,1,2-Tetrachloroethane - BS	EPA-8260	**98.6**			50	150	01/18/2022	DLC
1,1,1,2-Tetrachloroethane - BSD	EPA-8260	**97.0**	**2**		50	150	01/18/2022	DLC
Ethylbenzene - BS	EPA-8260	**93.9**			50	150	01/18/2022	DLC
Ethylbenzene - BSD	EPA-8260	**91.4**	**3**		50	150	01/18/2022	DLC
m,p-Xylene - BS	EPA-8260	**95.2**			50	150	01/18/2022	DLC
m,p-Xylene - BSD	EPA-8260	**91.7**	**4**		50	150	01/18/2022	DLC
Styrene - BS	EPA-8260	**101**			50	150	01/18/2022	DLC
Styrene - BSD	EPA-8260	**98.4**	**3**		50	150	01/18/2022	DLC
o-Xylene - BS	EPA-8260	**95.4**			50	150	01/18/2022	DLC
o-Xylene - BSD	EPA-8260	**93.1**	**2**		50	150	01/18/2022	DLC
Bromoform - BS	EPA-8260	**99.5**			50	150	01/18/2022	DLC
Bromoform - BSD	EPA-8260	**102**	**3**		50	150	01/18/2022	DLC
Isopropylbenzene - BS	EPA-8260	**93.9**			50	150	01/18/2022	DLC
Isopropylbenzene - BSD	EPA-8260	**91.8**	**2**		50	150	01/18/2022	DLC
1,1,2,2-Tetrachloroethane - BS	EPA-8260	**97.7**			50	150	01/18/2022	DLC
1,1,2,2-Tetrachloroethane - BSD	EPA-8260	**94.2**	**4**		50	150	01/18/2022	DLC
1,2,3-Trichloropropane - BS	EPA-8260	**99.5**			50	150	01/18/2022	DLC
1,2,3-Trichloropropane - BSD	EPA-8260	**98.6**	**1**		50	150	01/18/2022	DLC
Bromobenzene - BS	EPA-8260	**102**			50	150	01/18/2022	DLC
Bromobenzene - BSD	EPA-8260	**99.0**	**3**		50	150	01/18/2022	DLC
N-Propyl Benzene - BS	EPA-8260	**100**			50	150	01/18/2022	DLC
N-Propyl Benzene - BSD	EPA-8260	**93.7**	**7**		50	150	01/18/2022	DLC
2-Chlorotoluene - BS	EPA-8260	**99.1**			50	150	01/18/2022	DLC

ADDRESS 8620 Holly Drive, Suite 100, Everett, WA 98208 | PHONE 425-356-2600 | FAX 425-356-2626
ALS Group USA, Corp dba ALS Environmental

Environmental www.alsglobal.com
RIGHT SOLUTIONS RIGHT PARTNER

ALS Environmental

CERTIFICATE OF ANALYSIS

CLIENT: Landau Associates, Inc.
155 NE 100th St, Ste 302
Seattle, WA 98125

DATE: 1/19/2022
ALS SDG#: EV22010034
WDOE ACCREDITATION: C601

CLIENT CONTACT: Dylan Frazer
CLIENT PROJECT: POE - MIE / 121049.080.083

LABORATORY CONTROL SAMPLE RESULTS

SPIKED COMPOUND	METHOD	%REC	RPD	QUAL	LIMITS MIN	LIMITS MAX	ANALYSIS DATE	ANALYSIS BY
2-Chlorotoluene - BSD	EPA-8260	**95.6**	**4**		50	150	01/18/2022	DLC
1,3,5-Trimethylbenzene - BS	EPA-8260	**101**			50	150	01/18/2022	DLC
1,3,5-Trimethylbenzene - BSD	EPA-8260	**97.1**	**4**		50	150	01/18/2022	DLC
4-Chlorotoluene - BS	EPA-8260	**99.0**			50	150	01/18/2022	DLC
4-Chlorotoluene - BSD	EPA-8260	**96.1**	**3**		50	150	01/18/2022	DLC
T-Butyl Benzene - BS	EPA-8260	**93.4**			50	150	01/18/2022	DLC
T-Butyl Benzene - BSD	EPA-8260	**87.9**	**6**		50	150	01/18/2022	DLC
1,2,4-Trimethylbenzene - BS	EPA-8260	**95.3**			50	150	01/18/2022	DLC
1,2,4-Trimethylbenzene - BSD	EPA-8260	**90.8**	**5**		50	150	01/18/2022	DLC
S-Butyl Benzene - BS	EPA-8260	**96.8**			50	150	01/18/2022	DLC
S-Butyl Benzene - BSD	EPA-8260	**90.4**	**7**		50	150	01/18/2022	DLC
P-Isopropyltoluene - BS	EPA-8260	**93.4**			50	150	01/18/2022	DLC
P-Isopropyltoluene - BSD	EPA-8260	**88.0**	**6**		50	150	01/18/2022	DLC
1,3-Dichlorobenzene - BS	EPA-8260	**93.1**			50	150	01/18/2022	DLC
1,3-Dichlorobenzene - BSD	EPA-8260	**92.5**	**1**		50	150	01/18/2022	DLC
1,4-Dichlorobenzene - BS	EPA-8260	**94.4**			50	150	01/18/2022	DLC
1,4-Dichlorobenzene - BSD	EPA-8260	**93.8**	**1**		50	150	01/18/2022	DLC
N-Butylbenzene - BS	EPA-8260	**94.9**			50	150	01/18/2022	DLC
N-Butylbenzene - BSD	EPA-8260	**89.5**	**6**		50	150	01/18/2022	DLC
1,2-Dichlorobenzene - BS	EPA-8260	**97.6**			50	150	01/18/2022	DLC
1,2-Dichlorobenzene - BSD	EPA-8260	**95.0**	**3**		50	150	01/18/2022	DLC
1,2-Dibromo 3-Chloropropane - BS	EPA-8260	**105**			50	150	01/18/2022	DLC
1,2-Dibromo 3-Chloropropane - BSD	EPA-8260	**104**	**1**		50	150	01/18/2022	DLC
1,2,4-Trichlorobenzene - BS	EPA-8260	**94.8**			50	150	01/18/2022	DLC
1,2,4-Trichlorobenzene - BSD	EPA-8260	**95.5**	**1**		50	150	01/18/2022	DLC
Hexachlorobutadiene - BS	EPA-8260	**97.1**			50	150	01/18/2022	DLC
Hexachlorobutadiene - BSD	EPA-8260	**91.5**	**6**		50	150	01/18/2022	DLC
Naphthalene - BS	EPA-8260	**99.3**			50	150	01/18/2022	DLC
Naphthalene - BSD	EPA-8260	**100**	**1**		50	150	01/18/2022	DLC
1,2,3-Trichlorobenzene - BS	EPA-8260	**97.9**			50	150	01/18/2022	DLC
1,2,3-Trichlorobenzene - BSD	EPA-8260	**98.5**	**1**		50	150	01/18/2022	DLC

ALS Test Batch ID: 174514 - Soil by EPA-8270

SPIKED COMPOUND	METHOD	%REC	RPD	QUAL	LIMITS MIN	LIMITS MAX	ANALYSIS DATE	ANALYSIS BY
Pyridine - BS	EPA-8270	**79.6**			20	150	01/17/2022	JMK
Pyridine - BSD	EPA-8270	**87.7**	**10**		20	150	01/17/2022	JMK
N-Nitrosodimethylamine - BS	EPA-8270	**82.5**			20	150	01/17/2022	JMK
N-Nitrosodimethylamine - BSD	EPA-8270	**91.4**	**10**		20	150	01/17/2022	JMK
Phenol - BS	EPA-8270	**79.1**			36.1	131	01/17/2022	JMK

ADDRESS 8620 Holly Drive, Suite 100, Everett, WA 98208 | PHONE 425-356-2600 | FAX 425-356-2626
ALS Group USA, Corp dba ALS Environmental

Environmental www.alsglobal.com
RIGHT SOLUTIONS RIGHT PARTNER

ALS Environmental

CERTIFICATE OF ANALYSIS

CLIENT: Landau Associates, Inc.
155 NE 100th St, Ste 302
Seattle, WA 98125

DATE: 1/19/2022
ALS SDG#: EV22010034
WDOE ACCREDITATION: C601

CLIENT CONTACT: Dylan Frazer
CLIENT PROJECT: POE - MIE / 121049.080.083

LABORATORY CONTROL SAMPLE RESULTS

SPIKED COMPOUND	METHOD	%REC	RPD	QUAL	LIMITS MIN	LIMITS MAX	ANALYSIS DATE	ANALYSIS BY
Phenol - BSD	EPA-8270	**85.1**	**7**		36.1	131	01/17/2022	JMK
Aniline - BS	EPA-8270	**2230**		SQ1	20	150	01/17/2022	JMK
Aniline - BSD	EPA-8270	**2160**	**3**	SQ1	20	150	01/17/2022	JMK
Bis(2-Chloroethyl)Ether - BS	EPA-8270	**65.1**			20	150	01/17/2022	JMK
Bis(2-Chloroethyl)Ether - BSD	EPA-8270	**71.0**	**9**		20	150	01/17/2022	JMK
2-Chlorophenol - BS	EPA-8270	**77.0**			59.9	111	01/17/2022	JMK
2-Chlorophenol - BSD	EPA-8270	**82.7**	**7**		59.9	111	01/17/2022	JMK
1,3-Dichlorobenzene - BS	EPA-8270	**73.6**			20	150	01/17/2022	JMK
1,3-Dichlorobenzene - BSD	EPA-8270	**79.6**	**8**		20	150	01/17/2022	JMK
1,4-Dichlorobenzene - BS	EPA-8270	**74.0**			44.3	122	01/17/2022	JMK
1,4-Dichlorobenzene - BSD	EPA-8270	**79.9**	**8**		44.3	122	01/17/2022	JMK
Benzyl Alcohol - BS	EPA-8270	**88.1**			20	150	01/17/2022	JMK
Benzyl Alcohol - BSD	EPA-8270	**94.6**	**7**		20	150	01/17/2022	JMK
1,2-Dichlorobenzene - BS	EPA-8270	**75.9**			20	150	01/17/2022	JMK
1,2-Dichlorobenzene - BSD	EPA-8270	**81.7**	**7**		20	150	01/17/2022	JMK
2-Methylphenol - BS	EPA-8270	**76.3**			20	150	01/17/2022	JMK
2-Methylphenol - BSD	EPA-8270	**80.1**	**5**		20	150	01/17/2022	JMK
Bis(2-Chloroisopropyl)Ether - BS	EPA-8270	**79.8**			20	150	01/17/2022	JMK
Bis(2-Chloroisopropyl)Ether - BSD	EPA-8270	**85.2**	**7**		20	150	01/17/2022	JMK
3&4-Methylphenol - BS	EPA-8270	**77.9**			20	150	01/17/2022	JMK
3&4-Methylphenol - BSD	EPA-8270	**83.3**	**7**		20	150	01/17/2022	JMK
N-Nitroso-Di-N-Propylamine - BS	EPA-8270	**78.9**			31.6	134	01/17/2022	JMK
N-Nitroso-Di-N-Propylamine - BSD	EPA-8270	**85.1**	**8**		31.6	134	01/17/2022	JMK
Hexachloroethane - BS	EPA-8270	**76.3**			20	150	01/17/2022	JMK
Hexachloroethane - BSD	EPA-8270	**81.2**	**6**		20	150	01/17/2022	JMK
Nitrobenzene - BS	EPA-8270	**74.9**			20	150	01/17/2022	JMK
Nitrobenzene - BSD	EPA-8270	**79.8**	**6**		20	150	01/17/2022	JMK
Isophorone - BS	EPA-8270	**67.6**			20	150	01/17/2022	JMK
Isophorone - BSD	EPA-8270	**71.8**	**6**		20	150	01/17/2022	JMK
2-Nitrophenol - BS	EPA-8270	**77.9**			20	150	01/17/2022	JMK
2-Nitrophenol - BSD	EPA-8270	**83.4**	**7**		20	150	01/17/2022	JMK
2,4-Dimethylphenol - BS	EPA-8270	**66.8**			20	150	01/17/2022	JMK
2,4-Dimethylphenol - BSD	EPA-8270	**65.8**	**2**		20	150	01/17/2022	JMK
Bis(2-Chloroethoxy)Methane - BS	EPA-8270	**78.1**			20	150	01/17/2022	JMK
Bis(2-Chloroethoxy)Methane - BSD	EPA-8270	**83.5**	**7**		20	150	01/17/2022	JMK
2,4-Dichlorophenol - BS	EPA-8270	**84.0**			20	150	01/17/2022	JMK
2,4-Dichlorophenol - BSD	EPA-8270	**89.1**	**6**		20	150	01/17/2022	JMK
1,2,4-Trichlorobenzene - BS	EPA-8270	**75.7**			44.6	122	01/17/2022	JMK
1,2,4-Trichlorobenzene - BSD	EPA-8270	**80.9**	**7**		44.6	122	01/17/2022	JMK
Naphthalene - BS	EPA-8270	**77.3**			20	150	01/17/2022	JMK

ADDRESS 8620 Holly Drive, Suite 100, Everett, WA 98208 | PHONE 425-356-2600 | FAX 425-356-2626
ALS Group USA, Corp dba ALS Environmental

Environmental www.alsglobal.com
RIGHT SOLUTIONS RIGHT PARTNER

ALS Environmental

CERTIFICATE OF ANALYSIS

CLIENT: Landau Associates, Inc.
155 NE 100th St, Ste 302
Seattle, WA 98125

DATE: 1/19/2022
ALS SDG#: EV22010034
WDOE ACCREDITATION: C601

CLIENT CONTACT: Dylan Frazer
CLIENT PROJECT: POE - MIE / 121049.080.083

LABORATORY CONTROL SAMPLE RESULTS

SPIKED COMPOUND	METHOD	%REC	RPD	QUAL	LIMITS MIN	LIMITS MAX	ANALYSIS DATE	ANALYSIS BY
Naphthalene - BSD	EPA-8270	**82.6**	**7**		20	150	01/17/2022	JMK
4-Chloroaniline - BS	EPA-8270	**1220**		SQ1	20	150	01/17/2022	JMK
4-Chloroaniline - BSD	EPA-8270	**1190**	**3**	SQ1	20	150	01/17/2022	JMK
Hexachlorobutadiene - BS	EPA-8270	**75.5**			20	150	01/17/2022	JMK
Hexachlorobutadiene - BSD	EPA-8270	**81.2**	**7**		20	150	01/17/2022	JMK
4-Chloro-3-Methylphenol - BS	EPA-8270	**79.4**			49.2	135	01/17/2022	JMK
4-Chloro-3-Methylphenol - BSD	EPA-8270	**82.1**	**3**		49.2	135	01/17/2022	JMK
2-Methylnaphthalene - BS	EPA-8270	**76.8**			20	150	01/17/2022	JMK
2-Methylnaphthalene - BSD	EPA-8270	**81.6**	**6**		20	150	01/17/2022	JMK
1-Methylnaphthalene - BS	EPA-8270	**80.5**			20	150	01/17/2022	JMK
1-Methylnaphthalene - BSD	EPA-8270	**85.2**	**6**		20	150	01/17/2022	JMK
Hexachlorocyclopentadiene - BS	EPA-8270	**80.3**			20	150	01/17/2022	JMK
Hexachlorocyclopentadiene - BSD	EPA-8270	**90.9**	**12**		20	150	01/17/2022	JMK
2,4,6-Trichlorophenol - BS	EPA-8270	**77.1**			20	150	01/17/2022	JMK
2,4,6-Trichlorophenol - BSD	EPA-8270	**79.9**	**3**		20	150	01/17/2022	JMK
2,4,5-Trichlorophenol - BS	EPA-8270	**79.1**			20	150	01/17/2022	JMK
2,4,5-Trichlorophenol - BSD	EPA-8270	**82.4**	**4**		20	150	01/17/2022	JMK
2-Chloronaphthalene - BS	EPA-8270	**76.6**			20	150	01/17/2022	JMK
2-Chloronaphthalene - BSD	EPA-8270	**80.5**	**5**		20	150	01/17/2022	JMK
2-Nitroaniline - BS	EPA-8270	**204**		SQ1	20	150	01/17/2022	JMK
2-Nitroaniline - BSD	EPA-8270	**217**	**6**	SQ1	20	150	01/17/2022	JMK
Acenaphthylene - BS	EPA-8270	**77.7**			20	150	01/17/2022	JMK
Acenaphthylene - BSD	EPA-8270	**82.1**	**6**		20	150	01/17/2022	JMK
Dimethylphthalate - BS	EPA-8270	**82.6**			20	150	01/17/2022	JMK
Dimethylphthalate - BSD	EPA-8270	**84.7**	**2**		20	150	01/17/2022	JMK
2,6-Dinitrotoluene - BS	EPA-8270	**86.3**			20	150	01/17/2022	JMK
2,6-Dinitrotoluene - BSD	EPA-8270	**89.5**	**4**		20	150	01/17/2022	JMK
Acenaphthene - BS	EPA-8270	**78.3**			49.3	117	01/17/2022	JMK
Acenaphthene - BSD	EPA-8270	**82.5**	**5**		49.3	117	01/17/2022	JMK
3-Nitroaniline - BS	EPA-8270	**204**		SQ1	20	150	01/17/2022	JMK
3-Nitroaniline - BSD	EPA-8270	**217**	**6**	SQ1	20	150	01/17/2022	JMK
2,4-Dinitrophenol - BS	EPA-8270	**95.5**			20	150	01/17/2022	JMK
2,4-Dinitrophenol - BSD	EPA-8270	**101**	**5**		20	150	01/17/2022	JMK
4-Nitrophenol - BS	EPA-8270	**91.7**			29.8	137	01/17/2022	JMK
4-Nitrophenol - BSD	EPA-8270	**94.0**	**2**		29.8	137	01/17/2022	JMK
Dibenzofuran - BS	EPA-8270	**78.4**			20	150	01/17/2022	JMK
Dibenzofuran - BSD	EPA-8270	**81.2**	**4**		20	150	01/17/2022	JMK
2,4-Dinitrotoluene - BS	EPA-8270	**79.1**			55.3	130	01/17/2022	JMK
2,4-Dinitrotoluene - BSD	EPA-8270	**81.6**	**3**		55.3	130	01/17/2022	JMK
2,3,4,6-Tetrachlorophenol - BS	EPA-8270	**91.4**			20	150	01/17/2022	JMK

ADDRESS 8620 Holly Drive, Suite 100, Everett, WA 98208 | PHONE 425-356-2600 | FAX 425-356-2626
ALS Group USA, Corp dba ALS Environmental

Environmental www.alsglobal.com
RIGHT SOLUTIONS RIGHT PARTNER

ALS Environmental

CERTIFICATE OF ANALYSIS

CLIENT: Landau Associates, Inc.
155 NE 100th St, Ste 302
Seattle, WA 98125

DATE: 1/19/2022
ALS SDG#: EV22010034
WDOE ACCREDITATION: C601

CLIENT CONTACT: Dylan Frazer
CLIENT PROJECT: POE - MIE / 121049.080.083

LABORATORY CONTROL SAMPLE RESULTS

SPIKED COMPOUND	METHOD	%REC	RPD	QUAL	LIMITS MIN	LIMITS MAX	ANALYSIS DATE	ANALYSIS BY
2,3,4,6-Tetrachlorophenol - BSD	EPA-8270	**94.0**	**3**		20	150	01/17/2022	JMK
Diethylphthalate - BS	EPA-8270	**86.5**			20	150	01/17/2022	JMK
Diethylphthalate - BSD	EPA-8270	**88.2**	**2**		20	150	01/17/2022	JMK
Fluorene - BS	EPA-8270	**82.3**			20	150	01/17/2022	JMK
Fluorene - BSD	EPA-8270	**84.7**	**3**		20	150	01/17/2022	JMK
4-Chlorophenyl-Phenylether - BS	EPA-8270	**80.0**			20	150	01/17/2022	JMK
4-Chlorophenyl-Phenylether - BSD	EPA-8270	**82.1**	**3**		20	150	01/17/2022	JMK
4-Nitroaniline - BS	EPA-8270	**225**		SQ1	20	150	01/17/2022	JMK
4-Nitroaniline - BSD	EPA-8270	**233**	**3**	SQ1	20	150	01/17/2022	JMK
4,6-Dinitro-2-Methylphenol - BS	EPA-8270	**85.5**			20	150	01/17/2022	JMK
4,6-Dinitro-2-Methylphenol - BSD	EPA-8270	**91.1**	**6**		20	150	01/17/2022	JMK
Azobenzene - BS	EPA-8270	**81.0**			20	150	01/17/2022	JMK
Azobenzene - BSD	EPA-8270	**84.1**	**4**		20	150	01/17/2022	JMK
4-Bromophenyl-Phenylether - BS	EPA-8270	**78.8**			20	150	01/17/2022	JMK
4-Bromophenyl-Phenylether - BSD	EPA-8270	**83.3**	**6**		20	150	01/17/2022	JMK
Hexachlorobenzene - BS	EPA-8270	**80.8**			20	150	01/17/2022	JMK
Hexachlorobenzene - BSD	EPA-8270	**84.3**	**4**		20	150	01/17/2022	JMK
Pentachlorophenol - BS	EPA-8270	**78.6**			41.3	113	01/17/2022	JMK
Pentachlorophenol - BSD	EPA-8270	**82.5**	**5**		41.3	113	01/17/2022	JMK
Phenanthrene - BS	EPA-8270	**81.2**			20	150	01/17/2022	JMK
Phenanthrene - BSD	EPA-8270	**84.2**	**4**		20	150	01/17/2022	JMK
Anthracene - BS	EPA-8270	**80.9**			20	150	01/17/2022	JMK
Anthracene - BSD	EPA-8270	**83.8**	**4**		20	150	01/17/2022	JMK
Carbazole - BS	EPA-8270	**101**			20	150	01/17/2022	JMK
Carbazole - BSD	EPA-8270	**107**	**6**		20	150	01/17/2022	JMK
Di-N-Butylphthalate - BS	EPA-8270	**87.4**			20	150	01/17/2022	JMK
Di-N-Butylphthalate - BSD	EPA-8270	**91.3**	**4**		20	150	01/17/2022	JMK
Fluoranthene - BS	EPA-8270	**88.0**			20	150	01/17/2022	JMK
Fluoranthene - BSD	EPA-8270	**91.1**	**4**		20	150	01/17/2022	JMK
Pyrene - BS	EPA-8270	**81.5**			57.4	145	01/17/2022	JMK
Pyrene - BSD	EPA-8270	**85.3**	**5**		57.4	145	01/17/2022	JMK
Butylbenzylphthalate - BS	EPA-8270	**82.0**			20	150	01/17/2022	JMK
Butylbenzylphthalate - BSD	EPA-8270	**85.6**	**4**		20	150	01/17/2022	JMK
Benzo[A]Anthracene - BS	EPA-8270	**82.6**			20	150	01/17/2022	JMK
Benzo[A]Anthracene - BSD	EPA-8270	**86.3**	**4**		20	150	01/17/2022	JMK
Chrysene - BS	EPA-8270	**80.2**			20	150	01/17/2022	JMK
Chrysene - BSD	EPA-8270	**83.1**	**4**		20	150	01/17/2022	JMK
Bis(2-Ethylhexyl)Phthalate - BS	EPA-8270	**84.9**			20	150	01/17/2022	JMK
Bis(2-Ethylhexyl)Phthalate - BSD	EPA-8270	**88.0**	**4**		20	150	01/17/2022	JMK
Di-N-Octylphthalate - BS	EPA-8270	**82.7**			20	150	01/17/2022	JMK

ADDRESS 8620 Holly Drive, Suite 100, Everett, WA 98208 | PHONE 425-356-2600 | FAX 425-356-2626
ALS Group USA, Corp dba ALS Environmental

Environmental www.alsglobal.com
RIGHT SOLUTIONS RIGHT PARTNER

ALS Environmental

CERTIFICATE OF ANALYSIS

CLIENT: Landau Associates, Inc.
155 NE 100th St, Ste 302
Seattle, WA 98125

DATE: 1/19/2022
ALS SDG#: EV22010034
WDOE ACCREDITATION: C601

CLIENT CONTACT: Dylan Frazer
CLIENT PROJECT: POE - MIE / 121049.080.083

LABORATORY CONTROL SAMPLE RESULTS

SPIKED COMPOUND	METHOD	%REC	RPD	QUAL	LIMITS MIN	LIMITS MAX	ANALYSIS DATE	ANALYSIS BY
Di-N-Octylphthalate - BSD	EPA-8270	**86.4**	**4**		20	150	01/17/2022	JMK
Benzo[B]Fluoranthene - BS	EPA-8270	**79.1**			20	150	01/17/2022	JMK
Benzo[B]Fluoranthene - BSD	EPA-8270	**82.2**	**4**		20	150	01/17/2022	JMK
Benzo[K]Fluoranthene - BS	EPA-8270	**82.0**			20	150	01/17/2022	JMK
Benzo[K]Fluoranthene - BSD	EPA-8270	**83.6**	**2**		20	150	01/17/2022	JMK
Benzo[A]Pyrene - BS	EPA-8270	**78.9**			20	150	01/17/2022	JMK
Benzo[A]Pyrene - BSD	EPA-8270	**80.6**	**2**		20	150	01/17/2022	JMK
Indeno[1,2,3-Cd]Pyrene - BS	EPA-8270	**79.7**			20	150	01/17/2022	JMK
Indeno[1,2,3-Cd]Pyrene - BSD	EPA-8270	**82.8**	**4**		20	150	01/17/2022	JMK
Dibenz[A,H]Anthracene - BS	EPA-8270	**79.7**			20	150	01/17/2022	JMK
Dibenz[A,H]Anthracene - BSD	EPA-8270	**83.1**	**4**		20	150	01/17/2022	JMK
Benzo[G,H,I]Perylene - BS	EPA-8270	**84.5**			20	150	01/17/2022	JMK
Benzo[G,H,I]Perylene - BSD	EPA-8270	**88.3**	**4**		20	150	01/17/2022	JMK

SQ1 - Spike outside of control limits with a high bias. Associated compounds non-detect. No corrective action taken.

ALS Test Batch ID: 174532 - Soil by EPA-8082

SPIKED COMPOUND	METHOD	%REC	RPD	QUAL	LIMITS MIN	LIMITS MAX	ANALYSIS DATE	ANALYSIS BY
PCB-1016 - BS	EPA-8082	**72.5**			50	150	01/17/2022	JMK
PCB-1016 - BSD	EPA-8082	**72.5**	**0**		50	150	01/17/2022	JMK
PCB-1260 - BS	EPA-8082	**82.5**			50	150	01/17/2022	JMK
PCB-1260 - BSD	EPA-8082	**81.7**	**1**		50	150	01/17/2022	JMK

ALS Test Batch ID: R400602 - Soil by EPA-300.0M

SPIKED COMPOUND	METHOD	%REC	RPD	QUAL	LIMITS MIN	LIMITS MAX	ANALYSIS DATE	ANALYSIS BY
Sulfate - BS	EPA-300.0M	**98.0**			80	120	01/13/2022	EBS
Sulfate - BSD	EPA-300.0M	**99.0**	**1**		80	120	01/13/2022	EBS

ALS Test Batch ID: R400537 - Soil by EPA-7471

SPIKED COMPOUND	METHOD	%REC	RPD	QUAL	LIMITS MIN	LIMITS MAX	ANALYSIS DATE	ANALYSIS BY
Mercury - BS	EPA-7471	**105**			81.8	117	01/12/2022	RAL
Mercury - BSD	EPA-7471	**106**	**2**		81.8	117	01/12/2022	RAL

ALS Test Batch ID: 174364 - Soil by EPA-6020

SPIKED COMPOUND	METHOD	%REC	RPD	QUAL	LIMITS MIN	LIMITS MAX	ANALYSIS DATE	ANALYSIS BY
Arsenic - BS	EPA-6020	**93.6**			80	120	01/12/2022	EBS
Arsenic - BSD	EPA-6020	**96.8**	**3**		80	120	01/12/2022	EBS

ADDRESS 8620 Holly Drive, Suite 100, Everett, WA 98208 | PHONE 425-356-2600 | FAX 425-356-2626
ALS Group USA, Corp dba ALS Environmental

Environmental www.alsglobal.com
RIGHT SOLUTIONS RIGHT PARTNER

CERTIFICATE OF ANALYSIS

CLIENT: Landau Associates, Inc.
155 NE 100th St, Ste 302
Seattle, WA 98125
CLIENT CONTACT: Dylan Frazer
CLIENT PROJECT: POE - MIE / 121049.080.083

DATE: 1/19/2022
ALS SDG#: EV22010034
WDOE ACCREDITATION: C601

LABORATORY CONTROL SAMPLE RESULTS

SPIKED COMPOUND	METHOD	%REC	RPD	QUAL	LIMITS MIN	LIMITS MAX	ANALYSIS DATE	ANALYSIS BY
Barium - BS	EPA-6020	**97.0**			80	120	01/12/2022	EBS
Barium - BSD	EPA-6020	**99.6**	**3**		80	120	01/12/2022	EBS
Cadmium - BS	EPA-6020	**98.4**			80	120	01/12/2022	EBS
Cadmium - BSD	EPA-6020	**103**	**4**		80	120	01/12/2022	EBS
Chromium - BS	EPA-6020	**93.1**			80	120	01/12/2022	EBS
Chromium - BSD	EPA-6020	**95.6**	**3**		80	120	01/12/2022	EBS
Copper - BS	EPA-6020	**98.7**			80	120	01/12/2022	EBS
Copper - BSD	EPA-6020	**102**	**4**		80	120	01/12/2022	EBS
Lead - BS	EPA-6020	**95.0**			80	120	01/12/2022	EBS
Lead - BSD	EPA-6020	**95.9**	**1**		80	120	01/12/2022	EBS
Selenium - BS	EPA-6020	**94.3**			80	120	01/12/2022	EBS
Selenium - BSD	EPA-6020	**97.0**	**3**		80	120	01/12/2022	EBS
Silver - BS	EPA-6020	**96.5**			80	120	01/12/2022	EBS
Silver - BSD	EPA-6020	**101**	**4**		80	120	01/12/2022	EBS
Zinc - BS	EPA-6020	**99.9**			80	119	01/12/2022	EBS
Zinc - BSD	EPA-6020	**103**	**3**		80	119	01/12/2022	EBS

APPROVED BY



Laboratory Director

ADDRESS 8620 Holly Drive, Suite 100, Everett, WA 98208 | PHONE 425-356-2600 | FAX 425-356-2626
ALS Group USA, Corp dba ALS Environmental

Environmental www.alsglobal.com
RIGHT SOLUTIONS RIGHT PARTNER

EV2201034

Chain-of-Custody Record

LANDAU ASSOCIATES

- [x] North Seattle (206) 631-8660
- [ ] Tacoma (253) 926-2493
- [ ] Olympia (360) 791-3178
- [ ] Spokane (509) 327-9737
- [ ] Portland (503) 542-1080
- [ ] _____

Date 1/11/22

Page 1 of 1

Turnaround Time:
Standard _____
Accelerated 5 Day

Project Name POE-MIE Project No. 121049.080.083

Project Location/Event Port of Everett, WA / Waste Disposal Profiling

Sampler's Name Devon Brandt

Project Contact Dylan Frazer

Send Results To Dylan Frazer & Devon Brandt & Dani Jorgenson & Elise Gronwold

Special Handling Requirements: _____

Shipment Method: Drop off

Stored on ice: Yes / No

	Sample I.D.	Date	Time	Matrix	No. of Containers	TPH-D/O	PCBs	SVOCs	RCRA 8 Metals *	Sulfate	BTEX 8021	VOCs
1	MIE-DP-4-220111	1/11/22	1630	Soil	4	x	x	x	x	x	x	x
2	MIE-DP-5-220111	↓	1635	↓	4	x	x	x	x	x	x	x
3	MIE-DP-6-220111	↓	1640	↓	4	x	x	x	x	x	x	x

Testing Parameters

Observations/Comments

- Allow water samples to settle, collect aliquot from clear portion ☐
- NWTPH-Dx - Acid wash cleanup ☐
  - Silica gel cleanup ☐
- Dissolved metal samples were field filtered

Other ~~*~~ plus copper & zinc

(Archive Extra Volume for potential TCLP follow up)

Relinquished by	Received by	Relinquished by	Received by
Signature [signature]	Signature [signature]	Signature	Signature
Printed Name Devon Brandt	Printed Name Glen Perry	Printed Name	Printed Name
Company LAI	Company ALS	Company	Company
Date 1/12/22 Time 0912	Date 1/12/22 Time 9:12	Date Time	Date Time

WHITE COPY - Laboratory YELLOW COPY - Project File PINK COPY - Client Representative

10/2018

ALS ENVIRONMENTAL

Sample Receiving Checklist

Client: Landau Associates ALS Job #: EV22010034

Project: PoE-MIE /121049.080.083

Received Date: 1/12/22 Received Time: 9:15 am By: SM

Type of shipping container: Cooler X Box ___ Other ___

Shipped via: FedEx Ground ___ UPS ___ Mail ___ Courier ___ Hand Delivered X
FedEx Express ___

	Yes	No	N/A
Were custody seals on outside of shipping container?	___	X	___
If yes, how many? ___ Where? ___			
Custody seal date: ___ Seal name: ___			
Was Chain of Custody properly filled out (ink, signed, dated, etc.)?	X	___	___
Did all bottles have labels?	X	___	___
Did all bottle labels and tags agree with Chain of Custody?	X	___	___
Were samples received within hold time?	X	___	___
Did all bottles arrive in good condition (unbroken, etc.)?	X	___	___
Was sufficient amount of sample sent for the tests indicated?	X	___	___
Was correct preservation added to samples?	X	___	___

If no, Sample Control added preservative to the following:

Sample Number	Reagent	Analyte

Received per 5035 low kits.

Were VOA vials checked for absence of air bubbles?	___	___	X
Bubbles present in sample #: ___			

Temperature of cooler upon receipt: 3.5°C on ice (Cold) Cool Ambient N/A

Explain any discrepancies: ___

Was client contacted? ___ Who was called? ___ By whom? ___ Date: ___

Outcome of call: ___

January 28, 2022

Mr. Dylan Frazer
Landau Associates, Inc.
155 NE 100th St, Ste 302
Seattle, WA 98125

Dear Mr. Frazer,

On January 20th, 3 samples were received by our laboratory and assigned our laboratory project number EV22010079. The project was identified as your POE - MIE / 121049.080.083. The sample identification and requested analyses are outlined on the attached chain of custody record.

No abnormalities or nonconformances were observed during the analyses of the project samples.

Please do not hesitate to call me if you have any questions or if I can be of further assistance.

Sincerely,

ALS Laboratory Group

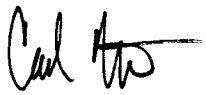

Carl Nott
Professional Scientist

ADDRESS 8620 Holly Drive, Suite 100, Everett, WA 98208 | PHONE 425-356-2600 | FAX 425-356-2626
ALS Group USA, Corp dba ALS Environmental

Environmental www.alsglobal.com
RIGHT SOLUTIONS RIGHT PARTNER

ALS Environmental

CERTIFICATE OF ANALYSIS

CLIENT:	Landau Associates, Inc. 155 NE 100th St, Ste 302 Seattle, WA 98125	DATE: ALS JOB#: ALS SAMPLE#:	1/28/2022 EV22010079 EV22010079-01
CLIENT CONTACT:	Dylan Frazer	DATE RECEIVED:	01/20/2022
CLIENT PROJECT:	POE - MIE / 121049.080.083	COLLECTION DATE:	1/20/2022 11:50:00 AM
CLIENT SAMPLE ID	MIE-DP-7-220120	WDOE ACCREDITATION:	C601

SAMPLE DATA RESULTS

ANALYTE	METHOD	RESULTS	REPORTING LIMITS	DILUTION FACTOR	UNITS	ANALYSIS DATE	ANALYSIS BY
Benzene	EPA-8021	U	0.030	1	MG/KG	01/21/2022	JMK
Toluene	EPA-8021	U	0.050	1	MG/KG	01/21/2022	JMK
Ethylbenzene	EPA-8021	U	0.050	1	MG/KG	01/21/2022	JMK
Xylenes	EPA-8021	U	0.20	1	MG/KG	01/21/2022	JMK
TPH-Diesel Range (C12-C24)	NWTPH-DX	**98**	25	1	MG/KG	01/20/2022	JNF
TPH-Oil Range (C24-C40)	NWTPH-DX	**180**	50	1	MG/KG	01/20/2022	JNF
Dichlorodifluoromethane	EPA-8260	U	10	1	UG/KG	01/21/2022	DLC
Chloromethane	EPA-8260	U	10	1	UG/KG	01/21/2022	DLC
Vinyl Chloride	EPA-8260	U	10	1	UG/KG	01/21/2022	DLC
Bromomethane	EPA-8260	U	10	1	UG/KG	01/21/2022	DLC
Chloroethane	EPA-8260	U	10	1	UG/KG	01/21/2022	DLC
Carbon Tetrachloride	EPA-8260	U	10	1	UG/KG	01/21/2022	DLC
Trichlorofluoromethane	EPA-8260	U	10	1	UG/KG	01/21/2022	DLC
Carbon Disulfide	EPA-8260	U	10	1	UG/KG	01/21/2022	DLC
Acetone	EPA-8260	U	50	1	UG/KG	01/21/2022	DLC
1,1-Dichloroethene	EPA-8260	U	10	1	UG/KG	01/21/2022	DLC
Methylene Chloride	EPA-8260	U	20	1	UG/KG	01/21/2022	DLC
Acrylonitrile	EPA-8260	U	50	1	UG/KG	01/21/2022	DLC
Methyl T-Butyl Ether	EPA-8260	U	10	1	UG/KG	01/21/2022	DLC
Trans-1,2-Dichloroethene	EPA-8260	U	10	1	UG/KG	01/21/2022	DLC
1,1-Dichloroethane	EPA-8260	U	10	1	UG/KG	01/21/2022	DLC
2-Butanone	EPA-8260	U	50	1	UG/KG	01/21/2022	DLC
Cis-1,2-Dichloroethene	EPA-8260	U	10	1	UG/KG	01/21/2022	DLC
2,2-Dichloropropane	EPA-8260	U	10	1	UG/KG	01/21/2022	DLC
Bromochloromethane	EPA-8260	U	10	1	UG/KG	01/21/2022	DLC
Chloroform	EPA-8260	U	10	1	UG/KG	01/21/2022	DLC
1,1,1-Trichloroethane	EPA-8260	U	10	1	UG/KG	01/21/2022	DLC
1,1-Dichloropropene	EPA-8260	U	10	1	UG/KG	01/21/2022	DLC
1,2-Dichloroethane	EPA-8260	U	10	1	UG/KG	01/21/2022	DLC
Benzene	EPA-8260	U	5.0	1	UG/KG	01/21/2022	DLC
Trichloroethene	EPA-8260	U	10	1	UG/KG	01/21/2022	DLC
1,2-Dichloropropane	EPA-8260	U	10	1	UG/KG	01/21/2022	DLC
Dibromomethane	EPA-8260	U	10	1	UG/KG	01/21/2022	DLC
Bromodichloromethane	EPA-8260	U	10	1	UG/KG	01/21/2022	DLC
Trans-1,3-Dichloropropene	EPA-8260	U	10	1	UG/KG	01/21/2022	DLC
4-Methyl-2-Pentanone	EPA-8260	U	50	1	UG/KG	01/21/2022	DLC
Toluene	EPA-8260	U	10	1	UG/KG	01/21/2022	DLC
Cis-1,3-Dichloropropene	EPA-8260	U	10	1	UG/KG	01/21/2022	DLC

ADDRESS 8620 Holly Drive, Suite 100, Everett, WA 98208 | PHONE 425-356-2600 | FAX 425-356-2626
ALS Group USA, Corp dba ALS Environmental

Environmental www.alsglobal.com
RIGHT SOLUTIONS RIGHT PARTNER

ALS Environmental

CERTIFICATE OF ANALYSIS

CLIENT:	Landau Associates, Inc. 155 NE 100th St, Ste 302 Seattle, WA 98125	DATE: ALS JOB#: ALS SAMPLE#:	1/28/2022 EV22010079 EV22010079-01
CLIENT CONTACT:	Dylan Frazer	DATE RECEIVED:	01/20/2022
CLIENT PROJECT:	POE - MIE / 121049.080.083	COLLECTION DATE:	1/20/2022 11:50:00 AM
CLIENT SAMPLE ID	MIE-DP-7-220120	WDOE ACCREDITATION:	C601

SAMPLE DATA RESULTS

ANALYTE	METHOD	RESULTS	REPORTING LIMITS	DILUTION FACTOR	UNITS	ANALYSIS DATE	ANALYSIS BY
1,1,2-Trichloroethane	EPA-8260	U	10	1	UG/KG	01/21/2022	DLC
2-Hexanone	EPA-8260	U	50	1	UG/KG	01/21/2022	DLC
1,3-Dichloropropane	EPA-8260	U	10	1	UG/KG	01/21/2022	DLC
Tetrachloroethylene	EPA-8260	U	10	1	UG/KG	01/21/2022	DLC
Dibromochloromethane	EPA-8260	U	10	1	UG/KG	01/21/2022	DLC
1,2-Dibromoethane	EPA-8260	U	5.0	1	UG/KG	01/21/2022	DLC
Chlorobenzene	EPA-8260	U	10	1	UG/KG	01/21/2022	DLC
1,1,1,2-Tetrachloroethane	EPA-8260	U	10	1	UG/KG	01/21/2022	DLC
Ethylbenzene	EPA-8260	U	10	1	UG/KG	01/21/2022	DLC
m,p-Xylene	EPA-8260	U	20	1	UG/KG	01/21/2022	DLC
Styrene	EPA-8260	U	10	1	UG/KG	01/21/2022	DLC
o-Xylene	EPA-8260	U	10	1	UG/KG	01/21/2022	DLC
Bromoform	EPA-8260	U	10	1	UG/KG	01/21/2022	DLC
Isopropylbenzene	EPA-8260	U	10	1	UG/KG	01/21/2022	DLC
1,1,2,2-Tetrachloroethane	EPA-8260	U	10	1	UG/KG	01/21/2022	DLC
1,2,3-Trichloropropane	EPA-8260	U	10	1	UG/KG	01/21/2022	DLC
Bromobenzene	EPA-8260	U	10	1	UG/KG	01/21/2022	DLC
N-Propyl Benzene	EPA-8260	U	10	1	UG/KG	01/21/2022	DLC
2-Chlorotoluene	EPA-8260	U	10	1	UG/KG	01/21/2022	DLC
1,3,5-Trimethylbenzene	EPA-8260	U	10	1	UG/KG	01/21/2022	DLC
4-Chlorotoluene	EPA-8260	U	10	1	UG/KG	01/21/2022	DLC
T-Butyl Benzene	EPA-8260	U	10	1	UG/KG	01/21/2022	DLC
1,2,4-Trimethylbenzene	EPA-8260	U	10	1	UG/KG	01/21/2022	DLC
S-Butyl Benzene	EPA-8260	U	10	1	UG/KG	01/21/2022	DLC
P-Isopropyltoluene	EPA-8260	U	10	1	UG/KG	01/21/2022	DLC
1,3-Dichlorobenzene	EPA-8260	U	10	1	UG/KG	01/21/2022	DLC
1,4-Dichlorobenzene	EPA-8260	U	10	1	UG/KG	01/21/2022	DLC
N-Butylbenzene	EPA-8260	U	10	1	UG/KG	01/21/2022	DLC
1,2-Dichlorobenzene	EPA-8260	U	10	1	UG/KG	01/21/2022	DLC
1,2-Dibromo 3-Chloropropane	EPA-8260	U	50	1	UG/KG	01/21/2022	DLC
1,2,4-Trichlorobenzene	EPA-8260	U	10	1	UG/KG	01/21/2022	DLC
Hexachlorobutadiene	EPA-8260	U	10	1	UG/KG	01/21/2022	DLC
Naphthalene	EPA-8260	U	10	1	UG/KG	01/21/2022	DLC
1,2,3-Trichlorobenzene	EPA-8260	U	10	1	UG/KG	01/21/2022	DLC
Pyridine	EPA-8270	U	200	1	UG/KG	01/26/2022	JMK
N-Nitrosodimethylamine	EPA-8270	U	100	1	UG/KG	01/26/2022	JMK
Phenol	EPA-8270	U	100	1	UG/KG	01/26/2022	JMK
Aniline	EPA-8270	U	100	1	UG/KG	01/26/2022	JMK
Bis(2-Chloroethyl)Ether	EPA-8270	U	250	1	UG/KG	01/26/2022	JMK

ADDRESS 8620 Holly Drive, Suite 100, Everett, WA 98208 | PHONE 425-356-2600 | FAX 425-356-2626
ALS Group USA, Corp dba ALS Environmental

Environmental www.alsglobal.com
RIGHT SOLUTIONS RIGHT PARTNER

ALS Environmental

CERTIFICATE OF ANALYSIS

CLIENT:	Landau Associates, Inc. 155 NE 100th St, Ste 302 Seattle, WA 98125	DATE: ALS JOB#: ALS SAMPLE#:	1/28/2022 EV22010079 EV22010079-01
CLIENT CONTACT:	Dylan Frazer	DATE RECEIVED:	01/20/2022
CLIENT PROJECT:	POE - MIE / 121049.080.083	COLLECTION DATE:	1/20/2022 11:50:00 AM
CLIENT SAMPLE ID	MIE-DP-7-220120	WDOE ACCREDITATION:	C601

SAMPLE DATA RESULTS

ANALYTE	METHOD	RESULTS	REPORTING LIMITS	DILUTION FACTOR	UNITS	ANALYSIS DATE	ANALYSIS BY
2-Chlorophenol	EPA-8270	U	250	1	UG/KG	01/26/2022	JMK
1,3-Dichlorobenzene	EPA-8270	U	100	1	UG/KG	01/26/2022	JMK
1,4-Dichlorobenzene	EPA-8270	U	100	1	UG/KG	01/26/2022	JMK
Benzyl Alcohol	EPA-8270	U	100	1	UG/KG	01/26/2022	JMK
1,2-Dichlorobenzene	EPA-8270	U	100	1	UG/KG	01/26/2022	JMK
2-Methylphenol	EPA-8270	U	100	1	UG/KG	01/26/2022	JMK
Bis(2-Chloroisopropyl)Ether	EPA-8270	U	250	1	UG/KG	01/26/2022	JMK
3&4-Methylphenol	EPA-8270	U	100	1	UG/KG	01/26/2022	JMK
N-Nitroso-Di-N-Propylamine	EPA-8270	U	250	1	UG/KG	01/26/2022	JMK
Hexachloroethane	EPA-8270	U	100	1	UG/KG	01/26/2022	JMK
Nitrobenzene	EPA-8270	U	100	1	UG/KG	01/26/2022	JMK
Isophorone	EPA-8270	U	100	1	UG/KG	01/26/2022	JMK
2-Nitrophenol	EPA-8270	U	100	1	UG/KG	01/26/2022	JMK
2,4-Dimethylphenol	EPA-8270	U	100	1	UG/KG	01/26/2022	JMK
Benzoic Acid	EPA-8270	U	1000	1	UG/KG	01/26/2022	JMK
Bis(2-Chloroethoxy)Methane	EPA-8270	U	250	1	UG/KG	01/26/2022	JMK
2,4-Dichlorophenol	EPA-8270	U	500	1	UG/KG	01/26/2022	JMK
1,2,4-Trichlorobenzene	EPA-8270	U	100	1	UG/KG	01/26/2022	JMK
Naphthalene	EPA-8270	U	100	1	UG/KG	01/26/2022	JMK
4-Chloroaniline	EPA-8270	U	1000	1	UG/KG	01/26/2022	JMK
2,6-Dichlorophenol	EPA-8270	U	250	1	UG/KG	01/26/2022	JMK
Hexachlorobutadiene	EPA-8270	U	500	1	UG/KG	01/26/2022	JMK
4-Chloro-3-Methylphenol	EPA-8270	U	500	1	UG/KG	01/26/2022	JMK
2-Methylnaphthalene	EPA-8270	U	250	1	UG/KG	01/26/2022	JMK
1-Methylnaphthalene	EPA-8270	U	250	1	UG/KG	01/26/2022	JMK
Hexachlorocyclopentadiene	EPA-8270	U	100	1	UG/KG	01/26/2022	JMK
2,4,6-Trichlorophenol	EPA-8270	U	100	1	UG/KG	01/26/2022	JMK
2,4,5-Trichlorophenol	EPA-8270	U	100	1	UG/KG	01/26/2022	JMK
2-Chloronaphthalene	EPA-8270	U	100	1	UG/KG	01/26/2022	JMK
2-Nitroaniline	EPA-8270	U	100	1	UG/KG	01/26/2022	JMK
Acenaphthylene	EPA-8270	U	100	1	UG/KG	01/26/2022	JMK
Dimethylphthalate	EPA-8270	U	100	1	UG/KG	01/26/2022	JMK
2,6-Dinitrotoluene	EPA-8270	U	100	1	UG/KG	01/26/2022	JMK
Acenaphthene	EPA-8270	U	100	1	UG/KG	01/26/2022	JMK
3-Nitroaniline	EPA-8270	U	1000	1	UG/KG	01/26/2022	JMK
2,4-Dinitrophenol	EPA-8270	U	100	1	UG/KG	01/26/2022	JMK
4-Nitrophenol	EPA-8270	U	100	1	UG/KG	01/26/2022	JMK
Dibenzofuran	EPA-8270	U	100	1	UG/KG	01/26/2022	JMK
2,4-Dinitrotoluene	EPA-8270	U	100	1	UG/KG	01/26/2022	JMK

ADDRESS 8620 Holly Drive, Suite 100, Everett, WA 98208 | PHONE 425-356-2600 | FAX 425-356-2626
ALS Group USA, Corp dba ALS Environmental

Environmental www.alsglobal.com
RIGHT SOLUTIONS RIGHT PARTNER

ALS Environmental

CERTIFICATE OF ANALYSIS

CLIENT:	Landau Associates, Inc. 155 NE 100th St, Ste 302 Seattle, WA 98125	DATE: ALS JOB#: ALS SAMPLE#:	1/28/2022 EV22010079 EV22010079-01
CLIENT CONTACT:	Dylan Frazer	DATE RECEIVED:	01/20/2022
CLIENT PROJECT:	POE - MIE / 121049.080.083	COLLECTION DATE:	1/20/2022 11:50:00 AM
CLIENT SAMPLE ID	MIE-DP-7-220120	WDOE ACCREDITATION:	C601

SAMPLE DATA RESULTS

ANALYTE	METHOD	RESULTS	REPORTING LIMITS	DILUTION FACTOR	UNITS	ANALYSIS DATE	ANALYSIS BY
2,3,4,6-Tetrachlorophenol	EPA-8270	U	100	1	UG/KG	01/26/2022	JMK
Diethylphthalate	EPA-8270	U	100	1	UG/KG	01/26/2022	JMK
Fluorene	EPA-8270	U	100	1	UG/KG	01/26/2022	JMK
4-Chlorophenyl-Phenylether	EPA-8270	U	100	1	UG/KG	01/26/2022	JMK
4-Nitroaniline	EPA-8270	U	250	1	UG/KG	01/26/2022	JMK
4,6-Dinitro-2-Methylphenol	EPA-8270	U	100	1	UG/KG	01/26/2022	JMK
N-Nitrosodiphenylamine	EPA-8270	U	100	1	UG/KG	01/26/2022	JMK
Azobenzene	EPA-8270	U	100	1	UG/KG	01/26/2022	JMK
4-Bromophenyl-Phenylether	EPA-8270	U	100	1	UG/KG	01/26/2022	JMK
Hexachlorobenzene	EPA-8270	U	100	1	UG/KG	01/26/2022	JMK
Pentachlorophenol	EPA-8270	U	500	1	UG/KG	01/26/2022	JMK
Phenanthrene	EPA-8270	U	100	1	UG/KG	01/26/2022	JMK
Anthracene	EPA-8270	U	100	1	UG/KG	01/26/2022	JMK
Carbazole	EPA-8270	U	250	1	UG/KG	01/26/2022	JMK
Di-N-Butylphthalate	EPA-8270	U	100	1	UG/KG	01/26/2022	JMK
Fluoranthene	EPA-8270	U	100	1	UG/KG	01/26/2022	JMK
Pyrene	EPA-8270	**100**	100	1	UG/KG	01/26/2022	JMK
Butylbenzylphthalate	EPA-8270	U	100	1	UG/KG	01/26/2022	JMK
3,3-Dichlorobenzidine	EPA-8270	U	250	1	UG/KG	01/26/2022	JMK
Benzo[A]Anthracene	EPA-8270	U	100	1	UG/KG	01/26/2022	JMK
Chrysene	EPA-8270	U	100	1	UG/KG	01/26/2022	JMK
Bis(2-Ethylhexyl)Phthalate	EPA-8270	U	100	1	UG/KG	01/26/2022	JMK
Di-N-Octylphthalate	EPA-8270	U	100	1	UG/KG	01/26/2022	JMK
Benzo[B]Fluoranthene	EPA-8270	U	100	1	UG/KG	01/26/2022	JMK
Benzo[K]Fluoranthene	EPA-8270	U	100	1	UG/KG	01/26/2022	JMK
Benzo[A]Pyrene	EPA-8270	U	100	1	UG/KG	01/26/2022	JMK
Indeno[1,2,3-Cd]Pyrene	EPA-8270	U	100	1	UG/KG	01/26/2022	JMK
Dibenz[A,H]Anthracene	EPA-8270	U	100	1	UG/KG	01/26/2022	JMK
Benzo[G,H,I]Perylene	EPA-8270	U	100	1	UG/KG	01/26/2022	JMK
PCB-1016	EPA-8082	U	0.10	1	MG/KG	01/26/2022	JMK
PCB-1221	EPA-8082	U	0.10	1	MG/KG	01/26/2022	JMK
PCB-1232	EPA-8082	U	0.10	1	MG/KG	01/26/2022	JMK
PCB-1242	EPA-8082	U	0.10	1	MG/KG	01/26/2022	JMK
PCB-1248	EPA-8082	U	0.10	1	MG/KG	01/26/2022	JMK
PCB-1254	EPA-8082	U	0.10	1	MG/KG	01/26/2022	JMK
PCB-1260	EPA-8082	U	0.10	1	MG/KG	01/26/2022	JMK
PCB-1268	EPA-8082	U	0.10	1	MG/KG	01/26/2022	JMK
Sulfate	EPA-300.0M	**180**	2.0	1	MG/KG	01/27/2022	RAL
Mercury	EPA-7471	**0.10**	0.020	1	MG/KG	01/21/2022	RAL

ADDRESS 8620 Holly Drive, Suite 100, Everett, WA 98208 | PHONE 425-356-2600 | FAX 425-356-2626
ALS Group USA, Corp dba ALS Environmental

Environmental www.alsglobal.com
RIGHT SOLUTIONS RIGHT PARTNER

ALS Environmental

CERTIFICATE OF ANALYSIS

CLIENT:	Landau Associates, Inc. 155 NE 100th St, Ste 302 Seattle, WA 98125	DATE: ALS JOB#: ALS SAMPLE#:	1/28/2022 EV22010079 EV22010079-01
CLIENT CONTACT:	Dylan Frazer	DATE RECEIVED:	01/20/2022
CLIENT PROJECT:	POE - MIE / 121049.080.083	COLLECTION DATE:	1/20/2022 11:50:00 AM
CLIENT SAMPLE ID	MIE-DP-7-220120	WDOE ACCREDITATION:	C601

SAMPLE DATA RESULTS

ANALYTE	METHOD	RESULTS	REPORTING LIMITS	DILUTION FACTOR	UNITS	ANALYSIS DATE	ANALYSIS BY
Arsenic	EPA-6020	**8.5**	0.20	1	MG/KG	01/20/2022	EBS
Barium	EPA-6020	**53**	0.10	1	MG/KG	01/20/2022	EBS
Cadmium	EPA-6020	**0.55**	0.10	1	MG/KG	01/20/2022	EBS
Chromium	EPA-6020	**28**	0.20	1	MG/KG	01/20/2022	EBS
Copper	EPA-6020	**33**	0.20	1	MG/KG	01/20/2022	EBS
Lead	EPA-6020	**37**	0.10	1	MG/KG	01/20/2022	EBS
Selenium	EPA-6020	U	1.0	1	MG/KG	01/20/2022	EBS
Silver	EPA-6020	U	0.10	1	MG/KG	01/20/2022	EBS
Zinc	EPA-6020	**94**	0.50	1	MG/KG	01/20/2022	EBS

SURROGATE	METHOD	%REC	ANALYSIS DATE	ANALYSIS BY
TFT	EPA-8021	**83.6**	01/21/2022	JMK
C25	NWTPH-DX	**102**	01/20/2022	JNF
1,2-Dichloroethane-d4	EPA-8260	**96.3**	01/21/2022	DLC
Toluene-d8	EPA-8260	**95.8**	01/21/2022	DLC
4-Bromofluorobenzene	EPA-8260	**103**	01/21/2022	DLC
2-Fluorophenol	EPA-8270	**107**	01/26/2022	JMK
Phenol-d5	EPA-8270	**101**	01/26/2022	JMK
Nitrobenzene-d5	EPA-8270	**87.6**	01/26/2022	JMK
2-Fluorobiphenyl	EPA-8270	**85.3**	01/26/2022	JMK
2,4,6-Tribromophenol	EPA-8270	**84.4**	01/26/2022	JMK
Terphenyl-d14	EPA-8270	**93.0**	01/26/2022	JMK
TCMX	EPA-8082	**69.8**	01/26/2022	JMK
DCB	EPA-8082	**94.4**	01/26/2022	JMK

U - Analyte analyzed for but not detected at level above reporting limit.
Chromatogram indicates that it is likely that sample contains an unidentified diesel range product and lube oil.
Diesel range product results biased high due to oil range product overlap.

ADDRESS 8620 Holly Drive, Suite 100, Everett, WA 98208 | PHONE 425-356-2600 | FAX 425-356-2626
ALS Group USA, Corp dba ALS Environmental

Environmental www.alsglobal.com
RIGHT SOLUTIONS RIGHT PARTNER

ALS Environmental

CERTIFICATE OF ANALYSIS

CLIENT:	Landau Associates, Inc. 155 NE 100th St, Ste 302 Seattle, WA 98125	DATE: ALS JOB#: ALS SAMPLE#:	1/28/2022 EV22010079 EV22010079-02
CLIENT CONTACT:	Dylan Frazer	DATE RECEIVED:	01/20/2022
CLIENT PROJECT:	POE - MIE / 121049.080.083	COLLECTION DATE:	1/20/2022 11:55:00 AM
CLIENT SAMPLE ID	MIE-DP-8-220120	WDOE ACCREDITATION:	C601

SAMPLE DATA RESULTS

ANALYTE	METHOD	RESULTS	REPORTING LIMITS	DILUTION FACTOR	UNITS	ANALYSIS DATE	ANALYSIS BY
Benzene	EPA-8021	U	0.030	1	MG/KG	01/21/2022	JMK
Toluene	EPA-8021	U	0.050	1	MG/KG	01/21/2022	JMK
Ethylbenzene	EPA-8021	U	0.050	1	MG/KG	01/21/2022	JMK
Xylenes	EPA-8021	U	0.20	1	MG/KG	01/21/2022	JMK
TPH-Diesel Range (C12-C24)	NWTPH-DX	**130**	25	1	MG/KG	01/20/2022	JNF
TPH-Oil Range (C24-C40)	NWTPH-DX	**100**	50	1	MG/KG	01/20/2022	JNF
Dichlorodifluoromethane	EPA-8260	U	10	1	UG/KG	01/21/2022	DLC
Chloromethane	EPA-8260	U	10	1	UG/KG	01/21/2022	DLC
Vinyl Chloride	EPA-8260	U	10	1	UG/KG	01/21/2022	DLC
Bromomethane	EPA-8260	U	10	1	UG/KG	01/21/2022	DLC
Chloroethane	EPA-8260	U	10	1	UG/KG	01/21/2022	DLC
Carbon Tetrachloride	EPA-8260	U	10	1	UG/KG	01/21/2022	DLC
Trichlorofluoromethane	EPA-8260	U	10	1	UG/KG	01/21/2022	DLC
Carbon Disulfide	EPA-8260	U	10	1	UG/KG	01/21/2022	DLC
Acetone	EPA-8260	U	50	1	UG/KG	01/21/2022	DLC
1,1-Dichloroethene	EPA-8260	U	10	1	UG/KG	01/21/2022	DLC
Methylene Chloride	EPA-8260	U	20	1	UG/KG	01/21/2022	DLC
Acrylonitrile	EPA-8260	U	50	1	UG/KG	01/21/2022	DLC
Methyl T-Butyl Ether	EPA-8260	U	10	1	UG/KG	01/21/2022	DLC
Trans-1,2-Dichloroethene	EPA-8260	U	10	1	UG/KG	01/21/2022	DLC
1,1-Dichloroethane	EPA-8260	U	10	1	UG/KG	01/21/2022	DLC
2-Butanone	EPA-8260	U	50	1	UG/KG	01/21/2022	DLC
Cis-1,2-Dichloroethene	EPA-8260	U	10	1	UG/KG	01/21/2022	DLC
2,2-Dichloropropane	EPA-8260	U	10	1	UG/KG	01/21/2022	DLC
Bromochloromethane	EPA-8260	U	10	1	UG/KG	01/21/2022	DLC
Chloroform	EPA-8260	U	10	1	UG/KG	01/21/2022	DLC
1,1,1-Trichloroethane	EPA-8260	U	10	1	UG/KG	01/21/2022	DLC
1,1-Dichloropropene	EPA-8260	U	10	1	UG/KG	01/21/2022	DLC
1,2-Dichloroethane	EPA-8260	U	10	1	UG/KG	01/21/2022	DLC
Benzene	EPA-8260	U	5.0	1	UG/KG	01/21/2022	DLC
Trichloroethene	EPA-8260	U	10	1	UG/KG	01/21/2022	DLC
1,2-Dichloropropane	EPA-8260	U	10	1	UG/KG	01/21/2022	DLC
Dibromomethane	EPA-8260	U	10	1	UG/KG	01/21/2022	DLC
Bromodichloromethane	EPA-8260	U	10	1	UG/KG	01/21/2022	DLC
Trans-1,3-Dichloropropene	EPA-8260	U	10	1	UG/KG	01/21/2022	DLC
4-Methyl-2-Pentanone	EPA-8260	U	50	1	UG/KG	01/21/2022	DLC
Toluene	EPA-8260	U	10	1	UG/KG	01/21/2022	DLC
Cis-1,3-Dichloropropene	EPA-8260	U	10	1	UG/KG	01/21/2022	DLC
1,1,2-Trichloroethane	EPA-8260	U	10	1	UG/KG	01/21/2022	DLC

ADDRESS 8620 Holly Drive, Suite 100, Everett, WA 98208 | PHONE 425-356-2600 | FAX 425-356-2626
ALS Group USA, Corp dba ALS Environmental

Environmental www.alsglobal.com
RIGHT SOLUTIONS RIGHT PARTNER

ALS Environmental

CERTIFICATE OF ANALYSIS

CLIENT:	Landau Associates, Inc. 155 NE 100th St, Ste 302 Seattle, WA 98125	DATE: ALS JOB#: ALS SAMPLE#:	1/28/2022 EV22010079 EV22010079-02
CLIENT CONTACT:	Dylan Frazer	DATE RECEIVED:	01/20/2022
CLIENT PROJECT:	POE - MIE / 121049.080.083	COLLECTION DATE:	1/20/2022 11:55:00 AM
CLIENT SAMPLE ID	MIE-DP-8-220120	WDOE ACCREDITATION:	C601

SAMPLE DATA RESULTS

ANALYTE	METHOD	RESULTS	REPORTING LIMITS	DILUTION FACTOR	UNITS	ANALYSIS DATE	ANALYSIS BY
2-Hexanone	EPA-8260	U	50	1	UG/KG	01/21/2022	DLC
1,3-Dichloropropane	EPA-8260	U	10	1	UG/KG	01/21/2022	DLC
Tetrachloroethylene	EPA-8260	U	10	1	UG/KG	01/21/2022	DLC
Dibromochloromethane	EPA-8260	U	10	1	UG/KG	01/21/2022	DLC
1,2-Dibromoethane	EPA-8260	U	5.0	1	UG/KG	01/21/2022	DLC
Chlorobenzene	EPA-8260	U	10	1	UG/KG	01/21/2022	DLC
1,1,1,2-Tetrachloroethane	EPA-8260	U	10	1	UG/KG	01/21/2022	DLC
Ethylbenzene	EPA-8260	U	10	1	UG/KG	01/21/2022	DLC
m,p-Xylene	EPA-8260	U	20	1	UG/KG	01/21/2022	DLC
Styrene	EPA-8260	U	10	1	UG/KG	01/21/2022	DLC
o-Xylene	EPA-8260	U	10	1	UG/KG	01/21/2022	DLC
Bromoform	EPA-8260	U	10	1	UG/KG	01/21/2022	DLC
Isopropylbenzene	EPA-8260	U	10	1	UG/KG	01/21/2022	DLC
1,1,2,2-Tetrachloroethane	EPA-8260	U	10	1	UG/KG	01/21/2022	DLC
1,2,3-Trichloropropane	EPA-8260	U	10	1	UG/KG	01/21/2022	DLC
Bromobenzene	EPA-8260	U	10	1	UG/KG	01/21/2022	DLC
N-Propyl Benzene	EPA-8260	U	10	1	UG/KG	01/21/2022	DLC
2-Chlorotoluene	EPA-8260	U	10	1	UG/KG	01/21/2022	DLC
1,3,5-Trimethylbenzene	EPA-8260	U	10	1	UG/KG	01/21/2022	DLC
4-Chlorotoluene	EPA-8260	U	10	1	UG/KG	01/21/2022	DLC
T-Butyl Benzene	EPA-8260	U	10	1	UG/KG	01/21/2022	DLC
1,2,4-Trimethylbenzene	EPA-8260	U	10	1	UG/KG	01/21/2022	DLC
S-Butyl Benzene	EPA-8260	U	10	1	UG/KG	01/21/2022	DLC
P-Isopropyltoluene	EPA-8260	U	10	1	UG/KG	01/21/2022	DLC
1,3-Dichlorobenzene	EPA-8260	U	10	1	UG/KG	01/21/2022	DLC
1,4-Dichlorobenzene	EPA-8260	U	10	1	UG/KG	01/21/2022	DLC
N-Butylbenzene	EPA-8260	U	10	1	UG/KG	01/21/2022	DLC
1,2-Dichlorobenzene	EPA-8260	U	10	1	UG/KG	01/21/2022	DLC
1,2-Dibromo 3-Chloropropane	EPA-8260	U	50	1	UG/KG	01/21/2022	DLC
1,2,4-Trichlorobenzene	EPA-8260	U	10	1	UG/KG	01/21/2022	DLC
Hexachlorobutadiene	EPA-8260	U	10	1	UG/KG	01/21/2022	DLC
Naphthalene	EPA-8260	U	10	1	UG/KG	01/21/2022	DLC
1,2,3-Trichlorobenzene	EPA-8260	U	10	1	UG/KG	01/21/2022	DLC
Pyridine	EPA-8270	U	200	1	UG/KG	01/26/2022	JMK
N-Nitrosodimethylamine	EPA-8270	U	100	1	UG/KG	01/26/2022	JMK
Phenol	EPA-8270	U	100	1	UG/KG	01/26/2022	JMK
Aniline	EPA-8270	U	100	1	UG/KG	01/26/2022	JMK
Bis(2-Chloroethyl)Ether	EPA-8270	U	250	1	UG/KG	01/26/2022	JMK
2-Chlorophenol	EPA-8270	U	250	1	UG/KG	01/26/2022	JMK

ADDRESS 8620 Holly Drive, Suite 100, Everett, WA 98208 | PHONE 425-356-2600 | FAX 425-356-2626
ALS Group USA, Corp dba ALS Environmental

Environmental www.alsglobal.com
RIGHT SOLUTIONS RIGHT PARTNER

ALS Environmental

CERTIFICATE OF ANALYSIS

CLIENT:	Landau Associates, Inc. 155 NE 100th St, Ste 302 Seattle, WA 98125	DATE: ALS JOB#: ALS SAMPLE#:	1/28/2022 EV22010079 EV22010079-02
CLIENT CONTACT:	Dylan Frazer	DATE RECEIVED:	01/20/2022
CLIENT PROJECT:	POE - MIE / 121049.080.083	COLLECTION DATE:	1/20/2022 11:55:00 AM
CLIENT SAMPLE ID	MIE-DP-8-220120	WDOE ACCREDITATION:	C601

SAMPLE DATA RESULTS

ANALYTE	METHOD	RESULTS	REPORTING LIMITS	DILUTION FACTOR	UNITS	ANALYSIS DATE	ANALYSIS BY
1,3-Dichlorobenzene	EPA-8270	U	100	1	UG/KG	01/26/2022	JMK
1,4-Dichlorobenzene	EPA-8270	U	100	1	UG/KG	01/26/2022	JMK
Benzyl Alcohol	EPA-8270	U	100	1	UG/KG	01/26/2022	JMK
1,2-Dichlorobenzene	EPA-8270	U	100	1	UG/KG	01/26/2022	JMK
2-Methylphenol	EPA-8270	U	100	1	UG/KG	01/26/2022	JMK
Bis(2-Chloroisopropyl)Ether	EPA-8270	U	250	1	UG/KG	01/26/2022	JMK
3&4-Methylphenol	EPA-8270	U	100	1	UG/KG	01/26/2022	JMK
N-Nitroso-Di-N-Propylamine	EPA-8270	U	250	1	UG/KG	01/26/2022	JMK
Hexachloroethane	EPA-8270	U	100	1	UG/KG	01/26/2022	JMK
Nitrobenzene	EPA-8270	U	100	1	UG/KG	01/26/2022	JMK
Isophorone	EPA-8270	U	100	1	UG/KG	01/26/2022	JMK
2-Nitrophenol	EPA-8270	U	100	1	UG/KG	01/26/2022	JMK
2,4-Dimethylphenol	EPA-8270	U	100	1	UG/KG	01/26/2022	JMK
Benzoic Acid	EPA-8270	U	1000	1	UG/KG	01/26/2022	JMK
Bis(2-Chloroethoxy)Methane	EPA-8270	U	250	1	UG/KG	01/26/2022	JMK
2,4-Dichlorophenol	EPA-8270	U	500	1	UG/KG	01/26/2022	JMK
1,2,4-Trichlorobenzene	EPA-8270	U	100	1	UG/KG	01/26/2022	JMK
Naphthalene	EPA-8270	U	100	1	UG/KG	01/26/2022	JMK
4-Chloroaniline	EPA-8270	U	1000	1	UG/KG	01/26/2022	JMK
2,6-Dichlorophenol	EPA-8270	U	250	1	UG/KG	01/26/2022	JMK
Hexachlorobutadiene	EPA-8270	U	500	1	UG/KG	01/26/2022	JMK
4-Chloro-3-Methylphenol	EPA-8270	U	500	1	UG/KG	01/26/2022	JMK
2-Methylnaphthalene	EPA-8270	U	250	1	UG/KG	01/26/2022	JMK
1-Methylnaphthalene	EPA-8270	U	250	1	UG/KG	01/26/2022	JMK
Hexachlorocyclopentadiene	EPA-8270	U	100	1	UG/KG	01/26/2022	JMK
2,4,6-Trichlorophenol	EPA-8270	U	100	1	UG/KG	01/26/2022	JMK
2,4,5-Trichlorophenol	EPA-8270	U	100	1	UG/KG	01/26/2022	JMK
2-Chloronaphthalene	EPA-8270	U	100	1	UG/KG	01/26/2022	JMK
2-Nitroaniline	EPA-8270	U	100	1	UG/KG	01/26/2022	JMK
Acenaphthylene	EPA-8270	U	100	1	UG/KG	01/26/2022	JMK
Dimethylphthalate	EPA-8270	U	100	1	UG/KG	01/26/2022	JMK
2,6-Dinitrotoluene	EPA-8270	U	100	1	UG/KG	01/26/2022	JMK
Acenaphthene	EPA-8270	U	100	1	UG/KG	01/26/2022	JMK
3-Nitroaniline	EPA-8270	U	1000	1	UG/KG	01/26/2022	JMK
2,4-Dinitrophenol	EPA-8270	U	100	1	UG/KG	01/26/2022	JMK
4-Nitrophenol	EPA-8270	U	100	1	UG/KG	01/26/2022	JMK
Dibenzofuran	EPA-8270	U	100	1	UG/KG	01/26/2022	JMK
2,4-Dinitrotoluene	EPA-8270	U	100	1	UG/KG	01/26/2022	JMK
2,3,4,6-Tetrachlorophenol	EPA-8270	U	100	1	UG/KG	01/26/2022	JMK

ADDRESS 8620 Holly Drive, Suite 100, Everett, WA 98208 | PHONE 425-356-2600 | FAX 425-356-2626
ALS Group USA, Corp dba ALS Environmental

Environmental www.alsglobal.com
RIGHT SOLUTIONS RIGHT PARTNER

ALS Environmental

CERTIFICATE OF ANALYSIS

CLIENT:	Landau Associates, Inc. 155 NE 100th St, Ste 302 Seattle, WA 98125	DATE: ALS JOB#: ALS SAMPLE#:	1/28/2022 EV22010079 EV22010079-02
CLIENT CONTACT:	Dylan Frazer	DATE RECEIVED:	01/20/2022
CLIENT PROJECT:	POE - MIE / 121049.080.083	COLLECTION DATE:	1/20/2022 11:55:00 AM
CLIENT SAMPLE ID	MIE-DP-8-220120	WDOE ACCREDITATION:	C601

SAMPLE DATA RESULTS

ANALYTE	METHOD	RESULTS	REPORTING LIMITS	DILUTION FACTOR	UNITS	ANALYSIS DATE	ANALYSIS BY
Diethylphthalate	EPA-8270	U	100	1	UG/KG	01/26/2022	JMK
Fluorene	EPA-8270	U	100	1	UG/KG	01/26/2022	JMK
4-Chlorophenyl-Phenylether	EPA-8270	U	100	1	UG/KG	01/26/2022	JMK
4-Nitroaniline	EPA-8270	U	250	1	UG/KG	01/26/2022	JMK
4,6-Dinitro-2-Methylphenol	EPA-8270	U	100	1	UG/KG	01/26/2022	JMK
N-Nitrosodiphenylamine	EPA-8270	U	100	1	UG/KG	01/26/2022	JMK
Azobenzene	EPA-8270	U	100	1	UG/KG	01/26/2022	JMK
4-Bromophenyl-Phenylether	EPA-8270	U	100	1	UG/KG	01/26/2022	JMK
Hexachlorobenzene	EPA-8270	U	100	1	UG/KG	01/26/2022	JMK
Pentachlorophenol	EPA-8270	U	500	1	UG/KG	01/26/2022	JMK
Phenanthrene	EPA-8270	U	100	1	UG/KG	01/26/2022	JMK
Anthracene	EPA-8270	U	100	1	UG/KG	01/26/2022	JMK
Carbazole	EPA-8270	U	250	1	UG/KG	01/26/2022	JMK
Di-N-Butylphthalate	EPA-8270	U	100	1	UG/KG	01/26/2022	JMK
Fluoranthene	EPA-8270	U	100	1	UG/KG	01/26/2022	JMK
Pyrene	EPA-8270	U	100	1	UG/KG	01/26/2022	JMK
Butylbenzylphthalate	EPA-8270	U	100	1	UG/KG	01/26/2022	JMK
3,3-Dichlorobenzidine	EPA-8270	U	250	1	UG/KG	01/26/2022	JMK
Benzo[A]Anthracene	EPA-8270	U	100	1	UG/KG	01/26/2022	JMK
Chrysene	EPA-8270	U	100	1	UG/KG	01/26/2022	JMK
Bis(2-Ethylhexyl)Phthalate	EPA-8270	U	100	1	UG/KG	01/26/2022	JMK
Di-N-Octylphthalate	EPA-8270	U	100	1	UG/KG	01/26/2022	JMK
Benzo[B]Fluoranthene	EPA-8270	U	100	1	UG/KG	01/26/2022	JMK
Benzo[K]Fluoranthene	EPA-8270	U	100	1	UG/KG	01/26/2022	JMK
Benzo[A]Pyrene	EPA-8270	U	100	1	UG/KG	01/26/2022	JMK
Indeno[1,2,3-Cd]Pyrene	EPA-8270	U	100	1	UG/KG	01/26/2022	JMK
Dibenz[A,H]Anthracene	EPA-8270	U	100	1	UG/KG	01/26/2022	JMK
Benzo[G,H,I]Perylene	EPA-8270	U	100	1	UG/KG	01/26/2022	JMK
PCB-1016	EPA-8082	U	0.10	1	MG/KG	01/26/2022	JMK
PCB-1221	EPA-8082	U	0.10	1	MG/KG	01/26/2022	JMK
PCB-1232	EPA-8082	U	0.10	1	MG/KG	01/26/2022	JMK
PCB-1242	EPA-8082	U	0.10	1	MG/KG	01/26/2022	JMK
PCB-1248	EPA-8082	U	0.10	1	MG/KG	01/26/2022	JMK
PCB-1254	EPA-8082	U	0.10	1	MG/KG	01/26/2022	JMK
PCB-1260	EPA-8082	U	0.10	1	MG/KG	01/26/2022	JMK
PCB-1268	EPA-8082	U	0.10	1	MG/KG	01/26/2022	JMK
Sulfate	EPA-300.0M	**170**	2.0	1	MG/KG	01/27/2022	RAL
Mercury	EPA-7471	**0.075**	0.020	1	MG/KG	01/21/2022	RAL
Arsenic	EPA-6020	**4.1**	0.20	1	MG/KG	01/20/2022	EBS

ADDRESS 8620 Holly Drive, Suite 100, Everett, WA 98208 | PHONE 425-356-2600 | FAX 425-356-2626
ALS Group USA, Corp dba ALS Environmental

Environmental www.alsglobal.com
RIGHT SOLUTIONS RIGHT PARTNER

ALS Environmental

CERTIFICATE OF ANALYSIS

CLIENT:	Landau Associates, Inc. 155 NE 100th St, Ste 302 Seattle, WA 98125	DATE: ALS JOB#: ALS SAMPLE#:	1/28/2022 EV22010079 EV22010079-02
CLIENT CONTACT:	Dylan Frazer	DATE RECEIVED:	01/20/2022
CLIENT PROJECT:	POE - MIE / 121049.080.083	COLLECTION DATE:	1/20/2022 11:55:00 AM
CLIENT SAMPLE ID	MIE-DP-8-220120	WDOE ACCREDITATION:	C601

SAMPLE DATA RESULTS

ANALYTE	METHOD	RESULTS	REPORTING LIMITS	DILUTION FACTOR	UNITS	ANALYSIS DATE	ANALYSIS BY
Barium	EPA-6020	**56**	0.10	1	MG/KG	01/20/2022	EBS
Cadmium	EPA-6020	**0.18**	0.10	1	MG/KG	01/20/2022	EBS
Chromium	EPA-6020	**24**	0.20	1	MG/KG	01/20/2022	EBS
Copper	EPA-6020	**29**	0.20	1	MG/KG	01/20/2022	EBS
Lead	EPA-6020	**37**	0.10	1	MG/KG	01/20/2022	EBS
Selenium	EPA-6020	U	1.0	1	MG/KG	01/20/2022	EBS
Silver	EPA-6020	U	0.10	1	MG/KG	01/20/2022	EBS
Zinc	EPA-6020	**77**	0.50	1	MG/KG	01/20/2022	EBS

SURROGATE	METHOD	%REC	ANALYSIS DATE	ANALYSIS BY
TFT	EPA-8021	**84.1**	01/21/2022	JMK
C25	NWTPH-DX	**92.8**	01/20/2022	JNF
1,2-Dichloroethane-d4	EPA-8260	**96.8**	01/21/2022	DLC
Toluene-d8	EPA-8260	**100**	01/21/2022	DLC
4-Bromofluorobenzene	EPA-8260	**92.1**	01/21/2022	DLC
2-Fluorophenol	EPA-8270	**99.2**	01/26/2022	JMK
Phenol-d5	EPA-8270	**99.2**	01/26/2022	JMK
Nitrobenzene-d5	EPA-8270	**92.5**	01/26/2022	JMK
2-Fluorobiphenyl	EPA-8270	**87.0**	01/26/2022	JMK
2,4,6-Tribromophenol	EPA-8270	**80.9**	01/26/2022	JMK
Terphenyl-d14	EPA-8270	**91.0**	01/26/2022	JMK
TCMX	EPA-8082	**73.4**	01/26/2022	JMK
DCB	EPA-8082	**106**	01/26/2022	JMK

U - Analyte analyzed for but not detected at level above reporting limit.
Chromatogram indicates that it is likely that sample contains weathered diesel and lube oil.

ADDRESS 8620 Holly Drive, Suite 100, Everett, WA 98208 | PHONE 425-356-2600 | FAX 425-356-2626
ALS Group USA, Corp dba ALS Environmental

Environmental www.alsglobal.com
RIGHT SOLUTIONS RIGHT PARTNER

ALS Environmental

CERTIFICATE OF ANALYSIS

CLIENT:	Landau Associates, Inc. 155 NE 100th St, Ste 302 Seattle, WA 98125	DATE: ALS JOB#: ALS SAMPLE#:	1/28/2022 EV22010079 EV22010079-03
CLIENT CONTACT:	Dylan Frazer	DATE RECEIVED:	01/20/2022
CLIENT PROJECT:	POE - MIE / 121049.080.083	COLLECTION DATE:	1/20/2022 12:00:00 PM
CLIENT SAMPLE ID	MIE-DP-9-220120	WDOE ACCREDITATION:	C601

SAMPLE DATA RESULTS

ANALYTE	METHOD	RESULTS	REPORTING LIMITS	DILUTION FACTOR	UNITS	ANALYSIS DATE	ANALYSIS BY
Benzene	EPA-8021	U	0.030	1	MG/KG	01/21/2022	JMK
Toluene	EPA-8021	U	0.050	1	MG/KG	01/21/2022	JMK
Ethylbenzene	EPA-8021	U	0.050	1	MG/KG	01/21/2022	JMK
Xylenes	EPA-8021	U	0.20	1	MG/KG	01/21/2022	JMK
TPH-Diesel Range (C12-C24)	NWTPH-DX	**440**	25	1	MG/KG	01/20/2022	JNF
TPH-Oil Range (C24-C40)	NWTPH-DX	**130**	50	1	MG/KG	01/20/2022	JNF
Dichlorodifluoromethane	EPA-8260	U	10	1	UG/KG	01/21/2022	DLC
Chloromethane	EPA-8260	U	10	1	UG/KG	01/21/2022	DLC
Vinyl Chloride	EPA-8260	U	10	1	UG/KG	01/21/2022	DLC
Bromomethane	EPA-8260	U	10	1	UG/KG	01/21/2022	DLC
Chloroethane	EPA-8260	U	10	1	UG/KG	01/21/2022	DLC
Carbon Tetrachloride	EPA-8260	U	10	1	UG/KG	01/21/2022	DLC
Trichlorofluoromethane	EPA-8260	U	10	1	UG/KG	01/21/2022	DLC
Carbon Disulfide	EPA-8260	U	10	1	UG/KG	01/21/2022	DLC
Acetone	EPA-8260	U	50	1	UG/KG	01/21/2022	DLC
1,1-Dichloroethene	EPA-8260	U	10	1	UG/KG	01/21/2022	DLC
Methylene Chloride	EPA-8260	U	20	1	UG/KG	01/21/2022	DLC
Acrylonitrile	EPA-8260	U	50	1	UG/KG	01/21/2022	DLC
Methyl T-Butyl Ether	EPA-8260	U	10	1	UG/KG	01/21/2022	DLC
Trans-1,2-Dichloroethene	EPA-8260	U	10	1	UG/KG	01/21/2022	DLC
1,1-Dichloroethane	EPA-8260	U	10	1	UG/KG	01/21/2022	DLC
2-Butanone	EPA-8260	U	50	1	UG/KG	01/21/2022	DLC
Cis-1,2-Dichloroethene	EPA-8260	U	10	1	UG/KG	01/21/2022	DLC
2,2-Dichloropropane	EPA-8260	U	10	1	UG/KG	01/21/2022	DLC
Bromochloromethane	EPA-8260	U	10	1	UG/KG	01/21/2022	DLC
Chloroform	EPA-8260	U	10	1	UG/KG	01/21/2022	DLC
1,1,1-Trichloroethane	EPA-8260	U	10	1	UG/KG	01/21/2022	DLC
1,1-Dichloropropene	EPA-8260	U	10	1	UG/KG	01/21/2022	DLC
1,2-Dichloroethane	EPA-8260	U	10	1	UG/KG	01/21/2022	DLC
Benzene	EPA-8260	U	5.0	1	UG/KG	01/21/2022	DLC
Trichloroethene	EPA-8260	U	10	1	UG/KG	01/21/2022	DLC
1,2-Dichloropropane	EPA-8260	U	10	1	UG/KG	01/21/2022	DLC
Dibromomethane	EPA-8260	U	10	1	UG/KG	01/21/2022	DLC
Bromodichloromethane	EPA-8260	U	10	1	UG/KG	01/21/2022	DLC
Trans-1,3-Dichloropropene	EPA-8260	U	10	1	UG/KG	01/21/2022	DLC
4-Methyl-2-Pentanone	EPA-8260	U	50	1	UG/KG	01/21/2022	DLC
Toluene	EPA-8260	U	10	1	UG/KG	01/21/2022	DLC
Cis-1,3-Dichloropropene	EPA-8260	U	10	1	UG/KG	01/21/2022	DLC
1,1,2-Trichloroethane	EPA-8260	U	10	1	UG/KG	01/21/2022	DLC

ADDRESS 8620 Holly Drive, Suite 100, Everett, WA 98208 | PHONE 425-356-2600 | FAX 425-356-2626
ALS Group USA, Corp dba ALS Environmental

Environmental www.alsglobal.com
RIGHT SOLUTIONS RIGHT PARTNER

ALS Environmental

CERTIFICATE OF ANALYSIS

CLIENT:	Landau Associates, Inc. 155 NE 100th St, Ste 302 Seattle, WA 98125	DATE: ALS JOB#: ALS SAMPLE#:	1/28/2022 EV22010079 EV22010079-03
CLIENT CONTACT:	Dylan Frazer	DATE RECEIVED:	01/20/2022
CLIENT PROJECT:	POE - MIE / 121049.080.083	COLLECTION DATE:	1/20/2022 12:00:00 PM
CLIENT SAMPLE ID	MIE-DP-9-220120	WDOE ACCREDITATION:	C601

SAMPLE DATA RESULTS

ANALYTE	METHOD	RESULTS	REPORTING LIMITS	DILUTION FACTOR	UNITS	ANALYSIS DATE	ANALYSIS BY
2-Hexanone	EPA-8260	U	50	1	UG/KG	01/21/2022	DLC
1,3-Dichloropropane	EPA-8260	U	10	1	UG/KG	01/21/2022	DLC
Tetrachloroethylene	EPA-8260	U	10	1	UG/KG	01/21/2022	DLC
Dibromochloromethane	EPA-8260	U	10	1	UG/KG	01/21/2022	DLC
1,2-Dibromoethane	EPA-8260	U	5.0	1	UG/KG	01/21/2022	DLC
Chlorobenzene	EPA-8260	U	10	1	UG/KG	01/21/2022	DLC
1,1,1,2-Tetrachloroethane	EPA-8260	U	10	1	UG/KG	01/21/2022	DLC
Ethylbenzene	EPA-8260	U	10	1	UG/KG	01/21/2022	DLC
m,p-Xylene	EPA-8260	U	20	1	UG/KG	01/21/2022	DLC
Styrene	EPA-8260	U	10	1	UG/KG	01/21/2022	DLC
o-Xylene	EPA-8260	U	10	1	UG/KG	01/21/2022	DLC
Bromoform	EPA-8260	U	10	1	UG/KG	01/21/2022	DLC
Isopropylbenzene	EPA-8260	U	10	1	UG/KG	01/21/2022	DLC
1,1,2,2-Tetrachloroethane	EPA-8260	U	10	1	UG/KG	01/21/2022	DLC
1,2,3-Trichloropropane	EPA-8260	U	10	1	UG/KG	01/21/2022	DLC
Bromobenzene	EPA-8260	U	10	1	UG/KG	01/21/2022	DLC
N-Propyl Benzene	EPA-8260	U	10	1	UG/KG	01/21/2022	DLC
2-Chlorotoluene	EPA-8260	U	10	1	UG/KG	01/21/2022	DLC
1,3,5-Trimethylbenzene	EPA-8260	U	10	1	UG/KG	01/21/2022	DLC
4-Chlorotoluene	EPA-8260	U	10	1	UG/KG	01/21/2022	DLC
T-Butyl Benzene	EPA-8260	U	10	1	UG/KG	01/21/2022	DLC
1,2,4-Trimethylbenzene	EPA-8260	U	10	1	UG/KG	01/21/2022	DLC
S-Butyl Benzene	EPA-8260	U	10	1	UG/KG	01/21/2022	DLC
P-Isopropyltoluene	EPA-8260	U	10	1	UG/KG	01/21/2022	DLC
1,3-Dichlorobenzene	EPA-8260	U	10	1	UG/KG	01/21/2022	DLC
1,4-Dichlorobenzene	EPA-8260	U	10	1	UG/KG	01/21/2022	DLC
N-Butylbenzene	EPA-8260	U	10	1	UG/KG	01/21/2022	DLC
1,2-Dichlorobenzene	EPA-8260	U	10	1	UG/KG	01/21/2022	DLC
1,2-Dibromo 3-Chloropropane	EPA-8260	U	50	1	UG/KG	01/21/2022	DLC
1,2,4-Trichlorobenzene	EPA-8260	U	10	1	UG/KG	01/21/2022	DLC
Hexachlorobutadiene	EPA-8260	U	10	1	UG/KG	01/21/2022	DLC
Naphthalene	EPA-8260	U	10	1	UG/KG	01/21/2022	DLC
1,2,3-Trichlorobenzene	EPA-8260	U	10	1	UG/KG	01/21/2022	DLC
Pyridine	EPA-8270	U	200	1	UG/KG	01/26/2022	JMK
N-Nitrosodimethylamine	EPA-8270	U	100	1	UG/KG	01/26/2022	JMK
Phenol	EPA-8270	U	100	1	UG/KG	01/26/2022	JMK
Aniline	EPA-8270	U	100	1	UG/KG	01/26/2022	JMK
Bis(2-Chloroethyl)Ether	EPA-8270	U	250	1	UG/KG	01/26/2022	JMK
2-Chlorophenol	EPA-8270	U	250	1	UG/KG	01/26/2022	JMK

ADDRESS 8620 Holly Drive, Suite 100, Everett, WA 98208 | PHONE 425-356-2600 | FAX 425-356-2626
ALS Group USA, Corp dba ALS Environmental

Environmental www.alsglobal.com
RIGHT SOLUTIONS RIGHT PARTNER

ALS Environmental

CERTIFICATE OF ANALYSIS

CLIENT:	Landau Associates, Inc. 155 NE 100th St, Ste 302 Seattle, WA 98125	DATE: ALS JOB#: ALS SAMPLE#:	1/28/2022 EV22010079 EV22010079-03
CLIENT CONTACT:	Dylan Frazer	DATE RECEIVED:	01/20/2022
CLIENT PROJECT:	POE - MIE / 121049.080.083	COLLECTION DATE:	1/20/2022 12:00:00 PM
CLIENT SAMPLE ID	MIE-DP-9-220120	WDOE ACCREDITATION:	C601

SAMPLE DATA RESULTS

ANALYTE	METHOD	RESULTS	REPORTING LIMITS	DILUTION FACTOR	UNITS	ANALYSIS DATE	ANALYSIS BY
1,3-Dichlorobenzene	EPA-8270	U	100	1	UG/KG	01/26/2022	JMK
1,4-Dichlorobenzene	EPA-8270	U	100	1	UG/KG	01/26/2022	JMK
Benzyl Alcohol	EPA-8270	U	100	1	UG/KG	01/26/2022	JMK
1,2-Dichlorobenzene	EPA-8270	U	100	1	UG/KG	01/26/2022	JMK
2-Methylphenol	EPA-8270	U	100	1	UG/KG	01/26/2022	JMK
Bis(2-Chloroisopropyl)Ether	EPA-8270	U	250	1	UG/KG	01/26/2022	JMK
3&4-Methylphenol	EPA-8270	U	100	1	UG/KG	01/26/2022	JMK
N-Nitroso-Di-N-Propylamine	EPA-8270	U	250	1	UG/KG	01/26/2022	JMK
Hexachloroethane	EPA-8270	U	100	1	UG/KG	01/26/2022	JMK
Nitrobenzene	EPA-8270	U	100	1	UG/KG	01/26/2022	JMK
Isophorone	EPA-8270	U	100	1	UG/KG	01/26/2022	JMK
2-Nitrophenol	EPA-8270	U	100	1	UG/KG	01/26/2022	JMK
2,4-Dimethylphenol	EPA-8270	U	100	1	UG/KG	01/26/2022	JMK
Benzoic Acid	EPA-8270	U	1000	1	UG/KG	01/26/2022	JMK
Bis(2-Chloroethoxy)Methane	EPA-8270	U	250	1	UG/KG	01/26/2022	JMK
2,4-Dichlorophenol	EPA-8270	U	500	1	UG/KG	01/26/2022	JMK
1,2,4-Trichlorobenzene	EPA-8270	U	100	1	UG/KG	01/26/2022	JMK
Naphthalene	EPA-8270	U	100	1	UG/KG	01/26/2022	JMK
4-Chloroaniline	EPA-8270	U	1000	1	UG/KG	01/26/2022	JMK
2,6-Dichlorophenol	EPA-8270	U	250	1	UG/KG	01/26/2022	JMK
Hexachlorobutadiene	EPA-8270	U	500	1	UG/KG	01/26/2022	JMK
4-Chloro-3-Methylphenol	EPA-8270	U	500	1	UG/KG	01/26/2022	JMK
2-Methylnaphthalene	EPA-8270	U	250	1	UG/KG	01/26/2022	JMK
1-Methylnaphthalene	EPA-8270	U	250	1	UG/KG	01/26/2022	JMK
Hexachlorocyclopentadiene	EPA-8270	U	100	1	UG/KG	01/26/2022	JMK
2,4,6-Trichlorophenol	EPA-8270	U	100	1	UG/KG	01/26/2022	JMK
2,4,5-Trichlorophenol	EPA-8270	U	100	1	UG/KG	01/26/2022	JMK
2-Chloronaphthalene	EPA-8270	U	100	1	UG/KG	01/26/2022	JMK
2-Nitroaniline	EPA-8270	U	100	1	UG/KG	01/26/2022	JMK
Acenaphthylene	EPA-8270	U	100	1	UG/KG	01/26/2022	JMK
Dimethylphthalate	EPA-8270	U	100	1	UG/KG	01/26/2022	JMK
2,6-Dinitrotoluene	EPA-8270	U	100	1	UG/KG	01/26/2022	JMK
Acenaphthene	EPA-8270	U	100	1	UG/KG	01/26/2022	JMK
3-Nitroaniline	EPA-8270	U	1000	1	UG/KG	01/26/2022	JMK
2,4-Dinitrophenol	EPA-8270	U	100	1	UG/KG	01/26/2022	JMK
4-Nitrophenol	EPA-8270	U	100	1	UG/KG	01/26/2022	JMK
Dibenzofuran	EPA-8270	U	100	1	UG/KG	01/26/2022	JMK
2,4-Dinitrotoluene	EPA-8270	U	100	1	UG/KG	01/26/2022	JMK
2,3,4,6-Tetrachlorophenol	EPA-8270	U	100	1	UG/KG	01/26/2022	JMK

ADDRESS 8620 Holly Drive, Suite 100, Everett, WA 98208 | PHONE 425-356-2600 | FAX 425-356-2626
ALS Group USA, Corp dba ALS Environmental

Environmental www.alsglobal.com
RIGHT SOLUTIONS RIGHT PARTNER

ALS Environmental

CERTIFICATE OF ANALYSIS

CLIENT:	Landau Associates, Inc. 155 NE 100th St, Ste 302 Seattle, WA 98125	DATE: ALS JOB#: ALS SAMPLE#:	1/28/2022 EV22010079 EV22010079-03
CLIENT CONTACT:	Dylan Frazer	DATE RECEIVED:	01/20/2022
CLIENT PROJECT:	POE - MIE / 121049.080.083	COLLECTION DATE:	1/20/2022 12:00:00 PM
CLIENT SAMPLE ID	MIE-DP-9-220120	WDOE ACCREDITATION:	C601

SAMPLE DATA RESULTS

ANALYTE	METHOD	RESULTS	REPORTING LIMITS	DILUTION FACTOR	UNITS	ANALYSIS DATE	ANALYSIS BY
Diethylphthalate	EPA-8270	U	100	1	UG/KG	01/26/2022	JMK
Fluorene	EPA-8270	**160**	100	1	UG/KG	01/26/2022	JMK
4-Chlorophenyl-Phenylether	EPA-8270	U	100	1	UG/KG	01/26/2022	JMK
4-Nitroaniline	EPA-8270	U	250	1	UG/KG	01/26/2022	JMK
4,6-Dinitro-2-Methylphenol	EPA-8270	U	100	1	UG/KG	01/26/2022	JMK
N-Nitrosodiphenylamine	EPA-8270	U	100	1	UG/KG	01/26/2022	JMK
Azobenzene	EPA-8270	U	100	1	UG/KG	01/26/2022	JMK
4-Bromophenyl-Phenylether	EPA-8270	U	100	1	UG/KG	01/26/2022	JMK
Hexachlorobenzene	EPA-8270	U	100	1	UG/KG	01/26/2022	JMK
Pentachlorophenol	EPA-8270	U	500	1	UG/KG	01/26/2022	JMK
Phenanthrene	EPA-8270	**180**	100	1	UG/KG	01/26/2022	JMK
Anthracene	EPA-8270	U	100	1	UG/KG	01/26/2022	JMK
Carbazole	EPA-8270	U	250	1	UG/KG	01/26/2022	JMK
Di-N-Butylphthalate	EPA-8270	U	100	1	UG/KG	01/26/2022	JMK
Fluoranthene	EPA-8270	U	100	1	UG/KG	01/26/2022	JMK
Pyrene	EPA-8270	**120**	100	1	UG/KG	01/26/2022	JMK
Butylbenzylphthalate	EPA-8270	U	100	1	UG/KG	01/26/2022	JMK
3,3-Dichlorobenzidine	EPA-8270	U	250	1	UG/KG	01/26/2022	JMK
Benzo[A]Anthracene	EPA-8270	U	100	1	UG/KG	01/26/2022	JMK
Chrysene	EPA-8270	U	100	1	UG/KG	01/26/2022	JMK
Bis(2-Ethylhexyl)Phthalate	EPA-8270	U	100	1	UG/KG	01/26/2022	JMK
Di-N-Octylphthalate	EPA-8270	U	100	1	UG/KG	01/26/2022	JMK
Benzo[B]Fluoranthene	EPA-8270	U	100	1	UG/KG	01/26/2022	JMK
Benzo[K]Fluoranthene	EPA-8270	U	100	1	UG/KG	01/26/2022	JMK
Benzo[A]Pyrene	EPA-8270	U	100	1	UG/KG	01/26/2022	JMK
Indeno[1,2,3-Cd]Pyrene	EPA-8270	U	100	1	UG/KG	01/26/2022	JMK
Dibenz[A,H]Anthracene	EPA-8270	U	100	1	UG/KG	01/26/2022	JMK
Benzo[G,H,I]Perylene	EPA-8270	U	100	1	UG/KG	01/26/2022	JMK
PCB-1016	EPA-8082	U	0.10	1	MG/KG	01/26/2022	JMK
PCB-1221	EPA-8082	U	0.10	1	MG/KG	01/26/2022	JMK
PCB-1232	EPA-8082	U	0.10	1	MG/KG	01/26/2022	JMK
PCB-1242	EPA-8082	U	0.10	1	MG/KG	01/26/2022	JMK
PCB-1248	EPA-8082	U	0.10	1	MG/KG	01/26/2022	JMK
PCB-1254	EPA-8082	U	0.10	1	MG/KG	01/26/2022	JMK
PCB-1260	EPA-8082	U	0.10	1	MG/KG	01/26/2022	JMK
PCB-1268	EPA-8082	U	0.10	1	MG/KG	01/26/2022	JMK
Sulfate	EPA-300.0M	**130**	2.0	1	MG/KG	01/27/2022	RAL
Mercury	EPA-7471	**0.084**	0.020	1	MG/KG	01/21/2022	RAL
Arsenic	EPA-6020	**5.2**	0.20	1	MG/KG	01/20/2022	EBS

ADDRESS 8620 Holly Drive, Suite 100, Everett, WA 98208 | PHONE 425-356-2600 | FAX 425-356-2626
ALS Group USA, Corp dba ALS Environmental

Environmental www.alsglobal.com
RIGHT SOLUTIONS RIGHT PARTNER

ALS Environmental

CERTIFICATE OF ANALYSIS

CLIENT:	Landau Associates, Inc. 155 NE 100th St, Ste 302 Seattle, WA 98125	DATE: ALS JOB#: ALS SAMPLE#:	1/28/2022 EV22010079 EV22010079-03
CLIENT CONTACT:	Dylan Frazer	DATE RECEIVED:	01/20/2022
CLIENT PROJECT:	POE - MIE / 121049.080.083	COLLECTION DATE:	1/20/2022 12:00:00 PM
CLIENT SAMPLE ID	MIE-DP-9-220120	WDOE ACCREDITATION:	C601

SAMPLE DATA RESULTS

ANALYTE	METHOD	RESULTS	REPORTING LIMITS	DILUTION FACTOR	UNITS	ANALYSIS DATE	ANALYSIS BY
Barium	EPA-6020	**53**	0.10	1	MG/KG	01/20/2022	EBS
Cadmium	EPA-6020	**0.19**	0.10	1	MG/KG	01/20/2022	EBS
Chromium	EPA-6020	**28**	0.20	1	MG/KG	01/20/2022	EBS
Copper	EPA-6020	**39**	0.20	1	MG/KG	01/20/2022	EBS
Lead	EPA-6020	**38**	0.10	1	MG/KG	01/20/2022	EBS
Selenium	EPA-6020	U	1.0	1	MG/KG	01/20/2022	EBS
Silver	EPA-6020	U	0.10	1	MG/KG	01/20/2022	EBS
Zinc	EPA-6020	**78**	0.50	1	MG/KG	01/20/2022	EBS

SURROGATE	METHOD	%REC	ANALYSIS DATE	ANALYSIS BY
TFT	EPA-8021	**86.5**	01/21/2022	JMK
C25	NWTPH-DX	**96.9**	01/20/2022	JNF
1,2-Dichloroethane-d4	EPA-8260	**106**	01/21/2022	DLC
Toluene-d8	EPA-8260	**90.1**	01/21/2022	DLC
4-Bromofluorobenzene	EPA-8260	**93.1**	01/21/2022	DLC
2-Fluorophenol	EPA-8270	**103**	01/26/2022	JMK
Phenol-d5	EPA-8270	**100**	01/26/2022	JMK
Nitrobenzene-d5	EPA-8270	**106**	01/26/2022	JMK
2-Fluorobiphenyl	EPA-8270	**86.4**	01/26/2022	JMK
2,4,6-Tribromophenol	EPA-8270	**83.2**	01/26/2022	JMK
Terphenyl-d14	EPA-8270	**92.6**	01/26/2022	JMK
TCMX	EPA-8082	**67.0**	01/26/2022	JMK
DCB	EPA-8082	**98.4**	01/26/2022	JMK

U - Analyte analyzed for but not detected at level above reporting limit.
Chromatogram indicates that it is likely that sample contains highly weathered diesel and lube oil.

ADDRESS 8620 Holly Drive, Suite 100, Everett, WA 98208 | PHONE 425-356-2600 | FAX 425-356-2626
ALS Group USA, Corp dba ALS Environmental

Environmental www.alsglobal.com
RIGHT SOLUTIONS RIGHT PARTNER

ALS Environmental

CERTIFICATE OF ANALYSIS

CLIENT: Landau Associates, Inc.
155 NE 100th St, Ste 302
Seattle, WA 98125
CLIENT CONTACT: Dylan Frazer
CLIENT PROJECT: POE - MIE / 121049.080.083

DATE: 1/28/2022
ALS SDG#: EV22010079
WDOE ACCREDITATION: C601

LABORATORY BLANK RESULTS

MB-012122S - Batch 174726 - Soil by EPA-8021

ANALYTE	METHOD	RESULTS	UNITS	REPORTING LIMITS	ANALYSIS DATE	ANALYSIS BY
Benzene	EPA-8021	U	MG/KG	0.030	01/21/2022	JMK
Toluene	EPA-8021	U	MG/KG	0.050	01/21/2022	JMK
Ethylbenzene	EPA-8021	U	MG/KG	0.050	01/21/2022	JMK
Xylenes	EPA-8021	U	MG/KG	0.20	01/21/2022	JMK

U - Analyte analyzed for but not detected at level above reporting limit.

MB-012022S - Batch 174656 - Soil by NWTPH-DX

ANALYTE	METHOD	RESULTS	UNITS	REPORTING LIMITS	ANALYSIS DATE	ANALYSIS BY
TPH-Diesel Range (C12-C24)	NWTPH-DX	U	MG/KG	25	01/20/2022	JNF
TPH-Oil Range (C24-C40)	NWTPH-DX	U	MG/KG	50	01/20/2022	JNF

U - Analyte analyzed for but not detected at level above reporting limit.

MB-012122S - Batch 174710 - Soil by EPA-8260

ANALYTE	METHOD	RESULTS	UNITS	REPORTING LIMITS	ANALYSIS DATE	ANALYSIS BY
Dichlorodifluoromethane	EPA-8260	U	UG/KG	10	01/21/2022	DLC
Chloromethane	EPA-8260	U	UG/KG	10	01/21/2022	DLC
Vinyl Chloride	EPA-8260	U	UG/KG	10	01/21/2022	DLC
Bromomethane	EPA-8260	U	UG/KG	10	01/21/2022	DLC
Chloroethane	EPA-8260	U	UG/KG	10	01/21/2022	DLC
Carbon Tetrachloride	EPA-8260	U	UG/KG	10	01/21/2022	DLC
Trichlorofluoromethane	EPA-8260	U	UG/KG	10	01/21/2022	DLC
Carbon Disulfide	EPA-8260	U	UG/KG	10	01/21/2022	DLC
Acetone	EPA-8260	U	UG/KG	50	01/21/2022	DLC
1,1-Dichloroethene	EPA-8260	U	UG/KG	10	01/21/2022	DLC
Methylene Chloride	EPA-8260	U	UG/KG	20	01/21/2022	DLC
Acrylonitrile	EPA-8260	U	UG/KG	50	01/21/2022	DLC
Methyl T-Butyl Ether	EPA-8260	U	UG/KG	10	01/21/2022	DLC
Trans-1,2-Dichloroethene	EPA-8260	U	UG/KG	10	01/21/2022	DLC
1,1-Dichloroethane	EPA-8260	U	UG/KG	10	01/21/2022	DLC
2-Butanone	EPA-8260	U	UG/KG	50	01/21/2022	DLC
Cis-1,2-Dichloroethene	EPA-8260	U	UG/KG	10	01/21/2022	DLC
2,2-Dichloropropane	EPA-8260	U	UG/KG	10	01/21/2022	DLC
Bromochloromethane	EPA-8260	U	UG/KG	10	01/21/2022	DLC
Chloroform	EPA-8260	U	UG/KG	10	01/21/2022	DLC
1,1,1-Trichloroethane	EPA-8260	U	UG/KG	10	01/21/2022	DLC
1,1-Dichloropropene	EPA-8260	U	UG/KG	10	01/21/2022	DLC

ADDRESS 8620 Holly Drive, Suite 100, Everett, WA 98208 | PHONE 425-356-2600 | FAX 425-356-2626
ALS Group USA, Corp dba ALS Environmental

Environmental www.alsglobal.com
RIGHT SOLUTIONS RIGHT PARTNER

CERTIFICATE OF ANALYSIS

CLIENT: Landau Associates, Inc.
155 NE 100th St, Ste 302
Seattle, WA 98125
CLIENT CONTACT: Dylan Frazer
CLIENT PROJECT: POE - MIE / 121049.080.083

DATE: 1/28/2022
ALS SDG#: EV22010079
WDOE ACCREDITATION: C601

LABORATORY BLANK RESULTS

MB-012122S - Batch 174710 - Soil by EPA-8260

1,2-Dichloroethane	EPA-8260	U	UG/KG	10	01/21/2022	DLC
Benzene	EPA-8260	U	UG/KG	5.0	01/21/2022	DLC
Trichloroethene	EPA-8260	U	UG/KG	10	01/21/2022	DLC
1,2-Dichloropropane	EPA-8260	U	UG/KG	10	01/21/2022	DLC
Dibromomethane	EPA-8260	U	UG/KG	10	01/21/2022	DLC
Bromodichloromethane	EPA-8260	U	UG/KG	10	01/21/2022	DLC
Trans-1,3-Dichloropropene	EPA-8260	U	UG/KG	10	01/21/2022	DLC
4-Methyl-2-Pentanone	EPA-8260	U	UG/KG	50	01/21/2022	DLC
Toluene	EPA-8260	U	UG/KG	10	01/21/2022	DLC
Cis-1,3-Dichloropropene	EPA-8260	U	UG/KG	10	01/21/2022	DLC
1,1,2-Trichloroethane	EPA-8260	U	UG/KG	10	01/21/2022	DLC
2-Hexanone	EPA-8260	U	UG/KG	50	01/21/2022	DLC
1,3-Dichloropropane	EPA-8260	U	UG/KG	10	01/21/2022	DLC
Tetrachloroethylene	EPA-8260	U	UG/KG	10	01/21/2022	DLC
Dibromochloromethane	EPA-8260	U	UG/KG	10	01/21/2022	DLC
1,2-Dibromoethane	EPA-8260	U	UG/KG	5.0	01/21/2022	DLC
Chlorobenzene	EPA-8260	U	UG/KG	10	01/21/2022	DLC
1,1,1,2-Tetrachloroethane	EPA-8260	U	UG/KG	10	01/21/2022	DLC
Ethylbenzene	EPA-8260	U	UG/KG	10	01/21/2022	DLC
m,p-Xylene	EPA-8260	U	UG/KG	20	01/21/2022	DLC
Styrene	EPA-8260	U	UG/KG	10	01/21/2022	DLC
o-Xylene	EPA-8260	U	UG/KG	10	01/21/2022	DLC
Bromoform	EPA-8260	U	UG/KG	10	01/21/2022	DLC
Isopropylbenzene	EPA-8260	U	UG/KG	10	01/21/2022	DLC
1,1,2,2-Tetrachloroethane	EPA-8260	U	UG/KG	10	01/21/2022	DLC
1,2,3-Trichloropropane	EPA-8260	U	UG/KG	10	01/21/2022	DLC
Bromobenzene	EPA-8260	U	UG/KG	10	01/21/2022	DLC
N-Propyl Benzene	EPA-8260	U	UG/KG	10	01/21/2022	DLC
2-Chlorotoluene	EPA-8260	U	UG/KG	10	01/21/2022	DLC
1,3,5-Trimethylbenzene	EPA-8260	U	UG/KG	10	01/21/2022	DLC
4-Chlorotoluene	EPA-8260	U	UG/KG	10	01/21/2022	DLC
T-Butyl Benzene	EPA-8260	U	UG/KG	10	01/21/2022	DLC
1,2,4-Trimethylbenzene	EPA-8260	U	UG/KG	10	01/21/2022	DLC
S-Butyl Benzene	EPA-8260	U	UG/KG	10	01/21/2022	DLC
P-Isopropyltoluene	EPA-8260	U	UG/KG	10	01/21/2022	DLC
1,3-Dichlorobenzene	EPA-8260	U	UG/KG	10	01/21/2022	DLC
1,4-Dichlorobenzene	EPA-8260	U	UG/KG	10	01/21/2022	DLC
N-Butylbenzene	EPA-8260	U	UG/KG	10	01/21/2022	DLC
1,2-Dichlorobenzene	EPA-8260	U	UG/KG	10	01/21/2022	DLC
1,2-Dibromo 3-Chloropropane	EPA-8260	U	UG/KG	50	01/21/2022	DLC
1,2,4-Trichlorobenzene	EPA-8260	U	UG/KG	10	01/21/2022	DLC

ADDRESS 8620 Holly Drive, Suite 100, Everett, WA 98208 | PHONE 425-356-2600 | FAX 425-356-2626
ALS Group USA, Corp dba ALS Environmental

Environmental www.alsglobal.com
RIGHT SOLUTIONS RIGHT PARTNER

ALS Environmental

CERTIFICATE OF ANALYSIS

CLIENT: Landau Associates, Inc.
155 NE 100th St, Ste 302
Seattle, WA 98125

DATE: 1/28/2022
ALS SDG#: EV22010079
WDOE ACCREDITATION: C601

CLIENT CONTACT: Dylan Frazer
CLIENT PROJECT: POE - MIE / 121049.080.083

LABORATORY BLANK RESULTS

MB-012122S - Batch 174710 - Soil by EPA-8260

Hexachlorobutadiene	EPA-8260	U	UG/KG	10	01/21/2022	DLC
Naphthalene	EPA-8260	U	UG/KG	10	01/21/2022	DLC
1,2,3-Trichlorobenzene	EPA-8260	U	UG/KG	10	01/21/2022	DLC

U - Analyte analyzed for but not detected at level above reporting limit.

MB-012422S - Batch 174774 - Soil by EPA-8270

ANALYTE	METHOD	RESULTS	UNITS	REPORTING LIMITS	ANALYSIS DATE	ANALYSIS BY
Pyridine	EPA-8270	U	UG/KG	200	01/26/2022	JMK
N-Nitrosodimethylamine	EPA-8270	U	UG/KG	100	01/26/2022	JMK
Phenol	EPA-8270	U	UG/KG	100	01/26/2022	JMK
Aniline	EPA-8270	U	UG/KG	100	01/26/2022	JMK
Bis(2-Chloroethyl)Ether	EPA-8270	U	UG/KG	250	01/26/2022	JMK
2-Chlorophenol	EPA-8270	U	UG/KG	250	01/26/2022	JMK
1,3-Dichlorobenzene	EPA-8270	U	UG/KG	100	01/26/2022	JMK
1,4-Dichlorobenzene	EPA-8270	U	UG/KG	100	01/26/2022	JMK
Benzyl Alcohol	EPA-8270	U	UG/KG	100	01/26/2022	JMK
1,2-Dichlorobenzene	EPA-8270	U	UG/KG	100	01/26/2022	JMK
2-Methylphenol	EPA-8270	U	UG/KG	100	01/26/2022	JMK
Bis(2-Chloroisopropyl)Ether	EPA-8270	U	UG/KG	250	01/26/2022	JMK
3&4-Methylphenol	EPA-8270	U	UG/KG	100	01/26/2022	JMK
N-Nitroso-Di-N-Propylamine	EPA-8270	U	UG/KG	250	01/26/2022	JMK
Hexachloroethane	EPA-8270	U	UG/KG	100	01/26/2022	JMK
Nitrobenzene	EPA-8270	U	UG/KG	100	01/26/2022	JMK
Isophorone	EPA-8270	U	UG/KG	100	01/26/2022	JMK
2-Nitrophenol	EPA-8270	U	UG/KG	100	01/26/2022	JMK
2,4-Dimethylphenol	EPA-8270	U	UG/KG	100	01/26/2022	JMK
Benzoic Acid	EPA-8270	U	UG/KG	1000	01/26/2022	JMK
Bis(2-Chloroethoxy)Methane	EPA-8270	U	UG/KG	250	01/26/2022	JMK
2,4-Dichlorophenol	EPA-8270	U	UG/KG	500	01/26/2022	JMK
1,2,4-Trichlorobenzene	EPA-8270	U	UG/KG	100	01/26/2022	JMK
Naphthalene	EPA-8270	U	UG/KG	100	01/26/2022	JMK
4-Chloroaniline	EPA-8270	U	UG/KG	1000	01/26/2022	JMK
2,6-Dichlorophenol	EPA-8270	U	UG/KG	250	01/26/2022	JMK
Hexachlorobutadiene	EPA-8270	U	UG/KG	500	01/26/2022	JMK
4-Chloro-3-Methylphenol	EPA-8270	U	UG/KG	500	01/26/2022	JMK
2-Methylnaphthalene	EPA-8270	U	UG/KG	250	01/26/2022	JMK
1-Methylnaphthalene	EPA-8270	U	UG/KG	250	01/26/2022	JMK
Hexachlorocyclopentadiene	EPA-8270	U	UG/KG	100	01/26/2022	JMK
2,4,6-Trichlorophenol	EPA-8270	U	UG/KG	100	01/26/2022	JMK
2,4,5-Trichlorophenol	EPA-8270	U	UG/KG	100	01/26/2022	JMK

ADDRESS 8620 Holly Drive, Suite 100, Everett, WA 98208 | PHONE 425-356-2600 | FAX 425-356-2626
ALS Group USA, Corp dba ALS Environmental

Environmental www.alsglobal.com
RIGHT SOLUTIONS RIGHT PARTNER

CERTIFICATE OF ANALYSIS

CLIENT:	Landau Associates, Inc. 155 NE 100th St, Ste 302 Seattle, WA 98125	DATE:	1/28/2022
		ALS SDG#:	EV22010079
		WDOE ACCREDITATION:	C601
CLIENT CONTACT:	Dylan Frazer		
CLIENT PROJECT:	POE - MIE / 121049.080.083		

LABORATORY BLANK RESULTS

MB-012422S - Batch 174774 - Soil by EPA-8270

2-Chloronaphthalene	EPA-8270	U	UG/KG	100	01/26/2022	JMK
2-Nitroaniline	EPA-8270	U	UG/KG	100	01/26/2022	JMK
Acenaphthylene	EPA-8270	U	UG/KG	100	01/26/2022	JMK
Dimethylphthalate	EPA-8270	U	UG/KG	100	01/26/2022	JMK
2,6-Dinitrotoluene	EPA-8270	U	UG/KG	100	01/26/2022	JMK
Acenaphthene	EPA-8270	U	UG/KG	100	01/26/2022	JMK
3-Nitroaniline	EPA-8270	U	UG/KG	1000	01/26/2022	JMK
2,4-Dinitrophenol	EPA-8270	U	UG/KG	100	01/26/2022	JMK
4-Nitrophenol	EPA-8270	U	UG/KG	100	01/26/2022	JMK
Dibenzofuran	EPA-8270	U	UG/KG	100	01/26/2022	JMK
2,4-Dinitrotoluene	EPA-8270	U	UG/KG	100	01/26/2022	JMK
2,3,4,6-Tetrachlorophenol	EPA-8270	U	UG/KG	100	01/26/2022	JMK
Diethylphthalate	EPA-8270	U	UG/KG	100	01/26/2022	JMK
Fluorene	EPA-8270	U	UG/KG	100	01/26/2022	JMK
4-Chlorophenyl-Phenylether	EPA-8270	U	UG/KG	100	01/26/2022	JMK
4-Nitroaniline	EPA-8270	U	UG/KG	250	01/26/2022	JMK
4,6-Dinitro-2-Methylphenol	EPA-8270	U	UG/KG	100	01/26/2022	JMK
N-Nitrosodiphenylamine	EPA-8270	U	UG/KG	100	01/26/2022	JMK
Azobenzene	EPA-8270	U	UG/KG	100	01/26/2022	JMK
4-Bromophenyl-Phenylether	EPA-8270	U	UG/KG	100	01/26/2022	JMK
Hexachlorobenzene	EPA-8270	U	UG/KG	100	01/26/2022	JMK
Pentachlorophenol	EPA-8270	U	UG/KG	500	01/26/2022	JMK
Phenanthrene	EPA-8270	U	UG/KG	100	01/26/2022	JMK
Anthracene	EPA-8270	U	UG/KG	100	01/26/2022	JMK
Carbazole	EPA-8270	U	UG/KG	250	01/26/2022	JMK
Di-N-Butylphthalate	EPA-8270	U	UG/KG	100	01/26/2022	JMK
Fluoranthene	EPA-8270	U	UG/KG	100	01/26/2022	JMK
Pyrene	EPA-8270	U	UG/KG	100	01/26/2022	JMK
Butylbenzylphthalate	EPA-8270	U	UG/KG	100	01/26/2022	JMK
3,3-Dichlorobenzidine	EPA-8270	U	UG/KG	250	01/26/2022	JMK
Benzo[A]Anthracene	EPA-8270	U	UG/KG	100	01/26/2022	JMK
Chrysene	EPA-8270	U	UG/KG	100	01/26/2022	JMK
Bis(2-Ethylhexyl)Phthalate	EPA-8270	U	UG/KG	100	01/26/2022	JMK
Di-N-Octylphthalate	EPA-8270	U	UG/KG	100	01/26/2022	JMK
Benzo[B]Fluoranthene	EPA-8270	U	UG/KG	100	01/26/2022	JMK
Benzo[K]Fluoranthene	EPA-8270	U	UG/KG	100	01/26/2022	JMK
Benzo[A]Pyrene	EPA-8270	U	UG/KG	100	01/26/2022	JMK
Indeno[1,2,3-Cd]Pyrene	EPA-8270	U	UG/KG	100	01/26/2022	JMK
Dibenz[A,H]Anthracene	EPA-8270	U	UG/KG	100	01/26/2022	JMK
Benzo[G,H,I]Perylene	EPA-8270	U	UG/KG	100	01/26/2022	JMK

ADDRESS 8620 Holly Drive, Suite 100, Everett, WA 98208 | PHONE 425-356-2600 | FAX 425-356-2626
ALS Group USA, Corp dba ALS Environmental

Environmental www.alsglobal.com
RIGHT SOLUTIONS RIGHT PARTNER

ALS Environmental

CERTIFICATE OF ANALYSIS

CLIENT: Landau Associates, Inc.
155 NE 100th St, Ste 302
Seattle, WA 98125
CLIENT CONTACT: Dylan Frazer
CLIENT PROJECT: POE - MIE / 121049.080.083

DATE: 1/28/2022
ALS SDG#: EV22010079
WDOE ACCREDITATION: C601

LABORATORY BLANK RESULTS

MB-012422S - Batch 174774 - Soil by EPA-8270

U - Analyte analyzed for but not detected at level above reporting limit.

MB-012522S - Batch 174808 - Soil by EPA-8082

ANALYTE	METHOD	RESULTS	UNITS	REPORTING LIMITS	ANALYSIS DATE	ANALYSIS BY
PCB-1016	EPA-8082	U	MG/KG	0.10	01/26/2022	JMK
PCB-1221	EPA-8082	U	MG/KG	0.10	01/26/2022	JMK
PCB-1232	EPA-8082	U	MG/KG	0.10	01/26/2022	JMK
PCB-1242	EPA-8082	U	MG/KG	0.10	01/26/2022	JMK
PCB-1248	EPA-8082	U	MG/KG	0.10	01/26/2022	JMK
PCB-1254	EPA-8082	U	MG/KG	0.10	01/26/2022	JMK
PCB-1260	EPA-8082	U	MG/KG	0.10	01/26/2022	JMK
PCB-1268	EPA-8082	U	MG/KG	0.10	01/26/2022	JMK

U - Analyte analyzed for but not detected at level above reporting limit.

MBLK-R401195 - Batch R401195 - Soil by EPA-300.0M

ANALYTE	METHOD	RESULTS	UNITS	REPORTING LIMITS	ANALYSIS DATE	ANALYSIS BY
Sulfate	EPA-300.0M	U	MG/KG	2.0	01/27/2022	RAL

U - Analyte analyzed for but not detected at level above reporting limit.

MBLK-R400813 - Batch R400813 - Soil by EPA-7471

ANALYTE	METHOD	RESULTS	UNITS	REPORTING LIMITS	ANALYSIS DATE	ANALYSIS BY
Mercury	EPA-7471	U	MG/KG	0.020	01/21/2022	RAL

U - Analyte analyzed for but not detected at level above reporting limit.

MB-012022S - Batch 174619 - Soil by EPA-6020

ANALYTE	METHOD	RESULTS	UNITS	REPORTING LIMITS	ANALYSIS DATE	ANALYSIS BY
Arsenic	EPA-6020	U	MG/KG	0.20	01/20/2022	EBS
Barium	EPA-6020	U	MG/KG	0.12	01/20/2022	EBS
Cadmium	EPA-6020	U	MG/KG	0.10	01/20/2022	EBS
Chromium	EPA-6020	U	MG/KG	0.20	01/20/2022	EBS
Copper	EPA-6020	U	MG/KG	0.20	01/20/2022	EBS
Lead	EPA-6020	U	MG/KG	0.10	01/20/2022	EBS
Selenium	EPA-6020	U	MG/KG	1.0	01/20/2022	EBS
Silver	EPA-6020	U	MG/KG	0.10	01/20/2022	EBS
Zinc	EPA-6020	U	MG/KG	0.88	01/20/2022	EBS

U - Analyte analyzed for but not detected at level above reporting limit.

ADDRESS 8620 Holly Drive, Suite 100, Everett, WA 98208 | PHONE 425-356-2600 | FAX 425-356-2626
ALS Group USA, Corp dba ALS Environmental

Environmental www.alsglobal.com
RIGHT SOLUTIONS RIGHT PARTNER

ALS Environmental

CERTIFICATE OF ANALYSIS

CLIENT: Landau Associates, Inc.
155 NE 100th St, Ste 302
Seattle, WA 98125

CLIENT CONTACT: Dylan Frazer
CLIENT PROJECT: POE - MIE / 121049.080.083

DATE: 1/28/2022
ALS SDG#: EV22010079
WDOE ACCREDITATION: C601

LABORATORY CONTROL SAMPLE RESULTS

ALS Test Batch ID: 174726 - Soil by EPA-8021

SPIKED COMPOUND	METHOD	%REC	RPD	QUAL	LIMITS MIN	LIMITS MAX	ANALYSIS DATE	ANALYSIS BY
Benzene - BS	EPA-8021	**99.3**			67.7	124	01/21/2022	JMK
Benzene - BSD	EPA-8021	**100**	**1**		67.7	124	01/21/2022	JMK
Toluene - BS	EPA-8021	**102**			71	123	01/21/2022	JMK
Toluene - BSD	EPA-8021	**103**	**1**		71	123	01/21/2022	JMK
Ethylbenzene - BS	EPA-8021	**102**			69.8	117	01/21/2022	JMK
Ethylbenzene - BSD	EPA-8021	**102**	**1**		69.8	117	01/21/2022	JMK
Xylenes - BS	EPA-8021	**103**			70	119	01/21/2022	JMK
Xylenes - BSD	EPA-8021	**103**	**1**		70	119	01/21/2022	JMK

ALS Test Batch ID: 174656 - Soil by NWTPH-DX

SPIKED COMPOUND	METHOD	%REC	RPD	QUAL	LIMITS MIN	LIMITS MAX	ANALYSIS DATE	ANALYSIS BY
TPH-Diesel Range (C12-C24) - BS	NWTPH-DX	**102**			75.5	122.1	01/20/2022	JNF
TPH-Diesel Range (C12-C24) - BSD	NWTPH-DX	**102**	**1**		75.5	122.1	01/20/2022	JNF

ALS Test Batch ID: 174710 - Soil by EPA-8260

SPIKED COMPOUND	METHOD	%REC	RPD	QUAL	LIMITS MIN	LIMITS MAX	ANALYSIS DATE	ANALYSIS BY
Dichlorodifluoromethane - BS	EPA-8260	**114**			50	150	01/21/2022	DLC
Dichlorodifluoromethane - BSD	EPA-8260	**101**	**12**		50	150	01/21/2022	DLC
Chloromethane - BS	EPA-8260	**122**			50	150	01/21/2022	DLC
Chloromethane - BSD	EPA-8260	**120**	**2**		50	150	01/21/2022	DLC
Vinyl Chloride - BS	EPA-8260	**124**			50	150	01/21/2022	DLC
Vinyl Chloride - BSD	EPA-8260	**124**	**0**		50	150	01/21/2022	DLC
Bromomethane - BS	EPA-8260	**124**			50	150	01/21/2022	DLC
Bromomethane - BSD	EPA-8260	**119**	**4**		50	150	01/21/2022	DLC
Chloroethane - BS	EPA-8260	**118**			50	150	01/21/2022	DLC
Chloroethane - BSD	EPA-8260	**115**	**3**		50	150	01/21/2022	DLC
Carbon Tetrachloride - BS	EPA-8260	**94.8**			50	150	01/21/2022	DLC
Carbon Tetrachloride - BSD	EPA-8260	**87.7**	**8**		50	150	01/21/2022	DLC
Trichlorofluoromethane - BS	EPA-8260	**117**			50	150	01/21/2022	DLC
Trichlorofluoromethane - BSD	EPA-8260	**114**	**3**		50	150	01/21/2022	DLC
Carbon Disulfide - BS	EPA-8260	**121**			50	150	01/21/2022	DLC
Carbon Disulfide - BSD	EPA-8260	**117**	**3**		50	150	01/21/2022	DLC
Acetone - BS	EPA-8260	**131**			50	150	01/21/2022	DLC
Acetone - BSD	EPA-8260	**123**	**6**		50	150	01/21/2022	DLC
1,1-Dichloroethene - BS	EPA-8260	**122**			70	130	01/21/2022	DLC
1,1-Dichloroethene - BSD	EPA-8260	**117**	**4**		70	130	01/21/2022	DLC
Methylene Chloride - BS	EPA-8260	**108**			50	150	01/21/2022	DLC

ADDRESS 8620 Holly Drive, Suite 100, Everett, WA 98208 | PHONE 425-356-2600 | FAX 425-356-2626
ALS Group USA, Corp dba ALS Environmental

Environmental www.alsglobal.com
RIGHT SOLUTIONS RIGHT PARTNER

ALS Environmental

CERTIFICATE OF ANALYSIS

CLIENT: Landau Associates, Inc.
155 NE 100th St, Ste 302
Seattle, WA 98125

CLIENT CONTACT: Dylan Frazer
CLIENT PROJECT: POE - MIE / 121049.080.083

DATE: 1/28/2022
ALS SDG#: EV22010079
WDOE ACCREDITATION: C601

LABORATORY CONTROL SAMPLE RESULTS

SPIKED COMPOUND	METHOD	%REC	RPD	QUAL	LIMITS MIN	LIMITS MAX	ANALYSIS DATE	ANALYSIS BY
Methylene Chloride - BSD	EPA-8260	**99.1**	**8**		50	150	01/21/2022	DLC
Acrylonitrile - BS	EPA-8260	**114**			50	150	01/21/2022	DLC
Acrylonitrile - BSD	EPA-8260	**110**	**3**		50	150	01/21/2022	DLC
Methyl T-Butyl Ether - BS	EPA-8260	**114**			50	150	01/21/2022	DLC
Methyl T-Butyl Ether - BSD	EPA-8260	**111**	**3**		50	150	01/21/2022	DLC
Trans-1,2-Dichloroethene - BS	EPA-8260	**100**			50	150	01/21/2022	DLC
Trans-1,2-Dichloroethene - BSD	EPA-8260	**96.8**	**4**		50	150	01/21/2022	DLC
1,1-Dichloroethane - BS	EPA-8260	**103**			50	150	01/21/2022	DLC
1,1-Dichloroethane - BSD	EPA-8260	**108**	**5**		50	150	01/21/2022	DLC
2-Butanone - BS	EPA-8260	**134**			50	150	01/21/2022	DLC
2-Butanone - BSD	EPA-8260	**125**	**7**		50	150	01/21/2022	DLC
Cis-1,2-Dichloroethene - BS	EPA-8260	**105**			50	150	01/21/2022	DLC
Cis-1,2-Dichloroethene - BSD	EPA-8260	**107**	**2**		50	150	01/21/2022	DLC
2,2-Dichloropropane - BS	EPA-8260	**112**			50	150	01/21/2022	DLC
2,2-Dichloropropane - BSD	EPA-8260	**107**	**5**		50	150	01/21/2022	DLC
Bromochloromethane - BS	EPA-8260	**115**			50	150	01/21/2022	DLC
Bromochloromethane - BSD	EPA-8260	**110**	**4**		50	150	01/21/2022	DLC
Chloroform - BS	EPA-8260	**103**			50	150	01/21/2022	DLC
Chloroform - BSD	EPA-8260	**100**	**3**		50	150	01/21/2022	DLC
1,1,1-Trichloroethane - BS	EPA-8260	**106**			50	150	01/21/2022	DLC
1,1,1-Trichloroethane - BSD	EPA-8260	**105**	**0**		50	150	01/21/2022	DLC
1,1-Dichloropropene - BS	EPA-8260	**107**			50	150	01/21/2022	DLC
1,1-Dichloropropene - BSD	EPA-8260	**108**	**1**		50	150	01/21/2022	DLC
1,2-Dichloroethane - BS	EPA-8260	**120**			50	150	01/21/2022	DLC
1,2-Dichloroethane - BSD	EPA-8260	**118**	**1**		50	150	01/21/2022	DLC
Benzene - BS	EPA-8260	**101**			75	138	01/21/2022	DLC
Benzene - BSD	EPA-8260	**106**	**5**		75	138	01/21/2022	DLC
Trichloroethene - BS	EPA-8260	**111**			75	136	01/21/2022	DLC
Trichloroethene - BSD	EPA-8260	**114**	**2**		75	136	01/21/2022	DLC
1,2-Dichloropropane - BS	EPA-8260	**115**			50	150	01/21/2022	DLC
1,2-Dichloropropane - BSD	EPA-8260	**114**	**0**		50	150	01/21/2022	DLC
Dibromomethane - BS	EPA-8260	**115**			50	150	01/21/2022	DLC
Dibromomethane - BSD	EPA-8260	**121**	**5**		50	150	01/21/2022	DLC
Bromodichloromethane - BS	EPA-8260	**112**			50	150	01/21/2022	DLC
Bromodichloromethane - BSD	EPA-8260	**115**	**3**		50	150	01/21/2022	DLC
Trans-1,3-Dichloropropene - BS	EPA-8260	**112**			50	150	01/21/2022	DLC
Trans-1,3-Dichloropropene - BSD	EPA-8260	**110**	**1**		50	150	01/21/2022	DLC
4-Methyl-2-Pentanone - BS	EPA-8260	**105**			50	150	01/21/2022	DLC
4-Methyl-2-Pentanone - BSD	EPA-8260	**104**	**1**		50	150	01/21/2022	DLC
Toluene - BS	EPA-8260	**101**			71.6	122.1	01/21/2022	DLC

ADDRESS 8620 Holly Drive, Suite 100, Everett, WA 98208 | PHONE 425-356-2600 | FAX 425-356-2626
ALS Group USA, Corp dba ALS Environmental

Environmental www.alsglobal.com
RIGHT SOLUTIONS RIGHT PARTNER

ALS Environmental

CERTIFICATE OF ANALYSIS

CLIENT: Landau Associates, Inc.
155 NE 100th St, Ste 302
Seattle, WA 98125

DATE: 1/28/2022
ALS SDG#: EV22010079
WDOE ACCREDITATION: C601

CLIENT CONTACT: Dylan Frazer
CLIENT PROJECT: POE - MIE / 121049.080.083

LABORATORY CONTROL SAMPLE RESULTS

SPIKED COMPOUND	METHOD	%REC	RPD	QUAL	LIMITS MIN	LIMITS MAX	ANALYSIS DATE	ANALYSIS BY
Toluene - BSD	EPA-8260	**106**	**5**		71.6	122.1	01/21/2022	DLC
Cis-1,3-Dichloropropene - BS	EPA-8260	**115**			50	150	01/21/2022	DLC
Cis-1,3-Dichloropropene - BSD	EPA-8260	**118**	**2**		50	150	01/21/2022	DLC
1,1,2-Trichloroethane - BS	EPA-8260	**108**			50	150	01/21/2022	DLC
1,1,2-Trichloroethane - BSD	EPA-8260	**108**	**0**		50	150	01/21/2022	DLC
2-Hexanone - BS	EPA-8260	**100**			50	150	01/21/2022	DLC
2-Hexanone - BSD	EPA-8260	**96.9**	**3**		50	150	01/21/2022	DLC
1,3-Dichloropropane - BS	EPA-8260	**105**			50	150	01/21/2022	DLC
1,3-Dichloropropane - BSD	EPA-8260	**105**	**1**		50	150	01/21/2022	DLC
Tetrachloroethylene - BS	EPA-8260	**94.1**			50	150	01/21/2022	DLC
Tetrachloroethylene - BSD	EPA-8260	**95.9**	**2**		50	150	01/21/2022	DLC
Dibromochloromethane - BS	EPA-8260	**90.9**			50	150	01/21/2022	DLC
Dibromochloromethane - BSD	EPA-8260	**89.6**	**1**		50	150	01/21/2022	DLC
1,2-Dibromoethane - BS	EPA-8260	**94.5**			50	150	01/21/2022	DLC
1,2-Dibromoethane - BSD	EPA-8260	**95.8**	**1**		50	150	01/21/2022	DLC
Chlorobenzene - BS	EPA-8260	**98.3**			79	128	01/21/2022	DLC
Chlorobenzene - BSD	EPA-8260	**99.9**	**2**		79	128	01/21/2022	DLC
1,1,1,2-Tetrachloroethane - BS	EPA-8260	**97.7**			50	150	01/21/2022	DLC
1,1,1,2-Tetrachloroethane - BSD	EPA-8260	**102**	**4**		50	150	01/21/2022	DLC
Ethylbenzene - BS	EPA-8260	**98.8**			50	150	01/21/2022	DLC
Ethylbenzene - BSD	EPA-8260	**102**	**3**		50	150	01/21/2022	DLC
m,p-Xylene - BS	EPA-8260	**95.6**			50	150	01/21/2022	DLC
m,p-Xylene - BSD	EPA-8260	**97.9**	**2**		50	150	01/21/2022	DLC
Styrene - BS	EPA-8260	**94.3**			50	150	01/21/2022	DLC
Styrene - BSD	EPA-8260	**96.3**	**2**		50	150	01/21/2022	DLC
o-Xylene - BS	EPA-8260	**95.7**			50	150	01/21/2022	DLC
o-Xylene - BSD	EPA-8260	**97.9**	**2**		50	150	01/21/2022	DLC
Bromoform - BS	EPA-8260	**92.3**			50	150	01/21/2022	DLC
Bromoform - BSD	EPA-8260	**92.3**	**0**		50	150	01/21/2022	DLC
Isopropylbenzene - BS	EPA-8260	**92.9**			50	150	01/21/2022	DLC
Isopropylbenzene - BSD	EPA-8260	**96.3**	**4**		50	150	01/21/2022	DLC
1,1,2,2-Tetrachloroethane - BS	EPA-8260	**108**			50	150	01/21/2022	DLC
1,1,2,2-Tetrachloroethane - BSD	EPA-8260	**106**	**2**		50	150	01/21/2022	DLC
1,2,3-Trichloropropane - BS	EPA-8260	**107**			50	150	01/21/2022	DLC
1,2,3-Trichloropropane - BSD	EPA-8260	**109**	**2**		50	150	01/21/2022	DLC
Bromobenzene - BS	EPA-8260	**100**			50	150	01/21/2022	DLC
Bromobenzene - BSD	EPA-8260	**105**	**5**		50	150	01/21/2022	DLC
N-Propyl Benzene - BS	EPA-8260	**100**			50	150	01/21/2022	DLC
N-Propyl Benzene - BSD	EPA-8260	**104**	**4**		50	150	01/21/2022	DLC
2-Chlorotoluene - BS	EPA-8260	**102**			50	150	01/21/2022	DLC

ADDRESS 8620 Holly Drive, Suite 100, Everett, WA 98208 | PHONE 425-356-2600 | FAX 425-356-2626
ALS Group USA, Corp dba ALS Environmental

Environmental www.alsglobal.com
RIGHT SOLUTIONS RIGHT PARTNER

ALS Environmental

CERTIFICATE OF ANALYSIS

CLIENT: Landau Associates, Inc.
155 NE 100th St, Ste 302
Seattle, WA 98125

DATE: 1/28/2022
ALS SDG#: EV22010079
WDOE ACCREDITATION: C601

CLIENT CONTACT: Dylan Frazer
CLIENT PROJECT: POE - MIE / 121049.080.083

LABORATORY CONTROL SAMPLE RESULTS

SPIKED COMPOUND	METHOD	%REC	RPD	QUAL	LIMITS MIN	LIMITS MAX	ANALYSIS DATE	ANALYSIS BY
2-Chlorotoluene - BSD	EPA-8260	**105**	**2**		50	150	01/21/2022	DLC
1,3,5-Trimethylbenzene - BS	EPA-8260	**102**			50	150	01/21/2022	DLC
1,3,5-Trimethylbenzene - BSD	EPA-8260	**105**	**3**		50	150	01/21/2022	DLC
4-Chlorotoluene - BS	EPA-8260	**103**			50	150	01/21/2022	DLC
4-Chlorotoluene - BSD	EPA-8260	**107**	**4**		50	150	01/21/2022	DLC
T-Butyl Benzene - BS	EPA-8260	**101**			50	150	01/21/2022	DLC
T-Butyl Benzene - BSD	EPA-8260	**103**	**2**		50	150	01/21/2022	DLC
1,2,4-Trimethylbenzene - BS	EPA-8260	**103**			50	150	01/21/2022	DLC
1,2,4-Trimethylbenzene - BSD	EPA-8260	**105**	**2**		50	150	01/21/2022	DLC
S-Butyl Benzene - BS	EPA-8260	**101**			50	150	01/21/2022	DLC
S-Butyl Benzene - BSD	EPA-8260	**104**	**2**		50	150	01/21/2022	DLC
P-Isopropyltoluene - BS	EPA-8260	**99.9**			50	150	01/21/2022	DLC
P-Isopropyltoluene - BSD	EPA-8260	**101**	**1**		50	150	01/21/2022	DLC
1,3-Dichlorobenzene - BS	EPA-8260	**100**			50	150	01/21/2022	DLC
1,3-Dichlorobenzene - BSD	EPA-8260	**104**	**3**		50	150	01/21/2022	DLC
1,4-Dichlorobenzene - BS	EPA-8260	**99.6**			50	150	01/21/2022	DLC
1,4-Dichlorobenzene - BSD	EPA-8260	**102**	**3**		50	150	01/21/2022	DLC
N-Butylbenzene - BS	EPA-8260	**103**			50	150	01/21/2022	DLC
N-Butylbenzene - BSD	EPA-8260	**106**	**3**		50	150	01/21/2022	DLC
1,2-Dichlorobenzene - BS	EPA-8260	**99.9**			50	150	01/21/2022	DLC
1,2-Dichlorobenzene - BSD	EPA-8260	**99.4**	**0**		50	150	01/21/2022	DLC
1,2-Dibromo 3-Chloropropane - BS	EPA-8260	**120**			50	150	01/21/2022	DLC
1,2-Dibromo 3-Chloropropane - BSD	EPA-8260	**120**	**0**		50	150	01/21/2022	DLC
1,2,4-Trichlorobenzene - BS	EPA-8260	**103**			50	150	01/21/2022	DLC
1,2,4-Trichlorobenzene - BSD	EPA-8260	**104**	**1**		50	150	01/21/2022	DLC
Hexachlorobutadiene - BS	EPA-8260	**103**			50	150	01/21/2022	DLC
Hexachlorobutadiene - BSD	EPA-8260	**108**	**5**		50	150	01/21/2022	DLC
Naphthalene - BS	EPA-8260	**110**			50	150	01/21/2022	DLC
Naphthalene - BSD	EPA-8260	**116**	**5**		50	150	01/21/2022	DLC
1,2,3-Trichlorobenzene - BS	EPA-8260	**100**			50	150	01/21/2022	DLC
1,2,3-Trichlorobenzene - BSD	EPA-8260	**111**	**10**		50	150	01/21/2022	DLC

ALS Test Batch ID: 174774 - Soil by EPA-8270

SPIKED COMPOUND	METHOD	%REC	RPD	QUAL	LIMITS MIN	LIMITS MAX	ANALYSIS DATE	ANALYSIS BY
Pyridine - BS	EPA-8270	**110**			20	150	01/26/2022	JMK
Pyridine - BSD	EPA-8270	**115**	**4**		20	150	01/26/2022	JMK
N-Nitrosodimethylamine - BS	EPA-8270	**81.1**			20	150	01/26/2022	JMK
N-Nitrosodimethylamine - BSD	EPA-8270	**85.5**	**5**		20	150	01/26/2022	JMK
Phenol - BS	EPA-8270	**111**			36.1	131	01/26/2022	JMK

ADDRESS 8620 Holly Drive, Suite 100, Everett, WA 98208 | PHONE 425-356-2600 | FAX 425-356-2626
ALS Group USA, Corp dba ALS Environmental

Environmental www.alsglobal.com
RIGHT SOLUTIONS RIGHT PARTNER

ALS Environmental

CERTIFICATE OF ANALYSIS

CLIENT: Landau Associates, Inc.
155 NE 100th St, Ste 302
Seattle, WA 98125

DATE: 1/28/2022
ALS SDG#: EV22010079
WDOE ACCREDITATION: C601

CLIENT CONTACT: Dylan Frazer
CLIENT PROJECT: POE - MIE / 121049.080.083

LABORATORY CONTROL SAMPLE RESULTS

SPIKED COMPOUND	METHOD	%REC	RPD	QUAL	LIMITS MIN	LIMITS MAX	ANALYSIS DATE	ANALYSIS BY
Phenol - BSD	EPA-8270	**117**	**5**		36.1	131	01/26/2022	JMK
Aniline - BS	EPA-8270	**1840**		SQ1	20	150	01/26/2022	JMK
Aniline - BSD	EPA-8270	**2440**	**28**	SQ1	20	150	01/26/2022	JMK
Bis(2-Chloroethyl)Ether - BS	EPA-8270	**122**			20	150	01/26/2022	JMK
Bis(2-Chloroethyl)Ether - BSD	EPA-8270	**135**	**10**		20	150	01/26/2022	JMK
2-Chlorophenol - BS	EPA-8270	**99.7**			59.9	111	01/26/2022	JMK
2-Chlorophenol - BSD	EPA-8270	**104**	**4**		59.9	111	01/26/2022	JMK
1,3-Dichlorobenzene - BS	EPA-8270	**79.6**			20	150	01/26/2022	JMK
1,3-Dichlorobenzene - BSD	EPA-8270	**85.0**	**7**		20	150	01/26/2022	JMK
1,4-Dichlorobenzene - BS	EPA-8270	**102**			44.3	122	01/26/2022	JMK
1,4-Dichlorobenzene - BSD	EPA-8270	**109**	**7**		44.3	122	01/26/2022	JMK
Benzyl Alcohol - BS	EPA-8270	**112**			20	150	01/26/2022	JMK
Benzyl Alcohol - BSD	EPA-8270	**119**	**6**		20	150	01/26/2022	JMK
1,2-Dichlorobenzene - BS	EPA-8270	**93.9**			20	150	01/26/2022	JMK
1,2-Dichlorobenzene - BSD	EPA-8270	**99.1**	**5**		20	150	01/26/2022	JMK
2-Methylphenol - BS	EPA-8270	**96.8**			20	150	01/26/2022	JMK
2-Methylphenol - BSD	EPA-8270	**101**	**5**		20	150	01/26/2022	JMK
Bis(2-Chloroisopropyl)Ether - BS	EPA-8270	**108**			20	150	01/26/2022	JMK
Bis(2-Chloroisopropyl)Ether - BSD	EPA-8270	**113**	**5**		20	150	01/26/2022	JMK
3&4-Methylphenol - BS	EPA-8270	**102**			20	150	01/26/2022	JMK
3&4-Methylphenol - BSD	EPA-8270	**106**	**3**		20	150	01/26/2022	JMK
N-Nitroso-Di-N-Propylamine - BS	EPA-8270	**77.0**			31.6	134	01/26/2022	JMK
N-Nitroso-Di-N-Propylamine - BSD	EPA-8270	**78.9**	**2**		31.6	134	01/26/2022	JMK
Hexachloroethane - BS	EPA-8270	**87.4**			20	150	01/26/2022	JMK
Hexachloroethane - BSD	EPA-8270	**94.6**	**8**		20	150	01/26/2022	JMK
Nitrobenzene - BS	EPA-8270	**99.9**			20	150	01/26/2022	JMK
Nitrobenzene - BSD	EPA-8270	**106**	**6**		20	150	01/26/2022	JMK
Isophorone - BS	EPA-8270	**92.0**			20	150	01/26/2022	JMK
Isophorone - BSD	EPA-8270	**95.1**	**3**		20	150	01/26/2022	JMK
2-Nitrophenol - BS	EPA-8270	**102**			20	150	01/26/2022	JMK
2-Nitrophenol - BSD	EPA-8270	**109**	**6**		20	150	01/26/2022	JMK
2,4-Dimethylphenol - BS	EPA-8270	**74.7**			20	150	01/26/2022	JMK
2,4-Dimethylphenol - BSD	EPA-8270	**79.4**	**6**		20	150	01/26/2022	JMK
Bis(2-Chloroethoxy)Methane - BS	EPA-8270	**107**			20	150	01/26/2022	JMK
Bis(2-Chloroethoxy)Methane - BSD	EPA-8270	**111**	**4**		20	150	01/26/2022	JMK
2,4-Dichlorophenol - BS	EPA-8270	**111**			20	150	01/26/2022	JMK
2,4-Dichlorophenol - BSD	EPA-8270	**116**	**4**		20	150	01/26/2022	JMK
1,2,4-Trichlorobenzene - BS	EPA-8270	**98.1**			44.6	122	01/26/2022	JMK
1,2,4-Trichlorobenzene - BSD	EPA-8270	**102**	**4**		44.6	122	01/26/2022	JMK
Naphthalene - BS	EPA-8270	**103**			20	150	01/26/2022	JMK

ADDRESS 8620 Holly Drive, Suite 100, Everett, WA 98208 | PHONE 425-356-2600 | FAX 425-356-2626
ALS Group USA, Corp dba ALS Environmental

Environmental www.alsglobal.com
RIGHT SOLUTIONS RIGHT PARTNER

ALS Environmental

CERTIFICATE OF ANALYSIS

CLIENT: Landau Associates, Inc.
155 NE 100th St, Ste 302
Seattle, WA 98125

DATE: 1/28/2022
ALS SDG#: EV22010079
WDOE ACCREDITATION: C601

CLIENT CONTACT: Dylan Frazer
CLIENT PROJECT: POE - MIE / 121049.080.083

LABORATORY CONTROL SAMPLE RESULTS

SPIKED COMPOUND	METHOD	%REC	RPD	QUAL	LIMITS MIN	LIMITS MAX	ANALYSIS DATE	ANALYSIS BY
Naphthalene - BSD	EPA-8270	**108**	**5**		20	150	01/26/2022	JMK
4-Chloroaniline - BS	EPA-8270	**1650**		SQ1	20	150	01/26/2022	JMK
4-Chloroaniline - BSD	EPA-8270	**2110**	**25**	SQ1	20	150	01/26/2022	JMK
Hexachlorobutadiene - BS	EPA-8270	**93.6**			20	150	01/26/2022	JMK
Hexachlorobutadiene - BSD	EPA-8270	**98.2**	**5**		20	150	01/26/2022	JMK
4-Chloro-3-Methylphenol - BS	EPA-8270	**102**			49.2	135	01/26/2022	JMK
4-Chloro-3-Methylphenol - BSD	EPA-8270	**105**	**3**		49.2	135	01/26/2022	JMK
2-Methylnaphthalene - BS	EPA-8270	**103**			20	150	01/26/2022	JMK
2-Methylnaphthalene - BSD	EPA-8270	**107**	**4**		20	150	01/26/2022	JMK
1-Methylnaphthalene - BS	EPA-8270	**106**			20	150	01/26/2022	JMK
1-Methylnaphthalene - BSD	EPA-8270	**111**	**4**		20	150	01/26/2022	JMK
Hexachlorocyclopentadiene - BS	EPA-8270	**84.9**			20	150	01/26/2022	JMK
Hexachlorocyclopentadiene - BSD	EPA-8270	**95.5**	**12**		20	150	01/26/2022	JMK
2,4,6-Trichlorophenol - BS	EPA-8270	**102**			20	150	01/26/2022	JMK
2,4,6-Trichlorophenol - BSD	EPA-8270	**107**	**4**		20	150	01/26/2022	JMK
2,4,5-Trichlorophenol - BS	EPA-8270	**103**			20	150	01/26/2022	JMK
2,4,5-Trichlorophenol - BSD	EPA-8270	**105**	**2**		20	150	01/26/2022	JMK
2-Chloronaphthalene - BS	EPA-8270	**104**			20	150	01/26/2022	JMK
2-Chloronaphthalene - BSD	EPA-8270	**108**	**4**		20	150	01/26/2022	JMK
2-Nitroaniline - BS	EPA-8270	**286**		SQ1	20	150	01/26/2022	JMK
2-Nitroaniline - BSD	EPA-8270	**303**	**6**	SQ1	20	150	01/26/2022	JMK
Acenaphthylene - BS	EPA-8270	**103**			20	150	01/26/2022	JMK
Acenaphthylene - BSD	EPA-8270	**108**	**5**		20	150	01/26/2022	JMK
Dimethylphthalate - BS	EPA-8270	**110**			20	150	01/26/2022	JMK
Dimethylphthalate - BSD	EPA-8270	**113**	**3**		20	150	01/26/2022	JMK
2,6-Dinitrotoluene - BS	EPA-8270	**115**			20	150	01/26/2022	JMK
2,6-Dinitrotoluene - BSD	EPA-8270	**119**	**3**		20	150	01/26/2022	JMK
Acenaphthene - BS	EPA-8270	**106**			49.3	117	01/26/2022	JMK
Acenaphthene - BSD	EPA-8270	**109**	**3**		49.3	117	01/26/2022	JMK
3-Nitroaniline - BS	EPA-8270	**286**		SQ1	20	150	01/26/2022	JMK
3-Nitroaniline - BSD	EPA-8270	**303**	**6**	SQ1	20	150	01/26/2022	JMK
2,4-Dinitrophenol - BS	EPA-8270	**104**			20	150	01/26/2022	JMK
2,4-Dinitrophenol - BSD	EPA-8270	**113**	**8**		20	150	01/26/2022	JMK
4-Nitrophenol - BS	EPA-8270	**125**			29.8	137	01/26/2022	JMK
4-Nitrophenol - BSD	EPA-8270	**131**	**5**		29.8	137	01/26/2022	JMK
Dibenzofuran - BS	EPA-8270	**107**			20	150	01/26/2022	JMK
Dibenzofuran - BSD	EPA-8270	**111**	**3**		20	150	01/26/2022	JMK
2,4-Dinitrotoluene - BS	EPA-8270	**106**			55.3	130	01/26/2022	JMK
2,4-Dinitrotoluene - BSD	EPA-8270	**110**	**4**		55.3	130	01/26/2022	JMK
2,3,4,6-Tetrachlorophenol - BS	EPA-8270	**119**			20	150	01/26/2022	JMK

ADDRESS 8620 Holly Drive, Suite 100, Everett, WA 98208 | PHONE 425-356-2600 | FAX 425-356-2626
ALS Group USA, Corp dba ALS Environmental

Environmental www.alsglobal.com
RIGHT SOLUTIONS RIGHT PARTNER

ALS Environmental

CERTIFICATE OF ANALYSIS

CLIENT: Landau Associates, Inc.
155 NE 100th St, Ste 302
Seattle, WA 98125

DATE: 1/28/2022
ALS SDG#: EV22010079
WDOE ACCREDITATION: C601

CLIENT CONTACT: Dylan Frazer
CLIENT PROJECT: POE - MIE / 121049.080.083

LABORATORY CONTROL SAMPLE RESULTS

SPIKED COMPOUND	METHOD	%REC	RPD	QUAL	LIMITS MIN	LIMITS MAX	ANALYSIS DATE	ANALYSIS BY
2,3,4,6-Tetrachlorophenol - BSD	EPA-8270	**123**	**4**		20	150	01/26/2022	JMK
Diethylphthalate - BS	EPA-8270	**116**			20	150	01/26/2022	JMK
Diethylphthalate - BSD	EPA-8270	**121**	**4**		20	150	01/26/2022	JMK
Fluorene - BS	EPA-8270	**111**			20	150	01/26/2022	JMK
Fluorene - BSD	EPA-8270	**114**	**3**		20	150	01/26/2022	JMK
4-Chlorophenyl-Phenylether - BS	EPA-8270	**106**			20	150	01/26/2022	JMK
4-Chlorophenyl-Phenylether - BSD	EPA-8270	**109**	**3**		20	150	01/26/2022	JMK
4-Nitroaniline - BS	EPA-8270	**317**		SQ1	20	150	01/26/2022	JMK
4-Nitroaniline - BSD	EPA-8270	**335**	**5**	SQ1	20	150	01/26/2022	JMK
4,6-Dinitro-2-Methylphenol - BS	EPA-8270	**98.2**			20	150	01/26/2022	JMK
4,6-Dinitro-2-Methylphenol - BSD	EPA-8270	**111**	**12**		20	150	01/26/2022	JMK
Azobenzene - BS	EPA-8270	**108**			20	150	01/26/2022	JMK
Azobenzene - BSD	EPA-8270	**114**	**6**		20	150	01/26/2022	JMK
4-Bromophenyl-Phenylether - BS	EPA-8270	**103**			20	150	01/26/2022	JMK
4-Bromophenyl-Phenylether - BSD	EPA-8270	**108**	**5**		20	150	01/26/2022	JMK
Hexachlorobenzene - BS	EPA-8270	**105**			20	150	01/26/2022	JMK
Hexachlorobenzene - BSD	EPA-8270	**110**	**4**		20	150	01/26/2022	JMK
Pentachlorophenol - BS	EPA-8270	**97.2**			41.3	113	01/26/2022	JMK
Pentachlorophenol - BSD	EPA-8270	**107**	**10**		41.3	113	01/26/2022	JMK
Phenanthrene - BS	EPA-8270	**107**			20	150	01/26/2022	JMK
Phenanthrene - BSD	EPA-8270	**113**	**5**		20	150	01/26/2022	JMK
Anthracene - BS	EPA-8270	**104**			20	150	01/26/2022	JMK
Anthracene - BSD	EPA-8270	**112**	**7**		20	150	01/26/2022	JMK
Carbazole - BS	EPA-8270	**133**			20	150	01/26/2022	JMK
Carbazole - BSD	EPA-8270	**135**	**1**		20	150	01/26/2022	JMK
Di-N-Butylphthalate - BS	EPA-8270	**117**			20	150	01/26/2022	JMK
Di-N-Butylphthalate - BSD	EPA-8270	**123**	**5**		20	150	01/26/2022	JMK
Fluoranthene - BS	EPA-8270	**116**			20	150	01/26/2022	JMK
Fluoranthene - BSD	EPA-8270	**122**	**6**		20	150	01/26/2022	JMK
Pyrene - BS	EPA-8270	**112**			57.4	145	01/26/2022	JMK
Pyrene - BSD	EPA-8270	**116**	**3**		57.4	145	01/26/2022	JMK
Butylbenzylphthalate - BS	EPA-8270	**115**			20	150	01/26/2022	JMK
Butylbenzylphthalate - BSD	EPA-8270	**121**	**5**		20	150	01/26/2022	JMK
Benzo[A]Anthracene - BS	EPA-8270	**110**			20	150	01/26/2022	JMK
Benzo[A]Anthracene - BSD	EPA-8270	**116**	**6**		20	150	01/26/2022	JMK
Chrysene - BS	EPA-8270	**87.9**			20	150	01/26/2022	JMK
Chrysene - BSD	EPA-8270	**90.5**	**3**		20	150	01/26/2022	JMK
Bis(2-Ethylhexyl)Phthalate - BS	EPA-8270	**119**			20	150	01/26/2022	JMK
Bis(2-Ethylhexyl)Phthalate - BSD	EPA-8270	**123**	**3**		20	150	01/26/2022	JMK
Di-N-Octylphthalate - BS	EPA-8270	**116**			20	150	01/26/2022	JMK

ADDRESS 8620 Holly Drive, Suite 100, Everett, WA 98208 | PHONE 425-356-2600 | FAX 425-356-2626
ALS Group USA, Corp dba ALS Environmental

Environmental www.alsglobal.com
RIGHT SOLUTIONS RIGHT PARTNER

ALS Environmental

CERTIFICATE OF ANALYSIS

CLIENT: Landau Associates, Inc.
155 NE 100th St, Ste 302
Seattle, WA 98125
CLIENT CONTACT: Dylan Frazer
CLIENT PROJECT: POE - MIE / 121049.080.083

DATE: 1/28/2022
ALS SDG#: EV22010079
WDOE ACCREDITATION: C601

LABORATORY CONTROL SAMPLE RESULTS

SPIKED COMPOUND	METHOD	%REC	RPD	QUAL	LIMITS MIN	LIMITS MAX	ANALYSIS DATE	ANALYSIS BY
Di-N-Octylphthalate - BSD	EPA-8270	**121**	**4**		20	150	01/26/2022	JMK
Benzo[B]Fluoranthene - BS	EPA-8270	**105**			20	150	01/26/2022	JMK
Benzo[B]Fluoranthene - BSD	EPA-8270	**107**	**2**		20	150	01/26/2022	JMK
Benzo[K]Fluoranthene - BS	EPA-8270	**112**			20	150	01/26/2022	JMK
Benzo[K]Fluoranthene - BSD	EPA-8270	**116**	**3**		20	150	01/26/2022	JMK
Benzo[A]Pyrene - BS	EPA-8270	**103**			20	150	01/26/2022	JMK
Benzo[A]Pyrene - BSD	EPA-8270	**108**	**5**		20	150	01/26/2022	JMK
Indeno[1,2,3-Cd]Pyrene - BS	EPA-8270	**97.9**			20	150	01/26/2022	JMK
Indeno[1,2,3-Cd]Pyrene - BSD	EPA-8270	**100**	**2**		20	150	01/26/2022	JMK
Dibenz[A,H]Anthracene - BS	EPA-8270	**59.3**			20	150	01/26/2022	JMK
Dibenz[A,H]Anthracene - BSD	EPA-8270	**60.3**	**2**		20	150	01/26/2022	JMK
Benzo[G,H,I]Perylene - BS	EPA-8270	**68.7**			20	150	01/26/2022	JMK
Benzo[G,H,I]Perylene - BSD	EPA-8270	**68.8**	**0**		20	150	01/26/2022	JMK

SQ1 - Spike outside of control limits with a high bias. Associated compounds non-detect. No corrective action taken.

ALS Test Batch ID: 174808 - Soil by EPA-8082

SPIKED COMPOUND	METHOD	%REC	RPD	QUAL	LIMITS MIN	LIMITS MAX	ANALYSIS DATE	ANALYSIS BY
PCB-1016 - BS	EPA-8082	**62.1**			50	150	01/26/2022	JMK
PCB-1016 - BSD	EPA-8082	**57.5**	**8**		50	150	01/26/2022	JMK
PCB-1260 - BS	EPA-8082	**73.1**			50	150	01/26/2022	JMK
PCB-1260 - BSD	EPA-8082	**69.1**	**6**		50	150	01/26/2022	JMK

ALS Test Batch ID: R401195 - Soil by EPA-300.0M

SPIKED COMPOUND	METHOD	%REC	RPD	QUAL	LIMITS MIN	LIMITS MAX	ANALYSIS DATE	ANALYSIS BY
Sulfate - BS	EPA-300.0M	**102**			80	120	01/27/2022	RAL
Sulfate - BSD	EPA-300.0M	**100**	**2**		80	120	01/27/2022	RAL

ALS Test Batch ID: R400813 - Soil by EPA-7471

SPIKED COMPOUND	METHOD	%REC	RPD	QUAL	LIMITS MIN	LIMITS MAX	ANALYSIS DATE	ANALYSIS BY
Mercury - BS	EPA-7471	**102**			81.8	117	01/21/2022	RAL
Mercury - BSD	EPA-7471	**100**	**2**		81.8	117	01/21/2022	RAL

ALS Test Batch ID: 174619 - Soil by EPA-6020

SPIKED COMPOUND	METHOD	%REC	RPD	QUAL	LIMITS MIN	LIMITS MAX	ANALYSIS DATE	ANALYSIS BY
Arsenic - BS	EPA-6020	**97.4**			80	120	01/20/2022	EBS
Arsenic - BSD	EPA-6020	**95.0**	**2**		80	120	01/20/2022	EBS

ADDRESS 8620 Holly Drive, Suite 100, Everett, WA 98208 | PHONE 425-356-2600 | FAX 425-356-2626
ALS Group USA, Corp dba ALS Environmental

Environmental www.alsglobal.com
RIGHT SOLUTIONS RIGHT PARTNER

CERTIFICATE OF ANALYSIS

CLIENT: Landau Associates, Inc.
155 NE 100th St, Ste 302
Seattle, WA 98125
CLIENT CONTACT: Dylan Frazer
CLIENT PROJECT: POE - MIE / 121049.080.083

DATE: 1/28/2022
ALS SDG#: EV22010079
WDOE ACCREDITATION: C601

LABORATORY CONTROL SAMPLE RESULTS

SPIKED COMPOUND	METHOD	%REC	RPD	QUAL	LIMITS MIN	LIMITS MAX	ANALYSIS DATE	ANALYSIS BY
Barium - BS	EPA-6020	**100**			80	120	01/20/2022	EBS
Barium - BSD	EPA-6020	**98.1**	**2**		80	120	01/20/2022	EBS
Cadmium - BS	EPA-6020	**101**			80	120	01/20/2022	EBS
Cadmium - BSD	EPA-6020	**99.7**	**2**		80	120	01/20/2022	EBS
Chromium - BS	EPA-6020	**97.4**			80	120	01/20/2022	EBS
Chromium - BSD	EPA-6020	**95.8**	**2**		80	120	01/20/2022	EBS
Copper - BS	EPA-6020	**103**			80	120	01/20/2022	EBS
Copper - BSD	EPA-6020	**102**	**0**		80	120	01/20/2022	EBS
Lead - BS	EPA-6020	**98.0**			80	120	01/20/2022	EBS
Lead - BSD	EPA-6020	**96.1**	**2**		80	120	01/20/2022	EBS
Selenium - BS	EPA-6020	**97.0**			80	120	01/20/2022	EBS
Selenium - BSD	EPA-6020	**94.9**	**2**		80	120	01/20/2022	EBS
Silver - BS	EPA-6020	**102**			80	120	01/20/2022	EBS
Silver - BSD	EPA-6020	**101**	**1**		80	120	01/20/2022	EBS
Zinc - BS	EPA-6020	**104**			80	119	01/20/2022	EBS
Zinc - BSD	EPA-6020	**102**	**2**		80	119	01/20/2022	EBS

APPROVED BY

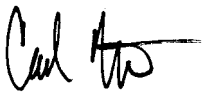

Professional Scientist

ADDRESS 8620 Holly Drive, Suite 100, Everett, WA 98208 | PHONE 425-356-2600 | FAX 425-356-2626
ALS Group USA, Corp dba ALS Environmental

Environmental www.alsglobal.com
RIGHT SOLUTIONS RIGHT PARTNER

EV2201 0079

Chain-of-Custody Record

LANDAU ASSOCIATES

- [x] North Seattle (206) 631-8660
- [ ] Tacoma (253) 926-2493
- [ ] Olympia (360) 791-3178
- [ ] Spokane (509) 327-9737
- [ ] Portland (503) 542-1080
- [ ] _____

Date 1/20/22

Page 1 of 1

Turnaround Time: Standard _____ Accelerated 5 Day

Project Name POE-MIE Project No. 121049.080.083

Project Location/Event Port of Everett, WA / Waste Disposal Profiling

Sampler's Name Devon Brandt

Project Contact Dylan Frazer

Send Results To DylanFrazer, DevonBrandt, DaniJorgensen & Elise Gronwall

Special Handling Requirements: _____

Shipment Method: Drop off

Stored on ice: (Yes) No

	Sample I.D.	Date	Time	Matrix	No. of Containers	TPH-D/O	PCBs	SVOCs	RCRA 8 Metals *	Sulfate	BTEX (8021)	VOCs	Observations/Comments
1	MIE-DP-7-220120	1/20/22	1150	Soil	4	x	x	x	x	x	x	x	
2	MIE-DP-8-220120	1/20/22	1155	Soil	4	x	x	x	x	x	x	x	
3	MIE-DP-9-220120	1/20/22	1200	Soil	4	x	x	x	x	x	x	x	

- [ ] Allow water samples to settle, collect aliquot from clear portion
- [ ] NWTPH-Dx - Acid wash cleanup
- [ ] - Silica gel cleanup
- [ ] Dissolved metal samples were field filtered

Other * + copper & zinc

Archive Extra Volume for Potential TCLP Follow up.

Relinquished by	Received by	Relinquished by	Received by
Signature	Signature	Signature	Signature
Printed Name Devon Brandt	Printed Name Shannon Huffman	Printed Name	Printed Name
Company LAI	Company ALS	Company	Company
Date 1/20/22 Time 1505	Date 1/20/22 Time 1505	Date Time	Date Time

WHITE COPY - Laboratory YELLOW COPY - Project File PINK COPY - Client Representative

10/2018

ALS ENVIRONMENTAL

Sample Receiving Checklist

Client: Landau ALS Job #: EV2201007 9

Project: POE-MIE 121049.080.083

Received Date: 1/20/2022 Received Time: 1505 By: SMH

Type of shipping container: Cooler X Box ___ Other ___

Shipped via: FedEx Ground ___ UPS ___ Mail ___ Courier ___ Hand Delivered X
FedEx Express ___

	Yes	No	N/A
Were custody seals on outside of shipping container?	___	X	___
If yes, how many? ___ Where? ___			
Custody seal date: ___ Seal name: ___			
Was Chain of Custody properly filled out (ink, signed, dated, etc.)?	X	___	___
Did all bottles have labels?	X	___	___
Did all bottle labels and tags agree with Chain of Custody?	X	___	___
Were samples received within hold time?	X	___	___
Did all bottles arrive in good condition (unbroken, etc.)?	X	___	___
Was sufficient amount of sample sent for the tests indicated?	X	___	___
Was correct preservation added to samples?	X	___	___

If no, Sample Control added preservative to the following:

Sample Number	Reagent	Analyte

3 low kits.

Were VOA vials checked for absence of air bubbles?	___	___	X
Bubbles present in sample #: ___			

Temperature of cooler upon receipt: 2.0°C on ice (Cold) Cool Ambient N/A

Explain any discrepancies: ___

Was client contacted? ___ Who was called? ___ By whom? ___ Date: ___

Outcome of call: ___

Waste Disposal Tickets

Total Haul off for month of March = 45

Billed to date = 6 EA
Total Tonnage = 190.71 TN

Use 28 Ton estimate for other loads
39 * 28 TN = 1092 TN

Total for month of March = 1282.71 TN

Everett Incl. Snohomish County --
WA ROOSEVELT , WA

2A **4857170**

Tiffany O.

014209 - Strider Construction Co. Inc.
4721 Northwest Road
Bellingham, WA 98225

3/7/22 11:16 am 3/7/22 11:45 am

2235 TOLU476859

Contract:MC-19415

BNSF230114

Scale In	GROSS WEIGHT	105,880	NET TONS	29.41	INBOUND
Scale Out	TARE WEIGHT	47,060	NET WEIGHT	58,820	INVOICE

28.00	YD	Tracking QTY	
29.41	tn	Cont Soil	Origin:Everett 100%

CHANGE:
CHECK :

Everett Incl. Snohomish County --
WA ROOSEVELT , WA

2A **4857321**

Tiffany O.

014209 - Strider Construction Co. Inc.
4721 Northwest Road
Bellingham, WA 98225

3/9/22 6:26 am 3/9/22 6:44 am

7331 GCEU432025

Contract:MC-19414

DTTX656666

Scale In	GROSS WEIGHT	110,840	NET TONS	31.60	INBOUND
Scale Out	TARE WEIGHT	47,640	NET WEIGHT	63,200	INVOICE

28.00	YD	Tracking QTY	
31.60	tn	PCS 34	Origin:Everett 100%

CHANGE:
CHECK :

Everett Incl. Snohomish County --
WA ROOSEVELT , WA

2A **4857320**

Tiffany O.

014209 - Strider Construction Co. Inc.
4721 Northwest Road
Bellingham, WA 98225

3/9/22 6:27 am 3/9/22 6:43 am
0329 GCEU426143

Contract:MC-19414

DTTX656666

Scale In	GROSS WEIGHT	118,600	NET TONS	34.21	INBOUND
Scale Out	TARE WEIGHT	50,180	NET WEIGHT	68,420	INVOICE

28.00	YD	Tracking QTY	
34.21	tn	PCS 34	Origin:Everett 100%

CHANGE:
CHECK :

Everett Incl. Snohomish County --
WA ROOSEVELT , WA

2A **4857749**

Denise B.

014209 - Strider Construction Co. Inc.
4721 Northwest Road
Bellingham, WA 98225

3/12/22 1:14 pm 3/12/22 1:31 pm
2235 GCEU430272

Contract:MC-19415

BNSF230045

Scale In	GROSS WEIGHT	114,120	NET TONS	33.02	INBOUND
Scale Out	TARE WEIGHT	48,080	NET WEIGHT	66,040	INVOICE

28.00	YD	Tracking QTY	
33.02	tn	Cont Soil	Origin:Everett 100%

CHANGE:
CHECK :

Everett Incl. Snohomish County --
WA ROOSEVELT , WA

2A **4857757**

Denise B.

014209 - Strider Construction Co. Inc.
4721 Northwest Road
Bellingham, WA 98225

3/12/22 2:34 pm 3/12/22 2:52 pm

7329 GCEU431710

Contract:MC-19415

BNSF231128

Scale In	GROSS WEIGHT	109,060	NET TONS	31.83	INBOUND
Scale Out	TARE WEIGHT	45,400	NET WEIGHT	63,660	INVOICE

28.00	YD	Tracking QTY	
31.83	tn	Cont Soil	Origin:Everett 100%

CHANGE:
CHECK :

Everett Incl. Snohomish County --
WA ROOSEVELT , WA

2A **4857781**

Denise B.

014209 - Strider Construction Co. Inc.
4721 Northwest Road
Bellingham, WA 98225

3/12/22 3:26 pm 3/12/22 3:41 pm

0329 TOLU457471

Contract:MC-19415

BNSF231117

Scale In	GROSS WEIGHT	109,460	NET TONS	30.64	INBOUND
Scale Out	TARE WEIGHT	48,180	NET WEIGHT	61,280	INVOICE

28.00	YD	Tracking QTY	
30.64	tn	Cont Soil	Origin:Everett 100%

CHANGE:
CHECK :

Bid Item 13

Republic Services

Tickets to date = 29 EA
Total Tonnage = 886.65 TN

Total Containers Hauled to Date = 64 EA
Total Haul Month of April = 19 EA

Use 28 Ton estimate for other loads
(64 EA - 29 EA) * 28 TN = 980 TN

Total thru month of April = 980 + 886.65 = 1866.65 TN

Waste Management

Total Haul Month of April = 994.15 TN

Total Billed to Date = 1866.65 + 994.15 = 2860.80 TN

Previously Billed = 1282.71
Total to Date incl. estimated = 2860.80

PA 8 = 2860.80-1282.71 = 1,578.09 Tons

Everett Incl. Snohomish County --
WA ROOSEVELT , WA

2A **4857170**

Tiffany O.

014209 - Strider Construction Co. Inc.
4721 Northwest Road
Bellingham, WA 98225

3/7/22 11:16 am 3/7/22 11:45 am

2235 TOLU476859

Contract:MC-19415

BNSF230114

Scale In	GROSS WEIGHT	105,880	NET TONS	29.41	INBOUND
Scale Out	TARE WEIGHT	47,060	NET WEIGHT	58,820	INVOICE

28.00	YD	Tracking QTY	
29.41	tn	Cont Soil	Origin:Everett 100%

CHANGE:
CHECK :

Everett Incl. Snohomish County --
WA ROOSEVELT , WA

2A **4857321**

Tiffany O.

014209 - Strider Construction Co. Inc.
4721 Northwest Road
Bellingham, WA 98225

3/9/22 6:26 am 3/9/22 6:44 am

7331 GCEU432025

Contract:MC-19414

DTTX656666

Scale In	GROSS WEIGHT	110,840	NET TONS	31.60	INBOUND
Scale Out	TARE WEIGHT	47,640	NET WEIGHT	63,200	INVOICE

28.00	YD	Tracking QTY	
31.60	tn	PCS 34	Origin:Everett 100%

CHANGE:
CHECK :

Everett Incl. Snohomish County --
WA ROOSEVELT , WA

2A **4857320**

Tiffany O.

014209 - Strider Construction Co. Inc.
4721 Northwest Road
Bellingham, WA 98225

3/9/22 6:27 am 3/9/22 6:43 am
0329 GCEU426143

Contract:MC-19414

DTTX656666

Scale In	GROSS WEIGHT	118,600	NET TONS	34.21	INBOUND
Scale Out	TARE WEIGHT	50,180	NET WEIGHT	68,420	INVOICE

28.00	YD	Tracking QTY	
34.21	tn	PCS 34	Origin:Everett 100%

CHANGE:
CHECK :

Everett Incl. Snohomish County --
WA ROOSEVELT , WA

2A **4857749**

Denise B.

014209 - Strider Construction Co. Inc.
4721 Northwest Road
Bellingham, WA 98225

3/12/22 1:14 pm 3/12/22 1:31 pm
2235 GCEU430272

Contract:MC-19415

BNSF230045

Scale In	GROSS WEIGHT	114,120	NET TONS	33.02	INBOUND
Scale Out	TARE WEIGHT	48,080	NET WEIGHT	66,040	INVOICE

28.00	YD	Tracking QTY	
33.02	tn	Cont Soil	Origin:Everett 100%

CHANGE:
CHECK :

Everett Incl. Snohomish County --
WA ROOSEVELT , WA

2A **4857757**

Denise B.

014209 - Strider Construction Co. Inc.
4721 Northwest Road
Bellingham, WA 98225

3/12/22 2:34 pm 3/12/22 2:52 pm

7329 GCEU431710

Contract:MC-19415

BNSF231128

Scale In	GROSS WEIGHT	109,060	NET TONS	31.83	INBOUND
Scale Out	TARE WEIGHT	45,400	NET WEIGHT	63,660	INVOICE

28.00	YD	Tracking QTY	
31.83	tn	Cont Soil	Origin:Everett 100%

CHANGE:
CHECK :

Everett Incl. Snohomish County --
WA ROOSEVELT , WA

2A **4857781**

Denise B.

014209 - Strider Construction Co. Inc.
4721 Northwest Road
Bellingham, WA 98225

3/12/22 3:26 pm 3/12/22 3:41 pm

0329 TOLU457471

Contract:MC-19415

BNSF231117

Scale In	GROSS WEIGHT	109,460	NET TONS	30.64	INBOUND
Scale Out	TARE WEIGHT	48,180	NET WEIGHT	61,280	INVOICE

28.00	YD	Tracking QTY	
30.64	tn	Cont Soil	Origin:Everett 100%

CHANGE:
CHECK :

Everett Incl. Snohomish County --
WA ROOSEVELT , WA

2A **4858657**

Tiffany O.

014209 - Strider Construction Co. Inc.
4721 Northwest Road
Bellingham, WA 98225

3/24/22 2:29 pm 3/24/22 2:54 pm

7750 TRLU900538

Contract:MC-19415

DTTX27218

Scale In	GROSS WEIGHT	110,840	NET TONS	31.62	INBOUND
Scale Out	TARE WEIGHT	47,600	NET WEIGHT	63,240	INVOICE

28.00	YD	Tracking QTY	
31.62	tn	Cont Soil	Origin:Everett 100%

CHANGE:

CHECK :

Everett Incl. Snohomish County --
WA ROOSEVELT , WA

2A **4858658**

Tiffany O.

014209 - Strider Construction Co. Inc.
4721 Northwest Road
Bellingham, WA 98225

3/24/22 2:34 pm 3/24/22 2:56 pm

7329 GCEU426143

Contract:MC-19415

DTTX27218

Scale In	GROSS WEIGHT	103,460	NET TONS	27.94	INBOUND
Scale Out	TARE WEIGHT	47,580	NET WEIGHT	55,880	INVOICE

28.00	YD	Tracking QTY	
27.94	tn	Cont Soil	Origin:Everett 100%

CHANGE:

CHECK :

Everett Incl. Snohomish County --
WA ROOSEVELT , WA

2A **4858661**

Tiffany O.

014209 - Strider Construction Co. Inc.
4721 Northwest Road
Bellingham, WA 98225

3/24/22 2:37 pm 3/24/22 3:02 pm

5223 TOLU457148

Contract:MC-19415

DTTX27218

Scale In	GROSS WEIGHT	107,980	NET TONS	30.25	INBOUND
Scale Out	TARE WEIGHT	47,480	NET WEIGHT	60,500	INVOICE

28.00	YD	Tracking QTY	
30.25	tn	Cont Soil	Origin:Everett 100%

CHANGE:
CHECK :

Everett Incl. Snohomish County --
WA ROOSEVELT , WA

2A **4858792**

Denise B.

014209 - Strider Construction Co. Inc.
4721 Northwest Road
Bellingham, WA 98225

3/25/22 3:02 pm 3/25/22 3:22 pm

2235 TRLU902875

Contract:MC-19415

BNSF231019

Scale In	GROSS WEIGHT	105,420	NET TONS	28.30	INBOUND
Scale Out	TARE WEIGHT	48,820	NET WEIGHT	56,600	INVOICE

28.00	YD	Tracking QTY	
28.30	tn	Cont Soil	Origin:Everett 100%

CHANGE:
CHECK :

Everett Incl. Snohomish County --
WA ROOSEVELT , WA

2A **4858885**

Tiffany O.

014209 - Strider Construction Co. Inc.
4721 Northwest Road
Bellingham, WA 98225

3/28/22 12:58 pm 3/28/22 1:26 pm

0331 RBSU200271

Contract:MC-19415

BNSF231119

Scale In	GROSS WEIGHT	107,440	NET TONS	29.56	INBOUND
Scale Out	TARE WEIGHT	48,320	NET WEIGHT	59,120	INVOICE

28.00	YD	Tracking QTY	
29.56	tn	Cont Soil	Origin:Everett 100%

CHANGE:
CHECK :

Everett Incl. Snohomish County --
WA ROOSEVELT , WA

2A **4858886**

Tiffany O.

014209 - Strider Construction Co. Inc.
4721 Northwest Road
Bellingham, WA 98225

3/28/22 1:14 pm 3/28/22 1:32 pm

1454 TPHU252623

Contract:MC-19415

BNSF230111

Scale In	GROSS WEIGHT	109,980	NET TONS	30.50	INBOUND
Scale Out	TARE WEIGHT	48,980	NET WEIGHT	61,000	INVOICE

28.00	YD	Tracking QTY	
30.50	tn	Cont Soil	Origin:Everett 100%

CHANGE:
CHECK :

Everett Incl. Snohomish County --
WA ROOSEVELT , WA

2A **4858890**

Tiffany O.

014209 - Strider Construction Co. Inc.
4721 Northwest Road
Bellingham, WA 98225

3/28/22 1:51 pm 3/28/22 2:12 pm

5833 TOLU459910

Contract:MC-19415

BNSF230111

Scale In	GROSS WEIGHT	114,880	NET TONS	33.26	
Scale Out	TARE WEIGHT	48,360	NET WEIGHT	66,520	INBOUND
					INVOICE

28.00	YD	Tracking QTY	
33.26	tn	Cont Soil	Origin:Everett 100%

CHANGE:

CHECK :

Everett Incl. Snohomish County --
WA ROOSEVELT , WA

2A **4858889**

Tiffany O.

014209 - Strider Construction Co. Inc.
4721 Northwest Road
Bellingham, WA 98225

3/28/22 1:52 pm 3/28/22 2:08 pm

2235 TRLU900517

Contract:MC-19415

BNSF230111

Scale In	GROSS WEIGHT	104,860	NET TONS	28.26	
Scale Out	TARE WEIGHT	48,340	NET WEIGHT	56,520	INBOUND
					INVOICE

28.00	YD	Tracking QTY	
28.26	tn	Cont Soil	Origin:Everett 100%

CHANGE:

CHECK :

Everett Incl. Snohomish County --
WA ROOSEVELT , WA

2A **4860472**

Tiffany O.

014209 - Strider Construction Co. Inc.
4721 Northwest Road
Bellingham, WA 98225

4/19/22 11:23 am 4/19/22 11:51 am

7749 TOLU422718

Contract:MC-19415

DTTX620616

Scale In	GROSS WEIGHT	100,340	NET TONS	28.38	INBOUND
Scale Out	TARE WEIGHT	43,580	NET WEIGHT	56,760	INVOICE

28.00	YD	Tracking QTY	
28.38	tn	Cont Soil	Origin:Everett 100%

CHANGE:
CHECK :

Everett Incl. Snohomish County --
WA ROOSEVELT , WA

2A **4860633**

Denise B.

014209 - Strider Construction Co. Inc.
4721 Northwest Road
Bellingham, WA 98225

4/22/22 11:13 am 4/22/22 11:36 am

2235 TOLU460463

Contract:MC-19415

DTTX56235

Scale In	GROSS WEIGHT	107,420	NET TONS	30.10	INBOUND
Scale Out	TARE WEIGHT	47,220	NET WEIGHT	60,200	INVOICE

28.00	YD	Tracking QTY	
30.10	tn	Cont Soil	Origin:Everett 100%

CHANGE:
CHECK :

Everett Incl. Snohomish County --
WA ROOSEVELT , WA

2A **4860660**

Denise B.

014209 - Strider Construction Co. Inc.
4721 Northwest Road
Bellingham, WA 98225

4/22/22 12:16 pm 4/22/22 12:43 pm

2235 TOLU456419

Contract:MC-19415

DTTX470290

Scale In	GROSS WEIGHT	116,820	NET TONS	33.89	INBOUND
Scale Out	TARE WEIGHT	49,040	NET WEIGHT	67,780	INVOICE

28.00	YD	Tracking QTY	
33.89	tn	Cont Soil	Origin:Everett 100%

CHANGE:
CHECK :

Everett Incl. Snohomish County --
WA ROOSEVELT , WA

2A **4860659**

Denise B.

014209 - Strider Construction Co. Inc.
4721 Northwest Road
Bellingham, WA 98225

4/22/22 12:21 pm 4/22/22 12:41 pm

2234 TOLU469489

Contract:MC-19415

DTTX470290

Scale In	GROSS WEIGHT	118,960	NET TONS	35.32	INBOUND
Scale Out	TARE WEIGHT	48,320	NET WEIGHT	70,640	INVOICE

28.00	YD	Tracking QTY	
35.32	tn	Cont Soil	Origin:Everett 100%

CHANGE:
CHECK :

Everett Incl. Snohomish County --
WA ROOSEVELT , WA

2A **4860805**

Tiffany O.

014209 - Strider Construction Co. Inc.
4721 Northwest Road
Bellingham, WA 98225

4/25/22 6:18 am 4/25/22 6:44 am

0332 TOLU466807

Contract:MC-19415

DTTX27574

Scale In	GROSS WEIGHT	106,500	NET TONS	29.87	INBOUND
Scale Out	TARE WEIGHT	46,760	NET WEIGHT	59,740	INVOICE

28.00	YD	Tracking QTY	
29.87	tn	Cont Soil	Origin:Everett 100%

CHANGE:
CHECK :

Everett Incl. Snohomish County --
WA ROOSEVELT , WA

2A **4860816**

Tiffany O.

014209 - Strider Construction Co. Inc.
4721 Northwest Road
Bellingham, WA 98225

4/25/22 6:44 am 4/25/22 7:06 am

5223 GCEU430744

Contract:MC-19415

DTTX27574

Scale In	GROSS WEIGHT	106,900	NET TONS	29.92	INBOUND
Scale Out	TARE WEIGHT	47,060	NET WEIGHT	59,840	INVOICE

28.00	YD	Tracking QTY	
29.92	tn	Cont Soil	Origin:Everett 100%

CHANGE:
CHECK :

Everett Incl. Snohomish County --
WA ROOSEVELT , WA

2A **4860822**

Tiffany O.

014209 - Strider Construction Co. Inc.
4721 Northwest Road
Bellingham, WA 98225

4/25/22 6:45 am 4/25/22 7:20 am

0329 TOLU469593

Contract:MC-19415

DTTX27574

Scale In	GROSS WEIGHT	115,480	NET TONS	33.46	INBOUND
Scale Out	TARE WEIGHT	48,560	NET WEIGHT	66,920	INVOICE

28.00	YD	Tracking QTY	
33.46	tn	Cont Soil	Origin:Everett 100%

CHANGE:
CHECK :

Everett Incl. Snohomish County --
WA ROOSEVELT , WA

2A **4860823**

Tiffany O.

014209 - Strider Construction Co. Inc.
4721 Northwest Road
Bellingham, WA 98225

4/25/22 6:54 am 4/25/22 7:20 am

1454 GCEU425116

Contract:MC-19415

DTTX27574

Scale In	GROSS WEIGHT	107,080	NET TONS	30.11	INBOUND
Scale Out	TARE WEIGHT	46,860	NET WEIGHT	60,220	INVOICE

28.00	YD	Tracking QTY	
30.11	tn	Cont Soil	Origin:Everett 100%

CHANGE:
CHECK :

Everett Incl. Snohomish County --
WA ROOSEVELT , WA

2A **4860824**

Tiffany O.

014209 - Strider Construction Co. Inc.
4721 Northwest Road
Bellingham, WA 98225

4/25/22 6:57 am 4/25/22 7:21 am
2234 RBSU200283

Contract:MC-19415

DTTX27574

Scale In	GROSS WEIGHT	103,940	NET TONS	27.29	INBOUND
Scale Out	TARE WEIGHT	49,360	NET WEIGHT	54,580	INVOICE

28.00	YD	Tracking QTY	
27.29	tn	Cont Soil	Origin:Everett 100%

CHANGE:
CHECK :

Everett Incl. Snohomish County --
WA ROOSEVELT , WA

2A **4860859**

Tiffany O.

014209 - Strider Construction Co. Inc.
4721 Northwest Road
Bellingham, WA 98225

4/25/22 1:31 pm 4/25/22 2:03 pm
1454 TPHU252282

Contract:MC-19415

DTTX620322

Scale In	GROSS WEIGHT	99,100	NET TONS	25.12	INBOUND
Scale Out	TARE WEIGHT	48,860	NET WEIGHT	50,240	INVOICE

28.00	YD	Tracking QTY	
25.12	tn	Cont Soil	Origin:Everett 100%

CHANGE:
CHECK :

Everett Incl. Snohomish County --
WA ROOSEVELT , WA

2A **4859190**

Tiffany O.

014209 - Strider Construction Co. Inc.
4721 Northwest Road
Bellingham, WA 98225

4/1/22 6:52 am 4/1/22 7:09 am
5223 GCEU426509

Contract:MC-19415

BNSF230030

Scale In	GROSS WEIGHT	111,700	NET TONS	32.17	INBOUND
Scale Out	TARE WEIGHT	47,360	NET WEIGHT	64,340	INVOICE

28.00	YD	Tracking QTY	
32.17	tn	Cont Soil	Origin:Everett 100%

CHANGE:
CHECK :

Everett Incl. Snohomish County --
WA ROOSEVELT , WA

2A **4859191**

Tiffany O.

014209 - Strider Construction Co. Inc.
4721 Northwest Road
Bellingham, WA 98225

4/1/22 6:56 am 4/1/22 7:19 am
2235 GCEU435041

Contract:MC-19415

BNSF230030

Scale In	GROSS WEIGHT	109,320	NET TONS	31.09	INBOUND
Scale Out	TARE WEIGHT	47,140	NET WEIGHT	62,180	INVOICE

28.00	YD	Tracking QTY	
31.09	tn	Cont Soil	Origin:Everett 100%

CHANGE:
CHECK :

Everett Incl. Snohomish County --
WA ROOSEVELT , WA

2A **4859330**

Tiffany O.

014209 - Strider Construction Co. Inc.
4721 Northwest Road
Bellingham, WA 98225

4/4/22 8:17 am 4/4/22 8:42 am

0332 RBSU200432

Contract:MC-19415

DTTX27218

Scale In	GROSS WEIGHT	101,760	NET TONS	27.02	INBOUND
Scale Out	TARE WEIGHT	47,720	NET WEIGHT	54,040	INVOICE

28.00	YD	Tracking QTY	
27.02	tn	Cont Soil	Origin:Everett 100%

CHANGE:
CHECK :

Everett Incl. Snohomish County --
WA ROOSEVELT , WA

2A **4859641**

IN - Tiffany O. OUT - Denise B.

014209 - Strider Construction Co. Inc.
4721 Northwest Road
Bellingham, WA 98225

4/7/22 2:02 pm 4/7/22 2:27 pm

2234 GCEU426253

Contract:MC-19415

BNSF230030

Scale In	GROSS WEIGHT	112,620	NET TONS	32.20	INBOUND
Scale Out	TARE WEIGHT	48,220	NET WEIGHT	64,400	INVOICE

28.00	YD	Tracking QTY	
32.20	tn	Cont Soil	Origin:Everett 100%

CHANGE:
CHECK :

Everett Incl.. Snohomish County --
WA ROOSEVELT , WA

2A **4859640**

Tiffany O.

014209 - Strider Construction Co. Inc.
4721 Northwest Road
Bellingham, WA 98225

4/7/22 2:03 pm 4/7/22 2:13 pm

5222 GCEU435563

Contract:MC-19415

BNSF230030

Manual In	GROSS WEIGHT	108,020	NET TONS	30.31	INBOUND
Scale Out	TARE WEIGHT	47,400	NET WEIGHT	60,620	INVOICE

28.00	YD	Tracking QTY	
30.31	tn	Cont Soil	Origin:Everett 100%

CHANGE:

CHECK :

WASTE MANAGEMENT

Alaska Street
70 S Alaska Street
Seattle, WA, 98134

Reprint
Ticket# 176110

Ph: 206 763 5025

Customer Name STRIDER CONSTRUCTION STRIDER
Ticket Date 04/08/2022
Payment Type Credit Account
Manual Ticket#
Route AK
Hauling Ticket#
Destination
PO# 116942WA

Carrier SELF HAULER *
Vehicle# R-82T
Container
Driver SHANE HENSLEY
Check#
Billing# 0000433
Grid

Volume

	Time	Scale	Operator	Inbound		
In	04/08/2022 09:02:42	SCALE 1	lmercer		Gross	106000 lb
Out	04/08/2022 09:02:42		lmercer		Tare	43380 lb
					Net	62620 lb
					Tons	31.31

Comments RT - LM

	Product	LD%	Qty	UOM	Rate	Tax	Amount	Origin
1	SpwasteCoverRGC-Tons-Uns	100	31.31	Tons				SNOHOMISH
2	EVF-P-Standard Environme	100		%				
3	GONDOLA T-GONDOLA TON	100	31.31	Tons				

Total Tax
Total Ticket

Driver`s Signature

WASTE MANAGEMENT

Alaska Street
70 S Alaska Street
Seattle, WA, 98134

Original
Ticket# 176162
Ph: 206 763 5025

Customer Name STRIDER CONSTRUCTION STRIDER
Ticket Date 04/11/2022
Payment Type Credit Account
Manual Ticket#
Route
Hauling Ticket#
Destination
PO# 116942WA

Carrier SELF HAULER *
Vehicle# M01T
Container
Driver TONY MERANTO
Check#
Billing# 0000433
Grid

Volume

	Time	Scale	Operator	Inbound	Gross	110220 lb
In	04/11/2022 12:06:22	SCALE 1	lmercer		Tare	39600 lb
Out	04/11/2022 12:06:22		lmercer		Net	70620 lb
					Tons	35.31

Comments MERANTO - LM

	Product	LD%	Qty	UOM	Rate	Tax	Amount	Origin
1	SpwasteCoverRGC-Tons-Uns	100	35.31	Tons				SNOHOMISH
2	EVF-P-Standard Environme	100		%				
3	GONDOLA T-GONDOLA TON	100	35.31	Tons				

Total Tax
Total Ticket

Driver`s Signature

WASTE MANAGEMENT

Alaska Street
70 S Alaska Street
Seattle, WA, 98134

Ph: 206 763 5025

Original
Ticket# 176132

Customer Name	STRIDER CONSTRUCTION STRIDER	Carrier	SELF HAULER *		
Ticket Date	04/11/2022	Vehicle#	M01T	Volume	
Payment Type	Credit Account	Container			
Manual Ticket#		Driver	TONY MERANTO		
Route		Check#			
Hauling Ticket#		Billing#	0000433		
Destination		Grid			
PO#	116942WA				

	Time	Scale	Operator	Inbound		
In	04/11/2022 07:48:55	SCALE 1	lmercer		Gross	102620 lb
Out	04/11/2022 07:48:55		lmercer		Tare	39600 lb
					Net	63020 lb
					Tons	31.51

Comments MERANTO - LM

	Product	LD%	Qty	UOM	Rate	Tax	Amount	Origin
1	SpwasteCoverRGC-Tons-Uns	100	31.51	Tons				SNOHOMISH
2	EVF-P-Standard Environme	100		%				
3	GONDOLA T-GONDOLA TON	100	31.51	Tons				

Total Tax
Total Ticket

Driver`s Signature

WASTE MANAGEMENT

Alaska Street
70 S Alaska Street
Seattle, WA, 98134

Original
Ticket# 176153

Ph: 206 763 5025

Customer Name	STRIDER CONSTRUCTION STRIDER	Carrier	SELF HAULER *		
Ticket Date	04/11/2022	Vehicle#	M01T	Volume	
Payment Type	Credit Account	Container			
Manual Ticket#		Driver	TONY MERANTO		
Route		Check#			
Hauling Ticket#		Billing#	0000433		
Destination		Grid			
PO#	116942WA				

	Time	Scale	Operator	Inbound		
In	04/11/2022 09:59:09	SCALE 1	lmercer		Gross	103180 lb
Out	04/11/2022 09:59:09		lmercer		Tare	39600 lb
					Net	63580 lb
					Tons	31.79

Comments MERANTO - LM

	Product	LD%	Qty	UOM	Rate	Tax	Amount	Origin
1	SpwasteCoverRGC-Tons-Uns	100	31.79	Tons				SNOHOMISH
2	EVF-P-Standard Environme	100		%				
3	GONDOLA T-GONDOLA TON	100	31.79	Tons				

Total Tax
Total Ticket

Driver`s Signature

WASTE MANAGEMENT

Alaska Street
70 S Alaska Street
Seattle, WA, 98134

Original
Ticket# 176161

Ph: 206 763 5025

Customer Name STRIDER CONSTRUCTION STRIDER
Ticket Date 04/11/2022
Payment Type Credit Account
Manual Ticket#
Route AK
Hauling Ticket#
Destination
PO# 116942WA

Carrier SELF HAULER *
Vehicle# R4T
Container
Driver TODD NYSETHER
Check#
Billing# 0000433
Grid

Volume

	Time	Scale	Operator	Inbound		
In	04/11/2022 12:02:13	SCALE 1	lmercer		Gross	108380 lb
Out	04/11/2022 12:02:13		lmercer		Tare	39980 lb
					Net	68400 lb
					Tons	34.20

Comments RENEGADE - LM

	Product	LD%	Qty	UOM	Rate	Tax	Amount	Origin
1	SpwasteCoverRGC-Tons-Uns	100	34.20	Tons				SNOHOMISH
2	EVF-P-Standard Environme	100		%				
3	GONDOLA T-GONDOLA TON	100	34.20	Tons				

Total Tax
Total Ticket

Driver's Signature

WASTE MANAGEMENT

Alaska Street
70 S Alaska Street
Seattle, WA, 98134

Reprint
Ticket# 176152

Ph: 206 763 5025

Customer Name	STRIDER CONSTRUCTION STRIDER	Carrier	SELF HAULER *
Ticket Date	04/11/2022	Vehicle#	R4T
Payment Type	Credit Account	Container	
Manual Ticket#		Driver	TODD NYSETHER
Route	AK	Check#	
Hauling Ticket#		Billing#	0000433
Destination		Grid	
PO#	116942WA		

Volume

	Time	Scale	Operator	Inbound		
In	04/11/2022 09:52:51	SCALE 1	lmercer		Gross	102760 lb
Out	04/11/2022 09:52:51		lmercer		Tare	39980 lb
					Net	62780 lb
					Tons	31.39

Comments RENEGADE - LM

	Product	LD%	Qty	UOM	Rate	Tax	Amount	Origin
1	SpwasteCoverRGC-Tons-Uns	100	31.39	Tons				SNOHOMISH
2	EVF-P-Standard Environme	100		%				
3	GONDOLA T-GONDOLA TON	100	31.39	Tons				

Total Tax
Total Ticket

Driver`s Signature

WASTE MANAGEMENT

Alaska Street
70 S Alaska Street
Seattle, WA, 98134

Reprint
Ticket# 176131

Ph: 206 763 5025

Customer Name STRIDER CONSTRUCTION STRIDER
Ticket Date 04/11/2022
Payment Type Credit Account
Manual Ticket#
Route AK
Hauling Ticket#
Destination
PO# 116942WA

Carrier SELF HAULER *
Vehicle# R4T
Container
Driver TODD NYSETHER
Check#
Billing# 0000433
Grid

Volume

	Time	Scale	Operator	Inbound		
In	04/11/2022 07:45:13	SCALE 1	lmercer		Gross	104440 lb
Out	04/11/2022 07:45:13		lmercer		Tare	39980 lb
					Net	64460 lb
					Tons	32.23

Comments RENEGADE - LM

	Product	LD%	Qty	UOM	Rate	Tax	Amount	Origin
1	SpwasteCoverRGC-Tons-Uns	100	32.23	Tons				SNOHOMISH
2	EVF-P-Standard Environme	100		%				
3	GONDOLA T-GONDOLA TON	100	32.23	Tons				

Total Tax
Total Ticket

Driver's Signature

WASTE MANAGEMENT

Alaska Street
70 S Alaska Street
Seattle, WA, 98134

Reprint
Ticket# 176171
Ph: 206 763 5025

Customer Name	STRIDER CONSTRUCTION STRIDER	Carrier	SELF HAULER *
Ticket Date	04/12/2022	Vehicle#	R-82T
Payment Type	Credit Account	Container	
Manual Ticket#		Driver	SHANE HENSLEY
Route	AK	Check#	
Hauling Ticket#		Billing#	0000433
Destination		Grid	
PO#	116942WA		

Volume

	Time	Scale	Operator	Inbound		
In	04/12/2022 06:56:48	SCALE 1	lmercer		Gross	104980 lb
Out	04/12/2022 06:56:48		lmercer		Tare	43380 lb
					Net	61600 lb
					Tons	30.80

Comments RT -LM

	Product	LD%	Qty	UOM	Rate	Tax	Amount	Origin
1	Daily Cover-SPW-Tons-Spe	100	30.80	Tons				SNOHOMISH
2	EVF-P-Standard Environme	100		%				
3	GONDOLA T-GONDOLA TON	100	30.80	Tons				

Total Tax
Total Ticket

Driver's Signature

WASTE MANAGEMENT

Alaska Street
70 S Alaska Street
Seattle, WA, 98134

Reprint
Ticket# 176150

Ph: 206 763 5025

Customer Name STRIDER CONSTRUCTION STRIDER
Ticket Date 04/11/2022
Payment Type Credit Account
Manual Ticket#
Route AK
Hauling Ticket#
Destination
PO# 116942WA

Carrier SELF HAULER *
Vehicle# R-82T
Container
Driver SHANE HENSLEY
Check#
Billing# 0000433
Grid

Volume

	Time	Scale	Operator	Inbound		
In	04/11/2022 09:35:45	SCALE 1	lmercer		Gross	103880 lb
Out	04/11/2022 09:35:45		lmercer		Tare	43380 lb
					Net	60500 lb
					Tons	30.25

Comments STRIDER - LM

	Product	LD%	Qty	UOM	Rate	Tax	Amount	Origin
1	SpwasteCoverRGC-Tons-Uns	100	30.25	Tons				SNOHOMISH
2	EVF-P-Standard Environme	100		%				
3	GONDOLA T-GONDOLA TON	100	30.25	Tons				

Total Tax
Total Ticket

Driver's Signature

WASTE MANAGEMENT

Alaska Street
70 S Alaska Street
Seattle, WA, 98134

Reprint
Ticket# 176130

Ph: 206 763 5025

Customer Name STRIDER CONSTRUCTION STRIDER
Ticket Date 04/11/2022
Payment Type Credit Account
Manual Ticket#
Route AK
Hauling Ticket#
Destination
PO# 116942WA

Carrier SELF HAULER *
Vehicle# R-82T
Container
Driver SHANE HENSLEY
Check#
Billing# 0000433
Grid

Volume

	Time	Scale	Operator	Inbound		
In	04/11/2022 07:34:05	SCALE 1	lmercer		Gross	102440 lb
Out	04/11/2022 07:34:05		lmercer		Tare	43380 lb
					Net	59060 lb
					Tons	29.53

Comments RT - LM

	Product	LD%	Qty	UOM	Rate	Tax	Amount	Origin
1	Daily Cover-SPW-Tons-Uns	100	29.53	Tons				SNOHOMISH
2	EVF-P-Standard Environme	100		%				
3	GONDOLA T-GONDOLA TON	100	29.53	Tons				

Total Tax
Total Ticket

Driver's Signature

WASTE MANAGEMENT

Alaska Street
70 S Alaska Street
Seattle, WA, 98134

Original
Ticket# 176160

Ph: 206 763 5025

Customer Name	STRIDER CONSTRUCTION STRIDER	Carrier	SELF HAULER *
Ticket Date	04/11/2022	Vehicle#	R-82T
Payment Type	Credit Account	Container	
Manual Ticket#		Driver	SHANE HENSLEY
Route	AK	Check#	
Hauling Ticket#		Billing#	0000433
Destination		Grid	
PO#	116942WA		

Volume

	Time	Scale	Operator	Inbound		
In	04/11/2022 11:52:49	SCALE 1	lmercer		Gross	109320 lb
Out	04/11/2022 11:52:49		lmercer		Tare	43380 lb
					Net	65940 lb
					Tons	32.97

Comments RT - LM

	Product	LD%	Qty	UOM	Rate	Tax	Amount	Origin
1	SpwasteCoverRGC-Tons-Uns	100	32.97	Tons				SNOHOMISH
2	EVF-P-Standard Environme	100		%				
3	GONDOLA T-GONDOLA TON	100	32.97	Tons				

Total Tax
Total Ticket

Driver`s Signature

WASTE MANAGEMENT

Alaska Street
70 S Alaska Street
Seattle, WA, 98134

Reprint
Ticket# 176124

Ph: 206 763 5025

Customer Name	STRIDER CONSTRUCTION STRIDER	Carrier	SELF HAULER *
Ticket Date	04/08/2022	Vehicle#	R-82T
Payment Type	Credit Account	Container	
Manual Ticket#		Driver	SHANE HENSLEY
Route	AK	Check#	
Hauling Ticket#		Billing#	0000433
Destination		Grid	
PO#	116942WA		

Volume

	Time	Scale	Operator	Inbound		
In	04/08/2022 13:52:38	SCALE 1	lmercer		Gross	110760 lb
Out	04/08/2022 13:52:38		lmercer		Tare	43380 lb
					Net	67380 lb
					Tons	33.69

Comments RT - LM

	Product	LD%	Qty	UOM	Rate	Tax	Amount	Origin
1	SpwasteCoverRGC-Tons-Uns	100	33.69	Tons				SNOHOMISH
2	EVF-P-Standard Environme	100		%				
3	GONDOLA T-GONDOLA TON	100	33.69	Tons				

Total Tax
Total Ticket

Driver`s Signature

WASTE MANAGEMENT

Alaska Street
70 S Alaska Street
Seattle, WA, 98134

Reprint
Ticket# 176117

Ph: 206 763 5025

Customer Name STRIDER CONSTRUCTION STRIDER
Ticket Date 04/08/2022
Payment Type Credit Account
Manual Ticket#
Route AK
Hauling Ticket#
Destination
PO# 116942WA

Carrier SELF HAULER *
Vehicle# R-82T
Container
Driver SHANE HENSLEY
Check#
Billing# 0000433
Grid

Volume

	Time	Scale	Operator	Inbound		
In	04/08/2022 11:16:15	SCALE 1	lmercer		Gross	99960 lb
Out	04/08/2022 11:16:15		lmercer		Tare	43380 lb
					Net	56580 lb
					Tons	28.29

Comments RT - LM

	Product	LD%	Qty	UOM	Rate	Tax	Amount	Origin
1	SpwasteCoverRGC-Tons-Uns	100	28.29	Tons				SNOHOMISH
2	EVF-P-Standard Environme	100		%				SNOHOMISH
3	GONDOLA T-GONDOLA TON	100	28.29	Tons				SNOHOMISH

Total Tax
Total Ticket

Driver`s Signature

WASTE MANAGEMENT

Alaska Street
70 S Alaska Street
Seattle, WA, 98134

Reprint
Ticket# 176098

Ph: 206 763 5025

Customer Name	STRIDER CONSTRUCTION STRIDER	Carrier	SELF HAULER *
Ticket Date	04/08/2022	Vehicle#	R-82T
Payment Type	Credit Account	Container	
Manual Ticket#		Driver	SHANE HENSLEY
Route	AK	Check#	
Hauling Ticket#		Billing#	0000433
Destination		Grid	
PO#	116942WA		

Volume

	Time	Scale	Operator	Inbound		
In	04/08/2022 06:56:56	SCALE 1	lmercer		Gross	106340 lb
Out	04/08/2022 06:56:56		lmercer		Tare	43380 lb
					Net	62960 lb
					Tons	31.48

Comments RT - LM

	Product	LD%	Qty	UOM	Rate	Tax	Amount	Origin
1	SpwasteCoverRGC-Tons-Uns	100	31.48	Tons				SNOHOMISH
2	EVF-P-Standard Environme	100		%				
3	GONDOLA T-GONDOLA TON	100	31.48	Tons				

Total Tax
Total Ticket

Driver`s Signature

WASTE MANAGEMENT

Alaska Street
70 S Alaska Street
Seattle, WA, 98134

Reprint
Ticket# 176125

Ph: 206 763 5025

Customer Name STRIDER CONSTRUCTION STRIDER
Ticket Date 04/08/2022
Payment Type Credit Account
Manual Ticket#
Route AK
Hauling Ticket#
Destination
PO# 116942WA

Carrier SELF HAULER *
Vehicle# R4T
Container
Driver TODD NYSETHER
Check#
Billing# 0000433
Grid

Volume

	Time	Scale	Operator	Inbound		
In	04/08/2022 13:55:08	SCALE 1	lmercer		Gross	108180 lb
Out	04/08/2022 13:55:08		lmercer		Tare	39980 lb
					Net	68200 lb
					Tons	34.10

Comments RENEGADE - LM

	Product	LD%	Qty	UOM	Rate	Tax	Amount	Origin
1	SpwasteCoverRGC-Tons-Uns	100	34.10	Tons				SNOHOMISH
2	EVF-P-Standard Environme	100		%				
3	GONDOLA T-GONDOLA TON	100	34.10	Tons				

Total Tax
Total Ticket

Driver's Signature

WASTE MANAGEMENT

Alaska Street
70 S Alaska Street
Seattle, WA, 98134

Reprint
Ticket# 176120

Ph: 206 763 5025

Customer Name STRIDER CONSTRUCTION STRIDER
Ticket Date 04/08/2022
Payment Type Credit Account
Manual Ticket#
Route AK
Hauling Ticket#
Destination
PO# 116942WA

Carrier SELF HAULER *
Vehicle# R4T
Container
Driver TODD NYSETHER
Check#
Billing# 0000433
Grid

Volume

	Time	Scale	Operator	Inbound		
In	04/08/2022 11:27:26	SCALE 1	lmercer		Gross	103920 lb
Out	04/08/2022 11:27:26		lmercer		Tare	39980 lb
					Net	63940 lb
					Tons	31.97

Comments RENEGADE - LM

	Product	LD%	Qty	UOM	Rate	Tax	Amount	Origin
1	SpwasteCoverRGC-Tons-Uns	100	31.97	Tons				SNOHOMISH
2	EVF-P-Standard Environme	100		%				
3	GONDOLA T-GONDOLA TON	100	31.97	Tons				

Total Tax
Total Ticket

Driver`s Signature

WASTE MANAGEMENT

Alaska Street
70 S Alaska Street
Seattle, WA, 98134

Reprint
Ticket# 176111

Ph: 206 763 5025

Customer Name	STRIDER CONSTRUCTION STRIDER	Carrier	SELF HAULER *
Ticket Date	04/08/2022	Vehicle#	R4T
Payment Type	Credit Account	Container	
Manual Ticket#		Driver	TODD NYSETHER
Route	AK	Check#	
Hauling Ticket#		Billing#	0000433
Destination		Grid	
PO#	116942WA		

Volume

	Time	Scale	Operator	Inbound		
In	04/08/2022 09:11:57	SCALE 1	lmercer		Gross	101900 lb
Out	04/08/2022 09:11:57		lmercer		Tare	39980 lb
					Net	61920 lb
					Tons	30.96

Comments RENEGADE - LM

	Product	LD%	Qty	UOM	Rate	Tax	Amount	Origin
1	SpwasteCoverRGC-Tons-Uns	100	30.96	Tons				SNOHOMISH
2	EVF-P-Standard Environme	100		%				
3	GONDOLA T-GONDOLA TON	100	30.96	Tons				

Total Tax
Total Ticket

Driver`s Signature

WASTE MANAGEMENT

Alaska Street
70 S Alaska Street
Seattle, WA, 98134

Original
Ticket# 176099

Ph: 206 763 5025

Customer Name	STRIDER CONSTRUCTION STRIDER	Carrier	SELF HAULER *
Ticket Date	04/08/2022	Vehicle#	R4T
Payment Type	Credit Account	Container	
Manual Ticket#		Driver	TODD NYSETHER
Route	AK	Check#	
Hauling Ticket#		Billing#	0000433
Destination		Grid	
PO#	116942WA		

Volume

	Time	Scale	Operator	Inbound		
In	04/08/2022 06:59:48	SCALE 1	lmercer		Gross	107020 lb
Out	04/08/2022 06:59:48		lmercer		Tare	39980 lb
					Net	67040 lb
					Tons	33.52

Comments RENEGADE - LM

	Product	LD%	Qty	UOM	Rate	Tax	Amount	Origin
1	SpwasteCoverRGC-Tons-Uns	100	33.52	Tons				SNOHOMISH
2	EVF-P-Standard Environme	100		%				
3	GONDOLA T-GONDOLA TON	100	33.52	Tons				

Total Tax
Total Ticket

Driver's Signature

WASTE MANAGEMENT

Alaska Street
70 S Alaska Street
Seattle, WA, 98134

Original
Ticket# 176126

Ph: 206 763 5025

Customer Name	STRIDER CONSTRUCTION STRIDER	Carrier	SELF HAULER *
Ticket Date	04/08/2022	Vehicle#	M01T
Payment Type	Credit Account	Container	
Manual Ticket#		Driver	TONY MERANTO
Route		Check#	
Hauling Ticket#		Billing#	0000433
Destination		Grid	
PO#	116942WA		

Volume

	Time	Scale	Operator	Inbound		
In	04/08/2022 13:58:17	SCALE 1	lmercer		Gross	110840 lb
Out	04/08/2022 13:58:17		lmercer		Tare	39600 lb
					Net	71240 lb
					Tons	35.62

Comments MERANTO - LM

	Product	LD%	Qty	UOM	Rate	Tax	Amount	Origin
1	SpwasteCoverRGC-Tons-Uns	100	35.62	Tons				SNOHOMISH
2	EVF-P-Standard Environme	100		%				
3	GONDOLA T-GONDOLA TON	100	35.62	Tons				

Total Tax
Total Ticket

Driver's Signature

WASTE MANAGEMENT

Alaska Street
70 S Alaska Street
Seattle, WA, 98134

Original
Ticket# 176112

Ph: 206 763 5025

Customer Name STRIDER CONSTRUCTION STRIDER
Ticket Date 04/08/2022
Payment Type Credit Account
Manual Ticket#
Route
Hauling Ticket#
Destination
PO# 116942WA

Carrier SELF HAULER *
Vehicle# M01T
Container
Driver TONY MERANTO
Check#
Billing# 0000433
Grid

Volume

	Time	Scale	Operator	Inbound	Gross	103720 lb
In	04/08/2022 09:17:18	SCALE 1	lmercer		Tare	39600 lb
Out	04/08/2022 09:17:18		lmercer		Net	64120 lb
					Tons	32.06

Comments MERANTO - LM

	Product	LD%	Qty	UOM	Rate	Tax	Amount	Origin
1	SpwasteCoverRGC-Tons-Uns	100	32.06	Tons				SNOHOMISH
2	EVF-P-Standard Environme	100		%				
3	GONDOLA T-GONDOLA TON	100	32.06	Tons				

Total Tax
Total Ticket

Driver's Signature

WASTE MANAGEMENT

Alaska Street
70 S Alaska Street
Seattle, WA, 98134

Original
Ticket# 176100

Ph: 206 763 5025

Customer Name STRIDER CONSTRUCTION STRIDER
Ticket Date 04/08/2022
Payment Type Credit Account
Manual Ticket#
Route
Hauling Ticket#
Destination
PO# 116942WA

Carrier SELF HAULER *
Vehicle# M01T
Container
Driver TONY MERANTO
Check#
Billing# 0000433
Grid

Volume

	Time	Scale	Operator	Inbound	Gross	108020 lb
In	04/08/2022 07:04:20	SCALE 1	lmercer		Tare	39600 lb
Out	04/08/2022 07:04:20		lmercer		Net	68420 lb
					Tons	34.21

Comments MERANTO - LM

	Product	LD%	Qty	UOM	Rate	Tax	Amount	Origin
1	SpwasteCoverRGC-Tons-Uns	100	34.21	Tons				SNOHOMISH
2	EVF-P-Standard Environme	100		%				
3	GONDOLA T-GONDOLA TON	100	34.21	Tons				

Total Tax
Total Ticket

Driver`s Signature

WASTE MANAGEMENT

Alaska Street
70 S Alaska Street
Seattle, WA, 98134

Reprint
Ticket# 176121

Ph: 206 763 5025

Customer Name STRIDER CONSTRUCTION STRIDER
Ticket Date 04/08/2022
Payment Type Credit Account
Manual Ticket#
Route
Hauling Ticket#
Destination
PO# 116942WA

Carrier SELF HAULER *
Vehicle# M01T
Container
Driver TONY MERANTO
Check#
Billing# 0000433
Grid

Volume

	Time	Scale	Operator	Inbound	Gross	107920 lb
In	04/08/2022 11:33:18	SCALE 1	lmercer		Tare	39600 lb
Out	04/08/2022 11:33:18		lmercer		Net	68320 lb
					Tons	34.16

Comments MERANTO - LM

	Product	LD%	Qty	UOM	Rate	Tax	Amount	Origin
1	SpwasteCoverRGC-Tons-Uns	100	34.16	Tons				SNOHOMISH
2	EVF-P-Standard Environme	100		%				
3	GONDOLA T-GONDOLA TON	100	34.16	Tons				

Total Tax
Total Ticket

Driver's Signature

WASTE MANAGEMENT

Alaska Street
70 S Alaska Street
Seattle, WA, 98134

Reprint
Ticket# 176101

Ph: 206 763 5025

Customer Name	STRIDER CONSTRUCTION STRIDER	Carrier	SELF HAULER *
Ticket Date	04/07/2022	Vehicle#	R-82T
Payment Type	Credit Account	Container	
Manual Ticket#		Driver	SHANE HENSLEY
Route	AK	Check#	
Hauling Ticket#		Billing#	0000433
Destination		Grid	
PO#	116942WA		

Volume

	Time	Scale	Operator	Inbound		
In	04/07/2022 08:08:51	SCALE 1	lmercer		Gross	104760 lb*
Out	04/07/2022 08:08:51		lmercer		Tare	43380 lb*
			* Manual Weight		Net	61380 lb
					Tons	30.69

Comments RT - LM (REPLACES VOIDED TICKET 176066)

	Product	LD%	Qty	UOM	Rate	Tax	Amount	Origin
1	SpwasteCoverRGC-Tons-Uns	100	30.69	Tons				SNOHOMISH
2	EVF-P-Standard Environme	100		%				
3	GONDOLA T-GONDOLA TON	100	30.69	Tons				

Total Tax
Total Ticket

Driver`s Signature

WASTE MANAGEMENT

Alaska Street
70 S Alaska Street
Seattle, WA, 98134

Reprint
Ticket# 176105

Ph: 206 763 5025

Customer Name	STRIDER CONSTRUCTION STRIDER	Carrier	SELF HAULER *
Ticket Date	04/07/2022	Vehicle#	R-82T
Payment Type	Credit Account	Container	
Manual Ticket#		Driver	SHANE HENSLEY
Route	AK	Check#	
Hauling Ticket#		Billing#	0000433
Destination		Grid	
PO#	116942WA		

Volume

	Time	Scale	Operator	Inbound		
In	04/07/2022 10:33:50	SCALE 1	lmercer		Gross	103080 lb*
Out	04/07/2022 10:33:50		lmercer		Tare	43380 lb*
			* Manual Weight		Net	59700 lb
					Tons	29.85

Comments RT - LM (REPLACES VOIDED TICKET # 176081)

	Product	LD%	Qty	UOM	Rate	Tax	Amount	Origin
1	SpwasteCoverRGC-Tons-Uns	100	29.85	Tons				SNOHOMISH
2	EVF-P-Standard Environme	100		%				SNOHOMISH
3	GONDOLA T-GONDOLA TON	100	29.85	Tons				SNOHOMISH

Total Tax
Total Ticket

Driver`s Signature

WASTE MANAGEMENT

Alaska Street
70 S Alaska Street
Seattle, WA, 98134

Reprint
Ticket# 176107

Ph: 206 763 5025

Customer Name STRIDER CONSTRUCTION STRIDER
Ticket Date 04/07/2022
Payment Type Credit Account
Manual Ticket#
Route AK
Hauling Ticket#
Destination
PO# 116942WA

Carrier SELF HAULER *
Vehicle# R-82T
Container
Driver SHANE HENSLEY
Check#
Billing# 0000433
Grid

Volume

	Time	Scale	Operator	Inbound		
In	04/07/2022 12:51:45	SCALE 1	lmercer		Gross	105780 lb*
Out	04/07/2022 12:51:45		lmercer		Tare	43380 lb*
			* Manual Weight		Net	62400 lb
					Tons	31.20

Comments RT - LM (REPLACES VOIDED TICKET # 176092)

	Product	LD%	Qty	UOM	Rate	Tax	Amount	Origin
1	SpwasteCoverRGC-Tons-Uns	100	31.20	Tons				SNOHOMISH
2	EVF-P-Standard Environme	100		%				
3	GONDOLA T-GONDOLA TON	100	31.20	Tons				

Total Tax
Total Ticket

Driver`s Signature

WASTE MANAGEMENT

Alaska Street
70 S Alaska Street
Seattle, WA, 98134

Reprint
Ticket# 176103

Ph: 206 763 5025

Customer Name STRIDER CONSTRUCTION STRIDER
Ticket Date 04/07/2022
Payment Type Credit Account
Manual Ticket#
Route AK
Hauling Ticket#
Destination
PO# 116942WA

Carrier SELF HAULER *
Vehicle# R4T
Container
Driver TODD NYSETHER
Check#
Billing# 0000433
Grid

Volume

	Time	Scale	Operator	Inbound		
In	04/07/2022 08:28:26	SCALE 1	lmercer		Gross	108220 lb*
Out	04/07/2022 08:42:09		lmercer		Tare	39980 lb*
			* Manual Weight		Net	68240 lb
					Tons	34.12

Comments RENEGADE - LM (REPLACES VOIDED TICKET # 176070)

	Product	LD%	Qty	UOM	Rate	Tax	Amount	Origin
1	SpwasteCoverRGC-Tons-Uns	100	34.12	Tons				SNOHOMISH
2	EVF-P-Standard Environme	100		%				
3	GONDOLA T-GONDOLA TON	100	34.12	Tons				

Total Tax
Total Ticket

Driver`s Signature

WASTE MANAGEMENT

Alaska Street
70 S Alaska Street
Seattle, WA, 98134

Reprint
Ticket# 176093

Ph: 206 763 5025

Customer Name	STRIDER CONSTRUCTION STRIDER	Carrier	SELF HAULER *
Ticket Date	04/07/2022	Vehicle#	R4T
Payment Type	Credit Account	Container	
Manual Ticket#		Driver	TODD NYSETHER
Route	AK	Check#	
Hauling Ticket#		Billing#	0000433
Destination		Grid	
PO#	116942WA		

Volume

	Time	Scale	Operator	Inbound		
In	04/07/2022 13:03:14	SCALE 1	lmercer		Gross	102660 lb
Out	04/07/2022 13:03:14		lmercer		Tare	39980 lb
					Net	62680 lb
					Tons	31.34

Comments RENEGADE - LM

	Product	LD%	Qty	UOM	Rate	Tax	Amount	Origin
1	SpwasteCoverRGC-Tons-Uns	100	31.34	Tons				SNOHOMISH
2	EVF-P-Standard Environme	100		%				
3	GONDOLA T-GONDOLA TON	100	31.34	Tons				

Total Tax
Total Ticket

Driver's Signature

WASTE MANAGEMENT

Alaska Street
70 S Alaska Street
Seattle, WA, 98134

Reprint
Ticket# 176106

Ph: 206 763 5025

Customer Name STRIDER CONSTRUCTION STRIDER
Ticket Date 04/07/2022
Payment Type Credit Account
Manual Ticket#
Route AK
Hauling Ticket#
Destination
PO# 116942WA

Carrier SELF HAULER *
Vehicle# R4T
Container
Driver TODD NYSETHER
Check#
Billing# 0000433
Grid

Volume

	Time	Scale	Operator	Inbound		
In	04/07/2022 10:46:34	SCALE 1	lmercer		Gross	105080 lb*
Out	04/07/2022 10:46:34		lmercer		Tare	39980 lb*
			* Manual Weight		Net	65100 lb
					Tons	32.55

Comments RENEGADE - LM (REPLACES VOIDED TICKET # 176083)

	Product	LD%	Qty	UOM	Rate	Tax	Amount	Origin
1	SpwasteCoverRGC-Tons-Uns	100	32.55	Tons				SNOHOMISH
2	EVF-P-Standard Environme	100		%				
3	GONDOLA T-GONDOLA TON	100	32.55	Tons				

Total Tax
Total Ticket

Driver's Signature

WASTE MANAGEMENT

Alaska Street
70 S Alaska Street
Seattle, WA, 98134

Reprint
Ticket# 176091

Ph: 206 763 5025

Customer Name STRIDER CONSTRUCTION STRIDER
Ticket Date 04/07/2022
Payment Type Credit Account
Manual Ticket#
Route
Hauling Ticket#
Destination
PO# 116942WA

Carrier SELF HAULER *
Vehicle# M01T
Container
Driver TONY MERANTO
Check#
Billing# 0000433
Grid

Volume

	Time	Scale	Operator	Inbound		
In	04/07/2022 12:48:56	SCALE 1	lmercer		Gross	107020 lb
Out	04/07/2022 12:48:56		lmercer		Tare	39600 lb
					Net	67420 lb
					Tons	33.71

Comments MERANTO - LM

	Product	LD%	Qty	UOM	Rate	Tax	Amount	Origin
1	SpwasteCoverRGC-Tons-Uns	100	33.71	Tons				SNOHOMISH
2	EVF-P-Standard Environme	100		%				
3	GONDOLA T-GONDOLA TON	100	33.71	Tons				

Total Tax
Total Ticket

Driver's Signature

WASTE MANAGEMENT

Alaska Street
70 S Alaska Street
Seattle, WA, 98134

Reprint
Ticket# 176104

Ph: 206 763 5025

Customer Name	STRIDER CONSTRUCTION STRIDER	Carrier	SELF HAULER *
Ticket Date	04/07/2022	Vehicle#	M01T
Payment Type	Credit Account	Container	
Manual Ticket#		Driver	TONY MERANTO
Route		Check#	
Hauling Ticket#		Billing#	0000433
Destination		Grid	
PO#	116942WA		

Volume

	Time	Scale	Operator	Inbound		
In	04/07/2022 10:29:12	SCALE 1	lmercer		Gross	100440 lb*
Out	04/07/2022 10:29:12		lmercer		Tare	39600 lb*
			* Manual Weight		Net	60840 lb
					Tons	30.42

Comments MERANTO - LM (REPLACES VOIDED TICKET # 176080)

	Product	LD%	Qty	UOM	Rate	Tax	Amount	Origin
1	SpwasteCoverRGC-Tons-Uns	100	30.42	Tons				SNOHOMISH
2	EVF-P-Standard Environme	100		%				
3	GONDOLA T-GONDOLA TON	100	30.42	Tons				

Total Tax
Total Ticket

Driver's Signature

WASTE MANAGEMENT

Alaska Street
70 S Alaska Street
Seattle, WA, 98134

Reprint
Ticket# 176102

Ph: 206 763 5025

Customer Name STRIDER CONSTRUCTION STRIDER
Ticket Date 04/07/2022
Payment Type Credit Account
Manual Ticket#
Route
Hauling Ticket#
Destination
PO# 116942WA

Carrier SELF HAULER *
Vehicle# M01T
Container
Driver TONY MERANTO
Check#
Billing# 0000433
Grid

Volume

	Time	Scale	Operator	Inbound		
In	04/07/2022 08:15:47	SCALE 1	lmercer		Gross	97440 lb*
Out	04/07/2022 08:15:47		lmercer		Tare	39600 lb*
			* Manual Weight		Net	57840 lb
					Tons	28.92

Comments MERANTO - LM (REPLACES VOIDED TICKET # 176067)

	Product	LD%	Qty	UOM	Rate	Tax	Amount	Origin
1	SpwasteCoverRGC-Tons-Uns	100	28.92	Tons				SNOHOMISH
2	EVF-P-Standard Environme	100		%				
3	GONDOLA T-GONDOLA TON	100	28.92	Tons				

Total Tax
Total Ticket

Driver`s Signature

Bid Item 13

Republic Services

Tickets to date = 31 EA
Total Tonnage = 936.29 TN

Total Containers Hauled to Date = 101 EA
Total Haul Month of May = 37 EA

Use 28 Ton estimate for other loads
(101 EA - 31 EA) * 28 TN = 1960 TN

980 TNs in PA 8:
1960-980 = 980 tons estimated for PA 9

Total thru month of May = 1960 + 936.29 = 2896.29 TN

Waste Management

Total Haul = 994.15 TN

Total Billed to Date = 2896.29 + 994.15 = 3890.44 TN

Previously Billed = 2860.80
Total to Date incl. estimated = 3890.44

PA 9 = 3890.44 - 2860.80 = 1,029.64 Tons

Everett Incl. Snohomish County --
WA ROOSEVELT , WA

2A 4861880

WEIGHMASTER: Denise B.

CUSTOMER
014209 - Strider Construction Co. Inc.
4721 Northwest Road
Bellingham, WA 98225

Contract:MC-19415

DATE/TIME IN	DATE/TIME OUT
5/10/22 10:55 am	5/10/22 11:25 am

VEHICLE	CONTAINER
7329	RBSU200283

REFERENCE:

BILL OF LADING: DTTX458902

Scale In GROSS WEIGHT 97,880 NET TONS 25.00 INBOUND
Scale Out TARE WEIGHT 47,880 NET WEIGHT 50,000 INVOICE

QTY.	UNIT	DESCRIPTION	RATE	EXTENSION	TAX	TOTAL
28.00	YD	Tracking QTY				
25.00	tn	Cont Soil Origin:Everett 100%				

NET AMOUNT
TENDERED
CHANGE
CHECK#

The undersigned individual signing this document on behalf of Customer acknowledges that he or she has read and understands the terms and conditions on the reverse side and that he or she has the authority to sign this document on behalf of the customer.

RS-F042UPR (07/12)

SIGNATURE _____ CHANGE:

CHECK :

SITE
Everett Incl. Snohomish County --
WA ROOSEVELT , WA

SITE TICKET # 4862214 CELL

WEIGHMASTER: Denise B.

CUSTOMER
014209 - Strider Construction Co. Inc.
4721 Northwest Road
Bellingham, WA 98225

Contract:MC-19415

DATE/TIME IN	DATE/TIME OUT
5/13/22 8:38 am	5/13/22 9:10 am

VEHICLE	CONTAINER
2235	TOLU469593

REFERENCE:

BILL OF LADING: DTTX646317

Scale In GROSS WEIGHT 97,780 NET TONS 24.64 INBOUND
Scale Out TARE WEIGHT 48,500 NET WEIGHT 49,280 INVOICE

QTY.	UNIT	DESCRIPTION	RATE	EXTENSION	TAX	TOTAL
28.00	YD	Tracking QTY				
24.64	tn	Cont Soil Origin:Everett 100%				

NET AMOUNT
TENDERED
CHANGE
CHECK#

The undersigned individual signing this document on behalf of Customer acknowledges that he or she has read and understands the terms and conditions on the reverse side and that he or she has the authority to sign this document on behalf of the customer.

RS-F042UPR (07/12)

SIGNATURE _____ CHANGE:

CHECK :

Bid Item 10

Iron Mountain Quarry, LLC

22121 17th Ave SE STE 117
Bothell, WA 98021
425-481-0999

Ticket No.: **78495**

Date : 6/9/2022 Time: 2:38:26PM
Location : **Granite Falls Quarry**
Customer : 719 STRIDER CONSTRUCTION
Order : 21 NORTON TERMINAL
P.O. : 21NT
Product : 506 CONCRETE W REBAR 2'< **30.54** Ton

	Pounds	Tons
Gross	104240	52.12
Tare	43160 *	21.58 *
Net	61080	30.54

* P. T.

Carrier : 1887 STRIDER CONSTRUCTION
Vehicle : MD11 Strider Construction
Received : _____

Weighmaster: Brad

COPY 1 CARRIER

Iron Mountain Quarry, LLC

22121 17th Ave SE STE 117
Bothell, WA 98021
425-481-0999

Ticket No.: **78495**

Date : 6/9/2022 Time: 2:38:26PM
Location : **Granite Falls Quarry**
Customer : 719 STRIDER CONSTRUCTION
Order : 21 NORTON TERMINAL
P.O. : 21NT

	Pounds	Tons
Gross	104240	52.12
Tare	43160 *	21.58 *
Net	61080	30.54

* P. T.

Iron Mountain Quarry, LLC

22121 17th Ave SE STE 117
Bothell, WA 98021
425-481-0999

Ticket No.: **78415**

Date : 6/9/2022 Time: 12:15:42PM
Location : **Granite Falls Quarry**
Customer : 719 STRIDER CONSTRUCTION
Order : 21 NORTON TERMINAL
P.O. : 21NT
Product : 506 CONCRETE W REBAR 2'< **28.55** Ton

	Pounds	Tons
Gross	100260	50.13
Tare	43160 *	21.58 *
Net	57100	28.55

* P. T.

Carrier : 1887 STRIDER CONSTRUCTION
Vehicle : MD11 Strider Construction
Received : _____

Weighmaster: Brad

COPY 1 CARRIER

Iron Mountain Quarry, LLC

22121 17th Ave SE STE 117
Bothell, WA 98021
425-481-0999

Ticket No.: **78415**

Date : 6/9/2022 Time: 12:15:42PM
Location : **Granite Falls Quarry**
Customer : 719 STRIDER CONSTRUCTION
Order : 21 NORTON TERMINAL

	Pounds	Tons
Gross	100260	50.13
Tare	43160 *	21.58 *
Net	57100	28.55

* P. T.

Iron Mountain Quarry, LLC

22121 17th Ave SE STE 117
Bothell, WA 98021
425-481-0999

Ticket No.: **78343**

Date : 6/9/2022 Time: 9:56:35AM
Location : **Granite Falls Quarry**
Customer : 719 STRIDER CONSTRUCTION
Order : 21 NORTON TERMINAL
P.O. : 21NT
Product : 506 CONCRETE W REBAR 2'< **27.65** Ton

	Pounds	Tons
Gross	98460	49.23
Tare	43160 *	21.58 *
Net	55300	27.65

* P. T.

Carrier : 1887 STRIDER CONSTRUCTION
Vehicle : MD11 Strider Construction
Received : _____

Weighmaster: Brad

COPY 1 CARRIER

Iron Mountain Quarry, LLC

22121 17th Ave SE STE 117
Bothell, WA 98021
425-481-0999

Ticket No.: **78343**

Date : 6/9/2022 Time: 9:56:35AM
Location : **Granite Falls Quarry**
Customer : 719 STRIDER CONSTRUCTION
Order : 21 NORTON TERMINAL
P.O. : 21NT

	Pounds	Tons
Gross	98460	49.23
Tare	43160 *	21.58 *
Net	55300	27.65

* P. T.

Iron Mountain Quarry, LLC

22121 17th Ave SE STE 117
Bothell, WA 98021
425-481-0999

Ticket No.: **78273**

Date : 6/9/2022 Time: 7:39:09AM
Location : **Granite Falls Quarry**
Customer : 719 STRIDER CONSTRUCTION
Order : 21 NORTON TERMINAL
P.O. : 21NT
Product : 506 CONCRETE W REBAR 2'< **29.52** Ton

	Pounds	Tons
Gross	102200	51.10
Tare	43160 *	21.58 *
Net	59040	29.52

* P. T.

Carrier : 1887 STRIDER CONSTRUCTION
Vehicle : MD11 Strider Construction
Received : _____

Weighmaster: Brad

COPY 1 CARRIER

Iron Mountain Quarry, LLC

22121 17th Ave SE STE 117
Bothell, WA 98021
425-481-0999

Ticket No.: **78273**

Date : 6/9/2022 Time: 7:39:09AM
Location : **Granite Falls Quarry**
Customer : 719 STRIDER CONSTRUCTION
Order : 21 NORTON TERMINAL
P.O. : 21NT

	Pounds	Tons
Gross	102200	51.10
Tare	43160 *	21.58 *
Net	59040	29.52

* P. T.

Iron Mountain Quarry, LLC

22121 17th Ave SE STE 117
Bothell, WA 98021
425-481-0999

Ticket No.: **78201**

Date : 6/8/2022 Time: 2:25:46PM
Location : **Granite Falls Quarry**
Customer : 719 STRIDER CONSTRUCTION
Order : 21 NORTON TERMINAL
P.O. : 21NT
Product : 506 CONCRETE W REBAR 2'< **29.43** Ton

	Pounds	Tons
Gross	102020	51.01
Tare	43160 *	21.58 *
Net	58860	29.43

* P. T.

Carrier : 1887 STRIDER CONSTRUCTION
Vehicle : MD11 Strider Construction
Received : _____

Weighmaster: Brad

COPY 1 CARRIER

Iron Mountain Quarry, LLC

22121 17th Ave SE STE 117
Bothell, WA 98021
425-481-0999

Ticket No.: **78201**

Date : 6/8/2022 Time: 2:25:46PM
Location : **Granite Falls Quarry**
Customer : 719 STRIDER CONSTRUCTION
Order : 21 NORTON TERMINAL
P.O. : 21NT

	Pounds	Tons
Gross	102020	51.01
Tare	43160 *	21.58 *
Net	58860	29.43

* P. T.

Iron Mountain Quarry, LLC

22121 17th Ave SE STE 117
Bothell, WA 98021
425-481-0999

Ticket No.: **78134**

Date : 6/8/2022 Time: 12:08:26PM
Location : **Granite Falls Quarry**
Customer : 719 STRIDER CONSTRUCTION
Order : 21 NORTON TERMINAL
P.O. : 21NT
Product : 506 CONCRETE W REBAR 2'< **22.13** Ton

	Pounds	Tons
Gross	87420	43.71
Tare	43160 *	21.58 *
Net	44260	22.13

* P. T.

Carrier : 1887 STRIDER CONSTRUCTION
Vehicle : MD11 Strider Construction
Received : _____

Weighmaster: Brad

COPY 1 CARRIER

Iron Mountain Quarry, LLC

22121 17th Ave SE STE 117
Bothell, WA 98021
425-481-0999

Ticket No.: **78134**

Date : 6/8/2022 Time: 12:08:26PM
Location : **Granite Falls Quarry**
Customer : 719 STRIDER CONSTRUCTION
Order : 21 NORTON TERMINAL
P.O. : 21NT

	Pounds	Tons
Gross	87420	43.71
Tare	43160 *	21.58 *
Net	44260	22.13

* P. T.

Iron Mountain Quarry, LLC

22121 17th Ave SE STE 117
Bothell, WA 98021
425-481-0999

Ticket No.: **78069**

Date : 6/8/2022 Time: 9:55:15AM
Location : **Granite Falls Quarry**
Customer : 719 STRIDER CONSTRUCTION
Order : 21 NORTON TERMINAL
P.O. : 21NT
Product : 506 CONCRETE W REBAR 2'< **29.74** Ton

	Pounds	Tons
Gross	102640	51.32
Tare	43160 *	21.58 *
Net	59480	29.74

* P. T.

Carrier : 1887 STRIDER CONSTRUCTION
Vehicle : MD11 Strider Construction
Received : _____

Weighmaster: Brad

COPY 1 CARRIER

Iron Mountain Quarry, LLC

22121 17th Ave SE STE 117
Bothell, WA 98021
425-481-0999

Ticket No.: **78069**

Date : 6/8/2022 Time: 9:55:15AM
Location : **Granite Falls Quarry**
Customer : 719 STRIDER CONSTRUCTION
Order : 21 NORTON TERMINAL
P.O. : 21NT

	Pounds	Tons
Gross	102640	51.32
Tare	43160 *	21.58 *
Net	59480	29.74

* P. T.

Iron Mountain Quarry, LLC

22121 17th Ave SE STE 117
Bothell, WA 98021
425-481-0999

Ticket No.: **77994**

Date : 6/8/2022 Time: 7:37:26AM
Location : **Granite Falls Quarry**
Customer : 719 STRIDER CONSTRUCTION
Order : 21 NORTON TERMINAL
P.O. : 21NT
Product : 506 CONCRETE W REBAR 2'< **31.04** Ton

	Pounds	Tons
Gross	105240	52.62
Tare	43160 *	21.58 *
Net	62080	31.04

* P. T.

Carrier : 1887 STRIDER CONSTRUCTION
Vehicle : MD11 Strider Construction
Received : _____

Weighmaster: Brad

COPY 1 CARRIER

Iron Mountain Quarry, LLC

22121 17th Ave SE STE 117
Bothell, WA 98021
425-481-0999

Ticket No.: **77994**

Date : 6/8/2022 Time: 7:37:26AM
Location : **Granite Falls Quarry**
Customer : 719 STRIDER CONSTRUCTION
Order : 21 NORTON TERMINAL
P.O. : 21NT

	Pounds	Tons
Gross	105240	52.62
Tare	43160 *	21.58 *
Net	62080	31.04

* P. T.

Iron Mountain Quarry, LLC

22121 17th Ave SE STE 117
Bothell, WA 98021
425-481-0999

Ticket No.: **77795**

Date : 6/7/2022 Time: 9:15:12AM
Location : **Granite Falls Quarry**
Customer : 719 STRIDER CONSTRUCTION
Order : 21 NORTON TERMINAL
P.O. : 21NT
Product : 506 CONCRETE W REBAR 2'< **29.68** Ton

	Pounds	Tons
Gross	102620	51.31
Tare	43260 *	21.63 *
Net	59360	29.68

* P. T.

Carrier : 1887 STRIDER CONSTRUCTION
Vehicle : MD12 Strider Construction
Received : _____

Weighmaster: Brad

COPY 1 CARRIER

Iron Mountain Quarry, LLC

22121 17th Ave SE STE 117
Bothell, WA 98021
425-481-0999

Ticket No.: **77795**

Date : 6/7/2022 Time: 9:15:12AM
Location : **Granite Falls Quarry**
Customer : 719 STRIDER CONSTRUCTION
Order : 21 NORTON TERMINAL
P.O. : 21NT

	Pounds	Tons
Gross	102620	51.31
Tare	43260 *	21.63 *
Net	59360	29.68

* P. T.

Iron Mountain Quarry, LLC

22121 17th Ave SE STE 117
Bothell, WA 98021
425-481-0999

Ticket No.: **77735**

Date : 6/7/2022 Time: 7:05:15AM
Location : **Granite Falls Quarry**
Customer : 719 STRIDER CONSTRUCTION
Order : 21 NORTON TERMINAL
P.O. : 21NT
Product : 506 CONCRETE W REBAR 2'< **32.03** Ton

	Pounds	Tons
Gross	107220	53.61
Tare	43160 *	21.58 *
Net	64060	32.03

* P. T.

Carrier : 1887 STRIDER CONSTRUCTION
Vehicle : MD11 Strider Construction
Received : _____

Weighmaster: Brad

COPY 1 CARRIER

Iron Mountain Quarry, LLC

22121 17th Ave SE STE 117
Bothell, WA 98021
425-481-0999

Ticket No.: **77735**

Date : 6/7/2022 Time: 7:05:15AM
Location : **Granite Falls Quarry**
Customer : 719 STRIDER CONSTRUCTION
Order : 21 NORTON TERMINAL
P.O. : 21NT

	Pounds	Tons
Gross	107220	53.61
Tare	43160 *	21.58 *
Net	64060	32.03

* P. T.

Iron Mountain Quarry, LLC

22121 17th Ave SE STE 117
Bothell, WA 98021
425-481-0999

Ticket No.: **77857**

Date : 6/7/2022 Time: 11:36:54AM
Location : **Granite Falls Quarry**
Customer : 719 STRIDER CONSTRUCTION
Order : 21 NORTON TERMINAL
P.O. : 21NT
Product : 506 CONCRETE W REBAR 2'< **29.10** Ton

	Pounds	Tons
Gross	101460	50.73
Tare	43260 *	21.63 *
Net	58200	29.10

* P. T.

Carrier : 1887 STRIDER CONSTRUCTION
Vehicle : MD12 Strider Construction
Received : _____

Weighmaster: Brad

COPY 1 CARRIER

Iron Mountain Quarry, LLC

22121 17th Ave SE STE 117
Bothell, WA 98021
425-481-0999

Ticket No.: **77857**

Date : 6/7/2022 Time: 11:36:54AM
Location : **Granite Falls Quarry**
Customer : 719 STRIDER CONSTRUCTION
Order : 21 NORTON TERMINAL
P.O. : 21NT

	Pounds	Tons
Gross	101460	50.73
Tare	43260 *	21.63 *
Net	58200	29.10

* P. T.

Iron Mountain Quarry, LLC

22121 17th Ave SE STE 117
Bothell, WA 98021
425-481-0999

Ticket No.: **77919**

Date : 6/7/2022 Time: 1:48:20PM
Location : **Granite Falls Quarry**
Customer : 719 STRIDER CONSTRUCTION
Order : 21 NORTON TERMINAL
P.O. : 21NT
Product : 506 CONCRETE W REBAR 2'< **30.72** Ton

	Pounds	Tons
Gross	104700	52.35
Tare	43260 *	21.63 *
Net	61440	30.72

* P. T.

Carrier : 1887 STRIDER CONSTRUCTION
Vehicle : MD12 Strider Construction
Received : _____

Weighmaster: Brad

COPY 1 CARRIER

Iron Mountain Quarry, LLC

22121 17th Ave SE STE 117
Bothell, WA 98021
425-481-0999

Ticket No.: **77919**

Date : 6/7/2022 Time: 1:48:20PM
Location : **Granite Falls Quarry**
Customer : 719 STRIDER CONSTRUCTION
Order : 21 NORTON TERMINAL
P.O. : 21NT

	Pounds	Tons
Gross	104700	52.35
Tare	43260 *	21.63 *
Net	61440	30.72

* P. T.

Iron Mountain Quarry, LLC

22121 17th Ave SE STE 117
Bothell, WA 98021
425-481-0999

Ticket No.: **77443**

Date : 6/6/2022 Time: 8:06:40AM
Location : **Granite Falls Quarry**
Customer : 719 STRIDER CONSTRUCTION
Order : 21 NORTON TERMINAL
P.O. : 21NT
Product : 506 CONCRETE W REBAR 2'< **30.01** Ton

	Pounds	Tons
Gross	103180	51.59
Tare	43160 *	21.58 *
Net	60020	30.01

* P. T.

Carrier : 1887 STRIDER CONSTRUCTION
Vehicle : MD11 Strider Construction
Received : _____

Weighmaster: Brad

COPY 1 CARRIER

Iron Mountain Quarry, LLC

22121 17th Ave SE STE 117
Bothell, WA 98021
425-481-0999

Ticket No.: **77443**

Date : 6/6/2022 Time: 8:06:40AM
Location : **Granite Falls Quarry**
Customer : 719 STRIDER CONSTRUCTION
Order : 21 NORTON TERMINAL
P.O. : 21NT

	Pounds	Tons
Gross	103180	51.59
Tare	43160 *	21.58 *
Net	60020	30.01

* P. T.

Iron Mountain Quarry, LLC

22121 17th Ave SE STE 117
Bothell, WA 98021
425-481-0999

Ticket No.: **77511**

REPRINT

Date : 6/6/2022 Time: 10:26:33AM
Location : **Granite Falls Quarry**
Customer : 719 STRIDER CONSTRUCTION
Order : 21 NORTON TERMINAL
P.O. : 21NT
Product : 506 CONCRETE W REBAR 2'< **28.02** Ton

	Pounds	Tons
Gross	99200	49.60
Tare	43160 *	21.58 *
Net	56040	28.02

* P. T.

Carrier : 1887 STRIDER CONSTRUCTION
Vehicle : MD11 Strider Construction
Received : _____

Weighmaster: Brad

COPY 1 CARRIER

Iron Mountain Quarry, LLC

22121 17th Ave SE STE 117
Bothell, WA 98021
425-481-0999

Ticket No.: **77511**

REPRINT

Date : 6/6/2022 Time: 10:26:33AM
Location : **Granite Falls Quarry**
Customer : 719 STRIDER CONSTRUCTION
Order : 21 NORTON TERMINAL

	Pounds	Tons
Gross	99200	49.60
Tare	43160 *	21.58 *
Net	56040	28.02

* P. T.

Iron Mountain Quarry, LLC

22121 17th Ave SE STE 117
Bothell, WA 98021
425-481-0999

Ticket No.: **77587**

Date : 6/6/2022 Time: 12:32:49PM
Location : **Granite Falls Quarry**
Customer : 719 STRIDER CONSTRUCTION
Order : 21 NORTON TERMINAL
P.O. : 21NT
Product : 506 CONCRETE W REBAR 2'< **28.44** Ton

	Pounds	Tons
Gross	100040	50.02
Tare	43160 *	21.58 *
Net	56880	28.44

* P. T.

Carrier : 1887 STRIDER CONSTRUCTION
Vehicle : MD11 Strider Construction
Received : _____

Weighmaster: Brad

COPY 1 CARRIER

Iron Mountain Quarry, LLC

22121 17th Ave SE STE 117
Bothell, WA 98021
425-481-0999

Ticket No.: **77587**

Date : 6/6/2022 Time: 12:32:49PM
Location : **Granite Falls Quarry**
Customer : 719 STRIDER CONSTRUCTION
Order : 21 NORTON TERMINAL
P.O. : 21NT

	Pounds	Tons
Gross	100040	50.02
Tare	43160 *	21.58 *
Net	56880	28.44

* P. T.

Iron Mountain Quarry, LLC

22121 17th Ave SE STE 117
Bothell, WA 98021
425-481-0999

Ticket No.: **77679**

Date : 6/6/2022 Time: 2:56:11PM
Location : **Granite Falls Quarry**
Customer : 719 STRIDER CONSTRUCTION
Order : 21 NORTON TERMINAL
P.O. : 21NT
Product : 506 CONCRETE W REBAR 2'< **30.64** Ton

	Pounds	Tons
Gross	104540	52.27
Tare	43260 *	21.63 *
Net	61280	30.64

* P. T.

Carrier : 1887 STRIDER CONSTRUCTION
Vehicle : MD12 Strider Construction
Received : _____

Weighmaster: Brad

COPY 1 CARRIER

Iron Mountain Quarry, LLC

22121 17th Ave SE STE 117
Bothell, WA 98021
425-481-0999

Ticket No.: **77679**

Date : 6/6/2022 Time: 2:56:11PM
Location : **Granite Falls Quarry**
Customer : 719 STRIDER CONSTRUCTION
Order : 21 NORTON TERMINAL

	Pounds	Tons
Gross	104540	52.27
Tare	43260 *	21.63 *
Net	61280	30.64

* P. T.

Iron Mountain Quarry, LLC

22121 17th Ave SE STE 117
Bothell, WA 98021
425-481-0999

Ticket No.: **77235**

Date : 6/3/2022 Time: 10:49:01AM
Location : **Granite Falls Quarry**
Customer : 719 STRIDER CONSTRUCTION
Order : 21 NORTON TERMINAL
P.O. : 21NT
Product : 506 CONCRETE W REBAR 2'< **30.82** Ton

	Pounds	Tons
Gross	104900	52.45
Tare	43260 *	21.63 *
Net	61640	30.82

* P. T.

Carrier : 1887 STRIDER CONSTRUCTION
Vehicle : MD12 Strider Construction
Received : _____

Weighmaster: Brad

COPY 1 CARRIER

Iron Mountain Quarry, LLC

22121 17th Ave SE STE 117
Bothell, WA 98021
425-481-0999

Ticket No.: **77235**

Date : 6/3/2022 Time: 10:49:01AM
Location : **Granite Falls Quarry**
Customer : 719 STRIDER CONSTRUCTION
Order : 21 NORTON TERMINAL
P.O. : 21NT

	Pounds	Tons
Gross	104900	52.45
Tare	43260 *	21.63 *
Net	61640	30.82

* P. T.

Iron Mountain Quarry, LLC

22121 17th Ave SE STE 117
Bothell, WA 98021
425-481-0999

Ticket No.: **77286**

Date : 6/3/2022 Time: 1:10:24PM
Location : **Granite Falls Quarry**
Customer : 719 STRIDER CONSTRUCTION
Order : 21 NORTON TERMINAL
P.O. : 21NT
Product : 506 CONCRETE W REBAR 2'< **29.29** Ton

	Pounds	Tons
Gross	101840	50.92
Tare	43260 *	21.63 *
Net	58580	29.29

* P. T.

Carrier : 1887 STRIDER CONSTRUCTION
Vehicle : MD12 Strider Construction
Received : _____

Weighmaster: Brad

COPY 1 CARRIER

Iron Mountain Quarry, LLC

22121 17th Ave SE STE 117
Bothell, WA 98021
425-481-0999

Ticket No.: **77286**

Date : 6/3/2022 Time: 1:10:24PM
Location : **Granite Falls Quarry**
Customer : 719 STRIDER CONSTRUCTION
Order : 21 NORTON TERMINAL
P.O. : 21NT

	Pounds	Tons
Gross	101840	50.92
Tare	43260 *	21.63 *
Net	58580	29.29

* P. T.

Iron Mountain Quarry, LLC

22121 17th Ave SE STE 117
Bothell, WA 98021
425-481-0999

Ticket No.: **77181**

Date : 6/3/2022 Time: 8:41:03AM
Location : **Granite Falls Quarry**
Customer : 719 STRIDER CONSTRUCTION
Order : 21 NORTON TERMINAL
P.O. : 21NT
Product : 506 CONCRETE W REBAR 2'< **31.54** Ton

	Pounds	Tons
Gross	106340	53.17
Tare	43260 *	21.63 *
Net	63080	31.54

* P. T.

Carrier : 1887 STRIDER CONSTRUCTION
Vehicle : MD12 Strider Construction
Received : _____

Weighmaster: Brad

COPY 1 CARRIER

Iron Mountain Quarry, LLC

22121 17th Ave SE STE 117
Bothell, WA 98021
425-481-0999

Ticket No.: **77181**

Date : 6/3/2022 Time: 8:41:03AM
Location : **Granite Falls Quarry**
Customer : 719 STRIDER CONSTRUCTION
Order : 21 NORTON TERMINAL
P.O. : 21NT

	Pounds	Tons
Gross	106340	53.17
Tare	43260 *	21.63 *
Net	63080	31.54

* P. T.

Iron Mountain Quarry, LLC

22121 17th Ave SE STE 117
Bothell, WA 98021
425-481-0999

Ticket No.: **77064**

Date : 6/2/2022 Time: 11:55:40AM
Location : **Granite Falls Quarry**
Customer : 719 STRIDER CONSTRUCTION
Order : 21 NORTON TERMINAL
P.O. : 21NT
Product : 506 CONCRETE W REBAR 2'< **25.72** Ton

	Pounds	Tons
Gross	94700	47.35
Tare	43260 *	21.63 *
Net	51440	25.72

* P. T.

Carrier : 1887 STRIDER CONSTRUCTION
Vehicle : MD12 Strider Construction
Received : _____

Weighmaster: Brad

COPY 1 CARRIER

Iron Mountain Quarry, LLC

22121 17th Ave SE STE 117
Bothell, WA 98021
425-481-0999

Ticket No.: **77064**

Date : 6/2/2022 Time: 11:55:40AM
Location : **Granite Falls Quarry**
Customer : 719 STRIDER CONSTRUCTION
Order : 21 NORTON TERMINAL
P.O. : 21NT

	Pounds	Tons
Gross	94700	47.35
Tare	43260 *	21.63 *
Net	51440	25.72

* P. T.

Iron Mountain Quarry, LLC

22121 17th Ave SE STE 117
Bothell, WA 98021
425-481-0999

Ticket No.: **77025**

Date : 6/2/2022 Time: 9:42:10AM
Location : **Granite Falls Quarry**
Customer : 719 STRIDER CONSTRUCTION
Order : 21 NORTON TERMINAL
P.O. : 21NT
Product : 506 CONCRETE W REBAR 2'< **28.66** Ton

	Pounds	Tons
Gross	100580	50.29
Tare	43260 *	21.63 *
Net	57320	28.66

* P. T.

Carrier : 1887 STRIDER CONSTRUCTION
Vehicle : MD12 Strider Construction
Received : _____

Weighmaster: Brad

COPY 1 CARRIER

Iron Mountain Quarry, LLC

22121 17th Ave SE STE 117
Bothell, WA 98021
425-481-0999

Ticket No.: **77025**

Date : 6/2/2022 Time: 9:42:10AM
Location : **Granite Falls Quarry**
Customer : 719 STRIDER CONSTRUCTION
Order : 21 NORTON TERMINAL
P.O. : 21NT

	Pounds	Tons
Gross	100580	50.29
Tare	43260 *	21.63 *
Net	57320	28.66

* P. T.

Bid Item 12

ORIGINAL

GRANITE™

Granite Falls
11423 Jordan Rd
Arlington, WA 98223
360-966-4970

Ticket No. **58676279**
6/28/2022 7:09:13AM

Customer: STRIDER CONSTRUCTION
289514

Order ID: 267107
Job/PO# : 21NT
Cost Code
Location: NORTON SITE DEVELOPMENT
2111 ROSS AVENUE

Comments:

Vehicle: RS55TT Riverside 55
License: | |
Carrier:
Product : 2209 GRAVEL BORROW

	Pounds	Metric Tons	Tons
Gross	103,540	46.96	51.77
Tare	40,540	18.39	20.27
Net	63,000	28.58	31.50

Scale: 1

FOB: PICK-UP

This Load: 31.50 TONS

Load No: 1
Shipped: 31.50 TONS

Weighmaster: Granite Construction Company
Deputy: Josh Ordos

WEIGHMASTER CERTIFICATE

Accepted by: _____

WARNING: THIS PRODUCT CONTAINS CRYSTALLINE SILICA (QUARTZ). CRYSTALLINE SILICA IS A COMMON NATURALLY OCCURING MINERAL FOUND IN SAND AND ROCK. PROLONGED AND REPEATED BREATHING OF CRYSTALLINE SILICA DUST MAY CAUSE RESPIRATORY AND OTHER HEALTH PROBLEMS, INCLUDING LUNG DISEASE, SILICOSIS AND CANCER, WHICH MAY RESULT IN PERMANENT INJURY OR DEATH. BEFORE USING OR HANDLING THIS PRODUCT READ THE MATERIAL SAFETY DATA SHEET FOR MORE DETAILED INFORMATION INCLUDING INFORMATION ON APPROPRIATE RESPIRATORY PROTECTION. MSDS SHEETS AVAILABLE AT WWW.GRANITECONSTRUCTION.COM/MSDS OR BY CONTACTING YOUR LOCAL OFFICE.

gci rev 04/21

COPY

GRANITE™

Granite Falls
11423 Jordan Rd
Arlington, WA 98223
360-966-4970

Ticket No. **58676279**
6/28/2022 7:09:13AM

Customer: STRIDER CONSTRUCTION
289514

Order ID: 267107
Job/PO# : 21NT
Cost Code
Location: NORTON SITE DEVELOPMENT
2111 ROSS AVENUE

Comments:

Vehicle: RS55TT Riverside 55
License: | |
Carrier:
Product : 2209 GRAVEL BORROW

	Pounds	Metric Tons	Tons
Gross	103,540	46.96	51.77
Tare	40,540	18.39	20.27
Net	63,000	28.58	31.50

Scale: 1

FOB: PICK-UP

This Load: 31.50 TONS

Load No: 1
Shipped: 31.50 TONS

Weighmaster: Granite Construction Company
Deputy: Josh Ordos

WEIGHMASTER CERTIFICATE

Accepted by: _____

WARNING: THIS PRODUCT CONTAINS CRYSTALLINE SILICA (QUARTZ). CRYSTALLINE SILICA IS A COMMON NATURALLY OCCURING MINERAL FOUND IN SAND AND ROCK. PROLONGED AND REPEATED BREATHING OF CRYSTALLINE SILICA DUST MAY CAUSE RESPIRATORY AND OTHER HEALTH PROBLEMS, INCLUDING LUNG DISEASE, SILICOSIS AND CANCER, WHICH MAY RESULT IN PERMANENT INJURY OR DEATH. BEFORE USING OR HANDLING THIS PRODUCT READ THE MATERIAL SAFETY DATA SHEET FOR MORE DETAILED INFORMATION INCLUDING INFORMATION ON APPROPRIATE RESPIRATORY PROTECTION. MSDS SHEETS AVAILABLE AT WWW.GRANITECONSTRUCTION.COM/MSDS OR BY CONTACTING YOUR LOCAL OFFICE.

gci rev 04/21

ORIGINAL

GRANITE™

Granite Falls
11423 Jordan Rd
Arlington, WA 98223
360-966-4970

Ticket No. **58676316**
6/28/2022 8:48:38AM

Customer: STRIDER CONSTRUCTION
289514

Order ID: 267107
Job/PO# : 21NT
Cost Code
Location: NORTON SITE DEVELOPMENT
2111 ROSS AVENUE

Comments:

Vehicle: RS55TT Riverside 55
License: | |
Carrier:
Product : 2209 GRAVEL BORROW

	Pounds	Metric Tons	Tons
Gross	103,580	46.98	51.79
Tare	40,540	18.39	20.27
Net	63,040	28.59	31.52

Scale: 1 * P T

FOB: PICK-UP

This Load: 31.52 TONS

Load No: 3
Shipped: 93.56 TONS

Weighmaster: Granite Construction Company
Deputy: Josh Ordos

WEIGHMASTER CERTIFICATE

Accepted by: _____

WARNING: THIS PRODUCT CONTAINS CRYSTALLINE SILICA (QUARTZ). CRYSTALLINE SILICA IS A COMMON NATURALLY OCCURING MINERAL FOUND IN SAND AND ROCK. PROLONGED AND REPEATED BREATHING OF CRYSTALLINE SILICA DUST MAY CAUSE RESPIRATORY AND OTHER HEALTH PROBLEMS, INCLUDING LUNG DISEASE, SILICOSIS AND CANCER, WHICH MAY RESULT IN PERMANENT INJURY OR DEATH. BEFORE USING OR HANDLING THIS PRODUCT READ THE MATERIAL SAFETY DATA SHEET FOR MORE DETAILED INFORMATION INCLUDING INFORMATION ON APPROPRIATE RESPIRATORY PROTECTION. MSDS SHEETS AVAILABLE AT WWW.GRANITECONSTRUCTION.COM/MSDS OR BY CONTACTING YOUR LOCAL OFFICE.

gci rev 04/21

COPY

GRANITE™

Granite Falls
11423 Jordan Rd
Arlington, WA 98223
360-966-4970

Ticket No. **58676316**
6/28/2022 8:48:38AM

Customer: STRIDER CONSTRUCTION
289514

Order ID: 267107
Job/PO# : 21NT
Cost Code
Location: NORTON SITE DEVELOPMENT
2111 ROSS AVENUE

Comments:

Vehicle: RS55TT Riverside 55
License: | |
Carrier:
Product : 2209 GRAVEL BORROW

	Pounds	Metric Tons	Tons
Gross	103,580	46.98	51.79
Tare	40,540	18.39	20.27
Net	63,040	28.59	31.52

Scale: 1 * P T

FOB: PICK-UP

This Load: 31.52 TONS

Load No: 3
Shipped: 93.56 TONS

Weighmaster: Granite Construction Company
Deputy: Josh Ordos

WEIGHMASTER CERTIFICATE

Accepted by: _____

WARNING: THIS PRODUCT CONTAINS CRYSTALLINE SILICA (QUARTZ). CRYSTALLINE SILICA IS A COMMON NATURALLY OCCURING MINERAL FOUND IN SAND AND ROCK. PROLONGED AND REPEATED BREATHING OF CRYSTALLINE SILICA DUST MAY CAUSE RESPIRATORY AND OTHER HEALTH PROBLEMS, INCLUDING LUNG DISEASE, SILICOSIS AND CANCER, WHICH MAY RESULT IN PERMANENT INJURY OR DEATH. BEFORE USING OR HANDLING THIS PRODUCT READ THE MATERIAL SAFETY DATA SHEET FOR MORE DETAILED INFORMATION INCLUDING INFORMATION ON APPROPRIATE RESPIRATORY PROTECTION. MSDS SHEETS AVAILABLE AT WWW.GRANITECONSTRUCTION.COM/MSDS OR BY CONTACTING YOUR LOCAL OFFICE.

gci rev 04/21

ORIGINAL

GRANITE™

Granite Falls
11423 Jordan Rd
Arlington, WA 98223
360-966-4970

Ticket No. **58676370**
6/28/2022 11:57:43AM

Customer: STRIDER CONSTRUCTION
289514

Order ID: 267107
Job/PO# : 21NT
Cost Code
Location: NORTON SITE DEVELOPMENT
2111 ROSS AVENUE

Comments:

Vehicle: RS55TT Riverside 55
License: | |
Carrier:
Product : 2209 GRAVEL BORROW

	Pounds	Metric Tons	Tons
Gross	103,680	47.03	51.84
Tare	40,540	18.39	20.27
Net	63,140	28.64	31.57

Scale: 1 * P. T.

FOB: PICK-UP

This Load: 31.57 TONS

Load No: 5
Shipped: 155.25 TONS

Weighmaster: Granite Construction Company
Deputy: Josh Ordos

WEIGHMASTER CERTIFICATE

Accepted by: _____

WARNING: THIS PRODUCT CONTAINS CRYSTALLINE SILICA (QUARTZ). CRYSTALLINE SILICA IS A COMMON NATURALLY OCCURING MINERAL FOUND IN SAND AND ROCK. PROLONGED AND REPEATED BREATHING OF CRYSTALLINE SILICA DUST MAY CAUSE RESPIRATORY AND OTHER HEALTH PROBLEMS, INCLUDING LUNG DISEASE, SILICOSIS AND CANCER, WHICH MAY RESULT IN PERMANENT INJURY OR DEATH. BEFORE USING OR HANDLING THIS PRODUCT READ THE MATERIAL SAFETY DATA SHEET FOR MORE DETAILED INFORMATION INCLUDING INFORMATION ON APPROPRIATE RESPIRATORY PROTECTION. MSDS SHEETS AVAILABLE AT WWW.GRANITECONSTRUCTION.COM/MSDS OR BY CONTACTING YOUR LOCAL OFFICE.

gci rev 04/21

COPY

GRANITE™

Granite Falls
11423 Jordan Rd
Arlington, WA 98223
360-966-4970

Ticket No. **58676370**
6/28/2022 11:57:43AM

Customer: STRIDER CONSTRUCTION
289514

Order ID: 267107
Job/PO# : 21NT
Cost Code
Location: NORTON SITE DEVELOPMENT
2111 ROSS AVENUE

Comments:

Vehicle: RS55TT Riverside 55
License: | |
Carrier:
Product : 2209 GRAVEL BORROW

	Pounds	Metric Tons	Tons
Gross	103,680	47.03	51.84
Tare	40,540	18.39	20.27
Net	63,140	28.64	31.57

Scale: 1 * P. T.

FOB: PICK-UP

This Load: 31.57 TONS

Load No: 5
Shipped: 155.25 TONS

Weighmaster: Granite Construction Company
Deputy: Josh Ordos

WEIGHMASTER CERTIFICATE

Accepted by: _____

WARNING: THIS PRODUCT CONTAINS CRYSTALLINE SILICA (QUARTZ). CRYSTALLINE SILICA IS A COMMON NATURALLY OCCURING MINERAL FOUND IN SAND AND ROCK. PROLONGED AND REPEATED BREATHING OF CRYSTALLINE SILICA DUST MAY CAUSE RESPIRATORY AND OTHER HEALTH PROBLEMS, INCLUDING LUNG DISEASE, SILICOSIS AND CANCER, WHICH MAY RESULT IN PERMANENT INJURY OR DEATH. BEFORE USING OR HANDLING THIS PRODUCT READ THE MATERIAL SAFETY DATA SHEET FOR MORE DETAILED INFORMATION INCLUDING INFORMATION ON APPROPRIATE RESPIRATORY PROTECTION. MSDS SHEETS AVAILABLE AT WWW.GRANITECONSTRUCTION.COM/MSDS OR BY CONTACTING YOUR LOCAL OFFICE.

gci rev 04/21

ORIGINAL

GRANITE™

Granite Falls
11423 Jordan Rd
Arlington, WA 98223
360-966-4970

Ticket No. **58676425**
6/28/2022 1:30:32PM

Customer: STRIDER CONSTRUCTION
289514

Order ID: 267107
Job/PO# : 21NT
Cost Code
Location: NORTON SITE DEVELOPMENT
2111 ROSS AVENUE

Comments:

Vehicle: RS55TT Riverside 55
License: | |
Carrier:
Product : 2209 GRAVEL BORROW

	Pounds	Metric Tons	Tons
Gross	102,140	46.33	51.07
Tare	40,540	18.39	20.27
Net	61,600	27.94	30.80

Scale: 1 * P. T.

FOB: PICK-UP

This Load: 30.80 TONS

Load No: 9
Shipped: 279.69 TONS

Weighmaster: Granite Construction Company
Deputy: Josh Ordos

WEIGHMASTER CERTIFICATE

Accepted by: _____

WARNING: THIS PRODUCT CONTAINS CRYSTALLINE SILICA (QUARTZ). CRYSTALLINE SILICA IS A COMMON NATURALLY OCCURING MINERAL FOUND IN SAND AND ROCK. PROLONGED AND REPEATED BREATHING OF CRYSTALLINE SILICA DUST MAY CAUSE RESPIRATORY AND OTHER HEALTH PROBLEMS, INCLUDING LUNG DISEASE, SILICOSIS AND CANCER, WHICH MAY RESULT IN PERMANENT INJURY OR DEATH. BEFORE USING OR HANDLING THIS PRODUCT READ THE MATERIAL SAFETY DATA SHEET FOR MORE DETAILED INFORMATION INCLUDING INFORMATION ON APPROPRIATE RESPIRATORY PROTECTION. MSDS SHEETS AVAILABLE AT WWW.GRANITECONSTRUCTION.COM/MSDS OR BY CONTACTING YOUR LOCAL OFFICE.

gci rev 04/21

COPY

GRANITE™

Granite Falls
11423 Jordan Rd
Arlington, WA 98223
360-966-4970

Ticket No. **58676425**
6/28/2022 1:30:32PM

Customer: STRIDER CONSTRUCTION
289514

Order ID: 267107
Job/PO# : 21NT
Cost Code
Location: NORTON SITE DEVELOPMENT
2111 ROSS AVENUE

Comments:

Vehicle: RS55TT Riverside 55
License: | |
Carrier:
Product : 2209 GRAVEL BORROW

	Pounds	Metric Tons	Tons
Gross	102,140	46.33	51.07
Tare	40,540	18.39	20.27
Net	61,600	27.94	30.80

Scale: 1 * P. T.

FOB: PICK-UP

This Load: 30.80 TONS

Load No: 9
Shipped: 279.69 TONS

Weighmaster: Granite Construction Company
Deputy: Josh Ordos

WEIGHMASTER CERTIFICATE

Accepted by: _____

WARNING: THIS PRODUCT CONTAINS CRYSTALLINE SILICA (QUARTZ). CRYSTALLINE SILICA IS A COMMON NATURALLY OCCURING MINERAL FOUND IN SAND AND ROCK. PROLONGED AND REPEATED BREATHING OF CRYSTALLINE SILICA DUST MAY CAUSE RESPIRATORY AND OTHER HEALTH PROBLEMS, INCLUDING LUNG DISEASE, SILICOSIS AND CANCER, WHICH MAY RESULT IN PERMANENT INJURY OR DEATH. BEFORE USING OR HANDLING THIS PRODUCT READ THE MATERIAL SAFETY DATA SHEET FOR MORE DETAILED INFORMATION INCLUDING INFORMATION ON APPROPRIATE RESPIRATORY PROTECTION. MSDS SHEETS AVAILABLE AT WWW.GRANITECONSTRUCTION.COM/MSDS OR BY CONTACTING YOUR LOCAL OFFICE.

gci rev 04/21

COPY REPRINT

GRANITE™

Granite Falls
11423 Jordan Rd
Arlington, WA 98223
360-966-4970

Ticket No. **58676392**
6/28/2022 12:29:04PM

Customer: STRIDER CONSTRUCTION
289514

Order ID: 267107
Job/PO# : 21NT
Cost Code
Location: NORTON SITE DEVELOPMENT
2111 ROSS AVENUE

Comments:

Vehicle: RS55TT Riverside 55
License: | |
Carrier:
Product : 2209 GRAVEL BORROW

	Pounds	Metric Tons	Tons
Gross	103,480	46.94	51.74
Tare	40,540	18.39	20.27
Net	62,940	28.55	31.47

Scale: 1 m Manual Weight, * P.T.

FOB: PICK-UP

This Load: 31.47 TONS

Load No: 7
Shipped: 217.80 TONS

Weighmaster: Granite Construction Company
Deputy: Josh Ordos

WEIGHMASTER CERTIFICATE

Accepted by: _____

WARNING: THIS PRODUCT CONTAINS CRYSTALLINE SILICA (QUARTZ). CRYSTALLINE SILICA IS A COMMON NATURALLY OCCURING MINERAL FOUND IN SAND AND ROCK. PROLONGED AND REPEATED BREATHING OF CRYSTALLINE SILICA DUST MAY CAUSE RESPIRATORY AND OTHER HEALTH PROBLEMS, INCLUDING LUNG DISEASE, SILICOSIS AND CANCER, WHICH MAY RESULT IN PERMANENT INJURY OR DEATH. BEFORE USING OR HANDLING THIS PRODUCT READ THE MATERIAL SAFETY DATA SHEET FOR MORE DETAILED INFORMATION INCLUDING INFORMATION ON APPROPRIATE RESPIRATORY PROTECTION. MSDS SHEETS AVAILABLE AT WWW.GRANITECONSTRUCTION.COM/MSDS OR BY CONTACTING YOUR LOCAL OFFICE.

gci rev 04/21

COPY REPRINT

GRANITE™

Granite Falls
11423 Jordan Rd
Arlington, WA 98223
360-966-4970

Ticket No. **58676392**
6/28/2022 12:29:04PM

Customer: STRIDER CONSTRUCTION
289514

Order ID: 267107
Job/PO# : 21NT
Cost Code
Location: NORTON SITE DEVELOPMENT
2111 ROSS AVENUE

Comments:

Vehicle: RS55TT Riverside 55
License: | |
Carrier:
Product : 2209 GRAVEL BORROW

	Pounds	Metric Tons	Tons
Gross	103,480	46.94	51.74
Tare	40,540	18.39	20.27
Net	62,940	28.55	31.47

Scale: 1 m Manual Weight, * P.T.

FOB: PICK-UP

This Load: 31.47 TONS

Load No: 7
Shipped: 217.80 TONS

Weighmaster: Granite Construction Company
Deputy: Josh Ordos

WEIGHMASTER CERTIFICATE

Accepted by: _____

WARNING: THIS PRODUCT CONTAINS CRYSTALLINE SILICA (QUARTZ). CRYSTALLINE SILICA IS A COMMON NATURALLY OCCURING MINERAL FOUND IN SAND AND ROCK. PROLONGED AND REPEATED BREATHING OF CRYSTALLINE SILICA DUST MAY CAUSE RESPIRATORY AND OTHER HEALTH PROBLEMS, INCLUDING LUNG DISEASE, SILICOSIS AND CANCER, WHICH MAY RESULT IN PERMANENT INJURY OR DEATH. BEFORE USING OR HANDLING THIS PRODUCT READ THE MATERIAL SAFETY DATA SHEET FOR MORE DETAILED INFORMATION INCLUDING INFORMATION ON APPROPRIATE RESPIRATORY PROTECTION. MSDS SHEETS AVAILABLE AT WWW.GRANITECONSTRUCTION.COM/MSDS OR BY CONTACTING YOUR LOCAL OFFICE.

gci rev 04/21

ORIGINAL

GRANITE™

Granite Falls
11423 Jordan Rd
Arlington, WA 98223
360-966-4970

Ticket No. **58676451**
6/28/2022 3:06:21PM

Customer: STRIDER CONSTRUCTION
289514

Order ID: 267107
Job/PO# : 21NT
Cost Code
Location: NORTON SITE DEVELOPMENT
2111 ROSS AVENUE

Comments:

Vehicle: RS55TT Riverside 55
License: | |
Carrier:
Product : 2209 GRAVEL BORROW

	Pounds	Metric Tons	Tons
Gross	101,320	45.96	50.66
Tare	40,540	18.39	20.27
Net	60,780	27.57	30.39

Scale: 1 * P. T.

FOB: PICK-UP

This Load: 30.39 TONS

Load No: 11
Shipped: 340.33 TONS

Weighmaster: Granite Construction Company
Deputy: Josh Ordos

WEIGHMASTER CERTIFICATE

Accepted by: _____

WARNING: THIS PRODUCT CONTAINS CRYSTALLINE SILICA (QUARTZ). CRYSTALLINE SILICA IS A COMMON NATURALLY OCCURING MINERAL FOUND IN SAND AND ROCK. PROLONGED AND REPEATED BREATHING OF CRYSTALLINE SILICA DUST MAY CAUSE RESPIRATORY AND OTHER HEALTH PROBLEMS, INCLUDING LUNG DISEASE, SILICOSIS AND CANCER, WHICH MAY RESULT IN PERMANENT INJURY OR DEATH. BEFORE USING OR HANDLING THIS PRODUCT READ THE MATERIAL SAFETY DATA SHEET FOR MORE DETAILED INFORMATION INCLUDING INFORMATION ON APPROPRIATE RESPIRATORY PROTECTION. MSDS SHEETS AVAILABLE AT WWW.GRANITECONSTRUCTION.COM/MSDS OR BY CONTACTING YOUR LOCAL OFFICE.

gci rev. 04/21

COPY

GRANITE™

Granite Falls
11423 Jordan Rd
Arlington, WA 98223
360-966-4970

Ticket No. **58676451**
6/28/2022 3:06:21PM

Customer: STRIDER CONSTRUCTION
289514

Order ID: 267107
Job/PO# : 21NT
Cost Code
Location: NORTON SITE DEVELOPMENT
2111 ROSS AVENUE

Comments:

Vehicle: RS55TT Riverside 55
License: | |
Carrier:
Product : 2209 GRAVEL BORROW

	Pounds	Metric Tons	Tons
Gross	101,320	45.96	50.66
Tare	40,540	18.39	20.27
Net	60,780	27.57	30.39

Scale: 1 * P. T.

FOB: PICK-UP

This Load: 30.39 TONS

Load No: 11
Shipped: 340.33 TONS

Weighmaster: Granite Construction Company
Deputy: Josh Ordos

WEIGHMASTER CERTIFICATE

Accepted by: _____

WARNING: THIS PRODUCT CONTAINS CRYSTALLINE SILICA (QUARTZ). CRYSTALLINE SILICA IS A COMMON NATURALLY OCCURING MINERAL FOUND IN SAND AND ROCK. PROLONGED AND REPEATED BREATHING OF CRYSTALLINE SILICA DUST MAY CAUSE RESPIRATORY AND OTHER HEALTH PROBLEMS, INCLUDING LUNG DISEASE, SILICOSIS AND CANCER, WHICH MAY RESULT IN PERMANENT INJURY OR DEATH. BEFORE USING OR HANDLING THIS PRODUCT READ THE MATERIAL SAFETY DATA SHEET FOR MORE DETAILED INFORMATION INCLUDING INFORMATION ON APPROPRIATE RESPIRATORY PROTECTION. MSDS SHEETS AVAILABLE AT WWW.GRANITECONSTRUCTION.COM/MSDS OR BY CONTACTING YOUR LOCAL OFFICE.

gci rev. 04/21

ORIGINAL

GRANITE™

Granite Falls
11423 Jordan Rd
Arlington, WA 98223
360-966-4970

Ticket No. **58676282**
6/28/2022 7:14:52AM

Customer: STRIDER CONSTRUCTION
289514

Order ID: 267107
Job/PO# : 21NT
Cost Code
Location: NORTON SITE DEVELOPMENT
2111 ROSS AVENUE

Comments:

Vehicle: RS56TT RS56TT
License: | |
Carrier:
Product : 2209 GRAVEL BORROW

	Pounds	Metric Tons	Tons
Gross	102,460	46.48	51.23
Tare	41,380	18.77	20.69
Net	61,080	27.71	30.54

Scale: 1

FOB: PICK-UP

This Load: 30.54 TONS

Load No: 2
Shipped: 62.04 TONS

Weighmaster: Granite Construction Company
Deputy: Josh Ordos

WEIGHMASTER CERTIFICATE

Accepted by: _____

WARNING: THIS PRODUCT CONTAINS CRYSTALLINE SILICA (QUARTZ). CRYSTALLINE SILICA IS A COMMON NATURALLY OCCURING MINERAL FOUND IN SAND AND ROCK. PROLONGED AND REPEATED BREATHING OF CRYSTALLINE SILICA DUST MAY CAUSE RESPIRATORY AND OTHER HEALTH PROBLEMS, INCLUDING LUNG DISEASE, SILICOSIS AND CANCER, WHICH MAY RESULT IN PERMANENT INJURY OR DEATH. BEFORE USING OR HANDLING THIS PRODUCT READ THE MATERIAL SAFETY DATA SHEET FOR MORE DETAILED INFORMATION INCLUDING INFORMATION ON APPROPRIATE RESPIRATORY PROTECTION. MSDS SHEETS AVAILABLE AT WWW.GRANITECONSTRUCTION.COM/MSDS OR BY CONTACTING YOUR LOCAL OFFICE.

gci rev 04/21

COPY

GRANITE™

Granite Falls
11423 Jordan Rd
Arlington, WA 98223
360-966-4970

Ticket No. **58676282**
6/28/2022 7:14:52AM

Customer: STRIDER CONSTRUCTION
289514

Order ID: 267107
Job/PO# : 21NT
Cost Code
Location: NORTON SITE DEVELOPMENT
2111 ROSS AVENUE

Comments:

Vehicle: RS56TT RS56TT
License: | |
Carrier:
Product : 2209 GRAVEL BORROW

	Pounds	Metric Tons	Tons
Gross	102,460	46.48	51.23
Tare	41,380	18.77	20.69
Net	61,080	27.71	30.54

Scale: 1

FOB: PICK-UP

This Load: 30.54 TONS

Load No: 2
Shipped: 62.04 TONS

Weighmaster: Granite Construction Company
Deputy: Josh Ordos

WEIGHMASTER CERTIFICATE

Accepted by: _____

WARNING: THIS PRODUCT CONTAINS CRYSTALLINE SILICA (QUARTZ). CRYSTALLINE SILICA IS A COMMON NATURALLY OCCURING MINERAL FOUND IN SAND AND ROCK. PROLONGED AND REPEATED BREATHING OF CRYSTALLINE SILICA DUST MAY CAUSE RESPIRATORY AND OTHER HEALTH PROBLEMS, INCLUDING LUNG DISEASE, SILICOSIS AND CANCER, WHICH MAY RESULT IN PERMANENT INJURY OR DEATH. BEFORE USING OR HANDLING THIS PRODUCT READ THE MATERIAL SAFETY DATA SHEET FOR MORE DETAILED INFORMATION INCLUDING INFORMATION ON APPROPRIATE RESPIRATORY PROTECTION. MSDS SHEETS AVAILABLE AT WWW.GRANITECONSTRUCTION.COM/MSDS OR BY CONTACTING YOUR LOCAL OFFICE.

gci rev. 04/21

ORIGINAL

GRANITE™

Granite Falls
11423 Jordan Rd
Arlington, WA 98223
360-966-4970

Ticket No. **58676320**
6/28/2022 8:57:21AM

Customer: STRIDER CONSTRUCTION
289514

Order ID: 267107
Job/PO# : 21NT
Cost Code
Location: NORTON SITE DEVELOPMENT
2111 ROSS AVENUE

Comments:

Vehicle: RS56TT RS56TT
License: | |
Carrier:
Product : 2209 GRAVEL BORROW

	Pounds	Metric Tons	Tons
Gross	101,620	46.09	50.81
Tare	41,380	18.77	20.69
Net	60,240	27.32	30.12

Scale: 1 * P. T.

FOB: PICK-UP

This Load: 30.12 TONS

Load No: 4
Shipped: 123.68 TONS

Weighmaster: Granite Construction Company
Deputy: Josh Ordos

WEIGHMASTER CERTIFICATE

Accepted by: _____

WARNING: THIS PRODUCT CONTAINS CRYSTALLINE SILICA (QUARTZ). CRYSTALLINE SILICA IS A COMMON NATURALLY OCCURING MINERAL FOUND IN SAND AND ROCK. PROLONGED AND REPEATED BREATHING OF CRYSTALLINE SILICA DUST MAY CAUSE RESPIRATORY AND OTHER HEALTH PROBLEMS, INCLUDING LUNG DISEASE, SILICOSIS AND CANCER, WHICH MAY RESULT IN PERMANENT INJURY OR DEATH. BEFORE USING OR HANDLING THIS PRODUCT READ THE MATERIAL SAFETY DATA SHEET FOR MORE DETAILED INFORMATION INCLUDING INFORMATION ON APPROPRIATE RESPIRATORY PROTECTION. MSDS SHEETS AVAILABLE AT WWW.GRANITECONSTRUCTION.COM/MSDS OR BY CONTACTING YOUR LOCAL OFFICE.

gci rev 04/21

COPY

GRANITE™

Granite Falls
11423 Jordan Rd
Arlington, WA 98223
360-966-4970

Ticket No. **58676320**
6/28/2022 8:57:21AM

Customer: STRIDER CONSTRUCTION
289514

Order ID: 267107
Job/PO# : 21NT
Cost Code
Location: NORTON SITE DEVELOPMENT
2111 ROSS AVENUE

Comments:

Vehicle: RS56TT RS56TT
License: | |
Carrier:
Product : 2209 GRAVEL BORROW

	Pounds	Metric Tons	Tons
Gross	101,620	46.09	50.81
Tare	41,380	18.77	20.69
Net	60,240	27.32	30.12

Scale: 1 * P. T.

FOB: PICK-UP

This Load: 30.12 TONS

Load No: 4
Shipped: 123.68 TONS

Weighmaster: Granite Construction Company
Deputy: Josh Ordos

WEIGHMASTER CERTIFICATE

Accepted by: _____

WARNING: THIS PRODUCT CONTAINS CRYSTALLINE SILICA (QUARTZ). CRYSTALLINE SILICA IS A COMMON NATURALLY OCCURING MINERAL FOUND IN SAND AND ROCK. PROLONGED AND REPEATED BREATHING OF CRYSTALLINE SILICA DUST MAY CAUSE RESPIRATORY AND OTHER HEALTH PROBLEMS, INCLUDING LUNG DISEASE, SILICOSIS AND CANCER, WHICH MAY RESULT IN PERMANENT INJURY OR DEATH. BEFORE USING OR HANDLING THIS PRODUCT READ THE MATERIAL SAFETY DATA SHEET FOR MORE DETAILED INFORMATION INCLUDING INFORMATION ON APPROPRIATE RESPIRATORY PROTECTION. MSDS SHEETS AVAILABLE AT WWW.GRANITECONSTRUCTION.COM/MSDS OR BY CONTACTING YOUR LOCAL OFFICE.

gci rev 04/21

ORIGINAL

GRANITE™

Granite Falls
11423 Jordan Rd
Arlington, WA 98223
360-966-4970

Ticket No. **58676371**
6/28/2022 11:59:40AM

Customer: STRIDER CONSTRUCTION
289514

Order ID: 267107
Job/PO# : 21NT
Cost Code
Location: NORTON SITE DEVELOPMENT
2111 ROSS AVENUE

Comments:

Vehicle: RS56TT RS56TT
License: | |
Carrier:
Product : 2209 GRAVEL BORROW

	Pounds	Metric Tons	Tons
Gross	103,540	46.96	51.77
Tare	41,380	18.77	20.69
Net	62,160	28.20	31.08

Scale: 1 * P. T.

FOB: PICK-UP

This Load: 31.08 TONS

Load No: 6
Shipped: 186.33 TONS

Weighmaster: Granite Construction Company
Deputy: Josh Ordos

WEIGHMASTER CERTIFICATE

Accepted by: _____

WARNING: THIS PRODUCT CONTAINS CRYSTALLINE SILICA (QUARTZ). CRYSTALLINE SILICA IS A COMMON NATURALLY OCCURING MINERAL FOUND IN SAND AND ROCK. PROLONGED AND REPEATED BREATHING OF CRYSTALLINE SILICA DUST MAY CAUSE RESPIRATORY AND OTHER HEALTH PROBLEMS, INCLUDING LUNG DISEASE, SILICOSIS AND CANCER, WHICH MAY RESULT IN PERMANENT INJURY OR DEATH. BEFORE USING OR HANDLING THIS PRODUCT READ THE MATERIAL SAFETY DATA SHEET FOR MORE DETAILED INFORMATION INCLUDING INFORMATION ON APPROPRIATE RESPIRATORY PROTECTION. MSDS SHEETS AVAILABLE AT WWW.GRANITECONSTRUCTION.COM/MSDS OR BY CONTACTING YOUR LOCAL OFFICE.

gci rev 04/21

COPY

GRANITE™

Granite Falls
11423 Jordan Rd
Arlington, WA 98223
360-966-4970

Ticket No. **58676371**
6/28/2022 11:59:40AM

Customer: STRIDER CONSTRUCTION
289514

Order ID: 267107
Job/PO# : 21NT
Cost Code
Location: NORTON SITE DEVELOPMENT
2111 ROSS AVENUE

Comments:

Vehicle: RS56TT RS56TT
License: | |
Carrier:
Product : 2209 GRAVEL BORROW

	Pounds	Metric Tons	Tons
Gross	103,540	46.96	51.77
Tare	41,380	18.77	20.69
Net	62,160	28.20	31.08

Scale: 1 * P. T.

FOB: PICK-UP

This Load: 31.08 TONS

Load No: 6
Shipped: 186.33 TONS

Weighmaster: Granite Construction Company
Deputy: Josh Ordos

WEIGHMASTER CERTIFICATE

Accepted by: _____

WARNING: THIS PRODUCT CONTAINS CRYSTALLINE SILICA (QUARTZ). CRYSTALLINE SILICA IS A COMMON NATURALLY OCCURING MINERAL FOUND IN SAND AND ROCK. PROLONGED AND REPEATED BREATHING OF CRYSTALLINE SILICA DUST MAY CAUSE RESPIRATORY AND OTHER HEALTH PROBLEMS, INCLUDING LUNG DISEASE, SILICOSIS AND CANCER, WHICH MAY RESULT IN PERMANENT INJURY OR DEATH. BEFORE USING OR HANDLING THIS PRODUCT READ THE MATERIAL SAFETY DATA SHEET FOR MORE DETAILED INFORMATION INCLUDING INFORMATION ON APPROPRIATE RESPIRATORY PROTECTION. MSDS SHEETS AVAILABLE AT WWW.GRANITECONSTRUCTION.COM/MSDS OR BY CONTACTING YOUR LOCAL OFFICE.

gci rev 04/21

ORIGINAL

GRANITE™

Granite Falls
11423 Jordan Rd
Arlington, WA 98223
360-966-4970

Ticket No. **58676426**
6/28/2022 1:31:59PM

Customer: STRIDER CONSTRUCTION
289514

Order ID: 267107
Job/PO# : 21NT
Cost Code
Location: NORTON SITE DEVELOPMENT
2111 ROSS AVENUE

Comments:

Vehicle: RS56TT RS56TT
License: | |
Carrier:
Product : 2209 GRAVEL BORROW

	Pounds	Metric Tons	Tons
Gross	101,880	46.21	50.94
Tare	41,380	18.77	20.69
Net	60,500	27.44	30.25

Scale: 1 * P T

FOB: PICK-UP

This Load: 30.25 TONS

Load No: 10
Shipped: 309.94 TONS

Weighmaster: Granite Construction Company
Deputy: Josh Ordos

WEIGHMASTER CERTIFICATE

Accepted by: _____

WARNING: THIS PRODUCT CONTAINS CRYSTALLINE SILICA (QUARTZ). CRYSTALLINE SILICA IS A COMMON NATURALLY OCCURING MINERAL FOUND IN SAND AND ROCK. PROLONGED AND REPEATED BREATHING OF CRYSTALLINE SILICA DUST MAY CAUSE RESPIRATORY AND OTHER HEALTH PROBLEMS, INCLUDING LUNG DISEASE, SILICOSIS AND CANCER, WHICH MAY RESULT IN PERMANENT INJURY OR DEATH. BEFORE USING OR HANDLING THIS PRODUCT READ THE MATERIAL SAFETY DATA SHEET FOR MORE DETAILED INFORMATION INCLUDING INFORMATION ON APPROPRIATE RESPIRATORY PROTECTION. MSDS SHEETS AVAILABLE AT WWW.GRANITECONSTRUCTION.COM/MSDS OR BY CONTACTING YOUR LOCAL OFFICE.

gci rev 04/21

COPY

GRANITE™

Granite Falls
11423 Jordan Rd
Arlington, WA 98223
360-966-4970

Ticket No. **58676426**
6/28/2022 1:31:59PM

Customer: STRIDER CONSTRUCTION
289514

Order ID: 267107
Job/PO# : 21NT
Cost Code
Location: NORTON SITE DEVELOPMENT
2111 ROSS AVENUE

Comments:

Vehicle: RS56TT RS56TT
License: | |
Carrier:
Product : 2209 GRAVEL BORROW

	Pounds	Metric Tons	Tons
Gross	101,880	46.21	50.94
Tare	41,380	18.77	20.69
Net	60,500	27.44	30.25

Scale: 1 * P T

FOB: PICK-UP

This Load: 30.25 TONS

Load No: 10
Shipped: 309.94 TONS

Weighmaster: Granite Construction Company
Deputy: Josh Ordos

WEIGHMASTER CERTIFICATE

Accepted by: _____

WARNING: THIS PRODUCT CONTAINS CRYSTALLINE SILICA (QUARTZ). CRYSTALLINE SILICA IS A COMMON NATURALLY OCCURING MINERAL FOUND IN SAND AND ROCK. PROLONGED AND REPEATED BREATHING OF CRYSTALLINE SILICA DUST MAY CAUSE RESPIRATORY AND OTHER HEALTH PROBLEMS, INCLUDING LUNG DISEASE, SILICOSIS AND CANCER, WHICH MAY RESULT IN PERMANENT INJURY OR DEATH. BEFORE USING OR HANDLING THIS PRODUCT READ THE MATERIAL SAFETY DATA SHEET FOR MORE DETAILED INFORMATION INCLUDING INFORMATION ON APPROPRIATE RESPIRATORY PROTECTION. MSDS SHEETS AVAILABLE AT WWW.GRANITECONSTRUCTION.COM/MSDS OR BY CONTACTING YOUR LOCAL OFFICE.

gci rev 04/21

COPY REPRINT

GRANITE™

Granite Falls
11423 Jordan Rd
Arlington, WA 98223
360-966-4970

Ticket No. **58676407**
6/28/2022 12:59:43PM

Customer: STRIDER CONSTRUCTION
289514

Order ID: 267107
Job/PO# : 21NT
Cost Code
Location: NORTON SITE DEVELOPMENT
2111 ROSS AVENUE

Comments:

Vehicle: RS56TT RS56TT
License: | |
Carrier:
Product : 2209 GRAVEL BORROW

	Pounds	Metric Tons	Tons
Gross	103,560	46.97	51.78
Tare	41,380	18.77	20.69
Net	62,180	28.20	31.09

Scale: 1 m Manual Weight, * P.T.

FOB: PICK-UP

This Load: 31.09 TONS

Load No: 8
Shipped: 248.89 TONS

Weighmaster: Granite Construction Company
Deputy: Josh Ordos

WEIGHMASTER CERTIFICATE

Accepted by: _____

WARNING: THIS PRODUCT CONTAINS CRYSTALLINE SILICA (QUARTZ). CRYSTALLINE SILICA IS A COMMON NATURALLY OCCURING MINERAL FOUND IN SAND AND ROCK. PROLONGED AND REPEATED BREATHING OF CRYSTALLINE SILICA DUST MAY CAUSE RESPIRATORY AND OTHER HEALTH PROBLEMS, INCLUDING LUNG DISEASE, SILICOSIS AND CANCER, WHICH MAY RESULT IN PERMANENT INJURY OR DEATH. BEFORE USING OR HANDLING THIS PRODUCT READ THE MATERIAL SAFETY DATA SHEET FOR MORE DETAILED INFORMATION INCLUDING INFORMATION ON APPROPRIATE RESPIRATORY PROTECTION. MSDS SHEETS AVAILABLE AT WWW.GRANITECONSTRUCTION.COM/MSDS OR BY CONTACTING YOUR LOCAL OFFICE.

gci rev. 04/21

COPY REPRINT

GRANITE™

Granite Falls
11423 Jordan Rd
Arlington, WA 98223
360-966-4970

Ticket No. **58676407**
6/28/2022 12:59:43PM

Customer: STRIDER CONSTRUCTION
289514

Order ID: 267107
Job/PO# : 21NT
Cost Code
Location: NORTON SITE DEVELOPMENT
2111 ROSS AVENUE

Comments:

Vehicle: RS56TT RS56TT
License: | |
Carrier:
Product : 2209 GRAVEL BORROW

	Pounds	Metric Tons	Tons
Gross	103,560	46.97	51.78
Tare	41,380	18.77	20.69
Net	62,180	28.20	31.09

Scale: 1 m Manual Weight, * P.T.

FOB: PICK-UP

This Load: 31.09 TONS

Load No: 8
Shipped: 248.89 TONS

Weighmaster: Granite Construction Company
Deputy: Josh Ordos

WEIGHMASTER CERTIFICATE

Accepted by: _____

WARNING: THIS PRODUCT CONTAINS CRYSTALLINE SILICA (QUARTZ). CRYSTALLINE SILICA IS A COMMON NATURALLY OCCURING MINERAL FOUND IN SAND AND ROCK. PROLONGED AND REPEATED BREATHING OF CRYSTALLINE SILICA DUST MAY CAUSE RESPIRATORY AND OTHER HEALTH PROBLEMS, INCLUDING LUNG DISEASE, SILICOSIS AND CANCER, WHICH MAY RESULT IN PERMANENT INJURY OR DEATH. BEFORE USING OR HANDLING THIS PRODUCT READ THE MATERIAL SAFETY DATA SHEET FOR MORE DETAILED INFORMATION INCLUDING INFORMATION ON APPROPRIATE RESPIRATORY PROTECTION. MSDS SHEETS AVAILABLE AT WWW.GRANITECONSTRUCTION.COM/MSDS OR BY CONTACTING YOUR LOCAL OFFICE.

gci rev 04/21

ORIGINAL

GRANITE™

Granite Falls
11423 Jordan Rd
Arlington, WA 98223
360-966-4970

Ticket No. **58676452**
6/28/2022 3:08:04PM

Customer: STRIDER CONSTRUCTION
289514

Order ID: 267107
Job/PO# : 21NT
Cost Code
Location: NORTON SITE DEVELOPMENT
2111 ROSS AVENUE

Comments:

Vehicle: RS56TT RS56TT
License: | |
Carrier:
Product : 2209 GRAVEL BORROW

	Pounds	Metric Tons	Tons
Gross	102,200	46.36	51.10
Tare	41,380	18.77	20.69
Net	60,820	27.59	30.41

Scale: 1 * P. T.

FOB: PICK-UP

This Load: 30.41 TONS

Load No: 12
Shipped: 370.74 TONS

Weighmaster: Granite Construction Company
Deputy: Josh Ordos

WEIGHMASTER CERTIFICATE

Accepted by: _____

WARNING: THIS PRODUCT CONTAINS CRYSTALLINE SILICA (QUARTZ). CRYSTALLINE SILICA IS A COMMON NATURALLY OCCURING MINERAL FOUND IN SAND AND ROCK. PROLONGED AND REPEATED BREATHING OF CRYSTALLINE SILICA DUST MAY CAUSE RESPIRATORY AND OTHER HEALTH PROBLEMS, INCLUDING LUNG DISEASE, SILICOSIS AND CANCER, WHICH MAY RESULT IN PERMANENT INJURY OR DEATH. BEFORE USING OR HANDLING THIS PRODUCT READ THE MATERIAL SAFETY DATA SHEET FOR MORE DETAILED INFORMATION INCLUDING INFORMATION ON APPROPRIATE RESPIRATORY PROTECTION. MSDS SHEETS AVAILABLE AT WWW.GRANITECONSTRUCTION.COM/MSDS OR BY CONTACTING YOUR LOCAL OFFICE.

gci rev. 04/21

COPY

GRANITE™

Granite Falls
11423 Jordan Rd
Arlington, WA 98223
360-966-4970

Ticket No. **58676452**
6/28/2022 3:08:04PM

Customer: STRIDER CONSTRUCTION
289514

Order ID: 267107
Job/PO# : 21NT
Cost Code
Location: NORTON SITE DEVELOPMENT
2111 ROSS AVENUE

Comments:

Vehicle: RS56TT RS56TT
License: | |
Carrier:
Product : 2209 GRAVEL BORROW

	Pounds	Metric Tons	Tons
Gross	102,200	46.36	51.10
Tare	41,380	18.77	20.69
Net	60,820	27.59	30.41

Scale: 1 * P. T.

FOB: PICK-UP

This Load: 30.41 TONS

Load No: 12
Shipped: 370.74 TONS

Weighmaster: Granite Construction Company
Deputy: Josh Ordos

WEIGHMASTER CERTIFICATE

Accepted by: _____

WARNING: THIS PRODUCT CONTAINS CRYSTALLINE SILICA (QUARTZ). CRYSTALLINE SILICA IS A COMMON NATURALLY OCCURING MINERAL FOUND IN SAND AND ROCK. PROLONGED AND REPEATED BREATHING OF CRYSTALLINE SILICA DUST MAY CAUSE RESPIRATORY AND OTHER HEALTH PROBLEMS, INCLUDING LUNG DISEASE, SILICOSIS AND CANCER, WHICH MAY RESULT IN PERMANENT INJURY OR DEATH. BEFORE USING OR HANDLING THIS PRODUCT READ THE MATERIAL SAFETY DATA SHEET FOR MORE DETAILED INFORMATION INCLUDING INFORMATION ON APPROPRIATE RESPIRATORY PROTECTION. MSDS SHEETS AVAILABLE AT WWW.GRANITECONSTRUCTION.COM/MSDS OR BY CONTACTING YOUR LOCAL OFFICE.

gci rev. 04/21

ORIGINAL

GRANITE™

Granite Falls
11423 Jordan Rd
Arlington, WA 98223
360-966-4970

Ticket No. **58676204**
6/27/2022 2:57:40PM

Customer: STRIDER CONSTRUCTION
289514

Order ID: 267107
Job/PO# : 21NT
Cost Code
Location: NORTON SITE DEVELOPMENT
2111 ROSS AVENUE

Comments:

Vehicle: RS59TT RS59TT
License: | |
Carrier:
Product : 2209 GRAVEL BORROW

	Pounds	Metric Tons	Tons
Gross	98,220	44.55	49.11
Tare	41,040	18.62	20.52
Net	57,180	25.94	28.59

Scale: 1 * P.T.

FOB: PICK-UP

This Load: 28.59 TONS

Load No: 11
Shipped: 333.39 TONS

Weighmaster: Granite Construction Company
Deputy: Josh Ordos

WEIGHMASTER CERTIFICATE

Accepted by: _____

WARNING: THIS PRODUCT CONTAINS CRYSTALLINE SILICA (QUARTZ). CRYSTALLINE SILICA IS A COMMON NATURALLY OCCURING MINERAL FOUND IN SAND AND ROCK. PROLONGED AND REPEATED BREATHING OF CRYSTALLINE SILICA DUST MAY CAUSE RESPIRATORY AND OTHER HEALTH PROBLEMS, INCLUDING LUNG DISEASE, SILICOSIS AND CANCER, WHICH MAY RESULT IN PERMANENT INJURY OR DEATH. BEFORE USING OR HANDLING THIS PRODUCT READ THE MATERIAL SAFETY DATA SHEET FOR MORE DETAILED INFORMATION INCLUDING INFORMATION ON APPROPRIATE RESPIRATORY PROTECTION. MSDS SHEETS AVAILABLE AT WWW.GRANITECONSTRUCTION.COM/MSDS OR BY CONTACTING YOUR LOCAL OFFICE.

gci rev 04/21

COPY

GRANITE™

Granite Falls
11423 Jordan Rd
Arlington, WA 98223
360-966-4970

Ticket No. **58676204**
6/27/2022 2:57:40PM

Customer: STRIDER CONSTRUCTION
289514

Order ID: 267107
Job/PO# : 21NT
Cost Code
Location: NORTON SITE DEVELOPMENT
2111 ROSS AVENUE

Comments:

Vehicle: RS59TT RS59TT
License: | |
Carrier:
Product : 2209 GRAVEL BORROW

	Pounds	Metric Tons	Tons
Gross	98,220	44.55	49.11
Tare	41,040	18.62	20.52
Net	57,180	25.94	28.59

Scale: 1 * P.T.

FOB: PICK-UP

This Load: 28.59 TONS

Load No: 11
Shipped: 333.39 TONS

Weighmaster: Granite Construction Company
Deputy: Josh Ordos

WEIGHMASTER CERTIFICATE

Accepted by: _____

WARNING: THIS PRODUCT CONTAINS CRYSTALLINE SILICA (QUARTZ). CRYSTALLINE SILICA IS A COMMON NATURALLY OCCURING MINERAL FOUND IN SAND AND ROCK. PROLONGED AND REPEATED BREATHING OF CRYSTALLINE SILICA DUST MAY CAUSE RESPIRATORY AND OTHER HEALTH PROBLEMS, INCLUDING LUNG DISEASE, SILICOSIS AND CANCER, WHICH MAY RESULT IN PERMANENT INJURY OR DEATH. BEFORE USING OR HANDLING THIS PRODUCT READ THE MATERIAL SAFETY DATA SHEET FOR MORE DETAILED INFORMATION INCLUDING INFORMATION ON APPROPRIATE RESPIRATORY PROTECTION. MSDS SHEETS AVAILABLE AT WWW.GRANITECONSTRUCTION.COM/MSDS OR BY CONTACTING YOUR LOCAL OFFICE.

gci rev 04/21

ORIGINAL

GRANITE™

Granite Falls
11423 Jordan Rd
Arlington, WA 98223
360-966-4970

Ticket No. **58676152**
6/27/2022 1:37:21PM

Customer: STRIDER CONSTRUCTION
289514

Order ID: 267107
Job/PO# : 21NT
Cost Code
Location: NORTON SITE DEVELOPMENT
2111 ROSS AVENUE

Comments

Vehicle: RS59TT RS59TT
License: | |
Carrier:
Product : 2209 GRAVEL BORROW

	Pounds	Metric Tons	Tons
Gross	102,140	46.33	51.07
Tare	41,040	18.62	20.52
Net	61,100	27.71	30.55

Scale: 1 * P T

FOB: PICK-UP

This Load: 30.55 TONS

Load No: 9
Shipped: 274.32 TONS

Weighmaster: Granite Construction Company
Deputy: Josh Ordos

WEIGHMASTER CERTIFICATE

Accepted by: _____

WARNING: THIS PRODUCT CONTAINS CRYSTALLINE SILICA (QUARTZ). CRYSTALLINE SILICA IS A COMMON NATURALLY OCCURING MINERAL FOUND IN SAND AND ROCK. PROLONGED AND REPEATED BREATHING OF CRYSTALLINE SILICA DUST MAY CAUSE RESPIRATORY AND OTHER HEALTH PROBLEMS, INCLUDING LUNG DISEASE, SILICOSIS AND CANCER, WHICH MAY RESULT IN PERMANENT INJURY OR DEATH. BEFORE USING OR HANDLING THIS PRODUCT READ THE MATERIAL SAFETY DATA SHEET FOR MORE DETAILED INFORMATION INCLUDING INFORMATION ON APPROPRIATE RESPIRATORY PROTECTION. MSDS SHEETS AVAILABLE AT WWW.GRANITECONSTRUCTION.COM/MSDS OR BY CONTACTING YOUR LOCAL OFFICE.

gci rev 04/21

COPY

GRANITE™

Granite Falls
11423 Jordan Rd
Arlington, WA 98223
360-966-4970

Ticket No. **58676152**
6/27/2022 1:37:21PM

Customer: STRIDER CONSTRUCTION
289514

Order ID: 267107
Job/PO# : 21NT
Cost Code
Location: NORTON SITE DEVELOPMENT
2111 ROSS AVENUE

Comments:

Vehicle: RS59TT RS59TT
License: | |
Carrier:
Product : 2209 GRAVEL BORROW

	Pounds	Metric Tons	Tons
Gross	102,140	46.33	51.07
Tare	41,040	18.62	20.52
Net	61,100	27.71	30.55

Scale: 1 * P T

FOB: PICK-UP

This Load: 30.55 TONS

Load No: 9
Shipped: 274.32 TONS

Weighmaster: Granite Construction Company
Deputy: Josh Ordos

WEIGHMASTER CERTIFICATE

Accepted by: _____

WARNING: THIS PRODUCT CONTAINS CRYSTALLINE SILICA (QUARTZ). CRYSTALLINE SILICA IS A COMMON NATURALLY OCCURING MINERAL FOUND IN SAND AND ROCK. PROLONGED AND REPEATED BREATHING OF CRYSTALLINE SILICA DUST MAY CAUSE RESPIRATORY AND OTHER HEALTH PROBLEMS, INCLUDING LUNG DISEASE, SILICOSIS AND CANCER, WHICH MAY RESULT IN PERMANENT INJURY OR DEATH. BEFORE USING OR HANDLING THIS PRODUCT READ THE MATERIAL SAFETY DATA SHEET FOR MORE DETAILED INFORMATION INCLUDING INFORMATION ON APPROPRIATE RESPIRATORY PROTECTION. MSDS SHEETS AVAILABLE AT WWW.GRANITECONSTRUCTION.COM/MSDS OR BY CONTACTING YOUR LOCAL OFFICE.

gci rev 04/21

ORIGINAL

Ticket No. **58676101**

6/27/2022 12:11:35PM

GRANITE™

Granite Falls
11423 Jordan Rd
Arlington, WA 98223
360-966-4970

Customer: STRIDER CONSTRUCTION
289514

Order ID: 267107
Job/PO# : 21NT
Cost Code
Location: NORTON SITE DEVELOPMENT
2111 ROSS AVENUE

Comments:

Vehicle: RS59TT RS59TT
License: | |
Carrier:
Product : 2209 GRAVEL BORROW

	Pounds	Metric Tons	Tons
Gross	102,980	46.71	51.49
Tare	41,040	18.62	20.52
Net	61,940	28.10	30.97

Scale: 1 * P T

FOB: PICK-UP

This Load: 30.97 TONS

Load No: 7
Shipped: 213.14 TONS

Weighmaster: Granite Construction Company
Deputy: Josh Ordos

WEIGHMASTER CERTIFICATE

Accepted by: _____

WARNING: THIS PRODUCT CONTAINS CRYSTALLINE SILICA (QUARTZ). CRYSTALLINE SILICA IS A COMMON NATURALLY OCCURING MINERAL FOUND IN SAND AND ROCK. PROLONGED AND REPEATED BREATHING OF CRYSTALLINE SILICA DUST MAY CAUSE RESPIRATORY AND OTHER HEALTH PROBLEMS, INCLUDING LUNG DISEASE, SILICOSIS AND CANCER, WHICH MAY RESULT IN PERMANENT INJURY OR DEATH. BEFORE USING OR HANDLING THIS PRODUCT READ THE MATERIAL SAFETY DATA SHEET FOR MORE DETAILED INFORMATION INCLUDING INFORMATION ON APPROPRIATE RESPIRATORY PROTECTION. MSDS SHEETS AVAILABLE AT WWW.GRANITECONSTRUCTION.COM/MSDS OR BY CONTACTING YOUR LOCAL OFFICE.

gci rev 04/21

COPY

Ticket No. 58676101

6/27/2022 12:11:35PM

GRANITE™

Granite Falls
11423 Jordan Rd
Arlington, WA 98223
360-966-4970

Customer: STRIDER CONSTRUCTION
289514

Order ID: 267107
Job/PO# : 21NT
Cost Code
Location: NORTON SITE DEVELOPMENT
2111 ROSS AVENUE

Comments:

Vehicle: RS59TT RS59TT
License: | |
Carrier:
Product : 2209 GRAVEL BORROW

	Pounds	Metric Tons	Tons
Gross	102,980	46.71	51.49
Tare	41,040	18.62	20.52
Net	61,940	28.10	30.97

Scale: 1 * P T

FOB: PICK-UP

This Load: 30.97 TONS

Load No: 7
Shipped: 213.14 TONS

Weighmaster: Granite Construction Company
Deputy: Josh Ordos

WEIGHMASTER CERTIFICATE

Accepted by: _____

WARNING: THIS PRODUCT CONTAINS CRYSTALLINE SILICA (QUARTZ). CRYSTALLINE SILICA IS A COMMON NATURALLY OCCURING MINERAL FOUND IN SAND AND ROCK. PROLONGED AND REPEATED BREATHING OF CRYSTALLINE SILICA DUST MAY CAUSE RESPIRATORY AND OTHER HEALTH PROBLEMS, INCLUDING LUNG DISEASE, SILICOSIS AND CANCER, WHICH MAY RESULT IN PERMANENT INJURY OR DEATH. BEFORE USING OR HANDLING THIS PRODUCT READ THE MATERIAL SAFETY DATA SHEET FOR MORE DETAILED INFORMATION INCLUDING INFORMATION ON APPROPRIATE RESPIRATORY PROTECTION. MSDS SHEETS AVAILABLE AT WWW.GRANITECONSTRUCTION.COM/MSDS OR BY CONTACTING YOUR LOCAL OFFICE.

gci rev 04/21

ORIGINAL

GRANITE™

Granite Falls
11423 Jordan Rd
Arlington, WA 98223
360-966-4970

Ticket No **58676035**
6/27/2022 10:38:09AM

Customer: STRIDER CONSTRUCTION
289514

Order ID: 267107
Job/PO# : 21NT
Cost Code
Location: NORTON SITE DEVELOPMENT
2111 ROSS AVENUE

Comments:

Vehicle: RS59TT RS59TT
License: | |
Carrier:
Product : 2209 GRAVEL BORROW

	Pounds	Metric Tons	Tons
Gross	101,360	45.98	50.68
Tare	41,040	18.62	20.52
Net	60,320	27.36	30.16

Scale: 1 * P. T.

FOB: PICK-UP

This Load: 30.16 TONS

Load No: 5
Shipped: 151.38 TONS

Weighmaster: Granite Construction Company
Deputy: Josh Ordos

WEIGHMASTER CERTIFICATE

Accepted by: _____

WARNING: THIS PRODUCT CONTAINS CRYSTALLINE SILICA (QUARTZ). CRYSTALLINE SILICA IS A COMMON NATURALLY OCCURING MINERAL FOUND IN SAND AND ROCK. PROLONGED AND REPEATED BREATHING OF CRYSTALLINE SILICA DUST MAY CAUSE RESPIRATORY AND OTHER HEALTH PROBLEMS, INCLUDING LUNG DISEASE, SILICOSIS AND CANCER, WHICH MAY RESULT IN PERMANENT INJURY OR DEATH. BEFORE USING OR HANDLING THIS PRODUCT READ THE MATERIAL SAFETY DATA SHEET FOR MORE DETAILED INFORMATION INCLUDING INFORMATION ON APPROPRIATE RESPIRATORY PROTECTION. MSDS SHEETS AVAILABLE AT WWW.GRANITECONSTRUCTION.COM/MSDS OR BY CONTACTING YOUR LOCAL OFFICE.

gci rev 04/21

COPY

GRANITE™

Granite Falls
11423 Jordan Rd
Arlington, WA 98223
360-966-4970

Ticket No. **58676035**
6/27/2022 10:38:09AM

Customer: STRIDER CONSTRUCTION
289514

Order ID: 267107
Job/PO# : 21NT
Cost Code
Location: NORTON SITE DEVELOPMENT
2111 ROSS AVENUE

Comments:

Vehicle: RS59TT RS59TT
License: | |
Carrier:
Product : 2209 GRAVEL BORROW

	Pounds	Metric Tons	Tons
Gross	101,360	45.98	50.68
Tare	41,040	18.62	20.52
Net	60,320	27.36	30.16

Scale: 1 * P. T.

FOB: PICK-UP

This Load: 30.16 TONS

Load No: 5
Shipped: 151.38 TONS

Weighmaster: Granite Construction Company
Deputy: Josh Ordos

WEIGHMASTER CERTIFICATE

Accepted by: _____

WARNING: THIS PRODUCT CONTAINS CRYSTALLINE SILICA (QUARTZ). CRYSTALLINE SILICA IS A COMMON NATURALLY OCCURING MINERAL FOUND IN SAND AND ROCK. PROLONGED AND REPEATED BREATHING OF CRYSTALLINE SILICA DUST MAY CAUSE RESPIRATORY AND OTHER HEALTH PROBLEMS, INCLUDING LUNG DISEASE, SILICOSIS AND CANCER, WHICH MAY RESULT IN PERMANENT INJURY OR DEATH. BEFORE USING OR HANDLING THIS PRODUCT READ THE MATERIAL SAFETY DATA SHEET FOR MORE DETAILED INFORMATION INCLUDING INFORMATION ON APPROPRIATE RESPIRATORY PROTECTION. MSDS SHEETS AVAILABLE AT WWW.GRANITECONSTRUCTION.COM/MSDS OR BY CONTACTING YOUR LOCAL OFFICE.

gci rev 04/21

ORIGINAL

GRANITE™

Granite Falls
11423 Jordan Rd
Arlington, WA 98223
360-966-4970

Ticket No. **58675973**
6/27/2022 9:13:08AM

Customer: STRIDER CONSTRUCTION
289514

Order ID: 267107
Job/PO# : 21NT
Cost Code
Location: NORTON SITE DEVELOPMENT
2111 ROSS AVENUE

Comments:

Vehicle: RS59TT RS59TT
License: | |
Carrier:
Product : 2209 GRAVEL BORROW

	Pounds	Metric Tons	Tons
Gross	101,120	45.87	50.56
Tare	41,040	18.62	20.52
Net	60,080	27.25	30.04

Scale: 1 * P T

FOB: PICK-UP

This Load: 30.04 TONS

Load No: 3
Shipped: 90.49 TONS

Weighmaster: Granite Construction Company
Deputy: Josh Ordos

WEIGHMASTER CERTIFICATE

Accepted by: _____

WARNING: THIS PRODUCT CONTAINS CRYSTALLINE SILICA (QUARTZ). CRYSTALLINE SILICA IS A COMMON NATURALLY OCCURING MINERAL FOUND IN SAND AND ROCK. PROLONGED AND REPEATED BREATHING OF CRYSTALLINE SILICA DUST MAY CAUSE RESPIRATORY AND OTHER HEALTH PROBLEMS, INCLUDING LUNG DISEASE, SILICOSIS AND CANCER, WHICH MAY RESULT IN PERMANENT INJURY OR DEATH. BEFORE USING OR HANDLING THIS PRODUCT READ THE MATERIAL SAFETY DATA SHEET FOR MORE DETAILED INFORMATION INCLUDING INFORMATION ON APPROPRIATE RESPIRATORY PROTECTION. MSDS SHEETS AVAILABLE AT WWW.GRANITECONSTRUCTION.COM/MSDS OR BY CONTACTING YOUR LOCAL OFFICE.

gci rev 04/21

COPY

GRANITE™

Granite Falls
11423 Jordan Rd
Arlington, WA 98223
360-966-4970

Ticket No. **58675973**
6/27/2022 9:13:08AM

Customer: STRIDER CONSTRUCTION
289514

Order ID: 267107
Job/PO# : 21NT
Cost Code
Location: NORTON SITE DEVELOPMENT
2111 ROSS AVENUE

Comments:

Vehicle: RS59TT RS59TT
License: | |
Carrier:
Product : 2209 GRAVEL BORROW

	Pounds	Metric Tons	Tons
Gross	101,120	45.87	50.56
Tare	41,040	18.62	20.52
Net	60,080	27.25	30.04

Scale: 1 * P T

FOB: PICK-UP

This Load: 30.04 TONS

Load No: 3
Shipped: 90.49 TONS

Weighmaster: Granite Construction Company
Deputy: Josh Ordos

WEIGHMASTER CERTIFICATE

Accepted by: _____

WARNING: THIS PRODUCT CONTAINS CRYSTALLINE SILICA (QUARTZ). CRYSTALLINE SILICA IS A COMMON NATURALLY OCCURING MINERAL FOUND IN SAND AND ROCK. PROLONGED AND REPEATED BREATHING OF CRYSTALLINE SILICA DUST MAY CAUSE RESPIRATORY AND OTHER HEALTH PROBLEMS, INCLUDING LUNG DISEASE, SILICOSIS AND CANCER, WHICH MAY RESULT IN PERMANENT INJURY OR DEATH. BEFORE USING OR HANDLING THIS PRODUCT READ THE MATERIAL SAFETY DATA SHEET FOR MORE DETAILED INFORMATION INCLUDING INFORMATION ON APPROPRIATE RESPIRATORY PROTECTION. MSDS SHEETS AVAILABLE AT WWW.GRANITECONSTRUCTION.COM/MSDS OR BY CONTACTING YOUR LOCAL OFFICE

gci rev 04/21

COPY REPRINT

GRANITE™

Granite Falls
11423 Jordan Rd
Arlington, WA 98223
360-966-4970

Ticket No. **58675920**
6/27/2022 7:30:53AM

Customer: STRIDER CONSTRUCTION
289514

Order ID: 267107
Job/PO# : 21NT
Cost Code
Location: NORTON SITE DEVELOPMENT
2111 ROSS AVENUE

Comments:

Vehicle: RS59TT RS59TT
License: | |
Carrier:
Product : 2209 GRAVEL BORROW

	Pounds	Metric Tons	Tons
Gross	101,560	46.07	50.78
Tare	41,040	18.62	20.52
Net	60,520	27.45	30.26

Scale: 1

FOB: PICK-UP

This Load: 30.26 TONS

Load No: 1
Shipped: 30.26 TONS

Weighmaster: Granite Construction Company
Deputy: Josh Ordos

WEIGHMASTER CERTIFICATE

Accepted by: _____

WARNING: THIS PRODUCT CONTAINS CRYSTALLINE SILICA (QUARTZ). CRYSTALLINE SILICA IS A COMMON NATURALLY OCCURING MINERAL FOUND IN SAND AND ROCK. PROLONGED AND REPEATED BREATHING OF CRYSTALLINE SILICA DUST MAY CAUSE RESPIRATORY AND OTHER HEALTH PROBLEMS, INCLUDING LUNG DISEASE, SILICOSIS AND CANCER, WHICH MAY RESULT IN PERMANENT INJURY OR DEATH. BEFORE USING OR HANDLING THIS PRODUCT READ THE MATERIAL SAFETY DATA SHEET FOR MORE DETAILED INFORMATION INCLUDING INFORMATION ON APPROPRIATE RESPIRATORY PROTECTION. MSDS SHEETS AVAILABLE AT WWW.GRANITECONSTRUCTION.COM/MSDS OR BY CONTACTING YOUR LOCAL OFFICE.

gci rev 04/21

COPY REPRINT

GRANITE™

Granite Falls
11423 Jordan Rd
Arlington, WA 98223
360-966-4970

Ticket No. **58675920**
6/27/2022 7:30:53AM

Customer: STRIDER CONSTRUCTION
289514

Order ID: 267107
Job/PO# : 21NT
Cost Code
Location: NORTON SITE DEVELOPMENT
2111 ROSS AVENUE

Comments:

Vehicle: RS59TT RS59TT
License: | |
Carrier:
Product : 2209 GRAVEL BORROW

	Pounds	Metric Tons	Tons
Gross	101,560	46.07	50.78
Tare	41,040	18.62	20.52
Net	60,520	27.45	30.26

Scale: 1

FOB: PICK-UP

This Load: 30.26 TONS

Load No: 1
Shipped: 30.26 TONS

Weighmaster: Granite Construction Company
Deputy: Josh Ordos

WEIGHMASTER CERTIFICATE

Accepted by: _____

WARNING: THIS PRODUCT CONTAINS CRYSTALLINE SILICA (QUARTZ). CRYSTALLINE SILICA IS A COMMON NATURALLY OCCURING MINERAL FOUND IN SAND AND ROCK. PROLONGED AND REPEATED BREATHING OF CRYSTALLINE SILICA DUST MAY CAUSE RESPIRATORY AND OTHER HEALTH PROBLEMS, INCLUDING LUNG DISEASE, SILICOSIS AND CANCER, WHICH MAY RESULT IN PERMANENT INJURY OR DEATH. BEFORE USING OR HANDLING THIS PRODUCT READ THE MATERIAL SAFETY DATA SHEET FOR MORE DETAILED INFORMATION INCLUDING INFORMATION ON APPROPRIATE RESPIRATORY PROTECTION. MSDS SHEETS AVAILABLE AT WWW.GRANITECONSTRUCTION.COM/MSDS OR BY CONTACTING YOUR LOCAL OFFICE.

gci rev 04/21

ORIGINAL

GRANITE™

Granite Falls
11423 Jordan Rd
Arlington, WA 98223
360-966-4970

Ticket No. **58676205**
6/27/2022 2:59:20PM

Customer: STRIDER CONSTRUCTION
289514

Order ID: 267107
Job/PO# : 21NT
Cost Code
Location: NORTON SITE DEVELOPMENT
2111 ROSS AVENUE

Comments:

Vehicle: RS57TT RS57TT
License: | |
Carrier:
Product : 2209 GRAVEL BORROW

	Pounds	Metric Tons	Tons
Gross	101,200	45.90	50.60
Tare	41,080	18.63	20.54
Net	60,120	27.27	30.06

Scale: 1 * P T

FOB: PICK-UP

This Load: 30.06 TONS

Load No: 12
Shipped: 363.45 TONS

Weighmaster: Granite Construction Company
Deputy: Josh Ordos

WEIGHMASTER CERTIFICATE

Accepted by: _____

WARNING: THIS PRODUCT CONTAINS CRYSTALLINE SILICA (QUARTZ). CRYSTALLINE SILICA IS A COMMON NATURALLY OCCURING MINERAL FOUND IN SAND AND ROCK. PROLONGED AND REPEATED BREATHING OF CRYSTALLINE SILICA DUST MAY CAUSE RESPIRATORY AND OTHER HEALTH PROBLEMS, INCLUDING LUNG DISEASE, SILICOSIS AND CANCER, WHICH MAY RESULT IN PERMANENT INJURY OR DEATH. BEFORE USING OR HANDLING THIS PRODUCT READ THE MATERIAL SAFETY DATA SHEET FOR MORE DETAILED INFORMATION INCLUDING INFORMATION ON APPROPRIATE RESPIRATORY PROTECTION. MSDS SHEETS AVAILABLE AT WWW.GRANITECONSTRUCTION.COM/MSDS OR BY CONTACTING YOUR LOCAL OFFICE.

gci rev 04/21

COPY

GRANITE™

Granite Falls
11423 Jordan Rd
Arlington, WA 98223
360-966-4970

Ticket No. **58676205**
6/27/2022 2:59:20PM

Customer: STRIDER CONSTRUCTION
289514

Order ID: 267107
Job/PO# : 21NT
Cost Code
Location: NORTON SITE DEVELOPMENT
2111 ROSS AVENUE

Comments:

Vehicle: RS57TT RS57TT
License: | |
Carrier:
Product : 2209 GRAVEL BORROW

	Pounds	Metric Tons	Tons
Gross	101,200	45.90	50.60
Tare	41,080	18.63	20.54
Net	60,120	27.27	30.06

Scale: 1 * P T

FOB: PICK-UP

This Load: 30.06 TONS

Load No: 12
Shipped: 363.45 TONS

Weighmaster: Granite Construction Company
Deputy: Josh Ordos

WEIGHMASTER CERTIFICATE

Accepted by: _____

WARNING: THIS PRODUCT CONTAINS CRYSTALLINE SILICA (QUARTZ). CRYSTALLINE SILICA IS A COMMON NATURALLY OCCURING MINERAL FOUND IN SAND AND ROCK. PROLONGED AND REPEATED BREATHING OF CRYSTALLINE SILICA DUST MAY CAUSE RESPIRATORY AND OTHER HEALTH PROBLEMS, INCLUDING LUNG DISEASE, SILICOSIS AND CANCER, WHICH MAY RESULT IN PERMANENT INJURY OR DEATH. BEFORE USING OR HANDLING THIS PRODUCT READ THE MATERIAL SAFETY DATA SHEET FOR MORE DETAILED INFORMATION INCLUDING INFORMATION ON APPROPRIATE RESPIRATORY PROTECTION. MSDS SHEETS AVAILABLE AT WWW.GRANITECONSTRUCTION.COM/MSDS OR BY CONTACTING YOUR LOCAL OFFICE.

gci rev 04/21

ORIGINAL

Ticket No. **58676153**

6/27/2022 1:38:57PM

GRANITE™

Granite Falls
11423 Jordan Rd
Arlington, WA 98223
360-966-4970

Customer: STRIDER CONSTRUCTION
289514

Order ID: 267107
Job/PO# : 21NT
Cost Code
Location: NORTON SITE DEVELOPMENT
2111 ROSS AVENUE

Comments:

Vehicle: RS57TT RS57TT
License: | |
Carrier:
Product : 2209 GRAVEL BORROW

	Pounds	Metric Tons	Tons
Gross	102,040	46.28	51.02
Tare	41,080	18.63	20.54
Net	60,960	27.65	30.48

Scale: 1 * P.T.

FOB: PICK-UP

This Load: 30.48 TONS

Load No: 10
Shipped: 304.80 TONS

Weighmaster: Granite Construction Company
Deputy: Josh Ordos

WEIGHMASTER CERTIFICATE

Accepted by: _____

WARNING: THIS PRODUCT CONTAINS CRYSTALLINE SILICA (QUARTZ). CRYSTALLINE SILICA IS A COMMON NATURALLY OCCURING MINERAL FOUND IN SAND AND ROCK. PROLONGED AND REPEATED BREATHING OF CRYSTALLINE SILICA DUST MAY CAUSE RESPIRATORY AND OTHER HEALTH PROBLEMS, INCLUDING LUNG DISEASE, SILICOSIS AND CANCER, WHICH MAY RESULT IN PERMANENT INJURY OR DEATH. BEFORE USING OR HANDLING THIS PRODUCT READ THE MATERIAL SAFETY DATA SHEET FOR MORE DETAILED INFORMATION INCLUDING INFORMATION ON APPROPRIATE RESPIRATORY PROTECTION. MSDS SHEETS AVAILABLE AT WWW.GRANITECONSTRUCTION.COM/MSDS OR BY CONTACTING YOUR LOCAL OFFICE.

gci rev 04/21

COPY

Ticket No. **58676153**

6/27/2022 1:38:57PM

GRANITE™

Granite Falls
11423 Jordan Rd
Arlington, WA 98223
360-966-4970

Customer: STRIDER CONSTRUCTION
289514

Order ID: 267107
Job/PO# : 21NT
Cost Code
Location: NORTON SITE DEVELOPMENT
2111 ROSS AVENUE

Comments:

Vehicle: RS57TT RS57TT
License: | |
Carrier:
Product : 2209 GRAVEL BORROW

	Pounds	Metric Tons	Tons
Gross	102,040	46.28	51.02
Tare	41,080	18.63	20.54
Net	60,960	27.65	30.48

Scale: 1 * P.T.

FOB: PICK-UP

This Load: 30.48 TONS

Load No: 10
Shipped: 304.80 TONS

Weighmaster: Granite Construction Company
Deputy: Josh Ordos

WEIGHMASTER CERTIFICATE

Accepted by: _____

WARNING: THIS PRODUCT CONTAINS CRYSTALLINE SILICA (QUARTZ). CRYSTALLINE SILICA IS A COMMON NATURALLY OCCURING MINERAL FOUND IN SAND AND ROCK. PROLONGED AND REPEATED BREATHING OF CRYSTALLINE SILICA DUST MAY CAUSE RESPIRATORY AND OTHER HEALTH PROBLEMS, INCLUDING LUNG DISEASE, SILICOSIS AND CANCER, WHICH MAY RESULT IN PERMANENT INJURY OR DEATH. BEFORE USING OR HANDLING THIS PRODUCT READ THE MATERIAL SAFETY DATA SHEET FOR MORE DETAILED INFORMATION INCLUDING INFORMATION ON APPROPRIATE RESPIRATORY PROTECTION. MSDS SHEETS AVAILABLE AT WWW.GRANITECONSTRUCTION.COM/MSDS OR BY CONTACTING YOUR LOCAL OFFICE.

gci rev 04/21

ORIGINAL

GRANITE™

Granite Falls
11423 Jordan Rd
Arlington, WA 98223
360-966-4970

Ticket No. **58676103**
6/27/2022 12:17:56PM

Customer: STRIDER CONSTRUCTION
289514

Order ID: 267107
Job/PO# : 21NT
Cost Code
Location: NORTON SITE DEVELOPMENT
2111 ROSS AVENUE

Comments:

Vehicle: RS57TT RS57TT
License: | |
Carrier:
Product : 2209 GRAVEL BORROW

	Pounds	Metric Tons	Tons
Gross	102,340	46.42	51.17
Tare	41,080	18.63	20.54
Net	61,260	27.79	30.63

Scale: 1 * P. T.

FOB: PICK-UP

This Load: 30.63 TONS

Load No: 8
Shipped: 243.77 TONS

Weighmaster: Granite Construction Company
Deputy: Josh Ordos

WEIGHMASTER CERTIFICATE

Accepted by: _____

WARNING: THIS PRODUCT CONTAINS CRYSTALLINE SILICA (QUARTZ). CRYSTALLINE SILICA IS A COMMON NATURALLY OCCURING MINERAL FOUND IN SAND AND ROCK. PROLONGED AND REPEATED BREATHING OF CRYSTALLINE SILICA DUST MAY CAUSE RESPIRATORY AND OTHER HEALTH PROBLEMS, INCLUDING LUNG DISEASE, SILICOSIS AND CANCER, WHICH MAY RESULT IN PERMANENT INJURY OR DEATH. BEFORE USING OR HANDLING THIS PRODUCT READ THE MATERIAL SAFETY DATA SHEET FOR MORE DETAILED INFORMATION INCLUDING INFORMATION ON APPROPRIATE RESPIRATORY PROTECTION. MSDS SHEETS AVAILABLE AT WWW.GRANITECONSTRUCTION.COM/MSDS OR BY CONTACTING YOUR LOCAL OFFICE.

gci rev 04/21

COPY

GRANITE™

Granite Falls
11423 Jordan Rd
Arlington, WA 98223
360-966-4970

Ticket No. **58676103**
6/27/2022 12:17:56PM

Customer: STRIDER CONSTRUCTION
289514

Order ID: 267107
Job/PO# : 21NT
Cost Code
Location: NORTON SITE DEVELOPMENT
2111 ROSS AVENUE

Comments:

Vehicle: RS57TT RS57TT
License: | |
Carrier:
Product : 2209 GRAVEL BORROW

	Pounds	Metric Tons	Tons
Gross	102,340	46.42	51.17
Tare	41,080	18.63	20.54
Net	61,260	27.79	30.63

Scale: 1 * P. T.

FOB: PICK-UP

This Load: 30.63 TONS

Load No: 8
Shipped: 243.77 TONS

Weighmaster: Granite Construction Company
Deputy: Josh Ordos

WEIGHMASTER CERTIFICATE

Accepted by: _____

WARNING: THIS PRODUCT CONTAINS CRYSTALLINE SILICA (QUARTZ). CRYSTALLINE SILICA IS A COMMON NATURALLY OCCURING MINERAL FOUND IN SAND AND ROCK. PROLONGED AND REPEATED BREATHING OF CRYSTALLINE SILICA DUST MAY CAUSE RESPIRATORY AND OTHER HEALTH PROBLEMS, INCLUDING LUNG DISEASE, SILICOSIS AND CANCER, WHICH MAY RESULT IN PERMANENT INJURY OR DEATH. BEFORE USING OR HANDLING THIS PRODUCT READ THE MATERIAL SAFETY DATA SHEET FOR MORE DETAILED INFORMATION INCLUDING INFORMATION ON APPROPRIATE RESPIRATORY PROTECTION. MSDS SHEETS AVAILABLE AT WWW.GRANITECONSTRUCTION.COM/MSDS OR BY CONTACTING YOUR LOCAL OFFICE.

gci rev 04/21

ORIGINAL

GRANITE™

Granite Falls
11423 Jordan Rd
Arlington, WA 98223
360-966-4970

Ticket No. **58676038**
6/27/2022 10:41:40AM

Customer: STRIDER CONSTRUCTION
289514

Order ID: 267107
Job/PO# : 21NT
Cost Code
Location: NORTON SITE DEVELOPMENT
2111 ROSS AVENUE

Comments:

Vehicle: RS57TT RS57TT
License: | |
Carrier:
Product : 2209 GRAVEL BORROW

	Pounds	Metric Tons	Tons
Gross	102,660	46.57	51.33
Tare	41,080	18.63	20.54
Net	61,580	27.93	30.79

Scale: 1 * P. T.

FOB: PICK-UP

This Load: 30.79 TONS

Load No: 6
Shipped: 182.17 TONS

Weighmaster: Granite Construction Company
Deputy: Josh Ordos

WEIGHMASTER CERTIFICATE

Accepted by: _____

WARNING: THIS PRODUCT CONTAINS CRYSTALLINE SILICA (QUARTZ). CRYSTALLINE SILICA IS A COMMON NATURALLY OCCURING MINERAL FOUND IN SAND AND ROCK. PROLONGED AND REPEATED BREATHING OF CRYSTALLINE SILICA DUST MAY CAUSE RESPIRATORY AND OTHER HEALTH PROBLEMS, INCLUDING LUNG DISEASE, SILICOSIS AND CANCER, WHICH MAY RESULT IN PERMANENT INJURY OR DEATH. BEFORE USING OR HANDLING THIS PRODUCT READ THE MATERIAL SAFETY DATA SHEET FOR MORE DETAILED INFORMATION INCLUDING INFORMATION ON APPROPRIATE RESPIRATORY PROTECTION. MSDS SHEETS AVAILABLE AT WWW.GRANITECONSTRUCTION.COM/MSDS OR BY CONTACTING YOUR LOCAL OFFICE.

gci rev 04/21

COPY

GRANITE™

Granite Falls
11423 Jordan Rd
Arlington, WA 98223
360-966-4970

Ticket No. **58676038**
6/27/2022 10:41:40AM

Customer: STRIDER CONSTRUCTION
289514

Order ID: 267107
Job/PO# : 21NT
Cost Code
Location: NORTON SITE DEVELOPMENT
2111 ROSS AVENUE

Comments

Vehicle: RS57TT RS57TT
License: | |
Carrier:
Product : 2209 GRAVEL BORROW

	Pounds	Metric Tons	Tons
Gross	102,660	46.57	51.33
Tare	41,080	18.63	20.54
Net	61,580	27.93	30.79

Scale: 1 * P. T.

FOB: PICK-UP

This Load: 30.79 TONS

Load No: 6
Shipped: 182.17 TONS

Weighmaster: Granite Construction Company
Deputy: Josh Ordos

WEIGHMASTER CERTIFICATE

Accepted by: _____

WARNING: THIS PRODUCT CONTAINS CRYSTALLINE SILICA (QUARTZ). CRYSTALLINE SILICA IS A COMMON NATURALLY OCCURING MINERAL FOUND IN SAND AND ROCK. PROLONGED AND REPEATED BREATHING OF CRYSTALLINE SILICA DUST MAY CAUSE RESPIRATORY AND OTHER HEALTH PROBLEMS, INCLUDING LUNG DISEASE, SILICOSIS AND CANCER, WHICH MAY RESULT IN PERMANENT INJURY OR DEATH. BEFORE USING OR HANDLING THIS PRODUCT READ THE MATERIAL SAFETY DATA SHEET FOR MORE DETAILED INFORMATION INCLUDING INFORMATION ON APPROPRIATE RESPIRATORY PROTECTION. MSDS SHEETS AVAILABLE AT WWW.GRANITECONSTRUCTION.COM/MSDS OR BY CONTACTING YOUR LOCAL OFFICE.

gci rev 04/21

ORIGINAL

GRANITE™ Granite Falls
11423 Jordan Rd
Arlington, WA 98223
360-966-4970

Ticket No **58675979**
6/27/2022 9:19:21AM

Customer: STRIDER CONSTRUCTION
289514

Order ID: 267107
Job/PO# : 21NT
Cost Code
Location: NORTON SITE DEVELOPMENT
2111 ROSS AVENUE

Comments:

Vehicle: RS57TT RS57TT
License: | |
Carrier:
Product : 2209 GRAVEL BORROW

	Pounds	Metric Tons	Tons
Gross	102,540	46.51	51.27
Tare	41,080	18.63	20.54
Net	61,460	27.88	30.73

Scale: 1 * P T

FOB: PICK-UP

This Load: 30.73 TONS

Load No: 4
Shipped: 121.22 TONS

Weighmaster: Granite Construction Company
Deputy: Josh Ordos

WEIGHMASTER CERTIFICATE

Accepted by: _____

WARNING: THIS PRODUCT CONTAINS CRYSTALLINE SILICA (QUARTZ). CRYSTALLINE SILICA IS A COMMON NATURALLY OCCURING MINERAL FOUND IN SAND AND ROCK. PROLONGED AND REPEATED BREATHING OF CRYSTALLINE SILICA DUST MAY CAUSE RESPIRATORY AND OTHER HEALTH PROBLEMS, INCLUDING LUNG DISEASE, SILICOSIS AND CANCER, WHICH MAY RESULT IN PERMANENT INJURY OR DEATH. BEFORE USING OR HANDLING THIS PRODUCT READ THE MATERIAL SAFETY DATA SHEET FOR MORE DETAILED INFORMATION INCLUDING INFORMATION ON APPROPRIATE RESPIRATORY PROTECTION. MSDS SHEETS AVAILABLE AT WWW.GRANITECONSTRUCTION.COM/MSDS OR BY CONTACTING YOUR LOCAL OFFICE.

gci rev 04/21

COPY

GRANITE™ Granite Falls
11423 Jordan Rd
Arlington, WA 98223
360-966-4970

Ticket No. **58675979**
6/27/2022 9:19:21AM

Customer: STRIDER CONSTRUCTION
289514

Order ID: 267107
Job/PO# : 21NT
Cost Code
Location: NORTON SITE DEVELOPMENT
2111 ROSS AVENUE

Comments:

Vehicle: RS57TT RS57TT
License: | |
Carrier:
Product : 2209 GRAVEL BORROW

	Pounds	Metric Tons	Tons
Gross	102,540	46.51	51.27
Tare	41,080	18.63	20.54
Net	61,460	27.88	30.73

Scale: 1 * P T

FOB: PICK-UP

This Load: 30.73 TONS

Load No: 4
Shipped: 121.22 TONS

Weighmaster: Granite Construction Company
Deputy: Josh Ordos

WEIGHMASTER CERTIFICATE

Accepted by: _____

WARNING: THIS PRODUCT CONTAINS CRYSTALLINE SILICA (QUARTZ). CRYSTALLINE SILICA IS A COMMON NATURALLY OCCURING MINERAL FOUND IN SAND AND ROCK. PROLONGED AND REPEATED BREATHING OF CRYSTALLINE SILICA DUST MAY CAUSE RESPIRATORY AND OTHER HEALTH PROBLEMS, INCLUDING LUNG DISEASE, SILICOSIS AND CANCER, WHICH MAY RESULT IN PERMANENT INJURY OR DEATH. BEFORE USING OR HANDLING THIS PRODUCT READ THE MATERIAL SAFETY DATA SHEET FOR MORE DETAILED INFORMATION INCLUDING INFORMATION ON APPROPRIATE RESPIRATORY PROTECTION. MSDS SHEETS AVAILABLE AT WWW.GRANITECONSTRUCTION.COM/MSDS OR BY CONTACTING YOUR LOCAL OFFICE.

gci rev 04/21

ORIGINAL

GRANITE™

Granite Falls
11423 Jordan Rd
Arlington, WA 98223
360-966-4970

Ticket No. **58675922**
6/27/2022 7:35:45AM

Customer: STRIDER CONSTRUCTION
289514

Order ID: 267107
Job/PO# : 21NT
Cost Code
Location: NORTON SITE DEVELOPMENT
2111 ROSS AVENUE

Comments:

Vehicle: RS57TT RS57TT
License: | |
Carrier:
Product : 2209 GRAVEL BORROW

	Pounds	Metric Tons	Tons
Gross	101,460	46.02	50.73
Tare	41,080	18.63	20.54
Net	60,380	27.39	30.19

Scale: 1

FOB: PICK-UP

This Load:	**30.19**	**TONS**
Load No:	2	
Shipped:	60.45	TONS

Weighmaster: Granite Construction Company
Deputy: Josh Ordos

WEIGHMASTER CERTIFICATE

Accepted by: _____

WARNING: THIS PRODUCT CONTAINS CRYSTALLINE SILICA (QUARTZ). CRYSTALLINE SILICA IS A COMMON NATURALLY OCCURING MINERAL FOUND IN SAND AND ROCK. PROLONGED AND REPEATED BREATHING OF CRYSTALLINE SILICA DUST MAY CAUSE RESPIRATORY AND OTHER HEALTH PROBLEMS, INCLUDING LUNG DISEASE, SILICOSIS AND CANCER, WHICH MAY RESULT IN PERMANENT INJURY OR DEATH. BEFORE USING OR HANDLING THIS PRODUCT READ THE MATERIAL SAFETY DATA SHEET FOR MORE DETAILED INFORMATION INCLUDING INFORMATION ON APPROPRIATE RESPIRATORY PROTECTION. MSDS SHEETS AVAILABLE AT WWW.GRANITECONSTRUCTION.COM/MSDS OR BY CONTACTING YOUR LOCAL OFFICE.

gci rev 04/21

COPY

GRANITE™

Granite Falls
11423 Jordan Rd
Arlington, WA 98223
360-966-4970

Ticket No. **58675922**
6/27/2022 7:35:45AM

Customer: STRIDER CONSTRUCTION
289514

Order ID: 267107
Job/PO# : 21NT
Cost Code
Location: NORTON SITE DEVELOPMENT
2111 ROSS AVENUE

Comments

Vehicle: RS57TT RS57TT
License: | |
Carrier:
Product : 2209 GRAVEL BORROW

	Pounds	Metric Tons	Tons
Gross	101,460	46.02	50.73
Tare	41,080	18.63	20.54
Net	60,380	27.39	30.19

Scale: 1

FOB: PICK-UP

This Load:	**30.19**	**TONS**
Load No:	2	
Shipped:	60.45	TONS

Weighmaster: Granite Construction Company
Deputy: Josh Ordos

WEIGHMASTER CERTIFICATE

Accepted by: _____

WARNING: THIS PRODUCT CONTAINS CRYSTALLINE SILICA (QUARTZ). CRYSTALLINE SILICA IS A COMMON NATURALLY OCCURING MINERAL FOUND IN SAND AND ROCK. PROLONGED AND REPEATED BREATHING OF CRYSTALLINE SILICA DUST MAY CAUSE RESPIRATORY AND OTHER HEALTH PROBLEMS, INCLUDING LUNG DISEASE, SILICOSIS AND CANCER, WHICH MAY RESULT IN PERMANENT INJURY OR DEATH. BEFORE USING OR HANDLING THIS PRODUCT READ THE MATERIAL SAFETY DATA SHEET FOR MORE DETAILED INFORMATION INCLUDING INFORMATION ON APPROPRIATE RESPIRATORY PROTECTION. MSDS SHEETS AVAILABLE AT WWW.GRANITECONSTRUCTION.COM/MSDS OR BY CONTACTING YOUR LOCAL OFFICE.

gci rev 04/21

ORIGINAL

GRANITE™

Granite Falls
11423 Jordan Rd
Arlington, WA 98223
360-966-4970

Ticket No. **58674495**
6/17/2022 12:15:15PM

Customer: STRIDER CONSTRUCTION
289514

Order ID: 267107
Job/PO# : 21NT
Cost Code
Location: NORTON SITE DEVELOPMENT
2111 ROSS AVENUE

Comments:

Vehicle: RS62TT RS62TT
License: | |
Carrier:
Product : 2209 GRAVEL BORROW

	Pounds	Metric Tons	Tons
Gross	102,520	46.50	51.26
Tare	41,360	18.76	20.68
Net	61,160	27.74	30.58

Scale: 1 * P. T.

FOB: PICK-UP

This Load:	**30.58**	**TONS**
Load No:	3	
Shipped:	90.73	TONS

Weighmaster: Granite Construction Company
Deputy: Josh Ordos

WEIGHMASTER CERTIFICATE

Accepted by: _____

WARNING: THIS PRODUCT CONTAINS CRYSTALLINE SILICA (QUARTZ). CRYSTALLINE SILICA IS A COMMON NATURALLY OCCURING MINERAL FOUND IN SAND AND ROCK. PROLONGED AND REPEATED BREATHING OF CRYSTALLINE SILICA DUST MAY CAUSE RESPIRATORY AND OTHER HEALTH PROBLEMS, INCLUDING LUNG DISEASE, SILICOSIS AND CANCER, WHICH MAY RESULT IN PERMANENT INJURY OR DEATH. BEFORE USING OR HANDLING THIS PRODUCT READ THE MATERIAL SAFETY DATA SHEET FOR MORE DETAILED INFORMATION INCLUDING INFORMATION ON APPROPRIATE RESPIRATORY PROTECTION. MSDS SHEETS AVAILABLE AT WWW.GRANITECONSTRUCTION.COM/MSDS OR BY CONTACTING YOUR LOCAL OFFICE.

gci rev 04/21

COPY

GRANITE™

Granite Falls
11423 Jordan Rd
Arlington, WA 98223
360-966-4970

Ticket No. **58674495**
6/17/2022 12:15:15PM

Customer: STRIDER CONSTRUCTION
289514

Order ID: 267107
Job/PO# : 21NT
Cost Code
Location: NORTON SITE DEVELOPMENT
2111 ROSS AVENUE

Comments:

Vehicle: RS62TT RS62TT
License: | |
Carrier:
Product : 2209 GRAVEL BORROW

	Pounds	Metric Tons	Tons
Gross	102,520	46.50	51.26
Tare	41,360	18.76	20.68
Net	61,160	27.74	30.58

Scale: 1 * P. T.

FOB: PICK-UP

This Load:	**30.58**	**TONS**
Load No:	3	
Shipped:	90.73	TONS

Weighmaster: Granite Construction Company
Deputy: Josh Ordos

WEIGHMASTER CERTIFICATE

Accepted by: _____

WARNING: THIS PRODUCT CONTAINS CRYSTALLINE SILICA (QUARTZ). CRYSTALLINE SILICA IS A COMMON NATURALLY OCCURING MINERAL FOUND IN SAND AND ROCK. PROLONGED AND REPEATED BREATHING OF CRYSTALLINE SILICA DUST MAY CAUSE RESPIRATORY AND OTHER HEALTH PROBLEMS, INCLUDING LUNG DISEASE, SILICOSIS AND CANCER, WHICH MAY RESULT IN PERMANENT INJURY OR DEATH. BEFORE USING OR HANDLING THIS PRODUCT READ THE MATERIAL SAFETY DATA SHEET FOR MORE DETAILED INFORMATION INCLUDING INFORMATION ON APPROPRIATE RESPIRATORY PROTECTION. MSDS SHEETS AVAILABLE AT WWW.GRANITECONSTRUCTION.COM/MSDS OR BY CONTACTING YOUR LOCAL OFFICE.

gci rev 04/21

ORIGINAL

GRANITE™

Granite Falls
11423 Jordan Rd
Arlington, WA 98223
360-966-4970

Ticket No **58674472**
6/17/2022 10:43:35AM

Customer: STRIDER CONSTRUCTION
289514

Order ID: 267107
Job/PO# : 21NT
Cost Code
Location: NORTON SITE DEVELOPMENT
2111 ROSS AVENUE

Comments:

Vehicle: RS62TT RS62TT
License: | |
Carrier:
Product : 2209 GRAVEL BORROW

	Pounds	Metric Tons	Tons
Gross	101,560	46.07	50.78
Tare	41,360	18.76	20.68
Net	60,200	27.31	30.10

Scale: 1 * P T

FOB: PICK-UP

This Load: 30.10 TONS

Load No: 2
Shipped: 60.15 TONS

Weighmaster: Granite Construction Company
Deputy: Josh Ordos

WEIGHMASTER CERTIFICATE

Accepted by: _____

WARNING: THIS PRODUCT CONTAINS CRYSTALLINE SILICA (QUARTZ). CRYSTALLINE SILICA IS A COMMON NATURALLY OCCURING MINERAL FOUND IN SAND AND ROCK. PROLONGED AND REPEATED BREATHING OF CRYSTALLINE SILICA DUST MAY CAUSE RESPIRATORY AND OTHER HEALTH PROBLEMS, INCLUDING LUNG DISEASE, SILICOSIS AND CANCER, WHICH MAY RESULT IN PERMANENT INJURY OR DEATH. BEFORE USING OR HANDLING THIS PRODUCT READ THE MATERIAL SAFETY DATA SHEET FOR MORE DETAILED INFORMATION INCLUDING INFORMATION ON APPROPRIATE RESPIRATORY PROTECTION. MSDS SHEETS AVAILABLE AT WWW.GRANITECONSTRUCTION.COM/MSDS OR BY CONTACTING YOUR LOCAL OFFICE.

gci rev 04/21

COPY

GRANITE™

Granite Falls
11423 Jordan Rd
Arlington, WA 98223
360-966-4970

Ticket No. **58674472**
6/17/2022 10:43:35AM

Customer: STRIDER CONSTRUCTION
289514

Order ID: 267107
Job/PO# : 21NT
Cost Code
Location: NORTON SITE DEVELOPMENT
2111 ROSS AVENUE

Comments:

Vehicle: RS62TT RS62TT
License: | |
Carrier:
Product : 2209 GRAVEL BORROW

	Pounds	Metric Tons	Tons
Gross	101,560	46.07	50.78
Tare	41,360	18.76	20.68
Net	60,200	27.31	30.10

Scale: 1 * P T

FOB: PICK-UP

This Load: 30.10 TONS

Load No: 2
Shipped: 60.15 TONS

Weighmaster: Granite Construction Company
Deputy: Josh Ordos

WEIGHMASTER CERTIFICATE

Accepted by: _____

WARNING: THIS PRODUCT CONTAINS CRYSTALLINE SILICA (QUARTZ). CRYSTALLINE SILICA IS A COMMON NATURALLY OCCURING MINERAL FOUND IN SAND AND ROCK. PROLONGED AND REPEATED BREATHING OF CRYSTALLINE SILICA DUST MAY CAUSE RESPIRATORY AND OTHER HEALTH PROBLEMS, INCLUDING LUNG DISEASE, SILICOSIS AND CANCER, WHICH MAY RESULT IN PERMANENT INJURY OR DEATH. BEFORE USING OR HANDLING THIS PRODUCT READ THE MATERIAL SAFETY DATA SHEET FOR MORE DETAILED INFORMATION INCLUDING INFORMATION ON APPROPRIATE RESPIRATORY PROTECTION. MSDS SHEETS AVAILABLE AT WWW.GRANITECONSTRUCTION.COM/MSDS OR BY CONTACTING YOUR LOCAL OFFICE.

gci rev 04/21

ORIGINAL

GRANITE™

Granite Falls
11423 Jordan Rd
Arlington, WA 98223
360-966-4970

Ticket No. **58674413**
6/17/2022 7:04:23AM

Customer: STRIDER CONSTRUCTION
289514

Order ID: 267107
Job/PO# : 21NT
Cost Code
Location: NORTON SITE DEVELOPMENT
2111 ROSS AVENUE

Comments:

Vehicle: RS62TT RS62TT
License: | |
Carrier:
Product : 2209 GRAVEL BORROW

	Pounds	Metric Tons	Tons
Gross	101,460	46.02	50.73
Tare	41,360	18.76	20.68
Net	60,100	27.26	30.05

Scale: 1

FOB: PICK-UP

This Load:	**30.05**	**TONS**
Load No:	1	
Shipped:	30.05	TONS

Weighmaster: Granite Construction Company
Deputy: Josh Ordos

WEIGHMASTER CERTIFICATE

Accepted by: _____

WARNING: THIS PRODUCT CONTAINS CRYSTALLINE SILICA (QUARTZ). CRYSTALLINE SILICA IS A COMMON NATURALLY OCCURING MINERAL FOUND IN SAND AND ROCK. PROLONGED AND REPEATED BREATHING OF CRYSTALLINE SILICA DUST MAY CAUSE RESPIRATORY AND OTHER HEALTH PROBLEMS, INCLUDING LUNG DISEASE, SILICOSIS AND CANCER, WHICH MAY RESULT IN PERMANENT INJURY OR DEATH. BEFORE USING OR HANDLING THIS PRODUCT READ THE MATERIAL SAFETY DATA SHEET FOR MORE DETAILED INFORMATION INCLUDING INFORMATION ON APPROPRIATE RESPIRATORY PROTECTION. MSDS SHEETS AVAILABLE AT WWW.GRANITECONSTRUCTION.COM/MSDS OR BY CONTACTING YOUR LOCAL OFFICE.

gci rev 04/21

COPY

GRANITE™

Granite Falls
11423 Jordan Rd
Arlington, WA 98223
360-966-4970

Ticket No. **58674413**
6/17/2022 7:04:23AM

Customer: STRIDER CONSTRUCTION
289514

Order ID: 267107
Job/PO# : 21NT
Cost Code
Location: NORTON SITE DEVELOPMENT
2111 ROSS AVENUE

Comments:

Vehicle: RS62TT RS62TT
License: | |
Carrier:
Product : 2209 GRAVEL BORROW

	Pounds	Metric Tons	Tons
Gross	101,460	46.02	50.73
Tare	41,360	18.76	20.68
Net	60,100	27.26	30.05

Scale: 1

FOB: PICK-UP

This Load:	**30.05**	**TONS**
Load No:	1	
Shipped:	30.05	TONS

Weighmaster: Granite Construction Company
Deputy: Josh Ordos

WEIGHMASTER CERTIFICATE

Accepted by: _____

WARNING: THIS PRODUCT CONTAINS CRYSTALLINE SILICA (QUARTZ). CRYSTALLINE SILICA IS A COMMON NATURALLY OCCURING MINERAL FOUND IN SAND AND ROCK. PROLONGED AND REPEATED BREATHING OF CRYSTALLINE SILICA DUST MAY CAUSE RESPIRATORY AND OTHER HEALTH PROBLEMS, INCLUDING LUNG DISEASE, SILICOSIS AND CANCER, WHICH MAY RESULT IN PERMANENT INJURY OR DEATH. BEFORE USING OR HANDLING THIS PRODUCT READ THE MATERIAL SAFETY DATA SHEET FOR MORE DETAILED INFORMATION INCLUDING INFORMATION ON APPROPRIATE RESPIRATORY PROTECTION. MSDS SHEETS AVAILABLE AT WWW.GRANITECONSTRUCTION.COM/MSDS OR BY CONTACTING YOUR LOCAL OFFICE.

gci rev 04/21

ORIGINAL

Ticket No. **58674202**

6/15/2022 1:24:34PM

GRANITE™

Granite Falls
11423 Jordan Rd
Arlington, WA 98223
360-966-4970

Customer: STRIDER CONSTRUCTION
289514

Order ID: 267107
Job/PO# : 21NT
Cost Code
Location: NORTON SITE DEVELOPMENT
2111 ROSS AVENUE

Comments:

Vehicle: RS59TT RS59TT
License: | |
Carrier:
Product : 2209 GRAVEL BORROW

	Pounds	Metric Tons	Tons
Gross	102,940	46.69	51.47
Tare	41,160	18.67	20.58
Net	61,780	28.02	30.89

Scale: 1 * P. T.

FOB: PICK-UP

This Load: 30.89 TONS

Load No: 1
Shipped: 30.89 TONS

Weighmaster: Granite Construction Company
Deputy: Josh Ordos

WEIGHMASTER CERTIFICATE

Accepted by: _____

WARNING: THIS PRODUCT CONTAINS CRYSTALLINE SILICA (QUARTZ). CRYSTALLINE SILICA IS A COMMON NATURALLY OCCURING MINERAL FOUND IN SAND AND ROCK. PROLONGED AND REPEATED BREATHING OF CRYSTALLINE SILICA DUST MAY CAUSE RESPIRATORY AND OTHER HEALTH PROBLEMS, INCLUDING LUNG DISEASE, SILICOSIS AND CANCER, WHICH MAY RESULT IN PERMANENT INJURY OR DEATH. BEFORE USING OR HANDLING THIS PRODUCT READ THE MATERIAL SAFETY DATA SHEET FOR MORE DETAILED INFORMATION INCLUDING INFORMATION ON APPROPRIATE RESPIRATORY PROTECTION. MSDS SHEETS AVAILABLE AT WWW.GRANITECONSTRUCTION.COM/MSDS OR BY CONTACTING YOUR LOCAL OFFICE.

gci rev 04/21

COPY

Ticket No. **58674202**

6/15/2022 1:24:34PM

GRANITE™

Granite Falls
11423 Jordan Rd
Arlington, WA 98223
360-966-4970

Customer: STRIDER CONSTRUCTION
289514

Order ID: 267107
Job/PO# : 21NT
Cost Code
Location: NORTON SITE DEVELOPMENT
2111 ROSS AVENUE

Comments:

Vehicle: RS59TT RS59TT
License: | |
Carrier:
Product : 2209 GRAVEL BORROW

	Pounds	Metric Tons	Tons
Gross	102,940	46.69	51.47
Tare	41,160	18.67	20.58
Net	61,780	28.02	30.89

Scale: 1 * P. T.

FOB: PICK-UP

This Load: 30.89 TONS

Load No: 1
Shipped: 30.89 TONS

Weighmaster: Granite Construction Company
Deputy: Josh Ordos

WEIGHMASTER CERTIFICATE

Accepted by: _____

WARNING: THIS PRODUCT CONTAINS CRYSTALLINE SILICA (QUARTZ). CRYSTALLINE SILICA IS A COMMON NATURALLY OCCURING MINERAL FOUND IN SAND AND ROCK. PROLONGED AND REPEATED BREATHING OF CRYSTALLINE SILICA DUST MAY CAUSE RESPIRATORY AND OTHER HEALTH PROBLEMS, INCLUDING LUNG DISEASE, SILICOSIS AND CANCER, WHICH MAY RESULT IN PERMANENT INJURY OR DEATH. BEFORE USING OR HANDLING THIS PRODUCT READ THE MATERIAL SAFETY DATA SHEET FOR MORE DETAILED INFORMATION INCLUDING INFORMATION ON APPROPRIATE RESPIRATORY PROTECTION. MSDS SHEETS AVAILABLE AT WWW.GRANITECONSTRUCTION.COM/MSDS OR BY CONTACTING YOUR LOCAL OFFICE.

gci rev 04/21

ORIGINAL

GRANITE™

Granite Falls
11423 Jordan Rd
Arlington, WA 98223
360-966-4970

Ticket No. **58674223**
6/15/2022 2:54:04PM

Customer: STRIDER CONSTRUCTION
289514

Order ID: 267107
Job/PO# : 21NT
Cost Code
Location: NORTON SITE DEVELOPMENT
2111 ROSS AVENUE

Comments:

Vehicle: RS59TT RS59TT
License: | |
Carrier:
Product 2209 GRAVEL BORROW

	Pounds	Metric Tons	Tons
Gross	102,340	46.42	51.17
Tare	41,160	18.67	20.58
Net	61,180	27.75	30.59

Scale: 1 * P. T.

FOB: PICK-UP

This Load: 30.59 TONS

Load No: 2
Shipped: 61.48 TONS

Weighmaster: Granite Construction Company
Deputy: Josh Ordos

WEIGHMASTER CERTIFICATE

Accepted by: _____

WARNING: THIS PRODUCT CONTAINS CRYSTALLINE SILICA (QUARTZ). CRYSTALLINE SILICA IS A COMMON NATURALLY OCCURING MINERAL FOUND IN SAND AND ROCK. PROLONGED AND REPEATED BREATHING OF CRYSTALLINE SILICA DUST MAY CAUSE RESPIRATORY AND OTHER HEALTH PROBLEMS, INCLUDING LUNG DISEASE, SILICOSIS AND CANCER, WHICH MAY RESULT IN PERMANENT INJURY OR DEATH. BEFORE USING OR HANDLING THIS PRODUCT READ THE MATERIAL SAFETY DATA SHEET FOR MORE DETAILED INFORMATION INCLUDING INFORMATION ON APPROPRIATE RESPIRATORY PROTECTION. MSDS SHEETS AVAILABLE AT WWW.GRANITECONSTRUCTION.COM/MSDS OR BY CONTACTING YOUR LOCAL OFFICE.

gci rev 04/21

COPY

GRANITE™

Granite Falls
11423 Jordan Rd
Arlington, WA 98223
360-966-4970

Ticket No. **58674223**
6/15/2022 2:54:04PM

Customer: STRIDER CONSTRUCTION
289514

Order ID: 267107
Job/PO# : 21NT
Cost Code
Location: NORTON SITE DEVELOPMENT
2111 ROSS AVENUE

Comments:

Vehicle: RS59TT RS59TT
License: | |
Carrier:
Product 2209 GRAVEL BORROW

	Pounds	Metric Tons	Tons
Gross	102,340	46.42	51.17
Tare	41,160	18.67	20.58
Net	61,180	27.75	30.59

Scale: 1 * P. T.

FOB: PICK-UP

This Load: 30.59 TONS

Load No: 2
Shipped: 61.48 TONS

Weighmaster: Granite Construction Company
Deputy: Josh Ordos

WEIGHMASTER CERTIFICATE

Accepted by: _____

WARNING: THIS PRODUCT CONTAINS CRYSTALLINE SILICA (QUARTZ). CRYSTALLINE SILICA IS A COMMON NATURALLY OCCURING MINERAL FOUND IN SAND AND ROCK. PROLONGED AND REPEATED BREATHING OF CRYSTALLINE SILICA DUST MAY CAUSE RESPIRATORY AND OTHER HEALTH PROBLEMS, INCLUDING LUNG DISEASE, SILICOSIS AND CANCER, WHICH MAY RESULT IN PERMANENT INJURY OR DEATH. BEFORE USING OR HANDLING THIS PRODUCT READ THE MATERIAL SAFETY DATA SHEET FOR MORE DETAILED INFORMATION INCLUDING INFORMATION ON APPROPRIATE RESPIRATORY PROTECTION. MSDS SHEETS AVAILABLE AT WWW.GRANITECONSTRUCTION.COM/MSDS OR BY CONTACTING YOUR LOCAL OFFICE.

gci rev 04/21

ORIGINAL

GRANITE™

Granite Falls
11423 Jordan Rd
Arlington, WA 98223
360-966-4970

Ticket No. **58673993**
6/14/2022 7:25:40AM

Customer: STRIDER CONSTRUCTION
289514

Order ID: 267107
Job/PO# : 21NT
Cost Code
Location: NORTON SITE DEVELOPMENT
2111 ROSS AVENUE

Comments:

Vehicle: RS58TT RS58TT
License: | |
Carrier:
Product : 2209 GRAVEL BORROW

	Pounds	Metric Tons	Tons
Gross	102,660	46.57	51.33
Tare	41,180	18.68	20.59
Net	61,480	27.89	30.74

Scale: 1

FOB: PICK-UP

This Load:	**30.74**	**TONS**
Load No:	1	
Shipped:	30.74	TONS

Weighmaster: Granite Construction Company
Deputy: Josh Ordos

WEIGHMASTER CERTIFICATE

Accepted by: _____

WARNING: THIS PRODUCT CONTAINS CRYSTALLINE SILICA (QUARTZ). CRYSTALLINE SILICA IS A COMMON NATURALLY OCCURING MINERAL FOUND IN SAND AND ROCK. PROLONGED AND REPEATED BREATHING OF CRYSTALLINE SILICA DUST MAY CAUSE RESPIRATORY AND OTHER HEALTH PROBLEMS, INCLUDING LUNG DISEASE, SILICOSIS AND CANCER, WHICH MAY RESULT IN PERMANENT INJURY OR DEATH. BEFORE USING OR HANDLING THIS PRODUCT READ THE MATERIAL SAFETY DATA SHEET FOR MORE DETAILED INFORMATION INCLUDING INFORMATION ON APPROPRIATE RESPIRATORY PROTECTION. MSDS SHEETS AVAILABLE AT WWW.GRANITECONSTRUCTION.COM/MSDS OR BY CONTACTING YOUR LOCAL OFFICE.

gci rev 04/21

COPY

GRANITE™

Granite Falls
11423 Jordan Rd
Arlington, WA 98223
360-966-4970

Ticket No. **58673993**
6/14/2022 7:25:40AM

Customer: STRIDER CONSTRUCTION
289514

Order ID: 267107
Job/PO# : 21NT
Cost Code
Location: NORTON SITE DEVELOPMENT
2111 ROSS AVENUE

Comments:

Vehicle: RS58TT RS58TT
License: | |
Carrier:
Product : 2209 GRAVEL BORROW

	Pounds	Metric Tons	Tons
Gross	102,660	46.57	51.33
Tare	41,180	18.68	20.59
Net	61,480	27.89	30.74

Scale: 1

FOB: PICK-UP

This Load:	**30.74**	**TONS**
Load No:	1	
Shipped:	30.74	TONS

Weighmaster: Granite Construction Company
Deputy: Josh Ordos

WEIGHMASTER CERTIFICATE

Accepted by: _____

WARNING: THIS PRODUCT CONTAINS CRYSTALLINE SILICA (QUARTZ). CRYSTALLINE SILICA IS A COMMON NATURALLY OCCURING MINERAL FOUND IN SAND AND ROCK. PROLONGED AND REPEATED BREATHING OF CRYSTALLINE SILICA DUST MAY CAUSE RESPIRATORY AND OTHER HEALTH PROBLEMS, INCLUDING LUNG DISEASE, SILICOSIS AND CANCER, WHICH MAY RESULT IN PERMANENT INJURY OR DEATH. BEFORE USING OR HANDLING THIS PRODUCT READ THE MATERIAL SAFETY DATA SHEET FOR MORE DETAILED INFORMATION INCLUDING INFORMATION ON APPROPRIATE RESPIRATORY PROTECTION. MSDS SHEETS AVAILABLE AT WWW.GRANITECONSTRUCTION.COM/MSDS OR BY CONTACTING YOUR LOCAL OFFICE.

gci rev 04/21

ORIGINAL

GRANITE™

Granite Falls
11423 Jordan Rd
Arlington, WA 98223
360-966-4970

Ticket No. **58674006**
6/14/2022 9:03:15AM

Customer: STRIDER CONSTRUCTION
289514

Order ID: 267107
Job/PO# : 21NT
Cost Code
Location: NORTON SITE DEVELOPMENT
2111 ROSS AVENUE

Comments:

Vehicle: RS58TT RS58TT
License: | |
Carrier:
Product : 2209 GRAVEL BORROW

	Pounds	Metric Tons	Tons
Gross	101,860	46.20	50.93
Tare	41,180	18.68	20.59
Net	60,680	27.52	30.34

Scale: 1 * P. T.

FOB: PICK-UP

This Load: 30.34 TONS

Load No: 2
Shipped: 61.08 TONS

Weighmaster: Granite Construction Company
Deputy: Josh Ordos

WEIGHMASTER CERTIFICATE

Accepted by: _____

WARNING: THIS PRODUCT CONTAINS CRYSTALLINE SILICA (QUARTZ). CRYSTALLINE SILICA IS A COMMON NATURALLY OCCURING MINERAL FOUND IN SAND AND ROCK. PROLONGED AND REPEATED BREATHING OF CRYSTALLINE SILICA DUST MAY CAUSE RESPIRATORY AND OTHER HEALTH PROBLEMS, INCLUDING LUNG DISEASE, SILICOSIS AND CANCER, WHICH MAY RESULT IN PERMANENT INJURY OR DEATH. BEFORE USING OR HANDLING THIS PRODUCT READ THE MATERIAL SAFETY DATA SHEET FOR MORE DETAILED INFORMATION INCLUDING INFORMATION ON APPROPRIATE RESPIRATORY PROTECTION. MSDS SHEETS AVAILABLE AT WWW.GRANITECONSTRUCTION.COM/MSDS OR BY CONTACTING YOUR LOCAL OFFICE.

gci rev 04/21

COPY

GRANITE™

Granite Falls
11423 Jordan Rd
Arlington, WA 98223
360-966-4970

Ticket No. **58674006**
6/14/2022 9:03:15AM

Customer: STRIDER CONSTRUCTION
289514

Order ID: 267107
Job/PO# : 21NT
Cost Code
Location: NORTON SITE DEVELOPMENT
2111 ROSS AVENUE

Comments:

Vehicle: RS58TT RS58TT
License: | |
Carrier:
Product : 2209 GRAVEL BORROW

	Pounds	Metric Tons	Tons
Gross	101,860	46.20	50.93
Tare	41,180	18.68	20.59
Net	60,680	27.52	30.34

Scale: 1 * P. T.

FOB: PICK-UP

This Load: 30.34 TONS

Load No: 2
Shipped: 61.08 TONS

Weighmaster: Granite Construction Company
Deputy: Josh Ordos

WEIGHMASTER CERTIFICATE

Accepted by: _____

WARNING: THIS PRODUCT CONTAINS CRYSTALLINE SILICA (QUARTZ). CRYSTALLINE SILICA IS A COMMON NATURALLY OCCURING MINERAL FOUND IN SAND AND ROCK. PROLONGED AND REPEATED BREATHING OF CRYSTALLINE SILICA DUST MAY CAUSE RESPIRATORY AND OTHER HEALTH PROBLEMS, INCLUDING LUNG DISEASE, SILICOSIS AND CANCER, WHICH MAY RESULT IN PERMANENT INJURY OR DEATH. BEFORE USING OR HANDLING THIS PRODUCT READ THE MATERIAL SAFETY DATA SHEET FOR MORE DETAILED INFORMATION INCLUDING INFORMATION ON APPROPRIATE RESPIRATORY PROTECTION. MSDS SHEETS AVAILABLE AT WWW.GRANITECONSTRUCTION.COM/MSDS OR BY CONTACTING YOUR LOCAL OFFICE.

gci rev 04/21

ORIGINAL

GRANITE™

Granite Falls
11423 Jordan Rd
Arlington, WA 98223
360-966-4970

Ticket No. **58674027**
6/14/2022 10:30:56AM

Customer: STRIDER CONSTRUCTION
289514

Order ID: 267107
Job/PO# : 21NT
Cost Code
Location: NORTON SITE DEVELOPMENT
2111 ROSS AVENUE

Comments:

Vehicle: RS58TT RS58TT
License: | |
Carrier:
Product : 2209 GRAVEL BORROW

	Pounds	Metric Tons	Tons
Gross	101,240	45.92	50.62
Tare	41,180	18.68	20.59
Net	60,060	27.24	30.03

Scale: 1 * P T

FOB: PICK-UP

This Load:	**30.03**	**TONS**
Load No:	3	
Shipped:	91.11	TONS

Weighmaster: Granite Construction Company
Deputy: Josh Ordos

WEIGHMASTER CERTIFICATE

Accepted by: _____

WARNING: THIS PRODUCT CONTAINS CRYSTALLINE SILICA (QUARTZ). CRYSTALLINE SILICA IS A COMMON NATURALLY OCCURING MINERAL FOUND IN SAND AND ROCK. PROLONGED AND REPEATED BREATHING OF CRYSTALLINE SILICA DUST MAY CAUSE RESPIRATORY AND OTHER HEALTH PROBLEMS, INCLUDING LUNG DISEASE, SILICOSIS AND CANCER, WHICH MAY RESULT IN PERMANENT INJURY OR DEATH. BEFORE USING OR HANDLING THIS PRODUCT READ THE MATERIAL SAFETY DATA SHEET FOR MORE DETAILED INFORMATION INCLUDING INFORMATION ON APPROPRIATE RESPIRATORY PROTECTION. MSDS SHEETS AVAILABLE AT WWW.GRANITECONSTRUCTION.COM/MSDS OR BY CONTACTING YOUR LOCAL OFFICE.

gci rev 04/21

COPY

GRANITE™

Granite Falls
11423 Jordan Rd
Arlington, WA 98223
360-966-4970

Ticket No. **58674027**
6/14/2022 10:30:56AM

Customer: STRIDER CONSTRUCTION
289514

Order ID: 267107
Job/PO# : 21NT
Cost Code
Location: NORTON SITE DEVELOPMENT
2111 ROSS AVENUE

Comments:

Vehicle: RS58TT RS58TT
License: | |
Carrier:
Product : 2209 GRAVEL BORROW

	Pounds	Metric Tons	Tons
Gross	101,240	45.92	50.62
Tare	41,180	18.68	20.59
Net	60,060	27.24	30.03

Scale: 1 * P T

FOB: PICK-UP

This Load:	**30.03**	**TONS**
Load No:	3	
Shipped:	91.11	TONS

Weighmaster: Granite Construction Company
Deputy: Josh Ordos

WEIGHMASTER CERTIFICATE

Accepted by: _____

WARNING: THIS PRODUCT CONTAINS CRYSTALLINE SILICA (QUARTZ). CRYSTALLINE SILICA IS A COMMON NATURALLY OCCURING MINERAL FOUND IN SAND AND ROCK. PROLONGED AND REPEATED BREATHING OF CRYSTALLINE SILICA DUST MAY CAUSE RESPIRATORY AND OTHER HEALTH PROBLEMS, INCLUDING LUNG DISEASE, SILICOSIS AND CANCER, WHICH MAY RESULT IN PERMANENT INJURY OR DEATH. BEFORE USING OR HANDLING THIS PRODUCT READ THE MATERIAL SAFETY DATA SHEET FOR MORE DETAILED INFORMATION INCLUDING INFORMATION ON APPROPRIATE RESPIRATORY PROTECTION. MSDS SHEETS AVAILABLE AT WWW.GRANITECONSTRUCTION.COM/MSDS OR BY CONTACTING YOUR LOCAL OFFICE.

gci rev 04/21

ORIGINAL

GRANITE™

Granite Falls
11423 Jordan Rd
Arlington, WA 98223
360-966-4970

Ticket No. **58674049**
6/14/2022 12:10:54PM

Customer: STRIDER CONSTRUCTION
289514

Order ID: 267107
Job/PO# : 21NT
Cost Code
Location: NORTON SITE DEVELOPMENT
2111 ROSS AVENUE

Comments:

Vehicle: RS58TT RS58TT
License: | |
Carrier:
Product : 2209 GRAVEL BORROW

	Pounds	Metric Tons	Tons
Gross	102,680	46.57	51.34
Tare	41,180	18.68	20.59
Net	61,500	27.90	30.75

Scale: 1 * P. T.

FOB: PICK-UP

This Load: 30.75 TONS

Load No: 4
Shipped: 121.86 TONS

Weighmaster: Granite Construction Company
Deputy: Josh Ordos

WEIGHMASTER CERTIFICATE

Accepted by: _____

WARNING: THIS PRODUCT CONTAINS CRYSTALLINE SILICA (QUARTZ). CRYSTALLINE SILICA IS A COMMON NATURALLY OCCURING MINERAL FOUND IN SAND AND ROCK. PROLONGED AND REPEATED BREATHING OF CRYSTALLINE SILICA DUST MAY CAUSE RESPIRATORY AND OTHER HEALTH PROBLEMS, INCLUDING LUNG DISEASE, SILICOSIS AND CANCER, WHICH MAY RESULT IN PERMANENT INJURY OR DEATH. BEFORE USING OR HANDLING THIS PRODUCT READ THE MATERIAL SAFETY DATA SHEET FOR MORE DETAILED INFORMATION INCLUDING INFORMATION ON APPROPRIATE RESPIRATORY PROTECTION. MSDS SHEETS AVAILABLE AT WWW.GRANITECONSTRUCTION.COM/MSDS OR BY CONTACTING YOUR LOCAL OFFICE.

gci rev 04/21

COPY

GRANITE™

Granite Falls
11423 Jordan Rd
Arlington, WA 98223
360-966-4970

Ticket No. **58674049**
6/14/2022 12:10:54PM

Customer: STRIDER CONSTRUCTION
289514

Order ID: 267107
Job/PO# : 21NT
Cost Code
Location: NORTON SITE DEVELOPMENT
2111 ROSS AVENUE

Comments

Vehicle: RS58TT RS58TT
License: | |
Carrier:
Product : 2209 GRAVEL BORROW

	Pounds	Metric Tons	Tons
Gross	102,680	46.57	51.34
Tare	41,180	18.68	20.59
Net	61,500	27.90	30.75

Scale: 1 * P. T.

FOB: PICK-UP

This Load: 30.75 TONS

Load No: 4
Shipped: 121.86 TONS

Weighmaster: Granite Construction Company
Deputy: Josh Ordos

WEIGHMASTER CERTIFICATE

Accepted by: _____

WARNING: THIS PRODUCT CONTAINS CRYSTALLINE SILICA (QUARTZ). CRYSTALLINE SILICA IS A COMMON NATURALLY OCCURING MINERAL FOUND IN SAND AND ROCK. PROLONGED AND REPEATED BREATHING OF CRYSTALLINE SILICA DUST MAY CAUSE RESPIRATORY AND OTHER HEALTH PROBLEMS, INCLUDING LUNG DISEASE, SILICOSIS AND CANCER, WHICH MAY RESULT IN PERMANENT INJURY OR DEATH. BEFORE USING OR HANDLING THIS PRODUCT READ THE MATERIAL SAFETY DATA SHEET FOR MORE DETAILED INFORMATION INCLUDING INFORMATION ON APPROPRIATE RESPIRATORY PROTECTION. MSDS SHEETS AVAILABLE AT WWW.GRANITECONSTRUCTION.COM/MSDS OR BY CONTACTING YOUR LOCAL OFFICE.

gci rev 04/21

ORIGINAL

GRANITE™

Granite Falls
11423 Jordan Rd
Arlington, WA 98223
360-966-4970

Ticket No. **58674065**
6/14/2022 1:36:58PM

Customer: STRIDER CONSTRUCTION
289514

Order ID: 267107
Job/PO# : 21NT
Cost Code
Location: NORTON SITE DEVELOPMENT
2111 ROSS AVENUE

Comments:

Vehicle: RS58TT RS58TT
License: | |
Carrier:
Product : 2209 GRAVEL BORROW

	Pounds	Metric Tons	Tons
Gross	102,680	46.57	51.34
Tare	41,180	18.68	20.59
Net	61,500	27.90	30.75

Scale: 1 * P. T.

FOB: PICK-UP

This Load: 30.75 TONS

Load No: 5
Shipped: 152.61 TONS

Weighmaster: Granite Construction Company
Deputy: Josh Ordos

WEIGHMASTER CERTIFICATE

Accepted by: _____

WARNING: THIS PRODUCT CONTAINS CRYSTALLINE SILICA (QUARTZ). CRYSTALLINE SILICA IS A COMMON NATURALLY OCCURING MINERAL FOUND IN SAND AND ROCK. PROLONGED AND REPEATED BREATHING OF CRYSTALLINE SILICA DUST MAY CAUSE RESPIRATORY AND OTHER HEALTH PROBLEMS, INCLUDING LUNG DISEASE, SILICOSIS AND CANCER, WHICH MAY RESULT IN PERMANENT INJURY OR DEATH. BEFORE USING OR HANDLING THIS PRODUCT READ THE MATERIAL SAFETY DATA SHEET FOR MORE DETAILED INFORMATION INCLUDING INFORMATION ON APPROPRIATE RESPIRATORY PROTECTION. MSDS SHEETS AVAILABLE AT WWW.GRANITECONSTRUCTION.COM/MSDS OR BY CONTACTING YOUR LOCAL OFFICE.

gci rev 04/21

COPY

GRANITE™

Granite Falls
11423 Jordan Rd
Arlington, WA 98223
360-966-4970

Ticket No. **58674065**
6/14/2022 1:36:58PM

Customer: STRIDER CONSTRUCTION
289514

Order ID: 267107
Job/PO# : 21NT
Cost Code
Location: NORTON SITE DEVELOPMENT
2111 ROSS AVENUE

Comments:

Vehicle: RS58TT RS58TT
License: | |
Carrier:
Product : 2209 GRAVEL BORROW

	Pounds	Metric Tons	Tons
Gross	102,680	46.57	51.34
Tare	41,180	18.68	20.59
Net	61,500	27.90	30.75

Scale: 1 * P. T.

FOB: PICK-UP

This Load: 30.75 TONS

Load No: 5
Shipped: 152.61 TONS

Weighmaster: Granite Construction Company
Deputy: Josh Ordos

WEIGHMASTER CERTIFICATE

Accepted by: _____

WARNING: THIS PRODUCT CONTAINS CRYSTALLINE SILICA (QUARTZ). CRYSTALLINE SILICA IS A COMMON NATURALLY OCCURING MINERAL FOUND IN SAND AND ROCK. PROLONGED AND REPEATED BREATHING OF CRYSTALLINE SILICA DUST MAY CAUSE RESPIRATORY AND OTHER HEALTH PROBLEMS, INCLUDING LUNG DISEASE, SILICOSIS AND CANCER, WHICH MAY RESULT IN PERMANENT INJURY OR DEATH. BEFORE USING OR HANDLING THIS PRODUCT READ THE MATERIAL SAFETY DATA SHEET FOR MORE DETAILED INFORMATION INCLUDING INFORMATION ON APPROPRIATE RESPIRATORY PROTECTION. MSDS SHEETS AVAILABLE AT WWW.GRANITECONSTRUCTION.COM/MSDS OR BY CONTACTING YOUR LOCAL OFFICE.

gci rev 04/21

ORIGINAL

GRANITE™

Granite Falls
11423 Jordan Rd
Arlington, WA 98223
360-966-4970

Ticket No. **58674074**
6/14/2022 3:05:14PM

Customer: STRIDER CONSTRUCTION
289514

Order ID: 267107
Job/PO# : 21NT
Cost Code
Location: NORTON SITE DEVELOPMENT
2111 ROSS AVENUE

Comments:

Vehicle: RS58TT RS58TT
License: | |
Carrier:
Product : 2209 GRAVEL BORROW

	Pounds	Metric Tons	Tons
Gross	103,180	46.80	51.59
Tare	41,180	18.68	20.59
Net	62,000	28.12	31.00

Scale: 1 * P. T.

FOB: PICK-UP

This Load: 31.00 TONS

Load No: 6
Shipped: 183.61 TONS

Weighmaster: Granite Construction Company
Deputy: Josh Ordos

WEIGHMASTER CERTIFICATE

Accepted by: _____

WARNING: THIS PRODUCT CONTAINS CRYSTALLINE SILICA (QUARTZ). CRYSTALLINE SILICA IS A COMMON NATURALLY OCCURING MINERAL FOUND IN SAND AND ROCK. PROLONGED AND REPEATED BREATHING OF CRYSTALLINE SILICA DUST MAY CAUSE RESPIRATORY AND OTHER HEALTH PROBLEMS, INCLUDING LUNG DISEASE, SILICOSIS AND CANCER, WHICH MAY RESULT IN PERMANENT INJURY OR DEATH. BEFORE USING OR HANDLING THIS PRODUCT READ THE MATERIAL SAFETY DATA SHEET FOR MORE DETAILED INFORMATION INCLUDING INFORMATION ON APPROPRIATE RESPIRATORY PROTECTION. MSDS SHEETS AVAILABLE AT WWW.GRANITECONSTRUCTION.COM/MSDS OR BY CONTACTING YOUR LOCAL OFFICE.

gci rev 04/21

COPY

GRANITE™

Granite Falls
11423 Jordan Rd
Arlington, WA 98223
360-966-4970

Ticket No. **58674074**
6/14/2022 3:05:14PM

Customer: STRIDER CONSTRUCTION
289514

Order ID: 267107
Job/PO# : 21NT
Cost Code
Location: NORTON SITE DEVELOPMENT
2111 ROSS AVENUE

Comments:

Vehicle: RS58TT RS58TT
License: | |
Carrier:
Product : 2209 GRAVEL BORROW

	Pounds	Metric Tons	Tons
Gross	103,180	46.80	51.59
Tare	41,180	18.68	20.59
Net	62,000	28.12	31.00

Scale: 1 * P. T.

FOB: PICK-UP

This Load: 31.00 TONS

Load No: 6
Shipped: 183.61 TONS

Weighmaster: Granite Construction Company
Deputy: Josh Ordos

WEIGHMASTER CERTIFICATE

Accepted by: _____

WARNING: THIS PRODUCT CONTAINS CRYSTALLINE SILICA (QUARTZ). CRYSTALLINE SILICA IS A COMMON NATURALLY OCCURING MINERAL FOUND IN SAND AND ROCK. PROLONGED AND REPEATED BREATHING OF CRYSTALLINE SILICA DUST MAY CAUSE RESPIRATORY AND OTHER HEALTH PROBLEMS, INCLUDING LUNG DISEASE, SILICOSIS AND CANCER, WHICH MAY RESULT IN PERMANENT INJURY OR DEATH. BEFORE USING OR HANDLING THIS PRODUCT READ THE MATERIAL SAFETY DATA SHEET FOR MORE DETAILED INFORMATION INCLUDING INFORMATION ON APPROPRIATE RESPIRATORY PROTECTION. MSDS SHEETS AVAILABLE AT WWW.GRANITECONSTRUCTION.COM/MSDS OR BY CONTACTING YOUR LOCAL OFFICE.

gci rev 04/21

ORIGINAL

GRANITE™

Granite Falls
11423 Jordan Rd
Arlington, WA 98223
360-966-4970

Ticket No. **58673744**
6/9/2022 8:15:15AM

Customer: STRIDER CONSTRUCTION
289514

Order ID: 267107
Job/PO# : 21NT
Cost Code
Location: NORTON SITE DEVELOPMENT
2111 ROSS AVENUE

Comments:

Vehicle: MD11TT MD11TT
License: | |
Carrier:
Product : 2209 GRAVEL BORROW

	Pounds	Metric Tons	Tons
Gross	100,720	45.69	50.36
Tare	42,420	19.24	21.21
Net	58,300	26.44	29.15

Scale: 1 * Manual P. T.

FOB: PICK-UP

This Load: 29.15 TONS

Load No: 1
Shipped: 29.15 TONS

Weighmaster: Granite Construction Company
Deputy: Josh Ordos

WEIGHMASTER CERTIFICATE

Accepted by: _____

WARNING: THIS PRODUCT CONTAINS CRYSTALLINE SILICA (QUARTZ). CRYSTALLINE SILICA IS A COMMON NATURALLY OCCURING MINERAL FOUND IN SAND AND ROCK. PROLONGED AND REPEATED BREATHING OF CRYSTALLINE SILICA DUST MAY CAUSE RESPIRATORY AND OTHER HEALTH PROBLEMS, INCLUDING LUNG DISEASE, SILICOSIS AND CANCER, WHICH MAY RESULT IN PERMANENT INJURY OR DEATH. BEFORE USING OR HANDLING THIS PRODUCT READ THE MATERIAL SAFETY DATA SHEET FOR MORE DETAILED INFORMATION INCLUDING INFORMATION ON APPROPRIATE RESPIRATORY PROTECTION. MSDS SHEETS AVAILABLE AT WWW.GRANITECONSTRUCTION.COM/MSDS OR BY CONTACTING YOUR LOCAL OFFICE.

gci rev 04/21

COPY

GRANITE™

Granite Falls
11423 Jordan Rd
Arlington, WA 98223
360-966-4970

Ticket No. **58673744**
6/9/2022 8:15:15AM

Customer: STRIDER CONSTRUCTION
289514

Order ID: 267107
Job/PO# : 21NT
Cost Code
Location: NORTON SITE DEVELOPMENT
2111 ROSS AVENUE

Comments:

Vehicle: MD11TT MD11TT
License: | |
Carrier:
Product : 2209 GRAVEL BORROW

	Pounds	Metric Tons	Tons
Gross	100,720	45.69	50.36
Tare	42,420	19.24	21.21
Net	58,300	26.44	29.15

Scale: 1 * Manual P. T.

FOB: PICK-UP

This Load: 29.15 TONS

Load No: 1
Shipped: 29.15 TONS

Weighmaster: Granite Construction Company
Deputy: Josh Ordos

WEIGHMASTER CERTIFICATE

Accepted by: _____

WARNING: THIS PRODUCT CONTAINS CRYSTALLINE SILICA (QUARTZ). CRYSTALLINE SILICA IS A COMMON NATURALLY OCCURING MINERAL FOUND IN SAND AND ROCK. PROLONGED AND REPEATED BREATHING OF CRYSTALLINE SILICA DUST MAY CAUSE RESPIRATORY AND OTHER HEALTH PROBLEMS, INCLUDING LUNG DISEASE, SILICOSIS AND CANCER, WHICH MAY RESULT IN PERMANENT INJURY OR DEATH. BEFORE USING OR HANDLING THIS PRODUCT READ THE MATERIAL SAFETY DATA SHEET FOR MORE DETAILED INFORMATION INCLUDING INFORMATION ON APPROPRIATE RESPIRATORY PROTECTION. MSDS SHEETS AVAILABLE AT WWW.GRANITECONSTRUCTION.COM/MSDS OR BY CONTACTING YOUR LOCAL OFFICE.

gci rev 04/21

ORIGINAL

GRANITE™

Granite Falls
11423 Jordan Rd
Arlington, WA 98223
360-966-4970

Ticket No. **58673791**
6/9/2022 10:40:13AM

Customer: STRIDER CONSTRUCTION
289514

Order ID: 267107
Job/PO# : 21NT
Cost Code
Location: NORTON SITE DEVELOPMENT
2111 ROSS AVENUE

Comments:

Vehicle: MD11TT MD11TT
License: | |
Carrier:
Product : 2209 GRAVEL BORROW

	Pounds	Metric Tons	Tons
Gross	101,800	46.18	50.90
Tare	42,420	19.24	21.21
Net	59,380	26.93	29.69

Scale: 1 * Manual P. T.

FOB: PICK-UP

This Load: 29.69 TONS

Load No: 2
Shipped: 58.84 TONS

Weighmaster: Granite Construction Company
Deputy: Josh Ordos

WEIGHMASTER CERTIFICATE

Accepted by: _____

WARNING: THIS PRODUCT CONTAINS CRYSTALLINE SILICA (QUARTZ). CRYSTALLINE SILICA IS A COMMON NATURALLY OCCURING MINERAL FOUND IN SAND AND ROCK. PROLONGED AND REPEATED BREATHING OF CRYSTALLINE SILICA DUST MAY CAUSE RESPIRATORY AND OTHER HEALTH PROBLEMS, INCLUDING LUNG DISEASE, SILICOSIS AND CANCER, WHICH MAY RESULT IN PERMANENT INJURY OR DEATH. BEFORE USING OR HANDLING THIS PRODUCT READ THE MATERIAL SAFETY DATA SHEET FOR MORE DETAILED INFORMATION INCLUDING INFORMATION ON APPROPRIATE RESPIRATORY PROTECTION. MSDS SHEETS AVAILABLE AT WWW.GRANITECONSTRUCTION.COM/MSDS OR BY CONTACTING YOUR LOCAL OFFICE.

gci rev 04/21

COPY

GRANITE™

Granite Falls
11423 Jordan Rd
Arlington, WA 98223
360-966-4970

Ticket No. **58673791**
6/9/2022 10:40:13AM

Customer: STRIDER CONSTRUCTION
289514

Order ID: 267107
Job/PO# : 21NT
Cost Code
Location: NORTON SITE DEVELOPMENT
2111 ROSS AVENUE

Comments:

Vehicle: MD11TT MD11TT
License: | |
Carrier:
Product : 2209 GRAVEL BORROW

	Pounds	Metric Tons	Tons
Gross	101,800	46.18	50.90
Tare	42,420	19.24	21.21
Net	59,380	26.93	29.69

Scale: 1 * Manual P. T.

FOB: PICK-UP

This Load: 29.69 TONS

Load No: 2
Shipped: 58.84 TONS

Weighmaster: Granite Construction Company
Deputy: Josh Ordos

WEIGHMASTER CERTIFICATE

Accepted by: _____

WARNING: THIS PRODUCT CONTAINS CRYSTALLINE SILICA (QUARTZ). CRYSTALLINE SILICA IS A COMMON NATURALLY OCCURING MINERAL FOUND IN SAND AND ROCK. PROLONGED AND REPEATED BREATHING OF CRYSTALLINE SILICA DUST MAY CAUSE RESPIRATORY AND OTHER HEALTH PROBLEMS, INCLUDING LUNG DISEASE, SILICOSIS AND CANCER, WHICH MAY RESULT IN PERMANENT INJURY OR DEATH. BEFORE USING OR HANDLING THIS PRODUCT READ THE MATERIAL SAFETY DATA SHEET FOR MORE DETAILED INFORMATION INCLUDING INFORMATION ON APPROPRIATE RESPIRATORY PROTECTION. MSDS SHEETS AVAILABLE AT WWW.GRANITECONSTRUCTION.COM/MSDS OR BY CONTACTING YOUR LOCAL OFFICE.

gci rev 04/21

ORIGINAL

Ticket No. **58673826**

6/9/2022 12:55:29PM

GRANITE™

Granite Falls
11423 Jordan Rd
Arlington, WA 98223
360-966-4970

Customer: STRIDER CONSTRUCTION
289514

Order ID: 267107
Job/PO# : 21NT
Cost Code
Location: NORTON SITE DEVELOPMENT
2111 ROSS AVENUE

Comments:

Vehicle: MD11TT MD11TT
License: | |
Carrier:
Product : 2209 GRAVEL BORROW

	Pounds	Metric Tons	Tons
Gross	101,380	45.99	50.69
Tare	42,420	19.24	21.21
Net	58,960	26.74	29.48

Scale: 1 * Manual P. T.

FOB: PICK-UP

This Load: 29.48 TONS

Load No: 3
Shipped: 88.32 TONS

Weighmaster: Granite Construction Company
Deputy: Josh Ordos

WEIGHMASTER CERTIFICATE

Accepted by: _____

WARNING: THIS PRODUCT CONTAINS CRYSTALLINE SILICA (QUARTZ). CRYSTALLINE SILICA IS A COMMON NATURALLY OCCURING MINERAL FOUND IN SAND AND ROCK. PROLONGED AND REPEATED BREATHING OF CRYSTALLINE SILICA DUST MAY CAUSE RESPIRATORY AND OTHER HEALTH PROBLEMS, INCLUDING LUNG DISEASE, SILICOSIS AND CANCER, WHICH MAY RESULT IN PERMANENT INJURY OR DEATH. BEFORE USING OR HANDLING THIS PRODUCT READ THE MATERIAL SAFETY DATA SHEET FOR MORE DETAILED INFORMATION INCLUDING INFORMATION ON APPROPRIATE RESPIRATORY PROTECTION. MSDS SHEETS AVAILABLE AT WWW.GRANITECONSTRUCTION.COM/MSDS OR BY CONTACTING YOUR LOCAL OFFICE.

gci rev 04/21

COPY

Ticket No. **58673826**

6/9/2022 12:55:29PM

GRANITE™

Granite Falls
11423 Jordan Rd
Arlington, WA 98223
360-966-4970

Customer: STRIDER CONSTRUCTION
289514

Order ID: 267107
Job/PO# : 21NT
Cost Code
Location: NORTON SITE DEVELOPMENT
2111 ROSS AVENUE

Comments:

Vehicle: MD11TT MD11TT
License: | |
Carrier:
Product : 2209 GRAVEL BORROW

	Pounds	Metric Tons	Tons
Gross	101,380	45.99	50.69
Tare	42,420	19.24	21.21
Net	58,960	26.74	29.48

Scale: 1 * Manual P. T.

FOB: PICK-UP

This Load: 29.48 TONS

Load No: 3
Shipped: 88.32 TONS

Weighmaster: Granite Construction Company
Deputy: Josh Ordos

WEIGHMASTER CERTIFICATE

Accepted by: _____

WARNING: THIS PRODUCT CONTAINS CRYSTALLINE SILICA (QUARTZ). CRYSTALLINE SILICA IS A COMMON NATURALLY OCCURING MINERAL FOUND IN SAND AND ROCK. PROLONGED AND REPEATED BREATHING OF CRYSTALLINE SILICA DUST MAY CAUSE RESPIRATORY AND OTHER HEALTH PROBLEMS, INCLUDING LUNG DISEASE, SILICOSIS AND CANCER, WHICH MAY RESULT IN PERMANENT INJURY OR DEATH. BEFORE USING OR HANDLING THIS PRODUCT READ THE MATERIAL SAFETY DATA SHEET FOR MORE DETAILED INFORMATION INCLUDING INFORMATION ON APPROPRIATE RESPIRATORY PROTECTION. MSDS SHEETS AVAILABLE AT WWW.GRANITECONSTRUCTION.COM/MSDS OR BY CONTACTING YOUR LOCAL OFFICE.

gci rev 04/21

ORIGINAL

Ticket No. **58673862**

6/9/2022 3:16:36PM

GRANITE™

Granite Falls
11423 Jordan Rd
Arlington, WA 98223
360-966-4970

Customer: STRIDER CONSTRUCTION
289514

Order ID: 267107
Job/PO# : 21NT
Cost Code
Location: NORTON SITE DEVELOPMENT
2111 ROSS AVENUE

Comments:

Vehicle: MD11TT MD11TT
License: | |
Carrier:

Product : 2209 GRAVEL BORROW

	Pounds	Metric Tons	Tons
Gross	103,680	47.03	51.84
Tare	42,420	19.24	21.21
Net	61,260	27.79	30.63

Scale: 1 * Manual P. T.

FOB: PICK-UP

This Load: 30.63 TONS

Load No: 4
Shipped: 118.95 TONS

Weighmaster: Granite Construction Company
Deputy: Josh Ordos

WEIGHMASTER CERTIFICATE

Accepted by: _____

WARNING: THIS PRODUCT CONTAINS CRYSTALLINE SILICA (QUARTZ). CRYSTALLINE SILICA IS A COMMON NATURALLY OCCURING MINERAL FOUND IN SAND AND ROCK. PROLONGED AND REPEATED BREATHING OF CRYSTALLINE SILICA DUST MAY CAUSE RESPIRATORY AND OTHER HEALTH PROBLEMS, INCLUDING LUNG DISEASE, SILICOSIS AND CANCER, WHICH MAY RESULT IN PERMANENT INJURY OR DEATH. BEFORE USING OR HANDLING THIS PRODUCT READ THE MATERIAL SAFETY DATA SHEET FOR MORE DETAILED INFORMATION INCLUDING INFORMATION ON APPROPRIATE RESPIRATORY PROTECTION. MSDS SHEETS AVAILABLE AT WWW.GRANITECONSTRUCTION.COM/MSDS OR BY CONTACTING YOUR LOCAL OFFICE.

gci rev 04/21

COPY

Ticket No. 58673862

6/9/2022 3:16:36PM

GRANITE™

Granite Falls
11423 Jordan Rd
Arlington, WA 98223
360-966-4970

Customer: STRIDER CONSTRUCTION
289514

Order ID: 267107
Job/PO# : 21NT
Cost Code
Location: NORTON SITE DEVELOPMENT
2111 ROSS AVENUE

Comments:

Vehicle: MD11TT MD11TT
License: | |
Carrier:

Product : 2209 GRAVEL BORROW

	Pounds	Metric Tons	Tons
Gross	103,680	47.03	51.84
Tare	42,420	19.24	21.21
Net	61,260	27.79	30.63

Scale: 1 * Manual P. T.

FOB: PICK-UP

This Load: 30.63 TONS

Load No: 4
Shipped: 118.95 TONS

Weighmaster: Granite Construction Company
Deputy: Josh Ordos

WEIGHMASTER CERTIFICATE

Accepted by: _____

WARNING: THIS PRODUCT CONTAINS CRYSTALLINE SILICA (QUARTZ). CRYSTALLINE SILICA IS A COMMON NATURALLY OCCURING MINERAL FOUND IN SAND AND ROCK. PROLONGED AND REPEATED BREATHING OF CRYSTALLINE SILICA DUST MAY CAUSE RESPIRATORY AND OTHER HEALTH PROBLEMS, INCLUDING LUNG DISEASE, SILICOSIS AND CANCER, WHICH MAY RESULT IN PERMANENT INJURY OR DEATH. BEFORE USING OR HANDLING THIS PRODUCT READ THE MATERIAL SAFETY DATA SHEET FOR MORE DETAILED INFORMATION INCLUDING INFORMATION ON APPROPRIATE RESPIRATORY PROTECTION. MSDS SHEETS AVAILABLE AT WWW.GRANITECONSTRUCTION.COM/MSDS OR BY CONTACTING YOUR LOCAL OFFICE.

gci rev 04/21

ORIGINAL

GRANITE™ Granite Falls
11423 Jordan Rd
Arlington, WA 98223
360-966-4970

Ticket No. **58673681**
6/8/2022 12:50:39PM

Customer: STRIDER CONSTRUCTION
289514

Order ID: 267107
Job/PO# : 21NT
Cost Code
Location: NORTON SITE DEVELOPMENT
2111 ROSS AVENUE

Comments:

Vehicle: MD11TT MD11TT
License: | |
Carrier:
Product : 3033 WSDOT BACKFILL - SEW WALL

	Pounds	Metric Tons	Tons
Gross	100,680	45.67	50.34
Tare	42,420	19.24	21.21
Net	58,260	26.43	29.13

Scale: 1 * Manual P. T.

FOB: PICK-UP

This Load: 29.13 TONS

Load No: 3
Shipped: 89.03 TONS

Weighmaster: Granite Construction Company
Deputy: Josh Ordos

WEIGHMASTER CERTIFICATE

Accepted by: _____

WARNING: THIS PRODUCT CONTAINS CRYSTALLINE SILICA (QUARTZ). CRYSTALLINE SILICA IS A COMMON NATURALLY OCCURING MINERAL FOUND IN SAND AND ROCK. PROLONGED AND REPEATED BREATHING OF CRYSTALLINE SILICA DUST MAY CAUSE RESPIRATORY AND OTHER HEALTH PROBLEMS, INCLUDING LUNG DISEASE, SILICOSIS AND CANCER, WHICH MAY RESULT IN PERMANENT INJURY OR DEATH. BEFORE USING OR HANDLING THIS PRODUCT READ THE MATERIAL SAFETY DATA SHEET FOR MORE DETAILED INFORMATION INCLUDING INFORMATION ON APPROPRIATE RESPIRATORY PROTECTION. MSDS SHEETS AVAILABLE AT WWW.GRANITECONSTRUCTION.COM/MSDS OR BY CONTACTING YOUR LOCAL OFFICE.

gci rev 04/21

COPY

GRANITE™ Granite Falls
11423 Jordan Rd
Arlington, WA 98223
360-966-4970

Ticket No. **58673681**
6/8/2022 12:50:39PM

Customer: STRIDER CONSTRUCTION
289514

Order ID: 267107
Job/PO# : 21NT
Cost Code
Location: NORTON SITE DEVELOPMENT
2111 ROSS AVENUE

Comments:

Vehicle: MD11TT MD11TT
License: | |
Carrier:
Product : 3033 WSDOT BACKFILL - SEW WALL

	Pounds	Metric Tons	Tons
Gross	100,680	45.67	50.34
Tare	42,420	19.24	21.21
Net	58,260	26.43	29.13

Scale: 1 * Manual P. T.

FOB: PICK-UP

This Load: 29.13 TONS

Load No: 3
Shipped: 89.03 TONS

Weighmaster: Granite Construction Company
Deputy: Josh Ordos

WEIGHMASTER CERTIFICATE

Accepted by: _____

WARNING: THIS PRODUCT CONTAINS CRYSTALLINE SILICA (QUARTZ). CRYSTALLINE SILICA IS A COMMON NATURALLY OCCURING MINERAL FOUND IN SAND AND ROCK. PROLONGED AND REPEATED BREATHING OF CRYSTALLINE SILICA DUST MAY CAUSE RESPIRATORY AND OTHER HEALTH PROBLEMS, INCLUDING LUNG DISEASE, SILICOSIS AND CANCER, WHICH MAY RESULT IN PERMANENT INJURY OR DEATH. BEFORE USING OR HANDLING THIS PRODUCT READ THE MATERIAL SAFETY DATA SHEET FOR MORE DETAILED INFORMATION INCLUDING INFORMATION ON APPROPRIATE RESPIRATORY PROTECTION. MSDS SHEETS AVAILABLE AT WWW.GRANITECONSTRUCTION.COM/MSDS OR BY CONTACTING YOUR LOCAL OFFICE.

gci rev 04/21

ORIGINAL

GRANITE™

Granite Falls
11423 Jordan Rd
Arlington, WA 98223
360-966-4970

Ticket No. **58673625**
6/8/2022 10:34:14AM

Customer: STRIDER CONSTRUCTION
289514

Order ID: 267107
Job/PO# : 21NT
Cost Code
Location: NORTON SITE DEVELOPMENT
2111 ROSS AVENUE

Comments:

Vehicle: MD11TT MD11TT
License: | |
Carrier:
Product : 3033 WSDOT BACKFILL - SEW WALL

	Pounds	Metric Tons	Tons
Gross	101,980	46.26	50.99
Tare	42,420	19.24	21.21
Net	59,560	27.02	29.78

Scale: 1 * Manual P. T.

FOB: PICK-UP

This Load: 29.78 TONS

Load No: 2
Shipped: 59.90 TONS

Weighmaster: Granite Construction Company
Deputy: Josh Ordos

WEIGHMASTER CERTIFICATE

Accepted by: _____

WARNING: THIS PRODUCT CONTAINS CRYSTALLINE SILICA (QUARTZ). CRYSTALLINE SILICA IS A COMMON NATURALLY OCCURING MINERAL FOUND IN SAND AND ROCK. PROLONGED AND REPEATED BREATHING OF CRYSTALLINE SILICA DUST MAY CAUSE RESPIRATORY AND OTHER HEALTH PROBLEMS, INCLUDING LUNG DISEASE, SILICOSIS AND CANCER, WHICH MAY RESULT IN PERMANENT INJURY OR DEATH. BEFORE USING OR HANDLING THIS PRODUCT READ THE MATERIAL SAFETY DATA SHEET FOR MORE DETAILED INFORMATION INCLUDING INFORMATION ON APPROPRIATE RESPIRATORY PROTECTION. MSDS SHEETS AVAILABLE AT WWW.GRANITECONSTRUCTION.COM/MSDS OR BY CONTACTING YOUR LOCAL OFFICE.

gci rev 04/21

COPY

GRANITE™

Granite Falls
11423 Jordan Rd
Arlington, WA 98223
360-966-4970

Ticket No. **58673625**
6/8/2022 10:34:14AM

Customer: STRIDER CONSTRUCTION
289514

Order ID: 267107
Job/PO# : 21NT
Cost Code
Location: NORTON SITE DEVELOPMENT
2111 ROSS AVENUE

Comments

Vehicle: MD11TT MD11TT
License: | |
Carrier:
Product : 3033 WSDOT BACKFILL - SEW WALL

	Pounds	Metric Tons	Tons
Gross	101,980	46.26	50.99
Tare	42,420	19.24	21.21
Net	59,560	27.02	29.78

Scale: 1 * Manual P. T.

FOB: PICK-UP

This Load: 29.78 TONS

Load No: 2
Shipped: 59.90 TONS

Weighmaster: Granite Construction Company
Deputy: Josh Ordos

WEIGHMASTER CERTIFICATE

Accepted by: _____

WARNING: THIS PRODUCT CONTAINS CRYSTALLINE SILICA (QUARTZ). CRYSTALLINE SILICA IS A COMMON NATURALLY OCCURING MINERAL FOUND IN SAND AND ROCK. PROLONGED AND REPEATED BREATHING OF CRYSTALLINE SILICA DUST MAY CAUSE RESPIRATORY AND OTHER HEALTH PROBLEMS, INCLUDING LUNG DISEASE, SILICOSIS AND CANCER, WHICH MAY RESULT IN PERMANENT INJURY OR DEATH. BEFORE USING OR HANDLING THIS PRODUCT READ THE MATERIAL SAFETY DATA SHEET FOR MORE DETAILED INFORMATION INCLUDING INFORMATION ON APPROPRIATE RESPIRATORY PROTECTION. MSDS SHEETS AVAILABLE AT WWW.GRANITECONSTRUCTION.COM/MSDS OR BY CONTACTING YOUR LOCAL OFFICE.

gci rev 04/21

ORIGINAL

Ticket No. **58673579**

6/8/2022 8:22:04AM

GRANITE™

Granite Falls
11423 Jordan Rd
Arlington, WA 98223
360-966-4970

Customer: STRIDER CONSTRUCTION
289514

Order ID: 267107
Job/PO# : 21NT
Cost Code
Location: NORTON SITE DEVELOPMENT
2111 ROSS AVENUE

Comments:

Vehicle: MD11TT MD11TT
License: | |
Carrier:
Product : 3033 WSDOT BACKFILL - SEW WALL

	Pounds	Metric Tons	Tons
Gross	102,660	46.57	51.33
Tare	42,420	19.24	21.21
Net	60,240	27.32	30.12

Scale: 1 * Manual P. T.

FOB: PICK-UP

This Load: 30.12 TONS

Load No: 1
Shipped: 30.12 TONS

Weighmaster: Granite Construction Company
Deputy: Josh Ordos

WEIGHMASTER CERTIFICATE

Accepted by: _____

WARNING: THIS PRODUCT CONTAINS CRYSTALLINE SILICA (QUARTZ). CRYSTALLINE SILICA IS A COMMON NATURALLY OCCURING MINERAL FOUND IN SAND AND ROCK. PROLONGED AND REPEATED BREATHING OF CRYSTALLINE SILICA DUST MAY CAUSE RESPIRATORY AND OTHER HEALTH PROBLEMS, INCLUDING LUNG DISEASE, SILICOSIS AND CANCER, WHICH MAY RESULT IN PERMANENT INJURY OR DEATH. BEFORE USING OR HANDLING THIS PRODUCT READ THE MATERIAL SAFETY DATA SHEET FOR MORE DETAILED INFORMATION INCLUDING INFORMATION ON APPROPRIATE RESPIRATORY PROTECTION. MSDS SHEETS AVAILABLE AT WWW.GRANITECONSTRUCTION.COM/MSDS OR BY CONTACTING YOUR LOCAL OFFICE.

gci rev 04/21

COPY

Ticket No. **58673579**

6/8/2022 8:22:04AM

GRANITE™

Granite Falls
11423 Jordan Rd
Arlington, WA 98223
360-966-4970

Customer: STRIDER CONSTRUCTION
289514

Order ID: 267107
Job/PO# : 21NT
Cost Code
Location: NORTON SITE DEVELOPMENT
2111 ROSS AVENUE

Comments:

Vehicle: MD11TT MD11TT
License: | |
Carrier:
Product : 3033 WSDOT BACKFILL - SEW WALL

	Pounds	Metric Tons	Tons
Gross	102,660	46.57	51.33
Tare	42,420	19.24	21.21
Net	60,240	27.32	30.12

Scale: 1 * Manual P. T.

FOB: PICK-UP

This Load: 30.12 TONS

Load No: 1
Shipped: 30.12 TONS

Weighmaster: Granite Construction Company
Deputy: Josh Ordos

WEIGHMASTER CERTIFICATE

Accepted by: _____

WARNING: THIS PRODUCT CONTAINS CRYSTALLINE SILICA (QUARTZ). CRYSTALLINE SILICA IS A COMMON NATURALLY OCCURING MINERAL FOUND IN SAND AND ROCK. PROLONGED AND REPEATED BREATHING OF CRYSTALLINE SILICA DUST MAY CAUSE RESPIRATORY AND OTHER HEALTH PROBLEMS, INCLUDING LUNG DISEASE, SILICOSIS AND CANCER, WHICH MAY RESULT IN PERMANENT INJURY OR DEATH. BEFORE USING OR HANDLING THIS PRODUCT READ THE MATERIAL SAFETY DATA SHEET FOR MORE DETAILED INFORMATION INCLUDING INFORMATION ON APPROPRIATE RESPIRATORY PROTECTION. MSDS SHEETS AVAILABLE AT WWW.GRANITECONSTRUCTION.COM/MSDS OR BY CONTACTING YOUR LOCAL OFFICE.

gci rev 04/21

ORIGINAL

Ticket No. **58673431**
6/7/2022 7:42:02AM

GRANITE™
Granite Falls
11423 Jordan Rd
Arlington, WA 98223
360-966-4970

Customer: STRIDER CONSTRUCTION
289514

Order ID: 267107
Job/PO# : 21NT
Cost Code
Location: NORTON SITE DEVELOPMENT
2111 ROSS AVENUE

Comments:

Vehicle: MD11TT MD11TT
License: | |
Carrier:
Product : 3033 WSDOT BACKFILL - SEW WALL

	Pounds	Metric Tons	Tons
Gross	100,580	45.62	50.29
Tare	42,420	19.24	21.21
Net	58,160	26.38	29.08

Scale: 1 * Manual P. T.

FOB: PICK-UP

This Load: 29.08 TONS

Load No: 1
Shipped: 29.08 TONS

Weighmaster: Granite Construction Company
Deputy: Josh Ordos

WEIGHMASTER CERTIFICATE

Accepted by: _____

WARNING: THIS PRODUCT CONTAINS CRYSTALLINE SILICA (QUARTZ). CRYSTALLINE SILICA IS A COMMON NATURALLY OCCURING MINERAL FOUND IN SAND AND ROCK. PROLONGED AND REPEATED BREATHING OF CRYSTALLINE SILICA DUST MAY CAUSE RESPIRATORY AND OTHER HEALTH PROBLEMS, INCLUDING LUNG DISEASE, SILICOSIS AND CANCER, WHICH MAY RESULT IN PERMANENT INJURY OR DEATH. BEFORE USING OR HANDLING THIS PRODUCT READ THE MATERIAL SAFETY DATA SHEET FOR MORE DETAILED INFORMATION INCLUDING INFORMATION ON APPROPRIATE RESPIRATORY PROTECTION. MSDS SHEETS AVAILABLE AT WWW.GRANITECONSTRUCTION.COM/MSDS OR BY CONTACTING YOUR LOCAL OFFICE.

gci rev 04/21

COPY

Ticket No. **58673431**
6/7/2022 7:42:02AM

GRANITE™
Granite Falls
11423 Jordan Rd
Arlington, WA 98223
360-966-4970

Customer: STRIDER CONSTRUCTION
289514

Order ID: 267107
Job/PO# : 21NT
Cost Code
Location: NORTON SITE DEVELOPMENT
2111 ROSS AVENUE

Comments:

Vehicle: MD11TT MD11TT
License: | |
Carrier:
Product : 3033 WSDOT BACKFILL - SEW WALL

	Pounds	Metric Tons	Tons
Gross	100,580	45.62	50.29
Tare	42,420	19.24	21.21
Net	58,160	26.38	29.08

Scale: 1 * Manual P. T.

FOB: PICK-UP

This Load: 29.08 TONS

Load No: 1
Shipped: 29.08 TONS

Weighmaster: Granite Construction Company
Deputy: Josh Ordos

WEIGHMASTER CERTIFICATE

Accepted by: _____

WARNING: THIS PRODUCT CONTAINS CRYSTALLINE SILICA (QUARTZ). CRYSTALLINE SILICA IS A COMMON NATURALLY OCCURING MINERAL FOUND IN SAND AND ROCK. PROLONGED AND REPEATED BREATHING OF CRYSTALLINE SILICA DUST MAY CAUSE RESPIRATORY AND OTHER HEALTH PROBLEMS, INCLUDING LUNG DISEASE, SILICOSIS AND CANCER, WHICH MAY RESULT IN PERMANENT INJURY OR DEATH. BEFORE USING OR HANDLING THIS PRODUCT READ THE MATERIAL SAFETY DATA SHEET FOR MORE DETAILED INFORMATION INCLUDING INFORMATION ON APPROPRIATE RESPIRATORY PROTECTION. MSDS SHEETS AVAILABLE AT WWW.GRANITECONSTRUCTION.COM/MSDS OR BY CONTACTING YOUR LOCAL OFFICE.

gci rev 04/21

Cowden Gravel & Ready Mix

(360) 592-4200

11423 Jordan Rd
Arlington , WA 98223

*** ETICKET REPRINT ***

Ticket #: 990001655 **Date:** 6/10/2022 **Time:** 9:25 AM

Order:	2275 - Norton Terminal Development & MTCA 3rd Interim Action - PW
Customer:	STRI001 - STRIDER CONSTRUCTION CO. INC.
Product:	809 - Structural Fill
Truck:	338 - COWDEN INC
PO #:	21NT
Job #:	21NT

DRIVER DELIVERY LOCATION

TICKET NOTE

Ticket PO
Granite Ticket
Reference #

	Tons	Pounds	M-Tons
Gross:	52.16	104,320	47.32
Tare:	20.60	41,200	18.69
Net:	31.56	63,120	28.63

Loads Today: 1
Units Today: 31.56

WEIGHMASTER: *GALLEN*

Cowden Gravel & Ready Mix

(360) 592-4200

11423 Jordan Rd
Arlington , WA 98223

*** ETICKET REPRINT ***

Ticket #: 990001656 **Date:** 6/10/2022 **Time:** 9:35 AM

Order:	2275 - Norton Terminal Development & MTCA 3rd Interim Action - PW
Customer:	STRI001 - STRIDER CONSTRUCTION CO. INC.
Product:	809 - Structural Fill
Truck:	362 - COWDEN INC
PO #:	21NT
Job #:	21NT

DRIVER DELIVERY LOCATION

TICKET NOTE

Ticket PO
Granite Ticket
Reference #

	Tons	Pounds	M-Tons
Gross:	52.02	104,040	47.19
Tare:	22.06	44,120	20.01
Net:	29.96	59,920	27.18

Loads Today: 2
Units Today: 61.52

WEIGHMASTER: *DDAHLGREN*

ORIGINAL

Ticket No. **58673461**
6/7/2022 10:00:26AM

GRANITE™
Granite Falls
11423 Jordan Rd
Arlington, WA 98223
360-966-4970

Customer: STRIDER CONSTRUCTION
289514

Order ID: 267107
Job/PO# : 21NT
Cost Code
Location: NORTON SITE DEVELOPMENT
2111 ROSS AVENUE

Comments:

Vehicle: MD11TT MD11TT
License: | |
Carrier:

Product : 3033 WSDOT BACKFILL - SEW WALL

	Pounds	Metric Tons	Tons
Gross	101,580	46.08	50.79
Tare	42,420	19.24	21.21
Net	59,160	26.83	29.58

Scale: 1 * Manual P. T.

FOB: PICK-UP

This Load: 29.58 TONS

Load No: 2
Shipped: 58.66 TONS

Weighmaster: Granite Construction Company
Deputy: Josh Ordos

WEIGHMASTER CERTIFICATE

Accepted by: _____

WARNING: THIS PRODUCT CONTAINS CRYSTALLINE SILICA (QUARTZ). CRYSTALLINE SILICA IS A COMMON NATURALLY OCCURING MINERAL FOUND IN SAND AND ROCK. PROLONGED AND REPEATED BREATHING OF CRYSTALLINE SILICA DUST MAY CAUSE RESPIRATORY AND OTHER HEALTH PROBLEMS, INCLUDING LUNG DISEASE, SILICOSIS AND CANCER, WHICH MAY RESULT IN PERMANENT INJURY OR DEATH. BEFORE USING OR HANDLING THIS PRODUCT READ THE MATERIAL SAFETY DATA SHEET FOR MORE DETAILED INFORMATION INCLUDING INFORMATION ON APPROPRIATE RESPIRATORY PROTECTION. MSDS SHEETS AVAILABLE AT WWW.GRANITECONSTRUCTION.COM/MSDS OR BY CONTACTING YOUR LOCAL OFFICE.

gci rev 04/21

COPY

Ticket No. **58673461**
6/7/2022 10:00:26AM

GRANITE™
Granite Falls
11423 Jordan Rd
Arlington, WA 98223
360-966-4970

Customer: STRIDER CONSTRUCTION
289514

Order ID: 267107
Job/PO# : 21NT
Cost Code
Location: NORTON SITE DEVELOPMENT
2111 ROSS AVENUE

Comments:

Vehicle: MD11TT MD11TT
License: | |
Carrier:

Product : 3033 WSDOT BACKFILL - SEW WALL

	Pounds	Metric Tons	Tons
Gross	101,580	46.08	50.79
Tare	42,420	19.24	21.21
Net	59,160	26.83	29.58

Scale: 1 * Manual P. T.

FOB: PICK-UP

This Load: 29.58 TONS

Load No: 2
Shipped: 58.66 TONS

Weighmaster: Granite Construction Company
Deputy: Josh Ordos

WEIGHMASTER CERTIFICATE

Accepted by: _____

WARNING: THIS PRODUCT CONTAINS CRYSTALLINE SILICA (QUARTZ). CRYSTALLINE SILICA IS A COMMON NATURALLY OCCURING MINERAL FOUND IN SAND AND ROCK. PROLONGED AND REPEATED BREATHING OF CRYSTALLINE SILICA DUST MAY CAUSE RESPIRATORY AND OTHER HEALTH PROBLEMS, INCLUDING LUNG DISEASE, SILICOSIS AND CANCER, WHICH MAY RESULT IN PERMANENT INJURY OR DEATH. BEFORE USING OR HANDLING THIS PRODUCT READ THE MATERIAL SAFETY DATA SHEET FOR MORE DETAILED INFORMATION INCLUDING INFORMATION ON APPROPRIATE RESPIRATORY PROTECTION. MSDS SHEETS AVAILABLE AT WWW.GRANITECONSTRUCTION.COM/MSDS OR BY CONTACTING YOUR LOCAL OFFICE.

gci rev 04/21

Cowden Gravel & Ready Mix

(360) 592-4200

11423 Jordan Rd
Arlington , WA 98223

*** ETICKET REPRINT ***

Ticket #: 990001657 **Date:** 6/10/2022 **Time:** 10:52 AM

Order:	2275 - Norton Terminal Development & MTCA 3rd Interim Action - PW
Customer:	STRI001 - STRIDER CONSTRUCTION CO. INC.
Product:	809 - Structural Fill
Truck:	338 - COWDEN INC
PO #:	21NT
Job #:	21NT

DRIVER DELIVERY LOCATION

TICKET NOTE

Ticket PO
Granite Ticket
Reference #

	Tons	Pounds	M-Tons
Gross:	51.88	103,760	47.06
Tare:	20.60	41,200	18.69
Net:	31.28	62,560	28.38

Loads Today: 3
Units Today: 92.80

WEIGHMASTER: *GALLEN*

Cowden Gravel & Ready Mix

(360) 592-4200

11423 Jordan Rd
Arlington , WA 98223

*** ETICKET REPRINT ***

Ticket #: 990001658 **Date:** 6/10/2022 **Time:** 10:57 AM

Order:	2275 - Norton Terminal Development & MTCA 3rd Interim Action - PW
Customer:	STRI001 - STRIDER CONSTRUCTION CO. INC.
Product:	809 - Structural Fill
Truck:	362 - COWDEN INC
PO #:	21NT
Job #:	21NT

DRIVER DELIVERY LOCATION

TICKET NOTE

Ticket PO
Granite Ticket
Reference #

	Tons	Pounds	M-Tons
Gross:	52.33	104,660	47.47
Tare:	22.06	44,120	20.01
Net:	30.27	60,540	27.46

Loads Today: 4
Units Today: 123.07

WEIGHMASTER: *DDAHLGREN*

Cowden Gravel & Ready Mix

(360) 592-4200

11423 Jordan Rd
Arlington , WA 98223

*** ETICKET REPRINT ***

Ticket #: 990001659 **Date:** 6/10/2022 **Time:** 12:25 PM

Order:	2275 - Norton Terminal Development & MTCA 3rd Interim Action - PW
Customer:	STRI001 - STRIDER CONSTRUCTION CO. INC.
Product:	809 - Structural Fill
Truck:	338 - COWDEN INC
PO #:	21NT
Job #:	21NT

DRIVER DELIVERY LOCATION

TICKET NOTE

Ticket PO
Granite Ticket
Reference #

	Tons	Pounds	M-Tons
Gross:	51.59	103,180	46.80
Tare:	20.60	41,200	18.69
Net:	30.99	61,980	28.11

Loads Today: 5
Units Today: 154.06

WEIGHMASTER: *GALLEN*

Cowden Gravel & Ready Mix

(360) 592-4200

11423 Jordan Rd
Arlington , WA 98223

*** ETICKET REPRINT ***

Ticket #: 990001660 **Date:** 6/10/2022 **Time:** 12:30 PM

Order:	2275 - Norton Terminal Development & MTCA 3rd Interim Action - PW
Customer:	STRI001 - STRIDER CONSTRUCTION CO. INC.
Product:	809 - Structural Fill
Truck:	362 - COWDEN INC
PO #:	21NT
Job #:	21NT

DRIVER DELIVERY LOCATION

TICKET NOTE

Ticket PO
Granite Ticket
Reference #

	Tons	Pounds	M-Tons
Gross:	51.74	103,480	46.94
Tare:	22.06	44,120	20.01
Net:	29.68	59,360	26.93

Loads Today: 6
Units Today: 183.74

WEIGHMASTER: *DDAHLGREN*

BI 13

Republic Services

Tickets to date = 100 EA
Total Tonnage = 2717.9 TN

Total Containers Hauled to Date = 129 EA
Total Haul Month of June = 28+ EA

Use 25 Ton estimate for other loads
(129 EA - 100 EA) * 25 TN = 725 TN

Total thru month of May = 2717.9 + 725 = 3442.90 TN

Waste Management

Total Haul = 994.15 TN

Cadman

7905.88 TN

Total Billed to Date = 3442.90 + 994.15 +7905.88

= 12,342.93 TN

Total billed through PA 9 = $3,890.44

12,342.93-3890.44 = $8,452.49 to be billed PA 10

CADMAN
HEIDELBERGCEMENTGroup®
(888) 322-6847 425-961-7100

WEIGHMASTER STATION
98846900
Sno River Delta Soils
17 E. Marine View Dr.
Everett, WA 98213

TICKET NO.	1124518428	TICKET TIME	7:17:00AM	DATE	6/2/2022
Customer No. 7832096	Payment Type Account	Customer Name STRIDER CONST CO INC			Order No. 10119451
Customer Job. No.	Customer P.O. 21NT		Map Ref. /		Disp. Ord. #
Truck Type Truck & Trailer	Truck No. RIV55TT	Vehicle or License Plate No.	Trailer or License Plate No.		Zone
Hauler/Carrier No. 7886596	Driver's Name	Delivered/Ordered 32.63 /	Load No. 1		Running Total 32.63

DEL/P PORT OF EVERETT
DEL/P 2600 FEDERAL AVE
EVERETT

Product	Description	Total	Unit Price	Amount
99005	CLASS 3 SOILS (TN)	32.63		

SCALE WEIGHT	GROSS & TARE		
Gross 105,840 LB *	X Scale 1 ☐ Scale 2	A STANDBY SURCHARGE WILL BE ASSESSED FOR LOADS THAT EXCEED 10 MINUTES UNLOADING TIME.	Fuel Surcharge
Tare 40,580 LB/P.T.	X Angelique Deputy Weighmaster	LIABILITY WAIVER Cadman, (Inc.) will not assume Liability for any property damage or any equipment damage for any delivery beyond the curb line.	Sales Tax
Net 65,260 LB *			**Total**

No one available to sign, customer waives receipt signature. ☐	Received by Signature X	Print Name (Customer) X	Driver's Signature X	Standby Time

Arrive Job		Start Unloading		Finish Unloading		Standby Time		Customer's Initials X	This Tickets Grand Total	

Everett Incl. Snohomish County --
WA ROOSEVELT , WA

2A **4862577**

CUSTOMER
014209 - Strider Construction Co. Inc.
4721 Northwest Road
Bellingham, WA 98225

Contract:MC-19415

WEIGHMASTER: Brandie M.

DATE/TIME IN	DATE/TIME OUT
5/17/22 7:06 am	5/17/22 7:28 am

VEHICLE	CONTAINER
1454	TOLU424194

REFERENCE

BILL OF LADING: BNSF231121

Scale In GROSS WEIGHT 93,940 NET TONS 22.52 INBOUND
Scale Out TARE WEIGHT 48,900 NET WEIGHT 45,040 INVOICE

QTY.	UNIT	DESCRIPTION	RATE	EXTENSION	TAX	TOTAL
28.00	YD	Tracking QTY				
22.52	tn	Cont Soil Origin:Everett 100%				

NET AMOUNT
TENDERED
CHANGE
CHECK#

The undersigned individual signing this document on behalf of Customer acknowledges that he or she has read and understands the terms and conditions on the reverse side and that he or she has the authority to sign this document on behalf of the customer.

RS-F042UPR (07/12)

SIGNATURE _____ CHANGE:

CHECK :

SITE
Everett Incl. Snohomish County --
WA ROOSEVELT , WA

STA 2A TICKET # **4862584** CELL

CUSTOMER
014209 - Strider Construction Co. Inc.
4721 Northwest Road
Bellingham, WA 98225

Contract:MC-19415

WEIGHMASTER: Brandie M.

DATE/TIME IN	DATE/TIME OUT
5/17/22 7:14 am	5/17/22 7:34 am

VEHICLE	CONTAINER
5222	GCEU435337

REFERENCE

BILL OF LADING: DTTX620382

Scale In GROSS WEIGHT 100,680 NET TONS 26.45 INBOUND
Scale Out TARE WEIGHT 47,780 NET WEIGHT 52,900 INVOICE

QTY.	UNIT	DESCRIPTION	RATE	EXTENSION	TAX	TOTAL
28.00	YD	Tracking QTY				
26.45	tn	Cont Soil Origin:Everett 100%				

NET AMOUNT
TENDERED
CHANGE
CHECK#

The undersigned individual signing this document on behalf of Customer acknowledges that he or she has read and understands the terms and conditions on the reverse side and that he or she has the authority to sign this document on behalf of the customer.

RS-F042UPR (07/12)

SIGNATURE _____ CHANGE:

CHECK :

Everett Incl. Snohomish County --
WA ROOSEVELT , WA

2A 4862587

WEIGHMASTER: Brandie M.

CUSTOMER
014209 - Strider Construction Co. Inc.
4721 Northwest Road
Bellingham, WA 98225

Contract:MC-19415

DATE/TIME IN	DATE/TIME OUT
5/17/22 7:17 am	5/17/22 7:39 am

VEHICLE	CONTAINER
7749	TOLU452051

REFERENCE:

BILL OF LADING: DTTX620382

Scale In GROSS WEIGHT 106,160 NET TONS 28.85 INBOUND
Scale Out TARE WEIGHT 48,460 NET WEIGHT 57,700 INVOICE

QTY.	UNIT	DESCRIPTION	RATE	EXTENSION	TAX	TOTAL
28.00	YD	Tracking QTY				
28.85	tn	Cont Soil Origin:Everett 100%				

NET AMOUNT
TENDERED
CHANGE
CHECK#

The undersigned individual signing this document on behalf of Customer acknowledges that he or she has read and understands the terms and conditions on the reverse side and that he or she has the authority to sign this document on behalf of the customer.

RS-F042UPR (07/12)

SIGNATURE _____ CHANGE:

CHECK :

SITE
Everett Incl. Snohomish County --
WA ROOSEVELT , WA

SITE 2A TICKET # 4862591 CELL

WEIGHMASTER: Brandie M.

CUSTOMER
014209 - Strider Construction Co. Inc.
4721 Northwest Road
Bellingham, WA 98225

Contract:MC-19415

DATE/TIME IN	DATE/TIME OUT
5/17/22 7:27 am	5/17/22 7:54 am

VEHICLE	CONTAINER
5833	GCEU426709

REFERENCE:

BILL OF LADING: DTTX620382

Scale In GROSS WEIGHT 99,080 NET TONS 24.60 INBOUND
Scale Out TARE WEIGHT 49,880 NET WEIGHT 49,200 INVOICE

QTY.	UNIT	DESCRIPTION	RATE	EXTENSION	TAX	TOTAL
28.00	YD	Tracking QTY				
24.60	tn	Cont Soil Origin:Everett 100%				

NET AMOUNT
TENDERED
CHANGE
CHECK#

The undersigned individual signing this document on behalf of Customer acknowledges that he or she has read and understands the terms and conditions on the reverse side and that he or she has the authority to sign this document on behalf of the customer.

RS-F042UPR (07/12)

SIGNATURE _____ CHANGE:

CHECK :

Everett Incl. Snohomish County --
WA ROOSEVELT , WA

2A 4862590

CUSTOMER
014209 - Strider Construction Co. Inc.
4721 Northwest Road
Bellingham, WA 98225

Contract:MC-19415

WEIGHMASTER: Brandie M.

DATE/TIME IN: 5/17/22 7:30 am
DATE/TIME OUT: 5/17/22 7:48 am
VEHICLE: 2235
CONTAINER: GCEU431768
REFERENCE:
BILL OF LADING: DTTX620382

Scale In GROSS WEIGHT 103,300 NET TONS 27.05 INBOUND
Scale Out TARE WEIGHT 49,200 NET WEIGHT 54,100 INVOICE

QTY.	UNIT	DESCRIPTION	RATE	EXTENSION	TAX	TOTAL
28.00	YD	Tracking QTY				
27.05	tn	Cont Soil Origin:Everett 100%				

NET AMOUNT
TENDERED
CHANGE
CHECK#

The undersigned individual signing this document on behalf of Customer acknowledges that he or she has read and understands the terms and conditions on the reverse side and that he or she has the authority to sign this document on behalf of the customer.

RS-F042UPR (07/12)

SIGNATURE _____ CHANGE:

CHECK :

SITE
Everett Incl. Snohomish County --
WA ROOSEVELT , WA

STA TICKET # 4862615 CELL

CUSTOMER
014209 - Strider Construction Co. Inc.
4721 Northwest Road
Bellingham, WA 98225

Contract:MC-19414

WEIGHMASTER: Brandie M.

DATE/TIME IN: 5/17/22 8:22 am
DATE/TIME OUT: 5/17/22 8:45 am
VEHICLE: 2235
CONTAINER: TOLU467943
REFERENCE:
BILL OF LADING: BNSF231172

Scale In GROSS WEIGHT 112,140 NET TONS 31.91 INBOUND
Scale Out TARE WEIGHT 48,320 NET WEIGHT 63,820 INVOICE

QTY.	UNIT	DESCRIPTION	RATE	EXTENSION	TAX	TOTAL
28.00	YD	Tracking QTY				
31.91	tn	PCS 34 Origin:Everett 100%				

NET AMOUNT
TENDERED
CHANGE
CHECK#

The undersigned individual signing this document on behalf of Customer acknowledges that he or she has read and understands the terms and conditions on the reverse side and that he or she has the authority to sign this document on behalf of the customer.

RS-F042UPR (07/12)

SIGNATURE _____ CHANGE:

CHECK :

Everett Incl. Snohomish County --
WA ROOSEVELT , WA

2A 4862616

CUSTOMER
014209 - Strider Construction Co. Inc.
4721 Northwest Road
Bellingham, WA 98225

Contract:MC-19414

WEIGHMASTER: Brandie M.
DATE/TIME IN: 5/17/22 8:24 am
DATE/TIME OUT: 5/17/22 8:47 am
VEHICLE: 5222
CONTAINER: GCEU430450
REFERENCE:
BILL OF LADING: BNSF231172

Scale In GROSS WEIGHT 95,600 NET TONS 23.76 INBOUND
Scale Out TARE WEIGHT 48,080 NET WEIGHT 47,520 INVOICE

QTY.	UNIT	DESCRIPTION	RATE	EXTENSION	TAX	TOTAL
28.00	YD	Tracking QTY				
23.76	tn	PCS 34 Origin:Everett 100%				

NET AMOUNT
TENDERED
CHANGE
CHECK#

The undersigned individual signing this document on behalf of Customer acknowledges that he or she has read and understands the terms and conditions on the reverse side and that he or she has the authority to sign this document on behalf of the customer.

RS-F042UPR (07/12)

SIGNATURE _____ CHANGE:

CHECK :

SITE
Everett Incl. Snohomish County --
WA ROOSEVELT , WA

SITE TICKET # 4862621
CELL

CUSTOMER
014209 - Strider Construction Co. Inc.
4721 Northwest Road
Bellingham, WA 98225

Contract:MC-19415

WEIGHMASTER: Brandie M.
DATE/TIME IN: 5/17/22 9:12 am
DATE/TIME OUT: 5/17/22 9:39 am
VEHICLE: 0329
CONTAINER: TOLU468313
REFERENCE:
BILL OF LADING: DTTX270049

Scale In GROSS WEIGHT 99,060 NET TONS 25.72 INBOUND
Scale Out TARE WEIGHT 47,620 NET WEIGHT 51,440 INVOICE

QTY.	UNIT	DESCRIPTION	RATE	EXTENSION	TAX	TOTAL
28.00	YD	Tracking QTY				
25.72	tn	Cont Soil Origin:Everett 100%				

NET AMOUNT
TENDERED
CHANGE
CHECK#

The undersigned individual signing this document on behalf of Customer acknowledges that he or she has read and understands the terms and conditions on the reverse side and that he or she has the authority to sign this document on behalf of the customer.

RS-F042UPR (07/12)

SIGNATURE _____ CHANGE:

CHECK :

Everett Incl. Snohomish County --
WA ROOSEVELT , WA

2A 4862620

CUSTOMER
014209 - Strider Construction Co. Inc.
4721 Northwest Road
Bellingham, WA 98225

Contract:MC-19415

WEIGHMASTER: Brandie M.
DATE/TIME IN: 5/17/22 9:12 am
DATE/TIME OUT: 5/17/22 9:37 am
VEHICLE: 1454
CONTAINER: TOLU424299
REFERENCE:
BILL OF LADING: DTTX270049

Scale In GROSS WEIGHT 94,500 NET TONS 23.53 INBOUND
Scale Out TARE WEIGHT 47,440 NET WEIGHT 47,060 INVOICE

QTY.	UNIT	DESCRIPTION	RATE	EXTENSION	TAX	TOTAL
28.00	YD	Tracking QTY				
23.53	tn	Cont Soil Origin:Everett 100%				

NET AMOUNT
TENDERED
CHANGE
CHECK#

The undersigned individual signing this document on behalf of Customer acknowledges that he or she has read and understands the terms and conditions on the reverse side and that he or she has the authority to sign this document on behalf of the customer.

RS-F042UPR (07/12)

SIGNATURE _____ CHANGE:

CHECK :

SITE
Everett Incl. Snohomish County --
WA ROOSEVELT , WA

SITE 2A TICKET # 4862622 CELL

CUSTOMER
014209 - Strider Construction Co. Inc.
4721 Northwest Road
Bellingham, WA 98225

Contract:MC-19414

WEIGHMASTER: Brandie M.
DATE/TIME IN: 5/17/22 9:16 am
DATE/TIME OUT: 5/17/22 9:41 am
VEHICLE: 2234
CONTAINER: TOLU459068
REFERENCE:
BILL OF LADING: DTTX620686

Scale In GROSS WEIGHT 103,480 NET TONS 28.13 INBOUND
Scale Out TARE WEIGHT 47,220 NET WEIGHT 56,260 INVOICE

QTY.	UNIT	DESCRIPTION	RATE	EXTENSION	TAX	TOTAL
28.00	YD	Tracking QTY				
28.13	tn	PCS 34 Origin:Everett 100%				

NET AMOUNT
TENDERED
CHANGE
CHECK#

The undersigned individual signing this document on behalf of Customer acknowledges that he or she has read and understands the terms and conditions on the reverse side and that he or she has the authority to sign this document on behalf of the customer.

RS-F042UPR (07/12)

SIGNATURE _____ CHANGE:

CHECK :

Everett Incl. Snohomish County --
WA ROOSEVELT , WA

2A **4862630**

WEIGHMASTER: Brandie M.

CUSTOMER
014209 - Strider Construction Co. Inc.
4721 Northwest Road
Bellingham, WA 98225

Contract:MC-19415

DATE/TIME IN	DATE/TIME OUT
5/17/22 9:44 am	5/17/22 10:10 am
VEHICLE	**CONTAINER**
5833	TOLU466807

REFERENCE:

BILL OF LADING: DTTX270049

Scale In GROSS WEIGHT 94,620 NET TONS 23.54 INBOUND
Scale Out TARE WEIGHT 47,540 NET WEIGHT 47,080 INVOICE

QTY.	UNIT	DESCRIPTION	RATE	EXTENSION	TAX	TOTAL
28.00	YD	Tracking QTY				
23.54	tn	Cont Soil Origin:Everett 100%				

NET AMOUNT
TENDERED
CHANGE
CHECK#

The undersigned individual signing this document on behalf of Customer acknowledges that he or she has read and understands the terms and conditions on the reverse side and that he or she has the authority to sign this document on behalf of the customer.

RS-F042UPR (07/12)

SIGNATURE _____ CHANGE:

CHECK :

SITE
Everett Incl. Snohomish County --
WA ROOSEVELT , WA

STA **TICKET # 4862637** CELL

WEIGHMASTER: Brandie M.

CUSTOMER
014209 - Strider Construction Co. Inc.
4721 Northwest Road
Bellingham, WA 98225

Contract:MC-19415

DATE/TIME IN	DATE/TIME OUT
5/17/22 11:08 am	5/17/22 11:50 am
VEHICLE	**CONTAINER**
0329	AWIU8243

REFERENCE:

BILL OF LADING: DTTX620703

Scale In GROSS WEIGHT 109,480 NET TONS 30.29 INBOUND
Scale Out TARE WEIGHT 48,900 NET WEIGHT 60,580 INVOICE

QTY.	UNIT	DESCRIPTION	RATE	EXTENSION	TAX	TOTAL
28.00	YD	Tracking QTY				
30.29	tn	Cont Soil Origin:Everett 100%				

NET AMOUNT
TENDERED
CHANGE
CHECK#

The undersigned individual signing this document on behalf of Customer acknowledges that he or she has read and understands the terms and conditions on the reverse side and that he or she has the authority to sign this document on behalf of the customer.

RS-F042UPR (07/12)

SIGNATURE _____ CHANGE:

CHECK :

Everett Incl. Snohomish County --
WA ROOSEVELT , WA

2A **4862634**

CUSTOMER
014209 - Strider Construction Co. Inc.
4721 Northwest Road
Bellingham, WA 98225

Contract:MC-19415

WEIGHMASTER: Brandie M.

DATE/TIME IN	DATE/TIME OUT
5/17/22 11:08 am	5/17/22 11:29 am

VEHICLE	CONTAINER
2234	TOLU456716

REFERENCE

BILL OF LADING: DTTX620703

Scale In GROSS WEIGHT 102,500 NET TONS 27.79 INBOUND
Scale Out TARE WEIGHT 46,920 NET WEIGHT 55,580 INVOICE

QTY.	UNIT	DESCRIPTION	RATE	EXTENSION	TAX	TOTAL
28.00	YD	Tracking QTY				
27.79	tn	Cont Soil Origin:Everett 100%				

NET AMOUNT
TENDERED
CHANGE
CHECK#

The undersigned individual signing this document on behalf of Customer acknowledges that he or she has read and understands the terms and conditions on the reverse side and that he or she has the authority to sign this document on behalf of the customer.

RS-F042UPR (07/12)

SIGNATURE _____ CHANGE:

CHECK :

Everett Incl. Snohomish County --
WA ROOSEVELT , WA

SITE 2A TICKET # **4862640** CELL

CUSTOMER
014209 - Strider Construction Co. Inc.
4721 Northwest Road
Bellingham, WA 98225

Contract:MC-19415

WEIGHMASTER: Brandie M.

DATE/TIME IN	DATE/TIME OUT
5/17/22 11:33 am	5/17/22 11:59 am

VEHICLE	CONTAINER
5223	TOLU425124

REFERENCE

BILL OF LADING: DTTX620703

Scale In GROSS WEIGHT 108,840 NET TONS 30.38 INBOUND
Scale Out TARE WEIGHT 48,080 NET WEIGHT 60,760 INVOICE

QTY.	UNIT	DESCRIPTION	RATE	EXTENSION	TAX	TOTAL
28.00	YD	Tracking QTY				
30.38	tn	Cont Soil Origin:Everett 100%				

NET AMOUNT
TENDERED
CHANGE
CHECK#

The undersigned individual signing this document on behalf of Customer acknowledges that he or she has read and understands the terms and conditions on the reverse side and that he or she has the authority to sign this document on behalf of the customer.

RS-F042UPR (07/12)

SIGNATURE _____ CHANGE:

CHECK :

Everett Incl. Snohomish County --
WA ROOSEVELT , WA

2A **4862641**

CUSTOMER
014209 - Strider Construction Co. Inc.
4721 Northwest Road
Bellingham, WA 98225

Contract:MC-19415

WEIGHMASTER: Brandie M.

DATE/TIME IN	DATE/TIME OUT
5/17/22 11:35 am	5/17/22 12:01 pm

VEHICLE	CONTAINER
5833	GCEU426382

REFERENCE

BILL OF LADING: BNSF231157

Scale In GROSS WEIGHT 102,000 NET TONS 26.58 INBOUND
Scale Out TARE WEIGHT 48,840 NET WEIGHT 53,160 INVOICE

QTY.	UNIT	DESCRIPTION	RATE	EXTENSION	TAX	TOTAL
28.00	YD	Tracking QTY				
26.58	tn	Cont Soil Origin:Everett 100%				

NET AMOUNT
TENDERED
CHANGE
CHECK#

The undersigned individual signing this document on behalf of Customer acknowledges that he or she has read and understands the terms and conditions on the reverse side and that he or she has the authority to sign this document on behalf of the customer.

RS-F042UPR (07/12)

SIGNATURE _____ CHANGE:

CHECK :

SITE
Everett Incl. Snohomish County --
WA ROOSEVELT , WA

SITE | TICKET # **4862656** | CELL

CUSTOMER
014209 - Strider Construction Co. Inc.
4721 Northwest Road
Bellingham, WA 98225

Contract:MC-19415

WEIGHMASTER: Brandie M.

DATE/TIME IN	DATE/TIME OUT
5/17/22 12:26 pm	5/17/22 12:56 pm

VEHICLE	CONTAINER
0329	GCEU425410

REFERENCE

BILL OF LADING: DTTX620703

Scale In GROSS WEIGHT 101,220 NET TONS 26.50 INBOUND
Scale Out TARE WEIGHT 48,220 NET WEIGHT 53,000 INVOICE

QTY.	UNIT	DESCRIPTION	RATE	EXTENSION	TAX	TOTAL
28.00	YD	Tracking QTY				
26.50	tn	Cont Soil Origin:Everett 100%				

NET AMOUNT
TENDERED
CHANGE
CHECK#

The undersigned individual signing this document on behalf of Customer acknowledges that he or she has read and understands the terms and conditions on the reverse side and that he or she has the authority to sign this document on behalf of the customer.

RS-F042UPR (07/12)

SIGNATURE _____ CHANGE:

CHECK :

Everett Incl. Snohomish County --
WA ROOSEVELT , WA

2A **4862661**

WEIGHTMASTER: Brandie M.

CUSTOMER
014209 - Strider Construction Co. Inc.
4721 Northwest Road
Bellingham, WA 98225

Contract:MC-19415

DATE/TIME IN	DATE/TIME OUT
5/17/22 12:38 pm	5/17/22 1:05 pm

VEHICLE	CONTAINER
5833	TOLU456368

REFERENCE:

BILL OF LADING: DTTX620322

Scale In GROSS WEIGHT 99,180 NET TONS 25.34 INBOUND
Scale Out TARE WEIGHT 48,500 NET WEIGHT 50,680 INVOICE

QTY.	UNIT	DESCRIPTION	RATE	EXTENSION	TAX	TOTAL
28.00	YD	Tracking QTY				
25.34	tn	Cont Soil Origin:Everett 100%				

NET AMOUNT
TENDERED
CHANGE
CHECK#

The undersigned individual signing this document on behalf of Customer acknowledges that he or she has read and understands the terms and conditions on the reverse side and that he or she has the authority to sign this document on behalf of the customer.

RS-F042UPR (07/12)

SIGNATURE _____ CHANGE:

CHECK :

SITE
Everett Incl. Snohomish County --
WA ROOSEVELT , WA

STA TICKET # **4862663** CELL

WEIGHTMASTER: Brandie M.

CUSTOMER
014209 - Strider Construction Co. Inc.
4721 Northwest Road
Bellingham, WA 98225

Contract:MC-19415

DATE/TIME IN	DATE/TIME OUT
5/17/22 12:50 pm	5/17/22 1:11 pm

VEHICLE	CONTAINER
1567	GCEU425198

REFERENCE:

BILL OF LADING: DTTX620322

Scale In GROSS WEIGHT 94,440 NET TONS 27.29 INBOUND
Scale Out TARE WEIGHT 39,860 NET WEIGHT 54,580 INVOICE

QTY.	UNIT	DESCRIPTION	RATE	EXTENSION	TAX	TOTAL
28.00	YD	Tracking QTY				
27.29	tn	Cont Soil Origin:Everett 100%				

NET AMOUNT
TENDERED
CHANGE
CHECK#

The undersigned individual signing this document on behalf of Customer acknowledges that he or she has read and understands the terms and conditions on the reverse side and that he or she has the authority to sign this document on behalf of the customer.

RS-F042UPR (07/12)

SIGNATURE _____ CHANGE:

CHECK :

Everett Incl. Snohomish County --
WA ROOSEVELT , WA

2A 4862664

CUSTOMER
014209 - Strider Construction Co. Inc.
4721 Northwest Road
Bellingham, WA 98225

Contract:MC-19415

WEIGHMASTER: Brandie M.

DATE/TIME IN	DATE/TIME OUT
5/17/22 12:58 pm	5/17/22 1:20 pm

VEHICLE	CONTAINER
5831	ICSU464480

REFERENCE:

BILL OF LADING: DTTX620322

Scale In GROSS WEIGHT 94,740 NET TONS 26.46 INBOUND
Scale Out TARE WEIGHT 41,820 NET WEIGHT 52,920 INVOICE

QTY.	UNIT	DESCRIPTION	RATE	EXTENSION	TAX	TOTAL
28.00	YD	Tracking QTY				
26.46	tn	Cont Soil Origin:Everett 100%				

NET AMOUNT
TENDERED
CHANGE
CHECK#

The undersigned individual signing this document on behalf of Customer acknowledges that he or she has read and understands the terms and conditions on the reverse side and that he or she has the authority to sign this document on behalf of the customer.

RS-F042UPR (07/12)

SIGNATURE _____ CHANGE:

CHECK :

SITE
Everett Incl. Snohomish County --
WA ROOSEVELT , WA

STA 2A TICKET # 4862665 CELL

CUSTOMER
014209 - Strider Construction Co. Inc.
4721 Northwest Road
Bellingham, WA 98225

Contract:MC-19415

WEIGHMASTER: Brandie M.

DATE/TIME IN	DATE/TIME OUT
5/17/22 1:07 pm	5/17/22 1:29 pm

VEHICLE	CONTAINER
7748	GCEU426104

REFERENCE:

BILL OF LADING: DTTX620322

Scale In GROSS WEIGHT 95,960 NET TONS 27.11 INBOUND
Scale Out TARE WEIGHT 41,740 NET WEIGHT 54,220 INVOICE

QTY.	UNIT	DESCRIPTION	RATE	EXTENSION	TAX	TOTAL
28.00	YD	Tracking QTY				
27.11	tn	Cont Soil Origin:Everett 100%				

NET AMOUNT
TENDERED
CHANGE
CHECK#

The undersigned individual signing this document on behalf of Customer acknowledges that he or she has read and understands the terms and conditions on the reverse side and that he or she has the authority to sign this document on behalf of the customer.

RS-F042UPR (07/12)

SIGNATURE _____ CHANGE:

CHECK :

Everett Incl. Snohomish County --
WA ROOSEVELT , WA

SITE 2A | TICKET # 4862666

WEIGHTMASTER: Brandie M.

CUSTOMER
014209 - Strider Construction Co. Inc.
4721 Northwest Road
Bellingham, WA 98225

Contract:MC-19415

DATE/TIME IN: 5/17/22 1:13 pm | DATE/TIME OUT: 5/17/22 1:37 pm
VEHICLE: 8282 | CONTAINER: TOLU468701
REFERENCE:
BILL OF LADING: DTTX270049

Scale In GROSS WEIGHT 87,780 NET TONS 23.67 INBOUND
Scale Out TARE WEIGHT 40,440 NET WEIGHT 47,340 INVOICE

QTY.	UNIT	DESCRIPTION	RATE	EXTENSION	TAX	TOTAL
28.00	YD	Tracking QTY				
23.67	tn	Cont Soil Origin:Everett 100%				

NET AMOUNT
TENDERED
CHANGE
CHECK#

The undersigned individual signing this document on behalf of Customer acknowledges that he or she has read and understands the terms and conditions on the reverse side and that he or she has the authority to sign this document on behalf of the customer.

RS-F042UPR (07/12)

SIGNATURE _____ CHANGE:

CHECK :

Everett Incl. Snohomish County --
WA ROOSEVELT , WA

SITE 2A | TICKET # 4862668 | CELL

WEIGHTMASTER: Brandie M.

CUSTOMER
014209 - Strider Construction Co. Inc.
4721 Northwest Road
Bellingham, WA 98225

Contract:MC-19415

DATE/TIME IN: 5/17/22 1:16 pm | DATE/TIME OUT: 5/17/22 1:47 pm
VEHICLE: 5226 | CONTAINER: GCEU425906
REFERENCE:
BILL OF LADING: DTTX270049

Scale In GROSS WEIGHT 92,400 NET TONS 26.13 INBOUND
Scale Out TARE WEIGHT 40,140 NET WEIGHT 52,260 INVOICE

QTY.	UNIT	DESCRIPTION	RATE	EXTENSION	TAX	TOTAL
28.00	YD	Tracking QTY				
26.13	tn	Cont Soil Origin:Everett 100%				

NET AMOUNT
TENDERED
CHANGE
CHECK#

The undersigned individual signing this document on behalf of Customer acknowledges that he or she has read and understands the terms and conditions on the reverse side and that he or she has the authority to sign this document on behalf of the customer.

RS-F042UPR (07/12)

SIGNATURE _____ CHANGE:

CHECK :

Everett Incl. Snohomish County --
WA ROOSEVELT , WA

2A 4862669

WEIGHMASTER: Brandie M.

CUSTOMER
014209 - Strider Construction Co. Inc.
4721 Northwest Road
Bellingham, WA 98225

Contract:MC-19415

DATE/TIME IN: 5/17/22 1:22 pm
DATE/TIME OUT: 5/17/22 1:54 pm
VEHICLE: 1566
CONTAINER: GCEU432143
REFERENCE:
BILL OF LADING: DTTX620686

Scale In GROSS WEIGHT 98,880 NET TONS 28.65 INBOUND
Scale Out TARE WEIGHT 41,580 NET WEIGHT 57,300 INVOICE

QTY.	UNIT	DESCRIPTION	RATE	EXTENSION	TAX	TOTAL
28.00	YD	Tracking QTY				
28.65	tn	Cont Soil Origin:Everett 100%				

NET AMOUNT
TENDERED
CHANGE
CHECK#

The undersigned individual signing this document on behalf of Customer acknowledges that he or she has read and understands the terms and conditions on the reverse side and that he or she has the authority to sign this document on behalf of the customer.

RS-F042UPR (07/12)

SIGNATURE _____ CHANGE:
CHECK :

SITE
Everett Incl. Snohomish County --
WA ROOSEVELT , WA

2A TICKET # 4862672 CELL

WEIGHMASTER: Brandie M.

CUSTOMER
014209 - Strider Construction Co. Inc.
4721 Northwest Road
Bellingham, WA 98225

Contract:MC-19414

DATE/TIME IN: 5/17/22 1:37 pm
DATE/TIME OUT: 5/17/22 2:03 pm
VEHICLE: 5224
CONTAINER: GCEU425255
REFERENCE:
BILL OF LADING: BNSF231172

Scale In GROSS WEIGHT 86,660 NET TONS 21.91 INBOUND
Scale Out TARE WEIGHT 42,840 NET WEIGHT 43,820 INVOICE

QTY.	UNIT	DESCRIPTION	RATE	EXTENSION	TAX	TOTAL
28.00	YD	Tracking QTY				
21.91	tn	PCS 34 Origin:Everett 100%				

NET AMOUNT
TENDERED
CHANGE
CHECK#

The undersigned individual signing this document on behalf of Customer acknowledges that he or she has read and understands the terms and conditions on the reverse side and that he or she has the authority to sign this document on behalf of the customer.

RS-F042UPR (07/12)

SIGNATURE _____ CHANGE:
CHECK :

Everett Incl. Snohomish County --
WA ROOSEVELT , WA

2A 4862674

WEIGHMASTER: Brandie M.

CUSTOMER
014209 - Strider Construction Co. Inc.
4721 Northwest Road
Bellingham, WA 98225

Contract:MC-19414

DATE/TIME IN	DATE/TIME OUT
5/17/22 1:44 pm	5/17/22 2:05 pm

VEHICLE	CONTAINER
1567	TOLU468788

REFERENCE:

BILL OF LADING: BNSF231172

Scale In GROSS WEIGHT 106,580 NET TONS 31.55 INBOUND
Scale Out TARE WEIGHT 43,480 NET WEIGHT 63,100 INVOICE

QTY.	UNIT	DESCRIPTION	RATE	EXTENSION	TAX	TOTAL
28.00	YD	Tracking QTY				
31.55	tn	PCS 34 Origin:Everett 100%				

NET AMOUNT
TENDERED
CHANGE
CHECK#

The undersigned individual signing this document on behalf of Customer acknowledges that he or she has read and understands the terms and conditions on the reverse side and that he or she has the authority to sign this document on behalf of the customer.

RS-F042UPR (07/12)

SIGNATURE _____ CHANGE:

CHECK :

SITE
Everett Incl. Snohomish County --
WA ROOSEVELT , WA

SITE TICKET # 4862677 CELL

WEIGHMASTER: Brandie M.

CUSTOMER
014209 - Strider Construction Co. Inc.
4721 Northwest Road
Bellingham, WA 98225

Contract:MC-19415

DATE/TIME IN	DATE/TIME OUT
5/17/22 2:01 pm	5/17/22 2:24 pm

VEHICLE	CONTAINER
7748	AWIU200018

REFERENCE:

BILL OF LADING: BNSF230093

Scale In GROSS WEIGHT 99,440 NET TONS 27.88 INBOUND
Scale Out TARE WEIGHT 43,680 NET WEIGHT 55,760 INVOICE

QTY.	UNIT	DESCRIPTION	RATE	EXTENSION	TAX	TOTAL
28.00	YD	Tracking QTY				
27.88	tn	Cont Soil Origin:Everett 100%				

NET AMOUNT
TENDERED
CHANGE
CHECK#

The undersigned individual signing this document on behalf of Customer acknowledges that he or she has read and understands the terms and conditions on the reverse side and that he or she has the authority to sign this document on behalf of the customer.

RS-F042UPR (07/12)

SIGNATURE _____ CHANGE:

CHECK :

Everett Incl. Snohomish County --
WA ROOSEVELT , WA

2A **4862678**

CUSTOMER
014209 - Strider Construction Co. Inc.
4721 Northwest Road
Bellingham, WA 98225

Contract:MC-19415

WEIGHMASTER: Brandie M.

DATE/TIME IN	DATE/TIME OUT
5/17/22 2:07 pm	5/17/22 2:28 pm

VEHICLE	CONTAINER
8282	GCEU431372

REFERENCE

BILL OF LADING: BNSF231121

Scale In GROSS WEIGHT 89,480 NET TONS 24.26 INBOUND
Scale Out TARE WEIGHT 40,960 NET WEIGHT 48,520 INVOICE

QTY.	UNIT	DESCRIPTION	RATE	EXTENSION	TAX	TOTAL
28.00	YD	Tracking QTY				
24.26	tn	Cont Soil Origin:Everett 100%				

NET AMOUNT
TENDERED
CHANGE
CHECK#

The undersigned individual signing this document on behalf of Customer acknowledges that he or she has read and understands the terms and conditions on the reverse side and that he or she has the authority to sign this document on behalf of the customer.

RS-F042UPR (07/12)

SIGNATURE _____ CHANGE:

CHECK :

SITE
Everett Incl. Snohomish County --
WA ROOSEVELT , WA

SITE 2A TICKET # **4862679** CELL

CUSTOMER
014209 - Strider Construction Co. Inc.
4721 Northwest Road
Bellingham, WA 98225

Contract:MC-19415

WEIGHMASTER: Brandie M.

DATE/TIME IN	DATE/TIME OUT
5/17/22 2:10 pm	5/17/22 2:33 pm

VEHICLE	CONTAINER
7749	TOLU460463

REFERENCE

BILL OF LADING: BNSF231121

Scale In GROSS WEIGHT 93,520 NET TONS 23.37 INBOUND
Scale Out TARE WEIGHT 46,780 NET WEIGHT 46,740 INVOICE

QTY.	UNIT	DESCRIPTION	RATE	EXTENSION	TAX	TOTAL
28.00	YD	Tracking QTY				
23.37	tn	Cont Soil Origin:Everett 100%				

NET AMOUNT
TENDERED
CHANGE
CHECK#

The undersigned individual signing this document on behalf of Customer acknowledges that he or she has read and understands the terms and conditions on the reverse side and that he or she has the authority to sign this document on behalf of the customer.

RS-F042UPR (07/12)

SIGNATURE _____ CHANGE:

CHECK :

Everett Incl. Snohomish County --
WA ROOSEVELT , WA

2A **4862680**

CUSTOMER
014209 - Strider Construction Co. Inc.
4721 Northwest Road
Bellingham, WA 98225

Contract:MC-19415

WEIGHMASTER: Brandie M.

DATE/TIME IN	DATE/TIME OUT
5/17/22 2:29 pm	5/17/22 2:50 pm

VEHICLE	CONTAINER
2783	TOLU469489

REFERENCE

BILL OF LADING: DTTX458902

Scale In GROSS WEIGHT 89,560 NET TONS 24.88 INBOUND
Scale Out TARE WEIGHT 39,800 NET WEIGHT 49,760 INVOICE

QTY.	UNIT	DESCRIPTION	RATE	EXTENSION	TAX	TOTAL
28.00	YD	Tracking QTY				
24.88	tn	Cont Soil Origin:Everett 100%				

NET AMOUNT
TENDERED
CHANGE
CHECK#

The undersigned individual signing this document on behalf of Customer acknowledges that he or she has read and understands the terms and conditions on the reverse side and that he or she has the authority to sign this document on behalf of the customer.

RS-F042UPR (07/12)

SIGNATURE _____ CHANGE:

CHECK :

SITE
Everett Incl. Snohomish County --
WA ROOSEVELT , WA

SITE 2A TICKET # **4862686** CELL

CUSTOMER
014209 - Strider Construction Co. Inc.
4721 Northwest Road
Bellingham, WA 98225

Contract:MC-19415

WEIGHMASTER: Brandie M.

DATE/TIME IN	DATE/TIME OUT
5/17/22 2:40 pm	5/17/22 3:16 pm

VEHICLE	CONTAINER
5224	GCEU431305

REFERENCE

BILL OF LADING: DTTX646317

Scale In GROSS WEIGHT 93,520 NET TONS 23.31 INBOUND
Scale Out TARE WEIGHT 46,900 NET WEIGHT 46,620 INVOICE

QTY.	UNIT	DESCRIPTION	RATE	EXTENSION	TAX	TOTAL
28.00	YD	Tracking QTY				
23.31	tn	Cont Soil Origin:Everett 100%				

NET AMOUNT
TENDERED
CHANGE
CHECK#

The undersigned individual signing this document on behalf of Customer acknowledges that he or she has read and understands the terms and conditions on the reverse side and that he or she has the authority to sign this document on behalf of the customer.

RS-F042UPR (07/12)

SIGNATURE _____ CHANGE:

CHECK :

Everett Incl. Snohomish County --
WA ROOSEVELT , WA

2A **4862690**

WEIGHMASTER: Brandie M.

CUSTOMER
014209 - Strider Construction Co. Inc.
4721 Northwest Road
Bellingham, WA 98225

Contract:MC-19415

DATE/TIME IN	DATE/TIME OUT
5/17/22 2:52 pm	5/17/22 3:25 pm

VEHICLE	CONTAINER
7748	GCEU430744

REFERENCE:

BILL OF LADING: BNSF231121

Scale In GROSS WEIGHT 95,040 NET TONS 27.03 INBOUND
Scale Out TARE WEIGHT 40,980 NET WEIGHT 54,060 INVOICE

QTY.	UNIT	DESCRIPTION	RATE	EXTENSION	TAX	TOTAL
28.00	YD	Tracking QTY				
27.03	tn	Cont Soil Origin:Everett 100%				

NET AMOUNT
TENDERED
CHANGE
CHECK#

The undersigned individual signing this document on behalf of Customer acknowledges that he or she has read and understands the terms and conditions on the reverse side and that he or she has the authority to sign this document on behalf of the customer.

RS-F042UPR (07/12)

SIGNATURE _____ CHANGE:

CHECK :

SITE
Everett Incl. Snohomish County --
WA ROOSEVELT , WA

SITE **4862688** TICKET # **4862688**

WEIGHMASTER: Brandie M.

CUSTOMER
014209 - Strider Construction Co. Inc.
4721 Northwest Road
Bellingham, WA 98225

Contract:MC-19415

DATE/TIME IN	DATE/TIME OUT
5/17/22 2:55 pm	5/17/22 3:19 pm

VEHICLE	CONTAINER
2234	TOLU456419

REFERENCE:

BILL OF LADING: BNSF231121

Scale In GROSS WEIGHT 98,780 NET TONS 25.21 INBOUND
Scale Out TARE WEIGHT 48,360 NET WEIGHT 50,420 INVOICE

QTY.	UNIT	DESCRIPTION	RATE	EXTENSION	TAX	TOTAL
28.00	YD	Tracking QTY				
25.21	tn	Cont Soil Origin:Everett 100%				

NET AMOUNT
TENDERED
CHANGE
CHECK#

The undersigned individual signing this document on behalf of Customer acknowledges that he or she has read and understands the terms and conditions on the reverse side and that he or she has the authority to sign this document on behalf of the customer.

RS-F042UPR (07/12)

SIGNATURE _____ CHANGE:

CHECK :

Everett Incl. Snohomish County --
WA ROOSEVELT , WA

2A **4863367**

CUSTOMER
014209 - Strider Construction Co. Inc.
4721 Northwest Road
Bellingham, WA 98225

Contract:MC-19415

WEIGHMASTER: Denise B.

DATE/TIME IN	DATE/TIME OUT
5/26/22 2:17 pm	5/26/22 2:41 pm

VEHICLE	CONTAINER
5222	GCEU420049

REFERENCE

BILL OF LADING: BNSF231050

Scale In GROSS WEIGHT 97,560 NET TONS 24.70 INBOUND
Scale Out TARE WEIGHT 48,160 NET WEIGHT 49,400 INVOICE

QTY.	UNIT	DESCRIPTION	RATE	EXTENSION	TAX	TOTAL
28.00	YD	Tracking QTY				
24.70	tn	Cont Soil Origin:Everett 100%				

NET AMOUNT
TENDERED
CHANGE
CHECK#

The undersigned individual signing this document on behalf of Customer acknowledges that he or she has read and understands the terms and conditions on the reverse side and that he or she has the authority to sign this document on behalf of the customer.

RS-F042UPR (07/12)

SIGNATURE _____ CHANGE:

CHECK :

SITE
Everett Incl. Snohomish County --
WA ROOSEVELT , WA

SITE TICKET # **4863372** CELL

CUSTOMER
014209 - Strider Construction Co. Inc.
4721 Northwest Road
Bellingham, WA 98225

Contract:MC-19415

WEIGHMASTER: Denise B.

DATE/TIME IN	DATE/TIME OUT
5/26/22 2:29 pm	5/26/22 2:50 pm

VEHICLE	CONTAINER
5223	TOLU466654

REFERENCE

BILL OF LADING: BNSF231050

Scale In GROSS WEIGHT 97,140 NET TONS 25.22 INBOUND
Scale Out TARE WEIGHT 46,700 NET WEIGHT 50,440 INVOICE

QTY.	UNIT	DESCRIPTION	RATE	EXTENSION	TAX	TOTAL
28.00	YD	Tracking QTY				
25.22	tn	Cont Soil Origin:Everett 100%				

NET AMOUNT
TENDERED
CHANGE
CHECK#

The undersigned individual signing this document on behalf of Customer acknowledges that he or she has read and understands the terms and conditions on the reverse side and that he or she has the authority to sign this document on behalf of the customer.

RS-F042UPR (07/12)

SIGNATURE _____ CHANGE:

CHECK :

Everett Incl. Snohomish County --
WA ROOSEVELT , WA

2A **4863373**

CUSTOMER
014209 - Strider Construction Co. Inc.
4721 Northwest Road
Bellingham, WA 98225

Contract:MC-19415

WEIGHMASTER: Denise B.

DATE/TIME IN	DATE/TIME OUT
5/26/22 2:38 pm	5/26/22 3:00 pm

VEHICLE	CONTAINER
1454	TOLU453397

REFERENCE

BILL OF LADING: BNSF231050

Scale In GROSS WEIGHT 89,020 NET TONS 21.14 INBOUND
Scale Out TARE WEIGHT 46,740 NET WEIGHT 42,280 INVOICE

QTY.	UNIT	DESCRIPTION	RATE	EXTENSION	TAX	TOTAL
28.00	YD	Tracking QTY				
21.14	tn	Cont Soil Origin:Everett 100%				

NET AMOUNT
TENDERED
CHANGE
CHECK#

The undersigned individual signing this document on behalf of Customer acknowledges that he or she has read and understands the terms and conditions on the reverse side and that he or she has the authority to sign this document on behalf of the customer.

RS-F042UPR (07/12)

SIGNATURE _____ CHANGE:

CHECK :

SITE
Everett Incl. Snohomish County --
WA ROOSEVELT , WA

SITE TICKET # **4863374** CELL

CUSTOMER
014209 - Strider Construction Co. Inc.
4721 Northwest Road
Bellingham, WA 98225

Contract:MC-19415

WEIGHMASTER: Denise B.

DATE/TIME IN	DATE/TIME OUT
5/26/22 2:44 pm	5/26/22 3:01 pm

VEHICLE	CONTAINER
7329	TOLU444296

REFERENCE

BILL OF LADING: BNSF231050

Scale In GROSS WEIGHT 93,740 NET TONS 23.13 INBOUND
Scale Out TARE WEIGHT 47,480 NET WEIGHT 46,260 INVOICE

QTY.	UNIT	DESCRIPTION	RATE	EXTENSION	TAX	TOTAL
28.00	YD	Tracking QTY				
23.13	tn	Cont Soil Origin:Everett 100%				

NET AMOUNT
TENDERED
CHANGE
CHECK#

The undersigned individual signing this document on behalf of Customer acknowledges that he or she has read and understands the terms and conditions on the reverse side and that he or she has the authority to sign this document on behalf of the customer.

RS-F042UPR (07/12)

SIGNATURE _____ CHANGE:

CHECK :

Everett Incl. Snohomish County --
WA ROOSEVELT , WA

2A **4863376**

CUSTOMER
014209 - Strider Construction Co. Inc.
4721 Northwest Road
Bellingham, WA 98225

Contract:MC-19415

WEIGHMASTER: Denise B.

DATE/TIME IN	DATE/TIME OUT
5/26/22 2:45 pm	5/26/22 3:04 pm

VEHICLE	CONTAINER
2235	RBSU200269

REFERENCE

BILL OF LADING: BNSF231050

Scale In GROSS WEIGHT 96,180 NET TONS 23.83 INBOUND
Scale Out TARE WEIGHT 48,520 NET WEIGHT 47,660 INVOICE

QTY.	UNIT	DESCRIPTION	RATE	EXTENSION	TAX	TOTAL
28.00	YD	Tracking QTY				
23.83	tn	Cont Soil Origin:Everett 100%				

NET AMOUNT
TENDERED
CHANGE
CHECK#

The undersigned individual signing this document on behalf of Customer acknowledges that he or she has read and understands the terms and conditions on the reverse side and that he or she has the authority to sign this document on behalf of the customer.

RS-F042UPR (07/12)

SIGNATURE _____ CHANGE:

CHECK :

SITE
Everett Incl. Snohomish County --
WA ROOSEVELT , WA

STA ZTA TICKET # **4863385** CELL

CUSTOMER
014209 - Strider Construction Co. Inc.
4721 Northwest Road
Bellingham, WA 98225

Contract:MC-19415

WEIGHMASTER: Denise B.

DATE/TIME IN	DATE/TIME OUT
5/27/22 8:52 am	5/27/22 9:13 am

VEHICLE	CONTAINER
5223	TOLU466638

REFERENCE

BILL OF LADING: DTTX427445

Scale In GROSS WEIGHT 93,820 NET TONS 23.22 INBOUND
Scale Out TARE WEIGHT 47,380 NET WEIGHT 46,440 INVOICE

QTY.	UNIT	DESCRIPTION	RATE	EXTENSION	TAX	TOTAL
28.00	YD	Tracking QTY				
23.22	tn	Cont Soil Origin:Everett 100%				

NET AMOUNT
TENDERED
CHANGE
CHECK#

The undersigned individual signing this document on behalf of Customer acknowledges that he or she has read and understands the terms and conditions on the reverse side and that he or she has the authority to sign this document on behalf of the customer.

RS-F042UPR (07/12)

SIGNATURE _____ CHANGE:

CHECK :

Everett Incl. Snohomish County --
WA ROOSEVELT , WA

2A **4863415**

CUSTOMER
014209 - Strider Construction Co. Inc.
4721 Northwest Road
Bellingham, WA 98225

Contract:MC-19415

WEIGHMASTER: Denise B.

DATE/TIME IN	DATE/TIME OUT
5/27/22 9:31 am	5/27/22 10:03 am

VEHICLE	CONTAINER
2235	TPHU252255

REFERENCE

BILL OF LADING: DTTX427445

Scale In GROSS WEIGHT 101,720 NET TONS 26.99 INBOUND
Scale Out TARE WEIGHT 47,740 NET WEIGHT 53,980 INVOICE

QTY.	UNIT	DESCRIPTION	RATE	EXTENSION	TAX	TOTAL
28.00	YD	Tracking QTY				
26.99	tn	Cont Soil Origin:Everett 100%				

NET AMOUNT
TENDERED
CHANGE
CHECK#

The undersigned individual signing this document on behalf of Customer acknowledges that he or she has read and understands the terms and conditions on the reverse side and that he or she has the authority to sign this document on behalf of the customer.

RS-F042UPR (07/12)

SIGNATURE _____ CHANGE:

CHECK :

SITE
Everett Incl. Snohomish County --
WA ROOSEVELT , WA

SITE | TICKET # **4863412** | CELL

CUSTOMER
014209 - Strider Construction Co. Inc.
4721 Northwest Road
Bellingham, WA 98225

Contract:MC-19415

WEIGHMASTER: Denise B.

DATE/TIME IN	DATE/TIME OUT
5/27/22 9:39 am	5/27/22 10:01 am

VEHICLE	CONTAINER
0332	RBSU200379

REFERENCE

BILL OF LADING: BNSF231050

Scale In GROSS WEIGHT 97,900 NET TONS 25.25 INBOUND
Scale Out TARE WEIGHT 47,400 NET WEIGHT 50,500 INVOICE

QTY.	UNIT	DESCRIPTION	RATE	EXTENSION	TAX	TOTAL
28.00	YD	Tracking QTY				
25.25	tn	Cont Soil Origin:Everett 100%				

NET AMOUNT
TENDERED
CHANGE
CHECK#

The undersigned individual signing this document on behalf of Customer acknowledges that he or she has read and understands the terms and conditions on the reverse side and that he or she has the authority to sign this document on behalf of the customer.

RS-F042UPR (07/12)

SIGNATURE _____ CHANGE:

CHECK :

Everett Incl. Snohomish County --
WA ROOSEVELT , WA

2A **4863411**

CUSTOMER
014209 - Strider Construction Co. Inc.
4721 Northwest Road
Bellingham, WA 98225

Contract:MC-19415

WEIGHMASTER: Denise B.

DATE/TIME IN	DATE/TIME OUT
5/27/22 9:40 am	5/27/22 10:00 am

VEHICLE	CONTAINER
7329	GCEU440148

REFERENCE

BILL OF LADING: BNSF231175

Scale In GROSS WEIGHT 89,800 NET TONS 21.62 INBOUND
Scale Out TARE WEIGHT 46,560 NET WEIGHT 43,240 INVOICE

QTY.	UNIT	DESCRIPTION	RATE	EXTENSION	TAX	TOTAL
28.00	YD	Tracking QTY				
21.62	tn	Cont Soil Origin:Everett 100%				

NET AMOUNT
TENDERED
CHANGE
CHECK#

The undersigned individual signing this document on behalf of Customer acknowledges that he or she has read and understands the terms and conditions on the reverse side and that he or she has the authority to sign this document on behalf of the customer.

RS-F042UPR (07/12)

SIGNATURE _____ CHANGE:

CHECK :

SITE
Everett Incl. Snohomish County --
WA ROOSEVELT , WA

SITE 2A TICKET # **4863424** CELL

CUSTOMER
014209 - Strider Construction Co. Inc.
4721 Northwest Road
Bellingham, WA 98225

Contract:MC-19415

WEIGHMASTER: Denise B.

DATE/TIME IN	DATE/TIME OUT
5/27/22 9:52 am	5/27/22 10:11 am

VEHICLE	CONTAINER
1454	GCEU425731

REFERENCE

BILL OF LADING: BNSF231175

Scale In GROSS WEIGHT 95,420 NET TONS 24.11 INBOUND
Scale Out TARE WEIGHT 47,200 NET WEIGHT 48,220 INVOICE

QTY.	UNIT	DESCRIPTION	RATE	EXTENSION	TAX	TOTAL
28.00	YD	Tracking QTY				
24.11	tn	Cont Soil Origin:Everett 100%				

NET AMOUNT
TENDERED
CHANGE
CHECK#

The undersigned individual signing this document on behalf of Customer acknowledges that he or she has read and understands the terms and conditions on the reverse side and that he or she has the authority to sign this document on behalf of the customer.

RS-F042UPR (07/12)

SIGNATURE _____ CHANGE:

CHECK :

Everett Incl. Snohomish County --
WA ROOSEVELT , WA

2A **4863478**

CUSTOMER
014209 - Strider Construction Co. Inc.
4721 Northwest Road
Bellingham, WA 98225

Contract:MC-19415

WEIGHMASTER: Denise B.

DATE/TIME IN	DATE/TIME OUT
5/28/22 7:38 am	5/28/22 8:18 am

VEHICLE	CONTAINER
5224	TRLU901257

REFERENCE

BILL OF LADING: DTTX458902

Scale In GROSS WEIGHT 112,140 NET TONS 32.36 INBOUND
Scale Out TARE WEIGHT 47,420 NET WEIGHT 64,720 INVOICE

QTY.	UNIT	DESCRIPTION	RATE	EXTENSION	TAX	TOTAL
28.00	YD	Tracking QTY				
32.36	tn	Cont Soil Origin:Everett 100%				

NET AMOUNT
TENDERED
CHANGE
CHECK#

The undersigned individual signing this document on behalf of Customer acknowledges that he or she has read and understands the terms and conditions on the reverse side and that he or she has the authority to sign this document on behalf of the customer.

RS-F042UPR (07/12)

SIGNATURE _____ CHANGE:

CHECK :

Everett Incl. Snohomish County --
WA ROOSEVELT , WA

SITE 2A TICKET # **4863474** CELL

CUSTOMER
014209 - Strider Construction Co. Inc.
4721 Northwest Road
Bellingham, WA 98225

Contract:MC-19415

WEIGHMASTER: Denise B.

DATE/TIME IN	DATE/TIME OUT
5/28/22 7:38 am	5/28/22 8:03 am

VEHICLE	CONTAINER
2234	GCEU431471

REFERENCE

BILL OF LADING: DTTX458902

Scale In GROSS WEIGHT 106,260 NET TONS 29.71 INBOUND
Scale Out TARE WEIGHT 46,840 NET WEIGHT 59,420 INVOICE

QTY.	UNIT	DESCRIPTION	RATE	EXTENSION	TAX	TOTAL
28.00	YD	Tracking QTY				
29.71	tn	Cont Soil Origin:Everett 100%				

NET AMOUNT
TENDERED
CHANGE
CHECK#

The undersigned individual signing this document on behalf of Customer acknowledges that he or she has read and understands the terms and conditions on the reverse side and that he or she has the authority to sign this document on behalf of the customer.

RS-F042UPR (07/12)

SIGNATURE _____ CHANGE:

CHECK :

Everett Incl. Snohomish County --
WA ROOSEVELT , WA

2A **4864345**

Brandie M.

014209 - Strider Construction Co. Inc.
4721 Northwest Road
Bellingham, WA 98225

6/8/22 6:05 am 6/8/22 6:25 am

2234 GCEU425116

Contract:MC-19415

DTTX427026

Scale In	GROSS WEIGHT	91,480	NET TONS	22.44		INBOUND
Scale Out	TARE WEIGHT	46,600	NET WEIGHT	44,880		INVOICE

28.00 YD Tracking QTY
22.44 tn Cont Soil Origin:Everett 100%

CHANGE:
CHECK :

Everett Incl. Snohomish County --
WA ROOSEVELT , WA

2A **4864348**

Brandie M.

014209 - Strider Construction Co. Inc.
4721 Northwest Road
Bellingham, WA 98225

6/8/22 6:09 am 6/8/22 6:28 am

5222 GCEU430252

Contract:MC-19415

DTTX427026

Scale In	GROSS WEIGHT	90,660	NET TONS	21.18		INBOUND
Scale Out	TARE WEIGHT	48,300	NET WEIGHT	42,360		INVOICE

28.00 YD Tracking QTY
21.18 tn Cont Soil Origin:Everett 100%

CHANGE:
CHECK :

Everett Incl. Snohomish County --
WA ROOSEVELT , WA

2A **4864353**

Brandie M.

014209 - Strider Construction Co. Inc.
4721 Northwest Road
Bellingham, WA 98225

6/8/22 6:19 am 6/8/22 6:36 am

7749 TRLU900497

Contract:MC-19415

DTTX427026

Scale In	GROSS WEIGHT	85,660	NET TONS	19.26	INBOUND
Scale Out	TARE WEIGHT	47,140	NET WEIGHT	38,520	INVOICE

28.00	YD	Tracking QTY	
19.26	tn	Cont Soil	Origin:Everett 100%

CHANGE:

CHECK :

Everett Incl. Snohomish County --
WA ROOSEVELT , WA

2A **4864371**

Brandie M.

014209 - Strider Construction Co. Inc.
4721 Northwest Road
Bellingham, WA 98225

6/8/22 6:44 am 6/8/22 7:05 am

7331 GCEU435079

Contract:MC-19415

DTTX427026

Scale In	GROSS WEIGHT	88,860	NET TONS	21.49	INBOUND
Scale Out	TARE WEIGHT	45,880	NET WEIGHT	42,980	INVOICE

28.00	YD	Tracking QTY	
21.49	tn	Cont Soil	Origin:Everett 100%

CHANGE:

CHECK :

Everett Incl. Snohomish County --
WA ROOSEVELT , WA

2A **4864372**

Brandie M.

014209 - Strider Construction Co. Inc.
4721 Northwest Road
Bellingham, WA 98225

6/8/22 6:49 am 6/8/22 7:08 am

0331 GCEU431514

Contract:MC-19415

DTTX427026

Scale In	GROSS WEIGHT	83,280	NET TONS	17.65		INBOUND
Scale Out	TARE WEIGHT	47,980	NET WEIGHT	35,300		INVOICE

28.00	YD	Tracking QTY	
17.65	tn	Cont Soil	Origin:Everett 100%

CHANGE:
CHECK :

Everett Incl. Snohomish County --
WA ROOSEVELT , WA

2A **4864384**

Brandie M.

014209 - Strider Construction Co. Inc.
4721 Northwest Road
Bellingham, WA 98225

6/8/22 6:56 am 6/8/22 7:28 am

2234 AWIU200005

Contract:MC-19415

BNSF230044

Scale In	GROSS WEIGHT	98,420	NET TONS	24.13		INBOUND
Scale Out	TARE WEIGHT	50,160	NET WEIGHT	48,260		INVOICE

28.00	YD	Tracking QTY	
24.13	tn	Cont Soil	Origin:Everett 100%

CHANGE:
CHECK :

Everett Incl. Snohomish County --
WA ROOSEVELT , WA

2A **4864420**

Brandie M.

014209 - Strider Construction Co. Inc.
4721 Northwest Road
Bellingham, WA 98225

6/8/22 8:29 am 6/8/22 8:49 am

7331 TOLU424299

Contract:MC-19415

BNSF231105

Scale In	GROSS WEIGHT	101,680	NET TONS	27.56	INBOUND
Scale Out	TARE WEIGHT	46,560	NET WEIGHT	55,120	INVOICE

28.00	YD	Tracking QTY	
27.56	tn	Cont Soil	Origin:Everett 100%

CHANGE:
CHECK :

Everett Incl. Snohomish County --
WA ROOSEVELT , WA

2A **4864431**

Brandie M.

014209 - Strider Construction Co. Inc.
4721 Northwest Road
Bellingham, WA 98225

6/8/22 9:24 am 6/8/22 9:55 am

2235 AWIU8266

Contract:MC-19415

DTTX432113

Scale In	GROSS WEIGHT	91,760	NET TONS	21.52	INBOUND
Scale Out	TARE WEIGHT	48,720	NET WEIGHT	43,040	INVOICE

28.00	YD	Tracking QTY	
21.52	tn	Cont Soil	Origin:Everett 100%

CHANGE:
CHECK :

Everett Incl. Snohomish County --
WA ROOSEVELT , WA

2A **4864432**

Brandie M.

014209 - Strider Construction Co. Inc.
4721 Northwest Road
Bellingham, WA 98225

6/8/22 9:39 am 6/8/22 10:06 am

5222 TOLU466526

Contract:MC-19415

DTTX432113

Scale In	GROSS WEIGHT	97,660	NET TONS	25.23	INBOUND
Scale Out	TARE WEIGHT	47,200	NET WEIGHT	50,460	INVOICE

28.00 YD Tracking QTY
25.23 tn Cont Soil Origin:Everett 100%

CHANGE:
CHECK :

Everett Incl. Snohomish County --
WA ROOSEVELT , WA

2A **4864436**

Denise B.

014209 - Strider Construction Co. Inc.
4721 Northwest Road
Bellingham, WA 98225

6/9/22 12:08 pm 6/9/22 12:31 pm

0331 GCEU440215

Contract:MC-19415

BNSF231086

Scale In	GROSS WEIGHT	102,280	NET TONS	27.50	INBOUND
Scale Out	TARE WEIGHT	47,280	NET WEIGHT	55,000	INVOICE

28.00 YD Tracking QTY
27.50 tn Cont Soil Origin:Everett 100%

CHANGE:
CHECK :

Everett Incl. Snohomish County --
WA ROOSEVELT , WA

2A **4864437**

Denise B.

014209 - Strider Construction Co. Inc.
4721 Northwest Road
Bellingham, WA 98225

6/9/22 12:11 pm 6/9/22 12:33 pm

7331 TOLU459068

Contract:MC-19415

BNSF231086

Scale In	GROSS WEIGHT	99,320	NET TONS	26.65	INBOUND
Scale Out	TARE WEIGHT	46,020	NET WEIGHT	53,300	INVOICE

28.00 YD Tracking QTY
26.65 tn Cont Soil Origin:Everett 100%

CHANGE:
CHECK :

Everett Incl. Snohomish County --
WA ROOSEVELT , WA

2A **4864457**

Denise B.

014209 - Strider Construction Co. Inc.
4721 Northwest Road
Bellingham, WA 98225

6/9/22 1:04 pm 6/9/22 1:26 pm

5223 TOLU456462

Contract:MC-19415

BNSF230078

Scale In	GROSS WEIGHT	103,040	NET TONS	26.43	INBOUND
Scale Out	TARE WEIGHT	50,180	NET WEIGHT	52,860	INVOICE

28.00 YD Tracking QTY
26.43 tn Cont Soil Origin:Everett 100%

CHANGE:
CHECK :

Everett Incl. Snohomish County --
WA ROOSEVELT , WA

2A **4864461**

Denise B.

014209 - Strider Construction Co. Inc.
4721 Northwest Road
Bellingham, WA 98225

6/9/22 1:15 pm 6/9/22 1:33 pm

7331 TOLU424194

Contract:MC-19415

BNSF230078

Scale In	GROSS WEIGHT	102,320	NET TONS	27.01	INBOUND
Scale Out	TARE WEIGHT	48,300	NET WEIGHT	54,020	INVOICE

28.00	YD	Tracking QTY	
27.01	tn	Cont Soil	Origin:Everett 100%

CHANGE:

CHECK :

Everett Incl. Snohomish County --
WA ROOSEVELT , WA

2A **4864465**

Denise B.

014209 - Strider Construction Co. Inc.
4721 Northwest Road
Bellingham, WA 98225

6/9/22 1:15 pm 6/9/22 1:38 pm

2235 GCEU425323

Contract:MC-19415

BNSF230021

Scale In	GROSS WEIGHT	101,760	NET TONS	27.59	INBOUND
Scale Out	TARE WEIGHT	46,580	NET WEIGHT	55,180	INVOICE

28.00	YD	Tracking QTY	
27.59	tn	Cont Soil	Origin:Everett 100%

CHANGE:

CHECK :

Everett Incl. Snohomish County --
WA ROOSEVELT , WA

2A **4864483**

Denise B.

014209 - Strider Construction Co. Inc.
4721 Northwest Road
Bellingham, WA 98225

6/9/22 1:48 pm 6/9/22 2:10 pm
1565 TPHU252184

Contract:MC-19415

BNSF230021

Scale In	GROSS WEIGHT	104,040	NET TONS	28.73	INBOUND
Scale Out	TARE WEIGHT	46,580	NET WEIGHT	57,460	INVOICE

28.00	YD	Tracking QTY	
28.73	tn	Cont Soil	Origin:Everett 100%

CHANGE:
CHECK :

Everett Incl. Snohomish County --
WA ROOSEVELT , WA

2A **4864492**

Denise B.

014209 - Strider Construction Co. Inc.
4721 Northwest Road
Bellingham, WA 98225

6/9/22 2:09 pm 6/9/22 2:28 pm
0331 GCEU426026

Contract:MC-19415

BNSF231117

Scale In	GROSS WEIGHT	92,680	NET TONS	22.57	INBOUND
Scale Out	TARE WEIGHT	47,540	NET WEIGHT	45,140	INVOICE

28.00	YD	Tracking QTY	
22.57	tn	Cont Soil	Origin:Everett 100%

CHANGE:
CHECK :

Everett Incl. Snohomish County --
WA ROOSEVELT , WA

2A **4864514**

Denise B.

014209 - Strider Construction Co. Inc.
4721 Northwest Road
Bellingham, WA 98225

6/9/22 2:25 pm 6/9/22 3:06 pm

2235 GCEU426106

Contract:MC-19415

BNSF231117

Scale In	GROSS WEIGHT	116,940	NET TONS	34.86	INBOUND
Scale Out	TARE WEIGHT	47,220	NET WEIGHT	69,720	INVOICE

28.00 YD Tracking QTY
34.86 tn Cont Soil Origin:Everett 100%

CHANGE:
CHECK :

Everett Incl. Snohomish County --
WA ROOSEVELT , WA

2A **4864542**

Denise B.

014209 - Strider Construction Co. Inc.
4721 Northwest Road
Bellingham, WA 98225

6/10/22 9:43 am 6/10/22 10:04 am

2234 TPHU252282

Contract:MC-19415

BNSF231086

Scale In	GROSS WEIGHT	105,940	NET TONS	28.66	INBOUND
Scale Out	TARE WEIGHT	48,620	NET WEIGHT	57,320	INVOICE

28.00 YD Tracking QTY
28.66 tn Cont Soil Origin:Everett 100%

CHANGE:
CHECK :

Everett Incl. Snohomish County --
WA ROOSEVELT , WA

2A **4864875**

Brandie M.

014209 - Strider Construction Co. Inc.
4721 Northwest Road
Bellingham, WA 98225

6/14/22 2:19 pm 6/14/22 2:39 pm

2234 TPHU252438

Contract:MC-19415

BNSF231026

Scale In	GROSS WEIGHT	105,180	NET TONS	28.59	INBOUND
Scale Out	TARE WEIGHT	48,000	NET WEIGHT	57,180	INVOICE

28.00	YD	Tracking QTY	
28.59	tn	Cont Soil	Origin:Everett 100%

CHANGE:
CHECK :

Everett Incl. Snohomish County --
WA ROOSEVELT , WA

2A **4864877**

Brandie M.

014209 - Strider Construction Co. Inc.
4721 Northwest Road
Bellingham, WA 98225

6/14/22 2:42 pm 6/14/22 2:58 pm

7329 GCEU432102

Contract:MC-19415

BNSF231026

Scale In	GROSS WEIGHT	89,620	NET TONS	20.94	INBOUND
Scale Out	TARE WEIGHT	47,740	NET WEIGHT	41,880	INVOICE

28.00	YD	Tracking QTY	
20.94	tn	Cont Soil	Origin:Everett 100%

CHANGE:
CHECK :

Everett Incl. Snohomish County --
WA ROOSEVELT , WA

2A **4864878**

Brandie M.

014209 - Strider Construction Co. Inc.
4721 Northwest Road
Bellingham, WA 98225

6/14/22 2:53 pm 6/14/22 3:12 pm

2235 TOLU468313

Contract:MC-19415

BNSF231026

Scale In	GROSS WEIGHT	105,680	NET TONS	29.20	INBOUND
Scale Out	TARE WEIGHT	47,280	NET WEIGHT	58,400	INVOICE

28.00	YD	Tracking QTY	
29.20	tn	Cont Soil	Origin:Everett 100%

CHANGE:
CHECK :

Everett Incl. Snohomish County --
WA ROOSEVELT , WA

2A **4864879**

Brandie M.

014209 - Strider Construction Co. Inc.
4721 Northwest Road
Bellingham, WA 98225

6/14/22 3:09 pm 6/14/22 3:36 pm

2234 GCEU432044

Contract:MC-19415

BNSF231026

Scale In	GROSS WEIGHT	101,320	NET TONS	26.75	INBOUND
Scale Out	TARE WEIGHT	47,820	NET WEIGHT	53,500	INVOICE

28.00	YD	Tracking QTY	
26.75	tn	Cont Soil	Origin:Everett 100%

CHANGE:
CHECK :

Everett Incl. Snohomish County --
WA ROOSEVELT , WA

2A **4864882**

Brandie M.

014209 - Strider Construction Co. Inc.
4721 Northwest Road
Bellingham, WA 98225

6/14/22 3:17 pm 6/14/22 3:53 pm

0329 GCEU430532

Contract:MC-19415

BNSF231026

Scale In	GROSS WEIGHT	103,520	NET TONS	27.30	INBOUND
Scale Out	TARE WEIGHT	48,920	NET WEIGHT	54,600	INVOICE

28.00 YD Tracking QTY
27.30 tn Cont Soil Origin:Everett 100%

CHANGE:
CHECK :

Everett Incl. Snohomish County --
WA ROOSEVELT , WA

2A **4864880**

Brandie M.

014209 - Strider Construction Co. Inc.
4721 Northwest Road
Bellingham, WA 98225

6/14/22 3:29 pm 6/14/22 3:49 pm

7329 GCEU435150

Contract:MC-19415

BNSF230021

Scale In	GROSS WEIGHT	102,980	NET TONS	27.85	INBOUND
Scale Out	TARE WEIGHT	47,280	NET WEIGHT	55,700	INVOICE

28.00 YD Tracking QTY
27.85 tn Cont Soil Origin:Everett 100%

CHANGE:
CHECK :

Everett Incl. Snohomish County --
WA ROOSEVELT , WA

2A **4864883**

Brandie M.

014209 - Strider Construction Co. Inc.
4721 Northwest Road
Bellingham, WA 98225

6/14/22 3:42 pm 6/14/22 3:57 pm

2235 GCEU426509

Contract:MC-19415

BNSF230021

Scale In	GROSS WEIGHT	102,240	NET TONS	27.59		INBOUND
Scale Out	TARE WEIGHT	47,060	NET WEIGHT	55,180		INVOICE

28.00	YD	Tracking QTY	
27.59	tn	Cont Soil	Origin:Everett 100%

CHANGE:

CHECK :

CADMAN
HEIDELBERGCEMENTGroup
(888) 322-6847 425-961-7100

WEIGHMASTER STATION
98846900
Sno River Delta Soils
17 E. Marine View Dr.
Everett, WA 98213

TICKET NO. 1124518485			TICKET TIME 3:36:27PM	DATE 6/2/2022	
Customer No. 7832096	Payment Type Account	Customer Name STRIDER CONST CO INC			Order No. 10119451
Customer Job. No.	Customer P.O. 21NT		Map Ref. /		Disp. Ord. #
Truck Type Truck & Trailer	Truck No. RIV55TT	Vehicle or License Plate No.	Trailer or License Plate No.		Zone
Hauler/Carrier No. 7886596	Driver's Name	Delivered/Ordered 1,527.48 /	Load No. 46		Running Total 1,527.48

DEL/P PORT OF EVERETT
DEL/P 2600 FEDERAL AVE
EVERETT

Product	Description	Total	Unit Price	Amount
99005	CLASS 3 SOILS (TN)	32.98		

SCALE WEIGHT
106,540 LB
Gross
40,580 LB/P.T.*
Tare
65,960 LB
Net

GROSS & TARE
☒ Scale 1 ☐ Scale 2
X Angelique
Deputy Weighmaster

A STANDBY SURCHARGE WILL BE ASSESSED FOR LOADS THAT EXCEED 10 MINUTES UNLOADING TIME.

LIABILITY WAIVER
Cadman, (Inc.) will not assume Liability for any property damage or any equipment damage for any delivery beyond the curb line.

Fuel Surcharge				
Sales Tax				
Total				
Standby Time				
This Tickets Grand Total				

No one available to sign, customer waives receipt signature. ☐	Received by Signature X	Print Name (Customer) X	Driver's Signature X

Arrive Job		Start Unloading		Finish Unloading		Standby Time		Customer's Initials X

CADMAN
HEIDELBERGCEMENTGroup
(888) 322-6847 425-961-7100

WEIGHMASTER STATION
98846900
Sno River Delta Soils
17 E. Marine View Dr.
Everett, WA 98213

TICKET NO.	1124518486	TICKET TIME	3:39:42PM	DATE	6/2/2022
Customer No. 7832096	Payment Type Account	Customer Name STRIDER CONST CO INC			Order No. 10119451
Customer Job. No.	Customer P.O. 21NT		Map Ref. /		Disp. Ord. #
Truck Type Truck & Trailer	Truck No. RIV57TT	Vehicle or License Plate No.	Trailer or License Plate No.		Zone
Hauler/Carrier No. 7886596	Driver's Name	Delivered/Ordered 1,561.12 /	Load No. 47		Running Total 1,561.12

DEL/P PORT OF EVERETT
DEL/P 2600 FEDERAL AVE
EVERETT

Product	Description	Total	Unit Price	Amount
99005	CLASS 3 SOILS (TN)	33.64		

SCALE WEIGHT
108,480 LB
Gross
41,200 LB/P.T.*
Tare
67,280 LB
Net

GROSS & TARE
☒ Scale 1 ☐ Scale 2
X Angelique
Deputy Weighmaster

A STANDBY SURCHARGE WILL BE ASSESSED FOR LOADS THAT EXCEED 10 MINUTES UNLOADING TIME.

LIABILITY WAIVER
Cadman, (Inc.) will not assume Liability for any property damage or any equipment damage for any delivery beyond the curb line.

Fuel Surcharge	
Sales Tax	
Total	
Standby Time	
This Tickets Grand Total	

No one available to sign, customer waives receipt signature. ☐	Received by Signature X	Print Name (Customer) X	Driver's Signature X

Arrive Job		Start Unloading		Finish Unloading		Standby Time		Customer's Initials X

CADMAN
HEIDELBERGCEMENTGroup
(888) 322-6847 425-961-7100

WEIGHMASTER STATION

98846900
Sno River Delta Soils
17 E. Marine View Dr.
Everett, WA 98213

TICKET NO.	1124518487	TICKET TIME	3:41:28PM	DATE	6/2/2022
Customer No. 7832096	Payment Type Account	Customer Name STRIDER CONST CO INC			Order No. 10119451
Customer Job. No.	Customer P.O. 21NT		Map Ref. /		Disp. Ord. #
Truck Type Truck & Trailer	Truck No. RIV56TT	Vehicle or License Plate No.	Trailer or License Plate No.		Zone
Hauler/Carrier No. 7886596	Driver's Name	Delivered/Ordered 1,594.71 /	Load No. 48		Running Total 1,594.71

DEL/P PORT OF EVERETT
DEL/P 2600 FEDERAL AVE
EVERETT

Product	Description	Total	Unit Price	Amount
99005	CLASS 3 SOILS (TN)	33.59		

SCALE WEIGHT

Gross 108,640 LB
Tare 41,460 LB/P.T.*
Net 67,180 LB

GROSS & TARE

[X] Scale 1 [ ] Scale 2

X Angelique
Deputy Weighmaster

A STANDBY SURCHARGE WILL BE ASSESSED FOR LOADS THAT EXCEED 10 MINUTES UNLOADING TIME.

LIABILITY WAIVER

Cadman, (Inc.) will not assume Liability for any property damage or any equipment damage for any delivery beyond the curb line.

Fuel Surcharge	
Sales Tax	
Total	
Standby Time	
This Tickets Grand Total	

No one available to sign, customer waives receipt signature. [ ]

Received by Signature X

Print Name (Customer) X

Driver's Signature X

Customer's Initials X

Arrive Job		Start Unloading		Finish Unloading		Standby Time	

CADMAN
HEIDELBERGCEMENTGroup
(888) 322-6847 425-961-7100

WEIGHMASTER STATION
98846900
Sno River Delta Soils
17 E. Marine View Dr.
Everett, WA 98213

TICKET NO.	1124518431	TICKET TIME	7:57:17AM	DATE	6/2/2022
Customer No. 7832096	Payment Type Account	Customer Name STRIDER CONST CO INC			Order No. 10119451
Customer Job. No.	Customer P.O. 21NT		Map Ref. /		Disp. Ord. #
Truck Type Truck & Trailer	Truck No. RIV55TT	Vehicle or License Plate No.	Trailer or License Plate No.		Zone
Hauler/Carrier No. 7886596	Driver's Name	Delivered/Ordered 117.40 /	Load No. 4		Running Total 117.40

DEL/P PORT OF EVERETT
DEL/P 2600 FEDERAL AVE
EVERETT

Product	Description	Total	Unit Price	Amount
99005	CLASS 3 SOILS (TN)	27.05		

SCALE WEIGHT	GROSS & TARE
Gross 94,680 LB	[X] Scale 1 [ ] Scale 2
Tare 40,580 LB/P.T.	X Angelique
Net 54,100 LB	Deputy Weighmaster

A STANDBY SURCHARGE WILL BE ASSESSED FOR LOADS THAT EXCEED 10 MINUTES UNLOADING TIME.

LIABILITY WAIVER

Cadman, (Inc.) will not assume Liability for any property damage or any equipment damage for any delivery beyond the curb line.

Fuel Surcharge	
Sales Tax	
Total	
Standby Time	
This Tickets Grand Total	

No one available to sign, customer waives receipt signature. [ ]	Received by Signature X	Print Name (Customer) X	Driver's Signature X

Arrive Job		Start Unloading		Finish Unloading		Standby Time		Customer's Initials X

CADMAN
HEIDELBERGCEMENTGroup
(888) 322-6847 425-961-7100

WEIGHMASTER STATION
98846900
Sno River Delta Soils
17 E. Marine View Dr.
Everett, WA 98213

TICKET NO.	1124518442	TICKET TIME	8:28:46AM	DATE	6/2/2022
Customer No. 7832096	Payment Type Account	Customer Name STRIDER CONST CO INC			Order No. 10119451
Customer Job. No.	Customer P.O. 21NT		Map Ref. /		Disp. Ord. #
Truck Type Truck & Trailer	Truck No. RIV55TT	Vehicle or License Plate No.	Trailer or License Plate No.		Zone
Hauler/Carrier No. 7886596	Driver's Name	Delivered/Ordered 223.45 /	Load No. 7		Running Total 223.45

DEL/P PORT OF EVERETT
DEL/P 2600 FEDERAL AVE
EVERETT

Product	Description	Total	Unit Price	Amount
99005	CLASS 3 SOILS (TN)	37.66		

SCALE WEIGHT	GROSS & TARE		
Gross 115,900 LB			Fuel Surcharge
Tare 40,580 LB/P.T.*	X Scale 1 ☐ Scale 2	**A STANDBY SURCHARGE WILL BE ASSESSED FOR LOADS THAT EXCEED 10 MINUTES UNLOADING TIME.**	Sales Tax
Net 75,320 LB	X Angelique Deputy Weighmaster	**LIABILITY WAIVER** Cadman, (Inc.) will not assume Liability for any property damage or any equipment damage for any delivery beyond the curb line.	**Total**

No one available to sign, customer waives receipt signature. ☐	Received by Signature X	Print Name (Customer) X	Driver's Signature X	Standby Time

Arrive Job		Start Unloading		Finish Unloading		Standby Time		Customer's Initials X	This Tickets Grand Total	

CADMAN
HEIDELBERGCEMENTGroup
(888) 322-6847 425-961-7100

WEIGHTMASTER STATION
98846900
Sno River Delta Soils
17 E. Marine View Dr.
Everett, WA 98213

TICKET NO.	1124518446	TICKET TIME	9:05:36AM	DATE	6/2/2022
Customer No. 7832096	Payment Type Account	Customer Name STRIDER CONST CO INC			Order No. 10119451
Customer Job. No.	Customer P.O. 21NT		Map Ref. /		Disp. Ord. #
Truck Type Truck & Trailer	Truck No. RIV55TT	Vehicle or License Plate No.	Trailer or License Plate No.		Zone
Hauler/Carrier No. 7886596	Driver's Name	Delivered/Ordered 330.52 /	Load No. 10		Running Total 330.52

DEL/P PORT OF EVERETT
DEL/P 2600 FEDERAL AVE
EVERETT

Product	Description	Total	Unit Price	Amount
99005	CLASS 3 SOILS (TN)	32.91		

SCALE WEIGHT	GROSS & TARE		
Gross 106,400 LB	X Scale 1 ☐ Scale 2	**A STANDBY SURCHARGE WILL BE ASSESSED FOR LOADS THAT EXCEED 10 MINUTES UNLOADING TIME.**	Fuel Surcharge
Tare 40,580 LB/P.T.*	X Angelique Deputy Weighmaster	**LIABILITY WAIVER** Cadman, (Inc.) will not assume Liability for any property damage or any equipment damage for any delivery beyond the curb line.	Sales Tax
Net 65,820 LB			**Total**

No one available to sign, customer waives receipt signature. ☐	Received by Signature X	Print Name (Customer) X	Driver's Signature X	Standby Time

Arrive Job		Start Unloading		Finish Unloading		Standby Time		Customer's Initials X	This Tickets Grand Total	

CADMAN
HEIDELBERGCEMENTGroup®
(888) 322-6847 425-961-7100

WEIGHMASTER STATION
98846900
Sno River Delta Soils
17 E. Marine View Dr.
Everett, WA 98213

TICKET NO.	1124518449	TICKET TIME	9:39:44AM	DATE	6/2/2022

Customer No.	Payment Type	Customer Name	Order No.
7832096	Account	STRIDER CONST CO INC	10119451

Customer Job. No.	Customer P.O.	Map Ref.	Disp. Ord. #
	21NT	/	

Truck Type	Truck No.	Vehicle or License Plate No.	Trailer or License Plate No.	Zone
Truck & Trailer	RIV55TT			

Hauler/Carrier No.	Driver's Name	Delivered/Ordered	Load No.	Running Total
7886596		426.63 /	13	426.63

DEL/P PORT OF EVERETT
DEL/P 2600 FEDERAL AVE
EVERETT

Product	Description	Total	Unit Price	Amount
99005	CLASS 3 SOILS (TN)	30.00		

SCALE WEIGHT
100,580 LB
Gross
40,580 LB/P.T.*
Tare
60,000 LB
Net

GROSS & TARE
☒ Scale 1 ☐ Scale 2
X Angelique
Deputy Weighmaster

A STANDBY SURCHARGE WILL BE ASSESSED FOR LOADS THAT EXCEED 10 MINUTES UNLOADING TIME.

LIABILITY WAIVER
Cadman, (Inc.) will not assume Liability for any property damage or any equipment damage for any delivery beyond the curb line.

Fuel Surcharge	
Sales Tax	
Total	
Standby Time	
This Tickets Grand Total	

No one available to sign, customer waives receipt signature. ☐	Received by Signature X	Print Name (Customer) X	Driver's Signature X

Arrive Job		Start Unloading		Finish Unloading		Standby Time		Customer's Initials X

CADMAN
HEIDELBERGCEMENTGroup
(888) 322-6847 425-961-7100

WEIGHMASTER STATION
98846900
Sno River Delta Soils
17 E. Marine View Dr.
Everett, WA 98213

TICKET NO.	1124518453	TICKET TIME	10:10:59AM	DATE	6/2/2022
Customer No. 7832096	Payment Type Account	Customer Name STRIDER CONST CO INC			Order No. 10119451
Customer Job. No.	Customer P.O. 21NT		Map Ref. /		Disp. Ord. #
Truck Type Truck & Trailer	Truck No. RIV55TT	Vehicle or License Plate No.	Trailer or License Plate No.		Zone
Hauler/Carrier No. 7886596	Driver's Name	Delivered/Ordered 525.70 /	Load No. 16		Running Total 525.70

DEL/P PORT OF EVERETT
DEL/P 2600 FEDERAL AVE
EVERETT

Product	Description	Total	Unit Price	Amount
99005	CLASS 3 SOILS (TN)	33.46		

SCALE WEIGHT
107,500 LB
Gross
40,580 LB/P.T.*
Tare
66,920 LB
Net

GROSS & TARE
X Scale 1 ☐ Scale 2
X Angelique
Deputy Weighmaster

A STANDBY SURCHARGE WILL BE ASSESSED FOR LOADS THAT EXCEED 10 MINUTES UNLOADING TIME.

LIABILITY WAIVER
Cadman, (Inc.) will not assume Liability for any property damage or any equipment damage for any delivery beyond the curb line.

Fuel Surcharge	
Sales Tax	
Total	
Standby Time	
This Tickets Grand Total	

No one available to sign, customer waives receipt signature. ☐	Received by Signature X	Print Name (Customer) X	Driver's Signature X

Arrive Job		Start Unloading		Finish Unloading		Standby Time		Customer's Initials X

CADMAN
HEIDELBERGCEMENTGroup
(888) 322-6847 425-961-7100

TICKET NO.	1124518457	TICKET TIME	10:45:58AM	DATE	6/2/2022
Customer No. 7832096	Payment Type Account	Customer Name STRIDER CONST CO INC			Order No. 10119451
Customer Job. No.	Customer P.O. 21NT		Map Ref. /		Disp. Ord. #
Truck Type Truck & Trailer	Truck No. RIV55TT	Vehicle or License Plate No.	Trailer or License Plate No.		Zone
Hauler/Carrier No. 7886596	Driver's Name	Delivered/Ordered 627.72 /	Load No. 19		Running Total 627.72

WEIGHMASTER STATION
98846500
Sno River Delta Soils
17 E. Marine View Dr.
Everett, WA 98213

DEL/P PORT OF EVERETT
DEL/P 2600 FEDERAL AVE
EVERETT

Product	Description	Total	Unit Price	Amount
99005	CLASS 3 SOILS (TN)	33.99		

SCALE WEIGHT	GROSS & TARE		
108,560 LB	X Scale 1 ☐ Scale 2	A STANDBY SURCHARGE WILL BE ASSESSED FOR LOADS THAT EXCEED 10 MINUTES UNLOADING TIME.	Fuel Surcharge
Gross 40,580 LB/P.T.*			Sales Tax
Tare 67,980 LB	X Angelique	LIABILITY WAIVER	Total
Net	Deputy Weighmaster	Cadman, (Inc.) will not assume Liability for any property damage or any equipment damage for any delivery beyond the curb line.	

No one available to sign, customer waives receipt signature. ☐	Received by Signature X	Print Name (Customer) X	Driver's Signature X	Standby Time

Arrive Job		Start Unloading		Finish Unloading		Standby Time		Customer's Initials X	This Tickets Grand Total	

CADMAN
HEIDELBERGCEMENTGroup
(888) 322-6847 425-961-7100

WEIGHMASTER STATION
98846900
Sno River Delta Soils
17 E. Marine View Dr.
Everett, WA 98213

TICKET NO.	1124518460	TICKET TIME	11:17:21AM	DATE	6/2/2022
Customer No. 7832096	Payment Type Account	Customer Name STRIDER CONST CO INC			Order No. 10119451
Customer Job. No.	Customer P.O. 21NT		Map Ref. /		Disp. Ord. #
Truck Type Truck & Trailer	Truck No. RIV55TT	Vehicle or License Plate No.	Trailer or License Plate No.		Zone
Hauler/Carrier No. 7886596	Driver's Name	Delivered/Ordered 740.78 /	Load No. 22		Running Total 740.78

DEL/P PORT OF EVERETT
DEL/P 2600 FEDERAL AVE
EVERETT

Product	Description	Total	Unit Price	Amount
99005	CLASS 3 SOILS (TN)	38.19		

SCALE WEIGHT	GROSS & TARE		
Gross 116,960 LB	[X] Scale 1 [ ] Scale 2	**A STANDBY SURCHARGE WILL BE ASSESSED FOR LOADS THAT EXCEED 10 MINUTES UNLOADING TIME.**	Fuel Surcharge
Tare 40,580 LB/P.T.*		**LIABILITY WAIVER**	Sales Tax
Net 76,380 LB	X Angelique Deputy Weighmaster	**Cadman, (Inc.) will not assume Liability for any property damage or any equipment damage for any delivery beyond the curb line.**	**Total**

No one available to sign, customer waives receipt signature. [ ]	Received by Signature X	Print Name (Customer) X	Driver's Signature X	Standby Time

Arrive Job		Start Unloading		Finish Unloading		Standby Time		Customer's Initials X	This Tickets Grand Total	

CADMAN
HEIDELBERGCEMENTGroup
(888) 322-6847 425-961-7100

WEIGHMASTER STATION
98846900
Sno River Delta Soils
17 E. Marine View Dr.
Everett, WA 98213

TICKET NO.	1124518463	TICKET TIME	11:47:16AM	DATE	6/2/2022
Customer No. 7832096	Payment Type Account	Customer Name STRIDER CONST CO INC			Order No. 10119451
Customer Job. No.	Customer PO 21NT		Map Ref. /		Disp. Ord. #
Truck Type Truck & Trailer	Truck No. RIV55TT	Vehicle or License Plate No.	Trailer or License Plate No.		Zone
Hauler/Carrier No. 7886596	Driver's Name	Delivered/Ordered 844.50 /	Load No. 25		Running Total 844.50

DEL/P PORT OF EVERETT
DEL/P 2600 FEDERAL AVE
EVERETT

Product	Description	Total	Unit Price	Amount
99005	CLASS 3 SOILS (TN)	32.15		

SCALE WEIGHT
104,880 LB
Gross 40,580 LB/P.T.*
Tare 64,300 LB
Net

GROSS & TARE
X Scale 1 ☐ Scale 2
X Angelique
Deputy Weighmaster

A STANDBY SURCHARGE WILL BE ASSESSED FOR LOADS THAT EXCEED 10 MINUTES UNLOADING TIME.

LIABILITY WAIVER
Cadman, (Inc.) will not assume Liability for any property damage or any equipment damage for any delivery beyond the curb line.

Fuel Surcharge	
Sales Tax	
Total	
Standby Time	
This Tickets Grand Total	

No one available to sign, customer waives receipt signature. ☐
Received by Signature X
Print Name (Customer) X
Driver's Signature X

Arrive Job		Start Unloading		Finish Unloading		Standby Time		Customer's Initials X

CADMAN
HEIDELBERGCEMENTGroup
(888) 322-6847 425-961-7100

WEIGHMASTER STATION
98846900
Sno River Delta Soils
17 E. Marine View Dr.
Everett, WA 98213

TICKET NO.	1124518466	TICKET TIME	12:21:27PM	DATE	6/2/2022
Customer No. 7832096	Payment Type Account	Customer Name STRIDER CONST CO INC			Order No. 10119451
Customer Job. No.	Customer P.O. 21NT		Map Ref. /		Disp. Ord. #
Truck Type Truck & Trailer	Truck No. RIV55TT	Vehicle or License Plate No.	Trailer or License Plate No.		Zone
Hauler/Carrier No. 7886596	Driver's Name	Delivered/Ordered 941.75 /	Load No. 28		Running Total 941.75

DEL/P PORT OF EVERETT
DEL/P 2600 FEDERAL AVE
EVERETT

Product	Description	Total	Unit Price	Amount
99005	CLASS 3 SOILS (TN)	32.10		

SCALE WEIGHT	GROSS & TARE		
Gross 104,780 LB	[X] Scale 1 [ ] Scale 2	A STANDBY SURCHARGE WILL BE ASSESSED FOR LOADS THAT EXCEED 10 MINUTES UNLOADING TIME.	Fuel Surcharge
Tare 40,580 LB/P.T.*			Sales Tax
Net 64,200 LB	X Angelique Deputy Weighmaster	LIABILITY WAIVER Cadman, (Inc.) will not assume Liability for any property damage or any equipment damage for any delivery beyond the curb line.	**Total**

No one available to sign, customer waives receipt signature. [ ]	Received by Signature X	Print Name (Customer) X	Driver's Signature X	Standby Time

Arrive Job		Start Unloading		Finish Unloading		Standby Time		Customer's Initials X	This Tickets Grand Total	

CADMAN
HEIDELBERGCEMENTGroup
(888) 322-6847 425-961-7100

TICKET NO	1124518469	TICKET TIME	12:53:51PM	DATE	6/2/2022

Customer No.	Payment Type	Customer Name	Order No.
7832096	Account	STRIDER CONST CO INC	10119451

Customer Job. No.	Customer P.O.	Map Ref.	Disp. Ord. #
	21NT	/	

Truck Type	Truck No.	Vehicle or License Plate No.	Trailer or License Plate No.	Zone
Truck & Traile	RIV55TT			

Hauler/Carrier No.	Driver's Name	Delivered/Ordered	Load No.	Running Total
7886596		1,034.57 /	31	1,034.57

WEIGHMASTER STATION
98846900
Sno River Delta Soils
17 E. Marine View Dr.
Everett, WA 98213

DEL/P PORT OF EVERETT
DEL/P 2600 FEDERAL AVE
EVERETT

Product	Description	Total	Unit Price	Amount
99005	CLASS 3 SOILS (TN)	31.05		

SCALE WEIGHT	GROSS & TARE
102,680 LB	
Gross 40,580 LB/P.T.*	
Tare 62,100 LB	
Net	

☒ Scale 1 ☐ Scale 2
X Angelique
Deputy Weighmaster

A STANDBY SURCHARGE WILL BE ASSESSED FOR LOADS THAT EXCEED 10 MINUTES UNLOADING TIME.

LIABILITY WAIVER

Cadman, (Inc.) will not assume Liability for any property damage or any equipment damage for any delivery beyond the curb line.

Fuel Surcharge	
Sales Tax	
Total	

No one available to sign, customer waives receipt signature. ☐	Received by Signature X	Print Name (Customer) X	Driver's Signature X	Standby Time	

Arrive Job		Start Unloading		Finish Unloading		Standby Time		Customer's Initials X	This Tickets Grand Total	

CADMAN
HEIDELBERGCEMENTGroup
(888) 322-6847 425-961-7100

WEIGHMASTER STATION
98846900
Sno River Delta Soils
17 E. Marine View Dr.
Everett, WA 98213

TICKET NO.	1124518472	TICKET TIME	1:25:38PM	DATE	6/2/2022
Customer No. 7832096	Payment Type Account	Customer Name STRIDER CONST CO INC			Order No. 10119451
Customer Job. No.	Customer P.O. 21NT		Map Ref /		Disp. Ord. #
Truck Type Truck & Trailer	Truck No. RIV55TT	Vehicle or License Plate No.	Trailer or License Plate No.		Zone
Hauler/Carrier No. 7886596	Driver's Name	Delivered/Ordered 1,129.35 /	Load No. 34		Running Total 1,129.35

DEL/P PORT OF EVERETT
DEL/P 2600 FEDERAL AVE
EVERETT

Product	Description	Total	Unit Price	Amount
99005	CLASS 3 SOILS (TN)	30.46		

SCALE WEIGHT
101,500 LB
Gross
40,580 LB/P.T.*
Tare
60,920 LB
Net

GROSS & TARE
☒ Scale 1 ☐ Scale 2
X Angelique
Deputy Weighmaster

A STANDBY SURCHARGE WILL BE ASSESSED FOR LOADS THAT EXCEED 10 MINUTES UNLOADING TIME.

LIABILITY WAIVER
Cadman, (Inc.) will not assume Liability for any property damage or any equipment damage for any delivery beyond the curb line.

Fuel Surcharge	
Sales Tax	
Total	
Standby Time	
This Tickets Grand Total	

No one available to sign, customer waives receipt signature. ☐	Received by Signature X	Print Name (Customer) X	Driver's Signature X

Arrive Job		Start Unloading		Finish Unloading		Standby Time		Customer's Initials X

CADMAN
HEIDELBERGCEMENTGroup®
(888) 322-6847 425-961-7100

WEIGHTMASTER STATION
98846900
Sno River Delta Soils
17 E. Marine View Dr.
Everett, WA 98213

TICKET NO.	1124518475	TICKET TIME	1:57:10PM	DATE	6/2/2022
Customer No. 7832096	Payment Type Account	Customer Name STRIDER CONST CO INC			Order No. 10119451
Customer Job. No.	Customer P.O. 21NT		Map Ref. /		Disp. Ord. #
Truck Type Truck & Trailer	Truck No. RIV55TT	Vehicle or License Plate No.	Trailer or License Plate No.		Zone
Hauler/Carrier No. 7886596	Driver's Name	Delivered/Ordered 1,225.95 /	Load No. 37		Running Total 1,225.95

DEL/P PORT OF EVERETT
DEL/P 2600 FEDERAL AVE
EVERETT

Product	Description	Total	Unit Price	Amount
99005	CLASS 3 SOILS (TN)	30.44		

SCALE WEIGHT
101,460 LB Gross
40,580 LB/P.T.* Tare
60,880 LB Net

GROSS & TARE
☒ Scale 1 ☐ Scale 2
X Angelique
Deputy Weighmaster

A STANDBY SURCHARGE WILL BE ASSESSED FOR LOADS THAT EXCEED 10 MINUTES UNLOADING TIME.

LIABILITY WAIVER
Cadman, (Inc.) will not assume Liability for any property damage or any equipment damage for any delivery beyond the curb line.

Fuel Surcharge	
Sales Tax	
Total	
Standby Time	
This Tickets Grand Total	

No one available to sign, customer waives receipt signature. ☐	Received by Signature X	Print Name (Customer) X	Driver's Signature X

Arrive Job		Start Unloading		Finish Unloading		Standby Time		Customer's Initials X

CADMAN
HEIDELBERGCEMENTGroup
(888) 322-6847 425-961-7100

WEIGHTMASTER STATION
98846900
Sno River Delta Soils
17 E. Marine View Dr.
Everett, WA 98213

TICKET NO.	1124518478	TICKET TIME	2:28:47PM	DATE	6/2/2022
Customer No. 7832096	Payment Type Account	Customer Name STRIDER CONST CO INC			Order No. 10119451
Customer Job. No.	Customer P.O. 21NT		Map Ref. /		Disp. Ord. #
Truck Type Truck & Trailer	Truck No. RIV55TT	Vehicle or License Plate No.	Trailer or License Plate No.		Zone
Hauler/Carrier No. 7886596	Driver's Name	Delivered/Ordered 1,322.53 /	Load No. 40		Running Total 1,322.53

DEL/P PORT OF EVERETT
DEL/P 2600 FEDERAL AVE
EVERETT

Product	Description	Total	Unit Price	Amount
99005	CLASS 3 SOILS (TN)	32.46		

SCALE WEIGHT	GROSS & TARE		
Gross 105,500 LB	X Scale 1 ☐ Scale 2	**A STANDBY SURCHARGE WILL BE ASSESSED FOR LOADS THAT EXCEED 10 MINUTES UNLOADING TIME.**	Fuel Surcharge
Tare 40,580 LB/P.T.*		**LIABILITY WAIVER**	Sales Tax
Net 64,920 LB	X Angelique Deputy Weighmaster	**Cadman, (Inc.) will not assume Liability for any property damage or any equipment damage for any delivery beyond the curb line.**	**Total**

No one available to sign, customer waives receipt signature. ☐	Received by Signature X	Print Name (Customer) X	Driver's Signature X	Standby Time

Arrive Job	Start Unloading	Finish Unloading	Standby Time	Customer's Initials X	This Tickets Grand Total

CADMAN
HEIDELBERGCEMENTGroup
(888) 322-6847 425-961-7100

WEIGHTMASTER STATION
98846900
Sno River Delta Soils
17 E. Marine View Dr.
Everett, WA 98213

TICKET NO.	1124518482	TICKET TIME	2:58:49PM	DATE	6/2/2022
Customer No. 7832096	Payment Type Account	Customer Name STRIDER CONST CO INC			Order No. 10119451
Customer Job. No.	Customer P.O. 21NT		Map Ref. /		Disp. Ord. #
Truck Type Truck & Trailer	Truck No. RIV55TT	Vehicle or License Plate No.	Trailer or License Plate No.		Zone
Hauler/Carrier No. 7886596	Driver's Name	Delivered/Ordered 1,427.62 /	Load No. 43		Running Total 1,427.62

DEL/P PORT OF EVERETT
DEL/P 2600 FEDERAL AVE ,
EVERETT

Product	Description	Total	Unit Price	Amount
99005	CLASS 3 SOILS (TN)	35.68		

SCALE WEIGHT	GROSS & TARE		
Gross 111,940 LB		A STANDBY SURCHARGE WILL BE ASSESSED FOR LOADS THAT EXCEED 10 MINUTES UNLOADING TIME.	Fuel Surcharge
Tare 40,580 LB/P.T.*	☒ Scale 1 ☐ Scale 2	LIABILITY WAIVER	Sales Tax
Net 71,360 LB	X Angelique Deputy Weighmaster	Cadman, (Inc.) will not assume Liability for any property damage or any equipment damage for any delivery beyond the curb line.	**Total**

No one available to sign, customer waives receipt signature. ☐	Received by Signature X	Print Name (Customer) X	Driver's Signature X	Standby Time

Arrive Job		Start Unloading		Finish Unloading		Standby Time		Customer's Initials X	This Tickets Grand Total	

CADMAN
HEIDELBERGCEMENTGroup
(888) 322-6847 425-961-7100

WEIGHMASTER STATION
98846900
Sno River Delta Soils
17 E. Marine View Dr.
Everett, WA 98213

TICKET NO.	1124518483	TICKET TIME	3:01:50PM	DATE	6/2/2022
Customer No. 7832096	Payment Type Account	Customer Name STRIDER CONST CO INC			Order No. 10119451
Customer Job. No.	Customer P.O. 21NT		Map Ref. /		Disp. Ord. #
Truck Type Truck & Trailer	Truck No. RIV57TT	Vehicle or License Plate No.	Trailer or License Plate No.		Zone
Hauler/Carrier No. 7886596	Driver's Name	Delivered/Ordered 1,462.29 /	Load No. 44		Running Total 1,462.29

DEL/P PORT OF EVERETT
DEL/P 2600 FEDERAL AVE
EVERETT

Product	Description	Total	Unit Price	Amount
99005	CLASS 3 SOILS (TN)	34.67		

SCALE WEIGHT	GROSS & TARE		
Gross 110,540 LB	☒ Scale 1 ☐ Scale 2	A STANDBY SURCHARGE WILL BE ASSESSED FOR LOADS THAT EXCEED 10 MINUTES UNLOADING TIME.	Fuel Surcharge
Tare 41,200 LB/P.T.*	X Angelique	LIABILITY WAIVER	Sales Tax
Net 69,340 LB	Deputy Weighmaster	Cadman, (Inc.) will not assume Liability for any property damage or any equipment damage for any delivery beyond the curb line.	**Total**

No one available to sign, customer waives receipt signature. ☐	Received by Signature X	Print Name (Customer) X	Driver's Signature X	Standby Time

Arrive Job		Start Unloading		Finish Unloading		Standby Time		Customer's Initials X	This Tickets Grand Total	

CADMAN
HEIDELBERGCEMENTGroup
(888) 322-6847 425-961-7100

WEIGHMASTER STATION
98846900
Sno River Delta Soils
17 E. Marine View Dr.
Everett, WA 98213

TICKET NO.	1124518479	TICKET TIME	2:31:30PM	DATE	6/2/2022

Customer No.	Payment Type	Customer Name	Order No.
7832096	Account	STRIDER CONST CO INC	10119451

Customer Job. No.	Customer P.O.	Map Ref.	Disp. Ord. #
	21NT	/	

Truck Type	Truck No.	Vehicle or License Plate No.	Trailer or License Plate No.	Zone
Truck & Traile	RIV57TT			

Hauler/Carrier No.	Driver's Name	Delivered/Ordered	Load No.	Running Total
7886596		1,357.63 /	41	1,357.63

DEL/P PORT OF EVERETT
DEL/P 2600 FEDERAL AVE
EVERETT

Product	Description	Total	Unit Price	Amount
99005	CLASS 3 SOILS (TN)	35.10		

SCALE WEIGHT

111,400 LB
Gross
41,200 LB/P.T.*
Tare
70,200 LB
Net

GROSS & TARE

☒ Scale 1 ☐ Scale 2

X Angelique
Deputy Weighmaster

A STANDBY SURCHARGE WILL BE ASSESSED FOR LOADS THAT EXCEED 10 MINUTES UNLOADING TIME.

LIABILITY WAIVER

Cadman, (Inc.) will not assume Liability for any property damage or any equipment damage for any delivery beyond the curb line.

Fuel Surcharge	
Sales Tax	
Total	
Standby Time	
This Tickets Grand Total	

No one available to sign, customer waives receipt signature. ☐	Received by Signature	Print Name (Customer)	Driver's Signature
	X	X	X

Arrive Job		Start Unloading		Finish Unloading		Standby Time		Customer's Initials
								X

CADMAN
HEIDELBERGCEMENTGroup
(888) 322-6847 425-961-7100

WEIGHMASTER STATION
98846900
Sno River Delta Soils
17 E. Marine View Dr.
Everett, WA 98213

TICKET NO.	1124518476	TICKET TIME	2:01:17PM	DATE	6/2/2022
Customer No. 7832096	Payment Type Account	Customer Name STRIDER CONST CO INC			Order No. 10119451
Customer Job. No.	Customer P.O. 21NT		Map Ref. /		Disp. Ord. #
Truck Type Truck & Traile	Truck No. RIV57TT	Vehicle or License Plate No.	Trailer or License Plate No.		Zone
Hauler/Carrier No. 7886596	Driver's Name	Delivered/Ordered 1,257.77 /	Load No. 38		Running Total 1,257.77

DEL/P PORT OF EVERETT
DEL/P 2600 FEDERAL AVE
EVERETT

Product	Description	Total	Unit Price	Amount
99005	CLASS 3 SOILS (TN)	31.82		

SCALE WEIGHT	GROSS & TARE		
Gross 104,840 LB		A STANDBY SURCHARGE WILL BE ASSESSED FOR LOADS THAT EXCEED 10 MINUTES UNLOADING TIME.	Fuel Surcharge
Tare 41,200 LB/P.T.*	[X] Scale 1 [ ] Scale 2	LIABILITY WAIVER	Sales Tax
Net 63,640 LB	X Angelique Deputy Weighmaster	Cadman, (Inc.) will not assume Liability for any property damage or any equipment damage for any delivery beyond the curb line.	**Total**

No one available to sign, customer waives receipt signature [ ]	Received by Signature X	Print Name (Customer) X	Driver's Signature X	Standby Time

Arrive Job		Start Unloading		Finish Unloading		Standby Time		Customer's Initials X	This Tickets Grand Total	

CADMAN
HEIDELBERGCEMENTGroup
(888) 322-6847 425-961-7100

WEIGHMASTER STATION
98846900
Sno River Delta Soils
17 E. Marine View Dr.
Everett, WA 98213

TICKET NO.	1124518473	TICKET TIME	1:29:26PM	DATE	6/2/2022

Customer No.	Payment Type	Customer Name	Order No.
7832096	Account	STRIDER CONST CO INC	10119451

Customer Job. No.	Customer P.O.	Map Ref.	Disp. Ord. #
	21NT	/	

Truck Type	Truck No.	Vehicle or License Plate No.	Trailer or License Plate No.	Zone
Truck & Trailer	RIV57TT			

Hauler/Carrier No.	Driver's Name	Delivered/Ordered	Load No.	Running Total
7886596		1,162.63 /	35	1,162.63

DEL/P PORT OF EVERETT
DEL/P 2600 FEDERAL AVE
EVERETT

Product	Description	Total	Unit Price	Amount
99005	CLASS 3 SOILS (TN)	33.28		

SCALE WEIGHT	GROSS & TARE
Gross 107,760 LB	
Tare 41,200 LB/P.T.*	X Scale 1 ☐ Scale 2
Net 66,560 LB	X Angelique Deputy Weighmaster

A STANDBY SURCHARGE WILL BE ASSESSED FOR LOADS THAT EXCEED 10 MINUTES UNLOADING TIME.

LIABILITY WAIVER

Cadman, (Inc.) will not assume Liability for any property damage or any equipment damage for any delivery beyond the curb line.

Fuel Surcharge	
Sales Tax	
Total	
Standby Time	
This Tickets Grand Total	

No one available to sign, customer waives receipt signature. ☐	Received by Signature X	Print Name (Customer) X	Driver's Signature X

Arrive Job		Start Unloading		Finish Unloading		Standby Time		Customer's Initials X

CADMAN
HEIDELBERGCEMENTGroup
(888) 322-6847 425-961-7100

WEIGHMASTER STATION
98846900
Sno River Delta Soils
17 E. Marine View Dr.
Everett, WA 98213

TICKET NO.	1124518470	TICKET TIME	12:57:01PM	DATE	6/2/2022
Customer No. 7832096	Payment Type Account	Customer Name STRIDER CONST CO INC			Order No. 10119451
Customer Job. No.	Customer P.O. 21NT		Map Ref. /		Disp. Ord. #
Truck Type Truck & Trailer	Truck No. RIV57TT	Vehicle or License Plate No.	Trailer or License Plate No.		Zone
Hauler/Carrier No. 7886596	Driver's Name	Delivered/Ordered 1,066.74 /	Load No. 32		Running Total 1,066.74

DEL/P PORT OF EVERETT
DEL/P 2600 FEDERAL AVE
EVERETT

Product	Description	Total	Unit Price	Amount
99005	CLASS 3 SOILS (TN)	32.17		

SCALE WEIGHT
105,540 LB
Gross
41,200 LB/P.T.*
Tare
64,340 LB
Net

GROSS & TARE
☒ Scale 1 ☐ Scale 2
X Angelique
Deputy Weighmaster

A STANDBY SURCHARGE WILL BE ASSESSED FOR LOADS THAT EXCEED 10 MINUTES UNLOADING TIME.

LIABILITY WAIVER
Cadman, (Inc.) will not assume Liability for any property damage or any equipment damage for any delivery beyond the curb line.

Fuel Surcharge	
Sales Tax	
Total	
Standby Time	
This Tickets Grand Total	

No one available to sign, customer waives receipt signature. ☐	Received by Signature X	Print Name (Customer) X	Driver's Signature X	Customer's Initials X

Arrive Job		Start Unloading		Finish Unloading		Standby Time	

CADMAN
HEIDELBERGCEMENTGroup®
(888) 322-6847 425-961-7100

WEIGHMASTER STATION
98846900
Sno River Delta Soils
17 E. Marine View Dr.
Everett, WA 98213

TICKET NO.	1124518467	TICKET TIME	12:24:43PM	DATE	6/2/2022
Customer No. 7832096	Payment Type Account	Customer Name STRIDER CONST CO INC			Order No. 10119451
Customer Job. No.	Customer P.O. 21NT		Map Ref. /		Disp. Ord. #
Truck Type Truck & Trailer	Truck No. RIV57TT	Vehicle or License Plate No.	Trailer or License Plate No.		Zone
Hauler/Carrier No. 7886596	Driver's Name	Delivered/Ordered 973.30 /	Load No. 29		Running Total 973.30

DEL/P PORT OF EVERETT
DEL/P 2600 FEDERAL AVE
EVERETT

Product	Description	Total	Unit Price	Amount
99005	CLASS 3 SOILS (TN)	31.55		

SCALE WEIGHT	GROSS & TARE		
Gross 104,300 LB	[X] Scale 1 [ ] Scale 2	**A STANDBY SURCHARGE WILL BE ASSESSED FOR LOADS THAT EXCEED 10 MINUTES UNLOADING TIME.**	Fuel Surcharge
Tare 41,200 LB/P.T.*	X Angelique	**LIABILITY WAIVER**	Sales Tax
Net 63,100 LB	Deputy Weighmaster	Cadman, (Inc.) will not assume Liability for any property damage or any equipment damage for any delivery beyond the curb line.	**Total**

No one available to sign, customer waives receipt signature. [ ]	Received by Signature X	Print Name (Customer) X	Driver's Signature X	Standby Time

Arrive Job		Start Unloading		Finish Unloading		Standby Time		Customer's Initials X	This Tickets Grand Total	

CADMAN
HEIDELBERGCEMENTGroup®
(888) 322-6847 425-961-7100

WEIGHMASTER STATION
98846900
Sno River Delta Soils
17 E. Marine View Dr.
Everett, WA 98213

TICKET NO.	1124518464	TICKET TIME	11:53:52AM	DATE	6/2/2022
Customer No. 7832096	Payment Type Account	Customer Name STRIDER CONST CO INC			Order No. 10119451
Customer Job. No.	Customer P.O. 21NT		Map Ref. /		Disp. Ord. #
Truck Type Truck & Trailer	Truck No. RIV57TT	Vehicle or License Plate No.	Trailer or License Plate No.		Zone
Hauler/Carrier No. 7886596	Driver's Name	Delivered/Ordered 879.76 /	Load No. 26		Running Total 879.76

DEL/P PORT OF EVERETT
DEL/P 2600 FEDERAL AVE
EVERETT

Product	Description	Total	Unit Price	Amount
99005	CLASS 3 SOILS (TN)	35.26		

SCALE WEIGHT	GROSS & TARE		
Gross 111,720 LB	[X] Scale 1 [ ] Scale 2	A STANDBY SURCHARGE WILL BE ASSESSED FOR LOADS THAT EXCEED 10 MINUTES UNLOADING TIME.	Fuel Surcharge
Tare 41,200 LB/P.T.*	X Angelique	LIABILITY WAIVER	Sales Tax
Net 70,520 LB	Deputy Weighmaster	Cadman, (Inc.) will not assume Liability for any property damage or any equipment damage for any delivery beyond the curb line.	**Total**

No one available to sign, customer waives receipt signature. [ ]	Received by Signature X	Print Name (Customer) X	Driver's Signature X	Standby Time

Arrive Job		Start Unloading		Finish Unloading		Standby Time		Customer's Initials X	This Tickets Grand Total	

CADMAN
HEIDELBERGCEMENTGroup
(888) 322-6847 425-961-7100

WEIGHMASTER STATION
98846900
Sno River Delta Soils
17 E. Marine View Dr.
Everett, WA 98213

TICKET NO.	1124518461	TICKET TIME	11:21:46AM	DATE	6/2/2022
Customer No. 7832096	Payment Type Account	Customer Name STRIDER CONST CO INC			Order No. 10119451
Customer Job. No.	Customer P.O. 21NT		Map Ref. /		Disp. Ord. #
Truck Type Truck & Traile	Truck No. RIV57TT	Vehicle or License Plate No.	Trailer or License Plate No.		Zone
Hauler/Carrier No. 7886596	Driver's Name	Delivered/Ordered 779.32 /	Load No. 23		Running Total 779.32

DEL/P PORT OF EVERETT
DEL/P 2600 FEDERAL AVE
EVERETT

Product	Description	Total	Unit Price	Amount
99005	CLASS 3 SOILS (TN)	38.54		

SCALE WEIGHT
118,280 LB
Gross
41,200 LB/P.T.*
Tare
77,080 LB
Net

GROSS & TARE
☒ Scale 1 ☐ Scale 2
X Angelique
Deputy Weighmaster

A STANDBY SURCHARGE WILL BE ASSESSED FOR LOADS THAT EXCEED 10 MINUTES UNLOADING TIME.

LIABILITY WAIVER
Cadman, (Inc.) will not assume Liability for any property damage or any equipment damage for any delivery beyond the curb line.

Fuel Surcharge	
Sales Tax	
Total	
Standby Time	
This Tickets Grand Total	

No one available to sign, customer waives receipt signature. ☐	Received by Signature X	Print Name (Customer) X	Driver's Signature X

Arrive Job		Start Unloading		Finish Unloading		Standby Time		Customer's Initials X

CADMAN
HEIDELBERGCEMENTGroup®
(888) 322-6847 425-961-7100

WEIGHMASTER STATION
98846900
Sno River Delta Soils
17 E. Marine View Dr.
Everett, WA 98213

TICKET NO.	1124518458	TICKET TIME	10:50:20AM	DATE	6/2/2022

Customer No.	Payment Type	Customer Name	Order No.
7832096	Account	STRIDER CONST CO INC	10119451

Customer Job. No.	Customer P.O.	Map Ref.	Disp. Ord. #
	21NT	/	

Truck Type	Truck No.	Vehicle or License Plate No.	Trailer or License Plate No.	Zone
Truck & Traile	RIV57TT			

Hauler/Carrier No.	Driver's Name	Delivered/Ordered	Load No.	Running Total
7886596		666.99 /	20	666.99

DEL/P PORT OF EVERETT
DEL/P 2600 FEDERAL AVE
EVERETT

Product	Description	Total	Unit Price	Amount
99005	CLASS 3 SOILS (TN)	39.27		

SCALE WEIGHT
119,740 LB
Gross 41,200 LB/P.T.*
Tare 78,540 LB
Net

GROSS & TARE
☒ Scale 1 ☐ Scale 2
X Angelique
Deputy Weighmaster

A STANDBY SURCHARGE WILL BE ASSESSED FOR LOADS THAT EXCEED 10 MINUTES UNLOADING TIME.

LIABILITY WAIVER
Cadman, (Inc.) will not assume Liability for any property damage or any equipment damage for any delivery beyond the curb line.

Fuel Surcharge	
Sales Tax	
Total	

No one available to sign, customer waives receipt signature. ☐

Received by Signature X

Print Name (Customer) X

Driver's Signature X

Standby Time

Arrive Job		Start Unloading		Finish Unloading		Standby Time		Customer's Initials X	**This Tickets Grand Total**	

CADMAN
HEIDELBERGCEMENTGroup
(888) 322-6847 425-961-7100

WEIGHMASTER STATION
98846900
Sno River Delta Soils
17 E. Marine View Dr.
Everett, WA 98213

TICKET NO.	1124518454	TICKET TIME	10:18:06AM	DATE	6/2/2022

Customer No.	Payment Type	Customer Name	Order No.
7832096	Account	STRIDER CONST CO INC	10119451

Customer Job. No.	Customer P.O.	Map Ref.	Disp. Ord. #
	21NT	/	

Truck Type	Truck No.	Vehicle or License Plate No.	Trailer or License Plate No.	Zone
Truck & Trailer	RIV57TT			

Hauler/Carrier No.	Driver's Name	Delivered/Ordered	Load No.	Running Total
7886596		559.56 /	17	559.56

DEL/P PORT OF EVERETT
DEL/P 2600 FEDERAL AVE
EVERETT

Product	Description	Total	Unit Price	Amount
99005	CLASS 3 SOILS (TN)	33.86		

SCALE WEIGHT
108,920 LB
Gross
41,200 LB/P.T.*
Tare
67,720 LB
Net

GROSS & TARE
☒ Scale 1 ☐ Scale 2
X Angelique
Deputy Weighmaster

A STANDBY SURCHARGE WILL BE ASSESSED FOR LOADS THAT EXCEED 10 MINUTES UNLOADING TIME.

LIABILITY WAIVER
Cadman, (Inc.) will not assume Liability for any property damage or any equipment damage for any delivery beyond the curb line.

Fuel Surcharge	
Sales Tax	
Total	
Standby Time	
This Tickets Grand Total	

No one available to sign, customer waives receipt signature. ☐	Received by Signature	Print Name (Customer)	Driver's Signature
	X	X	X

Arrive Job		Start Unloading		Finish Unloading		Standby Time		Customer's Initials
								X

CADMAN
HEIDELBERGCEMENTGroup®
(888) 322-6847 425-961-7100

WEIGHMASTER STATION
98846900
Sno River Delta Soils
17 E. Marine View Dr.
Everett, WA 98213

TICKET NO.	1124518450	TICKET TIME	9:45:07AM	DATE	6/2/2022
Customer No. 7832096	Payment Type Account	Customer Name STRIDER CONST CO INC			Order No. 10119451
Customer Job. No.	Customer P.O. 21NT		Map Ref. /		Disp. Ord. #
Truck Type Truck & Trailer	Truck No. RIV57TT	Vehicle or License Plate No.	Trailer or License Plate No.		Zone
Hauler/Carrier No. 7886596	Driver's Name	Delivered/Ordered 459.37 /	Load No. 14		Running Total 459.37

DEL/P PORT OF EVERETT
DEL/P 2600 FEDERAL AVE
EVERETT

Product	Description	Total	Unit Price	Amount
99005	CLASS 3 SOILS (TN)	32.74		

SCALE WEIGHT
106,680 LB
Gross
41,200 LB/P.T.*
Tare
65,480 LB
Net

GROSS & TARE
☒ Scale 1 ☐ Scale 2
X Angelique
Deputy Weighmaster

A STANDBY SURCHARGE WILL BE ASSESSED FOR LOADS THAT EXCEED 10 MINUTES UNLOADING TIME.

LIABILITY WAIVER
Cadman, (Inc.) will not assume Liability for any property damage or any equipment damage for any delivery beyond the curb line.

Fuel Surcharge	
Sales Tax	
Total	
Standby Time	
This Tickets Grand Total	

No one available to sign, customer waives receipt signature. ☐
Received by Signature X
Print Name (Customer) X
Driver's Signature X

Arrive Job		Start Unloading		Finish Unloading		Standby Time		Customer's Initials X

CADMAN
HEIDELBERGCEMENTGroup®
(888) 322-6847 425-961-7100

WEIGHMASTER STATION
98846900
Sno River Delta Soils
17 E. Marine View Dr.
Everett, WA 98213

TICKET NO. 1124518447		TICKET TIME 9:12:07AM	DATE 6/2/2022	
Customer No. 7832096	Payment Type Account	Customer Name STRIDER CONST CO INC		Order No. 10119451
Customer Job. No.	Customer P.O. 21NT		Map Ref. /	Disp. Ord. #
Truck Type Truck & Trailer	Truck No. RIV57TT	Vehicle or License Plate No.	Trailer or License Plate No.	Zone
Hauler/Carrier No. 7886596	Driver's Name	Delivered/Ordered 363.63 /	Load No. 11	Running Total 363.63

DEL/P PORT OF EVERETT
DEL/P 2600 FEDERAL AVE
EVERETT

Product	Description	Total	Unit Price	Amount
99005	CLASS 3 SOILS (TN)	33.11		

SCALE WEIGHT
107,420 LB
Gross
41,200 LB/P.T.*
Tare
66,220 LB
Net

GROSS & TARE
X Scale 1 ☐ Scale 2
X Angelique
Deputy Weighmaster

A STANDBY SURCHARGE WILL BE ASSESSED FOR LOADS THAT EXCEED 10 MINUTES UNLOADING TIME.

LIABILITY WAIVER
Cadman, (Inc.) will not assume Liability for any property damage or any equipment damage for any delivery beyond the curb line.

Fuel Surcharge	
Sales Tax	
Total	
Standby Time	
This Tickets Grand Total	

No one available to sign, customer waives receipt signature. ☐	Received by Signature X	Print Name (Customer) X	Driver's Signature X	Arrive Job		Start Unloading		Finish Unloading		Standby Time		Customer's Initials X

CADMAN
HEIDELBERGCEMENTGroup
(888) 322-6847 425-961-7100

WEIGHMASTER STATION
98846900
Sno River Delta Soils
17 E. Marine View Dr.
Everett, WA 98213

TICKET NO.	1124518443	TICKET TIME	8:35:10AM	DATE	6/2/2022

Customer No.	Payment Type	Customer Name	Order No.
7832096	Account	STRIDER CONST CO INC	10119451

Customer Job. No.	Customer P.O.	Map Ref.	Disp. Ord. #
	21NT	/	

Truck Type	Truck No.	Vehicle or License Plate No.	Trailer or License Plate No.	Zone
Truck & Trailer	RIV57TT			

Hauler/Carrier No.	Driver's Name	Delivered/Ordered	Load No.	Running Total
7886596		261.90 /	8	261.90

DEL/P PORT OF EVERETT
DEL/P 2600 FEDERAL AVE
EVERETT

Product	Description	Total	Unit Price	Amount
99005	CLASS 3 SOILS (TN)	38.45		

SCALE WEIGHT
Gross 118,100 LB
Tare 41,200 LB/P.T.
Net 76,900 LB

GROSS & TARE
X Scale 1 ☐ Scale 2
X Angelique
Deputy Weighmaster

A STANDBY SURCHARGE WILL BE ASSESSED FOR LOADS THAT EXCEED 10 MINUTES UNLOADING TIME.

LIABILITY WAIVER
Cadman, (Inc.) will not assume Liability for any property damage or any equipment damage for any delivery beyond the curb line.

Fuel Surcharge	
Sales Tax	
Total	
Standby Time	
This Tickets Grand Total	

No one available to sign, customer waives receipt signature. ☐	Received by Signature	Print Name (Customer)	Driver's Signature
	X	X	X

Arrive Job		Start Unloading		Finish Unloading		Standby Time		Customer's Initials
								X

CADMAN
HEIDELBERGCEMENTGroup
(888) 322-6847 425-961-7100

WEIGHMASTER STATION
98946900
Sno River Delta Soils
17 E. Marine View Dr.
Everett, WA 98213

TICKET NO.	1124518433	TICKET TIME	8:04:03AM	DATE	6/2/2022
Customer No. 7832096	Payment Type Account	Customer Name STRIDER CONST CO INC			Order No. 10119451
Customer Job. No.	Customer P.O. 21NT		Map Ref. /		Disp. Ord. #
Truck Type Truck & Trailer	Truck No. RIV57TT	Vehicle or License Plate No.	Trailer or License Plate No.		Zone
Hauler/Carrier No. 7886596	Driver's Name	Delivered/Ordered 150.99 /	Load No. 5		Running Total 150.99

DEL/P PORT OF EVERETT
DEL/P 2600 FEDERAL AVE
EVERETT

Product	Description	Total	Unit Price	Amount
99005	CLASS 3 SOILS (TN)	33.59		

SCALE WEIGHT	GROSS & TARE		
108,380 LB	X Scale 1 ☐ Scale 2	A STANDBY SURCHARGE WILL BE ASSESSED FOR LOADS THAT EXCEED 10 MINUTES UNLOADING TIME.	Fuel Surcharge
Gross 41,200 LB/P.T.	X Angelique	LIABILITY WAIVER	Sales Tax
Tare 67,180 LB	Deputy Weighmaster	Cadman, (Inc.) will not assume Liability for any property damage or any equipment damage for any delivery beyond the curb line.	**Total**
Net			

No one available to sign, customer waives receipt signature. ☐	Received by Signature X	Print Name (Customer) X	Driver's Signature X	Standby Time

Arrive Job		Start Unloading		Finish Unloading		Standby Time		Customer's Initials X	This Tickets Grand Total	

CADMAN
HEIDELBERGCEMENTGroup
(888) 322-6847 425-961-7100

WEIGHTMASTER STATION
98846900
Sno River Delta Soils
17 E. Marine View Dr.
Everett, WA 98213

TICKET NO.	1124518429	TICKET TIME	7:20:33AM	DATE	6/2/2022
Customer No. 7832096	Payment Type Account	Customer Name STRIDER CONST CO INC			Order No. 10119451
Customer Job. No.	Customer P.O. 21NT		Map Ref. /		Disp. Ord. #
Truck Type Truck & Trailer	Truck No. RIV57TT	Vehicle or License Plate No.	Trailer or License Plate No.		Zone
Hauler/Carrier No. 7886596	Driver's Name	Delivered/Ordered 62.45 /	Load No. 2		Running Total 62.45

DEL/P PORT OF EVERETT
DEL/P 2600 FEDERAL AVE
EVERETT

Product	Description	Total	Unit Price	Amount
99005	CLASS 3 SOILS (TN)	29.82		

SCALE WEIGHT	GROSS & TARE		
100,840 LB *	X Scale 1 ☐ Scale 2	**A STANDBY SURCHARGE WILL BE ASSESSED FOR LOADS THAT EXCEED 10 MINUTES UNLOADING TIME.**	Fuel Surcharge
Gross 41,200 LB/P.T.			
Tare 59,640 LB *	X Angelique	**LIABILITY WAIVER**	Sales Tax
Net	Deputy Weighmaster	Cadman, (Inc.) will not assume Liability for any property damage or any equipment damage for any delivery beyond the curb line.	**Total**

No one available to sign, customer waives receipt signature. ☐	Received by Signature X	Print Name (Customer) X	Driver's Signature X	Standby Time

Arrive Job		Start Unloading		Finish Unloading		Standby Time		Customer's Initials X	This Tickets Grand Total	

CADMAN
HEIDELBERGCEMENTGroup®
(888) 322-6847 425-961-7100

TICKET NO. 1124518430		TICKET TIME 7:26:26AM		DATE 6/2/2022	
Customer No. 7832096	Payment Type Account	Customer Name STRIDER CONST CO INC			Order No. 10119451
Customer Job. No.	Customer P.O. 21NT		Map Ref. /		Disp. Ord. #
Truck Type Truck & Trailer	Truck No. RIV56TT	Vehicle or License Plate No.	Trailer or License Plate No.	Zone	
Hauler/Carrier No. 7886596	Driver's Name	Delivered/Ordered 90.35 /	Load No. 3	Running Total 90.35	

WEIGHMASTER STATION
98846900
Sno River Delta Soils
17 E. Marine View Dr.
Everett, WA 98213

DEL/P PORT OF EVERETT
DEL/P 2600 FEDERAL AVE
EVERETT

Product	Description	Total	Unit Price	Amount
99005	CLASS 3 SOILS (TN)	27.90		

SCALE WEIGHT
97,260 LB *
Gross
41,460 LB/P.T.
Tare
55,800 LB *
Net

GROSS & TARE
[X] Scale 1 [ ] Scale 2
X Angelique
Deputy Weighmaster

A STANDBY SURCHARGE WILL BE ASSESSED FOR LOADS THAT EXCEED 10 MINUTES UNLOADING TIME.

LIABILITY WAIVER
Cadman, (Inc.) will not assume Liability for any property damage or any equipment damage for any delivery beyond the curb line.

Fuel Surcharge	
Sales Tax	
Total	
Standby Time	
This Tickets Grand Total	

No one available to sign, customer waives receipt signature. [ ]	Received by Signature X		Print Name (Customer) X		Driver's Signature X			
Arrive Job		Start Unloading		Finish Unloading		Standby Time		Customer's Initials X

CADMAN
HEIDELBERGCEMENTGroup
(888) 322-6847 425-961-7100

WEIGHMASTER STATION
98846900
Sno River Delta Soils
17 E. Marine View Dr.
Everett, WA 98213

TICKET NO.	1124518434	TICKET TIME	8:05:40AM	DATE	6/2/2022
Customer No. 7832096	Payment Type Account	Customer Name STRIDER CONST CO INC			Order No. 10119451
Customer Job. No.	Customer P.O. 21NT		Map Ref. /		Disp. Ord. #
Truck Type Truck & Trailer	Truck No. RIV56TT	Vehicle or License Plate No.	Trailer or License Plate No.		Zone
Hauler/Carrier No. 7886596	Driver's Name	Delivered/Ordered 185.79 /	Load No. 6		Running Total 185.79

DEL/P PORT OF EVERETT
DEL/P 2600 FEDERAL AVE
EVERETT

Product	Description	Total	Unit Price	Amount
99005	CLASS 3 SOILS (TN)	34.80		

SCALE WEIGHT	GROSS & TARE		
Gross 111,060 LB	[X] Scale 1 [ ] Scale 2	A STANDBY SURCHARGE WILL BE ASSESSED FOR LOADS THAT EXCEED 10 MINUTES UNLOADING TIME.	Fuel Surcharge
Tare 41,460 LB/P.T.	X Angelique	LIABILITY WAIVER	Sales Tax
Net 69,600 LB	Deputy Weighmaster	Cadman, (Inc.) will not assume Liability for any property damage or any equipment damage for any delivery beyond the curb line.	**Total**

No one available to sign, customer waives receipt signature. [ ]	Received by Signature X	Print Name (Customer) X	Driver's Signature X	Standby Time

Arrive Job		Start Unloading		Finish Unloading		Standby Time		Customer's Initials X	This Tickets Grand Total	

CADMAN
HEIDELBERGCEMENTGroup®
(888) 322-6847 425-961-7100

WEIGHMASTER STATION
98846900
Sno River Delta Soils
17 E. Marine View Dr.
Everett, WA 98213

TICKET NO.	1124518444	TICKET TIME	8:36:46AM	DATE	6/2/2022
Customer No. 7832096	Payment Type Account	Customer Name STRIDER CONST CO INC			Order No. 10119451
Customer Job. No.	Customer P.O. 21NT		Map Ref. /		Disp. Ord. #
Truck Type Truck & Trailer	Truck No. RIV56TT	Vehicle or License Plate No.	Trailer or License Plate No.		Zone
Hauler/Carrier No. 7886596	Driver's Name	Delivered/Ordered 297.61 /	Load No. 9		Running Total 297.61

DEL/P PORT OF EVERETT
DEL/P 2600 FEDERAL AVE
EVERETT

Product	Description	Total	Unit Price	Amount
99005	CLASS 3 SOILS (TN)	35.71		

SCALE WEIGHT	GROSS & TARE		
112,880 LB	X ☐ Scale 1 ☐ Scale 2	A STANDBY SURCHARGE WILL BE ASSESSED FOR LOADS THAT EXCEED 10 MINUTES UNLOADING TIME.	Fuel Surcharge
Gross 41,460 LB/P.T.	X Angelique	LIABILITY WAIVER	Sales Tax
Tare 71,420 LB	Deputy Weighmaster	Cadman, (Inc.) will not assume Liability for any property damage or any equipment damage for any delivery beyond the curb line.	**Total**
Net			

No one available to sign, customer waives receipt signature. ☐	Received by Signature X	Print Name (Customer) X	Driver's Signature X	Standby Time

Arrive Job		Start Unloading		Finish Unloading		Standby Time		Customer's Initials X	This Tickets Grand Total	

CADMAN
HEIDELBERGCEMENTGroup
(888) 322-6847 425-961-7100

WEIGHMASTER STATION
98846900
Sno River Delta Soils
17 E. Marine View Dr.
Everett, WA 98213

TICKET NO.	1124518448	TICKET TIME	9:15:32AM	DATE	6/2/2022
Customer No. 7832096	Payment Type Account	Customer Name STRIDER CONST CO INC			Order No. 10119451
Customer Job. No.	Customer P.O. 21NT		Map Ref. /		Disp. Ord. #
Truck Type Truck & Traile	Truck No. RIV56TT	Vehicle or License Plate No.	Trailer or License Plate No.		Zone
Hauler/Carrier No. 7886596	Driver's Name	Delivered/Ordered 396.63 /	Load No. 12		Running Total 396.63

DEL/P PORT OF EVERETT
DEL/P 2600 FEDERAL AVE
EVERETT

Product	Description	Total	Unit Price	Amount
99005	CLASS 3 SOILS (TN)	33.00		

SCALE WEIGHT	GROSS & TARE		
107,460 LB	☒ Scale 1 ☐ Scale 2	A STANDBY SURCHARGE WILL BE ASSESSED FOR LOADS THAT EXCEED 10 MINUTES UNLOADING TIME.	Fuel Surcharge
Gross		LIABILITY WAIVER	Sales Tax
41,460 LB/P.T.*	X Angelique	Cadman, (Inc.) will not assume Liability for any property damage or any equipment damage for any delivery beyond the curb line.	**Total**
Tare	Deputy Weighmaster		
66,000 LB			
Net			

No one available to sign, customer waives receipt signature. ☐	Received by Signature X	Print Name (Customer) X	Driver's Signature X	Standby Time

Arrive Job		Start Unloading		Finish Unloading		Standby Time		Customer's Initials X	This Tickets Grand Total	

CADMAN
HEIDELBERGCEMENTGroup
(888) 322-6847 425-961-7100

WEIGHMASTER STATION
98846900
Sno River Delta Soils
17 E. Marine View Dr.
Everett, WA 98213

TICKET NO.	1124518451	TICKET TIME	9:48:57AM	DATE	6/2/2022

Customer No.	Payment Type	Customer Name	Order No.
7832096	Account	STRIDER CONST CO INC	10119451

Customer Job. No.	Customer P.O.	Map Ref.	Disp. Ord. #
	21NT	/	

Truck Type	Truck No.	Vehicle or License Plate No.	Trailer or License Plate No.	Zone
Truck & Trailer	RIV56TT			

Hauler/Carrier No.	Driver's Name	Delivered/Ordered	Load No.	Running Total
7886596		492.24 /	15	492.24

DEL/P PORT OF EVERETT
DEL/P 2600 FEDERAL AVE
EVERETT

Product	Description	Total	Unit Price	Amount
99005	CLASS 3 SOILS (TN)	32.87		

SCALE WEIGHT
107,200 LB
Gross
41,460 LB/P.T.*
Tare
65,740 LB
Net

GROSS & TARE
☒ Scale 1 ☐ Scale 2
X Angelique
Deputy Weighmaster

A STANDBY SURCHARGE WILL BE ASSESSED FOR LOADS THAT EXCEED 10 MINUTES UNLOADING TIME.

LIABILITY WAIVER
Cadman, (Inc.) will not assume Liability for any property damage or any equipment damage for any delivery beyond the curb line.

Fuel Surcharge	
Sales Tax	
Total	
Standby Time	
This Tickets Grand Total	

No one available to sign, customer waives receipt signature. ☐	Received by Signature	Print Name (Customer)	Driver's Signature
	X	X	X

Arrive Job		Start Unloading		Finish Unloading		Standby Time		Customer's Initials
								X

CADMAN
HEIDELBERGCEMENTGroup
(888) 322-6847 425-961-7100

WEIGHMASTER STATION
98846900
Sno River Delta Soils
17 E. Marine View Dr.
Everett, WA 98213

TICKET NO.	1124518455	TICKET TIME	10:20:00AM	DATE	6/2/2022

Customer No.	Payment Type	Customer Name	Order No.
7832096	Account	STRIDER CONST CO INC	10119451

Customer Job. No.	Customer P.O.	Map Ref.	Disp. Ord. #
	21NT	/	

Truck Type	Truck No.	Vehicle or License Plate No.	Trailer or License Plate No.	Zone
Truck & Trailer	RIV56TT			

Hauler/Carrier No.	Driver's Name	Delivered/Ordered	Load No.	Running Total
7886596		593.73 /	18	593.73

DEL/P PORT OF EVERETT
DEL/P 2600 FEDERAL AVE
EVERETT

Product	Description	Total	Unit Price	Amount
99005	CLASS 3 SOILS (TN)	34.17		

SCALE WEIGHT

109,800 LB
Gross
41,460 LB/P.T.*
Tare
68,340 LB
Net

GROSS & TARE

X Scale 1 ☐ Scale 2

X Angelique
Deputy Weighmaster

A STANDBY SURCHARGE WILL BE ASSESSED FOR LOADS THAT EXCEED 10 MINUTES UNLOADING TIME.

LIABILITY WAIVER

Cadman, (Inc.) will not assume Liability for any property damage or any equipment damage for any delivery beyond the curb line.

Fuel Surcharge	
Sales Tax	
Total	
Standby Time	
This Tickets Grand Total	

No one available to sign, customer waives receipt signature. ☐	Received by Signature	Print Name (Customer)	Driver's Signature
	X	X	X

Arrive Job		Start Unloading		Finish Unloading		Standby Time		Customer's Initials
								X

CADMAN
HEIDELBERGCEMENTGroup®
(888) 322-6847 425-961-7100

WEIGHMASTER STATION
98846900
Sno River Delta Soils
17 E. Marine View Dr.
Everett, WA 98213

TICKET NO.	1124518459	TICKET TIME	10:54:33AM	DATE	6/2/2022
Customer No. 7832096	Payment Type Account	Customer Name STRIDER CONST CO INC			Order No. 10119451
Customer Job. No.	Customer P.O. 21NT		Map Ref. /		Disp. Ord. #
Truck Type Truck & Trailer	Truck No. RIV56TT	Vehicle or License Plate No.	Trailer or License Plate No.		Zone
Hauler/Carrier No. 7886596	Driver's Name	Delivered/Ordered 702.59 /	Load No. 21		Running Total 702.59

DEL/P PORT OF EVERETT
DEL/P 2600 FEDERAL AVE
EVERETT

Product	Description	Total	Unit Price	Amount
99005	CLASS 3 SOILS (TN)	35.60		

SCALE WEIGHT	GROSS & TARE		
Gross 112,660 LB			Fuel Surcharge
Tare 41,460 LB/P.T.*	☒ Scale 1 ☐ Scale 2	**A STANDBY SURCHARGE WILL BE ASSESSED FOR LOADS THAT EXCEED 10 MINUTES UNLOADING TIME.**	Sales Tax
Net 71,200 LB	X Angelique Deputy Weighmaster	**LIABILITY WAIVER** Cadman, (Inc.) will not assume Liability for any property damage or any equipment damage for any delivery beyond the curb line.	**Total**

No one available to sign, customer waives receipt signature. ☐	Received by Signature X	Print Name (Customer) X	Driver's Signature X	Standby Time

Arrive Job		Start Unloading		Finish Unloading		Standby Time		Customer's Initials X	This Tickets Grand Total	

CADMAN
HEIDELBERGCEMENTGroup
(888) 322-6847 425-961-7100

WEIGHMASTER STATION
98846900
Sno River Delta Soils
17 E. Marine View Dr.
Everett, WA 98213

TICKET NO.	1124518462	TICKET TIME	11:25:05AM	DATE	6/2/2022
Customer No. 7832096	Payment Type Account	Customer Name STRIDER CONST CO INC			Order No. 10119451
Customer Job. No.	Customer P.O. 21NT		Map Ref. /		Disp. Ord. #
Truck Type Truck & Trailer	Truck No. RIV56TT	Vehicle or License Plate No.	Trailer or License Plate No.		Zone
Hauler/Carrier No. 7886596	Driver's Name	Delivered/Ordered 812.35 /	Load No. 24		Running Total 812.35

DEL/P PORT OF EVERETT
DEL/P 2600 FEDERAL AVE
EVERETT

Product	Description	Total	Unit Price	Amount
99005	CLASS 3 SOILS (TN)	33.03		

SCALE WEIGHT	GROSS & TARE		
107,520 LB		A STANDBY SURCHARGE WILL BE ASSESSED FOR LOADS THAT EXCEED 10 MINUTES UNLOADING TIME.	Fuel Surcharge
Gross 41,460 LB/P.T.*	X Scale 1 ☐ Scale 2	LIABILITY WAIVER	Sales Tax
Tare 66,060 LB	X Angelique Deputy Weighmaster	Cadman, (Inc.) will not assume Liability for any property damage or any equipment damage for any delivery beyond the curb line.	**Total**
Net			Standby Time

No one available to sign, customer waives receipt signature. ☐	Received by Signature X	Print Name (Customer) X	Driver's Signature X	

Arrive Job		Start Unloading		Finish Unloading		Standby Time		Customer's Initials X	This Tickets Grand Total	

CADMAN
HEIDELBERGCEMENTGroup®
(888) 322-6847 425-961-7100

WEIGHMASTER STATION
98846900
Sno River Delta Soils
17 E. Marine View Dr.
Everett, WA 98213

TICKET NO.	1124518465	TICKET TIME	11:56:59AM	DATE	6/2/2022
Customer No. 7832096	Payment Type Account	Customer Name STRIDER CONST CO INC			Order No. 10119451
Customer Job. No.	Customer P.O. 21NT		Map Ref. /		Disp. Ord. #
Truck Type Truck & Trailer	Truck No. RIV56TT	Vehicle or License Plate No.	Trailer or License Plate No.		Zone
Hauler/Carrier No. 7886596	Driver's Name	Delivered/Ordered 909.65 /	Load No. 27		Running Total 909.65

DEL/P PORT OF EVERETT
DEL/P 2600 FEDERAL AVE
EVERETT

Product	Description	Total	Unit Price	Amount
99005	CLASS 3 SOILS (TN)	29.89		

SCALE WEIGHT	GROSS & TARE		
Gross 101,240 LB	X Scale 1 ☐ Scale 2	A STANDBY SURCHARGE WILL BE ASSESSED FOR LOADS THAT EXCEED 10 MINUTES UNLOADING TIME.	Fuel Surcharge
Tare 41,460 LB/P.T.*		LIABILITY WAIVER	Sales Tax
Net 59,780 LB	X Angelique Deputy Weighmaster	Cadman, (Inc.) will not assume Liability for any property damage or any equipment damage for any delivery beyond the curb line.	**Total**

No one available to sign, customer waives receipt signature. ☐	Received by Signature X	Print Name (Customer) X	Driver's Signature X	Standby Time

Arrive Job		Start Unloading		Finish Unloading		Standby Time		Customer's Initials X	This Tickets Grand Total	

CADMAN
HEIDELBERGCEMENTGroup®
(888) 322-6847 425-961-7100

WEIGHMASTER STATION
98846900
Sno River Delta Soils
17 E. Marine View Dr.
Everett, WA 98213

TICKET NO.	1124518468	TICKET TIME	12:27:43PM	DATE	6/2/2022
Customer No. 7832096	Payment Type Account	Customer Name STRIDER CONST CO INC			Order No. 10119451
Customer Job. No.	Customer P.O. 21NT		Map Ref. /		Disp. Ord. #
Truck Type Truck & Trailer	Truck No. RIV56TT	Vehicle or License Plate No.	Trailer or License Plate No.		Zone
Hauler/Carrier No. 7886596	Driver's Name	Delivered/Ordered 1,003.52 /	Load No. 30		Running Total 1,003.52

DEL/P PORT OF EVERETT
DEL/P 2600 FEDERAL AVE
EVERETT

Product	Description	Total	Unit Price	Amount
99005	CLASS 3 SOILS (TN)	30.22		

SCALE WEIGHT	GROSS & TARE		
Gross 101,900 LB	[X] Scale 1 [ ] Scale 2	A STANDBY SURCHARGE WILL BE ASSESSED FOR LOADS THAT EXCEED 10 MINUTES UNLOADING TIME.	Fuel Surcharge
Tare 41,460 LB/P.T.*	X Angelique Deputy Weighmaster	LIABILITY WAIVER	Sales Tax
Net 60,440 LB		Cadman, (Inc.) will not assume Liability for any property damage or any equipment damage for any delivery beyond the curb line.	**Total**

No one available to sign, customer waives receipt signature. [ ]	Received by Signature X	Print Name (Customer) X	Driver's Signature X	Standby Time

Arrive Job		Start Unloading		Finish Unloading		Standby Time		Customer's initials X	This Tickets Grand Total	

CADMAN
HEIDELBERGCEMENTGroup®
(888) 322-6847 425-961-7100

WEIGHMASTER STATION
98846900
Sno River Delta Soils
17 E. Marine View Dr.
Everett, WA 98213

TICKET NO.	1124518471	TICKET TIME	12:59:52PM	DATE	6/2/2022
Customer No. 7832096	Payment Type Account	Customer Name STRIDER CONST CO INC			Order No. 10119451
Customer Job. No.	Customer P.O. 21NT		Map Ref. /		Disp. Ord. #
Truck Type Truck & Trailer	Truck No. RIV56TT	Vehicle or License Plate No.	Trailer or License Plate No.		Zone
Hauler/Carrier No. 7886596	Driver's Name	Delivered/Ordered 1,098.89 /	Load No. 33		Running Total 1,098.89

DEL/P PORT OF EVERETT
DEL/P 2600 FEDERAL AVE
EVERETT

Product	Description	Total	Unit Price	Amount
99005	CLASS 3 SOILS (TN)	32.15		

SCALE WEIGHT	GROSS & TARE		
Gross 105,760 LB	X Scale 1 ☐ Scale 2	A STANDBY SURCHARGE WILL BE ASSESSED FOR LOADS THAT EXCEED 10 MINUTES UNLOADING TIME.	Fuel Surcharge
Tare 41,460 LB/P.T.*			Sales Tax
Net 64,300 LB	X Angelique Deputy Weighmaster	LIABILITY WAIVER Cadman, (Inc.) will not assume Liability for any property damage or any equipment damage for any delivery beyond the curb line.	**Total**

No one available to sign, customer waives receipt signature. ☐	Received by Signature X	Print Name (Customer) X	Driver's Signature X	Standby Time

Arrive Job		Start Unloading		Finish Unloading		Standby Time		Customer's Initials X	**This Tickets Grand Total**	

CADMAN
HEIDELBERGCEMENTGroup
(888) 322-6847 425-961-7100

WEIGHMASTER STATION
98846900
Sno River Delta Soils
17 E. Marine View Dr.
Everett, WA 98213

TICKET NO	1124518474	TICKET TIME	1:33:26PM	DATE	6/2/2022
Customer No. 7832096	Payment Type Account	Customer Name STRIDER CONST CO INC			Order No. 10119451
Customer Job. No.	Customer P.O. 21NT		Map Ref. /		Disp. Ord. #
Truck Type Truck & Trailer	Truck No. RIV56TT	Vehicle or License Plate No.	Trailer or License Plate No.		Zone
Hauler/Carrier No. 7886596	Driver's Name	Delivered/Ordered 1,195.51 /	Load No. 36		Running Total 1,195.51

DEL/P PORT OF EVERETT
DEL/P 2600 FEDERAL AVE
EVERETT

Product	Description	Total	Unit Price	Amount
99005	CLASS 3 SOILS (TN)	32.88		

SCALE WEIGHT	GROSS & TARE		
Gross 107,220 LB			Fuel Surcharge
Tare 41,460 LB/P.T.*	X Scale 1 ☐ Scale 2	A STANDBY SURCHARGE WILL BE ASSESSED FOR LOADS THAT EXCEED 10 MINUTES UNLOADING TIME.	Sales Tax
Net 65,760 LB	X Angelique Deputy Weighmaster	LIABILITY WAIVER Cadman, (Inc.) will not assume Liability for any property damage or any equipment damage for any delivery beyond the curb line.	**Total**

No one available to sign, customer waives receipt signature. ☐	Received by Signature X	Print Name (Customer) X	Driver's Signature X	Standby Time

Arrive Job		Start Unloading		Finish Unloading		Standby Time		Customer's Initials X	**This Tickets Grand Total**	

CADMAN
HEIDELBERGCEMENTGroup
(888) 322-6847 425-961-7100

WEIGHMASTER STATION
98846900
Sno River Delta Soils
17 E. Marine View Dr.
Everett, WA 98213

TICKET NO.	1124518477	TICKET TIME	2:03:52PM	DATE	6/2/2022
Customer No. 7832096	Payment Type Account	Customer Name STRIDER CONST CO INC			Order No. 10119451
Customer Job. No.	Customer P.O. 21NT		Map Ref. /		Disp. Ord. #
Truck Type Truck & Trailer	Truck No. RIV56TT	Vehicle or License Plate No.	Trailer or License Plate No.		Zone
Hauler/Carrier No. 7886596	Driver's Name	Delivered/Ordered 1,290.07 /	Load No. 39		Running Total 1,290.07

DEL/P PORT OF EVERETT
DEL/P 2600 FEDERAL AVE
EVERETT

Product	Description	Total	Unit Price	Amount
99005	CLASS 3 SOILS (TN)	32.30		

SCALE WEIGHT	GROSS & TARE		
Gross 106,060 LB	X Scale 1 ☐ Scale 2	A STANDBY SURCHARGE WILL BE ASSESSED FOR LOADS THAT EXCEED 10 MINUTES UNLOADING TIME.	Fuel Surcharge
Tare 41,460 LB/P.T.*	X Angelique Deputy Weighmaster	LIABILITY WAIVER Cadman, (Inc.) will not assume Liability for any property damage or any equipment damage for any delivery beyond the curb line.	Sales Tax
Net 64,600 LB			**Total**

No one available to sign, customer waives receipt signature. ☐	Received by Signature X	Print Name (Customer) X	Driver's Signature X	Standby Time

Arrive Job		Start Unloading		Finish Unloading		Standby Time		Customer's Initials X	This Tickets Grand Total	

CADMAN
HEIDELBERGCEMENTGroup
(888) 322-6847 425-961-7100

WEIGHTMASTER STATION
98846900
Sno River Delta Soils
17 E. Marine View Dr.
Everett, WA 98213

TICKET NO.	1124518481	TICKET TIME	2:35:01PM	DATE	6/2/2022
Customer No. 7832096	Payment Type Account	Customer Name STRIDER CONST CO INC			Order No. 10119451
Customer Job. No.	Customer P.O. 21NT		Map Ref. /		Disp. Ord. #
Truck Type Truck & Trailer	Truck No. RIV56TT	Vehicle or License Plate No.	Trailer or License Plate No.		Zone
Hauler/Carrier No. 7886596	Driver's Name	Delivered/Ordered 1,391.94 /	Load No. 42		Running Total 1,391.94

DEL/P PORT OF EVERETT
DEL/P 2600 FEDERAL AVE
EVERETT

Product	Description	Total	Unit Price	Amount
99005	CLASS 3 SOILS (TN)	34.31		

SCALE WEIGHT	GROSS & TARE		Fuel Surcharge	
Gross 110,080 LB	☒ Scale 1 ☐ Scale 2	**A STANDBY SURCHARGE WILL BE ASSESSED FOR LOADS THAT EXCEED 10 MINUTES UNLOADING TIME.**	Sales Tax	
Tare 41,460 LB/P.T.*	X Angelique	**LIABILITY WAIVER**	**Total**	
Net 68,620 LB	Deputy Weighmaster	Cadman, (Inc.) will not assume Liability for any property damage or any equipment damage for any delivery beyond the curb line.		

No one available to sign, customer waives receipt signature. ☐	Received by Signature X	Print Name (Customer) X	Driver's Signature X	Standby Time	

Arrive Job		Start Unloading		Finish Unloading		Standby Time		Customer's Initials X	This Tickets Grand Total	

CADMAN
HEIDELBERGCEMENTGroup
(888) 322-6847 425-961-7100

WEIGHTMASTER STATION

98846900
Sno River Delta Soils
17 E. Marine View Dr.
Everett, WA 98213

TICKET NO.	1124518484	TICKET TIME	3:04:49PM	DATE	6/2/2022
Customer No. 7832096	Payment Type Account	Customer Name STRIDER CONST CO INC			Order No. 10119451
Customer Job. No.	Customer P.O. 21NT		Map Ref. /		Disp. Ord. #
Truck Type Truck & Trailer	Truck No. RIV56TT	Vehicle or License Plate No.	Trailer or License Plate No.		Zone
Hauler/Carrier No. 7886596	Driver's Name	Delivered/Ordered 1,494.50 /	Load No. 45		Running Total 1,494.50

DEL/P PORT OF EVERETT
DEL/P 2600 FEDERAL AVE
EVERETT

Product	Description	Total	Unit Price	Amount
99005	CLASS 3 SOILS (TN)	32.21		

SCALE WEIGHT

105,880 LB
Gross
41,460 LB/P.T.*
Tare
64,420 LB
Net

GROSS & TARE

☒ Scale 1 ☐ Scale 2

X Angelique
Deputy Weighmaster

A STANDBY SURCHARGE WILL BE ASSESSED FOR LOADS THAT EXCEED 10 MINUTES UNLOADING TIME.

LIABILITY WAIVER

Cadman, (Inc.) will not assume Liability for any property damage or any equipment damage for any delivery beyond the curb line.

Fuel Surcharge	
Sales Tax	
Total	
Standby Time	
This Tickets Grand Total	

No one available to sign, customer waives receipt signature. ☐	Received by Signature X	Print Name (Customer) X	Driver's Signature X

Arrive Job		Start Unloading		Finish Unloading		Standby Time		Customer's Initials X

CADMAN
HEIDELBERGCEMENTGroup®
(888) 322-6847 425-961-7100

TICKET NO.	1124518563	TICKET TIME	2:20:44PM	DATE	6/3/2022
Customer No. 7832096	Payment Type Account	Customer Name STRIDER CONST CO INC			Order No. 10119451
Customer Job. No.	Customer PO 21NT			Map Ref. /	Disp. Ord. #
Truck Type Truck & Trailer	Truck No. RST/TT	Vehicle or License Plate No.	Trailer or License Plate No.	Zone	
Hauler/Carrier No. 7774341	Driver's Name	Delivered/Ordered ,627.15 /	Load No. 52	Running Total 1,627.15	

WEIGHMASTER STATION
98846900
Sno River Delta Soils
17 E. Marine View Dr.
Everett, WA 98213

DEL/P PORT OF EVERETT
DEL/P 2600 FEDERAL AVE
EVERETT

Product	Description	Total	Unit Price	Amount
99005	CLASS 3 SOILS (TN)	24.38		

SCALE WEIGHT	GROSS & TARE		Fuel Surcharge	
Gross 85,080 LB	X ☐ Scale 1 ☐ Scale 2	**A STANDBY SURCHARGE WILL BE ASSESSED FOR LOADS THAT EXCEED 10 MINUTES UNLOADING TIME.**	Sales Tax	
Tare 36,320 LB/P.T.*	X Angelique	**LIABILITY WAIVER**	**Total**	
Net 48,760 LB	Deputy Weighmaster	Cadman, (Inc.) will not assume Liability for any property damage or any equipment damage for any delivery beyond the curb line.		

No one available to sign, customer waives receipt signature. ☐	Received by Signature X	Print Name (Customer) X	Driver's Signature X	Standby Time	

Arrive Job		Start Unloading		Finish Unloading		Standby Time		Customer's Initials X	This Tickets Grand Total	

CADMAN
HEIDELBERGCEMENTGroup
(888) 322-6847 425-961-7100

WEIGHMASTER STATION
98846900
Sno River Delta Soils
17 E. Marine View Dr.
Everett, WA 98213

TICKET NO.	1124518488	TICKET TIME	7:42:04AM	DATE	6/3/2022
Customer No. 7832096	Payment Type Account	Customer Name STRIDER CONST CO INC			Order No. 10119451
Customer Job. No.	Customer P.O. 21NT		Map Ref. /		Disp. Ord. #
Truck Type Truck & Trailer	Truck No. RIV55TT	Vehicle or License Plate No.	Trailer or License Plate No.		Zone
Hauler/Carrier No. 7886596	Driver's Name	Delivered/Ordered 32.91 /	Load No. 1		Running Total 32.91

DEL/P PORT OF EVERETT
DEL/P 2600 FEDERAL AVE
EVERETT

Product	Description	Total	Unit Price	Amount
99005	CLASS 3 SOILS (TN)	32.91		

SCALE WEIGHT	GROSS & TARE
Gross 106,400 LB	X Scale 1 ☐ Scale 2
Tare 40,580 LB/P.T.*	X Angelique Deputy Weighmaster
Net 65,820 LB	

A STANDBY SURCHARGE WILL BE ASSESSED FOR LOADS THAT EXCEED 10 MINUTES UNLOADING TIME.

LIABILITY WAIVER

Cadman, (Inc.) will not assume Liability for any property damage or any equipment damage for any delivery beyond the curb line.

Fuel Surcharge	
Sales Tax	
Total	
Standby Time	
This Tickets Grand Total	

No one available to sign, customer waives receipt signature. ☐	Received by Signature X	Print Name (Customer) X	Driver's Signature X

Arrive Job		Start Unloading		Finish Unloading		Standby Time		Customer's Initials X

CADMAN
HEIDELBERGCEMENTGroup®
(888) 322-6847 425-961-7100

WEIGHMASTER STATION
98846900
Sno River Delta Soils
17 E. Marine View Dr.
Everett, WA 98213

TICKET NO.	1124518489	TICKET TIME	7:47:09AM	DATE	6/3/2022
Customer No. 7832096	Payment Type Account	Customer Name STRIDER CONST CO INC			Order No. 10119451
Customer Job. No.	Customer P.O. 21NT		Map Ref. /		Disp. Ord. #
Truck Type Truck & Trailer	Truck No. RIV57TT	Vehicle or License Plate No.	Trailer or License Plate No.		Zone
Hauler/Carrier No. 7886596	Driver's Name	Delivered/Ordered 69.87 /	Load No. 2		Running Total 69.87

DEL/P PORT OF EVERETT
DEL/P 2600 FEDERAL AVE
EVERETT

Product	Description	Total	Unit Price	Amount
99005	CLASS 3 SOILS (TN)	36.96		

SCALE WEIGHT
115,120 LB
Gross
41,200 LB/P.T.*
Tare
73,920 LB
Net

GROSS & TARE
X Scale 1 ☐ Scale 2
X Angelique
Deputy Weighmaster

A STANDBY SURCHARGE WILL BE ASSESSED FOR LOADS THAT EXCEED 10 MINUTES UNLOADING TIME.

LIABILITY WAIVER
Cadman, (Inc.) will not assume Liability for any property damage or any equipment damage for any delivery beyond the curb line.

Fuel Surcharge	
Sales Tax	
Total	
Standby Time	
This Tickets Grand Total	

No one available to sign, customer waives receipt signature. ☐	Received by Signature X	Print Name (Customer) X	Driver's Signature X

Arrive Job		Start Unloading		Finish Unloading		Standby Time		Customer's Initials X

CADMAN
HEIDELBERGCEMENTGroup
(888) 322-6847 425-961-7100

WEIGHMASTER STATION
98846900
Sno River Delta Soils
17 E. Marine View Dr.
Everett, WA 98213

TICKET NO.	1124518490	TICKET TIME	7:51:52AM	DATE	6/3/2022
Customer No. 7832096	Payment Type Account	Customer Name STRIDER CONST CO INC			Order No. 10119451
Customer Job. No.	Customer P.O. 21NT		Map Ref. /		Disp. Ord. #
Truck Type Truck & Trailer	Truck No. RIV56TT	Vehicle or License Plate No.	Trailer or License Plate No.		Zone
Hauler/Carrier No. 7886596	Driver's Name	Delivered/Ordered 103.09 /	Load No. 3		Running Total 103.09

DEL/P PORT OF EVERETT
DEL/P 2600 FEDERAL AVE
EVERETT

Product	Description	Total	Unit Price	Amount
99005	CLASS 3 SOILS (TN)	33.22		

SCALE WEIGHT
107,900 LB
Gross
41,460 LB/P.T.*
Tare
66,440 LB
Net

GROSS & TARE
☒ Scale 1 ☐ Scale 2
X Angelique
Deputy Weighmaster

A STANDBY SURCHARGE WILL BE ASSESSED FOR LOADS THAT EXCEED 10 MINUTES UNLOADING TIME.

LIABILITY WAIVER
Cadman, (Inc.) will not assume Liability for any property damage or any equipment damage for any delivery beyond the curb line.

Fuel Surcharge	
Sales Tax	
Total	
Standby Time	
This Tickets Grand Total	

No one available to sign, customer waives receipt signature. ☐	Received by Signature X	Print Name (Customer) X	Driver's Signature X

Arrive Job		Start Unloading		Finish Unloading		Standby Time		Customer's Initials X

CADMAN
HEIDELBERGCEMENTGroup®
(888) 322-6847 425-961-7100

WEIGHMASTER STATION
98946900
Sno River Delta Soils
17 E. Marine View Dr.
Everett, WA 98213

TICKET NO.	1124518491	TICKET TIME	7:57:46AM	DATE	6/3/2022
Customer No. 7832096	Payment Type Account	Customer Name STRIDER CONST CO INC			Order No. 10119451
Customer Job. No.	Customer P.O. 21NT		Map Ref. /		Disp. Ord. #
Truck Type Truck & Traile	Truck No. RIV62TT	Vehicle or License Plate No.	Trailer or License Plate No.		Zone
Hauler/Carrier No.	Driver's Name	Delivered/Ordered 137.88 /	Load No. 4		Running Total 137.88

DEL/P PORT OF EVERETT
DEL/P 2600 FEDERAL AVE
EVERETT

Product	Description	Total	Unit Price	Amount
99005	CLASS 3 SOILS (TN)	34.79		

SCALE WEIGHT
110,520 LB
Gross
40,940 LB/P.T.*
Tare
69,580 LB
Net

GROSS & TARE
☒ Scale 1 ☐ Scale 2
X Angelique
Deputy Weighmaster

A STANDBY SURCHARGE WILL BE ASSESSED FOR LOADS THAT EXCEED 10 MINUTES UNLOADING TIME.

LIABILITY WAIVER
Cadman, (Inc.) will not assume Liability for any property damage or any equipment damage for any delivery beyond the curb line.

Fuel Surcharge	
Sales Tax	
Total	
Standby Time	
This Tickets Grand Total	

No one available to sign, customer waives receipt signature. ☐	Received by Signature X	Print Name (Customer) X	Driver's Signature X

Arrive Job		Start Unloading		Finish Unloading		Standby Time		Customer's Initials X

CADMAN
HEIDELBERGCEMENTGroup
(888) 322-6847 425-961-7100

WEIGHMASTER STATION
98846900
Sno River Delta Soils
17 E. Marine View Dr.
Everett, WA 98213

TICKET NO.	1124518492	TICKET TIME	8:14:11AM	DATE	6/3/2022
Customer No. 7832096	Payment Type Account	Customer Name STRIDER CONST CO INC			Order No. 10119451
Customer Job. No.	Customer P.O. 21NT		Map Ref. /		Disp. Ord. #
Truck Type Truck & Trailer	Truck No. RIV55TT	Vehicle or License Plate No.	Trailer or License Plate No.		Zone
Hauler/Carrier No. 7886596	Driver's Name	Delivered/Ordered 169.24 /	Load No. 5		Running Total 169.24

DEL/P PORT OF EVERETT
DEL/P 2600 FEDERAL AVE
EVERETT

Product	Description	Total	Unit Price	Amount
99005	CLASS 3 SOILS (TN)	31.36		

SCALE WEIGHT	GROSS & TARE			
Gross 103,300 LB	X Scale 1 ☐ Scale 2	A STANDBY SURCHARGE WILL BE ASSESSED FOR LOADS THAT EXCEED 10 MINUTES UNLOADING TIME.	Fuel Surcharge	
Tare 40,580 LB/P.T.*		LIABILITY WAIVER	Sales Tax	
Net 62,720 LB	X Angelique Deputy Weighmaster	Cadman, (Inc.) will not assume Liability for any property damage or any equipment damage for any delivery beyond the curb line.	**Total**	

No one available to sign, customer waives receipt signature. ☐	Received by Signature X	Print Name (Customer) X	Driver's Signature X	Standby Time	

Arrive Job		Start Unloading		Finish Unloading		Standby Time		Customer's Initials X	This Tickets Grand Total	

CADMAN
HEIDELBERGCEMENTGroup
(888) 322-6847 425-961-7100

WEIGHMASTER STATION

98846900
Sno River Delta Soils
17 E. Marine View Dr.
Everett, WA 98213

TICKET NO.	1124518493	TICKET TIME	8:17:24AM	DATE	6/3/2022
Customer No. 7832096	Payment Type Account	Customer Name STRIDER CONST CO INC			Order No. 10119451
Customer Job. No.	Customer P.O. 21NT		Map Ref. /		Disp. Ord. #
Truck Type Truck & Trailer	Truck No. RIV57TT	Vehicle or License Plate No.	Trailer or License Plate No.		Zone
Hauler/Carrier No. 7886596	Driver's Name	Delivered/Ordered 201.52 /	Load No. 6		Running Total 201.52

DEL/P PORT OF EVERETT
DEL/P 2600 FEDERAL AVE
EVERETT

Product	Description	Total	Unit Price	Amount
99005	CLASS 3 SOILS (TN)	32.28		

SCALE WEIGHT	GROSS & TARE		
Gross 105,760 LB	X Scale 1 ☐ Scale 2	A STANDBY SURCHARGE WILL BE ASSESSED FOR LOADS THAT EXCEED 10 MINUTES UNLOADING TIME.	Fuel Surcharge
Tare 41,200 LB/P.T.*		LIABILITY WAIVER	Sales Tax
Net 64,560 LB	X Angelique Deputy Weighmaster	Cadman, (Inc.) will not assume Liability for any property damage or any equipment damage for any delivery beyond the curb line.	**Total**

No one available to sign, customer waives receipt signature ☐	Received by Signature X	Print Name (Customer) X	Driver's Signature X	Standby Time

Arrive Job		Start Unloading		Finish Unloading		Standby Time		Customer's Initials X	This Tickets Grand Total	

CADMAN
HEIDELBERGCEMENTGroup
(888) 322-6847 425-961-7100

WEIGHTMASTER STATION
98846900
Sno River Delta Soils
17 E. Marine View Dr.
Everett, WA 98213

TICKET NO.	1124518494	TICKET TIME	8:20:10AM	DATE	6/3/2022
Customer No. 7832096	Payment Type Account	Customer Name STRIDER CONST CO INC			Order No. 10119451
Customer Job. No.	Customer P.O. 21NT		Map Ref. /		Disp. Ord. #
Truck Type Truck & Trailer	Truck No. RIV56TT	Vehicle or License Plate No.	Trailer or License Plate No.		Zone
Hauler/Carrier No. 7886596	Driver's Name	Delivered/Ordered 230.14 /	Load No. 7		Running Total 230.14

DEL/P PORT OF EVERETT
DEL/P 2600 FEDERAL AVE
EVERETT

Product	Description	Total	Unit Price	Amount
99005	CLASS 3 SOILS (TN)	28.62		

SCALE WEIGHT
98,700 LB
Gross
41,460 LB/P.T.*
Tare
57,240 LB
Net

GROSS & TARE
[X] Scale 1 [ ] Scale 2
X Angelique
Deputy Weighmaster

A STANDBY SURCHARGE WILL BE ASSESSED FOR LOADS THAT EXCEED 10 MINUTES UNLOADING TIME.

LIABILITY WAIVER
Cadman, (Inc.) will not assume Liability for any property damage or any equipment damage for any delivery beyond the curb line.

Fuel Surcharge	
Sales Tax	
Total	
Standby Time	
This Tickets Grand Total	

No one available to sign, customer waives receipt signature [ ]	Received by Signature X	Print Name (Customer) X	Driver's Signature X

Arrive Job		Start Unloading		Finish Unloading		Standby Time		Customer's Initials X

CADMAN
HEIDELBERGCEMENTGroup
(888) 322-6847 425-961-7100

WEIGHMASTER STATION

98846900
Sno River Delta Soils
17 E. Marine View Dr.
Everett, WA 98213

TICKET NO.	1124518495	TICKET TIME	8:31:43AM	DATE	6/3/2022
Customer No. 7832096	Payment Type Account	Customer Name STRIDER CONST CO INC			Order No. 10119451
Customer Job. No.	Customer P.O. 21NT		Map Ref. /		Disp. Ord. #
Truck Type Truck & Traile	Truck No. RIV62TT	Vehicle or License Plate No.	Trailer or License Plate No.		Zone
Hauler/Carrier No.	Driver's Name	Delivered/Ordered 264.43 /	Load No. 8		Running Total 264.43

DEL/P PORT OF EVERETT
DEL/P 2600 FEDERAL AVE
EVERETT

Product	Description	Total	Unit Price	Amount
99005	CLASS 3 SOILS (TN)	34.29		

SCALE WEIGHT	GROSS & TARE		
Gross 109,520 LB	[X] Scale 1 [ ] Scale 2	**A STANDBY SURCHARGE WILL BE ASSESSED FOR LOADS THAT EXCEED 10 MINUTES UNLOADING TIME.**	Fuel Surcharge
Tare 40,940 LB/P.T.*	X Angelique	**LIABILITY WAIVER**	Sales Tax
Net 68,580 LB	Deputy Weighmaster	Cadman, (Inc.) will not assume Liability for any property damage or any equipment damage for any delivery beyond the curb line.	**Total**

No one available to sign, customer waives receipt signature. [ ]	Received by Signature X	Print Name (Customer) X	Driver's Signature X	Standby Time

Arrive Job		Start Unloading		Finish Unloading		Standby Time		Customer's Initials X	**This Tickets Grand Total**	

CADMAN
HEIDELBERGCEMENTGroup®
(888) 322-6847 425-961-7100

WEIGHMASTER STATION
98846900
Sno River Delta Soils
17 E. Marine View Dr.
Everett, WA 98213

TICKET NO.	1124518496	TICKET TIME	8:44:05AM	DATE	6/3/2022
Customer No. 7832096	Payment Type Account	Customer Name STRIDER CONST CO INC			Order No. 10119451
Customer Job. No.	Customer P.O. 21NT		Map Ref. /		Disp. Ord. #
Truck Type Truck & Trailer	Truck No. RIV55TT	Vehicle or License Plate No.	Trailer or License Plate No.		Zone
Hauler/Carrier No. 7886596	Driver's Name	Delivered/Ordered 295.63 /	Load No. 9		Running Total 295.63

DEL/P PORT OF EVERETT
DEL/P 2600 FEDERAL AVE
EVERETT

Product	Description	Total	Unit Price	Amount
99005	CLASS 3 SOILS (TN)	31.20		

SCALE WEIGHT
102,980 LB
Gross
40,580 LB/P.T.
Tare
62,400 LB
Net

GROSS & TARE
[X] Scale 1 [ ] Scale 2
X Angelique
Deputy Weighmaster

A STANDBY SURCHARGE WILL BE ASSESSED FOR LOADS THAT EXCEED 10 MINUTES UNLOADING TIME.

LIABILITY WAIVER
Cadman, (Inc.) will not assume Liability for any property damage or any equipment damage for any delivery beyond the curb line.

Fuel Surcharge	
Sales Tax	
Total	
Standby Time	
This Tickets Grand Total	

No one available to sign, customer waives receipt signature. [ ]	Received by Signature X	Print Name (Customer) X	Driver's Signature X

Arrive Job		Start Unloading		Finish Unloading		Standby Time		Customer's Initials X

CADMAN
HEIDELBERGCEMENTGroup
(888) 322-6847 425-961-7100

WEIGHMASTER STATION
98846900
Sno River Delta Soils
17 E. Marine View Dr.
Everett, WA 98213

TICKET NO.	1124518497	TICKET TIME	8:47:07AM	DATE	6/3/2022
Customer No. 7832096	Payment Type Account	Customer Name STRIDER CONST CO INC			Order No. 10119451
Customer Job. No.	Customer P.O. 21NT		Map Ref. /		Disp. Ord. #
Truck Type Truck & Trailer	Truck No. RIV57TT	Vehicle or License Plate No.	Trailer or License Plate No.		Zone
Hauler/Carrier No. 7886596	Driver's Name	Delivered/Ordered 326.68 /	Load No. 10		Running Total 326.68

DEL/P PORT OF EVERETT
DEL/P 2600 FEDERAL AVE
EVERETT

Product	Description	Total	Unit Price	Amount
99005	CLASS 3 SOILS (TN)	31.05		

SCALE WEIGHT	GROSS & TARE			
Gross 103,300 LB	X Scale 1 ☐ Scale 2	A STANDBY SURCHARGE WILL BE ASSESSED FOR LOADS THAT EXCEED 10 MINUTES UNLOADING TIME.	Fuel Surcharge	
Tare 41,200 LB/P.T.	X Angelique Deputy Weighmaster	LIABILITY WAIVER Cadman, (Inc.) will not assume Liability for any property damage or any equipment damage for any delivery beyond the curb line.	Sales Tax	
Net 62,100 LB			**Total**	

No one available to sign, customer waives receipt signature. ☐	Received by Signature X	Print Name (Customer) X	Driver's Signature X	Standby Time	
Arrive Job	Start Unloading	Finish Unloading	Standby Time	Customer's Initials X	**This Tickets Grand Total**

CADMAN
HEIDELBERGCEMENTGroup
(888) 322-6847 425-961-7100

WEIGHMASTER STATION
98846900
Sno River Delta Soils
17 E. Marine View Dr.
Everett, WA 98213

TICKET NO.	1124518498	TICKET TIME	8:49:09AM	DATE	6/3/2022
Customer No. 7832096	Payment Type Account	Customer Name STRIDER CONST CO INC			Order No. 10119451
Customer Job. No.	Customer P.O. 21NT		Map Ref. /		Disp. Ord. #
Truck Type Truck & Trailer	Truck No. RIV56TT	Vehicle or License Plate No.	Trailer or License Plate No.		Zone
Hauler/Carrier No. 7886596	Driver's Name	Delivered/Ordered 355.76 /	Load No. 11		Running Total 355.76

DEL/P PORT OF EVERETT
DEL/P 2600 FEDERAL AVE
EVERETT

Product	Description	Total	Unit Price	Amount
99005	CLASS 3 SOILS (TN)	29.08		

SCALE WEIGHT	GROSS & TARE		
Gross 99,620 LB	☒ Scale 1 ☐ Scale 2	A STANDBY SURCHARGE WILL BE ASSESSED FOR LOADS THAT EXCEED 10 MINUTES UNLOADING TIME.	Fuel Surcharge
Tare 41,460 LB/P.T.	X Angelique	LIABILITY WAIVER	Sales Tax
Net 58,160 LB	Deputy Weighmaster	Cadman, (Inc.) will not assume Liability for any property damage or any equipment damage for any delivery beyond the curb line.	**Total**

No one available to sign, customer waives receipt signature. ☐	Received by Signature X	Print Name (Customer) X	Driver's Signature X	Standby Time

Arrive Job		Start Unloading		Finish Unloading		Standby Time		Customer's Initials X	This Tickets Grand Total	

CADMAN
HEIDELBERGCEMENTGroup®
(888) 322-6847 425-961-7100

WEIGHMASTER STATION
98846900
Sno River Delta Soils
17 E. Marine View Dr.
Everett, WA 98213

TICKET NO.	1124518499	TICKET TIME	8:58:37AM	DATE	6/3/2022
Customer No. 7832096	Payment Type Account	Customer Name STRIDER CONST CO INC			Order No. 10119451
Customer Job. No.	Customer P.O. 21NT		Map Ref. /		Disp. Ord. #
Truck Type Truck & Trailer	Truck No. RIV62TT	Vehicle or License Plate No.	Trailer or License Plate No.		Zone
Hauler/Carrier No.	Driver's Name	Delivered/Ordered 389.78 /	Load No. 12		Running Total 389.78

DEL/P PORT OF EVERETT
DEL/P 2600 FEDERAL AVE
EVERETT

Product	Description	Total	Unit Price	Amount
99005	CLASS 3 SOILS (TN)	34.02		

SCALE WEIGHT	GROSS & TARE		
108,980 LB		A STANDBY SURCHARGE WILL BE ASSESSED FOR LOADS THAT EXCEED 10 MINUTES UNLOADING TIME.	Fuel Surcharge
Gross 40,940 LB/P.T.*	X Scale 1 ☐ Scale 2	LIABILITY WAIVER	Sales Tax
Tare 68,040 LB	X Angelique Deputy Weighmaster	Cadman, (Inc.) will not assume Liability for any property damage or any equipment damage for any delivery beyond the curb line.	**Total**
Net			Standby Time

No one available to sign, customer waives receipt signature. ☐	Received by Signature X	Print Name (Customer) X	Driver's Signature X

Arrive Job		Start Unloading		Finish Unloading		Standby Time		Customer's Initials X	This Tickets Grand Total	

CADMAN
HEIDELBERGCEMENTGroup
(888) 322-6847 425-961-7100

WEIGHMASTER STATION
98846900
Sno River Delta Soils
17 E. Marine View Dr.
Everett, WA 98213

TICKET NO.	1124518500	TICKET TIME	9:11:32AM	DATE	6/3/2022
Customer No. 7832096	Payment Type Account	Customer Name STRIDER CONST CO INC			Order No. 10119451
Customer Job. No.	Customer P.O. 21NT		Map Ref. /		Disp. Ord. #
Truck Type Truck & Trailer	Truck No. RIV55TT	Vehicle or License Plate No.	Trailer or License Plate No.		Zone
Hauler/Carrier No. 7886596	Driver's Name	Delivered/Ordered 418.90 /	Load No. 13		Running Total 418.90

DEL/P PORT OF EVERETT
DEL/P 2600 FEDERAL AVE
EVERETT

Product	Description	Total	Unit Price	Amount
99005	CLASS 3 SOILS (TN)	29.12		

SCALE WEIGHT	GROSS & TARE		
Gross 98,820 LB	[X] Scale 1 [ ] Scale 2	A STANDBY SURCHARGE WILL BE ASSESSED FOR LOADS THAT EXCEED 10 MINUTES UNLOADING TIME.	Fuel Surcharge
Tare 40,580 LB/P.T.		LIABILITY WAIVER	Sales Tax
Net 58,240 LB	X Angelique Deputy Weighmaster	Cadman, (Inc.) will not assume Liability for any property damage or any equipment damage for any delivery beyond the curb line.	**Total**

No one available to sign, customer waives receipt signature. [ ]	Received by Signature X	Print Name (Customer) X	Driver's Signature X	Standby Time

Arrive Job		Start Unloading		Finish Unloading		Standby Time		Customer's Initials X	This Tickets Grand Total	

CADMAN
HEIDELBERGCEMENTGroup
(888) 322-6847 425-961-7100

WEIGHMASTER STATION
98846900
Sno River Delta Soils
17 E. Marine View Dr.
Everett, WA 98213

TICKET NO.	1124518501	TICKET TIME	9:19:11AM	DATE	6/3/2022

Customer No.	Payment Type	Customer Name	Order No.
7832096	Account	STRIDER CONST CO INC	10119451

Customer Job. No.	Customer P.O.	Map Ref.	Disp. Ord. #
	21NT	/	

Truck Type	Truck No.	Vehicle or License Plate No.	Trailer or License Plate No.	Zone
Truck & Trailer	RIV57TT			

Hauler/Carrier No.	Driver's Name	Delivered/Ordered	Load No.	Running Total
7886596		450.79 /	14	450.79

DEL/P PORT OF EVERETT
DEL/P 2600 FEDERAL AVE
EVERETT

Product	Description	Total	Unit Price	Amount
99005	CLASS 3 SOILS (TN)	31.89		

SCALE WEIGHT
104,980 LB
Gross
41,200 LB/P.T.
Tare
63,780 LB
Net

GROSS & TARE
X Scale 1 ☐ Scale 2
X Angelique
Deputy Weighmaster

A STANDBY SURCHARGE WILL BE ASSESSED FOR LOADS THAT EXCEED 10 MINUTES UNLOADING TIME.

LIABILITY WAIVER
Cadman, (Inc.) will not assume Liability for any property damage or any equipment damage for any delivery beyond the curb line.

Fuel Surcharge	
Sales Tax	
Total	
Standby Time	
This Tickets Grand Total	

No one available to sign, customer waives receipt signature. ☐	Received by Signature	Print Name (Customer)	Driver's Signature
	X	X	X

Arrive Job		Start Unloading		Finish Unloading		Standby Time		Customer's Initials
								X

CADMAN
HEIDELBERGCEMENTGroup®
(888) 322-6847 425-961-7100

WEIGHMASTER STATION
98846900
Sno River Delta Soils
17 E. Marine View Dr.
Everett, WA 98213

TICKET NO.	1124518502	TICKET TIME	9:22:10AM	DATE	6/3/2022
Customer No. 7832096	Payment Type Account	Customer Name STRIDER CONST CO INC			Order No. 10119451
Customer Job. No.	Customer P.O. 21NT		Map Ref. /		Disp. Ord. #
Truck Type Truck & Trailer	Truck No. RIV56TT	Vehicle or License Plate No.	Trailer or License Plate No.		Zone
Hauler/Carrier No. 7886596	Driver's Name	Delivered/Ordered 484.86 /	Load No. 15		Running Total 484.86

DEL/P PORT OF EVERETT
DEL/P 2600 FEDERAL AVE
EVERETT

Product	Description	Total	Unit Price	Amount
99005	CLASS 3 SOILS (TN)	34.07		

SCALE WEIGHT
109,600 LB
Gross
41,460 LB/P.T.
Tare
68,140 LB
Net

GROSS & TARE
☒ Scale 1 ☐ Scale 2
X Angelique
Deputy Weighmaster

A STANDBY SURCHARGE WILL BE ASSESSED FOR LOADS THAT EXCEED 10 MINUTES UNLOADING TIME.

LIABILITY WAIVER
Cadman, (Inc.) will not assume Liability for any property damage or any equipment damage for any delivery beyond the curb line.

Fuel Surcharge	
Sales Tax	
Total	
Standby Time	
This Tickets Grand Total	

No one available to sign, customer waives receipt signature. ☐	Received by Signature X	Print Name (Customer) X	Driver's Signature X

Arrive Job		Start Unloading		Finish Unloading		Standby Time		Customer's Initials X

CADMAN
HEIDELBERGCEMENTGroup®
(888) 322-6847 425-961-7100

TICKET NO	1124518503	TICKET TIME	9:27:31AM	DATE	6/3/2022

Customer No.	Payment Type	Customer Name	Order No.
7832096	Account	STRIDER CONST CO INC	10119451

Customer Job. No.	Customer P.O.	Map Ref.	Disp. Ord. #
	21NT	/	

Truck Type	Truck No.	Vehicle or License Plate No.	Trailer or License Plate No.	Zone
Truck & Trailer	RIV62TT			

Hauler/Carrier No.	Driver's Name	Delivered/Ordered	Load No.	Running Total
		518.51 /	16	518.51

WEIGHTMASTER STATION

98846900
Sno River Delta Soils
17 E. Marine View Dr.
Everett, WA 98213

DEL/P PORT OF EVERETT
DEL/P 2600 FEDERAL AVE
EVERETT

Product	Description	Total	Unit Price	Amount
99005	CLASS 3 SOILS (TN)	33.65		

SCALE WEIGHT

Gross 108,240 LB
Tare 40,940 LB/P.T.*
Net 67,300 LB

GROSS & TARE

☒ Scale 1 ☐ Scale 2

X Angelique
Deputy Weighmaster

A STANDBY SURCHARGE WILL BE ASSESSED FOR LOADS THAT EXCEED 10 MINUTES UNLOADING TIME.

LIABILITY WAIVER

Cadman, (Inc.) will not assume Liability for any property damage or any equipment damage for any delivery beyond the curb line.

Fuel Surcharge	
Sales Tax	
Total	
Standby Time	
This Tickets Grand Total	

No one available to sign, customer waives receipt signature. ☐	Received by Signature	Print Name (Customer)	Driver's Signature
	X	X	X

Arrive Job		Start Unloading		Finish Unloading		Standby Time		Customer's Initials
								X

CADMAN
HEIDELBERGCEMENTGroup
(888) 322-6847 425-961-7100

WEIGHMASTER STATION
98846900
Sno River Delta Soils
17 E. Marine View Dr.
Everett, WA 98213

TICKET NO.	1124518504	TICKET TIME	9:45:15AM	DATE	6/3/2022

Customer No.	Payment Type	Customer Name	Order No.
7832096	Account	STRIDER CONST CO INC	10119451

Customer Job. No.	Customer P.O.	Map Ref.	Disp. Ord. #
	21NT	/	

Truck Type	Truck No.	Vehicle or License Plate No.	Trailer or License Plate No.	Zone
Truck & Traile	RIV55TT			

Hauler/Carrier No.	Driver's Name	Delivered/Ordered	Load No.	Running Total
7886596		548.93 /	17	548.93

DEL/P PORT OF EVERETT
DEL/P 2600 FEDERAL AVE
EVERETT

Product	Description	Total	Unit Price	Amount
99005	CLASS 3 SOILS (TN)	30.42		

SCALE WEIGHT
101,420 LB
Gross
40,580 LB/P.T.
Tare
60,840 LB
Net

GROSS & TARE
☒ Scale 1 ☐ Scale 2
X Angelique
Deputy Weighmaster

A STANDBY SURCHARGE WILL BE ASSESSED FOR LOADS THAT EXCEED 10 MINUTES UNLOADING TIME.

LIABILITY WAIVER
Cadman, (Inc.) will not assume Liability for any property damage or any equipment damage for any delivery beyond the curb line.

Fuel Surcharge	
Sales Tax	
Total	
Standby Time	
This Tickets Grand Total	

No one available to sign, customer waives receipt signature. ☐	Received by Signature	Print Name (Customer)	Driver's Signature
	X	X	X

Arrive Job		Start Unloading		Finish Unloading		Standby Time		Customer's Initials
								X

CADMAN
HEIDELBERGCEMENTGroup
(888) 322-6847 425-961-7100

WEIGHMASTER STATION
98846900
Sno River Delta Soils
17 E. Marine View Dr.
Everett, WA 98213

TICKET NO.	1124518505	TICKET TIME	9:51:26AM	DATE	6/3/2022
Customer No. 7832096	Payment Type Account	Customer Name STRIDER CONST CO INC			Order No. 10119451
Customer Job. No.	Customer P.O. 21NT		Map Ref. /		Disp. Ord. #
Truck Type Truck & Trailer	Truck No. RIV57TT	Vehicle or License Plate No.	Trailer or License Plate No.		Zone
Hauler/Carrier No. 7886596	Driver's Name	Delivered/Ordered 577.17 /	Load No. 18		Running Total 577.17

DEL/P PORT OF EVERETT
DEL/P 2600 FEDERAL AVE
EVERETT

Product	Description	Total	Unit Price	Amount
99005	CLASS 3 SOILS (TN)	28.24		

SCALE WEIGHT	GROSS & TARE		
Gross 97,680 LB	[X] Scale 1 [ ] Scale 2	A STANDBY SURCHARGE WILL BE ASSESSED FOR LOADS THAT EXCEED 10 MINUTES UNLOADING TIME.	Fuel Surcharge
Tare 41,200 LB/P.T.	X Angelique	LIABILITY WAIVER	Sales Tax
Net 56,480 LB	Deputy Weighmaster	Cadman, (Inc.) will not assume Liability for any property damage or any equipment damage for any delivery beyond the curb line.	**Total**

No one available to sign, customer waives receipt signature. [ ]	Received by Signature X	Print Name (Customer) X	Driver's Signature X	Standby Time

Arrive Job		Start Unloading		Finish Unloading		Standby Time		Customer's Initials X	This Tickets Grand Total	

CADMAN
HEIDELBERGCEMENTGroup
(888) 322-6847 425-961-7100

WEIGHTMASTER STATION
98846900
Sno River Delta Soils
17 E. Marine View Dr.
Everett, WA 98213

TICKET NO.	1124518506	TICKET TIME	9:58:44AM	DATE	6/3/2022
Customer No. 7832096	Payment Type Account	Customer Name STRIDER CONST CO INC			Order No. 10119451
Customer Job. No.	Customer P.O. 21NT		Map Ref. /		Disp. Ord. #
Truck Type Truck & Trailer	Truck No. RIV56TT	Vehicle or License Plate No.	Trailer or License Plate No.		Zone
Hauler/Carrier No. 7886596	Driver's Name	Delivered/Ordered 608.44 /	Load No. 19		Running Total 608.44

DEL/P PORT OF EVERETT
DEL/P 2600 FEDERAL AVE
EVERETT

Product	Description	Total	Unit Price	Amount
99005	CLASS 3 SOILS (TN)	31.27		

SCALE WEIGHT
104,000 LB
Gross
41,460 LB/P.T.
Tare
62,540 LB
Net

GROSS & TARE
[X] Scale 1 [ ] Scale 2
X Angelique
Deputy Weighmaster

A STANDBY SURCHARGE WILL BE ASSESSED FOR LOADS THAT EXCEED 10 MINUTES UNLOADING TIME.

LIABILITY WAIVER
Cadman, (Inc.) will not assume Liability for any property damage or any equipment damage for any delivery beyond the curb line.

Fuel Surcharge	
Sales Tax	
Total	
Standby Time	
This Tickets Grand Total	

No one available to sign, customer waives receipt signature. [ ]	Received by Signature X	Print Name (Customer) X	Driver's Signature X

Arrive Job		Start Unloading		Finish Unloading		Standby Time		Customer's Initials X

CADMAN
HEIDELBERGCEMENTGroup®
(888) 322-6847 425-961-7100

WEIGHMASTER STATION
98846900
Sno River Delta Soils
17 E. Marine View Dr.
Everett, WA 98213

TICKET NO.	1124518507	TICKET TIME	10:04:42AM	DATE	6/3/2022
Customer No. 7832096	Payment Type Account	Customer Name STRIDER CONST CO INC			Order No. 10119451
Customer Job. No.	Customer P.O. 21NT		Map Ref. /		Disp. Ord. #
Truck Type Truck & Trailer	Truck No. RIV62TT	Vehicle or License Plate No.	Trailer or License Plate No.		Zone
Hauler/Carrier No.	Driver's Name	Delivered/Ordered 638.58 /	Load No. 20		Running Total 638.58

DEL/P PORT OF EVERETT
DEL/P 2600 FEDERAL AVE
EVERETT

Product	Description	Total	Unit Price	Amount
99005	CLASS 3 SOILS (TN)	30.14		

SCALE WEIGHT	GROSS & TARE		
Gross 101,220 LB	X Scale 1 ☐ Scale 2	A STANDBY SURCHARGE WILL BE ASSESSED FOR LOADS THAT EXCEED 10 MINUTES UNLOADING TIME.	Fuel Surcharge
Tare 40,940 LB/P.T.*		LIABILITY WAIVER	Sales Tax
Net 60,280 LB	X Angelique Deputy Weighmaster	Cadman, (Inc.) will not assume Liability for any property damage or any equipment damage for any delivery beyond the curb line.	**Total**

No one available to sign, customer waives receipt signature. ☐	Received by Signature X	Print Name (Customer) X	Driver's Signature X	Standby Time

Arrive Job		Start Unloading		Finish Unloading		Standby Time		Customer's Initials X	This Tickets Grand Total	

CADMAN
HEIDELBERGCEMENTGroup
(888) 322-6847 425-961-7100

WEIGHTMASTER STATION
98846900
Sno River Delta Soils
17 E. Marine View Dr.
Everett, WA 98213

TICKET NO.	1124518508	TICKET TIME	10:19:00AM	DATE	6/3/2022
Customer No. 7832096	Payment Type Account	Customer Name STRIDER CONST CO INC			Order No. 10119451
Customer Job. No.	Customer P.O. 21NT		Map Ref. /		Disp. Ord. #
Truck Type Truck & Trailer	Truck No. RIV55TT	Vehicle or License Plate No.	Trailer or License Plate No.		Zone
Hauler/Carrier No. 7886596	Driver's Name	Delivered/Ordered 668.15 /	Load No. 21		Running Total 668.15

DEL/P PORT OF EVERETT
DEL/P 2600 FEDERAL AVE
EVERETT

Product	Description	Total	Unit Price	Amount
99005	CLASS 3 SOILS (TN)	29.57		

SCALE WEIGHT
Gross 99,720 LB
Tare 40,580 LB/P.T.
Net 59,140 LB

GROSS & TARE
☒ Scale 1 ☐ Scale 2
X Angelique
Deputy Weighmaster

A STANDBY SURCHARGE WILL BE ASSESSED FOR LOADS THAT EXCEED 10 MINUTES UNLOADING TIME.

LIABILITY WAIVER
Cadman, (Inc.) will not assume Liability for any property damage or any equipment damage for any delivery beyond the curb line.

Fuel Surcharge	
Sales Tax	
Total	
Standby Time	
This Tickets Grand Total	

No one available to sign, customer waives receipt signature. ☐	Received by Signature X	Print Name (Customer) X	Driver's Signature X	Customer's Initials X

Arrive Job		Start Unloading		Finish Unloading		Standby Time	

CADMAN
HEIDELBERGCEMENTGroup®
(888) 322-6847 425-961-7100

WEIGHMASTER STATION
98846900
Sno River Delta Soils
17 E. Marine View Dr.
Everett, WA 98213

TICKET NO.	1124518509	TICKET TIME	10:23:01AM	DATE	6/3/2022
Customer No. 7832096	Payment Type Account	Customer Name STRIDER CONST CO INC			Order No. 10119451
Customer Job. No.	Customer P.O. 21NT		Map Ref. /		Disp. Ord. #
Truck Type Truck & Traile	Truck No. RIV57TT	Vehicle or License Plate No.	Trailer or License Plate No.		Zone
Hauler/Carrier No. 7886596	Driver's Name	Delivered/Ordered 697.38 /	Load No. 22		Running Total 697.38

DEL/P PORT OF EVERETT
DEL/P 2600 FEDERAL AVE
EVERETT

Product	Description	Total	Unit Price	Amount
99005	CLASS 3 SOILS (TN)	29.23		

SCALE WEIGHT	GROSS & TARE		
Gross 99,660 LB	☒ Scale 1 ☐ Scale 2	A STANDBY SURCHARGE WILL BE ASSESSED FOR LOADS THAT EXCEED 10 MINUTES UNLOADING TIME.	Fuel Surcharge
Tare 41,200 LB/P.T.*	X Angelique	LIABILITY WAIVER	Sales Tax
Net 58,460 LB	Deputy Weighmaster	Cadman, (Inc.) will not assume Liability for any property damage or any equipment damage for any delivery beyond the curb line.	**Total**

No one available to sign, customer waives receipt signature. ☐	Received by Signature X	Print Name (Customer) X	Driver's Signature X	Standby Time

Arrive Job	Start Unloading	Finish Unloading	Standby Time	Customer's Initials X	This Tickets Grand Total

CADMAN
HEIDELBERGCEMENTGroup®
(888) 322-6847 425-961-7100

WEIGHMASTER STATION
98846900
Sno River Delta Soils
17 E. Marine View Dr.
Everett, WA 98213

TICKET NO.	1124518510	TICKET TIME	10:25:44AM	DATE	6/3/2022
Customer No. 7832096	Payment Type Account	Customer Name STRIDER CONST CO INC			Order No. 10119451
Customer Job. No.	Customer P.O. 21NT		Map Ref. /		Disp. Ord. #
Truck Type Truck & Trailer	Truck No. RIV56TT	Vehicle or License Plate No.	Trailer or License Plate No.		Zone
Hauler/Carrier No. 7886596	Driver's Name	Delivered/Ordered 725.34 /	Load No. 23		Running Total 725.34

DEL/P PORT OF EVERETT
DEL/P 2600 FEDERAL AVE
EVERETT

Product	Description	Total	Unit Price	Amount
99005	CLASS 3 SOILS (TN)	27.96		

SCALE WEIGHT	GROSS & TARE		
Gross 97,380 LB	☒ Scale 1 ☐ Scale 2	A STANDBY SURCHARGE WILL BE ASSESSED FOR LOADS THAT EXCEED 10 MINUTES UNLOADING TIME.	Fuel Surcharge
Tare 41,460 LB/P.T.*	X Angelique Deputy Weighmaster	LIABILITY WAIVER Cadman, (Inc.) will not assume Liability for any property damage or any equipment damage for any delivery beyond the curb line.	Sales Tax
Net 55,920 LB			**Total**

No one available to sign, customer waives receipt signature. ☐	Received by Signature X	Print Name (Customer) X	Driver's Signature X	Standby Time

Arrive Job	Start Unloading	Finish Unloading	Standby Time	Customer's Initials X	This Tickets Grand Total

CADMAN
HEIDELBERGCEMENTGroup®
(888) 322-6847 425-961-7100

WEIGHMASTER STATION
98846900
Sno River Delta Soils
17 E. Marine View Dr.
Everett, WA 98213

TICKET NO.	1124518511	TICKET TIME	10:31:46AM	DATE	6/3/2022
Customer No. 7832096	Payment Type Account	Customer Name STRIDER CONST CO INC			Order No. 10119451
Customer Job. No.	Customer P.O. 21NT		Map Ref. /		Disp. Ord. #
Truck Type Truck & Trailer	Truck No. RIV62TT	Vehicle or License Plate No.	Trailer or License Plate No.		Zone
Hauler/Carrier No.	Driver's Name	Delivered/Ordered 759.70 /	Load No. 24		Running Total 759.70

DEL/P PORT OF EVERETT
DEL/P 2600 FEDERAL AVE
EVERETT

Product	Description	Total	Unit Price	Amount
99005	CLASS 3 SOILS (TN)	34.36		

SCALE WEIGHT	GROSS & TARE		
Gross 109,660 LB	X Scale 1 ☐ Scale 2	A STANDBY SURCHARGE WILL BE ASSESSED FOR LOADS THAT EXCEED 10 MINUTES UNLOADING TIME.	Fuel Surcharge
40,940 LB/P.T.*		LIABILITY WAIVER	Sales Tax
Tare 68,720 LB	X Angelique	Cadman, (Inc.) will not assume Liability for any property damage or any equipment damage for any delivery beyond the curb line.	**Total**
Net	X Deputy Weighmaster		

No one available to sign, customer waives receipt signature. ☐	Received by Signature X	Print Name (Customer) X	Driver's Signature X	Standby Time

Arrive Job		Start Unloading		Finish Unloading		Standby Time		Customer's Initials X	This Tickets Grand Total	

CADMAN
HEIDELBERGCEMENTGroup
(888) 322-6847 425-961-7100

WEIGHMASTER STATION
98846900
Sno River Delta Soils
17 E. Marine View Dr.
Everett, WA 98213

TICKET NO.	1124518514	TICKET TIME	10:47:57AM	DATE	6/3/2022
Customer No. 7832096	Payment Type Account	Customer Name STRIDER CONST CO INC			Order No. 10119451
Customer Job. No.	Customer P.O. 21NT		Map Ref. /		Disp. Ord. #
Truck Type Truck & Trailer	Truck No. RIV55TT	Vehicle or License Plate No.	Trailer or License Plate No.		Zone
Hauler/Carrier No. 7886596	Driver's Name	Delivered/Ordered 787.77 /	Load No. 25		Running Total 787.77

DEL/P PORT OF EVERETT
DEL/P 2600 FEDERAL AVE
EVERETT

Product	Description	Total	Unit Price	Amount
99005	CLASS 3 SOILS (TN)	28.07		

SCALE WEIGHT	GROSS & TARE
Gross 96,720 LB	[X] Scale 1 [ ] Scale 2
Tare 40,580 LB/P.T.*	X Angelique Deputy Weighmaster
Net 56,140 LB	

A STANDBY SURCHARGE WILL BE ASSESSED FOR LOADS THAT EXCEED 10 MINUTES UNLOADING TIME.

LIABILITY WAIVER

Cadman, (Inc.) will not assume Liability for any property damage or any equipment damage for any delivery beyond the curb line.

Fuel Surcharge	
Sales Tax	
Total	
Standby Time	
This Tickets Grand Total	

No one available to sign, customer waives receipt signature. [ ]	Received by Signature X	Print Name (Customer) X	Driver's Signature X	Customer's Initials X

Arrive Job		Start Unloading		Finish Unloading		Standby Time	

CADMAN
HEIDELBERGCEMENTGroup®
(888) 322-6847 425-961-7100

WEIGHMASTER STATION
98846900
Sno River Delta Soils
17 E. Marine View Dr.
Everett, WA 98213

TICKET NO.	1124518515	TICKET TIME	10:53:04AM	DATE	6/3/2022

Customer No.	Payment Type	Customer Name	Order No.
7832096	Account	STRIDER CONST CO INC	10119451

Customer Job. No.	Customer P.O.	Map Ref.	Disp. Ord. #
	21NT	/	

Truck Type	Truck No.	Vehicle or License Plate No.	Trailer or License Plate No.	Zone
Truck & Trailer	RIV57TT			

Hauler/Carrier No.	Driver's Name	Delivered/Ordered	Load No.	Running Total
7886596		818.93 /	26	818.93

DEL/P PORT OF EVERETT
DEL/P 2600 FEDERAL AVE
EVERETT

Product	Description	Total	Unit Price	Amount
99005	CLASS 3 SOILS (TN)	31.16		

SCALE WEIGHT
103,520 LB
Gross
41,200 LB/P.T.*
Tare
62,320 LB
Net

GROSS & TARE
☒ Scale 1 ☐ Scale 2
X Angelique
Deputy Weighmaster

A STANDBY SURCHARGE WILL BE ASSESSED FOR LOADS THAT EXCEED 10 MINUTES UNLOADING TIME.

LIABILITY WAIVER
Cadman, (Inc.) will not assume Liability for any property damage or any equipment damage for any delivery beyond the curb line.

Fuel Surcharge	
Sales Tax	
Total	

No one available to sign, customer waives receipt signature. ☐

Received by Signature X

Print Name (Customer) X

Driver's Signature X

Standby Time

Arrive Job		Start Unloading		Finish Unloading		Standby Time		Customer's Initials X	**This Tickets Grand Total**	

CADMAN
HEIDELBERGCEMENTGroup
(888) 322-6847 425-961-7100

WEIGHMASTER STATION
98846900
Sno River Delta Soils
17 E. Marine View Dr.
Everett, WA 98213

TICKET NO.	1124518519	TICKET TIME	11:21:30AM	DATE	6/3/2022
Customer No. 7832096	Payment Type Account	Customer Name STRIDER CONST CO INC			Order No. 10119451
Customer Job. No.	Customer P.O. 21NT		Map Ref. /		Disp. Ord. #
Truck Type Truck & Trailer	Truck No. RIV55TT	Vehicle or License Plate No.	Trailer or License Plate No.		Zone
Hauler/Carrier No. 7886596	Driver's Name	Delivered/Ordered 911.85 /	Load No. 29		Running Total 911.85

DEL/P PORT OF EVERETT
DEL/P 2600 FEDERAL AVE
EVERETT

Product	Description	Total	Unit Price	Amount
99005	CLASS 3 SOILS (TN)	30.11		

SCALE WEIGHT	GROSS & TARE		
Gross 100,800 LB	[X] Scale 1 [ ] Scale 2	A STANDBY SURCHARGE WILL BE ASSESSED FOR LOADS THAT EXCEED 10 MINUTES UNLOADING TIME.	Fuel Surcharge
Tare 40,580 LB/P.T.*		LIABILITY WAIVER	Sales Tax
Net 60,220 LB	X Angelique Deputy Weighmaster	Cadman, (Inc.) will not assume Liability for any property damage or any equipment damage for any delivery beyond the curb line.	**Total**

No one available to sign, customer waives receipt signature. [ ]	Received by Signature X	Print Name (Customer) X	Driver's Signature X	Standby Time

Arrive Job		Start Unloading		Finish Unloading		Standby Time		Customer's Initials X	This Tickets Grand Total	

CADMAN
HEIDELBERGCEMENTGroup
(888) 322-6847 425-961-7100

WEIGHMASTER STATION
98846900
Sno River Delta Soils
17 E. Marine View Dr.
Everett, WA 98213

TICKET NO	1124518521	TICKET TIME	11:26:07AM	DATE	6/3/2022

Customer No.	Payment Type	Customer Name	Order No.
7832096	Account	STRIDER CONST CO INC	10119451

Customer Job. No.	Customer P.O.	Map Ref.	Disp. Ord. #
	21NT	/	

Truck Type	Truck No.	Vehicle or License Plate No.	Trailer or License Plate No.	Zone
Truck & Trailer	RIV56TT			

Hauler/Carrier No.	Driver's Name	Delivered/Ordered	Load No.	Running Total
7886596		972.15 /	31	972.15

DEL/P PORT OF EVERETT
DEL/P 2600 FEDERAL AVE
EVERETT

Product	Description	Total	Unit Price	Amount
99005	CLASS 3 SOILS (TN)	28.98		

SCALE WEIGHT
99,420 LB
Gross
41,460 LB/P.T.*
Tare
57,960 LB
Net

GROSS & TARE
X Scale 1 ☐ Scale 2
X Angelique
Deputy Weighmaster

A STANDBY SURCHARGE WILL BE ASSESSED FOR LOADS THAT EXCEED 10 MINUTES UNLOADING TIME.

LIABILITY WAIVER
Cadman, (Inc.) will not assume Liability for any property damage or any equipment damage for any delivery beyond the curb line.

Fuel Surcharge	
Sales Tax	
Total	
Standby Time	
This Tickets Grand Total	

No one available to sign, customer waives receipt signature. ☐	Received by Signature X	Print Name (Customer) X	Driver's Signature X

Arrive Job		Start Unloading		Finish Unloading		Standby Time		Customer's Initials X

CADMAN
HEIDELBERGCEMENTGroup®
(888) 322-6847 425-961-7100

WEIGHMASTER STATION
98846900
Sno River Delta Soils
17 E. Marine View Dr.
Everett, WA 98213

TICKET NO.	1124518516	TICKET TIME	10:55:34AM	DATE	6/3/2022
Customer No. 7832096	Payment Type Account	Customer Name STRIDER CONST CO INC			Order No. 10119451
Customer Job. No.	Customer P.O. 21NT		Map Ref. /		Disp. Ord. #
Truck Type Truck & Trailer	Truck No. RIV56TT	Vehicle or License Plate No.	Trailer or License Plate No.		Zone
Hauler/Carrier No. 7886596	Driver's Name	Delivered/Ordered 849.47 /	Load No. 27		Running Total 849.47

DEL/P PORT OF EVERETT
DEL/P 2600 FEDERAL AVE
EVERETT

Product	Description	Total	Unit Price	Amount
99005	CLASS 3 SOILS (TN)	30.54		

SCALE WEIGHT	GROSS & TARE		
Gross 102,540 LB		A STANDBY SURCHARGE WILL BE ASSESSED FOR LOADS THAT EXCEED 10 MINUTES UNLOADING TIME.	Fuel Surcharge
Tare 41,460 LB/P.T.*	[X] Scale 1 [ ] Scale 2	LIABILITY WAIVER	Sales Tax
Net 61,080 LB	X Angelique Deputy Weighmaster	Cadman, (Inc.) will not assume Liability for any property damage or any equipment damage for any delivery beyond the curb line.	**Total**

No one available to sign, customer waives receipt signature. [ ]	Received by Signature X	Print Name (Customer) X	Driver's Signature X	Standby Time

Arrive Job		Start Unloading		Finish Unloading		Standby Time		Customer's Initials X	This Tickets Grand Total	

CADMAN
HEIDELBERGCEMENTGroup
(888) 322-6847 425-961-7100

WEIGHTMASTER STATION
98846900
Sno River Delta Soils
17 E. Marine View Dr.
Everett, WA 98213

TICKET NO.	1124518520	TICKET TIME	11:24:00AM	DATE	6/3/2022
Customer No. 7832096	Payment Type Account	Customer Name STRIDER CONST CO INC			Order No. 10119451
Customer Job. No.	Customer P.O. 21NT		Map Ref. /		Disp. Ord. #
Truck Type Truck & Trailer	Truck No. RIV57TT	Vehicle or License Plate No.	Trailer or License Plate No.		Zone
Hauler/Carrier No. 7886596	Driver's Name	Delivered/Ordered 943.17 /	Load No. 30		Running Total 943.17

DEL/P PORT OF EVERETT
DEL/P 2600 FEDERAL AVE
EVERETT

Product	Description	Total	Unit Price	Amount
99005	CLASS 3 SOILS (TN)	31.32		

SCALE WEIGHT	GROSS & TARE		
103,840 LB			Fuel Surcharge
Gross	[X] Scale 1 [ ] Scale 2	A STANDBY SURCHARGE WILL BE ASSESSED FOR LOADS THAT EXCEED 10 MINUTES UNLOADING TIME.	
41,200 LB/P.T.*			Sales Tax
Tare	X Angelique		
62,640 LB	Deputy Weighmaster		**Total**
Net			

LIABILITY WAIVER
Cadman, (Inc.) will not assume Liability for any property damage or any equipment damage for any delivery beyond the curb line.

No one available to sign, customer waives receipt signature. [ ]	Received by Signature X	Print Name (Customer) X	Driver's Signature X	Standby Time	

Arrive Job		Start Unloading		Finish Unloading		Standby Time		Customer's Initials X	This Tickets Grand Total	

CADMAN
HEIDELBERGCEMENTGroup
(888) 322-6847 425-961-7100

WEIGHTMASTER STATION
98846900
Sno River Delta Soils
17 E. Marine View Dr.
Everett, WA 98213

TICKET NO.	1124518517	TICKET TIME	11:02:12AM	DATE	6/3/2022
Customer No. 7832096	Payment Type Account	Customer Name STRIDER CONST CO INC			Order No. 10119451
Customer Job. No.	Customer P.O. 21NT		Map Ref. /		Disp. Ord. #
Truck Type Truck & Trailer	Truck No. RIV62TT	Vehicle or License Plate No.	Trailer or License Plate No.		Zone
Hauler/Carrier No.	Driver's Name	Delivered/Ordered 881.74 /	Load No. 28		Running Total 881.74

DEL/P PORT OF EVERETT
DEL/P 2600 FEDERAL AVE
EVERETT

Product	Description	Total	Unit Price	Amount
99005	CLASS 3 SOILS (TN)	32.27		

SCALE WEIGHT	GROSS & TARE		
Gross 105,480 LB	X Scale 1 ☐ Scale 2	A STANDBY SURCHARGE WILL BE ASSESSED FOR LOADS THAT EXCEED 10 MINUTES UNLOADING TIME.	Fuel Surcharge
Tare 40,940 LB/P.T.*		LIABILITY WAIVER	Sales Tax
Net 64,540 LB	X Angelique Deputy Weighmaster	Cadman, (Inc.) will not assume Liability for any property damage or any equipment damage for any delivery beyond the curb line.	**Total**

No one available to sign, customer waives receipt signature. ☐	Received by Signature X	Print Name (Customer) X	Driver's Signature X	Standby Time

Arrive Job		Start Unloading		Finish Unloading		Standby Time		Customer's Initials X	This Tickets Grand Total	

CADMAN
HEIDELBERGCEMENTGroup
(888) 322-6847 425-961-7100

WEIGHTMASTER STATION
98846900
Sno River Delta Soils
17 E. Marine View Dr.
Everett, WA 98213

TICKET NO.	1124518522	TICKET TIME	11:31:12AM	DATE	6/3/2022
Customer No. 7832096	Payment Type Account	Customer Name STRIDER CONST CO INC			Order No. 10119451
Customer Job. No.	Customer P.O. 21NT		Map Ref. /		Disp. Ord. #
Truck Type Truck & Trailer	Truck No. RIV62TT	Vehicle or License Plate No.	Trailer or License Plate No.		Zone
Hauler/Carrier No.	Driver's Name	Delivered/Ordered 1,003.81 /	Load No. 32		Running Total 1,003.81

DEL/P PORT OF EVERETT
DEL/P 2600 FEDERAL AVE
EVERETT

Product	Description	Total	Unit Price	Amount
99005	CLASS 3 SOILS (TN)	31.66		

SCALE WEIGHT
104,260 LB
Gross
40,940 LB/P.T.*
Tare
63,320 LB
Net

GROSS & TARE
☒ Scale 1 ☐ Scale 2
X Angelique
Deputy Weighmaster

A STANDBY SURCHARGE WILL BE ASSESSED FOR LOADS THAT EXCEED 10 MINUTES UNLOADING TIME.

LIABILITY WAIVER
Cadman, (Inc.) will not assume Liability for any property damage or any equipment damage for any delivery beyond the curb line.

Fuel Surcharge	
Sales Tax	
Total	
Standby Time	
This Tickets Grand Total	

No one available to sign, customer waives receipt signature. ☐	Received by Signature X	Print Name (Customer) X	Driver's Signature X

Arrive Job		Start Unloading		Finish Unloading		Standby Time		Customer's Initials X

CADMAN
HEIDELBERGCEMENTGroup
(888) 322-6847 425-961-7100

WEIGHMASTER STATION
98846900
Sno River Delta Soils
17 E. Marine View Dr.
Everett, WA 98213

TICKET NO.	1124518528	TICKET TIME	11:51:23AM	DATE	6/3/2022
Customer No. 7832096	Payment Type Account	Customer Name STRIDER CONST CO INC			Order No. 10119451
Customer Job. No.	Customer P.O. 21NT		Map Ref. /		Disp. Ord. #
Truck Type Truck & Trailer	Truck No. RIV55TT	Vehicle or License Plate No.	Trailer or License Plate No.		Zone
Hauler/Carrier No. 7886596	Driver's Name	Delivered/Ordered 1,034.44 /	Load No. 33		Running Total 1,034.44

DEL/P PORT OF EVERETT
DEL/P 2600 FEDERAL AVE
EVERETT

Product	Description	Total	Unit Price	Amount
99005	CLASS 3 SOILS (TN)	30.63		

SCALE WEIGHT	GROSS & TARE		
101,840 LB			Fuel Surcharge
Gross 40,580 LB/P.T.*	[X] Scale 1 [ ] Scale 2	**A STANDBY SURCHARGE WILL BE ASSESSED FOR LOADS THAT EXCEED 10 MINUTES UNLOADING TIME.**	Sales Tax
Tare 61,260 LB	X Angelique Deputy Weighmaster	**LIABILITY WAIVER** Cadman, (Inc.) will not assume Liability for any property damage or any equipment damage for any delivery beyond the curb line.	**Total**
Net			Standby Time

No one available to sign, customer waives receipt signature. [ ]	Received by Signature X	Print Name (Customer) X	Driver's Signature X	Customer's Initials X	This Tickets Grand Total

Arrive Job		Start Unloading		Finish Unloading		Standby Time	

CADMAN
HEIDELBERGCEMENTGroup
(888) 322-6847 425-961-7100

WEIGHTMASTER STATION

98846900
Sno River Delta Soils
17 E. Marine View Dr.
Everett, WA 98213

TICKET NO.	1124518530	TICKET TIME	11:57:07AM	DATE	6/3/2022
Customer No. 7832096	Payment Type Account	Customer Name STRIDER CONST CO INC			Order No. 10119451
Customer Job. No.	Customer P.O. 21NT		Map Ref. /		Disp. Ord. #
Truck Type Truck & Trailer	Truck No. RIV57TT	Vehicle or License Plate No.	Trailer or License Plate No.		Zone
Hauler/Carrier No. 7886596	Driver's Name	Delivered/Ordered 1,065.67 /	Load No. 34		Running Total 1,065.67

DEL/P PORT OF EVERETT
DEL/P 2600 FEDERAL AVE
EVERETT

Product	Description	Total	Unit Price	Amount
99005	CLASS 3 SOILS (TN)	31.23		

SCALE WEIGHT	GROSS & TARE
Gross 103,660 LB	[X] Scale 1 [ ] Scale 2
Tare 41,200 LB/P.T.*	X Angelique Deputy Weighmaster
Net 62,460 LB	

A STANDBY SURCHARGE WILL BE ASSESSED FOR LOADS THAT EXCEED 10 MINUTES UNLOADING TIME.

LIABILITY WAIVER

Cadman, (Inc.) will not assume Liability for any property damage or any equipment damage for any delivery beyond the curb line.

Fuel Surcharge	
Sales Tax	
Total	
Standby Time	
This Tickets Grand Total	

No one available to sign, customer waives receipt signature. [ ]	Received by Signature X	Print Name (Customer) X	Driver's Signature X

Arrive Job		Start Unloading		Finish Unloading		Standby Time		Customer's Initials X

CADMAN
HEIDELBERGCEMENTGroup
(888) 322-6847 425-961-7100

WEIGHMASTER STATION
98846900
Sno River Delta Soils
17 E. Marine View Dr.
Everett, WA 98213

TICKET NO.	1124518531	TICKET TIME	11:59:23AM	DATE	6/3/2022
Customer No. 7832096	Payment Type Account	Customer Name STRIDER CONST CO INC			Order No. 10119451
Customer Job. No.	Customer P.O. 21NT		Map Ref. /		Disp. Ord. #
Truck Type Truck & Trailer	Truck No. RIV56TT	Vehicle or License Plate No.	Trailer or License Plate No.		Zone
Hauler/Carrier No. 7886596	Driver's Name	Delivered/Ordered 1,096.09 /	Load No. 35		Running Total 1,096.09

DEL/P PORT OF EVERETT
DEL/P 2600 FEDERAL AVE
EVERETT

Product	Description	Total	Unit Price	Amount
99005	CLASS 3 SOILS (TN)	30.42		

SCALE WEIGHT	GROSS & TARE		
102,300 LB			Fuel Surcharge
Gross 41,460 LB/P.T.*	[X] Scale 1 [ ] Scale 2	**A STANDBY SURCHARGE WILL BE ASSESSED FOR LOADS THAT EXCEED 10 MINUTES UNLOADING TIME.**	Sales Tax
Tare 60,840 LB	X Angelique Deputy Weighmaster	**LIABILITY WAIVER** Cadman, (Inc.) will not assume Liability for any property damage or any equipment damage for any delivery beyond the curb line.	**Total**
Net			

No one available to sign, customer waives receipt signature. [ ]	Received by Signature X	Print Name (Customer) X	Driver's Signature X	Standby Time

Arrive Job		Start Unloading		Finish Unloading		Standby Time		Customer's Initials X	This Tickets Grand Total	

CADMAN
HEIDELBERGCEMENTGroup
(888) 322-6847 425-961-7100

WEIGHMASTER STATION
98846900
Sno River Delta Soils
17 E. Marine View Dr.
Everett, WA 98213

TICKET NO.	1124518532	TICKET TIME	12:02:29PM	DATE	6/3/2022
Customer No. 7832096	Payment Type Account	Customer Name STRIDER CONST CO INC			Order No. 10119451
Customer Job. No.	Customer P.O. 21NT		Map Ref. /		Disp. Ord. #
Truck Type Truck & Trailer	Truck No. RIV62TT	Vehicle or License Plate No.	Trailer or License Plate No.		Zone
Hauler/Carrier No.	Driver's Name	Delivered/Ordered 1,126.90 /	Load No. 36		Running Total 1,126.90

DEL/P PORT OF EVERETT
DEL/P 2600 FEDERAL AVE
EVERETT

Product	Description	Total	Unit Price	Amount
99005	CLASS 3 SOILS (TN)	30.81		

SCALE WEIGHT
102,560 LB
Gross
40,940 LB/P.T.*
Tare
61,620 LB
Net

GROSS & TARE
☒ Scale 1 ☐ Scale 2
X Angelique
Deputy Weighmaster

A STANDBY SURCHARGE WILL BE ASSESSED FOR LOADS THAT EXCEED 10 MINUTES UNLOADING TIME.

LIABILITY WAIVER
Cadman, (Inc.) will not assume Liability for any property damage or any equipment damage for any delivery beyond the curb line.

Fuel Surcharge	
Sales Tax	
Total	
Standby Time	
This Tickets Grand Total	

No one available to sign, customer waives receipt signature. ☐	Received by Signature X	Print Name (Customer) X	Driver's Signature X

Arrive Job		Start Unloading		Finish Unloading		Standby Time		Customer's Initials X

CADMAN
HEIDELBERGCEMENTGroup
(888) 322-6847 425-961-7100

WEIGHMASTER STATION
98846900
Sno River Delta Soils
17 E. Marine View Dr.
Everett, WA 98213

TICKET NO	1124518534	TICKET TIME	12:31:31PM	DATE	6/3/2022
Customer No. 7832096	Payment Type Account	Customer Name STRIDER CONST CO INC			Order No. 10119451
Customer Job. No.	Customer P.O. 21NT		Map Ref. /		Disp. Ord. #
Truck Type Truck & Trailer	Truck No. RIV55TT	Vehicle or License Plate No.	Trailer or License Plate No.		Zone
Hauler/Carrier No. 7886596	Driver's Name	Delivered/Ordered 1,157.16 /	Load No. 37		Running Total 1,157.16

DEL/P PORT OF EVERETT
DEL/P 2600 FEDERAL AVE
EVERETT

Product	Description	Total	Unit Price	Amount
99005	CLASS 3 SOILS (TN)	30.26		

SCALE WEIGHT	GROSS & TARE		
Gross 101,100 LB	☒ Scale 1 ☐ Scale 2	A STANDBY SURCHARGE WILL BE ASSESSED FOR LOADS THAT EXCEED 10 MINUTES UNLOADING TIME.	Fuel Surcharge
Tare 40,580 LB/P.T.*		LIABILITY WAIVER	Sales Tax
Net 60,520 LB	X Angelique Deputy Weighmaster	Cadman, (Inc.) will not assume Liability for any property damage or any equipment damage for any delivery beyond the curb line.	**Total**

No one available to sign, customer waives receipt signature. ☐	Received by Signature X	Print Name (Customer) X	Driver's Signature X	Standby Time

Arrive Job		Start Unloading		Finish Unloading		Standby Time		Customer's Initials X	This Tickets Grand Total	

CADMAN
HEIDELBERGCEMENTGroup
(888) 322-6847 425-961-7100

WEIGHMASTER STATION
98846900
Sno River Delta Soils
17 E. Marine View Dr.
Everett, WA 98213

TICKET NO.	1124518535	TICKET TIME	12:39:37PM	DATE	6/3/2022
Customer No. 7832096	Payment Type Account	Customer Name STRIDER CONST CO INC			Order No. 10119451
Customer Job. No.	Customer P.O. 21NT		Map Ref. /		Disp. Ord. #
Truck Type Truck & Trailer	Truck No. RIV57TT	Vehicle or License Plate No.	Trailer or License Plate No.		Zone
Hauler/Carrier No. 7886596	Driver's Name	Delivered/Ordered 1,188.34 /	Load No. 38		Running Total 1,188.34

DEL/P PORT OF EVERETT
DEL/P 2600 FEDERAL AVE
EVERETT

Product	Description	Total	Unit Price	Amount
99005	CLASS 3 SOILS (TN)	31.18		

SCALE WEIGHT	GROSS & TARE		Fuel Surcharge	
Gross 103,560 LB	☒ Scale 1 ☐ Scale 2	**A STANDBY SURCHARGE WILL BE ASSESSED FOR LOADS THAT EXCEED 10 MINUTES UNLOADING TIME.**	Sales Tax	
Tare 41,200 LB/P.T.*	X Angelique	**LIABILITY WAIVER**	**Total**	
Net 62,360 LB	Deputy Weighmaster	Cadman, (Inc.) will not assume Liability for any property damage or any equipment damage for any delivery beyond the curb line.	Standby Time	

No one available to sign, customer waives receipt signature. ☐	Received by Signature X	Print Name (Customer) X	Driver's Signature X	Customer's Initials X	This Tickets Grand Total

Arrive Job		Start Unloading		Finish Unloading		Standby Time	

CADMAN
HEIDELBERGCEMENTGroup®
(888) 322-6847 425-961-7100

WEIGHMASTER STATION
98846900
Sno River Delta Soils
17 E. Marine View Dr.
Everett, WA 98213

TICKET NO.	1124518536	TICKET TIME	12:41:58PM	DATE	6/3/2022
Customer No. 7832096	Payment Type Account	Customer Name STRIDER CONST CO INC			Order No. 10119451
Customer Job. No.	Customer P.O. 21NT		Map Ref. /		Disp. Ord. #
Truck Type Truck & Trailer	Truck No. RIV56TT	Vehicle or License Plate No.	Trailer or License Plate No.		Zone
Hauler/Carrier No. 7886596	Driver's Name	Delivered/Ordered 1,217.75 /	Load No. 39		Running Total 1,217.75

DEL/P PORT OF EVERETT
DEL/P 2600 FEDERAL AVE
EVERETT

Product	Description	Total	Unit Price	Amount
99005	CLASS 3 SOILS (TN)	29.41		

SCALE WEIGHT	GROSS & TARE		
Gross 100,280 LB	[X] Scale 1 [ ] Scale 2	A STANDBY SURCHARGE WILL BE ASSESSED FOR LOADS THAT EXCEED 10 MINUTES UNLOADING TIME.	Fuel Surcharge
Tare 41,460 LB/P.T.*	X Angelique	LIABILITY WAIVER	Sales Tax
Net 58,820 LB	Deputy Weighmaster	Cadman, (Inc.) will not assume Liability for any property damage or any equipment damage for any delivery beyond the curb line.	**Total**

No one available to sign, customer waives receipt signature. [ ]	Received by Signature X	Print Name (Customer) X	Driver's Signature X	Standby Time

Arrive Job		Start Unloading		Finish Unloading		Standby Time		Customer's Initials X	This Tickets Grand Total	

CADMAN
HEIDELBERGCEMENTGroup
(888) 322-6847 425-961-7100

WEIGHMASTER STATION
98846900
Sno River Delta Soils
17 E. Marine View Dr.
Everett, WA 98213

TICKET NO.	1124518537	TICKET TIME	12:47:21PM	DATE	6/3/2022
Customer No. 7832096	Payment Type Account	Customer Name STRIDER CONST CO INC			Order No. 10119451
Customer Job. No.	Customer P.O. 21NT		Map Ref /		Disp. Ord. #
Truck Type Truck & Trailer	Truck No. RIV62TT	Vehicle or License Plate No.	Trailer or License Plate No.		Zone
Hauler/Carrier No.	Driver's Name	Delivered/Ordered 1,251.97 /	Load No. 40		Running Total 1,251.97

DEL/P PORT OF EVERETT
DEL/P 2600 FEDERAL AVE
EVERETT

Product	Description	Total	Unit Price	Amount
99005	CLASS 3 SOILS (TN)	34.22		

SCALE WEIGHT	GROSS & TARE		
Gross 109,380 LB	☒ Scale 1 ☐ Scale 2	A STANDBY SURCHARGE WILL BE ASSESSED FOR LOADS THAT EXCEED 10 MINUTES UNLOADING TIME.	Fuel Surcharge
Tare 40,940 LB/P.T.*	X Angelique	LIABILITY WAIVER	Sales Tax
Net 68,440 LB	Deputy Weighmaster	Cadman, (Inc.) will not assume Liability for any property damage or any equipment damage for any delivery beyond the curb line.	**Total**

No one available to sign, customer waives receipt signature. ☐	Received by Signature X	Print Name (Customer) X	Driver's Signature X	Standby Time

Arrive Job		Start Unloading		Finish Unloading		Standby Time		Customer's Initials X	This Tickets Grand Total	

CADMAN
HEIDELBERGCEMENTGroup®
(888) 322-6847 425-961-7100

WEIGHMASTER STATION
98846900
Sno River Delta Soils
17 E. Marine View Dr.
Everett, WA 98213

TICKET NO.	1124518538	TICKET TIME	1:03:15PM	DATE	6/3/2022
Customer No. 7832096	Payment Type Account	Customer Name STRIDER CONST CO INC			Order No. 10119451
Customer Job. No.	Customer P.O. 21NT		Map Ref. /		Disp. Ord. #
Truck Type Truck & Trailer	Truck No. RIV55TT	Vehicle or License Plate No.	Trailer or License Plate No.		Zone
Hauler/Carrier No. 7886596	Driver's Name	Delivered/Ordered 1,280.27 /	Load No. 41		Running Total 1,280.27

DEL/P PORT OF EVERETT
DEL/P 2600 FEDERAL AVE
EVERETT

Product	Description	Total	Unit Price	Amount
99005	CLASS 3 SOILS (TN)	28.30		

SCALE WEIGHT	GROSS & TARE
Gross 97,180 LB	☒ Scale 1 ☐ Scale 2
Tare 40,580 LB/P.T.*	X Angelique
Net 56,600 LB	Deputy Weighmaster

A STANDBY SURCHARGE WILL BE ASSESSED FOR LOADS THAT EXCEED 10 MINUTES UNLOADING TIME.

LIABILITY WAIVER

Cadman, (Inc.) will not assume Liability for any property damage or any equipment damage for any delivery beyond the curb line.

Fuel Surcharge	
Sales Tax	
Total	
Standby Time	
This Tickets Grand Total	

No one available to sign, customer waives receipt signature. ☐	Received by Signature X	Print Name (Customer) X	Driver's Signature X

Arrive Job		Start Unloading		Finish Unloading		Standby Time		Customer's Initials X

CADMAN
HEIDELBERGCEMENTGroup
(888) 322-6847 425-961-7100

WEIGHMASTER STATION
98846900
Sno River Delta Soils
17 E. Marine View Dr.
Everett, WA 98213

TICKET NO.	1124518539	TICKET TIME	1:06:50PM	DATE	6/3/2022
Customer No. 7832096	Payment Type Account	Customer Name STRIDER CONST CO INC			Order No. 10119451
Customer Job. No.	Customer P.O. 21NT		Map Ref. /		Disp. Ord. #
Truck Type Truck & Trailer	Truck No. RIV57TT	Vehicle or License Plate No.	Trailer or License Plate No.		Zone
Hauler/Carrier No. 7886596	Driver's Name	Delivered/Ordered 1,311.08 /	Load No. 42		Running Total 1,311.08

DEL/P PORT OF EVERETT
DEL/P 2600 FEDERAL AVE
EVERETT

Product	Description	Total	Unit Price	Amount
99005	CLASS 3 SOILS (TN)	30.81		

SCALE WEIGHT
102,820 LB
Gross
41,200 LB/P.T.*
Tare
61,620 LB
Net

GROSS & TARE
[X] Scale 1 [ ] Scale 2
X Angelique
Deputy Weighmaster

A STANDBY SURCHARGE WILL BE ASSESSED FOR LOADS THAT EXCEED 10 MINUTES UNLOADING TIME.

LIABILITY WAIVER
Cadman, (Inc.) will not assume Liability for any property damage or any equipment damage for any delivery beyond the curb line.

Fuel Surcharge	
Sales Tax	
Total	
Standby Time	
This Tickets Grand Total	

No one available to sign, customer waives receipt signature. [ ]	Received by Signature X	Print Name (Customer) X	Driver's Signature X

Arrive Job		Start Unloading		Finish Unloading		Standby Time		Customer's Initials X

CADMAN
HEIDELBERGCEMENTGroup
(888) 322-6847 425-961-7100

WEIGHTMASTER STATION

98846900
Sno River Delta Soils
17 E. Marine View Dr.
Everett, WA 98213

TICKET NO.	1124518540	TICKET TIME	1:09:59PM	DATE	6/3/2022
Customer No. 7832096	Payment Type Account	Customer Name STRIDER CONST CO INC			Order No. 10119451
Customer Job. No.	Customer P.O. 21NT		Map Ref. /		Disp. Ord. #
Truck Type Truck & Trailer	Truck No. RIV56TT	Vehicle or License Plate No.	Trailer or License Plate No.		Zone
Hauler/Carrier No. 7886596	Driver's Name	Delivered/Ordered 1,342.13 /	Load No. 43		Running Total 1,342.13

DEL/P PORT OF EVERETT
DEL/P 2600 FEDERAL AVE
EVERETT

Product	Description	Total	Unit Price	Amount
99005	CLASS 3 SOILS (TN)	31.05		

SCALE WEIGHT

103,560 LB
Gross
41,460 LB/P.T.*
Tare
62,100 LB
Net

GROSS & TARE

☒ Scale 1 ☐ Scale 2

X Angelique
Deputy Weighmaster

A STANDBY SURCHARGE WILL BE ASSESSED FOR LOADS THAT EXCEED 10 MINUTES UNLOADING TIME.

LIABILITY WAIVER

Cadman, (Inc.) will not assume Liability for any property damage or any equipment damage for any delivery beyond the curb line.

Fuel Surcharge	
Sales Tax	
Total	
Standby Time	
This Tickets Grand Total	

No one available to sign, customer waives receipt signature. ☐	Received by Signature X	Print Name (Customer) X	Driver's Signature X

Arrive Job		Start Unloading		Finish Unloading		Standby Time		Customer's Initials X

CADMAN
HEIDELBERGCEMENTGroup®
(888) 322-6847 425-961-7100

WEIGHMASTER STATION
98846900
Sno River Delta Soils
17 E. Marine View Dr.
Everett, WA 98213

TICKET NO.	1124518542	TICKET TIME	1:15:50PM	DATE	6/3/2022
Customer No. 7832096	Payment Type Account	Customer Name STRIDER CONST CO INC			Order No. 10119451
Customer Job. No.	Customer P.O. 21NT		Map Ref. /		Disp. Ord. #
Truck Type Truck & Trailer	Truck No. RIV62TT	Vehicle or License Plate No.	Trailer or License Plate No.		Zone
Hauler/Carrier No.	Driver's Name	Delivered/Ordered 1,377.59 /	Load No. 44		Running Total 1,377.59

DEL/P PORT OF EVERETT
DEL/P 2600 FEDERAL AVE
EVERETT

Product	Description	Total	Unit Price	Amount
99005	CLASS 3 SOILS (TN)	35.46		

SCALE WEIGHT	GROSS & TARE		
Gross 111,860 LB	☒ Scale 1 ☐ Scale 2	A STANDBY SURCHARGE WILL BE ASSESSED FOR LOADS THAT EXCEED 10 MINUTES UNLOADING TIME.	Fuel Surcharge
Tare 40,940 LB/P.T.*	X Angelique	LIABILITY WAIVER	Sales Tax
Net 70,920 LB	Deputy Weighmaster	Cadman, (Inc.) will not assume Liability for any property damage or any equipment damage for any delivery beyond the curb line.	**Total**

No one available to sign, customer waives receipt signature. ☐	Received by Signature X	Print Name (Customer) X	Driver's Signature X	Standby Time

Arrive Job		Start Unloading		Finish Unloading		Standby Time		Customer's Initials X	This Tickets Grand Total	

CADMAN
HEIDELBERGCEMENTGroup®
(888) 322-6847 425-961-7100

WEIGHMASTER STATION
98846900
Sno River Delta Soils
17 E. Marine View Dr.
Everett, WA 98213

TICKET NO.	1124518544	TICKET TIME	1:33:30PM	DATE	6/3/2022
Customer No. 7832096	Payment Type Account	Customer Name STRIDER CONST CO INC			Order No. 10119451
Customer Job. No.	Customer P.O. 21NT		Map Ref. /		Disp. Ord. #
Truck Type Truck & Trailer	Truck No. RIV55TT	Vehicle or License Plate No.	Trailer or License Plate No.		Zone
Hauler/Carrier No. 7886596	Driver's Name	Delivered/Ordered 1,408.01 /	Load No. 45		Running Total 1,408.01

DEL/P PORT OF EVERETT
DEL/P 2600 FEDERAL AVE
EVERETT

Product	Description	Total	Unit Price	Amount
99005	CLASS 3 SOILS (TN)	30.42		

SCALE WEIGHT
101,420 LB
Gross
40,580 LB/P.T.*
Tare
60,840 LB
Net

GROSS & TARE
☒ Scale 1 ☐ Scale 2
X Angelique
Deputy Weighmaster

A STANDBY SURCHARGE WILL BE ASSESSED FOR LOADS THAT EXCEED 10 MINUTES UNLOADING TIME.

LIABILITY WAIVER
Cadman, (Inc.) will not assume Liability for any property damage or any equipment damage for any delivery beyond the curb line.

Fuel Surcharge	
Sales Tax	
Total	
Standby Time	
This Tickets Grand Total	

No one available to sign, customer waives receipt signature. ☐	Received by Signature X	Print Name (Customer) X	Driver's Signature X

Arrive Job		Start Unloading		Finish Unloading		Standby Time		Customer's Initials X

CADMAN
HEIDELBERGCEMENTGroup
(888) 322-6847 425-961-7100

WEIGHMASTER STATION
98846900
Sno River Delta Soils
17 E. Marine View Dr.
Everett, WA 98213

TICKET NO.	1124518546	TICKET TIME	1:38:38PM	DATE	6/3/2022
Customer No. 7832096	Payment Type Account	Customer Name STRIDER CONST CO INC			Order No. 10119451
Customer Job. No.	Customer P.O. 21NT		Map Ref. /		Disp. Ord. #
Truck Type Truck & Trailer	Truck No. RIV57TT	Vehicle or License Plate No.	Trailer or License Plate No.		Zone
Hauler/Carrier No. 7886596	Driver's Name	Delivered/Ordered 1,441.09 /	Load No. 46		Running Total 1,441.09

DEL/P PORT OF EVERETT
DEL/P 2600 FEDERAL AVE
EVERETT

Product	Description	Total	Unit Price	Amount
99005	CLASS 3 SOILS (TN)	33.08		

SCALE WEIGHT	GROSS & TARE		
Gross 107,360 LB	[X] Scale 1 [ ] Scale 2	A STANDBY SURCHARGE WILL BE ASSESSED FOR LOADS THAT EXCEED 10 MINUTES UNLOADING TIME.	Fuel Surcharge
Tare 41,200 LB/P.T.*		LIABILITY WAIVER	Sales Tax
Net 66,160 LB	X Angelique Deputy Weighmaster	Cadman, (Inc.) will not assume Liability for any property damage or any equipment damage for any delivery beyond the curb line.	**Total**

No one available to sign, customer waives receipt signature. [ ]	Received by Signature X	Print Name (Customer) X	Driver's Signature X	Standby Time

Arrive Job		Start Unloading		Finish Unloading		Standby Time		Customer's Initials X	This Tickets Grand Total	

CADMAN
HEIDELBERGCEMENTGroup
(888) 322-6847 425-961-7100

WEIGHMASTER STATION
98846900
Sno River Delta Soils
17 E. Marine View Dr.
Everett, WA 98213

TICKET NO.	1124518548	TICKET TIME	1:43:20PM	DATE	6/3/2022
Customer No. 7832096	Payment Type Account	Customer Name STRIDER CONST CO INC			Order No. 10119451
Customer Job. No.	Customer P.O. 21NT		Map Ref. /		Disp. Ord. #
Truck Type Truck & Trailer	Truck No. RIV56TT	Vehicle or License Plate No.	Trailer or License Plate No.		Zone
Hauler/Carrier No. 7886596	Driver's Name	Delivered/Ordered 1,470.99 /	Load No. 47		Running Total 1,470.99

DEL/P PORT OF EVERETT
DEL/P 2600 FEDERAL AVE
EVERETT

Product	Description	Total	Unit Price	Amount
99005	CLASS 3 SOILS (TN)	29.90		

SCALE WEIGHT	GROSS & TARE		
Gross 101,260 LB	[X] Scale 1 [ ] Scale 2	A STANDBY SURCHARGE WILL BE ASSESSED FOR LOADS THAT EXCEED 10 MINUTES UNLOADING TIME.	Fuel Surcharge
Tare 41,460 LB/P.T.*			Sales Tax
Net 59,800 LB	X Angelique Deputy Weighmaster	LIABILITY WAIVER Cadman, (Inc.) will not assume Liability for any property damage or any equipment damage for any delivery beyond the curb line.	**Total**

No one available to sign, customer waives receipt signature. [ ]	Received by Signature X	Print Name (Customer) X	Driver's Signature X	Standby Time

Arrive Job		Start Unloading		Finish Unloading		Standby Time		Customer's Initials X	This Tickets Grand Total	

CADMAN
HEIDELBERGCEMENTGroup
(888) 322-6847 425-961-7100

WEIGHMASTER STATION
98846900
Sno River Delta Soils
17 E. Marine View Dr.
Everett, WA 98213

TICKET NO.	1124518550	TICKET TIME	1:51:34PM	DATE	6/3/2022
Customer No. 7832096	Payment Type Account	Customer Name STRIDER CONST CO INC			Order No. 10119451
Customer Job. No.	Customer P.O. 21NT		Map Ref. /		Disp. Ord. #
Truck Type Truck & Trailer	Truck No. RIV62TT	Vehicle or License Plate No.	Trailer or License Plate No.		Zone
Hauler/Carrier No.	Driver's Name	Delivered/Ordered 1,507.29 /	Load No. 48		Running Total 1,507.29

DEL/P PORT OF EVERETT
DEL/P 2600 FEDERAL AVE
EVERETT

Product	Description	Total	Unit Price	Amount
99005	CLASS 3 SOILS (TN)	36.30		

SCALE WEIGHT	GROSS & TARE		
Gross 113,540 LB	[X] Scale 1 [ ] Scale 2	A STANDBY SURCHARGE WILL BE ASSESSED FOR LOADS THAT EXCEED 10 MINUTES UNLOADING TIME.	Fuel Surcharge
Tare 40,940 LB/P.T.*		LIABILITY WAIVER	Sales Tax
Net 72,600 LB	X Angelique Deputy Weighmaster	Cadman, (Inc.) will not assume Liability for any property damage or any equipment damage for any delivery beyond the curb line.	**Total**

No one available to sign, customer waives receipt signature. [ ]	Received by Signature X	Print Name (Customer) X	Driver's Signature X	Standby Time

Arrive Job		Start Unloading		Finish Unloading		Standby Time		Customer's Initials X	This Tickets Grand Total	

CADMAN
HEIDELBERGCEMENTGroup
(888) 322-6847 425-961-7100

WEIGHMASTER STATION
98846900
Sno River Delta Soils
17 E. Marine View Dr.
Everett, WA 98213

TICKET NO.	1124518556	TICKET TIME	2:04:55PM	DATE	6/3/2022
Customer No. 7832096	Payment Type Account	Customer Name STRIDER CONST CO INC			Order No. 10119451
Customer Job. No.	Customer P.O. 21NT		Map Ref. /		Disp. Ord. #
Truck Type Truck & Trailer	Truck No. RIV55TT	Vehicle or License Plate No.	Trailer or License Plate No.		Zone
Hauler/Carrier No. 7886596	Driver's Name	Delivered/Ordered 1,537.06 /	Load No. 49		Running Total 1,537.06

DEL/P PORT OF EVERETT
DEL/P 2600 FEDERAL AVE
EVERETT

Product	Description	Total	Unit Price	Amount
99005	CLASS 3 SOILS (TN)	29.77		

SCALE WEIGHT
100,120 LB Gross
40,580 LB/P.T.*
Tare
59,540 LB Net

GROSS & TARE
☒ Scale 1 ☐ Scale 2
X Angelique
Deputy Weighmaster

A STANDBY SURCHARGE WILL BE ASSESSED FOR LOADS THAT EXCEED 10 MINUTES UNLOADING TIME.

LIABILITY WAIVER
Cadman, (Inc.) will not assume Liability for any property damage or any equipment damage for any delivery beyond the curb line.

Fuel Surcharge	
Sales Tax	
Total	
Standby Time	
This Tickets Grand Total	

No one available to sign, customer waives receipt signature. ☐	Received by Signature X	Print Name (Customer) X	Driver's Signature X

Arrive Job		Start Unloading		Finish Unloading		Standby Time		Customer's Initials X

CADMAN
HEIDELBERGCEMENTGroup
(888) 322-6847 425-961-7100

WEIGHMASTER STATION
98846900
Sno River Delta Soils
17 E. Marine View Dr.
Everett, WA 98213

TICKET NO.	1124518558	TICKET TIME	2:13:24PM	DATE	6/3/2022

Customer No.	Payment Type	Customer Name	Order No.
7832096	Account	STRIDER CONST CO INC	10119451

Customer Job. No.	Customer P.O.	Map Ref.	Disp. Ord. #
	21NT	/	

Truck Type	Truck No.	Vehicle or License Plate No.	Trailer or License Plate No.	Zone
Truck & Trailer	RIV57TT			

Hauler/Carrier No.	Driver's Name	Delivered/Ordered	Load No.	Running Total
7886596		1,569.89 /	50	1,569.89

DEL/P PORT OF EVERETT
DEL/P 2600 FEDERAL AVE
EVERETT

Product	Description	Total	Unit Price	Amount
99005	CLASS 3 SOILS (TN)	32.83		

SCALE WEIGHT

106,860 LB
Gross
41,200 LB/P.T.*
Tare
65,660 LB
Net

GROSS & TARE

☒ Scale 1 ☐ Scale 2

X Angelique
Deputy Weighmaster

A STANDBY SURCHARGE WILL BE ASSESSED FOR LOADS THAT EXCEED 10 MINUTES UNLOADING TIME.

LIABILITY WAIVER

Cadman, (Inc.) will not assume Liability for any property damage or any equipment damage for any delivery beyond the curb line.

Fuel Surcharge	
Sales Tax	
Total	
Standby Time	
This Tickets Grand Total	

No one available to sign, customer waives receipt signature. ☐	Received by Signature X	Print Name (Customer) X	Driver's Signature X

Arrive Job		Start Unloading		Finish Unloading		Standby Time		Customer's Initials X

CADMAN
HEIDELBERGCEMENTGroup
(888) 322-6847 425-961-7100

WEIGHMASTER STATION
98846900
Sno River Delta Soils
17 E. Marine View Dr.
Everett, WA 98213

TICKET NO.	1124518562	TICKET TIME	2:25:27PM	DATE	6/3/2022
Customer No. 7832096	Payment Type Account	Customer Name STRIDER CONST CO INC			Order No. 10119451
Customer Job. No.	Customer P.O. 21NT		Map Ref. /		Disp. Ord. #
Truck Type Truck & Trailer	Truck No. RIV56TT	Vehicle or License Plate No.	Trailer or License Plate No.		Zone
Hauler/Carrier No. 7886596	Driver's Name	Delivered/Ordered 1,602.77 /	Load No. 51		Running Total 1,602.77

DEL/P PORT OF EVERETT
DEL/P 2600 FEDERAL AVE
EVERETT

Product	Description	Total	Unit Price	Amount
99005	CLASS 3 SOILS (TN)	32.88		

SCALE WEIGHT	GROSS & TARE		Fuel Surcharge	
Gross 107,220 LB		**A STANDBY SURCHARGE WILL BE ASSESSED FOR LOADS THAT EXCEED 10 MINUTES UNLOADING TIME.**	Sales Tax	
Tare 41,460 LB/P.T.*	X Scale 1 ☐ Scale 2	**LIABILITY WAIVER**	**Total**	
Net 65,760 LB	X Angelique Deputy Weighmaster	**Cadman, (Inc.) will not assume Liability for any property damage or any equipment damage for any delivery beyond the curb line.**		

No one available to sign, customer waives receipt signature. ☐	Received by Signature X	Print Name (Customer) X	Driver's Signature X	Standby Time	

Arrive Job		Start Unloading		Finish Unloading		Standby Time		Customer's Initials X	This Tickets Grand Total	

CADMAN
HEIDELBERGCEMENTGroup
(888) 322-6847 425-961-7100

WEIGHMASTER STATION
98846900
Sno River Delta Soils
17 E. Marine View Dr.
Everett, WA 98213

TICKET NO. 1124518564	TICKET TIME 2:31:20PM	DATE 6/3/2022	
Customer No. 7832096	Payment Type Account	Customer Name STRIDER CONST CO INC	Order No. 10119451
Customer Job. No.	Customer PO 21NT	Map Ref. /	Disp. Ord. #
Truck Type Truck & Trailer	Truck No. RIV62TT	Vehicle or License Plate No.	Trailer or License Plate No. / Zone
Hauler/Carrier No.	Driver's Name	Delivered/Ordered ,661.42 /	Load No. 53 / Running Total 1,661.42

DEL/P PORT OF EVERETT
DEL/P 2600 FEDERAL AVE
EVERETT

Product	Description	Total	Unit Price	Amount
99005	CLASS 3 SOILS (TN)	34.27		

SCALE WEIGHT	GROSS & TARE
Gross 109,480 LB	X Scale 1 ☐ Scale 2
Tare 40,940 LB/P.T.*	X Angelique Deputy Weighmaster
Net 68,540 LB	

A STANDBY SURCHARGE WILL BE ASSESSED FOR LOADS THAT EXCEED 10 MINUTES UNLOADING TIME.

LIABILITY WAIVER

Cadman, (Inc.) will not assume Liability for any property damage or any equipment damage for any delivery beyond the curb line.

No one available to sign, customer waives receipt signature ☐	Received by Signature X	Print Name (Customer) X	Driver's Signature X	
Arrive Job	Start Unloading	Finish Unloading	Standby Time	Customer's Initials X

Fuel Surcharge	
Sales Tax	
Total	
Standby Time	
This Tickets Grand Total	

CADMAN
HEIDELBERGCEMENTGroup
(888) 322-6847 425-961-7100

WEIGHMASTER STATION
98846900
Sno River Delta Soils
17 E. Marine View Dr.
Everett, WA 98213

TICKET NO.	1124518567	TICKET TIME	2:52:12PM	DATE	6/3/2022
Customer No. 7832096	Payment Type Account	Customer Name STRIDER CONST CO INC			Order No. 10119451
Customer Job. No.	Customer P.O. 21NT		Map Ref. /		Disp. Ord. #
Truck Type Truck & Traile	Truck No. RIV55TT	Vehicle or License Plate No.	Trailer or License Plate No.		Zone
Hauler/Carrier No. 7886596	Driver's Name	Delivered/Ordered 1,694.07 /	Load No. 54		Running Total 1,694.07

DEL/P PORT OF EVERETT
DEL/P 2600 FEDERAL AVE
EVERETT

Product	Description	Total	Unit Price	Amount
99005	CLASS 3 SOILS (TN)	32.65		

SCALE WEIGHT	GROSS & TARE		
Gross 105,880 LB	☒ Scale 1 ☐ Scale 2	A STANDBY SURCHARGE WILL BE ASSESSED FOR LOADS THAT EXCEED 10 MINUTES UNLOADING TIME.	Fuel Surcharge
Tare 40,580 LB/P.T.*	X Angelique	LIABILITY WAIVER	Sales Tax
Net 65,300 LB	Deputy Weighmaster	Cadman, (Inc.) will not assume Liability for any property damage or any equipment damage for any delivery beyond the curb line.	**Total**

No one available to sign, customer waives receipt signature. ☐	Received by Signature X	Print Name (Customer) X	Driver's Signature X	Standby Time

Arrive Job		Start Unloading		Finish Unloading		Standby Time		Customer's Initials X	This Tickets Grand Total	

CADMAN
HEIDELBERGCEMENTGroup
(888) 322-6847 425-961-7100

WEIGHMASTER STATION
98846900
Sno River Delta Soils
17 E. Marine View Dr.
Everett, WA 98213

TICKET NO.	1124518568	TICKET TIME	2:59:01PM	DATE	6/3/2022
Customer No. 7832096	Payment Type Account	Customer Name STRIDER CONST CO INC			Order No. 10119451
Customer Job. No.	Customer P.O. 21NT		Map Ref. /		Disp. Ord. #
Truck Type Truck & Trailer	Truck No. RIV57TT	Vehicle or License Plate No.	Trailer or License Plate No.		Zone
Hauler/Carrier No. 7886596	Driver's Name	Delivered/Ordered 1,727.11 /	Load No. 55		Running Total 1,727.11

DEL/P PORT OF EVERETT
DEL/P 2600 FEDERAL AVE
EVERETT

Product	Description	Total	Unit Price	Amount
99005	CLASS 3 SOILS (TN)	33.04		

SCALE WEIGHT	GROSS & TARE		
Gross 107,280 LB	☒ Scale 1 ☐ Scale 2	A STANDBY SURCHARGE WILL BE ASSESSED FOR LOADS THAT EXCEED 10 MINUTES UNLOADING TIME.	Fuel Surcharge
Tare 41,200 LB/P.T.*	X Angelique	LIABILITY WAIVER	Sales Tax
Net 66,080 LB	Deputy Weighmaster	Cadman, (Inc.) will not assume Liability for any property damage or any equipment damage for any delivery beyond the curb line.	**Total**

No one available to sign, customer waives receipt signature. ☐	Received by Signature X	Print Name (Customer) X	Driver's Signature X	Standby Time

Arrive Job		Start Unloading		Finish Unloading		Standby Time		Customer's Initials X	This Tickets Grand Total	

CADMAN
HEIDELBERGCEMENTGroup
(888) 322-6847 425-961-7100

WEIGHMASTER STATION
98846900
Sno River Delta Soils
17 E. Marine View Dr.
Everett, WA 98213

TICKET NO.	1124518569	TICKET TIME	3:09:17PM	DATE	6/3/2022
Customer No. 7832096	Payment Type Account	Customer Name STRIDER CONST CO INC			Order No. 10119451
Customer Job. No.	Customer P.O. 21NT		Map Ref. /		Disp. Ord. #
Truck Type Truck & Traile	Truck No. RIV56TT	Vehicle or License Plate No.	Trailer or License Plate No.		Zone
Hauler/Carrier No. 7886596	Driver's Name	Delivered/Ordered 1,759.25 /	Load No. 56		Running Total 1,759.25

DEL/P PORT OF EVERETT
DEL/P 2600 FEDERAL AVE
EVERETT

Product	Description	Total	Unit Price	Amount
99005	CLASS 3 SOILS (TN)	32.14		

SCALE WEIGHT	GROSS & TARE		
Gross 105,740 LB	[X] Scale 1 [ ] Scale 2	A STANDBY SURCHARGE WILL BE ASSESSED FOR LOADS THAT EXCEED 10 MINUTES UNLOADING TIME.	Fuel Surcharge
Tare 41,460 LB/P.T.*		LIABILITY WAIVER	Sales Tax
Net 64,280 LB	X Angelique Deputy Weighmaster	Cadman, (Inc.) will not assume Liability for any property damage or any equipment damage for any delivery beyond the curb line.	**Total**

No one available to sign, customer waives receipt signature. [ ]	Received by Signature X	Print Name (Customer) X	Driver's Signature X	Standby Time

Arrive Job		Start Unloading		Finish Unloading		Standby Time		Customer's Initials X	This Tickets Grand Total	

CADMAN
HEIDELBERGCEMENTGroup
(888) 322-6847 425-961-7100

WEIGHTMASTER STATION
98846900
Sno River Delta Soils
17 E. Marine View Dr.
Everett, WA 98213

TICKET NO.	1124518570	TICKET TIME	3:16:21PM	DATE	6/3/2022
Customer No. 7832096	Payment Type Account	Customer Name STRIDER CONST CO INC			Order No. 10119451
Customer Job. No.	Customer P.O. 21NT		Map Ref. /		Disp. Ord. #
Truck Type Truck & Traile	Truck No. RIV62TT	Vehicle or License Plate No.	Trailer or License Plate No.		Zone
Hauler/Carrier No.	Driver's Name	Delivered/Ordered 1,793.27 /	Load No. 57		Running Total 1,793.27

DEL/P PORT OF EVERETT
DEL/P 2600 FEDERAL AVE
EVERETT

Product	Description	Total	Unit Price	Amount
99005	CLASS 3 SOILS (TN)	34.02		

SCALE WEIGHT	GROSS & TARE		
Gross 108,980 LB	☒ Scale 1 ☐ Scale 2	A STANDBY SURCHARGE WILL BE ASSESSED FOR LOADS THAT EXCEED 10 MINUTES UNLOADING TIME.	Fuel Surcharge
Tare 40,940 LB/P.T.*	X Angelique	LIABILITY WAIVER	Sales Tax
Net 68,040 LB	Deputy Weighmaster	Cadman, (Inc.) will not assume Liability for any property damage or any equipment damage for any delivery beyond the curb line.	**Total**

No one available to sign, customer waives receipt signature ☐	Received by Signature X	Print Name (Customer) X	Driver's Signature X	Standby Time

Arrive Job		Start Unloading		Finish Unloading		Standby Time		Customer's initials X	This Tickets Grand Total	

CADMAN
HEIDELBERGCEMENTGroup
(888) 322-6847 425-961-7100

WEIGHMASTER STATION
98846900
Sno River Delta Soils
17 E. Marine View Dr.
Everett, WA 98213

TICKET NO.	1124518571	TICKET TIME	3:36:28PM	DATE	6/3/2022
Customer No. 7832096	Payment Type Account	Customer Name STRIDER CONST CO INC			Order No. 10119451
Customer Job. No.	Customer P.O. 21NT		Map Ref. /		Disp. Ord. #
Truck Type Truck & Trailer	Truck No. RIV55TT	Vehicle or License Plate No.	Trailer or License Plate No.		Zone
Hauler/Carrier No. 7886596	Driver's Name	Delivered/Ordered 1,826.39 /	Load No. 58		Running Total 1,826.39

DEL/P PORT OF EVERETT
DEL/P 2600 FEDERAL AVE
EVERETT

Product	Description	Total	Unit Price	Amount
99005	CLASS 3 SOILS (TN)	33.12		

SCALE WEIGHT	GROSS & TARE		
Gross 106,820 LB	[X] Scale 1 [ ] Scale 2	**A STANDBY SURCHARGE WILL BE ASSESSED FOR LOADS THAT EXCEED 10 MINUTES UNLOADING TIME.**	Fuel Surcharge
Tare 40,580 LB/P.T.*	X Angelique Deputy Weighmaster	**LIABILITY WAIVER** Cadman, (Inc.) will not assume Liability for any property damage or any equipment damage for any delivery beyond the curb line.	Sales Tax
Net 66,240 LB			**Total**

No one available to sign, customer waives receipt signature. [ ]	Received by Signature X	Print Name (Customer) X	Driver's Signature X	Standby Time

Arrive Job		Start Unloading		Finish Unloading		Standby Time		Customer's Initials X	This Tickets Grand Total	

CADMAN
HEIDELBERGCEMENTGroup
(888) 322-6847 425-961-7100

TICKET NO.	1124518572	TICKET TIME	3:40:33PM	DATE	6/3/2022
Customer No. 7832096	Payment Type Account	Customer Name STRIDER CONST CO INC			Order No. 10119451
Customer Job. No.	Customer P.O. 21NT		Map Ref. /		Disp. Ord. #
Truck Type Truck & Trailer	Truck No. RIV57TT	Vehicle or License Plate No.	Trailer or License Plate No.		Zone
Hauler/Carrier No. 7886596	Driver's Name	Delivered/Ordered 1,859.06 /	Load No. 59		Running Total 1,859.06

WEIGHMASTER STATION

98846900
Sno River Delta Soils
17 E. Marine View Dr.
Everett, WA 98213

DEL/P PORT OF EVERETT
DEL/P 2600 FEDERAL AVE
EVERETT

Product	Description	Total	Unit Price	Amount
99005	CLASS 3 SOILS (TN)	32.67		

SCALE WEIGHT	GROSS & TARE			
Gross 106,540 LB			Fuel Surcharge	
Tare 41,200 LB/P.T.*	[X] Scale 1 [ ] Scale 2	**A STANDBY SURCHARGE WILL BE ASSESSED FOR LOADS THAT EXCEED 10 MINUTES UNLOADING TIME.**	Sales Tax	
Net 65,340 LB	X Angelique Deputy Weighmaster	**LIABILITY WAIVER** Cadman, (Inc.) will not assume Liability for any property damage or any equipment damage for any delivery beyond the curb line.	**Total**	

No one available to sign, customer waives receipt signature. [ ]	Received by Signature X	Print Name (Customer) X	Driver's Signature X	Standby Time	

Arrive Job		Start Unloading		Finish Unloading		Standby Time		Customer's Initials X	This Tickets Grand Total	

CADMAN
HEIDELBERGCEMENTGroup
(888) 322-6847 425-961-7100

WEIGHMASTER STATION
98846900
Sno River Delta Soils
17 E. Marine View Dr.
Everett, WA 98213

TICKET NO.	1124518573	TICKET TIME	3:46:00PM	DATE	6/3/2022
Customer No. 7832096	Payment Type Account	Customer Name STRIDER CONST CO INC			Order No. 10119451
Customer Job. No.	Customer P.O. 21NT		Map Ref. /		Disp. Ord. #
Truck Type Truck & Trailer	Truck No. RIV56TT	Vehicle or License Plate No.	Trailer or License Plate No.		Zone
Hauler/Carrier No. 7886596	Driver's Name	Delivered/Ordered 1,892.34 /	Load No. 60		Running Total 1,892.34

DEL/P PORT OF EVERETT
DEL/P 2600 FEDERAL AVE
EVERETT

Product	Description	Total	Unit Price	Amount
99005	CLASS 3 SOILS (TN)	33.28		

SCALE WEIGHT	GROSS & TARE		
Gross 108,020 LB	X Scale 1 ☐ Scale 2	A STANDBY SURCHARGE WILL BE ASSESSED FOR LOADS THAT EXCEED 10 MINUTES UNLOADING TIME.	Fuel Surcharge
Tare 41,460 LB/P.T.*	X Angelique Deputy Weighmaster	**LIABILITY WAIVER** Cadman, (Inc.) will not assume Liability for any property damage or any equipment damage for any delivery beyond the curb line.	Sales Tax
Net 66,560 LB			**Total**

No one available to sign, customer waives receipt signature. ☐	Received by Signature X	Print Name (Customer) X	Driver's Signature X	Standby Time

Arrive Job		Start Unloading		Finish Unloading		Standby Time		Customer's Initials X	This Tickets Grand Total	

CADMAN
HEIDELBERGCEMENTGroup®
(888) 322-6847 425-961-7100

WEIGHMASTER STATION
98846900
Sno River Delta Soils
17 E. Marine View Dr.
Everett, WA 98213

TICKET NO.	1124518574	TICKET TIME	3:47:40PM	DATE	6/3/2022

Customer No.	Payment Type	Customer Name	Order No.
7832096	Account	STRIDER CONST CO INC	10119451

Customer Job. No.	Customer P.O.	Map Ref.	Disp. Ord. #
	21NT	/	

Truck Type	Truck No.	Vehicle or License Plate No.	Trailer or License Plate No.	Zone
Truck & Trailer	RIV62TT			

Hauler/Carrier No.	Driver's Name	Delivered/Ordered	Load No.	Running Total
		1,925.51 /	61	1,925.51

DEL/P PORT OF EVERETT
DEL/P 2600 FEDERAL AVE
EVERETT

Product	Description	Total	Unit Price	Amount
99005	CLASS 3 SOILS (TN)	33.17		

SCALE WEIGHT

Gross 107,280 LB
Tare 40,940 LB/P.T.*
Net 66,340 LB

GROSS & TARE

☒ Scale 1 ☐ Scale 2

X Angelique
Deputy Weighmaster

A STANDBY SURCHARGE WILL BE ASSESSED FOR LOADS THAT EXCEED 10 MINUTES UNLOADING TIME.

LIABILITY WAIVER

Cadman, (Inc.) will not assume Liability for any property damage or any equipment damage for any delivery beyond the curb line.

Fuel Surcharge	
Sales Tax	
Total	
Standby Time	
This Tickets Grand Total	

No one available to sign, customer waives receipt signature. ☐	Received by Signature	Print Name (Customer)	Driver's Signature
	X	X	X

Arrive Job		Start Unloading		Finish Unloading		Standby Time		Customer's Initials
								X

CADMAN
HEIDELBERGCEMENTGroup
(888) 322-6847 425-961-7100

WEIGHMASTER STATION
98785500
Everett Glenwood LND
6300 Glenwood Avenue
Everett, WA 98213

TICKET NO	1120563179	TICKET TIME	1:09:16PM	DATE	6/6/2022

Customer No.	Payment Type	Customer Name	Order No.
7832096	Account	STRIDER CONST CO INC	10119468

Customer Job. No.	Customer P.O.	Map Ref.	Disp. Ord. #
	21NT	/	

Truck Type	Truck No.	Vehicle or License Plate No.	Trailer or License Plate No.	Zone
Truck & Trailer	RIV55TT			

Hauler/Carrier No.	Driver's Name	Delivered/Ordered	Load No.	Running Total
7886596		28.92 /	1	28.92

EV/P PORT OF EVERETT
2600 FEDERAL AVE
EVERETT

Product	Description	Total	Unit Price	Amount
99004	CLASS 2 SOILS DUMP (TN)	28.92		

SCALE WEIGHT

Gross 98,420 LB m
Tare 40,580 LB/P.T.*
Net 57,840 LB m

GROSS & TARE

☒ Scale 1 ☐ Scale 2

X Cate
Deputy Weighmaster

A STANDBY SURCHARGE WILL BE ASSESSED FOR LOADS THAT EXCEED 10 MINUTES UNLOADING TIME.

LIABILITY WAIVER

Cadman Materials, (Inc.) will not assume Liability for any property damage or any equipment damage for any delivery beyond the curb line.

Fuel Surcharge	
Sales Tax	
Total	
Standby Time	
This Tickets Grand Total	

No one available to sign, customer waives receipt signature. ☐	Received by Signature X	Print Name (Customer) X	Driver's Signature X

Arrive Job		Start Unloading		Finish Unloading		Standby Time		Customer's Initials X

CADMAN
HEIDELBERGCEMENTGroup®
(888) 322-6847 425-961-7100

WEIGHMASTER STATION
98785500
Everett Glenwood LND
6300 Glenwood Avenue
Everett, WA 98213

TICKET NO	1120563180	TICKET TIME	1:12:22PM	DATE	6/6/2022
Customer No.	Payment Type	Customer Name			Order No.
7832096	Account	STRIDER CONST CO INC			10119468
Customer Job. No.	Customer P.O.			Map Ref.	Disp. Ord. #
	21NT			/	
Truck Type	Truck No.	Vehicle or License Plate No.		Trailer or License Plate No.	Zone
Truck & Trailer	RIV57TT				
Hauler/Carrier No.	Driver's Name	Delivered/Ordered		Load No.	Running Total
7886596		57.41 /		2	57.41

EV/P PORT OF EVERETT
2600 FEDERAL AVE
EVERETT

Product	Description	Total	Unit Price	Amount
99004	CLASS 2 SOILS DUMP (TN)	28.49		

SCALE WEIGHT

Gross 98,180 LB m
Tare 41,200 LB/P.T.*
Net 56,980 LB m

GROSS & TARE

☒ Scale 1 ☐ Scale 2

X Cate
Deputy Weighmaster

A STANDBY SURCHARGE WILL BE ASSESSED FOR LOADS THAT EXCEED 10 MINUTES UNLOADING TIME.

LIABILITY WAIVER

Cadman Materials, (Inc.) will not assume Liability for any property damage or any equipment damage for any delivery beyond the curb line.

Fuel Surcharge	
Sales Tax	
Total	
Standby Time	
This Tickets Grand Total	

No one available to sign, customer waives receipt signature. ☐	Received by Signature X	Print Name (Customer) X	Driver's Signature X

Arrive Job		Start Unloading		Finish Unloading		Standby Time		Customer's Initials X

CADMAN
HEIDELBERGCEMENTGroup®
(888) 322-6847 425-961-7100

WEIGHMASTER STATION
98785500
Everett Glenwood LND
6300 Glenwood Avenue
Everett, WA 98213

TICKET NO.	1120563181	TICKET TIME	1:16:54PM	DATE	6/6/2022

Customer No.	Payment Type	Customer Name	Order No.
7832096	Account	STRIDER CONST CO INC	10119468

Customer Job. No.	Customer P.O.	Map Ref.	Disp. Ord. #
	21NT	/	

Truck Type	Truck No.	Vehicle or License Plate No.	Trailer or License Plate No.	Zone
Truck & Trailer	RIV59TT			

Hauler/Carrier No.	Driver's Name	Delivered/Ordered	Load No.	Running Total
7886596		85.46 /	3	85.46

EV/P PORT OF EVERETT
2600 FEDERAL AVE
EVERETT

Product	Description	Total	Unit Price	Amount
99004	CLASS 2 SOILS DUMP (TN)	28.05		

SCALE WEIGHT

Gross 97,140 LB m
Tare 41,040 LB/P.T.*
Net 56,100 LB m

GROSS & TARE

☒ Scale 1 ☐ Scale 2

X Cate
Deputy Weighmaster

A STANDBY SURCHARGE WILL BE ASSESSED FOR LOADS THAT EXCEED 10 MINUTES UNLOADING TIME.

LIABILITY WAIVER

Cadman Materials, (Inc.) will not assume Liability for any property damage or any equipment damage for any delivery beyond the curb line.

Fuel Surcharge	
Sales Tax	
Total	
Standby Time	
This Tickets Grand Total	

No one available to sign, customer waives receipt signature. ☐

Received by Signature X

Print Name (Customer) X

Driver's Signature X

Arrive Job		Start Unloading		Finish Unloading		Standby Time		Customer's Initials X

CADMAN
HEIDELBERGCEMENTGroup
(888) 322-6847 425-961-7100

WEIGHMASTER STATION
98785500
Everett Glenwood LND
6300 Glenwood Avenue
Everett, WA 98213

TICKET NO.	1120563182	TICKET TIME	1:22:03PM	DATE	6/6/2022
Customer No.	Payment Type	Customer Name			Order No.
7832096	Account	STRIDER CONST CO INC			10119468
Customer Job. No.	Customer P.O.			Map Ref.	Disp. Ord. #
	21NT			/	
Truck Type	Truck No.	Vehicle or License Plate No.		Trailer or License Plate No.	Zone
Truck & Trailer	RIV56TT				
Hauler/Carrier No.	Driver's Name	Delivered/Ordered		Load No.	Running Total
7886596		114.33 /		4	114.33

EV/P PORT OF EVERETT
2600 FEDERAL AVE
EVERETT

Product	Description	Total	Unit Price	Amount
99004	CLASS 2 SOILS DUMP (TN)	28.87		

SCALE WEIGHT		GROSS & TARE			
Gross	99,200 LB m	☒ Scale 1	☐ Scale 2	A STANDBY SURCHARGE WILL BE ASSESSED FOR LOADS THAT EXCEED 10 MINUTES UNLOADING TIME.	Fuel Surcharge
Tare	41,460 LB/P.T.*			LIABILITY WAIVER	Sales Tax
Net	57,740 LB m	X Cate Deputy Weighmaster		Cadman Materials, (Inc.) will not assume Liability for any property damage or any equipment damage for any delivery beyond the curb line.	**Total**

No one available to sign, customer waives receipt signature. ☐	Received by Signature X	Print Name (Customer) X	Driver's Signature X	Standby Time

Arrive Job		Start Unloading		Finish Unloading		Standby Time		Customer's Initials X	This Tickets Grand Total	

CADMAN
HEIDELBERGCEMENTGroup
(888) 322-6847 425-961-7100

WEIGHMASTER STATION
98785500
Everett Glenwood LND
6300 Glenwood Avenue
Everett, WA 98213

TICKET NO.	1120563183	TICKET TIME	2:29:08PM	DATE	6/6/2022

Customer No.	Payment Type	Customer Name	Order No.
7832096	Account	STRIDER CONST CO INC	10119468

Customer Job. No.	Customer P.O.	Map Ref.	Disp. Ord. #
	21NT	/	

Truck Type	Truck No.	Vehicle or License Plate No.	Trailer or License Plate No.	Zone
Truck & Trailer	RIV55TT			

Hauler/Carrier No.	Driver's Name	Delivered/Ordered	Load No.	Running Total
7886596		145.67 /	5	145.67

EV/P PORT OF EVERETT
2600 FEDERAL AVE
EVERETT

Product	Description	Total	Unit Price	Amount
99004	CLASS 2 SOILS DUMP (TN)	31.34		

SCALE WEIGHT

Gross 103,260 LB m
Tare 40,580 LB/P.T.*
Net 62,680 LB m

GROSS & TARE

☒ Scale 1 ☐ Scale 2

X Cate
Deputy Weighmaster

A STANDBY SURCHARGE WILL BE ASSESSED FOR LOADS THAT EXCEED 10 MINUTES UNLOADING TIME.

LIABILITY WAIVER

Cadman Materials, (Inc.) will not assume Liability for any property damage or any equipment damage for any delivery beyond the curb line.

Fuel Surcharge	
Sales Tax	
Total	
Standby Time	
This Tickets Grand Total	

No one available to sign, customer waives receipt signature. ☐	Received by Signature	Print Name (Customer)	Driver's Signature
	X	X	X

Arrive Job		Start Unloading		Finish Unloading		Standby Time		Customer's Initials
								X

CADMAN
HEIDELBERGCEMENTGroup
(888) 322-6847 425-961-7100

WEIGHMASTER STATION
98785500
Everett Glenwood LND
6300 Glenwood Avenue
Everett, WA 98213

TICKET NO.	1120563184	TICKET TIME	2:30:50PM	DATE	6/6/2022

Customer No.	Payment Type	Customer Name	Order No.
7832096	Account	STRIDER CONST CO INC	10119468

Customer Job. No.	Customer P.O.	Map Ref.	Disp. Ord. #
	21NT	/	

Truck Type	Truck No.	Vehicle or License Plate No.	Trailer or License Plate No.	Zone
Truck & Trailer	RIV57TT			

Hauler/Carrier No.	Driver's Name	Delivered/Ordered	Load No.	Running Total
7886596		178.83 /	6	178.83

EV/P PORT OF EVERETT
2600 FEDERAL AVE
EVERETT

Product	Description	Total	Unit Price	Amount
99004	CLASS 2 SOILS DUMP (TN)	33.16		

SCALE WEIGHT

Gross 107,520 LB m
Tare 41,200 LB/P.T.*
Net 66,320 LB m

GROSS & TARE

☒ Scale 1 ☐ Scale 2

X Cate
Deputy Weighmaster

A STANDBY SURCHARGE WILL BE ASSESSED FOR LOADS THAT EXCEED 10 MINUTES UNLOADING TIME.

LIABILITY WAIVER

Cadman Materials, (Inc.) will not assume Liability for any property damage or any equipment damage for any delivery beyond the curb line.

Fuel Surcharge	
Sales Tax	
Total	
Standby Time	
This Tickets Grand Total	

No one available to sign, customer waives receipt signature. ☐

Received by Signature X

Print Name (Customer) X

Driver's Signature X

Customer's Initials X

Arrive Job		Start Unloading		Finish Unloading		Standby Time	

CADMAN
HEIDELBERGCEMENTGroup
(888) 322-6847 425-961-7100

WEIGHMASTER STATION
98785500
Everett Glenwood LND
6300 Glenwood Avenue
Everett, WA 98213

TICKET NO.	1120563185	TICKET TIME	2:32:49PM	DATE	6/6/2022
Customer No. 7832096	Payment Type Account	Customer Name STRIDER CONST CO INC			Order No. 10119468
Customer Job. No.	Customer P.O. 21NT		Map Ref. /		Disp. Ord. #
Truck Type Truck & Trailer	Truck No. RIV59TT	Vehicle or License Plate No.	Trailer or License Plate No.		Zone
Hauler/Carrier No. 7886596	Driver's Name	Delivered/Ordered 210.04 /	Load No. 7		Running Total 210.04

EV/P PORT OF EVERETT
2600 FEDERAL AVE
EVERETT

Product	Description	Total	Unit Price	Amount
99004	CLASS 2 SOILS DUMP (TN)	31.21		

SCALE WEIGHT	GROSS & TARE		
Gross 103,460 LB m	[X] Scale 1 [ ] Scale 2	A STANDBY SURCHARGE WILL BE ASSESSED FOR LOADS THAT EXCEED 10 MINUTES UNLOADING TIME.	Fuel Surcharge
Tare 41,040 LB/P.T.*			Sales Tax
Net 62,420 LB m	X Cate Deputy Weighmaster		Total

LIABILITY WAIVER
Cadman Materials, (Inc.) will not assume Liability for any property damage or any equipment damage for any delivery beyond the curb line.

No one available to sign, customer waives receipt signature. [ ]	Received by Signature X	Print Name (Customer) X	Driver's Signature X	Standby Time

Arrive Job		Start Unloading		Finish Unloading		Standby Time		Customer's Initials X	This Tickets Grand Total	

CADMAN
HEIDELBERGCEMENTGroup
(888) 322-6847 425-961-7100

WEIGHMASTER STATION
98785500
Everett Glenwood LND
6300 Glenwood Avenue
Everett, WA 98213

TICKET NO.	1120563186	TICKET TIME	2:41:29PM	DATE	6/6/2022

Customer No.	Payment Type	Customer Name	Order No.
7832096	Account	STRIDER CONST CO INC	10119468

Customer Job. No.	Customer P.O.	Map Ref.	Disp. Ord. #
	21NT	/	

Truck Type	Truck No.	Vehicle or License Plate No.	Trailer or License Plate No.	Zone
Truck & Trailer	RIV56TT			

Hauler/Carrier No.	Driver's Name	Delivered/Ordered	Load No.	Running Total
7886596		240.52 /	8	240.52

EV/P PORT OF EVERETT
2600 FEDERAL AVE
EVERETT

Product	Description	Total	Unit Price	Amount
99004	CLASS 2 SOILS DUMP (TN)	30.48		

SCALE WEIGHT

Gross 102,420 LB m
Tare 41,460 LB/P.T.*
Net 60,960 LB m

GROSS & TARE

☒ Scale 1 ☐ Scale 2

X Cate
Deputy Weighmaster

A STANDBY SURCHARGE WILL BE ASSESSED FOR LOADS THAT EXCEED 10 MINUTES UNLOADING TIME.

LIABILITY WAIVER

Cadman Materials, (Inc.) will not assume Liability for any property damage or any equipment damage for any delivery beyond the curb line.

Fuel Surcharge	
Sales Tax	
Total	
Standby Time	
This Tickets Grand Total	

No one available to sign, customer waives receipt signature. ☐	Received by Signature X	Print Name (Customer) X	Driver's Signature X

Arrive Job		Start Unloading		Finish Unloading		Standby Time		Customer's Initials X

CADMAN
HEIDELBERGCEMENTGroup
(888) 322-6847 425-961-7100

WEIGHMASTER STATION
98846900
Sno River Delta Soils
17 E. Marine View Dr.
Everett, WA 98213

TICKET NO.	1124518575	TICKET TIME	7:01:33AM	DATE	6/6/2022

Customer No.	Payment Type	Customer Name	Order No.
7832096	Account	STRIDER CONST CO INC	10119451

Customer Job. No.	Customer P.O.	Map Ref.	Disp. Ord. #
	21NT	/	

Truck Type	Truck No.	Vehicle or License Plate No.	Trailer or License Plate No.	Zone
Truck & Trailer	RIV55TT			

Hauler/Carrier No.	Driver's Name	Delivered/Ordered	Load No.	Running Total
7886596		27.68 /	1	27.68

DEL/P PORT OF EVERETT
DEL/P 2600 FEDERAL AVE
EVERETT

Product	Description	Total	Unit Price	Amount
99005	CLASS 3 SOILS (TN)	27.68		

SCALE WEIGHT
Gross 95,940 LB
Tare 40,580 LB/P.T.*
Net 55,360 LB

GROSS & TARE
☒ Scale 1 ☐ Scale 2
X Angelique
Deputy Weighmaster

A STANDBY SURCHARGE WILL BE ASSESSED FOR LOADS THAT EXCEED 10 MINUTES UNLOADING TIME.

LIABILITY WAIVER
Cadman, (Inc.) will not assume Liability for any property damage or any equipment damage for any delivery beyond the curb line.

Fuel Surcharge	
Sales Tax	
Total	
Standby Time	
This Tickets Grand Total	

No one available to sign, customer waives receipt signature. ☐	Received by Signature	Print Name (Customer)	Driver's Signature
	X	X	X

Arrive Job		Start Unloading		Finish Unloading		Standby Time		Customer's Initials
								X

CADMAN
HEIDELBERGCEMENTGroup
(888) 322-6847 425-961-7100

TICKET NO. 1124518576			TICKET TIME 7:05:20AM	DATE 6/6/2022	
Customer No. 7832096	Payment Type Account	Customer Name STRIDER CONST CO INC			Order No. 10119451
Customer Job. No.	Customer P.O. 21NT		Map Ref. /		Disp. Ord. #
Truck Type Truck & Trailer	Truck No. RIV57TT	Vehicle or License Plate No.	Trailer or License Plate No.	Zone	
Hauler/Carrier No. 7886596	Driver's Name	Delivered/Ordered 57.10 /	Load No. 2	Running Total 57.10	

WEIGHMASTER STATION
98046900
Sno River Delta Soils
17 E. Marine View Dr.
Everett, WA 98213

DEL/P PORT OF EVERETT
DEL/P 2600 FEDERAL AVE
EVERETT

Product	Description	Total	Unit Price	Amount
99005	CLASS 3 SOILS (TN)	29.42		

SCALE WEIGHT
100,040 LB
Gross
41,200 LB/P.T.*
Tare
58,840 LB
Net

GROSS & TARE
X Scale 1 ☐ Scale 2
X Angelique
Deputy Weighmaster

A STANDBY SURCHARGE WILL BE ASSESSED FOR LOADS THAT EXCEED 10 MINUTES UNLOADING TIME.

LIABILITY WAIVER
Cadman, (Inc.) will not assume Liability for any property damage or any equipment damage for any delivery beyond the curb line.

Fuel Surcharge	
Sales Tax	
Total	
Standby Time	
This Tickets Grand Total	

No one available to sign, customer waives receipt signature. ☐	Received by Signature X	Print Name (Customer) X	Driver's Signature X	

Arrive Job		Start Unloading		Finish Unloading		Standby Time		Customer's Initials X

CADMAN
HEIDELBERGCEMENTGroup®
(888) 322-6847 425-961-7100

WEIGHMASTER STATION
98046900
Sno River Delta Soils
17 E. Marine View Dr.
Everett, WA 98213

TICKET NO.	1124518577	TICKET TIME	7:08:55AM	DATE	8/6/2022
Customer No. 7832096	Payment Type Account	Customer Name STRIDER CONST CO INC			Order No. 10119451
Customer Job. No.	Customer P.O. 21NT		Map Ref. /		Disp. Ord. #
Truck Type Truck & Trailer	Truck No. RIV59TT	Vehicle or License Plate No.	Trailer or License Plate No.		Zone
Hauler/Carrier No. 7886596	Driver's Name	Delivered/Ordered 91.33 /	Load No. 3		Running Total 91.33

DEL/P PORT OF EVERETT
DEL/P 2600 FEDERAL AVE
EVERETT

Product	Description	Total	Unit Price	Amount
99005	CLASS 3 SOILS (TN)	34.23		

SCALE WEIGHT
108,900 LB
Gross
40,440 LB/P.T.*
Tare
68,460 LB
Net

GROSS & TARE
X Scale 1 ☐ Scale 2
X Angelique
Deputy Weighmaster

A STANDBY SURCHARGE WILL BE ASSESSED FOR LOADS THAT EXCEED 10 MINUTES UNLOADING TIME.

LIABILITY WAIVER
Cadman, (Inc.) will not assume Liability for any property damage or any equipment damage for any delivery beyond the curb line.

Fuel Surcharge	
Sales Tax	
Total	
Standby Time	
This Tickets Grand Total	

No one available to sign, customer waives receipt signature. ☐	Received by Signature X	Print Name (Customer) X	Driver's Signature X

Arrive Job		Start Unloading		Finish Unloading		Standby Time		Customer's Initials X

CADMAN
HEIDELBERGCEMENTGroup®
(888) 322-6847 425-961-7100

WEIGHTMASTER STATION
98846900
Sno River Delta Soils
17 E. Marine View Dr.
Everett, WA 98213

TICKET NO.	1124518578	TICKET TIME	7:10:20AM	DATE	6/6/2022

Customer No.	Payment Type	Customer Name	Order No.
7832096	Account	STRIDER CONST CO INC	10119451

Customer Job. No.	Customer P.O.	Map Ref.	Disp. Ord. #
	21NT	/	

Truck Type	Truck No.	Vehicle or License Plate No.	Trailer or License Plate No.	Zone
Truck & Trailer	RIV56TT			

Hauler/Carrier No.	Driver's Name	Delivered/Ordered	Load No.	Running Total
7886596		123.43 /	4	123.43

DEL/P PORT OF EVERETT
DEL/P 2600 FEDERAL AVE
EVERETT

Product	Description	Total	Unit Price	Amount
99005	CLASS 3 SOILS (TN)	32.10		

SCALE WEIGHT

105,660 LB
Gross
41,460 LB/P.T.*
Tare
64,200 LB
Net

GROSS & TARE

☒ Scale 1 ☐ Scale 2
X Angelique
Deputy Weighmaster

A STANDBY SURCHARGE WILL BE ASSESSED FOR LOADS THAT EXCEED 10 MINUTES UNLOADING TIME.

LIABILITY WAIVER

Cadman, (Inc.) will not assume Liability for any property damage or any equipment damage for any delivery beyond the curb line.

Fuel Surcharge	
Sales Tax	
Total	
Standby Time	
This Tickets Grand Total	

No one available to sign, customer waives receipt signature. ☐

Received by Signature: X

Print Name (Customer): X

Driver's Signature: X

Customer's Initials: X

Arrive Job		Start Unloading		Finish Unloading		Standby Time	

CADMAN
HEIDELBERGCEMENTGroup
(888) 322-6847 425-961-7100

WEIGHTMASTER STATION
98846900
Sno River Delta Soils
17 E. Marine View Dr.
Everett, WA 98213

TICKET NO	1124518579	TICKET TIME	7:43:01AM	DATE	6/6/2022
Customer No. 7832096	Payment Type Account	Customer Name STRIDER CONST CO INC			Order No. 10119451
Customer Job. No.	Customer P.O. 21NT		Map Ref. /		Disp. Ord. #
Truck Type Truck & Trailer	Truck No. RIV55TT	Vehicle or License Plate No.	Trailer or License Plate No.		Zone
Hauler/Carrier No. 7886596	Driver's Name	Delivered/Ordered 151.29 /	Load No. 5		Running Total 151.29

DEL/P PORT OF EVERETT
DEL/P 2600 FEDERAL AVE
EVERETT

Product	Description	Total	Unit Price	Amount
99005	CLASS 3 SOILS (TN)	27.86		

SCALE WEIGHT	GROSS & TARE		
Gross 96,300 LB	X Scale 1 ☐ Scale 2	A STANDBY SURCHARGE WILL BE ASSESSED FOR LOADS THAT EXCEED 10 MINUTES UNLOADING TIME.	Fuel Surcharge
Tare 40,580 LB/P.T.*	X Angelique	LIABILITY WAIVER	Sales Tax
Net 55,720 LB	Deputy Weighmaster	Cadman, (Inc.) will not assume Liability for any property damage or any equipment damage for any delivery beyond the curb line.	**Total**

No one available to sign, customer waives receipt signature. ☐	Received by Signature X	Print Name (Customer) X	Driver's Signature X	Standby Time

Arrive Job		Start Unloading		Finish Unloading		Standby Time		Customer's Initials X	This Tickets Grand Total	

CADMAN
HEIDELBERGCEMENTGroup
(888) 322-6847 425-961-7100

WEIGHMASTER STATION
98846900
Sno River Delta Soils
17 E. Marine View Dr.
Everett, WA 98213

TICKET NO.	1124518580	TICKET TIME	7:47:57AM	DATE	6/6/2022

Customer No.	Payment Type	Customer Name	Order No.
7832096	Account	STRIDER CONST CO INC	10119451

Customer Job. No.	Customer P.O.	Map Ref.	Disp. Ord. #
	21NT	/	

Truck Type	Truck No.	Vehicle or License Plate No.	Trailer or License Plate No.	Zone
Truck & Trailer	RIV57TT			

Hauler/Carrier No.	Driver's Name	Delivered/Ordered	Load No.	Running Total
7886596		178.76 /	6	178.76

DEL/P PORT OF EVERETT
DEL/P 2600 FEDERAL AVE
EVERETT

Product	Description	Total	Unit Price	Amount
99005	CLASS 3 SOILS (TN)	27.47		

SCALE WEIGHT

Gross 96,140 LB
Tare 41,200 LB/P.T.*
Net 54,940 LB

GROSS & TARE

X Scale 1 ☐ Scale 2

X Angelique
Deputy Weighmaster

A STANDBY SURCHARGE WILL BE ASSESSED FOR LOADS THAT EXCEED 10 MINUTES UNLOADING TIME.

LIABILITY WAIVER

Cadman, (Inc.) will not assume Liability for any property damage or any equipment damage for any delivery beyond the curb line.

Fuel Surcharge	
Sales Tax	
Total	
Standby Time	
This Tickets Grand Total	

No one available to sign, customer waives receipt signature. ☐	Received by Signature	Print Name (Customer)	Driver's Signature
	X	X	X

Arrive Job		Start Unloading		Finish Unloading		Standby Time		Customer's Initials
								X

CADMAN
HEIDELBERGCEMENTGroup
(888) 322-6847 425-961-7100

TICKET NO.	1124518581	TICKET TIME	7:53:10AM	DATE	6/6/2022
Customer No. 7832096	Payment Type Account	Customer Name STRIDER CONST CO INC			Order No. 10119451
Customer Job. No.	Customer P.O. 21NT		Map Ref. /		Disp. Ord. #
Truck Type Truck & Trailer	Truck No. RIV59TT	Vehicle or License Plate No.	Trailer or License Plate No.		Zone
Hauler/Carrier No. 7886596	Driver's Name	Delivered/Ordered 210.08 /	Load No. 7		Running Total 210.08

WEIGHTMASTER STATION
98846900
Sno River Delta Soils
17 E. Marine View Dr.
Everett, WA 98213

DEL/P PORT OF EVERETT
DEL/P 2600 FEDERAL AVE
EVERETT

Product	Description	Total	Unit Price	Amount
99005	CLASS 3 SOILS (TN)	31.32		

SCALE WEIGHT
Gross 103,680 LB
Tare 41,040 LB/P.T.
Net 62,640 LB

GROSS & TARE
X Scale 1 ☐ Scale 2
X Angelique
Deputy Weighmaster

A STANDBY SURCHARGE WILL BE ASSESSED FOR LOADS THAT EXCEED 10 MINUTES UNLOADING TIME.

LIABILITY WAIVER
Cadman, (Inc.) will not assume Liability for any property damage or any equipment damage for any delivery beyond the curb line.

Fuel Surcharge	
Sales Tax	
Total	
Standby Time	
This Tickets Grand Total	

No one available to sign, customer waives receipt signature. ☐	Received by Signature X	Print Name (Customer) X	Driver's Signature X

Arrive Job		Start Unloading		Finish Unloading		Standby Time		Customer's Initials X

CADMAN
HEIDELBERGCEMENTGroup®
(888) 322-6847 425-961-7100

WEIGHMASTER STATION
98846900
Sno River Delta Soils
17 E. Marine View Dr.
Everett, WA 98213

TICKET NO.	1124518582	TICKET TIME	7:58:23AM	DATE	6/6/2022
Customer No. 7832096	Payment Type Account	Customer Name STRIDER CONST CO INC			Order No. 10119451
Customer Job. No.	Customer P.O. 21NT		Map Ref. /		Disp. Ord. #
Truck Type Truck & Trailer	Truck No. RIV56TT	Vehicle or License Plate No.	Trailer or License Plate No.		Zone
Hauler/Carrier No. 7886596	Driver's Name	Delivered/Ordered 239.26 /	Load No. 8		Running Total 239.26

DEL/P PORT OF EVERETT
DEL/P 2600 FEDERAL AVE
EVERETT

Product	Description	Total	Unit Price	Amount
99005	CLASS 3 SOILS (TN)	29.18		

SCALE WEIGHT
99,820 LB
Gross
41,460 LB/P.T.*
Tare
58,360 LB
Net

GROSS & TARE
☒ Scale 1 ☐ Scale 2
X Angelique
Deputy Weighmaster

A STANDBY SURCHARGE WILL BE ASSESSED FOR LOADS THAT EXCEED 10 MINUTES UNLOADING TIME.

LIABILITY WAIVER
Cadman, (Inc.) will not assume Liability for any property damage or any equipment damage for any delivery beyond the curb line.

Fuel Surcharge	
Sales Tax	
Total	
Standby Time	
This Tickets Grand Total	

No one available to sign, customer waives receipt signature. ☐	Received by Signature X	Print Name (Customer) X	Driver's Signature X

Arrive Job		Start Unloading		Finish Unloading		Standby Time		Customer's Initials X

CADMAN
HEIDELBERGCEMENTGroup®
(888) 322-6847 425-961-7100

TICKET NO. 1124518583			TICKET TIME 8:35:10AM	DATE 6/6/2022	
Customer No. 7832096	Payment Type Account	Customer Name STRIDER CONST CO INC			Order No. 10119451
Customer Job. No.	Customer P.O. 21NT		Map Ref. /		Disp. Ord. #
Truck Type Truck & Trailer	Truck No. RIV55TT	Vehicle or License Plate No.	Trailer or License Plate No.	Zone	
Hauler/Carrier No. 7886596	Driver's Name	Delivered/Ordered 271.44 /	Load No. 9	Running Total 271.44	

WEIGHMASTER STATION
98846900
Sno River Delta Soils
17 E. Marine View Dr.
Everett, WA 98213

DEL/P PORT OF EVERETT
DEL/P 2600 FEDERAL AVE
EVERETT

Product	Description	Total	Unit Price	Amount
99005	CLASS 3 SOILS (TN)	32.18		

SCALE WEIGHT	GROSS & TARE		
Gross 104,940 LB	X Scale 1 ☐ Scale 2	A STANDBY SURCHARGE WILL BE ASSESSED FOR LOADS THAT EXCEED 10 MINUTES UNLOADING TIME.	Fuel Surcharge
Tare 40,580 LB/P.T.*		LIABILITY WAIVER	Sales Tax
Net 64,360 LB	X Angelique Deputy Weighmaster	Cadman, (Inc.) will not assume Liability for any property damage or any equipment damage for any delivery beyond the curb line.	**Total**

No one available to sign, customer waives receipt signature. ☐	Received by Signature X	Print Name (Customer) X	Driver's Signature X	Standby Time
Arrive Job	Start Unloading	Finish Unloading	Standby Time	Customer's Initials X / This Tickets Grand Total

CADMAN
HEIDELBERGCEMENTGroup
(888) 322-6847 425-961-7100

WEIGHMASTER STATION
98046900
Sno River Delta Soils
17 E. Marine View Dr.
Everett, WA 98213

TICKET NO.	1124518584	TICKET TIME	8:43:46AM	DATE	6/6/2022
Customer No. 7832096	Payment Type Account	Customer Name STRIDER CONST CO INC			Order No. 10119451
Customer Job. No.	Customer P.O. 21NT		Map Ref. /		Disp. Ord. #
Truck Type Truck & Trailer	Truck No. RIV57TT	Vehicle or License Plate No.	Trailer or License Plate No.	Zone	
Hauler/Carrier No. 7886596	Driver's Name	Delivered/Ordered 304.07 /	Load No. 10	Running Total 304.07	

DEL/P PORT OF EVERETT
DEL/P 2600 FEDERAL AVE
EVERETT

Product	Description	Total	Unit Price	Amount
99005	CLASS 3 SOILS (TN)	32.63		

SCALE WEIGHT
106,460 LB
Gross
41,200 LB/P.T.*
Tare
65,260 LB
Net

GROSS & TARE
X Scale 1 ☐ Scale 2
X Angelique
Deputy Weighmaster

A STANDBY SURCHARGE WILL BE ASSESSED FOR LOADS THAT EXCEED 10 MINUTES UNLOADING TIME.

LIABILITY WAIVER
Cadman, (Inc.) will not assume Liability for any property damage or any equipment damage for any delivery beyond the curb line.

Fuel Surcharge	
Sales Tax	
Total	
Standby Time	
This Tickets Grand Total	

No one available to sign, customer waives receipt signature. ☐
Received by Signature X
Print Name (Customer) X
Driver's Signature X

Arrive Job		Start Unloading		Finish Unloading		Standby Time		Customer's Initials X

CADMAN
HEIDELBERGCEMENTGroup
(888) 322-6847 425-961-7100

TICKET NO.	1124518585	TICKET TIME	8:47:57AM	DATE	6/6/2022

Customer No.	Payment Type	Customer Name	Order No.
7832096	Account	STRIDER CONST CO INC	10119451

Customer Job. No.	Customer P.O.	Map Ref.	Disp. Ord. #
	21NT	/	

Truck Type	Truck No.	Vehicle or License Plate No.	Trailer or License Plate No.	Zone
Truck & Trailer	RIV59TT			

Hauler/Carrier No.	Driver's Name	Delivered/Ordered	Load No.	Running Total
7886596		334.11 /	11	334.11

WEIGHTMASTER STATION
98846900
Sno River Delta Soils
17 E. Marine View Dr.
Everett, WA 98213

DEL/P PORT OF EVERETT
DEL/P 2600 FEDERAL AVE
EVERETT

Product	Description	Total	Unit Price	Amount
99005	CLASS 3 SOILS (TN)	30.04		

SCALE WEIGHT
Gross 101,120 LB
Tare 41,040 LB/P.T.*
Net 60,080 LB

GROSS & TARE
X Scale 1 ☐ Scale 2
X Angelique
Deputy Weighmaster

A STANDBY SURCHARGE WILL BE ASSESSED FOR LOADS THAT EXCEED 10 MINUTES UNLOADING TIME.

LIABILITY WAIVER
Cadman, (Inc.) will not assume Liability for any property damage or any equipment damage for any delivery beyond the curb line.

Fuel Surcharge	
Sales Tax	
Total	
Standby Time	
This Tickets Grand Total	

No one available to sign, customer waives receipt signature.	Received by Signature	Print Name (Customer)	Driver's Signature
☐	X	X	X

Arrive Job		Start Unloading		Finish Unloading		Standby Time		Customer's Initials
								X

CADMAN
HEIDELBERGCEMENTGroup
(888) 322-6847 425-961-7100

TICKET NO.	1124518586	TICKET TIME	8:53:43AM	DATE	6/6/2022

Customer No.	Payment Type	Customer Name	Order No.
7832096	Account	STRIDER CONST CO INC	10119451

Customer Job. No.	Customer P.O.	Map Ref.	Disp. Ord. #
	21NT	/	

Truck Type	Truck No.	Vehicle or License Plate No.	Trailer or License Plate No.	Zone
Truck & Trailer	RIV56TT			

Hauler/Carrier No.	Driver's Name	Delivered/Ordered	Load No.	Running Total
7886596		363.23 /	12	363.23

WEIGHMASTER STATION
9804[illegible]
Sno River Delta Soils
17 E. Marine View Dr.
Everett, WA 98213

DEL/P PORT OF EVERETT
DEL/P 2600 FEDERAL AVE
EVERETT

Product	Description	Total	Unit Price	Amount
99005	CLASS 3 SOILS (TN)	29.12		

SCALE WEIGHT	GROSS & TARE
Gross 99,700 LB	X Scale 1 ☐ Scale 2
Tare 41,460 LB/P.T.*	X Angelique Deputy Weighmaster
Net 58,240 LB	

A STANDBY SURCHARGE WILL BE ASSESSED FOR LOADS THAT EXCEED 10 MINUTES UNLOADING TIME.

LIABILITY WAIVER

Cadman, (Inc.) will not assume Liability for any property damage or any equipment damage for any delivery beyond the curb line.

Fuel Surcharge	
Sales Tax	
Total	
Standby Time	
This Tickets Grand Total	

No one available to sign, customer waives receipt signature. ☐	Received by Signature	Print Name (Customer)	Driver's Signature
	X	X	X

Arrive Job		Start Unloading		Finish Unloading		Standby Time		Customer's Initials
								X

CADMAN
HEIDELBERGCEMENTGroup
(888) 322-6847 425-961-7100

WEIGHMASTER STATION
98048900
Sno River Delta Soils
17 E. Marine View Dr.
Everett, WA 98213

TICKET NO. 1124518587		TICKET TIME 9:10:57AM	DATE 6/6/2022	
Customer No. 7832096	Payment Type Account	Customer Name STRIDER CONST CO INC		Order No. 10119451
Customer Job. No.	Customer P.O. 21NT		Map Ref. /	Disp. Ord. #
Truck Type Truck & Trailer	Truck No. RIV55TT	Vehicle or License Plate No.	Trailer or License Plate No.	Zone
Hauler/Carrier No. 7886596	Driver's Name	Delivered/Ordered 393.22 /	Load No. 13	Running Total 393.22

DEL/P PORT OF EVERETT
DEL/P 2600 FEDERAL AVE
EVERETT

Product	Description	Total	Unit Price	Amount
99005	CLASS 3 SOILS (TN)	29.99		

SCALE WEIGHT
100,560 LB
Gross
40,580 LB/P.T.*
Tare
59,980 LB
Net

GROSS & TARE
X Scale 1 ☐ Scale 2
X Angelique
Deputy Weighmaster

A STANDBY SURCHARGE WILL BE ASSESSED FOR LOADS THAT EXCEED 10 MINUTES UNLOADING TIME.

LIABILITY WAIVER
Cadman, (Inc.) will not assume Liability for any property damage or any equipment damage for any delivery beyond the curb line.

Fuel Surcharge	
Sales Tax	
Total	
Standby Time	
This Tickets Grand Total	

No one available to sign, customer waives receipt signature. ☐	Received by Signature X	Print Name (Customer) X	Driver's Signature X	Arrive Job		Start Unloading		Finish Unloading		Standby Time		Customer's Initials X

CADMAN
HEIDELBERGCEMENTGroup
(888) 322-6847 425-961-7100

WEIGHMASTER STATION
98046900
Sno River Delta Soils
17 E. Marine View Dr.
Everett, WA 98213

TICKET NO.	1124518588	TICKET TIME	9:18:10AM	DATE	6/6/2022
Customer No. 7832096	Payment Type Account	Customer Name STRIDER CONST CO INC			Order No. 10119451
Customer Job. No.	Customer P.O. 21NT			Map Ref. /	Disp. Ord. #
Truck Type Truck & Trailer	Truck No. RIV57TT	Vehicle or License Plate No.		Trailer or License Plate No.	Zone
Hauler/Carrier No. 7886596	Driver's Name	Delivered/Ordered 425.68 /		Load No. 14	Running Total 425.68

DEL/P PORT OF EVERETT
DEL/P 2600 FEDERAL AVE
EVERETT

Product	Description	Total	Unit Price	Amount
99005	CLASS 3 SOILS (TN)	32.46		

SCALE WEIGHT	GROSS & TARE
106,120 LB	X Scale 1 ☐ Scale 2
Gross 41,200 LB/P.T.*	X Angelique
Tare 64,920 LB	Deputy Weighmaster
Net	

A STANDBY SURCHARGE WILL BE ASSESSED FOR LOADS THAT EXCEED 10 MINUTES UNLOADING TIME.

LIABILITY WAIVER

Cadman, (Inc.) will not assume Liability for any property damage or any equipment damage for any delivery beyond the curb line.

Fuel Surcharge	
Sales Tax	
Total	
Standby Time	
This Tickets Grand Total	

No one available to sign, customer waives receipt signature ☐	Received by Signature X	Print Name (Customer) X	Driver's Signature X

Arrive Job		Start Unloading		Finish Unloading		Standby Time		Customer's Initials X

CADMAN
HEIDELBERGCEMENTGroup
(888) 322-6847 425-961-7100

TICKET NO.	1124518589	TICKET TIME	9:25:03AM	DATE	6/6/2022

Customer No.	Payment Type	Customer Name	Order No.
7832096	Account	STRIDER CONST CO INC	10119451

Customer Job. No.	Customer P.O.	Map Ref.	Disp. Ord. #
	21NT	/	

Truck Type	Truck No.	Vehicle or License Plate No.	Trailer or License Plate No.	Zone
Truck & Trailer	RIV59TT			

Hauler/Carrier No.	Driver's Name	Delivered/Ordered	Load No.	Running Total
7886596		458.34 /	15	458.34

WEIGHTMASTER STATION
98846900
Sno River Delta Soils
17 E. Marine View Dr.
Everett, WA 98213

DEL/P PORT OF EVERETT
DEL/P 2600 FEDERAL AVE
EVERETT

Product	Description	Total	Unit Price	Amount
99005	CLASS 3 SOILS (TN)	32.66		

SCALE WEIGHT
106,360 LB
Gross
41,040 LB/P.T.*
Tare
65,320 LB
Net

GROSS & TARE
☒ Scale 1 ☐ Scale 2
X Angelique
Deputy Weighmaster

A STANDBY SURCHARGE WILL BE ASSESSED FOR LOADS THAT EXCEED 10 MINUTES UNLOADING TIME.

LIABILITY WAIVER
Cadman, (Inc.) will not assume Liability for any property damage or any equipment damage for any delivery beyond the curb line.

Fuel Surcharge	
Sales Tax	
Total	
Standby Time	
This Tickets Grand Total	

No one available to sign, customer waives receipt signature. ☐	Received by Signature	Print Name (Customer)	Driver's Signature
	X	X	X

Arrive Job		Start Unloading		Finish Unloading		Standby Time		Customer's Initials
								X

CADMAN
HEIDELBERGCEMENTGroup®
(888) 322-6847 425-961-7100

WEIGHMASTER STATION
98046900
Sno River Delta Soils
17 E. Marine View Dr.
Everett, WA 98213

TICKET NO.	1124518590	TICKET TIME	9:31:34AM	DATE	6/6/2022

Customer No.	Payment Type	Customer Name	Order No.
7832096	Account	STRIDER CONST CO INC	10119451

Customer Job. No.	Customer P.O.	Map Ref.	Disp. Ord. #
	21NT	/	

Truck Type	Truck No.	Vehicle or License Plate No.	Trailer or License Plate No.	Zone
Truck & Trailer	RIV56TT			

Hauler/Carrier No.	Driver's Name	Delivered/Ordered	Load No.	Running Total
7886596		491.38 /	16	491.38

DEL/P PORT OF EVERETT
DEL/P 2600 FEDERAL AVE
EVERETT

Product	Description	Total	Unit Price	Amount
99005	CLASS 3 SOILS (TN)	33.04		

SCALE WEIGHT
107,540 LB
Gross
41,460 LB/P.T.*
Tare
66,080 LB
Net

GROSS & TARE
X Scale 1 ☐ Scale 2
X Angelique
Deputy Weighmaster

A STANDBY SURCHARGE WILL BE ASSESSED FOR LOADS THAT EXCEED 10 MINUTES UNLOADING TIME.

LIABILITY WAIVER
Cadman, (Inc.) will not assume Liability for any property damage or any equipment damage for any delivery beyond the curb line.

Fuel Surcharge	
Sales Tax	
Total	
Standby Time	
This Tickets Grand Total	

No one available to sign, customer waives receipt signature. ☐	Received by Signature	Print Name (Customer)	Driver's Signature
	X	X	X

Arrive Job		Start Unloading		Finish Unloading		Standby Time		Customer's Initials
								X

CADMAN
HEIDELBERGCEMENTGroup®
(888) 322-6847 425-961-7100

98010900
WEIGHMASTER STATION
Sno River Delta Soils
17 E. Marine View Dr.
Everett, WA 98213

TICKET NO. 1124518591		TICKET TIME 9:46:50AM	DATE 6/6/2022	
Customer No. 7832096	Payment Type Account	Customer Name STRIDER CONST CO INC		Order No. 10119451
Customer Job. No.	Customer P.O. 21NT		Map Ref. /	Disp. Ord. #
Truck Type Truck & Trailer	Truck No. RIV55TT	Vehicle or License Plate No.	Trailer or License Plate No.	Zone
Hauler/Carrier No. 7886596	Driver's Name	Delivered/Ordered 526.04 /	Load No. 17	Running Total 526.04

DEL/P PORT OF EVERETT
DEL/P 2600 FEDERAL AVE
EVERETT

Product	Description	Total	Unit Price	Amount
99005	CLASS 3 SOILS (TN)	34.66		

SCALE WEIGHT
109,900 LB
Gross
40,580 LB/P.T.*
Tare
69,320 LB
Net

GROSS & TARE
☒ Scale 1 ☐ Scale 2
X Angelique
Deputy Weighmaster

A STANDBY SURCHARGE WILL BE ASSESSED FOR LOADS THAT EXCEED 10 MINUTES UNLOADING TIME.

LIABILITY WAIVER
Cadman, (Inc.) will not assume Liability for any property damage or any equipment damage for any delivery beyond the curb line.

Fuel Surcharge	
Sales Tax	
Total	
Standby Time	
This Tickets Grand Total	

No one available to sign, customer waives receipt signature. ☐	Received by Signature X	Print Name (Customer) X	Driver's Signature X

Arrive Job		Start Unloading		Finish Unloading		Standby Time		Customer's Initials X

CADMAN
HEIDELBERGCEMENTGroup®
(888) 322-6847 425-961-7100

WEIGHMASTER STATION
98046900
Sno River Delta Soils
17 E. Marine View Dr.
Everett, WA 98213

TICKET NO.	1124518592	TICKET TIME	9:56:49AM	DATE	6/6/2022
Customer No. 7832096	Payment Type Account	Customer Name STRIDER CONST CO INC			Order No. 10119451
Customer Job. No.	Customer P.O. 21NT		Map Ref. /		Disp. Ord. #
Truck Type Truck & Trailer	Truck No. RIV57TT	Vehicle or License Plate No.	Trailer or License Plate No.		Zone
Hauler/Carrier No. 7886596	Driver's Name	Delivered/Ordered 561.00 /	Load No. 18		Running Total 561.00

DEL/P PORT OF EVERETT
DEL/P 2600 FEDERAL AVE
EVERETT

Product	Description	Total	Unit Price	Amount
99005	CLASS 3 SOILS (TN)	34.96		

SCALE WEIGHT	GROSS & TARE		
111,120 LB	X Scale 1 ☐ Scale 2	A STANDBY SURCHARGE WILL BE ASSESSED FOR LOADS THAT EXCEED 10 MINUTES UNLOADING TIME.	Fuel Surcharge
Gross 41,200 LB/P.T.*			
Tare 69,920 LB	X Angelique	LIABILITY WAIVER	Sales Tax
Net	Deputy Weighmaster	Cadman, (Inc.) will not assume Liability for any property damage or any equipment damage for any delivery beyond the curb line.	**Total**

No one available to sign, customer waives receipt signature. ☐	Received by Signature X	Print Name (Customer) X	Driver's Signature X	Standby Time

Arrive Job		Start Unloading		Finish Unloading		Standby Time		Customer's Initials X	This Tickets Grand Total	

CADMAN
HEIDELBERGCEMENTGroup
(888) 322-6847 425-961-7100

WEIGHMASTER STATION

98846900
Sno River Delta Soils
17 E. Marine View Dr.
Everett, WA 98213

TICKET NO.	TICKET TIME	DATE
1124518593	9:58:38AM	6/6/2022

Customer No.	Payment Type	Customer Name	Order No.
7832096	Account	STRIDER CONST CO INC	10119451

Customer Job. No.	Customer P.O.	Map Ref.	Disp. Ord. #
	21NT	/	

Truck Type	Truck No.	Vehicle or License Plate No.	Trailer or License Plate No.	Zone
Truck & Traile	RIV59TT			

Hauler/Carrier No.	Driver's Name	Delivered/Ordered	Load No.	Running Total
7886596		593.73 /	19	593.73

DEL/P PORT OF EVERETT
DEL/P 2600 FEDERAL AVE
EVERETT

Product	Description	Total	Unit Price	Amount
99005	CLASS 3 SOILS (TN)	32.73		

SCALE WEIGHT

106,500 LB
Gross
41,040 LB/P.T.*
Tare
65,460 LB
Net

GROSS & TARE

☒ Scale 1 ☐ Scale 2

X Angelique
Deputy Weighmaster

A STANDBY SURCHARGE WILL BE ASSESSED FOR LOADS THAT EXCEED 10 MINUTES UNLOADING TIME.

LIABILITY WAIVER

Cadman, (Inc.) will not assume Liability for any property damage or any equipment damage for any delivery beyond the curb line.

Fuel Surcharge	
Sales Tax	
Total	
Standby Time	
This Tickets Grand Total	

No one available to sign, customer waives receipt signature. ☐	Received by Signature	Print Name (Customer)	Driver's Signature
	X	X	X

Arrive Job		Start Unloading		Finish Unloading		Standby Time		Customer's initials
								X

CADMAN
HEIDELBERGCEMENTGroup
(888) 322-6847 425-961-7100

TICKET NO. 1124518594			TICKET TIME 10:07:20AM	DATE 6/6/2022	
Customer No. 7832096	Payment Type Account	Customer Name STRIDER CONST CO INC			Order No. 10119451
Customer Job. No.	Customer P.O. 21NT		Map Ref. /		Disp. Ord. #
Truck Type Truck & Trailer	Truck No. RIV56TT	Vehicle or License Plate No.	Trailer or License Plate No.	Zone	
Hauler/Carrier No. 7886596	Driver's Name	Delivered/Ordered 625.31 /	Load No. 20	Running Total 625.31	

WEIGHMASTER STATION
98046900
Sno River Delta Soils
17 E. Marine View Dr.
Everett, WA 98213

DEL/P PORT OF EVERETT
DEL/P 2600 FEDERAL AVE
EVERETT

Product	Description	Total	Unit Price	Amount
99005	CLASS 3 SOILS (TN)	31.58		

SCALE WEIGHT
104,620 LB
Gross 41,460 LB/P.T.*
Tare 63,160 LB
Net

GROSS & TARE
X Scale 1 ☐ Scale 2
X Angelique
Deputy Weighmaster

A STANDBY SURCHARGE WILL BE ASSESSED FOR LOADS THAT EXCEED 10 MINUTES UNLOADING TIME.

LIABILITY WAIVER
Cadman, (Inc.) will not assume Liability for any property damage or any equipment damage for any delivery beyond the curb line.

Fuel Surcharge	
Sales Tax	
Total	
Standby Time	
This Tickets Grand Total	

No one available to sign, customer waives receipt signature. ☐	Received by Signature X	Print Name (Customer) X	Driver's Signature X

Arrive Job		Start Unloading		Finish Unloading		Standby Time		Customer's Initials X

CADMAN
HEIDELBERGCEMENTGroup
(888) 322-6847 425-961-7100

WEIGHMASTER STATION
9804[illegible]
Sno River Delta Soils
17 E. Marine View Dr.
Everett, WA 98213

TICKET NO.	1124518596	TICKET TIME	10:23:37AM	DATE	6/6/2022

Customer No.	Payment Type	Customer Name	Order No.
7832096	Account	STRIDER CONST CO INC	10119451

Customer Job. No.	Customer P.O.	Map Ref.	Disp. Ord. #
	21NT	/	

Truck Type	Truck No.	Vehicle or License Plate No.	Trailer or License Plate No.	Zone
Truck & Traile	RIV55TT			

Hauler/Carrier No.	Driver's Name	Delivered/Ordered	Load No.	Running Total
7886596		659.27 /	21	659.27

DEL/P PORT OF EVERETT
DEL/P 2600 FEDERAL AVE
EVERETT

Product	Description	Total	Unit Price	Amount
99005	CLASS 3 SOILS (TN)	33.96		

SCALE WEIGHT
108,500 LB
Gross
40,580 LB/P.T.*
Tare
67,920 LB
Net

GROSS & TARE
X Scale 1 ☐ Scale 2
X Angelique
Deputy Weighmaster

A STANDBY SURCHARGE WILL BE ASSESSED FOR LOADS THAT EXCEED 10 MINUTES UNLOADING TIME.

LIABILITY WAIVER
Cadman, (Inc.) will not assume Liability for any property damage or any equipment damage for any delivery beyond the curb line.

Fuel Surcharge	
Sales Tax	
Total	
Standby Time	
This Tickets Grand Total	

No one available to sign, customer waives receipt signature. ☐	Received by Signature	Print Name (Customer)	Driver's Signature	Customer's Initials
	X	X	X	X

Arrive Job		Start Unloading		Finish Unloading		Standby Time	

CADMAN
HEIDELBERGCEMENTGroup®
(888) 322-6847 425-961-7100

WEIGHMASTER STATION
98846900
Sno River Delta Soils
17 E. Marine View Dr.
Everett, WA 98213

TICKET NO.	1124518598	TICKET TIME	10:30:34AM	DATE	6/6/2022
Customer No. 7832096	Payment Type Account	Customer Name STRIDER CONST CO INC			Order No. 10119451
Customer Job. No.	Customer P.O. 21NT		Map Ref. /		Disp. Ord. #
Truck Type Truck & Trailer	Truck No. RIV57TT	Vehicle or License Plate No.	Trailer or License Plate No.		Zone
Hauler/Carrier No. 7886596	Driver's Name	Delivered/Ordered 693.38 /	Load No. 22		Running Total 693.38

DEL/P PORT OF EVERETT
DEL/P 2600 FEDERAL AVE
EVERETT

Product	Description	Total	Unit Price	Amount
99005	CLASS 3 SOILS (TN)	34.11		

SCALE WEIGHT
Gross 109,420 LB
Tare 41,200 LB/P.T.*
Net 68,220 LB

GROSS & TARE
[X] Scale 1 [ ] Scale 2
X Angelique
Deputy Weighmaster

A STANDBY SURCHARGE WILL BE ASSESSED FOR LOADS THAT EXCEED 10 MINUTES UNLOADING TIME.

LIABILITY WAIVER
Cadman, (Inc.) will not assume Liability for any property damage or any equipment damage for any delivery beyond the curb line.

Fuel Surcharge	
Sales Tax	
Total	
Standby Time	
This Tickets Grand Total	

No one available to sign, customer waives receipt signature. [ ]	Received by Signature X	Print Name (Customer) X	Driver's Signature X

Arrive Job		Start Unloading		Finish Unloading		Standby Time		Customer's Initials X

CADMAN
HEIDELBERGCEMENTGroup®
(888) 322-6847 425-961-7100

WEIGHMASTER STATION
98846900
Sno River Delta Soils
17 E. Marine View Dr.
Everett, WA 98213

TICKET NO.	1124518599	TICKET TIME	10:40:27AM	DATE	6/6/2022

Customer No.	Payment Type	Customer Name	Order No.
7832096	Account	STRIDER CONST CO INC	10119451

Customer Job. No.	Customer P.O.	Map Ref.	Disp. Ord. #
	21NT	/	

Truck Type	Truck No.	Vehicle or License Plate No.	Trailer or License Plate No.	Zone
Truck & Trailer	RIV59TT			

Hauler/Carrier No.	Driver's Name	Delivered/Ordered	Load No.	Running Total
7886596		725.95 /	23	725.95

DEL/P PORT OF EVERETT
DEL/P 2600 FEDERAL AVE
EVERETT

Product	Description	Total	Unit Price	Amount
99005	CLASS 3 SOILS (TN)	32.57		

SCALE WEIGHT
106,180 LB
Gross
41,040 LB/P.T.*
Tare
65,140 LB
Net

GROSS & TARE
X Scale 1 ☐ Scale 2
X Angelique
Deputy Weighmaster

A STANDBY SURCHARGE WILL BE ASSESSED FOR LOADS THAT EXCEED 10 MINUTES UNLOADING TIME.

LIABILITY WAIVER
Cadman, (Inc.) will not assume Liability for any property damage or any equipment damage for any delivery beyond the curb line.

Fuel Surcharge	
Sales Tax	
Total	
Standby Time	
This Tickets Grand Total	

No one available to sign, customer waives receipt signature. ☐	Received by Signature	Print Name (Customer)	Driver's Signature
	X	X	X

Arrive Job		Start Unloading		Finish Unloading		Standby Time		Customer's Initials
								X

CADMAN
HEIDELBERGCEMENTGroup
(888) 322-6847 425-961-7100

WEIGHMASTER STATION
98046900
Sno River Delta Soils
17 E. Marine View Dr.
Everett, WA 98213

TICKET NO.	1124518600	TICKET TIME	10:50:23AM	DATE	6/6/2022
Customer No. 7832096	Payment Type Account	Customer Name STRIDER CONST CO INC			Order No. 10119451
Customer Job. No.	Customer P.O. 21NT		Map Ref. /		Disp. Ord. #
Truck Type Truck & Trailer	Truck No. RIV56TT	Vehicle or License Plate No.	Trailer or License Plate No.		Zone
Hauler/Carrier No. 7886596	Driver's Name	Delivered/Ordered 756.97 /	Load No. 24		Running Total 756.97

DEL/P PORT OF EVERETT
DEL/P 2600 FEDERAL AVE
EVERETT

Product	Description	Total	Unit Price	Amount
99005	CLASS 3 SOILS (TN)	31.02		

SCALE WEIGHT
103,500 LB
Gross 41,460 LB/P.T.*
Tare 62,040 LB
Net

GROSS & TARE
X Scale 1 ☐ Scale 2
X Angelique
Deputy Weighmaster

A STANDBY SURCHARGE WILL BE ASSESSED FOR LOADS THAT EXCEED 10 MINUTES UNLOADING TIME.

LIABILITY WAIVER
Cadman, (Inc.) will not assume Liability for any property damage or any equipment damage for any delivery beyond the curb line.

Fuel Surcharge	
Sales Tax	
Total	
Standby Time	
This Tickets Grand Total	

No one available to sign, customer waives receipt signature. ☐	Received by Signature X	Print Name (Customer) X	Driver's Signature X

Arrive Job		Start Unloading		Finish Unloading		Standby Time		Customer's Initials X

CADMAN
HEIDELBERGCEMENTGroup®
(888) 322-6847 425-961-7100

WEIGHMASTER STATION
98846900
Sno River Delta Soils
17 E. Marine View Dr.
Everett, WA 98213

TICKET NO.	1124518601	TICKET TIME	11:00:52AM	DATE	6/6/2022
Customer No. 7832096	Payment Type Account	Customer Name STRIDER CONST CO INC			Order No. 10119451
Customer Job. No.	Customer P.O. 21NT		Map Ref. /		Disp. Ord. #
Truck Type Truck & Trailer	Truck No. RIV55TT	Vehicle or License Plate No.	Trailer or License Plate No.		Zone
Hauler/Carrier No. 7886596	Driver's Name	Delivered/Ordered 787.70 /	Load No. 25		Running Total 787.70

DEL/P PORT OF EVERETT
DEL/P 2600 FEDERAL AVE
EVERETT

Product	Description	Total	Unit Price	Amount
99005	CLASS 3 SOILS (TN)	30.73		

SCALE WEIGHT
102,040 LB
Gross
40,580 LB/P.T.*
Tare
61,460 LB
Net

GROSS & TARE
X Scale 1 ☐ Scale 2
X Angelique
Deputy Weighmaster

A STANDBY SURCHARGE WILL BE ASSESSED FOR LOADS THAT EXCEED 10 MINUTES UNLOADING TIME.

LIABILITY WAIVER
Cadman, (Inc.) will not assume Liability for any property damage or any equipment damage for any delivery beyond the curb line.

Fuel Surcharge	
Sales Tax	
Total	
Standby Time	
This Tickets Grand Total	

No one available to sign, customer waives receipt signature. ☐	Received by Signature X	Print Name (Customer) X	Driver's Signature X

Arrive Job		Start Unloading		Finish Unloading		Standby Time		Customer's Initials X

CADMAN
HEIDELBERGCEMENTGroup®
(888) 322-6847 425-961-7100

TICKET NO. 1124518602			TICKET TIME 11:10:50AM	DATE 6/6/2022	
Customer No. 7832096	Payment Type Account	Customer Name STRIDER CONST CO INC			Order No. 10119451
Customer Job. No.	Customer P.O. 21NT		Map Ref. /		Disp. Ord. #
Truck Type Truck & Trailer	Truck No. RIV57TT	Vehicle or License Plate No.	Trailer or License Plate No.	Zone	
Hauler/Carrier No. 7886596	Driver's Name	Delivered/Ordered 820.44 /	Load No. 26	Running Total 820.44	

WEIGHMASTER STATION
98046900
Sno River Delta Soils
17 E. Marine View Dr.
Everett, WA 98213

DEL/P PORT OF EVERETT
DEL/P 2600 FEDERAL AVE
EVERETT

Product	Description	Total	Unit Price	Amount
99005	CLASS 3 SOILS (TN)	32.74		

SCALE WEIGHT	GROSS & TARE		
Gross 106,680 LB	X Scale 1 ☐ Scale 2	A STANDBY SURCHARGE WILL BE ASSESSED FOR LOADS THAT EXCEED 10 MINUTES UNLOADING TIME.	Fuel Surcharge
Tare 41,200 LB/P.T.*	X Angelique	**LIABILITY WAIVER**	Sales Tax
Net 65,480 LB	Deputy Weighmaster	Cadman, (Inc.) will not assume Liability for any property damage or any equipment damage for any delivery beyond the curb line.	**Total**

No one available to sign, customer waives receipt signature. ☐	Received by Signature X	Print Name (Customer) X	Driver's Signature X	Standby Time

Arrive Job		Start Unloading		Finish Unloading		Standby Time		Customer's Initials X	This Tickets Grand Total	

CADMAN
HEIDELBERGCEMENTGroup
(888) 322-6847 425-961-7100

TICKET NO. 1124518603			TICKET TIME 11:20:20AM	DATE 6/6/2022	
Customer No. 7832096	Payment Type Account	Customer Name STRIDER CONST CO INC			Order No. 10119451
Customer Job. No.	Customer P.O. 21NT		Map Ref. /		Disp. Ord. #
Truck Type Truck & Trailer	Truck No. RIV59TT	Vehicle or License Plate No.	Trailer or License Plate No.	Zone	
Hauler/Carrier No. 7886596	Driver's Name	Delivered/Ordered 853.71 /	Load No. 27	Running Total 853.71	

WEIGHMASTER STATION
98046900
Sno River Delta Soils
17 E. Marine View Dr.
Everett, WA 98213

DEL/P PORT OF EVERETT
DEL/P 2600 FEDERAL AVE
EVERETT

Product	Description	Total	Unit Price	Amount
99005	CLASS 3 SOILS (TN)	33.27		

SCALE WEIGHT	GROSS & TARE			
Gross 107,580 LB	X Scale 1 ☐ Scale 2	A STANDBY SURCHARGE WILL BE ASSESSED FOR LOADS THAT EXCEED 10 MINUTES UNLOADING TIME.	Fuel Surcharge	
Tare 41,040 LB/P.T.*	X Angelique	LIABILITY WAIVER	Sales Tax	
Net 66,540 LB	Deputy Weighmaster	Cadman, (Inc.) will not assume Liability for any property damage or any equipment damage for any delivery beyond the curb line.	**Total**	

No one available to sign, customer waives receipt signature. ☐	Received by Signature X	Print Name (Customer) X	Driver's Signature X	Standby Time	

Arrive Job		Start Unloading		Finish Unloading		Standby Time		Customer's Initials X	This Tickets Grand Total	

CADMAN
HEIDELBERGCEMENTGroup®
(888) 322-6847 425-961-7100

TICKET NO	1124518604	TICKET TIME	11:28:58AM	DATE	6/6/2022
Customer No. 7832096	Payment Type Account	Customer Name STRIDER CONST CO INC			Order No. 10119451
Customer Job. No.	Customer P.O. 21NT		Map Ref. /		Disp. Ord. #
Truck Type Truck & Trailer	Truck No. RIV56TT	Vehicle or License Plate No.	Trailer or License Plate No.		Zone
Hauler/Carrier No. 7886596	Driver's Name	Delivered/Ordered 883.20 /	Load No. 28		Running Total 883.20

WEIGHMASTER STATION
98846900
Sno River Delta Soils
17 E. Marine View Dr.
Everett, WA 98213

DEL/P PORT OF EVERETT
DEL/P 2600 FEDERAL AVE
EVERETT

Product	Description	Total	Unit Price	Amount
99005	CLASS 3 SOILS (TN)	29.49		

SCALE WEIGHT	GROSS & TARE		Fuel Surcharge	
100,440 LB		**A STANDBY SURCHARGE WILL BE ASSESSED FOR LOADS THAT EXCEED 10 MINUTES UNLOADING TIME.**		
Gross 41,460 LB/P.T.*	X Scale 1 ☐ Scale 2	**LIABILITY WAIVER**	Sales Tax	
Tare 58,980 LB	X Angelique Deputy Weighmaster	**Cadman, (Inc.) will not assume Liability for any property damage or any equipment damage for any delivery beyond the curb line.**	**Total**	
Net				

No one available to sign, customer waives receipt signature. ☐	Received by Signature X	Print Name (Customer) X	Driver's Signature X	Standby Time	

Arrive Job		Start Unloading		Finish Unloading		Standby Time		Customer's Initials X	This Tickets Grand Total	

CADMAN
HEIDELBERGCEMENTGroup
(888) 322-6847 425-961-7100

WEIGHMASTER STATION
98846900
Sno River Delta Soils
17 E. Marine View Dr.
Everett, WA 98213

TICKET NO.	1124518605	TICKET TIME	11:40:48AM	DATE	6/6/2022
Customer No. 7832096	Payment Type Account	Customer Name STRIDER CONST CO INC			Order No. 10119451
Customer Job. No.	Customer P.O. 21NT		Map Ref. /		Disp. Ord. #
Truck Type Truck & Traile	Truck No. RIV55TT	Vehicle or License Plate No.	Trailer or License Plate No.		Zone
Hauler/Carrier No. 7886596	Driver's Name	Delivered/Ordered 912.54 /	Load No. 29		Running Total 912.54

DEL/P PORT OF EVERETT
DEL/P 2600 FEDERAL AVE
EVERETT

Product	Description	Total	Unit Price	Amount
99005	CLASS 3 SOILS (TN)	29.34		

SCALE WEIGHT
Gross 99,260 LB
Tare 40,580 LB/P.T.*
Net 58,680 LB

GROSS & TARE
X Scale 1 ☐ Scale 2
X Angelique
Deputy Weighmaster

A STANDBY SURCHARGE WILL BE ASSESSED FOR LOADS THAT EXCEED 10 MINUTES UNLOADING TIME.

LIABILITY WAIVER
Cadman, (Inc.) will not assume Liability for any property damage or any equipment damage for any delivery beyond the curb line.

Fuel Surcharge	
Sales Tax	
Total	
Standby Time	
This Tickets Grand Total	

No one available to sign, customer waives receipt signature. ☐	Received by Signature X	Print Name (Customer) X	Driver's Signature X

Arrive Job		Start Unloading		Finish Unloading		Standby Time		Customer's Initials X

CADMAN
HEIDELBERGCEMENTGroup
(888) 322-6847 425-961-7100

WEIGHMASTER STATION
9804[illegible]
Sno River Delta Soils
17 E. Marine View Dr.
Everett, WA 98213

TICKET NO.	1124518606	TICKET TIME	11:47:26AM	DATE	6/6/2022
Customer No. 7832096	Payment Type Account	Customer Name STRIDER CONST CO INC			Order No. 10119451
Customer Job. No.	Customer P.O. 21NT		Map Ref. /		Disp. Ord. #
Truck Type Truck & Trailer	Truck No. RIV57TT	Vehicle or License Plate No.	Trailer or License Plate No.		Zone
Hauler/Carrier No. 7886596	Driver's Name	Delivered/Ordered 946.41 /	Load No. 30		Running Total 946.41

DEL/P PORT OF EVERETT
DEL/P 2600 FEDERAL AVE
EVERETT

Product	Description	Total	Unit Price	Amount
99005	CLASS 3 SOILS (TN)	33.87		

SCALE WEIGHT
108,940 LB
Gross 41,200 LB/P.T.*
Tare 67,740 LB
Net

GROSS & TARE
X Scale 1 ☐ Scale 2
X Angelique
Deputy Weighmaster

A STANDBY SURCHARGE WILL BE ASSESSED FOR LOADS THAT EXCEED 10 MINUTES UNLOADING TIME.

LIABILITY WAIVER
Cadman, (Inc.) will not assume Liability for any property damage or any equipment damage for any delivery beyond the curb line.

Fuel Surcharge	
Sales Tax	
Total	
Standby Time	
This Tickets Grand Total	

No one available to sign, customer waives receipt signature. ☐	Received by Signature X	Print Name (Customer) X	Driver's Signature X

Arrive Job		Start Unloading		Finish Unloading		Standby Time		Customer's Initials X

CADMAN
HEIDELBERGCEMENTGroup
(888) 322-6847 425-961-7100

WEIGHMASTER STATION
98846900
Sno River Delta Soils
17 E. Marine View Dr.
Everett, WA 98213

TICKET NO.	1124518607	TICKET TIME	11:55:39AM	DATE	6/6/2022
Customer No. 7832096	Payment Type Account	Customer Name STRIDER CONST CO INC			Order No. 10119451
Customer Job. No.	Customer P.O. 21NT		Map Ref. /		Disp. Ord. #
Truck Type Truck & Trailer	Truck No. RIV59TT	Vehicle or License Plate No.	Trailer or License Plate No.		Zone
Hauler/Carrier No. 7886596	Driver's Name	Delivered/Ordered 978.30 /	Load No. 31		Running Total 978.30

DEL/P PORT OF EVERETT
DEL/P 2600 FEDERAL AVE
EVERETT

Product	Description	Total	Unit Price	Amount
99005	CLASS 3 SOILS (TN)	31.89		

SCALE WEIGHT
104,820 LB
Gross
41,040 LB/P.T.*
Tare
63,780 LB
Net

GROSS & TARE
X Scale 1 ☐ Scale 2
X Angelique
Deputy Weighmaster

A STANDBY SURCHARGE WILL BE ASSESSED FOR LOADS THAT EXCEED 10 MINUTES UNLOADING TIME.

LIABILITY WAIVER
Cadman, (Inc.) will not assume Liability for any property damage or any equipment damage for any delivery beyond the curb line.

Fuel Surcharge	
Sales Tax	
Total	
Standby Time	
This Tickets Grand Total	

No one available to sign, customer waives receipt signature. ☐	Received by Signature X	Print Name (Customer) X	Driver's Signature X

Arrive Job		Start Unloading		Finish Unloading		Standby Time		Customer's Initials X

CADMAN
HEIDELBERGCEMENTGroup
(888) 322-6847 425-961-7100

TICKET NO.	1124518608	TICKET TIME	12:07:03PM	DATE	6/6/2022
Customer No. 7832096	Payment Type Account	Customer Name STRIDER CONST CO INC			Order No. 10119451
Customer Job. No.	Customer P.O. 21NT			Map Ref. /	Disp. Ord. #
Truck Type Truck & Trailer	Truck No. RIV56TT	Vehicle or License Plate No.	Trailer or License Plate No.	Zone	
Hauler/Carrier No. 7886596	Driver's Name	Delivered/Ordered 1,005.90 /	Load No. 32	Running Total 1,005.90	

WEIGHMASTER STATION
98848900
Sno River Delta Soils
17 E. Marine View Dr.
Everett, WA 98213

DEL/P PORT OF EVERETT
DEL/P 2600 FEDERAL AVE
EVERETT

Product	Description	Total	Unit Price	Amount
99005	CLASS 3 SOILS (TN)	27.60		

SCALE WEIGHT
96,660 LB
Gross
41,460 LB/P.T.*
Tare
55,200 LB
Net

GROSS & TARE
X Scale 1 ☐ Scale 2
X Angelique
Deputy Weighmaster

A STANDBY SURCHARGE WILL BE ASSESSED FOR LOADS THAT EXCEED 10 MINUTES UNLOADING TIME.

LIABILITY WAIVER
Cadman, (Inc.) will not assume Liability for any property damage or any equipment damage for any delivery beyond the curb line.

Fuel Surcharge	
Sales Tax	
Total	
Standby Time	
This Tickets Grand Total	

No one available to sign, customer waives receipt signature. ☐	Received by Signature X	Print Name (Customer) X	Driver's Signature X

Arrive Job		Start Unloading		Finish Unloading		Standby Time		Customer's Initials X

CADMAN
HEIDELBERGCEMENTGroup
(888) 322-6847 425-961-7100

TICKET NO.	1124518609	TICKET TIME	12:17:35PM	DATE	6/6/2022

Customer No.	Payment Type	Customer Name	Order No.
7832096	Account	STRIDER CONST CO INC	10119451

Customer Job. No.	Customer P.O.	Map Ref.	Disp. Ord. #
	21NT	/	

Truck Type	Truck No.	Vehicle or License Plate No.	Trailer or License Plate No.	Zone
Truck & Trailer	RIV55TT			

Hauler/Carrier No.	Driver's Name	Delivered/Ordered	Load No.	Running Total
7886596		1,034.56 /	33	1,034.56

WEIGHTMASTER STATION

98846900
Sno River Delta Soils
17 E. Marine View Dr.
Everett, WA 98213

DEL/P PORT OF EVERETT
DEL/P 2600 FEDERAL AVE
EVERETT

Product	Description	Total	Unit Price	Amount
99005	CLASS 3 SOILS (TN)	28.66		

SCALE WEIGHT

Gross 97,900 LB
Tare 57,320 LB
Net 40,580 LB/P.T.*

GROSS & TARE

☒ Scale 1 ☐ Scale 2

X Angelique
Deputy Weighmaster

A STANDBY SURCHARGE WILL BE ASSESSED FOR LOADS THAT EXCEED 10 MINUTES UNLOADING TIME.

LIABILITY WAIVER

Cadman, (Inc.) will not assume Liability for any property damage or any equipment damage for any delivery beyond the curb line.

Fuel Surcharge	
Sales Tax	
Total	
Standby Time	
This Tickets Grand Total	

No one available to sign, customer waives receipt signature.	Received by Signature	Print Name (Customer)	Driver's Signature
☐	X	X	X

Arrive Job		Start Unloading		Finish Unloading		Standby Time		Customer's Initials
								X

CADMAN
HEIDELBERGCEMENTGroup®
(888) 322-6847 425-961-7100

TICKET NO. 1124518610			TICKET TIME 12:23:17PM	DATE 6/6/2022	
Customer No. 7832096	Payment Type Account	Customer Name STRIDER CONST CO INC			Order No. 10119451
Customer Job. No.	Customer P.O. 21NT		Map Ref. /		Disp. Ord. #
Truck Type Truck & Trailer	Truck No. RIV57TT	Vehicle or License Plate No.	Trailer or License Plate No.	Zone	
Hauler/Carrier No. 7886596	Driver's Name	Delivered/Ordered 1,061.96 /	Load No. 34	Running Total 1,061.96	

WEIGHMASTER STATION
98946900
Sno River Delta Soils
17 E. Marine View Dr.
Everett, WA 98213

DEL/P PORT OF EVERETT
DEL/P 2600 FEDERAL AVE
EVERETT

Product	Description	Total	Unit Price	Amount
99005	CLASS 3 SOILS (TN)	27.40		

SCALE WEIGHT
96,000 LB
Gross 41,200 LB/P.T.*
Tare 54,800 LB
Net

GROSS & TARE
X ☐ Scale 1 ☐ Scale 2
X Angelique
Deputy Weighmaster

A STANDBY SURCHARGE WILL BE ASSESSED FOR LOADS THAT EXCEED 10 MINUTES UNLOADING TIME.

LIABILITY WAIVER
Cadman, (Inc.) will not assume Liability for any property damage or any equipment damage for any delivery beyond the curb line.

Fuel Surcharge	
Sales Tax	
Total	
Standby Time	
This Tickets Grand Total	

No one available to sign, customer waives receipt signature. ☐	Received by Signature X	Print Name (Customer) X	Driver's Signature X

Arrive Job		Start Unloading		Finish Unloading		Standby Time		Customer's Initials X

CADMAN
HEIDELBERGCEMENTGroup®
(888) 322-6847 425-961-7100

WEIGHMASTER STATION
98846900
Sno River Delta Soils
17 E. Marine View Dr.
Everett, WA 98213

TICKET NO.	1124518611	TICKET TIME	12:28:54PM	DATE	6/6/2022
Customer No. 7832096	Payment Type Account	Customer Name STRIDER CONST CO INC			Order No. 10119451
Customer Job. No.	Customer P.O. 21NT		Map Ref. /		Disp. Ord. #
Truck Type Truck & Trailer	Truck No. RIV59TT	Vehicle or License Plate No.	Trailer or License Plate No.		Zone
Hauler/Carrier No. 7886596	Driver's Name	Delivered/Ordered 1,090.03 /	Load No. 35		Running Total 1,090.03

DEL/P PORT OF EVERETT
DEL/P 2600 FEDERAL AVE
EVERETT

Product	Description	Total	Unit Price	Amount
99005	CLASS 3 SOILS (TN)	28.07		

SCALE WEIGHT	GROSS & TARE
Gross 97,180 LB	X Scale 1 ☐ Scale 2
Tare 41,040 LB/P.T.*	X Angelique Deputy Weighmaster
Net 56,140 LB	

A STANDBY SURCHARGE WILL BE ASSESSED FOR LOADS THAT EXCEED 10 MINUTES UNLOADING TIME.

LIABILITY WAIVER

Cadman, (Inc.) will not assume Liability for any property damage or any equipment damage for any delivery beyond the curb line.

Fuel Surcharge	
Sales Tax	
Total	
Standby Time	
This Tickets Grand Total	

No one available to sign, customer waives receipt signature. ☐	Received by Signature X	Print Name (Customer) X	Driver's Signature X

Arrive Job		Start Unloading		Finish Unloading		Standby Time		Customer's Initials X

CADMAN
HEIDELBERGCEMENTGroup
(888) 322-6847 425-961-7100

WEIGHTMASTER STATION
98846900
Sno River Delta Soils
17 E. Marine View Dr.
Everett, WA 98213

TICKET NO.	1124518612	TICKET TIME	12:30:49PM	DATE	6/6/2022

Customer No.	Payment Type	Customer Name	Order No.
7832096	Account	STRIDER CONST CO INC	10119451

Customer Job. No.	Customer P.O.	Map Ref.	Disp. Ord. #
	21NT	/	

Truck Type	Truck No.	Vehicle or License Plate No.	Trailer or License Plate No.	Zone
Truck & Trailer	RIV56TT			

Hauler/Carrier No.	Driver's Name	Delivered/Ordered	Load No.	Running Total
7886596		1,118.09 /	36	1,118.09

DEL/P PORT OF EVERETT
DEL/P 2600 FEDERAL AVE
EVERETT

Product	Description	Total	Unit Price	Amount
99005	CLASS 3 SOILS (TN)	28.06		

SCALE WEIGHT	GROSS & TARE		
97,580 LB	X Scale 1 ☐ Scale 2	A STANDBY SURCHARGE WILL BE ASSESSED FOR LOADS THAT EXCEED 10 MINUTES UNLOADING TIME.	Fuel Surcharge
Gross 41,460 LB/P.T.*	X Angelique	**LIABILITY WAIVER**	Sales Tax
Tare 56,120 LB	Deputy Weighmaster	Cadman, (Inc.) will not assume Liability for any property damage or any equipment damage for any delivery beyond the curb line.	**Total**
Net			

No one available to sign, customer waives receipt signature. ☐	Received by Signature	Print Name (Customer)	Driver's Signature	Standby Time
	X	X	X	

Arrive Job		Start Unloading		Finish Unloading		Standby Time		Customer's Initials	This Tickets Grand Total
								X	

CADMAN
HEIDELBERGCEMENTGroup
(888) 322-6847 425-961-7100

WEIGHMASTER STATION
98785500
Everett Glenwood LND
6300 Glenwood Avenue
Everett, WA 98213

TICKET NO	1120563257	TICKET TIME	2:02:09PM	DATE	6/7/2022
Customer No.	Payment Type	Customer Name			Order No.
7832096	Account	STRIDER CONST CO INC			1011946
Customer Job. No.	Customer P.O.			Map Ref.	Disp. Ord. #
	21NT			/	
Truck Type	Truck No.	Vehicle or License Plate No.	Trailer or License Plate No.	Zone	
Truck & Trailer	RIV57TT				
Hauler/Carrier No.	Driver's Name	Delivered/Ordered	Load No.	Running Total	
7886596		1,398.96 /	43	1,398.9	

EV/P PORT OF EVERETT
2600 FEDERAL AVE
EVERETT

Product	Description	Total	Unit Price	Amount
99004	CLASS 2 SOILS DUMP (TN)	33.19		

SCALE WEIGHT	GROSS & TARE		Fuel Surcharge	
Gross 107,580 LB m	☒ Scale 1 ☐ Scale 2	**A STANDBY SURCHARGE WILL BE ASSESSED FOR LOADS THAT EXCEED 10 MINUTES UNLOADING TIME.**	Sales Tax	
Tare 41,200 LB/P.T.*	X Cate	**LIABILITY WAIVER**	**Total**	
Net 66,380 LB m	Deputy Weighmaster	**Cadman Materials, (Inc.) will not assume Liability for any property damage or any equipment damage for any delivery beyond the curb line.**		

No one available to sign, customer waives receipt signature ☐	Received by Signature	Print Name (Customer)	Driver's Signature	Standby Time	
	X Robin	X	X		

Arrive Job		Start Unloading		Finish Unloading		Standby Time		Customer's Initials	This Tickets Grand Total	
								X		

CADMAN
HEIDELBERGCEMENTGroup®
(888) 322-6847 425-961-7100

WEIGHMASTER STATION
98785500
Everett Glenwood LND
6300 Glenwood Avenue
Everett, WA 98213

TICKET NO.	1120563259	TICKET TIME	2:11:37PM	DATE	6/7/2022
Customer No.	Payment Type	Customer Name			Order No.
7832096	Account	STRIDER CONST CO INC			1011946
Customer Job. No.	Customer P.O.			Map Ref.	Disp. Ord. #
	21NT			/	
Truck Type	Truck No.	Vehicle or License Plate No.	Trailer or License Plate No.	Zone	
Truck & Traile	RIV28TT				
Hauler/Carrier No.	Driver's Name	Delivered/Ordered	Load No.	Running Total	
7886596		1,432.42 /	44	1,432.4	

EV/P PORT OF EVERETT
2600 FEDERAL AVE
EVERETT

Product	Description	Total	Unit Price	Amount
99004	CLASS 2 SOILS DUMP (TN)	33.46		

SCALE WEIGHT	GROSS & TARE		Fuel Surcharge	
Gross 104,960 LB m	☒ Scale 1 ☐ Scale 2	**A STANDBY SURCHARGE WILL BE ASSESSED FOR LOADS THAT EXCEED 10 MINUTES UNLOADING TIME.**	Sales Tax	
Tare 38,040 LB/P.T.*	X Cate	**LIABILITY WAIVER**	**Total**	
Net 66,920 LB m	Deputy Weighmaster	**Cadman Materials, (Inc.) will not assume Liability for any property damage or any equipment damage for any delivery beyond the curb line.**		

No one available to sign, customer waives receipt signature. ☐	Received by Signature	Print Name (Customer)	Driver's Signature	Standby Time	
	X Tom	X	X		

Arrive Job		Start Unloading		Finish Unloading		Standby Time		Customer's Initials	This Tickets Grand Total	
								X		

CADMAN
HEIDELBERGCEMENTGroup
(888) 322-6847 425-961-7100

WEIGHMASTER STATION
98785500
Everett Glenwood LND
6300 Glenwood Avenue
Everett, WA 98213

TICKET NO.	1120563260	TICKET TIME	2:16:56PM	DATE	6/7/2022
Customer No.	Payment Type	Customer Name			Order No.
7832096	Account	STRIDER CONST CO INC			1011946
Customer Job. No.	Customer P.O.			Map Ref.	Disp. Ord. #
	21NT			/	
Truck Type	Truck No.	Vehicle or License Plate No.		Trailer or License Plate No.	Zone
Truck & Trailer	RIV62TT				
Hauler/Carrier No.	Driver's Name	Delivered/Ordered		Load No.	Running Total
		1,468.14 /		45	1,468.1

EV/P PORT OF EVERETT
2600 FEDERAL AVE
EVERETT

Product	Description	Total	Unit Price	Amount
99004	CLASS 2 SOILS DUMP (TN)	35.72		

SCALE WEIGHT	GROSS & TARE		
Gross 113,120 LB m	☒ Scale 1 ☐ Scale 2	A STANDBY SURCHARGE WILL BE ASSESSED FOR LOADS THAT EXCEED 10 MINUTES UNLOADING TIME.	Fuel Surcharge
Tare 41,680 LB/P.T.*		**LIABILITY WAIVER**	Sales Tax
Net 71,440 LB m	X Cate Deputy Weighmaster	**Cadman Materials, (Inc.) will not assume Liability for any property damage or any equipment damage for any delivery beyond the curb line.**	**Total**

No one available to sign, customer waives receipt signature ☐	Received by Signature X Wyatt	Print Name (Customer) X	Driver's Signature X	Standby Time

Arrive Job		Start Unloading		Finish Unloading		Standby Time		Customer's Initials X	This Tickets Grand Total	

CADMAN
HEIDELBERGCEMENTGroup
(888) 322-6847 425-961-7100

WEIGHMASTER STATION
98785500
Everett Glenwood LND
6300 Glenwood Avenue
Everett, WA 98213

TICKET NO.	1120563262	TICKET TIME	2:20:21PM	DATE	6/7/2022
Customer No.	Payment Type	Customer Name			Order No.
7832096	Account	STRIDER CONST CO INC			1011946
Customer Job. No.	Customer P.O.			Map Ref.	Disp. Ord. #
	21NT			/	
Truck Type	Truck No.	Vehicle or License Plate No.		Trailer or License Plate No.	Zone
Truck & Trailer	RIV26TT				
Hauler/Carrier No.	Driver's Name	Delivered/Ordered		Load No.	Running Total
7886596		1,500.53 /		46	1,500.5

EV/P PORT OF EVERETT
2600 FEDERAL AVE
EVERETT

Product	Description	Total	Unit Price	Amount
99004	CLASS 2 SOILS DUMP (TN)	32.39		

SCALE WEIGHT	GROSS & TARE		Fuel Surcharge	
Gross 103,420 LB m		**A STANDBY SURCHARGE WILL BE ASSESSED FOR LOADS THAT EXCEED 10 MINUTES UNLOADING TIME.**		
Tare 38,640 LB/P.T.*	☒ Scale 1 ☐ Scale 2	**LIABILITY WAIVER**	Sales Tax	
Net 64,780 LB m	X Cate Deputy Weighmaster	**Cadman Materials, (Inc.) will not assume Liability for any property damage or any equipment damage for any delivery beyond the curb line.**	**Total**	

No one available to sign, customer waives receipt signature. ☐	Received by Signature X Justin	Print Name (Customer) X	Driver's Signature X	Standby Time	

Arrive Job		Start Unloading		Finish Unloading		Standby Time		Customer's Initials X	This Tickets Grand Total	

CADMAN
HEIDELBERGCEMENTGroup*
(888) 322-6847 425-961-7100

WEIGHMASTER STATION
98785500
Everett Glenwood LND
6300 Glenwood Avenue
Everett, WA 98213

TICKET NO.	1120563263	TICKET TIME	2:34:53PM	DATE	6/7/2022
Customer No.	Payment Type	Customer Name			Order No.
7832096	Account	STRIDER CONST CO INC			1011946
Customer Job. No.	Customer P.O.			Map Ref.	Disp. Ord. #
	21NT			/	
Truck Type	Truck No.	Vehicle or License Plate No.	Trailer or License Plate No.	Zone	
Truck & Traile	RIV58TT				
Hauler/Carrier No.	Driver's Name	Delivered/Ordered	Load No.	Running Total	
7886596		1,533.18 /	47	1,533.1	

EV/P PORT OF EVERETT
2600 FEDERAL AVE
EVERETT

Product	Description	Total	Unit Price	Amount
99004	CLASS 2 SOILS DUMP (TN)	32.65		

SCALE WEIGHT	GROSS & TARE		
Gross 106,360 LB m	☒ Scale 1 ☐ Scale 2	A STANDBY SURCHARGE WILL BE ASSESSED FOR LOADS THAT EXCEED 10 MINUTES UNLOADING TIME.	Fuel Surcharge
Tare 41,060 LB/P.T.*	X Cate	**LIABILITY WAIVER**	Sales Tax
Net 65,300 LB m	Deputy Weighmaster	**Cadman Materials, (Inc.) will not assume Liability for any property damage or any equipment damage for any delivery beyond the curb line.**	**Total**

No one available to sign, customer waives receipt signature. ☐	Received by Signature	Print Name (Customer)	Driver's Signature	Standby Time
	X Steve	X	X	

Arrive Job		Start Unloading		Finish Unloading		Standby Time		Customer's Initials	This Tickets Grand Total
								X	

CADMAN
HEIDELBERGCEMENTGroup
(888) 322-6847 425-961-7100

WEIGHMASTER STATION
98785500
Everett Glenwood LND
6300 Glenwood Avenue
Everett, WA 98213

TICKET NO.	1120563264	TICKET TIME	2:39:15PM	DATE	6/7/2022
Customer No.	Payment Type	Customer Name			Order No.
7832096	Account	STRIDER CONST CO INC			1011946
Customer Job. No.	Customer P.O.			Map Ref.	Disp. Ord. #
	21NT			/	
Truck Type	Truck No.	Vehicle or License Plate No.		Trailer or License Plate No.	Zone
Truck & Traile	RIV59TT				
Hauler/Carrier No.	Driver's Name	Delivered/Ordered		Load No.	Running Total
7886596		1,566.83 /		48	1,566.8

EV/P PORT OF EVERETT
2600 FEDERAL AVE
EVERETT

Product	Description	Total	Unit Price	Amount
99004	CLASS 2 SOILS DUMP (TN)	33.65		

SCALE WEIGHT	GROSS & TARE		
Gross 108,340 LB m	☒ Scale 1 ☐ Scale 2	A STANDBY SURCHARGE WILL BE ASSESSED FOR LOADS THAT EXCEED 10 MINUTES UNLOADING TIME.	Fuel Surcharge
Tare 41,040 LB/P.T.*		**LIABILITY WAIVER**	Sales Tax
Net 67,300 LB m	X Cate Deputy Weighmaster	**Cadman Materials, (Inc.) will not assume Liability for any property damage or any equipment damage for any delivery beyond the curb line.**	**Total**

No one available to sign, customer waives receipt signature. ☐	Received by Signature x Gary	Print Name (Customer) X	Driver's Signature X	Standby Time

Arrive Job		Start Unloading		Finish Unloading		Standby Time		Customer's Initials X	This Tickets Grand Total	

CADMAN
HEIDELBERGCEMENTGroup
(888) 322-6847 425-961-7100

WEIGHMASTER STATION
98785500
Everett Glenwood LND
6300 Glenwood Avenue
Everett, WA 98213

TICKET NO.	1120563265	TICKET TIME	2:48:40PM	DATE	6/7/2022
Customer No.	Payment Type	Customer Name			Order No.
7832096	Account	STRIDER CONST CO INC			1011946
Customer Job. No.	Customer P.O.			Map Ref.	Disp. Ord. #
	21NT			/	
Truck Type	Truck No.	Vehicle or License Plate No.	Trailer or License Plate No.	Zone	
Truck & Traile	RIV55TT				
Hauler/Carrier No.	Driver's Name	Delivered/Ordered	Load No.	Running Total	
7886596		1,600.32 /	49	1,600.3	

EV/P PORT OF EVERETT
2600 FEDERAL AVE
EVERETT

Product	Description	Total	Unit Price	Amount
99004	CLASS 2 SOILS DUMP (TN)	33.49		

SCALE WEIGHT	GROSS & TARE		Fuel Surcharge	
Gross 107,560 LB m	☒ Scale 1 ☐ Scale 2	**A STANDBY SURCHARGE WILL BE ASSESSED FOR LOADS THAT EXCEED 10 MINUTES UNLOADING TIME.**	Sales Tax	
Tare 40,580 LB/P.T.*	X Cate	**LIABILITY WAIVER**	**Total**	
Net 66,980 LB m	Deputy Weighmaster	**Cadman Materials, (Inc.) will not assume Liability for any property damage or any equipment damage for any delivery beyond the curb line.**		

No one available to sign, customer waives receipt signature. ☐	Received by Signature X RICK	Print Name (Customer) X	Driver's Signature X	Standby Time	
Arrive Job	Start Unloading	Finish Unloading	Standby Time	Customer's Initials X	**This Tickets Grand Total**

CADMAN
HEIDELBERGCEMENTGroup
(888) 322-6847 425-961-7100

WEIGHMASTER STATION
98785500
Everett Glenwood LND
6300 Glenwood Avenue
Everett, WA 98213

TICKET NO.	1120563188	TICKET TIME	7:23:42AM	DATE	6/7/2022
Customer No.	Payment Type	Customer Name			Order No.
7832096	Account	STRIDER CONST CO INC			10119468
Customer Job. No.	Customer P.O.			Map Ref.	Disp. Ord. #
	21NT			/	
Truck Type	Truck No.	Vehicle or License Plate No.		Trailer or License Plate No.	Zone
Truck & Trailer	RIV55TT				
Hauler/Carrier No.	Driver's Name	Delivered/Ordered		Load No.	Running Total
7886596		31.21 /		1	31.21

EV/P PORT OF EVERETT
2600 FEDERAL AVE
EVERETT

Product	Description	Total	Unit Price	Amount
99004	CLASS 2 SOILS DUMP (TN)	31.21		

SCALE WEIGHT

Gross 103,000 LB m
Tare 40,580 LB/P.T.*
Net 62,420 LB m

GROSS & TARE

☒ Scale 1 ☐ Scale 2

X Cate
Deputy Weighmaster

A STANDBY SURCHARGE WILL BE ASSESSED FOR LOADS THAT EXCEED 10 MINUTES UNLOADING TIME.

LIABILITY WAIVER

Cadman Materials, (Inc.) will not assume Liability for any property damage or any equipment damage for any delivery beyond the curb line.

Fuel Surcharge	
Sales Tax	
Total	
Standby Time	
This Tickets Grand Total	

No one available to sign, customer waives receipt signature. ☐	Received by Signature	Print Name (Customer)	Driver's Signature
	X	X	X

Arrive Job		Start Unloading		Finish Unloading		Standby Time		Customer's Initials
								X

CADMAN
HEIDELBERGCEMENTGroup
(888) 322-6847 425-961-7100

WEIGHMASTER STATION
98785500
Everett Glenwood LND
6300 Glenwood Avenue
Everett, WA 98213

TICKET NO.	1120563189	TICKET TIME	7:25:26AM	DATE	6/7/2022
Customer No.	Payment Type	Customer Name			Order No.
7832096	Account	STRIDER CONST CO INC			10119468
Customer Job. No.	Customer P.O.		Map Ref.		Disp. Ord. #
	21NT		/		
Truck Type	Truck No.	Vehicle or License Plate No.	Trailer or License Plate No.		Zone
Truck & Trailer	RIV59TT				
Hauler/Carrier No.	Driver's Name	Delivered/Ordered	Load No.		Running Total
7886596		62.26 /	2		62.26

EV/P PORT OF EVERETT
2600 FEDERAL AVE
EVERETT

Product	Description	Total	Unit Price	Amount
99004	CLASS 2 SOILS DUMP (TN)	31.05		

SCALE WEIGHT	GROSS & TARE		
Gross 103,140 LB m	☒ Scale 1 ☐ Scale 2	A STANDBY SURCHARGE WILL BE ASSESSED FOR LOADS THAT EXCEED 10 MINUTES UNLOADING TIME.	Fuel Surcharge
Tare 41,040 LB/P.T.*	X Cate	LIABILITY WAIVER	Sales Tax
Net 62,100 LB m	Deputy Weighmaster	Cadman Materials, (Inc.) will not assume Liability for any property damage or any equipment damage for any delivery beyond the curb line.	**Total**

No one available to sign, customer waives receipt signature. ☐	Received by Signature	Print Name (Customer)	Driver's Signature	Standby Time
	X	X	X	

Arrive Job		Start Unloading		Finish Unloading		Standby Time		Customer's Initials	This Tickets Grand Total
								X	

CADMAN
HEIDELBERGCEMENTGroup®
(888) 322-6847 425-961-7100

WEIGHMASTER STATION
98785500
Everett Glenwood LND
6300 Glenwood Avenue
Everett, WA 98213

TICKET NO.	1120563192	TICKET TIME	7:40:31AM	DATE	6/7/2022
Customer No.	Payment Type	Customer Name			Order No.
7832096	Account	STRIDER CONST CO INC			10119468
Customer Job. No.	Customer P.O.			Map Ref.	Disp. Ord. #
	21NT			/	
Truck Type	Truck No.	Vehicle or License Plate No.		Trailer or License Plate No.	Zone
Truck & Trailer	RIV57TT				
Hauler/Carrier No.	Driver's Name	Delivered/Ordered		Load No.	Running Total
7886596		93.82 /		3	93.82

EV/P PORT OF EVERETT
2600 FEDERAL AVE
EVERETT

Product	Description	Total	Unit Price	Amount
99004	CLASS 2 SOILS DUMP (TN)	31.56		

SCALE WEIGHT	GROSS & TARE			
Gross 104,320 LB m	☒ Scale 1 ☐ Scale 2	A STANDBY SURCHARGE WILL BE ASSESSED FOR LOADS THAT EXCEED 10 MINUTES UNLOADING TIME.	Fuel Surcharge	
Tare 41,200 LB/P.T.*		LIABILITY WAIVER	Sales Tax	
Net 63,120 LB m	X Cate Deputy Weighmaster	Cadman Materials, (Inc.) will not assume Liability for any property damage or any equipment damage for any delivery beyond the curb line.	**Total**	

No one available to sign, customer waives receipt signature. ☐	Received by Signature X	Print Name (Customer) X	Driver's Signature X	Standby Time	

Arrive Job		Start Unloading		Finish Unloading		Standby Time		Customer's Initials X	This Tickets Grand Total	

CADMAN
HEIDELBERGCEMENTGroup
(888) 322-6847 425-961-7100

WEIGHMASTER STATION
98785500
Everett Glenwood LND
6300 Glenwood Avenue
Everett, WA 98213

TICKET NO.	1120563194	TICKET TIME	7:50:41AM	DATE	6/7/2022

Customer No.	Payment Type	Customer Name	Order No.
7832096	Account	STRIDER CONST CO INC	10119468

Customer Job. No.	Customer P.O.	Map Ref.	Disp. Ord. #
	21NT	/	

Truck Type	Truck No.	Vehicle or License Plate No.	Trailer or License Plate No.	Zone
Truck & Trailer	RIV28TT			

Hauler/Carrier No.	Driver's Name	Delivered/Ordered	Load No.	Running Total
7886596		125.38 /	4	125.38

EV/P PORT OF EVERETT
2600 FEDERAL AVE
EVERETT

Product	Description	Total	Unit Price	Amount
99004	CLASS 2 SOILS DUMP (TN)	31.56		

SCALE WEIGHT

Gross 101,160 LB *
Tare 38,040 LB/P.T.*
Net 63,120 LB *

GROSS & TARE

☒ Scale 1 ☐ Scale 2

X Cate
Deputy Weighmaster

A STANDBY SURCHARGE WILL BE ASSESSED FOR LOADS THAT EXCEED 10 MINUTES UNLOADING TIME.

LIABILITY WAIVER

Cadman Materials, (Inc.) will not assume Liability for any property damage or any equipment damage for any delivery beyond the curb line.

Fuel Surcharge	
Sales Tax	
Total	
Standby Time	
This Tickets Grand Total	

No one available to sign, customer waives receipt signature. ☐	Received by Signature	Print Name (Customer)	Driver's Signature
	X	X	X

Arrive Job		Start Unloading		Finish Unloading		Standby Time		Customer's Initials
								X

CADMAN
HEIDELBERGCEMENTGroup
(888) 322-6847 425-961-7100

WEIGHMASTER STATION
98785500
Everett Glenwood LND
6300 Glenwood Avenue
Everett, WA 98213

TICKET NO.	1120563195	TICKET TIME	8:10:50AM	DATE	6/7/2022
Customer No.	Payment Type	Customer Name			Order No.
7832096	Account	STRIDER CONST CO INC			10119468
Customer Job. No.	Customer P.O.			Map Ref.	Disp. Ord. #
	21NT			/	
Truck Type	Truck No.	Vehicle or License Plate No.		Trailer or License Plate No.	Zone
Truck & Trailer	RIV62TT				
Hauler/Carrier No.	Driver's Name	Delivered/Ordered		Load No.	Running Total
		157.38 /		5	157.38

EV/P PORT OF EVERETT
2600 FEDERAL AVE
EVERETT

Product	Description	Total	Unit Price	Amount
99004	CLASS 2 SOILS DUMP (TN)	32.00		

SCALE WEIGHT	GROSS & TARE		
Gross 105,680 LB *	☒ Scale 1 ☐ Scale 2	A STANDBY SURCHARGE WILL BE ASSESSED FOR LOADS THAT EXCEED 10 MINUTES UNLOADING TIME.	Fuel Surcharge
Tare 41,680 LB/P.T.*		LIABILITY WAIVER	Sales Tax
Net 64,000 LB *	X Cate Deputy Weighmaster	Cadman Materials, (Inc.) will not assume Liability for any property damage or any equipment damage for any delivery beyond the curb line.	**Total**

No one available to sign, customer waives receipt signature ☐	Received by Signature X	Print Name (Customer) X	Driver's Signature X	Standby Time

Arrive Job		Start Unloading		Finish Unloading		Standby Time		Customer's Initials X	This Tickets Grand Total	

CADMAN
HEIDELBERGCEMENTGroup®
(888) 322-6847 425-961-7100

WEIGHMASTER STATION
98785500
Everett Glenwood LND
6300 Glenwood Avenue
Everett, WA 98213

TICKET NO.	1120563196	TICKET TIME	8:14:54AM	DATE	6/7/2022
Customer No.	Payment Type	Customer Name			Order No.
7832096	Account	STRIDER CONST CO INC			10119468
Customer Job. No.	Customer P.O.			Map Ref.	Disp. Ord. #
	21NT			/	
Truck Type	Truck No.	Vehicle or License Plate No.		Trailer or License Plate No.	Zone
Truck & Trailer	RIV26TT				
Hauler/Carrier No.	Driver's Name	Delivered/Ordered		Load No.	Running Total
7886596		188.04 /		6	188.04

EV/P PORT OF EVERETT
2600 FEDERAL AVE
EVERETT

Product	Description	Total	Unit Price	Amount
99004	CLASS 2 SOILS DUMP (TN)	30.66		

SCALE WEIGHT

Gross 99,960 LB *
Tare 38,640 LB/P.T.*
Net 61,320 LB *

GROSS & TARE

☒ Scale 1 ☐ Scale 2

X Cate
Deputy Weighmaster

A STANDBY SURCHARGE WILL BE ASSESSED FOR LOADS THAT EXCEED 10 MINUTES UNLOADING TIME.

LIABILITY WAIVER

Cadman Materials, (Inc.) will not assume Liability for any property damage or any equipment damage for any delivery beyond the curb line.

Fuel Surcharge	
Sales Tax	
Total	
Standby Time	
This Tickets Grand Total	

No one available to sign, customer waives receipt signature. ☐

Received by Signature X

Print Name (Customer) X

Driver's Signature X

Customer's Initials X

Arrive Job		Start Unloading		Finish Unloading		Standby Time	

CADMAN
HEIDELBERGCEMENTGroup
(888) 322-6847 425-961-7100

WEIGHMASTER STATION
98785500
Everett Glenwood LND
6300 Glenwood Avenue
Everett, WA 98213

TICKET NO.	1120563199	TICKET TIME	8:25:53AM	DATE	6/7/2022
Customer No.	Payment Type	Customer Name			Order No.
7832096	Account	STRIDER CONST CO INC			10119468
Customer Job. No.	Customer P.O.			Map Ref.	Disp. Ord. #
	21NT			/	
Truck Type	Truck No.	Vehicle or License Plate No.		Trailer or License Plate No.	Zone
Truck & Trailer	RIV55TT				
Hauler/Carrier No.	Driver's Name	Delivered/Ordered		Load No.	Running Total
7886596		217.97 /		7	217.97

EV/P PORT OF EVERETT
2600 FEDERAL AVE
EVERETT

Product	Description	Total	Unit Price	Amount
99004	CLASS 2 SOILS DUMP (TN)	29.93		

SCALE WEIGHT	GROSS & TARE		
Gross 100,440 LB m	☒ Scale 1 ☐ Scale 2	A STANDBY SURCHARGE WILL BE ASSESSED FOR LOADS THAT EXCEED 10 MINUTES UNLOADING TIME.	Fuel Surcharge
Tare 40,580 LB/P.T.*		LIABILITY WAIVER	Sales Tax
Net 59,860 LB m	X Cate Deputy Weighmaster	Cadman Materials, (Inc.) will not assume Liability for any property damage or any equipment damage for any delivery beyond the curb line.	**Total**

No one available to sign, customer waives receipt signature. ☐	Received by Signature X	Print Name (Customer) X	Driver's Signature X	Standby Time

Arrive Job		Start Unloading		Finish Unloading		Standby Time		Customer's Initials X	This Tickets Grand Total	

CADMAN
HEIDELBERGCEMENTGroup
(888) 322-6847 425-961-7100

WEIGHMASTER STATION
98785500
Everett Glenwood LND
6300 Glenwood Avenue
Everett, WA 98213

TICKET NO.	1120563200	TICKET TIME	8:27:34AM	DATE	6/7/2022
Customer No.	Payment Type	Customer Name			Order No.
7832096	Account	STRIDER CONST CO INC			10119468
Customer Job. No.	Customer P.O.			Map Ref.	Disp. Ord. #
	21NT			/	
Truck Type	Truck No.	Vehicle or License Plate No.		Trailer or License Plate No.	Zone
Truck & Trailer	RIV59TT				
Hauler/Carrier No.	Driver's Name	Delivered/Ordered		Load No.	Running Total
7886596		251.86 /		8	251.86

EV/P PORT OF EVERETT
2600 FEDERAL AVE
EVERETT

Product	Description	Total	Unit Price	Amount
99004	CLASS 2 SOILS DUMP (TN)	33.89		

SCALE WEIGHT		GROSS & TARE	
Gross	108,820 LB m		
Tare	41,040 LB/P.T.*	☒ Scale 1 ☐ Scale 2	
Net	67,780 LB m	X Cate Deputy Weighmaster	

A STANDBY SURCHARGE WILL BE ASSESSED FOR LOADS THAT EXCEED 10 MINUTES UNLOADING TIME.

LIABILITY WAIVER

Cadman Materials, (Inc.) will not assume Liability for any property damage or any equipment damage for any delivery beyond the curb line.

Fuel Surcharge	
Sales Tax	
Total	
Standby Time	
This Tickets Grand Total	

No one available to sign, customer waives receipt signature. ☐	Received by Signature X	Print Name (Customer) X	Driver's Signature X

Arrive Job		Start Unloading		Finish Unloading		Standby Time		Customer's Initials X

CADMAN
HEIDELBERGCEMENTGroup
(888) 322-6847 425-961-7100

WEIGHMASTER STATION
98785500
Everett Glenwood LND
6300 Glenwood Avenue
Everett, WA 98213

TICKET NO.	1120563202	TICKET TIME	8:40:47AM	DATE	6/7/2022
Customer No.	Payment Type	Customer Name			Order No.
7832096	Account	STRIDER CONST CO INC			10119468
Customer Job. No.	Customer P.O.			Map Ref.	Disp. Ord. #
	21NT			/	
Truck Type	Truck No.	Vehicle or License Plate No.		Trailer or License Plate No.	Zone
Truck & Trailer	RIV57TT				
Hauler/Carrier No.	Driver's Name	Delivered/Ordered		Load No.	Running Total
7886596		286.75 /		9	286.75

EV/P PORT OF EVERETT
2600 FEDERAL AVE
EVERETT

Product	Description	Total	Unit Price	Amount
99004	CLASS 2 SOILS DUMP (TN)	34.89		

SCALE WEIGHT	GROSS & TARE		
Gross 110,980 LB m	☒ Scale 1 ☐ Scale 2	A STANDBY SURCHARGE WILL BE ASSESSED FOR LOADS THAT EXCEED 10 MINUTES UNLOADING TIME.	Fuel Surcharge
Tare 41,200 LB/P.T.*	X Cate	LIABILITY WAIVER	Sales Tax
Net 69,780 LB m	Deputy Weighmaster	Cadman Materials, (Inc.) will not assume Liability for any property damage or any equipment damage for any delivery beyond the curb line.	**Total**

No one available to sign, customer waives receipt signature. ☐	Received by Signature	Print Name (Customer)	Driver's Signature	Standby Time
	X	X	X	

Arrive Job		Start Unloading		Finish Unloading		Standby Time		Customer's Initials	This Tickets Grand Total
								X	

CADMAN
HEIDELBERGCEMENTGroup®
(888) 322-6847 425-961-7100

WEIGHMASTER STATION
98785500
Everett Glenwood LND
6300 Glenwood Avenue
Everett, WA 98213

TICKET NO.	1120563203	TICKET TIME	8:45:58AM	DATE	6/7/2022

Customer No.	Payment Type	Customer Name	Order No.
7832096	Account	STRIDER CONST CO INC	10119468

Customer Job. No.	Customer P.O.	Map Ref.	Disp. Ord. #
	21NT	/	

Truck Type	Truck No.	Vehicle or License Plate No.	Trailer or License Plate No.	Zone
Truck & Trailer	RIV28TT			

Hauler/Carrier No.	Driver's Name	Delivered/Ordered	Load No.	Running Total
7886596		320.85 /	10	320.85

EV/P PORT OF EVERETT
2600 FEDERAL AVE
EVERETT

Product	Description	Total	Unit Price	Amount
99004	CLASS 2 SOILS DUMP (TN)	34.10		

SCALE WEIGHT

Gross 106,240 LB m
Tare 38,040 LB/P.T.*
Net 68,200 LB m

GROSS & TARE

☒ Scale 1 ☐ Scale 2

X Cate
Deputy Weighmaster

A STANDBY SURCHARGE WILL BE ASSESSED FOR LOADS THAT EXCEED 10 MINUTES UNLOADING TIME.

LIABILITY WAIVER

Cadman Materials, (Inc.) will not assume Liability for any property damage or any equipment damage for any delivery beyond the curb line.

Fuel Surcharge	
Sales Tax	
Total	
Standby Time	
This Tickets Grand Total	

No one available to sign, customer waives receipt signature. ☐	Received by Signature	Print Name (Customer)	Driver's Signature
	X	X	X

Arrive Job		Start Unloading		Finish Unloading		Standby Time		Customer's Initials
								X

CADMAN
HEIDELBERGCEMENTGroup
(888) 322-6847 425-961-7100

WEIGHMASTER STATION
98785500
Everett Glenwood LND
6300 Glenwood Avenue
Everett, WA 98213

TICKET NO.	1120563205	TICKET TIME	9:04:47AM	DATE	6/7/2022
Customer No. 7832096	Payment Type Account	Customer Name STRIDER CONST CO INC			Order No. 10119468
Customer Job. No.	Customer P.O. 21NT		Map Ref. /		Disp. Ord. #
Truck Type Truck & Trailer	Truck No. RIV62TT	Vehicle or License Plate No.	Trailer or License Plate No.		Zone
Hauler/Carrier No.	Driver's Name	Delivered/Ordered 354.24 /	Load No. 11		Running Total 354.24

EV/P PORT OF EVERETT
2600 FEDERAL AVE
EVERETT

Product	Description	Total	Unit Price	Amount
99004	CLASS 2 SOILS DUMP (TN)	33.39		

SCALE WEIGHT

Gross 108,460 LB m
Tare 41,680 LB/P.T.*
Net 66,780 LB m

GROSS & TARE

☒ Scale 1 ☐ Scale 2
X Cate
Deputy Weighmaster

A STANDBY SURCHARGE WILL BE ASSESSED FOR LOADS THAT EXCEED 10 MINUTES UNLOADING TIME.

LIABILITY WAIVER
Cadman Materials, (Inc.) will not assume Liability for any property damage or any equipment damage for any delivery beyond the curb line.

Fuel Surcharge	
Sales Tax	
Total	
Standby Time	
This Tickets Grand Total	

No one available to sign, customer waives receipt signature. ☐	Received by Signature X	Print Name (Customer) X	Driver's Signature X

Arrive Job		Start Unloading		Finish Unloading		Standby Time		Customer's Initials X

CADMAN
HEIDELBERGCEMENTGroup
(888) 322-6847 425-961-7100

WEIGHMASTER STATION
98785500
Everett Glenwood LND
6300 Glenwood Avenue
Everett, WA 98213

TICKET NO	1120563206	TICKET TIME	9:07:55AM	DATE	6/7/2022
Customer No.	Payment Type	Customer Name			Order No.
7832096	Account	STRIDER CONST CO INC			10119468
Customer Job. No.	Customer P.O.			Map Ref.	Disp. Ord. #
	21NT			/	
Truck Type	Truck No.	Vehicle or License Plate No.		Trailer or License Plate No.	Zone
Truck & Trailer	RIV26TT				
Hauler/Carrier No.	Driver's Name	Delivered/Ordered		Load No.	Running Total
7886596		386.64 /		12	386.64

EV/P PORT OF EVERETT
2600 FEDERAL AVE
EVERETT

Product	Description	Total	Unit Price	Amount
99004	CLASS 2 SOILS DUMP (TN)	32.40		

SCALE WEIGHT	GROSS & TARE		
Gross 103,440 LB m	☒ Scale 1 ☐ Scale 2	A STANDBY SURCHARGE WILL BE ASSESSED FOR LOADS THAT EXCEED 10 MINUTES UNLOADING TIME.	Fuel Surcharge
Tare 38,640 LB/P.T.*	X Cate	LIABILITY WAIVER	Sales Tax
Net 64,800 LB m	Deputy Weighmaster	Cadman Materials, (Inc.) will not assume Liability for any property damage or any equipment damage for any delivery beyond the curb line.	**Total**

No one available to sign, customer waives receipt signature. ☐	Received by Signature	Print Name (Customer)	Driver's Signature	Standby Time
	X	X	X	

Arrive Job		Start Unloading		Finish Unloading		Standby Time		Customer's Initials	**This Tickets Grand Total**
								X	

CADMAN
HEIDELBERGCEMENTGroup
(888) 322-6847 425-961-7100

WEIGHMASTER STATION
98785500
Everett Glenwood LND
6300 Glenwood Avenue
Everett, WA 98213

TICKET NO.	1120563210	TICKET TIME	9:23:11AM	DATE	6/7/2022

Customer No.	Payment Type	Customer Name	Order No.
7832096	Account	STRIDER CONST CO INC	10119468

Customer Job. No.	Customer P.O.	Map Ref.	Disp. Ord. #
	21NT	/	

Truck Type	Truck No.	Vehicle or License Plate No.	Trailer or License Plate No.	Zone
Truck & Trailer	RIV58TT			

Hauler/Carrier No.	Driver's Name	Delivered/Ordered	Load No.	Running Total
7886596		421.66 /	13	421.66

EV/P PORT OF EVERETT
2600 FEDERAL AVE
EVERETT

Product	Description	Total	Unit Price	Amount
99004	CLASS 2 SOILS DUMP (TN)	35.02		

SCALE WEIGHT

Gross 111,100 LB *
Tare 41,060 LB/P.T.*
Net 70,040 LB *

GROSS & TARE

☒ Scale 1 ☐ Scale 2

X Cate
Deputy Weighmaster

A STANDBY SURCHARGE WILL BE ASSESSED FOR LOADS THAT EXCEED 10 MINUTES UNLOADING TIME.

LIABILITY WAIVER

Cadman Materials, (Inc.) will not assume Liability for any property damage or any equipment damage for any delivery beyond the curb line.

Fuel Surcharge	
Sales Tax	
Total	

No one available to sign, customer waives receipt signature. ☐

Received by Signature X

Print Name (Customer) X

Driver's Signature X

Standby Time

Arrive Job		Start Unloading		Finish Unloading		Standby Time		Customer's Initials X	This Tickets Grand Total	

CADMAN
HEIDELBERGCEMENTGroup
(888) 322-6847 425-961-7100

WEIGHMASTER STATION
98785500
Everett Glenwood LND
6300 Glenwood Avenue
Everett, WA 98213

TICKET NO.	1120563211	TICKET TIME	9:26:01AM	DATE	6/7/2022
Customer No.	Payment Type	Customer Name			Order No.
7832096	Account	STRIDER CONST CO INC			10119468
Customer Job. No.	Customer P.O.			Map Ref.	Disp. Ord. #
	21NT			/	
Truck Type	Truck No.	Vehicle or License Plate No.	Trailer or License Plate No.		Zone
Truck & Trailer	RIV55TT				
Hauler/Carrier No.	Driver's Name	Delivered/Ordered	Load No.		Running Total
7886596		452.10 /	14		452.10

EV/P PORT OF EVERETT
2600 FEDERAL AVE
EVERETT

Product	Description	Total	Unit Price	Amount
99004	CLASS 2 SOILS DUMP (TN)	30.44		

SCALE WEIGHT	GROSS & TARE		
Gross 101,460 LB m	☒ Scale 1 ☐ Scale 2	A STANDBY SURCHARGE WILL BE ASSESSED FOR LOADS THAT EXCEED 10 MINUTES UNLOADING TIME.	Fuel Surcharge
Tare 40,580 LB/P.T.*	X Cate	LIABILITY WAIVER	Sales Tax
Net 60,880 LB m	Deputy Weighmaster	Cadman Materials, (Inc.) will not assume Liability for any property damage or any equipment damage for any delivery beyond the curb line.	**Total**

No one available to sign, customer waives receipt signature. ☐	Received by Signature	Print Name (Customer)	Driver's Signature	Standby Time
	X	X	X	

Arrive Job		Start Unloading		Finish Unloading		Standby Time		Customer's Initials	This Tickets Grand Total
								X	

CADMAN
HEIDELBERGCEMENTGroup
(888) 322-6847 425-961-7100

WEIGHMASTER STATION
98785500
Everett Glenwood LND
6300 Glenwood Avenue
Everett, WA 98213

TICKET NO.	1120563212	TICKET TIME	9:30:27AM	DATE	6/7/2022
Customer No.	Payment Type	Customer Name			Order No.
7832096	Account	STRIDER CONST CO INC			10119468
Customer Job. No.	Customer P.O.			Map Ref.	Disp. Ord. #
	21NT			/	
Truck Type	Truck No.	Vehicle or License Plate No.		Trailer or License Plate No.	Zone
Truck & Trailer	RIV59TT				
Hauler/Carrier No.	Driver's Name	Delivered/Ordered		Load No.	Running Total
7886596		487.93 /		15	487.93

EV/P PORT OF EVERETT
2600 FEDERAL AVE
EVERETT

Product	Description	Total	Unit Price	Amount
99004	CLASS 2 SOILS DUMP (TN)	35.83		

SCALE WEIGHT

Gross 112,700 LB m
Tare 41,040 LB/P.T.*
Net 71,660 LB m

GROSS & TARE

[X] Scale 1 [ ] Scale 2

X Cate
Deputy Weighmaster

A STANDBY SURCHARGE WILL BE ASSESSED FOR LOADS THAT EXCEED 10 MINUTES UNLOADING TIME.

LIABILITY WAIVER

Cadman Materials, (Inc.) will not assume Liability for any property damage or any equipment damage for any delivery beyond the curb line.

Fuel Surcharge	
Sales Tax	
Total	
Standby Time	
This Tickets Grand Total	

No one available to sign, customer waives receipt signature. [ ]	Received by Signature X	Print Name (Customer) X	Driver's Signature X

Arrive Job		Start Unloading		Finish Unloading		Standby Time		Customer's Initials X

CADMAN
HEIDELBERGCEMENTGroup
(888) 322-6847 425-961-7100

WEIGHMASTER STATION
98785500
Everett Glenwood LND
6300 Glenwood Avenue
Everett, WA 98213

TICKET NO.	1120563213	TICKET TIME	9:46:32AM	DATE	6/7/2022
Customer No.	Payment Type	Customer Name			Order No.
7832096	Account	STRIDER CONST CO INC			10119468
Customer Job. No.	Customer P.O.			Map Ref.	Disp. Ord. #
	21NT			/	
Truck Type	Truck No.	Vehicle or License Plate No.		Trailer or License Plate No.	Zone
Truck & Trailer	RIV57TT				
Hauler/Carrier No.	Driver's Name	Delivered/Ordered		Load No.	Running Total
7886596		519.89 /		16	519.89

EV/P PORT OF EVERETT
2600 FEDERAL AVE
EVERETT

Product	Description	Total	Unit Price	Amount
99004	CLASS 2 SOILS DUMP (TN)	31.96		

SCALE WEIGHT	GROSS & TARE		
Gross 105,120 LB m	☒ Scale 1 ☐ Scale 2	A STANDBY SURCHARGE WILL BE ASSESSED FOR LOADS THAT EXCEED 10 MINUTES UNLOADING TIME.	Fuel Surcharge
Tare 41,200 LB/P.T.*	X Cate	**LIABILITY WAIVER**	Sales Tax
Net 63,920 LB m	Deputy Weighmaster	Cadman Materials, (Inc.) will not assume Liability for any property damage or any equipment damage for any delivery beyond the curb line.	**Total**

No one available to sign, customer waives receipt signature ☐	Received by Signature X	Print Name (Customer) X	Driver's Signature X	Standby Time

Arrive Job		Start Unloading		Finish Unloading		Standby Time		Customer's Initials X	This Tickets Grand Total	

CADMAN
HEIDELBERGCEMENTGroup
(888) 322-6847 425-961-7100

WEIGHMASTER STATION
98785500
Everett Glenwood LND
6300 Glenwood Avenue
Everett, WA 98213

TICKET NO.	1120563214	TICKET TIME	9:53:16AM	DATE	6/7/2022
Customer No.	Payment Type	Customer Name			Order No.
7832096	Account	STRIDER CONST CO INC			10119468
Customer Job. No.	Customer P.O.		Map Ref.		Disp. Ord. #
	21NT		/		
Truck Type	Truck No.	Vehicle or License Plate No.	Trailer or License Plate No.		Zone
Truck & Trailer	RIV28TT				
Hauler/Carrier No.	Driver's Name	Delivered/Ordered	Load No.		Running Total
7886596		552.21 /	17		552.21

EV/P PORT OF EVERETT
2600 FEDERAL AVE
EVERETT

Product	Description	Total	Unit Price	Amount
99004	CLASS 2 SOILS DUMP (TN)	32.32		

SCALE WEIGHT	GROSS & TARE		Fuel Surcharge	
Gross 102,680 LB m		A STANDBY SURCHARGE WILL BE ASSESSED FOR LOADS THAT EXCEED 10 MINUTES UNLOADING TIME.	Sales Tax	
Tare 38,040 LB/P.T.*	☒ Scale 1 ☐ Scale 2	LIABILITY WAIVER	**Total**	
Net 64,640 LB m	X Cate Deputy Weighmaster	Cadman Materials, (Inc.) will not assume Liability for any property damage or any equipment damage for any delivery beyond the curb line.		

No one available to sign, customer waives receipt signature. ☐	Received by Signature	Print Name (Customer)	Driver's Signature	Standby Time	
	X	X	X		

Arrive Job		Start Unloading		Finish Unloading		Standby Time		Customer's Initials	**This Tickets Grand Total**	
								X		

CADMAN
HEIDELBERGCEMENTGroup
(888) 322-6847 425-961-7100

WEIGHMASTER STATION
98785500
Everett Glenwood LND
6300 Glenwood Avenue
Everett, WA 98213

TICKET NO.	1120563217	TICKET TIME	10:12:42AM	DATE	6/7/2022
Customer No.	Payment Type	Customer Name			Order No.
7832096	Account	STRIDER CONST CO INC			10119468
Customer Job. No.	Customer P.O.			Map Ref.	Disp. Ord. #
	21NT			/	
Truck Type	Truck No.	Vehicle or License Plate No.		Trailer or License Plate No.	Zone
Truck & Trailer	RIV62TT				
Hauler/Carrier No.	Driver's Name	Delivered/Ordered		Load No.	Running Total
		585.94 /		18	585.94

EV/P PORT OF EVERETT
2600 FEDERAL AVE
EVERETT

Product	Description	Total	Unit Price	Amount
99004	CLASS 2 SOILS DUMP (TN)	33.73		

SCALE WEIGHT

Gross 109,140 LB m
Tare 41,680 LB/P.T.*
Net 67,460 LB m

GROSS & TARE

☒ Scale 1 ☐ Scale 2

X Cate
Deputy Weighmaster

A STANDBY SURCHARGE WILL BE ASSESSED FOR LOADS THAT EXCEED 10 MINUTES UNLOADING TIME.

LIABILITY WAIVER

Cadman Materials, (Inc.) will not assume Liability for any property damage or any equipment damage for any delivery beyond the curb line.

Fuel Surcharge	
Sales Tax	
Total	
Standby Time	
This Tickets Grand Total	

No one available to sign, customer waives receipt signature. ☐	Received by Signature	Print Name (Customer)	Driver's Signature
	X	X	X

Arrive Job		Start Unloading		Finish Unloading		Standby Time		Customer's Initials
								X

CADMAN
HEIDELBERGCEMENTGroup®
(888) 322-6847 425-961-7100

WEIGHMASTER STATION
98785500
Everett Glenwood LND
6300 Glenwood Avenue
Everett, WA 98213

TICKET NO.	1120563218	TICKET TIME	10:14:11AM	DATE	6/7/2022
Customer No.	Payment Type	Customer Name			Order No.
7832096	Account	STRIDER CONST CO INC			10119468
Customer Job. No.	Customer P.O.			Map Ref.	Disp. Ord. #
	21NT			/	
Truck Type	Truck No.	Vehicle or License Plate No.		Trailer or License Plate No.	Zone
Truck & Trailer	RIV26TT				
Hauler/Carrier No.	Driver's Name	Delivered/Ordered		Load No.	Running Total
7886596		618.35 /		19	618.35

EV/P PORT OF EVERETT
2600 FEDERAL AVE
EVERETT

Product	Description	Total	Unit Price	Amount
99004	CLASS 2 SOILS DUMP (TN)	32.41		

SCALE WEIGHT	GROSS & TARE		
Gross 103,460 LB m	☒ Scale 1 ☐ Scale 2	A STANDBY SURCHARGE WILL BE ASSESSED FOR LOADS THAT EXCEED 10 MINUTES UNLOADING TIME.	Fuel Surcharge
Tare 38,640 LB/P.T.*	X Cate	LIABILITY WAIVER	Sales Tax
Net 64,820 LB m	Deputy Weighmaster	Cadman Materials, (Inc.) will not assume Liability for any property damage or any equipment damage for any delivery beyond the curb line.	**Total**

No one available to sign, customer waives receipt signature. ☐	Received by Signature	Print Name (Customer)	Driver's Signature	Standby Time
	X	X	X	

Arrive Job		Start Unloading		Finish Unloading		Standby Time		Customer's Initials	This Tickets Grand Total
								X	

CADMAN
HEIDELBERGCEMENTGroup®
(888) 322-6847 425-961-7100

WEIGHMASTER STATION
98785500
Everett Glenwood LND
6300 Glenwood Avenue
Everett, WA 98213

TICKET NO.	1120563219	TICKET TIME	10:18:14AM	DATE	6/7/2022
Customer No. 7832096	Payment Type Account	Customer Name STRIDER CONST CO INC			Order No. 10119468
Customer Job. No.	Customer P.O. 21NT		Map Ref. /		Disp. Ord. #
Truck Type Truck & Trailer	Truck No. RIV58TT	Vehicle or License Plate No.	Trailer or License Plate No.		Zone
Hauler/Carrier No. 7886596	Driver's Name	Delivered/Ordered 653.70 /	Load No. 20		Running Total 653.70

EV/P PORT OF EVERETT
2600 FEDERAL AVE
EVERETT

Product	Description	Total	Unit Price	Amount
99004	CLASS 2 SOILS DUMP (TN)	35.35		

SCALE WEIGHT

Gross 111,760 LB m
Tare 41,060 LB/P.T.*
Net 70,700 LB m

GROSS & TARE

☒ Scale 1 ☐ Scale 2

X Cate
Deputy Weighmaster

A STANDBY SURCHARGE WILL BE ASSESSED FOR LOADS THAT EXCEED 10 MINUTES UNLOADING TIME.

LIABILITY WAIVER

Cadman Materials, (Inc.) will not assume Liability for any property damage or any equipment damage for any delivery beyond the curb line.

Fuel Surcharge	
Sales Tax	
Total	
Standby Time	
This Tickets Grand Total	

No one available to sign, customer waives receipt signature. ☐	Received by Signature X	Print Name (Customer) X	Driver's Signature X

Arrive Job		Start Unloading		Finish Unloading		Standby Time		Customer's Initials X

CADMAN
HEIDELBERGCEMENTGroup®
(888) 322-6847 425-961-7100

WEIGHMASTER STATION
98785500
Everett Glenwood LND
6300 Glenwood Avenue
Everett, WA 98213

TICKET NO.	1120563222	TICKET TIME	10:28:45AM	DATE	6/7/2022
Customer No.	Payment Type	Customer Name			Order No.
7832096	Account	STRIDER CONST CO INC			10119468
Customer Job. No.	Customer P.O.			Map Ref.	Disp. Ord. #
	21NT			/	
Truck Type	Truck No.	Vehicle or License Plate No.		Trailer or License Plate No.	Zone
Truck & Trailer	RIV55TT				
Hauler/Carrier No.	Driver's Name	Delivered/Ordered		Load No.	Running Total
7886596		684.25 /		21	684.25

EV/P PORT OF EVERETT
2600 FEDERAL AVE
EVERETT

Product	Description	Total	Unit Price	Amount
99004	CLASS 2 SOILS DUMP (TN)	30.55		

SCALE WEIGHT

Gross 101,680 LB m
Tare 40,580 LB/P.T.*
Net 61,100 LB m

GROSS & TARE

☒ Scale 1 ☐ Scale 2

X Cate
Deputy Weighmaster

A STANDBY SURCHARGE WILL BE ASSESSED FOR LOADS THAT EXCEED 10 MINUTES UNLOADING TIME.

LIABILITY WAIVER

Cadman Materials, (Inc.) will not assume Liability for any property damage or any equipment damage for any delivery beyond the curb line.

Fuel Surcharge	
Sales Tax	
Total	
Standby Time	
This Tickets Grand Total	

No one available to sign, customer waives receipt signature. ☐	Received by Signature	Print Name (Customer)	Driver's Signature
	X	X	X

Arrive Job		Start Unloading		Finish Unloading		Standby Time		Customer's Initials
								X

CADMAN
HEIDELBERGCEMENTGroup
(888) 322-6847 425-961-7100

WEIGHMASTER STATION
98785500
Everett Glenwood LND
6300 Glenwood Avenue
Everett, WA 98213

TICKET NO.	1120563223	TICKET TIME	10:30:45AM	DATE	6/7/2022

Customer No.	Payment Type	Customer Name	Order No.
7832096	Account	STRIDER CONST CO INC	10119468

Customer Job. No.	Customer P.O.	Map Ref.	Disp. Ord. #
	21NT	/	

Truck Type	Truck No.	Vehicle or License Plate No.	Trailer or License Plate No.	Zone
Truck & Trailer	RIV59TT			

Hauler/Carrier No.	Driver's Name	Delivered/Ordered	Load No.	Running Total
7886596		715.10 /	22	715.10

EV/P PORT OF EVERETT
2600 FEDERAL AVE
EVERETT

Product	Description	Total	Unit Price	Amount
99004	CLASS 2 SOILS DUMP (TN)	30.85		

SCALE WEIGHT

Gross 102,740 LB m
Tare 41,040 LB/P.T.*
Net 61,700 LB m

GROSS & TARE

☒ Scale 1 ☐ Scale 2

X Cate
Deputy Weighmaster

A STANDBY SURCHARGE WILL BE ASSESSED FOR LOADS THAT EXCEED 10 MINUTES UNLOADING TIME.

LIABILITY WAIVER

Cadman Materials, (Inc.) will not assume Liability for any property damage or any equipment damage for any delivery beyond the curb line.

Fuel Surcharge	
Sales Tax	
Total	
Standby Time	
This Tickets Grand Total	

No one available to sign, customer waives receipt signature. ☐	Received by Signature X	Print Name (Customer) X	Driver's Signature X

Arrive Job		Start Unloading		Finish Unloading		Standby Time		Customer's Initials X

CADMAN
HEIDELBERGCEMENTGroup
(888) 322-6847 425-961-7100

WEIGHMASTER STATION
98785500
Everett Glenwood LND
6300 Glenwood Avenue
Everett, WA 98213

TICKET NO.	1120563225	TICKET TIME	10:49:59AM	DATE	6/7/2022

Customer No.	Payment Type	Customer Name	Order No.
7832096	Account	STRIDER CONST CO INC	10119468

Customer Job. No.	Customer P.O.	Map Ref.	Disp. Ord. #
	21NT	/	

Truck Type	Truck No.	Vehicle or License Plate No.	Trailer or License Plate No.	Zone
Truck & Trailer	RIV57TT			

Hauler/Carrier No.	Driver's Name	Delivered/Ordered	Load No.	Running Total
7886596		747.61 /	23	747.61

EV/P PORT OF EVERETT
2600 FEDERAL AVE
EVERETT

Product	Description	Total	Unit Price	Amount
99004	CLASS 2 SOILS DUMP (TN)	32.51		

SCALE WEIGHT

Gross 106,220 LB m
Tare 41,200 LB/P.T.*
Net 65,020 LB m

GROSS & TARE

☒ Scale 1 ☐ Scale 2

X Cate
Deputy Weighmaster

A STANDBY SURCHARGE WILL BE ASSESSED FOR LOADS THAT EXCEED 10 MINUTES UNLOADING TIME.

LIABILITY WAIVER

Cadman Materials, (Inc.) will not assume Liability for any property damage or any equipment damage for any delivery beyond the curb line.

Fuel Surcharge	
Sales Tax	
Total	
Standby Time	
This Tickets Grand Total	

No one available to sign, customer waives receipt signature ☐	Received by Signature	Print Name (Customer)	Driver's Signature
	X	X	X

Arrive Job		Start Unloading		Finish Unloading		Standby Time		Customer's Initials
								X

CADMAN
HEIDELBERGCEMENTGroup
(888) 322-6847 425-961-7100

WEIGHMASTER STATION
98785500
Everett Glenwood LND
6300 Glenwood Avenue
Everett, WA 98213

TICKET NO	1120563226	TICKET TIME	10:54:18AM	DATE	6/7/2022

Customer No.	Payment Type	Customer Name	Order No.
7832096	Account	STRIDER CONST CO INC	10119468

Customer Job. No.	Customer P.O.	Map Ref.	Disp. Ord. #
	21NT	/	

Truck Type	Truck No.	Vehicle or License Plate No.	Trailer or License Plate No.	Zone
Truck & Trailer	RIV28TT			

Hauler/Carrier No.	Driver's Name	Delivered/Ordered	Load No.	Running Total
7886596		777.87 /	24	777.87

EV/P PORT OF EVERETT
2600 FEDERAL AVE
EVERETT

Product	Description	Total	Unit Price	Amount
99004	CLASS 2 SOILS DUMP (TN)	30.26		

SCALE WEIGHT

Gross 98,560 LB m
Tare 38,040 LB/P.T.*
Net 60,520 LB m

GROSS & TARE

☒ Scale 1 ☐ Scale 2

X Cate
Deputy Weighmaster

A STANDBY SURCHARGE WILL BE ASSESSED FOR LOADS THAT EXCEED 10 MINUTES UNLOADING TIME.

LIABILITY WAIVER

Cadman Materials, (Inc.) will not assume Liability for any property damage or any equipment damage for any delivery beyond the curb line.

Fuel Surcharge	
Sales Tax	
Total	
Standby Time	
This Tickets Grand Total	

No one available to sign, customer waives receipt signature. ☐	Received by Signature X	Print Name (Customer) X	Driver's Signature X

Arrive Job		Start Unloading		Finish Unloading		Standby Time		Customer's Initials X

CADMAN
HEIDELBERGCEMENTGroup
(888) 322-6847 425-961-7100

WEIGHMASTER STATION
98785500
Everett Glenwood LND
6300 Glenwood Avenue
Everett, WA 98213

TICKET NO	1120563229	TICKET TIME	11:13:14AM	DATE	6/7/2022
Customer No.	Payment Type	Customer Name			Order No.
7832096	Account	STRIDER CONST CO INC			10119468
Customer Job. No.	Customer P.O.		Map Ref.		Disp. Ord. #
	21NT		/		
Truck Type	Truck No.	Vehicle or License Plate No.	Trailer or License Plate No.		Zone
Truck & Trailer	RIV62TT				
Hauler/Carrier No.	Driver's Name	Delivered/Ordered	Load No.		Running Total
		309.82 /	25		809.82

EV/P PORT OF EVERETT
2600 FEDERAL AVE
EVERETT

Product	Description	Total	Unit Price	Amount
99004	CLASS 2 SOILS DUMP (TN)	31.95		

SCALE WEIGHT

Gross 105,580 LB m
Tare 41,680 LB/P.T.*
Net 63,900 LB m

GROSS & TARE

☒ Scale 1 ☐ Scale 2

X Cate
Deputy Weighmaster

A STANDBY SURCHARGE WILL BE ASSESSED FOR LOADS THAT EXCEED 10 MINUTES UNLOADING TIME.

LIABILITY WAIVER

Cadman Materials, (Inc.) will not assume Liability for any property damage or any equipment damage for any delivery beyond the curb line.

Fuel Surcharge	
Sales Tax	
Total	

No one available to sign, customer waives receipt signature. ☐

Received by Signature X

Print Name (Customer) X

Driver's Signature X

Standby Time

Arrive Job		Start Unloading		Finish Unloading		Standby Time		Customer's Initials X	This Tickets Grand Total	

CADMAN
HEIDELBERGCEMENTGroup
(888) 322-6847 425-961-7100

WEIGHMASTER STATION
98785500
Everett Glenwood LND
6300 Glenwood Avenue
Everett, WA 98213

TICKET NO.	1120563230	TICKET TIME	11:14:33AM	DATE	6/7/2022
Customer No.	Payment Type	Customer Name			Order No.
7832096	Account	STRIDER CONST CO INC			10119468
Customer Job. No.	Customer P.O.			Map Ref.	Disp. Ord. #
	21NT			/	
Truck Type	Truck No.	Vehicle or License Plate No.		Trailer or License Plate No.	Zone
Truck & Trailer	RIV26TT				
Hauler/Carrier No.	Driver's Name	Delivered/Ordered		Load No.	Running Total
7886596		841.57 /		26	841.57

EV/P PORT OF EVERETT
2600 FEDERAL AVE
EVERETT

Product	Description	Total	Unit Price	Amount
99004	CLASS 2 SOILS DUMP (TN)	31.75		

SCALE WEIGHT	GROSS & TARE		Fuel Surcharge	
Gross 102,140 LB m	☒ Scale 1 ☐ Scale 2	**A STANDBY SURCHARGE WILL BE ASSESSED FOR LOADS THAT EXCEED 10 MINUTES UNLOADING TIME.**	Sales Tax	
Tare 38,640 LB/P.T.*	X Cate	**LIABILITY WAIVER**	**Total**	
Net 63,500 LB m	Deputy Weighmaster	**Cadman Materials, (Inc.) will not assume Liability for any property damage or any equipment damage for any delivery beyond the curb line.**	Standby Time	

No one available to sign, customer waives receipt signature. ☐	Received by Signature X	Print Name (Customer) X	Driver's Signature X	Customer's Initials X

Arrive Job		Start Unloading		Finish Unloading		Standby Time		This Tickets Grand Total	

CADMAN
HEIDELBERGCEMENTGroup®
(888) 322-6847 425-961-7100

WEIGHMASTER STATION
98785500
Everett Glenwood LND
6300 Glenwood Avenue
Everett, WA 98213

TICKET NO.	1120563232	TICKET TIME	11:18:58AM	DATE	6/7/2022
Customer No.	Payment Type	Customer Name			Order No.
7832096	Account	STRIDER CONST CO INC			10119468
Customer Job. No.	Customer P.O.			Map Ref.	Disp. Ord. #
	21NT			/	
Truck Type	Truck No.	Vehicle or License Plate No.		Trailer or License Plate No.	Zone
Truck & Trailer	RIV58TT				
Hauler/Carrier No.	Driver's Name	Delivered/Ordered		Load No.	Running Total
7886596		875.03 /		27	875.03

EV/P PORT OF EVERETT
2600 FEDERAL AVE
EVERETT

Product	Description	Total	Unit Price	Amount
99004	CLASS 2 SOILS DUMP (TN)	33.46		

SCALE WEIGHT	GROSS & TARE		
Gross 107,980 LB m	☒ Scale 1 ☐ Scale 2	A STANDBY SURCHARGE WILL BE ASSESSED FOR LOADS THAT EXCEED 10 MINUTES UNLOADING TIME.	Fuel Surcharge
Tare 41,060 LB/P.T.*		LIABILITY WAIVER	Sales Tax
Net 66,920 LB m	X Cate Deputy Weighmaster	Cadman Materials, (Inc.) will not assume Liability for any property damage or any equipment damage for any delivery beyond the curb line.	**Total**

No one available to sign, customer waives receipt signature. ☐	Received by Signature	Print Name (Customer)	Driver's Signature	Standby Time
	X	X	X	

Arrive Job		Start Unloading		Finish Unloading		Standby Time		Customer's Initials	This Tickets Grand Total
								X	

CADMAN
HEIDELBERGCEMENTGroup
(888) 322-6847 425-961-7100

WEIGHMASTER STATION
98785500
Everett Glenwood LND
6300 Glenwood Avenue
Everett, WA 98213

TICKET NO.	1120563234	TICKET TIME	11:30:41AM	DATE	6/7/2022
Customer No.	Payment Type	Customer Name			Order No.
7832096	Account	STRIDER CONST CO INC			10119468
Customer Job. No.	Customer P.O.			Map Ref.	Disp. Ord. #
	21NT			/	
Truck Type	Truck No.	Vehicle or License Plate No.		Trailer or License Plate No.	Zone
Truck & Trailer	RIV55TT				
Hauler/Carrier No.	Driver's Name	Delivered/Ordered		Load No.	Running Total
7886596		906.71 /		28	906.71

EV/P PORT OF EVERETT
2600 FEDERAL AVE
EVERETT

Product	Description	Total	Unit Price	Amount
99004	CLASS 2 SOILS DUMP (TN)	31.68		

SCALE WEIGHT

Gross 103,940 LB m
Tare 40,580 LB/P.T.*
Net 63,360 LB m

GROSS & TARE

☒ Scale 1 ☐ Scale 2

X Cate
Deputy Weighmaster

A STANDBY SURCHARGE WILL BE ASSESSED FOR LOADS THAT EXCEED 10 MINUTES UNLOADING TIME.

LIABILITY WAIVER

Cadman Materials, (Inc.) will not assume Liability for any property damage or any equipment damage for any delivery beyond the curb line.

Fuel Surcharge	
Sales Tax	
Total	
Standby Time	
This Tickets Grand Total	

No one available to sign, customer waives receipt signature. ☐	Received by Signature	Print Name (Customer)	Driver's Signature
	X	X	X

Arrive Job		Start Unloading		Finish Unloading		Standby Time		Customer's Initials
								X

CADMAN
HEIDELBERGCEMENTGroup
(888) 322-6847 425-961-7100

WEIGHMASTER STATION
98785500
Everett Glenwood LND
6300 Glenwood Avenue
Everett, WA 98213

TICKET NO.	1120563235	TICKET TIME	11:32:32AM	DATE	6/7/2022
Customer No.	Payment Type	Customer Name			Order No.
7832096	Account	STRIDER CONST CO INC			10119468
Customer Job. No.	Customer P.O.			Map Ref.	Disp. Ord. #
	21NT			/	
Truck Type	Truck No.	Vehicle or License Plate No.		Trailer or License Plate No.	Zone
Truck & Trailer	RIV59TT				
Hauler/Carrier No.	Driver's Name	Delivered/Ordered		Load No.	Running Total
7886596		939.33 /		29	939.33

EV/P PORT OF EVERETT
2600 FEDERAL AVE
EVERETT

Product	Description	Total	Unit Price	Amount
99004	CLASS 2 SOILS DUMP (TN)	32.62		

SCALE WEIGHT

Gross 106,280 LB m
Tare 41,040 LB/P.T.*
Net 65,240 LB m

GROSS & TARE

☒ Scale 1 ☐ Scale 2

X Cate
Deputy Weighmaster

A STANDBY SURCHARGE WILL BE ASSESSED FOR LOADS THAT EXCEED 10 MINUTES UNLOADING TIME.

LIABILITY WAIVER

Cadman Materials, (Inc.) will not assume Liability for any property damage or any equipment damage for any delivery beyond the curb line.

Fuel Surcharge	
Sales Tax	
Total	
Standby Time	
This Tickets Grand Total	

No one available to sign, customer waives receipt signature. ☐

Received by Signature X

Print Name (Customer) X

Driver's Signature X

Customer's Initials X

Arrive Job		Start Unloading		Finish Unloading		Standby Time	

CADMAN
HEIDELBERGCEMENTGroup
(888) 322-6847 425-961-7100

WEIGHMASTER STATION
98785500
Everett Glenwood LND
6300 Glenwood Avenue
Everett, WA 98213

TICKET NO.	1120563237	TICKET TIME	11:52:03AM	DATE	6/7/2022

Customer No.	Payment Type	Customer Name	Order No.
7832096	Account	STRIDER CONST CO INC	10119468

Customer Job. No.	Customer P.O.	Map Ref.	Disp. Ord. #
	21NT	/	

Truck Type	Truck No.	Vehicle or License Plate No.	Trailer or License Plate No.	Zone
Truck & Trailer	RIV57TT			

Hauler/Carrier No.	Driver's Name	Delivered/Ordered	Load No.	Running Total
7886596		972.28 /	30	972.28

EV/P PORT OF EVERETT
2600 FEDERAL AVE
EVERETT

Product	Description	Total	Unit Price	Amount
99004	CLASS 2 SOILS DUMP (TN)	32.95		

SCALE WEIGHT

Gross 107,100 LB m
Tare 41,200 LB/P.T.*
Net 65,900 LB m

GROSS & TARE

☒ Scale 1 ☐ Scale 2

X Cate
Deputy Weighmaster

A STANDBY SURCHARGE WILL BE ASSESSED FOR LOADS THAT EXCEED 10 MINUTES UNLOADING TIME.

LIABILITY WAIVER

Cadman Materials, (Inc.) will not assume Liability for any property damage or any equipment damage for any delivery beyond the curb line.

Fuel Surcharge	
Sales Tax	
Total	
Standby Time	
This Tickets Grand Total	

No one available to sign, customer waives receipt signature. ☐	Received by Signature	Print Name (Customer)	Driver's Signature
	X	X	X

Arrive Job		Start Unloading		Finish Unloading		Standby Time		Customer's Initials
								X

CADMAN
HEIDELBERGCEMENTGroup
(888) 322-6847 425-961-7100

WEIGHMASTER STATION
98785500
Everett Glenwood LND
6300 Glenwood Avenue
Everett, WA 98213

TICKET NO.	TICKET TIME	DATE
1120563238	11:55:56AM	6/7/2022

Customer No.	Payment Type	Customer Name	Order No.
7832096	Account	STRIDER CONST CO INC	10119468

Customer Job. No.	Customer P.O.	Map Ref.	Disp. Ord. #
	21NT	/	

Truck Type	Truck No.	Vehicle or License Plate No.	Trailer or License Plate No.	Zone
Truck & Trailer	RIV28TT			

Hauler/Carrier No.	Driver's Name	Delivered/Ordered	Load No.	Running Total
7886596		,006.46 /	31	1,006.46

EV/P PORT OF EVERETT
2600 FEDERAL AVE
EVERETT

Product	Description	Total	Unit Price	Amount
99004	CLASS 2 SOILS DUMP (TN)	34.18		

SCALE WEIGHT

Gross 106,400 LB m
Tare 38,040 LB/P.T.*
Net 68,360 LB m

GROSS & TARE

☒ Scale 1 ☐ Scale 2

X Cate
Deputy Weighmaster

A STANDBY SURCHARGE WILL BE ASSESSED FOR LOADS THAT EXCEED 10 MINUTES UNLOADING TIME.

LIABILITY WAIVER

Cadman Materials, (Inc.) will not assume Liability for any property damage or any equipment damage for any delivery beyond the curb line.

Fuel Surcharge	
Sales Tax	
Total	
Standby Time	
This Tickets Grand Total	

No one available to sign, customer waives receipt signature. ☐	Received by Signature	Print Name (Customer)	Driver's Signature
	X	X	X

Arrive Job		Start Unloading		Finish Unloading		Standby Time		Customer's Initials
								X

CADMAN
HEIDELBERGCEMENTGroup
(888) 322-6847 425-961-7100

WEIGHMASTER STATION
98785500
Everett Glenwood LND
6300 Glenwood Avenue
Everett, WA 98213

TICKET NO.	TICKET TIME	DATE
1120563240	12:17:56PM	6/7/2022

Customer No.	Payment Type	Customer Name	Order No.
7832096	Account	STRIDER CONST CO INC	10119468

Customer Job. No.	Customer P.O.	Map Ref.	Disp. Ord. #
	21NT	/	

Truck Type	Truck No.	Vehicle or License Plate No.	Trailer or License Plate No.	Zone
Truck & Trailer	RIV26TT			

Hauler/Carrier No.	Driver's Name	Delivered/Ordered	Load No.	Running Total
7886596		,041.39 /	32	1,041.39

EV/P PORT OF EVERETT
2600 FEDERAL AVE
EVERETT

Product	Description	Total	Unit Price	Amount
99004	CLASS 2 SOILS DUMP (TN)	34.93		

SCALE WEIGHT

Gross 108,500 LB m
Tare 38,640 LB/P.T.*
Net 69,860 LB m

GROSS & TARE

☒ Scale 1 ☐ Scale 2

X Cate
Deputy Weighmaster

A STANDBY SURCHARGE WILL BE ASSESSED FOR LOADS THAT EXCEED 10 MINUTES UNLOADING TIME.

LIABILITY WAIVER

Cadman Materials, (Inc.) will not assume Liability for any property damage or any equipment damage for any delivery beyond the curb line.

Fuel Surcharge	
Sales Tax	
Total	
Standby Time	
This Tickets Grand Total	

No one available to sign, customer waives receipt signature. ☐	Received by Signature	Print Name (Customer)	Driver's Signature
	X	X	X

Arrive Job		Start Unloading		Finish Unloading		Standby Time		Customer's Initials
								X

CADMAN
HEIDELBERGCEMENTGroup
(888) 322-6847 425-961-7100

WEIGHMASTER STATION
98785500
Everett Glenwood LND
6300 Glenwood Avenue
Everett, WA 98213

TICKET NO.	1120563241	TICKET TIME	12:20:10PM	DATE	6/7/2022
Customer No.	Payment Type	Customer Name			Order No.
7832096	Account	STRIDER CONST CO INC			10119468
Customer Job. No.	Customer P.O.			Map Ref.	Disp. Ord. #
	21NT			/	
Truck Type	Truck No.	Vehicle or License Plate No.		Trailer or License Plate No.	Zone
Truck & Trailer	RIV58TT				
Hauler/Carrier No.	Driver's Name	Delivered/Ordered		Load No.	Running Total
7886596		1,072.28 /		33	1,072.28

EV/P PORT OF EVERETT
2600 FEDERAL AVE
EVERETT

Product	Description	Total	Unit Price	Amount
99004	CLASS 2 SOILS DUMP (TN)	30.89		

SCALE WEIGHT

Gross 102,840 LB m
Tare 41,060 LB/P.T.*
Net 61,780 LB m

GROSS & TARE

☒ Scale 1 ☐ Scale 2

X Cate
Deputy Weighmaster

A STANDBY SURCHARGE WILL BE ASSESSED FOR LOADS THAT EXCEED 10 MINUTES UNLOADING TIME.

LIABILITY WAIVER

Cadman Materials, (Inc.) will not assume Liability for any property damage or any equipment damage for any delivery beyond the curb line.

Fuel Surcharge	
Sales Tax	
Total	
Standby Time	
This Tickets Grand Total	

No one available to sign, customer waives receipt signature. ☐	Received by Signature	Print Name (Customer)	Driver's Signature
	X	X	X

Arrive Job		Start Unloading		Finish Unloading		Standby Time		Customer's Initials
								X

CADMAN
HEIDELBERGCEMENTGroup
(888) 322-6847 425-961-7100

WEIGHMASTER STATION
98785500
Everett Glenwood LND
6300 Glenwood Avenue
Everett, WA 98213

TICKET NO.	1120563244	TICKET TIME	12:31:31PM	DATE	6/7/2022
Customer No.	Payment Type	Customer Name			Order No.
7832096	Account	STRIDER CONST CO INC			10119468
Customer Job. No.	Customer P.O.			Map Ref.	Disp. Ord. #
	21NT			/	
Truck Type	Truck No.	Vehicle or License Plate No.		Trailer or License Plate No.	Zone
Truck & Trailer	RIV55TT				
Hauler/Carrier No.	Driver's Name	Delivered/Ordered		Load No.	Running Total
7886596		104.49 /		34	1,104.49

EV/P PORT OF EVERETT
2600 FEDERAL AVE
EVERETT

Product	Description	Total	Unit Price	Amount
99004	CLASS 2 SOILS DUMP (TN)	32.21		

SCALE WEIGHT	GROSS & TARE			
Gross 105,000 LB m	☒ Scale 1	☐ Scale 2	A STANDBY SURCHARGE WILL BE ASSESSED FOR LOADS THAT EXCEED 10 MINUTES UNLOADING TIME.	Fuel Surcharge
Tare 40,580 LB/P.T.*			LIABILITY WAIVER	Sales Tax
Net 64,420 LB m	X Cate Deputy Weighmaster		Cadman Materials, (Inc.) will not assume Liability for any property damage or any equipment damage for any delivery beyond the curb line.	**Total**

No one available to sign, customer waives receipt signature ☐	Received by Signature	Print Name (Customer)	Driver's Signature	Standby Time
	X	X	X	

Arrive Job		Start Unloading		Finish Unloading		Standby Time		Customer's Initials	**This Tickets Grand Total**
								X	

CADMAN
HEIDELBERGCEMENTGroup®
(888) 322-6847 425-961-7100

WEIGHMASTER STATION
98785500
Everett Glenwood LND
6300 Glenwood Avenue
Everett, WA 98213

TICKET NO.	1120563245	TICKET TIME	12:33:07PM	DATE	6/7/2022
Customer No.	Payment Type	Customer Name			Order No.
7832096	Account	STRIDER CONST CO INC			10119468
Customer Job. No.	Customer P.O.			Map Ref.	Disp. Ord. #
	21NT			/	
Truck Type	Truck No.	Vehicle or License Plate No.		Trailer or License Plate No.	Zone
Truck & Trailer	RIV59TT				
Hauler/Carrier No.	Driver's Name	Delivered/Ordered		Load No.	Running Total
7886596		,136.37 /		35	1,136.37

EV/P PORT OF EVERETT
2600 FEDERAL AVE
EVERETT

Product	Description	Total	Unit Price	Amount
99004	CLASS 2 SOILS DUMP (TN)	31.88		

SCALE WEIGHT	GROSS & TARE			
Gross 104,800 LB m	☒ Scale 1 ☐ Scale 2	A STANDBY SURCHARGE WILL BE ASSESSED FOR LOADS THAT EXCEED 10 MINUTES UNLOADING TIME.	Fuel Surcharge	
Tare 41,040 LB/P.T.*		LIABILITY WAIVER	Sales Tax	
Net 63,760 LB m	X Cate Deputy Weighmaster	Cadman Materials, (Inc.) will not assume Liability for any property damage or any equipment damage for any delivery beyond the curb line.	**Total**	

No one available to sign, customer waives receipt signature. ☐	Received by Signature	Print Name (Customer)	Driver's Signature	Standby Time	
	X	X	X		

Arrive Job		Start Unloading		Finish Unloading		Standby Time		Customer's Initials	This Tickets Grand Total	
								X		

CADMAN
HEIDELBERGCEMENTGroup
(888) 322-6847 425-961-7100

WEIGHMASTER STATION
98785500
Everett Glenwood LND
6300 Glenwood Avenue
Everett, WA 98213

TICKET NO.	1120563247	TICKET TIME	12:53:22PM	DATE	6/7/2022
Customer No.	Payment Type	Customer Name			Order No.
7832096	Account	STRIDER CONST CO INC			10119468
Customer Job. No.	Customer P.O.			Map Ref.	Disp. Ord. #
	21NT			/	
Truck Type	Truck No.	Vehicle or License Plate No.		Trailer or License Plate No.	Zone
Truck & Trailer	RIV57TT				
Hauler/Carrier No.	Driver's Name	Delivered/Ordered		Load No.	Running Total
7886596		,168.08 /		36	1,168.08

EV/P PORT OF EVERETT
2600 FEDERAL AVE
EVERETT

Product	Description	Total	Unit Price	Amount
99004	CLASS 2 SOILS DUMP (TN)	31.71		

SCALE WEIGHT	GROSS & TARE		
Gross 104,620 LB m	☒ Scale 1 ☐ Scale 2	A STANDBY SURCHARGE WILL BE ASSESSED FOR LOADS THAT EXCEED 10 MINUTES UNLOADING TIME.	Fuel Surcharge
Tare 41,200 LB/P.T.*	X Cate	LIABILITY WAIVER	Sales Tax
Net 63,420 LB m	Deputy Weighmaster	Cadman Materials, (Inc.) will not assume Liability for any property damage or any equipment damage for any delivery beyond the curb line.	**Total**

No one available to sign, customer waives receipt signature. ☐	Received by Signature X	Print Name (Customer) X	Driver's Signature X	Standby Time

Arrive Job		Start Unloading		Finish Unloading		Standby Time		Customer's Initials X	This Tickets Grand Total	

CADMAN
HEIDELBERGCEMENTGroup
(888) 322-6847 425-961-7100

WEIGHMASTER STATION
98785500
Everett Glenwood LND
6300 Glenwood Avenue
Everett, WA 98213

TICKET NO.	1120563248	TICKET TIME	1:05:34 PM	DATE	6/7/2022
Customer No.	Payment Type	Customer Name			Order No.
7832096	Account	STRIDER CONST CO INC			10119468
Customer Job. No.	Customer P.O.		Map Ref.		Disp. Ord. #
	21NT		/		
Truck Type	Truck No.	Vehicle or License Plate No.	Trailer or License Plate No.		Zone
Truck & Trailer	RIV28TT				
Hauler/Carrier No.	Driver's Name	Delivered/Ordered	Load No.		Running Total
7886596		1,201.64 /	37		1,201.64

EV/P PORT OF EVERETT
2600 FEDERAL AVE
EVERETT

Product	Description	Total	Unit Price	Amount
99004	CLASS 2 SOILS DUMP (TN)	33.56		

SCALE WEIGHT	GROSS & TARE		
Gross 105,160 LB m	☒ Scale 1 ☐ Scale 2	A STANDBY SURCHARGE WILL BE ASSESSED FOR LOADS THAT EXCEED 10 MINUTES UNLOADING TIME.	Fuel Surcharge
Tare 38,040 LB/P.T.*			Sales Tax
Net 67,120 LB m	X Cate Deputy Weighmaster	LIABILITY WAIVER Cadman Materials, (Inc.) will not assume Liability for any property damage or any equipment damage for any delivery beyond the curb line.	**Total**

No one available to sign, customer waives receipt signature. ☐	Received by Signature	Print Name (Customer)	Driver's Signature	Standby Time
	X	X	X	

Arrive Job		Start Unloading		Finish Unloading		Standby Time		Customer's Initials	This Tickets Grand Total
								X	

CADMAN
HEIDELBERGCEMENTGroup
(888) 322-6847 425-961-7100

WEIGHMASTER STATION
98785500
Everett Glenwood LND
6300 Glenwood Avenue
Everett, WA 98213

TICKET NO.	1120563250	TICKET TIME	1:10:31PM	DATE	6/7/2022
Customer No.	Payment Type	Customer Name			Order No.
7832096	Account	STRIDER CONST CO INC			10119468
Customer Job. No.	Customer P.O.			Map Ref.	Disp. Ord. #
	21NT			/	
Truck Type	Truck No.	Vehicle or License Plate No.		Trailer or License Plate No.	Zone
Truck & Trailer	RIV62TT				
Hauler/Carrier No.	Driver's Name	Delivered/Ordered		Load No.	Running Total
		,235.43 /		38	1,235.43

EV/P PORT OF EVERETT
2600 FEDERAL AVE
EVERETT

Product	Description	Total	Unit Price	Amount
99004	CLASS 2 SOILS DUMP (TN)	33.79		

SCALE WEIGHT

Gross 109,260 LB m
Tare 41,680 LB/P.T.*
Net 67,580 LB m

GROSS & TARE

☒ Scale 1 ☐ Scale 2

X Cate
Deputy Weighmaster

A STANDBY SURCHARGE WILL BE ASSESSED FOR LOADS THAT EXCEED 10 MINUTES UNLOADING TIME.

LIABILITY WAIVER

Cadman Materials, (Inc.) will not assume Liability for any property damage or any equipment damage for any delivery beyond the curb line.

Fuel Surcharge	
Sales Tax	
Total	
Standby Time	
This Tickets Grand Total	

No one available to sign, customer waives receipt signature ☐	Received by Signature X	Print Name (Customer) X	Driver's Signature X	Customer's Initials X

Arrive Job		Start Unloading		Finish Unloading		Standby Time	

CADMAN
HEIDELBERGCEMENTGroup®
(888) 322-6847 425-961-7100

WEIGHMASTER STATION
98785500
Everett Glenwood LND
6300 Glenwood Avenue
Everett, WA 98213

TICKET NO.	1120563252	TICKET TIME	1:17:48PM	DATE	6/7/2022
Customer No.	Payment Type	Customer Name			Order No.
7832096	Account	STRIDER CONST CO INC			10119468
Customer Job. No.	Customer P.O.			Map Ref.	Disp. Ord. #
	21NT			/	
Truck Type	Truck No.	Vehicle or License Plate No.		Trailer or License Plate No.	Zone
Truck & Trailer	RIV26TT				
Hauler/Carrier No.	Driver's Name	Delivered/Ordered		Load No.	Running Total
7886596		,267.29 /		39	1,267.29

EV/P PORT OF EVERETT
2600 FEDERAL AVE
EVERETT

Product	Description	Total	Unit Price	Amount
99004	CLASS 2 SOILS DUMP (TN)	31.86		

SCALE WEIGHT	GROSS & TARE		
Gross 102,360 LB m	☒ Scale 1 ☐ Scale 2	A STANDBY SURCHARGE WILL BE ASSESSED FOR LOADS THAT EXCEED 10 MINUTES UNLOADING TIME.	Fuel Surcharge
Tare 38,640 LB/P.T.*			Sales Tax
Net 63,720 LB m	X Cate Deputy Weighmaster	**LIABILITY WAIVER** Cadman Materials, (Inc.) will not assume Liability for any property damage or any equipment damage for any delivery beyond the curb line.	**Total**

No one available to sign, customer waives receipt signature. ☐	Received by Signature X	Print Name (Customer) X	Driver's Signature X	Standby Time

Arrive Job		Start Unloading		Finish Unloading		Standby Time		Customer's Initials X	This Tickets Grand Total	

CADMAN
HEIDELBERGCEMENTGroup
(888) 322-6847 425-961-7100

WEIGHMASTER STATION
98785500
Everett Glenwood LND
6300 Glenwood Avenue
Everett, WA 98213

TICKET NO.	1120563253	TICKET TIME	1:21:07PM	DATE	6/7/2022
Customer No.	Payment Type	Customer Name			Order No.
7832096	Account	STRIDER CONST CO INC			10119468
Customer Job. No.	Customer P.O.			Map Ref.	Disp. Ord. #
	21NT			/	
Truck Type	Truck No.	Vehicle or License Plate No.		Trailer or License Plate No.	Zone
Truck & Trailer	RIV58TT				
Hauler/Carrier No.	Driver's Name	Delivered/Ordered		Load No.	Running Total
7886596		1,299.17 /		40	1,299.17

EV/P PORT OF EVERETT
2600 FEDERAL AVE
EVERETT

Product	Description	Total	Unit Price	Amount
99004	CLASS 2 SOILS DUMP (TN)	31.88		

SCALE WEIGHT	GROSS & TARE		Fuel Surcharge	
Gross 104,820 LB m	☒ Scale 1 ☐ Scale 2	**A STANDBY SURCHARGE WILL BE ASSESSED FOR LOADS THAT EXCEED 10 MINUTES UNLOADING TIME.**	Sales Tax	
Tare 41,060 LB/P.T.*	X Cate	**LIABILITY WAIVER**	**Total**	
Net 63,760 LB m	Deputy Weighmaster	**Cadman Materials, (Inc.) will not assume Liability for any property damage or any equipment damage for any delivery beyond the curb line.**		

No one available to sign, customer waives receipt signature. ☐	Received by Signature	Print Name (Customer)	Driver's Signature	Standby Time	
	X	X	X		

Arrive Job		Start Unloading		Finish Unloading		Standby Time		Customer's Initials	This Tickets Grand Total	
								X		

CADMAN
HEIDELBERGCEMENTGroup®
(888) 322-6847 425-961-7100

WEIGHMASTER STATION
98785500
Everett Glenwood LND
6300 Glenwood Avenue
Everett, WA 98213

TICKET NO.	1120563255	TICKET TIME	1:37:16PM	DATE	6/7/2022
Customer No.	Payment Type	Customer Name			Order No.
7832096	Account	STRIDER CONST CO INC			10119468
Customer Job. No.	Customer P.O.			Map Ref.	Disp. Ord. #
	21NT			/	
Truck Type	Truck No.	Vehicle or License Plate No.		Trailer or License Plate No.	Zone
Truck & Trailer	RIV55TT				
Hauler/Carrier No.	Driver's Name	Delivered/Ordered		Load No.	Running Total
7886596		,332.72 /		41	1,332.72

EV/P PORT OF EVERETT
2600 FEDERAL AVE
EVERETT

Product	Description	Total	Unit Price	Amount
99004	CLASS 2 SOILS DUMP (TN)	33.55		

SCALE WEIGHT

Gross 107,680 LB m
Tare 40,580 LB/P.T.*
Net 67,100 LB m

GROSS & TARE

☒ Scale 1 ☐ Scale 2

X Cate
Deputy Weighmaster

A STANDBY SURCHARGE WILL BE ASSESSED FOR LOADS THAT EXCEED 10 MINUTES UNLOADING TIME.

LIABILITY WAIVER

Cadman Materials, (Inc.) will not assume Liability for any property damage or any equipment damage for any delivery beyond the curb line.

Fuel Surcharge	
Sales Tax	
Total	
Standby Time	
This Tickets Grand Total	

No one available to sign, customer waives receipt signature. ☐	Received by Signature	Print Name (Customer)	Driver's Signature
	X	X	X

Arrive Job		Start Unloading		Finish Unloading		Standby Time		Customer's Initials
								X

CADMAN
HEIDELBERGCEMENTGroup
(888) 322-6847 425-961-7100

WEIGHMASTER STATION
98785500
Everett Glenwood LND
6300 Glenwood Avenue
Everett, WA 98213

TICKET NO.	1120563256	TICKET TIME	1:40:22PM	DATE	6/7/2022
Customer No.	Payment Type	Customer Name			Order No.
7832096	Account	STRIDER CONST CO INC			10119468
Customer Job. No.	Customer P.O.			Map Ref.	Disp. Ord. #
	21NT			/	
Truck Type	Truck No.	Vehicle or License Plate No.		Trailer or License Plate No.	Zone
Truck & Trailer	RIV59TT				
Hauler/Carrier No.	Driver's Name	Delivered/Ordered		Load No.	Running Total
7886596		,365.77 /		42	1,365.77

EV/P PORT OF EVERETT
2600 FEDERAL AVE
EVERETT

Product	Description	Total	Unit Price	Amount
99004	CLASS 2 SOILS DUMP (TN)	33.05		

SCALE WEIGHT	GROSS & TARE
Gross 107,140 LB m	☒ Scale 1 ☐ Scale 2
Tare 41,040 LB/P.T.*	X Cate
Net 66,100 LB m	Deputy Weighmaster

A STANDBY SURCHARGE WILL BE ASSESSED FOR LOADS THAT EXCEED 10 MINUTES UNLOADING TIME.

LIABILITY WAIVER

Cadman Materials, (Inc.) will not assume Liability for any property damage or any equipment damage for any delivery beyond the curb line.

Fuel Surcharge	
Sales Tax	
Total	
Standby Time	
This Tickets Grand Total	

No one available to sign, customer waives receipt signature ☐	Received by Signature	Print Name (Customer)	Driver's Signature
	X	X	X

Arrive Job		Start Unloading		Finish Unloading		Standby Time		Customer's Initials
								X

REPRINT

CADMAN
HEIDELBERGCEMENTGroup
(888) 322-6847 425-961-7100

WEIGHMASTER STATION
98785500
Everett Glenwood LND
6300 Glenwood Avenue
Everett, WA 98213

TICKET NO.	TICKET TIME	DATE
1120563266	7:12:38AM	6/8/2022

Customer No.	Payment Type	Customer Name	Order No.
7832096	Account	STRIDER CONST CO INC	10119468

Customer Job. No.	Customer P.O.	Map Ref.	Disp. Ord. #
	21NT	/	

Truck Type	Truck No.	Vehicle or License Plate No.	Trailer or License Plate No.	Zone
Truck & Trailer	RIV59TT			

Hauler/Carrier No.	Driver's Name	Delivered/Ordered	Load No.	Running Total
7886596		34.74 /	1	34.74

EV/P PORT OF EVERETT
2600 FEDERAL AVE
EVERETT

Product	Description	Total	Unit Price	Amount
99004	CLASS 2 SOILS DUMP (TN)	34.74		

SCALE WEIGHT

Gross 110,520 LB m
Tare 41,040 LB/P.T.*
Net 69,480 LB m

GROSS & TARE

[X] Scale 1 [ ] Scale 2

X Cate
Deputy Weighmaster

A STANDBY SURCHARGE WILL BE ASSESSED FOR LOADS THAT EXCEED 10 MINUTES UNLOADING TIME.

LIABILITY WAIVER

Cadman Materials, (Inc.) will not assume Liability for any property damage or any equipment damage for any delivery beyond the curb line.

Fuel Surcharge	
Sales Tax	
Total	
Standby Time	
This Tickets Grand Total	

No one available to sign, customer waives receipt signature.	Received by Signature	Print Name (Customer)	Driver's Signature
[ ]	X	X	X

Arrive Job		Start Unloading		Finish Unloading		Standby Time		Customer's Initials
								X

CADMAN
HEIDELBERGCEMENTGroup®
(888) 322-6847 425-961-7100

WEIGHMASTER STATION
98785500
Everett Glenwood LND
6300 Glenwood Avenue
Everett, WA 98213

TICKET NO.	1120563267	TICKET TIME	7:17:26AM	DATE	6/8/2022
Customer No.	Payment Type	Customer Name			Order No.
7832096	Account	STRIDER CONST CO INC			10119468
Customer Job. No.	Customer P.O.			Map Ref.	Disp. Ord. #
	21NT			/	
Truck Type	Truck No.	Vehicle or License Plate No.		Trailer or License Plate No.	Zone
Truck & Trailer	RIV57TT				
Hauler/Carrier No.	Driver's Name	Delivered/Ordered		Load No.	Running Total
7886596		70.69 /		2	70.69

EV/P PORT OF EVERETT
2600 FEDERAL AVE
EVERETT

Product	Description	Total	Unit Price	Amount
99004	CLASS 2 SOILS DUMP (TN)	35.95		

SCALE WEIGHT	GROSS & TARE			
Gross 113,100 LB m	☒ Scale 1 ☐ Scale 2	A STANDBY SURCHARGE WILL BE ASSESSED FOR LOADS THAT EXCEED 10 MINUTES UNLOADING TIME.	Fuel Surcharge	
Tare 41,200 LB/P.T.*		LIABILITY WAIVER	Sales Tax	
Net 71,900 LB m	X Cate Deputy Weighmaster	Cadman Materials, (Inc.) will not assume Liability for any property damage or any equipment damage for any delivery beyond the curb line.	**Total**	

No one available to sign, customer waives receipt signature. ☐	Received by Signature	Print Name (Customer)	Driver's Signature	Standby Time	
	X	X	X		

Arrive Job		Start Unloading		Finish Unloading		Standby Time		Customer's Initials	This Tickets Grand Total	
								X		

CADMAN
HEIDELBERGCEMENTGroup
(888) 322-6847 425-961-7100

WEIGHMASTER STATION
98785500
Everett Glenwood LND
6300 Glenwood Avenue
Everett, WA 98213

TICKET NO.	1120563269	TICKET TIME	7:36:26AM	DATE	6/8/2022
Customer No.	Payment Type	Customer Name			Order No.
7832096	Account	STRIDER CONST CO INC			10119468
Customer Job. No.	Customer P.O.			Map Ref.	Disp. Ord. #
	21NT			/	
Truck Type	Truck No.	Vehicle or License Plate No.		Trailer or License Plate No.	Zone
Truck & Trailer	RIV62TT				
Hauler/Carrier No.	Driver's Name	Delivered/Ordered		Load No.	Running Total
		105.39 /		3	105.39

EV/P PORT OF EVERETT
2600 FEDERAL AVE
EVERETT

Product	Description	Total	Unit Price	Amount
99004	CLASS 2 SOILS DUMP (TN)	34.70		

SCALE WEIGHT

Gross 111,080 LB m
Tare 41,680 LB/P.T.*
Net 69,400 LB m

GROSS & TARE

☒ Scale 1 ☐ Scale 2

X Cate
Deputy Weighmaster

A STANDBY SURCHARGE WILL BE ASSESSED FOR LOADS THAT EXCEED 10 MINUTES UNLOADING TIME.

LIABILITY WAIVER

Cadman Materials, (Inc.) will not assume Liability for any property damage or any equipment damage for any delivery beyond the curb line.

Fuel Surcharge	
Sales Tax	
Total	
Standby Time	
This Tickets Grand Total	

No one available to sign, customer waives receipt signature. ☐

Received by Signature: X

Print Name (Customer): X

Driver's Signature: X

Customer's Initials: X

Arrive Job		Start Unloading		Finish Unloading		Standby Time	

CADMAN
HEIDELBERGCEMENTGroup
(888) 322-6847 425-961-7100

WEIGHMASTER STATION
98785500
Everett Glenwood LND
6300 Glenwood Avenue
Everett, WA 98213

TICKET NO.	1120563270	TICKET TIME	7:38:51AM	DATE	6/8/2022
Customer No.	Payment Type	Customer Name			Order No.
7832096	Account	STRIDER CONST CO INC			10119468
Customer Job. No.	Customer P.O.			Map Ref.	Disp. Ord. #
	21NT			/	
Truck Type	Truck No.	Vehicle or License Plate No.		Trailer or License Plate No.	Zone
Truck & Trailer	RIV61TT				
Hauler/Carrier No.	Driver's Name	Delivered/Ordered		Load No.	Running Total
7886596		136.81 /		4	136.81

EV/P PORT OF EVERETT
2600 FEDERAL AVE
EVERETT

Product	Description	Total	Unit Price	Amount
99004	CLASS 2 SOILS DUMP (TN)	31.42		

SCALE WEIGHT	GROSS & TARE		
Gross 106,260 LB *	☒ Scale 1 ☐ Scale 2	A STANDBY SURCHARGE WILL BE ASSESSED FOR LOADS THAT EXCEED 10 MINUTES UNLOADING TIME.	Fuel Surcharge
Tare 43,420 LB/P.T.*	X Cate	LIABILITY WAIVER	Sales Tax
Net 62,840 LB *	Deputy Weighmaster	Cadman Materials, (Inc.) will not assume Liability for any property damage or any equipment damage for any delivery beyond the curb line.	**Total**

No one available to sign, customer waives receipt signature. ☐	Received by Signature X	Print Name (Customer) X	Driver's Signature X	Standby Time

Arrive Job		Start Unloading		Finish Unloading		Standby Time		Customer's Initials X	This Tickets Grand Total	

CADMAN
HEIDELBERGCEMENTGroup®
(888) 322-6847 425-961-7100

WEIGHMASTER STATION
98785500
Everett Glenwood LND
6300 Glenwood Avenue
Everett, WA 98213

TICKET NO.	1120563272	TICKET TIME	7:41:39AM	DATE	6/8/2022
Customer No.	Payment Type	Customer Name			Order No.
7832096	Account	STRIDER CONST CO INC			10119468
Customer Job. No.	Customer P.O.			Map Ref.	Disp. Ord. #
	21NT			/	
Truck Type	Truck No.	Vehicle or License Plate No.		Trailer or License Plate No.	Zone
Truck & Trailer	RIV26TT				
Hauler/Carrier No.	Driver's Name	Delivered/Ordered		Load No.	Running Total
7886596		169.51 /		5	169.51

EV/P PORT OF EVERETT
2600 FEDERAL AVE
EVERETT

Product	Description	Total	Unit Price	Amount
99004	CLASS 2 SOILS DUMP (TN)	32.70		

SCALE WEIGHT	GROSS & TARE		
Gross 104,040 LB m	[X] Scale 1 [ ] Scale 2	A STANDBY SURCHARGE WILL BE ASSESSED FOR LOADS THAT EXCEED 10 MINUTES UNLOADING TIME.	Fuel Surcharge
Tare 38,640 LB/P.T.*	X Cate	LIABILITY WAIVER	Sales Tax
Net 65,400 LB m	Deputy Weighmaster	Cadman Materials, (Inc.) will not assume Liability for any property damage or any equipment damage for any delivery beyond the curb line.	**Total**

No one available to sign, customer waives receipt signature. [ ]	Received by Signature	Print Name (Customer)	Driver's Signature	Standby Time
	X	X	X	

Arrive Job		Start Unloading		Finish Unloading		Standby Time		Customer's Initials	**This Tickets Grand Total**
								X	

CADMAN
HEIDELBERGCEMENTGroup
(888) 322-6847 425-961-7100

WEIGHMASTER STATION
98785500
Everett Glenwood LND
6300 Glenwood Avenue
Everett, WA 98213

TICKET NO.	1120563273	TICKET TIME	7:51:05AM	DATE	6/8/2022
Customer No.	Payment Type	Customer Name			Order No.
7832096	Account	STRIDER CONST CO INC			10119468
Customer Job. No.	Customer P.O.			Map Ref.	Disp. Ord. #
	21NT			/	
Truck Type	Truck No.	Vehicle or License Plate No.		Trailer or License Plate No.	Zone
Truck & Trailer	RIV60TT				
Hauler/Carrier No.	Driver's Name	Delivered/Ordered		Load No.	Running Total
7886596		203.14 /		6	203.14

EV/P PORT OF EVERETT
2600 FEDERAL AVE
EVERETT

Product	Description	Total	Unit Price	Amount
99004	CLASS 2 SOILS DUMP (TN)	33.63		

SCALE WEIGHT	GROSS & TARE		
Gross 108,740 LB *	☒ Scale 1 ☐ Scale 2	A STANDBY SURCHARGE WILL BE ASSESSED FOR LOADS THAT EXCEED 10 MINUTES UNLOADING TIME.	Fuel Surcharge
Tare 41,480 LB/P.T.*		LIABILITY WAIVER	Sales Tax
Net 67,260 LB *	X Cate Deputy Weighmaster	Cadman Materials, (Inc.) will not assume Liability for any property damage or any equipment damage for any delivery beyond the curb line.	**Total**

No one available to sign, customer waives receipt signature. ☐	Received by Signature	Print Name (Customer)	Driver's Signature	Standby Time
	X	X	X	

Arrive Job		Start Unloading		Finish Unloading		Standby Time		Customer's Initials	This Tickets Grand Total
								X	

CADMAN
HEIDELBERGCEMENTGroup
(888) 322-6847 425-961-7100

WEIGHMASTER STATION
98785500
Everett Glenwood LND
6300 Glenwood Avenue
Everett, WA 98213

TICKET NO	1120563276	TICKET TIME	8:10:45AM	DATE	6/8/2022
Customer No.	Payment Type	Customer Name			Order No.
7832096	Account	STRIDER CONST CO INC			10119468
Customer Job. No.	Customer P.O.			Map Ref.	Disp. Ord. #
	21NT			/	
Truck Type	Truck No.	Vehicle or License Plate No.		Trailer or License Plate No.	Zone
Truck & Trailer	RIV59TT				
Hauler/Carrier No.	Driver's Name	Delivered/Ordered		Load No.	Running Total
7886596		237.79 /		7	237.79

EV/P PORT OF EVERETT
2600 FEDERAL AVE
EVERETT

Product	Description	Total	Unit Price	Amount
99004	CLASS 2 SOILS DUMP (TN)	34.65		

SCALE WEIGHT

Gross 110,340 LB m
Tare 41,040 LB/P.T.*
Net 69,300 LB m

GROSS & TARE

☒ Scale 1 ☐ Scale 2

X Cate
Deputy Weighmaster

A STANDBY SURCHARGE WILL BE ASSESSED FOR LOADS THAT EXCEED 10 MINUTES UNLOADING TIME.

LIABILITY WAIVER

Cadman Materials, (Inc.) will not assume Liability for any property damage or any equipment damage for any delivery beyond the curb line.

Fuel Surcharge	
Sales Tax	
Total	
Standby Time	
This Tickets Grand Total	

No one available to sign, customer waives receipt signature. ☐	Received by Signature	Print Name (Customer)	Driver's Signature
	X	X	X

Arrive Job		Start Unloading		Finish Unloading		Standby Time		Customer's Initials
								X

CADMAN
HEIDELBERGCEMENTGroup
(888) 322-6847 425-961-7100

WEIGHMASTER STATION
98785500
Everett Glenwood LND
6300 Glenwood Avenue
Everett, WA 98213

TICKET NO.	1120563277	TICKET TIME	8:21:14AM	DATE	6/8/2022
Customer No.	Payment Type	Customer Name			Order No.
7832096	Account	STRIDER CONST CO INC			10119468
Customer Job. No.	Customer P.O.			Map Ref.	Disp. Ord. #
	21NT			/	
Truck Type	Truck No.	Vehicle or License Plate No.		Trailer or License Plate No.	Zone
Truck & Trailer	RIV57TT				
Hauler/Carrier No.	Driver's Name	Delivered/Ordered		Load No.	Running Total
7886596		266.51 /		8	266.51

EV/P PORT OF EVERETT
2600 FEDERAL AVE
EVERETT

Product	Description	Total	Unit Price	Amount
99004	CLASS 2 SOILS DUMP (TN)	28.72		

SCALE WEIGHT

Gross 98,640 LB m
Tare 41,200 LB/P.T.*
Net 57,440 LB m

GROSS & TARE

[X] Scale 1 [ ] Scale 2

X Cate
Deputy Weighmaster

A STANDBY SURCHARGE WILL BE ASSESSED FOR LOADS THAT EXCEED 10 MINUTES UNLOADING TIME.

LIABILITY WAIVER

Cadman Materials, (Inc.) will not assume Liability for any property damage or any equipment damage for any delivery beyond the curb line.

Fuel Surcharge	
Sales Tax	
Total	
Standby Time	
This Tickets Grand Total	

No one available to sign, customer waives receipt signature. [ ]

Received by Signature: X

Print Name (Customer): X

Driver's Signature: X

Customer's Initials: X

Arrive Job		Start Unloading		Finish Unloading		Standby Time	

CADMAN
HEIDELBERGCEMENT Group
(888) 322-6847 425-961-7100

WEIGHMASTER STATION
98785500
Everett Glenwood LND
6300 Glenwood Avenue
Everett, WA 98213

TICKET NO.	1120563278	TICKET TIME	8:33:02AM	DATE	6/8/2022
Customer No.	Payment Type	Customer Name			Order No.
7832096	Account	STRIDER CONST CO INC			10119468
Customer Job. No.	Customer P.O.		Map Ref.		Disp. Ord. #
	21NT		/		
Truck Type	Truck No.	Vehicle or License Plate No.	Trailer or License Plate No.		Zone
Truck & Trailer	RIV61TT				
Hauler/Carrier No.	Driver's Name	Delivered/Ordered	Load No.		Running Total
7886596		297.03 /	9		297.03

EV/P PORT OF EVERETT
2600 FEDERAL AVE
EVERETT

Product	Description	Total	Unit Price	Amount
99004	CLASS 2 SOILS DUMP (TN)	30.52		

SCALE WEIGHT	GROSS & TARE		Fuel Surcharge	
Gross 104,460 LB m	[X] Scale 1 [ ] Scale 2	A STANDBY SURCHARGE WILL BE ASSESSED FOR LOADS THAT EXCEED 10 MINUTES UNLOADING TIME.	Sales Tax	
Tare 43,420 LB/P.T.*	X Cate	LIABILITY WAIVER	**Total**	
Net 61,040 LB m	Deputy Weighmaster	Cadman Materials, (Inc.) will not assume Liability for any property damage or any equipment damage for any delivery beyond the curb line.	Standby Time	

No one available to sign, customer waives receipt signature [ ]	Received by Signature X	Print Name (Customer) X	Driver's Signature X	

Arrive Job		Start Unloading		Finish Unloading		Standby Time		Customer's Initials X	This Tickets Grand Total	

CADMAN
HEIDELBERGCEMENTGroup®
(888) 322-6847 425-961-7100

WEIGHMASTER STATION
98785500
Everett Glenwood LND
6300 Glenwood Avenue
Everett, WA 98213

TICKET NO.	1120563279	TICKET TIME	8:40:46AM	DATE	6/8/2022
Customer No.	Payment Type	Customer Name			Order No.
7832096	Account	STRIDER CONST CO INC			10119468
Customer Job. No.	Customer P.O.			Map Ref.	Disp. Ord. #
	21NT			/	
Truck Type	Truck No.	Vehicle or License Plate No.		Trailer or License Plate No.	Zone
Truck & Trailer	RIV62TT				
Hauler/Carrier No.	Driver's Name	Delivered/Ordered		Load No.	Running Total
		329.82 /		10	329.82

EV/P PORT OF EVERETT
2600 FEDERAL AVE
EVERETT

Product	Description	Total	Unit Price	Amount
99004	CLASS 2 SOILS DUMP (TN)	32.79		

SCALE WEIGHT	GROSS & TARE		
Gross 107,260 LB m	☒ Scale 1 ☐ Scale 2	A STANDBY SURCHARGE WILL BE ASSESSED FOR LOADS THAT EXCEED 10 MINUTES UNLOADING TIME.	Fuel Surcharge
Tare 41,680 LB/P.T.*	X Cate	LIABILITY WAIVER	Sales Tax
Net 65,580 LB m	Deputy Weighmaster	Cadman Materials, (Inc.) will not assume Liability for any property damage or any equipment damage for any delivery beyond the curb line.	**Total**

No one available to sign, customer waives receipt signature. ☐	Received by Signature X	Print Name (Customer) X	Driver's Signature X	Standby Time

Arrive Job		Start Unloading		Finish Unloading		Standby Time		Customer's Initials X	**This Tickets Grand Total**	

CADMAN
HEIDELBERGCEMENTGroup
(888) 322-6847 425-961-7100

WEIGHMASTER STATION
98785500
Everett Glenwood LND
6300 Glenwood Avenue
Everett, WA 98213

TICKET NO.	TICKET TIME	DATE
1120563280	8:45:38AM	6/8/2022

Customer No.	Payment Type	Customer Name	Order No.
7832096	Account	STRIDER CONST CO INC	10119468

Customer Job. No.	Customer P.O.	Map Ref.	Disp. Ord #
	21NT	/	

Truck Type	Truck No.	Vehicle or License Plate No.	Trailer or License Plate No.	Zone
Truck & Trailer	RIV60TT			

Hauler/Carrier No.	Driver's Name	Delivered/Ordered	Load No.	Running Total
7886596		360.14 /	11	360.14

EV/P PORT OF EVERETT
2600 FEDERAL AVE
EVERETT

Product	Description	Total	Unit Price	Amount
99004	CLASS 2 SOILS DUMP (TN)	30.32		

SCALE WEIGHT

Gross 102,120 LB m
Tare 41,480 LB/P.T.*
Net 60,640 LB m

GROSS & TARE

☒ Scale 1 ☐ Scale 2

X Cate
Deputy Weighmaster

A STANDBY SURCHARGE WILL BE ASSESSED FOR LOADS THAT EXCEED 10 MINUTES UNLOADING TIME.

LIABILITY WAIVER

Cadman Materials, (Inc.) will not assume Liability for any property damage or any equipment damage for any delivery beyond the curb line.

Fuel Surcharge	
Sales Tax	
Total	
Standby Time	
This Tickets Grand Total	

No one available to sign, customer waives receipt signature. ☐	Received by Signature	Print Name (Customer)	Driver's Signature
	X	X	X

Arrive Job		Start Unloading		Finish Unloading		Standby Time		Customer's Initials
								X

CADMAN
HEIDELBERGCEMENTGroup®
(888) 322-6847 425-961-7100

WEIGHMASTER STATION
98785500
Everett Glenwood LND
6300 Glenwood Avenue
Everett, WA 98213

TICKET NO.	1120563281	TICKET TIME	8:48:30AM	DATE	6/8/2022
Customer No.	Payment Type	Customer Name			Order No.
7832096	Account	STRIDER CONST CO INC			10119468
Customer Job. No.	Customer P.O.			Map Ref.	Disp. Ord. #
	21NT			/	
Truck Type	Truck No.	Vehicle or License Plate No.		Trailer or License Plate No.	Zone
Truck & Trailer	RIV26TT				
Hauler/Carrier No.	Driver's Name	Delivered/Ordered		Load No.	Running Total
7886596		390.18 /		12	390.18

EV/P PORT OF EVERETT
2600 FEDERAL AVE
EVERETT

Product	Description	Total	Unit Price	Amount
99004	CLASS 2 SOILS DUMP (TN)	30.04		

SCALE WEIGHT

Gross 98,720 LB m
Tare 38,640 LB/P.T.*
Net 60,080 LB m

GROSS & TARE

☒ Scale 1 ☐ Scale 2

X Cate
Deputy Weighmaster

A STANDBY SURCHARGE WILL BE ASSESSED FOR LOADS THAT EXCEED 10 MINUTES UNLOADING TIME.

LIABILITY WAIVER

Cadman Materials, (Inc.) will not assume Liability for any property damage or any equipment damage for any delivery beyond the curb line.

Fuel Surcharge	
Sales Tax	
Total	
Standby Time	
This Tickets Grand Total	

No one available to sign, customer waives receipt signature. ☐

Received by Signature: X

Print Name (Customer): X

Driver's Signature: X

Customer's Initials: X

Arrive Job		Start Unloading		Finish Unloading		Standby Time	

CADMAN
HEIDELBERGCEMENTGroup
(888) 322-6847 425-961-7100

WEIGHMASTER STATION
98785500
Everett Glenwood LND
6300 Glenwood Avenue
Everett, WA 98213

TICKET NO	1120563284	TICKET TIME	9:10:08AM	DATE	6/8/2022
Customer No.	Payment Type	Customer Name			Order No.
7832096	Account	STRIDER CONST CO INC			10119468
Customer Job. No.	Customer P.O.			Map Ref.	Disp. Ord. #
	21NT			/	
Truck Type	Truck No.	Vehicle or License Plate No.		Trailer or License Plate No.	Zone
Truck & Trailer	RIV59TT				
Hauler/Carrier No.	Driver's Name	Delivered/Ordered		Load No.	Running Total
7886596		421.34 /		13	421.34

EV/P PORT OF EVERETT
2600 FEDERAL AVE
EVERETT

Product	Description	Total	Unit Price	Amount
99004	CLASS 2 SOILS DUMP (TN)	31.16		

SCALE WEIGHT

Gross 103,360 LB m
Tare 41,040 LB/P.T.*
Net 62,320 LB m

GROSS & TARE

☒ Scale 1 ☐ Scale 2

X Cate
Deputy Weighmaster

A STANDBY SURCHARGE WILL BE ASSESSED FOR LOADS THAT EXCEED 10 MINUTES UNLOADING TIME.

LIABILITY WAIVER

Cadman Materials, (Inc.) will not assume Liability for any property damage or any equipment damage for any delivery beyond the curb line.

Fuel Surcharge	
Sales Tax	
Total	
Standby Time	
This Tickets Grand Total	

No one available to sign, customer waives receipt signature. ☐	Received by Signature	Print Name (Customer)	Driver's Signature
	X	X	X

Arrive Job		Start Unloading		Finish Unloading		Standby Time		Customer's Initials
								X

CADMAN
HEIDELBERGCEMENTGroup
(888) 322-6847 425-961-7100

WEIGHMASTER STATION
98785500
Everett Glenwood LND
6300 Glenwood Avenue
Everett, WA 98213

TICKET NO.	1120563285	TICKET TIME	9:22:00AM	DATE	6/8/2022
Customer No.	Payment Type	Customer Name			Order No.
7832096	Account	STRIDER CONST CO INC			10119468
Customer Job. No.	Customer P.O.			Map Ref.	Disp. Ord. #
	21NT			/	
Truck Type	Truck No.	Vehicle or License Plate No.		Trailer or License Plate No.	Zone
Truck & Trailer	RIV57TT				
Hauler/Carrier No.	Driver's Name	Delivered/Ordered		Load No.	Running Total
7886596		455.83 /		14	455.83

EV/P PORT OF EVERETT
2600 FEDERAL AVE
EVERETT

Product	Description	Total	Unit Price	Amount
99004	CLASS 2 SOILS DUMP (TN)	34.49		

SCALE WEIGHT

Gross 110,180 LB m
Tare 41,200 LB/P.T.*
Net 68,980 LB m

GROSS & TARE

☒ Scale 1 ☐ Scale 2

X Cate
Deputy Weighmaster

A STANDBY SURCHARGE WILL BE ASSESSED FOR LOADS THAT EXCEED 10 MINUTES UNLOADING TIME.

LIABILITY WAIVER

Cadman Materials, (Inc.) will not assume Liability for any property damage or any equipment damage for any delivery beyond the curb line.

Fuel Surcharge	
Sales Tax	
Total	
Standby Time	
This Tickets Grand Total	

No one available to sign, customer waives receipt signature. ☐	Received by Signature	Print Name (Customer)	Driver's Signature
	X	X	X

Arrive Job		Start Unloading		Finish Unloading		Standby Time		Customer's Initials
								X

CADMAN
HEIDELBERGCEMENTGroup®
(888) 322-6847 425-961-7100

WEIGHMASTER STATION
98785500
Everett Glenwood LND
6300 Glenwood Avenue
Everett, WA 98213

TICKET NO.	1120563286	TICKET TIME	9:31:40AM	DATE	6/8/2022
Customer No.	Payment Type	Customer Name			Order No.
7832096	Account	STRIDER CONST CO INC			10119468
Customer Job. No.	Customer P.O.			Map Ref.	Disp. Ord. #
	21NT			/	
Truck Type	Truck No.	Vehicle or License Plate No.		Trailer or License Plate No.	Zone
Truck & Trailer	RIV61TT				
Hauler/Carrier No.	Driver's Name	Delivered/Ordered		Load No.	Running Total
7886596		483.34 /		15	483.34

EV/P PORT OF EVERETT
2600 FEDERAL AVE
EVERETT

Product	Description	Total	Unit Price	Amount
99004	CLASS 2 SOILS DUMP (TN)	27.51		

SCALE WEIGHT	GROSS & TARE		
Gross 98,440 LB m	[X] Scale 1 [ ] Scale 2	A STANDBY SURCHARGE WILL BE ASSESSED FOR LOADS THAT EXCEED 10 MINUTES UNLOADING TIME.	Fuel Surcharge
Tare 43,420 LB/P.T.*		LIABILITY WAIVER	Sales Tax
Net 55,020 LB m	X Cate Deputy Weighmaster	Cadman Materials, (Inc.) will not assume Liability for any property damage or any equipment damage for any delivery beyond the curb line.	**Total**

No one available to sign, customer waives receipt signature. [ ]	Received by Signature	Print Name (Customer)	Driver's Signature	Standby Time
	X	X	X	

Arrive Job		Start Unloading		Finish Unloading		Standby Time		Customer's Initials	This Tickets Grand Total
								X	

CADMAN
HEIDELBERGCEMENTGroup
(888) 322-6847 425-961-7100

WEIGHMASTER STATION
98785500
Everett Glenwood LND
6300 Glenwood Avenue
Everett, WA 98213

TICKET NO.	1120563288	TICKET TIME	9:41:13AM	DATE	6/8/2022
Customer No.	Payment Type	Customer Name			Order No.
7832096	Account	STRIDER CONST CO INC			10119468
Customer Job. No.	Customer P.O.			Map Ref.	Disp. Ord. #
	21NT			/	
Truck Type	Truck No.	Vehicle or License Plate No.		Trailer or License Plate No.	Zone
Truck & Trailer	RIV62TT				
Hauler/Carrier No.	Driver's Name	Delivered/Ordered		Load No.	Running Total
		517.43 /		16	517.43

EV/P PORT OF EVERETT
2600 FEDERAL AVE
EVERETT

Product	Description	Total	Unit Price	Amount
99004	CLASS 2 SOILS DUMP (TN)	34.09		

SCALE WEIGHT	GROSS & TARE			
Gross 109,860 LB m	☒ Scale 1 ☐ Scale 2	A STANDBY SURCHARGE WILL BE ASSESSED FOR LOADS THAT EXCEED 10 MINUTES UNLOADING TIME.	Fuel Surcharge	
Tare 41,680 LB/P.T.*	X Cate	LIABILITY WAIVER	Sales Tax	
Net 68,180 LB m	Deputy Weighmaster	Cadman Materials, (Inc.) will not assume Liability for any property damage or any equipment damage for any delivery beyond the curb line.	**Total**	

No one available to sign, customer waives receipt signature. ☐	Received by Signature	Print Name (Customer)	Driver's Signature	Standby Time	
	X	X	X		

Arrive Job		Start Unloading		Finish Unloading		Standby Time		Customer's Initials	This Tickets Grand Total	
								X		

CADMAN
HEIDELBERGCEMENTGroup®
(888) 322-6847 425-961-7100

WEIGHMASTER STATION
98785500
Everett Glenwood LND
6300 Glenwood Avenue
Everett, WA 98213

TICKET NO.	1120563289	TICKET TIME	9:44:04AM	DATE	6/8/2022
Customer No.	Payment Type	Customer Name			Order No.
7832096	Account	STRIDER CONST CO INC			10119468
Customer Job. No.	Customer P.O.			Map Ref.	Disp. Ord. #
	21NT			/	
Truck Type	Truck No.	Vehicle or License Plate No.		Trailer or License Plate No.	Zone
Truck & Trailer	RIV60TT				
Hauler/Carrier No.	Driver's Name	Delivered/Ordered		Load No.	Running Total
7886596		549.67 /		17	549.67

EV/P PORT OF EVERETT
2600 FEDERAL AVE
EVERETT

Product	Description	Total	Unit Price	Amount
99004	CLASS 2 SOILS DUMP (TN)	32.24		

SCALE WEIGHT	GROSS & TARE		Fuel Surcharge	
Gross 105,960 LB m		**A STANDBY SURCHARGE WILL BE ASSESSED FOR LOADS THAT EXCEED 10 MINUTES UNLOADING TIME.**	Sales Tax	
Tare 41,480 LB/P.T.*	[X] Scale 1 [ ] Scale 2	**LIABILITY WAIVER**	**Total**	
Net 64,480 LB m	X Cate Deputy Weighmaster	**Cadman Materials, (Inc.) will not assume Liability for any property damage or any equipment damage for any delivery beyond the curb line.**		

No one available to sign, customer waives receipt signature. ☐	Received by Signature	Print Name (Customer)	Driver's Signature	Standby Time	
	X	X	X		

Arrive Job		Start Unloading		Finish Unloading		Standby Time		Customer's Initials	This Tickets Grand Total	
								X		

CADMAN
HEIDELBERGCEMENTGroup
(888) 322-6847 425-961-7100

WEIGHMASTER STATION
98785500
Everett Glenwood LND
6300 Glenwood Avenue
Everett, WA 98213

TICKET NO.	TICKET TIME	DATE
1120563290	9:48:10AM	6/8/2022

Customer No.	Payment Type	Customer Name	Order No.
7832096	Account	STRIDER CONST CO INC	10119468

Customer Job. No.	Customer P.O.	Map Ref.	Disp. Ord. #
	21NT	/	

Truck Type	Truck No.	Vehicle or License Plate No.	Trailer or License Plate No.	Zone
Truck & Trailer	RIV26TT			

Hauler/Carrier No.	Driver's Name	Delivered/Ordered	Load No.	Running Total
7886596		580.24 /	18	580.24

EV/P PORT OF EVERETT
2600 FEDERAL AVE
EVERETT

Product	Description	Total	Unit Price	Amount
99004	CLASS 2 SOILS DUMP (TN)	30.57		

SCALE WEIGHT

Gross 99,780 LB m
Tare 38,640 LB/P.T.*
Net 61,140 LB m

GROSS & TARE

☒ Scale 1 ☐ Scale 2

X Cate
Deputy Weighmaster

A STANDBY SURCHARGE WILL BE ASSESSED FOR LOADS THAT EXCEED 10 MINUTES UNLOADING TIME.

LIABILITY WAIVER

Cadman Materials, (Inc.) will not assume Liability for any property damage or any equipment damage for any delivery beyond the curb line.

Fuel Surcharge	
Sales Tax	
Total	
Standby Time	
This Tickets Grand Total	

No one available to sign, customer waives receipt signature. ☐	Received by Signature	Print Name (Customer)	Driver's Signature
	X	X	X

Arrive Job		Start Unloading		Finish Unloading		Standby Time		Customer's Initials
								X

CADMAN
HEIDELBERGCEMENTGroup
(888) 322-6847 425-961-7100

WEIGHMASTER STATION
98785500
Everett Glenwood LND
6300 Glenwood Avenue
Everett, WA 98213

TICKET NO.	1120563291	TICKET TIME	10:09:07AM	DATE	6/8/2022
Customer No.	Payment Type	Customer Name			Order No.
7832096	Account	STRIDER CONST CO INC			10119468
Customer Job. No.	Customer P.O.			Map Ref.	Disp. Ord. #
	21NT			/	
Truck Type	Truck No.	Vehicle or License Plate No.		Trailer or License Plate No.	Zone
Truck & Trailer	RIV59TT				
Hauler/Carrier No.	Driver's Name	Delivered/Ordered		Load No.	Running Total
7886596		613.19 /		19	613.19

EV/P PORT OF EVERETT
2600 FEDERAL AVE
EVERETT

Product	Description	Total	Unit Price	Amount
99004	CLASS 2 SOILS DUMP (TN)	32.95		

SCALE WEIGHT	GROSS & TARE		
Gross 106,940 LB m	☒ Scale 1 ☐ Scale 2	A STANDBY SURCHARGE WILL BE ASSESSED FOR LOADS THAT EXCEED 10 MINUTES UNLOADING TIME.	Fuel Surcharge
Tare 41,040 LB/P.T.*	X Cate	LIABILITY WAIVER	Sales Tax
Net 65,900 LB m	Deputy Weighmaster	Cadman Materials, (Inc.) will not assume Liability for any property damage or any equipment damage for any delivery beyond the curb line.	**Total**

No one available to sign, customer waives receipt signature. ☐	Received by Signature	Print Name (Customer)	Driver's Signature	Standby Time
	X	X	X	

Arrive Job		Start Unloading		Finish Unloading		Standby Time		Customer's Initials	This Tickets Grand Total
								X	

CADMAN
HEIDELBERGCEMENTGroup
(888) 322-6847 425-961-7100

WEIGHMASTER STATION
98785500
Everett Glenwood LND
6300 Glenwood Avenue
Everett, WA 98213

TICKET NO.	1120563292	TICKET TIME	10:20:59AM	DATE	6/8/2022
Customer No.	Payment Type	Customer Name			Order No.
7832096	Account	STRIDER CONST CO INC			10119468
Customer Job. No.	Customer P.O.			Map Ref.	Disp. Ord. #
	21NT			/	
Truck Type	Truck No.	Vehicle or License Plate No.		Trailer or License Plate No.	Zone
Truck & Trailer	RIV57TT				
Hauler/Carrier No.	Driver's Name	Delivered/Ordered		Load No.	Running Total
7886596		644.84 /		20	644.84

EV/P PORT OF EVERETT
2600 FEDERAL AVE
EVERETT

Product	Description	Total	Unit Price	Amount
99004	CLASS 2 SOILS DUMP (TN)	31.65		

SCALE WEIGHT

Gross 104,500 LB m
Tare 41,200 LB/P.T.*
Net 63,300 LB m

GROSS & TARE

☒ Scale 1 ☐ Scale 2

X Cate
Deputy Weighmaster

A STANDBY SURCHARGE WILL BE ASSESSED FOR LOADS THAT EXCEED 10 MINUTES UNLOADING TIME.

LIABILITY WAIVER

Cadman Materials, (Inc.) will not assume Liability for any property damage or any equipment damage for any delivery beyond the curb line.

Fuel Surcharge	
Sales Tax	
Total	
Standby Time	
This Tickets Grand Total	

No one available to sign, customer waives receipt signature. ☐	Received by Signature	Print Name (Customer)	Driver's Signature
	X	X	X

Arrive Job		Start Unloading		Finish Unloading		Standby Time		Customer's Initials
								X

CADMAN
HEIDELBERGCEMENTGroup
(888) 322-6847 425-961-7100

WEIGHMASTER STATION
98785500
Everett Glenwood LND
6300 Glenwood Avenue
Everett, WA 98213

TICKET NO.	1120563294	TICKET TIME	10:28:08AM	DATE	6/8/2022
Customer No.	Payment Type	Customer Name			Order No.
7832096	Account	STRIDER CONST CO INC			10119468
Customer Job. No.	Customer P.O.			Map Ref.	Disp. Ord. #
	21NT			/	
Truck Type	Truck No.	Vehicle or License Plate No.		Trailer or License Plate No.	Zone
Truck & Trailer	RIV61TT				
Hauler/Carrier No.	Driver's Name	Delivered/Ordered		Load No.	Running Total
7886596		673.35 /		21	673.35

EV/P PORT OF EVERETT
2600 FEDERAL AVE
EVERETT

Product	Description	Total	Unit Price	Amount
99004	CLASS 2 SOILS DUMP (TN)	28.51		

SCALE WEIGHT

Gross 100,440 LB m
Tare 43,420 LB/P.T.*
Net 57,020 LB m

GROSS & TARE

☒ Scale 1 ☐ Scale 2

X Cate
Deputy Weighmaster

A STANDBY SURCHARGE WILL BE ASSESSED FOR LOADS THAT EXCEED 10 MINUTES UNLOADING TIME.

LIABILITY WAIVER

Cadman Materials, (Inc.) will not assume Liability for any property damage or any equipment damage for any delivery beyond the curb line.

Fuel Surcharge	
Sales Tax	
Total	
Standby Time	
This Tickets Grand Total	

No one available to sign, customer waives receipt signature. ☐

Received by Signature: X

Print Name (Customer): X

Driver's Signature: X

Customer's Initials: X

Arrive Job		Start Unloading		Finish Unloading		Standby Time	

CADMAN
HEIDELBERGCEMENTGroup
(888) 322-6847 425-961-7100

WEIGHMASTER STATION
98785500
Everett Glenwood LND
6300 Glenwood Avenue
Everett, WA 98213

TICKET NO.	1120563297	TICKET TIME	10:41:27AM	DATE	6/8/2022
Customer No. 7832096	Payment Type Account	Customer Name STRIDER CONST CO INC			Order No. 10119468
Customer Job. No.	Customer P.O. 21NT		Map Ref. /		Disp. Ord. #
Truck Type Truck & Trailer	Truck No. RIV62TT	Vehicle or License Plate No.	Trailer or License Plate No.		Zone
Hauler/Carrier No.	Driver's Name	Delivered/Ordered 702.29 /	Load No. 22		Running Total 702.29

EV/P PORT OF EVERETT
2600 FEDERAL AVE
EVERETT

Product	Description	Total	Unit Price	Amount
99004	CLASS 2 SOILS DUMP (TN)	28.94		

SCALE WEIGHT
Gross 99,560 LB m
Tare 41,680 LB/P.T.*
Net 57,880 LB m

GROSS & TARE
[X] Scale 1 [ ] Scale 2
X Cate
Deputy Weighmaster

A STANDBY SURCHARGE WILL BE ASSESSED FOR LOADS THAT EXCEED 10 MINUTES UNLOADING TIME.

LIABILITY WAIVER
Cadman Materials, (Inc.) will not assume Liability for any property damage or any equipment damage for any delivery beyond the curb line.

Fuel Surcharge	
Sales Tax	
Total	
Standby Time	
This Tickets Grand Total	

No one available to sign, customer waives receipt signature. [ ]
Received by Signature X
Print Name (Customer) X
Driver's Signature X
Customer's Initials X

Arrive Job		Start Unloading		Finish Unloading		Standby Time	

CADMAN
HEIDELBERGCEMENTGroup®
(888) 322-6847 425-961-7100

WEIGHMASTER STATION
98785500
Everett Glenwood LND
6300 Glenwood Avenue
Everett, WA 98213

TICKET NO.	TICKET TIME	DATE
1120563298	10:42:47AM	6/8/2022

Customer No.	Payment Type	Customer Name	Order No.
7832096	Account	STRIDER CONST CO INC	10119468

Customer Job. No.	Customer P.O.	Map Ref.	Disp. Ord. #
	21NT	/	

Truck Type	Truck No.	Vehicle or License Plate No.	Trailer or License Plate No.	Zone
Truck & Trailer	RIV60TT			

Hauler/Carrier No.	Driver's Name	Delivered/Ordered	Load No.	Running Total
7886596		732.16 /	23	732.16

EV/P PORT OF EVERETT
2600 FEDERAL AVE
EVERETT

Product	Description	Total	Unit Price	Amount
99004	CLASS 2 SOILS DUMP (TN)	29.87		

SCALE WEIGHT

Gross 101,220 LB m
Tare 41,480 LB/P.T.*
Net 59,740 LB m

GROSS & TARE

☒ Scale 1 ☐ Scale 2

X Cate
Deputy Weighmaster

A STANDBY SURCHARGE WILL BE ASSESSED FOR LOADS THAT EXCEED 10 MINUTES UNLOADING TIME.

LIABILITY WAIVER

Cadman Materials, (Inc.) will not assume Liability for any property damage or any equipment damage for any delivery beyond the curb line.

Fuel Surcharge	
Sales Tax	
Total	
Standby Time	
This Tickets Grand Total	

No one available to sign, customer waives receipt signature. ☐	Received by Signature	Print Name (Customer)	Driver's Signature
	X	X	X

Arrive Job		Start Unloading		Finish Unloading		Standby Time		Customer's Initials
								X

CADMAN
HEIDELBERGCEMENTGroup
(888) 322-6847 425-961-7100

WEIGHMASTER STATION
98785500
Everett Glenwood LND
6300 Glenwood Avenue
Everett, WA 98213

TICKET NO.	1120563299	TICKET TIME	10:48:04AM	DATE	6/8/2022
Customer No.	Payment Type	Customer Name			Order No.
7832096	Account	STRIDER CONST CO INC			10119468
Customer Job. No.	Customer P.O.		Map Ref.		Disp. Ord. #
	21NT		/		
Truck Type	Truck No.	Vehicle or License Plate No.	Trailer or License Plate No.		Zone
Truck & Trailer	RIV26TT				
Hauler/Carrier No.	Driver's Name	Delivered/Ordered	Load No.		Running Total
7886596		760.08 /	24		760.08

EV/P PORT OF EVERETT
2600 FEDERAL AVE
EVERETT

Product	Description	Total	Unit Price	Amount
99004	CLASS 2 SOILS DUMP (TN)	27.92		

SCALE WEIGHT

Gross 94,480 LB m
Tare 38,640 LB/P.T.*
Net 55,840 LB m

GROSS & TARE

☒ Scale 1 ☐ Scale 2

X Cate
Deputy Weighmaster

A STANDBY SURCHARGE WILL BE ASSESSED FOR LOADS THAT EXCEED 10 MINUTES UNLOADING TIME.

LIABILITY WAIVER

Cadman Materials, (Inc.) will not assume Liability for any property damage or any equipment damage for any delivery beyond the curb line.

Fuel Surcharge	
Sales Tax	
Total	
Standby Time	
This Tickets Grand Total	

No one available to sign, customer waives receipt signature. ☐	Received by Signature	Print Name (Customer)	Driver's Signature
	X	X	X

Arrive Job		Start Unloading		Finish Unloading		Standby Time		Customer's Initials
								X

CADMAN
HEIDELBERGCEMENTGroup®
(888) 322-6847 425-961-7100

WEIGHMASTER STATION
98785500
Everett Glenwood LND
6300 Glenwood Avenue
Everett, WA 98213

TICKET NO.	1120563301	TICKET TIME	11:10:47AM	DATE	6/8/2022
Customer No.	Payment Type	Customer Name			Order No.
7832096	Account	STRIDER CONST CO INC			10119468
Customer Job. No.	Customer P.O.			Map Ref.	Disp. Ord. #
	21NT			/	
Truck Type	Truck No.	Vehicle or License Plate No.		Trailer or License Plate No.	Zone
Truck & Trailer	RIV59TT				
Hauler/Carrier No.	Driver's Name	Delivered/Ordered		Load No.	Running Total
7886596		792.24 /		25	792.24

EV/P PORT OF EVERETT
2600 FEDERAL AVE
EVERETT

Product	Description	Total	Unit Price	Amount
99004	CLASS 2 SOILS DUMP (TN)	32.16		

SCALE WEIGHT	GROSS & TARE		
Gross 105,360 LB m	☒ Scale 1 ☐ Scale 2	A STANDBY SURCHARGE WILL BE ASSESSED FOR LOADS THAT EXCEED 10 MINUTES UNLOADING TIME.	Fuel Surcharge
Tare 41,040 LB/P.T.*	X Cate	LIABILITY WAIVER	Sales Tax
Net 64,320 LB m	Deputy Weighmaster	Cadman Materials, (Inc.) will not assume Liability for any property damage or any equipment damage for any delivery beyond the curb line.	**Total**

No one available to sign, customer waives receipt signature. ☐	Received by Signature	Print Name (Customer)	Driver's Signature	Standby Time
	X	X	X	

Arrive Job		Start Unloading		Finish Unloading		Standby Time		Customer's Initials	This Tickets Grand Total
								X	

CADMAN
HEIDELBERGCEMENTGroup®
(888) 322-6847 425-961-7100

WEIGHMASTER STATION
98785500
Everett Glenwood LND
6300 Glenwood Avenue
Everett, WA 98213

TICKET NO.	1120563302	TICKET TIME	11:22:30AM	DATE	6/8/2022
Customer No.	Payment Type	Customer Name			Order No.
7832096	Account	STRIDER CONST CO INC			10119468
Customer Job. No.	Customer P.O.			Map Ref.	Disp. Ord. #
	21NT			/	
Truck Type	Truck No.	Vehicle or License Plate No.		Trailer or License Plate No.	Zone
Truck & Trailer	RIV57TT				
Hauler/Carrier No.	Driver's Name	Delivered/Ordered		Load No.	Running Total
7886596		822.84 /		26	822.84

EV/P PORT OF EVERETT
2600 FEDERAL AVE
EVERETT

Product	Description	Total	Unit Price	Amount
99004	CLASS 2 SOILS DUMP (TN)	30.60		

SCALE WEIGHT
Gross 102,400 LB m
Tare 41,200 LB/P.T.*
Net 61,200 LB m

GROSS & TARE
☒ Scale 1 ☐ Scale 2
X Cate
Deputy Weighmaster

A STANDBY SURCHARGE WILL BE ASSESSED FOR LOADS THAT EXCEED 10 MINUTES UNLOADING TIME.

LIABILITY WAIVER
Cadman Materials, (Inc.) will not assume Liability for any property damage or any equipment damage for any delivery beyond the curb line.

Fuel Surcharge	
Sales Tax	
Total	
Standby Time	
This Tickets Grand Total	

No one available to sign, customer waives receipt signature. ☐	Received by Signature	Print Name (Customer)	Driver's Signature
	X	X	X

Arrive Job		Start Unloading		Finish Unloading		Standby Time		Customer's Initials
								X

CADMAN
HEIDELBERGCEMENTGroup
(888) 322-6847 425-961-7100

WEIGHMASTER STATION
98785500
Everett Glenwood LND
6300 Glenwood Avenue
Everett, WA 98213

TICKET NO.	1120563303	TICKET TIME	11:28:57AM	DATE	6/8/2022
Customer No.	Payment Type	Customer Name			Order No.
7832096	Account	STRIDER CONST CO INC			10119468
Customer Job. No.	Customer P.O.			Map Ref.	Disp. Ord. #
	21NT			/	
Truck Type	Truck No.	Vehicle or License Plate No.		Trailer or License Plate No.	Zone
Truck & Trailer	RIV61TT				
Hauler/Carrier No.	Driver's Name	Delivered/Ordered		Load No.	Running Total
7886596		853.29 /		27	853.29

EV/P PORT OF EVERETT
2600 FEDERAL AVE
EVERETT

Product	Description	Total	Unit Price	Amount
99004	CLASS 2 SOILS DUMP (TN)	30.45		

SCALE WEIGHT	GROSS & TARE		
Gross 104,320 LB m	☒ Scale 1 ☐ Scale 2	A STANDBY SURCHARGE WILL BE ASSESSED FOR LOADS THAT EXCEED 10 MINUTES UNLOADING TIME.	Fuel Surcharge
Tare 43,420 LB/P.T.*			Sales Tax
Net 60,900 LB m	X Cate Deputy Weighmaster	**LIABILITY WAIVER** Cadman Materials, (Inc.) will not assume Liability for any property damage or any equipment damage for any delivery beyond the curb line.	**Total**

No one available to sign, customer waives receipt signature. ☐	Received by Signature X	Print Name (Customer) X	Driver's Signature X	Standby Time

Arrive Job		Start Unloading		Finish Unloading		Standby Time		Customer's Initials X	This Tickets Grand Total	

CADMAN
HEIDELBERGCEMENTGroup
(888) 322-6847 425-961-7100

WEIGHMASTER STATION
98785500
Everett Glenwood LND
6300 Glenwood Avenue
Everett, WA 98213

TICKET NO.	1120563306	TICKET TIME	11:40:48AM	DATE	6/8/2022
Customer No.	Payment Type	Customer Name			Order No.
7832096	Account	STRIDER CONST CO INC			10119468
Customer Job. No.	Customer P.O.			Map Ref.	Disp. Ord. #
	21NT			/	
Truck Type	Truck No.	Vehicle or License Plate No.		Trailer or License Plate No.	Zone
Truck & Trailer	RIV62TT				
Hauler/Carrier No.	Driver's Name	Delivered/Ordered		Load No.	Running Total
		886.90 /		28	886.90

EV/P PORT OF EVERETT
2600 FEDERAL AVE
EVERETT

Product	Description	Total	Unit Price	Amount
99004	CLASS 2 SOILS DUMP (TN)	33.61		

SCALE WEIGHT	GROSS & TARE			
Gross 108,900 LB m	☒ Scale 1 ☐ Scale 2	A STANDBY SURCHARGE WILL BE ASSESSED FOR LOADS THAT EXCEED 10 MINUTES UNLOADING TIME.	Fuel Surcharge	
Tare 41,680 LB/P.T.*		LIABILITY WAIVER	Sales Tax	
Net 67,220 LB m	X Cate Deputy Weighmaster	Cadman Materials, (Inc.) will not assume Liability for any property damage or any equipment damage for any delivery beyond the curb line.	**Total**	

No one available to sign, customer waives receipt signature. ☐	Received by Signature	Print Name (Customer)	Driver's Signature	Standby Time	
	X	X	X		

Arrive Job		Start Unloading		Finish Unloading		Standby Time		Customer's Initials	This Tickets Grand Total	
								X		

CADMAN
HEIDELBERGCEMENTGroup
(888) 322-6847 425-961-7100

WEIGHMASTER STATION
98785500
Everett Glenwood LND
6300 Glenwood Avenue
Everett, WA 98213

TICKET NO.	1120563307	TICKET TIME	11:44:13AM	DATE	6/8/2022

Customer No.	Payment Type	Customer Name	Order No.
7832096	Account	STRIDER CONST CO INC	10119468

Customer Job. No.	Customer P.O.	Map Ref.	Disp. Ord. #
	21NT	/	

Truck Type	Truck No.	Vehicle or License Plate No.	Trailer or License Plate No.	Zone
Truck & Trailer	RIV60TT			

Hauler/Carrier No.	Driver's Name	Delivered/Ordered	Load No.	Running Total
7886596		918.61 /	29	918.61

EV/P PORT OF EVERETT
2600 FEDERAL AVE
EVERETT

Product	Description	Total	Unit Price	Amount
99004	CLASS 2 SOILS DUMP (TN)	31.71		

SCALE WEIGHT

Gross 104,900 LB m
Tare 41,480 LB/P.T.*
Net 63,420 LB m

GROSS & TARE

☒ Scale 1 ☐ Scale 2

X Cate
Deputy Weighmaster

A STANDBY SURCHARGE WILL BE ASSESSED FOR LOADS THAT EXCEED 10 MINUTES UNLOADING TIME.

LIABILITY WAIVER

Cadman Materials, (Inc.) will not assume Liability for any property damage or any equipment damage for any delivery beyond the curb line.

Fuel Surcharge	
Sales Tax	
Total	
Standby Time	
This Tickets Grand Total	

No one available to sign, customer waives receipt signature ☐	Received by Signature	Print Name (Customer)	Driver's Signature
	X	X	X

Arrive Job		Start Unloading		Finish Unloading		Standby Time		Customer's Initials
								X

CADMAN
HEIDELBERGCEMENTGroup
(888) 322-6847 425-961-7100

WEIGHMASTER STATION
98785500
Everett Glenwood LND
6300 Glenwood Avenue
Everett, WA 98213

TICKET NO.	1120563310	TICKET TIME	11:48:24AM	DATE	6/8/2022
Customer No.	Payment Type	Customer Name			Order No.
7832096	Account	STRIDER CONST CO INC			10119468
Customer Job. No.	Customer P.O.			Map Ref.	Disp. Ord. #
	21NT			/	
Truck Type	Truck No.	Vehicle or License Plate No.		Trailer or License Plate No.	Zone
Truck & Trailer	RIV26TT				
Hauler/Carrier No.	Driver's Name	Delivered/Ordered		Load No.	Running Total
7886596		947.67 /		30	947.67

EV/P PORT OF EVERETT
2600 FEDERAL AVE
EVERETT

Product	Description	Total	Unit Price	Amount
99004	CLASS 2 SOILS DUMP (TN)	29.06		

SCALE WEIGHT	GROSS & TARE		
Gross 96,760 LB m	☒ Scale 1 ☐ Scale 2	A STANDBY SURCHARGE WILL BE ASSESSED FOR LOADS THAT EXCEED 10 MINUTES UNLOADING TIME.	Fuel Surcharge
Tare 38,640 LB/P.T.*	X Cate	LIABILITY WAIVER	Sales Tax
Net 58,120 LB m	Deputy Weighmaster	Cadman Materials, (Inc.) will not assume Liability for any property damage or any equipment damage for any delivery beyond the curb line.	**Total**

No one available to sign, customer waives receipt signature. ☐	Received by Signature	Print Name (Customer)	Driver's Signature	Standby Time
	X	X	X	

Arrive Job		Start Unloading		Finish Unloading		Standby Time		Customer's Initials	This Tickets Grand Total
								X	

CADMAN
HEIDELBERGCEMENTGroup®
(888) 322-6847 425-961-7100

WEIGHMASTER STATION
98785500
Everett Glenwood LND
6300 Glenwood Avenue
Everett, WA 98213

TICKET NO.	1120563311	TICKET TIME	12:13:16PM	DATE	6/8/2022

Customer No.	Payment Type	Customer Name	Order No.
7832096	Account	STRIDER CONST CO INC	10119468

Customer Job. No.	Customer P.O.	Map Ref.	Disp. Ord. #
	21NT	/	

Truck Type	Truck No.	Vehicle or License Plate No.	Trailer or License Plate No.	Zone
Truck & Trailer	RIV59TT			

Hauler/Carrier No.	Driver's Name	Delivered/Ordered	Load No.	Running Total
7886596		981.62 /	31	981.62

EV/P PORT OF EVERETT
2600 FEDERAL AVE
EVERETT

Product	Description	Total	Unit Price	Amount
99004	CLASS 2 SOILS DUMP (TN)	33.95		

SCALE WEIGHT

Gross 108,940 LB m
Tare 41,040 LB/P.T.*
Net 67,900 LB m

GROSS & TARE

☒ Scale 1 ☐ Scale 2

X Cate
Deputy Weighmaster

A STANDBY SURCHARGE WILL BE ASSESSED FOR LOADS THAT EXCEED 10 MINUTES UNLOADING TIME.

LIABILITY WAIVER

Cadman Materials, (Inc.) will not assume Liability for any property damage or any equipment damage for any delivery beyond the curb line.

Fuel Surcharge	
Sales Tax	
Total	
Standby Time	
This Tickets Grand Total	

No one available to sign, customer waives receipt signature ☐	Received by Signature	Print Name (Customer)	Driver's Signature
	X	X	X

Arrive Job		Start Unloading		Finish Unloading		Standby Time		Customer's Initials
								X

CADMAN
HEIDELBERGCEMENTGroup
(888) 322-6847 425-961-7100

WEIGHMASTER STATION
98785500
Everett Glenwood LND
6300 Glenwood Avenue
Everett, WA 98213

TICKET NO.	1120563312	TICKET TIME	12:29:11 PM	DATE	6/8/2022
Customer No.	Payment Type	Customer Name			Order No.
7832096	Account	STRIDER CONST CO INC			10119468
Customer Job. No.	Customer P.O.			Map Ref.	Disp. Ord. #
	21NT			/	
Truck Type	Truck No.	Vehicle or License Plate No.		Trailer or License Plate No.	Zone
Truck & Trailer	RIV57TT				
Hauler/Carrier No.	Driver's Name	Delivered/Ordered		Load No.	Running Total
7886596		,013.23 /		32	1,013.23

EV/P PORT OF EVERETT
2600 FEDERAL AVE
EVERETT

Product	Description	Total	Unit Price	Amount
99004	CLASS 2 SOILS DUMP (TN)	31.61		

SCALE WEIGHT	GROSS & TARE		Fuel Surcharge	
Gross 104,420 LB m	[X] Scale 1 [ ] Scale 2	A STANDBY SURCHARGE WILL BE ASSESSED FOR LOADS THAT EXCEED 10 MINUTES UNLOADING TIME.	Sales Tax	
Tare 41,200 LB/P.T.*	X Cate	LIABILITY WAIVER	**Total**	
Net 63,220 LB m	Deputy Weighmaster	Cadman Materials, (Inc.) will not assume Liability for any property damage or any equipment damage for any delivery beyond the curb line.	Standby Time	

No one available to sign, customer waives receipt signature. [ ]	Received by Signature	Print Name (Customer)	Driver's Signature	Customer's Initials	This Tickets Grand Total
	X	X	X	X	

Arrive Job		Start Unloading		Finish Unloading		Standby Time	

CADMAN
HEIDELBERGCEMENTGroup®
(888) 322-6847 425-961-7100

WEIGHMASTER STATION
98785500
Everett Glenwood LND
6300 Glenwood Avenue
Everett, WA 98213

TICKET NO.	1120563313	TICKET TIME	12:34:00PM	DATE	6/8/2022
Customer No.	Payment Type	Customer Name			Order No.
7832096	Account	STRIDER CONST CO INC			10119468
Customer Job. No.	Customer P.O.			Map Ref.	Disp. Ord. #
	21NT			/	
Truck Type	Truck No.	Vehicle or License Plate No.		Trailer or License Plate No.	Zone
Truck & Trailer	RIV61TT				
Hauler/Carrier No.	Driver's Name	Delivered/Ordered		Load No.	Running Total
7886596		,043.84 /		33	1,043.84

EV/P PORT OF EVERETT
2600 FEDERAL AVE
EVERETT

Product	Description	Total	Unit Price	Amount
99004	CLASS 2 SOILS DUMP (TN)	30.61		

SCALE WEIGHT

Gross 104,640 LB m
Tare 43,420 LB/P.T.*
Net 61,220 LB m

GROSS & TARE

☒ Scale 1 ☐ Scale 2

X Cate
Deputy Weighmaster

A STANDBY SURCHARGE WILL BE ASSESSED FOR LOADS THAT EXCEED 10 MINUTES UNLOADING TIME.

LIABILITY WAIVER

Cadman Materials, (Inc.) will not assume Liability for any property damage or any equipment damage for any delivery beyond the curb line.

Fuel Surcharge	
Sales Tax	
Total	
Standby Time	
This Tickets Grand Total	

No one available to sign, customer waives receipt signature. ☐	Received by Signature X	Print Name (Customer) X	Driver's Signature X

Arrive Job		Start Unloading		Finish Unloading		Standby Time		Customer's Initials X

CADMAN
HEIDELBERGCEMENTGroup
(888) 322-6847 425-961-7100

WEIGHMASTER STATION
98785500
Everett Glenwood LND
6300 Glenwood Avenue
Everett, WA 98213

TICKET NO.	1120563314	TICKET TIME	12:42:52PM	DATE	6/8/2022
Customer No.	Payment Type	Customer Name			Order No.
7832096	Account	STRIDER CONST CO INC			10119468
Customer Job. No.	Customer P.O.			Map Ref.	Disp. Ord. #
	21NT			/	
Truck Type	Truck No.	Vehicle or License Plate No.		Trailer or License Plate No.	Zone
Truck & Trailer	RIV62TT				
Hauler/Carrier No.	Driver's Name	Delivered/Ordered		Load No.	Running Total
		,076.81 /		34	1,076.81

EV/P PORT OF EVERETT
2600 FEDERAL AVE
EVERETT

Product	Description	Total	Unit Price	Amount
99004	CLASS 2 SOILS DUMP (TN)	32.97		

SCALE WEIGHT	GROSS & TARE		Fuel Surcharge	
Gross 107,620 LB m	☒ Scale 1 ☐ Scale 2	**A STANDBY SURCHARGE WILL BE ASSESSED FOR LOADS THAT EXCEED 10 MINUTES UNLOADING TIME.**	Sales Tax	
Tare 41,680 LB/P.T.*	X Cate	**LIABILITY WAIVER**	**Total**	
Net 65,940 LB m	Deputy Weighmaster	**Cadman Materials, (Inc.) will not assume Liability for any property damage or any equipment damage for any delivery beyond the curb line.**	Standby Time	

No one available to sign, customer waives receipt signature. ☐	Received by Signature X	Print Name (Customer) X	Driver's Signature X	Customer's Initials X	This Tickets Grand Total

Arrive Job		Start Unloading		Finish Unloading		Standby Time	

CADMAN
HEIDELBERGCEMENTGroup®
(888) 322-6847 425-961-7100

WEIGHMASTER STATION
98785500
Everett Glenwood LND
6300 Glenwood Avenue
Everett, WA 98213

TICKET NO.	1120563315	TICKET TIME	12:44:13PM	DATE	6/8/2022
Customer No. 7832096	Payment Type Account	Customer Name STRIDER CONST CO INC			Order No. 10119468
Customer Job. No.	Customer P.O. 21NT		Map Ref. /		Disp. Ord. #
Truck Type Truck & Trailer	Truck No. RIV60TT	Vehicle or License Plate No.	Trailer or License Plate No.		Zone
Hauler/Carrier No. 7886596	Driver's Name	Delivered/Ordered 108.43 /	Load No. 35		Running Total 1,108.43

EV/P PORT OF EVERETT
2600 FEDERAL AVE
EVERETT

Product	Description	Total	Unit Price	Amount
99004	CLASS 2 SOILS DUMP (TN)	31.62		

SCALE WEIGHT

Gross 104,720 LB m
Tare 41,480 LB/P.T.*
Net 63,240 LB m

GROSS & TARE

☒ Scale 1 ☐ Scale 2

X Cate
Deputy Weighmaster

A STANDBY SURCHARGE WILL BE ASSESSED FOR LOADS THAT EXCEED 10 MINUTES UNLOADING TIME.

LIABILITY WAIVER

Cadman Materials, (Inc.) will not assume Liability for any property damage or any equipment damage for any delivery beyond the curb line.

Fuel Surcharge	
Sales Tax	
Total	
Standby Time	
This Tickets Grand Total	

No one available to sign, customer waives receipt signature. ☐

Received by Signature X

Print Name (Customer) X

Driver's Signature X

Customer's Initials X

Arrive Job		Start Unloading		Finish Unloading		Standby Time	

CADMAN
HEIDELBERGCEMENTGroup®
(888) 322-6847 425-961-7100

WEIGHMASTER STATION
98785500
Everett Glenwood LND
6300 Glenwood Avenue
Everett, WA 98213

TICKET NO.	TICKET TIME	DATE
1120563316	12:51:04PM	6/8/2022

Customer No.	Payment Type	Customer Name	Order No.
7832096	Account	STRIDER CONST CO INC	10119468

Customer Job. No.	Customer P.O.	Map Ref.	Disp. Ord. #
	21NT	/	

Truck Type	Truck No.	Vehicle or License Plate No.	Trailer or License Plate No.	Zone
Truck & Trailer	RIV26TT			

Hauler/Carrier No.	Driver's Name	Delivered/Ordered	Load No.	Running Total
7886596		,137.49 /	36	1,137.49

EV/P PORT OF EVERETT
2600 FEDERAL AVE
EVERETT

Product	Description	Total	Unit Price	Amount
99004	CLASS 2 SOILS DUMP (TN)	29.06		

SCALE WEIGHT

Gross 96,760 LB m
Tare 38,640 LB/P.T.*
Net 58,120 LB m

GROSS & TARE

☒ Scale 1 ☐ Scale 2

X Cate
Deputy Weighmaster

A STANDBY SURCHARGE WILL BE ASSESSED FOR LOADS THAT EXCEED 10 MINUTES UNLOADING TIME.

LIABILITY WAIVER

Cadman Materials, (Inc.) will not assume Liability for any property damage or any equipment damage for any delivery beyond the curb line.

Fuel Surcharge	
Sales Tax	
Total	
Standby Time	
This Tickets Grand Total	

No one available to sign, customer waives receipt signature. ☐	Received by Signature	Print Name (Customer)	Driver's Signature
	X	X	X

Arrive Job		Start Unloading		Finish Unloading		Standby Time		Customer's Initials
								X

REPRINT

CADMAN
HEIDELBERGCEMENTGroup®
(888) 322-6847 425-961-7100

WEIGHMASTER STATION
98785500
Everett Glenwood LND
6300 Glenwood Avenue
Everett, WA 98213

TICKET NO.	1120563317	TICKET TIME	1:12:18PM	DATE	6/8/2022
Customer No.	Payment Type	Customer Name			Order No.
7832096	Account	STRIDER CONST CO INC			10119468
Customer Job. No.	Customer P.O.			Map Ref.	Disp. Ord. #
	21NT			/	
Truck Type	Truck No.	Vehicle or License Plate No.		Trailer or License Plate No.	Zone
Truck & Trailer	RIV59TT				
Hauler/Carrier No.	Driver's Name	Delivered/Ordered		Load No.	Running Total
7886596		,170.62 /		37	1,170.62

EV/P PORT OF EVERETT
2600 FEDERAL AVE
EVERETT

Product	Description	Total	Unit Price	Amount
99004	CLASS 2 SOILS DUMP (TN)	33.13		

SCALE WEIGHT	GROSS & TARE
Gross 107,300 LB m	☒ Scale 1 ☐ Scale 2
Tare 41,040 LB/P.T.*	X Cate
Net 66,260 LB m	Deputy Weighmaster

A STANDBY SURCHARGE WILL BE ASSESSED FOR LOADS THAT EXCEED 10 MINUTES UNLOADING TIME.

LIABILITY WAIVER

Cadman Materials, (Inc.) will not assume Liability for any property damage or any equipment damage for any delivery beyond the curb line.

Fuel Surcharge	
Sales Tax	
Total	
Standby Time	
This Tickets Grand Total	

No one available to sign, customer waives receipt signature. ☐	Received by Signature X	Print Name (Customer) X	Driver's Signature X

Arrive Job		Start Unloading		Finish Unloading		Standby Time		Customer's Initials X

CADMAN
HEIDELBERGCEMENTGroup
(888) 322-6847 425-961-7100

WEIGHMASTER STATION
98785500
Everett Glenwood LND
6300 Glenwood Avenue
Everett, WA 98213

TICKET NO.	1120563318	TICKET TIME	1:30:26PM	DATE	6/8/2022
Customer No.	Payment Type	Customer Name			Order No.
7832096	Account	STRIDER CONST CO INC			10119468
Customer Job. No.	Customer P.O.			Map Ref.	Disp. Ord. #
	21NT			/	
Truck Type	Truck No.	Vehicle or License Plate No.		Trailer or License Plate No.	Zone
Truck & Trailer	RIV57TT				
Hauler/Carrier No.	Driver's Name	Delivered/Ordered		Load No.	Running Total
7886596		,203.22 /		38	1,203.22

EV/P PORT OF EVERETT
2600 FEDERAL AVE
EVERETT

Product	Description	Total	Unit Price	Amount
99004	CLASS 2 SOILS DUMP (TN)	32.60		

SCALE WEIGHT	GROSS & TARE		
Gross 106,400 LB m	[X] Scale 1 [ ] Scale 2	A STANDBY SURCHARGE WILL BE ASSESSED FOR LOADS THAT EXCEED 10 MINUTES UNLOADING TIME.	Fuel Surcharge
Tare 41,200 LB/P.T.*		LIABILITY WAIVER	Sales Tax
Net 65,200 LB m	X Cate Deputy Weighmaster	Cadman Materials, (Inc.) will not assume Liability for any property damage or any equipment damage for any delivery beyond the curb line.	**Total**

No one available to sign, customer waives receipt signature. [ ]	Received by Signature	Print Name (Customer)	Driver's Signature	Standby Time
	X	X	X	

Arrive Job		Start Unloading		Finish Unloading		Standby Time		Customer's Initials	This Tickets Grand Total
								X	

CADMAN
HEIDELBERGCEMENTGroup
(888) 322-6847 425-961-7100

WEIGHMASTER STATION
98785500
Everett Glenwood LND
6300 Glenwood Avenue
Everett, WA 98213

TICKET NO.	1120563319	TICKET TIME	1:31:47PM	DATE	6/8/2022
Customer No.	Payment Type	Customer Name			Order No.
7832096	Account	STRIDER CONST CO INC			10119468
Customer Job. No.	Customer P.O.			Map Ref.	Disp. Ord. #
	21NT			/	
Truck Type	Truck No.	Vehicle or License Plate No.		Trailer or License Plate No.	Zone
Truck & Trailer	RIV61TT				
Hauler/Carrier No.	Driver's Name	Delivered/Ordered		Load No.	Running Total
7886596		,234.77 /		39	1,234.77

EV/P PORT OF EVERETT
2600 FEDERAL AVE
EVERETT

Product	Description	Total	Unit Price	Amount
99004	CLASS 2 SOILS DUMP (TN)	31.55		

SCALE WEIGHT	GROSS & TARE		
Gross 106,520 LB m	☒ Scale 1 ☐ Scale 2	A STANDBY SURCHARGE WILL BE ASSESSED FOR LOADS THAT EXCEED 10 MINUTES UNLOADING TIME.	Fuel Surcharge
Tare 43,420 LB/P.T.*	X Cate	LIABILITY WAIVER	Sales Tax
Net 63,100 LB m	Deputy Weighmaster	Cadman Materials, (Inc.) will not assume Liability for any property damage or any equipment damage for any delivery beyond the curb line.	**Total**

No one available to sign, customer waives receipt signature. ☐	Received by Signature	Print Name (Customer)	Driver's Signature	Standby Time
	X	X	X	

Arrive Job		Start Unloading		Finish Unloading		Standby Time		Customer's Initials	This Tickets Grand Total
								X	

CADMAN
HEIDELBERGCEMENTGroup
(888) 322-6847 425-961-7100

WEIGHMASTER STATION
98785500
Everett Glenwood LND
6300 Glenwood Avenue
Everett, WA 98213

TICKET NO.	1120563320	TICKET TIME	1:43:39PM	DATE	6/8/2022
Customer No.	Payment Type	Customer Name			Order No.
7832096	Account	STRIDER CONST CO INC			10119468
Customer Job. No.	Customer P.O.			Map Ref.	Disp. Ord. #
	21NT			/	
Truck Type	Truck No.	Vehicle or License Plate No.		Trailer or License Plate No.	Zone
Truck & Trailer	RIV62TT				
Hauler/Carrier No.	Driver's Name	Delivered/Ordered		Load No.	Running Total
		,267.67 /		40	1,267.67

EV/P PORT OF EVERETT
2600 FEDERAL AVE
EVERETT

Product	Description	Total	Unit Price	Amount
99004	CLASS 2 SOILS DUMP (TN)	32.90		

SCALE WEIGHT	GROSS & TARE		
Gross 107,480 LB m	☒ Scale 1 ☐ Scale 2	A STANDBY SURCHARGE WILL BE ASSESSED FOR LOADS THAT EXCEED 10 MINUTES UNLOADING TIME.	Fuel Surcharge
Tare 41,680 LB/P.T.*		LIABILITY WAIVER	Sales Tax
Net 65,800 LB m	X Cate Deputy Weighmaster	Cadman Materials, (Inc.) will not assume Liability for any property damage or any equipment damage for any delivery beyond the curb line.	**Total**

No one available to sign, customer waives receipt signature. ☐	Received by Signature	Print Name (Customer)	Driver's Signature	Standby Time
	X	X	X	

Arrive Job		Start Unloading		Finish Unloading		Standby Time		Customer's Initials	This Tickets Grand Total
								X	

CADMAN
HEIDELBERGCEMENTGroup®
(888) 322-6847 425-961-7100

WEIGHMASTER STATION
98785500
Everett Glenwood LND
6300 Glenwood Avenue
Everett, WA 98213

TICKET NO.	1120563321	TICKET TIME	1:45:08PM	DATE	6/8/2022
Customer No.	Payment Type	Customer Name			Order No.
7832096	Account	STRIDER CONST CO INC			10119468
Customer Job. No.	Customer P.O.			Map Ref.	Disp. Ord. #
	21NT			/	
Truck Type	Truck No.	Vehicle or License Plate No.		Trailer or License Plate No.	Zone
Truck & Trailer	RIV60TT				
Hauler/Carrier No.	Driver's Name	Delivered/Ordered		Load No.	Running Total
7886596		,299.25 /		41	1,299.25

EV/P PORT OF EVERETT
2600 FEDERAL AVE
EVERETT

Product	Description	Total	Unit Price	Amount
99004	CLASS 2 SOILS DUMP (TN)	31.58		

SCALE WEIGHT

Gross 104,640 LB m
Tare 41,480 LB/P.T.*
Net 63,160 LB m

GROSS & TARE

☒ Scale 1 ☐ Scale 2

X Cate
Deputy Weighmaster

A STANDBY SURCHARGE WILL BE ASSESSED FOR LOADS THAT EXCEED 10 MINUTES UNLOADING TIME.

LIABILITY WAIVER

Cadman Materials, (Inc.) will not assume Liability for any property damage or any equipment damage for any delivery beyond the curb line.

Fuel Surcharge	
Sales Tax	
Total	
Standby Time	
This Tickets Grand Total	

No one available to sign, customer waives receipt signature. ☐	Received by Signature	Print Name (Customer)	Driver's Signature
	X	X	X

Arrive Job		Start Unloading		Finish Unloading		Standby Time		Customer's Initials
								X

CADMAN
HEIDELBERGCEMENTGroup
(888) 322-6847 425-961-7100

WEIGHMASTER STATION
98785500
Everett Glenwood LND
6300 Glenwood Avenue
Everett, WA 98213

TICKET NO.	1120563322	TICKET TIME	1:56:29PM	DATE	6/8/2022
Customer No.	Payment Type	Customer Name			Order No.
7832096	Account	STRIDER CONST CO INC			10119468
Customer Job. No.	Customer P.O.			Map Ref.	Disp. Ord. #
	21NT			/	
Truck Type	Truck No.	Vehicle or License Plate No.		Trailer or License Plate No.	Zone
Truck & Trailer	RIV26TT				
Hauler/Carrier No.	Driver's Name	Delivered/Ordered		Load No.	Running Total
7886596		1,328.74 /		42	1,328.74

EV/P PORT OF EVERETT
2600 FEDERAL AVE
EVERETT

Product	Description	Total	Unit Price	Amount
99004	CLASS 2 SOILS DUMP (TN)	29.49		

SCALE WEIGHT	GROSS & TARE		Fuel Surcharge	
Gross 97,620 LB M	☒ Scale 1 ☐ Scale 2	A STANDBY SURCHARGE WILL BE ASSESSED FOR LOADS THAT EXCEED 10 MINUTES UNLOADING TIME.	Sales Tax	
Tare 38,640 LB P.T.*	X Cate	**LIABILITY WAIVER**	**Total**	
Net 58,980 LB M	Deputy Weighmaster	**Cadman Materials, (Inc.) will not assume Liability for any property damage or any equipment damage for any delivery beyond the curb line.**		

No one available to sign, customer waives receipt signature. ☐	Received by Signature	Print Name (Customer)	Driver's Signature	Standby Time	
	X	X	X		

Arrive Job		Start Unloading		Finish Unloading		Standby Time		Customer's Initials	This Tickets Grand Total	
								X		

CADMAN
HEIDELBERGCEMENTGroup
(888) 322-6847 425-961-7100

WEIGHMASTER STATION
98785500
Everett Glenwood LND
6300 Glenwood Avenue
Everett, WA 98213

TICKET NO.	1120563323	TICKET TIME	2:20:34PM	DATE	6/8/2022
Customer No.	Payment Type	Customer Name			Order No.
7832096	Account	STRIDER CONST CO INC			10119468
Customer Job. No.	Customer P.O.			Map Ref.	Disp. Ord. #
	21NT			/	
Truck Type	Truck No.	Vehicle or License Plate No.		Trailer or License Plate No.	Zone
Truck & Trailer	RIV59TT				
Hauler/Carrier No.	Driver's Name	Delivered/Ordered		Load No.	Running Total
7886596		362.15 /		43	1,362.15

EV/P PORT OF EVERETT
2600 FEDERAL AVE
EVERETT

Product	Description	Total	Unit Price	Amount
99004	CLASS 2 SOILS DUMP (TN)	33.41		

SCALE WEIGHT	GROSS & TARE		
Gross 107,860 LB m	☒ Scale 1 ☐ Scale 2	A STANDBY SURCHARGE WILL BE ASSESSED FOR LOADS THAT EXCEED 10 MINUTES UNLOADING TIME.	Fuel Surcharge
Tare 41,040 LB/P.T.*	X Cate	LIABILITY WAIVER	Sales Tax
Net 66,820 LB m	Deputy Weighmaster	Cadman Materials, (Inc.) will not assume Liability for any property damage or any equipment damage for any delivery beyond the curb line.	**Total**

No one available to sign, customer waives receipt signature. ☐	Received by Signature	Print Name (Customer)	Driver's Signature	Standby Time
	X	X	X	

Arrive Job		Start Unloading		Finish Unloading		Standby Time		Customer's Initials	This Tickets Grand Total	
								X		

CADMAN
HEIDELBERGCEMENTGroup
(888) 322-6847 425-961-7100

WEIGHMASTER STATION
98785500
Everett Glenwood LND
6300 Glenwood Avenue
Everett, WA 98213

TICKET NO.	1120563324	TICKET TIME	2:37:44PM	DATE	6/8/2022
Customer No.	Payment Type	Customer Name			Order No.
7832096	Account	STRIDER CONST CO INC			10119468
Customer Job. No.	Customer P.O.			Map Ref.	Disp. Ord. #
	21NT			/	
Truck Type	Truck No.	Vehicle or License Plate No.		Trailer or License Plate No.	Zone
Truck & Trailer	RIV57TT				
Hauler/Carrier No.	Driver's Name	Delivered/Ordered		Load No.	Running Total
7886596		,395.11 /		44	1,395.11

EV/P PORT OF EVERETT
2600 FEDERAL AVE
EVERETT

Product	Description	Total	Unit Price	Amount
99004	CLASS 2 SOILS DUMP (TN)	32.96		

SCALE WEIGHT	GROSS & TARE			
Gross 107,120 LB m	☒ Scale 1 ☐ Scale 2	A STANDBY SURCHARGE WILL BE ASSESSED FOR LOADS THAT EXCEED 10 MINUTES UNLOADING TIME.	Fuel Surcharge	
Tare 41,200 LB/P.T.*		**LIABILITY WAIVER**	Sales Tax	
Net 65,920 LB m	X Cate Deputy Weighmaster	Cadman Materials, (Inc.) will not assume Liability for any property damage or any equipment damage for any delivery beyond the curb line.	**Total**	

No one available to sign, customer waives receipt signature. ☐	Received by Signature X	Print Name (Customer) X	Driver's Signature X	Standby Time	

Arrive Job		Start Unloading		Finish Unloading		Standby Time		Customer's Initials X	This Tickets Grand Total	

CADMAN
HEIDELBERGCEMENTGroup
(888) 322-6847 425-961-7100

WEIGHMASTER STATION
98785500
Everett Glenwood LND
6300 Glenwood Avenue
Everett, WA 98213

TICKET NO	1120563325	TICKET TIME	2:43:04PM	DATE	6/8/2022

Customer No.	Payment Type	Customer Name	Order No.
7832096	Account	STRIDER CONST CO INC	10119468

Customer Job. No.	Customer P.O.	Map Ref.	Disp. Ord. #
	21NT	/	

Truck Type	Truck No.	Vehicle or License Plate No.	Trailer or License Plate No.	Zone
Truck & Trailer	RIV61TT			

Hauler/Carrier No.	Driver's Name	Delivered/Ordered	Load No.	Running Total
7886596		,426.73 /	45	1,426.73

EV/P PORT OF EVERETT
2600 FEDERAL AVE
EVERETT

Product	Description	Total	Unit Price	Amount
99004	CLASS 2 SOILS DUMP (TN)	31.62		

SCALE WEIGHT		GROSS & TARE
Gross	106,660 LB m	☒ Scale 1 ☐ Scale 2
Tare	43,420 LB/P.T.*	X Cate
Net	63,240 LB m	Deputy Weighmaster

A STANDBY SURCHARGE WILL BE ASSESSED FOR LOADS THAT EXCEED 10 MINUTES UNLOADING TIME.

LIABILITY WAIVER

Cadman Materials, (Inc.) will not assume Liability for any property damage or any equipment damage for any delivery beyond the curb line.

Fuel Surcharge	
Sales Tax	
Total	
Standby Time	

No one available to sign, customer waives receipt signature. ☐	Received by Signature	Print Name (Customer)	Driver's Signature
	X	X	X

Arrive Job		Start Unloading		Finish Unloading		Standby Time		Customer's Initials	This Tickets Grand Total
								X	

Bid Item 17

Raw Ticket Data	
Ticket	2666291
Ticket Status	Pending
Date Printed	Jun 28, 2022
Time Printed	3:22 PM PDT
District	-
Supplier	Granite Construction
Supplier Code	-
Plant Name	SMITH ISLAND ASPHALT PLANT
Origin Address	-
Contract Number	-
Jobsite ID	22030-EVT - NORTON TERMINAL DEV
Job Number	22030
Ticketed Phase Description	-
Customer Name	GRANITE CONSTRUCTION COMPANY
Applied Phase Code	-
Ticketed Phase Code	-
Hauler	-
Truck	048532S
Picked Up By	-
License	-
Max GVW	30000
Received By	-
Product Description	1/2"HMA58H-22ST
Product	3947
Product Code	-
Material	-
Supplier Comments	- -
Load Number	31
Daily Total	518.06
Gross	30.70
Tare	13.82
Net	16.88
UOM	Tons
Weighmaster	SMCOFFMAN
Deputy	SMCOFFMAN

Inspector review: DOT Pending

Waste
-

Notes
-

Inspector
-

Inspector review: Contractor Pending

Field Temp	Plant Temp	Waste
-	-	-

Notes
-

Inspector
-

Raw Ticket Data	
Ticket	2666050
Ticket Status	Pending
Date Printed	Jun 27, 2022
Time Printed	11:39 AM PDT
District	-
Supplier	Granite Construction
Supplier Code	-
Plant Name	SMITH ISLAND ASPHALT PLANT
Origin Address	-
Contract Number	-
Jobsite ID	22030-EVT - NORTON TERMINAL DEV
Job Number	22030
Ticketed Phase Description	-
Customer Name	GRANITE CONSTRUCTION COMPANY
Applied Phase Code	-
Ticketed Phase Code	-
Hauler	-
Truck	0486SS
Picked Up By	-
License	-
Max GVW	30000
Received By	-
Product Description	1/2"HMA58H-22ST
Product	3947
Product Code	-
Material	-
Supplier Comments	- -
Load Number	21
Daily Total	367.59
Gross	39.75
Tare	16.01
Net	23.74
UOM	Tons
Weighmaster	SMCOFFMAN
Deputy	SMCOFFMAN

Inspector review: DOT Pending

Waste
-

Notes
-

Inspector
-

Inspector review: Contractor Pending

Field Temp	Plant Temp	Waste
-	-	-

Notes
-

Inspector
-

Raw Ticket Data	
Ticket	2665972
Ticket Status	Pending
Date Printed	Jun 27, 2022
Time Printed	7:29 AM PDT
District	-
Supplier	Granite Construction
Supplier Code	-
Plant Name	SMITH ISLAND ASPHALT PLANT
Origin Address	-
Contract Number	-
Jobsite ID	22030-EVT - NORTON TERMINAL DEV
Job Number	22030
Ticketed Phase Description	-
Customer Name	GRANITE CONSTRUCTION COMPANY
Applied Phase Code	-
Ticketed Phase Code	-
Hauler	-
Truck	0486SS
Picked Up By	-
License	-
Max GVW	30000
Received By	-
Product Description	1/2"HMA58H-22ST
Product	3947
Product Code	-
Material	-
Supplier Comments	- -
Load Number	5
Daily Total	87.95
Gross	39.62
Tare	16.03
Net	23.59
UOM	Tons
Weighmaster	SMCOFFMAN
Deputy	SMCOFFMAN

Inspector review: DOT Pending

Waste
-

Notes
-

Inspector
-

Inspector review: Contractor Pending

Field Temp	Plant Temp	Waste
-	-	-

Notes
-

Inspector
-

ORIGINAL

GRANITE™

SMITH ISLAND ASPHALT
2111 ROSS AVE
EVERETT, WA 98205
425-252-9592

Ticket No. **2665962**
6/27/2022 7:09:15AM

Customer: GRANITE CONSTRUCTION COMPANY 2
Order ID: 22030
Job/PO# : 1136527
Cost Code
Location: EVT - NORTON TERMINAL DEV
2600 FEDERAL AVE

Comments:

Vehicle: 048688S WHITE GRANITE TERRY
License: | |
Carrier:
Product : 3947 1/2"HMA58H-22ST

	Pounds	Metric Tons	Tons
Gross	55,400	25.13	27.70
Tare	25,800	11.70	12.90
Net	29,600	13.43	14.80

Scale: 1

FOB: PICK-UP

This Load:	**14.80**	**TONS**
Load No:	1	
Shipped:	14.80	TONS

Weighmaster: Granite Construction Company
Deputy: Shanin Coffman

WEIGHMASTER CERTIFICATE

~~Missing~~ Load 5+21 Missing but last ticket has the total tonage on it.
Accepted by: _____

WARNING: THIS PRODUCT CONTAINS CRYSTALLINE SILICA(QUARTZ). CRYSTALLINE SILICA IS A COMMON NATURALLY OCCURING MINERAL FOUND IN SAND AND ROCKPROLONGED AND REPEATE BREATHING OF CRYSTALLINE SILICA DUST MAY CAUSE RESPIRATORY AND OTHER HEALTH PROBLEMS, INCLUDING LUNG DISEASE, SILICOSIS AND CANCER, WHICH MAY RESULT IN PERMANENT INJURY OR DEATH. BEFORE USING OR HANDLING THIS PRODUCT READ THE MATERIAL SAFETY DATA SHEET FOR MORE DETAILED INFORMATION INCLUDING INFORMATION ON APPROPRIATE RESPIRATORY PROTECTION. MSDS SHEETS AVAILABLE AT WWW.GRANITECONSTRUCTION.COM/MSDS OR BY CONTACTING YOUR LOCAL OFFICE

gci rev 04/21

COPY

GRANITE™

SMITH ISLAND ASPHALT
2111 ROSS AVE.
EVERETT, WA 98205
425-252-9592

Ticket No. **2665962**
6/27/2022 7:09:15AM

Customer: GRANITE CONSTRUCTION COMPANY 2
Order ID: 22030
Job/PO# : 1136527
Cost Code
Location: EVT - NORTON TERMINAL DEV
2600 FEDERAL AVE

Comments:

Vehicle: 048688S WHITE GRANITE TERRY
License: | |
Carrier:
Product : 3947 1/2"HMA58H-22ST

	Pounds	Metric Tons	Tons
Gross	55,400	25.13	27.70
Tare	25,800	11.70	12.90
Net	29,600	13.43	14.80

Scale: 1

FOB: PICK-UP

This Load:	**14.80**	**TONS**
Load No:	1	
Shipped:	14.80	TONS

Weighmaster: Granite Construction Company
Deputy: Shanin Coffman

WEIGHMASTER CERTIFICATE

Accepted by: _____

WARNING: THIS PRODUCT CONTAINS CRYSTALLINE SILICA(QUARTZ). CRYSTALLINE SILICA IS A COMMON NATURALLY OCCURING MINERAL FOUND IN SAND AND ROCKPROLONGED AND REPEATE BREATHING OF CRYSTALLINE SILICA DUST MAY CAUSE RESPIRATORY AND OTHER HEALTH PROBLEMS, INCLUDING LUNG DISEASE, SILICOSIS AND CANCER, WHICH MAY RESULT IN PERMANENT INJURY OR DEATH. BEFORE USING OR HANDLING THIS PRODUCT READ THE MATERIAL SAFETY DATA SHEET FOR MORE DETAILED INFORMATION INCLUDING INFORMATION ON APPROPRIATE RESPIRATORY PROTECTION. MSDS SHEETS AVAILABLE AT WWW.GRANITECONSTRUCTION.COM/MSDS OR BY CONTACTING YOUR LOCAL OFFICE

gci rev 04/21

ORIGINAL

GRANITE™

SMITH ISLAND ASPHALT
2111 ROSS AVE.
EVERETT, WA 98205
425-252-9592

Ticket No. **2665966**
6/27/2022 7:18:12AM

Customer: GRANITE CONSTRUCTION COMPANY 2
Order ID: 22030
Job/PO# : 1136527
Cost Code
Location: EVT - NORTON TERMINAL DEV
2600 FEDERAL AVE

Comments:

Vehicle: 0466S GREEN PETE
License: | |
Carrier:
Product : 3947 1/2"HMA58H-22ST

	Pounds	Metric Tons	Tons
Gross	61,140	27.73	30.57
Tare	27,380	12.42	13.69
Net	33,760	15.31	16.88

Scale: 1

FOB: PICK-UP

This Load:	**16.88**	**TONS**
Load No:	2	
Shipped:	31.68	TONS

Weighmaster: Granite Construction Company
Deputy: Shanin Coffman

WEIGHMASTER CERTIFICATE

Accepted by: _____

WARNING: THIS PRODUCT CONTAINS CRYSTALLINE SILICA(QUARTZ). CRYSTALLINE SILICA IS A COMMON NATURALLY OCCURING MINERAL FOUND IN SAND AND ROCKPROLONGED AND REPEATE BREATHING OF CRYSTALLINE SILICA DUST MAY CAUSE RESPIRATORY AND OTHER HEALTH PROBLEMS, INCLUDING LUNG DISEASE, SILICOSIS AND CANCER, WHICH MAY RESULT IN PERMANENT INJURY OR DEATH. BEFORE USING OR HANDLING THIS PRODUCT READ THE MATERIAL SAFETY DATA SHEET FOR MORE DETAILED INFORMATION INCLUDING INFORMATION ON APPROPRIATE RESPIRATORY PROTECTION. MSDS SHEETS AVAILABLE AT WWW.GRANITECONSTRUCTION.COM/MSDS OR BY CONTACTING YOUR LOCAL OFFICE

gci rev. 04/21

COPY

GRANITE™

SMITH ISLAND ASPHALT
2111 ROSS AVE.
EVERETT, WA 98205
425-252-9592

Ticket No. **2665966**
6/27/2022 7:18:12AM

Customer: GRANITE CONSTRUCTION COMPANY 2
Order ID: 22030
Job/PO# : 1136527
Cost Code
Location: EVT - NORTON TERMINAL DEV
2600 FEDERAL AVE

Comments:

Vehicle: 0466S GREEN PETE
License: | |
Carrier:
Product : 3947 1/2"HMA58H-22ST

	Pounds	Metric Tons	Tons
Gross	61,140	27.73	30.57
Tare	27,380	12.42	13.69
Net	33,760	15.31	16.88

Scale: 1

FOB: PICK-UP

This Load:	**16.88**	**TONS**
Load No:	2	
Shipped:	31.68	TONS

Weighmaster: Granite Construction Company
Deputy: Shanin Coffman

WEIGHMASTER CERTIFICATE

Accepted by: _____

WARNING: THIS PRODUCT CONTAINS CRYSTALLINE SILICA(QUARTZ). CRYSTALLINE SILICA IS A COMMON NATURALLY OCCURING MINERAL FOUND IN SAND AND ROCKPROLONGED AND REPEATE BREATHING OF CRYSTALLINE SILICA DUST MAY CAUSE RESPIRATORY AND OTHER HEALTH PROBLEMS, INCLUDING LUNG DISEASE, SILICOSIS AND CANCER, WHICH MAY RESULT IN PERMANENT INJURY OR DEATH. BEFORE USING OR HANDLING THIS PRODUCT READ THE MATERIAL SAFETY DATA SHEET FOR MORE DETAILED INFORMATION INCLUDING INFORMATION ON APPROPRIATE RESPIRATORY PROTECTION. MSDS SHEETS AVAILABLE AT WWW.GRANITECONSTRUCTION.COM/MSDS OR BY CONTACTING YOUR LOCAL OFFICE

gci rev. 04/21

ORIGINAL

GRANITE™

SMITH ISLAND ASPHALT
2111 ROSS AVE.
EVERETT, WA 98205
425-252-9592

Ticket No. **2665968**
6/27/2022 7:22:37AM

Customer: GRANITE CONSTRUCTION COMPANY 2
Order ID: 22030
Job/PO# : 1136527
Cost Code
Location: EVT - NORTON TERMINAL DEV
2600 FEDERAL AVE

Comments:

Vehicle: G4S KW
License: | |
Carrier:
Product : 3947 1/2"HMA58H-22ST

	Pounds	Metric Tons	Tons
Gross	61,640	27.96	30.82
Tare	26,780	12.15	13.39
Net	34,860	15.81	17.43

Scale: 1

FOB: PICK-UP

This Load:	**17.43**	**TONS**
Load No:	3	
Shipped:	49.11	TONS

Weighmaster: Granite Construction Company
Deputy: Shanin Coffman

WEIGHMASTER CERTIFICATE

Accepted by: _____

WARNING: THIS PRODUCT CONTAINS CRYSTALLINE SILICA(QUARTZ). CRYSTALLINE SILICA IS A COMMON NATURALLY OCCURING MINERAL FOUND IN SAND AND ROCKPROLONGED AND REPEATE BREATHING OF CRYSTALLINE SILICA DUST MAY CAUSE RESPIRATORY AND OTHER HEALTH PROBLEMS, INCLUDING LUNG DISEASE, SILICOSIS AND CANCER, WHICH MAY RESULT IN PERMANENT INJURY OR DEATH. BEFORE USING OR HANDLING THIS PRODUCT READ THE MATERIAL SAFETY DATA SHEET FOR MORE DETAILED INFORMATION INCLUDING INFORMATION ON APPROPRIATE RESPIRATORY PROTECTION. MSDS SHEETS AVAILABLE AT WWW.GRANITECONSTRUCTION.COM/MSDS OR BY CONTACTING YOUR LOCAL OFFICE

gci rev 04/21

COPY

GRANITE™

SMITH ISLAND ASPHALT
2111 ROSS AVE.
EVERETT, WA 98205
425-252-9592

Ticket No. **2665968**
6/27/2022 7:22:37AM

Customer: GRANITE CONSTRUCTION COMPANY 2
Order ID: 22030
Job/PO# : 1136527
Cost Code
Location: EVT - NORTON TERMINAL DEV
2600 FEDERAL AVE

Comments:

Vehicle: G4S KW
License: | |
Carrier:
Product : 3947 1/2"HMA58H-22ST

	Pounds	Metric Tons	Tons
Gross	61,640	27.96	30.82
Tare	26,780	12.15	13.39
Net	34,860	15.81	17.43

Scale: 1

FOB: PICK-UP

This Load:	**17.43**	**TONS**
Load No:	3	
Shipped:	49.11	TONS

Weighmaster: Granite Construction Company
Deputy: Shanin Coffman

WEIGHMASTER CERTIFICATE

Accepted by: _____

WARNING: THIS PRODUCT CONTAINS CRYSTALLINE SILICA(QUARTZ). CRYSTALLINE SILICA IS A COMMON NATURALLY OCCURING MINERAL FOUND IN SAND AND ROCKPROLONGED AND REPEATE BREATHING OF CRYSTALLINE SILICA DUST MAY CAUSE RESPIRATORY AND OTHER HEALTH PROBLEMS, INCLUDING LUNG DISEASE, SILICOSIS AND CANCER, WHICH MAY RESULT IN PERMANENT INJURY OR DEATH. BEFORE USING OR HANDLING THIS PRODUCT READ THE MATERIAL SAFETY DATA SHEET FOR MORE DETAILED INFORMATION INCLUDING INFORMATION ON APPROPRIATE RESPIRATORY PROTECTION. MSDS SHEETS AVAILABLE AT WWW.GRANITECONSTRUCTION.COM/MSDS OR BY CONTACTING YOUR LOCAL OFFICE

gci rev 04/21

ORIGINAL

GRANITE™

SMITH ISLAND ASPHALT
2111 ROSS AVE.
EVERETT, WA 98205
425-252-9592

Ticket No. **2665970**
6/27/2022 7:26:17AM

Customer: GRANITE CONSTRUCTION COMPANY 2
Order ID: 22030
Job/PO# : 1136527
Cost Code
Location: EVT - NORTON TERMINAL DEV
2600 FEDERAL AVE

Comments:

Vehicle: G2S MAROON SOLO
License: | |
Carrier:
Product : 3947 1/2"HMA58H-22ST

	Pounds	Metric Tons	Tons
Gross	55,680	25.26	27.84
Tare	25,180	11.42	12.59
Net	30,500	13.83	15.25

Scale: 1

FOB: PICK-UP

This Load: 15.25 TONS

Load No: 4
Shipped: 64.36 TONS

Weighmaster: Granite Construction Company
Deputy: Shanin Coffman

WEIGHMASTER CERTIFICATE

Accepted by: _____

WARNING: THIS PRODUCT CONTAINS CRYSTALLINE SILICA(QUARTZ). CRYSTALLINE SILICA IS A COMMON NATURALLY OCCURING MINERAL FOUND IN SAND AND ROCKPROLONGED AND REPEATE BREATHING OF CRYSTALLINE SILICA DUST MAY CAUSE RESPIRATORY AND OTHER HEALTH PROBLEMS, INCLUDING LUNG DISEASE, SILICOSIS AND CANCER, WHICH MAY RESULT IN PERMANENT INJURY OR DEATH. BEFORE USING OR HANDLING THIS PRODUCT READ THE MATERIAL SAFETY DATA SHEET FOR MORE DETAILED INFORMATION INCLUDING INFORMATION ON APPROPRIATE RESPIRATORY PROTECTION. MSDS SHEETS AVAILABLE AT WWW.GRANITECONSTRUCTION.COM/MSDS OR BY CONTACTING YOUR LOCAL OFFICE

gci rev 04/21

COPY

GRANITE™

SMITH ISLAND ASPHALT
2111 ROSS AVE.
EVERETT, WA 98205
425-252-9592

Ticket No. **2665970**
6/27/2022 7:26:17AM

Customer: GRANITE CONSTRUCTION COMPANY 2
Order ID: 22030
Job/PO# : 1136527
Cost Code
Location: EVT - NORTON TERMINAL DEV
2600 FEDERAL AVE

Comments:

Vehicle: G2S MAROON SOLO
License: | |
Carrier:
Product : 3947 1/2"HMA58H-22ST

	Pounds	Metric Tons	Tons
Gross	55,680	25.26	27.84
Tare	25,180	11.42	12.59
Net	30,500	13.83	15.25

Scale: 1

FOB: PICK-UP

This Load: 15.25 TONS

Load No: 4
Shipped: 64.36 TONS

Weighmaster: Granite Construction Company
Deputy: Shanin Coffman

WEIGHMASTER CERTIFICATE

Accepted by: _____

WARNING: THIS PRODUCT CONTAINS CRYSTALLINE SILICA(QUARTZ). CRYSTALLINE SILICA IS A COMMON NATURALLY OCCURING MINERAL FOUND IN SAND AND ROCKPROLONGED AND REPEATE BREATHING OF CRYSTALLINE SILICA DUST MAY CAUSE RESPIRATORY AND OTHER HEALTH PROBLEMS, INCLUDING LUNG DISEASE, SILICOSIS AND CANCER, WHICH MAY RESULT IN PERMANENT INJURY OR DEATH. BEFORE USING OR HANDLING THIS PRODUCT READ THE MATERIAL SAFETY DATA SHEET FOR MORE DETAILED INFORMATION INCLUDING INFORMATION ON APPROPRIATE RESPIRATORY PROTECTION. MSDS SHEETS AVAILABLE AT WWW.GRANITECONSTRUCTION.COM/MSDS OR BY CONTACTING YOUR LOCAL OFFICE

gci rev 04/21

ORIGINAL

GRANITE™

SMITH ISLAND ASPHALT
2111 ROSS AVE.
EVERETT, WA 98205
425-252-9592

Ticket No. **2665981**
6/27/2022 8:06:33AM

Customer: GRANITE CONSTRUCTION COMPANY 2
Order ID: 22030
Job/PO# : 1136527
Cost Code
Location: EVT - NORTON TERMINAL DEV
2600 FEDERAL AVE

Comments:

Vehicle: 048688S WHITE GRANITE TERRY
License: | |
Carrier:
Product : 3947 1/2"HMA58H-22ST

	Pounds	Metric Tons	Tons
Gross	55,240	25.06	27.62
Tare	25,760	11.68	12.88
Net	29,480	13.37	14.74

Scale: 1

FOB: PICK-UP

This Load: 14.74 TONS

Load No: 6
Shipped: 102.69 TONS

Weighmaster: Granite Construction Company
Deputy: Shanin Coffman

WEIGHMASTER CERTIFICATE

Accepted by: _____

WARNING: THIS PRODUCT CONTAINS CRYSTALLINE SILICA(QUARTZ). CRYSTALLINE SILICA IS A COMMON NATURALLY OCCURING MINERAL FOUND IN SAND AND ROCKPROLONGED AND REPEATE BREATHING OF CRYSTALLINE SILICA DUST MAY CAUSE RESPIRATORY AND OTHER HEALTH PROBLEMS, INCLUDING LUNG DISEASE, SILICOSIS AND CANCER, WHICH MAY RESULT IN PERMANENT INJURY OR DEATH. BEFORE USING OR HANDLING THIS PRODUCT READ THE MATERIAL SAFETY DATA SHEET FOR MORE DETAILED INFORMATION INCLUDING INFORMATION ON APPROPRIATE RESPIRATORY PROTECTION. MSDS SHEETS AVAILABLE AT WWW.GRANITECONSTRUCTION.COM/MSDS OR BY CONTACTING YOUR LOCAL OFFICE.

gci rev 04/21

COPY

GRANITE™

SMITH ISLAND ASPHALT
2111 ROSS AVE.
EVERETT, WA 98205
425-252-9592

Ticket No. **2665981**
6/27/2022 8:06:33AM

Customer: GRANITE CONSTRUCTION COMPANY 2
Order ID: 22030
Job/PO# : 1136527
Cost Code
Location: EVT - NORTON TERMINAL DEV
2600 FEDERAL AVE

Comments:

Vehicle: 048688S WHITE GRANITE TERRY
License: | |
Carrier:
Product : 3947 1/2"HMA58H-22ST

	Pounds	Metric Tons	Tons
Gross	55,240	25.06	27.62
Tare	25,760	11.68	12.88
Net	29,480	13.37	14.74

Scale: 1

FOB: PICK-UP

This Load: 14.74 TONS

Load No: 6
Shipped: 102.69 TONS

Weighmaster: Granite Construction Company
Deputy: Shanin Coffman

WEIGHMASTER CERTIFICATE

Accepted by: _____

WARNING: THIS PRODUCT CONTAINS CRYSTALLINE SILICA(QUARTZ). CRYSTALLINE SILICA IS A COMMON NATURALLY OCCURING MINERAL FOUND IN SAND AND ROCKPROLONGED AND REPEATE BREATHING OF CRYSTALLINE SILICA DUST MAY CAUSE RESPIRATORY AND OTHER HEALTH PROBLEMS, INCLUDING LUNG DISEASE, SILICOSIS AND CANCER, WHICH MAY RESULT IN PERMANENT INJURY OR DEATH. BEFORE USING OR HANDLING THIS PRODUCT READ THE MATERIAL SAFETY DATA SHEET FOR MORE DETAILED INFORMATION INCLUDING INFORMATION ON APPROPRIATE RESPIRATORY PROTECTION. MSDS SHEETS AVAILABLE AT WWW.GRANITECONSTRUCTION.COM/MSDS OR BY CONTACTING YOUR LOCAL OFFICE.

gci rev 04/21

ORIGINAL

GRANITE™

SMITH ISLAND ASPHALT
2111 ROSS AVE.
EVERETT, WA 98205
425-252-9592

Ticket No. **2665990**
6/27/2022 8:31:28AM

Customer: GRANITE CONSTRUCTION COMPANY 2
Order ID: 22030
Job/PO# : 1136527
Cost Code
Location: EVT - NORTON TERMINAL DEV
2600 FEDERAL AVE

Comments:

Vehicle: G4S KW
License: | |
Carrier:
Product : 3947 1/2"HMA58H-22ST

	Pounds	Metric Tons	Tons
Gross	61,700	27.99	30.85
Tare	26,740	12.13	13.37
Net	34,960	15.86	17.48

Scale: 1

FOB: PICK-UP

This Load: 17.48 TONS
Load No: 7
Shipped: 120.17 TONS

Weighmaster: Granite Construction Company
Deputy: Shanin Coffman

WEIGHMASTER CERTIFICATE

Accepted by: _____

WARNING: THIS PRODUCT CONTAINS CRYSTALLINE SILICA(QUARTZ). CRYSTALLINE SILICA IS A COMMON NATURALLY OCCURING MINERAL FOUND IN SAND AND ROCKPROLONGED AND REPEATE BREATHING OF CRYSTALLINE SILICA DUST MAY CAUSE RESPIRATORY AND OTHER HEALTH PROBLEMS, INCLUDING LUNG DISEASE, SILICOSIS AND CANCER, WHICH MAY RESULT IN PERMANENT INJURY OR DEATH. BEFORE USING OR HANDLING THIS PRODUCT READ THE MATERIAL SAFETY DATA SHEET FOR MORE DETAILED INFORMATION INCLUDING INFORMATION ON APPROPRIATE RESPIRATORY PROTECTION. MSDS SHEETS AVAILABLE AT WWW.GRANITECONSTRUCTION.COM/MSDS OR BY CONTACTING YOUR LOCAL OFFICE

gci rev 04/21

COPY

GRANITE™

SMITH ISLAND ASPHALT
2111 ROSS AVE.
EVERETT, WA 98205
425-252-9592

Ticket No. **2665990**
6/27/2022 8:31:28AM

Customer: GRANITE CONSTRUCTION COMPANY 2
Order ID: 22030
Job/PO# : 1136527
Cost Code
Location: EVT - NORTON TERMINAL DEV
2600 FEDERAL AVE

Comments:

Vehicle: G4S KW
License: | |
Carrier:
Product : 3947 1/2"HMA58H-22ST

	Pounds	Metric Tons	Tons
Gross	61,700	27.99	30.85
Tare	26,740	12.13	13.37
Net	34,960	15.86	17.48

Scale: 1

FOB: PICK-UP

This Load: 17.48 TONS
Load No: 7
Shipped: 120.17 TONS

Weighmaster: Granite Construction Company
Deputy: Shanin Coffman

WEIGHMASTER CERTIFICATE

Accepted by: _____

WARNING: THIS PRODUCT CONTAINS CRYSTALLINE SILICA(QUARTZ). CRYSTALLINE SILICA IS A COMMON NATURALLY OCCURING MINERAL FOUND IN SAND AND ROCKPROLONGED AND REPEATE BREATHING OF CRYSTALLINE SILICA DUST MAY CAUSE RESPIRATORY AND OTHER HEALTH PROBLEMS, INCLUDING LUNG DISEASE, SILICOSIS AND CANCER, WHICH MAY RESULT IN PERMANENT INJURY OR DEATH. BEFORE USING OR HANDLING THIS PRODUCT READ THE MATERIAL SAFETY DATA SHEET FOR MORE DETAILED INFORMATION INCLUDING INFORMATION ON APPROPRIATE RESPIRATORY PROTECTION. MSDS SHEETS AVAILABLE AT WWW.GRANITECONSTRUCTION.COM/MSDS OR BY CONTACTING YOUR LOCAL OFFICE

gci rev 04/21

ORIGINAL

GRANITE™

SMITH ISLAND ASPHALT
2111 ROSS AVE.
EVERETT, WA 98205
425-252-9592

Ticket No. **2665993**
6/27/2022 8:37:20AM

Customer: GRANITE CONSTRUCTION COMPANY 2
Order ID: 22030
Job/PO# : 1136527
Cost Code
Location: EVT - NORTON TERMINAL DEV
2600 FEDERAL AVE

Comments:

Vehicle: G2S MAROON SOLO
License: | |
Carrier:
Product : 3947 1/2"HMA58H-22ST

	Pounds	Metric Tons	Tons
Gross	55,980	25.39	27.99
Tare	25,140	11.40	12.57
Net	30,840	13.99	15.42

Scale: 1

FOB: PICK-UP

This Load: 15.42 TONS

Load No: 8
Shipped: 135.59 TONS

Weighmaster: Granite Construction Company
Deputy: Shanin Coffman

WEIGHMASTER CERTIFICATE

Accepted by: _____

WARNING: THIS PRODUCT CONTAINS CRYSTALLINE SILICA(QUARTZ). CRYSTALLINE SILICA IS A COMMON NATURALLY OCCURING MINERAL FOUND IN SAND AND ROCKPROLONGED AND REPEATE BREATHING OF CRYSTALLINE SILICA DUST MAY CAUSE RESPIRATORY AND OTHER HEALTH PROBLEMS, INCLUDING LUNG DISEASE, SILICOSIS AND CANCER. WHICH MAY RESULT IN PERMANENT INJURY OR DEATH. BEFORE USING OR HANDLING THIS PRODUCT READ THE MATERIAL SAFETY DATA SHEET FOR MORE DETAILED INFORMATION INCLUDING INFORMATION ON APPROPRIATE RESPIRATORY PROTECTION. MSDS SHEETS AVAILABLE AT WWW.GRANITECONSTRUCTION.COM/MSDS OR BY CONTACTING YOUR LOCAL OFFICE

gci rev 04/21

COPY

GRANITE™

SMITH ISLAND ASPHALT
2111 ROSS AVE.
EVERETT, WA 98205
425-252-9592

Ticket No. **2665993**
6/27/2022 8:37:20AM

Customer: GRANITE CONSTRUCTION COMPANY 2
Order ID: 22030
Job/PO# : 1136527
Cost Code
Location: EVT - NORTON TERMINAL DEV
2600 FEDERAL AVE

Comments:

Vehicle: G2S MAROON SOLO
License: | |
Carrier:
Product : 3947 1/2"HMA58H-22ST

	Pounds	Metric Tons	Tons
Gross	55,980	25.39	27.99
Tare	25,140	11.40	12.57
Net	30,840	13.99	15.42

Scale: 1

FOB: PICK-UP

This Load: 15.42 TONS

Load No: 8
Shipped: 135.59 TONS

Weighmaster: Granite Construction Company
Deputy: Shanin Coffman

WEIGHMASTER CERTIFICATE

Accepted by: _____

WARNING: THIS PRODUCT CONTAINS CRYSTALLINE SILICA(QUARTZ). CRYSTALLINE SILICA IS A COMMON NATURALLY OCCURING MINERAL FOUND IN SAND AND ROCKPROLONGED AND REPEATE BREATHING OF CRYSTALLINE SILICA DUST MAY CAUSE RESPIRATORY AND OTHER HEALTH PROBLEMS, INCLUDING LUNG DISEASE, SILICOSIS AND CANCER. WHICH MAY RESULT IN PERMANENT INJURY OR DEATH. BEFORE USING OR HANDLING THIS PRODUCT READ THE MATERIAL SAFETY DATA SHEET FOR MORE DETAILED INFORMATION INCLUDING INFORMATION ON APPROPRIATE RESPIRATORY PROTECTION. MSDS SHEETS AVAILABLE AT WWW.GRANITECONSTRUCTION.COM/MSDS OR BY CONTACTING YOUR LOCAL OFFICE

gci rev 04/21

ORIGINAL

GRANITE™

SMITH ISLAND ASPHALT
2111 ROSS AVE.
EVERETT, WA 98205
425-252-9592

Ticket No. **2665999**
6/27/2022 8:56:41AM

Customer: GRANITE CONSTRUCTION COMPANY 2
Order ID: 22030
Job/PO# : 1136527
Cost Code
Location: EVT - NORTON TERMINAL DEV 2600 FEDERAL AVE

Comments:

Vehicle: 0466S GREEN PETE
License: | |
Carrier:
Product : 3947 1/2"HMA58H-22ST

	Pounds	Metric Tons	Tons
Gross	60,900	27.62	30.45
Tare	27,380	12.42	13.69
Net	33,520	15.20	16.76

Scale: 1

FOB: PICK-UP

This Load: 16.76 TONS

Load No: 9
Shipped: 152.35 TONS

Weighmaster: Granite Construction Company
Deputy: Shanin Coffman

WEIGHMASTER CERTIFICATE

Accepted by: _____

WARNING: THIS PRODUCT CONTAINS CRYSTALLINE SILICA(QUARTZ). CRYSTALLINE SILICA IS A COMMON NATURALLY OCCURING MINERAL FOUND IN SAND AND ROCKPROLONGED AND REPEATE BREATHING OF CRYSTALLINE SILICA DUST MAY CAUSE RESPIRATORY AND OTHER HEALTH PROBLEMS, INCLUDING LUNG DISEASE, SILICOSIS AND CANCER, WHICH MAY RESULT IN PERMANENT INJURY OR DEATH. BEFORE USING OR HANDLING THIS PRODUCT READ THE MATERIAL SAFETY DATA SHEET FOR MORE DETAILED INFORMATION INCLUDING INFORMATION ON APPROPRIATE RESPIRATORY PROTECTION. MSDS SHEETS AVAILABLE AT WWW.GRANITECONSTRUCTION.COM/MSDS OR BY CONTACTING YOUR LOCAL OFFICE

gci rev 04/21

COPY

GRANITE™

SMITH ISLAND ASPHALT
2111 ROSS AVE.
EVERETT, WA 98205
425-252-9592

Ticket No. **2665999**
6/27/2022 8:56:41AM

Customer: GRANITE CONSTRUCTION COMPANY 2
Order ID: 22030
Job/PO# : 1136527
Cost Code
Location: EVT - NORTON TERMINAL DEV 2600 FEDERAL AVE

Comments:

Vehicle: 0466S GREEN PETE
License: | |
Carrier:
Product : 3947 1/2"HMA58H-22ST

	Pounds	Metric Tons	Tons
Gross	60,900	27.62	30.45
Tare	27,380	12.42	13.69
Net	33,520	15.20	16.76

Scale: 1

FOB: PICK-UP

This Load: 16.76 TONS

Load No: 9
Shipped: 152.35 TONS

Weighmaster: Granite Construction Company
Deputy: Shanin Coffman

WEIGHMASTER CERTIFICATE

Accepted by: _____

WARNING: THIS PRODUCT CONTAINS CRYSTALLINE SILICA(QUARTZ). CRYSTALLINE SILICA IS A COMMON NATURALLY OCCURING MINERAL FOUND IN SAND AND ROCKPROLONGED AND REPEATE BREATHING OF CRYSTALLINE SILICA DUST MAY CAUSE RESPIRATORY AND OTHER HEALTH PROBLEMS, INCLUDING LUNG DISEASE, SILICOSIS AND CANCER, WHICH MAY RESULT IN PERMANENT INJURY OR DEATH. BEFORE USING OR HANDLING THIS PRODUCT READ THE MATERIAL SAFETY DATA SHEET FOR MORE DETAILED INFORMATION INCLUDING INFORMATION ON APPROPRIATE RESPIRATORY PROTECTION. MSDS SHEETS AVAILABLE AT WWW.GRANITECONSTRUCTION.COM/MSDS OR BY CONTACTING YOUR LOCAL OFFICE

gci rev 04/21

ORIGINAL

GRANITE™

SMITH ISLAND ASPHALT
2111 ROSS AVE.
EVERETT, WA 98205
425-252-9592

Ticket No. **2666004**
6/27/2022 9:31:38AM

Customer: GRANITE CONSTRUCTION COMPANY 2

Order ID: 22030
Job/PO# : 1136527
Cost Code
Location: EVT - NORTON TERMINAL DEV
2600 FEDERAL AVE

Comments:

Vehicle: 048688S WHITE GRANITE TERRY
License: | |
Carrier:
Product : 3947 1/2"HMA58H-22ST

	Pounds	Metric Tons	Tons
Gross	55,200	25.04	27.60
Tare	25,760	11.68	12.88
Net	29,440	13.35	14.72

Scale: 1

FOB: PICK-UP

This Load:	**14.72**	**TONS**
Load No:	10	
Shipped:	167.07	TONS

Weighmaster: Granite Construction Company
Deputy: Shanin Coffman

WEIGHMASTER CERTIFICATE

Accepted by: _____

WARNING: THIS PRODUCT CONTAINS CRYSTALLINE SILICA(QUARTZ). CRYSTALLINE SILICA IS A COMMON NATURALLY OCCURING MINERAL FOUND IN SAND AND ROCKPROLONGED AND REPEATE BREATHING OF CRYSTALLINE SILICA DUST MAY CAUSE RESPIRATORY AND OTHER HEALTH PROBLEMS, INCLUDING LUNG DISEASE, SILICOSIS AND CANCER, WHICH MAY RESULT IN PERMANENT INJURY OR DEATH. BEFORE USING OR HANDLING THIS PRODUCT READ THE MATERIAL SAFETY DATA SHEET FOR MORE DETAILED INFORMATION INCLUDING INFORMATION ON APPROPRIATE RESPIRATORY PROTECTION. MSDS SHEETS AVAILABLE AT WWW.GRANITECONSTRUCTION.COM/MSDS OR BY CONTACTING YOUR LOCAL OFFICE

gci rev. 04/21

COPY

GRANITE™

SMITH ISLAND ASPHALT
2111 ROSS AVE.
EVERETT, WA 98205
425-252-9592

Ticket No. **2666004**
6/27/2022 9:31:38AM

Customer: GRANITE CONSTRUCTION COMPANY 2

Order ID: 22030
Job/PO# : 1136527
Cost Code
Location: EVT - NORTON TERMINAL DEV
2600 FEDERAL AVE

Comments:

Vehicle: 048688S WHITE GRANITE TERRY
License: | |
Carrier:
Product : 3947 1/2"HMA58H-22ST

	Pounds	Metric Tons	Tons
Gross	55,200	25.04	27.60
Tare	25,760	11.68	12.88
Net	29,440	13.35	14.72

Scale: 1

FOB: PICK-UP

This Load:	**14.72**	**TONS**
Load No:	10	
Shipped:	167.07	TONS

Weighmaster: Granite Construction Company
Deputy: Shanin Coffman

WEIGHMASTER CERTIFICATE

Accepted by: _____

WARNING: THIS PRODUCT CONTAINS CRYSTALLINE SILICA(QUARTZ). CRYSTALLINE SILICA IS A COMMON NATURALLY OCCURING MINERAL FOUND IN SAND AND ROCKPROLONGED AND REPEATE BREATHING OF CRYSTALLINE SILICA DUST MAY CAUSE RESPIRATORY AND OTHER HEALTH PROBLEMS, INCLUDING LUNG DISEASE, SILICOSIS AND CANCER, WHICH MAY RESULT IN PERMANENT INJURY OR DEATH. BEFORE USING OR HANDLING THIS PRODUCT READ THE MATERIAL SAFETY DATA SHEET FOR MORE DETAILED INFORMATION INCLUDING INFORMATION ON APPROPRIATE RESPIRATORY PROTECTION. MSDS SHEETS AVAILABLE AT WWW.GRANITECONSTRUCTION.COM/MSDS OR BY CONTACTING YOUR LOCAL OFFICE

gci rev. 04/21

ORIGINAL

GRANITE™

SMITH ISLAND ASPHALT
2111 ROSS AVE.
EVERETT, WA 98205
425-252-9592

Ticket No. **2666005**
6/27/2022 9:37:35AM

Customer: GRANITE CONSTRUCTION COMPANY 2
Order ID: 22030
Job/PO# : 1136527
Cost Code
Location: EVT - NORTON TERMINAL DEV 2600 FEDERAL AVE

Comments:

Vehicle: 0486SS GREEN
License: | |
Carrier:
Product : 3947 1/2"HMA58H-22ST

	Pounds	Metric Tons	Tons
Gross	79,880	36.23	39.94
Tare	32,060	14.54	16.03
Net	47,820	21.69	23.91

Scale: 1 * Manual Weight

FOB: PICK-UP

This Load: 23.91 TONS

Load No: 11
Shipped: 190.98 TONS

Weighmaster: Granite Construction Company
Deputy: Shanin Coffman

WEIGHMASTER CERTIFICATE

Accepted by: _____

WARNING: THIS PRODUCT CONTAINS CRYSTALLINE SILICA(QUARTZ). CRYSTALLINE SILICA IS A COMMON NATURALLY OCCURING MINERAL FOUND IN SAND AND ROCKPROLONGED AND REPEATE BREATHING OF CRYSTALLINE SILICA DUST MAY CAUSE RESPIRATORY AND OTHER HEALTH PROBLEMS, INCLUDING LUNG DISEASE, SILICOSIS AND CANCER. WHICH MAY RESULT IN PERMANENT INJURY OR DEATH. BEFORE USING OR HANDLING THIS PRODUCT READ THE MATERIAL SAFETY DATA SHEET FOR MORE DETAILED INFORMATION INCLUDING INFORMATION ON APPROPRIATE RESPIRATORY PROTECTION. MSDS SHEETS AVAILABLE AT WWW.GRANITECONSTRUCTION.COM/MSDS OR BY CONTACTING YOUR LOCAL OFFICE

gci rev 04/21

COPY

GRANITE™

SMITH ISLAND ASPHALT
2111 ROSS AVE.
EVERETT, WA 98205
425-252-9592

Ticket No. **2666005**
6/27/2022 9:37:35AM

Customer: GRANITE CONSTRUCTION COMPANY 2
Order ID: 22030
Job/PO# : 1136527
Cost Code
Location: EVT - NORTON TERMINAL DEV 2600 FEDERAL AVE

Comments:

Vehicle: 0486SS GREEN
License: | |
Carrier:
Product : 3947 1/2"HMA58H-22ST

	Pounds	Metric Tons	Tons
Gross	79,880	36.23	39.94
Tare	32,060	14.54	16.03
Net	47,820	21.69	23.91

Scale: 1 * Manual Weight

FOB: PICK-UP

This Load: 23.91 TONS

Load No: 11
Shipped: 190.98 TONS

Weighmaster: Granite Construction Company
Deputy: Shanin Coffman

WEIGHMASTER CERTIFICATE

Accepted by: _____

WARNING: THIS PRODUCT CONTAINS CRYSTALLINE SILICA(QUARTZ). CRYSTALLINE SILICA IS A COMMON NATURALLY OCCURING MINERAL FOUND IN SAND AND ROCKPROLONGED AND REPEATE BREATHING OF CRYSTALLINE SILICA DUST MAY CAUSE RESPIRATORY AND OTHER HEALTH PROBLEMS, INCLUDING LUNG DISEASE, SILICOSIS AND CANCER. WHICH MAY RESULT IN PERMANENT INJURY OR DEATH. BEFORE USING OR HANDLING THIS PRODUCT READ THE MATERIAL SAFETY DATA SHEET FOR MORE DETAILED INFORMATION INCLUDING INFORMATION ON APPROPRIATE RESPIRATORY PROTECTION. MSDS SHEETS AVAILABLE AT WWW.GRANITECONSTRUCTION.COM/MSDS OR BY CONTACTING YOUR LOCAL OFFICE

gci rev 04/21

ORIGINAL

GRANITE™

SMITH ISLAND ASPHALT
2111 ROSS AVE.
EVERETT, WA 98205
425-252-9592

Ticket No. **2666009**
6/27/2022 9:48:26AM

Customer: GRANITE CONSTRUCTION COMPANY 2
Order ID: 22030
Job/PO# : 1136527
Cost Code
Location: EVT - NORTON TERMINAL DEV
2600 FEDERAL AVE

Comments:

Vehicle: G4S KW
License: | |
Carrier:
Product : 3947 1/2"HMA58H-22ST

	Pounds	Metric Tons	Tons
Gross	61,600	27.94	30.80
Tare	26,720	12.12	13.36
Net	34,880	15.82	17.44

Scale: 1

FOB: PICK-UP

This Load: 17.44 TONS

Load No: 12
Shipped: 208.42 TONS

Weighmaster: Granite Construction Company
Deputy: Shanin Coffman

WEIGHMASTER CERTIFICATE

Accepted by: _____

WARNING: THIS PRODUCT CONTAINS CRYSTALLINE SILICA(QUARTZ). CRYSTALLINE SILICA IS A COMMON NATURALLY OCCURING MINERAL FOUND IN SAND AND ROCKPROLONGED AND REPEATE BREATHING OF CRYSTALLINE SILICA DUST MAY CAUSE RESPIRATORY AND OTHER HEALTH PROBLEMS, INCLUDING LUNG DISEASE, SILICOSIS AND CANCER, WHICH MAY RESULT IN PERMANENT INJURY OR DEATH. BEFORE USING OR HANDLING THIS PRODUCT READ THE MATERIAL SAFETY DATA SHEET FOR MORE DETAILED INFORMATION INCLUDING INFORMATION ON APPROPRIATE RESPIRATORY PROTECTION. MSDS SHEETS AVAILABLE AT WWW.GRANITECONSTRUCTION.COM/MSDS OR BY CONTACTING YOUR LOCAL OFFICE

gci rev 04/21

COPY

GRANITE™

SMITH ISLAND ASPHALT
2111 ROSS AVE.
EVERETT, WA 98205
425-252-9592

Ticket No. **2666009**
6/27/2022 9:48:26AM

Customer: GRANITE CONSTRUCTION COMPANY 2
Order ID: 22030
Job/PO# : 1136527
Cost Code
Location: EVT - NORTON TERMINAL DEV
2600 FEDERAL AVE

Comments:

Vehicle: G4S KW
License: | |
Carrier:
Product : 3947 1/2"HMA58H-22ST

	Pounds	Metric Tons	Tons
Gross	61,600	27.94	30.80
Tare	26,720	12.12	13.36
Net	34,880	15.82	17.44

Scale: 1

FOB: PICK-UP

This Load: 17.44 TONS

Load No: 12
Shipped: 208.42 TONS

Weighmaster: Granite Construction Company
Deputy: Shanin Coffman

WEIGHMASTER CERTIFICATE

Accepted by: _____

WARNING: THIS PRODUCT CONTAINS CRYSTALLINE SILICA(QUARTZ). CRYSTALLINE SILICA IS A COMMON NATURALLY OCCURING MINERAL FOUND IN SAND AND ROCKPROLONGED AND REPEATE BREATHING OF CRYSTALLINE SILICA DUST MAY CAUSE RESPIRATORY AND OTHER HEALTH PROBLEMS, INCLUDING LUNG DISEASE, SILICOSIS AND CANCER, WHICH MAY RESULT IN PERMANENT INJURY OR DEATH. BEFORE USING OR HANDLING THIS PRODUCT READ THE MATERIAL SAFETY DATA SHEET FOR MORE DETAILED INFORMATION INCLUDING INFORMATION ON APPROPRIATE RESPIRATORY PROTECTION. MSDS SHEETS AVAILABLE AT WWW.GRANITECONSTRUCTION.COM/MSDS OR BY CONTACTING YOUR LOCAL OFFICE

gci rev 04/21

ORIGINAL

GRANITE™

SMITH ISLAND ASPHALT
2111 ROSS AVE.
EVERETT, WA 98205
425-252-9592

Ticket No. **2666015**
6/27/2022 10:03:02AM

Customer: GRANITE CONSTRUCTION COMPANY 2
Order ID: 22030
Job/PO# : 1136527
Cost Code
Location: EVT - NORTON TERMINAL DEV
2600 FEDERAL AVE

Comments:

Vehicle: G2S MAROON SOLO
License: | |
Carrier:
Product : 3947 1/2"HMA58H-22ST

	Pounds	Metric Tons	Tons
Gross	55,900	25.36	27.95
Tare	25,140	11.40	12.57
Net	30,760	13.95	15.38

Scale: 1

FOB: PICK-UP

This Load:	**15.38**	**TONS**
Load No:	13	
Shipped:	223.80	TONS

Weighmaster: Granite Construction Company
Deputy: Shanin Coffman

WEIGHMASTER CERTIFICATE

Accepted by: _____

WARNING: THIS PRODUCT CONTAINS CRYSTALLINE SILICA(QUARTZ). CRYSTALLINE SILICA IS A COMMON NATURALLY OCCURING MINERAL FOUND IN SAND AND ROCKPROLONGED AND REPEATE BREATHING OF CRYSTALLINE SILICA DUST MAY CAUSE RESPIRATORY AND OTHER HEALTH PROBLEMS, INCLUDING LUNG DISEASE, SILICOSIS AND CANCER, WHICH MAY RESULT IN PERMANENT INJURY OR DEATH. BEFORE USING OR HANDLING THIS PRODUCT READ THE MATERIAL SAFETY DATA SHEET FOR MORE DETAILED INFORMATION INCLUDING INFORMATION ON APPROPRIATE RESPIRATORY PROTECTION. MSDS SHEETS AVAILABLE AT WWW.GRANITECONSTRUCTION.COM/MSDS OR BY CONTACTING YOUR LOCAL OFFICE

gci rev 04/21

COPY

GRANITE™

SMITH ISLAND ASPHALT
2111 ROSS AVE.
EVERETT, WA 98205
425-252-9592

Ticket No. **2666015**
6/27/2022 10:03:02AM

Customer: GRANITE CONSTRUCTION COMPANY 2
Order ID: 22030
Job/PO# : 1136527
Cost Code
Location: EVT - NORTON TERMINAL DEV
2600 FEDERAL AVE

Comments:

Vehicle: G2S MAROON SOLO
License: | |
Carrier:
Product : 3947 1/2"HMA58H-22ST

	Pounds	Metric Tons	Tons
Gross	55,900	25.36	27.95
Tare	25,140	11.40	12.57
Net	30,760	13.95	15.38

Scale: 1

FOB: PICK-UP

This Load:	**15.38**	**TONS**
Load No:	13	
Shipped:	223.80	TONS

Weighmaster: Granite Construction Company
Deputy: Shanin Coffman

WEIGHMASTER CERTIFICATE

Accepted by: _____

WARNING: THIS PRODUCT CONTAINS CRYSTALLINE SILICA(QUARTZ). CRYSTALLINE SILICA IS A COMMON NATURALLY OCCURING MINERAL FOUND IN SAND AND ROCKPROLONGED AND REPEATE BREATHING OF CRYSTALLINE SILICA DUST MAY CAUSE RESPIRATORY AND OTHER HEALTH PROBLEMS, INCLUDING LUNG DISEASE, SILICOSIS AND CANCER, WHICH MAY RESULT IN PERMANENT INJURY OR DEATH. BEFORE USING OR HANDLING THIS PRODUCT READ THE MATERIAL SAFETY DATA SHEET FOR MORE DETAILED INFORMATION INCLUDING INFORMATION ON APPROPRIATE RESPIRATORY PROTECTION. MSDS SHEETS AVAILABLE AT WWW.GRANITECONSTRUCTION.COM/MSDS OR BY CONTACTING YOUR LOCAL OFFICE

gci rev 04/21

ORIGINAL

GRANITE™

SMITH ISLAND ASPHALT
2111 ROSS AVE.
EVERETT, WA 98205
425-252-9592

Ticket No. **2666017**
6/27/2022 10:08:44AM

Customer: GRANITE CONSTRUCTION COMPANY 2
Order ID: 22030
Job/PO# : 1136527
Cost Code
Location: EVT - NORTON TERMINAL DEV
2600 FEDERAL AVE

Comments:

Vehicle: 0466S GREEN PETE
License: | |
Carrier:
Product : 3947 1/2"HMA58H-22ST

	Pounds	Metric Tons	Tons
Gross	60,720	27.54	30.36
Tare	27,340	12.40	13.67
Net	33,380	15.14	16.69

Scale: 1

FOB: PICK-UP

This Load: 16.69 TONS

Load No: 14
Shipped: 240.49 TONS

Weighmaster: Granite Construction Company
Deputy: Shanin Coffman

WEIGHMASTER CERTIFICATE

Accepted by: _____

WARNING: THIS PRODUCT CONTAINS CRYSTALLINE SILICA(QUARTZ). CRYSTALLINE SILICA IS A COMMON NATURALLY OCCURING MINERAL FOUND IN SAND AND ROCKPROLONGED AND REPEATE BREATHING OF CRYSTALLINE SILICA DUST MAY CAUSE RESPIRATORY AND OTHER HEALTH PROBLEMS, INCLUDING LUNG DISEASE, SILICOSIS AND CANCER, WHICH MAY RESULT IN PERMANENT INJURY OR DEATH. BEFORE USING OR HANDLING THIS PRODUCT READ THE MATERIAL SAFETY DATA SHEET FOR MORE DETAILED INFORMATION INCLUDING INFORMATION ON APPROPRIATE RESPIRATORY PROTECTION. MSDS SHEETS AVAILABLE AT WWW.GRANITECONSTRUCTION.COM/MSDS OR BY CONTACTING YOUR LOCAL OFFICE

gci rev. 04/21

COPY

GRANITE™

SMITH ISLAND ASPHALT
2111 ROSS AVE.
EVERETT, WA 98205
425-252-9592

Ticket No. **2666017**
6/27/2022 10:08:44AM

Customer: GRANITE CONSTRUCTION COMPANY 2
Order ID: 22030
Job/PO# : 1136527
Cost Code
Location: EVT - NORTON TERMINAL DEV
2600 FEDERAL AVE

Comments:

Vehicle: 0466S GREEN PETE
License: | |
Carrier:
Product : 3947 1/2"HMA58H-22ST

	Pounds	Metric Tons	Tons
Gross	60,720	27.54	30.36
Tare	27,340	12.40	13.67
Net	33,380	15.14	16.69

Scale: 1

FOB: PICK-UP

This Load: 16.69 TONS

Load No: 14
Shipped: 240.49 TONS

Weighmaster: Granite Construction Company
Deputy: Shanin Coffman

WEIGHMASTER CERTIFICATE

Accepted by: _____

WARNING: THIS PRODUCT CONTAINS CRYSTALLINE SILICA(QUARTZ). CRYSTALLINE SILICA IS A COMMON NATURALLY OCCURING MINERAL FOUND IN SAND AND ROCKPROLONGED AND REPEATE BREATHING OF CRYSTALLINE SILICA DUST MAY CAUSE RESPIRATORY AND OTHER HEALTH PROBLEMS, INCLUDING LUNG DISEASE, SILICOSIS AND CANCER, WHICH MAY RESULT IN PERMANENT INJURY OR DEATH. BEFORE USING OR HANDLING THIS PRODUCT READ THE MATERIAL SAFETY DATA SHEET FOR MORE DETAILED INFORMATION INCLUDING INFORMATION ON APPROPRIATE RESPIRATORY PROTECTION. MSDS SHEETS AVAILABLE AT WWW.GRANITECONSTRUCTION.COM/MSDS OR BY CONTACTING YOUR LOCAL OFFICE

gci rev. 04/21

ORIGINAL

GRANITE™

SMITH ISLAND ASPHALT
2111 ROSS AVE.
EVERETT, WA 98205
425-252-9592

Ticket No. **2666029**
6/27/2022 10:36:40AM

Customer: GRANITE CONSTRUCTION COMPANY 2
Order ID: 22030
Job/PO# : 1136527
Cost Code
Location: EVT - NORTON TERMINAL DEV
2600 FEDERAL AVE

Comments:

Vehicle: 048688S WHITE GRANITE TERRY
License: | |
Carrier:
Product : 3947 1/2"HMA58H-22ST

	Pounds	Metric Tons	Tons
Gross	55,380	25.12	27.69
Tare	25,700	11.66	12.85
Net	29,680	13.46	14.84

Scale: 1

FOB: PICK-UP

This Load:	**14.84**	**TONS**
Load No:	15	
Shipped:	255.33	TONS

Weighmaster: Granite Construction Company
Deputy: Shanin Coffman

WEIGHMASTER CERTIFICATE

Accepted by: _____

WARNING: THIS PRODUCT CONTAINS CRYSTALLINE SILICA(QUARTZ). CRYSTALLINE SILICA IS A COMMON NATURALLY OCCURING MINERAL FOUND IN SAND AND ROCKPROLONGED AND REPEATE BREATHING OF CRYSTALLINE SILICA DUST MAY CAUSE RESPIRATORY AND OTHER HEALTH PROBLEMS, INCLUDING LUNG DISEASE, SILICOSIS AND CANCER. WHICH MAY RESULT IN PERMANENT INJURY OR DEATH. BEFORE USING OR HANDLING THIS PRODUCT READ THE MATERIAL SAFETY DATA SHEET FOR MORE DETAILED INFORMATION INCLUDING INFORMATION ON APPROPRIATE RESPIRATORY PROTECTION. MSDS SHEETS AVAILABLE AT WWW.GRANITECONSTRUCTION.COM/MSDS OR BY CONTACTING YOUR LOCAL OFFICE

gci rev 04/21

COPY

GRANITE™

SMITH ISLAND ASPHALT
2111 ROSS AVE.
EVERETT, WA 98205
425-252-9592

Ticket No. **2666029**
6/27/2022 10:36:40AM

Customer: GRANITE CONSTRUCTION COMPANY 2
Order ID: 22030
Job/PO# : 1136527
Cost Code
Location: EVT - NORTON TERMINAL DEV
2600 FEDERAL AVE

Comments:

Vehicle: 048688S WHITE GRANITE TERRY
License: | |
Carrier:
Product : 3947 1/2"HMA58H-22ST

	Pounds	Metric Tons	Tons
Gross	55,380	25.12	27.69
Tare	25,700	11.66	12.85
Net	29,680	13.46	14.84

Scale: 1

FOB: PICK-UP

This Load:	**14.84**	**TONS**
Load No:	15	
Shipped:	255.33	TONS

Weighmaster: Granite Construction Company
Deputy: Shanin Coffman

WEIGHMASTER CERTIFICATE

Accepted by: _____

WARNING: THIS PRODUCT CONTAINS CRYSTALLINE SILICA(QUARTZ). CRYSTALLINE SILICA IS A COMMON NATURALLY OCCURING MINERAL FOUND IN SAND AND ROCKPROLONGED AND REPEATE BREATHING OF CRYSTALLINE SILICA DUST MAY CAUSE RESPIRATORY AND OTHER HEALTH PROBLEMS, INCLUDING LUNG DISEASE, SILICOSIS AND CANCER. WHICH MAY RESULT IN PERMANENT INJURY OR DEATH. BEFORE USING OR HANDLING THIS PRODUCT READ THE MATERIAL SAFETY DATA SHEET FOR MORE DETAILED INFORMATION INCLUDING INFORMATION ON APPROPRIATE RESPIRATORY PROTECTION. MSDS SHEETS AVAILABLE AT WWW.GRANITECONSTRUCTION.COM/MSDS OR BY CONTACTING YOUR LOCAL OFFICE

gci rev 04/21

ORIGINAL

GRANITE™

SMITH ISLAND ASPHALT
2111 ROSS AVE.
EVERETT, WA 98205
425-252-9592

Ticket No. **2666031**
6/27/2022 10:45:43AM

Customer: GRANITE CONSTRUCTION COMPANY 2
Order ID: 22030
Job/PO# : 1136527
Cost Code
Location: EVT - NORTON TERMINAL DEV
2600 FEDERAL AVE

Comments:

Vehicle: 0486SS GREEN
License: | |
Carrier:
Product : 3947 1/2"HMA58H-22ST

	Pounds	Metric Tons	Tons
Gross	79,780	36.19	39.89
Tare	32,060	14.54	16.03
Net	47,720	21.65	23.86

Scale: 1

FOB: PICK-UP

This Load:	**23.86**	**TONS**
Load No:	16	
Shipped:	279.19	TONS

Weighmaster: Granite Construction Company
Deputy: Shanin Coffman

WEIGHMASTER CERTIFICATE

Accepted by: _____

WARNING: THIS PRODUCT CONTAINS CRYSTALLINE SILICA(QUARTZ). CRYSTALLINE SILICA IS A COMMON NATURALLY OCCURING MINERAL FOUND IN SAND AND ROCKPROLONGED AND REPEATE BREATHING OF CRYSTALLINE SILICA DUST MAY CAUSE RESPIRATORY AND OTHER HEALTH PROBLEMS, INCLUDING LUNG DISEASE, SILICOSIS AND CANCER, WHICH MAY RESULT IN PERMANENT INJURY OR DEATH. BEFORE USING OR HANDLING THIS PRODUCT READ THE MATERIAL SAFETY DATA SHEET FOR MORE DETAILED INFORMATION INCLUDING INFORMATION ON APPROPRIATE RESPIRATORY PROTECTION. MSDS SHEETS AVAILABLE AT WWW.GRANITECONSTRUCTION.COM/MSDS OR BY CONTACTING YOUR LOCAL OFFICE

gci rev 04/21

COPY

GRANITE™

SMITH ISLAND ASPHALT
2111 ROSS AVE.
EVERETT, WA 98205
425-252-9592

Ticket No. **2666031**
6/27/2022 10:45:43AM

Customer: GRANITE CONSTRUCTION COMPANY 2
Order ID: 22030
Job/PO# : 1136527
Cost Code
Location: EVT - NORTON TERMINAL DEV
2600 FEDERAL AVE

Comments:

Vehicle: 0486SS GREEN
License: | |
Carrier:
Product : 3947 1/2"HMA58H-22ST

	Pounds	Metric Tons	Tons
Gross	79,780	36.19	39.89
Tare	32,060	14.54	16.03
Net	47,720	21.65	23.86

Scale: 1

FOB: PICK-UP

This Load:	**23.86**	**TONS**
Load No:	16	
Shipped:	279.19	TONS

Weighmaster: Granite Construction Company
Deputy: Shanin Coffman

WEIGHMASTER CERTIFICATE

Accepted by: _____

WARNING: THIS PRODUCT CONTAINS CRYSTALLINE SILICA(QUARTZ). CRYSTALLINE SILICA IS A COMMON NATURALLY OCCURING MINERAL FOUND IN SAND AND ROCKPROLONGED AND REPEATE BREATHING OF CRYSTALLINE SILICA DUST MAY CAUSE RESPIRATORY AND OTHER HEALTH PROBLEMS, INCLUDING LUNG DISEASE, SILICOSIS AND CANCER, WHICH MAY RESULT IN PERMANENT INJURY OR DEATH. BEFORE USING OR HANDLING THIS PRODUCT READ THE MATERIAL SAFETY DATA SHEET FOR MORE DETAILED INFORMATION INCLUDING INFORMATION ON APPROPRIATE RESPIRATORY PROTECTION. MSDS SHEETS AVAILABLE AT WWW.GRANITECONSTRUCTION.COM/MSDS OR BY CONTACTING YOUR LOCAL OFFICE.

gci rev 04/21

ORIGINAL

GRANITE™

SMITH ISLAND ASPHALT
2111 ROSS AVE.
EVERETT, WA 98205
425-252-9592

Ticket No. **2666036**
6/27/2022 10:58:16AM

Customer: GRANITE CONSTRUCTION COMPANY 2
Order ID: 22030
Job/PO# : 1136527
Cost Code
Location: EVT - NORTON TERMINAL DEV
2600 FEDERAL AVE

Comments:

Vehicle: G4S KW WITH PRETTY FLAMES
License: | |
Carrier:
Product : 3947 1/2"HMA58H-22ST

	Pounds	Metric Tons	Tons
Gross	61,500	27.90	30.75
Tare	26,700	12.11	13.35
Net	34,800	15.79	17.40

Scale: 1

FOB: PICK-UP

This Load:	**17.40**	**TONS**
Load No:	17	
Shipped:	296.59	TONS

Weighmaster: Granite Construction Company
Deputy: Shanin Coffman

WEIGHMASTER CERTIFICATE

Accepted by: _____

WARNING: THIS PRODUCT CONTAINS CRYSTALLINE SILICA(QUARTZ). CRYSTALLINE SILICA IS A COMMON NATURALLY OCCURING MINERAL FOUND IN SAND AND ROCKPROLONGED AND REPEATE BREATHING OF CRYSTALLINE SILICA DUST MAY CAUSE RESPIRATORY AND OTHER HEALTH PROBLEMS, INCLUDING LUNG DISEASE, SILICOSIS AND CANCER, WHICH MAY RESULT IN PERMANENT INJURY OR DEATH. BEFORE USING OR HANDLING THIS PRODUCT READ THE MATERIAL SAFETY DATA SHEET FOR MORE DETAILED INFORMATION INCLUDING INFORMATION ON APPROPRIATE RESPIRATORY PROTECTION. MSDS SHEETS AVAILABLE AT WWW.GRANITECONSTRUCTION.COM/MSDS OR BY CONTACTING YOUR LOCAL OFFICE

gci rev 04/21

COPY

GRANITE™

SMITH ISLAND ASPHALT
2111 ROSS AVE.
EVERETT, WA 98205
425-252-9592

Ticket No. **2666036**
6/27/2022 10:58:16AM

Customer: GRANITE CONSTRUCTION COMPANY 2
Order ID: 22030
Job/PO# : 1136527
Cost Code
Location: EVT - NORTON TERMINAL DEV
2600 FEDERAL AVE

Comments:

Vehicle: G4S KW WITH PRETTY FLAMES
License: | |
Carrier:
Product : 3947 1/2"HMA58H-22ST

	Pounds	Metric Tons	Tons
Gross	61,500	27.90	30.75
Tare	26,700	12.11	13.35
Net	34,800	15.79	17.40

Scale: 1

FOB: PICK-UP

This Load:	**17.40**	**TONS**
Load No:	17	
Shipped:	296.59	TONS

Weighmaster: Granite Construction Company
Deputy: Shanin Coffman

WEIGHMASTER CERTIFICATE

Accepted by: _____

WARNING: THIS PRODUCT CONTAINS CRYSTALLINE SILICA(QUARTZ). CRYSTALLINE SILICA IS A COMMON NATURALLY OCCURING MINERAL FOUND IN SAND AND ROCKPROLONGED AND REPEATE BREATHING OF CRYSTALLINE SILICA DUST MAY CAUSE RESPIRATORY AND OTHER HEALTH PROBLEMS, INCLUDING LUNG DISEASE, SILICOSIS AND CANCER, WHICH MAY RESULT IN PERMANENT INJURY OR DEATH. BEFORE USING OR HANDLING THIS PRODUCT READ THE MATERIAL SAFETY DATA SHEET FOR MORE DETAILED INFORMATION INCLUDING INFORMATION ON APPROPRIATE RESPIRATORY PROTECTION. MSDS SHEETS AVAILABLE AT WWW.GRANITECONSTRUCTION.COM/MSDS OR BY CONTACTING YOUR LOCAL OFFICE

gci rev 04/21

ORIGINAL

GRANITE™

SMITH ISLAND ASPHALT
2111 ROSS AVE.
EVERETT, WA 98205
425-252-9592

Ticket No. **2666038**
6/27/2022 11:02:11AM

Customer: GRANITE CONSTRUCTION COMPANY 2
Order ID: 22030
Job/PO# : 1136527
Cost Code
Location: EVT - NORTON TERMINAL DEV
2600 FEDERAL AVE

Comments:

Vehicle: G2S MAROON SOLO
License: | |
Carrier:
Product : 3947 1/2"HMA58H-22ST

	Pounds	Metric Tons	Tons
Gross	55,800	25.31	27.90
Tare	25,140	11.40	12.57
Net	30,660	13.91	15.33

Scale: 1

FOB: PICK-UP

This Load: 15.33 TONS

Load No: 18
Shipped: 311.92 TONS

Weighmaster: Granite Construction Company
Deputy: Shanin Coffman

WEIGHMASTER CERTIFICATE

Accepted by: _____

WARNING: THIS PRODUCT CONTAINS CRYSTALLINE SILICA(QUARTZ). CRYSTALLINE SILICA IS A COMMON NATURALLY OCCURING MINERAL FOUND IN SAND AND ROCKPROLONGED AND REPEATE BREATHING OF CRYSTALLINE SILICA DUST MAY CAUSE RESPIRATORY AND OTHER HEALTH PROBLEMS, INCLUDING LUNG DISEASE, SILICOSIS AND CANCER, WHICH MAY RESULT IN PERMANENT INJURY OR DEATH. BEFORE USING OR HANDLING THIS PRODUCT READ THE MATERIAL SAFETY DATA SHEET FOR MORE DETAILED INFORMATION INCLUDING INFORMATION ON APPROPRIATE RESPIRATORY PROTECTION. MSDS SHEETS AVAILABLE AT WWW.GRANITECONSTRUCTION.COM/MSDS OR BY CONTACTING YOUR LOCAL OFFICE

gci rev 04/21

COPY

GRANITE™

SMITH ISLAND ASPHALT
2111 ROSS AVE.
EVERETT, WA 98205
425-252-9592

Ticket No. **2666038**
6/27/2022 11:02:11AM

Customer: GRANITE CONSTRUCTION COMPANY 2
Order ID: 22030
Job/PO# : 1136527
Cost Code
Location: EVT - NORTON TERMINAL DEV
2600 FEDERAL AVE

Comments:

Vehicle: G2S MAROON SOLO
License: | |
Carrier:
Product : 3947 1/2"HMA58H-22ST

	Pounds	Metric Tons	Tons
Gross	55,800	25.31	27.90
Tare	25,140	11.40	12.57
Net	30,660	13.91	15.33

Scale: 1

FOB: PICK-UP

This Load: 15.33 TONS

Load No: 18
Shipped: 311.92 TONS

Weighmaster: Granite Construction Company
Deputy: Shanin Coffman

WEIGHMASTER CERTIFICATE

Accepted by: _____

WARNING: THIS PRODUCT CONTAINS CRYSTALLINE SILICA(QUARTZ). CRYSTALLINE SILICA IS A COMMON NATURALLY OCCURING MINERAL FOUND IN SAND AND ROCKPROLONGED AND REPEATE BREATHING OF CRYSTALLINE SILICA DUST MAY CAUSE RESPIRATORY AND OTHER HEALTH PROBLEMS, INCLUDING LUNG DISEASE, SILICOSIS AND CANCER, WHICH MAY RESULT IN PERMANENT INJURY OR DEATH. BEFORE USING OR HANDLING THIS PRODUCT READ THE MATERIAL SAFETY DATA SHEET FOR MORE DETAILED INFORMATION INCLUDING INFORMATION ON APPROPRIATE RESPIRATORY PROTECTION. MSDS SHEETS AVAILABLE AT WWW.GRANITECONSTRUCTION.COM/MSDS OR BY CONTACTING YOUR LOCAL OFFICE

gci rev 04/21

ORIGINAL

GRANITE™

SMITH ISLAND ASPHALT
2111 ROSS AVE.
EVERETT, WA 98205
425-252-9592

Ticket No. **2666042**
6/27/2022 11:12:38AM

Customer: GRANITE CONSTRUCTION COMPANY 2
Order ID: 22030
Job/PO# : 1136527
Cost Code
Location: EVT - NORTON TERMINAL DEV
2600 FEDERAL AVE

Comments:

Vehicle: 0466S GREEN PETE
License: | |
Carrier:
Product : 3947 1/2"HMA58H-22ST

	Pounds	Metric Tons	Tons
Gross	61,500	27.90	30.75
Tare	27,320	12.39	13.66
Net	34,180	15.50	17.09

Scale: 1 * Manual Weight

FOB: PICK-UP

This Load:	**17.09**	**TONS**
Load No:	19	
Shipped:	329.01	TONS

Weighmaster: Granite Construction Company
Deputy: Shanin Coffman

WEIGHMASTER CERTIFICATE

Accepted by: _____

WARNING: THIS PRODUCT CONTAINS CRYSTALLINE SILICA(QUARTZ). CRYSTALLINE SILICA IS A COMMON NATURALLY OCCURING MINERAL FOUND IN SAND AND ROCKPROLONGED AND REPEATE BREATHING OF CRYSTALLINE SILICA DUST MAY CAUSE RESPIRATORY AND OTHER HEALTH PROBLEMS, INCLUDING LUNG DISEASE, SILICOSIS AND CANCER, WHICH MAY RESULT IN PERMANENT INJURY OR DEATH. BEFORE USING OR HANDLING THIS PRODUCT READ THE MATERIAL SAFETY DATA SHEET FOR MORE DETAILED INFORMATION INCLUDING INFORMATION ON APPROPRIATE RESPIRATORY PROTECTION. MSDS SHEETS AVAILABLE AT WWW.GRANITECONSTRUCTION.COM/MSDS OR BY CONTACTING YOUR LOCAL OFFICE.

gci rev 04/21

COPY

GRANITE™

SMITH ISLAND ASPHALT
2111 ROSS AVE.
EVERETT, WA 98205
425-252-9592

Ticket No. **2666042**
6/27/2022 11:12:38AM

Customer: GRANITE CONSTRUCTION COMPANY 2
Order ID: 22030
Job/PO# : 1136527
Cost Code
Location: EVT - NORTON TERMINAL DEV
2600 FEDERAL AVE

Comments:

Vehicle: 0466S GREEN PETE
License: | |
Carrier:
Product : 3947 1/2"HMA58H-22ST

	Pounds	Metric Tons	Tons
Gross	61,500	27.90	30.75
Tare	27,320	12.39	13.66
Net	34,180	15.50	17.09

Scale: 1 * Manual Weight

FOB: PICK-UP

This Load:	**17.09**	**TONS**
Load No:	19	
Shipped:	329.01	TONS

Weighmaster: Granite Construction Company
Deputy: Shanin Coffman

WEIGHMASTER CERTIFICATE

Accepted by: _____

WARNING: THIS PRODUCT CONTAINS CRYSTALLINE SILICA(QUARTZ). CRYSTALLINE SILICA IS A COMMON NATURALLY OCCURING MINERAL FOUND IN SAND AND ROCKPROLONGED AND REPEATE BREATHING OF CRYSTALLINE SILICA DUST MAY CAUSE RESPIRATORY AND OTHER HEALTH PROBLEMS, INCLUDING LUNG DISEASE, SILICOSIS AND CANCER, WHICH MAY RESULT IN PERMANENT INJURY OR DEATH. BEFORE USING OR HANDLING THIS PRODUCT READ THE MATERIAL SAFETY DATA SHEET FOR MORE DETAILED INFORMATION INCLUDING INFORMATION ON APPROPRIATE RESPIRATORY PROTECTION. MSDS SHEETS AVAILABLE AT WWW.GRANITECONSTRUCTION.COM/MSDS OR BY CONTACTING YOUR LOCAL OFFICE.

gci rev. 04/21

ORIGINAL

GRANITE™

SMITH ISLAND ASPHALT
2111 ROSS AVE.
EVERETT, WA 98205
425-252-9592

Ticket No. **2666043**
6/27/2022 11:16:47AM

Customer: GRANITE CONSTRUCTION COMPANY 2
Order ID: 22030
Job/PO# : 1136527
Cost Code
Location: EVT - NORTON TERMINAL DEV
2600 FEDERAL AVE

Comments:

Vehicle: 048688S WHITE GRANITE TERRY
License: | |
Carrier:
Product : 3947 1/2"HMA58H-22ST

	Pounds	Metric Tons	Tons
Gross	55,400	25.13	27.70
Tare	25,720	11.67	12.86
Net	29,680	13.46	14.84

Scale: 1

FOB: PICK-UP

This Load:	**14.84**	**TONS**
Load No:	20	
Shipped:	343.85	TONS

Weighmaster: Granite Construction Company
Deputy: Shanin Coffman

WEIGHMASTER CERTIFICATE

Accepted by: _____

WARNING: THIS PRODUCT CONTAINS CRYSTALLINE SILICA(QUARTZ). CRYSTALLINE SILICA IS A COMMON NATURALLY OCCURING MINERAL FOUND IN SAND AND ROCKPROLONGED AND REPEATE BREATHING OF CRYSTALLINE SILICA DUST MAY CAUSE RESPIRATORY AND OTHER HEALTH PROBLEMS, INCLUDING LUNG DISEASE, SILICOSIS AND CANCER, WHICH MAY RESULT IN PERMANENT INJURY OR DEATH. BEFORE USING OR HANDLING THIS PRODUCT READ THE MATERIAL SAFETY DATA SHEET FOR MORE DETAILED INFORMATION INCLUDING INFORMATION ON APPROPRIATE RESPIRATORY PROTECTION. MSDS SHEETS AVAILABLE AT WWW.GRANITECONSTRUCTION.COM/MSDS OR BY CONTACTING YOUR LOCAL OFFICE

gci rev 04/21

COPY

GRANITE™

SMITH ISLAND ASPHALT
2111 ROSS AVE.
EVERETT, WA 98205
425-252-9592

Ticket No. **2666043**
6/27/2022 11:16:47AM

Customer: GRANITE CONSTRUCTION COMPANY 2
Order ID: 22030
Job/PO# : 1136527
Cost Code
Location: EVT - NORTON TERMINAL DEV
2600 FEDERAL AVE

Comments:

Vehicle: 048688S WHITE GRANITE TERRY
License: | |
Carrier:
Product : 3947 1/2"HMA58H-22ST

	Pounds	Metric Tons	Tons
Gross	55,400	25.13	27.70
Tare	25,720	11.67	12.86
Net	29,680	13.46	14.84

Scale: 1

FOB: PICK-UP

This Load:	**14.84**	**TONS**
Load No:	20	
Shipped:	343.85	TONS

Weighmaster: Granite Construction Company
Deputy: Shanin Coffman

WEIGHMASTER CERTIFICATE

Accepted by: _____

WARNING: THIS PRODUCT CONTAINS CRYSTALLINE SILICA(QUARTZ). CRYSTALLINE SILICA IS A COMMON NATURALLY OCCURING MINERAL FOUND IN SAND AND ROCKPROLONGED AND REPEATE BREATHING OF CRYSTALLINE SILICA DUST MAY CAUSE RESPIRATORY AND OTHER HEALTH PROBLEMS, INCLUDING LUNG DISEASE, SILICOSIS AND CANCER, WHICH MAY RESULT IN PERMANENT INJURY OR DEATH. BEFORE USING OR HANDLING THIS PRODUCT READ THE MATERIAL SAFETY DATA SHEET FOR MORE DETAILED INFORMATION INCLUDING INFORMATION ON APPROPRIATE RESPIRATORY PROTECTION. MSDS SHEETS AVAILABLE AT WWW.GRANITECONSTRUCTION.COM/MSDS OR BY CONTACTING YOUR LOCAL OFFICE

gci rev 04/21

ORIGINAL

GRANITE™

SMITH ISLAND ASPHALT
2111 ROSS AVE.
EVERETT, WA 98205
425-252-9592

Ticket No. **2666057**
6/27/2022 12:19:19PM

Customer: GRANITE CONSTRUCTION COMPANY 2
Order ID: 22030
Job/PO# : 1136527
Cost Code
Location: EVT - NORTON TERMINAL DEV
2600 FEDERAL AVE

Comments:

Vehicle: G4S KW WITH PRETTY FLAMES
License: | |
Carrier:
Product : 3947 1/2"HMA58H-22ST

	Pounds	Metric Tons	Tons
Gross	61,440	27.87	30.72
Tare	26,700	12.11	13.35
Net	34,740	15.76	17.37

Scale: 1

FOB: PICK-UP

This Load:	**17.37**	**TONS**
Load No:	22	
Shipped:	384.96	TONS

Weighmaster: Granite Construction Company
Deputy: Shanin Coffman

WEIGHMASTER CERTIFICATE

Accepted by: _____

WARNING: THIS PRODUCT CONTAINS CRYSTALLINE SILICA(QUARTZ). CRYSTALLINE SILICA IS A COMMON NATURALLY OCCURING MINERAL FOUND IN SAND AND ROCKPROLONGED AND REPEATE BREATHING OF CRYSTALLINE SILICA DUST MAY CAUSE RESPIRATORY AND OTHER HEALTH PROBLEMS, INCLUDING LUNG DISEASE, SILICOSIS AND CANCER, WHICH MAY RESULT IN PERMANENT INJURY OR DEATH. BEFORE USING OR HANDLING THIS PRODUCT READ THE MATERIAL SAFETY DATA SHEET FOR MORE DETAILED INFORMATION INCLUDING INFORMATION ON APPROPRIATE RESPIRATORY PROTECTION. MSDS SHEETS AVAILABLE AT WWW.GRANITECONSTRUCTION.COM/MSDS OR BY CONTACTING YOUR LOCAL OFFICE

gci rev 04/21

COPY

GRANITE™

SMITH ISLAND ASPHALT
2111 ROSS AVE.
EVERETT, WA 98205
425-252-9592

Ticket No. **2666057**
6/27/2022 12:19:19PM

Customer: GRANITE CONSTRUCTION COMPANY 2
Order ID: 22030
Job/PO# : 1136527
Cost Code
Location: EVT - NORTON TERMINAL DEV
2600 FEDERAL AVE

Comments:

Vehicle: G4S KW WITH PRETTY FLAMES
License: | |
Carrier:
Product : 3947 1/2"HMA58H-22ST

	Pounds	Metric Tons	Tons
Gross	61,440	27.87	30.72
Tare	26,700	12.11	13.35
Net	34,740	15.76	17.37

Scale: 1

FOB: PICK-UP

This Load:	**17.37**	**TONS**
Load No:	22	
Shipped:	384.96	TONS

Weighmaster: Granite Construction Company
Deputy: Shanin Coffman

WEIGHMASTER CERTIFICATE

Accepted by: _____

WARNING: THIS PRODUCT CONTAINS CRYSTALLINE SILICA(QUARTZ). CRYSTALLINE SILICA IS A COMMON NATURALLY OCCURING MINERAL FOUND IN SAND AND ROCKPROLONGED AND REPEATE BREATHING OF CRYSTALLINE SILICA DUST MAY CAUSE RESPIRATORY AND OTHER HEALTH PROBLEMS, INCLUDING LUNG DISEASE, SILICOSIS AND CANCER, WHICH MAY RESULT IN PERMANENT INJURY OR DEATH. BEFORE USING OR HANDLING THIS PRODUCT READ THE MATERIAL SAFETY DATA SHEET FOR MORE DETAILED INFORMATION INCLUDING INFORMATION ON APPROPRIATE RESPIRATORY PROTECTION. MSDS SHEETS AVAILABLE AT WWW.GRANITECONSTRUCTION.COM/MSDS OR BY CONTACTING YOUR LOCAL OFFICE.

gci rev 04/21

ORIGINAL

GRANITE™

SMITH ISLAND ASPHALT
2111 ROSS AVE.
EVERETT, WA 98205
425-252-9592

Ticket No. **2666058**
6/27/2022 12:21:15PM

Customer: GRANITE CONSTRUCTION COMPANY 2
Order ID: 22030
Job/PO# : 1136527
Cost Code
Location: EVT - NORTON TERMINAL DEV
2600 FEDERAL AVE

Comments:

Vehicle: G2S MAROON SOLO
License: | |
Carrier:
Product : 3947 1/2"HMA58H-22ST

	Pounds	Metric Tons	Tons
Gross	55,880	25.35	27.94
Tare	25,120	11.39	12.56
Net	30,760	13.95	15.38

Scale: 1

FOB: PICK-UP

This Load:	**15.38**	**TONS**
Load No:	23	
Shipped:	400.34	TONS

Weighmaster: Granite Construction Company
Deputy: Shanin Coffman

WEIGHMASTER CERTIFICATE

Accepted by: _____

WARNING: THIS PRODUCT CONTAINS CRYSTALLINE SILICA(QUARTZ). CRYSTALLINE SILICA IS A COMMON NATURALLY OCCURING MINERAL FOUND IN SAND AND ROCKPROLONGED AND REPEATE BREATHING OF CRYSTALLINE SILICA DUST MAY CAUSE RESPIRATORY AND OTHER HEALTH PROBLEMS, INCLUDING LUNG DISEASE, SILICOSIS AND CANCER, WHICH MAY RESULT IN PERMANENT INJURY OR DEATH. BEFORE USING OR HANDLING THIS PRODUCT READ THE MATERIAL SAFETY DATA SHEET FOR MORE DETAILED INFORMATION INCLUDING INFORMATION ON APPROPRIATE RESPIRATORY PROTECTION. MSDS SHEETS AVAILABLE AT WWW.GRANITECONSTRUCTION.COM/MSDS OR BY CONTACTING YOUR LOCAL OFFICE

gci rev 04/21

COPY

GRANITE™

SMITH ISLAND ASPHALT
2111 ROSS AVE.
EVERETT, WA 98205
425-252-9592

Ticket No. **2666058**
6/27/2022 12:21:15PM

Customer: GRANITE CONSTRUCTION COMPANY 2
Order ID: 22030
Job/PO# : 1136527
Cost Code
Location: EVT - NORTON TERMINAL DEV
2600 FEDERAL AVE

Comments:

Vehicle: G2S MAROON SOLO
License: | |
Carrier:
Product : 3947 1/2"HMA58H-22ST

	Pounds	Metric Tons	Tons
Gross	55,880	25.35	27.94
Tare	25,120	11.39	12.56
Net	30,760	13.95	15.38

Scale: 1

FOB: PICK-UP

This Load:	**15.38**	**TONS**
Load No:	23	
Shipped:	400.34	TONS

Weighmaster: Granite Construction Company
Deputy: Shanin Coffman

WEIGHMASTER CERTIFICATE

Accepted by: _____

WARNING: THIS PRODUCT CONTAINS CRYSTALLINE SILICA(QUARTZ). CRYSTALLINE SILICA IS A COMMON NATURALLY OCCURING MINERAL FOUND IN SAND AND ROCKPROLONGED AND REPEATE BREATHING OF CRYSTALLINE SILICA DUST MAY CAUSE RESPIRATORY AND OTHER HEALTH PROBLEMS, INCLUDING LUNG DISEASE, SILICOSIS AND CANCER, WHICH MAY RESULT IN PERMANENT INJURY OR DEATH. BEFORE USING OR HANDLING THIS PRODUCT READ THE MATERIAL SAFETY DATA SHEET FOR MORE DETAILED INFORMATION INCLUDING INFORMATION ON APPROPRIATE RESPIRATORY PROTECTION. MSDS SHEETS AVAILABLE AT WWW.GRANITECONSTRUCTION.COM/MSDS OR BY CONTACTING YOUR LOCAL OFFICE

gci rev 04/21

ORIGINAL

GRANITE™

SMITH ISLAND ASPHALT
2111 ROSS AVE.
EVERETT, WA 98205
425-252-9592

Ticket No. **2666061**
6/27/2022 12:37:29PM

Customer: GRANITE CONSTRUCTION COMPANY 2
Order ID: 22030
Job/PO# : 1136527
Cost Code
Location: EVT - NORTON TERMINAL DEV
2600 FEDERAL AVE

Comments:

Vehicle: 0466S GREEN PETE
License: | |
Carrier:
Product : 3947 1/2"HMA58H-22ST

	Pounds	Metric Tons	Tons
Gross	61,040	27.69	30.52
Tare	27,320	12.39	13.66
Net	33,720	15.30	16.86

Scale: 1

FOB: PICK-UP

This Load:	**16.86**	**TONS**
Load No:	24	
Shipped:	417.20	TONS

Weighmaster: Granite Construction Company
Deputy: Shanin Coffman

WEIGHMASTER CERTIFICATE

Accepted by: _____

WARNING: THIS PRODUCT CONTAINS CRYSTALLINE SILICA(QUARTZ). CRYSTALLINE SILICA IS A COMMON NATURALLY OCCURING MINERAL FOUND IN SAND AND ROCKPROLONGED AND REPEATE BREATHING OF CRYSTALLINE SILICA DUST MAY CAUSE RESPIRATORY AND OTHER HEALTH PROBLEMS, INCLUDING LUNG DISEASE, SILICOSIS AND CANCER, WHICH MAY RESULT IN PERMANENT INJURY OR DEATH. BEFORE USING OR HANDLING THIS PRODUCT READ THE MATERIAL SAFETY DATA SHEET FOR MORE DETAILED INFORMATION INCLUDING INFORMATION ON APPROPRIATE RESPIRATORY PROTECTION. MSDS SHEETS AVAILABLE AT WWW.GRANITECONSTRUCTION.COM/MSDS OR BY CONTACTING YOUR LOCAL OFFICE

gci rev. 04/21

COPY

GRANITE™

SMITH ISLAND ASPHALT
2111 ROSS AVE.
EVERETT, WA 98205
425-252-9592

Ticket No. **2666061**
6/27/2022 12:37:29PM

Customer: GRANITE CONSTRUCTION COMPANY 2
Order ID: 22030
Job/PO# : 1136527
Cost Code
Location: EVT - NORTON TERMINAL DEV
2600 FEDERAL AVE

Comments:

Vehicle: 0466S GREEN PETE
License: | |
Carrier:
Product : 3947 1/2"HMA58H-22ST

	Pounds	Metric Tons	Tons
Gross	61,040	27.69	30.52
Tare	27,320	12.39	13.66
Net	33,720	15.30	16.86

Scale: 1

FOB: PICK-UP

This Load:	**16.86**	**TONS**
Load No:	24	
Shipped:	417.20	TONS

Weighmaster: Granite Construction Company
Deputy: Shanin Coffman

WEIGHMASTER CERTIFICATE

Accepted by: _____

WARNING: THIS PRODUCT CONTAINS CRYSTALLINE SILICA(QUARTZ). CRYSTALLINE SILICA IS A COMMON NATURALLY OCCURING MINERAL FOUND IN SAND AND ROCKPROLONGED AND REPEATE BREATHING OF CRYSTALLINE SILICA DUST MAY CAUSE RESPIRATORY AND OTHER HEALTH PROBLEMS, INCLUDING LUNG DISEASE, SILICOSIS AND CANCER, WHICH MAY RESULT IN PERMANENT INJURY OR DEATH. BEFORE USING OR HANDLING THIS PRODUCT READ THE MATERIAL SAFETY DATA SHEET FOR MORE DETAILED INFORMATION INCLUDING INFORMATION ON APPROPRIATE RESPIRATORY PROTECTION. MSDS SHEETS AVAILABLE AT WWW.GRANITECONSTRUCTION.COM/MSDS OR BY CONTACTING YOUR LOCAL OFFICE

gci rev. 04/21

ORIGINAL

GRANITE™

SMITH ISLAND ASPHALT
2111 ROSS AVE.
EVERETT, WA 98205
425-252-9592

Ticket No. **2666063**
6/27/2022 12:39:55PM

Customer: GRANITE CONSTRUCTION COMPANY 2
Order ID: 22030
Job/PO# : 1136527
Cost Code
Location: EVT - NORTON TERMINAL DEV
2600 FEDERAL AVE

Comments:

Vehicle: 048688S WHITE GRANITE TERRY
License: | |
Carrier:
Product : 3947 1/2"HMA58H-22ST

	Pounds	Metric Tons	Tons
Gross	55,400	25.13	27.70
Tare	25,700	11.66	12.85
Net	29,700	13.47	14.85

Scale: 1

FOB: PICK-UP

This Load:	**14.85**	**TONS**
Load No:	25	
Shipped:	432.05	TONS

Weighmaster: Granite Construction Company
Deputy: Shanin Coffman

WEIGHMASTER CERTIFICATE

Accepted by: _____

WARNING: THIS PRODUCT CONTAINS CRYSTALLINE SILICA(QUARTZ). CRYSTALLINE SILICA IS A COMMON NATURALLY OCCURING MINERAL FOUND IN SAND AND ROCKPROLONGED AND REPEATE BREATHING OF CRYSTALLINE SILICA DUST MAY CAUSE RESPIRATORY AND OTHER HEALTH PROBLEMS, INCLUDING LUNG DISEASE, SILICOSIS AND CANCER, WHICH MAY RESULT IN PERMANENT INJURY OR DEATH. BEFORE USING OR HANDLING THIS PRODUCT READ THE MATERIAL SAFETY DATA SHEET FOR MORE DETAILED INFORMATION INCLUDING INFORMATION ON APPROPRIATE RESPIRATORY PROTECTION. MSDS SHEETS AVAILABLE AT WWW.GRANITECONSTRUCTION.COM/MSDS OR BY CONTACTING YOUR LOCAL OFFICE

gci rev 04/21

COPY

GRANITE™

SMITH ISLAND ASPHALT
2111 ROSS AVE.
EVERETT, WA 98205
425-252-9592

Ticket No. **2666063**
6/27/2022 12:39:55PM

Customer: GRANITE CONSTRUCTION COMPANY 2
Order ID: 22030
Job/PO# : 1136527
Cost Code
Location: EVT - NORTON TERMINAL DEV
2600 FEDERAL AVE

Comments:

Vehicle: 048688S WHITE GRANITE TERRY
License: | |
Carrier:
Product : 3947 1/2"HMA58H-22ST

	Pounds	Metric Tons	Tons
Gross	55,400	25.13	27.70
Tare	25,700	11.66	12.85
Net	29,700	13.47	14.85

Scale: 1

FOB: PICK-UP

This Load:	**14.85**	**TONS**
Load No:	25	
Shipped:	432.05	TONS

Weighmaster: Granite Construction Company
Deputy: Shanin Coffman

WEIGHMASTER CERTIFICATE

Accepted by: _____

WARNING: THIS PRODUCT CONTAINS CRYSTALLINE SILICA(QUARTZ). CRYSTALLINE SILICA IS A COMMON NATURALLY OCCURING MINERAL FOUND IN SAND AND ROCKPROLONGED AND REPEATE BREATHING OF CRYSTALLINE SILICA DUST MAY CAUSE RESPIRATORY AND OTHER HEALTH PROBLEMS, INCLUDING LUNG DISEASE, SILICOSIS AND CANCER, WHICH MAY RESULT IN PERMANENT INJURY OR DEATH. BEFORE USING OR HANDLING THIS PRODUCT READ THE MATERIAL SAFETY DATA SHEET FOR MORE DETAILED INFORMATION INCLUDING INFORMATION ON APPROPRIATE RESPIRATORY PROTECTION. MSDS SHEETS AVAILABLE AT WWW.GRANITECONSTRUCTION.COM/MSDS OR BY CONTACTING YOUR LOCAL OFFICE

gci rev 04/21

ORIGINAL

GRANITE™

SMITH ISLAND ASPHALT
2111 ROSS AVE.
EVERETT, WA 98205
425-252-9592

Ticket No. **2666077**
6/27/2022 1:37:52PM

Customer: GRANITE CONSTRUCTION COMPANY 2
Order ID: 22030
Job/PO# : 1136527
Cost Code
Location: EVT - NORTON TERMINAL DEV
2600 FEDERAL AVE

Comments:

Vehicle: 0486SS GREEN
License: | |
Carrier:
Product : 3947 1/2"HMA58H-22ST

	Pounds	Metric Tons	Tons
Gross	79,680	36.14	39.84
Tare	31,980	14.51	15.99
Net	47,700	21.64	23.85

Scale: 1

FOB: PICK-UP

This Load: 23.85 TONS

Load No: 26
Shipped: 455.90 TONS

Weighmaster: Granite Construction Company
Deputy: Shanin Coffman

WEIGHMASTER CERTIFICATE

Accepted by: _____

WARNING: THIS PRODUCT CONTAINS CRYSTALLINE SILICA(QUARTZ). CRYSTALLINE SILICA IS A COMMON NATURALLY OCCURING MINERAL FOUND IN SAND AND ROCKPROLONGED AND REPEATE BREATHING OF CRYSTALLINE SILICA DUST MAY CAUSE RESPIRATORY AND OTHER HEALTH PROBLEMS, INCLUDING LUNG DISEASE, SILICOSIS AND CANCER, WHICH MAY RESULT IN PERMANENT INJURY OR DEATH. BEFORE USING OR HANDLING THIS PRODUCT READ THE MATERIAL SAFETY DATA SHEET FOR MORE DETAILED INFORMATION INCLUDING INFORMATION ON APPROPRIATE RESPIRATORY PROTECTION. MSDS SHEETS AVAILABLE AT WWW.GRANITECONSTRUCTION.COM/MSDS OR BY CONTACTING YOUR LOCAL OFFICE

gci rev 04/21

COPY

GRANITE™

SMITH ISLAND ASPHALT
2111 ROSS AVE.
EVERETT, WA 98205
425-252-9592

Ticket No. **2666077**
6/27/2022 1:37:52PM

Customer: GRANITE CONSTRUCTION COMPANY 2
Order ID: 22030
Job/PO# : 1136527
Cost Code
Location: EVT - NORTON TERMINAL DEV
2600 FEDERAL AVE

Comments:

Vehicle: 0486SS GREEN
License: | |
Carrier:
Product : 3947 1/2"HMA58H-22ST

	Pounds	Metric Tons	Tons
Gross	79,680	36.14	39.84
Tare	31,980	14.51	15.99
Net	47,700	21.64	23.85

Scale: 1

FOB: PICK-UP

This Load: 23.85 TONS

Load No: 26
Shipped: 455.90 TONS

Weighmaster: Granite Construction Company
Deputy: Shanin Coffman

WEIGHMASTER CERTIFICATE

Accepted by: _____

WARNING: THIS PRODUCT CONTAINS CRYSTALLINE SILICA(QUARTZ). CRYSTALLINE SILICA IS A COMMON NATURALLY OCCURING MINERAL FOUND IN SAND AND ROCKPROLONGED AND REPEATE BREATHING OF CRYSTALLINE SILICA DUST MAY CAUSE RESPIRATORY AND OTHER HEALTH PROBLEMS, INCLUDING LUNG DISEASE, SILICOSIS AND CANCER, WHICH MAY RESULT IN PERMANENT INJURY OR DEATH. BEFORE USING OR HANDLING THIS PRODUCT READ THE MATERIAL SAFETY DATA SHEET FOR MORE DETAILED INFORMATION INCLUDING INFORMATION ON APPROPRIATE RESPIRATORY PROTECTION. MSDS SHEETS AVAILABLE AT WWW.GRANITECONSTRUCTION.COM/MSDS OR BY CONTACTING YOUR LOCAL OFFICE

gci rev 04/21

ORIGINAL

GRANITE™

SMITH ISLAND ASPHALT
2111 ROSS AVE.
EVERETT, WA 98205
425-252-9592

Ticket No. **2666105**
6/28/2022 6:35:40AM

Customer: GRANITE CONSTRUCTION COMPANY 2
Order ID: 22030
Job/PO# : 1136527
Cost Code
Location: EVT - NORTON TERMINAL DEV
2600 FEDERAL AVE

Comments:

Vehicle: G4S KW DOUBLE DROP
License: | |
Carrier:
Product : 3947 1/2"HMA58H-22ST

	Pounds	Metric Tons	Tons
Gross	61,660	27.97	30.83
Tare	26,720	12.12	13.36
Net	34,940	15.85	17.47

Scale: 1

FOB: PICK-UP

This Load: 17.47 TONS

Load No: 1
Shipped: 17.47 TONS

Weighmaster: Granite Construction Company
Deputy: Shanin Coffman

WEIGHMASTER CERTIFICATE

Accepted by: _____

WARNING: THIS PRODUCT CONTAINS CRYSTALLINE SILICA(QUARTZ). CRYSTALLINE SILICA IS A COMMON NATURALLY OCCURING MINERAL FOUND IN SAND AND ROCKPROLONGED AND REPEATE BREATHING OF CRYSTALLINE SILICA DUST MAY CAUSE RESPIRATORY AND OTHER HEALTH PROBLEMS, INCLUDING LUNG DISEASE, SILICOSIS AND CANCER, WHICH MAY RESULT IN PERMANENT INJURY OR DEATH. BEFORE USING OR HANDLING THIS PRODUCT READ THE MATERIAL SAFETY DATA SHEET FOR MORE DETAILED INFORMATION INCLUDING INFORMATION ON APPROPRIATE RESPIRATORY PROTECTION. MSDS SHEETS AVAILABLE AT WWW.GRANITECONSTRUCTION.COM/MSDS OR BY CONTACTING YOUR LOCAL OFFICE

gci rev 04/21

COPY

GRANITE™

SMITH ISLAND ASPHALT
2111 ROSS AVE.
EVERETT, WA 98205
425-252-9592

Ticket No. **2666105**
6/28/2022 6:35:40AM

Customer: GRANITE CONSTRUCTION COMPANY 2
Order ID: 22030
Job/PO# : 1136527
Cost Code
Location: EVT - NORTON TERMINAL DEV
2600 FEDERAL AVE

Comments:

Vehicle: G4S KW DOUBLE DROP
License: | |
Carrier:
Product : 3947 1/2"HMA58H-22ST

	Pounds	Metric Tons	Tons
Gross	61,660	27.97	30.83
Tare	26,720	12.12	13.36
Net	34,940	15.85	17.47

Scale: 1

FOB: PICK-UP

This Load: 17.47 TONS

Load No: 1
Shipped: 17.47 TONS

Weighmaster: Granite Construction Company
Deputy: Shanin Coffman

WEIGHMASTER CERTIFICATE

Accepted by: _____

WARNING: THIS PRODUCT CONTAINS CRYSTALLINE SILICA(QUARTZ). CRYSTALLINE SILICA IS A COMMON NATURALLY OCCURING MINERAL FOUND IN SAND AND ROCKPROLONGED AND REPEATE BREATHING OF CRYSTALLINE SILICA DUST MAY CAUSE RESPIRATORY AND OTHER HEALTH PROBLEMS, INCLUDING LUNG DISEASE, SILICOSIS AND CANCER, WHICH MAY RESULT IN PERMANENT INJURY OR DEATH. BEFORE USING OR HANDLING THIS PRODUCT READ THE MATERIAL SAFETY DATA SHEET FOR MORE DETAILED INFORMATION INCLUDING INFORMATION ON APPROPRIATE RESPIRATORY PROTECTION. MSDS SHEETS AVAILABLE AT WWW.GRANITECONSTRUCTION.COM/MSDS OR BY CONTACTING YOUR LOCAL OFFICE

gci rev 04/21

ORIGINAL

GRANITE™

SMITH ISLAND ASPHALT
2111 ROSS AVE
EVERETT, WA 98205
425-252-9592

Ticket No. **2666106**
6/28/2022 6:39:56AM

Customer: GRANITE CONSTRUCTION COMPANY 2
Order ID: 22030
Job/PO# : 1136527
Cost Code
Location: EVT - NORTON TERMINAL DEV
2600 FEDERAL AVE

Comments:

Vehicle: 048532S WHITE/BLUE SOLO -
License: B05780A | |
Carrier:
Product : 3947 1/2"HMA58H-22ST

	Pounds	Metric Tons	Tons
Gross	60,980	27.66	30.49
Tare	27,800	12.61	13.90
Net	33,180	15.05	16.59

Scale: 1

FOB: PICK-UP

This Load: 16.59 TONS
Load No: 2
Shipped: 34.06 TONS

Weighmaster: Granite Construction Company
Deputy: Shanin Coffman

WEIGHMASTER CERTIFICATE

Accepted by: _____

WARNING: THIS PRODUCT CONTAINS CRYSTALLINE SILICA(QUARTZ). CRYSTALLINE SILICA IS A COMMON NATURALLY OCCURING MINERAL FOUND IN SAND AND ROCKPROLONGED AND REPEATE BREATHING OF CRYSTALLINE SILICA DUST MAY CAUSE RESPIRATORY AND OTHER HEALTH PROBLEMS, INCLUDING LUNG DISEASE, SILICOSIS AND CANCER, WHICH MAY RESULT IN PERMANENT INJURY OR DEATH. BEFORE USING OR HANDLING THIS PRODUCT READ THE MATERIAL SAFETY DATA SHEET FOR MORE DETAILED INFORMATION INCLUDING INFORMATION ON APPROPRIATE RESPIRATORY PROTECTION. MSDS SHEETS AVAILABLE AT WWW.GRANITECONSTRUCTION.COM/MSDS OR BY CONTACTING YOUR LOCAL OFFICE

gci rev 04/21

COPY

GRANITE™

SMITH ISLAND ASPHALT
2111 ROSS AVE
EVERETT, WA 98205
425-252-9592

Ticket No. **2666106**
6/28/2022 6:39:56AM

Customer: GRANITE CONSTRUCTION COMPANY 2
Order ID: 22030
Job/PO# : 1136527
Cost Code
Location: EVT - NORTON TERMINAL DEV
2600 FEDERAL AVE

Comments:

Vehicle: 048532S WHITE/BLUE SOLO -
License: B05780A | |
Carrier:
Product : 3947 1/2"HMA58H-22ST

	Pounds	Metric Tons	Tons
Gross	60,980	27.66	30.49
Tare	27,800	12.61	13.90
Net	33,180	15.05	16.59

Scale: 1

FOB: PICK-UP

This Load: 16.59 TONS
Load No: 2
Shipped: 34.06 TONS

Weighmaster: Granite Construction Company
Deputy: Shanin Coffman

WEIGHMASTER CERTIFICATE

Accepted by: _____

WARNING: THIS PRODUCT CONTAINS CRYSTALLINE SILICA(QUARTZ). CRYSTALLINE SILICA IS A COMMON NATURALLY OCCURING MINERAL FOUND IN SAND AND ROCKPROLONGED AND REPEATE BREATHING OF CRYSTALLINE SILICA DUST MAY CAUSE RESPIRATORY AND OTHER HEALTH PROBLEMS, INCLUDING LUNG DISEASE, SILICOSIS AND CANCER, WHICH MAY RESULT IN PERMANENT INJURY OR DEATH. BEFORE USING OR HANDLING THIS PRODUCT READ THE MATERIAL SAFETY DATA SHEET FOR MORE DETAILED INFORMATION INCLUDING INFORMATION ON APPROPRIATE RESPIRATORY PROTECTION. MSDS SHEETS AVAILABLE AT WWW.GRANITECONSTRUCTION.COM/MSDS OR BY CONTACTING YOUR LOCAL OFFICE

gci rev 04/21

ORIGINAL

GRANITE™

SMITH ISLAND ASPHALT
2111 ROSS AVE.
EVERETT, WA 98205
425-252-9592

Ticket No. **2666107**
6/28/2022 6:46:59AM

Customer: GRANITE CONSTRUCTION COMPANY 2
Order ID: 22030
Job/PO# : 1136527
Cost Code
Location: EVT - NORTON TERMINAL DEV 2600 FEDERAL AVE

Comments:

Vehicle: G2S MAROON SOLO
License: | |
Carrier:
Product : 3947 1/2"HMA58H-22ST

	Pounds	Metric Tons	Tons
Gross	55,660	25.25	27.83
Tare	25,140	11.40	12.57
Net	30,520	13.84	15.26

Scale: 1

FOB: PICK-UP

This Load: 15.26 TONS

Load No: 3
Shipped: 49.32 TONS

Weighmaster: Granite Construction Company
Deputy: Shanin Coffman

WEIGHMASTER CERTIFICATE

Accepted by: _____

WARNING: THIS PRODUCT CONTAINS CRYSTALLINE SILICA(QUARTZ). CRYSTALLINE SILICA IS A COMMON NATURALLY OCCURING MINERAL FOUND IN SAND AND ROCKPROLONGED AND REPEATE BREATHING OF CRYSTALLINE SILICA DUST MAY CAUSE RESPIRATORY AND OTHER HEALTH PROBLEMS, INCLUDING LUNG DISEASE, SILICOSIS AND CANCER, WHICH MAY RESULT IN PERMANENT INJURY OR DEATH. BEFORE USING OR HANDLING THIS PRODUCT READ THE MATERIAL SAFETY DATA SHEET FOR MORE DETAILED INFORMATION INCLUDING INFORMATION ON APPROPRIATE RESPIRATORY PROTECTION. MSDS SHEETS AVAILABLE AT WWW.GRANITECONSTRUCTION.COM/MSDS OR BY CONTACTING YOUR LOCAL OFFICE

gci rev 04/21

COPY

GRANITE™

SMITH ISLAND ASPHALT
2111 ROSS AVE.
EVERETT, WA 98205
425-252-9592

Ticket No. **2666107**
6/28/2022 6:46:59AM

Customer: GRANITE CONSTRUCTION COMPANY 2
Order ID: 22030
Job/PO# : 1136527
Cost Code
Location: EVT - NORTON TERMINAL DEV 2600 FEDERAL AVE

Comments:

Vehicle: G2S MAROON SOLO
License: | |
Carrier:
Product : 3947 1/2"HMA58H-22ST

	Pounds	Metric Tons	Tons
Gross	55,660	25.25	27.83
Tare	25,140	11.40	12.57
Net	30,520	13.84	15.26

Scale: 1

FOB: PICK-UP

This Load: 15.26 TONS

Load No: 3
Shipped: 49.32 TONS

Weighmaster: Granite Construction Company
Deputy: Shanin Coffman

WEIGHMASTER CERTIFICATE

Accepted by: _____

WARNING: THIS PRODUCT CONTAINS CRYSTALLINE SILICA(QUARTZ). CRYSTALLINE SILICA IS A COMMON NATURALLY OCCURING MINERAL FOUND IN SAND AND ROCKPROLONGED AND REPEATE BREATHING OF CRYSTALLINE SILICA DUST MAY CAUSE RESPIRATORY AND OTHER HEALTH PROBLEMS, INCLUDING LUNG DISEASE, SILICOSIS AND CANCER, WHICH MAY RESULT IN PERMANENT INJURY OR DEATH. BEFORE USING OR HANDLING THIS PRODUCT READ THE MATERIAL SAFETY DATA SHEET FOR MORE DETAILED INFORMATION INCLUDING INFORMATION ON APPROPRIATE RESPIRATORY PROTECTION. MSDS SHEETS AVAILABLE AT WWW.GRANITECONSTRUCTION.COM/MSDS OR BY CONTACTING YOUR LOCAL OFFICE

gci rev 04/21

ORIGINAL

GRANITE™

SMITH ISLAND ASPHALT
2111 ROSS AVE.
EVERETT, WA 98205
425-252-9592

Ticket No. **2666110**
6/28/2022 6:52:08AM

Customer: GRANITE CONSTRUCTION COMPANY 2
Order ID: 22030
Job/PO# : 1136527
Cost Code
Location: EVT - NORTON TERMINAL DEV 2600 FEDERAL AVE

Comments:

Vehicle: 0466S GREEN PETE
License: | |
Carrier:
Product : 3947 1/2"HMA58H-22ST

	Pounds	Metric Tons	Tons
Gross	61,140	27.73	30.57
Tare	27,400	12.43	13.70
Net	33,740	15.30	16.87

Scale: 1

FOB: PICK-UP

This Load: 16.87 TONS

Load No: 4
Shipped: 66.19 TONS

Weighmaster: Granite Construction Company
Deputy: Shanin Coffman

WEIGHMASTER CERTIFICATE

Accepted by: _____

WARNING: THIS PRODUCT CONTAINS CRYSTALLINE SILICA(QUARTZ). CRYSTALLINE SILICA IS A COMMON NATURALLY OCCURING MINERAL FOUND IN SAND AND ROCKPROLONGED AND REPEATE BREATHING OF CRYSTALLINE SILICA DUST MAY CAUSE RESPIRATORY AND OTHER HEALTH PROBLEMS, INCLUDING LUNG DISEASE, SILICOSIS AND CANCER, WHICH MAY RESULT IN PERMANENT INJURY OR DEATH. BEFORE USING OR HANDLING THIS PRODUCT READ THE MATERIAL SAFETY DATA SHEET FOR MORE DETAILED INFORMATION INCLUDING INFORMATION ON APPROPRIATE RESPIRATORY PROTECTION. MSDS SHEETS AVAILABLE AT WWW.GRANITECONSTRUCTION.COM/MSDS OR BY CONTACTING YOUR LOCAL OFFICE

gci rev 04/21

COPY

GRANITE™

SMITH ISLAND ASPHALT
2111 ROSS AVE.
EVERETT, WA 98205
425-252-9592

Ticket No. **2666110**
6/28/2022 6:52:08AM

Customer: GRANITE CONSTRUCTION COMPANY 2
Order ID: 22030
Job/PO# : 1136527
Cost Code
Location: EVT - NORTON TERMINAL DEV 2600 FEDERAL AVE

Comments:

Vehicle: 0466S GREEN PETE
License: | |
Carrier:
Product : 3947 1/2"HMA58H-22ST

	Pounds	Metric Tons	Tons
Gross	61,140	27.73	30.57
Tare	27,400	12.43	13.70
Net	33,740	15.30	16.87

Scale: 1

FOB: PICK-UP

This Load: 16.87 TONS

Load No: 4
Shipped: 66.19 TONS

Weighmaster: Granite Construction Company
Deputy: Shanin Coffman

WEIGHMASTER CERTIFICATE

Accepted by: _____

WARNING: THIS PRODUCT CONTAINS CRYSTALLINE SILICA(QUARTZ). CRYSTALLINE SILICA IS A COMMON NATURALLY OCCURING MINERAL FOUND IN SAND AND ROCKPROLONGED AND REPEATE BREATHING OF CRYSTALLINE SILICA DUST MAY CAUSE RESPIRATORY AND OTHER HEALTH PROBLEMS, INCLUDING LUNG DISEASE, SILICOSIS AND CANCER, WHICH MAY RESULT IN PERMANENT INJURY OR DEATH. BEFORE USING OR HANDLING THIS PRODUCT READ THE MATERIAL SAFETY DATA SHEET FOR MORE DETAILED INFORMATION INCLUDING INFORMATION ON APPROPRIATE RESPIRATORY PROTECTION. MSDS SHEETS AVAILABLE AT WWW.GRANITECONSTRUCTION.COM/MSDS OR BY CONTACTING YOUR LOCAL OFFICE

gci rev 04/21

ORIGINAL

GRANITE™

SMITH ISLAND ASPHALT
2111 ROSS AVE.
EVERETT, WA 98205
425-252-9592

Ticket No. **2666135**
6/28/2022 8:18:53AM

Customer: GRANITE CONSTRUCTION COMPANY 2
Order ID: 22030
Job/PO# : 1136527
Cost Code
Location: EVT - NORTON TERMINAL DEV 2600 FEDERAL AVE

Comments:

Vehicle: G4S KW DOUBLE DROP
License: | |
Carrier:
Product : 3947 1/2"HMA58H-22ST

	Pounds	Metric Tons	Tons
Gross	60,980	27.66	30.49
Tare	26,660	12.09	13.33
Net	34,320	15.57	17.16

Scale: 1

FOB: PICK-UP

This Load: 17.16 TONS
Load No: 5
Shipped: 83.35 TONS

Weighmaster: Granite Construction Company
Deputy: Shanin Coffman

WEIGHMASTER CERTIFICATE

Accepted by: _____

WARNING: THIS PRODUCT CONTAINS CRYSTALLINE SILICA(QUARTZ). CRYSTALLINE SILICA IS A COMMON NATURALLY OCCURING MINERAL FOUND IN SAND AND ROCKPROLONGED AND REPEATE BREATHING OF CRYSTALLINE SILICA DUST MAY CAUSE RESPIRATORY AND OTHER HEALTH PROBLEMS, INCLUDING LUNG DISEASE, SILICOSIS AND CANCER, WHICH MAY RESULT IN PERMANENT INJURY OR DEATH. BEFORE USING OR HANDLING THIS PRODUCT READ THE MATERIAL SAFETY DATA SHEET FOR MORE DETAILED INFORMATION INCLUDING INFORMATION ON APPROPRIATE RESPIRATORY PROTECTION. MSDS SHEETS AVAILABLE AT WWW.GRANITECONSTRUCTION.COM/MSDS OR BY CONTACTING YOUR LOCAL OFFICE

gci rev 04/21

COPY

GRANITE™

SMITH ISLAND ASPHALT
2111 ROSS AVE.
EVERETT, WA 98205
425-252-9592

Ticket No. **2666135**
6/28/2022 8:18:53AM

Customer: GRANITE CONSTRUCTION COMPANY 2
Order ID: 22030
Job/PO# : 1136527
Cost Code
Location: EVT - NORTON TERMINAL DEV 2600 FEDERAL AVE

Comments:

Vehicle: G4S KW DOUBLE DROP
License: | |
Carrier:
Product : 3947 1/2"HMA58H-22ST

	Pounds	Metric Tons	Tons
Gross	60,980	27.66	30.49
Tare	26,660	12.09	13.33
Net	34,320	15.57	17.16

Scale: 1

FOB: PICK-UP

This Load: 17.16 TONS
Load No: 5
Shipped: 83.35 TONS

Weighmaster: Granite Construction Company
Deputy: Shanin Coffman

WEIGHMASTER CERTIFICATE

Accepted by: _____

WARNING: THIS PRODUCT CONTAINS CRYSTALLINE SILICA(QUARTZ). CRYSTALLINE SILICA IS A COMMON NATURALLY OCCURING MINERAL FOUND IN SAND AND ROCKPROLONGED AND REPEATE BREATHING OF CRYSTALLINE SILICA DUST MAY CAUSE RESPIRATORY AND OTHER HEALTH PROBLEMS, INCLUDING LUNG DISEASE, SILICOSIS AND CANCER, WHICH MAY RESULT IN PERMANENT INJURY OR DEATH. BEFORE USING OR HANDLING THIS PRODUCT READ THE MATERIAL SAFETY DATA SHEET FOR MORE DETAILED INFORMATION INCLUDING INFORMATION ON APPROPRIATE RESPIRATORY PROTECTION. MSDS SHEETS AVAILABLE AT WWW.GRANITECONSTRUCTION.COM/MSDS OR BY CONTACTING YOUR LOCAL OFFICE

gci rev 04/21

ORIGINAL

GRANITE™

SMITH ISLAND ASPHALT
2111 ROSS AVE.
EVERETT, WA 98205
425-252-9592

Ticket No. **2666136**
6/28/2022 8:23:12AM

Customer: GRANITE CONSTRUCTION COMPANY 2
Order ID: 22030
Job/PO# : 1136527
Cost Code
Location: EVT - NORTON TERMINAL DEV
2600 FEDERAL AVE

Comments:

Vehicle: 048532S WHITE/BLUE SOLO -
License: B05780A | |
Carrier:
Product : 3947 1/2"HMA58H-22ST

	Pounds	Metric Tons	Tons
Gross	59,320	26.91	29.66
Tare	27,740	12.58	13.87
Net	31,580	14.32	15.79

Scale: 1

FOB: PICK-UP

This Load: 15.79 TONS
Load No: 6
Shipped: 99.14 TONS

Weighmaster: Granite Construction Company
Deputy: Shanin Coffman

WEIGHMASTER CERTIFICATE

Accepted by: _____

WARNING: THIS PRODUCT CONTAINS CRYSTALLINE SILICA(QUARTZ). CRYSTALLINE SILICA IS A COMMON NATURALLY OCCURING MINERAL FOUND IN SAND AND ROCKPROLONGED AND REPEATE BREATHING OF CRYSTALLINE SILICA DUST MAY CAUSE RESPIRATORY AND OTHER HEALTH PROBLEMS, INCLUDING LUNG DISEASE, SILICOSIS AND CANCER, WHICH MAY RESULT IN PERMANENT INJURY OR DEATH. BEFORE USING OR HANDLING THIS PRODUCT READ THE MATERIAL SAFETY DATA SHEET FOR MORE DETAILED INFORMATION INCLUDING INFORMATION ON APPROPRIATE RESPIRATORY PROTECTION. MSDS SHEETS AVAILABLE AT WWW.GRANITECONSTRUCTION.COM/MSDS OR BY CONTACTING YOUR LOCAL OFFICE

gci rev 04/21

COPY

GRANITE™

SMITH ISLAND ASPHALT
2111 ROSS AVE.
EVERETT, WA 98205
425-252-9592

Ticket No. **2666136**
6/28/2022 8:23:12AM

Customer: GRANITE CONSTRUCTION COMPANY 2
Order ID: 22030
Job/PO# : 1136527
Cost Code
Location: EVT - NORTON TERMINAL DEV
2600 FEDERAL AVE

Comments:

Vehicle: 048532S WHITE/BLUE SOLO -
License: B05780A | |
Carrier:
Product : 3947 1/2"HMA58H-22ST

	Pounds	Metric Tons	Tons
Gross	59,320	26.91	29.66
Tare	27,740	12.58	13.87
Net	31,580	14.32	15.79

Scale: 1

FOB: PICK-UP

This Load: 15.79 TONS
Load No: 6
Shipped: 99.14 TONS

Weighmaster: Granite Construction Company
Deputy: Shanin Coffman

WEIGHMASTER CERTIFICATE

Accepted by: _____

WARNING: THIS PRODUCT CONTAINS CRYSTALLINE SILICA(QUARTZ). CRYSTALLINE SILICA IS A COMMON NATURALLY OCCURING MINERAL FOUND IN SAND AND ROCKPROLONGED AND REPEATE BREATHING OF CRYSTALLINE SILICA DUST MAY CAUSE RESPIRATORY AND OTHER HEALTH PROBLEMS, INCLUDING LUNG DISEASE, SILICOSIS AND CANCER, WHICH MAY RESULT IN PERMANENT INJURY OR DEATH. BEFORE USING OR HANDLING THIS PRODUCT READ THE MATERIAL SAFETY DATA SHEET FOR MORE DETAILED INFORMATION INCLUDING INFORMATION ON APPROPRIATE RESPIRATORY PROTECTION. MSDS SHEETS AVAILABLE AT WWW.GRANITECONSTRUCTION.COM/MSDS OR BY CONTACTING YOUR LOCAL OFFICE

gci rev 04/21

ORIGINAL

GRANITE™

SMITH ISLAND ASPHALT
2111 ROSS AVE.
EVERETT, WA 98205
425-252-9592

Ticket No. **2666138**
6/28/2022 8:28:11AM

Customer: GRANITE CONSTRUCTION COMPANY 2
Order ID: 22030
Job/PO# : 1136527
Cost Code
Location: EVT - NORTON TERMINAL DEV 2600 FEDERAL AVE

Comments:

Vehicle: G2S MAROON SOLO
License: | |
Carrier:
Product : 3947 1/2"HMA58H-22ST

	Pounds	Metric Tons	Tons
Gross	55,320	25.09	27.66
Tare	25,040	11.36	12.52
Net	30,280	13.73	15.14

Scale: 1

FOB: PICK-UP

This Load: 15.14 TONS

Load No: 7
Shipped: 114.28 TONS

Weighmaster: Granite Construction Company
Deputy: Shanin Coffman

WEIGHMASTER CERTIFICATE

Accepted by: _____

WARNING: THIS PRODUCT CONTAINS CRYSTALLINE SILICA(QUARTZ). CRYSTALLINE SILICA IS A COMMON NATURALLY OCCURING MINERAL FOUND IN SAND AND ROCKPROLONGED AND REPEATE BREATHING OF CRYSTALLINE SILICA DUST MAY CAUSE RESPIRATORY AND OTHER HEALTH PROBLEMS, INCLUDING LUNG DISEASE, SILICOSIS AND CANCER, WHICH MAY RESULT IN PERMANENT INJURY OR DEATH. BEFORE USING OR HANDLING THIS PRODUCT READ THE MATERIAL SAFETY DATA SHEET FOR MORE DETAILED INFORMATION INCLUDING INFORMATION ON APPROPRIATE RESPIRATORY PROTECTION. MSDS SHEETS AVAILABLE AT WWW.GRANITECONSTRUCTION.COM/MSDS OR BY CONTACTING YOUR LOCAL OFFICE

gci rev 04/21

COPY

GRANITE™

SMITH ISLAND ASPHALT
2111 ROSS AVE.
EVERETT, WA 98205
425-252-9592

Ticket No. **2666138**
6/28/2022 8:28:11AM

Customer: GRANITE CONSTRUCTION COMPANY 2
Order ID: 22030
Job/PO# : 1136527
Cost Code
Location: EVT - NORTON TERMINAL DEV 2600 FEDERAL AVE

Comments:

Vehicle: G2S MAROON SOLO
License: | |
Carrier:
Product : 3947 1/2"HMA58H-22ST

	Pounds	Metric Tons	Tons
Gross	55,320	25.09	27.66
Tare	25,040	11.36	12.52
Net	30,280	13.73	15.14

Scale: 1

FOB: PICK-UP

This Load: 15.14 TONS

Load No: 7
Shipped: 114.28 TONS

Weighmaster: Granite Construction Company
Deputy: Shanin Coffman

WEIGHMASTER CERTIFICATE

Accepted by: _____

WARNING: THIS PRODUCT CONTAINS CRYSTALLINE SILICA(QUARTZ). CRYSTALLINE SILICA IS A COMMON NATURALLY OCCURING MINERAL FOUND IN SAND AND ROCKPROLONGED AND REPEATE BREATHING OF CRYSTALLINE SILICA DUST MAY CAUSE RESPIRATORY AND OTHER HEALTH PROBLEMS, INCLUDING LUNG DISEASE, SILICOSIS AND CANCER, WHICH MAY RESULT IN PERMANENT INJURY OR DEATH. BEFORE USING OR HANDLING THIS PRODUCT READ THE MATERIAL SAFETY DATA SHEET FOR MORE DETAILED INFORMATION INCLUDING INFORMATION ON APPROPRIATE RESPIRATORY PROTECTION. MSDS SHEETS AVAILABLE AT WWW.GRANITECONSTRUCTION.COM/MSDS OR BY CONTACTING YOUR LOCAL OFFICE

gci rev 04/21

ORIGINAL

GRANITE™

SMITH ISLAND ASPHALT
2111 ROSS AVE.
EVERETT, WA 98205
425-252-9592

Ticket No. **2666142**
6/28/2022 8:40:30AM

Customer: GRANITE CONSTRUCTION COMPANY 2
Order ID: 22030
Job/PO# : 1136527
Cost Code
Location: EVT - NORTON TERMINAL DEV
2600 FEDERAL AVE

Comments:

Vehicle: 0466S GREEN PETE
License: | |
Carrier:
Product : 3947 1/2"HMA58H-22ST

	Pounds	Metric Tons	Tons
Gross	59,860	27.15	29.93
Tare	27,360	12.41	13.68
Net	32,500	14.74	16.25

Scale: 1

FOB: PICK-UP

This Load:	**16.25**	**TONS**
Load No:	8	
Shipped:	130.53	TONS

Weighmaster: Granite Construction Company
Deputy: Shanin Coffman

WEIGHMASTER CERTIFICATE

Accepted by: _____

WARNING: THIS PRODUCT CONTAINS CRYSTALLINE SILICA(QUARTZ). CRYSTALLINE SILICA IS A COMMON NATURALLY OCCURING MINERAL FOUND IN SAND AND ROCKPROLONGED AND REPEATE BREATHING OF CRYSTALLINE SILICA DUST MAY CAUSE RESPIRATORY AND OTHER HEALTH PROBLEMS, INCLUDING LUNG DISEASE, SILICOSIS AND CANCER, WHICH MAY RESULT IN PERMANENT INJURY OR DEATH. BEFORE USING OR HANDLING THIS PRODUCT READ THE MATERIAL SAFETY DATA SHEET FOR MORE DETAILED INFORMATION INCLUDING INFORMATION ON APPROPRIATE RESPIRATORY PROTECTION. MSDS SHEETS AVAILABLE AT WWW.GRANITECONSTRUCTION.COM/MSDS OR BY CONTACTING YOUR LOCAL OFFICE

gci rev 04/21

COPY

GRANITE™

SMITH ISLAND ASPHALT
2111 ROSS AVE.
EVERETT, WA 98205
425-252-9592

Ticket No. **2666142**
6/28/2022 8:40:30AM

Customer: GRANITE CONSTRUCTION COMPANY 2
Order ID: 22030
Job/PO# : 1136527
Cost Code
Location: EVT - NORTON TERMINAL DEV
2600 FEDERAL AVE

Comments:

Vehicle: 0466S GREEN PETE
License: | |
Carrier:
Product : 3947 1/2"HMA58H-22ST

	Pounds	Metric Tons	Tons
Gross	59,860	27.15	29.93
Tare	27,360	12.41	13.68
Net	32,500	14.74	16.25

Scale: 1

FOB: PICK-UP

This Load:	**16.25**	**TONS**
Load No:	8	
Shipped:	130.53	TONS

Weighmaster: Granite Construction Company
Deputy: Shanin Coffman

WEIGHMASTER CERTIFICATE

Accepted by: _____

WARNING: THIS PRODUCT CONTAINS CRYSTALLINE SILICA(QUARTZ). CRYSTALLINE SILICA IS A COMMON NATURALLY OCCURING MINERAL FOUND IN SAND AND ROCKPROLONGED AND REPEATE BREATHING OF CRYSTALLINE SILICA DUST MAY CAUSE RESPIRATORY AND OTHER HEALTH PROBLEMS, INCLUDING LUNG DISEASE, SILICOSIS AND CANCER, WHICH MAY RESULT IN PERMANENT INJURY OR DEATH. BEFORE USING OR HANDLING THIS PRODUCT READ THE MATERIAL SAFETY DATA SHEET FOR MORE DETAILED INFORMATION INCLUDING INFORMATION ON APPROPRIATE RESPIRATORY PROTECTION. MSDS SHEETS AVAILABLE AT WWW.GRANITECONSTRUCTION.COM/MSDS OR BY CONTACTING YOUR LOCAL OFFICE

gci rev 04/21

ORIGINAL

GRANITE™

SMITH ISLAND ASPHALT
2111 ROSS AVE.
EVERETT, WA 98205
425-252-9592

Ticket No. **2666154**
6/28/2022 9:11:33AM

Customer: GRANITE CONSTRUCTION COMPANY 2
Order ID: 22030
Job/PO# : 1136527
Cost Code
Location: EVT - NORTON TERMINAL DEV 2600 FEDERAL AVE

Comments:

Vehicle: G4S KW DOUBLE DROP
License: | |
Carrier:
Product : 3947 1/2"HMA58H-22ST

	Pounds	Metric Tons	Tons
Gross	61,040	27.69	30.52
Tare	26,680	12.10	13.34
Net	34,360	15.59	17.18

Scale: 1

FOB: PICK-UP

This Load:	**17.18**	**TONS**
Load No:	9	
Shipped:	147.71	TONS

Weighmaster: Granite Construction Company
Deputy: Shanin Coffman

WEIGHMASTER CERTIFICATE

Accepted by: _____

WARNING: THIS PRODUCT CONTAINS CRYSTALLINE SILICA(QUARTZ). CRYSTALLINE SILICA IS A COMMON NATURALLY OCCURING MINERAL FOUND IN SAND AND ROCKPROLONGED AND REPEATE BREATHING OF CRYSTALLINE SILICA DUST MAY CAUSE RESPIRATORY AND OTHER HEALTH PROBLEMS, INCLUDING LUNG DISEASE, SILICOSIS AND CANCER, WHICH MAY RESULT IN PERMANENT INJURY OR DEATH. BEFORE USING OR HANDLING THIS PRODUCT READ THE MATERIAL SAFETY DATA SHEET FOR MORE DETAILED INFORMATION INCLUDING INFORMATION ON APPROPRIATE RESPIRATORY PROTECTION. MSDS SHEETS AVAILABLE AT WWW.GRANITECONSTRUCTION.COM/MSDS OR BY CONTACTING YOUR LOCAL OFFICE

gci rev 04/21

COPY

GRANITE™

SMITH ISLAND ASPHALT
2111 ROSS AVE.
EVERETT, WA 98205
425-252-9592

Ticket No. **2666154**
6/28/2022 9:11:33AM

Customer: GRANITE CONSTRUCTION COMPANY 2
Order ID: 22030
Job/PO# : 1136527
Cost Code
Location: EVT - NORTON TERMINAL DEV 2600 FEDERAL AVE

Comments:

Vehicle: G4S KW DOUBLE DROP
License: | |
Carrier:
Product : 3947 1/2"HMA58H-22ST

	Pounds	Metric Tons	Tons
Gross	61,040	27.69	30.52
Tare	26,680	12.10	13.34
Net	34,360	15.59	17.18

Scale: 1

FOB: PICK-UP

This Load:	**17.18**	**TONS**
Load No:	9	
Shipped:	147.71	TONS

Weighmaster: Granite Construction Company
Deputy: Shanin Coffman

WEIGHMASTER CERTIFICATE

Accepted by: _____

WARNING: THIS PRODUCT CONTAINS CRYSTALLINE SILICA(QUARTZ). CRYSTALLINE SILICA IS A COMMON NATURALLY OCCURING MINERAL FOUND IN SAND AND ROCKPROLONGED AND REPEATE BREATHING OF CRYSTALLINE SILICA DUST MAY CAUSE RESPIRATORY AND OTHER HEALTH PROBLEMS, INCLUDING LUNG DISEASE, SILICOSIS AND CANCER, WHICH MAY RESULT IN PERMANENT INJURY OR DEATH. BEFORE USING OR HANDLING THIS PRODUCT READ THE MATERIAL SAFETY DATA SHEET FOR MORE DETAILED INFORMATION INCLUDING INFORMATION ON APPROPRIATE RESPIRATORY PROTECTION. MSDS SHEETS AVAILABLE AT WWW.GRANITECONSTRUCTION.COM/MSDS OR BY CONTACTING YOUR LOCAL OFFICE

gci rev 04/21

ORIGINAL

GRANITE™

SMITH ISLAND ASPHALT
2111 ROSS AVE.
EVERETT, WA 98205
425-252-9592

Ticket No. **2666156**
6/28/2022 9:16:36AM

Customer: GRANITE CONSTRUCTION COMPANY 2
Order ID: 22030
Job/PO# : 1136527
Cost Code
Location: EVT - NORTON TERMINAL DEV
2600 FEDERAL AVE

Comments:

Vehicle: 048532S WHITE/BLUE SOLO -
License: B05780A | |
Carrier:
Product : 3947 1/2"HMA58H-22ST

	Pounds	Metric Tons	Tons
Gross	60,640	27.51	30.32
Tare	27,960	12.68	13.98
Net	32,680	14.82	16.34

Scale: 1

FOB: PICK-UP

This Load: 16.34 TONS

Load No: 10
Shipped: 164.05 TONS

Weighmaster: Granite Construction Company
Deputy: Shanin Coffman

WEIGHMASTER CERTIFICATE

Accepted by: _____

WARNING: THIS PRODUCT CONTAINS CRYSTALLINE SILICA(QUARTZ). CRYSTALLINE SILICA IS A COMMON NATURALLY OCCURING MINERAL FOUND IN SAND AND ROCKPROLONGED AND REPEATE BREATHING OF CRYSTALLINE SILICA DUST MAY CAUSE RESPIRATORY AND OTHER HEALTH PROBLEMS, INCLUDING LUNG DISEASE, SILICOSIS AND CANCER, WHICH MAY RESULT IN PERMANENT INJURY OR DEATH. BEFORE USING OR HANDLING THIS PRODUCT READ THE MATERIAL SAFETY DATA SHEET FOR MORE DETAILED INFORMATION INCLUDING INFORMATION ON APPROPRIATE RESPIRATORY PROTECTION. MSDS SHEETS AVAILABLE AT WWW.GRANITECONSTRUCTION.COM/MSDS OR BY CONTACTING YOUR LOCAL OFFICE

gci rev 04/21

COPY

GRANITE™

SMITH ISLAND ASPHALT
2111 ROSS AVE.
EVERETT, WA 98205
425-252-9592

Ticket No. **2666156**
6/28/2022 9:16:36AM

Customer: GRANITE CONSTRUCTION COMPANY 2
Order ID: 22030
Job/PO# : 1136527
Cost Code
Location: EVT - NORTON TERMINAL DEV
2600 FEDERAL AVE

Comments:

Vehicle: 048532S WHITE/BLUE SOLO -
License: B05780A | |
Carrier:
Product : 3947 1/2"HMA58H-22ST

	Pounds	Metric Tons	Tons
Gross	60,640	27.51	30.32
Tare	27,960	12.68	13.98
Net	32,680	14.82	16.34

Scale: 1

FOB: PICK-UP

This Load: 16.34 TONS

Load No: 10
Shipped: 164.05 TONS

Weighmaster: Granite Construction Company
Deputy: Shanin Coffman

WEIGHMASTER CERTIFICATE

Accepted by: _____

WARNING: THIS PRODUCT CONTAINS CRYSTALLINE SILICA(QUARTZ). CRYSTALLINE SILICA IS A COMMON NATURALLY OCCURING MINERAL FOUND IN SAND AND ROCKPROLONGED AND REPEATE BREATHING OF CRYSTALLINE SILICA DUST MAY CAUSE RESPIRATORY AND OTHER HEALTH PROBLEMS, INCLUDING LUNG DISEASE, SILICOSIS AND CANCER, WHICH MAY RESULT IN PERMANENT INJURY OR DEATH. BEFORE USING OR HANDLING THIS PRODUCT READ THE MATERIAL SAFETY DATA SHEET FOR MORE DETAILED INFORMATION INCLUDING INFORMATION ON APPROPRIATE RESPIRATORY PROTECTION. MSDS SHEETS AVAILABLE AT WWW.GRANITECONSTRUCTION.COM/MSDS OR BY CONTACTING YOUR LOCAL OFFICE

gci rev 04/21

ORIGINAL

GRANITE™

SMITH ISLAND ASPHALT
2111 ROSS AVE.
EVERETT, WA 98205
425-252-9592

Ticket No. **2666160**
6/28/2022 9:25:41AM

Customer: GRANITE CONSTRUCTION COMPANY 2

Order ID: 22030
Job/PO# : 1136527
Cost Code
Location: EVT - NORTON TERMINAL DEV
2600 FEDERAL AVE

Comments:

Vehicle: G2S MAROON SOLO
License: | |
Carrier:
Product : 3947 1/2"HMA58H-22ST

	Pounds	Metric Tons	Tons
Gross	55,300	25.08	27.65
Tare	25,060	11.37	12.53
Net	30,240	13.72	15.12

Scale: 1

FOB: PICK-UP

This Load: 15.12 TONS

Load No: 11
Shipped: 179.17 TONS

Weighmaster: Granite Construction Company
Deputy: Shanin Coffman

WEIGHMASTER CERTIFICATE

Accepted by: _____

WARNING: THIS PRODUCT CONTAINS CRYSTALLINE SILICA(QUARTZ). CRYSTALLINE SILICA IS A COMMON NATURALLY OCCURING MINERAL FOUND IN SAND AND ROCKPROLONGED AND REPEATE BREATHING OF CRYSTALLINE SILICA DUST MAY CAUSE RESPIRATORY AND OTHER HEALTH PROBLEMS, INCLUDING LUNG DISEASE, SILICOSIS AND CANCER, WHICH MAY RESULT IN PERMANENT INJURY OR DEATH. BEFORE USING OR HANDLING THIS PRODUCT READ THE MATERIAL SAFETY DATA SHEET FOR MORE DETAILED INFORMATION INCLUDING INFORMATION ON APPROPRIATE RESPIRATORY PROTECTION. MSDS SHEETS AVAILABLE AT WWW.GRANITECONSTRUCTION.COM/MSDS OR BY CONTACTING YOUR LOCAL OFFICE

gci rev. 04/21

COPY

GRANITE™

SMITH ISLAND ASPHALT
2111 ROSS AVE.
EVERETT, WA 98205
425-252-9592

Ticket No. **2666160**
6/28/2022 9:25:41AM

Customer: GRANITE CONSTRUCTION COMPANY 2

Order ID: 22030
Job/PO# : 1136527
Cost Code
Location: EVT - NORTON TERMINAL DEV
2600 FEDERAL AVE

Comments:

Vehicle: G2S MAROON SOLO
License: | |
Carrier:
Product : 3947 1/2"HMA58H-22ST

	Pounds	Metric Tons	Tons
Gross	55,300	25.08	27.65
Tare	25,060	11.37	12.53
Net	30,240	13.72	15.12

Scale: 1

FOB: PICK-UP

This Load: 15.12 TONS

Load No: 11
Shipped: 179.17 TONS

Weighmaster: Granite Construction Company
Deputy: Shanin Coffman

WEIGHMASTER CERTIFICATE

Accepted by: _____

WARNING: THIS PRODUCT CONTAINS CRYSTALLINE SILICA(QUARTZ). CRYSTALLINE SILICA IS A COMMON NATURALLY OCCURING MINERAL FOUND IN SAND AND ROCKPROLONGED AND REPEATE BREATHING OF CRYSTALLINE SILICA DUST MAY CAUSE RESPIRATORY AND OTHER HEALTH PROBLEMS, INCLUDING LUNG DISEASE, SILICOSIS AND CANCER, WHICH MAY RESULT IN PERMANENT INJURY OR DEATH. BEFORE USING OR HANDLING THIS PRODUCT READ THE MATERIAL SAFETY DATA SHEET FOR MORE DETAILED INFORMATION INCLUDING INFORMATION ON APPROPRIATE RESPIRATORY PROTECTION. MSDS SHEETS AVAILABLE AT WWW.GRANITECONSTRUCTION.COM/MSDS OR BY CONTACTING YOUR LOCAL OFFICE

gci rev. 04/21

ORIGINAL

GRANITE™

SMITH ISLAND ASPHALT
2111 ROSS AVE.
EVERETT, WA 98205
425-252-9592

Ticket No. **2666166**
6/28/2022 9:46:25AM

Customer: GRANITE CONSTRUCTION COMPANY 2
Order ID: 22030
Job/PO# : 1136527
Cost Code
Location: EVT - NORTON TERMINAL DEV
2600 FEDERAL AVE

Comments:

Vehicle: 0466S GREEN PETE
License: | |
Carrier:
Product : 3947 1/2"HMA58H-22ST

	Pounds	Metric Tons	Tons
Gross	61,060	27.70	30.53
Tare	27,320	12.39	13.66
Net	33,740	15.30	16.87

Scale: 1

FOB: PICK-UP

This Load: 16.87 TONS

Load No: 12
Shipped: 196.04 TONS

Weighmaster: Granite Construction Company
Deputy: Shanin Coffman

WEIGHMASTER CERTIFICATE

Accepted by: _____

WARNING: THIS PRODUCT CONTAINS CRYSTALLINE SILICA(QUARTZ). CRYSTALLINE SILICA IS A COMMON NATURALLY OCCURING MINERAL FOUND IN SAND AND ROCKPROLONGED AND REPEATE BREATHING OF CRYSTALLINE SILICA DUST MAY CAUSE RESPIRATORY AND OTHER HEALTH PROBLEMS, INCLUDING LUNG DISEASE, SILICOSIS AND CANCER, WHICH MAY RESULT IN PERMANENT INJURY OR DEATH. BEFORE USING OR HANDLING THIS PRODUCT READ THE MATERIAL SAFETY DATA SHEET FOR MORE DETAILED INFORMATION INCLUDING INFORMATION ON APPROPRIATE RESPIRATORY PROTECTION. MSDS SHEETS AVAILABLE AT WWW.GRANITECONSTRUCTION.COM/MSDS OR BY CONTACTING YOUR LOCAL OFFICE

gci rev 04/21

COPY

GRANITE™

SMITH ISLAND ASPHALT
2111 ROSS AVE.
EVERETT, WA 98205
425-252-9592

Ticket No. **2666166**
6/28/2022 9:46:25AM

Customer: GRANITE CONSTRUCTION COMPANY 2
Order ID: 22030
Job/PO# : 1136527
Cost Code
Location: EVT - NORTON TERMINAL DEV
2600 FEDERAL AVE

Comments:

Vehicle: 0466S GREEN PETE
License: | |
Carrier:
Product : 3947 1/2"HMA58H-22ST

	Pounds	Metric Tons	Tons
Gross	61,060	27.70	30.53
Tare	27,320	12.39	13.66
Net	33,740	15.30	16.87

Scale: 1

FOB: PICK-UP

This Load: 16.87 TONS

Load No: 12
Shipped: 196.04 TONS

Weighmaster: Granite Construction Company
Deputy: Shanin Coffman

WEIGHMASTER CERTIFICATE

Accepted by: _____

WARNING: THIS PRODUCT CONTAINS CRYSTALLINE SILICA(QUARTZ). CRYSTALLINE SILICA IS A COMMON NATURALLY OCCURING MINERAL FOUND IN SAND AND ROCKPROLONGED AND REPEATE BREATHING OF CRYSTALLINE SILICA DUST MAY CAUSE RESPIRATORY AND OTHER HEALTH PROBLEMS, INCLUDING LUNG DISEASE, SILICOSIS AND CANCER, WHICH MAY RESULT IN PERMANENT INJURY OR DEATH. BEFORE USING OR HANDLING THIS PRODUCT READ THE MATERIAL SAFETY DATA SHEET FOR MORE DETAILED INFORMATION INCLUDING INFORMATION ON APPROPRIATE RESPIRATORY PROTECTION. MSDS SHEETS AVAILABLE AT WWW.GRANITECONSTRUCTION.COM/MSDS OR BY CONTACTING YOUR LOCAL OFFICE

gci rev 04/21

ORIGINAL

GRANITE™

SMITH ISLAND ASPHALT
2111 ROSS AVE.
EVERETT, WA 98205
425-252-9592

Ticket No. **2666172**
6/28/2022 10:03:15AM

Customer: GRANITE CONSTRUCTION COMPANY 2
Order ID: 22030
Job/PO# : 1136527
Cost Code
Location: EVT - NORTON TERMINAL DEV
2600 FEDERAL AVE

Comments:

Vehicle: G4S KW DOUBLE DROP
License: | |
Carrier:
Product : 3947 1/2"HMA58H-22ST

	Pounds	Metric Tons	Tons
Gross	59,880	27.16	29.94
Tare	26,620	12.07	13.31
Net	33,260	15.09	16.63

Scale: 1

FOB: PICK-UP

This Load:	**16.63**	**TONS**
Load No:	13	
Shipped:	212.67	TONS

Weighmaster: Granite Construction Company
Deputy: Shanin Coffman

WEIGHMASTER CERTIFICATE

Accepted by: _____

WARNING: THIS PRODUCT CONTAINS CRYSTALLINE SILICA(QUARTZ). CRYSTALLINE SILICA IS A COMMON NATURALLY OCCURING MINERAL FOUND IN SAND AND ROCKPROLONGED AND REPEATE BREATHING OF CRYSTALLINE SILICA DUST MAY CAUSE RESPIRATORY AND OTHER HEALTH PROBLEMS, INCLUDING LUNG DISEASE, SILICOSIS AND CANCER, WHICH MAY RESULT IN PERMANENT INJURY OR DEATH. BEFORE USING OR HANDLING THIS PRODUCT READ THE MATERIAL SAFETY DATA SHEET FOR MORE DETAILED INFORMATION INCLUDING INFORMATION ON APPROPRIATE RESPIRATORY PROTECTION. MSDS SHEETS AVAILABLE AT WWW.GRANITECONSTRUCTION.COM/MSDS OR BY CONTACTING YOUR LOCAL OFFICE

gci rev. 04/21

COPY

GRANITE™

SMITH ISLAND ASPHALT
2111 ROSS AVE.
EVERETT, WA 98205
425-252-9592

Ticket No. **2666172**
6/28/2022 10:03:15AM

Customer: GRANITE CONSTRUCTION COMPANY 2
Order ID: 22030
Job/PO# : 1136527
Cost Code
Location: EVT - NORTON TERMINAL DEV
2600 FEDERAL AVE

Comments:

Vehicle: G4S KW DOUBLE DROP
License: | |
Carrier:
Product : 3947 1/2"HMA58H-22ST

	Pounds	Metric Tons	Tons
Gross	59,880	27.16	29.94
Tare	26,620	12.07	13.31
Net	33,260	15.09	16.63

Scale: 1

FOB: PICK-UP

This Load:	**16.63**	**TONS**
Load No:	13	
Shipped:	212.67	TONS

Weighmaster: Granite Construction Company
Deputy: Shanin Coffman

WEIGHMASTER CERTIFICATE

Accepted by: _____

WARNING: THIS PRODUCT CONTAINS CRYSTALLINE SILICA(QUARTZ). CRYSTALLINE SILICA IS A COMMON NATURALLY OCCURING MINERAL FOUND IN SAND AND ROCKPROLONGED AND REPEATE BREATHING OF CRYSTALLINE SILICA DUST MAY CAUSE RESPIRATORY AND OTHER HEALTH PROBLEMS, INCLUDING LUNG DISEASE, SILICOSIS AND CANCER, WHICH MAY RESULT IN PERMANENT INJURY OR DEATH. BEFORE USING OR HANDLING THIS PRODUCT READ THE MATERIAL SAFETY DATA SHEET FOR MORE DETAILED INFORMATION INCLUDING INFORMATION ON APPROPRIATE RESPIRATORY PROTECTION. MSDS SHEETS AVAILABLE AT WWW.GRANITECONSTRUCTION.COM/MSDS OR BY CONTACTING YOUR LOCAL OFFICE

gci rev. 04/21

ORIGINAL

GRANITE™

SMITH ISLAND ASPHALT
2111 ROSS AVE.
EVERETT, WA 98205
425-252-9592

Ticket No. **2666178**
6/28/2022 10:15:16AM

Customer: GRANITE CONSTRUCTION COMPANY 2
Order ID: 22030
Job/PO# : 1136527
Cost Code
Location: EVT - NORTON TERMINAL DEV
2600 FEDERAL AVE

Comments:

Vehicle: 048532S WHITE/BLUE SOLO -
License: B05780A | |
Carrier:
Product : 3947 1/2"HMA58H-22ST

	Pounds	Metric Tons	Tons
Gross	60,980	27.66	30.49
Tare	27,820	12.62	13.91
Net	33,160	15.04	16.58

Scale: 1

FOB: PICK-UP

This Load: 16.58 TONS

Load No: 14
Shipped: 229.25 TONS

Weighmaster: Granite Construction Company
Deputy: Shanin Coffman

WEIGHMASTER CERTIFICATE

Accepted by: _____

WARNING: THIS PRODUCT CONTAINS CRYSTALLINE SILICA(QUARTZ). CRYSTALLINE SILICA IS A COMMON NATURALLY OCCURING MINERAL FOUND IN SAND AND ROCKPROLONGED AND REPEATE BREATHING OF CRYSTALLINE SILICA DUST MAY CAUSE RESPIRATORY AND OTHER HEALTH PROBLEMS, INCLUDING LUNG DISEASE, SILICOSIS AND CANCER. WHICH MAY RESULT IN PERMANENT INJURY OR DEATH. BEFORE USING OR HANDLING THIS PRODUCT READ THE MATERIAL SAFETY DATA SHEET FOR MORE DETAILED INFORMATION INCLUDING INFORMATION ON APPROPRIATE RESPIRATORY PROTECTION. MSDS SHEETS AVAILABLE AT WWW.GRANITECONSTRUCTION.COM/MSDS OR BY CONTACTING YOUR LOCAL OFFICE

gci rev 04/21

COPY

GRANITE™

SMITH ISLAND ASPHALT
2111 ROSS AVE.
EVERETT, WA 98205
425-252-9592

Ticket No. **2666178**
6/28/2022 10:15:16AM

Customer: GRANITE CONSTRUCTION COMPANY 2
Order ID: 22030
Job/PO# : 1136527
Cost Code
Location: EVT - NORTON TERMINAL DEV
2600 FEDERAL AVE

Comments:

Vehicle: 048532S WHITE/BLUE SOLO -
License: B05780A | |
Carrier:
Product : 3947 1/2"HMA58H-22ST

	Pounds	Metric Tons	Tons
Gross	60,980	27.66	30.49
Tare	27,820	12.62	13.91
Net	33,160	15.04	16.58

Scale: 1

FOB: PICK-UP

This Load: 16.58 TONS

Load No: 14
Shipped: 229.25 TONS

Weighmaster: Granite Construction Company
Deputy: Shanin Coffman

WEIGHMASTER CERTIFICATE

Accepted by: _____

WARNING: THIS PRODUCT CONTAINS CRYSTALLINE SILICA(QUARTZ). CRYSTALLINE SILICA IS A COMMON NATURALLY OCCURING MINERAL FOUND IN SAND AND ROCKPROLONGED AND REPEATE BREATHING OF CRYSTALLINE SILICA DUST MAY CAUSE RESPIRATORY AND OTHER HEALTH PROBLEMS, INCLUDING LUNG DISEASE, SILICOSIS AND CANCER. WHICH MAY RESULT IN PERMANENT INJURY OR DEATH. BEFORE USING OR HANDLING THIS PRODUCT READ THE MATERIAL SAFETY DATA SHEET FOR MORE DETAILED INFORMATION INCLUDING INFORMATION ON APPROPRIATE RESPIRATORY PROTECTION. MSDS SHEETS AVAILABLE AT WWW.GRANITECONSTRUCTION.COM/MSDS OR BY CONTACTING YOUR LOCAL OFFICE

gci rev 04/21

ORIGINAL

GRANITE™

SMITH ISLAND ASPHALT
2111 ROSS AVE.
EVERETT, WA 98205
425-252-9592

Ticket No. **2666182**
6/28/2022 10:22:30AM

Customer: GRANITE CONSTRUCTION COMPANY 2
Order ID: 22030
Job/PO# : 1136527
Cost Code
Location: EVT - NORTON TERMINAL DEV 2600 FEDERAL AVE

Comments:

Vehicle: G2S MAROON SOLO
License: | |
Carrier:
Product : 3947 1/2"HMA58H-22ST

	Pounds	Metric Tons	Tons
Gross	55,200	25.04	27.60
Tare	25,080	11.38	12.54
Net	30,120	13.66	15.06

Scale: 1

FOB: PICK-UP

This Load:	**15.06**	**TONS**
Load No:	15	
Shipped:	244.31	TONS

Weighmaster: Granite Construction Company
Deputy: Shanin Coffman

WEIGHMASTER CERTIFICATE

Accepted by: _____

WARNING: THIS PRODUCT CONTAINS CRYSTALLINE SILICA(QUARTZ). CRYSTALLINE SILICA IS A COMMON NATURALLY OCCURING MINERAL FOUND IN SAND AND ROCKPROLONGED AND REPEATE BREATHING OF CRYSTALLINE SILICA DUST MAY CAUSE RESPIRATORY AND OTHER HEALTH PROBLEMS, INCLUDING LUNG DISEASE, SILICOSIS AND CANCER, WHICH MAY RESULT IN PERMANENT INJURY OR DEATH. BEFORE USING OR HANDLING THIS PRODUCT READ THE MATERIAL SAFETY DATA SHEET FOR MORE DETAILED INFORMATION INCLUDING INFORMATION ON APPROPRIATE RESPIRATORY PROTECTION. MSDS SHEETS AVAILABLE AT WWW.GRANITECONSTRUCTION.COM/MSDS OR BY CONTACTING YOUR LOCAL OFFICE.

gci rev 04/21

COPY

GRANITE™

SMITH ISLAND ASPHALT
2111 ROSS AVE.
EVERETT, WA 98205
425-252-9592

Ticket No. **2666182**
6/28/2022 10:22:30AM

Customer: GRANITE CONSTRUCTION COMPANY 2
Order ID: 22030
Job/PO# : 1136527
Cost Code
Location: EVT - NORTON TERMINAL DEV 2600 FEDERAL AVE

Comments:

Vehicle: G2S MAROON SOLO
License: | |
Carrier:
Product : 3947 1/2"HMA58H-22ST

	Pounds	Metric Tons	Tons
Gross	55,200	25.04	27.60
Tare	25,080	11.38	12.54
Net	30,120	13.66	15.06

Scale: 1

FOB: PICK-UP

This Load:	**15.06**	**TONS**
Load No:	15	
Shipped:	244.31	TONS

Weighmaster: Granite Construction Company
Deputy: Shanin Coffman

WEIGHMASTER CERTIFICATE

Accepted by: _____

WARNING: THIS PRODUCT CONTAINS CRYSTALLINE SILICA(QUARTZ). CRYSTALLINE SILICA IS A COMMON NATURALLY OCCURING MINERAL FOUND IN SAND AND ROCKPROLONGED AND REPEATE BREATHING OF CRYSTALLINE SILICA DUST MAY CAUSE RESPIRATORY AND OTHER HEALTH PROBLEMS, INCLUDING LUNG DISEASE, SILICOSIS AND CANCER, WHICH MAY RESULT IN PERMANENT INJURY OR DEATH. BEFORE USING OR HANDLING THIS PRODUCT READ THE MATERIAL SAFETY DATA SHEET FOR MORE DETAILED INFORMATION INCLUDING INFORMATION ON APPROPRIATE RESPIRATORY PROTECTION. MSDS SHEETS AVAILABLE AT WWW.GRANITECONSTRUCTION.COM/MSDS OR BY CONTACTING YOUR LOCAL OFFICE.

gci rev 04/21

ORIGINAL

GRANITE™

SMITH ISLAND ASPHALT
2111 ROSS AVE.
EVERETT, WA 98205
425-252-9592

Ticket No. **2666198**
6/28/2022 11:05:52AM

Customer: GRANITE CONSTRUCTION COMPANY 2
Order ID: 22030
Job/PO# : 1136527
Cost Code
Location: EVT - NORTON TERMINAL DEV
2600 FEDERAL AVE

Comments:

Vehicle: 0466S GREEN PETE
License: | |
Carrier:
Product : 3947 1/2"HMA58H-22ST

	Pounds	Metric Tons	Tons
Gross	61,060	27.70	30.53
Tare	27,300	12.38	13.65
Net	33,760	15.31	16.88

Scale: 1

FOB: PICK-UP

This Load:	**16.88**	**TONS**
Load No:	16	
Shipped:	261.19	TONS

Weighmaster: Granite Construction Company
Deputy: Shanin Coffman

WEIGHMASTER CERTIFICATE

Accepted by: _____

WARNING: THIS PRODUCT CONTAINS CRYSTALLINE SILICA(QUARTZ). CRYSTALLINE SILICA IS A COMMON NATURALLY OCCURING MINERAL FOUND IN SAND AND ROCKPROLONGED AND REPEATE BREATHING OF CRYSTALLINE SILICA DUST MAY CAUSE RESPIRATORY AND OTHER HEALTH PROBLEMS, INCLUDING LUNG DISEASE, SILICOSIS AND CANCER, WHICH MAY RESULT IN PERMANENT INJURY OR DEATH. BEFORE USING OR HANDLING THIS PRODUCT READ THE MATERIAL SAFETY DATA SHEET FOR MORE DETAILED INFORMATION INCLUDING INFORMATION ON APPROPRIATE RESPIRATORY PROTECTION. MSDS SHEETS AVAILABLE AT WWW.GRANITECONSTRUCTION.COM/MSDS OR BY CONTACTING YOUR LOCAL OFFICE

gci rev 04/21

COPY

GRANITE™

SMITH ISLAND ASPHALT
2111 ROSS AVE.
EVERETT, WA 98205
425-252-9592

Ticket No. **2666198**
6/28/2022 11:05:52AM

Customer: GRANITE CONSTRUCTION COMPANY 2
Order ID: 22030
Job/PO# : 1136527
Cost Code
Location: EVT - NORTON TERMINAL DEV
2600 FEDERAL AVE

Comments:

Vehicle: 0466S GREEN PETE
License: | |
Carrier:
Product : 3947 1/2"HMA58H-22ST

	Pounds	Metric Tons	Tons
Gross	61,060	27.70	30.53
Tare	27,300	12.38	13.65
Net	33,760	15.31	16.88

Scale: 1

FOB: PICK-UP

This Load:	**16.88**	**TONS**
Load No:	16	
Shipped:	261.19	TONS

Weighmaster: Granite Construction Company
Deputy: Shanin Coffman

WEIGHMASTER CERTIFICATE

Accepted by: _____

WARNING: THIS PRODUCT CONTAINS CRYSTALLINE SILICA(QUARTZ). CRYSTALLINE SILICA IS A COMMON NATURALLY OCCURING MINERAL FOUND IN SAND AND ROCKPROLONGED AND REPEATE BREATHING OF CRYSTALLINE SILICA DUST MAY CAUSE RESPIRATORY AND OTHER HEALTH PROBLEMS, INCLUDING LUNG DISEASE, SILICOSIS AND CANCER, WHICH MAY RESULT IN PERMANENT INJURY OR DEATH. BEFORE USING OR HANDLING THIS PRODUCT READ THE MATERIAL SAFETY DATA SHEET FOR MORE DETAILED INFORMATION INCLUDING INFORMATION ON APPROPRIATE RESPIRATORY PROTECTION. MSDS SHEETS AVAILABLE AT WWW.GRANITECONSTRUCTION.COM/MSDS OR BY CONTACTING YOUR LOCAL OFFICE

gci rev 04/21

ORIGINAL

GRANITE™

SMITH ISLAND ASPHALT
2111 ROSS AVE.
EVERETT, WA 98205
425-252-9592

Ticket No. **2666207**
6/28/2022 11:28:44AM

Customer: GRANITE CONSTRUCTION COMPANY 2
Order ID: 22030
Job/PO# : 1136527
Cost Code
Location: EVT - NORTON TERMINAL DEV
2600 FEDERAL AVE

Comments:

Vehicle: G4S KW DOUBLE DROP
License: | |
Carrier:
Product : 3947 1/2"HMA58H-22ST

	Pounds	Metric Tons	Tons
Gross	61,720	28.00	30.86
Tare	26,620	12.07	13.31
Net	35,100	15.92	17.55

Scale: 1

FOB: PICK-UP

This Load: 17.55 TONS

Load No: 17
Shipped: 278.74 TONS

Weighmaster: Granite Construction Company
Deputy: Shanin Coffman

WEIGHMASTER CERTIFICATE

Accepted by: _____

WARNING: THIS PRODUCT CONTAINS CRYSTALLINE SILICA(QUARTZ). CRYSTALLINE SILICA IS A COMMON NATURALLY OCCURING MINERAL FOUND IN SAND AND ROCKPROLONGED AND REPEATE BREATHING OF CRYSTALLINE SILICA DUST MAY CAUSE RESPIRATORY AND OTHER HEALTH PROBLEMS, INCLUDING LUNG DISEASE, SILICOSIS AND CANCER. WHICH MAY RESULT IN PERMANENT INJURY OR DEATH. BEFORE USING OR HANDLING THIS PRODUCT READ THE MATERIAL SAFETY DATA SHEET FOR MORE DETAILED INFORMATION INCLUDING INFORMATION ON APPROPRIATE RESPIRATORY PROTECTION. MSDS SHEETS AVAILABLE AT WWW.GRANITECONSTRUCTION.COM/MSDS OR BY CONTACTING YOUR LOCAL OFFICE

gci rev 04/21

COPY

GRANITE™

SMITH ISLAND ASPHALT
2111 ROSS AVE.
EVERETT, WA 98205
425-252-9592

Ticket No. **2666207**
6/28/2022 11:28:44AM

Customer: GRANITE CONSTRUCTION COMPANY 2
Order ID: 22030
Job/PO# : 1136527
Cost Code
Location: EVT - NORTON TERMINAL DEV
2600 FEDERAL AVE

Comments:

Vehicle: G4S KW DOUBLE DROP
License: | |
Carrier:
Product : 3947 1/2"HMA58H-22ST

	Pounds	Metric Tons	Tons
Gross	61,720	28.00	30.86
Tare	26,620	12.07	13.31
Net	35,100	15.92	17.55

Scale: 1

FOB: PICK-UP

This Load: 17.55 TONS

Load No: 17
Shipped: 278.74 TONS

Weighmaster: Granite Construction Company
Deputy: Shanin Coffman

WEIGHMASTER CERTIFICATE

Accepted by: _____

WARNING: THIS PRODUCT CONTAINS CRYSTALLINE SILICA(QUARTZ). CRYSTALLINE SILICA IS A COMMON NATURALLY OCCURING MINERAL FOUND IN SAND AND ROCKPROLONGED AND REPEATE BREATHING OF CRYSTALLINE SILICA DUST MAY CAUSE RESPIRATORY AND OTHER HEALTH PROBLEMS, INCLUDING LUNG DISEASE, SILICOSIS AND CANCER. WHICH MAY RESULT IN PERMANENT INJURY OR DEATH. BEFORE USING OR HANDLING THIS PRODUCT READ THE MATERIAL SAFETY DATA SHEET FOR MORE DETAILED INFORMATION INCLUDING INFORMATION ON APPROPRIATE RESPIRATORY PROTECTION. MSDS SHEETS AVAILABLE AT WWW.GRANITECONSTRUCTION.COM/MSDS OR BY CONTACTING YOUR LOCAL OFFICE

gci rev 04/21

ORIGINAL

GRANITE™

SMITH ISLAND ASPHALT
2111 ROSS AVE.
EVERETT, WA 98205
425-252-9592

Ticket No. **2666212**
6/28/2022 11:38:27AM

Customer: GRANITE CONSTRUCTION COMPANY 2
Order ID: 22030
Job/PO# : 1136527
Cost Code
Location: EVT - NORTON TERMINAL DEV
2600 FEDERAL AVE

Comments:

Vehicle: 048532S WHITE/BLUE SOLO -
License: B05780A | |
Carrier:
Product : 3947 1/2"HMA58H-22ST

	Pounds	Metric Tons	Tons
Gross	61,060	27.70	30.53
Tare	27,720	12.57	13.86
Net	33,340	15.12	16.67

Scale: 1

FOB: PICK-UP

This Load:	**16.67**	**TONS**
Load No:	18	
Shipped:	295.41	TONS

Weighmaster: Granite Construction Company
Deputy: Shanin Coffman

WEIGHMASTER CERTIFICATE

Accepted by: _____

WARNING: THIS PRODUCT CONTAINS CRYSTALLINE SILICA(QUARTZ). CRYSTALLINE SILICA IS A COMMON NATURALLY OCCURING MINERAL FOUND IN SAND AND ROCKPROLONGED AND REPEATE BREATHING OF CRYSTALLINE SILICA DUST MAY CAUSE RESPIRATORY AND OTHER HEALTH PROBLEMS, INCLUDING LUNG DISEASE, SILICOSIS AND CANCER, WHICH MAY RESULT IN PERMANENT INJURY OR DEATH. BEFORE USING OR HANDLING THIS PRODUCT READ THE MATERIAL SAFETY DATA SHEET FOR MORE DETAILED INFORMATION INCLUDING INFORMATION ON APPROPRIATE RESPIRATORY PROTECTION. MSDS SHEETS AVAILABLE AT WWW.GRANITECONSTRUCTION.COM/MSDS OR BY CONTACTING YOUR LOCAL OFFICE

gci rev. 04/21

COPY

GRANITE™

SMITH ISLAND ASPHALT
2111 ROSS AVE.
EVERETT, WA 98205
425-252-9592

Ticket No. **2666212**
6/28/2022 11:38:27AM

Customer: GRANITE CONSTRUCTION COMPANY 2
Order ID: 22030
Job/PO# : 1136527
Cost Code
Location: EVT - NORTON TERMINAL DEV
2600 FEDERAL AVE

Comments:

Vehicle: 048532S WHITE/BLUE SOLO -
License: B05780A | |
Carrier:
Product : 3947 1/2"HMA58H-22ST

	Pounds	Metric Tons	Tons
Gross	61,060	27.70	30.53
Tare	27,720	12.57	13.86
Net	33,340	15.12	16.67

Scale: 1

FOB: PICK-UP

This Load:	**16.67**	**TONS**
Load No:	18	
Shipped:	295.41	TONS

Weighmaster: Granite Construction Company
Deputy: Shanin Coffman

WEIGHMASTER CERTIFICATE

Accepted by: _____

WARNING: THIS PRODUCT CONTAINS CRYSTALLINE SILICA(QUARTZ). CRYSTALLINE SILICA IS A COMMON NATURALLY OCCURING MINERAL FOUND IN SAND AND ROCKPROLONGED AND REPEATE BREATHING OF CRYSTALLINE SILICA DUST MAY CAUSE RESPIRATORY AND OTHER HEALTH PROBLEMS, INCLUDING LUNG DISEASE, SILICOSIS AND CANCER, WHICH MAY RESULT IN PERMANENT INJURY OR DEATH. BEFORE USING OR HANDLING THIS PRODUCT READ THE MATERIAL SAFETY DATA SHEET FOR MORE DETAILED INFORMATION INCLUDING INFORMATION ON APPROPRIATE RESPIRATORY PROTECTION. MSDS SHEETS AVAILABLE AT WWW.GRANITECONSTRUCTION.COM/MSDS OR BY CONTACTING YOUR LOCAL OFFICE

gci rev. 04/21

ORIGINAL

GRANITE™

SMITH ISLAND ASPHALT
2111 ROSS AVE.
EVERETT, WA 98205
425-252-9592

Ticket No. **2666227**
6/28/2022 12:16:42PM

Customer: GRANITE CONSTRUCTION COMPANY 2
Order ID: 22030
Job/PO# : 1136527
Cost Code
Location: EVT - NORTON TERMINAL DEV
2600 FEDERAL AVE

Comments:

Vehicle: G2S MAROON SOLO
License: | |
Carrier:
Product : 3947 1/2"HMA58H-22ST

	Pounds	Metric Tons	Tons
Gross	55,240	25.06	27.62
Tare	25,040	11.36	12.52
Net	30,200	13.70	15.10

Scale: 1

FOB: PICK-UP

This Load: 15.10 TONS

Load No: 19
Shipped: 310.51 TONS

Weighmaster: Granite Construction Company
Deputy: Shanin Coffman

WEIGHMASTER CERTIFICATE

Accepted by: _____

WARNING: THIS PRODUCT CONTAINS CRYSTALLINE SILICA(QUARTZ). CRYSTALLINE SILICA IS A COMMON NATURALLY OCCURING MINERAL FOUND IN SAND AND ROCKPROLONGED AND REPEATE BREATHING OF CRYSTALLINE SILICA DUST MAY CAUSE RESPIRATORY AND OTHER HEALTH PROBLEMS, INCLUDING LUNG DISEASE, SILICOSIS AND CANCER. WHICH MAY RESULT IN PERMANENT INJURY OR DEATH. BEFORE USING OR HANDLING THIS PRODUCT READ THE MATERIAL SAFETY DATA SHEET FOR MORE DETAILED INFORMATION INCLUDING INFORMATION ON APPROPRIATE RESPIRATORY PROTECTION. MSDS SHEETS AVAILABLE AT WWW.GRANITECONSTRUCTION.COM/MSDS OR BY CONTACTING YOUR LOCAL OFFICE

gci rev 04/21

COPY

GRANITE™

SMITH ISLAND ASPHALT
2111 ROSS AVE.
EVERETT, WA 98205
425-252-9592

Ticket No. **2666227**
6/28/2022 12:16:42PM

Customer: GRANITE CONSTRUCTION COMPANY 2
Order ID: 22030
Job/PO# : 1136527
Cost Code
Location: EVT - NORTON TERMINAL DEV
2600 FEDERAL AVE

Comments:

Vehicle: G2S MAROON SOLO
License: | |
Carrier:
Product : 3947 1/2"HMA58H-22ST

	Pounds	Metric Tons	Tons
Gross	55,240	25.06	27.62
Tare	25,040	11.36	12.52
Net	30,200	13.70	15.10

Scale: 1

FOB: PICK-UP

This Load: 15.10 TONS

Load No: 19
Shipped: 310.51 TONS

Weighmaster: Granite Construction Company
Deputy: Shanin Coffman

WEIGHMASTER CERTIFICATE

Accepted by: _____

WARNING: THIS PRODUCT CONTAINS CRYSTALLINE SILICA(QUARTZ). CRYSTALLINE SILICA IS A COMMON NATURALLY OCCURING MINERAL FOUND IN SAND AND ROCKPROLONGED AND REPEATE BREATHING OF CRYSTALLINE SILICA DUST MAY CAUSE RESPIRATORY AND OTHER HEALTH PROBLEMS, INCLUDING LUNG DISEASE, SILICOSIS AND CANCER. WHICH MAY RESULT IN PERMANENT INJURY OR DEATH. BEFORE USING OR HANDLING THIS PRODUCT READ THE MATERIAL SAFETY DATA SHEET FOR MORE DETAILED INFORMATION INCLUDING INFORMATION ON APPROPRIATE RESPIRATORY PROTECTION. MSDS SHEETS AVAILABLE AT WWW.GRANITECONSTRUCTION.COM/MSDS OR BY CONTACTING YOUR LOCAL OFFICE

gci rev 04/21

ORIGINAL

GRANITE™

SMITH ISLAND ASPHALT
2111 ROSS AVE.
EVERETT, WA 98205
425-252-9592

Ticket No. **2666239**
6/28/2022 12:50:27PM

Customer: GRANITE CONSTRUCTION COMPANY 2
Order ID: 22030
Job/PO# : 1136527
Cost Code
Location: EVT - NORTON TERMINAL DEV
2600 FEDERAL AVE

Comments:

Vehicle: 0466S GREEN PETE
License: | |
Carrier:
Product : 3947 1/2"HMA58H-22ST

	Pounds	Metric Tons	Tons
Gross	60,520	27.45	30.26
Tare	27,300	12.38	13.65
Net	33,220	15.07	16.61

Scale: 1

FOB: PICK-UP

This Load:	**16.61**	**TONS**
Load No:	20	
Shipped:	327.12	TONS

Weighmaster: Granite Construction Company
Deputy: Shanin Coffman

WEIGHMASTER CERTIFICATE

Accepted by: _____

WARNING THIS PRODUCT CONTAINS CRYSTALLINE SILICA(QUARTZ). CRYSTALLINE SILICA IS A COMMON NATURALLY OCCURING MINERAL FOUND IN SAND AND ROCKPROLONGED AND REPEATE BREATHING OF CRYSTALLINE SILICA DUST MAY CAUSE RESPIRATORY AND OTHER HEALTH PROBLEMS, INCLUDING LUNG DISEASE, SILICOSIS AND CANCER, WHICH MAY RESULT IN PERMANENT INJURY OR DEATH. BEFORE USING OR HANDLING THIS PRODUCT READ THE MATERIAL SAFETY DATA SHEET FOR MORE DETAILED INFORMATION INCLUDING INFORMATION ON APPROPRIATE RESPIRATORY PROTECTION. MSDS SHEETS AVAILABLE AT WWW.GRANITECONSTRUCTION.COM/MSDS OR BY CONTACTING YOUR LOCAL OFFICE

gci rev 04/21

COPY

GRANITE™

SMITH ISLAND ASPHALT
2111 ROSS AVE.
EVERETT, WA 98205
425-252-9592

Ticket No. **2666239**
6/28/2022 12:50:27PM

Customer: GRANITE CONSTRUCTION COMPANY 2
Order ID: 22030
Job/PO# : 1136527
Cost Code
Location: EVT - NORTON TERMINAL DEV
2600 FEDERAL AVE

Comments:

Vehicle: 0466S GREEN PETE
License: | |
Carrier:
Product : 3947 1/2"HMA58H-22ST

	Pounds	Metric Tons	Tons
Gross	60,520	27.45	30.26
Tare	27,300	12.38	13.65
Net	33,220	15.07	16.61

Scale: 1

FOB: PICK-UP

This Load:	**16.61**	**TONS**
Load No:	20	
Shipped:	327.12	TONS

Weighmaster: Granite Construction Company
Deputy: Shanin Coffman

WEIGHMASTER CERTIFICATE

Accepted by: _____

WARNING THIS PRODUCT CONTAINS CRYSTALLINE SILICA(QUARTZ). CRYSTALLINE SILICA IS A COMMON NATURALLY OCCURING MINERAL FOUND IN SAND AND ROCKPROLONGED AND REPEATE BREATHING OF CRYSTALLINE SILICA DUST MAY CAUSE RESPIRATORY AND OTHER HEALTH PROBLEMS, INCLUDING LUNG DISEASE, SILICOSIS AND CANCER, WHICH MAY RESULT IN PERMANENT INJURY OR DEATH. BEFORE USING OR HANDLING THIS PRODUCT READ THE MATERIAL SAFETY DATA SHEET FOR MORE DETAILED INFORMATION INCLUDING INFORMATION ON APPROPRIATE RESPIRATORY PROTECTION. MSDS SHEETS AVAILABLE AT WWW.GRANITECONSTRUCTION.COM/MSDS OR BY CONTACTING YOUR LOCAL OFFICE

gci rev 04/21

ORIGINAL

GRANITE™

SMITH ISLAND ASPHALT
2111 ROSS AVE.
EVERETT, WA 98205
425-252-9592

Ticket No. **2666247**
6/28/2022 1:12:32PM

Customer: GRANITE CONSTRUCTION COMPANY 2
Order ID: 22030
Job/PO# : 1136527
Cost Code
Location: EVT - NORTON TERMINAL DEV
2600 FEDERAL AVE

Comments:

Vehicle: G4S KW DOUBLE DROP
License: | |
Carrier:
Product : 3947 1/2"HMA58H-22ST

	Pounds	Metric Tons	Tons
Gross	61,500	27.90	30.75
Tare	26,580	12.06	13.29
Net	34,920	15.84	17.46

Scale: 1

FOB: PICK-UP

This Load:	**17.46**	**TONS**
Load No:	21	
Shipped:	344.58	TONS

Weighmaster: Granite Construction Company
Deputy: Shanin Coffman

WEIGHMASTER CERTIFICATE

Accepted by: _____

WARNING: THIS PRODUCT CONTAINS CRYSTALLINE SILICA(QUARTZ). CRYSTALLINE SILICA IS A COMMON NATURALLY OCCURING MINERAL FOUND IN SAND AND ROCKPROLONGED AND REPEATE BREATHING OF CRYSTALLINE SILICA DUST MAY CAUSE RESPIRATORY AND OTHER HEALTH PROBLEMS, INCLUDING LUNG DISEASE, SILICOSIS AND CANCER. WHICH MAY RESULT IN PERMANENT INJURY OR DEATH. BEFORE USING OR HANDLING THIS PRODUCT READ THE MATERIAL SAFETY DATA SHEET FOR MORE DETAILED INFORMATION INCLUDING INFORMATION ON APPROPRIATE RESPIRATORY PROTECTION. MSDS SHEETS AVAILABLE AT WWW.GRANITECONSTRUCTION.COM/MSDS OR BY CONTACTING YOUR LOCAL OFFICE

gci rev 04/21

COPY

GRANITE™

SMITH ISLAND ASPHALT
2111 ROSS AVE.
EVERETT, WA 98205
425-252-9592

Ticket No. **2666247**
6/28/2022 1:12:32PM

Customer: GRANITE CONSTRUCTION COMPANY 2
Order ID: 22030
Job/PO# : 1136527
Cost Code
Location: EVT - NORTON TERMINAL DEV
2600 FEDERAL AVE

Comments:

Vehicle: G4S KW DOUBLE DROP
License: | |
Carrier:
Product : 3947 1/2"HMA58H-22ST

	Pounds	Metric Tons	Tons
Gross	61,500	27.90	30.75
Tare	26,580	12.06	13.29
Net	34,920	15.84	17.46

Scale: 1

FOB: PICK-UP

This Load:	**17.46**	**TONS**
Load No:	21	
Shipped:	344.58	TONS

Weighmaster: Granite Construction Company
Deputy: Shanin Coffman

WEIGHMASTER CERTIFICATE

Accepted by: _____

WARNING: THIS PRODUCT CONTAINS CRYSTALLINE SILICA(QUARTZ). CRYSTALLINE SILICA IS A COMMON NATURALLY OCCURING MINERAL FOUND IN SAND AND ROCKPROLONGED AND REPEATE BREATHING OF CRYSTALLINE SILICA DUST MAY CAUSE RESPIRATORY AND OTHER HEALTH PROBLEMS, INCLUDING LUNG DISEASE, SILICOSIS AND CANCER. WHICH MAY RESULT IN PERMANENT INJURY OR DEATH. BEFORE USING OR HANDLING THIS PRODUCT READ THE MATERIAL SAFETY DATA SHEET FOR MORE DETAILED INFORMATION INCLUDING INFORMATION ON APPROPRIATE RESPIRATORY PROTECTION. MSDS SHEETS AVAILABLE AT WWW.GRANITECONSTRUCTION.COM/MSDS OR BY CONTACTING YOUR LOCAL OFFICE

gci rev 04/21

ORIGINAL

GRANITE™

SMITH ISLAND ASPHALT
2111 ROSS AVE.
EVERETT, WA 98205
425-252-9592

Ticket No. **2666251**
6/28/2022 1:21:05PM

Customer: GRANITE CONSTRUCTION COMPANY 2
Order ID: 22030
Job/PO# : 1136527
Cost Code
Location: EVT - NORTON TERMINAL DEV
2600 FEDERAL AVE

Comments:

Vehicle: 048532S WHITE/BLUE SOLO -
License: B05780A | |
Carrier:
Product : 3947 1/2"HMA58H-22ST

	Pounds	Metric Tons	Tons
Gross	61,100	27.71	30.55
Tare	27,780	12.60	13.89
Net	33,320	15.11	16.66

Scale: 1

FOB: PICK-UP

This Load: 16.66 TONS
Load No: 22
Shipped: 361.24 TONS

Weighmaster: Granite Construction Company
Deputy: Shanin Coffman

WEIGHMASTER CERTIFICATE

Accepted by: _____

WARNING: THIS PRODUCT CONTAINS CRYSTALLINE SILICA(QUARTZ). CRYSTALLINE SILICA IS A COMMON NATURALLY OCCURING MINERAL FOUND IN SAND AND ROCKPROLONGED AND REPEATE BREATHING OF CRYSTALLINE SILICA DUST MAY CAUSE RESPIRATORY AND OTHER HEALTH PROBLEMS, INCLUDING LUNG DISEASE, SILICOSIS AND CANCER, WHICH MAY RESULT IN PERMANENT INJURY OR DEATH. BEFORE USING OR HANDLING THIS PRODUCT READ THE MATERIAL SAFETY DATA SHEET FOR MORE DETAILED INFORMATION INCLUDING INFORMATION ON APPROPRIATE RESPIRATORY PROTECTION. MSDS SHEETS AVAILABLE AT WWW.GRANITECONSTRUCTION.COM/MSDS OR BY CONTACTING YOUR LOCAL OFFICE

gci rev 04/21

COPY

GRANITE™

SMITH ISLAND ASPHALT
2111 ROSS AVE.
EVERETT, WA 98205
425-252-9592

Ticket No. **2666251**
6/28/2022 1:21:05PM

Customer: GRANITE CONSTRUCTION COMPANY 2
Order ID: 22030
Job/PO# : 1136527
Cost Code
Location: EVT - NORTON TERMINAL DEV
2600 FEDERAL AVE

Comments:

Vehicle: 048532S WHITE/BLUE SOLO -
License: B05780A | |
Carrier:
Product : 3947 1/2"HMA58H-22ST

	Pounds	Metric Tons	Tons
Gross	61,100	27.71	30.55
Tare	27,780	12.60	13.89
Net	33,320	15.11	16.66

Scale: 1

FOB: PICK-UP

This Load: 16.66 TONS
Load No: 22
Shipped: 361.24 TONS

Weighmaster: Granite Construction Company
Deputy: Shanin Coffman

WEIGHMASTER CERTIFICATE

Accepted by: _____

WARNING: THIS PRODUCT CONTAINS CRYSTALLINE SILICA(QUARTZ). CRYSTALLINE SILICA IS A COMMON NATURALLY OCCURING MINERAL FOUND IN SAND AND ROCKPROLONGED AND REPEATE BREATHING OF CRYSTALLINE SILICA DUST MAY CAUSE RESPIRATORY AND OTHER HEALTH PROBLEMS, INCLUDING LUNG DISEASE, SILICOSIS AND CANCER, WHICH MAY RESULT IN PERMANENT INJURY OR DEATH. BEFORE USING OR HANDLING THIS PRODUCT READ THE MATERIAL SAFETY DATA SHEET FOR MORE DETAILED INFORMATION INCLUDING INFORMATION ON APPROPRIATE RESPIRATORY PROTECTION. MSDS SHEETS AVAILABLE AT WWW.GRANITECONSTRUCTION.COM/MSDS OR BY CONTACTING YOUR LOCAL OFFICE

gci rev 04/21

ORIGINAL

GRANITE™

SMITH ISLAND ASPHALT
2111 ROSS AVE.
EVERETT, WA 98205
425-252-9592

Ticket No. **2666253**
6/28/2022 1:25:46PM

Customer: GRANITE CONSTRUCTION COMPANY 2
Order ID: 22030
Job/PO# : 1136527
Cost Code
Location: EVT - NORTON TERMINAL DEV
2600 FEDERAL AVE

Comments:

Vehicle: G2S MAROON SOLO
License: | |
Carrier:
Product : 3947 1/2"HMA58H-22ST

	Pounds	Metric Tons	Tons
Gross	55,080	24.98	27.54
Tare	25,000	11.34	12.50
Net	30,080	13.64	15.04

Scale: 1

FOB: PICK-UP

This Load:	**15.04**	**TONS**
Load No:	23	
Shipped:	376.28	TONS

Weighmaster: Granite Construction Company
Deputy: Shanin Coffman

WEIGHMASTER CERTIFICATE

Accepted by: _____

WARNING: THIS PRODUCT CONTAINS CRYSTALLINE SILICA(QUARTZ). CRYSTALLINE SILICA IS A COMMON NATURALLY OCCURING MINERAL FOUND IN SAND AND ROCKPROLONGED AND REPEATE BREATHING OF CRYSTALLINE SILICA DUST MAY CAUSE RESPIRATORY AND OTHER HEALTH PROBLEMS, INCLUDING LUNG DISEASE, SILICOSIS AND CANCER, WHICH MAY RESULT IN PERMANENT INJURY OR DEATH. BEFORE USING OR HANDLING THIS PRODUCT READ THE MATERIAL SAFETY DATA SHEET FOR MORE DETAILED INFORMATION INCLUDING INFORMATION ON APPROPRIATE RESPIRATORY PROTECTION. MSDS SHEETS AVAILABLE AT WWW.GRANITECONSTRUCTION.COM/MSDS OR BY CONTACTING YOUR LOCAL OFFICE

gci rev. 04/21

COPY

GRANITE™

SMITH ISLAND ASPHALT
2111 ROSS AVE.
EVERETT, WA 98205
425-252-9592

Ticket No. **2666253**
6/28/2022 1:25:46PM

Customer: GRANITE CONSTRUCTION COMPANY 2
Order ID: 22030
Job/PO# : 1136527
Cost Code
Location: EVT - NORTON TERMINAL DEV
2600 FEDERAL AVE

Comments:

Vehicle: G2S MAROON SOLO
License: | |
Carrier:
Product : 3947 1/2"HMA58H-22ST

	Pounds	Metric Tons	Tons
Gross	55,080	24.98	27.54
Tare	25,000	11.34	12.50
Net	30,080	13.64	15.04

Scale: 1

FOB: PICK-UP

This Load:	**15.04**	**TONS**
Load No:	23	
Shipped:	376.28	TONS

Weighmaster: Granite Construction Company
Deputy: Shanin Coffman

WEIGHMASTER CERTIFICATE

Accepted by: _____

WARNING: THIS PRODUCT CONTAINS CRYSTALLINE SILICA(QUARTZ). CRYSTALLINE SILICA IS A COMMON NATURALLY OCCURING MINERAL FOUND IN SAND AND ROCKPROLONGED AND REPEATE BREATHING OF CRYSTALLINE SILICA DUST MAY CAUSE RESPIRATORY AND OTHER HEALTH PROBLEMS, INCLUDING LUNG DISEASE, SILICOSIS AND CANCER, WHICH MAY RESULT IN PERMANENT INJURY OR DEATH. BEFORE USING OR HANDLING THIS PRODUCT READ THE MATERIAL SAFETY DATA SHEET FOR MORE DETAILED INFORMATION INCLUDING INFORMATION ON APPROPRIATE RESPIRATORY PROTECTION. MSDS SHEETS AVAILABLE AT WWW.GRANITECONSTRUCTION.COM/MSDS OR BY CONTACTING YOUR LOCAL OFFICE

gci rev. 04/21

ORIGINAL

GRANITE™

SMITH ISLAND ASPHALT
2111 ROSS AVE.
EVERETT, WA 98205
425-252-9592

Ticket No. **2666268**
6/28/2022 2:04:36PM

Customer: GRANITE CONSTRUCTION COMPANY 2
Order ID: 22030
Job/PO# : 1136527
Cost Code
Location: EVT - NORTON TERMINAL DEV
2600 FEDERAL AVE

Comments:

Vehicle: 0466S GREEN PETE
License: | |
Carrier:
Product : 3947 1/2"HMA58H-22ST

	Pounds	Metric Tons	Tons
Gross	61,060	27.70	30.53
Tare	27,320	12.39	13.66
Net	33,740	15.30	16.87

Scale: 1

FOB: PICK-UP

This Load: 16.87 TONS

Load No: 24
Shipped: 393.15 TONS

Weighmaster: Granite Construction Company
Deputy: Shanin Coffman

WEIGHMASTER CERTIFICATE

Accepted by: _____

WARNING: THIS PRODUCT CONTAINS CRYSTALLINE SILICA(QUARTZ). CRYSTALLINE SILICA IS A COMMON NATURALLY OCCURING MINERAL FOUND IN SAND AND ROCKPROLONGED AND REPEATE BREATHING OF CRYSTALLINE SILICA DUST MAY CAUSE RESPIRATORY AND OTHER HEALTH PROBLEMS, INCLUDING LUNG DISEASE, SILICOSIS AND CANCER. WHICH MAY RESULT IN PERMANENT INJURY OR DEATH. BEFORE USING OR HANDLING THIS PRODUCT READ THE MATERIAL SAFETY DATA SHEET FOR MORE DETAILED INFORMATION INCLUDING INFORMATION ON APPROPRIATE RESPIRATORY PROTECTION. MSDS SHEETS AVAILABLE AT WWW.GRANITECONSTRUCTION.COM/MSDS OR BY CONTACTING YOUR LOCAL OFFICE

gci rev. 04/21

COPY

GRANITE™

SMITH ISLAND ASPHALT
2111 ROSS AVE.
EVERETT, WA 98205
425-252-9592

Ticket No. **2666268**
6/28/2022 2:04:36PM

Customer: GRANITE CONSTRUCTION COMPANY 2
Order ID: 22030
Job/PO# : 1136527
Cost Code
Location: EVT - NORTON TERMINAL DEV
2600 FEDERAL AVE

Comments:

Vehicle: 0466S GREEN PETE
License: | |
Carrier:
Product : 3947 1/2"HMA58H-22ST

	Pounds	Metric Tons	Tons
Gross	61,060	27.70	30.53
Tare	27,320	12.39	13.66
Net	33,740	15.30	16.87

Scale: 1

FOB: PICK-UP

This Load: 16.87 TONS

Load No: 24
Shipped: 393.15 TONS

Weighmaster: Granite Construction Company
Deputy: Shanin Coffman

WEIGHMASTER CERTIFICATE

Accepted by: _____

WARNING: THIS PRODUCT CONTAINS CRYSTALLINE SILICA(QUARTZ). CRYSTALLINE SILICA IS A COMMON NATURALLY OCCURING MINERAL FOUND IN SAND AND ROCKPROLONGED AND REPEATE BREATHING OF CRYSTALLINE SILICA DUST MAY CAUSE RESPIRATORY AND OTHER HEALTH PROBLEMS, INCLUDING LUNG DISEASE, SILICOSIS AND CANCER. WHICH MAY RESULT IN PERMANENT INJURY OR DEATH. BEFORE USING OR HANDLING THIS PRODUCT READ THE MATERIAL SAFETY DATA SHEET FOR MORE DETAILED INFORMATION INCLUDING INFORMATION ON APPROPRIATE RESPIRATORY PROTECTION. MSDS SHEETS AVAILABLE AT WWW.GRANITECONSTRUCTION.COM/MSDS OR BY CONTACTING YOUR LOCAL OFFICE

gci rev. 04/21

ORIGINAL

GRANITE™

SMITH ISLAND ASPHALT
2111 ROSS AVE.
EVERETT, WA 98205
425-252-9592

Ticket No. **2666274**
6/28/2022 2:22:16PM

Customer: GRANITE CONSTRUCTION COMPANY 2
Order ID: 22030
Job/PO# : 1136527
Cost Code
Location: EVT - NORTON TERMINAL DEV
2600 FEDERAL AVE

Comments:

Vehicle: G4S KW DOUBLE DROP
License: | |
Carrier:
Product : 3947 1/2"HMA58H-22ST

	Pounds	Metric Tons	Tons
Gross	61,780	28.02	30.89
Tare	26,620	12.07	13.31
Net	35,160	15.95	17.58

Scale: 1

FOB: PICK-UP

This Load: 17.58 TONS

Load No: 25
Shipped: 410.73 TONS

Weighmaster: Granite Construction Company
Deputy: Shanin Coffman

WEIGHMASTER CERTIFICATE

Accepted by: _____

WARNING THIS PRODUCT CONTAINS CRYSTALLINE SILICA(QUARTZ). CRYSTALLINE SILICA IS A COMMON NATURALLY OCCURING MINERAL FOUND IN SAND AND ROCKPROLONGED AND REPEATE BREATHING OF CRYSTALLINE SILICA DUST MAY CAUSE RESPIRATORY AND OTHER HEALTH PROBLEMS, INCLUDING LUNG DISEASE, SILICOSIS AND CANCER, WHICH MAY RESULT IN PERMANENT INJURY OR DEATH. BEFORE USING OR HANDLING THIS PRODUCT READ THE MATERIAL SAFETY DATA SHEET FOR MORE DETAILED INFORMATION INCLUDING INFORMATION ON APPROPRIATE RESPIRATORY PROTECTION. MSDS SHEETS AVAILABLE AT WWW.GRANITECONSTRUCTION.COM/MSDS OR BY CONTACTING YOUR LOCAL OFFICE

gci rev 04/21

COPY

GRANITE™

SMITH ISLAND ASPHALT
2111 ROSS AVE.
EVERETT, WA 98205
425-252-9592

Ticket No. **2666274**
6/28/2022 2:22:16PM

Customer: GRANITE CONSTRUCTION COMPANY 2
Order ID: 22030
Job/PO# : 1136527
Cost Code
Location: EVT - NORTON TERMINAL DEV
2600 FEDERAL AVE

Comments:

Vehicle: G4S KW DOUBLE DROP
License: | |
Carrier:
Product : 3947 1/2"HMA58H-22ST

	Pounds	Metric Tons	Tons
Gross	61,780	28.02	30.89
Tare	26,620	12.07	13.31
Net	35,160	15.95	17.58

Scale: 1

FOB: PICK-UP

This Load: 17.58 TONS

Load No: 25
Shipped: 410.73 TONS

Weighmaster: Granite Construction Company
Deputy: Shanin Coffman

WEIGHMASTER CERTIFICATE

Accepted by: _____

WARNING THIS PRODUCT CONTAINS CRYSTALLINE SILICA(QUARTZ). CRYSTALLINE SILICA IS A COMMON NATURALLY OCCURING MINERAL FOUND IN SAND AND ROCKPROLONGED AND REPEATE BREATHING OF CRYSTALLINE SILICA DUST MAY CAUSE RESPIRATORY AND OTHER HEALTH PROBLEMS, INCLUDING LUNG DISEASE, SILICOSIS AND CANCER, WHICH MAY RESULT IN PERMANENT INJURY OR DEATH. BEFORE USING OR HANDLING THIS PRODUCT READ THE MATERIAL SAFETY DATA SHEET FOR MORE DETAILED INFORMATION INCLUDING INFORMATION ON APPROPRIATE RESPIRATORY PROTECTION. MSDS SHEETS AVAILABLE AT WWW.GRANITECONSTRUCTION.COM/MSDS OR BY CONTACTING YOUR LOCAL OFFICE

gci rev 04/21

ORIGINAL

GRANITE™

SMITH ISLAND ASPHALT
2111 ROSS AVE.
EVERETT, WA 98205
425-252-9592

Ticket No. **2666277**
6/28/2022 2:28:00PM

Customer: GRANITE CONSTRUCTION COMPANY 2

Order ID: 22030
Job/PO# : 1136527
Cost Code
Location: EVT - NORTON TERMINAL DEV
2600 FEDERAL AVE

Comments:

Vehicle: 048532S WHITE/BLUE SOLO -
License: B05780A | |
Carrier:
Product : 3947 1/2"HMA58H-22ST

	Pounds	Metric Tons	Tons
Gross	60,960	27.65	30.48
Tare	27,740	12.58	13.87
Net	33,220	15.07	16.61

Scale: 1

FOB: PICK-UP

This Load: 16.61 TONS

Load No: 26
Shipped: 427.34 TONS

Weighmaster: Granite Construction Company
Deputy: Shanin Coffman

WEIGHMASTER CERTIFICATE

Accepted by: _____

WARNING: THIS PRODUCT CONTAINS CRYSTALLINE SILICA(QUARTZ). CRYSTALLINE SILICA IS A COMMON NATURALLY OCCURING MINERAL FOUND IN SAND AND ROCKPROLONGED AND REPEATE BREATHING OF CRYSTALLINE SILICA DUST MAY CAUSE RESPIRATORY AND OTHER HEALTH PROBLEMS, INCLUDING LUNG DISEASE, SILICOSIS AND CANCER, WHICH MAY RESULT IN PERMANENT INJURY OR DEATH. BEFORE USING OR HANDLING THIS PRODUCT READ THE MATERIAL SAFETY DATA SHEET FOR MORE DETAILED INFORMATION INCLUDING INFORMATION ON APPROPRIATE RESPIRATORY PROTECTION. MSDS SHEETS AVAILABLE AT WWW.GRANITECONSTRUCTION.COM/MSDS OR BY CONTACTING YOUR LOCAL OFFICE

gci rev 04/21

COPY

GRANITE™

SMITH ISLAND ASPHALT
2111 ROSS AVE
EVERETT, WA 98205
425-252-9592

Ticket No. **2666277**
6/28/2022 2:28:00PM

Customer: GRANITE CONSTRUCTION COMPANY 2

Order ID: 22030
Job/PO# : 1136527
Cost Code
Location: EVT - NORTON TERMINAL DEV
2600 FEDERAL AVE

Comments:

Vehicle: 048532S WHITE/BLUE SOLO -
License: B05780A | |
Carrier:
Product : 3947 1/2"HMA58H-22ST

	Pounds	Metric Tons	Tons
Gross	60,960	27.65	30.48
Tare	27,740	12.58	13.87
Net	33,220	15.07	16.61

Scale: 1

FOB: PICK-UP

This Load: 16.61 TONS

Load No: 26
Shipped: 427.34 TONS

Weighmaster: Granite Construction Company
Deputy: Shanin Coffman

WEIGHMASTER CERTIFICATE

Accepted by: _____

WARNING: THIS PRODUCT CONTAINS CRYSTALLINE SILICA(QUARTZ). CRYSTALLINE SILICA IS A COMMON NATURALLY OCCURING MINERAL FOUND IN SAND AND ROCKPROLONGED AND REPEATE BREATHING OF CRYSTALLINE SILICA DUST MAY CAUSE RESPIRATORY AND OTHER HEALTH PROBLEMS, INCLUDING LUNG DISEASE, SILICOSIS AND CANCER, WHICH MAY RESULT IN PERMANENT INJURY OR DEATH. BEFORE USING OR HANDLING THIS PRODUCT READ THE MATERIAL SAFETY DATA SHEET FOR MORE DETAILED INFORMATION INCLUDING INFORMATION ON APPROPRIATE RESPIRATORY PROTECTION. MSDS SHEETS AVAILABLE AT WWW.GRANITECONSTRUCTION.COM/MSDS OR BY CONTACTING YOUR LOCAL OFFICE

gci rev 04/21

ORIGINAL

GRANITE™

SMITH ISLAND ASPHALT
2111 ROSS AVE.
EVERETT, WA 98205
425-252-9592

Ticket No. **2666279**
6/28/2022 2:33:07PM

Customer: GRANITE CONSTRUCTION COMPANY 2
Order ID: 22030
Job/PO# : 1136527
Cost Code
Location: EVT - NORTON TERMINAL DEV
2600 FEDERAL AVE

Comments:

Vehicle: G2S MAROON SOLO
License: | |
Carrier:
Product : 3947 1/2"HMA58H-22ST

	Pounds	Metric Tons	Tons
Gross	55,280	25.07	27.64
Tare	25,060	11.37	12.53
Net	30,220	13.71	15.11

Scale: 1

FOB: PICK-UP

This Load: 15.11 TONS

Load No: 27
Shipped: 442.45 TONS

Weighmaster: Granite Construction Company
Deputy: Shanin Coffman

WEIGHMASTER CERTIFICATE

Accepted by: _____

WARNING THIS PRODUCT CONTAINS CRYSTALLINE SILICA(QUARTZ). CRYSTALLINE SILICA IS A COMMON NATURALLY OCCURING MINERAL FOUND IN SAND AND ROCKPROLONGED AND REPEATE BREATHING OF CRYSTALLINE SILICA DUST MAY CAUSE RESPIRATORY AND OTHER HEALTH PROBLEMS, INCLUDING LUNG DISEASE, SILICOSIS AND CANCER, WHICH MAY RESULT IN PERMANENT INJURY OR DEATH. BEFORE USING OR HANDLING THIS PRODUCT READ THE MATERIAL SAFETY DATA SHEET FOR MORE DETAILED INFORMATION INCLUDING INFORMATION ON APPROPRIATE RESPIRATORY PROTECTION. MSDS SHEETS AVAILABLE AT WWW.GRANITECONSTRUCTION.COM/MSDS OR BY CONTACTING YOUR LOCAL OFFICE

gci rev 04/21

COPY

GRANITE™

SMITH ISLAND ASPHALT
2111 ROSS AVE.
EVERETT, WA 98205
425-252-9592

Ticket No. **2666279**
6/28/2022 2:33:07PM

Customer: GRANITE CONSTRUCTION COMPANY 2
Order ID: 22030
Job/PO# : 1136527
Cost Code
Location: EVT - NORTON TERMINAL DEV
2600 FEDERAL AVE

Comments:

Vehicle: G2S MAROON SOLO
License: | |
Carrier:
Product : 3947 1/2"HMA58H-22ST

	Pounds	Metric Tons	Tons
Gross	55,280	25.07	27.64
Tare	25,060	11.37	12.53
Net	30,220	13.71	15.11

Scale: 1

FOB: PICK-UP

This Load: 15.11 TONS

Load No: 27
Shipped: 442.45 TONS

Weighmaster: Granite Construction Company
Deputy: Shanin Coffman

WEIGHMASTER CERTIFICATE

Accepted by: _____

WARNING THIS PRODUCT CONTAINS CRYSTALLINE SILICA(QUARTZ). CRYSTALLINE SILICA IS A COMMON NATURALLY OCCURING MINERAL FOUND IN SAND AND ROCKPROLONGED AND REPEATE BREATHING OF CRYSTALLINE SILICA DUST MAY CAUSE RESPIRATORY AND OTHER HEALTH PROBLEMS, INCLUDING LUNG DISEASE, SILICOSIS AND CANCER, WHICH MAY RESULT IN PERMANENT INJURY OR DEATH. BEFORE USING OR HANDLING THIS PRODUCT READ THE MATERIAL SAFETY DATA SHEET FOR MORE DETAILED INFORMATION INCLUDING INFORMATION ON APPROPRIATE RESPIRATORY PROTECTION. MSDS SHEETS AVAILABLE AT WWW.GRANITECONSTRUCTION.COM/MSDS OR BY CONTACTING YOUR LOCAL OFFICE

gci rev 04/21

ORIGINAL

GRANITE™

SMITH ISLAND ASPHALT
2111 ROSS AVE.
EVERETT, WA 98205
425-252-9592

Ticket No. **2666284**
6/28/2022 2:45:33PM

Customer: GRANITE CONSTRUCTION COMPANY 2
Order ID: 22030
Job/PO# : 1136527
Cost Code 461002
Location: EVT - NORTON TERMINAL DEV
2600 FEDERAL AVE

Comments:

Vehicle: 0486SS GREEN
License: | |
Carrier:
Product : 3947 1/2"HMA58H-22ST

	Pounds	Metric Tons	Tons
Gross	79,560	36.09	39.78
Tare	31,700	14.38	15.85
Net	47,860	21.71	23.93

Scale: 1

FOB: PICK-UP

This Load: 23.93 TONS

Load No: 28
Shipped: 466.38 TONS

Weighmaster: Granite Construction Company
Deputy: Shanin Coffman

WEIGHMASTER CERTIFICATE

Accepted by: _____

WARNING: THIS PRODUCT CONTAINS CRYSTALLINE SILICA(QUARTZ). CRYSTALLINE SILICA IS A COMMON NATURALLY OCCURING MINERAL FOUND IN SAND AND ROCKPROLONGED AND REPEATE BREATHING OF CRYSTALLINE SILICA DUST MAY CAUSE RESPIRATORY AND OTHER HEALTH PROBLEMS, INCLUDING LUNG DISEASE, SILICOSIS AND CANCER, WHICH MAY RESULT IN PERMANENT INJURY OR DEATH. BEFORE USING OR HANDLING THIS PRODUCT READ THE MATERIAL SAFETY DATA SHEET FOR MORE DETAILED INFORMATION INCLUDING INFORMATION ON APPROPRIATE RESPIRATORY PROTECTION. MSDS SHEETS AVAILABLE AT WWW.GRANITECONSTRUCTION.COM/MSDS OR BY CONTACTING YOUR LOCAL OFFICE

gci rev. 04/21

COPY

GRANITE™

SMITH ISLAND ASPHALT
2111 ROSS AVE.
EVERETT, WA 98205
425-252-9592

Ticket No. **2666284**
6/28/2022 2:45:33PM

Customer: GRANITE CONSTRUCTION COMPANY 2
Order ID: 22030
Job/PO# : 1136527
Cost Code 461002
Location: EVT - NORTON TERMINAL DEV
2600 FEDERAL AVE

Comments:

Vehicle: 0486SS GREEN
License: | |
Carrier:
Product : 3947 1/2"HMA58H-22ST

	Pounds	Metric Tons	Tons
Gross	79,560	36.09	39.78
Tare	31,700	14.38	15.85
Net	47,860	21.71	23.93

Scale: 1

FOB: PICK-UP

This Load: 23.93 TONS

Load No: 28
Shipped: 466.38 TONS

Weighmaster: Granite Construction Company
Deputy: Shanin Coffman

WEIGHMASTER CERTIFICATE

Accepted by: _____

WARNING: THIS PRODUCT CONTAINS CRYSTALLINE SILICA(QUARTZ). CRYSTALLINE SILICA IS A COMMON NATURALLY OCCURING MINERAL FOUND IN SAND AND ROCKPROLONGED AND REPEATE BREATHING OF CRYSTALLINE SILICA DUST MAY CAUSE RESPIRATORY AND OTHER HEALTH PROBLEMS, INCLUDING LUNG DISEASE, SILICOSIS AND CANCER, WHICH MAY RESULT IN PERMANENT INJURY OR DEATH. BEFORE USING OR HANDLING THIS PRODUCT READ THE MATERIAL SAFETY DATA SHEET FOR MORE DETAILED INFORMATION INCLUDING INFORMATION ON APPROPRIATE RESPIRATORY PROTECTION. MSDS SHEETS AVAILABLE AT WWW.GRANITECONSTRUCTION.COM/MSDS OR BY CONTACTING YOUR LOCAL OFFICE

gci rev. 04/21

ORIGINAL

GRANITE™

SMITH ISLAND ASPHALT
2111 ROSS AVE.
EVERETT, WA 98205
425-252-9592

Ticket No. **2666288**
6/28/2022 3:03:39PM

Customer: GRANITE CONSTRUCTION COMPANY 2
Order ID: 22030
Job/PO# : 1136527
Cost Code
Location: EVT - NORTON TERMINAL DEV
2600 FEDERAL AVE

Comments:

Vehicle: 0466S GREEN PETE
License: | |
Carrier:
Product : 3947 1/2"HMA58H-22ST

	Pounds	Metric Tons	Tons
Gross	61,500	27.90	30.75
Tare	27,220	12.35	13.61
Net	34,280	15.55	17.14

Scale: 1 * Manual Weight

FOB: PICK-UP

This Load: 17.14 TONS

Load No: 29
Shipped: 483.52 TONS

Weighmaster: Granite Construction Company
Deputy: Shanin Coffman

WEIGHMASTER CERTIFICATE

Accepted by: _____

WARNING: THIS PRODUCT CONTAINS CRYSTALLINE SILICA(QUARTZ). CRYSTALLINE SILICA IS A COMMON NATURALLY OCCURING MINERAL FOUND IN SAND AND ROCKPROLONGED AND REPEATE BREATHING OF CRYSTALLINE SILICA DUST MAY CAUSE RESPIRATORY AND OTHER HEALTH PROBLEMS, INCLUDING LUNG DISEASE, SILICOSIS AND CANCER, WHICH MAY RESULT IN PERMANENT INJURY OR DEATH. BEFORE USING OR HANDLING THIS PRODUCT READ THE MATERIAL SAFETY DATA SHEET FOR MORE DETAILED INFORMATION INCLUDING INFORMATION ON APPROPRIATE RESPIRATORY PROTECTION. MSDS SHEETS AVAILABLE AT WWW.GRANITECONSTRUCTION.COM/MSDS OR BY CONTACTING YOUR LOCAL OFFICE

gci rev. 04/21

COPY

GRANITE™

SMITH ISLAND ASPHALT
2111 ROSS AVE.
EVERETT, WA 98205
425-252-9592

Ticket No. **2666288**
6/28/2022 3:03:39PM

Customer: GRANITE CONSTRUCTION COMPANY 2
Order ID: 22030
Job/PO# : 1136527
Cost Code
Location: EVT - NORTON TERMINAL DEV
2600 FEDERAL AVE

Comments:

Vehicle: 0466S GREEN PETE
License: | |
Carrier:
Product : 3947 1/2"HMA58H-22ST

	Pounds	Metric Tons	Tons
Gross	61,500	27.90	30.75
Tare	27,220	12.35	13.61
Net	34,280	15.55	17.14

Scale: 1 * Manual Weight

FOB: PICK-UP

This Load: 17.14 TONS

Load No: 29
Shipped: 483.52 TONS

Weighmaster: Granite Construction Company
Deputy: Shanin Coffman

WEIGHMASTER CERTIFICATE

Accepted by: _____

WARNING: THIS PRODUCT CONTAINS CRYSTALLINE SILICA(QUARTZ). CRYSTALLINE SILICA IS A COMMON NATURALLY OCCURING MINERAL FOUND IN SAND AND ROCKPROLONGED AND REPEATE BREATHING OF CRYSTALLINE SILICA DUST MAY CAUSE RESPIRATORY AND OTHER HEALTH PROBLEMS, INCLUDING LUNG DISEASE, SILICOSIS AND CANCER, WHICH MAY RESULT IN PERMANENT INJURY OR DEATH. BEFORE USING OR HANDLING THIS PRODUCT READ THE MATERIAL SAFETY DATA SHEET FOR MORE DETAILED INFORMATION INCLUDING INFORMATION ON APPROPRIATE RESPIRATORY PROTECTION. MSDS SHEETS AVAILABLE AT WWW.GRANITECONSTRUCTION.COM/MSDS OR BY CONTACTING YOUR LOCAL OFFICE

gci rev. 04/21

ORIGINAL

GRANITE™

SMITH ISLAND ASPHALT
2111 ROSS AVE.
EVERETT, WA 98205
425-252-9592

Ticket No. **2666290**
6/28/2022 3:16:18PM

Customer: GRANITE CONSTRUCTION COMPANY 2

Order ID: 22030
Job/PO# : 1136527
Cost Code
Location: EVT - NORTON TERMINAL DEV
2600 FEDERAL AVE

Comments:

Vehicle: G4S KW DOUBLE DROP
License: | |
Carrier:
Product : 3947 1/2"HMA58H-22ST

	Pounds	Metric Tons	Tons
Gross	61,860	28.06	30.93
Tare	26,540	12.04	13.27
Net	35,320	16.02	17.66

Scale: 1

FOB: PICK-UP

This Load: 17.66 TONS

Load No: 30
Shipped: 501.18 TONS

Weighmaster: Granite Construction Company
Deputy: Shanin Coffman

WEIGHMASTER CERTIFICATE

Accepted by: _____

WARNING: THIS PRODUCT CONTAINS CRYSTALLINE SILICA(QUARTZ). CRYSTALLINE SILICA IS A COMMON NATURALLY OCCURING MINERAL FOUND IN SAND AND ROCKPROLONGED AND REPEATE BREATHING OF CRYSTALLINE SILICA DUST MAY CAUSE RESPIRATORY AND OTHER HEALTH PROBLEMS, INCLUDING LUNG DISEASE, SILICOSIS AND CANCER. WHICH MAY RESULT IN PERMANENT INJURY OR DEATH. BEFORE USING OR HANDLING THIS PRODUCT READ THE MATERIAL SAFETY DATA SHEET FOR MORE DETAILED INFORMATION INCLUDING INFORMATION ON APPROPRIATE RESPIRATORY PROTECTION. MSDS SHEETS AVAILABLE AT WWW.GRANITECONSTRUCTION.COM/MSDS OR BY CONTACTING YOUR LOCAL OFFICE

gci rev 04/21

COPY

GRANITE™

SMITH ISLAND ASPHALT
2111 ROSS AVE.
EVERETT, WA 98205
425-252-9592

Ticket No. **2666290**
6/28/2022 3:16:18PM

Customer: GRANITE CONSTRUCTION COMPANY 2

Order ID: 22030
Job/PO# : 1136527
Cost Code
Location: EVT - NORTON TERMINAL DEV
2600 FEDERAL AVE

Comments:

Vehicle: G4S KW DOUBLE DROP
License: | |
Carrier:
Product : 3947 1/2"HMA58H-22ST

	Pounds	Metric Tons	Tons
Gross	61,860	28.06	30.93
Tare	26,540	12.04	13.27
Net	35,320	16.02	17.66

Scale: 1

FOB: PICK-UP

This Load: 17.66 TONS

Load No: 30
Shipped: 501.18 TONS

Weighmaster: Granite Construction Company
Deputy: Shanin Coffman

WEIGHMASTER CERTIFICATE

Accepted by: _____

WARNING: THIS PRODUCT CONTAINS CRYSTALLINE SILICA(QUARTZ). CRYSTALLINE SILICA IS A COMMON NATURALLY OCCURING MINERAL FOUND IN SAND AND ROCKPROLONGED AND REPEATE BREATHING OF CRYSTALLINE SILICA DUST MAY CAUSE RESPIRATORY AND OTHER HEALTH PROBLEMS, INCLUDING LUNG DISEASE, SILICOSIS AND CANCER. WHICH MAY RESULT IN PERMANENT INJURY OR DEATH. BEFORE USING OR HANDLING THIS PRODUCT READ THE MATERIAL SAFETY DATA SHEET FOR MORE DETAILED INFORMATION INCLUDING INFORMATION ON APPROPRIATE RESPIRATORY PROTECTION. MSDS SHEETS AVAILABLE AT WWW.GRANITECONSTRUCTION.COM/MSDS OR BY CONTACTING YOUR LOCAL OFFICE

gci rev 04/21

ORIGINAL

GRANITE™

SMITH ISLAND ASPHALT
2111 ROSS AVE.
EVERETT, WA 98205
425-252-9592

Ticket No. **2666294**
6/28/2022 3:35:59PM

Customer: GRANITE CONSTRUCTION COMPANY 2
Order ID: 22030
Job/PO# : 1136527
Cost Code
Location: EVT - NORTON TERMINAL DEV
2600 FEDERAL AVE

Comments:

Vehicle: G2S MAROON SOLO
License: | |
Carrier:
Product : 3947 1/2"HMA58H-22ST

	Pounds	Metric Tons	Tons
Gross	55,980	25.39	27.99
Tare	24,980	11.33	12.49
Net	31,000	14.06	15.50

Scale: 1

FOB: PICK-UP

This Load: 15.50 TONS

Load No: 32
Shipped: 533.56 TONS

Weighmaster: Granite Construction Company
Deputy: Shanin Coffman

WEIGHMASTER CERTIFICATE

Accepted by: _____

WARNING: THIS PRODUCT CONTAINS CRYSTALLINE SILICA(QUARTZ). CRYSTALLINE SILICA IS A COMMON NATURALLY OCCURING MINERAL FOUND IN SAND AND ROCKPROLONGED AND REPEATE BREATHING OF CRYSTALLINE SILICA DUST MAY CAUSE RESPIRATORY AND OTHER HEALTH PROBLEMS, INCLUDING LUNG DISEASE, SILICOSIS AND CANCER, WHICH MAY RESULT IN PERMANENT INJURY OR DEATH. BEFORE USING OR HANDLING THIS PRODUCT READ THE MATERIAL SAFETY DATA SHEET FOR MORE DETAILED INFORMATION INCLUDING INFORMATION ON APPROPRIATE RESPIRATORY PROTECTION. MSDS SHEETS AVAILABLE AT WWW.GRANITECONSTRUCTION.COM/MSDS OR BY CONTACTING YOUR LOCAL OFFICE

gci rev 04/21

COPY

GRANITE™

SMITH ISLAND ASPHALT
2111 ROSS AVE.
EVERETT, WA 98205
425-252-9592

Ticket No. **2666294**
6/28/2022 3:35:59PM

Customer: GRANITE CONSTRUCTION COMPANY 2
Order ID: 22030
Job/PO# : 1136527
Cost Code
Location: EVT - NORTON TERMINAL DEV
2600 FEDERAL AVE

Comments:

Vehicle: G2S MAROON SOLO
License: | |
Carrier:
Product : 3947 1/2"HMA58H-22ST

	Pounds	Metric Tons	Tons
Gross	55,980	25.39	27.99
Tare	24,980	11.33	12.49
Net	31,000	14.06	15.50

Scale: 1

FOB: PICK-UP

This Load: 15.50 TONS

Load No: 32
Shipped: 533.56 TONS

Weighmaster: Granite Construction Company
Deputy: Shanin Coffman

WEIGHMASTER CERTIFICATE

Accepted by: _____

WARNING: THIS PRODUCT CONTAINS CRYSTALLINE SILICA(QUARTZ). CRYSTALLINE SILICA IS A COMMON NATURALLY OCCURING MINERAL FOUND IN SAND AND ROCKPROLONGED AND REPEATE BREATHING OF CRYSTALLINE SILICA DUST MAY CAUSE RESPIRATORY AND OTHER HEALTH PROBLEMS, INCLUDING LUNG DISEASE, SILICOSIS AND CANCER, WHICH MAY RESULT IN PERMANENT INJURY OR DEATH. BEFORE USING OR HANDLING THIS PRODUCT READ THE MATERIAL SAFETY DATA SHEET FOR MORE DETAILED INFORMATION INCLUDING INFORMATION ON APPROPRIATE RESPIRATORY PROTECTION. MSDS SHEETS AVAILABLE AT WWW.GRANITECONSTRUCTION.COM/MSDS OR BY CONTACTING YOUR LOCAL OFFICE

gci rev 04/21

ORIGINAL

GRANITE™

SMITH ISLAND ASPHALT
2111 ROSS AVE.
EVERETT, WA 98205
425-252-9592

Ticket No. **2666298**
6/28/2022 4:19:27PM

Customer: GRANITE CONSTRUCTION COMPANY 2
Order ID: 22030
Job/PO# : 1136527
Cost Code 461002
Location: EVT - NORTON TERMINAL DEV
2600 FEDERAL AVE

Comments:

Vehicle: 0486SS GREEN
License: | |
Carrier:
Product : 3947 1/2"HMA58H-22ST

	Pounds	Metric Tons	Tons
Gross	79,800	36.20	39.90
Tare	31,600	14.33	15.80
Net	48,200	21.86	24.10

Scale: 1

FOB: PICK-UP

This Load: 24.10 TONS

Load No: 33
Shipped: 557.66 TONS

Weighmaster: Granite Construction Company
Deputy: Shanin Coffman

WEIGHMASTER CERTIFICATE

Accepted by: _____

WARNING: THIS PRODUCT CONTAINS CRYSTALLINE SILICA(QUARTZ). CRYSTALLINE SILICA IS A COMMON NATURALLY OCCURING MINERAL FOUND IN SAND AND ROCKPROLONGED AND REPEATE BREATHING OF CRYSTALLINE SILICA DUST MAY CAUSE RESPIRATORY AND OTHER HEALTH PROBLEMS, INCLUDING LUNG DISEASE, SILICOSIS AND CANCER, WHICH MAY RESULT IN PERMANENT INJURY OR DEATH. BEFORE USING OR HANDLING THIS PRODUCT READ THE MATERIAL SAFETY DATA SHEET FOR MORE DETAILED INFORMATION INCLUDING INFORMATION ON APPROPRIATE RESPIRATORY PROTECTION. MSDS SHEETS AVAILABLE AT WWW.GRANITECONSTRUCTION.COM/MSDS OR BY CONTACTING YOUR LOCAL OFFICE.

gci rev 04/21

COPY

GRANITE™

SMITH ISLAND ASPHALT
2111 ROSS AVE.
EVERETT, WA 98205
425-252-9592

Ticket No. **2666298**
6/28/2022 4:19:27PM

Customer: GRANITE CONSTRUCTION COMPANY 2
Order ID: 22030
Job/PO# : 1136527
Cost Code 461002
Location: EVT - NORTON TERMINAL DEV
2600 FEDERAL AVE

Comments:

Vehicle: 0486SS GREEN
License: | |
Carrier:
Product : 3947 1/2"HMA58H-22ST

	Pounds	Metric Tons	Tons
Gross	79,800	36.20	39.90
Tare	31,600	14.33	15.80
Net	48,200	21.86	24.10

Scale: 1

FOB: PICK-UP

This Load: 24.10 TONS

Load No: 33
Shipped: 557.66 TONS

Weighmaster: Granite Construction Company
Deputy: Shanin Coffman

WEIGHMASTER CERTIFICATE

Accepted by: _____

WARNING: THIS PRODUCT CONTAINS CRYSTALLINE SILICA(QUARTZ). CRYSTALLINE SILICA IS A COMMON NATURALLY OCCURING MINERAL FOUND IN SAND AND ROCKPROLONGED AND REPEATE BREATHING OF CRYSTALLINE SILICA DUST MAY CAUSE RESPIRATORY AND OTHER HEALTH PROBLEMS, INCLUDING LUNG DISEASE, SILICOSIS AND CANCER, WHICH MAY RESULT IN PERMANENT INJURY OR DEATH. BEFORE USING OR HANDLING THIS PRODUCT READ THE MATERIAL SAFETY DATA SHEET FOR MORE DETAILED INFORMATION INCLUDING INFORMATION ON APPROPRIATE RESPIRATORY PROTECTION. MSDS SHEETS AVAILABLE AT WWW.GRANITECONSTRUCTION.COM/MSDS OR BY CONTACTING YOUR LOCAL OFFICE.

gci rev 04/21

Bid Item 31

Cowden Gravel & Ready Mix

(360) 592-4200

P.O. Box 732677
Dallas, TX 75373-2677

*** ETICKET REPRINT ***

Ticket #: 516524 **Date:** 6/10/2022 **Time:**

Order:	2275 - Norton Terminal Development & MTCA 3rd Interim Action - PW
Customer:	STRI001 - STRIDER CONSTRUCTION CO. INC.
Product:	032 - 2" X 4" QUARRY SPALLS
Truck:	362 - COWDEN INC
PO #:	21NT
Job #:	21NT

DRIVER DELIVERY LOCATION

TICKET NOTE

Ticket PO
Granite Ticket
Reference #

	Tons	Pounds	M-Tons
Gross:			
Tare:			
Net:	29.47	58,940	26.73

Loads Today: 2
Units Today: 60.78

WEIGHMASTER: *Brandon Wong*

Cowden Gravel & Ready Mix

(360) 592-4200

P.O. Box 732677
Dallas, TX 75373-2677

*** ETICKET REPRINT ***

Ticket #: 516526 **Date:** 6/10/2022 **Time:**

Order:	2275 - Norton Terminal Development & MTCA 3rd Interim Action - PW
Customer:	STRI001 - STRIDER CONSTRUCTION CO. INC.
Product:	032 - 2" X 4" QUARRY SPALLS
Truck:	338 - COWDEN INC
PO #:	21NT
Job #:	21NT

DRIVER DELIVERY LOCATION

TICKET NOTE

Ticket PO
Granite Ticket
Reference #

	Tons	Pounds	M-Tons
Gross:			
Tare:			
Net:	31.31	62,620	28.40

Loads Today: 2
Units Today: 60.78

WEIGHMASTER: *Brandon Wong*

Iron Mountain Quarry, LLC

22121 17th Ave SE STE 117
Bothell, WA 98021
425-481-0999

Ticket No.: **77875**

Date : 6/7/2022 Time: 11:59:30AM
Location : **Granite Falls Quarry**
Customer : 719 STRIDER CONSTRUCTION
Order : 21 NORTON TERMINAL
P.O. : 21NT
Product : 51 4X8" ROCK **29.03** Ton

	Pounds	Tons
Gross	101320	50.66
Tare	43260 *	21.63 *
Net	58060	29.03

* P. T.

Carrier : 1887 STRIDER CONSTRUCTION
Vehicle : MD12 Strider Construction
Received : _____

Weighmaster: Brad

COPY 1 CARRIER

Iron Mountain Quarry, LLC

22121 17th Ave SE STE 117
Bothell, WA 98021
425-481-0999

Ticket No.: **77875**

Date : 6/7/2022 Time: 11:59:30AM
Location : **Granite Falls Quarry**
Customer : 719 STRIDER CONSTRUCTION
Order : 21 NORTON TERMINAL
P.O. : 21NT
Product : 51 4X8" ROCK **29.03** Ton

	Pounds	Tons
Gross	101320	50.66
Tare	43260 *	21.63 *
Net	58060	29.03

* P. T.

Carrier : 1887 STRIDER CONSTRUCTION
Vehicle : MD12 Strider Construction
Received : _____

Weighmaster: Brad

COPY 2 CUSTOMER

Iron Mountain Quarry, LLC

22121 17th Ave SE STE 117
Bothell, WA 98021
425-481-0999

Ticket No.: **77933**

Date : 6/7/2022 Time: 2:21:05PM
Location : **Granite Falls Quarry**
Customer : 719 STRIDER CONSTRUCTION
Order : 21 NORTON TERMINAL
P.O. : 21NT
Product : 51 4X8" ROCK **28.34** Ton

	Pounds	Tons
Gross	99940	49.97
Tare	43260 *	21.63 *
Net	56680	28.34

* P. T.

Carrier : 1887 STRIDER CONSTRUCTION
Vehicle : MD12 Strider Construction
Received : _____

Weighmaster: Brad

COPY 1 CARRIER

Iron Mountain Quarry, LLC

22121 17th Ave SE STE 117
Bothell, WA 98021
425-481-0999

Ticket No.: **77933**

Date : 6/7/2022 Time: 2:21:05PM
Location : **Granite Falls Quarry**
Customer : 719 STRIDER CONSTRUCTION
Order : 21 NORTON TERMINAL
P.O. : 21NT
Product : 51 4X8" ROCK **28.34** Ton

	Pounds	Tons
Gross	99940	49.97
Tare	43260 *	21.63 *
Net	56680	28.34

* P. T.

Carrier : 1887 STRIDER CONSTRUCTION
Vehicle : MD12 Strider Construction
Received : _____

Weighmaster: Brad

COPY 2 CUSTOMER

Bid Item 13

Republic Services

Tickets to date = 107 EA
Total Tonnage = 2927.86 TN ✓

Total Containers Hauled to Date = 139 EA
Total Haul Month of July = 0 EA

Use 25 Ton estimate for other loads
(139 EA - 107 EA) * 25 TN = 800 TN ✓

Total thru month of July = 2927.86 + 800 = 3727.86 TN ✓

Waste Management

Total Haul = 994.15 TN Previously Billed

Cadman

11,303.58 TN

Tickets submitted this PA 11 = 3,397.7 Tons

Total Billed to Date = 3727.86 + 994.15 + 11,303.58
= 16,025.59 TN

Total Above = 16,025.59 TNs
Billed to Date PA 10 = 12,342.93 TNs

Total PA 11 = 3,682.66 TNs

Everett Incl. Snohomish County --
WA ROOSEVELT , WA

2A 4866308

WEIGHMASTER: Denise B.

CUSTOMER
014209 - Strider Construction Co. Inc.
4721 Northwest Road
Bellingham, WA 98225

Contract:MC-19415

DATE/TIME IN: 7/2/22 11:49 am
DATE/TIME OUT: 7/2/22 12:16 pm
VEHICLE: 1454
CONTAINER: TOLU467189
REFERENCE:
BILL OF LADING: BNSF230043

Scale In GROSS WEIGHT 107,800 NET TONS 29.98
Scale Out TARE WEIGHT 47,840 NET WEIGHT 59,960

INBOUND
INVOICE

QTY.	UNIT	DESCRIPTION	RATE	EXTENSION	TAX	TOTAL
28.00	YD	Tracking QTY				
29.98	tn	Cont Soil Origin:Everett 100%				

NET AMOUNT
TENDERED
CHANGE
CHECK#

The undersigned individual signing this document on behalf of Customer acknowledges that he or she has read and understands the terms and conditions on the reverse side and that he or she has the authority to sign this document on behalf of the customer.

RS-F042UPR (07/12)

SIGNATURE _____ CHANGE:

CHECK :

SITE
Everett Incl. Snohomish County --
WA ROOSEVELT , WA

SITE ZA TICKET # 4866320 CELL

WEIGHMASTER: Denise B.

CUSTOMER
014209 - Strider Construction Co. Inc.
4721 Northwest Road
Bellingham, WA 98225

Contract:MC-19415

DATE/TIME IN: 7/2/22 12:45 pm
DATE/TIME OUT: 7/2/22 1:12 pm
VEHICLE: 8281
CONTAINER: TRLU901855
REFERENCE:
BILL OF LADING: BNSF230043

Scale In GROSS WEIGHT 109,500 NET TONS 30.94
Scale Out TARE WEIGHT 47,620 NET WEIGHT 61,880

INBOUND
INVOICE

QTY.	UNIT	DESCRIPTION	RATE	EXTENSION	TAX	TOTAL
28.00	YD	Tracking QTY				
30.94	tn	Cont Soil Origin:Everett 100%				

NET AMOUNT
TENDERED
CHANGE
CHECK#

The undersigned individual signing this document on behalf of Customer acknowledges that he or she has read and understands the terms and conditions on the reverse side and that he or she has the authority to sign this document on behalf of the customer.

RS-F042UPR (07/12)

SIGNATURE _____ CHANGE:

CHECK :

Everett Incl. Snohomish County --
WA ROOSEVELT , WA

CUSTOMER
014209 - Strider Construction Co. Inc.
4721 Northwest Road
Bellingham, WA 98225

Contract:MC-19415

2A 4866321

WEIGHMASTER: Denise B.

DATE/TIME IN	DATE/TIME OUT
7/2/22 1:34 pm	7/2/22 1:51 pm

VEHICLE	CONTAINER
0331	TOLU456462

REFERENCE

BILL OF LADING: BNSF230123

Scale In GROSS WEIGHT 114,020 NET TONS 31.84
Scale Out TARE WEIGHT 50,340 NET WEIGHT 63,680

INBOUND
INVOICE

QTY.	UNIT	DESCRIPTION	RATE	EXTENSION	TAX	TOTAL
28.00	YD	Tracking QTY				
31.84	tn	Cont Soil Origin:Everett 100%				

NET AMOUNT
TENDERED
CHANGE
CHECK#

The undersigned individual signing this document on behalf of Customer acknowledges that he or she has read and understands the terms and conditions on the reverse side and that he or she has the authority to sign this document on behalf of the customer.

RS-F042UPR (07/12)

SIGNATURE _____ CHANGE:

CHECK :

SITE
Everett Incl. Snohomish County --
WA ROOSEVELT , WA

CUSTOMER
014209 - Strider Construction Co. Inc.
4721 Northwest Road
Bellingham, WA 98225

Contract:MC-19415

SITE TICKET # 4866322 CELL

WEIGHMASTER: Denise B.

DATE/TIME IN	DATE/TIME OUT
7/2/22 1:52 pm	7/2/22 2:13 pm

VEHICLE	CONTAINER
8281	TPHU252184

REFERENCE

BILL OF LADING: BNSF230123

Scale In GROSS WEIGHT 105,320 NET TONS 29.02
Scale Out TARE WEIGHT 47,280 NET WEIGHT 58,040

INBOUND
INVOICE

QTY.	UNIT	DESCRIPTION	RATE	EXTENSION	TAX	TOTAL
28.00	YD	Tracking QTY				
29.02	tn	Cont Soil Origin:Everett 100%				

NET AMOUNT
TENDERED
CHANGE
CHECK#

The undersigned individual signing this document on behalf of Customer acknowledges that he or she has read and understands the terms and conditions on the reverse side and that he or she has the authority to sign this document on behalf of the customer.

RS-F042UPR (07/12)

SIGNATURE _____ CHANGE:

CHECK :

Everett Incl. Snohomish County --
WA ROOSEVELT , WA

2A 4867198

WEIGHMASTER: Brandie M.

CUSTOMER
014209 - Strider Construction Co. Inc.
4721 Northwest Road
Bellingham, WA 98225

Contract:MC-19415

DATE/TIME IN: 7/13/22 12:43 pm
DATE/TIME OUT: 7/13/22 1:13 pm
VEHICLE: 5223
CONTAINER: TOLU469593
REFERENCE:
BILL OF LADING: BNSF231157

Scale In GROSS WEIGHT 110,360 NET TONS 31.02 INBOUND
Scale Out TARE WEIGHT 48,320 NET WEIGHT 62,040 INVOICE

QTY.	UNIT	DESCRIPTION	RATE	EXTENSION	TAX	TOTAL
28.00	YD	Tracking QTY				
31.02	tn	Cont Soil Origin:Everett 100%				

NET AMOUNT
TENDERED
CHANGE
CHECK#

The undersigned individual signing this document on behalf of Customer acknowledges that he or she has read and understands the terms and conditions on the reverse side and that he or she has the authority to sign this document on behalf of the customer.

RS-F042UPR (07/12)

SIGNATURE _____ CHANGE:

CHECK :

Everett Incl. Snohomish County --
WA ROOSEVELT , WA

SITE 2A TICKET # 4867237 CELL

WEIGHMASTER: Brandie M.

CUSTOMER
014209 - Strider Construction Co. Inc.
4721 Northwest Road
Bellingham, WA 98225

Contract:MC-19415

DATE/TIME IN: 7/13/22 3:32 pm
DATE/TIME OUT: 7/13/22 3:49 pm
VEHICLE: 2234
CONTAINER: GCEU426890
REFERENCE:
BILL OF LADING: DTTX458902

Scale In GROSS WEIGHT 107,540 NET TONS 28.94 INBOUND
Scale Out TARE WEIGHT 49,660 NET WEIGHT 57,880 INVOICE

QTY.	UNIT	DESCRIPTION	RATE	EXTENSION	TAX	TOTAL
28.00	YD	Tracking QTY				
28.94	tn	Cont Soil Origin:Everett 100%				

NET AMOUNT
TENDERED
CHANGE
CHECK#

The undersigned individual signing this document on behalf of Customer acknowledges that he or she has read and understands the terms and conditions on the reverse side and that he or she has the authority to sign this document on behalf of the customer.

RS-F042UPR (07/12)

SIGNATURE _____ CHANGE:

CHECK :

Everett Incl. Snohomish County --
WA ROOSEVELT , WA

2A 4867239

CUSTOMER
014209 - Strider Construction Co. Inc.
4721 Northwest Road
Bellingham, WA 98225

Contract:MC-19415

WEIGHMASTER: Brandie M.

DATE/TIME IN: 7/13/22 3:51 pm
DATE/TIME OUT: 7/13/22 4:07 pm

VEHICLE: 5224
CONTAINER: GCEU426026

REFERENCE:

BILL OF LADING: DTTX458902

Scale In GROSS WEIGHT 103,260 NET TONS 28.22
Scale Out TARE WEIGHT 46,820 NET WEIGHT 56,440

INBOUND
INVOICE

QTY.	UNIT	DESCRIPTION	RATE	EXTENSION	TAX	TOTAL
28.00	YD	Tracking QTY				
28.22	tn	Cont Soil Origin:Everett 100%				

NET AMOUNT
TENDERED
CHANGE
CHECK#

The undersigned individual signing this document on behalf of Customer acknowledges that he or she has read and understands the terms and conditions on the reverse side and that he or she has the authority to sign this document on behalf of the customer.

RS-F042UPR (07/12)

SIGNATURE _____

CHANGE:
CHECK :

SITE

CUSTOMER

SITE | TICKET # | CELL

WEIGHMASTER

DATE/TIME IN | DATE/TIME OUT

VEHICLE | CONTAINER

REFERENCE

BILL OF LADING

QTY.	UNIT	DESCRIPTION	RATE	EXTENSION	TAX	TOTAL

NET AMOUNT
TENDERED
CHANGE
CHECK#

The undersigned individual signing this document on behalf of Customer acknowledges that he or she has read and understands the terms and conditions on the reverse side and that he or she has the authority to sign this document on behalf of the customer.

RS-F042UPR (07/12)

SIGNATURE _____

CADMAN
HEIDELBERGCEMENTGroup
(888) 322-6847 425-961-7100

WEIGHMASTER STATION
98785500
Everett Glenwood LND
6300 Glenwood Avenue
Everett, WA 98213

TICKET NO.	1120564069	TICKET TIME	2:19:18PM	DATE	7/20/2022
Customer No.	Payment Type	Customer Name			Order No.
7832096	Account	STRIDER CONST CO INC			10119468
Customer Job. No.	Customer P.O.		Map Ref.		Disp. Ord. #
	21NT		/		
Truck Type	Truck No.	Vehicle or License Plate No.	Trailer or License Plate No.		Zone
Truck & Trailer	RIV52TT				
Hauler/Carrier No.	Driver's Name	Delivered/Ordered	Load No.		Running Total
7886596		589.85 /	20		589.85

EV/P PORT OF EVERETT
2600 FEDERAL AVE
EVERETT

Product	Description	Total	Unit Price	Amount
99004	CLASS 2 SOILS DUMP (TN)	29.38		

SCALE WEIGHT
Gross 98,500 LB m
Tare 39,740 LB/P.T.*
Net 58,760 LB m

GROSS & TARE
☒ Scale 1 ☐ Scale 2
X Cate
Deputy Weighmaster

A STANDBY SURCHARGE WILL BE ASSESSED FOR LOADS THAT EXCEED 10 MINUTES UNLOADING TIME.

LIABILITY WAIVER
Cadman Materials, (Inc.) will not assume Liability for any property damage or any equipment damage for any delivery beyond the curb line.

Fuel Surcharge	
Sales Tax	
Total	
Standby Time	
This Tickets Grand Total	

No one available to sign, customer waives receipt signature. ☐
Received by Signature X
Print Name (Customer) X
Driver's Signature X
Customer's Initials X

Arrive Job		Start Unloading		Finish Unloading		Standby Time	

REPRINT

CADMAN
HEIDELBERGCEMENTGroup
(888) 322-6847 425-961-7100

WEIGHMASTER STATION
98785500
Everett Glenwood LND
6300 Glenwood Avenue
Everett, WA 98213

TICKET NO.	1120564067	TICKET TIME	2:02:09PM	DATE	7/20/2022
Customer No. 7832096	Payment Type Account	Customer Name STRIDER CONST CO INC			Order No. 10119468
Customer Job. No.	Customer P.O. 21NT		Map Ref. /		Disp. Ord. #
Truck Type Truck & Trailer	Truck No. RIV59TT	Vehicle or License Plate No.	Trailer or License Plate No.		Zone
Hauler/Carrier No. 7886596	Driver's Name	Delivered/Ordered 533.36 /	Load No. 18		Running Total 533.36

EV/P PORT OF EVERETT
2600 FEDERAL AVE
EVERETT

Product	Description	Total	Unit Price	Amount
99004	CLASS 2 SOILS DUMP (TN)	29.83		

SCALE WEIGHT
Gross 100,600 LB m
Tare 40,940 LB/P.T.*
Net 59,660 LB m

GROSS & TARE
☒ Scale 1 ☐ Scale 2
X Cate
Deputy Weighmaster

A STANDBY SURCHARGE WILL BE ASSESSED FOR LOADS THAT EXCEED 10 MINUTES UNLOADING TIME.

LIABILITY WAIVER
Cadman Materials, (Inc.) will not assume Liability for any property damage or any equipment damage for any delivery beyond the curb line.

Fuel Surcharge	
Sales Tax	
Total	
Standby Time	
This Tickets Grand Total	

No one available to sign, customer waives receipt signature. ☐

Received by Signature X

Print Name (Customer) X

Driver's Signature X

Customer's Initials X

Arrive Job		Start Unloading		Finish Unloading		Standby Time	

CADMAN
HEIDELBERGCEMENTGroup
(888) 322-6847 425-961-7100

WEIGHMASTER STATION
98785500
Everett Glenwood LND
6300 Glenwood Avenue
Everett, WA 98213

TICKET NO	1120564068	TICKET TIME	2:08:29PM	DATE	7/20/2022
Customer No. 7832096	Payment Type Account	Customer Name STRIDER CONST CO INC			Order No. 10119468
Customer Job. No.	Customer P.O. 21NT		Map Ref. /		Disp. Ord. #
Truck Type Truck & Trailer	Truck No. SPR30TT	Vehicle or License Plate No.	Trailer or License Plate No.		Zone
Hauler/Carrier No. 9388321	Driver's Name	Delivered/Ordered 560.47 /	Load No. 19		Running Total 560.47

EV/P PORT OF EVERETT
2600 FEDERAL AVE
EVERETT

Product	Description	Total	Unit Price	Amount
99004	CLASS 2 SOILS DUMP (TN)	27.11		

SCALE WEIGHT	GROSS & TARE		
Gross 94,460 LB m	☒ Scale 1 ☐ Scale 2	A STANDBY SURCHARGE WILL BE ASSESSED FOR LOADS THAT EXCEED 10 MINUTES UNLOADING TIME.	Fuel Surcharge
Tare 40,240 LB/P.T.*	X Cate	LIABILITY WAIVER	Sales Tax
Net 54,220 LB m	Deputy Weighmaster	Cadman Materials, (Inc.) will not assume Liability for any property damage or any equipment damage for any delivery beyond the curb line.	**Total**

No one available to sign, customer waives receipt signature. ☐	Received by Signature X	Print Name (Customer) X	Driver's Signature X	Standby Time

Arrive Job		Start Unloading		Finish Unloading		Standby Time		Customer's Initials X	This Tickets Grand Total	

CADMAN
HEIDELBERGCEMENTGroup
(888) 322-6847 425-961-7100

WEIGHMASTER STATION
98846900
Sno River Delta Soils
17 E. Marine View Dr.
Everett, WA 98213

TICKET NO.	1124519427	TICKET TIME	3:39:17PM	DATE	7/18/2022
Customer No.	Payment Type	Customer Name			Order No.
7832096	Account	STRIDER CONST CO INC			10119451
Customer Job. No.	Customer P.O.			Map Ref.	Disp. Ord. #
	21NT			/	
Truck Type	Truck No.	Vehicle or License Plate No.		Trailer or License Plate No.	Zone
Truck & Trailer	RIV57TT				
Hauler/Carrier No.	Driver's Name	Delivered/Ordered		Load No.	Running Total
7886596		147.00 /		5	147.00

DEL/P PORT OF EVERETT
DEL/P 2600 FEDERAL AVE
EVERETT

Product	Description	Total	Unit Price	Amount
99005	CLASS 3 SOILS (TN)	31.18		

SCALE WEIGHT

Gross 102,460 LB
Tare 40,100 LB/P.T.*
Net 62,360 LB

GROSS & TARE

[X] Scale 1 [ ] Scale 2
X Angelique
Deputy Weighmaster

A STANDBY SURCHARGE WILL BE ASSESSED FOR LOADS THAT EXCEED 10 MINUTES UNLOADING TIME.

LIABILITY WAIVER

Cadman, (Inc.) will not assume Liability for any property damage or any equipment damage for any delivery beyond the curb line.

Fuel Surcharge	
Sales Tax	
Total	
Standby Time	
This Tickets Grand Total	

No one available to sign, customer waives receipt signature. [ ]

Received by Signature X

Print Name (Customer) X

Driver's Signature X

Customer's Initials X

Arrive Job		Start Unloading		Finish Unloading		Standby Time	

CADMAN
HEIDELBERGCEMENTGroup
(888) 322-6847 425-961-7100

WEIGHTMASTER STATION
98846900
Sno River Delta Soils
17 E. Marine View Dr.
Everett, WA 98213

TICKET NO.	1124519424	TICKET TIME	3:04:26PM	DATE	7/18/2022
Customer No.	Payment Type	Customer Name			Order No.
7832096	Account	STRIDER CONST CO INC			10119451
Customer Job. No.	Customer P.O.			Map Ref.	Disp. Ord. #
	21NT			/	
Truck Type	Truck No.	Vehicle or License Plate No.	Trailer or License Plate No.	Zone	
Truck & Trailer	RIV57TT				
Hauler/Carrier No.	Driver's Name	Delivered/Ordered	Load No.	Running Total	
7886596		52.44 /	2	52.44	

DEL/P PORT OF EVERETT
DEL/P 2600 FEDERAL AVE
EVERETT

Product	Description	Total	Unit Price	Amount
99005	CLASS 3 SOILS (TN)	28.74		

SCALE WEIGHT

Gross 97,580 LB
Tare 40,100 LB/P.T.*
Net 57,480 LB

GROSS & TARE

[X] Scale 1 [ ] Scale 2
X Angelique
Deputy Weighmaster

A STANDBY SURCHARGE WILL BE ASSESSED FOR LOADS THAT EXCEED 10 MINUTES UNLOADING TIME.

LIABILITY WAIVER

Cadman, (Inc.) will not assume Liability for any property damage or any equipment damage for any delivery beyond the curb line.

Fuel Surcharge	
Sales Tax	
Total	
Standby Time	
This Tickets Grand Total	

No one available to sign, customer waives receipt signature. [ ]	Received by Signature X	Print Name (Customer) X	Driver's Signature X

Arrive Job		Start Unloading		Finish Unloading		Standby Time		Customer's initials X

CADMAN
HEIDELBERGCEMENTGroup
(888) 322-6847 425-961-7100

WEIGHTMASTER STATION
98846900
Sno River Delta Soils
17 E. Marine View Dr.
Everett, WA 98213

TICKET NO.	1124519426	TICKET TIME	3:17:16PM	DATE	7/18/2022
Customer No.	Payment Type	Customer Name			Order No.
7832096	Account	STRIDER CONST CO INC			10119451
Customer Job. No.	Customer P.O.			Map Ref.	Disp. Ord. #
	21NT			/	
Truck Type	Truck No.	Vehicle or License Plate No.		Trailer or License Plate No.	Zone
Truck & Trailer	RIV52TT				
Hauler/Carrier No.	Driver's Name	Delivered/Ordered		Load No.	Running Total
7886596		115.82 /		4	115.82

DEL/P PORT OF EVERETT
DEL/P 2600 FEDERAL AVE
EVERETT

Product	Description	Total	Unit Price	Amount
99005	CLASS 3 SOILS (TN)	28.49		

SCALE WEIGHT	GROSS & TARE		
Gross 96,720 LB	☒ Scale 1 ☐ Scale 2	A STANDBY SURCHARGE WILL BE ASSESSED FOR LOADS THAT EXCEED 10 MINUTES UNLOADING TIME.	Fuel Surcharge
Tare 39,740 LB/P.T.*	X Angelique	LIABILITY WAIVER	Sales Tax
Net 56,980 LB	Deputy Weighmaster	Cadman, (Inc.) will not assume Liability for any property damage or any equipment damage for any delivery beyond the curb line.	**Total**

No one available to sign, customer waives receipt signature. ☐	Received by Signature	Print Name (Customer)	Driver's Signature	Standby Time
	X	X	X	

Arrive Job		Start Unloading		Finish Unloading		Standby Time		Customer's Initials	This Tickets Grand Total
								X	

CADMAN
HEIDELBERGCEMENTGroup
(888) 322-6847 425-961-7100

WEIGHMASTER STATION
98846900
Sno River Delta Soils
17 E. Marine View Dr.
Everett, WA 98213

TICKET NO.	1124519429	TICKET TIME	3:46:43PM	DATE	7/18/2022
Customer No.	Payment Type	Customer Name			Order No.
7832096	Account	STRIDER CONST CO INC			10119451
Customer Job. No.	Customer P.O.			Map Ref.	Disp. Ord. #
	21NT			/	
Truck Type	Truck No.	Vehicle or License Plate No.		Trailer or License Plate No.	Zone
Truck & Trailer	RIV52TT				
Hauler/Carrier No.	Driver's Name	Delivered/Ordered		Load No.	Running Total
7886596		210.76 /		7	210.76

DEL/P PORT OF EVERETT
DEL/P 2600 FEDERAL AVE
EVERETT

Product	Description	Total	Unit Price	Amount
99005	CLASS 3 SOILS (TN)	34.47		

SCALE WEIGHT	GROSS & TARE		Fuel Surcharge	
Gross 108,680 LB	[X] Scale 1 [ ] Scale 2	**A STANDBY SURCHARGE WILL BE ASSESSED FOR LOADS THAT EXCEED 10 MINUTES UNLOADING TIME.**	Sales Tax	
Tare 39,740 LB/P.T.*	X Angelique	**LIABILITY WAIVER**	**Total**	
Net 68,940 LB	Deputy Weighmaster	Cadman, (Inc.) will not assume Liability for any property damage or any equipment damage for any delivery beyond the curb line.	Standby Time	

No one available to sign, customer waives receipt signature [ ]	Received by Signature X	Print Name (Customer) X	Driver's Signature X

Arrive Job		Start Unloading		Finish Unloading		Standby Time		Customer's Initials X	This Tickets Grand Total	

CADMAN
HEIDELBERGCEMENTGroup
(888) 322-6847 425-961-7100

WEIGHMASTER STATION
98846900
Sno River Delta Soils
17 E. Marine View Dr.
Everett, WA 98213

TICKET NO.	1124519423	TICKET TIME	2:41:53PM	DATE	7/18/2022
Customer No.	Payment Type	Customer Name			Order No.
7832096	Account	STRIDER CONST CO INC			10119451
Customer Job No.	Customer P.O.		Map Ref.		Disp. Ord. #
	21NT		/		
Truck Type	Truck No.	Vehicle or License Plate No.	Trailer or License Plate No.		Zone
Truck & Traile	SPR30TT				
Hauler/Carrier No.	Driver's Name	Delivered/Ordered	Load No.		Running Total
9388321		23.70 /	1		23.70

DEL/P PORT OF EVERETT
DEL/P 2600 FEDERAL AVE
EVERETT

Product	Description	Total	Unit Price	Amount
99005	CLASS 3 SOILS (TN)	23.70		

SCALE WEIGHT

Gross 89,040 LB
Tare 41,640 LB/P.T.*
Net 47,400 LB

GROSS & TARE

[X] Scale 1 [ ] Scale 2
X Angelique
Deputy Weighmaster

A STANDBY SURCHARGE WILL BE ASSESSED FOR LOADS THAT EXCEED 10 MINUTES UNLOADING TIME.

LIABILITY WAIVER

Cadman, (Inc.) will not assume Liability for any property damage or any equipment damage for any delivery beyond the curb line.

Fuel Surcharge	
Sales Tax	
Total	
Standby Time	
This Tickets Grand Total	

No one available to sign, customer waives receipt signature. [ ]	Received by Signature X	Print Name (Customer) X	Driver's Signature X

Arrive Job		Start Unloading		Finish Unloading		Standby Time		Customer's Initials X

CADMAN
HEIDELBERGCEMENTGroup
(888) 322-6847 425-961-7100

WEIGHMASTER STATION
98846900
Sno River Delta Soils
17 E. Marine View Dr.
Everett, WA 98213

TICKET NO.	1124519425	TICKET TIME	3:12:16PM	DATE	7/18/2022
Customer No.	Payment Type	Customer Name			Order No.
7832096	Account	STRIDER CONST CO INC			10119451
Customer Job. No.	Customer P.O.			Map Ref.	Disp. Ord. #
	21NT			/	
Truck Type	Truck No.	Vehicle or License Plate No.		Trailer or License Plate No.	Zone
Solo	SPR30				
Hauler/Carrier No.	Driver's Name	Delivered/Ordered		Load No.	Running Total
9388321		87.33 /		3	87.33

DEL/P PORT OF EVERETT
DEL/P 2600 FEDERAL AVE
EVERETT

Product	Description	Total	Unit Price	Amount
99005	CLASS 3 SOILS (TN)	34.89		

SCALE WEIGHT		GROSS & TARE	A STANDBY SURCHARGE WILL BE ASSESSED FOR LOADS THAT EXCEED 10 MINUTES UNLOADING TIME.	
Gross	97,260 LB	[X] Scale 1 [ ] Scale 2		Fuel Surcharge
Tare	27,480 LB/P.T.*	X Angelique	LIABILITY WAIVER	Sales Tax
Net	69,780 LB	Deputy Weighmaster	Cadman, (Inc.) will not assume Liability for any property damage or any equipment damage for any delivery beyond the curb line.	**Total**

No one available to sign, customer waives receipt signature. [ ]	Received by Signature	Print Name (Customer)	Driver's Signature	Standby Time
	X	X	X	

Arrive Job		Start Unloading		Finish Unloading		Standby Time		Customer's Initials	This Tickets Grand Total
								X	

CADMAN
HEIDELBERGCEMENTGroup®
(888) 322-6847 425-961-7100

WEIGHMASTER STATION
98846900
Sno River Delta Soils
17 E. Marine View Dr.
Everett, WA 98213

TICKET NO.	1124519428	TICKET TIME	3:42:41PM	DATE	7/18/2022
Customer No.	Payment Type	Customer Name			Order No.
7832096	Account	STRIDER CONST CO INC			10119451
Customer Job. No.	Customer P.O.			Map Ref.	Disp. Ord. #
	21NT			/	
Truck Type	Truck No.	Vehicle or License Plate No.		Trailer or License Plate No.	Zone
Truck & Trailer	SPR30TT				
Hauler/Carrier No.	Driver's Name	Delivered/Ordered		Load No.	Running Total
9388321		176.29 /		6	176.29

DEL/P PORT OF EVERETT
DEL/P 2600 FEDERAL AVE
EVERETT

Product	Description	Total	Unit Price	Amount
99005	CLASS 3 SOILS (TN)	29.29		

SCALE WEIGHT	GROSS & TARE		
Gross 100,220 LB	[X] Scale 1 [ ] Scale 2	A STANDBY SURCHARGE WILL BE ASSESSED FOR LOADS THAT EXCEED 10 MINUTES UNLOADING TIME.	Fuel Surcharge
Tare 41,640 LB/P.T.*		LIABILITY WAIVER	Sales Tax
Net 58,580 LB	X Angelique Deputy Weighmaster	Cadman, (Inc.) will not assume Liability for any property damage or any equipment damage for any delivery beyond the curb line.	**Total**

No one available to sign, customer waives receipt signature. [ ]	Received by Signature X	Print Name (Customer) X	Driver's Signature X	Standby Time

Arrive Job		Start Unloading		Finish Unloading		Standby Time		Customer's Initials X	This Tickets Grand Total	

CADMAN
HEIDELBERGCEMENTGroup
(888) 322-6847 425-961-7100

WEIGHMASTER STATION
98846900
Sno River Delta Soils
17 E. Marine View Dr.
Everett, WA 98213

TICKET NO.	1124519546	TICKET TIME	2:58:13PM	DATE	7/19/2022
Customer No. 7832096	Payment Type Account	Customer Name STRIDER CONST CO INC			Order No. 10119451
Customer Job. No.	Customer P.O. 21NT		Map Ref. /		Disp. Ord. #
Truck Type Truck & Trailer	Truck No. RIV58TT	Vehicle or License Plate No.	Trailer or License Plate No.		Zone
Hauler/Carrier No. 7886596	Driver's Name	Delivered/Ordered 1,477.16 /	Load No. 52		Running Total 1,477.16

DEL/P PORT OF EVERETT
DEL/P 2600 FEDERAL AVE
EVERETT

Product	Description	Total	Unit Price	Amount
99005	CLASS 3 SOILS (TN)	31.05		

SCALE WEIGHT
103,160 LB Gross
41,060 LB/P.T.* Tare
62,100 LB Net

GROSS & TARE
☒ Scale 1 ☐ Scale 2
X Angelique
Deputy Weighmaster

A STANDBY SURCHARGE WILL BE ASSESSED FOR LOADS THAT EXCEED 10 MINUTES UNLOADING TIME.

LIABILITY WAIVER
Cadman, (Inc.) will not assume Liability for any property damage or any equipment damage for any delivery beyond the curb line.

Fuel Surcharge	
Sales Tax	
Total	
Standby Time	
This Tickets Grand Total	

No one available to sign, customer waives receipt signature. ☐	Received by Signature X	Print Name (Customer) X	Driver's Signature X

Arrive Job		Start Unloading		Finish Unloading		Standby Time		Customer's Initials X

CADMAN
HEIDELBERGCEMENTGroup
(888) 322-6847 425-961-7100

WEIGHMASTER STATION
98846900
Sno River Delta Soils
17 E. Marine View Dr.
Everett, WA 98213

TICKET NO.	1124519540	TICKET TIME	2:31:16PM	DATE	7/19/2022

Customer No.	Payment Type	Customer Name	Order No.
7832096	Account	STRIDER CONST CO INC	10119451

Customer Job. No.	Customer P.O.	Map Ref.	Disp. Ord. #
	21NT	/	

Truck Type	Truck No.	Vehicle or License Plate No.	Trailer or License Plate No.	Zone
Truck & Traile	RIV58TT			

Hauler/Carrier No.	Driver's Name	Delivered/Ordered	Load No.	Running Total
7886596		1,327.84 /	47	1,327.84

DEL/P PORT OF EVERETT
DEL/P 2600 FEDERAL AVE
EVERETT

Product	Description	Total	Unit Price	Amount
99005	CLASS 3 SOILS (TN)	29.86		

SCALE WEIGHT

100,780 LB
Gross

41,060 LB/P.T.*
Tare

59,720 LB
Net

GROSS & TARE

☒ Scale 1 ☐ Scale 2

X Angelique
Deputy Weighmaster

A STANDBY SURCHARGE WILL BE ASSESSED FOR LOADS THAT EXCEED 10 MINUTES UNLOADING TIME.

LIABILITY WAIVER

Cadman, (Inc.) will not assume Liability for any property damage or any equipment damage for any delivery beyond the curb line.

Fuel Surcharge	
Sales Tax	
Total	
Standby Time	
This Tickets Grand Total	

No one available to sign, customer waives receipt signature. ☐	Received by Signature	Print Name (Customer)	Driver's Signature
	X	X	X

Arrive Job		Start Unloading		Finish Unloading		Standby Time		Customer's Initials
								X

CADMAN
HEIDELBERGCEMENTGroup
(888) 322-6847 425-961-7100

WEIGHMASTER STATION
98846900
Sno River Delta Soils
17 E. Marine View Dr.
Everett, WA 98213

TICKET NO.	1124519534	TICKET TIME	2:03:30PM	DATE	7/19/2022
Customer No. 7832096	Payment Type Account	Customer Name STRIDER CONST CO INC			Order No. 10119451
Customer Job. No.	Customer P.O. 21NT			Map Ref. /	Disp. Ord. #
Truck Type Truck & Traile	Truck No. RIV58TT	Vehicle or License Plate No.		Trailer or License Plate No.	Zone
Hauler/Carrier No. 7886596	Driver's Name	Delivered/Ordered 1,187.52 /		Load No. 42	Running Total 1,187.52

DEL/P PORT OF EVERETT
DEL/P 2600 FEDERAL AVE
EVERETT

Product	Description	Total	Unit Price	Amount
99005	CLASS 3 SOILS (TN)	29.49		

SCALE WEIGHT	GROSS & TARE
Gross 100,040 LB	[X] Scale 1 [ ] Scale 2
Tare 41,060 LB/P.T.*	X Angelique
Net 58,980 LB	Deputy Weighmaster

A STANDBY SURCHARGE WILL BE ASSESSED FOR LOADS THAT EXCEED 10 MINUTES UNLOADING TIME.

LIABILITY WAIVER

Cadman, (Inc.) will not assume Liability for any property damage or any equipment damage for any delivery beyond the curb line.

Fuel Surcharge	
Sales Tax	
Total	
Standby Time	
This Tickets Grand Total	

No one available to sign, customer waives receipt signature. [ ]	Received by Signature X	Print Name (Customer) X	Driver's Signature X

Arrive Job		Start Unloading		Finish Unloading		Standby Time		Customer's Initials X

CADMAN
HEIDELBERGCEMENTGroup®
(888) 322-6847 425-961-7100

WEIGHMASTER STATION
98846900
Sno River Delta Soils
17 E. Marine View Dr.
Everett, WA 98213

TICKET NO.	1124519527	TICKET TIME	1:28:32PM	DATE	7/19/2022
Customer No.	Payment Type	Customer Name			Order No.
7832096	Account	STRIDER CONST CO INC			10119451
Customer Job. No.	Customer P.O.			Map Ref.	Disp. Ord. #
	21NT			/	
Truck Type	Truck No.	Vehicle or License Plate No.		Trailer or License Plate No.	Zone
Truck & Trailer	RIV58TT				
Hauler/Carrier No.	Driver's Name	Delivered/Ordered		Load No.	Running Total
7886596		1,022.84 /		36	1,022.84

DEL/P PORT OF EVERETT
DEL/P 2600 FEDERAL AVE
EVERETT

Product	Description	Total	Unit Price	Amount
99005	CLASS 3 SOILS (TN)	25.62		

SCALE WEIGHT	GROSS & TARE		
Gross 92,300 LB	[X] Scale 1 [ ] Scale 2	A STANDBY SURCHARGE WILL BE ASSESSED FOR LOADS THAT EXCEED 10 MINUTES UNLOADING TIME.	Fuel Surcharge
Tare 41,060 LB/P.T.*		LIABILITY WAIVER	Sales Tax
Net 51,240 LB	X Angelique Deputy Weighmaster	Cadman, (Inc.) will not assume Liability for any property damage or any equipment damage for any delivery beyond the curb line.	**Total**

No one available to sign, customer waives receipt signature. [ ]	Received by Signature	Print Name (Customer)	Driver's Signature	Standby Time
	X	X	X	

Arrive Job		Start Unloading		Finish Unloading		Standby Time		Customer's Initials	This Tickets Grand Total
								X	

CADMAN
HEIDELBERGCEMENTGroup
(888) 322-6847 425-961-7100

WEIGHMASTER STATION
98846900
Sno River Delta Soils
17 E. Marine View Dr.
Everett, WA 98213

TICKET NO.	1124519512	TICKET TIME	12:52:48PM	DATE	7/19/2022
Customer No. 7832096	Payment Type Account	Customer Name STRIDER CONST CO INC			Order No. 10119451
Customer Job. No.	Customer P.O. 21NT		Map Ref. /		Disp. Ord. #
Truck Type Truck & Trailer	Truck No. RIV58TT	Vehicle or License Plate No.	Trailer or License Plate No.		Zone
Hauler/Carrier No. 7886596	Driver's Name	Delivered/Ordered 856.45 /	Load No. 30		Running Total 856.45

DEL/P PORT OF EVERETT
DEL/P 2600 FEDERAL AVE
EVERETT

Product	Description	Total	Unit Price	Amount
99005	CLASS 3 SOILS (TN)	27.46		

SCALE WEIGHT
95,980 LB Gross
41,060 LB/P.T.* Tare
54,920 LB Net

GROSS & TARE
☒ Scale 1 ☐ Scale 2
X Angelique
Deputy Weighmaster

A STANDBY SURCHARGE WILL BE ASSESSED FOR LOADS THAT EXCEED 10 MINUTES UNLOADING TIME.

LIABILITY WAIVER

Cadman, (Inc.) will not assume Liability for any property damage or any equipment damage for any delivery beyond the curb line.

Fuel Surcharge	
Sales Tax	
Total	
Standby Time	
This Tickets Grand Total	

No one available to sign, customer waives receipt signature. ☐	Received by Signature X	Print Name (Customer) X	Driver's Signature X	Customer's initials X

Arrive Job		Start Unloading		Finish Unloading		Standby Time	

CADMAN
HEIDELBERGCEMENTGroup
(888) 322-6847 425-961-7100

WEIGHTMASTER STATION
98846900
Sno River Delta Soils
17 E. Marine View Dr.
Everett, WA 98213

TICKET NO.	1124519443	TICKET TIME	8:18:17AM	DATE	7/19/2022
Customer No.	Payment Type	Customer Name			Order No.
7832096	Account	STRIDER CONST CO INC			10119451
Customer Job. No.	Customer P.O.			Map Ref.	Disp. Ord. #
	21NT			/	
Truck Type	Truck No.	Vehicle or License Plate No.		Trailer or License Plate No.	Zone
Truck & Traile	RIV57TT				
Hauler/Carrier No.	Driver's Name	Delivered/Ordered		Load No.	Running Total
7886596		143.97 /		5	143.97

DEL/P PORT OF EVERETT
DEL/P 2600 FEDERAL AVE
EVERETT

Product	Description	Total	Unit Price	Amount
99005	CLASS 3 SOILS (TN)	31.83		

SCALE WEIGHT	GROSS & TARE		
Gross 103,760 LB	[X] Scale 1 [ ] Scale 2	A STANDBY SURCHARGE WILL BE ASSESSED FOR LOADS THAT EXCEED 10 MINUTES UNLOADING TIME.	Fuel Surcharge
Tare 40,100 LB/P.T.*			Sales Tax
Net 63,660 LB	X Angelique Deputy Weighmaster	LIABILITY WAIVER Cadman, (Inc.) will not assume Liability for any property damage or any equipment damage for any delivery beyond the curb line.	**Total**

No one available to sign, customer waives receipt signature. [ ]	Received by Signature	Print Name (Customer)	Driver's Signature	Standby Time
	X	X	X	

Arrive Job		Start Unloading		Finish Unloading		Standby Time		Customer's initials	This Tickets Grand Total	
								X		

CADMAN
HEIDELBERGCEMENTGroup®
(888) 322-6847 425-961-7100

WEIGHMASTER STATION
98846900
Sno River Delta Soils
17 E. Marine View Dr.
Everett, WA 98213

TICKET NO.	1124519455	TICKET TIME	8:51:10AM	DATE	7/19/2022
Customer No. 7832096	Payment Type Account	Customer Name STRIDER CONST CO INC			Order No. 10119451
Customer Job. No.	Customer P.O. 21NT		Map Ref. /		Disp. Ord. #
Truck Type Truck & Traile	Truck No. RIV57TT	Vehicle or License Plate No.	Trailer or License Plate No.		Zone
Hauler/Carrier No. 7886596	Driver's Name	Delivered/Ordered 229.93 /	Load No. 8		Running Total 229.93

DEL/P PORT OF EVERETT
DEL/P 2600 FEDERAL AVE
EVERETT

Product	Description	Total	Unit Price	Amount
99005	CLASS 3 SOILS (TN)	32.96		

SCALE WEIGHT
Gross 106,020 LB
Tare 40,100 LB/P.T.*
Net 65,920 LB

GROSS & TARE
[X] Scale 1 [ ] Scale 2
X Angelique
Deputy Weighmaster

A STANDBY SURCHARGE WILL BE ASSESSED FOR LOADS THAT EXCEED 10 MINUTES UNLOADING TIME.

LIABILITY WAIVER
Cadman, (Inc.) will not assume Liability for any property damage or any equipment damage for any delivery beyond the curb line.

Fuel Surcharge	
Sales Tax	
Total	
Standby Time	
This Tickets Grand Total	

No one available to sign, customer waives receipt signature. [ ]

Received by Signature X

Print Name (Customer) X

Driver's Signature X

Arrive Job		Start Unloading		Finish Unloading		Standby Time		Customer's Initials X

CADMAN
HEIDELBERGCEMENTGroup
(888) 322-6847 425-961-7100

WEIGHMASTER STATION
98846900
Sno River Delta Soils
17 E. Marine View Dr.
Everett, WA 98213

TICKET NO	1124519459	TICKET TIME	9:23:29AM	DATE	7/19/2022
Customer No. 7832096	Payment Type Account	Customer Name STRIDER CONST CO INC			Order No. 10119451
Customer Job. No.	Customer P.O. 21NT		Map Ref. /		Disp. Ord. #
Truck Type Truck & Trailer	Truck No. RIV57TT	Vehicle or License Plate No.	Trailer or License Plate No.		Zone
Hauler/Carrier No. 7886596	Driver's Name	Delivered/Ordered 319.64 /	Load No. 11		Running Total 319.64

DEL/P PORT OF EVERETT
DEL/P 2600 FEDERAL AVE
EVERETT

Product	Description	Total	Unit Price	Amount
99005	CLASS 3 SOILS (TN)	30.59		

SCALE WEIGHT	GROSS & TARE		
Gross 101,280 LB	☒ Scale 1 ☐ Scale 2	A STANDBY SURCHARGE WILL BE ASSESSED FOR LOADS THAT EXCEED 10 MINUTES UNLOADING TIME.	Fuel Surcharge
Tare 40,100 LB/P.T.*			Sales Tax
Net 61,180 LB	X Angelique Deputy Weighmaster	**LIABILITY WAIVER** Cadman, (Inc.) will not assume Liability for any property damage or any equipment damage for any delivery beyond the curb line.	**Total**

No one available to sign, customer waives receipt signature. ☐	Received by Signature X	Print Name (Customer) X	Driver's Signature X	Standby Time	

Arrive Job		Start Unloading		Finish Unloading		Standby Time		Customer's Initials X	This Tickets Grand Total	

CADMAN
HEIDELBERGCEMENTGroup
(888) 322-6847 425-961-7100

WEIGHMASTER STATION
98846900
Sno River Delta Soils
17 E. Marine View Dr.
Everett, WA 98213

TICKET NO.	1124519462	TICKET TIME	9:52:25AM	DATE	7/19/2022
Customer No. 7832096	Payment Type Account	Customer Name STRIDER CONST CO INC			Order No. 10119451
Customer Job. No.	Customer P.O. 21NT		Map Ref. /		Disp. Ord. #
Truck Type Truck & Trailer	Truck No. RIV57TT	Vehicle or License Plate No.	Trailer or License Plate No.		Zone
Hauler/Carrier No. 7886596	Driver's Name	Delivered/Ordered 404.81 /	Load No. 14		Running Total 404.81

DEL/P PORT OF EVERETT
DEL/P 2600 FEDERAL AVE
EVERETT

Product	Description	Total	Unit Price	Amount
99005	CLASS 3 SOILS (TN)	29.96		

SCALE WEIGHT

Gross 100,020 LB
Tare 40,100 LB/P.T.*
Net 59,920 LB

GROSS & TARE

[X] Scale 1 [ ] Scale 2
X Angelique
Deputy Weighmaster

A STANDBY SURCHARGE WILL BE ASSESSED FOR LOADS THAT EXCEED 10 MINUTES UNLOADING TIME.

LIABILITY WAIVER

Cadman, (Inc.) will not assume Liability for any property damage or any equipment damage for any delivery beyond the curb line.

Fuel Surcharge	
Sales Tax	
Total	
Standby Time	
This Tickets Grand Total	

No one available to sign, customer waives receipt signature. [ ]	Received by Signature X	Print Name (Customer) X	Driver's Signature X

Arrive Job		Start Unloading		Finish Unloading		Standby Time		Customer's Initials X

CADMAN
HEIDELBERGCEMENTGroup
(888) 322-6847 425-961-7100

WEIGHMASTER STATION
98846900
Sno River Delta Soils
17 E. Marine View Dr.
Everett, WA 98213

TICKET NO.	1124519469	TICKET TIME	10:27:46AM	DATE	7/19/2022
Customer No. 7832096	Payment Type Account	Customer Name STRIDER CONST CO INC			Order No. 10119451
Customer Job. No.	Customer P.O. 21NT		Map Ref. /		Disp. Ord. #
Truck Type Truck & Trailer	Truck No. RIV57TT	Vehicle or License Plate No.	Trailer or License Plate No.		Zone
Hauler/Carrier No. 7886596	Driver's Name	Delivered/Ordered 495.14 /	Load No. 17		Running Total 495.14

DEL/P PORT OF EVERETT
DEL/P 2600 FEDERAL AVE
EVERETT

Product	Description	Total	Unit Price	Amount
99005	CLASS 3 SOILS (TN)	31.41		

SCALE WEIGHT
102,920 LB Gross
40,100 LB/P.T.* Tare
62,820 LB Net

GROSS & TARE
☒ Scale 1 ☐ Scale 2
X Angelique
Deputy Weighmaster

A STANDBY SURCHARGE WILL BE ASSESSED FOR LOADS THAT EXCEED 10 MINUTES UNLOADING TIME.

LIABILITY WAIVER
Cadman, (Inc.) will not assume Liability for any property damage or any equipment damage for any delivery beyond the curb line.

Fuel Surcharge	
Sales Tax	
Total	
Standby Time	
This Tickets Grand Total	

No one available to sign, customer waives receipt signature. ☐	Received by Signature X	Print Name (Customer) X	Driver's Signature X

Arrive Job		Start Unloading		Finish Unloading		Standby Time		Customer's Initials X

CADMAN
HEIDELBERGCEMENTGroup®
(888) 322-6847 425-961-7100

WEIGHMASTER STATION
98846900
Sno River Delta Soils
17 E. Marine View Dr.
Everett, WA 98213

TICKET NO.	1124519483	TICKET TIME	10:58:10AM	DATE	7/19/2022
Customer No. 7832096	Payment Type Account	Customer Name STRIDER CONST CO INC			Order No. 10119451
Customer Job. No.	Customer P.O. 21NT		Map Ref. /		Disp. Ord. #
Truck Type Truck & Trailer	Truck No. RIV57TT	Vehicle or License Plate No.	Trailer or License Plate No.		Zone
Hauler/Carrier No. 7886596	Driver's Name	Delivered/Ordered 588.51 /	Load No. 20		Running Total 588.51

DEL/P PORT OF EVERETT
DEL/P 2600 FEDERAL AVE
EVERETT

Product	Description	Total	Unit Price	Amount
99005	CLASS 3 SOILS (TN)	35.43		

SCALE WEIGHT
110,960 LB Gross
40,100 LB/P.T.* Tare
70,860 LB Net

GROSS & TARE
☒ Scale 1 ☐ Scale 2
X Angelique
Deputy Weighmaster

A STANDBY SURCHARGE WILL BE ASSESSED FOR LOADS THAT EXCEED 10 MINUTES UNLOADING TIME.

LIABILITY WAIVER
Cadman, (Inc.) will not assume Liability for any property damage or any equipment damage for any delivery beyond the curb line.

Fuel Surcharge	
Sales Tax	
Total	
Standby Time	
This Tickets Grand Total	

No one available to sign, customer waives receipt signature. ☐	Received by Signature X	Print Name (Customer) X	Driver's Signature X

Arrive Job		Start Unloading		Finish Unloading		Standby Time		Customer's Initials X

CADMAN
HEIDELBERGCEMENTGroup®
(888) 322-6847 425-961-7100

WEIGHMASTER STATION
98846900
Sno River Delta Soils
17 E. Marine View Dr.
Everett, WA 98213

TICKET NO.	1124519493	TICKET TIME	11:30:29AM	DATE	7/19/2022
Customer No. 7832096	Payment Type Account	Customer Name STRIDER CONST CO INC			Order No. 10119451
Customer Job. No.	Customer P.O. 21NT		Map Ref. /		Disp. Ord. #
Truck Type Truck & Trailer	Truck No. RIV57TT	Vehicle or License Plate No.	Trailer or License Plate No.		Zone
Hauler/Carrier No. 7886596	Driver's Name	Delivered/Ordered 675.45 /	Load No. 23		Running Total 675.45

DEL/P PORT OF EVERETT
DEL/P 2600 FEDERAL AVE
EVERETT

Product	Description	Total	Unit Price	Amount
99005	CLASS 3 SOILS (TN)	30.41		

SCALE WEIGHT
100,920 LB Gross
40,100 LB/P.T.* Tare
60,820 LB Net

GROSS & TARE
☒ Scale 1 ☐ Scale 2
X Angelique
Deputy Weighmaster

A STANDBY SURCHARGE WILL BE ASSESSED FOR LOADS THAT EXCEED 10 MINUTES UNLOADING TIME.

LIABILITY WAIVER
Cadman, (Inc.) will not assume Liability for any property damage or any equipment damage for any delivery beyond the curb line.

Fuel Surcharge	
Sales Tax	
Total	
Standby Time	
This Tickets Grand Total	

No one available to sign, customer waives receipt signature. ☐	Received by Signature X	Print Name (Customer) X	Driver's Signature X

Arrive Job		Start Unloading		Finish Unloading		Standby Time		Customer's Initials X

CADMAN
HEIDELBERGCEMENTGroup
(888) 322-6847 425-961-7100

WEIGHMASTER STATION
98846900
Sno River Delta Soils
17 E. Marine View Dr.
Everett, WA 98213

TICKET NO.	1124519498	TICKET TIME	11:57:21AM	DATE	7/19/2022
Customer No. 7832096	Payment Type Account	Customer Name STRIDER CONST CO INC			Order No. 10119451
Customer Job. No.	Customer P.O. 21NT		Map Ref. /		Disp. Ord. #
Truck Type Truck & Trailer	Truck No. RIV57TT	Vehicle or License Plate No.	Trailer or License Plate No.		Zone
Hauler/Carrier No. 7886596	Driver's Name	Delivered/Ordered 751.01 /	Load No. 26		Running Total 751.01

DEL/P PORT OF EVERETT
DEL/P 2600 FEDERAL AVE
EVERETT

Product	Description	Total	Unit Price	Amount
99005	CLASS 3 SOILS (TN)	26.53		

SCALE WEIGHT
93,160 LB Gross
40,100 LB/P.T.* Tare
53,060 LB Net

GROSS & TARE
☒ Scale 1 ☐ Scale 2
X Angelique
Deputy Weighmaster

A STANDBY SURCHARGE WILL BE ASSESSED FOR LOADS THAT EXCEED 10 MINUTES UNLOADING TIME.

LIABILITY WAIVER
Cadman, (Inc.) will not assume Liability for any property damage or any equipment damage for any delivery beyond the curb line.

Fuel Surcharge	
Sales Tax	
Total	
Standby Time	
This Tickets Grand Total	

No one available to sign, customer waives receipt signature. ☐	Received by Signature X	Print Name (Customer) X	Driver's Signature X

Arrive Job		Start Unloading		Finish Unloading		Standby Time		Customer's Initials X

CADMAN
HEIDELBERGCEMENTGroup
(888) 322-6847 425-961-7100

WEIGHMASTER STATION
98846900
Sno River Delta Soils
17 E. Marine View Dr.
Everett, WA 98213

TICKET NO.	1124519505	TICKET TIME	12:34:16PM	DATE	7/19/2022
Customer No. 7832096	Payment Type Account	Customer Name STRIDER CONST CO INC			Order No. 10119451
Customer Job. No.	Customer P.O. 21NT		Map Ref. /		Disp. Ord. #
Truck Type Truck & Trailer	Truck No. RIV57TT	Vehicle or License Plate No.	Trailer or License Plate No.		Zone
Hauler/Carrier No. 7886596	Driver's Name	Delivered/Ordered 828.99 /	Load No. 29		Running Total 828.99

DEL/P PORT OF EVERETT
DEL/P 2600 FEDERAL AVE
EVERETT

Product	Description	Total	Unit Price	Amount
99005	CLASS 3 SOILS (TN)	30.40		

SCALE WEIGHT

100,900 LB
Gross
40,100 LB/P.T.*
Tare
60,800 LB
Net

GROSS & TARE

☒ Scale 1 ☐ Scale 2
X Angelique
Deputy Weighmaster

A STANDBY SURCHARGE WILL BE ASSESSED FOR LOADS THAT EXCEED 10 MINUTES UNLOADING TIME.

LIABILITY WAIVER

Cadman, (Inc.) will not assume Liability for any property damage or any equipment damage for any delivery beyond the curb line.

Fuel Surcharge	
Sales Tax	
Total	
Standby Time	
This Tickets Grand Total	

No one available to sign, customer waives receipt signature. ☐	Received by Signature X	Print Name (Customer) X	Driver's Signature X

Arrive Job		Start Unloading		Finish Unloading		Standby Time		Customer's Initials X

CADMAN
HEIDELBERGCEMENTGroup®
(888) 322-6847 425-961-7100

WEIGHMASTER STATION
98846900
Sno River Delta Soils
17 E. Marine View Dr.
Everett, WA 98213

TICKET NO.	1124519518	TICKET TIME	1:02:44PM	DATE	7/19/2022
Customer No.	Payment Type	Customer Name			Order No.
7832096	Account	STRIDER CONST CO INC			10119451
Customer Job. No.	Customer P.O.			Map Ref.	Disp. Ord. #
	21NT			/	
Truck Type	Truck No.	Vehicle or License Plate No.		Trailer or License Plate No.	Zone
Truck & Traile	RIV57TT				
Hauler/Carrier No.	Driver's Name	Delivered/Ordered		Load No.	Running Total
7886596		939.34 /		33	939.34

DEL/P PORT OF EVERETT
DEL/P 2600 FEDERAL AVE
EVERETT

Product	Description	Total	Unit Price	Amount
99005	CLASS 3 SOILS (TN)	28.86		

SCALE WEIGHT

Gross 97,820 LB
Tare 40,100 LB/P.T.*
Net 57,720 LB

GROSS & TARE

☒ Scale 1 ☐ Scale 2

X Angelique
Deputy Weighmaster

A STANDBY SURCHARGE WILL BE ASSESSED FOR LOADS THAT EXCEED 10 MINUTES UNLOADING TIME.

LIABILITY WAIVER

Cadman, (Inc.) will not assume Liability for any property damage or any equipment damage for any delivery beyond the curb line.

Fuel Surcharge	
Sales Tax	
Total	
Standby Time	
This Tickets Grand Total	

No one available to sign, customer waives receipt signature. ☐	Received by Signature	Print Name (Customer)	Driver's Signature	Customer's Initials
	X	X	X	X

Arrive Job		Start Unloading		Finish Unloading		Standby Time	

CADMAN
HEIDELBERGCEMENTGroup®
(888) 322-6847 425-961-7100

WEIGHMASTER STATION
98846900
Sno River Delta Soils
17 E. Marine View Dr.
Everett, WA 98213

TICKET NO.	1124519529	TICKET TIME	1:35:03PM	DATE	7/19/2022
Customer No. 7832096	Payment Type Account	Customer Name STRIDER CONST CO INC			Order No. 10119451
Customer Job. No.	Customer P.O. 21NT			Map Ref. /	Disp. Ord. #
Truck Type Truck & Trailer	Truck No. RIV57TT	Vehicle or License Plate No.		Trailer or License Plate No.	Zone
Hauler/Carrier No. 7886596	Driver's Name	Delivered/Ordered 1,077.22 /		Load No. 38	Running Total 1,077.22

DEL/P PORT OF EVERETT
DEL/P 2600 FEDERAL AVE
EVERETT

Product	Description	Total	Unit Price	Amount
99005	CLASS 3 SOILS (TN)	29.53		

SCALE WEIGHT

Gross 99,160 LB
Tare 40,100 LB/P.T.*
Net 59,060 LB

GROSS & TARE

[X] Scale 1 [ ] Scale 2
X Angelique
Deputy Weighmaster

A STANDBY SURCHARGE WILL BE ASSESSED FOR LOADS THAT EXCEED 10 MINUTES UNLOADING TIME.

LIABILITY WAIVER

Cadman, (Inc.) will not assume Liability for any property damage or any equipment damage for any delivery beyond the curb line.

Fuel Surcharge	
Sales Tax	
Total	
Standby Time	
This Tickets Grand Total	

No one available to sign, customer waives receipt signature. [ ]	Received by Signature X	Print Name (Customer) X	Driver's Signature X

Arrive Job		Start Unloading		Finish Unloading		Standby Time		Customer's Initials X

CADMAN
HEIDELBERGCEMENTGroup®
(888) 322-6847 425-961-7100

WEIGHMASTER STATION
98846900
Sno River Delta Soils
17 E. Marine View Dr.
Everett, WA 98213

TICKET NO.	1124519535	TICKET TIME	2:06:51PM	DATE	7/19/2022
Customer No.	Payment Type	Customer Name			Order No.
7832096	Account	STRIDER CONST CO INC			10119451
Customer Job. No.	Customer P.O.			Map Ref.	Disp. Ord. #
	21NT			/	
Truck Type	Truck No.	Vehicle or License Plate No.		Trailer or License Plate No.	Zone
Truck & Traile	RIV57TT				
Hauler/Carrier No.	Driver's Name	Delivered/Ordered		Load No.	Running Total
7886596		1,216.39 /		43	1,216.39

DEL/P PORT OF EVERETT
DEL/P 2600 FEDERAL AVE
EVERETT

Product	Description	Total	Unit Price	Amount
99005	CLASS 3 SOILS (TN)	28.87		

SCALE WEIGHT
Gross 97,840 LB
Tare 40,100 LB/P.T.*
Net 57,740 LB

GROSS & TARE
[X] Scale 1 [ ] Scale 2
X Angelique
Deputy Weighmaster

A STANDBY SURCHARGE WILL BE ASSESSED FOR LOADS THAT EXCEED 10 MINUTES UNLOADING TIME.

LIABILITY WAIVER
Cadman, (Inc.) will not assume Liability for any property damage or any equipment damage for any delivery beyond the curb line.

Fuel Surcharge	
Sales Tax	
Total	
Standby Time	
This Tickets Grand Total	

No one available to sign, customer waives receipt signature. [ ]	Received by Signature	Print Name (Customer)	Driver's Signature
	X	X	X

Arrive Job		Start Unloading		Finish Unloading		Standby Time		Customer's Initials
								X

CADMAN
HEIDELBERGCEMENTGroup®
(888) 322-6847 425-961-7100

WEIGHMASTER STATION
98846900
Sno River Delta Soils
17 E. Marine View Dr.
Everett, WA 98213

TICKET NO.	1124519541	TICKET TIME	2:35:11PM	DATE	7/19/2022
Customer No. 7832096	Payment Type Account	Customer Name STRIDER CONST CO INC			Order No. 10119451
Customer Job. No.	Customer P.O. 21NT		Map Ref. /		Disp. Ord. #
Truck Type Truck & Traile	Truck No. RIV57TT	Vehicle or License Plate No.	Trailer or License Plate No.		Zone
Hauler/Carrier No. 7886596	Driver's Name	Delivered/Ordered 1,357.45 /	Load No. 48		Running Total 1,357.45

DEL/P PORT OF EVERETT
DEL/P 2600 FEDERAL AVE
EVERETT

Product	Description	Total	Unit Price	Amount
99005	CLASS 3 SOILS (TN)	29.61		

SCALE WEIGHT
Gross 99,320 LB
Tare 40,100 LB/P.T.*
Net 59,220 LB

GROSS & TARE
[X] Scale 1 [ ] Scale 2
X Angelique
Deputy Weighmaster

A STANDBY SURCHARGE WILL BE ASSESSED FOR LOADS THAT EXCEED 10 MINUTES UNLOADING TIME.

LIABILITY WAIVER
Cadman, (Inc.) will not assume Liability for any property damage or any equipment damage for any delivery beyond the curb line.

Fuel Surcharge	
Sales Tax	
Total	
Standby Time	
This Tickets Grand Total	

No one available to sign, customer waives receipt signature. [ ]	Received by Signature X	Print Name (Customer) X	Driver's Signature X

Arrive Job		Start Unloading		Finish Unloading		Standby Time		Customer's Initials X

CADMAN
HEIDELBERGCEMENTGroup®
(888) 322-6847 425-961-7100

WEIGHMASTER STATION
98846900
Sno River Delta Soils
17 E. Marine View Dr.
Everett, WA 98213

TICKET NO.	1124519547	TICKET TIME	3:03:45PM	DATE	7/19/2022
Customer No.	Payment Type	Customer Name			Order No.
7832096	Account	STRIDER CONST CO INC			10119451
Customer Job. No.	Customer P.O.			Map Ref.	Disp. Ord. #
	21NT			/	
Truck Type	Truck No.	Vehicle or License Plate No.		Trailer or License Plate No.	Zone
Truck & Traile	RIV57TT				
Hauler/Carrier No.	Driver's Name	Delivered/Ordered		Load No.	Running Total
7886596		1,509.04 /		53	1,509.04

DEL/P PORT OF EVERETT
DEL/P 2600 FEDERAL AVE
EVERETT

Product	Description	Total	Unit Price	Amount
99005	CLASS 3 SOILS (TN)	31.88		

SCALE WEIGHT	GROSS & TARE		
Gross 103,860 LB	[X] Scale 1 [ ] Scale 2	A STANDBY SURCHARGE WILL BE ASSESSED FOR LOADS THAT EXCEED 10 MINUTES UNLOADING TIME.	Fuel Surcharge
Tare 40,100 LB/P.T.*	X Angelique	LIABILITY WAIVER	Sales Tax
Net 63,760 LB	Deputy Weighmaster	Cadman, (Inc.) will not assume Liability for any property damage or any equipment damage for any delivery beyond the curb line.	**Total**

No one available to sign, customer waives receipt signature. [ ]	Received by Signature	Print Name (Customer)	Driver's Signature	Standby Time
	X	X	X	

Arrive Job		Start Unloading		Finish Unloading		Standby Time		Customer's Initials	This Tickets Grand Total
								X	

CADMAN
HEIDELBERGCEMENTGroup
(888) 322-6847 425-961-7100

WEIGHMASTER STATION
98846900
Sno River Delta Soils
17 E. Marine View Dr.
Everett, WA 98213

TICKET NO.	1124519430	TICKET TIME	7:11:23AM	DATE	7/19/2022
Customer No. 7832096	Payment Type Account	Customer Name STRIDER CONST CO INC			Order No. 10119451
Customer Job. No.	Customer P.O. 21NT		Map Ref. /		Disp. Ord. #
Truck Type Truck & Traile	Truck No. SPR30TT	Vehicle or License Plate No.	Trailer or License Plate No.		Zone
Hauler/Carrier No. 9388321	Driver's Name	Delivered/Ordered 28.80 /	Load No. 1		Running Total 28.80

DEL/P PORT OF EVERETT
DEL/P 2600 FEDERAL AVE
EVERETT

Product	Description	Total	Unit Price	Amount
99005	CLASS 3 SOILS (TN)	28.80		

SCALE WEIGHT
Gross 99,240 LB
Tare 41,640 LB/P.T.*
Net 57,600 LB

GROSS & TARE
☒ Scale 1 ☐ Scale 2
X Angelique
Deputy Weighmaster

A STANDBY SURCHARGE WILL BE ASSESSED FOR LOADS THAT EXCEED 10 MINUTES UNLOADING TIME.

LIABILITY WAIVER
Cadman, (Inc.) will not assume Liability for any property damage or any equipment damage for any delivery beyond the curb line.

Fuel Surcharge	
Sales Tax	
Total	
Standby Time	
This Tickets Grand Total	

No one available to sign, customer waives receipt signature. ☐	Received by Signature X	Print Name (Customer) X	Driver's Signature X

Arrive Job		Start Unloading		Finish Unloading		Standby Time		Customer's Initials X

CADMAN
HEIDELBERGCEMENTGroup
(888) 322-6847 425-961-7100

WEIGHMASTER STATION
98846900
Sno River Delta Soils
17 E. Marine View Dr.
Everett, WA 98213

TICKET NO.	1124519431	TICKET TIME	7:42:22AM	DATE	7/19/2022
Customer No.	Payment Type	Customer Name			Order No.
7832096	Account	STRIDER CONST CO INC			10119451
Customer Job. No.	Customer P.O.			Map Ref.	Disp. Ord. #
	21NT			/	
Truck Type	Truck No.	Vehicle or License Plate No.		Trailer or License Plate No.	Zone
Truck & Traile	SPR30TT				
Hauler/Carrier No.	Driver's Name	Delivered/Ordered		Load No.	Running Total
9388321		57.76 /		2	57.76

DEL/P PORT OF EVERETT
DEL/P 2600 FEDERAL AVE
EVERETT

Product	Description	Total	Unit Price	Amount
99005	CLASS 3 SOILS (TN)	28.96		

SCALE WEIGHT

Gross 99,560 LB
Tare 41,640 LB/P.T.*
Net 57,920 LB

GROSS & TARE

[X] Scale 1 [ ] Scale 2

X Angelique
Deputy Weighmaster

A STANDBY SURCHARGE WILL BE ASSESSED FOR LOADS THAT EXCEED 10 MINUTES UNLOADING TIME.

LIABILITY WAIVER

Cadman, (Inc.) will not assume Liability for any property damage or any equipment damage for any delivery beyond the curb line.

Fuel Surcharge	
Sales Tax	
Total	
Standby Time	
This Tickets Grand Total	

No one available to sign, customer waives receipt signature. [ ]	Received by Signature	Print Name (Customer)	Driver's Signature
	X	X	X

Arrive Job		Start Unloading		Finish Unloading		Standby Time		Customer's Initials
								X

CADMAN
HEIDELBERGCEMENTGroup
(888) 322-6847 425-961-7100

WEIGHMASTER STATION
98846900
Sno River Delta Soils
17 E. Marine View Dr.
Everett, WA 98213

TICKET NO.	1124519440	TICKET TIME	8:13:51AM	DATE	7/19/2022
Customer No.	Payment Type	Customer Name			Order No.
7832096	Account	STRIDER CONST CO INC			10119451
Customer Job. No.	Customer P.O.			Map Ref.	Disp. Ord. #
	21NT			/	
Truck Type	Truck No.	Vehicle or License Plate No.		Trailer or License Plate No.	Zone
Truck & Trailer	SPR30TT				
Hauler/Carrier No.	Driver's Name	Delivered/Ordered		Load No.	Running Total
9388321		112.14 /		4	112.14

DEL/P PORT OF EVERETT
DEL/P 2600 FEDERAL AVE
EVERETT

Product	Description	Total	Unit Price	Amount
99005	CLASS 3 SOILS (TN)	24.90		

SCALE WEIGHT	GROSS & TARE
Gross 91,440 LB	☒ Scale 1 ☐ Scale 2
Tare 41,640 LB/P.T.*	X Angelique
Net 49,800 LB	Deputy Weighmaster

A STANDBY SURCHARGE WILL BE ASSESSED FOR LOADS THAT EXCEED 10 MINUTES UNLOADING TIME.

LIABILITY WAIVER

Cadman, (Inc.) will not assume Liability for any property damage or any equipment damage for any delivery beyond the curb line.

Fuel Surcharge	
Sales Tax	
Total	
Standby Time	
This Tickets Grand Total	

No one available to sign, customer waives receipt signature. ☐	Received by Signature X	Print Name (Customer) X	Driver's Signature X

Arrive Job		Start Unloading		Finish Unloading		Standby Time		Customer's Initials X

CADMAN
HEIDELBERGCEMENTGroup
(888) 322-6847 425-961-7100

WEIGHTMASTER STATION
98846900
Sno River Delta Soils
17 E. Marine View Dr.
Everett, WA 98213

TICKET NO.	1124519451	TICKET TIME	8:42:50AM	DATE	7/19/2022
Customer No.	Payment Type	Customer Name			Order No.
7832096	Account	STRIDER CONST CO INC			10119451
Customer Job. No.	Customer P.O.			Map Ref.	Disp. Ord. #
	21NT			/	
Truck Type	Truck No.	Vehicle or License Plate No.	Trailer or License Plate No.	Zone	
Truck & Trailer	SPR30TT				
Hauler/Carrier No.	Driver's Name	Delivered/Ordered	Load No.	Running Total	
9388321		196.97 /	7	196.97	

DEL/P PORT OF EVERETT
DEL/P 2600 FEDERAL AVE
EVERETT

Product	Description	Total	Unit Price	Amount
99005	CLASS 3 SOILS (TN)	24.66		

SCALE WEIGHT

Gross 90,960 LB
Tare 41,640 LB/P.T.*
Net 49,320 LB

GROSS & TARE

[X] Scale 1 [ ] Scale 2

X Angelique
Deputy Weighmaster

A STANDBY SURCHARGE WILL BE ASSESSED FOR LOADS THAT EXCEED 10 MINUTES UNLOADING TIME.

LIABILITY WAIVER

Cadman, (Inc.) will not assume Liability for any property damage or any equipment damage for any delivery beyond the curb line.

Fuel Surcharge	
Sales Tax	
Total	
Standby Time	
This Tickets Grand Total	

No one available to sign, customer waives receipt signature. [ ]

Received by Signature: X

Print Name (Customer): X

Driver's Signature: X

Arrive Job		Start Unloading		Finish Unloading		Standby Time		Customer's Initials: X

CADMAN
HEIDELBERGCEMENTGroup
(888) 322-6847 425-961-7100

WEIGHTMASTER STATION
98846900
Sno River Delta Soils
17 E. Marine View Dr.
Everett, WA 98213

TICKET NO.	1124519458	TICKET TIME	9:19:01AM	DATE	7/19/2022
Customer No.	Payment Type	Customer Name			Order No.
7832096	Account	STRIDER CONST CO INC			10119451
Customer Job. No.	Customer P.O.			Map Ref.	Disp. Ord. #
	21NT			/	
Truck Type	Truck No.	Vehicle or License Plate No.		Trailer or License Plate No.	Zone
Truck & Traile	SPR30TT				
Hauler/Carrier No.	Driver's Name	Delivered/Ordered		Load No.	Running Total
9388321		289.05 /		10	289.05

DEL/P PORT OF EVERETT
DEL/P 2600 FEDERAL AVE
EVERETT

Product	Description	Total	Unit Price	Amount
99005	CLASS 3 SOILS (TN)	28.44		

SCALE WEIGHT

Gross 98,520 LB
Tare 41,640 LB/P.T.*
Net 56,880 LB

GROSS & TARE

☒ Scale 1 ☐ Scale 2
X Angelique
Deputy Weighmaster

A STANDBY SURCHARGE WILL BE ASSESSED FOR LOADS THAT EXCEED 10 MINUTES UNLOADING TIME.

LIABILITY WAIVER

Cadman, (Inc.) will not assume Liability for any property damage or any equipment damage for any delivery beyond the curb line.

Fuel Surcharge	
Sales Tax	
Total	
Standby Time	
This Tickets Grand Total	

No one available to sign, customer waives receipt signature. ☐	Received by Signature X	Print Name (Customer) X	Driver's Signature X

Arrive Job		Start Unloading		Finish Unloading		Standby Time		Customer's Initials X

CADMAN
HEIDELBERGCEMENTGroup
(888) 322-6847 425-961-7100

WEIGHMASTER STATION
98846900
Sno River Delta Soils
17 E. Marine View Dr.
Everett, WA 98213

TICKET NO.	1124519461	TICKET TIME	9:47:37AM	DATE	7/19/2022
Customer No.	Payment Type	Customer Name			Order No.
7832096	Account	STRIDER CONST CO INC			10119451
Customer Job. No.	Customer P.O.			Map Ref.	Disp. Ord. #
	21NT			/	
Truck Type	Truck No.	Vehicle or License Plate No.		Trailer or License Plate No.	Zone
Truck & Trailer	SPR30TT				
Hauler/Carrier No.	Driver's Name	Delivered/Ordered		Load No.	Running Total
9388321		374.85 /		13	374.85

DEL/P PORT OF EVERETT
DEL/P 2600 FEDERAL AVE
EVERETT

Product	Description	Total	Unit Price	Amount
99005	CLASS 3 SOILS (TN)	25.34		

SCALE WEIGHT		GROSS & TARE
Gross	92,320 LB	
Tare	41,640 LB/P.T.*	[X] Scale 1 [ ] Scale 2
Net	50,680 LB	X Angelique
		Deputy Weighmaster

A STANDBY SURCHARGE WILL BE ASSESSED FOR LOADS THAT EXCEED 10 MINUTES UNLOADING TIME.

LIABILITY WAIVER

Cadman, (Inc.) will not assume Liability for any property damage or any equipment damage for any delivery beyond the curb line.

Fuel Surcharge	
Sales Tax	
Total	
Standby Time	
This Tickets Grand Total	

No one available to sign, customer waives receipt signature. [ ]	Received by Signature X	Print Name (Customer) X	Driver's Signature X

Arrive Job		Start Unloading		Finish Unloading		Standby Time		Customer's Initials X	

CADMAN
HEIDELBERGCEMENTGroup
(888) 322-6847 425-961-7100

WEIGHTMASTER STATION
98846900
Sno River Delta Soils
17 E. Marine View Dr.
Everett, WA 98213

TICKET NO.	1124519467	TICKET TIME	10:20:09AM	DATE	7/19/2022
Customer No. 7832096	Payment Type Account	Customer Name STRIDER CONST CO INC			Order No. 10119451
Customer Job. No.	Customer P.O. 21NT		Map Ref. /		Disp. Ord. #
Truck Type Truck & Traile	Truck No. SPR30TT	Vehicle or License Plate No.	Trailer or License Plate No.		Zone
Hauler/Carrier No. 9388321	Driver's Name	Delivered/Ordered 463.73 /	Load No. 16		Running Total 463.73

DEL/P PORT OF EVERETT
DEL/P 2600 FEDERAL AVE
EVERETT

Product	Description	Total	Unit Price	Amount
99005	CLASS 3 SOILS (TN)	27.30		

SCALE WEIGHT

Gross 96,240 LB m
Tare 41,640 LB/P.T.*
Net 54,600 LB m

GROSS & TARE

[X] Scale 1 [ ] Scale 2
X Angelique
Deputy Weighmaster

A STANDBY SURCHARGE WILL BE ASSESSED FOR LOADS THAT EXCEED 10 MINUTES UNLOADING TIME.

LIABILITY WAIVER

Cadman, (Inc.) will not assume Liability for any property damage or any equipment damage for any delivery beyond the curb line.

Fuel Surcharge	
Sales Tax	
Total	
Standby Time	
This Tickets Grand Total	

No one available to sign, customer waives receipt signature. [ ]	Received by Signature X	Print Name (Customer) X	Driver's Signature X

Arrive Job		Start Unloading		Finish Unloading		Standby Time		Customer's Initials X

CADMAN
HEIDELBERGCEMENTGroup®
(888) 322-6847 425-961-7100

WEIGHMASTER STATION
98846900
Sno River Delta Soils
17 E. Marine View Dr.
Everett, WA 98213

TICKET NO.	1124519477	TICKET TIME	10:45:45AM	DATE	7/19/2022
Customer No.	Payment Type	Customer Name			Order No.
7832096	Account	STRIDER CONST CO INC			10119451
Customer Job. No.	Customer P.O.			Map Ref.	Disp. Ord. #
	21NT			/	
Truck Type	Truck No.	Vehicle or License Plate No.		Trailer or License Plate No.	Zone
Truck & Trailer	SPR30TT				
Hauler/Carrier No.	Driver's Name	Delivered/Ordered		Load No.	Running Total
9388321		553.08 /		19	553.08

DEL/P PORT OF EVERETT
DEL/P 2600 FEDERAL AVE
EVERETT

Product	Description	Total	Unit Price	Amount
99005	CLASS 3 SOILS (TN)	26.81		

SCALE WEIGHT	GROSS & TARE		
Gross 95,260 LB	☒ Scale 1 ☐ Scale 2	A STANDBY SURCHARGE WILL BE ASSESSED FOR LOADS THAT EXCEED 10 MINUTES UNLOADING TIME.	Fuel Surcharge
Tare 41,640 LB/P.T.*			Sales Tax
Net 53,620 LB	X Angelique Deputy Weighmaster	**LIABILITY WAIVER** Cadman, (Inc.) will not assume Liability for any property damage or any equipment damage for any delivery beyond the curb line.	**Total**

No one available to sign, customer waives receipt signature. ☐	Received by Signature	Print Name (Customer)	Driver's Signature	Standby Time
	X	X	X	

Arrive Job		Start Unloading		Finish Unloading		Standby Time		Customer's initials	This Tickets Grand Total
								X	

CADMAN
HEIDELBERGCEMENTGroup
(888) 322-6847 425-961-7100

WEIGHMASTER STATION
98846900
Sno River Delta Soils
17 E. Marine View Dr.
Everett, WA 98213

TICKET NO.	1124519491	TICKET TIME	11:19:04AM	DATE	7/19/2022
Customer No. 7832096	Payment Type Account	Customer Name STRIDER CONST CO INC			Order No. 10119451
Customer Job. No.	Customer P.O. 21NT		Map Ref. /		Disp. Ord. #
Truck Type Truck & Traile	Truck No. SPR30TT	Vehicle or License Plate No.	Trailer or License Plate No.		Zone
Hauler/Carrier No. 9388321	Driver's Name	Delivered/Ordered 645.04 /	Load No. 22		Running Total 645.04

DEL/P PORT OF EVERETT
DEL/P 2600 FEDERAL AVE
EVERETT

Product	Description	Total	Unit Price	Amount
99005	CLASS 3 SOILS (TN)	26.04		

SCALE WEIGHT

Gross 93,720 LB
Tare 41,640 LB/P.T.*
Net 52,080 LB

GROSS & TARE

☒ Scale 1 ☐ Scale 2
X Angelique
Deputy Weighmaster

A STANDBY SURCHARGE WILL BE ASSESSED FOR LOADS THAT EXCEED 10 MINUTES UNLOADING TIME.

LIABILITY WAIVER

Cadman, (Inc.) will not assume Liability for any property damage or any equipment damage for any delivery beyond the curb line.

Fuel Surcharge	
Sales Tax	
Total	
Standby Time	
This Tickets Grand Total	

No one available to sign, customer waives receipt signature. ☐	Received by Signature X	Print Name (Customer) X	Driver's Signature X

Arrive Job		Start Unloading		Finish Unloading		Standby Time		Customer's Initials X

CADMAN
HEIDELBERGCEMENTGroup
(888) 322-6847 425-961-7100

WEIGHMASTER STATION
98846900
Sno River Delta Soils
17 E. Marine View Dr.
Everett, WA 98213

TICKET NO.	1124519496	TICKET TIME	11:52:04AM	DATE	7/19/2022
Customer No.	Payment Type	Customer Name			Order No.
7832096	Account	STRIDER CONST CO INC			10119451
Customer Job. No.	Customer P.O.			Map Ref.	Disp. Ord. #
	21NT			/	
Truck Type	Truck No.	Vehicle or License Plate No.		Trailer or License Plate No.	Zone
Truck & Traile	SPR30TT				
Hauler/Carrier No.	Driver's Name	Delivered/Ordered		Load No.	Running Total
9388321		724.48 /		25	724.48

DEL/P PORT OF EVERETT
DEL/P 2600 FEDERAL AVE
EVERETT

Product	Description	Total	Unit Price	Amount
99005	CLASS 3 SOILS (TN)	23.51		

SCALE WEIGHT	GROSS & TARE
Gross 88,660 LB	[X] Scale 1 [ ] Scale 2
Tare 41,640 LB/P.T.*	X Angelique
Net 47,020 LB	Deputy Weighmaster

A STANDBY SURCHARGE WILL BE ASSESSED FOR LOADS THAT EXCEED 10 MINUTES UNLOADING TIME.

LIABILITY WAIVER

Cadman, (Inc.) will not assume Liability for any property damage or any equipment damage for any delivery beyond the curb line.

Fuel Surcharge	
Sales Tax	
Total	
Standby Time	
This Tickets Grand Total	

No one available to sign, customer waives receipt signature. [ ]	Received by Signature X	Print Name (Customer) X	Driver's Signature X

Arrive Job		Start Unloading		Finish Unloading		Standby Time		Customer's Initials X

CADMAN
HEIDELBERGCEMENTGroup
(888) 322-6847 425-961-7100

WEIGHTMASTER STATION
98846900
Sno River Delta Soils
17 E. Marine View Dr.
Everett, WA 98213

TICKET NO.	1124519501	TICKET TIME	12:19:36PM	DATE	7/19/2022
Customer No. 7832096	Payment Type Account	Customer Name STRIDER CONST CO INC			Order No. 10119451
Customer Job. No.	Customer P.O. 21NT		Map Ref. /		Disp. Ord. #
Truck Type Truck & Traile	Truck No. SPR30TT	Vehicle or License Plate No.	Trailer or License Plate No.		Zone
Hauler/Carrier No. 9388321	Driver's Name	Delivered/Ordered 798.59 /	Load No. 28		Running Total 798.59

DEL/P PORT OF EVERETT
DEL/P 2600 FEDERAL AVE
EVERETT

Product	Description	Total	Unit Price	Amount
99005	CLASS 3 SOILS (TN)	22.91		

SCALE WEIGHT
87,460 LB Gross
41,640 LB/P.T.* Tare
45,820 LB Net

GROSS & TARE
☒ Scale 1 ☐ Scale 2
X Angelique
Deputy Weighmaster

A STANDBY SURCHARGE WILL BE ASSESSED FOR LOADS THAT EXCEED 10 MINUTES UNLOADING TIME.

LIABILITY WAIVER
Cadman, (Inc.) will not assume Liability for any property damage or any equipment damage for any delivery beyond the curb line.

Fuel Surcharge	
Sales Tax	
Total	
Standby Time	
This Tickets Grand Total	

No one available to sign, customer waives receipt signature. ☐	Received by Signature X	Print Name (Customer) X	Driver's Signature X

Arrive Job		Start Unloading		Finish Unloading		Standby Time		Customer's Initials X

CADMAN
HEIDELBERGCEMENTGroup®
(888) 322-6847 425-961-7100

WEIGHMASTER STATION
98846900
Sno River Delta Soils
17 E. Marine View Dr.
Everett, WA 98213

TICKET NO.	1124519515	TICKET TIME	12:57:26PM	DATE	7/19/2022
Customer No.	Payment Type	Customer Name			Order No.
7832096	Account	STRIDER CONST CO INC			10119451
Customer Job. No.	Customer P.O.			Map Ref.	Disp. Ord. #
	21NT			/	
Truck Type	Truck No.	Vehicle or License Plate No.		Trailer or License Plate No.	Zone
Truck & Trailer	SPR30TT				
Hauler/Carrier No.	Driver's Name	Delivered/Ordered		Load No.	Running Total
9388321		910.48 /		32	910.48

DEL/P PORT OF EVERETT
DEL/P 2600 FEDERAL AVE
EVERETT

Product	Description	Total	Unit Price	Amount
99005	CLASS 3 SOILS (TN)	27.78		

SCALE WEIGHT	GROSS & TARE
Gross 97,200 LB	[X] Scale 1 [ ] Scale 2
Tare 41,640 LB/P.T.*	X Angelique
Net 55,560 LB	Deputy Weighmaster

A STANDBY SURCHARGE WILL BE ASSESSED FOR LOADS THAT EXCEED 10 MINUTES UNLOADING TIME.

LIABILITY WAIVER

Cadman, (Inc.) will not assume Liability for any property damage or any equipment damage for any delivery beyond the curb line.

Fuel Surcharge	
Sales Tax	
Total	
Standby Time	
This Tickets Grand Total	

No one available to sign, customer waives receipt signature. [ ]	Received by Signature	Print Name (Customer)	Driver's Signature
	X	X	X

Arrive Job		Start Unloading		Finish Unloading		Standby Time		Customer's Initials
								X

CADMAN
HEIDELBERGCEMENTGroup
(888) 322-6847 425-961-7100

WEIGHTMASTER STATION
98846900
Sno River Delta Soils
17 E. Marine View Dr.
Everett, WA 98213

TICKET NO.	1124519528	TICKET TIME	1:30:22PM	DATE	7/19/2022
Customer No.	Payment Type	Customer Name			Order No.
7832096	Account	STRIDER CONST CO INC			10119451
Customer Job. No.	Customer P.O.			Map Ref.	Disp. Ord. #
	21NT			/	
Truck Type	Truck No.	Vehicle or License Plate No.		Trailer or License Plate No.	Zone
Truck & Trailer	SPR30TT				
Hauler/Carrier No.	Driver's Name	Delivered/Ordered		Load No.	Running Total
9388321		1,047.69 /		37	1,047.69

DEL/P PORT OF EVERETT
DEL/P 2600 FEDERAL AVE
EVERETT

Product	Description	Total	Unit Price	Amount
99005	CLASS 3 SOILS (TN)	24.85		

SCALE WEIGHT

Gross 91,340 LB
Tare 41,640 LB/P.T.*
Net 49,700 LB

GROSS & TARE

☒ Scale 1 ☐ Scale 2
X Angelique
Deputy Weighmaster

A STANDBY SURCHARGE WILL BE ASSESSED FOR LOADS THAT EXCEED 10 MINUTES UNLOADING TIME.

LIABILITY WAIVER

Cadman, (Inc.) will not assume Liability for any property damage or any equipment damage for any delivery beyond the curb line.

Fuel Surcharge	
Sales Tax	
Total	
Standby Time	
This Tickets Grand Total	

No one available to sign, customer waives receipt signature. ☐	Received by Signature	Print Name (Customer)	Driver's Signature
	X	X	X

Arrive Job		Start Unloading		Finish Unloading		Standby Time		Customer's initials
								X

CADMAN
HEIDELBERGCEMENTGroup
(888) 322-6847 425-961-7100

WEIGHMASTER STATION
98846900
Sno River Delta Soils
17 E. Marine View Dr.
Everett, WA 98213

TICKET NO.	1124519533	TICKET TIME	1:59:03PM	DATE	7/19/2022
Customer No.	Payment Type	Customer Name			Order No.
7832096	Account	STRIDER CONST CO INC			10119451
Customer Job. No.	Customer P.O.			Map Ref.	Disp. Ord. #
	21NT			/	
Truck Type	Truck No.	Vehicle or License Plate No.		Trailer or License Plate No.	Zone
Truck & Trailer	SPR30TT				
Hauler/Carrier No.	Driver's Name	Delivered/Ordered		Load No.	Running Total
9388321		1,158.03 /		41	1,158.03

DEL/P PORT OF EVERETT
DEL/P 2600 FEDERAL AVE
EVERETT

Product	Description	Total	Unit Price	Amount
99005	CLASS 3 SOILS (TN)	25.25		

SCALE WEIGHT	GROSS & TARE		
Gross 92,140 LB	☒ Scale 1 ☐ Scale 2	A STANDBY SURCHARGE WILL BE ASSESSED FOR LOADS THAT EXCEED 10 MINUTES UNLOADING TIME.	Fuel Surcharge
Tare 41,640 LB/P.T.*	X Angelique	LIABILITY WAIVER	Sales Tax
Net 50,500 LB	Deputy Weighmaster	Cadman, (Inc.) will not assume Liability for any property damage or any equipment damage for any delivery beyond the curb line.	**Total**

No one available to sign, customer waives receipt signature. ☐	Received by Signature	Print Name (Customer)	Driver's Signature	Standby Time
	X	X	X	

Arrive Job		Start Unloading		Finish Unloading		Standby Time		Customer's initials	This Tickets Grand Total
								X	

CADMAN
HEIDELBERGCEMENTGroup
(888) 322-6847 425-961-7100

WEIGHMASTER STATION
98846900
Sno River Delta Soils
17 E. Marine View Dr.
Everett, WA 98213

TICKET NO.	1124519539	TICKET TIME	2:26:07PM	DATE	7/19/2022
Customer No.	Payment Type	Customer Name			Order No.
7832096	Account	STRIDER CONST CO INC			10119451
Customer Job. No.	Customer P.O.			Map Ref.	Disp. Ord. #
	21NT			/	
Truck Type	Truck No.	Vehicle or License Plate No.		Trailer or License Plate No.	Zone
Truck & Trailer	SPR30TT				
Hauler/Carrier No.	Driver's Name	Delivered/Ordered		Load No.	Running Total
9388321		1,297.98 /		46	1,297.98

DEL/P PORT OF EVERETT
DEL/P 2600 FEDERAL AVE
EVERETT

Product	Description	Total	Unit Price	Amount
99005	CLASS 3 SOILS (TN)	24.35		

SCALE WEIGHT

Gross 90,340 LB
Tare 41,640 LB/P.T.*
Net 48,700 LB

GROSS & TARE

☒ Scale 1 ☐ Scale 2

X Angelique
Deputy Weighmaster

A STANDBY SURCHARGE WILL BE ASSESSED FOR LOADS THAT EXCEED 10 MINUTES UNLOADING TIME.

LIABILITY WAIVER

Cadman, (Inc.) will not assume Liability for any property damage or any equipment damage for any delivery beyond the curb line.

Fuel Surcharge	
Sales Tax	
Total	
Standby Time	
This Tickets Grand Total	

No one available to sign, customer waives receipt signature. ☐	Received by Signature	Print Name (Customer)	Driver's Signature
	X	X	X

Arrive Job		Start Unloading		Finish Unloading		Standby Time		Customer's Initials
								X

CADMAN
HEIDELBERGCEMENTGroup®
(888) 322-6847 425-961-7100

WEIGHMASTER STATION
98846900
Sno River Delta Soils
17 E. Marine View Dr.
Everett, WA 98213

TICKET NO.	1124519545	TICKET TIME	2:54:19PM	DATE	7/19/2022
Customer No.	Payment Type	Customer Name			Order No.
7832096	Account	STRIDER CONST CO INC			10119451
Customer Job. No.	Customer P.O.			Map Ref.	Disp. Ord. #
	21NT			/	
Truck Type	Truck No.	Vehicle or License Plate No.		Trailer or License Plate No.	Zone
Truck & Trailer	SPR30TT				
Hauler/Carrier No.	Driver's Name	Delivered/Ordered		Load No.	Running Total
9388321		1,446.11 /		51	1,446.11

DEL/P PORT OF EVERETT
DEL/P 2600 FEDERAL AVE
EVERETT

Product	Description	Total	Unit Price	Amount
99005	CLASS 3 SOILS (TN)	25.99		

SCALE WEIGHT	GROSS & TARE			
Gross 93,620 LB	[X] Scale 1 [ ] Scale 2	A STANDBY SURCHARGE WILL BE ASSESSED FOR LOADS THAT EXCEED 10 MINUTES UNLOADING TIME.	Fuel Surcharge	
Tare 41,640 LB/P.T.*		LIABILITY WAIVER	Sales Tax	
Net 51,980 LB	X Angelique Deputy Weighmaster	Cadman, (Inc.) will not assume Liability for any property damage or any equipment damage for any delivery beyond the curb line.	**Total**	

No one available to sign, customer waives receipt signature. [ ]	Received by Signature	Print Name (Customer)	Driver's Signature	Standby Time	
	X	X	X		

Arrive Job		Start Unloading		Finish Unloading		Standby Time		Customer's Initials	This Tickets Grand Total	
								X		

CADMAN
HEIDELBERGCEMENTGroup®
(888) 322-6847 425-961-7100

WEIGHTMASTER STATION
98846900
Sno River Delta Soils
17 E. Marine View Dr.
Everett, WA 98213

TICKET NO.	1124519552	TICKET TIME	3:22:32PM	DATE	7/19/2022
Customer No.	Payment Type	Customer Name			Order No.
7832096	Account	STRIDER CONST CO INC			10119451
Customer Job. No.	Customer P.O.			Map Ref.	Disp. Ord. #
	21NT			/	
Truck Type	Truck No.	Vehicle or License Plate No.		Trailer or License Plate No.	Zone
Truck & Trailer	SPR30TT				
Hauler/Carrier No.	Driver's Name	Delivered/Ordered		Load No.	Running Total
9388321		1,591.18 /		56	1,591.18

DEL/P PORT OF EVERETT
DEL/P 2600 FEDERAL AVE
EVERETT

Product	Description	Total	Unit Price	Amount
99005	CLASS 3 SOILS (TN)	25.67		

SCALE WEIGHT	GROSS & TARE			
Gross 92,980 LB	☒ Scale 1 ☐ Scale 2	A STANDBY SURCHARGE WILL BE ASSESSED FOR LOADS THAT EXCEED 10 MINUTES UNLOADING TIME.	Fuel Surcharge	
Tare 41,640 LB/P.T.*		**LIABILITY WAIVER**	Sales Tax	
Net 51,340 LB	X Angelique Deputy Weighmaster	Cadman, (Inc.) will not assume Liability for any property damage or any equipment damage for any delivery beyond the curb line.	**Total**	

No one available to sign, customer waives receipt signature. ☐	Received by Signature X	Print Name (Customer) X	Driver's Signature X	Standby Time	

Arrive Job		Start Unloading		Finish Unloading		Standby Time		Customer's Initials X	This Tickets Grand Total	

CADMAN
HEIDELBERGCEMENTGroup
(888) 322-6847 425-961-7100

WEIGHMASTER STATION
98846900
Sno River Delta Soils
17 E. Marine View Dr.
Everett, WA 98213

TICKET NO.	1124519549	TICKET TIME	3:13:18PM	DATE	7/19/2022
Customer No. 7832096	Payment Type Account	Customer Name STRIDER CONST CO INC			Order No. 10119451
Customer Job. No.	Customer P.O. 21NT		Map Ref. /		Disp. Ord. #
Truck Type Truck & Trailer	Truck No. RIV60TT	Vehicle or License Plate No.	Trailer or License Plate No.		Zone
Hauler/Carrier No. 7886596	Driver's Name	Delivered/Ordered 1,537.17 /	Load No. 54		Running Total 1,537.17

DEL/P PORT OF EVERETT
DEL/P 2600 FEDERAL AVE
EVERETT

Product	Description	Total	Unit Price	Amount
99005	CLASS 3 SOILS (TN)	28.13		

SCALE WEIGHT	GROSS & TARE
Gross 97,740 LB	☒ Scale 1 ☐ Scale 2
Tare 41,480 LB/P.T.*	X Angelique
Net 56,260 LB	Deputy Weighmaster

A STANDBY SURCHARGE WILL BE ASSESSED FOR LOADS THAT EXCEED 10 MINUTES UNLOADING TIME.

LIABILITY WAIVER

Cadman, (Inc.) will not assume Liability for any property damage or any equipment damage for any delivery beyond the curb line.

Fuel Surcharge	
Sales Tax	
Total	
Standby Time	
This Tickets Grand Total	

No one available to sign, customer waives receipt signature. ☐	Received by Signature X	Print Name (Customer) X	Driver's Signature X

Arrive Job		Start Unloading		Finish Unloading		Standby Time		Customer's Initials X

CADMAN
HEIDELBERGCEMENTGroup
(888) 322-6847 425-961-7100

WEIGHMASTER STATION
98846900
Sno River Delta Soils
17 E. Marine View Dr.
Everett, WA 98213

TICKET NO	1124519542	TICKET TIME	2:40:32PM	DATE	7/19/2022
Customer No. 7832096	Payment Type Account	Customer Name STRIDER CONST CO INC			Order No. 10119451
Customer Job. No.	Customer P.O. 21NT			Map Ref. /	Disp. Ord. #
Truck Type Truck & Trailer	Truck No. RIV60TT	Vehicle or License Plate No.	Trailer or License Plate No.		Zone
Hauler/Carrier No. 7886596	Driver's Name	Delivered/Ordered 1,389.79 /	Load No. 49		Running Total 1,389.79

DEL/P PORT OF EVERETT
DEL/P 2600 FEDERAL AVE
EVERETT

Product	Description	Total	Unit Price	Amount
99005	CLASS 3 SOILS (TN)	32.34		

SCALE WEIGHT

Gross 106,160 LB
Tare 41,480 LB/P.T.*
Net 64,680 LB

GROSS & TARE

☒ Scale 1 ☐ Scale 2

X Angelique
Deputy Weighmaster

A STANDBY SURCHARGE WILL BE ASSESSED FOR LOADS THAT EXCEED 10 MINUTES UNLOADING TIME.

LIABILITY WAIVER

Cadman, (Inc.) will not assume Liability for any property damage or any equipment damage for any delivery beyond the curb line.

Fuel Surcharge	
Sales Tax	
Total	
Standby Time	
This Tickets Grand Total	

No one available to sign, customer waives receipt signature. ☐	Received by Signature X	Print Name (Customer) X	Driver's Signature X

Arrive Job		Start Unloading		Finish Unloading		Standby Time		Customer's Initials X

CADMAN
HEIDELBERGCEMENTGroup
(888) 322-6847 425-961-7100

WEIGHMASTER STATION
98846900
Sno River Delta Soils
17 E. Marine View Dr.
Everett, WA 98213

TICKET NO.	1124519536	TICKET TIME	2:13:12PM	DATE	7/19/2022
Customer No. 7832096	Payment Type Account	Customer Name STRIDER CONST CO INC			Order No. 10119451
Customer Job. No.	Customer P.O. 21NT		Map Ref. /		Disp. Ord. #
Truck Type Truck & Trailer	Truck No. RIV60TT	Vehicle or License Plate No.	Trailer or License Plate No.		Zone
Hauler/Carrier No. 7886596	Driver's Name	Delivered/Ordered 1,245.25 /	Load No. 44		Running Total 1,245.25

DEL/P PORT OF EVERETT
DEL/P 2600 FEDERAL AVE
EVERETT

Product	Description	Total	Unit Price	Amount
99005	CLASS 3 SOILS (TN)	28.86		

SCALE WEIGHT
99,200 LB Gross
41,480 LB/P.T.* Tare
57,720 LB Net

GROSS & TARE
☒ Scale 1 ☐ Scale 2
X Angelique
Deputy Weighmaster

A STANDBY SURCHARGE WILL BE ASSESSED FOR LOADS THAT EXCEED 10 MINUTES UNLOADING TIME.

LIABILITY WAIVER
Cadman, (Inc.) will not assume Liability for any property damage or any equipment damage for any delivery beyond the curb line.

Fuel Surcharge	
Sales Tax	
Total	
Standby Time	
This Tickets Grand Total	

No one available to sign, customer waives receipt signature. ☐	Received by Signature X	Print Name (Customer) X	Driver's Signature X

Arrive Job		Start Unloading		Finish Unloading		Standby Time		Customer's Initials X

CADMAN
HEIDELBERGCEMENTGroup
(888) 322-6847 425-961-7100

WEIGHMASTER STATION
98846900
Sno River Delta Soils
17 E. Marine View Dr.
Everett, WA 98213

TICKET NO.	1124519530	TICKET TIME	1:41:36PM	DATE	7/19/2022
Customer No. 7832096	Payment Type Account	Customer Name STRIDER CONST CO INC			Order No. 10119451
Customer Job. No.	Customer P.O. 21NT		Map Ref. /		Disp. Ord. #
Truck Type Truck & Trailer	Truck No. RIV60TT	Vehicle or License Plate No.	Trailer or License Plate No.		Zone
Hauler/Carrier No. 7886596	Driver's Name	Delivered/Ordered 1,104.87 /	Load No. 39		Running Total 1,104.87

DEL/P PORT OF EVERETT
DEL/P 2600 FEDERAL AVE
EVERETT

Product	Description	Total	Unit Price	Amount
99005	CLASS 3 SOILS (TN)	27.65		

SCALE WEIGHT

Gross 96,780 LB
Tare 41,480 LB/P.T.*
Net 55,300 LB

GROSS & TARE

☒ Scale 1 ☐ Scale 2
X Angelique
Deputy Weighmaster

A STANDBY SURCHARGE WILL BE ASSESSED FOR LOADS THAT EXCEED 10 MINUTES UNLOADING TIME.

LIABILITY WAIVER

Cadman, (Inc.) will not assume Liability for any property damage or any equipment damage for any delivery beyond the curb line.

Fuel Surcharge	
Sales Tax	
Total	
Standby Time	
This Tickets Grand Total	

No one available to sign, customer waives receipt signature. ☐	Received by Signature X	Print Name (Customer) X	Driver's Signature X

Arrive Job		Start Unloading		Finish Unloading		Standby Time		Customer's Initials X

CADMAN
HEIDELBERGCEMENTGroup
(888) 322-6847 425-961-7100

WEIGHMASTER STATION
98846900
Sno River Delta Soils
17 E. Marine View Dr.
Everett, WA 98213

TICKET NO.	1124519521	TICKET TIME	1:12:37PM	DATE	7/19/2022
Customer No.	Payment Type	Customer Name			Order No.
7832096	Account	STRIDER CONST CO INC			10119451
Customer Job. No.	Customer P.O.			Map Ref.	Disp. Ord. #
	21NT			/	
Truck Type	Truck No.	Vehicle or License Plate No.		Trailer or License Plate No.	Zone
Truck & Traile	RIV60TT				
Hauler/Carrier No.	Driver's Name	Delivered/Ordered		Load No.	Running Total
7886596		968.23 /		34	968.23

DEL/P PORT OF EVERETT
DEL/P 2600 FEDERAL AVE
EVERETT

Product	Description	Total	Unit Price	Amount
99005	CLASS 3 SOILS (TN)	28.89		

SCALE WEIGHT		GROSS & TARE	A STANDBY SURCHARGE WILL BE ASSESSED FOR LOADS THAT EXCEED 10 MINUTES UNLOADING TIME.	
Gross	99,260 LB	[X] Scale 1 [ ] Scale 2	LIABILITY WAIVER	Fuel Surcharge
Tare	41,480 LB/P.T.*	X Angelique	Cadman, (Inc.) will not assume Liability for any property damage or any equipment damage for any delivery beyond the curb line.	Sales Tax
Net	57,780 LB	Deputy Weighmaster		**Total**

No one available to sign, customer waives receipt signature. [ ]	Received by Signature	Print Name (Customer)	Driver's Signature	Standby Time
	X	X	X	

Arrive Job		Start Unloading		Finish Unloading		Standby Time		Customer's Initials	This Tickets Grand Total
								X	

CADMAN
HEIDELBERGCEMENTGroup
(888) 322-6847 425-961-7100

WEIGHMASTER STATION
98846900
Sno River Delta Soils
17 E. Marine View Dr.
Everett, WA 98213

TICKET NO	1124519551	TICKET TIME	3:18:19PM	DATE	7/19/2022
Customer No.	Payment Type	Customer Name			Order No.
7832096	Account	STRIDER CONST CO INC			10119451
Customer Job. No.	Customer P.O.			Map Ref.	Disp. Ord. #
	21NT			/	
Truck Type	Truck No.	Vehicle or License Plate No.		Trailer or License Plate No.	Zone
Truck & Trailer	RIV52TT				
Hauler/Carrier No.	Driver's Name	Delivered/Ordered		Load No.	Running Total
7886596		1,565.51 /		55	1,565.51

DEL/P PORT OF EVERETT
DEL/P 2600 FEDERAL AVE
EVERETT

Product	Description	Total	Unit Price	Amount
99005	CLASS 3 SOILS (TN)	28.34		

SCALE WEIGHT

Gross 96,420 LB
Tare 39,740 LB/P.T.*
Net 56,680 LB

GROSS & TARE

[X] Scale 1 [ ] Scale 2
X Angelique
Deputy Weighmaster

A STANDBY SURCHARGE WILL BE ASSESSED FOR LOADS THAT EXCEED 10 MINUTES UNLOADING TIME.

LIABILITY WAIVER

Cadman, (Inc.) will not assume Liability for any property damage or any equipment damage for any delivery beyond the curb line.

Fuel Surcharge	
Sales Tax	
Total	
Standby Time	
This Tickets Grand Total	

No one available to sign, customer waives receipt signature. [ ]	Received by Signature	Print Name (Customer)	Driver's Signature
	X	X	X

Arrive Job		Start Unloading		Finish Unloading		Standby Time		Customer's Initials
								X

CADMAN
HEIDELBERGCEMENTGroup®
(888) 322-6847 425-961-7100

WEIGHMASTER STATION
98846900
Sno River Delta Soils
17 E. Marine View Dr.
Everett, WA 98213

TICKET NO.	1124519543	TICKET TIME	2:48:30PM	DATE	7/19/2022
Customer No. 7832096	Payment Type Account	Customer Name STRIDER CONST CO INC			Order No. 10119451
Customer Job. No.	Customer P.O. 21NT		Map Ref. /		Disp. Ord. #
Truck Type Truck & Traile	Truck No. RIV52TT	Vehicle or License Plate No.	Trailer or License Plate No.		Zone
Hauler/Carrier No. 7886596	Driver's Name	Delivered/Ordered 1,420.12 /	Load No. 50		Running Total 1,420.12

DEL/P PORT OF EVERETT
DEL/P 2600 FEDERAL AVE
EVERETT

Product	Description	Total	Unit Price	Amount
99005	CLASS 3 SOILS (TN)	30.33		

SCALE WEIGHT
Gross 100,400 LB
Tare 39,740 LB/P.T.*
Net 60,660 LB

GROSS & TARE
[X] Scale 1 [ ] Scale 2
X Angelique
Deputy Weighmaster

A STANDBY SURCHARGE WILL BE ASSESSED FOR LOADS THAT EXCEED 10 MINUTES UNLOADING TIME.

LIABILITY WAIVER
Cadman, (Inc.) will not assume Liability for any property damage or any equipment damage for any delivery beyond the curb line.

Fuel Surcharge	
Sales Tax	
Total	
Standby Time	
This Tickets Grand Total	

No one available to sign, customer waives receipt signature. [ ]
Received by Signature X
Print Name (Customer) X
Driver's Signature X

Arrive Job		Start Unloading		Finish Unloading		Standby Time		Customer's initials X

CADMAN
HEIDELBERGCEMENTGroup
(888) 322-6847 425-961-7100

WEIGHMASTER STATION
98846900
Sno River Delta Soils
17 E. Marine View Dr.
Everett, WA 98213

TICKET NO.	1124519538	TICKET TIME	2:20:49PM	DATE	7/19/2022
Customer No.	Payment Type	Customer Name			Order No.
7832096	Account	STRIDER CONST CO INC			10119451
Customer Job. No.	Customer P.O.			Map Ref.	Disp. Ord. #
	21NT			/	
Truck Type	Truck No.	Vehicle or License Plate No.		Trailer or License Plate No.	Zone
Truck & Trailer	RIV52TT				
Hauler/Carrier No.	Driver's Name	Delivered/Ordered		Load No.	Running Total
7886596		1,273.63 /		45	1,273.63

DEL/P PORT OF EVERETT
DEL/P 2600 FEDERAL AVE
EVERETT

Product	Description	Total	Unit Price	Amount
99005	CLASS 3 SOILS (TN)	28.38		

SCALE WEIGHT

Gross 96,500 LB
Tare 39,740 LB/P.T.*
Net 56,760 LB

GROSS & TARE

☒ Scale 1 ☐ Scale 2
X Angelique
Deputy Weighmaster

A STANDBY SURCHARGE WILL BE ASSESSED FOR LOADS THAT EXCEED 10 MINUTES UNLOADING TIME.

LIABILITY WAIVER

Cadman, (Inc.) will not assume Liability for any property damage or any equipment damage for any delivery beyond the curb line.

Fuel Surcharge	
Sales Tax	
Total	
Standby Time	
This Tickets Grand Total	

No one available to sign, customer waives receipt signature. ☐	Received by Signature	Print Name (Customer)	Driver's Signature
	X	X	X

Arrive Job		Start Unloading		Finish Unloading		Standby Time		Customer's Initials
								X

CADMAN
HEIDELBERGCEMENTGroup
(888) 322-6847 425-961-7100

WEIGHTMASTER STATION
98846900
Sno River Delta Soils
17 E. Marine View Dr.
Everett, WA 98213

TICKET NO.	1124519532	TICKET TIME	1:55:05PM	DATE	7/19/2022
Customer No. 7832096	Payment Type Account	Customer Name STRIDER CONST CO INC			Order No. 10119451
Customer Job. No.	Customer P.O. 21NT		Map Ref. /		Disp. Ord. #
Truck Type Truck & Trailer	Truck No. RIV52TT	Vehicle or License Plate No.	Trailer or License Plate No.		Zone
Hauler/Carrier No. 7886596	Driver's Name	Delivered/Ordered 1,132.78 /	Load No. 40		Running Total 1,132.78

DEL/P PORT OF EVERETT
DEL/P 2600 FEDERAL AVE
EVERETT

Product	Description	Total	Unit Price	Amount
99005	CLASS 3 SOILS (TN)	27.91		

SCALE WEIGHT

Gross 95,560 LB
Tare 39,740 LB/P.T.*
Net 55,820 LB

GROSS & TARE

☒ Scale 1 ☐ Scale 2

X Angelique
Deputy Weighmaster

A STANDBY SURCHARGE WILL BE ASSESSED FOR LOADS THAT EXCEED 10 MINUTES UNLOADING TIME.

LIABILITY WAIVER

Cadman, (Inc.) will not assume Liability for any property damage or any equipment damage for any delivery beyond the curb line.

Fuel Surcharge	
Sales Tax	
Total	
Standby Time	
This Tickets Grand Total	

No one available to sign, customer waives receipt signature. ☐	Received by Signature X	Print Name (Customer) X	Driver's Signature X

Arrive Job		Start Unloading		Finish Unloading		Standby Time		Customer's Initials X

CADMAN
HEIDELBERGCEMENTGroup
(888) 322-6847 425-961-7100

WEIGHMASTER STATION
98846900
Sno River Delta Soils
17 E. Marine View Dr.
Everett, WA 98213

TICKET NO	1124519525	TICKET TIME	1:23:49PM	DATE	7/19/2022
Customer No. 7832096	Payment Type Account	Customer Name STRIDER CONST CO INC			Order No. 10119451
Customer Job. No.	Customer P.O. 21NT		Map Ref. /		Disp. Ord. #
Truck Type Truck & Trailer	Truck No. RIV52TT	Vehicle or License Plate No.	Trailer or License Plate No.		Zone
Hauler/Carrier No. 7886596	Driver's Name	Delivered/Ordered 997.22 /	Load No. 35		Running Total 997.22

DEL/P PORT OF EVERETT
DEL/P 2600 FEDERAL AVE
EVERETT

Product	Description	Total	Unit Price	Amount
99005	CLASS 3 SOILS (TN)	28.99		

SCALE WEIGHT

Gross 97,720 LB
Tare 39,740 LB/P.T.*
Net 57,980 LB

GROSS & TARE

[X] Scale 1 [ ] Scale 2
X Angelique
Deputy Weighmaster

A STANDBY SURCHARGE WILL BE ASSESSED FOR LOADS THAT EXCEED 10 MINUTES UNLOADING TIME.

LIABILITY WAIVER

Cadman, (Inc.) will not assume Liability for any property damage or any equipment damage for any delivery beyond the curb line.

Fuel Surcharge	
Sales Tax	
Total	
Standby Time	
This Tickets Grand Total	

No one available to sign, customer waives receipt signature. [ ]	Received by Signature X	Print Name (Customer) X	Driver's Signature X

Arrive Job		Start Unloading		Finish Unloading		Standby Time		Customer's Initials X

CADMAN
HEIDELBERGCEMENTGroup®
(888) 322-6847 425-961-7100

WEIGHMASTER STATION
98846900
Sno River Delta Soils
17 E. Marine View Dr.
Everett, WA 98213

TICKET NO.	1124519514	TICKET TIME	12:56:07PM	DATE	7/19/2022
Customer No.	Payment Type	Customer Name			Order No.
7832096	Account	STRIDER CONST CO INC			10119451
Customer Job. No.	Customer P.O.			Map Ref.	Disp. Ord. #
	21NT			/	
Truck Type	Truck No.	Vehicle or License Plate No.		Trailer or License Plate No.	Zone
Truck & Trailer	RIV52TT				
Hauler/Carrier No.	Driver's Name	Delivered/Ordered		Load No.	Running Total
7886596		882.70 /		31	882.70

DEL/P PORT OF EVERETT
DEL/P 2600 FEDERAL AVE
EVERETT

Product	Description	Total	Unit Price	Amount
99005	CLASS 3 SOILS (TN)	26.25		

SCALE WEIGHT

Gross 92,240 LB
Tare 39,740 LB/P.T.*
Net 52,500 LB

GROSS & TARE

☒ Scale 1 ☐ Scale 2

X Angelique
Deputy Weighmaster

A STANDBY SURCHARGE WILL BE ASSESSED FOR LOADS THAT EXCEED 10 MINUTES UNLOADING TIME.

LIABILITY WAIVER

Cadman, (Inc.) will not assume Liability for any property damage or any equipment damage for any delivery beyond the curb line.

Fuel Surcharge	
Sales Tax	
Total	
Standby Time	
This Tickets Grand Total	

No one available to sign, customer waives receipt signature. ☐	Received by Signature X	Print Name (Customer) X	Driver's Signature X

Arrive Job		Start Unloading		Finish Unloading		Standby Time		Customer's Initials X

CADMAN
HEIDELBERGCEMENTGroup
(888) 322-6847 425-961-7100

WEIGHMASTER STATION
98846900
Sno River Delta Soils
17 E. Marine View Dr.
Everett, WA 98213

TICKET NO.	1124519500	TICKET TIME	12:16:41PM	DATE	7/19/2022
Customer No. 7832096	Payment Type Account	Customer Name STRIDER CONST CO INC			Order No. 10119451
Customer Job. No.	Customer P.O. 21NT		Map Ref. /		Disp. Ord. #
Truck Type Truck & Trailer	Truck No. RIV52TT	Vehicle or License Plate No.	Trailer or License Plate No.		Zone
Hauler/Carrier No. 7886596	Driver's Name	Delivered/Ordered 775.68 /	Load No. 27		Running Total 775.68

DEL/P PORT OF EVERETT
DEL/P 2600 FEDERAL AVE
EVERETT

Product	Description	Total	Unit Price	Amount
99005	CLASS 3 SOILS (TN)	24.67		

SCALE WEIGHT	GROSS & TARE
89,080 LB	
oss	
39,740 LB/P.T.*	☒ Scale 1 ☐ Scale 2
re	X Angelique
49,340 LB	Deputy Weighmaster
t	

A STANDBY SURCHARGE WILL BE ASSESSED FOR LOADS THAT EXCEED 10 MINUTES UNLOADING TIME.

LIABILITY WAIVER

Cadman, (Inc.) will not assume Liability for any property damage or any equipment damage for any delivery beyond the curb line.

Fuel Surcharge	
Sales Tax	
Total	
Standby Time	
This Tickets Grand Total	

one available to sign, customer waives receipt nature. ☐	Received by Signature X	Print Name (Customer) X	Driver's Signature X

rive Job		Start Unloading		Finish Unloading		Standby Time		Customer's Initials X

CADMAN
HEIDELBERGCEMENTGroup
(888) 322-6847 425-961-7100

WEIGHMASTER STATION
98846900
Sno River Delta Soils
17 E. Marine View Dr.
Everett, WA 98213

TICKET NO.	1124519495	TICKET TIME	11:48:33AM	DATE	7/19/2022
Customer No. 7832096	Payment Type Account	Customer Name STRIDER CONST CO INC			Order No. 10119451
Customer Job. No.	Customer P.O. 21NT		Map Ref. /		Disp. Ord. #
Truck Type Truck & Trailer	Truck No. RIV52TT	Vehicle or License Plate No.	Trailer or License Plate No.		Zone
Hauler/Carrier No. 7886596	Driver's Name	Delivered/Ordered 700.97 /	Load No. 24		Running Total 700.97

DEL/P PORT OF EVERETT
DEL/P 2600 FEDERAL AVE
EVERETT

Product	Description	Total	Unit Price	Amount
99005	CLASS 3 SOILS (TN)	25.52		

SCALE WEIGHT	GROSS & TARE		
Gross 90,780 LB	☒ Scale 1 ☐ Scale 2	A STANDBY SURCHARGE WILL BE ASSESSED FOR LOADS THAT EXCEED 10 MINUTES UNLOADING TIME.	Fuel Surcharge
Tare 39,740 LB/P.T.*	X Angelique	LIABILITY WAIVER	Sales Tax
Net 51,040 LB	Deputy Weighmaster	Cadman, (Inc.) will not assume Liability for any property damage or any equipment damage for any delivery beyond the curb line.	**Total**

No one available to sign, customer waives receipt signature. ☐	Received by Signature X	Print Name (Customer) X	Driver's Signature X	Standby Time

Arrive Job		Start Unloading		Finish Unloading		Standby Time		Customer's Initials X	This Tickets Grand Total	

CADMAN
HEIDELBERGCEMENTGroup®
(888) 322-6847 425-961-7100

WEIGHMASTER STATION
98846900
Sno River Delta Soils
17 E. Marine View Dr.
Everett, WA 98213

TICKET NO.	1124519489	TICKET TIME	11:15:11AM	DATE	7/19/2022
Customer No. 7832096	Payment Type Account	Customer Name STRIDER CONST CO INC			Order No. 10119451
Customer Job. No.	Customer P.O. 21NT		Map Ref. /		Disp. Ord. #
Truck Type Truck & Trailer	Truck No. RIV52TT	Vehicle or License Plate No.	Trailer or License Plate No.		Zone
Hauler/Carrier No. 7886596	Driver's Name	Delivered/Ordered 619.00 /	Load No. 21		Running Total 619.00

DEL/P PORT OF EVERETT
DEL/P 2600 FEDERAL AVE
EVERETT

Product	Description	Total	Unit Price	Amount
99005	CLASS 3 SOILS (TN)	30.49		

SCALE WEIGHT
Gross 100,720 LB
Tare 39,740 LB/P.T.*
Net 60,980 LB

GROSS & TARE
[X] Scale 1 [ ] Scale 2
X Angelique
Deputy Weighmaster

A STANDBY SURCHARGE WILL BE ASSESSED FOR LOADS THAT EXCEED 10 MINUTES UNLOADING TIME.

LIABILITY WAIVER
Cadman, (Inc.) will not assume Liability for any property damage or any equipment damage for any delivery beyond the curb line.

Fuel Surcharge	
Sales Tax	
Total	
Standby Time	
This Tickets Grand Total	

No one available to sign, customer waives receipt signature. [ ]	Received by Signature X	Print Name (Customer) X	Driver's Signature X

Arrive Job		Start Unloading		Finish Unloading		Standby Time		Customer's initials X

CADMAN
HEIDELBERGCEMENTGroup®
(888) 322-6847 425-961-7100

WEIGHMASTER STATION
98846900
Sno River Delta Soils
17 E. Marine View Dr.
Everett, WA 98213

TICKET NO.	1124519474	TICKET TIME	10:38:53AM	DATE	7/19/2022
Customer No.	Payment Type	Customer Name			Order No.
7832096	Account	STRIDER CONST CO INC			10119451
Customer Job. No.	Customer P.O.			Map Ref.	Disp. Ord. #
	21NT			/	
Truck Type	Truck No.	Vehicle or License Plate No.		Trailer or License Plate No.	Zone
Truck & Trailer	RIV52TT				
Hauler/Carrier No.	Driver's Name	Delivered/Ordered		Load No.	Running Total
7886596		526.27 /		18	526.27

DEL/P PORT OF EVERETT
DEL/P 2600 FEDERAL AVE
EVERETT

Product	Description	Total	Unit Price	Amount
99005	CLASS 3 SOILS (TN)	31.13		

SCALE WEIGHT		GROSS & TARE	
Gross	102,000 LB	[X] Scale 1 [ ] Scale 2	
Tare	39,740 LB/P.T.*	X Angelique	Deputy Weighmaster
Net	62,260 LB		

A STANDBY SURCHARGE WILL BE ASSESSED FOR LOADS THAT EXCEED 10 MINUTES UNLOADING TIME.

LIABILITY WAIVER

Cadman, (Inc.) will not assume Liability for any property damage or any equipment damage for any delivery beyond the curb line.

Fuel Surcharge	
Sales Tax	
Total	
Standby Time	
This Tickets Grand Total	

No one available to sign, customer waives receipt signature. [ ]	Received by Signature	Print Name (Customer)	Driver's Signature
	X	X	X

Arrive Job		Start Unloading		Finish Unloading		Standby Time		Customer's Initials
								X

CADMAN
HEIDELBERGCEMENTGroup
(888) 322-6847 425-961-7100

WEIGHMASTER STATION
98846900
Sno River Delta Soils
17 E. Marine View Dr.
Everett, WA 98213

TICKET NO	1124519464	TICKET TIME	10:08:36AM	DATE	7/19/2022
Customer No. 7832096	Payment Type Account	Customer Name STRIDER CONST CO INC			Order No. 10119451
Customer Job No.	Customer P.O. 21NT		Map Ref. /		Disp. Ord. #
Truck Type Truck & Trailer	Truck No. RIV52TT	Vehicle or License Plate No.	Trailer or License Plate No.		Zone
Hauler/Carrier No. 7886596	Driver's Name	Delivered/Ordered 436.43 /	Load No. 15		Running Total 436.43

DEL/P PORT OF EVERETT
DEL/P 2600 FEDERAL AVE
EVERETT

Product	Description	Total	Unit Price	Amount
99005	CLASS 3 SOILS (TN)	31.62		

SCALE WEIGHT
Gross 102,980 LB
Tare 39,740 LB/P.T.*
Net 63,240 LB

GROSS & TARE
[X] Scale 1 [ ] Scale 2
X Angelique
Deputy Weighmaster

A STANDBY SURCHARGE WILL BE ASSESSED FOR LOADS THAT EXCEED 10 MINUTES UNLOADING TIME.

LIABILITY WAIVER
Cadman, (Inc.) will not assume Liability for any property damage or any equipment damage for any delivery beyond the curb line.

Fuel Surcharge	
Sales Tax	
Total	
Standby Time	
This Tickets Grand Total	

No one available to sign, customer waives receipt signature. [ ]

Received by Signature X

Print Name (Customer) X

Driver's Signature X

Customer's Initials X

Arrive Job		Start Unloading		Finish Unloading		Standby Time	

CADMAN
HEIDELBERGCEMENTGroup
(888) 322-6847 425-961-7100

WEIGHTMASTER STATION
98846900
Sno River Delta Soils
17 E. Marine View Dr.
Everett, WA 98213

TICKET NO.	1124519460	TICKET TIME	9:43:08AM	DATE	7/19/2022
Customer No. 7832096	Payment Type Account	Customer Name STRIDER CONST CO INC			Order No. 10119451
Customer Job. No.	Customer P.O. 21NT		Map Ref. /		Disp. Ord. #
Truck Type Truck & Traile	Truck No. RIV52TT	Vehicle or License Plate No.	Trailer or License Plate No.		Zone
Hauler/Carrier No. 7886596	Driver's Name	Delivered/Ordered 349.51 /	Load No. 12		Running Total 349.51

DEL/P PORT OF EVERETT
DEL/P 2600 FEDERAL AVE
EVERETT

Product	Description	Total	Unit Price	Amount
99005	CLASS 3 SOILS (TN)	29.87		

SCALE WEIGHT
Gross 99,480 LB
Tare 39,740 LB/P.T.*
Net 59,740 LB

GROSS & TARE
[X] Scale 1 [ ] Scale 2
X Angelique
Deputy Weighmaster

A STANDBY SURCHARGE WILL BE ASSESSED FOR LOADS THAT EXCEED 10 MINUTES UNLOADING TIME.

LIABILITY WAIVER
Cadman, (Inc.) will not assume Liability for any property damage or any equipment damage for any delivery beyond the curb line.

Fuel Surcharge	
Sales Tax	
Total	
Standby Time	
This Tickets Grand Total	

No one available to sign, customer waives receipt signature. [ ]	Received by Signature X	Print Name (Customer) X	Driver's Signature X

Arrive Job		Start Unloading		Finish Unloading		Standby Time		Customer's Initials X

CADMAN
HEIDELBERGCEMENTGroup
(888) 322-6847 425-961-7100

WEIGHMASTER STATION
98846900
Sno River Delta Soils
17 E. Marine View Dr.
Everett, WA 98213

TICKET NO.	1124519457	TICKET TIME	9:15:30AM	DATE	7/19/2022
Customer No.	Payment Type	Customer Name			Order No.
7832096	Account	STRIDER CONST CO INC			10119451
Customer Job. No.	Customer P.O.			Map Ref.	Disp. Ord. #
	21NT			/	
Truck Type	Truck No.	Vehicle or License Plate No.		Trailer or License Plate No.	Zone
Truck & Trailer	RIV52TT				
Hauler/Carrier No.	Driver's Name	Delivered/Ordered		Load No.	Running Total
7886596		260.61 /		9	260.61

DEL/P PORT OF EVERETT
DEL/P 2600 FEDERAL AVE
EVERETT

Product	Description	Total	Unit Price	Amount
99005	CLASS 3 SOILS (TN)	30.68		

SCALE WEIGHT	GROSS & TARE		
Gross 101,100 LB	☒ Scale 1 ☐ Scale 2	A STANDBY SURCHARGE WILL BE ASSESSED FOR LOADS THAT EXCEED 10 MINUTES UNLOADING TIME.	Fuel Surcharge
Tare 39,740 LB/P.T.*	X Angelique	**LIABILITY WAIVER**	Sales Tax
Net 61,360 LB	Deputy Weighmaster	Cadman, (Inc.) will not assume Liability for any property damage or any equipment damage for any delivery beyond the curb line.	**Total**

No one available to sign, customer waives receipt signature. ☐	Received by Signature	Print Name (Customer)	Driver's Signature	Standby Time
	X	X	X	

Arrive Job		Start Unloading		Finish Unloading		Standby Time		Customer's Initials	This Tickets Grand Total
								X	

CADMAN
HEIDELBERGCEMENTGroup®
(888) 322-6847 425-961-7100

WEIGHMASTER STATION
98846900
Sno River Delta Soils
17 E. Marine View Dr.
Everett, WA 98213

TICKET NO.	1124519450	TICKET TIME	8:40:00AM	DATE	7/19/2022
Customer No.	Payment Type	Customer Name			Order No.
7832096	Account	STRIDER CONST CO INC			10119451
Customer Job. No.	Customer P.O.			Map Ref.	Disp. Ord. #
	21NT			/	
Truck Type	Truck No.	Vehicle or License Plate No.		Trailer or License Plate No.	Zone
Truck & Trailer	RIV52TT				
Hauler/Carrier No.	Driver's Name	Delivered/Ordered		Load No.	Running Total
7886596		172.31 /		6	172.31

DEL/P PORT OF EVERETT
DEL/P 2600 FEDERAL AVE
EVERETT

Product	Description	Total	Unit Price	Amount
99005	CLASS 3 SOILS (TN)	28.34		

SCALE WEIGHT
Gross 96,420 LB
Tare 39,740 LB/P.T.*
Net 56,680 LB

GROSS & TARE
[X] Scale 1 [ ] Scale 2
X Angelique
Deputy Weighmaster

A STANDBY SURCHARGE WILL BE ASSESSED FOR LOADS THAT EXCEED 10 MINUTES UNLOADING TIME.

LIABILITY WAIVER
Cadman, (Inc.) will not assume Liability for any property damage or any equipment damage for any delivery beyond the curb line.

Fuel Surcharge	
Sales Tax	
Total	
Standby Time	
This Tickets Grand Total	

No one available to sign, customer waives receipt signature. [ ]	Received by Signature X	Print Name (Customer) X	Driver's Signature X

Arrive Job		Start Unloading		Finish Unloading		Standby Time		Customer's Initials X

CADMAN
HEIDELBERGCEMENTGroup
(888) 322-6847 425-961-7100

WEIGHMASTER STATION
98846900
Sno River Delta Soils
17 E. Marine View Dr.
Everett, WA 98213

TICKET NO.	1124519439	TICKET TIME	8:12:31AM	DATE	7/19/2022
Customer No.	Payment Type	Customer Name			Order No.
7832096	Account	STRIDER CONST CO INC			10119451
Customer Job. No.	Customer P.O.			Map Ref.	Disp. Ord. #
	21NT			/	
Truck Type	Truck No.	Vehicle or License Plate No.		Trailer or License Plate No.	Zone
Truck & Trailer	RIV52TT				
Hauler/Carrier No.	Driver's Name	Delivered/Ordered		Load No.	Running Total
7886596		87.24 /		3	87.24

DEL/P PORT OF EVERETT
DEL/P 2600 FEDERAL AVE
EVERETT

Product	Description	Total	Unit Price	Amount
99005	CLASS 3 SOILS (TN)	29.48		

SCALE WEIGHT

Gross 98,700 LB
Tare 39,740 LB/P.T.*
Net 58,960 LB

GROSS & TARE

[X] Scale 1 [ ] Scale 2

X Angelique
Deputy Weighmaster

A STANDBY SURCHARGE WILL BE ASSESSED FOR LOADS THAT EXCEED 10 MINUTES UNLOADING TIME.

LIABILITY WAIVER

Cadman, (Inc.) will not assume Liability for any property damage or any equipment damage for any delivery beyond the curb line.

Fuel Surcharge	
Sales Tax	
Total	
Standby Time	
This Tickets Grand Total	

No one available to sign, customer waives receipt signature. [ ]

Received by Signature X

Print Name (Customer) X

Driver's Signature X

Arrive Job		Start Unloading		Finish Unloading		Standby Time		Customer's Initials X

CADMAN
HEIDELBERGCEMENTGroup
(888) 322-6847 425-961-7100

WEIGHMASTER STATION
98785500
Everett Glenwood LND
6300 Glenwood Avenue
Everett, WA 98213

TICKET NO.	1120564061	TICKET TIME	12:58:51PM	DATE	7/20/2022
Customer No.	Payment Type	Customer Name			Order No.
7832096	Account	STRIDER CONST CO INC			10119468
Customer Job. No.	Customer P.O.			Map Ref.	Disp. Ord. #
	21NT			/	
Truck Type	Truck No.	Vehicle or License Plate No.		Trailer or License Plate No.	Zone
Truck & Trailer	SPR30TT				
Hauler/Carrier No.	Driver's Name	Delivered/Ordered		Load No.	Running Total
9388321		450.20 /		15	450.20

EV/P PORT OF EVERETT
2600 FEDERAL AVE
EVERETT

Product	Description	Total	Unit Price	Amount
99004	CLASS 2 SOILS DUMP (TN)	28.03		

SCALE WEIGHT	GROSS & TARE		Fuel Surcharge	
Gross 96,300 LB m	☒ Scale 1 ☐ Scale 2	**A STANDBY SURCHARGE WILL BE ASSESSED FOR LOADS THAT EXCEED 10 MINUTES UNLOADING TIME.**	Sales Tax	
Tare 40,240 LB/P.T.*	X Cate	**LIABILITY WAIVER**	**Total**	
Net 56,060 LB m	Deputy Weighmaster	**Cadman Materials, (Inc.) will not assume Liability for any property damage or any equipment damage for any delivery beyond the curb line.**		

No one available to sign, customer waives receipt signature. ☐	Received by Signature	Print Name (Customer)	Driver's Signature	Standby Time	
	X	X	X		

Arrive Job		Start Unloading		Finish Unloading		Standby Time		Customer's Initials	This Tickets Grand Total	
								X		

CADMAN
HEIDELBERGCEMENTGroup
(888) 322-6847 425-961-7100

WEIGHMASTER STATION
98785500
Everett Glenwood LND
6300 Glenwood Avenue
Everett, WA 98213

TICKET NO	1120564056	TICKET TIME	11:50:43AM	DATE	7/20/2022
Customer No.	Payment Type	Customer Name			Order No.
7832096	Account	STRIDER CONST CO INC			10119468
Customer Job. No.	Customer P.O.			Map Ref.	Disp. Ord. #
	21NT			/	
Truck Type	Truck No.	Vehicle or License Plate No.		Trailer or License Plate No.	Zone
Truck & Trailer	SPR30TT				
Hauler/Carrier No.	Driver's Name	Delivered/Ordered		Load No.	Running Total
9388321		394.75 /		13	394.75

EV/P PORT OF EVERETT
2600 FEDERAL AVE
EVERETT

Product	Description	Total	Unit Price	Amount
99004	CLASS 2 SOILS DUMP (TN)	24.75		

SCALE WEIGHT	GROSS & TARE			
Gross 89,740 LB m	[X] Scale 1	[ ] Scale 2	A STANDBY SURCHARGE WILL BE ASSESSED FOR LOADS THAT EXCEED 10 MINUTES UNLOADING TIME.	Fuel Surcharge
Tare 40,240 LB/P.T.*				Sales Tax
Net 49,500 LB m	X Cate Deputy Weighmaster		**LIABILITY WAIVER** Cadman Materials, (Inc.) will not assume Liability for any property damage or any equipment damage for any delivery beyond the curb line.	**Total**

No one available to sign, customer waives receipt signature. [ ]	Received by Signature	Print Name (Customer)	Driver's Signature	Standby Time
	X	X	X	

Arrive Job		Start Unloading		Finish Unloading		Standby Time		Customer's Initials	This Tickets Grand Total
								X	

CADMAN
HEIDELBERGCEMENTGroup
(888) 322-6847 425-961-7100

WEIGHMASTER STATION
98785500
Everett Glenwood LND
6300 Glenwood Avenue
Everett, WA 98213

TICKET NO.	TICKET TIME	DATE
1120564048	10:42:38AM	7/20/2022

Customer No.	Payment Type	Customer Name	Order No.
7832096	Account	STRIDER CONST CO INC	10119468

Customer Job. No.	Customer P.O.	Map Ref.	Disp. Ord. #
	21NT	/	

Truck Type	Truck No.	Vehicle or License Plate No.	Trailer or License Plate No.	Zone
Truck & Trailer	SPR30TT			

Hauler/Carrier No.	Driver's Name	Delivered/Ordered	Load No.	Running Total
9388321		311.87 /	10	311.87

EV/P PORT OF EVERETT
2600 FEDERAL AVE
EVERETT

Product	Description	Total	Unit Price	Amount
99004	CLASS 2 SOILS DUMP (TN)	25.18		

SCALE WEIGHT

Gross 90,600 LB m
Tare 40,240 LB/P.T.*
Net 50,360 LB m

GROSS & TARE

☒ Scale 1 ☐ Scale 2

X Cate
Deputy Weighmaster

A STANDBY SURCHARGE WILL BE ASSESSED FOR LOADS THAT EXCEED 10 MINUTES UNLOADING TIME.

LIABILITY WAIVER

Cadman Materials, (Inc.) will not assume Liability for any property damage or any equipment damage for any delivery beyond the curb line.

Fuel Surcharge	
Sales Tax	
Total	
Standby Time	
This Tickets Grand Total	

No one available to sign, customer waives receipt signature. ☐	Received by Signature	Print Name (Customer)	Driver's Signature
	X	X	X

Arrive Job		Start Unloading		Finish Unloading		Standby Time		Customer's Initials
								X

CADMAN
HEIDELBERGCEMENTGroup
(888) 322-6847 425-961-7100

WEIGHMASTER STATION
98785500
Everett Glenwood LND
6300 Glenwood Avenue
Everett, WA 98213

TICKET NO.	1120564041	TICKET TIME	9:38:40AM	DATE	7/20/2022
Customer No.	Payment Type	Customer Name			Order No.
7832096	Account	STRIDER CONST CO INC			10119468
Customer Job. No.	Customer P.O.			Map Ref.	Disp. Ord. #
	21NT			/	
Truck Type	Truck No.	Vehicle or License Plate No.		Trailer or License Plate No.	Zone
Truck & Trailer	SPR30TT				
Hauler/Carrier No.	Driver's Name	Delivered/Ordered		Load No.	Running Total
9388321		224.92 /		7	224.92

EV/P PORT OF EVERETT
2600 FEDERAL AVE
EVERETT

Product	Description	Total	Unit Price	Amount
99004	CLASS 2 SOILS DUMP (TN)	33.77		

SCALE WEIGHT

Gross 107,780 LB m
Tare 40,240 LB/P.T.*
Net 67,540 LB m

GROSS & TARE

[X] Scale 1 [ ] Scale 2

X Cate
Deputy Weighmaster

A STANDBY SURCHARGE WILL BE ASSESSED FOR LOADS THAT EXCEED 10 MINUTES UNLOADING TIME.

LIABILITY WAIVER

Cadman Materials, (Inc.) will not assume Liability for any property damage or any equipment damage for any delivery beyond the curb line.

Fuel Surcharge	
Sales Tax	
Total	
Standby Time	
This Tickets Grand Total	

No one available to sign, customer waives receipt signature. [ ]

Received by Signature X

Print Name (Customer) X

Driver's Signature X

Customer's Initials X

Arrive Job		Start Unloading		Finish Unloading		Standby Time	

CADMAN
HEIDELBERGCEMENTGroup®
(888) 322-6847 425-961-7100

WEIGHMASTER STATION
98785500
Everett Glenwood LND
6300 Glenwood Avenue
Everett, WA 98213

TICKET NO.	1120564035	TICKET TIME	8:32:26AM	DATE	7/20/2022

Customer No.	Payment Type	Customer Name	Order No.
7832096	Account	STRIDER CONST CO INC	10119468

Customer Job. No.	Customer P.O.	Map Ref.	Disp. Ord. #
	21NT	/	

Truck Type	Truck No.	Vehicle or License Plate No.	Trailer or License Plate No.	Zone
Truck & Trailer	SPR30TT			

Hauler/Carrier No.	Driver's Name	Delivered/Ordered	Load No.	Running Total
9388321		121.63 /	4	121.63

EV/P PORT OF EVERETT
2600 FEDERAL AVE
EVERETT

Product	Description	Total	Unit Price	Amount
99004	CLASS 2 SOILS DUMP (TN)	31.13		

SCALE WEIGHT

Gross 102,500 LB m
Tare 40,240 LB/P.T.*
Net 62,260 LB m

GROSS & TARE

☒ Scale 1 ☐ Scale 2

X Cate
Deputy Weighmaster

A STANDBY SURCHARGE WILL BE ASSESSED FOR LOADS THAT EXCEED 10 MINUTES UNLOADING TIME.

LIABILITY WAIVER

Cadman Materials, (Inc.) will not assume Liability for any property damage or any equipment damage for any delivery beyond the curb line.

Fuel Surcharge	
Sales Tax	
Total	
Standby Time	
This Tickets Grand Total	

No one available to sign, customer waives receipt signature. ☐

Received by Signature X

Print Name (Customer) X

Driver's Signature X

Customer's Initials X

Arrive Job		Start Unloading		Finish Unloading		Standby Time	

CADMAN
HEIDELBERGCEMENTGroup®
(888) 322-6847 425-961-7100

WEIGHMASTER STATION
98785500
Everett Glenwood LND
6300 Glenwood Avenue
Everett, WA 98213

TICKET NO.	1120564029	TICKET TIME	7:30:06AM	DATE	7/20/2022
Customer No.	Payment Type	Customer Name			Order No.
7832096	Account	STRIDER CONST CO INC			10119468
Customer Job. No.	Customer P.O.			Map Ref.	Disp. Ord. #
	21NT			/	
Truck Type	Truck No.	Vehicle or License Plate No.		Trailer or License Plate No.	Zone
Truck & Trailer	SPR30TT				
Hauler/Carrier No.	Driver's Name	Delivered/Ordered		Load No.	Running Total
9388321		29.80 /		1	29.80

EV/P PORT OF EVERETT
2600 FEDERAL AVE
EVERETT

Product	Description	Total	Unit Price	Amount
99004	CLASS 2 SOILS DUMP (TN)	29.80		

SCALE WEIGHT	GROSS & TARE		
Gross 99,840 LB *	[X] Scale 1 [ ] Scale 2	A STANDBY SURCHARGE WILL BE ASSESSED FOR LOADS THAT EXCEED 10 MINUTES UNLOADING TIME.	Fuel Surcharge
Tare 40,240 LB/P.T.*		LIABILITY WAIVER	Sales Tax
Net 59,600 LB *	X Cate Deputy Weighmaster	Cadman Materials, (Inc.) will not assume Liability for any property damage or any equipment damage for any delivery beyond the curb line.	**Total**

No one available to sign, customer waives receipt signature [ ]	Received by Signature	Print Name (Customer)	Driver's Signature	Standby Time
	X	X	X	

Arrive Job		Start Unloading		Finish Unloading		Standby Time		Customer's Initials	This Tickets Grand Total
								X	

CADMAN
HEIDELBERGCEMENTGroup
(888) 322-6847 425-961-7100

WEIGHMASTER STATION
98785500
Everett Glenwood LND
6300 Glenwood Avenue
Everett, WA 98213

TICKET NO.	1120564030	TICKET TIME	7:36:19AM	DATE	7/20/2022
Customer No.	Payment Type	Customer Name			Order No.
7832096	Account	STRIDER CONST CO INC			10119468
Customer Job. No.	Customer P.O.			Map Ref.	Disp. Ord. #
	21NT			/	
Truck Type	Truck No.	Vehicle or License Plate No.		Trailer or License Plate No.	Zone
Truck & Trailer	RIV57TT				
Hauler/Carrier No.	Driver's Name	Delivered/Ordered		Load No.	Running Total
7886596		59.39 /		2	59.39

EV/P PORT OF EVERETT
2600 FEDERAL AVE
EVERETT

Product	Description	Total	Unit Price	Amount
99004	CLASS 2 SOILS DUMP (TN)	29.59		

SCALE WEIGHT

Gross 99,280 LB m
Tare 40,100 LB/P.T.*
Net 59,180 LB m

GROSS & TARE

☒ Scale 1 ☐ Scale 2

X Cate
Deputy Weighmaster

A STANDBY SURCHARGE WILL BE ASSESSED FOR LOADS THAT EXCEED 10 MINUTES UNLOADING TIME.

LIABILITY WAIVER

Cadman Materials, (Inc.) will not assume Liability for any property damage or any equipment damage for any delivery beyond the curb line.

Fuel Surcharge	
Sales Tax	
Total	
Standby Time	

No one available to sign, customer waives receipt signature. ☐

Received by Signature X

Print Name (Customer) X

Driver's Signature X

Arrive Job		Start Unloading		Finish Unloading		Standby Time		Customer's Initials X	This Tickets Grand Total	

CADMAN
HEIDELBERGCEMENTGroup
(888) 322-6847 425-961-7100

WEIGHMASTER STATION
98785500
Everett Glenwood LND
6300 Glenwood Avenue
Everett, WA 98213

TICKET NO.	TICKET TIME	DATE
1120564036	8:41:08AM	7/20/2022

Customer No.	Payment Type	Customer Name	Order No.
7832096	Account	STRIDER CONST CO INC	10119468

Customer Job. No.	Customer P.O.	Map Ref.	Disp. Ord. #
	21NT	/	

Truck Type	Truck No.	Vehicle or License Plate No.	Trailer or License Plate No.	Zone
Truck & Trailer	RIV57TT			

Hauler/Carrier No.	Driver's Name	Delivered/Ordered	Load No.	Running Total
7886596		157.27 /	5	157.27

EV/P PORT OF EVERETT
2600 FEDERAL AVE
EVERETT

Product	Description	Total	Unit Price	Amount
99004	CLASS 2 SOILS DUMP (TN)	35.64		

SCALE WEIGHT

Gross 111,380 LB m
Tare 40,100 LB/P.T.*
Net 71,280 LB m

GROSS & TARE

☒ Scale 1 ☐ Scale 2

X Cate
Deputy Weighmaster

A STANDBY SURCHARGE WILL BE ASSESSED FOR LOADS THAT EXCEED 10 MINUTES UNLOADING TIME.

LIABILITY WAIVER

Cadman Materials, (Inc.) will not assume Liability for any property damage or any equipment damage for any delivery beyond the curb line.

Fuel Surcharge	
Sales Tax	
Total	
Standby Time	
This Tickets Grand Total	

No one available to sign, customer waives receipt signature. ☐	Received by Signature	Print Name (Customer)	Driver's Signature
	X	X	X

Arrive Job		Start Unloading		Finish Unloading		Standby Time		Customer's Initials
								X

CADMAN
HEIDELBERGCEMENTGroup
(888) 322-6847 425-961-7100

WEIGHMASTER STATION
98785500
Everett Glenwood LND
6300 Glenwood Avenue
Everett, WA 98213

TICKET NO.	1120564045	TICKET TIME	9:51:07AM	DATE	7/20/2022
Customer No.	Payment Type	Customer Name			Order No.
7832096	Account	STRIDER CONST CO INC			10119468
Customer Job. No.	Customer P.O.			Map Ref.	Disp. Ord. #
	21NT			/	
Truck Type	Truck No.	Vehicle or License Plate No.		Trailer or License Plate No.	Zone
Truck & Trailer	RIV57TT				
Hauler/Carrier No.	Driver's Name	Delivered/Ordered		Load No.	Running Total
7886596		257.68 /		8	257.68

EV/P PORT OF EVERETT
2600 FEDERAL AVE
EVERETT

Product	Description	Total	Unit Price	Amount
99004	CLASS 2 SOILS DUMP (TN)	32.76		

SCALE WEIGHT	GROSS & TARE		
Gross 105,620 LB m	[X] Scale 1	[ ] Scale 2	A STANDBY SURCHARGE WILL BE ASSESSED FOR LOADS THAT EXCEED 10 MINUTES UNLOADING TIME.
Tare 40,100 LB/P.T.*	X Cate		LIABILITY WAIVER
Net 65,520 LB m	Deputy Weighmaster		Cadman Materials, (Inc.) will not assume Liability for any property damage or any equipment damage for any delivery beyond the curb line.

Fuel Surcharge	
Sales Tax	
Total	
Standby Time	
This Tickets Grand Total	

No one available to sign, customer waives receipt signature. [ ]	Received by Signature	Print Name (Customer)	Driver's Signature	Customer's Initials
	X	X	X	X

Arrive Job		Start Unloading		Finish Unloading		Standby Time	

CADMAN
HEIDELBERGCEMENTGroup
(888) 322-6847 425-961-7100

WEIGHMASTER STATION
98785500
Everett Glenwood LND
6300 Glenwood Avenue
Everett, WA 98213

TICKET NO.	1120564052	TICKET TIME	11:02:41AM	DATE	7/20/2022
Customer No.	Payment Type	Customer Name			Order No.
7832096	Account	STRIDER CONST CO INC			10119468
Customer Job. No.	Customer P.O.			Map Ref.	Disp. Ord. #
	21NT			/	
Truck Type	Truck No.	Vehicle or License Plate No.		Trailer or License Plate No.	Zone
Truck & Trailer	RIV57TT				
Hauler/Carrier No.	Driver's Name	Delivered/Ordered		Load No.	Running Total
7886596		370.00 /		12	370.00

EV/P PORT OF EVERETT
2600 FEDERAL AVE
EVERETT

Product	Description	Total	Unit Price	Amount
99004	CLASS 2 SOILS DUMP (TN)	29.43		

SCALE WEIGHT	GROSS & TARE		
Gross 98,960 LB m	☒ Scale 1 ☐ Scale 2	A STANDBY SURCHARGE WILL BE ASSESSED FOR LOADS THAT EXCEED 10 MINUTES UNLOADING TIME.	Fuel Surcharge
Tare 40,100 LB/P.T.*			Sales Tax
Net 58,860 LB m	X Cate Deputy Weighmaster	LIABILITY WAIVER Cadman Materials, (Inc.) will not assume Liability for any property damage or any equipment damage for any delivery beyond the curb line.	**Total**

No one available to sign, customer waives receipt signature. ☐	Received by Signature X	Print Name (Customer) X	Driver's Signature X	Standby Time

Arrive Job		Start Unloading		Finish Unloading		Standby Time		Customer's Initials X	This Tickets Grand Total	

CADMAN
HEIDELBERGCEMENTGroup®
(888) 322-6847 425-961-7100

WEIGHMASTER STATION
98785500
Everett Glenwood LND
6300 Glenwood Avenue
Everett, WA 98213

TICKET NO.	1120564062	TICKET TIME	1:02:26PM	DATE	7/20/2022
Customer No.	Payment Type	Customer Name			Order No.
7832096	Account	STRIDER CONST CO INC			10119468
Customer Job. No.	Customer P.O.			Map Ref.	Disp. Ord. #
	21NT			/	
Truck Type	Truck No.	Vehicle or License Plate No.		Trailer or License Plate No.	Zone
Truck & Trailer	RIV59TT				
Hauler/Carrier No.	Driver's Name	Delivered/Ordered		Load No.	Running Total
7886596		475.76 /		16	475.76

EV/P PORT OF EVERETT
2600 FEDERAL AVE
EVERETT

Product	Description	Total	Unit Price	Amount
99004	CLASS 2 SOILS DUMP (TN)	25.56		

SCALE WEIGHT	GROSS & TARE		
Gross 92,060 LB *	☒ Scale 1 ☐ Scale 2	A STANDBY SURCHARGE WILL BE ASSESSED FOR LOADS THAT EXCEED 10 MINUTES UNLOADING TIME.	Fuel Surcharge
Tare 40,940 LB/P.T.*		LIABILITY WAIVER	Sales Tax
Net 51,120 LB *	X Cate Deputy Weighmaster	Cadman Materials, (Inc.) will not assume Liability for any property damage or any equipment damage for any delivery beyond the curb line.	**Total**

No one available to sign, customer waives receipt signature. ☐	Received by Signature	Print Name (Customer)	Driver's Signature	Standby Time
	X	X	X	

Arrive Job		Start Unloading		Finish Unloading		Standby Time		Customer's Initials	This Tickets Grand Total
								X	

CADMAN
HEIDELBERGCEMENTGroup
(888) 322-6847 425-961-7100

WEIGHMASTER STATION
98785500
Everett Glenwood LND
6300 Glenwood Avenue
Everett, WA 98213

TICKET NO.	1120564063	TICKET TIME	1:16:09PM	DATE	7/20/2022
Customer No.	Payment Type	Customer Name			Order No.
7832096	Account	STRIDER CONST CO INC			10119468
Customer Job. No.	Customer P.O.			Map Ref.	Disp. Ord. #
	21NT			/	
Truck Type	Truck No.	Vehicle or License Plate No.	Trailer or License Plate No.	Zone	
Truck & Trailer	RIV52TT				
Hauler/Carrier No.	Driver's Name	Delivered/Ordered	Load No.	Running Total	
7886596		503.53 /	17	503.53	

EV/P PORT OF EVERETT
2600 FEDERAL AVE
EVERETT

Product	Description	Total	Unit Price	Amount
99004	CLASS 2 SOILS DUMP (TN)	27.77		

SCALE WEIGHT	GROSS & TARE		
Gross 95,280 LB m	[X] Scale 1 [ ] Scale 2	A STANDBY SURCHARGE WILL BE ASSESSED FOR LOADS THAT EXCEED 10 MINUTES UNLOADING TIME.	Fuel Surcharge
Tare 39,740 LB/P.T.*	X Cate	LIABILITY WAIVER	Sales Tax
Net 55,540 LB m	Deputy Weighmaster	Cadman Materials, (Inc.) will not assume Liability for any property damage or any equipment damage for any delivery beyond the curb line.	**Total**

No one available to sign, customer waives receipt signature. [ ]	Received by Signature X	Print Name (Customer) X	Driver's Signature X	Standby Time

Arrive Job		Start Unloading		Finish Unloading		Standby Time		Customer's Initials X	This Tickets Grand Total	

CADMAN
HEIDELBERGCEMENTGroup
(888) 322-6847 425-961-7100

WEIGHMASTER STATION
98785500
Everett Glenwood LND
6300 Glenwood Avenue
Everett, WA 98213

TICKET NO.	1120564057	TICKET TIME	12:08:30PM	DATE	7/20/2022

Customer No.	Payment Type	Customer Name	Order No.
7832096	Account	STRIDER CONST CO INC	10119468

Customer Job. No.	Customer P.O.	Map Ref.	Disp. Ord. #
	21NT	/	

Truck Type	Truck No.	Vehicle or License Plate No.	Trailer or License Plate No.	Zone
Truck & Trailer	RIV52TT			

Hauler/Carrier No.	Driver's Name	Delivered/Ordered	Load No.	Running Total
7886596		422.17 /	14	422.17

EV/P PORT OF EVERETT
2600 FEDERAL AVE
EVERETT

Product	Description	Total	Unit Price	Amount
99004	CLASS 2 SOILS DUMP (TN)	27.42		

SCALE WEIGHT

Gross 94,580 LB m
Tare 39,740 LB/P.T.*
Net 54,840 LB m

GROSS & TARE

☒ Scale 1 ☐ Scale 2

X Cate
Deputy Weighmaster

A STANDBY SURCHARGE WILL BE ASSESSED FOR LOADS THAT EXCEED 10 MINUTES UNLOADING TIME.

LIABILITY WAIVER

Cadman Materials, (Inc.) will not assume Liability for any property damage or any equipment damage for any delivery beyond the curb line.

Fuel Surcharge	
Sales Tax	
Total	
Standby Time	
This Tickets Grand Total	

No one available to sign, customer waives receipt signature. ☐

Received by Signature X

Print Name (Customer) X

Driver's Signature X

Arrive Job		Start Unloading		Finish Unloading		Standby Time		Customer's Initials X

CADMAN
HEIDELBERGCEMENTGroup
(888) 322-6847 425-961-7100

WEIGHMASTER STATION
98785500
Everett Glenwood LND
6300 Glenwood Avenue
Everett, WA 98213

TICKET NO.	1120564051	TICKET TIME	10:56:42AM	DATE	7/20/2022
Customer No.	Payment Type	Customer Name			Order No.
7832096	Account	STRIDER CONST CO INC			10119468
Customer Job. No.	Customer P.O.			Map Ref.	Disp. Ord. #
	21NT			/	
Truck Type	Truck No.	Vehicle or License Plate No.		Trailer or License Plate No.	Zone
Truck & Trailer	RIV52TT				
Hauler/Carrier No.	Driver's Name	Delivered/Ordered		Load No.	Running Total
7886596		340.57 /		11	340.57

EV/P PORT OF EVERETT
2600 FEDERAL AVE
EVERETT

Product	Description	Total	Unit Price	Amount
99004	CLASS 2 SOILS DUMP (TN)	28.70		

SCALE WEIGHT		GROSS & TARE
Gross	97,140 LB m	☒ Scale 1 ☐ Scale 2
Tare	39,740 LB/P.T.*	X Cate
Net	57,400 LB m	Deputy Weighmaster

A STANDBY SURCHARGE WILL BE ASSESSED FOR LOADS THAT EXCEED 10 MINUTES UNLOADING TIME.

LIABILITY WAIVER

Cadman Materials, (Inc.) will not assume Liability for any property damage or any equipment damage for any delivery beyond the curb line.

Fuel Surcharge	
Sales Tax	
Total	
Standby Time	
This Tickets Grand Total	

No one available to sign, customer waives receipt signature. ☐	Received by Signature	Print Name (Customer)	Driver's Signature
	X	X	X

Arrive Job		Start Unloading		Finish Unloading		Standby Time		Customer's Initials
								X

CADMAN
HEIDELBERGCEMENTGroup
(888) 322-6847 425-961-7100

WEIGHMASTER STATION
98785500
Everett Glenwood LND
6300 Glenwood Avenue
Everett, WA 98213

TICKET NO.	1120564046	TICKET TIME	9:54:34AM	DATE	7/20/2022
Customer No.	Payment Type	Customer Name			Order No.
7832096	Account	STRIDER CONST CO INC			10119468
Customer Job. No.	Customer P.O.			Map Ref.	Disp. Ord. #
	21NT			/	
Truck Type	Truck No.	Vehicle or License Plate No.		Trailer or License Plate No.	Zone
Truck & Trailer	RIV52TT				
Hauler/Carrier No.	Driver's Name	Delivered/Ordered		Load No.	Running Total
7886596		286.69 /		9	286.69

EV/P PORT OF EVERETT
2600 FEDERAL AVE
EVERETT

Product	Description	Total	Unit Price	Amount
99004	CLASS 2 SOILS DUMP (TN)	29.01		

SCALE WEIGHT	GROSS & TARE		
Gross 97,760 LB m	[X] Scale 1	[ ] Scale 2	A STANDBY SURCHARGE WILL BE ASSESSED FOR LOADS THAT EXCEED 10 MINUTES UNLOADING TIME.
Tare 39,740 LB/P.T.*	X Cate		LIABILITY WAIVER
Net 58,020 LB m	Deputy Weighmaster		Cadman Materials, (Inc.) will not assume Liability for any property damage or any equipment damage for any delivery beyond the curb line.

Fuel Surcharge	
Sales Tax	
Total	
Standby Time	
This Tickets Grand Total	

No one available to sign, customer waives receipt signature. [ ]	Received by Signature X	Print Name (Customer) X	Driver's Signature X

Arrive Job		Start Unloading		Finish Unloading		Standby Time		Customer's Initials X

CADMAN
HEIDELBERGCEMENTGroup
(888) 322-6847 425-961-7100

WEIGHMASTER STATION
98785500
Everett Glenwood LND
6300 Glenwood Avenue
Everett, WA 98213

TICKET NO.	1120564031	TICKET TIME	7:38:27AM	DATE	7/20/2022
Customer No.	Payment Type	Customer Name			Order No.
7832096	Account	STRIDER CONST CO INC			10119468
Customer Job. No.	Customer P.O.			Map Ref.	Disp. Ord. #
	21NT			/	
Truck Type	Truck No.	Vehicle or License Plate No.		Trailer or License Plate No.	Zone
Truck & Trailer	RIV52TT				
Hauler/Carrier No.	Driver's Name	Delivered/Ordered		Load No.	Running Total
7886596		90.50 /		3	90.50

EV/P PORT OF EVERETT
2600 FEDERAL AVE
EVERETT

Product	Description	Total	Unit Price	Amount
99004	CLASS 2 SOILS DUMP (TN)	31.11		

SCALE WEIGHT	GROSS & TARE		
Gross 101,960 LB m	☒ Scale 1 ☐ Scale 2	A STANDBY SURCHARGE WILL BE ASSESSED FOR LOADS THAT EXCEED 10 MINUTES UNLOADING TIME.	Fuel Surcharge
Tare 39,740 LB/P.T.*	X Cate	LIABILITY WAIVER	Sales Tax
Net 62,220 LB m	Deputy Weighmaster	Cadman Materials, (Inc.) will not assume Liability for any property damage or any equipment damage for any delivery beyond the curb line.	**Total**

No one available to sign, customer waives receipt signature. ☐	Received by Signature	Print Name (Customer)	Driver's Signature	Standby Time
	X	X	X	

Arrive Job		Start Unloading		Finish Unloading		Standby Time		Customer's Initials	**This Tickets Grand Total**
								X	

CADMAN
HEIDELBERGCEMENTGroup
(888) 322-6847 425-961-7100

WEIGHMASTER STATION
98785500
Everett Glenwood LND
6300 Glenwood Avenue
Everett, WA 98213

TICKET NO.	1120564038	TICKET TIME	8:48:44AM	DATE	7/20/2022
Customer No.	Payment Type	Customer Name			Order No.
7832096	Account	STRIDER CONST CO INC			10119468
Customer Job. No.	Customer P.O.			Map Ref.	Disp. Ord. #
	21NT			/	
Truck Type	Truck No.	Vehicle or License Plate No.		Trailer or License Plate No.	Zone
Truck & Trailer	RIV52TT				
Hauler/Carrier No.	Driver's Name	Delivered/Ordered		Load No.	Running Total
7886596		191.15 /		6	191.15

EV/P PORT OF EVERETT
2600 FEDERAL AVE
EVERETT

Product	Description	Total	Unit Price	Amount
99004	CLASS 2 SOILS DUMP (TN)	33.88		

SCALE WEIGHT

Gross 107,500 LB m
Tare 39,740 LB/P.T.*
Net 67,760 LB m

GROSS & TARE

☒ Scale 1 ☐ Scale 2

X Cate
Deputy Weighmaster

A STANDBY SURCHARGE WILL BE ASSESSED FOR LOADS THAT EXCEED 10 MINUTES UNLOADING TIME.

LIABILITY WAIVER

Cadman Materials, (Inc.) will not assume Liability for any property damage or any equipment damage for any delivery beyond the curb line.

Fuel Surcharge	
Sales Tax	
Total	
Standby Time	
This Tickets Grand Total	

No one available to sign, customer waives receipt signature. ☐	Received by Signature	Print Name (Customer)	Driver's Signature
	X	X	X

Arrive Job		Start Unloading		Finish Unloading		Standby Time		Customer's Initials
								X

CADMAN
HEIDELBERGCEMENTGroup
(888) 322-6847 425-961-7100

WEIGHMASTER STATION
98785500
Everett Glenwood LND
6300 Glenwood Avenue
Everett, WA 98213

TICKET NO.	1120564074	TICKET TIME	7:34:05AM	DATE	7/21/2022

Customer No.	Payment Type	Customer Name	Order No.
7832096	Account	STRIDER CONST CO INC	10119468

Customer Job. No.	Customer P.O.	Map Ref.	Disp. Ord. #
	21NT	/	

Truck Type	Truck No.	Vehicle or License Plate No.	Trailer or License Plate No.	Zone
Truck & Trailer	SPR30TT			

Hauler/Carrier No.	Driver's Name	Delivered/Ordered	Load No.	Running Total
9388321		27.68 /	1	27.68

EV/P PORT OF EVERETT
2600 FEDERAL AVE
EVERETT

Product	Description	Total	Unit Price	Amount
99004	CLASS 2 SOILS DUMP (TN)	27.68		

SCALE WEIGHT

Gross 95,600 LB m
Tare 40,240 LB/P.T.*
Net 55,360 LB m

GROSS & TARE

☒ Scale 1 ☐ Scale 2

X Cate
Deputy Weighmaster

A STANDBY SURCHARGE WILL BE ASSESSED FOR LOADS THAT EXCEED 10 MINUTES UNLOADING TIME.

LIABILITY WAIVER

Cadman Materials, (Inc.) will not assume Liability for any property damage or any equipment damage for any delivery beyond the curb line.

Fuel Surcharge	
Sales Tax	
Total	
Standby Time	
This Tickets Grand Total	

No one available to sign, customer waives receipt signature. ☐	Received by Signature	Print Name (Customer)	Driver's Signature
	X	X	X

Arrive Job		Start Unloading		Finish Unloading		Standby Time		Customer's Initials
								X

CADMAN
HEIDELBERGCEMENTGroup
(888) 322-6847 425-961-7100

WEIGHMASTER STATION
98785500
Everett Glenwood LND
6300 Glenwood Avenue
Everett, WA 98213

TICKET NO.	1120564076	TICKET TIME	7:54:50AM	DATE	7/21/2022

Customer No.	Payment Type	Customer Name	Order No.
7832096	Account	STRIDER CONST CO INC	10119468

Customer Job. No.	Customer P.O.	Map Ref.	Disp. Ord. #
	21NT	/	

Truck Type	Truck No.	Vehicle or License Plate No.	Trailer or License Plate No.	Zone
Truck & Trailer	RIV26TT			

Hauler/Carrier No.	Driver's Name	Delivered/Ordered	Load No.	Running Total
7886596		54.08 /	2	54.08

EV/P PORT OF EVERETT
2600 FEDERAL AVE
EVERETT

Product	Description	Total	Unit Price	Amount
99004	CLASS 2 SOILS DUMP (TN)	26.40		

SCALE WEIGHT

Gross 91,600 LB *
Tare 38,800 LB/P.T.*
Net 52,800 LB *

GROSS & TARE

[X] Scale 1 [ ] Scale 2
X Cate
Deputy Weighmaster

A STANDBY SURCHARGE WILL BE ASSESSED FOR LOADS THAT EXCEED 10 MINUTES UNLOADING TIME.

LIABILITY WAIVER

Cadman Materials, (Inc.) will not assume Liability for any property damage or any equipment damage for any delivery beyond the curb line.

Fuel Surcharge	
Sales Tax	
Total	
Standby Time	
This Tickets Grand Total	

No one available to sign, customer waives receipt signature. [ ]	Received by Signature	Print Name (Customer)	Driver's Signature
	X	X	X

Arrive Job		Start Unloading		Finish Unloading		Standby Time		Customer's Initials
								X

CADMAN
HEIDELBERGCEMENTGroup®
(888) 322-6847 425-961-7100

WEIGHMASTER STATION
98785500
Everett Glenwood LND
6300 Glenwood Avenue
Everett, WA 98213

TICKET NO.	1120564077	TICKET TIME	8:05:18AM	DATE	7/21/2022
Customer No.	Payment Type	Customer Name			Order No.
7832096	Account	STRIDER CONST CO INC			10119468
Customer Job. No.	Customer P.O.			Map Ref.	Disp. Ord. #
	21NT			/	
Truck Type	Truck No.	Vehicle or License Plate No.		Trailer or License Plate No.	Zone
Truck & Trailer	RIV58TT				
Hauler/Carrier No.	Driver's Name	Delivered/Ordered		Load No.	Running Total
7886596		82.12 /		3	82.12

EV/P PORT OF EVERETT
2600 FEDERAL AVE
EVERETT

Product	Description	Total	Unit Price	Amount
99004	CLASS 2 SOILS DUMP (TN)	28.04		

SCALE WEIGHT

Gross 97,020 LB *
Tare 40,940 LB/P.T.*
Net 56,080 LB *

GROSS & TARE

☒ Scale 1 ☐ Scale 2

X Cate
Deputy Weighmaster

A STANDBY SURCHARGE WILL BE ASSESSED FOR LOADS THAT EXCEED 10 MINUTES UNLOADING TIME.

LIABILITY WAIVER

Cadman Materials, (Inc.) will not assume Liability for any property damage or any equipment damage for any delivery beyond the curb line.

Fuel Surcharge	
Sales Tax	
Total	
Standby Time	
This Tickets Grand Total	

No one available to sign, customer waives receipt signature. ☐

Received by Signature: X

Print Name (Customer): X

Driver's Signature: X

Arrive Job		Start Unloading		Finish Unloading		Standby Time		Customer's Initials: X

CADMAN
HEIDELBERGCEMENTGroup®
(888) 322-6847 425-961-7100

WEIGHMASTER STATION
98785500
Everett Glenwood LND
6300 Glenwood Avenue
Everett, WA 98213

TICKET NO.	1120564079	TICKET TIME	8:39:40AM	DATE	7/21/2022
Customer No.	Payment Type	Customer Name			Order No.
7832096	Account	STRIDER CONST CO INC			10119468
Customer Job. No.	Customer P.O.			Map Ref.	Disp. Ord. #
	21NT			/	
Truck Type	Truck No.	Vehicle or License Plate No.		Trailer or License Plate No.	Zone
Truck & Trailer	SPR30TT				
Hauler/Carrier No.	Driver's Name	Delivered/Ordered		Load No.	Running Total
9388321		110.36 /		4	110.36

EV/P PORT OF EVERETT
2600 FEDERAL AVE
EVERETT

Product	Description	Total	Unit Price	Amount
99004	CLASS 2 SOILS DUMP (TN)	28.24		

SCALE WEIGHT

Gross 96,720 LB m
Tare 40,240 LB/P.T.*
Net 56,480 LB m

GROSS & TARE

☒ Scale 1 ☐ Scale 2

X Cate
Deputy Weighmaster

A STANDBY SURCHARGE WILL BE ASSESSED FOR LOADS THAT EXCEED 10 MINUTES UNLOADING TIME.

LIABILITY WAIVER

Cadman Materials, (Inc.) will not assume Liability for any property damage or any equipment damage for any delivery beyond the curb line.

Fuel Surcharge	
Sales Tax	
Total	
Standby Time	
This Tickets Grand Total	

No one available to sign, customer waives receipt signature. ☐	Received by Signature	Print Name (Customer)	Driver's Signature
	X	X	X

Arrive Job		Start Unloading		Finish Unloading		Standby Time		Customer's Initials
								X

CADMAN
HEIDELBERGCEMENTGroup®
(888) 322-6847 425-961-7100

WEIGHMASTER STATION
98785500
Everett Glenwood LND
6300 Glenwood Avenue
Everett, WA 98213

TICKET NO.	1120564081	TICKET TIME	8:46:22AM	DATE	7/21/2022
Customer No.	Payment Type	Customer Name			Order No.
7832096	Account	STRIDER CONST CO INC			10119468
Customer Job. No.	Customer P.O.			Map Ref.	Disp. Ord. #
	21NT			/	
Truck Type	Truck No.	Vehicle or License Plate No.		Trailer or License Plate No.	Zone
Truck & Trailer	RIV26TT				
Hauler/Carrier No.	Driver's Name	Delivered/Ordered		Load No.	Running Total
7886596		137.90 /		5	137.90

EV/P PORT OF EVERETT
2600 FEDERAL AVE
EVERETT

Product	Description	Total	Unit Price	Amount
99004	CLASS 2 SOILS DUMP (TN)	27.54		

SCALE WEIGHT		GROSS & TARE	A STANDBY SURCHARGE WILL BE ASSESSED FOR LOADS THAT EXCEED 10 MINUTES UNLOADING TIME.	
Gross	93,880 LB m	☒ Scale 1 ☐ Scale 2		Fuel Surcharge
Tare	38,800 LB/P.T.*			Sales Tax
Net	55,080 LB m	X Cate Deputy Weighmaster		**Total**

LIABILITY WAIVER
Cadman Materials, (Inc.) will not assume Liability for any property damage or any equipment damage for any delivery beyond the curb line.

No one available to sign, customer waives receipt signature ☐	Received by Signature X	Print Name (Customer) X	Driver's Signature X	Standby Time

Arrive Job		Start Unloading		Finish Unloading		Standby Time		Customer's Initials X	This Tickets Grand Total	

CADMAN
HEIDELBERGCEMENTGroup®
(888) 322-6847 425-961-7100

WEIGHMASTER STATION
98785500
Everett Glenwood LND
6300 Glenwood Avenue
Everett, WA 98213

TICKET NO.	1120564082	TICKET TIME	8:58:32AM	DATE	7/21/2022
Customer No.	Payment Type	Customer Name			Order No.
7832096	Account	STRIDER CONST CO INC			10119468
Customer Job. No.	Customer P.O.			Map Ref.	Disp. Ord. #
	21NT			/	
Truck Type	Truck No.	Vehicle or License Plate No.		Trailer or License Plate No.	Zone
Truck & Trailer	RIV58TT				
Hauler/Carrier No.	Driver's Name	Delivered/Ordered		Load No.	Running Total
7886596		166.81 /		6	166.81

EV/P PORT OF EVERETT
2600 FEDERAL AVE
EVERETT

Product	Description	Total	Unit Price	Amount
99004	CLASS 2 SOILS DUMP (TN)	28.91		

SCALE WEIGHT		GROSS & TARE	A STANDBY SURCHARGE WILL BE ASSESSED FOR LOADS THAT EXCEED 10 MINUTES UNLOADING TIME.	
Gross	98,760 LB m			Fuel Surcharge
Tare	40,940 LB/P.T.*	[X] Scale 1 [ ] Scale 2	LIABILITY WAIVER	Sales Tax
Net	57,820 LB m	X Cate Deputy Weighmaster	Cadman Materials, (Inc.) will not assume Liability for any property damage or any equipment damage for any delivery beyond the curb line.	**Total**

No one available to sign, customer waives receipt signature. [ ]	Received by Signature X	Print Name (Customer) X	Driver's Signature X	Standby Time

Arrive Job		Start Unloading		Finish Unloading		Standby Time		Customer's Initials X	**This Tickets Grand Total**	

CADMAN
HEIDELBERGCEMENTGroup
(888) 322-6847 425-961-7100

WEIGHMASTER STATION
98785500
Everett Glenwood LND
6300 Glenwood Avenue
Everett, WA 98213

TICKET NO.	1120564085	TICKET TIME	9:44:56AM	DATE	7/21/2022
Customer No.	Payment Type	Customer Name			Order No.
7832096	Account	STRIDER CONST CO INC			10119468
Customer Job. No.	Customer P.O.			Map Ref.	Disp. Ord. #
	21NT			/	
Truck Type	Truck No.	Vehicle or License Plate No.		Trailer or License Plate No.	Zone
Truck & Trailer	SPR30TT				
Hauler/Carrier No.	Driver's Name	Delivered/Ordered		Load No.	Running Total
9388321		196.86 /		7	196.86

EV/P PORT OF EVERETT
2600 FEDERAL AVE
EVERETT

Product	Description	Total	Unit Price	Amount
99004	CLASS 2 SOILS DUMP (TN)	30.05		

SCALE WEIGHT	GROSS & TARE		
Gross 100,340 LB m	☒ Scale 1 ☐ Scale 2	A STANDBY SURCHARGE WILL BE ASSESSED FOR LOADS THAT EXCEED 10 MINUTES UNLOADING TIME.	Fuel Surcharge
Tare 40,240 LB/P.T.*			Sales Tax
Net 60,100 LB m	X Cate Deputy Weighmaster	**LIABILITY WAIVER** Cadman Materials, (Inc.) will not assume Liability for any property damage or any equipment damage for any delivery beyond the curb line.	**Total**

No one available to sign, customer waives receipt signature. ☐	Received by Signature X	Print Name (Customer) X	Driver's Signature X	Standby Time

Arrive Job		Start Unloading		Finish Unloading		Standby Time		Customer's Initials X	This Tickets Grand Total	

CADMAN
HEIDELBERGCEMENTGroup®
(888) 322-6847 425-961-7100

WEIGHMASTER STATION
98785500
Everett Glenwood LND
6300 Glenwood Avenue
Everett, WA 98213

TICKET NO.	1120564086	TICKET TIME	9:53:53AM	DATE	7/21/2022

Customer No.	Payment Type	Customer Name	Order No.
7832096	Account	STRIDER CONST CO INC	10119468

Customer Job. No.	Customer P.O.	Map Ref.	Disp. Ord. #
	21NT	/	

Truck Type	Truck No.	Vehicle or License Plate No.	Trailer or License Plate No.	Zone
Truck & Trailer	RIV26TT			

Hauler/Carrier No.	Driver's Name	Delivered/Ordered	Load No.	Running Total
7886596		225.15 /	8	225.15

EV/P PORT OF EVERETT
2600 FEDERAL AVE
EVERETT

Product	Description	Total	Unit Price	Amount
99004	CLASS 2 SOILS DUMP (TN)	28.29		

SCALE WEIGHT

Gross 95,380 LB m
Tare 38,800 LB/P.T.*
Net 56,580 LB m

GROSS & TARE

☒ Scale 1 ☐ Scale 2

X Cate
Deputy Weighmaster

A STANDBY SURCHARGE WILL BE ASSESSED FOR LOADS THAT EXCEED 10 MINUTES UNLOADING TIME.

LIABILITY WAIVER

Cadman Materials, (Inc.) will not assume Liability for any property damage or any equipment damage for any delivery beyond the curb line.

Fuel Surcharge	
Sales Tax	
Total	
Standby Time	
This Tickets Grand Total	

No one available to sign, customer waives receipt signature. ☐	Received by Signature X	Print Name (Customer) X	Driver's Signature X

Arrive Job		Start Unloading		Finish Unloading		Standby Time		Customer's Initials X

CADMAN
HEIDELBERGCEMENTGroup
(888) 322-6847 425-961-7100

WEIGHMASTER STATION
98785500
Everett Glenwood LND
6300 Glenwood Avenue
Everett, WA 98213

TICKET NO.	1120564087	TICKET TIME	9:57:31AM	DATE	7/21/2022
Customer No.	Payment Type	Customer Name			Order No.
7832096	Account	STRIDER CONST CO INC			10119468
Customer Job. No.	Customer P.O.			Map Ref.	Disp. Ord. #
	21NT			/	
Truck Type	Truck No.	Vehicle or License Plate No.		Trailer or License Plate No.	Zone
Truck & Trailer	RIV58TT				
Hauler/Carrier No.	Driver's Name	Delivered/Ordered		Load No.	Running Total
7886596		253.00 /		9	253.00

EV/P PORT OF EVERETT
2600 FEDERAL AVE
EVERETT

Product	Description	Total	Unit Price	Amount
99004	CLASS 2 SOILS DUMP (TN)	27.85		

SCALE WEIGHT	GROSS & TARE		
Gross 96,640 LB m	[X] Scale 1	[ ] Scale 2	
Tare 40,940 LB/P.T.*	X Cate		
Net 55,700 LB m	Deputy Weighmaster		

A STANDBY SURCHARGE WILL BE ASSESSED FOR LOADS THAT EXCEED 10 MINUTES UNLOADING TIME.

LIABILITY WAIVER

Cadman Materials, (Inc.) will not assume Liability for any property damage or any equipment damage for any delivery beyond the curb line.

Fuel Surcharge	
Sales Tax	
Total	
Standby Time	
This Tickets Grand Total	

No one available to sign, customer waives receipt signature. [ ]	Received by Signature	Print Name (Customer)	Driver's Signature	Customer's Initials
	X	X	X	X

Arrive Job		Start Unloading		Finish Unloading		Standby Time	

CADMAN
HEIDELBERGCEMENTGroup®
(888) 322-6847 425-961-7100

WEIGHMASTER STATION
98785500
Everett Glenwood LND
6300 Glenwood Avenue
Everett, WA 98213

TICKET NO.	1120564091	TICKET TIME	10:42:36AM	DATE	7/21/2022
Customer No.	Payment Type	Customer Name			Order No.
7832096	Account	STRIDER CONST CO INC			10119468
Customer Job. No.	Customer P.O.			Map Ref.	Disp. Ord. #
	21NT			/	
Truck Type	Truck No.	Vehicle or License Plate No.		Trailer or License Plate No.	Zone
Truck & Trailer	SPR30TT				
Hauler/Carrier No.	Driver's Name	Delivered/Ordered		Load No.	Running Total
9388321		282.47 /		10	282.47

EV/P PORT OF EVERETT
2600 FEDERAL AVE
EVERETT

Product	Description	Total	Unit Price	Amount
99004	CLASS 2 SOILS DUMP (TN)	29.47		

SCALE WEIGHT

Gross 99,180 LB m
Tare 40,240 LB/P.T.*
Net 58,940 LB m

GROSS & TARE

☒ Scale 1 ☐ Scale 2

X Cate
Deputy Weighmaster

A STANDBY SURCHARGE WILL BE ASSESSED FOR LOADS THAT EXCEED 10 MINUTES UNLOADING TIME.

LIABILITY WAIVER

Cadman Materials, (Inc.) will not assume Liability for any property damage or any equipment damage for any delivery beyond the curb line.

Fuel Surcharge	
Sales Tax	
Total	
Standby Time	
This Tickets Grand Total	

No one available to sign, customer waives receipt signature. ☐	Received by Signature X	Print Name (Customer) X	Driver's Signature X

Arrive Job		Start Unloading		Finish Unloading		Standby Time		Customer's Initials X

CADMAN
HEIDELBERGCEMENTGroup
(888) 322-6847 425-961-7100

WEIGHMASTER STATION
98785500
Everett Glenwood LND
6300 Glenwood Avenue
Everett, WA 98213

TICKET NO.	1120564092	TICKET TIME	10:53:55AM	DATE	7/21/2022
Customer No.	Payment Type	Customer Name			Order No.
7832096	Account	STRIDER CONST CO INC			10119468
Customer Job. No.	Customer P.O.			Map Ref.	Disp. Ord. #
	21NT			/	
Truck Type	Truck No.	Vehicle or License Plate No.		Trailer or License Plate No.	Zone
Truck & Trailer	RIV26TT				
Hauler/Carrier No.	Driver's Name	Delivered/Ordered		Load No.	Running Total
7886596		312.04 /		11	312.04

EV/P PORT OF EVERETT
2600 FEDERAL AVE
EVERETT

Product	Description	Total	Unit Price	Amount
99004	CLASS 2 SOILS DUMP (TN)	29.57		

SCALE WEIGHT	GROSS & TARE		
Gross 97,940 LB m	[X] Scale 1 [ ] Scale 2	A STANDBY SURCHARGE WILL BE ASSESSED FOR LOADS THAT EXCEED 10 MINUTES UNLOADING TIME.	Fuel Surcharge
Tare 38,800 LB/P.T.*	X Cate	LIABILITY WAIVER	Sales Tax
Net 59,140 LB m	Deputy Weighmaster	Cadman Materials, (Inc.) will not assume Liability for any property damage or any equipment damage for any delivery beyond the curb line.	**Total**

No one available to sign, customer waives receipt signature. [ ]	Received by Signature	Print Name (Customer)	Driver's Signature	Standby Time
	X	X	X	

Arrive Job		Start Unloading		Finish Unloading		Standby Time		Customer's Initials	This Tickets Grand Total
								X	

CADMAN
HEIDELBERGCEMENTGroup
(888) 322-6847 425-961-7100

WEIGHMASTER STATION
98785500
Everett Glenwood LND
6300 Glenwood Avenue
Everett, WA 98213

TICKET NO	1120564111	TICKET TIME	1:55:53PM	DATE	7/21/2022
Customer No.	Payment Type	Customer Name			Order No.
7832096	Account	STRIDER CONST CO INC			10119468
Customer Job. No.	Customer P.O.			Map Ref.	Disp. Ord. #
	21NT			/	
Truck Type	Truck No.	Vehicle or License Plate No.		Trailer or License Plate No.	Zone
Truck & Trailer	SPR30TT				
Hauler/Carrier No.	Driver's Name	Delivered/Ordered		Load No.	Running Total
9388321		535.07 /		19	535.07

EV/P PORT OF EVERETT
2600 FEDERAL AVE
EVERETT

Product	Description	Total	Unit Price	Amount
99004	CLASS 2 SOILS DUMP (TN)	26.48		

SCALE WEIGHT		GROSS & TARE	A STANDBY SURCHARGE WILL BE ASSESSED FOR LOADS THAT EXCEED 10 MINUTES UNLOADING TIME.	
Gross	93,200 LB m	[X] Scale 1 [ ] Scale 2		Fuel Surcharge
Tare	40,240 LB/P.T.*	X Cate	LIABILITY WAIVER	Sales Tax
Net	52,960 LB m	Deputy Weighmaster	Cadman Materials, (Inc.) will not assume Liability for any property damage or any equipment damage for any delivery beyond the curb line.	**Total**

No one available to sign, customer waives receipt signature. [ ]	Received by Signature X	Print Name (Customer) X	Driver's Signature X	Standby Time

Arrive Job		Start Unloading		Finish Unloading		Standby Time		Customer's Initials X	This Tickets Grand Total	

CADMAN
HEIDELBERGCEMENTGroup
(888) 322-6847 425-961-7100

WEIGHMASTER STATION
98785500
Everett Glenwood LND
6300 Glenwood Avenue
Everett, WA 98213

TICKET NO.	1120564114	TICKET TIME	2:23:12PM	DATE	7/21/2022

Customer No.	Payment Type	Customer Name	Order No.
7832096	Account	STRIDER CONST CO INC	10119468

Customer Job. No.	Customer P.O.	Map Ref.	Disp. Ord. #
	21NT	/	

Truck Type	Truck No.	Vehicle or License Plate No.	Trailer or License Plate No.	Zone
Truck & Trailer	RIV58TT			

Hauler/Carrier No.	Driver's Name	Delivered/Ordered	Load No.	Running Total
7886596		598.35 /	21	598.35

EV/P PORT OF EVERETT
2600 FEDERAL AVE
EVERETT

Product	Description	Total	Unit Price	Amount
99004	CLASS 2 SOILS DUMP (TN)	30.64		

SCALE WEIGHT

Gross 102,220 LB m
Tare 40,940 LB/P.T.*
Net 61,280 LB m

GROSS & TARE

☒ Scale 1 ☐ Scale 2

X Cate
Deputy Weighmaster

A STANDBY SURCHARGE WILL BE ASSESSED FOR LOADS THAT EXCEED 10 MINUTES UNLOADING TIME.

LIABILITY WAIVER

Cadman Materials, (Inc.) will not assume Liability for any property damage or any equipment damage for any delivery beyond the curb line.

Fuel Surcharge	
Sales Tax	
Total	
Standby Time	
This Tickets Grand Total	

No one available to sign, customer waives receipt signature. ☐

Received by Signature X

Print Name (Customer) X

Driver's Signature X

Customer's Initials X

Arrive Job		Start Unloading		Finish Unloading		Standby Time	

CADMAN
HEIDELBERGCEMENTGroup
(888) 322-6847 425-961-7100

WEIGHMASTER STATION
98785500
Everett Glenwood LND
6300 Glenwood Avenue
Everett, WA 98213

TICKET NO.	1120564113	TICKET TIME	2:13:42PM	DATE	7/21/2022
Customer No.	Payment Type	Customer Name			Order No.
7832096	Account	STRIDER CONST CO INC			10119468
Customer Job. No.	Customer P.O.			Map Ref.	Disp. Ord. #
	21NT			/	
Truck Type	Truck No.	Vehicle or License Plate No.		Trailer or License Plate No.	Zone
Truck & Trailer	RIV26TT				
Hauler/Carrier No.	Driver's Name	Delivered/Ordered		Load No.	Running Total
7886596		567.71 /		20	567.71

EV/P PORT OF EVERETT
2600 FEDERAL AVE
EVERETT

Product	Description	Total	Unit Price	Amount
99004	CLASS 2 SOILS DUMP (TN)	32.64		

SCALE WEIGHT

Gross 104,080 LB m
Tare 38,800 LB/P.T.*
Net 65,280 LB m

GROSS & TARE

☒ Scale 1 ☐ Scale 2

X Cate
Deputy Weighmaster

A STANDBY SURCHARGE WILL BE ASSESSED FOR LOADS THAT EXCEED 10 MINUTES UNLOADING TIME.

LIABILITY WAIVER

Cadman Materials, (Inc.) will not assume Liability for any property damage or any equipment damage for any delivery beyond the curb line.

Fuel Surcharge	
Sales Tax	
Total	
Standby Time	
This Tickets Grand Total	

No one available to sign, customer waives receipt signature. ☐

Received by Signature X

Print Name (Customer) X

Driver's Signature X

Arrive Job		Start Unloading		Finish Unloading		Standby Time		Customer's Initials X

CADMAN
HEIDELBERGCEMENTGroup®
(888) 322-6847 425-961-7100

WEIGHMASTER STATION
98785500
Everett Glenwood LND
6300 Glenwood Avenue
Everett, WA 98213

TICKET NO.	1120564095	TICKET TIME	11:01:23AM	DATE	7/21/2022
Customer No.	Payment Type	Customer Name			Order No.
7832096	Account	STRIDER CONST CO INC			10119468
Customer Job. No.	Customer P.O.			Map Ref.	Disp. Ord. #
	21NT			/	
Truck Type	Truck No.	Vehicle or License Plate No.		Trailer or License Plate No.	Zone
Truck & Trailer	RIV58TT				
Hauler/Carrier No.	Driver's Name	Delivered/Ordered		Load No.	Running Total
7886596		340.15 /		12	340.15

EV/P PORT OF EVERETT
2600 FEDERAL AVE
EVERETT

Product	Description	Total	Unit Price	Amount
99004	CLASS 2 SOILS DUMP (TN)	28.11		

SCALE WEIGHT

Gross 97,160 LB m
Tare 40,940 LB/P.T.*
Net 56,220 LB m

GROSS & TARE

☒ Scale 1 ☐ Scale 2

X Cate
Deputy Weighmaster

A STANDBY SURCHARGE WILL BE ASSESSED FOR LOADS THAT EXCEED 10 MINUTES UNLOADING TIME.

LIABILITY WAIVER

Cadman Materials, (Inc.) will not assume Liability for any property damage or any equipment damage for any delivery beyond the curb line.

Fuel Surcharge	
Sales Tax	
Total	
Standby Time	
This Tickets Grand Total	

No one available to sign, customer waives receipt signature. ☐	Received by Signature	Print Name (Customer)	Driver's Signature	Customer's Initials
	X	X	X	X

Arrive Job		Start Unloading		Finish Unloading		Standby Time	

CADMAN
HEIDELBERGCEMENTGroup
(888) 322-6847 425-961-7100

WEIGHMASTER STATION
98785500
Everett Glenwood LND
6300 Glenwood Avenue
Everett, WA 98213

TICKET NO.	1120564097	TICKET TIME	11:47:02AM	DATE	7/21/2022
Customer No.	Payment Type	Customer Name			Order No.
7832096	Account	STRIDER CONST CO INC			10119468
Customer Job. No.	Customer P.O.			Map Ref.	Disp. Ord. #
	21NT			/	
Truck Type	Truck No.	Vehicle or License Plate No.		Trailer or License Plate No.	Zone
Truck & Trailer	SPR30TT				
Hauler/Carrier No.	Driver's Name	Delivered/Ordered		Load No.	Running Total
9388321		367.24 /		13	367.24

EV/P PORT OF EVERETT
2600 FEDERAL AVE
EVERETT

Product	Description	Total	Unit Price	Amount
99004	CLASS 2 SOILS DUMP (TN)	27.09		

SCALE WEIGHT	GROSS & TARE		
Gross 94,420 LB m	☒ Scale 1 ☐ Scale 2	A STANDBY SURCHARGE WILL BE ASSESSED FOR LOADS THAT EXCEED 10 MINUTES UNLOADING TIME.	Fuel Surcharge
Tare 40,240 LB/P.T.*			Sales Tax
Net 54,180 LB m	X Cate Deputy Weighmaster		**Total**

LIABILITY WAIVER
Cadman Materials, (Inc.) will not assume Liability for any property damage or any equipment damage for any delivery beyond the curb line.

No one available to sign, customer waives receipt signature. ☐	Received by Signature X	Print Name (Customer) X	Driver's Signature X	Standby Time

Arrive Job		Start Unloading		Finish Unloading		Standby Time		Customer's Initials X	This Tickets Grand Total	

CADMAN
HEIDELBERGCEMENTGroup
(888) 322-6847 425-961-7100

WEIGHMASTER STATION
98785500
Everett Glenwood LND
6300 Glenwood Avenue
Everett, WA 98213

TICKET NO.	1120564100	TICKET TIME	11:57:52AM	DATE	7/21/2022
Customer No.	Payment Type	Customer Name			Order No.
7832096	Account	STRIDER CONST CO INC			10119468
Customer Job. No.	Customer P.O.			Map Ref.	Disp. Ord. #
	21NT			/	
Truck Type	Truck No.	Vehicle or License Plate No.		Trailer or License Plate No.	Zone
Truck & Trailer	RIV26TT				
Hauler/Carrier No.	Driver's Name	Delivered/Ordered		Load No.	Running Total
7886596		395.84 /		14	395.84

EV/P PORT OF EVERETT
2600 FEDERAL AVE
EVERETT

Product	Description	Total	Unit Price	Amount
99004	CLASS 2 SOILS DUMP (TN)	28.60		

SCALE WEIGHT	GROSS & TARE		Fuel Surcharge	
Gross 96,000 LB m		A STANDBY SURCHARGE WILL BE ASSESSED FOR LOADS THAT EXCEED 10 MINUTES UNLOADING TIME.	Sales Tax	
Tare 38,800 LB/P.T.*	☒ Scale 1 ☐ Scale 2	LIABILITY WAIVER	**Total**	
Net 57,200 LB m	X Cate Deputy Weighmaster	Cadman Materials, (Inc.) will not assume Liability for any property damage or any equipment damage for any delivery beyond the curb line.	Standby Time	

No one available to sign, customer waives receipt signature. ☐	Received by Signature X	Print Name (Customer) X	Driver's Signature X	Customer's Initials X	This Tickets Grand Total

Arrive Job		Start Unloading		Finish Unloading		Standby Time	

CADMAN
HEIDELBERGCEMENTGroup
(888) 322-6847 425-961-7100

WEIGHMASTER STATION
98785500
Everett Glenwood LND
6300 Glenwood Avenue
Everett, WA 98213

TICKET NO.	1120564101	TICKET TIME	12:09:13PM	DATE	7/21/2022
Customer No.	Payment Type	Customer Name			Order No.
7832096	Account	STRIDER CONST CO INC			10119468
Customer Job. No.	Customer P.O.			Map Ref.	Disp. Ord. #
	21NT			/	
Truck Type	Truck No.	Vehicle or License Plate No.		Trailer or License Plate No.	Zone
Truck & Trailer	RIV58TT				
Hauler/Carrier No.	Driver's Name	Delivered/Ordered		Load No.	Running Total
7886596		425.12 /		15	425.12

EV/P PORT OF EVERETT
2600 FEDERAL AVE
EVERETT

Product	Description	Total	Unit Price	Amount
99004	CLASS 2 SOILS DUMP (TN)	29.28		

SCALE WEIGHT	GROSS & TARE		Fuel Surcharge	
Gross 99,500 LB m	☒ Scale 1 ☐ Scale 2	**A STANDBY SURCHARGE WILL BE ASSESSED FOR LOADS THAT EXCEED 10 MINUTES UNLOADING TIME.**	Sales Tax	
Tare 40,940 LB/P.T.*	X Cate	**LIABILITY WAIVER**	**Total**	
Net 58,560 LB m	Deputy Weighmaster	**Cadman Materials, (Inc.) will not assume Liability for any property damage or any equipment damage for any delivery beyond the curb line.**	Standby Time	

No one available to sign, customer waives receipt signature. ☐	Received by Signature	Print Name (Customer)	Driver's Signature	Customer's Initials	This Tickets Grand Total
	X	X	X	X	

Arrive Job		Start Unloading		Finish Unloading		Standby Time	

CADMAN
HEIDELBERGCEMENTGroup®
(888) 322-6847 425-961-7100

WEIGHMASTER STATION
98785500
Everett Glenwood LND
6300 Glenwood Avenue
Everett, WA 98213

TICKET NO.	1120564104	TICKET TIME	12:51:48PM	DATE	7/21/2022
Customer No.	Payment Type	Customer Name			Order No.
7832096	Account	STRIDER CONST CO INC			10119468
Customer Job. No.	Customer P.O.		Map Ref.		Disp. Ord. #
	21NT		/		
Truck Type	Truck No.	Vehicle or License Plate No.	Trailer or License Plate No.		Zone
Truck & Trailer	SPR30TT				
Hauler/Carrier No.	Driver's Name	Delivered/Ordered	Load No.		Running Total
9388321		450.51 /	16		450.51

EV/P PORT OF EVERETT
2600 FEDERAL AVE
EVERETT

Product	Description	Total	Unit Price	Amount
99004	CLASS 2 SOILS DUMP (TN)	25.39		

SCALE WEIGHT

Gross 91,020 LB m
Tare 40,240 LB/P.T.*
Net 50,780 LB m

GROSS & TARE

☒ Scale 1 ☐ Scale 2

X Cate
Deputy Weighmaster

A STANDBY SURCHARGE WILL BE ASSESSED FOR LOADS THAT EXCEED 10 MINUTES UNLOADING TIME.

LIABILITY WAIVER

Cadman Materials, (Inc.) will not assume Liability for any property damage or any equipment damage for any delivery beyond the curb line.

Fuel Surcharge	
Sales Tax	
Total	
Standby Time	
This Tickets Grand Total	

No one available to sign, customer waives receipt signature. ☐	Received by Signature X	Print Name (Customer) X	Driver's Signature X

Arrive Job		Start Unloading		Finish Unloading		Standby Time		Customer's Initials X

CADMAN
HEIDELBERGCEMENTGroup
(888) 322-6847 425-961-7100

WEIGHMASTER STATION
98785500
Everett Glenwood LND
6300 Glenwood Avenue
Everett, WA 98213

TICKET NO.	1120564106	TICKET TIME	1:01:14PM	DATE	7/21/2022
Customer No.	Payment Type	Customer Name			Order No.
7832096	Account	STRIDER CONST CO INC			10119468
Customer Job. No.	Customer P.O.			Map Ref.	Disp. Ord. #
	21NT			/	
Truck Type	Truck No.	Vehicle or License Plate No.		Trailer or License Plate No.	Zone
Truck & Trailer	RIV26TT				
Hauler/Carrier No.	Driver's Name	Delivered/Ordered		Load No.	Running Total
7886596		478.60 /		17	478.60

EV/P PORT OF EVERETT
2600 FEDERAL AVE
EVERETT

Product	Description	Total	Unit Price	Amount
99004	CLASS 2 SOILS DUMP (TN)	28.09		

SCALE WEIGHT	GROSS & TARE		Fuel Surcharge	
Gross 94,980 LB m		A STANDBY SURCHARGE WILL BE ASSESSED FOR LOADS THAT EXCEED 10 MINUTES UNLOADING TIME.	Sales Tax	
Tare 38,800 LB/P.T.*	☒ Scale 1 ☐ Scale 2	LIABILITY WAIVER	**Total**	
Net 56,180 LB m	X Cate Deputy Weighmaster	Cadman Materials, (Inc.) will not assume Liability for any property damage or any equipment damage for any delivery beyond the curb line.	Standby Time	

No one available to sign, customer waives receipt signature. ☐	Received by Signature	Print Name (Customer)	Driver's Signature	Customer's Initials	This Tickets Grand Total
	X	X	X	X	

Arrive Job		Start Unloading		Finish Unloading		Standby Time	

CADMAN
HEIDELBERGCEMENTGroup
(888) 322-6847 425-961-7100

WEIGHMASTER STATION
98785500
Everett Glenwood LND
6300 Glenwood Avenue
Everett, WA 98213

TICKET NO.	1120564108	TICKET TIME	1:10:03PM	DATE	7/21/2022
Customer No.	Payment Type	Customer Name			Order No.
7832096	Account	STRIDER CONST CO INC			10119468
Customer Job. No.	Customer P.O.		Map Ref.		Disp. Ord. #
	21NT		/		
Truck Type	Truck No.	Vehicle or License Plate No.	Trailer or License Plate No.		Zone
Truck & Trailer	RIV58TT				
Hauler/Carrier No.	Driver's Name	Delivered/Ordered	Load No.		Running Total
7886596		508.59 /	18		508.59

EV/P PORT OF EVERETT
2600 FEDERAL AVE
EVERETT

Product	Description	Total	Unit Price	Amount
99004	CLASS 2 SOILS DUMP (TN)	29.99		

SCALE WEIGHT	GROSS & TARE		
Gross 100,920 LB m	[X] Scale 1	[ ] Scale 2	Fuel Surcharge
Tare 40,940 LB/P.T.*			Sales Tax
Net 59,980 LB m	X Cate	Deputy Weighmaster	**Total**

A STANDBY SURCHARGE WILL BE ASSESSED FOR LOADS THAT EXCEED 10 MINUTES UNLOADING TIME.

LIABILITY WAIVER

Cadman Materials, (Inc.) will not assume Liability for any property damage or any equipment damage for any delivery beyond the curb line.

No one available to sign, customer waives receipt signature.	Received by Signature	Print Name (Customer)	Driver's Signature	Standby Time
[ ]	X	X	X	

Arrive Job		Start Unloading		Finish Unloading		Standby Time		Customer's Initials	This Tickets Grand Total
								X	

CADMAN
HEIDELBERGCEMENTGroup
(888) 322-6847 425-961-7100

WEIGHMASTER STATION
98785500
Everett Glenwood LND
6300 Glenwood Avenue
Everett, WA 98213

TICKET NO.	1120564118	TICKET TIME	7:19:33AM	DATE	7/22/2022
Customer No.	Payment Type	Customer Name			Order No.
7832096	Account	STRIDER CONST CO INC			10119468
Customer Job. No.	Customer P.O.			Map Ref.	Disp. Ord. #
	21NT			/	
Truck Type	Truck No.	Vehicle or License Plate No.		Trailer or License Plate No.	Zone
Truck & Trailer	SPR30TT				
Hauler/Carrier No.	Driver's Name	Delivered/Ordered		Load No.	Running Total
9388321		30.18 /		1	30.18

EV/P PORT OF EVERETT
2600 FEDERAL AVE
EVERETT

Product	Description	Total	Unit Price	Amount
99004	CLASS 2 SOILS DUMP (TN)	30.18		

SCALE WEIGHT

Gross 100,600 LB m
Tare 40,240 LB/P.T.*
Net 60,360 LB m

GROSS & TARE

☒ Scale 1 ☐ Scale 2

X Cate
Deputy Weighmaster

A STANDBY SURCHARGE WILL BE ASSESSED FOR LOADS THAT EXCEED 10 MINUTES UNLOADING TIME.

LIABILITY WAIVER

Cadman Materials, (Inc.) will not assume Liability for any property damage or any equipment damage for any delivery beyond the curb line.

Fuel Surcharge	
Sales Tax	
Total	
Standby Time	
This Tickets Grand Total	

No one available to sign, customer waives receipt signature. ☐

Received by Signature X

Print Name (Customer) X

Driver's Signature X

Customer's Initials X

Arrive Job		Start Unloading		Finish Unloading		Standby Time	

CADMAN
HEIDELBERGCEMENTGroup
(888) 322-6847 425-961-7100

WEIGHMASTER STATION
98785500
Everett Glenwood LND
6300 Glenwood Avenue
Everett, WA 98213

TICKET NO.	TICKET TIME	DATE
1120564126	8:30:37AM	7/22/2022

Customer No.	Payment Type	Customer Name	Order No.
7832096	Account	STRIDER CONST CO INC	10119468

Customer Job. No.	Customer P.O.	Map Ref.	Disp. Ord. #
	21NT	/	

Truck Type	Truck No.	Vehicle or License Plate No.	Trailer or License Plate No.	Zone
Truck & Trailer	SPR30TT			

Hauler/Carrier No.	Driver's Name	Delivered/Ordered	Load No.	Running Total
9388321		143.24 /	5	143.24

EV/P PORT OF EVERETT
2600 FEDERAL AVE
EVERETT

Product	Description	Total	Unit Price	Amount
99004	CLASS 2 SOILS DUMP (TN)	27.51		

SCALE WEIGHT

Gross 95,260 LB m
Tare 40,240 LB/P.T.*
Net 55,020 LB m

GROSS & TARE

☒ Scale 1 ☐ Scale 2

X Cate
Deputy Weighmaster

A STANDBY SURCHARGE WILL BE ASSESSED FOR LOADS THAT EXCEED 10 MINUTES UNLOADING TIME.

LIABILITY WAIVER

Cadman Materials, (Inc.) will not assume Liability for any property damage or any equipment damage for any delivery beyond the curb line.

Fuel Surcharge	
Sales Tax	
Total	
Standby Time	
This Tickets Grand Total	

No one available to sign, customer waives receipt signature. ☐	Received by Signature	Print Name (Customer)	Driver's Signature
	X	X	X

Arrive Job		Start Unloading		Finish Unloading		Standby Time		Customer's Initials
								X

CADMAN
HEIDELBERGCEMENTGroup
(888) 322-6847 425-961-7100

WEIGHMASTER STATION
98785500
Everett Glenwood LND
6300 Glenwood Avenue
Everett, WA 98213

TICKET NO.	1120564133	TICKET TIME	9:33:24AM	DATE	7/22/2022
Customer No.	Payment Type	Customer Name			Order No.
7832096	Account	STRIDER CONST CO INC			10119468
Customer Job. No.	Customer P.O.			Map Ref.	Disp. Ord. #
	21NT			/	
Truck Type	Truck No.	Vehicle or License Plate No.		Trailer or License Plate No.	Zone
Truck & Trailer	SPR30TT				
Hauler/Carrier No.	Driver's Name	Delivered/Ordered		Load No.	Running Total
9388321		259.37 /		9	259.37

EV/P PORT OF EVERETT
2600 FEDERAL AVE
EVERETT

Product	Description	Total	Unit Price	Amount
99004	CLASS 2 SOILS DUMP (TN)	28.28		

SCALE WEIGHT	GROSS & TARE		Fuel Surcharge	
Gross 96,800 LB m	☒ Scale 1 ☐ Scale 2	**A STANDBY SURCHARGE WILL BE ASSESSED FOR LOADS THAT EXCEED 10 MINUTES UNLOADING TIME.**	Sales Tax	
Tare 40,240 LB/P.T.*	X Cate	**LIABILITY WAIVER**	**Total**	
Net 56,560 LB m	Deputy Weighmaster	**Cadman Materials, (Inc.) will not assume Liability for any property damage or any equipment damage for any delivery beyond the curb line.**		

No one available to sign, customer waives receipt signature. ☐	Received by Signature X	Print Name (Customer) X	Driver's Signature X	Standby Time	

Arrive Job		Start Unloading		Finish Unloading		Standby Time		Customer's Initials X	This Tickets Grand Total	

CADMAN
HEIDELBERGCEMENTGroup
(888) 322-6847 425-961-7100

WEIGHMASTER STATION
98785500
Everett Glenwood LND
6300 Glenwood Avenue
Everett, WA 98213

TICKET NO.	1120564141	TICKET TIME	10:45:16AM	DATE	7/22/2022
Customer No.	Payment Type	Customer Name			Order No.
7832096	Account	STRIDER CONST CO INC			10119468
Customer Job. No.	Customer P.O.			Map Ref.	Disp. Ord. #
	21NT			/	
Truck Type	Truck No.	Vehicle or License Plate No.		Trailer or License Plate No.	Zone
Truck & Trailer	SPR30TT				
Hauler/Carrier No.	Driver's Name	Delivered/Ordered		Load No.	Running Total
9388321		378.16 /		13	378.16

EV/P PORT OF EVERETT
2600 FEDERAL AVE
EVERETT

Product	Description	Total	Unit Price	Amount
99004	CLASS 2 SOILS DUMP (TN)	27.99		

SCALE WEIGHT

Gross 96,220 LB m
Tare 40,240 LB/P.T.*
Net 55,980 LB m

GROSS & TARE

☒ Scale 1 ☐ Scale 2

X Cate
Deputy Weighmaster

A STANDBY SURCHARGE WILL BE ASSESSED FOR LOADS THAT EXCEED 10 MINUTES UNLOADING TIME.

LIABILITY WAIVER

Cadman Materials, (Inc.) will not assume Liability for any property damage or any equipment damage for any delivery beyond the curb line.

Fuel Surcharge	
Sales Tax	
Total	
Standby Time	
This Tickets Grand Total	

No one available to sign, customer waives receipt signature. ☐	Received by Signature X	Print Name (Customer) X	Driver's Signature X

Arrive Job		Start Unloading		Finish Unloading		Standby Time		Customer's Initials X

CADMAN
HEIDELBERGCEMENTGroup®
(888) 322-6847 425-961-7100

WEIGHMASTER STATION
98785500
Everett Glenwood LND
6300 Glenwood Avenue
Everett, WA 98213

TICKET NO.	1120564146	TICKET TIME	11:54:44AM	DATE	7/22/2022
Customer No.	Payment Type	Customer Name			Order No.
7832096	Account	STRIDER CONST CO INC			10119468
Customer Job. No.	Customer P.O.			Map Ref.	Disp. Ord. #
	21NT			/	
Truck Type	Truck No.	Vehicle or License Plate No.		Trailer or License Plate No.	Zone
Truck & Trailer	SPR30TT				
Hauler/Carrier No.	Driver's Name	Delivered/Ordered		Load No.	Running Total
9388321		407.56 /		14	407.56

EV/P PORT OF EVERETT
2600 FEDERAL AVE
EVERETT

Product	Description	Total	Unit Price	Amount
99004	CLASS 2 SOILS DUMP (TN)	29.40		

SCALE WEIGHT	GROSS & TARE		
Gross 99,040 LB m	☒ Scale 1 ☐ Scale 2	A STANDBY SURCHARGE WILL BE ASSESSED FOR LOADS THAT EXCEED 10 MINUTES UNLOADING TIME.	Fuel Surcharge
Tare 40,240 LB/P.T.*			Sales Tax
Net 58,800 LB m	X Cate Deputy Weighmaster	**LIABILITY WAIVER** Cadman Materials, (Inc.) will not assume Liability for any property damage or any equipment damage for any delivery beyond the curb line.	**Total**

No one available to sign, customer waives receipt signature. ☐	Received by Signature	Print Name (Customer)	Driver's Signature	Standby Time
	X	X	X	

Arrive Job		Start Unloading		Finish Unloading		Standby Time		Customer's Initials	This Tickets Grand Total
								X	

CADMAN
HEIDELBERGCEMENTGroup
(888) 322-6847 425-961-7100

WEIGHMASTER STATION
98785500
Everett Glenwood LND
6300 Glenwood Avenue
Everett, WA 98213

TICKET NO.	TICKET TIME	DATE
1120564119	7:30:35AM	7/22/2022

Customer No.	Payment Type	Customer Name	Order No.
7832096	Account	STRIDER CONST CO INC	10119468

Customer Job. No.	Customer P.O.	Map Ref.	Disp. Ord. #
	21NT	/	

Truck Type	Truck No.	Vehicle or License Plate No.	Trailer or License Plate No.	Zone
Truck & Trailer	RIV58TT			

Hauler/Carrier No.	Driver's Name	Delivered/Ordered	Load No.	Running Total
7886596		61.96 /	2	61.96

EV/P PORT OF EVERETT
2600 FEDERAL AVE
EVERETT

Product	Description	Total	Unit Price	Amount
99004	CLASS 2 SOILS DUMP (TN)	31.78		

SCALE WEIGHT

Gross 104,500 LB m
Tare 40,940 LB/P.T.*
Net 63,560 LB m

GROSS & TARE

☒ Scale 1 ☐ Scale 2

X Cate
Deputy Weighmaster

A STANDBY SURCHARGE WILL BE ASSESSED FOR LOADS THAT EXCEED 10 MINUTES UNLOADING TIME.

LIABILITY WAIVER

Cadman Materials, (Inc.) will not assume Liability for any property damage or any equipment damage for any delivery beyond the curb line.

Fuel Surcharge	
Sales Tax	
Total	
Standby Time	

No one available to sign, customer waives receipt signature. ☐	Received by Signature	Print Name (Customer)	Driver's Signature
	X	X	X

Arrive Job		Start Unloading		Finish Unloading		Standby Time		Customer's Initials		This Tickets Grand Total	
								X			

CADMAN
HEIDELBERGCEMENTGroup
(888) 322-6847 425-961-7100

WEIGHMASTER STATION
98785500
Everett Glenwood LND
6300 Glenwood Avenue
Everett, WA 98213

TICKET NO.	1120564139	TICKET TIME	10:41:56AM	DATE	7/22/2022
Customer No.	Payment Type	Customer Name			Order No.
7832096	Account	STRIDER CONST CO INC			10119468
Customer Job. No.	Customer P.O.			Map Ref.	Disp. Ord. #
	21NT			/	
Truck Type	Truck No.	Vehicle or License Plate No.		Trailer or License Plate No.	Zone
Truck & Trailer	RIV58TT				
Hauler/Carrier No.	Driver's Name	Delivered/Ordered		Load No.	Running Total
7886596		320.61 /		11	320.61

EV/P PORT OF EVERETT
2600 FEDERAL AVE
EVERETT

Product	Description	Total	Unit Price	Amount
99004	CLASS 2 SOILS DUMP (TN)	31.59		

SCALE WEIGHT	GROSS & TARE		
Gross 104,120 LB m	[X] Scale 1 [ ] Scale 2	A STANDBY SURCHARGE WILL BE ASSESSED FOR LOADS THAT EXCEED 10 MINUTES UNLOADING TIME.	Fuel Surcharge
Tare 40,940 LB/P.T.*	X Cate	LIABILITY WAIVER	Sales Tax
Net 63,180 LB m	Deputy Weighmaster	Cadman Materials, (Inc.) will not assume Liability for any property damage or any equipment damage for any delivery beyond the curb line.	**Total**

No one available to sign, customer waives receipt signature. [ ]	Received by Signature	Print Name (Customer)	Driver's Signature	Standby Time
	X	X	X	

Arrive Job		Start Unloading		Finish Unloading		Standby Time		Customer's Initials	This Tickets Grand Total
								X	

CADMAN
HEIDELBERGCEMENTGroup
(888) 322-6847 425-961-7100

WEIGHMASTER STATION
98785500
Everett Glenwood LND
6300 Glenwood Avenue
Everett, WA 98213

TICKET NO.	1120564127	TICKET TIME	8:34:02AM	DATE	7/22/2022
Customer No.	Payment Type	Customer Name			Order No.
7832096	Account	STRIDER CONST CO INC			10119468
Customer Job. No.	Customer P.O.			Map Ref.	Disp. Ord. #
	21NT			/	
Truck Type	Truck No.	Vehicle or License Plate No.		Trailer or License Plate No.	Zone
Truck & Trailer	RIV58TT				
Hauler/Carrier No.	Driver's Name	Delivered/Ordered		Load No.	Running Total
7886596		175.16 /		6	175.16

EV/P PORT OF EVERETT
2600 FEDERAL AVE
EVERETT

Product	Description	Total	Unit Price	Amount
99004	CLASS 2 SOILS DUMP (TN)	31.92		

SCALE WEIGHT

Gross 104,780 LB m
Tare 40,940 LB/P.T.*
Net 63,840 LB m

GROSS & TARE

☒ Scale 1 ☐ Scale 2

X Cate
Deputy Weighmaster

A STANDBY SURCHARGE WILL BE ASSESSED FOR LOADS THAT EXCEED 10 MINUTES UNLOADING TIME.

LIABILITY WAIVER

Cadman Materials, (Inc.) will not assume Liability for any property damage or any equipment damage for any delivery beyond the curb line.

Fuel Surcharge	
Sales Tax	
Total	
Standby Time	
This Tickets Grand Total	

No one available to sign, customer waives receipt signature. ☐

Received by Signature X

Print Name (Customer) X

Driver's Signature X

Customer's Initials X

Arrive Job		Start Unloading		Finish Unloading		Standby Time	

CADMAN
HEIDELBERGCEMENTGroup
(888) 322-6847 425-961-7100

WEIGHMASTER STATION
98785500
Everett Glenwood LND
6300 Glenwood Avenue
Everett, WA 98213

TICKET NO.	1120564140	TICKET TIME	10:43:23AM	DATE	7/22/2022
Customer No.	Payment Type	Customer Name			Order No.
7832096	Account	STRIDER CONST CO INC			10119468
Customer Job. No.	Customer P.O.			Map Ref.	Disp. Ord. #
	21NT			/	
Truck Type	Truck No.	Vehicle or License Plate No.		Trailer or License Plate No.	Zone
Truck & Trailer	RIV60TT				
Hauler/Carrier No.	Driver's Name	Delivered/Ordered		Load No.	Running Total
7886596		350.17 /		12	350.17

EV/P PORT OF EVERETT
2600 FEDERAL AVE
EVERETT

Product	Description	Total	Unit Price	Amount
99004	CLASS 2 SOILS DUMP (TN)	29.56		

SCALE WEIGHT

Gross 100,300 LB m
Tare 41,180 LB/P.T.*
Net 59,120 LB m

GROSS & TARE

☒ Scale 1 ☐ Scale 2

X Cate
Deputy Weighmaster

A STANDBY SURCHARGE WILL BE ASSESSED FOR LOADS THAT EXCEED 10 MINUTES UNLOADING TIME.

LIABILITY WAIVER

Cadman Materials, (Inc.) will not assume Liability for any property damage or any equipment damage for any delivery beyond the curb line.

Fuel Surcharge	
Sales Tax	
Total	
Standby Time	
This Tickets Grand Total	

No one available to sign, customer waives receipt signature. ☐	Received by Signature	Print Name (Customer)	Driver's Signature
	X	X	X

Arrive Job		Start Unloading		Finish Unloading		Standby Time		Customer's Initials
								X

CADMAN
HEIDELBERGCEMENTGroup
(888) 322-6847 425-961-7100

WEIGHMASTER STATION
98785500
Everett Glenwood LND
6300 Glenwood Avenue
Everett, WA 98213

TICKET NO.	TICKET TIME	DATE
1120564128	8:40:33AM	7/22/2022

Customer No.	Payment Type	Customer Name	Order No.
7832096	Account	STRIDER CONST CO INC	10119468

Customer Job. No.	Customer P.O.	Map Ref.	Disp. Ord. #
	21NT	/	

Truck Type	Truck No.	Vehicle or License Plate No.	Trailer or License Plate No.	Zone
Truck & Trailer	RIV60TT			

Hauler/Carrier No.	Driver's Name	Delivered/Ordered	Load No.	Running Total
7886596		203.49 /	7	203.49

EV/P PORT OF EVERETT
2600 FEDERAL AVE
EVERETT

Product	Description	Total	Unit Price	Amount
99004	CLASS 2 SOILS DUMP (TN)	28.33		

SCALE WEIGHT	GROSS & TARE
Gross 97,840 LB m	☒ Scale 1 ☐ Scale 2
Tare 41,180 LB/P.T.*	X Cate Deputy Weighmaster
Net 56,660 LB m	

A STANDBY SURCHARGE WILL BE ASSESSED FOR LOADS THAT EXCEED 10 MINUTES UNLOADING TIME.

LIABILITY WAIVER

Cadman Materials, (Inc.) will not assume Liability for any property damage or any equipment damage for any delivery beyond the curb line.

Fuel Surcharge	
Sales Tax	
Total	
Standby Time	
This Tickets Grand Total	

No one available to sign, customer waives receipt signature. ☐	Received by Signature X	Print Name (Customer) X	Driver's Signature X

Arrive Job		Start Unloading		Finish Unloading		Standby Time		Customer's Initials X

CADMAN
HEIDELBERGCEMENTGroup®
(888) 322-6847 425-961-7100

WEIGHMASTER STATION
98785500
Everett Glenwood LND
6300 Glenwood Avenue
Everett, WA 98213

TICKET NO.	1120564122	TICKET TIME	7:45:21AM	DATE	7/22/2022
Customer No.	Payment Type	Customer Name			Order No.
7832096	Account	STRIDER CONST CO INC			10119468
Customer Job. No.	Customer P.O.			Map Ref.	Disp. Ord. #
	21NT			/	
Truck Type	Truck No.	Vehicle or License Plate No.		Trailer or License Plate No.	Zone
Truck & Trailer	RIV60TT				
Hauler/Carrier No.	Driver's Name	Delivered/Ordered		Load No.	Running Total
7886596		115.73 /		4	115.73

EV/P PORT OF EVERETT
2600 FEDERAL AVE
EVERETT

Product	Description	Total	Unit Price	Amount
99004	CLASS 2 SOILS DUMP (TN)	27.69		

SCALE WEIGHT

Gross 96,560 LB *
Tare 41,180 LB/P.T.*
Net 55,380 LB *

GROSS & TARE

[X] Scale 1 [ ] Scale 2

X Cate
Deputy Weighmaster

A STANDBY SURCHARGE WILL BE ASSESSED FOR LOADS THAT EXCEED 10 MINUTES UNLOADING TIME.

LIABILITY WAIVER

Cadman Materials, (Inc.) will not assume Liability for any property damage or any equipment damage for any delivery beyond the curb line.

Fuel Surcharge	
Sales Tax	
Total	
Standby Time	
This Tickets Grand Total	

No one available to sign, customer waives receipt signature. [ ]	Received by Signature X	Print Name (Customer) X	Driver's Signature X	Customer's Initials X

Arrive Job		Start Unloading		Finish Unloading		Standby Time	

CADMAN
HEIDELBERGCEMENTGroup
(888) 322-6847 425-961-7100

WEIGHMASTER STATION
98785500
Everett Glenwood LND
6300 Glenwood Avenue
Everett, WA 98213

TICKET NO.	1120564135	TICKET TIME	9:50:07AM	DATE	7/22/2022
Customer No.	Payment Type	Customer Name			Order No.
7832096	Account	STRIDER CONST CO INC			10119468
Customer Job. No.	Customer P.O.			Map Ref.	Disp. Ord. #
	21NT			/	
Truck Type	Truck No.	Vehicle or License Plate No.		Trailer or License Plate No.	Zone
Truck & Trailer	RIV56TT				
Hauler/Carrier No.	Driver's Name	Delivered/Ordered		Load No.	Running Total
7886596		289.02 /		10	289.02

EV/P PORT OF EVERETT
2600 FEDERAL AVE
EVERETT

Product	Description	Total	Unit Price	Amount
99004	CLASS 2 SOILS DUMP (TN)	29.65		

SCALE WEIGHT	GROSS & TARE		
Gross 99,720 LB m	[X] Scale 1 [ ] Scale 2	A STANDBY SURCHARGE WILL BE ASSESSED FOR LOADS THAT EXCEED 10 MINUTES UNLOADING TIME.	Fuel Surcharge
Tare 40,420 LB/P.T.*	X Cate	LIABILITY WAIVER	Sales Tax
Net 59,300 LB m	Deputy Weighmaster	Cadman Materials, (Inc.) will not assume Liability for any property damage or any equipment damage for any delivery beyond the curb line.	**Total**

No one available to sign, customer waives receipt signature. [ ]	Received by Signature X	Print Name (Customer) X	Driver's Signature X	Standby Time

Arrive Job		Start Unloading		Finish Unloading		Standby Time		Customer's Initials X	**This Tickets Grand Total**	

CADMAN
HEIDELBERGCEMENTGroup
(888) 322-6847 425-961-7100

WEIGHMASTER STATION
98785500
Everett Glenwood LND
6300 Glenwood Avenue
Everett, WA 98213

TICKET NO.	1120564129	TICKET TIME	8:44:31AM	DATE	7/22/2022
Customer No.	Payment Type	Customer Name			Order No.
7832096	Account	STRIDER CONST CO INC			10119468
Customer Job. No.	Customer P.O.		Map Ref.		Disp. Ord. #
	21NT		/		
Truck Type	Truck No.	Vehicle or License Plate No.	Trailer or License Plate No.		Zone
Truck & Trailer	RIV56TT				
Hauler/Carrier No.	Driver's Name	Delivered/Ordered	Load No.		Running Total
7886596		231.09 /	8		231.09

EV/P PORT OF EVERETT
2600 FEDERAL AVE
EVERETT

Product	Description	Total	Unit Price	Amount
99004	CLASS 2 SOILS DUMP (TN)	27.60		

SCALE WEIGHT

Gross 95,620 LB m
Tare 40,420 LB/P.T.*
Net 55,200 LB m

GROSS & TARE

[X] Scale 1 [ ] Scale 2

X Cate
Deputy Weighmaster

A STANDBY SURCHARGE WILL BE ASSESSED FOR LOADS THAT EXCEED 10 MINUTES UNLOADING TIME.

LIABILITY WAIVER

Cadman Materials, (Inc.) will not assume Liability for any property damage or any equipment damage for any delivery beyond the curb line.

Fuel Surcharge	
Sales Tax	
Total	
Standby Time	
This Tickets Grand Total	

No one available to sign, customer waives receipt signature. [ ]	Received by Signature X	Print Name (Customer) X	Driver's Signature X

Arrive Job		Start Unloading		Finish Unloading		Standby Time		Customer's Initials X

CADMAN
HEIDELBERGCEMENTGroup
(888) 322-6847 425-961-7100

WEIGHMASTER STATION
98785500
Everett Glenwood LND
6300 Glenwood Avenue
Everett, WA 98213

TICKET NO.	1120564121	TICKET TIME	7:41:06AM	DATE	7/22/2022
Customer No.	Payment Type	Customer Name			Order No.
7832096	Account	STRIDER CONST CO INC			10119468
Customer Job. No.	Customer P.O.			Map Ref.	Disp. Ord. #
	21NT			/	
Truck Type	Truck No.	Vehicle or License Plate No.		Trailer or License Plate No.	Zone
Truck & Trailer	RIV56TT				
Hauler/Carrier No.	Driver's Name	Delivered/Ordered		Load No.	Running Total
7886596		88.04 /		3	88.04

EV/P PORT OF EVERETT
2600 FEDERAL AVE
EVERETT

Product	Description	Total	Unit Price	Amount
99004	CLASS 2 SOILS DUMP (TN)	26.08		

SCALE WEIGHT	GROSS & TARE			
Gross 92,580 LB m	☒ Scale 1 ☐ Scale 2	A STANDBY SURCHARGE WILL BE ASSESSED FOR LOADS THAT EXCEED 10 MINUTES UNLOADING TIME.	Fuel Surcharge	
Tare 40,420 LB/P.T.*		LIABILITY WAIVER	Sales Tax	
Net 52,160 LB m	X Cate Deputy Weighmaster	Cadman Materials, (Inc.) will not assume Liability for any property damage or any equipment damage for any delivery beyond the curb line.	**Total**	

No one available to sign, customer waives receipt signature. ☐	Received by Signature X	Print Name (Customer) X	Driver's Signature X	Standby Time	

Arrive Job		Start Unloading		Finish Unloading		Standby Time		Customer's Initials X	This Tickets Grand Total	

Bid Item 13

Republic Services

Tickets to date = 139 EA
Total Tonnage = 3342.95 TN

Total Containers Hauled to Date = 139 EA
Total Haul Month of Aug = 0 EA

Use 25 Ton estimate for other loads
(139 EA - 121 EA) * 25 TN = 450 TN

Total thru month of July = 3342.95 + 450 = 3792.95 TN

Waste Management

Total Haul = 994.15 + 1681 = 2675.15TN

Cadman

11,303.58 TN

Total Billed to Date = 3792.95 + 2675.15 + 11,303.58
= 17,771.68 TN

Everett Incl. Snohomish County --
WA ROOSEVELT , WA

2A **4867402**

Denise B.

014209 - Strider Construction Co. Inc.
4721 Northwest Road
Bellingham, WA 98225

7/16/22 12:14 pm 7/16/22 12:31 pm
2235 GCEU431477

Contract:MC-19415

BNSF231157

Scale In	GROSS WEIGHT	109,100	NET TONS	30.60	INBOUND
Scale Out	TARE WEIGHT	47,900	NET WEIGHT	61,200	INVOICE

28.00	YD	Tracking QTY	
30.60	tn	Cont Soil	Origin:Everett 100%

CHANGE:
CHECK :

Everett Incl. Snohomish County --
WA ROOSEVELT , WA

2A **4867506**

Denise B.

014209 - Strider Construction Co. Inc.
4721 Northwest Road
Bellingham, WA 98225

7/16/22 3:22 pm 7/16/22 3:49 pm
1454 GCEU432163

Contract:MC-19415

DTTX27370

Scale In	GROSS WEIGHT	100,380	NET TONS	26.90	INBOUND
Scale Out	TARE WEIGHT	46,580	NET WEIGHT	53,800	INVOICE

28.00	YD	Tracking QTY	
26.90	tn	Cont Soil	Origin:Everett 100%

CHANGE:
CHECK :

Everett Incl. Snohomish County --
WA ROOSEVELT , WA

2A **4867898**

Denise B.

014209 - Strider Construction Co. Inc.
4721 Northwest Road
Bellingham, WA 98225

7/22/22 11:49 am 7/22/22 12:25 pm

2235 TOLU468440

Contract:MC-19415

BNSF230030

Scale In	GROSS WEIGHT	107,640	NET TONS	29.51	INBOUND
Manual Out	TARE WEIGHT	48,620	NET WEIGHT	59,020	INVOICE

28.00	YD	Tracking QTY	
29.51	tn	Cont Soil	Origin:Everett 100%

CHANGE:
CHECK :

Everett Incl. Snohomish County --
WA ROOSEVELT , WA

2A **4867896**

Denise B.

014209 - Strider Construction Co. Inc.
4721 Northwest Road
Bellingham, WA 98225

7/22/22 11:52 am 7/22/22 12:17 pm

1454 GCEU426305

Contract:MC-19415

BNSF230030

Scale In	GROSS WEIGHT	113,620	NET TONS	32.29	INBOUND
Scale Out	TARE WEIGHT	49,040	NET WEIGHT	64,580	INVOICE

28.00	YD	Tracking QTY	
32.29	tn	Cont Soil	Origin:Everett 100%

CHANGE:
CHECK :

Everett Incl. Snohomish County --
WA ROOSEVELT , WA

2A **4867901**

Denise B.

014209 - Strider Construction Co. Inc.
4721 Northwest Road
Bellingham, WA 98225

7/22/22 1:03 pm 7/22/22 1:33 pm
2235 TRLU901573

Contract:MC-19415

BNSF230030

Scale In	GROSS WEIGHT	105,440	NET TONS	29.25	INBOUND
Scale Out	TARE WEIGHT	46,940	NET WEIGHT	58,500	INVOICE

28.00	YD	Tracking QTY	
29.25	tn	Cont Soil	Origin:Everett 100%

CHANGE:
CHECK :

Everett Incl. Snohomish County --
WA ROOSEVELT , WA

2A **4868133**

IN - Brandie M. OUT - David N.

014209 - Strider Construction Co. Inc.
4721 Northwest Road
Bellingham, WA 98225

7/26/22 2:16 pm 7/26/22 5:32 pm
2234 GCEU430734

Contract:MC-19415

DTTX620703

Scale In	GROSS WEIGHT	111,680	NET TONS	32.53	INBOUND
Manual Out	TARE WEIGHT	46,620	NET WEIGHT	65,060	INVOICE

28.00	YD	Tracking QTY	
32.53	tn	Cont Soil	Origin:Everett 100%

CHANGE:
CHECK :

Everett Incl. Snohomish County --
WA ROOSEVELT , WA

2A **4868152**

David N.

014209 - Strider Construction Co. Inc.
4721 Northwest Road
Bellingham, WA 98225

7/26/22 6:07 pm 7/26/22 6:07 pm

0331 TOLU422275

Contract:MC-19415

DTTX620322

Manual In	GROSS WEIGHT	104,380	NET TONS	27.86	INBOUND
Manual Out	TARE WEIGHT	48,660	NET WEIGHT	55,720	INVOICE

28.00	YD	Tracking QTY	
27.86	tn	Cont Soil	Origin:Everett 100%

CHANGE:

CHECK :

Everett Incl. Snohomish County --
WA ROOSEVELT , WA

2A **4868162**

David N.

014209 - Strider Construction Co. Inc.
4721 Northwest Road
Bellingham, WA 98225

7/26/22 6:24 pm 7/26/22 6:24 pm

0331 TOLU456155

Contract:MC-19415

DTTX620322

Manual In	GROSS WEIGHT	106,520	NET TONS	29.29	INBOUND
Manual Out	TARE WEIGHT	47,940	NET WEIGHT	58,580	INVOICE

28.00	YD	Tracking QTY	
29.29	tn	Cont Soil	Origin:Everett 100%

CHANGE:

CHECK :

Everett Incl. Snohomish County --
WA ROOSEVELT , WA

2A **4868244**

Brandie M.

014209 - Strider Construction Co. Inc.
4721 Northwest Road
Bellingham, WA 98225

7/27/22 7:32 am 7/27/22 7:53 am

5223 GCEU425323

Contract:MC-19415

DTTX427877

Scale In	GROSS WEIGHT	105,480	NET TONS	29.53	INBOUND
Scale Out	TARE WEIGHT	46,420	NET WEIGHT	59,060	INVOICE

28.00	YD	Tracking QTY	
29.53	tn	Cont Soil	Origin:Everett 100%

CHANGE:

CHECK :

Everett Incl. Snohomish County --
WA ROOSEVELT , WA

2A **4868267**

Brandie M.

014209 - Strider Construction Co. Inc.
4721 Northwest Road
Bellingham, WA 98225

7/27/22 8:25 am 7/27/22 8:42 am

8281 TOLU424194

Contract:MC-19415

DTTX427877

Scale In	GROSS WEIGHT	105,580	NET TONS	28.30	INBOUND
Scale Out	TARE WEIGHT	48,980	NET WEIGHT	56,600	INVOICE

28.00	YD	Tracking QTY	
28.30	tn	Cont Soil	Origin:Everett 100%

CHANGE:

CHECK :

Everett Incl. Snohomish County --
WA ROOSEVELT , WA

2A **4868282**

Brandie M.

014209 - Strider Construction Co. Inc.
4721 Northwest Road
Bellingham, WA 98225

7/27/22 9:20 am 7/27/22 9:37 am

5223 TRLU901016

Contract:MC-19415

DTTX428055

Scale In	GROSS WEIGHT	107,560	NET TONS	30.50	INBOUND
Scale Out	TARE WEIGHT	46,560	NET WEIGHT	61,000	INVOICE

28.00	YD	Tracking QTY	
30.50	tn	Cont Soil	Origin:Everett 100%

CHANGE:

CHECK :

Everett Incl. Snohomish County --
WA ROOSEVELT , WA

2A **4868458**

Denise B.

014209 - Strider Construction Co. Inc.
4721 Northwest Road
Bellingham, WA 98225

7/29/22 9:34 am 7/29/22 9:56 am

8281 TOLU459921

Contract:MC-19415

DTTX620703

Scale In	GROSS WEIGHT	112,840	NET TONS	32.95	INBOUND
Scale Out	TARE WEIGHT	46,940	NET WEIGHT	65,900	INVOICE

28.00	YD	Tracking QTY	
32.95	tn	Cont Soil	Origin:Everett 100%

CHANGE:

CHECK :

Everett Incl. Snohomish County --
WA ROOSEVELT , WA

2A **4868462**

Denise B.

014209 - Strider Construction Co. Inc.
4721 Northwest Road
Bellingham, WA 98225

7/29/22 11:07 am 7/29/22 11:24 am

0331 GCEU425860

Contract:MC-19415

DTTX458902

Scale In	GROSS WEIGHT	102,080	NET TONS	27.19	INBOUND
Scale Out	TARE WEIGHT	47,700	NET WEIGHT	54,380	INVOICE

28.00	YD	Tracking QTY	
27.19	tn	Cont Soil	Origin:Everett 100%

CHANGE:
CHECK :

Everett Incl. Snohomish County --
WA ROOSEVELT , WA

2A **4868463**

Denise B.

014209 - Strider Construction Co. Inc.
4721 Northwest Road
Bellingham, WA 98225

7/29/22 11:09 am 7/29/22 11:25 am

7331 TOLU444296

Contract:MC-19415

DTTX458902

Scale In	GROSS WEIGHT	104,280	NET TONS	28.39	INBOUND
Scale Out	TARE WEIGHT	47,500	NET WEIGHT	56,780	INVOICE

28.00	YD	Tracking QTY	
28.39	tn	Cont Soil	Origin:Everett 100%

CHANGE:
CHECK :

WASTE MANAGEMENT

Alaska Street
70 S Alaska Street
Seattle, WA, 98134

Original
Ticket# 178994

Ph: 206 763 5025

Customer Name STRIDER CONSTRUCTION STRIDER
Ticket Date 08/26/2022
Payment Type Credit Account
Manual Ticket#
Route AK
Hauling Ticket#
Destination
PO# 116938WA

Carrier SELF HAULER *
Vehicle# 28T
Container
Driver JOSH
Check#
Billing# 0000433
Grid

Volume

	Time	Scale	Operator		
In	08/26/2022 08:15:14	SCALE 1	galtheim	Inbound	Gross 95460 lb*
Out	08/26/2022 08:15:14		galtheim		Tare 37600 lb*
			* Manual Weight		Net 57860 lb
					Tons 28.93

Comments RIVER-GA

	Product	LD%	Qty	UOM	Rate	Tax	Amount	Origin
1	Daily Cover-PCS-Tons-Pet	100	28.93	Tons				SNOHOMISH
2	EVF-P-Standard Environme	100		%				SNOHOMISH
3	FUEL-Fuel Surcharge - Tr	100		%				SNOHOMISH
4	GONDOLA T-GONDOLA TON	100	28.93	Tons				SNOHOMISH

Total Tax
Total Ticket

Driver`s Signature

WASTE MANAGEMENT

Alaska Street
70 S Alaska Street
Seattle, WA, 98134

Original
Ticket# 178997

Ph: 206 763 5025

Customer Name STRIDER CONSTRUCTION STRIDER
Ticket Date 08/26/2022
Payment Type Credit Account
Manual Ticket#
Route AK
Hauling Ticket#
Destination
PO# 116938WA

Carrier SELF HAULER *
Vehicle# 58
Container
Driver JASON
Check#
Billing# 0000433
Grid

Volume

	Time	Scale	Operator			
In	08/26/2022 08:49:35	SCALE 1	galtheim	Inbound	Gross	99160 lb*
Out	08/26/2022 08:49:35		galtheim		Tare	40720 lb*
			* Manual Weight		Net	58440 lb
					Tons	29.22

Comments RIVER-GA

	Product	LD%	Qty	UOM	Rate	Tax	Amount	Origin
1	Daily Cover-PCS-Tons-Pet	100	29.22	Tons				SNOHOMISH
2	EVF-P-Standard Environme	100		%				SNOHOMISH
3	FUEL-Fuel Surcharge - Tr	100		%				SNOHOMISH
4	GONDOLA T-GONDOLA TON	100	29.22	Tons				SNOHOMISH

Total Tax
Total Ticket

Driver`s Signature

WASTE MANAGEMENT

Alaska Street
70 S Alaska Street
Seattle, WA, 98134

Ph: 206 763 5025

Original
Ticket# 178999

Customer Name STRIDER CONSTRUCTION STRIDER
Ticket Date 08/26/2022
Payment Type Credit Account
Manual Ticket#
Route AK
Hauling Ticket#
Destination
PO# 116938WA

Carrier SELF HAULER *
Vehicle# 52
Container
Driver JUSTIN
Check#
Billing# 0000433
Grid

Volume

	Time	Scale	Operator	Inbound		
In	08/26/2022 09:43:17	SCALE 1	galtheim		Gross	97620 lb
Out	08/26/2022 09:43:17		galtheim		Tare	40160 lb
					Net	57460 lb
					Tons	28.73

Comments RIVER-GA

	Product	LD%	Qty	UOM	Rate	Tax	Amount	Origin
1	Daily Cover-PCS-Tons-Pet	100	28.73	Tons				SNOHOMISH
2	EVF-P-Standard Environme	100		%				SNOHOMISH
3	FUEL-Fuel Surcharge - Tr	100		%				SNOHOMISH
4	GONDOLA T-GONDOLA TON	100	28.73	Tons				SNOHOMISH

Total Tax
Total Ticket

Driver`s Signature

WASTE MANAGEMENT

Alaska Street
70 S Alaska Street
Seattle, WA, 98134

Original
Ticket# 178996

Ph: 206 763 5025

Customer Name STRIDER CONSTRUCTION STRIDER
Ticket Date 08/26/2022
Payment Type Credit Account
Manual Ticket#
Route AK
Hauling Ticket#
Destination
PO# 116938WA

Carrier SELF HAULER *
Vehicle# 56
Container
Driver ED
Check#
Billing# 0000433
Grid

Volume

	Time	Scale	Operator	Inbound		
In	08/26/2022 08:24:27	SCALE 1	galtheim		Gross	93840 lb
Out	08/26/2022 08:24:27		galtheim		Tare	41060 lb
					Net	52780 lb
					Tons	26.39

Comments RIVER-GA

	Product	LD%	Qty	UOM	Rate	Tax	Amount	Origin
1	Daily Cover-PCS-Tons-Pet	100	26.39	Tons				SNOHOMISH
2	EVF-P-Standard Environme	100		%				SNOHOMISH
3	FUEL-Fuel Surcharge - Tr	100		%				SNOHOMISH
4	GONDOLA T-GONDOLA TON	100	26.39	Tons				SNOHOMISH

Total Tax
Total Ticket

Driver`s Signature

WASTE MANAGEMENT

Alaska Street
70 S Alaska Street
Seattle, WA, 98134

Ph: 206 763 5025

Original
Ticket# 178998

Customer Name STRIDER CONSTRUCTION STRIDER
Ticket Date 08/26/2022
Payment Type Credit Account
Manual Ticket#
Route AK
Hauling Ticket#
Destination
PO# 116938WA

Carrier SELF HAULER *
Vehicle# 29T
Container
Driver SCOOTER
Check#
Billing# 0000433
Grid

Volume

	Time	Scale	Operator	Inbound		
In	08/26/2022 09:00:12	SCALE 1	galtheim		Gross	89660 lb
Out	08/26/2022 09:00:12		galtheim		Tare	37480 lb
					Net	52180 lb
					Tons	26.09

Comments RIVER-GA

	Product	LD%	Qty	UOM	Rate	Tax	Amount	Origin
1	Daily Cover-PCS-Tons-Pet	100	26.09	Tons				SNOHOMISH
2	EVF-P-Standard Environme	100		%				
3	FUEL-Fuel Surcharge - Tr	100		%				
4	GONDOLA T-GONDOLA TON	100	26.09	Tons				

Total Tax
Total Ticket

Driver`s Signature

WASTE MANAGEMENT

Alaska Street
70 S Alaska Street
Seattle, WA, 98134

Ph: 206 763 5025

Original
Ticket# 178995

Customer Name STRIDER CONSTRUCTION STRIDER
Ticket Date 08/26/2022
Payment Type Credit Account
Manual Ticket#
Route AK
Hauling Ticket#
Destination
PO# 116938WA

Carrier SELF HAULER *
Vehicle# 62T
Container
Driver WYATT
Check#
Billing# 0000433
Grid

Volume

	Time	Scale	Operator	Inbound		
In	08/26/2022 08:17:29	SCALE 1	galtheim		Gross	97860 lb*
Out	08/26/2022 08:17:29		galtheim		Tare	41060 lb*
			* Manual Weight		Net	56800 lb
					Tons	28.40

Comments RIVER-GA

	Product	LD%	Qty	UOM	Rate	Tax	Amount	Origin
1	Daily Cover-PCS-Tons-Pet	100	28.40	Tons				SNOHOMISH
2	EVF-P-Standard Environme	100		%				SNOHOMISH
3	FUEL-Fuel Surcharge - Tr	100		%				SNOHOMISH
4	GONDOLA T-GONDOLA TON	100	28.40	Tons				SNOHOMISH

Total Tax
Total Ticket

Driver`s Signature

WASTE MANAGEMENT

Alaska Street
70 S Alaska Street
Seattle, WA, 98134

Original
Ticket# 178854

Ph: 206 763 5025

Customer Name STRIDER CONSTRUCTION STRIDER
Ticket Date 08/23/2022
Payment Type Credit Account
Manual Ticket#
Route AK
Hauling Ticket#
Destination
PO# 116938WA

Carrier SELF HAULER *
Vehicle# 52
Container
Driver JUSTIN
Check#
Billing# 0000433
Grid

Volume

	Time	Scale	Operator	Inbound		
In	08/23/2022 08:43:52	SCALE 1	galtheim		Gross	88760 lb
Out	08/23/2022 08:52:17	SCALE 1	galtheim		Tare	40160 lb
					Net	48600 lb
					Tons	24.30

Comments RIVER-GA

	Product	LD%	Qty	UOM	Rate	Tax	Amount	Origin
1	Daily Cover-PCS-Tons-Pet	100	24.30	Tons				SNOHOMISH
2	EVF-P-Standard Environme	100		%				SNOHOMISH
3	FUEL-Fuel Surcharge - Tr	100		%				SNOHOMISH
4	GONDOLA T-GONDOLA TON	100	24.30	Tons				SNOHOMISH

Total Tax
Total Ticket

Driver`s Signature

WASTE MANAGEMENT

Alaska Street
70 S Alaska Street
Seattle, WA, 98134

Ph: 206 763 5025

Original
Ticket# 178866

Customer Name STRIDER CONSTRUCTION STRIDER
Ticket Date 08/23/2022
Payment Type Credit Account
Manual Ticket#
Route AK
Hauling Ticket#
Destination
PO# 116938WA

Carrier SELF HAULER *
Vehicle# 52
Container
Driver JUSTIN
Check#
Billing# 0000433
Grid

Volume

	Time	Scale	Operator	Inbound
In	08/23/2022 11:11:12	SCALE 1	galtheim	
Out	08/23/2022 11:11:12		galtheim	

Gross	101300 lb
Tare	40160 lb
Net	61140 lb
Tons	30.57

Comments RIVER-GA

	Product	LD%	Qty	UOM	Rate	Tax	Amount	Origin
1	Daily Cover-PCS-Tons-Pet	100	30.57	Tons				SNOHOMISH
2	EVF-P-Standard Environme	100		%				
3	FUEL-Fuel Surcharge - Tr	100		%				
4	GONDOLA T-GONDOLA TON	100	30.57	Tons				

Total Tax
Total Ticket

Driver`s Signature

WASTE MANAGEMENT

Alaska Street
70 S Alaska Street
Seattle, WA, 98134

Ph: 206 763 5025

Original
Ticket# 178865

Customer Name	STRIDER CONSTRUCTION STRIDER	Carrier	SELF HAULER *
Ticket Date	08/23/2022	Vehicle#	29T
Payment Type	Credit Account	Container	
Manual Ticket#		Driver	SCOOTER
Route	AK	Check#	
Hauling Ticket#		Billing#	0000433
Destination		Grid	
PO#	116938WA		

Volume

	Time	Scale	Operator	Inbound		
In	08/23/2022 10:44:15	SCALE 1	galtheim		Gross	53720 lb
Out	08/23/2022 10:44:15		galtheim		Tare	37480 lb
					Net	16240 lb
					Tons	8.12

Comments RIVER-GA

	Product	LD%	Qty	UOM	Rate	Tax	Amount	Origin
1	Daily Cover-PCS-Tons-Pet	100	8.12	Tons				SNOHOMISH
2	EVF-P-Standard Environme	100		%				
3	FUEL-Fuel Surcharge - Tr	100		%				
4	GONDOLA T-GONDOLA TON	100	8.12	Tons				

Total Tax
Total Ticket

Driver`s Signature

WASTE MANAGEMENT

Alaska Street
70 S Alaska Street
Seattle, WA, 98134

Ph: 206 763 5025

Original
Ticket# 178852

Customer Name STRIDER CONSTRUCTION STRIDER
Ticket Date 08/23/2022
Payment Type Credit Account
Manual Ticket#
Route AK
Hauling Ticket#
Destination
PO# 116938WA

Carrier SELF HAULER *
Vehicle# 29T
Container
Driver SCOOTER
Check#
Billing# 0000433
Grid

Volume

	Time	Scale	Operator	Inbound
In	08/23/2022 08:15:28	SCALE 1	galtheim	
Out	08/23/2022 08:25:56	SCALE 1	galtheim	

Gross	90500 lb
Tare	37480 lb
Net	53020 lb
Tons	26.51

Comments RIVER-GA

	Product	LD%	Qty	UOM	Rate	Tax	Amount	Origin
1	Daily Cover-PCS-Tons-Pet	100	26.51	Tons				SNOHOMISH
2	EVF-P-Standard Environme	100		%				SNOHOMISH
3	FUEL-Fuel Surcharge - Tr	100		%				SNOHOMISH
4	GONDOLA T-GONDOLA TON	100	26.51	Tons				SNOHOMISH

Total Tax
Total Ticket

Driver`s Signature

WASTE MANAGEMENT

Alaska Street
70 S Alaska Street
Seattle, WA, 98134

Original
Ticket# 178863

Ph: 206 763 5025

Customer Name STRIDER CONSTRUCTION STRIDER
Ticket Date 08/23/2022
Payment Type Credit Account
Manual Ticket#
Route AK
Hauling Ticket#
Destination
PO# 116938WA

Carrier SELF HAULER *
Vehicle# 58
Container
Driver JASON
Check#
Billing# 0000433
Grid

Volume

	Time	Scale	Operator	Inbound		
In	08/23/2022 10:34:30	SCALE 1	galtheim		Gross	105480 lb
Out	08/23/2022 10:34:30		galtheim		Tare	40720 lb
					Net	64760 lb
					Tons	32.38

Comments RIVER-GA

	Product	LD%	Qty	UOM	Rate	Tax	Amount	Origin
1	Daily Cover-PCS-Tons-Pet	100	32.38	Tons				SNOHOMISH
2	EVF-P-Standard Environme	100		%				
3	FUEL-Fuel Surcharge - Tr	100		%				
4	GONDOLA T-GONDOLA TON	100	32.38	Tons				

Total Tax
Total Ticket

Driver`s Signature

WASTE MANAGEMENT

Alaska Street
70 S Alaska Street
Seattle, WA, 98134

Original
Ticket# 178851

Ph: 206 763 5025

Customer Name STRIDER CONSTRUCTION STRIDER
Ticket Date 08/23/2022
Payment Type Credit Account
Manual Ticket#
Route AK
Hauling Ticket#
Destination
PO# 116938WA

Carrier SELF HAULER *
Vehicle# 58
Container
Driver JASON
Check#
Billing# 0000433
Grid

Volume

	Time	Scale	Operator	Inbound		
In	08/23/2022 08:11:41	SCALE 1	galtheim		Gross	92960 lb*
Out	08/23/2022 08:11:41		galtheim		Tare	40720 lb*
			* Manual Weight		Net	52240 lb
					Tons	26.12

Comments RIVER-GA

	Product	LD%	Qty	UOM	Rate	Tax	Amount	Origin
1	Daily Cover-PCS-Tons-Pet	100	26.12	Tons				SNOHOMISH
2	EVF-P-Standard Environme	100		%				
3	FUEL-Fuel Surcharge - Tr	100		%				
4	GONDOLA T-GONDOLA TON	100	26.12	Tons				

Total Tax
Total Ticket

Driver`s Signature

WASTE MANAGEMENT

Alaska Street
70 S Alaska Street
Seattle, WA, 98134

Original
Ticket# 178860

Ph: 206 763 5025

Customer Name STRIDER CONSTRUCTION STRIDER
Ticket Date 08/23/2022
Payment Type Credit Account
Manual Ticket#
Route AK
Hauling Ticket#
Destination
PO# 116938WA

Carrier SELF HAULER *
Vehicle# 28T
Container
Driver JOSH
Check#
Billing# 0000433
Grid

Volume

	Time	Scale	Operator	Inbound		
In	08/23/2022 10:19:16	SCALE 1	galtheim		Gross	97780 lb
Out	08/23/2022 10:19:16		galtheim		Tare	37600 lb
					Net	60180 lb
					Tons	30.09

Comments RIVER-GA

	Product	LD%	Qty	UOM	Rate	Tax	Amount	Origin
1	Daily Cover-PCS-Tons-Pet	100	30.09	Tons				SNOHOMISH
2	EVF-P-Standard Environme	100		%				SNOHOMISH
3	FUEL-Fuel Surcharge - Tr	100		%				SNOHOMISH
4	GONDOLA T-GONDOLA TON	100	30.09	Tons				SNOHOMISH

Total Tax
Total Ticket

Driver`s Signature

WASTE MANAGEMENT

Alaska Street
70 S Alaska Street
Seattle, WA, 98134

Original
Ticket# 178849

Ph: 206 763 5025

Customer Name STRIDER CONSTRUCTION STRIDER
Ticket Date 08/23/2022
Payment Type Credit Account
Manual Ticket#
Route AK
Hauling Ticket#
Destination
PO# 116938WA

Carrier SELF HAULER *
Vehicle# 28T
Container
Driver JOSH
Check#
Billing# 0000433
Grid

Volume

	Time	Scale	Operator	Inbound
In	08/23/2022 07:48:27	SCALE 1	galtheim	
Out	08/23/2022 07:57:54	SCALE 1	galtheim	

Gross	93000 lb
Tare	37600 lb
Net	55400 lb
Tons	27.70

Comments RIVER-GA

	Product	LD%	Qty	UOM	Rate	Tax	Amount	Origin
1	Daily Cover-PCS-Tons-Pet	100	27.70	Tons				SNOHOMISH
2	EVF-P-Standard Environme	100		%				SNOHOMISH
3	FUEL-Fuel Surcharge - Tr	100		%				SNOHOMISH
4	GONDOLA T-GONDOLA TON	100	27.70	Tons				SNOHOMISH

Total Tax
Total Ticket

Driver`s Signature

WASTE MANAGEMENT

Alaska Street
70 S Alaska Street
Seattle, WA, 98134

Original
Ticket# 178859
Ph: 206 763 5025

Customer Name STRIDER CONSTRUCTION STRIDER
Ticket Date 08/23/2022
Payment Type Credit Account
Manual Ticket#
Route AK
Hauling Ticket#
Destination
PO# 116938WA

Carrier SELF HAULER *
Vehicle# 62T
Container
Driver WYATT
Check#
Billing# 0000433
Grid

Volume

	Time	Scale	Operator	Inbound
In	08/23/2022 10:05:54	SCALE 1	galtheim	
Out	08/23/2022 10:05:54		galtheim	

Gross	103120 lb
Tare	41060 lb
Net	62060 lb
Tons	31.03

Comments RIVER-GA

	Product	LD%	Qty	UOM	Rate	Tax	Amount	Origin
1	Daily Cover-PCS-Tons-Pet	100	31.03	Tons				SNOHOMISH
2	EVF-P-Standard Environme	100		%				SNOHOMISH
3	FUEL-Fuel Surcharge - Tr	100		%				SNOHOMISH
4	GONDOLA T-GONDOLA TON	100	31.03	Tons				SNOHOMISH

Total Tax
Total Ticket

Driver`s Signature

WASTE MANAGEMENT

Alaska Street
70 S Alaska Street
Seattle, WA, 98134

Ph: 206 763 5025

Original
Ticket# 178847

Customer Name STRIDER CONSTRUCTION STRIDER
Ticket Date 08/23/2022
Payment Type Credit Account
Manual Ticket#
Route AK
Hauling Ticket#
Destination
PO# 116938WA

Carrier SELF HAULER *
Vehicle# 62T
Container
Driver WYATT
Check#
Billing# 0000433
Grid

Volume

	Time	Scale	Operator	Inbound		
In	08/23/2022 07:33:09	SCALE 1	galtheim		Gross	95600 lb
Out	08/23/2022 07:43:57	SCALE 1	galtheim		Tare	41060 lb
					Net	54540 lb
					Tons	27.27

Comments RIVER-GA

	Product	LD%	Qty	UOM	Rate	Tax	Amount	Origin
1	Daily Cover-PCS-Tons-Pet	100	27.27	Tons				SNOHOMISH
2	EVF-P-Standard Environme	100		%				SNOHOMISH
3	FUEL-Fuel Surcharge - Tr	100		%				SNOHOMISH
4	GONDOLA T-GONDOLA TON	100	27.27	Tons				SNOHOMISH

Total Tax
Total Ticket

Driver`s Signature

WASTE MANAGEMENT

Alaska Street
70 S Alaska Street
Seattle, WA, 98134

Ph: 206 763 5025

Original
Ticket# 178872

Customer Name STRIDER CONSTRUCTION STRIDER
Ticket Date 08/23/2022
Payment Type Credit Account
Manual Ticket#
Route AK
Hauling Ticket#
Destination
PO# 116938WA

Carrier SELF HAULER *
Vehicle# 62T
Container
Driver WYATT
Check#
Billing# 0000433
Grid

Volume

	Time	Scale	Operator	Inbound
In	08/23/2022 12:36:30	SCALE 1	galtheim	
Out	08/23/2022 12:36:30		galtheim	

Gross	97960 lb
Tare	41060 lb
Net	56900 lb
Tons	28.45

Comments RIVER-GA

	Product	LD%	Qty	UOM	Rate	Tax	Amount	Origin
1	Daily Cover-PCS-Tons-Pet	100	28.45	Tons				SNOHOMISH
2	EVF-P-Standard Environme	100		%				SNOHOMISH
3	FUEL-Fuel Surcharge - Tr	100		%				SNOHOMISH
4	GONDOLA T-GONDOLA TON	100	28.45	Tons				SNOHOMISH

Total Tax
Total Ticket

Driver`s Signature

WASTE MANAGEMENT

Alaska Street
70 S Alaska Street
Seattle, WA, 98134

Ph: 206 763 5025

Original
Ticket# 178882

Customer Name STRIDER CONSTRUCTION STRIDER
Ticket Date 08/24/2022
Payment Type Credit Account
Manual Ticket#
Route AK
Hauling Ticket#
Destination
PO# 116938WA

Carrier SELF HAULER *
Vehicle# 58
Container
Driver JASON
Check#
Billing# 0000433
Grid

Volume

	Time	Scale	Operator	Inbound		
In	08/24/2022 07:01:11	SCALE 1	galtheim		Gross	104240 lb
Out	08/24/2022 07:01:11		galtheim		Tare	40720 lb
					Net	63520 lb
					Tons	31.76

Comments RIVER-GA

	Product	LD%	Qty	UOM	Rate	Tax	Amount	Origin
1	Daily Cover-PCS-Tons-Pet	100	31.76	Tons				SNOHOMISH
2	EVF-P-Standard Environme	100		%				
3	FUEL-Fuel Surcharge - Tr	100		%				
4	GONDOLA T-GONDOLA TON	100	31.76	Tons				

Total Tax
Total Ticket

Driver`s Signature

WASTE MANAGEMENT

Alaska Street
70 S Alaska Street
Seattle, WA, 98134

Ph: 206 763 5025

Original
Ticket# 178875

Customer Name STRIDER CONSTRUCTION STRIDER
Ticket Date 08/23/2022
Payment Type Credit Account
Manual Ticket#
Route AK
Hauling Ticket#
Destination
PO# 116938WA

Carrier SELF HAULER *
Vehicle# 58
Container
Driver JASON
Check#
Billing# 0000433
Grid

Volume

	Time	Scale	Operator	Inbound		
In	08/23/2022 13:06:25	SCALE 1	galtheim		Gross	112200 lb
Out	08/23/2022 13:06:25		galtheim		Tare	40720 lb
					Net	71480 lb
					Tons	35.74

Comments RIVER-GA

	Product	LD%	Qty	UOM	Rate	Tax	Amount	Origin
1	Daily Cover-PCS-Tons-Pet	100	35.74	Tons				SNOHOMISH
2	EVF-P-Standard Environme	100		%				SNOHOMISH
3	FUEL-Fuel Surcharge - Tr	100		%				SNOHOMISH
4	GONDOLA T-GONDOLA TON	100	35.74	Tons				SNOHOMISH

Total Tax
Total Ticket

Driver`s Signature

WASTE MANAGEMENT

Alaska Street
70 S Alaska Street
Seattle, WA, 98134

Ph: 206 763 5025

Original
Ticket# 178877

Customer Name STRIDER CONSTRUCTION STRIDER
Ticket Date 08/23/2022
Payment Type Credit Account
Manual Ticket#
Route AK
Hauling Ticket#
Destination
PO# 116938WA

Carrier SELF HAULER *
Vehicle# 29T
Container
Driver SCOOTER
Check#
Billing# 0000433
Grid

Volume

	Time	Scale	Operator	Inbound		
In	08/23/2022 13:23:08	SCALE 1	galtheim		Gross	98300 lb*
Out	08/23/2022 13:23:08		galtheim		Tare	37480 lb*
			* Manual Weight		Net	60820 lb
					Tons	30.41

Comments RIVER-GA

	Product	LD%	Qty	UOM	Rate	Tax	Amount	Origin
1	Daily Cover-PCS-Tons-Pet	100	30.41	Tons				SNOHOMISH
2	EVF-P-Standard Environme	100		%				SNOHOMISH
3	FUEL-Fuel Surcharge - Tr	100		%				SNOHOMISH
4	GONDOLA T-GONDOLA TON	100	30.41	Tons				SNOHOMISH

Total Tax
Total Ticket

Driver`s Signature

WASTE MANAGEMENT

Alaska Street
70 S Alaska Street
Seattle, WA, 98134

Ph: 206 763 5025

Original
Ticket# 178904

Customer Name STRIDER CONSTRUCTION STRIDER
Ticket Date 08/24/2022
Payment Type Credit Account
Manual Ticket#
Route AK
Hauling Ticket#
Destination
PO# 116938WA

Carrier SELF HAULER *
Vehicle# 58
Container
Driver JASON
Check#
Billing# 0000433
Grid

Volume

	Time	Scale	Operator	Inbound		
In	08/24/2022 10:51:25	SCALE 1	galtheim		Gross	101740 lb
Out	08/24/2022 10:51:25		galtheim		Tare	40720 lb
					Net	61020 lb
					Tons	30.51

Comments RIVER-GA

	Product	LD%	Qty	UOM	Rate	Tax	Amount	Origin
1	Daily Cover-PCS-Tons-Pet	100	30.51	Tons				SNOHOMISH
2	EVF-P-Standard Environme	100		%				SNOHOMISH
3	FUEL-Fuel Surcharge - Tr	100		%				SNOHOMISH
4	GONDOLA T-GONDOLA TON	100	30.51	Tons				SNOHOMISH

Total Tax
Total Ticket

Driver`s Signature

WASTE MANAGEMENT

Alaska Street
70 S Alaska Street
Seattle, WA, 98134

Ph: 206 763 5025

Original
Ticket# 178890

Customer Name STRIDER CONSTRUCTION STRIDER
Ticket Date 08/24/2022
Payment Type Credit Account
Manual Ticket#
Route AK
Hauling Ticket#
Destination
PO# 116938WA

Carrier SELF HAULER *
Vehicle# 58
Container
Driver JASON
Check#
Billing# 0000433
Grid

Volume

	Time	Scale	Operator	Inbound		
In	08/24/2022 07:53:59	SCALE 1	galtheim		Gross	113780 lb
Out	08/24/2022 07:53:59		galtheim		Tare	40720 lb
					Net	73060 lb
					Tons	36.53

Comments RIVER-GA

	Product	LD%	Qty	UOM	Rate	Tax	Amount	Origin
1	Daily Cover-PCS-Tons-Pet	100	36.53	Tons				SNOHOMISH
2	EVF-P-Standard Environme	100		%				SNOHOMISH
3	FUEL-Fuel Surcharge - Tr	100		%				SNOHOMISH
4	GONDOLA T-GONDOLA TON	100	36.53	Tons				SNOHOMISH

Total Tax
Total Ticket

Driver`s Signature

WASTE MANAGEMENT

Alaska Street
70 S Alaska Street
Seattle, WA, 98134

Ph: 206 763 5025

Original
Ticket# 178888

Customer Name STRIDER CONSTRUCTION STRIDER
Ticket Date 08/24/2022
Payment Type Credit Account
Manual Ticket#
Route AK
Hauling Ticket#
Destination
PO# 116938WA

Carrier SELF HAULER *
Vehicle# 29T
Container
Driver SCOOTER
Check#
Billing# 0000433
Grid

Volume

	Time	Scale	Operator	Inbound		
In	08/24/2022 07:49:04	SCALE 1	galtheim		Gross	106060 lb*
Out	08/24/2022 07:49:04		galtheim		Tare	37480 lb*
			* Manual Weight		Net	68580 lb
					Tons	34.29

Comments RIVER-GA

	Product	LD%	Qty	UOM	Rate	Tax	Amount	Origin
1	Daily Cover-PCS-Tons-Pet	100	34.29	Tons				SNOHOMISH
2	EVF-P-Standard Environme	100		%				SNOHOMISH
3	FUEL-Fuel Surcharge - Tr	100		%				SNOHOMISH
4	GONDOLA T-GONDOLA TON	100	34.29	Tons				SNOHOMISH

Total Tax
Total Ticket

Driver`s Signature

WASTE MANAGEMENT

Alaska Street
70 S Alaska Street
Seattle, WA, 98134

Ph: 206 763 5025

Original
Ticket# 178902

Customer Name	STRIDER CONSTRUCTION STRIDER	Carrier	SELF HAULER *
Ticket Date	08/24/2022	Vehicle#	29T
Payment Type	Credit Account	Container	
Manual Ticket#		Driver	SCOOTER
Route	AK	Check#	
Hauling Ticket#		Billing#	0000433
Destination		Grid	
PO#	116938WA		

Volume

	Time	Scale	Operator	Inbound		
In	08/24/2022 10:28:16	SCALE 1	galtheim		Gross	97360 lb
Out	08/24/2022 10:28:16		galtheim		Tare	37480 lb
					Net	59880 lb
					Tons	29.94

Comments RIVER-GA

	Product	LD%	Qty	UOM	Rate	Tax	Amount	Origin
1	Daily Cover-PCS-Tons-Pet	100	29.94	Tons				SNOHOMISH
2	EVF-P-Standard Environme	100		%				SNOHOMISH
3	FUEL-Fuel Surcharge - Tr	100		%				SNOHOMISH
4	GONDOLA T-GONDOLA TON	100	29.94	Tons				SNOHOMISH

Total Tax
Total Ticket

Driver`s Signature

WASTE MANAGEMENT

Alaska Street
70 S Alaska Street
Seattle, WA, 98134

Ph: 206 763 5025

Original
Ticket# 178916

Customer Name STRIDER CONSTRUCTION STRIDER
Ticket Date 08/24/2022
Payment Type Credit Account
Manual Ticket#
Route AK
Hauling Ticket#
Destination
PO# 116938WA

Carrier SELF HAULER *
Vehicle# 28T
Container
Driver JOSH
Check#
Billing# 0000433
Grid

Volume

	Time	Scale	Operator	Inbound		
In	08/24/2022 12:59:10	SCALE 1	galtheim		Gross	99460 lb
Out	08/24/2022 12:59:10		galtheim		Tare	37600 lb
					Net	61860 lb
					Tons	30.93

Comments RIVER-GA

	Product	LD%	Qty	UOM	Rate	Tax	Amount	Origin
1	Daily Cover-PCS-Tons-Pet	100	30.93	Tons				SNOHOMISH
2	EVF-P-Standard Environme	100		%				SNOHOMISH
3	FUEL-Fuel Surcharge - Tr	100		%				SNOHOMISH
4	GONDOLA T-GONDOLA TON	100	30.93	Tons				SNOHOMISH

Total Tax
Total Ticket

Driver`s Signature

WASTE MANAGEMENT

Alaska Street
70 S Alaska Street
Seattle, WA, 98134

Original
Ticket# 178929
Ph: 206 763 5025

Customer Name STRIDER CONSTRUCTION STRIDER
Ticket Date 08/24/2022
Payment Type Credit Account
Manual Ticket#
Route AK
Hauling Ticket#
Destination
PO# 116938WA

Carrier SELF HAULER *
Vehicle# 62T
Container
Driver WYATT
Check#
Billing# 0000433
Grid

Volume

	Time	Scale	Operator	Inbound		
In	08/24/2022 15:09:11	SCALE 1	galtheim		Gross	103340 lb
Out	08/24/2022 15:09:11		galtheim		Tare	41060 lb
					Net	62280 lb
					Tons	31.14

Comments RIVER-GA

	Product	LD%	Qty	UOM	Rate	Tax	Amount	Origin
1	Daily Cover-PCS-Tons-Pet	100	31.14	Tons				SNOHOMISH
2	EVF-P-Standard Environme	100		%				
3	FUEL-Fuel Surcharge - Tr	100		%				
4	GONDOLA T-GONDOLA TON	100	31.14	Tons				

Total Tax
Total Ticket

Driver`s Signature

WASTE MANAGEMENT

Alaska Street
70 S Alaska Street
Seattle, WA, 98134

Ph: 206 763 5025

Original
Ticket# 178931

Customer Name	STRIDER CONSTRUCTION STRIDER	Carrier	SELF HAULER *
Ticket Date	08/24/2022	Vehicle#	28T
Payment Type	Credit Account	Container	
Manual Ticket#		Driver	JOSH
Route	AK	Check#	
Hauling Ticket#		Billing#	0000433
Destination		Grid	
PO#	116938WA		

Volume

	Time	Scale	Operator	Inbound		
In	08/24/2022 15:36:04	SCALE 1	galtheim		Gross	99960 lb
Out	08/24/2022 15:36:04		galtheim		Tare	37600 lb
					Net	62360 lb
					Tons	31.18

Comments RIVER-GA

	Product	LD%	Qty	UOM	Rate	Tax	Amount	Origin
1	Daily Cover-PCS-Tons-Pet	100	31.18	Tons				SNOHOMISH
2	EVF-P-Standard Environme	100		%				SNOHOMISH
3	FUEL-Fuel Surcharge - Tr	100		%				SNOHOMISH
4	GONDOLA T-GONDOLA TON	100	31.18	Tons				SNOHOMISH

Total Tax
Total Ticket

Driver`s Signature

WASTE MANAGEMENT

Alaska Street
70 S Alaska Street
Seattle, WA, 98134

Ph: 206 763 5025

Original
Ticket# 178927

Customer Name STRIDER CONSTRUCTION STRIDER
Ticket Date 08/24/2022
Payment Type Credit Account
Manual Ticket#
Route AK
Hauling Ticket#
Destination
PO# 116938WA

Carrier SELF HAULER *
Vehicle# 58
Container
Driver JASON
Check#
Billing# 0000433
Grid

Volume

	Time	Scale	Operator	Inbound
In	08/24/2022 13:32:19	SCALE 1	galtheim	
Out	08/24/2022 13:32:19		galtheim	

Gross	101400 lb
Tare	40720 lb
Net	60680 lb
Tons	30.34

Comments RIVER-GA

	Product	LD%	Qty	UOM	Rate	Tax	Amount	Origin
1	Daily Cover-PCS-Tons-Pet	100	30.34	Tons				SNOHOMISH
2	EVF-P-Standard Environme	100		%				SNOHOMISH
3	FUEL-Fuel Surcharge - Tr	100		%				SNOHOMISH
4	GONDOLA T-GONDOLA TON	100	30.34	Tons				SNOHOMISH

Total Tax
Total Ticket

Driver`s Signature

WASTE MANAGEMENT

Alaska Street
70 S Alaska Street
Seattle, WA, 98134

Ph: 206 763 5025

Original
Ticket# 178915

Customer Name	STRIDER CONSTRUCTION STRIDER	Carrier	SELF HAULER *		
Ticket Date	08/24/2022	Vehicle#	29T	Volume	
Payment Type	Credit Account	Container			
Manual Ticket#		Driver	SCOOTER		
Route	AK	Check#			
Hauling Ticket#		Billing#	0000433		
Destination		Grid			
PO#	116938WA				

	Time	Scale	Operator	Inbound		
In	08/24/2022 12:56:38	SCALE 1	galtheim		Gross	97280 lb
Out	08/24/2022 12:56:38		galtheim		Tare	37480 lb
					Net	59800 lb
					Tons	29.90

Comments RIVER-GA

	Product	LD%	Qty	UOM	Rate	Tax	Amount	Origin
1	Daily Cover-PCS-Tons-Pet	100	29.90	Tons				SNOHOMISH
2	EVF-P-Standard Environme	100		%				SNOHOMISH
3	FUEL-Fuel Surcharge - Tr	100		%				SNOHOMISH
4	GONDOLA T-GONDOLA TON	100	29.90	Tons				SNOHOMISH

Total Tax
Total Ticket

Driver`s Signature

WASTE MANAGEMENT

Alaska Street
70 S Alaska Street
Seattle, WA, 98134

Original
Ticket# 178930

Ph: 206 763 5025

Customer Name	STRIDER CONSTRUCTION STRIDER	Carrier	SELF HAULER *
Ticket Date	08/24/2022	Vehicle#	52
Payment Type	Credit Account	Container	
Manual Ticket#		Driver	JUSTIN
Route	AK	Check#	
Hauling Ticket#		Billing#	0000433
Destination		Grid	
PO#	116938WA		

Volume

	Time	Scale	Operator	Inbound		
In	08/24/2022 15:15:51	SCALE 1	galtheim		Gross	97940 lb
Out	08/24/2022 15:15:51		galtheim		Tare	40160 lb
					Net	57780 lb
					Tons	28.89

Comments RIVER-GA

	Product	LD%	Qty	UOM	Rate	Tax	Amount	Origin
1	Daily Cover-PCS-Tons-Pet	100	28.89	Tons				SNOHOMISH
2	EVF-P-Standard Environme	100		%				SNOHOMISH
3	FUEL-Fuel Surcharge - Tr	100		%				SNOHOMISH
4	GONDOLA T-GONDOLA TON	100	28.89	Tons				SNOHOMISH

Total Tax
Total Ticket

Driver`s Signature

WASTE MANAGEMENT

Alaska Street
70 S Alaska Street
Seattle, WA, 98134

Ph: 206 763 5025

Original
Ticket# 178914

Customer Name STRIDER CONSTRUCTION STRIDER
Ticket Date 08/24/2022
Payment Type Credit Account
Manual Ticket#
Route AK
Hauling Ticket#
Destination
PO# 116938WA

Carrier SELF HAULER *
Vehicle# 62T
Container
Driver WYATT
Check#
Billing# 0000433
Grid

Volume

	Time	Scale	Operator	Inbound		
In	08/24/2022 12:46:47	SCALE 1	galtheim		Gross	103080 lb
Out	08/24/2022 12:46:47		galtheim		Tare	41060 lb
					Net	62020 lb
					Tons	31.01

Comments RIVER-GA

	Product	LD%	Qty	UOM	Rate	Tax	Amount	Origin
1	Daily Cover-PCS-Tons-Pet	100	31.01	Tons				SNOHOMISH
2	EVF-P-Standard Environme	100		%				
3	FUEL-Fuel Surcharge - Tr	100		%				
4	GONDOLA T-GONDOLA TON	100	31.01	Tons				

Total Tax
Total Ticket

Driver`s Signature

WASTE MANAGEMENT

Alaska Street
70 S Alaska Street
Seattle, WA, 98134

Original
Ticket# 178884

Ph: 206 763 5025

Customer Name STRIDER CONSTRUCTION STRIDER
Ticket Date 08/24/2022
Payment Type Credit Account
Manual Ticket#
Route AK
Hauling Ticket#
Destination
PO# 116938WA

Carrier SELF HAULER *
Vehicle# 62T
Container
Driver WYATT
Check#
Billing# 0000433
Grid

Volume

	Time	Scale	Operator	Inbound		
In	08/24/2022 07:30:30	SCALE 1	galtheim		Gross	112480 lb
Out	08/24/2022 07:30:30		galtheim		Tare	41060 lb
					Net	71420 lb
					Tons	35.71

Comments RIVER-GA

	Product	LD%	Qty	UOM	Rate	Tax	Amount	Origin
1	Daily Cover-PCS-Tons-Pet	100	35.71	Tons				SNOHOMISH
2	EVF-P-Standard Environme	100		%				SNOHOMISH
3	FUEL-Fuel Surcharge - Tr	100		%				SNOHOMISH
4	GONDOLA T-GONDOLA TON	100	35.71	Tons				SNOHOMISH

Total Tax
Total Ticket

Driver`s Signature

WASTE MANAGEMENT

Alaska Street
70 S Alaska Street
Seattle, WA, 98134

Ph: 206 763 5025

Original
Ticket# 178900

Customer Name STRIDER CONSTRUCTION STRIDER
Ticket Date 08/24/2022
Payment Type Credit Account
Manual Ticket#
Route AK
Hauling Ticket#
Destination
PO# 116938WA

Carrier SELF HAULER *
Vehicle# 62T
Container
Driver WYATT
Check#
Billing# 0000433
Grid

Volume

	Time	Scale	Operator	Inbound
In	08/24/2022 10:14:55	SCALE 1	galtheim	
Out	08/24/2022 10:14:55		galtheim	

Gross	101940 lb
Tare	41060 lb
Net	60880 lb
Tons	30.44

Comments RIVER-GA

	Product	LD%	Qty	UOM	Rate	Tax	Amount	Origin
1	Daily Cover-PCS-Tons-Pet	100	30.44	Tons				SNOHOMISH
2	EVF-P-Standard Environme	100		%				
3	FUEL-Fuel Surcharge - Tr	100		%				
4	GONDOLA T-GONDOLA TON	100	30.44	Tons				

Total Tax
Total Ticket

Driver`s Signature

WASTE MANAGEMENT

Alaska Street
70 S Alaska Street
Seattle, WA, 98134

Ph: 206 763 5025

Original
Ticket# 178913

Customer Name STRIDER CONSTRUCTION STRIDER
Ticket Date 08/24/2022
Payment Type Credit Account
Manual Ticket#
Route AK
Hauling Ticket#
Destination
PO# 116938WA

Carrier SELF HAULER *
Vehicle# 52
Container
Driver JUSTIN
Check#
Billing# 0000433
Grid

Volume

	Time	Scale	Operator	Inbound
In	08/24/2022 12:32:32	SCALE 1	galtheim	
Out	08/24/2022 12:32:32		galtheim	

Gross	98140 lb
Tare	40160 lb
Net	57980 lb
Tons	28.99

Comments RIVER-GA

	Product	LD%	Qty	UOM	Rate	Tax	Amount	Origin
1	Daily Cover-PCS-Tons-Pet	100	28.99	Tons				SNOHOMISH
2	EVF-P-Standard Environme	100		%				
3	FUEL-Fuel Surcharge - Tr	100		%				
4	GONDOLA T-GONDOLA TON	100	28.99	Tons				

Total Tax
Total Ticket

Driver`s Signature

WASTE MANAGEMENT

Alaska Street
70 S Alaska Street
Seattle, WA, 98134

Ph: 206 763 5025

Original
Ticket# 178896

Customer Name STRIDER CONSTRUCTION STRIDER
Ticket Date 08/24/2022
Payment Type Credit Account
Manual Ticket#
Route AK
Hauling Ticket#
Destination
PO# 116938WA

Carrier SELF HAULER *
Vehicle# 52
Container
Driver JUSTIN
Check#
Billing# 0000433
Grid

Volume

	Time	Scale	Operator	Inbound		
In	08/24/2022 09:55:28	SCALE 1	galtheim		Gross	107940 lb
Out	08/24/2022 09:55:28		galtheim		Tare	40160 lb
					Net	67780 lb
					Tons	33.89

Comments RIVER-GA

	Product	LD%	Qty	UOM	Rate	Tax	Amount	Origin
1	Daily Cover-PCS-Tons-Pet	100	33.89	Tons				SNOHOMISH
2	EVF-P-Standard Environme	100		%				
3	FUEL-Fuel Surcharge - Tr	100		%				
4	GONDOLA T-GONDOLA TON	100	33.89	Tons				

Total Tax
Total Ticket

Driver`s Signature

WASTE MANAGEMENT

Alaska Street
70 S Alaska Street
Seattle, WA, 98134

Ph: 206 763 5025

Original
Ticket# 178901

Customer Name	STRIDER CONSTRUCTION STRIDER	Carrier	SELF HAULER *		
Ticket Date	08/24/2022	Vehicle#	28T	Volume	
Payment Type	Credit Account	Container			
Manual Ticket#		Driver	JOSH		
Route	AK	Check#			
Hauling Ticket#		Billing#	0000433		
Destination		Grid			
PO#	116938WA				

	Time	Scale	Operator	Inbound		
In	08/24/2022 10:23:53	SCALE 1	galtheim		Gross	95760 lb
Out	08/24/2022 10:23:53		galtheim		Tare	37600 lb
					Net	58160 lb
					Tons	29.08

Comments RIVER-GA

	Product	LD%	Qty	UOM	Rate	Tax	Amount	Origin
1	Daily Cover-PCS-Tons-Pet	100	29.08	Tons				SNOHOMISH
2	EVF-P-Standard Environme	100		%				SNOHOMISH
3	FUEL-Fuel Surcharge - Tr	100		%				SNOHOMISH
4	GONDOLA T-GONDOLA TON	100	29.08	Tons				SNOHOMISH

Total Tax
Total Ticket

Driver`s Signature

WASTE MANAGEMENT

Alaska Street
70 S Alaska Street
Seattle, WA, 98134

Original
Ticket# 178885

Ph: 206 763 5025

Customer Name	STRIDER CONSTRUCTION STRIDER	Carrier	SELF HAULER *
Ticket Date	08/24/2022	Vehicle#	28T
Payment Type	Credit Account	Container	
Manual Ticket#		Driver	JOSH
Route	AK	Check#	
Hauling Ticket#		Billing#	0000433
Destination		Grid	
PO#	116938WA		

Volume

	Time	Scale	Operator	Inbound		
In	08/24/2022 07:40:22	SCALE 1	galtheim		Gross	109040 lb
Out	08/24/2022 07:40:22		galtheim		Tare	37600 lb
					Net	71440 lb
					Tons	35.72

Comments RIVER-GA

	Product	LD%	Qty	UOM	Rate	Tax	Amount	Origin
1	Daily Cover-PCS-Tons-Pet	100	35.72	Tons				SNOHOMISH
2	EVF-P-Standard Environme	100		%				SNOHOMISH
3	FUEL-Fuel Surcharge - Tr	100		%				SNOHOMISH
4	GONDOLA T-GONDOLA TON	100	35.72	Tons				SNOHOMISH

Total Tax
Total Ticket

Driver`s Signature

WASTE MANAGEMENT

Alaska Street
70 S Alaska Street
Seattle, WA, 98134

Original
Ticket# 178941

Ph: 206 763 5025

Customer Name STRIDER CONSTRUCTION STRIDER
Ticket Date 08/25/2022
Payment Type Credit Account
Manual Ticket#
Route AK
Hauling Ticket#
Destination
PO# 116938WA

Carrier SELF HAULER *
Vehicle# 56
Container
Driver ED
Check#
Billing# 0000433
Grid

Volume

	Time	Scale	Operator	Inbound		
In	08/25/2022 08:27:41	SCALE 1	GALTHEIM		Gross	93880 lb
Out	08/25/2022 08:36:21	SCALE 1	GALTHEIM		Tare	41060 lb
					Net	52820 lb
					Tons	26.41

Comments RIVER-GA

	Product	LD%	Qty	UOM	Rate	Tax	Amount	Origin
1	Daily Cover-PCS-Tons-Pet	100	26.41	Tons				SNOHOMISH
2	EVF-P-Standard Environme	100		%				SNOHOMISH
3	FUEL-Fuel Surcharge - Tr	100		%				SNOHOMISH
4	GONDOLA T-GONDOLA TON	100	26.41	Tons				SNOHOMISH

Total Tax
Total Ticket

Driver`s Signature

WASTE MANAGEMENT

Alaska Street
70 S Alaska Street
Seattle, WA, 98134

Original
Ticket# 178969
Ph: 206 763 5025

Customer Name	STRIDER CONSTRUCTION STRIDER	Carrier	SELF HAULER *		
Ticket Date	08/25/2022	Vehicle#	56	Volume	
Payment Type	Credit Account	Container			
Manual Ticket#		Driver	ED		
Route	AK	Check#			
Hauling Ticket#		Billing#	0000433		
Destination		Grid			
PO#	116938WA				

	Time	Scale	Operator	Inbound		
In	08/25/2022 11:04:56	SCALE 1	GALTHEIM		Gross	88560 lb
Out	08/25/2022 11:04:56		GALTHEIM		Tare	41060 lb
					Net	47500 lb
					Tons	23.75

Comments RIVER-GA

	Product	LD%	Qty	UOM	Rate	Tax	Amount	Origin
1	Daily Cover-PCS-Tons-Pet	100	23.75	Tons				SNOHOMISH
2	EVF-P-Standard Environme	100		%				SNOHOMISH
3	FUEL-Fuel Surcharge - Tr	100		%				SNOHOMISH
4	GONDOLA T-GONDOLA TON	100	23.75	Tons				SNOHOMISH

Total Tax
Total Ticket

Driver`s Signature

WASTE MANAGEMENT

Alaska Street
70 S Alaska Street
Seattle, WA, 98134

Ph: 206 763 5025

Original
Ticket# 178988

Customer Name STRIDER CONSTRUCTION STRIDER
Ticket Date 08/25/2022
Payment Type Credit Account
Manual Ticket#
Route AK
Hauling Ticket#
Destination
PO# 116938WA

Carrier SELF HAULER *
Vehicle# 56
Container
Driver ED
Check#
Billing# 0000433
Grid

Volume

	Time	Scale	Operator	Inbound
In	08/25/2022 13:43:26	SCALE 1	GALTHEIM	
Out	08/25/2022 13:43:26		GALTHEIM	

Gross	93620 lb
Tare	41060 lb
Net	52560 lb
Tons	26.28

Comments RIVER-GA

	Product	LD%	Qty	UOM	Rate	Tax	Amount	Origin
1	Daily Cover-PCS-Tons-Pet	100	26.28	Tons				SNOHOMISH
2	EVF-P-Standard Environme	100		%				
3	FUEL-Fuel Surcharge - Tr	100		%				
4	GONDOLA T-GONDOLA TON	100	26.28	Tons				

Total Tax
Total Ticket

Driver`s Signature

WASTE MANAGEMENT

Alaska Street
70 S Alaska Street
Seattle, WA, 98134

Original
Ticket# 178987

Ph: 206 763 5025

Customer Name STRIDER CONSTRUCTION STRIDER
Ticket Date 08/25/2022
Payment Type Credit Account
Manual Ticket#
Route AK
Hauling Ticket#
Destination
PO# 116938WA

Carrier SELF HAULER *
Vehicle# 62T
Container
Driver WYATT
Check#
Billing# 0000433
Grid

Volume

	Time	Scale	Operator	Inbound		
In	08/25/2022 13:41:57	SCALE 1	GALTHEIM		Gross	97360 lb
Out	08/25/2022 13:41:57		GALTHEIM		Tare	41060 lb
					Net	56300 lb
					Tons	28.15

Comments RIVER-GA

	Product	LD%	Qty	UOM	Rate	Tax	Amount	Origin
1	Daily Cover-PCS-Tons-Pet	100	28.15	Tons				SNOHOMISH
2	EVF-P-Standard Environme	100		%				SNOHOMISH
3	FUEL-Fuel Surcharge - Tr	100		%				SNOHOMISH
4	GONDOLA T-GONDOLA TON	100	28.15	Tons				SNOHOMISH

Total Tax
Total Ticket

Driver`s Signature

WASTE MANAGEMENT

Alaska Street
70 S Alaska Street
Seattle, WA, 98134

Ph: 206 763 5025

Original
Ticket# 178967

Customer Name STRIDER CONSTRUCTION STRIDER
Ticket Date 08/25/2022
Payment Type Credit Account
Manual Ticket#
Route AK
Hauling Ticket#
Destination
PO# 116938WA

Carrier SELF HAULER *
Vehicle# 62T
Container
Driver WYATT
Check#
Billing# 0000433
Grid

Volume

	Time	Scale	Operator	Inbound
In	08/25/2022 11:02:25	SCALE 1	GALTHEIM	
Out	08/25/2022 11:02:25		GALTHEIM	

Gross	96480 lb
Tare	41060 lb
Net	55420 lb
Tons	27.71

Comments RIVER-GA

	Product	LD%	Qty	UOM	Rate	Tax	Amount	Origin
1	Daily Cover-PCS-Tons-Pet	100	27.71	Tons				SNOHOMISH
2	EVF-P-Standard Environme	100		%				SNOHOMISH
3	FUEL-Fuel Surcharge - Tr	100		%				SNOHOMISH
4	GONDOLA T-GONDOLA TON	100	27.71	Tons				SNOHOMISH

Total Tax
Total Ticket

Driver`s Signature

WASTE MANAGEMENT

Alaska Street
70 S Alaska Street
Seattle, WA, 98134

Ph: 206 763 5025

Original
Ticket# 178940

Customer Name STRIDER CONSTRUCTION STRIDER
Ticket Date 08/25/2022
Payment Type Credit Account
Manual Ticket#
Route AK
Hauling Ticket#
Destination
PO# 116938WA

Carrier SELF HAULER *
Vehicle# 62T
Container
Driver WYATT
Check#
Billing# 0000433
Grid

Volume

	Time	Scale	Operator	Inbound		
In	08/25/2022 08:25:25	SCALE 1	GALTHEIM		Gross	99420 lb
Out	08/25/2022 08:25:25		GALTHEIM		Tare	41060 lb
					Net	58360 lb
					Tons	29.18

Comments RIVER-GA

	Product	LD%	Qty	UOM	Rate	Tax	Amount	Origin
1	Daily Cover-PCS-Tons-Pet	100	29.18	Tons				SNOHOMISH
2	EVF-P-Standard Environme	100		%				SNOHOMISH
3	FUEL-Fuel Surcharge - Tr	100		%				SNOHOMISH
4	GONDOLA T-GONDOLA TON	100	29.18	Tons				SNOHOMISH

Total Tax
Total Ticket

Driver`s Signature

WASTE MANAGEMENT

Alaska Street
70 S Alaska Street
Seattle, WA, 98134

Ph: 206 763 5025

Original
Ticket# 178955

Customer Name STRIDER CONSTRUCTION STRIDER
Ticket Date 08/25/2022
Payment Type Credit Account
Manual Ticket#
Route AK
Hauling Ticket#
Destination
PO# 116938WA

Carrier SELF HAULER *
Vehicle# 29T
Container
Driver SCOOTER
Check#
Billing# 0000433
Grid

Volume

	Time	Scale	Operator	Inbound
In	08/25/2022 10:08:33	SCALE 1	GALTHEIM	
Out	08/25/2022 10:08:33		GALTHEIM	

Gross	89460 lb
Tare	37480 lb
Net	51980 lb
Tons	25.99

Comments RIVER-GA

	Product	LD%	Qty	UOM	Rate	Tax	Amount	Origin
1	Daily Cover-PCS-Tons-Pet	100	25.99	Tons				SNOHOMISH
2	EVF-P-Standard Environme	100		%				SNOHOMISH
3	FUEL-Fuel Surcharge - Tr	100		%				SNOHOMISH
4	GONDOLA T-GONDOLA TON	100	25.99	Tons				SNOHOMISH

Total Tax
Total Ticket

Driver`s Signature

WASTE MANAGEMENT

Alaska Street
70 S Alaska Street
Seattle, WA, 98134

Ph: 206 763 5025

Original
Ticket# 178981

Customer Name STRIDER CONSTRUCTION STRIDER
Ticket Date 08/25/2022
Payment Type Credit Account
Manual Ticket#
Route AK
Hauling Ticket#
Destination
PO# 116938WA

Carrier SELF HAULER *
Vehicle# 29T
Container
Driver SCOOTER
Check#
Billing# 0000433
Grid

Volume

	Time	Scale	Operator	Inbound
In	08/25/2022 12:43:20	SCALE 1	GALTHEIM	
Out	08/25/2022 12:43:20		GALTHEIM	

Gross	92160 lb
Tare	37480 lb
Net	54680 lb
Tons	27.34

Comments RIVER-GA

	Product	LD%	Qty	UOM	Rate	Tax	Amount	Origin
1	Daily Cover-PCS-Tons-Pet	100	27.34	Tons				SNOHOMISH
2	EVF-P-Standard Environme	100		%				SNOHOMISH
3	FUEL-Fuel Surcharge - Tr	100		%				SNOHOMISH
4	GONDOLA T-GONDOLA TON	100	27.34	Tons				SNOHOMISH

Total Tax
Total Ticket

Driver`s Signature

WASTE MANAGEMENT

Alaska Street
70 S Alaska Street
Seattle, WA, 98134

Original
Ticket# 178937

Ph: 206 763 5025

Customer Name	STRIDER CONSTRUCTION STRIDER	Carrier	SELF HAULER *		
Ticket Date	08/25/2022	Vehicle#	29T	Volume	
Payment Type	Credit Account	Container			
Manual Ticket#		Driver	SCOOTER		
Route	AK	Check#			
Hauling Ticket#		Billing#	0000433		
Destination		Grid			
PO#	116938WA				

	Time	Scale	Operator	Inbound		
In	08/25/2022 07:41:04	SCALE 1	GALTHEIM		Gross	99480 lb
Out	08/25/2022 07:41:04		GALTHEIM		Tare	37480 lb
					Net	62000 lb
					Tons	31.00

Comments RIVER-GA

	Product	LD%	Qty	UOM	Rate	Tax	Amount	Origin
1	Daily Cover-PCS-Tons-Pet	100	31.00	Tons				SNOHOMISH
2	EVF-P-Standard Environme	100		%				SNOHOMISH
3	FUEL-Fuel Surcharge - Tr	100		%				SNOHOMISH
4	GONDOLA T-GONDOLA TON	100	31.00	Tons				SNOHOMISH

Total Tax
Total Ticket

Driver`s Signature

WASTE MANAGEMENT

Alaska Street
70 S Alaska Street
Seattle, WA, 98134

Ph: 206 763 5025

Original
Ticket# 178982

Customer Name STRIDER CONSTRUCTION STRIDER
Ticket Date 08/25/2022
Payment Type Credit Account
Manual Ticket#
Route AK
Hauling Ticket#
Destination
PO# 116938WA

Carrier SELF HAULER *
Vehicle# 58
Container
Driver JASON
Check#
Billing# 0000433
Grid

Volume

	Time	Scale	Operator	Inbound		
In	08/25/2022 12:56:16	SCALE 1	GALTHEIM		Gross	108140 lb
Out	08/25/2022 12:56:16		GALTHEIM		Tare	40720 lb
					Net	67420 lb
					Tons	33.71

Comments RIVER-GA

	Product	LD%	Qty	UOM	Rate	Tax	Amount	Origin
1	Daily Cover-PCS-Tons-Pet	100	33.71	Tons				SNOHOMISH
2	EVF-P-Standard Environme	100		%				SNOHOMISH
3	FUEL-Fuel Surcharge - Tr	100		%				SNOHOMISH
4	GONDOLA T-GONDOLA TON	100	33.71	Tons				SNOHOMISH

Total Tax
Total Ticket

Driver`s Signature

WASTE MANAGEMENT

Alaska Street
70 S Alaska Street
Seattle, WA, 98134

Ph: 206 763 5025

Original
Ticket# 178954

Customer Name STRIDER CONSTRUCTION STRIDER
Ticket Date 08/25/2022
Payment Type Credit Account
Manual Ticket#
Route AK
Hauling Ticket#
Destination
PO# 116938WA

Carrier SELF HAULER *
Vehicle# 58
Container
Driver JASON
Check#
Billing# 0000433
Grid

Volume

	Time	Scale	Operator	Inbound		
In	08/25/2022 10:05:01	SCALE 1	GALTHEIM		Gross	93780 lb
Out	08/25/2022 10:05:01		GALTHEIM		Tare	40720 lb
					Net	53060 lb
					Tons	26.53

Comments RIVER-GA

	Product	LD%	Qty	UOM	Rate	Tax	Amount	Origin
1	Daily Cover-PCS-Tons-Pet	100	26.53	Tons				SNOHOMISH
2	EVF-P-Standard Environme	100		%				
3	FUEL-Fuel Surcharge - Tr	100		%				
4	GONDOLA T-GONDOLA TON	100	26.53	Tons				

Total Tax
Total Ticket

Driver`s Signature

WASTE MANAGEMENT

Alaska Street
70 S Alaska Street
Seattle, WA, 98134

Original
Ticket# 178936

Ph: 206 763 5025

Customer Name	STRIDER CONSTRUCTION STRIDER	Carrier	SELF HAULER *
Ticket Date	08/25/2022	Vehicle#	58
Payment Type	Credit Account	Container	
Manual Ticket#		Driver	JASON
Route	AK	Check#	
Hauling Ticket#		Billing#	0000433
Destination		Grid	
PO#	116938WA		

Volume

	Time	Scale	Operator	Inbound		
In	08/25/2022 07:37:25	SCALE 1	GALTHEIM		Gross	104340 lb
Out	08/25/2022 07:37:25		GALTHEIM		Tare	40720 lb
					Net	63620 lb
					Tons	31.81

Comments RIVER-GA

	Product	LD%	Qty	UOM	Rate	Tax	Amount	Origin
1	Daily Cover-PCS-Tons-Pet	100	31.81	Tons				SNOHOMISH
2	EVF-P-Standard Environme	100		%				SNOHOMISH
3	FUEL-Fuel Surcharge - Tr	100		%				SNOHOMISH
4	GONDOLA T-GONDOLA TON	100	31.81	Tons				SNOHOMISH

Total Tax
Total Ticket

Driver`s Signature

WASTE MANAGEMENT

Alaska Street
70 S Alaska Street
Seattle, WA, 98134

Ph: 206 763 5025

Original
Ticket# 178956

Customer Name	STRIDER CONSTRUCTION STRIDER	Carrier	SELF HAULER *		
Ticket Date	08/25/2022	Vehicle#	52	Volume	
Payment Type	Credit Account	Container			
Manual Ticket#		Driver	JUSTIN		
Route	AK	Check#			
Hauling Ticket#		Billing#	0000433		
Destination		Grid			
PO#	116938WA				

	Time	Scale	Operator	Inbound		
In	08/25/2022 10:14:04	SCALE 1	GALTHEIM		Gross	89460 lb
Out	08/25/2022 10:14:04		GALTHEIM		Tare	40160 lb
					Net	49300 lb
					Tons	24.65

Comments RIVER-GA

	Product	LD%	Qty	UOM	Rate	Tax	Amount	Origin
1	Daily Cover-PCS-Tons-Pet	100	24.65	Tons				SNOHOMISH
2	EVF-P-Standard Environme	100		%				SNOHOMISH
3	FUEL-Fuel Surcharge - Tr	100		%				SNOHOMISH
4	GONDOLA T-GONDOLA TON	100	24.65	Tons				SNOHOMISH

Total Tax
Total Ticket

Driver`s Signature

WASTE MANAGEMENT

Alaska Street
70 S Alaska Street
Seattle, WA, 98134

Original
Ticket# 178938

Ph: 206 763 5025

Customer Name	STRIDER CONSTRUCTION STRIDER	Carrier	SELF HAULER *		
Ticket Date	08/25/2022	Vehicle#	52	Volume	
Payment Type	Credit Account	Container			
Manual Ticket#		Driver	JUSTIN		
Route	AK	Check#			
Hauling Ticket#		Billing#	0000433		
Destination		Grid			
PO#	116938WA				

	Time	Scale	Operator	Inbound		
In	08/25/2022 07:47:13	SCALE 1	GALTHEIM		Gross	107320 lb
Out	08/25/2022 07:47:13		GALTHEIM		Tare	40160 lb
					Net	67160 lb
					Tons	33.58

Comments RIVER-GA

	Product	LD%	Qty	UOM	Rate	Tax	Amount	Origin
1	Daily Cover-PCS-Tons-Pet	100	33.58	Tons				SNOHOMISH
2	EVF-P-Standard Environme	100		%				SNOHOMISH
3	FUEL-Fuel Surcharge - Tr	100		%				SNOHOMISH
4	GONDOLA T-GONDOLA TON	100	33.58	Tons				SNOHOMISH

Total Tax
Total Ticket

Driver`s Signature

WASTE MANAGEMENT

Alaska Street
70 S Alaska Street
Seattle, WA, 98134

Ph: 206 763 5025

Original
Ticket# 178985

Customer Name STRIDER CONSTRUCTION STRIDER
Ticket Date 08/25/2022
Payment Type Credit Account
Manual Ticket#
Route AK
Hauling Ticket#
Destination
PO# 116938WA

Carrier SELF HAULER *
Vehicle# 52
Container
Driver JUSTIN
Check#
Billing# 0000433
Grid

Volume

	Time	Scale	Operator	Inbound		
In	08/25/2022 13:11:27	SCALE 1	GALTHEIM		Gross	96900 lb
Out	08/25/2022 13:11:27		GALTHEIM		Tare	40160 lb
					Net	56740 lb
					Tons	28.37

Comments RIVER-GA

	Product	LD%	Qty	UOM	Rate	Tax	Amount	Origin
1	Daily Cover-PCS-Tons-Pet	100	28.37	Tons				SNOHOMISH
2	EVF-P-Standard Environme	100		%				SNOHOMISH
3	FUEL-Fuel Surcharge - Tr	100		%				SNOHOMISH
4	GONDOLA T-GONDOLA TON	100	28.37	Tons				SNOHOMISH

Total Tax
Total Ticket

Driver`s Signature

WASTE MANAGEMENT

Alaska Street
70 S Alaska Street
Seattle, WA, 98134

Original
Ticket# 178986

Ph: 206 763 5025

Customer Name STRIDER CONSTRUCTION STRIDER
Ticket Date 08/25/2022
Payment Type Credit Account
Manual Ticket#
Route AK
Hauling Ticket#
Destination
PO# 116938WA

Carrier SELF HAULER *
Vehicle# 28T
Container
Driver JOSH
Check#
Billing# 0000433
Grid

Volume

	Time	Scale	Operator	Inbound		
In	08/25/2022 13:39:25	SCALE 1	GALTHEIM		Gross	89980 lb
Out	08/25/2022 13:39:25		GALTHEIM		Tare	37600 lb
					Net	52380 lb
					Tons	26.19

Comments RIVER-GA

	Product	LD%	Qty	UOM	Rate	Tax	Amount	Origin
1	Daily Cover-PCS-Tons-Pet	100	26.19	Tons				SNOHOMISH
2	EVF-P-Standard Environme	100		%				
3	FUEL-Fuel Surcharge - Tr	100		%				
4	GONDOLA T-GONDOLA TON	100	26.19	Tons				

Total Tax
Total Ticket

Driver`s Signature

WASTE MANAGEMENT

Alaska Street
70 S Alaska Street
Seattle, WA, 98134

Ph: 206 763 5025

Original
Ticket# 178970

Customer Name STRIDER CONSTRUCTION STRIDER
Ticket Date 08/25/2022
Payment Type Credit Account
Manual Ticket#
Route AK
Hauling Ticket#
Destination
PO# 116938WA

Carrier SELF HAULER *
Vehicle# 28T
Container
Driver JOSH
Check#
Billing# 0000433
Grid

Volume

	Time	Scale	Operator	Inbound		
In	08/25/2022 11:08:14	SCALE 1	GALTHEIM		Gross	88620 lb
Out	08/25/2022 11:08:14		GALTHEIM		Tare	37600 lb
					Net	51020 lb
					Tons	25.51

Comments RIVER-GA

	Product	LD%	Qty	UOM	Rate	Tax	Amount	Origin
1	Daily Cover-PCS-Tons-Pet	100	25.51	Tons				SNOHOMISH
2	EVF-P-Standard Environme	100		%				SNOHOMISH
3	FUEL-Fuel Surcharge - Tr	100		%				SNOHOMISH
4	GONDOLA T-GONDOLA TON	100	25.51	Tons				SNOHOMISH

Total Tax
Total Ticket

Driver`s Signature

WASTE MANAGEMENT

Alaska Street
70 S Alaska Street
Seattle, WA, 98134

Ph: 206 763 5025

Original
Ticket# 178942

Customer Name STRIDER CONSTRUCTION STRIDER
Ticket Date 08/25/2022
Payment Type Credit Account
Manual Ticket#
Route AK
Hauling Ticket#
Destination
PO# 116938WA

Carrier SELF HAULER *
Vehicle# 28T
Container
Driver JOSH
Check#
Billing# 0000433
Grid

Volume

	Time	Scale	Operator	Inbound
In	08/25/2022 08:29:05	SCALE 1	GALTHEIM	
Out	08/25/2022 08:29:05		GALTHEIM	

Gross	93520 lb
Tare	37600 lb
Net	55920 lb
Tons	27.96

Comments RIVER-GA

	Product	LD%	Qty	UOM	Rate	Tax	Amount	Origin
1	Daily Cover-PCS-Tons-Pet	100	27.96	Tons				SNOHOMISH
2	EVF-P-Standard Environme	100		%				SNOHOMISH
3	FUEL-Fuel Surcharge - Tr	100		%				SNOHOMISH
4	GONDOLA T-GONDOLA TON	100	27.96	Tons				SNOHOMISH

Total Tax
Total Ticket

Driver`s Signature

WASTE MANAGEMENT

Alaska Street
70 S Alaska Street
Seattle, WA, 98134

Ph: 206 763 5025

Original
Ticket# 178976

Customer Name STRIDER CONSTRUCTION STRIDER
Ticket Date 08/25/2022
Payment Type Credit Account
Manual Ticket#
Route AK
Hauling Ticket#
Destination
PO# 116938WA

Carrier SELF HAULER *
Vehicle# 55R
Container
Driver JEFF
Check#
Billing# 0000433
Grid

Volume

	Time	Scale	Operator	Inbound
In	08/25/2022 11:43:59	SCALE 1	GALTHEIM	
Out	08/25/2022 11:43:59		GALTHEIM	

Gross	99760 lb
Tare	40040 lb
Net	59720 lb
Tons	29.86

Comments RIVER-GA

	Product	LD%	Qty	UOM	Rate	Tax	Amount	Origin
1	Daily Cover-PCS-Tons-Pet	100	29.86	Tons				SNOHOMISH
2	EVF-P-Standard Environme	100		%				
3	FUEL-Fuel Surcharge - Tr	100		%				
4	GONDOLA T-GONDOLA TON	100	29.86	Tons				

Total Tax
Total Ticket

Driver`s Signature

WASTE MANAGEMENT

Alaska Street
70 S Alaska Street
Seattle, WA, 98134

Ph: 206 763 5025

Original
Ticket# 178990

Customer Name	STRIDER CONSTRUCTION STRIDER	Carrier	SELF HAULER *
Ticket Date	08/25/2022	Vehicle#	55R
Payment Type	Credit Account	Container	
Manual Ticket#		Driver	JEFF
Route	AK	Check#	
Hauling Ticket#		Billing#	0000433
Destination		Grid	
PO#	116938WA		

Volume

	Time	Scale	Operator	Inbound		
In	08/25/2022 14:16:07	SCALE 1	GALTHEIM		Gross	95180 lb
Out	08/25/2022 14:16:07		GALTHEIM		Tare	40040 lb
					Net	55140 lb
					Tons	27.57

Comments RIVER-GA

	Product	LD%	Qty	UOM	Rate	Tax	Amount	Origin
1	Daily Cover-PCS-Tons-Pet	100	27.57	Tons				SNOHOMISH
2	EVF-P-Standard Environme	100		%				SNOHOMISH
3	FUEL-Fuel Surcharge - Tr	100		%				SNOHOMISH
4	GONDOLA T-GONDOLA TON	100	27.57	Tons				SNOHOMISH

Total Tax
Total Ticket

Driver`s Signature

WASTE MANAGEMENT

Alaska Street
70 S Alaska Street
Seattle, WA, 98134

Ph: 206 763 5025

Original
Ticket# 178946

Customer Name STRIDER CONSTRUCTION STRIDER
Ticket Date 08/25/2022
Payment Type Credit Account
Manual Ticket#
Route AK
Hauling Ticket#
Destination
PO# 116938WA

Carrier SELF HAULER *
Vehicle# 55R
Container
Driver JEFF
Check#
Billing# 0000433
Grid

Volume

	Time	Scale	Operator	Inbound		
In	08/25/2022 09:00:14	SCALE 1	GALTHEIM		Gross	85540 lb
Out	08/25/2022 09:06:53	SCALE 1	GALTHEIM		Tare	40040 lb
					Net	45500 lb
					Tons	22.75

Comments RIVER-GA

	Product	LD%	Qty	UOM	Rate	Tax	Amount	Origin
1	Daily Cover-PCS-Tons-Pet	100	22.75	Tons				SNOHOMISH
2	EVF-P-Standard Environme	100		%				SNOHOMISH
3	FUEL-Fuel Surcharge - Tr	100		%				SNOHOMISH
4	GONDOLA T-GONDOLA TON	100	22.75	Tons				SNOHOMISH

Total Tax
Total Ticket

Driver`s Signature

Bid Item 13

Republic Services

Tickets to date = 139 EA
Total Tonnage = 3374.73 TN

Total Containers Hauled to Date = 139 EA
Total Haul Month of Aug = 0 EA

Use 25 Ton estimate for other loads
(139 EA - 122 EA) * 25 TN = 425 TN

Total thru month of July = 3374.73 + 425 = 3799.73 TN

Waste Management

Total Haul = 994.15 + 1681 = 2675.15TN

Cadman

11,303.58 TN

Total Billed to Date = 3799.73 + 2675.15 + 11,303.58

= 17,778.46 TN

Everett Incl. Snohomish County --
WA ROOSEVELT , WA

2A

4871530

Denise B.

014209 - Strider Construction Co. Inc.
4721 Northwest Road
Bellingham, WA 98225

9/8/22 12:08 pm

9/8/22 12:28 pm

8281

GCEU430222

Contract:MC-19415

DTTX458902

Scale In	GROSS WEIGHT	110,580	NET TONS	31.78	INBOUND
Scale Out	TARE WEIGHT	47,020	NET WEIGHT	63,560	INVOICE

28.00	YD	Tracking QTY	
31.78	tn	Cont Soil	Origin:Everett 100%

CHANGE:

CHECK :

Bid Item 13

Republic Services

Tickets to date = 140 EA
Total Tonnage = 3401.3 TN

Total Containers Hauled to Date = 139 EA
Total Haul Month of Aug = 0 EA

Use 27 Ton estimate for other loads
(139 EA - 123 EA) * 27 TN = 432 TN

Changed to 27 tons to better match average of incoming tickets

Total thru month of July = 3401.3 + 432 = 3833.3 TN

Waste Management

Total Haul = 994.15 + 1681 = 2675.15TN

Cadman

11,303.58 TN

Total Billed to Date = 3833.3 + 2675.15 + 11,303.58
= 17,812.03 TN

Everett Incl. Snohomish County --
WA ROOSEVELT , WA

2A **4874638**

Brandie M.

014209 - Strider Construction Co. Inc.
4721 Northwest Road
Bellingham, WA 98225

10/18/22 8:28 am 10/18/22 9:36 an

1454 AWIU8176

Contract:MC-19415

DTTX27094

Scale In	GROSS WEIGHT	102,340	NET TONS	26.57		INBOUND
Scale Out	TARE WEIGHT	49,200	NET WEIGHT	53,140		INVOICE

28.17	YD	Tracking QTY	
26.57	tn	Cont Soil	Origin:Everett 100%

CHANGE:

CHECK :

Republic Services

Tickets to date = 139 EA
Total Tonnage = 3871.95 TN

Total Containers Hauled to Date = 139 EA
Total Haul Month of Aug = 0 EA

Use 27 Ton estimate for other loads
(139 EA - 139 EA) * 27 TN = 0 TN

Total thru month of Jan = 3871.95 TN

Waste Management

Total Haul = 994.15 + 1681 = 2675.15TN

Cadman

11,303.58 TN

Total Billed to Date = 3871.95 + 2675.15 + 11,303.58
= 17,850.68 TN

Everett Incl. Snohomish County --
WA ROOSEVELT , WA

2A **4879376**

Denise B.

014209 - Strider Construction Co. Inc.
4721 Northwest Road
Bellingham, WA 98225

12/30/22 10:16 am 12/30/22 10:41 an

8281 TOLU468875

Contract:MC-19415

BNSF230043

Scale In	GROSS WEIGHT	110,680	NET TONS	29.75	INBOUND
Scale Out	TARE WEIGHT	51,180	NET WEIGHT	59,500	INVOICE

28.00	YD	Tracking QTY	
29.75	tn	Cont Soil	Origin:Everett 100%

CHANGE:
CHECK :

Everett Incl. Snohomish County --
WA ROOSEVELT , WA

2A **4879378**

Denise B.

014209 - Strider Construction Co. Inc.
4721 Northwest Road
Bellingham, WA 98225

12/30/22 10:21 am 12/30/22 10:51 an

5223 TOLU453219

Contract:MC-19415

DTTX427026

Scale In	GROSS WEIGHT	118,740	NET TONS	32.66	INBOUND
Scale Out	TARE WEIGHT	53,420	NET WEIGHT	65,320	INVOICE

28.00	YD	Tracking QTY	
32.66	tn	Cont Soil	Origin:Everett 100%

CHANGE:
CHECK :

Everett Incl. Snohomish County --
WA ROOSEVELT , WA

2A **4879381**

Denise B.

014209 - Strider Construction Co. Inc.
4721 Northwest Road
Bellingham, WA 98225

12/30/22 11:35 am 12/30/22 12:02 pm

7329 TOLU459437

Contract:MC-19415

DTTX427026

Scale In	GROSS WEIGHT	115,400	NET TONS	33.86	INBOUND
Scale Out	TARE WEIGHT	47,680	NET WEIGHT	67,720	INVOICE

28.00	YD	Tracking QTY	
33.86	tn	Cont Soil	Origin:Everett 100%

CHANGE:
CHECK :

Everett Incl. Snohomish County --
WA ROOSEVELT , WA

2A **4879402**

Denise B.

014209 - Strider Construction Co. Inc.
4721 Northwest Road
Bellingham, WA 98225

12/30/22 12:24 pm 12/30/22 12:50 pm

5223 TOLU475776

Contract:MC-19415

BNSF230043

Scale In	GROSS WEIGHT	105,500	NET TONS	28.54	INBOUND
Scale Out	TARE WEIGHT	48,420	NET WEIGHT	57,080	INVOICE

28.00	YD	Tracking QTY	
28.54	tn	Cont Soil	Origin:Everett 100%

CHANGE:
CHECK :

Everett Incl. Snohomish County --
WA ROOSEVELT , WA

2A **4879407**

Denise B.

014209 - Strider Construction Co. Inc.
4721 Northwest Road
Bellingham, WA 98225

12/30/22 12:38 pm 12/30/22 1:32 pm

7329 RBSU200115

Contract:MC-19415

BNSF230043

Scale In	GROSS WEIGHT	119,300	NET TONS	34.96	INBOUND
Scale Out	TARE WEIGHT	49,380	NET WEIGHT	69,920	INVOICE

28.00	YD	Tracking QTY	
34.96	tn	Cont Soil	Origin:Everett 100%

CHANGE:
CHECK :

Everett Incl. Snohomish County --
WA ROOSEVELT , WA

2A **4879404**

Denise B.

014209 - Strider Construction Co. Inc.
4721 Northwest Road
Bellingham, WA 98225

12/30/22 12:42 pm 12/30/22 1:10 pm

0329 GCEU425440

Contract:MC-19415

BNSF230043

Scale In	GROSS WEIGHT	106,180	NET TONS	29.03	INBOUND
Scale Out	TARE WEIGHT	48,120	NET WEIGHT	58,060	INVOICE

28.00	YD	Tracking QTY	
29.03	tn	Cont Soil	Origin:Everett 100%

CHANGE:
CHECK :

Everett Incl. Snohomish County --
WA ROOSEVELT , WA

2A **4879452**

Denise B.

014209 - Strider Construction Co. Inc.
4721 Northwest Road
Bellingham, WA 98225

12/30/22 3:30 pm 12/30/22 3:56 pm
7329 GCEU425690

Contract:MC-19415

DTTX427927

Scale In	GROSS WEIGHT	104,800	NET TONS	28.35	INBOUND
Scale Out	TARE WEIGHT	48,100	NET WEIGHT	56,700	INVOICE

28.00	YD	Tracking QTY	
28.35	tn	Cont Soil	Origin:Everett 100%

CHANGE:
CHECK :

Everett Incl. Snohomish County --
WA ROOSEVELT , WA

2A **4879464**

Denise B.

014209 - Strider Construction Co. Inc.
4721 Northwest Road
Bellingham, WA 98225

12/31/22 6:22 am 12/31/22 6:45 am
2235 TOLU466636

Contract:MC-19415

DTTX620397

Scale In	GROSS WEIGHT	104,960	NET TONS	26.71	INBOUND
Scale Out	TARE WEIGHT	51,540	NET WEIGHT	53,420	INVOICE

28.00	YD	Tracking QTY	
26.71	tn	Cont Soil	Origin:Everett 100%

CHANGE:
CHECK :

Everett Incl. Snohomish County --
WA ROOSEVELT , WA

2A **4879465**

Denise B.

014209 - Strider Construction Co. Inc.
4721 Northwest Road
Bellingham, WA 98225

12/31/22 6:31 am 12/31/22 7:00 an

8281 GCEU431468

Contract:MC-19415

DTTX27574

Scale In	GROSS WEIGHT	109,900	NET TONS	29.71	INBOUND
Scale Out	TARE WEIGHT	50,480	NET WEIGHT	59,420	INVOICE

28.00	YD	Tracking QTY	
29.71	tn	Cont Soil	Origin:Everett 100%

CHANGE:
CHECK :

Everett Incl. Snohomish County --
WA ROOSEVELT , WA

2A **4879497**

Denise B.

014209 - Strider Construction Co. Inc.
4721 Northwest Road
Bellingham, WA 98225

12/31/22 11:52 am 12/31/22 12:20 pn

8281 GCEU435263

Contract:MC-19415

DTTX427927

Scale In	GROSS WEIGHT	110,680	NET TONS	30.19	INBOUND
Scale Out	TARE WEIGHT	50,300	NET WEIGHT	60,380	INVOICE

28.00	YD	Tracking QTY	
30.19	tn	Cont Soil	Origin:Everett 100%

CHANGE:
CHECK :

Everett Incl. Snohomish County --
WA ROOSEVELT , WA

2A **4879615**

Brandie M.

014209 - Strider Construction Co. Inc.
4721 Northwest Road
Bellingham, WA 98225

1/2/23 3:46 pm 1/2/23 4:13 pm
0331 GCEU425648

Contract:MC-19415

BNSF230058

Scale In	GROSS WEIGHT	106,060	NET TONS	28.79	INBOUND
Scale Out	TARE WEIGHT	48,480	NET WEIGHT	57,580	INVOICE

28.00	YD	Tracking QTY	
28.79	tn	Cont Soil	Origin:Everett 100%

CHANGE:
CHECK :

Everett Incl. Snohomish County --
WA ROOSEVELT , WA

2A **4879628**

Brandie M.

014209 - Strider Construction Co. Inc.
4721 Northwest Road
Bellingham, WA 98225

1/3/23 6:24 am 1/3/23 6:48 am
5227 TRLU900271

Contract:MC-19415

DTTX27574

Scale In	GROSS WEIGHT	101,620	NET TONS	26.54	INBOUND
Scale Out	TARE WEIGHT	48,540	NET WEIGHT	53,080	INVOICE

28.00	YD	Tracking QTY	
26.54	tn	Cont Soil	Origin:Everett 100%

CHANGE:
CHECK :

Everett Incl. Snohomish County --
WA ROOSEVELT , WA

2A **4879809**

Brandie M.

014209 - Strider Construction Co. Inc.
4721 Northwest Road
Bellingham, WA 98225

1/3/23 3:46 pm 1/3/23 4:07 pm

5227 TOLU466526

Contract:MC-19415

BNSF230058

Scale In	GROSS WEIGHT	108,280	NET TONS	29.42	INBOUND
Scale Out	TARE WEIGHT	49,440	NET WEIGHT	58,840	INVOICE

28.00	YD	Tracking QTY	
29.42	tn	Cont Soil	Origin:Everett 100%

CHANGE:
CHECK :

Everett Incl. Snohomish County --
WA ROOSEVELT , WA

2A **4879974**

Denise B.

014209 - Strider Construction Co. Inc.
4721 Northwest Road
Bellingham, WA 98225

1/6/23 8:07 am 1/6/23 8:29 am

8281 GCEU431449

Contract:MC-19415

DTTX620397

Scale In	GROSS WEIGHT	105,780	NET TONS	28.33	INBOUND
Scale Out	TARE WEIGHT	49,120	NET WEIGHT	56,660	INVOICE

28.00	YD	Tracking QTY	
28.33	tn	Cont Soil	Origin:Everett 100%

CHANGE:
CHECK :

Everett Incl. Snohomish County --
WA ROOSEVELT , WA

2A **4879985**

Denise B.

014209 - Strider Construction Co. Inc.
4721 Northwest Road
Bellingham, WA 98225

1/6/23 11:37 am 1/6/23 12:23 pm

5223 RBSU200309

Contract:MC-19415

DTTX620397

Scale In	GROSS WEIGHT	107,000	NET TONS	27.37	INBOUND
Scale Out	TARE WEIGHT	52,260	NET WEIGHT	54,740	INVOICE

28.00	YD	Tracking QTY	
27.37	tn	Cont Soil	Origin:Everett 100%

CHANGE:
CHECK :

Everett Incl. Snohomish County --
WA ROOSEVELT , WA

2A **4879986**

Denise B.

014209 - Strider Construction Co. Inc.
4721 Northwest Road
Bellingham, WA 98225

1/6/23 11:40 am 1/6/23 12:33 pm

0329 GCEU430213

Contract:MC-19415

DTTX620397

Scale In	GROSS WEIGHT	103,580	NET TONS	26.44	INBOUND
Scale Out	TARE WEIGHT	50,700	NET WEIGHT	52,880	INVOICE

28.00	YD	Tracking QTY	
26.44	tn	Cont Soil	Origin:Everett 100%

CHANGE:
CHECK :

APPENDIX F

City of Everett Sewer Discharge Authorization

November 16, 2021

Mr. Neil Robins
Clear Water Services
2525 W. Casino Rd, Suite 7A,B
Everett, WA 98204

Dear Mr. Robins,

On November 11th, 1 sample was received by our laboratory and assigned our laboratory project number EV21110067. The project was identified as your WAI21POENT. The sample identification and requested analyses are outlined on the attached chain of custody record.

No abnormalities or nonconformances were observed during the analyses of the project samples.

Please do not hesitate to call me if you have any questions or if I can be of further assistance.

Sincerely,

ALS Laboratory Group



Glen Perry
Laboratory Director

ADDRESS 8620 Holly Drive, Suite 100, Everett, WA 98208 | PHONE 425-356-2600 | FAX 425-356-2626
ALS Group USA, Corp dba ALS Environmental

Environmental www.alsglobal.com
RIGHT SOLUTIONS RIGHT PARTNER

ALS Environmental

CERTIFICATE OF ANALYSIS

CLIENT:	Clear Water Services 2525 W. Casino Rd, Suite 7A,B Everett, WA 98204	DATE: ALS JOB#: ALS SAMPLE#:	11/16/2021 EV21110067 EV21110067-01
CLIENT CONTACT:	Neil Robins	DATE RECEIVED:	11/11/2021
CLIENT PROJECT:	WAI21POENT	COLLECTION DATE:	11/11/2021 1:10:00 PM
CLIENT SAMPLE ID	Post Filter	WDOE ACCREDITATION:	C601

SAMPLE DATA RESULTS

ANALYTE	METHOD	RESULTS	REPORTING LIMITS	DILUTION FACTOR	UNITS	ANALYSIS DATE	ANALYSIS BY
Fats/Oils/Grease (Non-Polar)	EPA-1664	U	5.0	1	MG/L	11/12/2021	RAL
Cyanide	SM4500-CN E	U	0.050	1	MG/L	11/16/2021	EBS
Mercury	EPA-245.1	U	0.20	1	UG/L	11/12/2021	RAL
Arsenic	EPA-200.8	U	1.0	1	UG/L	11/15/2021	RAL
Cadmium	EPA-200.8	U	1.0	1	UG/L	11/15/2021	RAL
Chromium	EPA-200.8	U	2.0	1	UG/L	11/15/2021	RAL
Copper	EPA-200.8	**3.6**	2.0	1	UG/L	11/15/2021	RAL
Lead	EPA-200.8	U	1.0	1	UG/L	11/15/2021	RAL
Nickel	EPA-200.8	U	2.0	1	UG/L	11/15/2021	RAL
Silver	EPA-200.8	U	1.0	1	UG/L	11/15/2021	RAL
Zinc	EPA-200.8	**14**	2.5	1	UG/L	11/15/2021	RAL

U - Analyte analyzed for but not detected at level above reporting limit.

ADDRESS 8620 Holly Drive, Suite 100, Everett, WA 98208 | PHONE 425-356-2600 | FAX 425-356-2626
ALS Group USA, Corp dba ALS Environmental

Environmental www.alsglobal.com
RIGHT SOLUTIONS RIGHT PARTNER

ALS Environmental

CERTIFICATE OF ANALYSIS

CLIENT:	Clear Water Services 2525 W. Casino Rd, Suite 7A,B Everett, WA 98204	DATE:	11/16/2021
		ALS SDG#:	EV21110067
		WDOE ACCREDITATION:	C601
CLIENT CONTACT:	Neil Robins		
CLIENT PROJECT:	WAI21POENT		

LABORATORY BLANK RESULTS

MBLK-R395704 - Batch R395704 - Water by EPA-1664

ANALYTE	METHOD	RESULTS	UNITS	REPORTING LIMITS	ANALYSIS DATE	ANALYSIS BY
Fats/Oils/Grease (Non-Polar)	EPA-1664	U	MG/L	5.0	11/12/2021	RAL

U - Analyte analyzed for but not detected at level above reporting limit.

MBLK-R395808 - Batch R395808 - Water by SM4500-CN E

ANALYTE	METHOD	RESULTS	UNITS	REPORTING LIMITS	ANALYSIS DATE	ANALYSIS BY
Cyanide	SM4500-CN E	U	MG/L	0.050	11/16/2021	EBS

U - Analyte analyzed for but not detected at level above reporting limit.

MBLK-R395712 - Batch R395712 - Water by EPA-245.1

ANALYTE	METHOD	RESULTS	UNITS	REPORTING LIMITS	ANALYSIS DATE	ANALYSIS BY
Mercury	EPA-245.1	U	UG/L	0.20	11/12/2021	RAL

U - Analyte analyzed for but not detected at level above reporting limit.

MB-111221W - Batch 172522 - Water by EPA-200.8

ANALYTE	METHOD	RESULTS	UNITS	REPORTING LIMITS	ANALYSIS DATE	ANALYSIS BY
Arsenic	EPA-200.8	U	UG/L	1.0	11/15/2021	RAL
Cadmium	EPA-200.8	U	UG/L	1.0	11/15/2021	RAL
Chromium	EPA-200.8	U	UG/L	2.0	11/15/2021	RAL
Copper	EPA-200.8	U	UG/L	2.0	11/15/2021	RAL
Lead	EPA-200.8	U	UG/L	1.0	11/15/2021	RAL
Nickel	EPA-200.8	U	UG/L	2.0	11/15/2021	RAL
Silver	EPA-200.8	U	UG/L	1.0	11/15/2021	RAL
Zinc	EPA-200.8	U	UG/L	2.5	11/15/2021	RAL

U - Analyte analyzed for but not detected at level above reporting limit.

ADDRESS 8620 Holly Drive, Suite 100, Everett, WA 98208 | PHONE 425-356-2600 | FAX 425-356-2626
ALS Group USA, Corp dba ALS Environmental

Environmental www.alsglobal.com
RIGHT SOLUTIONS RIGHT PARTNER

ALS Environmental

CERTIFICATE OF ANALYSIS

CLIENT: Clear Water Services
2525 W. Casino Rd, Suite 7A,B
Everett, WA 98204

CLIENT CONTACT: Neil Robins
CLIENT PROJECT: WAI21POENT

DATE: 11/16/2021
ALS SDG#: EV21110067
WDOE ACCREDITATION: C601

LABORATORY CONTROL SAMPLE RESULTS

ALS Test Batch ID: R395704 - Water by EPA-1664

SPIKED COMPOUND	METHOD	%REC	RPD	QUAL	LIMITS MIN	LIMITS MAX	ANALYSIS DATE	ANALYSIS BY
Fats/Oils/Grease (Non-Polar) - BS	EPA-1664	**86.0**			66	119	11/12/2021	RAL

ALS Test Batch ID: R395808 - Water by SM4500-CN E

SPIKED COMPOUND	METHOD	%REC	RPD	QUAL	LIMITS MIN	LIMITS MAX	ANALYSIS DATE	ANALYSIS BY
Cyanide - BS	SM4500-CN E	**106**			82	116	11/16/2021	EBS

ALS Test Batch ID: R395712 - Water by EPA-245.1

SPIKED COMPOUND	METHOD	%REC	RPD	QUAL	LIMITS MIN	LIMITS MAX	ANALYSIS DATE	ANALYSIS BY
Mercury - BS	EPA-245.1	**107**			80.6	118	11/12/2021	RAL
Mercury - BSD	EPA-245.1	**109**	**2**		80.6	118	11/12/2021	RAL

ALS Test Batch ID: 172522 - Water by EPA-200.8

SPIKED COMPOUND	METHOD	%REC	RPD	QUAL	LIMITS MIN	LIMITS MAX	ANALYSIS DATE	ANALYSIS BY
Arsenic - BS	EPA-200.8	**96.6**			89.1	110	11/15/2021	RAL
Arsenic - BSD	EPA-200.8	**97.9**	**1**		89.1	110	11/15/2021	RAL
Cadmium - BS	EPA-200.8	**98.9**			89.4	110	11/15/2021	RAL
Cadmium - BSD	EPA-200.8	**99.5**	**1**		89.4	110	11/15/2021	RAL
Chromium - BS	EPA-200.8	**98.9**			88.3	110.2	11/15/2021	RAL
Chromium - BSD	EPA-200.8	**100**	**1**		88.3	110.2	11/15/2021	RAL
Copper - BS	EPA-200.8	**101**			85.4	109	11/15/2021	RAL
Copper - BSD	EPA-200.8	**102**	**1**		85.4	109	11/15/2021	RAL
Lead - BS	EPA-200.8	**96.6**			87.5	107	11/15/2021	RAL
Lead - BSD	EPA-200.8	**97.4**	**1**		87.5	107	11/15/2021	RAL
Nickel - BS	EPA-200.8	**96.9**			85.4	109	11/15/2021	RAL
Nickel - BSD	EPA-200.8	**98.0**	**1**		85.4	109	11/15/2021	RAL
Silver - BS	EPA-200.8	**100**			80	120	11/15/2021	RAL
Silver - BSD	EPA-200.8	**100**	**0**		80	120	11/15/2021	RAL
Zinc - BS	EPA-200.8	**98.5**			88.2	111	11/15/2021	RAL
Zinc - BSD	EPA-200.8	**98.9**	**0**		88.2	111	11/15/2021	RAL

APPROVED BY

Laboratory Director

ADDRESS 8620 Holly Drive, Suite 100, Everett, WA 98208 | PHONE 425-356-2600 | FAX 425-356-2626
ALS Group USA, Corp dba ALS Environmental

Environmental www.alsglobal.com
RIGHT SOLUTIONS RIGHT PARTNER

ALS Environmental
8620 Holly Drive, Suite 100
Everett, WA 98208
Phone (425) 356-2600
Fax (425) 356-2626
http://www.alsglobal.com

Chain Of Custody/ Laboratory Analysis Request

ALS Job# (Laboratory Use Only)

EV2111067

Date _____ Page _____ Of _____

PROJECT ID: WTI21FOENT
REPORT TO COMPANY: Clear water Service
PROJECT MANAGER: Neil Robins
ADDRESS: 2525 W Casino rd suit 7A
Everett wa 98204
PHONE: 4254125700 P.O. #:
E-MAIL: Neil.robins@clearwaterservices.com
INVOICE TO COMPANY: same
ATTENTION:
ADDRESS:

ANALYSIS REQUESTED

SAMPLE I.D.	DATE	TIME	TYPE	LAB#	NWTPH-HCID	NWTPH-DX	NWTPH-GX	BTEX by EPA 8021 ☐ BTEX by EPA 8260 ☐	MTBE by EPA 8021 ☐ MTBE by EPA 8260 ☐	Halogenated Volatiles by EPA 8260	Volatile Organic Compounds by EPA 8260	EDB / EDC by EPA 8260 SIM (water)	EDB / EDC by EPA 8260 (soil)	Semivolatile Organic Compounds by EPA 8270	Polycyclic Aromatic Hydrocarbons (PAH) by EPA 8270 SIM	PCB by EPA 8082 ☐ Pesticides by EPA 8081 ☐	Metals-MTCA-5 ☐ RCRA-8 ☐ Pri Pol ☐ TAL ☐	Metals Other (Specify) EV-9	TCLP-Metals ☐ VOA ☐ Semi-Vol ☐ Pest ☐ Herbs ☐	OTHER (Specify) FOG - HP	CN	NUMBER OF CONTAINERS	RECEIVED IN GOOD CONDITION?
1. post filter	11/11/21	1310	W	1													X		X	X		
2.																						
3.																						
4.																						
5.																						
6.																						
7.																						
8.																						
9.																						
10.																						

SPECIAL INSTRUCTIONS

SIGNATURES (Name, Company, Date, Time):

1. Relinquished By: Ryan Gibson, clear water ~ 11,11,21
   Received By: Shuttle ALS 11/11/2021 1400
2. Relinquished By: _____
   Received By: _____

TURNAROUND REQUESTED in Business Days*

Organic, Metals & Inorganic Analysis: 10 Standard | 5 | 3 | 2 | 1 | SAME DAY

Fuels & Hydrocarbon Analysis: 5 Standard | 3 | 1 | SAME DAY

OTHER:
Specify: _____

*Turnaround request less than standard may incur Rush Charges

November 15, 2021

Mr. Cole Potter
Strider Construction
4721 Northwest Dr
Bellingham, WA 98226

Dear Mr. Potter,

On November 11th, 1 sample was received by our laboratory and assigned our laboratory project number EV21110066. The project was identified as your NORTON. The sample identification and requested analyses are outlined on the attached chain of custody record.

No abnormalities or nonconformances were observed during the analyses of the project samples.

Please do not hesitate to call me if you have any questions or if I can be of further assistance.

Sincerely,

ALS Laboratory Group

Glen Perry
Laboratory Director

ADDRESS 8620 Holly Drive, Suite 100, Everett, WA 98208 | PHONE 425-356-2600 | FAX 425-356-2626
ALS Group USA, Corp dba ALS Environmental

Environmental www.alsglobal.com
RIGHT SOLUTIONS RIGHT PARTNER

ALS Environmental

CERTIFICATE OF ANALYSIS

CLIENT:	Strider Construction 4721 Northwest Dr Bellingham, WA 98226	DATE: ALS JOB#: ALS SAMPLE#:	11/15/2021 EV21110066 EV21110066-01
CLIENT CONTACT:	Cole Potter	DATE RECEIVED:	11/11/2021
CLIENT PROJECT:	NORTON	COLLECTION DATE:	11/11/2021 11:30:00 AM
CLIENT SAMPLE ID	SOUTH END S.W.	WDOE ACCREDITATION:	C601

SAMPLE DATA RESULTS

ANALYTE	METHOD	RESULTS	REPORTING LIMITS	DILUTION FACTOR	UNITS	ANALYSIS DATE	ANALYSIS BY
Fats/Oils/Grease (Non-Polar)	EPA-1664	U	5.0	1	MG/L	11/12/2021	RAL
Cyanide	SM4500-CN E	U	0.050	1	MG/L	11/11/2021	EBS
Mercury	EPA-245.1	U	0.20	1	UG/L	11/12/2021	RAL
Arsenic	EPA-200.8	**14**	1.0	1	UG/L	11/11/2021	RAL
Cadmium	EPA-200.8	U	1.0	1	UG/L	11/11/2021	RAL
Chromium	EPA-200.8	**35**	2.0	1	UG/L	11/11/2021	RAL
Copper	EPA-200.8	**43**	2.0	1	UG/L	11/11/2021	RAL
Lead	EPA-200.8	**18**	1.0	1	UG/L	11/11/2021	RAL
Nickel	EPA-200.8	**44**	2.0	1	UG/L	11/11/2021	RAL
Silver	EPA-200.8	U	1.0	1	UG/L	11/11/2021	RAL
Zinc	EPA-200.8	**78**	2.5	1	UG/L	11/11/2021	RAL

U - Analyte analyzed for but not detected at level above reporting limit.

ADDRESS 8620 Holly Drive, Suite 100, Everett, WA 98208 | PHONE 425-356-2600 | FAX 425-356-2626
ALS Group USA, Corp dba ALS Environmental

Environmental www.alsglobal.com
RIGHT SOLUTIONS RIGHT PARTNER

ALS Environmental

CERTIFICATE OF ANALYSIS

CLIENT: Strider Construction
4721 Northwest Dr
Bellingham, WA 98226
CLIENT CONTACT: Cole Potter
CLIENT PROJECT: NORTON

DATE: 11/15/2021
ALS SDG#: EV21110066
WDOE ACCREDITATION: C601

LABORATORY BLANK RESULTS

MBLK-R395704 - Batch R395704 - Water by EPA-1664

ANALYTE	METHOD	RESULTS	UNITS	REPORTING LIMITS	ANALYSIS DATE	ANALYSIS BY
Fats/Oils/Grease (Non-Polar)	EPA-1664	U	MG/L	5.0	11/12/2021	RAL

U - Analyte analyzed for but not detected at level above reporting limit.

MBLK-R395509 - Batch R395509 - Water by SM4500-CN E

ANALYTE	METHOD	RESULTS	UNITS	REPORTING LIMITS	ANALYSIS DATE	ANALYSIS BY
Cyanide	SM4500-CN E	U	MG/L	0.050	11/11/2021	EBS

U - Analyte analyzed for but not detected at level above reporting limit.

MBLK-R395712 - Batch R395712 - Water by EPA-245.1

ANALYTE	METHOD	RESULTS	UNITS	REPORTING LIMITS	ANALYSIS DATE	ANALYSIS BY
Mercury	EPA-245.1	U	UG/L	0.20	11/12/2021	RAL

U - Analyte analyzed for but not detected at level above reporting limit.

MB-111121W - Batch 172479 - Water by EPA-200.8

ANALYTE	METHOD	RESULTS	UNITS	REPORTING LIMITS	ANALYSIS DATE	ANALYSIS BY
Arsenic	EPA-200.8	U	UG/L	1.0	11/11/2021	RAL
Cadmium	EPA-200.8	U	UG/L	1.0	11/11/2021	RAL
Chromium	EPA-200.8	U	UG/L	2.0	11/11/2021	RAL
Copper	EPA-200.8	U	UG/L	2.0	11/11/2021	RAL
Lead	EPA-200.8	U	UG/L	1.0	11/11/2021	RAL
Nickel	EPA-200.8	U	UG/L	2.0	11/11/2021	RAL
Silver	EPA-200.8	U	UG/L	1.0	11/11/2021	RAL
Zinc	EPA-200.8	U	UG/L	2.5	11/11/2021	RAL

U - Analyte analyzed for but not detected at level above reporting limit.

ADDRESS 8620 Holly Drive, Suite 100, Everett, WA 98208 | PHONE 425-356-2600 | FAX 425-356-2626
ALS Group USA, Corp dba ALS Environmental

Environmental www.alsglobal.com
RIGHT SOLUTIONS RIGHT PARTNER

ALS Environmental

CERTIFICATE OF ANALYSIS

CLIENT:	Strider Construction 4721 Northwest Dr Bellingham, WA 98226	DATE:	11/15/2021
		ALS SDG#:	EV21110066
		WDOE ACCREDITATION:	C601
CLIENT CONTACT:	Cole Potter		
CLIENT PROJECT:	NORTON		

LABORATORY CONTROL SAMPLE RESULTS

ALS Test Batch ID: R395704 - Water by EPA-1664

SPIKED COMPOUND	METHOD	%REC	RPD	QUAL	LIMITS MIN	LIMITS MAX	ANALYSIS DATE	ANALYSIS BY
Fats/Oils/Grease (Non-Polar) - BS	EPA-1664	**86.0**			66	119	11/12/2021	RAL

ALS Test Batch ID: R395509 - Water by SM4500-CN E

SPIKED COMPOUND	METHOD	%REC	RPD	QUAL	LIMITS MIN	LIMITS MAX	ANALYSIS DATE	ANALYSIS BY
Cyanide - BS	SM4500-CN E	**106**			82	116	11/11/2021	EBS

ALS Test Batch ID: R395712 - Water by EPA-245.1

SPIKED COMPOUND	METHOD	%REC	RPD	QUAL	LIMITS MIN	LIMITS MAX	ANALYSIS DATE	ANALYSIS BY
Mercury - BS	EPA-245.1	**107**			80.6	118	11/12/2021	RAL
Mercury - BSD	EPA-245.1	**109**	**2**		80.6	118	11/12/2021	RAL

ALS Test Batch ID: 172479 - Water by EPA-200.8

SPIKED COMPOUND	METHOD	%REC	RPD	QUAL	LIMITS MIN	LIMITS MAX	ANALYSIS DATE	ANALYSIS BY
Arsenic - BS	EPA-200.8	**96.5**			89.1	110	11/11/2021	RAL
Arsenic - BSD	EPA-200.8	**95.3**	**1**		89.1	110	11/11/2021	RAL
Cadmium - BS	EPA-200.8	**104**			89.4	110	11/11/2021	RAL
Cadmium - BSD	EPA-200.8	**101**	**3**		89.4	110	11/11/2021	RAL
Chromium - BS	EPA-200.8	**98.2**			88.3	110.2	11/11/2021	RAL
Chromium - BSD	EPA-200.8	**97.9**	**0**		88.3	110.2	11/11/2021	RAL
Copper - BS	EPA-200.8	**102**			85.4	109	11/11/2021	RAL
Copper - BSD	EPA-200.8	**101**	**1**		85.4	109	11/11/2021	RAL
Lead - BS	EPA-200.8	**99.3**			87.5	107	11/11/2021	RAL
Lead - BSD	EPA-200.8	**98.2**	**1**		87.5	107	11/11/2021	RAL
Nickel - BS	EPA-200.8	**96.2**			85.4	109	11/11/2021	RAL
Nickel - BSD	EPA-200.8	**94.4**	**2**		85.4	109	11/11/2021	RAL
Silver - BS	EPA-200.8	**107**			80	120	11/11/2021	RAL
Silver - BSD	EPA-200.8	**104**	**2**		80	120	11/11/2021	RAL
Zinc - BS	EPA-200.8	**100**			88.2	111	11/11/2021	RAL
Zinc - BSD	EPA-200.8	**99.1**	**1**		88.2	111	11/11/2021	RAL

APPROVED BY

Laboratory Director

ADDRESS 8620 Holly Drive, Suite 100, Everett, WA 98208 | PHONE 425-356-2600 | FAX 425-356-2626
ALS Group USA, Corp dba ALS Environmental

Environmental www.alsglobal.com
RIGHT SOLUTIONS RIGHT PARTNER

ALS Environmental
8620 Holly Drive, Suite 100
Everett, WA 98208
Phone (425) 356-2600
Fax (425) 356-2626
http://www.alsglobal.com

Chain Of Custody/ Laboratory Analysis Request

ALS Job# (Laboratory Use Only): EV2111 05 66

Date _____ Page _____ Of _____

PROJECT ID: NORTON
REPORT TO COMPANY: Strider
PROJECT MANAGER: COLE POTTER
ADDRESS: 4721 NORTHWEST DR
BELLINGHAM, WA 98226
PHONE: 360. 380. 1234 P.O. #:
E-MAIL: COLE
INVOICE TO COMPANY: STRIDER CONSTRUCTION
ATTENTION:
ADDRESS:

SAMPLE I.D.	DATE	TIME	TYPE	LAB#
1. SOUTH END S.W.	11/11/21	11:30AM	W	1
2.				
3.				
4.				
5.				
6.				
7.				
8.				
9.				
10.				

ANALYSIS REQUESTED

NWTPH-HCID	NWTPH-DX	NWTPH-GX	BTEX by EPA 8021 ☐ BTEX by EPA 8260 ☐	MTBE by EPA 8021 ☐ MTBE by EPA 8260 ☐	Halogenated Volatiles by EPA 8260	Volatile Organic Compounds by EPA 8260	EDB / EDC by EPA 8260 SIM (water)	EDB / EDC by EPA 8260 (soil)	Semivolatile Organic Compounds by EPA 8270	Polycyclic Aromatic Hydrocarbons (PAH) by EPA 8270 SIM	PCB by EPA 8082 ☐ Pesticides by EPA 8081 ☐	Metals-MTCA-5 ☐ RCRA-8 ☐ Pri Pol ☐ TAL ☐	Metals Other (Specify) EV-9	TCLP-Metals ☐ VOA ☐ Semi-Vol ☐ Pest ☐ Herbs ☐
													X	

OTHER (Specify)

										NUMBER OF CONTAINERS	RECEIVED IN GOOD CONDITION?
X FOG - NP	X CN -										

SPECIAL INSTRUCTIONS

SIGNATURES (Name, Company, Date, Time):

1. Relinquished By: TAYLOR LENDERMAN STRIDER 11/11/21 12:00noon
   Received By: Glen Perry ALS 11/11/21 12:07PM
2. Relinquished By: _____
   Received By: _____

TURNAROUND REQUESTED in Business Days*

Organic, Metals & Inorganic Analysis: 10 Standard ☐ | 5 ☐ | X | 2 ☐ | 1 ☐ | SAME DAY ☐

Fuels & Hydrocarbon Analysis: 5 Standard ☐ | X | 1 ☐ | SAME DAY ☐

OTHER: Specify: _____

*Turnaround request less than standard may incur Rush Charges

EVERETT
WASHINGTON

September 16, 2021

Taylor Lenderman
Strider Construction
4721 Northwest Dr
Bellingham WA 98226

Subject: Discharge Authorization No. MD-41-2021
2600 Federal Avenue, Everett WA 98201
Expires: September 30, 2022

Dear Mr. Lenderman:

Strider Construction, is hereby authorized to discharge site related water from site remediation. Discharge will be allowed for the permit duration. The discharge will be allowed upon the City's receipt of the signed acceptance of this letter and with the proper notification to the City that the work will proceed. No other water sources are allowed to be discharged under this authorization, other than what is listed above.

This authorization is based on the information you provided; we understand that this work is an ongoing. Discharge will be allowed based on compliance with the conditions of this authorization.

The point of discharge will be within the city's sewer collection system as directed by your City representative.

You will be billed for the amount discharged to the city sewers based on the total flow. Your sewer bill will be invoiced monthly and will be calculated on our current sewer rate (currently $8.176 per 100 cubic feet) plus the industrial surcharge of $0.19 per thousand gallons of flow.

You must meter and track the amount discharged to the city sewers. You must also know the approximate flow rate at all times, as we will need to know especially during wet weather

This Discharge Authorization is issued with the following conditions:

1) You must comply with the general use and discharge requirements of the Industrial Pretreatment Ordinance #3070-08 as amended (attached), as well as any applicable Federal and State regulations.

2) The City solely reserves the right to modify, suspend, or terminate this authorization at any time once issued.

3) Your City representative and point of contact for discharge is Brian Doolan at 425-257-8828 (cell at 425-501-5124) or bdoolan@everettwa.gov. You need to notify Brian prior to discharge and when your project is completed. You must also report monthly flows to Brian.

Public Works

3200 Cedar Street
Everett, WA 98201

425.257.8800
425.257.8882 fax

everettpw@everettwa.gov
everettwa.gov/pw

4) Discharge can only occur during non-rain impacted flow periods. Your point of contact will receive notification to immediately stop discharging within 30 minutes.

5) The point of discharge shall be as directed by the City's project representative and limited to a flow of 200 gallons per minute or less. Higher rates must be first approved by Brian Doolan and be for limited durations.

6) Discharge will only be for water related to construction at the specific location identified in the DA application. Other sources must be pre-approved.

7) All flow shall be routed through a system to remove any free floatables and settleable solids or be free of floatable and settleable solids. Strider Construction will monitor and prevent that there are no floatable and settleable solids in discharge and shall use an onsite storage tank for pre-settlement needs related to high sediment or turbidity prior to discharge to the City's sewers. The City will inspect the tank and volume prior to discharge; with the ability and permission to inspect during the work as needed. Contact Brian for inspection of the tank at least a working day prior to your discharge request.

8) At any time, the City can direct the point of discharge to an alternative location that best suits the City.

9) Discharge operations shall comply with the City's Noise Ordinance.

10) Strider Construction is solely responsible for spills of any kind related to the discharge operations, including reporting to Department of Ecology, clean-up, and any repairs or restoration, and costs for City to oversee and respond. The City must be notified immediately of any spill.

11) City of Everett personnel may take samples of the effluent for analysis and may inspect your site to verify compliance at any time.

12) Maximum rate of flow shall not cause capacity problems in the receiving sewer or at any point downstream of the discharge; the City may modify the flow rate at any time.

13) The discharge is subject to these limits:

As	0.5	mg/L
Cd	0.24	mg/L
Cr	5.0	mg/L
Cu	3.0	mg/L
Pb	1.9	mg/L
Hg	0.1	mg/L
Ni	2.83	mg/L
Ag	0.49	mg/L
Zn	4.0	mg/L
CN-	0.65	mg/L
Nonpolar FOG	200	mg/L

Should lab samples indicate higher than allowed discharge limits, then a treatment plan to bring the discharge below the allowable limits will be required.

All discharge data from the site shall be reported. The total amount of flow to the sanitary sewer shall be reported at the completion of the discharge along with the data required. Please send reports to the following:

Brian Doolan
M & O Supervisor
City of Everett
3200 Cedar Street
Everett, WA 98201

14) The City reserves the right to bill Strider Construction fees for city work beyond our normal site monitoring for sewer related regulatory compliance or for overseeing this discharge authorization.

15) Strider Construction must install a meter to monitor the flow rate of discharge and report the monthly volumes to Brian Doolan. Brian must inspect and approve the meter installation prior to discharge. The meter shall not be removed or replaced without notifying the City first. Strider Construction will not exceed 200 gallons per minute and must keep a log for the discharge volumes noted. The log and amount of flow must be submitted to Brian at the end of the project.

Please contact me at 425 257-8828 (bdoolan@everettwa.gov) if you have any questions.

Sincerely,

Brian Doolan, PE
Maintenance & Operations Supervisor

Accepted By:

Date: 9/16/2021

Attachment: General Permit Provisions
Pretreatment Ordinance

cc: Gene Bennett, City of Everett
Jeff Marrs City of Everett
Chron File
IPT File

APPENDIX G

Archaeological Monitoring Report

Cultural Resource Consultants

TECHNICAL MEMO 2110B-1

DATE: November 18, 2022

TO: Nathan Watson
KPFF

FROM: Margaret Berger, Principal Investigator

RE: Archaeological Monitoring Report for the Norton Terminal Development & MTCA 3rd Interim Action, Everett, Snohomish County, Washington

The attached form contains our final report for the above referenced project. Archaeological monitoring of project ground disturbance did not result in the identification of any archaeological resources. No additional cultural resources investigation is recommended at this time. Please contact our office if you have any questions about our findings and/or recommendations.

P.O. Box 4159, Seattle, WA 98194
Phone 206 855-9020 Email info@crcwa.com

CULTURAL RESOURCES REPORT COVER SHEET

Author: Margaret Berger

Title of Report: Archaeological Monitoring Report for the Norton Terminal Development & MTCA 3rd Interim Action, Everett, Snohomish County, Washington

Date of Report: November 18, 2022

County(ies): Snohomish Section: 19 Township: 29 N Range: 05 E

Quad: Everett, WA Acres: ~33

PDF of report submitted (REQUIRED) ☐ Yes

Historic Property Inventory Forms to be Approved Online? ☐ Yes ☒ No

Archaeological Site(s)/Isolate(s) Found or Amended? ☐ Yes ☒ No

TCP(s) found? ☐ Yes ☒ No

Replace a draft? ☐ Yes ☒ No

Satisfy a DAHP Archaeological Excavation Permit requirement? ☐ Yes # ☒ No

Were Human Remains Found? ☐ Yes DAHP Case # ☒ No

DAHP Archaeological Site #:

_____
_____
_____
_____
_____
_____
_____
_____

- Submission of PDFs is required.
- Please be sure that any PDF submitted to DAHP has its cover sheet, figures, graphics, appendices, attachments, correspondence, etc., compiled into one single PDF file.
- Please check that the PDF displays correctly when opened.

Archaeological Monitoring Report for the Norton Terminal Development & MTCA 3rd Interim Action, Everett, Snohomish County, Washington

Table of Contents

Management Summary 1
1.0 Administrative Data 1
1.1 Overview 1
1.2 Research Design 2
1.3 Project Description 3
2.0 Archaeological Monitoring Summary 5
3.0 Results and Recommendations 7
4.0 Limitations of this Assessment 7
5.0 References 8
Appendix A. Archaeological Monitoring Logs 9

Management Summary

This report describes the archaeological monitoring report for the Norton Terminal Development & Model Toxics Control Act (MTCA) 3rd Interim Action project in Everett, Snohomish County, Washington. On behalf of Port of Everett, KPFF contracted Cultural Resource Consultants (CRC) to provide archaeological monitoring during ground disturbing activities with potential to exceed the depth of existing fill in compliance with Section 106 of the National Historic Preservation Act (NHPA) and Washington's State Environmental Policy Act (SEPA). Further, the work was funded in part by Washington State Department of Ecology through an Oversight Remedial Action Grant. As a result, the work was done in compliance with Governor Inslee's Executive Order 21-02 (formerly 05-05). Archaeological monitoring conducted by CRC on 34 days from October 2021 to August 2022 did not result in the identification of any archaeological resources. Project activities requiring archaeological monitoring are complete. No additional cultural resources investigation is recommended at this time.

1.0 Administrative Data

1.1 Overview

Report Title: Archaeological Monitoring Report for the Norton Terminal Development & MTCA 3rd Interim Action, Everett, Snohomish County, Washington

Author (s): Margaret Berger

Report Date: November 18, 2022

Location: This physical address for the project is 2600 Federal Ave E, Everett, WA 98201.

Legal Description: The legal description for the project is Section 19 of Township 29 North, Range 05 East, W.M. This project is located on Snohomish County Tax Parcels 29051900300100, 29051900300200, 29051900200900, 29051900201500, 29051900201000, 29051900201100, 00437461700200, 00597761803000, 00597761800600, and 00597761801000.

USGS 7.5' Topographic Map(s): Everett, WA (Figure 1).

Total Area Involved: Approximately 33 acres.

Regulatory Nexus/#: Section 106 of NHPA; SEPA.

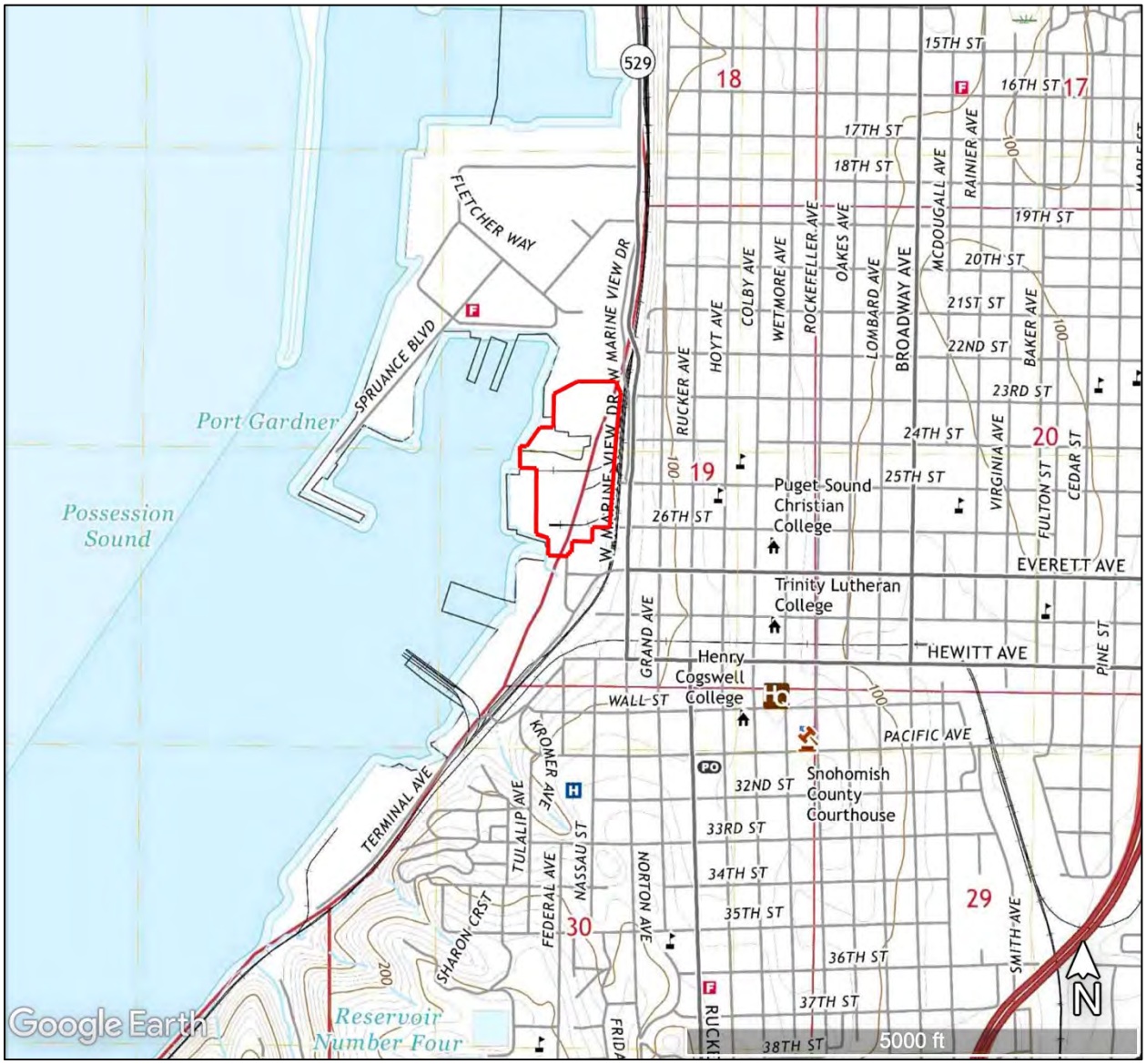

Figure 1. Topographic quadrangle (USGS 2020) annotated with the project location.

1.2 Research Design

CRC's work was intended, in part, to assist in addressing state regulations pertaining to the identification and protection of cultural resources (e.g., RCW 27.44, RCW 27.53, RCW 68.60). The Archaeological Sites and Resources Act (RCW 27.53) prohibits knowingly disturbing archaeological sites without a permit from the Washington State Department of Archaeology and Historic Preservation (DAHP), the Indian Graves and Records Act (RCW 27.44) prohibits knowingly disturbing Native American or historic graves, and the Abandoned and Historic Cemeteries and Historic Graves Act (RCW 68.60) calls for the protection and preservation of historic era cemeteries and graves.

This project is subject to oversight by the Washington State Department of Ecology (Ecology) and has received a U.S. Department of Transportation Better Utilizing Investment to Leverage

Development (BUILD) Grant. It is being completed in compliance with SEPA, Section 106 of the NHPA, and Executive Order (EO) 21-02.

SEPA requires that impacts to cultural resources be considered during the public environmental review process. Under SEPA, DAHP is considered the agency with technical expertise in regard to cultural resources and provides formal opinions to national and state level governments and agencies on a site's significance and the impact of proposed projects upon such sites. Properties evaluated for eligibility for local registers are reviewed by the responsible preservation program.

EO 21-02, signed by Governor Jay Inslee on April 7, 2021, aims to protect Washington's history from unnecessary damage by requiring any state funded project or investment to consider impacts to cultural resources. Agencies must contact DAHP, the Governor's Office of Indian Affairs (GIOA), and concerned tribes, and allow them time to review the project's scope and respond.

Under Section 106, agencies involved in a federal undertaking must take into account the undertaking's potential effects to historic properties within the defined Area of Potential Effects (APE) (36 CFR 800.16(l)(1)). Historic properties are typically defined as buildings, structures, sites, districts, or objects at least 50 years old. The Section 106 process involves identifying and inventorying historic properties within the APE and evaluating those properties to determine if they are eligible for listing on the National Register of Historic Places (NRHP). If NRHP eligible historic properties are identified within the APE, then potential adverse effects to the historic properties must be assessed, and a resolution of adverse effects recommended.

1.3 Project Description

Port of Everett sought to implement an integrated cleanup and redevelopment plan at Norton Terminal by installing a site-wide (33 acre) environmental pavement cap under an Agreed Order with Ecology that will double as a marine terminal cargo pad. The pavement cap will provide permanent environmental controls and state of-the-art stormwater treatment for the first time in the property's history (Figure 2). Prior cleanup efforts on the property have included removing contaminated sediments and capping areas with clean fill material. However, there is potential for archaeological deposits to occur beneath the extent of prior disturbances and filling. Archaeological monitoring was conducted during project actions with potential to exceed the depth of fill on the property as determined by a previous cultural resources assessment (Rinck et al. 2013). Monitoring was conducted following the protocols outlined in an archaeological monitoring plan developed for earlier interim cleanup actions on the property (Rinck 2013). Project actions requiring archaeological monitoring included utility potholing, trenching for electrical vaults, and trenching for stormwater outfalls and vaults. These actions occurred within the area described above and depicted in Figures 1 – 3.

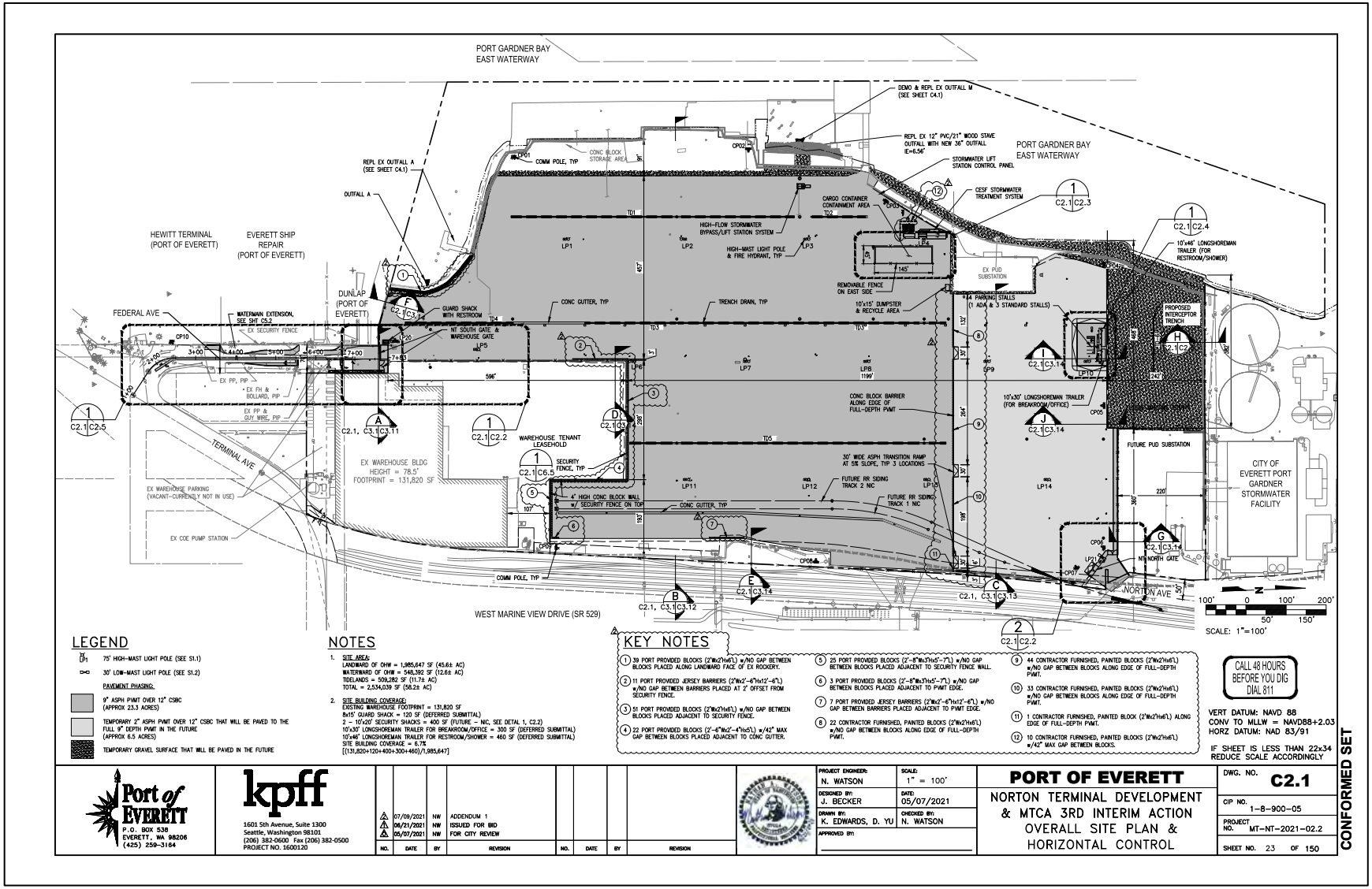

Figure 2. Proposed site plan, provided by KPFF.



Figure 3. August 2020 satellite imagery annotated with red polygon containing all locations monitored by CRC for this project (base map: Google Earth 2022).

2.0 Archaeological Monitoring Summary

Monitoring occurred between October 2021 and August 2022 on a total of 34 days (Table 1). Archaeological monitoring conducted by or under the supervision of a "professional archaeologist" (RCW 27.53.030 (11)). Monitoring was completed by CRC Archaeologists Margaret Berger, Jessica Gardner, and Ian Kretzler. The monitoring effort was supervised by

CRC Principal Investigator Margaret Berger. Detailed observations and photographs are captured in the Daily Archaeological Monitoring Logs (Appendix B).

The goal of monitoring was to observe subsurface conditions and identify any buried precontact or postcontact archaeological resources. During ground disturbing work with potential to exceed the depth of fill deposits on the property (typically 7 feet below ground surface or deeper), the archaeologist stood in close proximity to construction equipment in order to view subsurface deposits as they were exposed and remained in close communication with equipment operators to ensure adequate opportunity for observation and documentation. Archaeological monitoring focused on identifying potential buried surfaces, anthropogenic sediments, and archaeological features such as shell middens, hearths, burials, or artifact-bearing strata underlying modern fill deposits. The monitoring archaeologist inspected project excavations and, when necessary, recovered sediments for indications of such archaeological resources.

Ground disturbing methods consisted of machine excavated trenching. Observed sediments generally consisted of recent and older fill, dredge spoils, and tide flat deposits. Recent fill was typically observed as clean, well-sorted, loose brown sand and gravel. Older fill included gravelly sands and pieces of demolition debris from the removal of the previously documented mill buildings and facilities that occupied the property from the early 1900s until the 2013. These items included brick fragments, rebar, concrete slabs and rubble, abandoned pipes, and tiles, are described in detail in the Daily Archaeological Monitoring Logs; however, none were formally recorded given their secondary context in fill material. Dredge spoils typically consisted of dark gray gravelly silty sands with occasional shell fragments. Tide flat deposits, sometimes intact but often at least partially disturbed by prior construction, were generally identifiable as gray to dark gray sand with variable silt and clay content. Beach deposits were encountered in only two areas, and were identified as gravelly, cobbly coarser sands.

Table 1. Summary of Archaeological Monitoring.

Date	**Monitor**	**Project Component**	**Archaeology Observed**	**General Sediments**
10/25/2021	Margaret Berger	Utility potholing	None	Fill over tide flat
1/17/2022	Ian Kretzler	Utility pre-digging	None	Fill/dredge spoils
1/18/2022	Ian Kretzler	Utility pre-digging	None	Fill/dredge spoils over tide flat
1/19/2022	Ian Kretzler	Utility pre-digging	None	Fill/dredge spoils over disturbed tide flat
1/20/2022	Ian Kretzler	Utility pre-digging	None	Dredge spoils over tide flat
3/14/2022	Margaret Berger	Utility excavation	None	Fill
3/15/2022	Margaret Berger	Utility excavation	None	Fill/dredge spoils over tide flat
3/16/2022	Margaret Berger	Utility excavation	None	Fill/dredge spoils
3/17/2022	Ian Kretzler	Utility excavation	None	Dredge spoils over disturbed tide flat
3/21/2022	Jessica Gardner	Utility excavation	None	Fill/dredge spoils
3/22/2022	Jessica Gardner	Utility excavation	None	Fill/dredge spoils
3/23/2022	Jessica Gardner	Utility excavation	None	Fill/dredge spoils
3/24/2022	Margaret Berger	Utility excavation	None	Fill/dredge spoils over disturbed tide flat

Date	Monitor	Project Component	Archaeology Observed	General Sediments
3/25/2022	Jessica Gardner	Utility excavation	None	Fill
4/4/2022	Margaret Berger	Utility excavation	None	Fill/dredge spoils over disturbed tide flat
4/5/2022	Margaret Berger	Utility excavation	None	Fill/dredge spoils over beach
4/11/2022	Margaret Berger	Outfall M excavation	None	Fill/dredge spoils
4/12/2022	Margaret Berger	Outfall M excavation	None	Fill/dredge spoils
4/19/2022	Margaret Berger	Utility excavation	None	Fill over disturbed tide flat
4/20/2022	Margaret Berger	Outfall M excavation	None	Fill/dredge spoils over disturbed tide flat
4/21/2022	Margaret Berger	Outfall M excavation & utility potholing	None	Fill
5/3/2022	Margaret Berger	Dewatering well excavation	None	Fill over disturbed tide flat
5/4/2022	Margaret Berger	Utility excavation	None	Fill
5/9/2022	Ian Kretzler	Utility excavation	None	Fill/dredge spoils
5/10/2022	Ian Kretzler	Utility excavation	None	Fill/dredge spoils over tideflat
5/11/2022	Ian Kretzler	Utility excavation	None	Fill/dredge spoils over tide flat
5/12/2022	Ian Kretzler	Utility excavation	None	Fill
5/23/2022	Ian Kretzler	Utility excavation	None	Fill/dredge spoils over tide flat
5/26/2022	Margaret Berger	Utility excavation	None	Fill over tide flat
7/6/2022	Margaret Berger	Utility excavation	None	Fill over tide flat
7/7/2022	Margaret Berger	Utility excavation	None	Fill over tide flat
7/13/2022	Ian Kretzler	Utility excavation	None	Fill over dredge spoils/tide flat
7/25/2022	Margaret Berger	Outfall A & Outfall M spillway excavation	None	Fill over tide flat
8/1/2022	Margaret Berger	SDMH 9 excavation	None	Fill over beach

3.0 Results and Recommendations

No archaeological deposits were identified during monitoring of the project's ground disturbing activities. The project activities with potential to intersect native deposits, which required monitoring, are complete. No additional cultural resources investigation is recommended at this time.

4.0 Limitations of this Assessment

No cultural resources study can assess with complete certainty whether archaeological sites, historic properties, or traditional cultural properties exist at a given location. The information presented in this report is based on professional opinions derived from CRC's analysis and interpretation of available documents, records, literature, and information identified in this report. The conclusions and recommendations presented apply to current and reasonably foreseeable project conditions. The data, conclusions, and interpretations in this report should not be construed as a warranty of subsurface conditions. They do not apply to site changes of which CRC is not aware and has not had the opportunity to evaluate.

5.0 References

Google, Inc.
2022 Google Earth Pro (Version 7.3.4.8642). [Software] Available from https://www.google.com/work/earthmaps/earthpro.html, accessed November 16, 2022.

Rinck, B.
2013 Archaeological Resources Assessment for the Kimberly-Clark Worldwide Site Upland Area, Everett, Snohomish County, Washington. SWCA/Northwest Archaeological Associates, Seattle. Prepared for Aspect Consulting, LLC, Seattle.

Rinck, B., S. Boswell, and J. Shea
2013 Cultural Resources Monitoring and Discovery Plan for the Kimberly-Clark Worldwide Site Upland Area, Everett, Snohomish County, Washington. SWCA/Northwest Archaeological Associates, Seattle. Prepared for Aspect Consulting, LLC, Seattle.

United States Geological Survey (USGS)
2020 *Everett Quadrangle, Washington*. 7.5-Minute Series, 1-24,000 scale. USGS, Washington, D.C.

Appendix A. Archaeological Monitoring Logs.

DAILY ARCHAEOLOGICAL MONITORING LOG
PORT OF EVERETT - MIE/MTCA 3RD INTERIM ACTION
CRC PROJECT NO. 2110B

DATE AND TIME: October 25, 2021, 8:30 to 11:15 AM.

MONITOR: Margaret Berger

PROJECT COMPONENT MONITORED: Utility potholing with potential to exceed depth of fill.

GENERAL FIELD CONDITIONS: Weather was overcast with temperatures in the low 50s Fahrenheit.

ARCHAEOLOGY OBSERVED: None.

NARRATIVE:

The archaeologist arrived on site at 8:30 AM and met with Port of Everett, Strider Construction Company, and Landau Associates staff to review the project's monitoring and inadvertent discovery plan, and the day's planned activities. Utility potholing would be conducted using a large excavator (Deere 245G LC) to dig test pits in several locations across the property. The archaeologist would be on site to monitor those with potential to exceed the depth of fill deposits on site. This consisted of four test pits in the southern, central, and western portions of the project.

- Test Pit 1 contained pea gravel (fill) from 0 to 6 inches; and brownish gray gravelly sand with concrete rubble, wood, and brick fragments (fill) from 6 inches to 3 ft. This pit was abandoned at 3 ft below surface.
- Test Pit 2 contained light brown sand with rebar and concrete rubble (fill) from 0 to 4 ft and was abandoned at 4 ft below surface.
- Test Pit 3 contained light brown sand with rebar, lumber, and concrete rubble (fill) from 0 to 4 ft; and gray sand and clay with wooden pilings (dredge spoils) from 4 to 8 ft. This pit was terminated 8 ft below surface.
- Test Pit 4 contained brown sand (fill) from 0 to 2 ft; light to dark gray sand and clay with lots of concrete rubble and some metal fragments (fill) from 2 to 5 ft; and gray to brownish gray sand and clay (tide flat) from 5 to 8.5 ft. This test pit was terminated 8.5 ft below surface.

No archaeological material was observed. The archaeologist departed after the completion of Test Pit 4 as none of the other planned test pits were expected to reach native sediments.

FIGURES



Figure 1. Satellite imagery annotated with the approximate locations of the monitored utility potholing.



Figure 2. Conditions at Test Pit 1 in the southern part of the project; view is to the south-southeast.


Figure 3. Typical stratigraphic profile observed during utility potholing as seen in Test Pit 3.

DAILY ARCHAEOLOGICAL MONITORING LOG
PORT OF EVERETT - MIE/MTCA 3RD INTERIM ACTION
CRC PROJECT NO. 2110B

DATE AND TIME: January 17, 2022, 8:00 AM to 4:15 PM.

MONITOR: Ian Kretzler.

PROJECT COMPONENT MONITORED: Utility pre-digging with potential to encounter non-fill deposits.

GENERAL FIELD CONDITIONS: Weather was overcast with periodic light rain; temperatures were in the low to high 40s Fahrenheit.

ARCHAEOLOGY OBSERVED: None.

NARRATIVE:

The archaeologist arrived on site at 8:00 AM and met Port of Everett and Strider Construction Company staff to review excavation plans for the week. Construction personnel planned to excavate several trenches to identify and remove debris and buried structural features. Trenches were aligned with proposed utility lines and were backfilled after pre-digging. Utility installation will occur at a later date. The archaeologist monitored excavation of trenches likely to extend below fill deposits, which are present up to approximately 7 feet below surface. Pre-digging began near the west-central edge of the project. A Hitachi ZX245USLC excavator was used to excavate one primary trench and two adjacent trenches (Figure 1). The archaeologist divided the monitored area into seven trench segments (S1, S2, etc.). Segments measured about 14 feet wide and varied in length. Some segments (e.g., S7) were expanded to isolate and remove buried concrete structures. Segments were excavated to between 8 and 12 feet below surface (ft bs). They contained fill and dredge spoil deposits with significant quantities of concrete, rebar, and other debris (Figures 2 – 4). Groundwater was usually encountered between 8 and 9 ft bs. Trench segment locations are shown in Figure 5.

Segment 1 contained:

- 0-6 ft bs: light brown gravelly sand with wood pilings, rebar, concrete, and other debris (fill); pea gravel present 1-2 ft bs along the northern edge of the trench near its western terminus; the top of a concrete manhole was identified 2.5 ft bs
- 6-8 ft bs: light brown fill and dark brown very gravelly silt and sand with same debris (fill / dredge spoils)

Segment 2 contained:

- 0-4 ft bs: medium brown sand with wood pilings, rebar, concrete, and other debris (fill)
- 4-6 ft bs: light yellowish brown gravelly sand with same debris (fill)
- 6-8 ft bs: dark gray silt and sand with wood pilings (fill / dredge spoils)

Segment 3 contained:

- 0-5 ft bs: light brown gravelly sand with wood pilings, rebar, concrete, and other debris (fill)
- 5-6 ft bs: grayish brown very gravelly sand with same debris (fill)
- 6-8 ft bs: grayish brown sand with same debris (fill); removed concrete manhole and associated pipes
- 8-10 ft bs: dark gray silt and sand with wood pilings (fill / dredge spoils)

Segment 4 contained:

- 0-5 ft bs: light brown gravelly sand with rebar, concrete, and other debris (fill)
- 5-6 ft bs: grayish brown very gravelly sand with same debris (fill)
- 6-8: grayish brown sand with same debris (fill)
- 8-10: dark gray very gravelly silt and sand with wood pilings (fill / dredge spoils)

Segment 5 contained:

- 0-3 ft bs: light brown gravelly sand with rebar, concrete, and other debris (fill)
- 3-4 ft bs: gray and dark brown very gravelly sand with same debris (fill)
- 4-8 ft bs: mottled yellowish brown and gray sand and dark gray sand with wood pilings (fill / dredge spoils)
- 8-10 ft bs: gray silt and sand (fill); concrete, wood, and metal pipe at base of trench

Segment 6 contained:

- 0-5 ft bs: light brown to yellowish brown gravelly sand with rebar, concrete, and other debris (fill)
- 5-6 ft bs: above fill and gray sand and silt (fill / dredge spoils)
- 6-10 ft bs: gray silt and sand with wood debris and concrete, wood, and metal pipe (fill / dredge spoils)

Segment 7 contained:

- 0-5 ft bs: light brown to yellowish brown gravelly sand with rebar, concrete, and other debris (fill); linear concrete panels and concrete, wood, and metal pipe identified; removal required expanding the size of the trench
- 5-6 ft bs: above fill and gray sand and silt, concrete debris (fill / dredge spoils)
- 6-12 ft bs: gray silt and sand with concrete, wood pilings, and concrete, wood, and metal pipe (fill / dredge spoils)

No archaeological materials were observed during trench excavation. Trench excavation paused at 4:15 PM. The archaeologist departed shortly thereafter.

FIGURES



Figure 1. Utility pre-digging at the project location. Segment 1 is present in the foreground, Segment 2 on the left side of the image. View to the east.



Figure 2. Typical stratigraphic profile observed during utility pre-digging as seen in Segments 1 and 3.



Figure 3. Typical stratigraphic profile observed during utility pre-digging as seen in Segment 6.



Figure 4. Typical stratigraphic profile observed during utility pre-digging as seen in Segment 7.

DAILY ARCHAEOLOGICAL MONITORING LOG
PORT OF EVERETT - MIE/MTCA 3RD INTERIM ACTION
CRC PROJECT NO. 2110B

DATE AND TIME: January 17, 2022, 8:00 AM to 4:15 PM.

MONITOR: Ian Kretzler.

PROJECT COMPONENT MONITORED: Utility pre-digging with potential to encounter non-fill deposits.

GENERAL FIELD CONDITIONS: Weather was overcast with periodic light rain; temperatures were in the low to high 40s Fahrenheit.

ARCHAEOLOGY OBSERVED: None.

NARRATIVE:

The archaeologist arrived on site at 8:00 AM and met Port of Everett and Strider Construction Company staff to review excavation plans for the week. Construction personnel planned to excavate several trenches to identify and remove debris and buried structural features. Trenches were aligned with proposed utility lines and were backfilled after pre-digging. Utility installation will occur at a later date. The archaeologist monitored excavation of trenches likely to extend below fill deposits, which are present up to approximately 7 feet below surface. Pre-digging began near the west-central edge of the project. A Hitachi ZX245USLC excavator was used to excavate one primary trench and two adjacent trenches (Figure 1). The archaeologist divided the monitored area into seven trench segments (S1, S2, etc.). Segments measured about 14 feet wide and varied in length. Some segments (e.g., S7) were expanded to isolate and remove buried concrete structures. Segments were excavated to between 8 and 12 feet below surface (ft bs). They contained fill and dredge spoil deposits with significant quantities of concrete, rebar, and other debris (Figures 2 – 4). Groundwater was usually encountered between 8 and 9 ft bs. Trench segment locations are shown in Figure 5.

Segment 1 contained:

- 0-6 ft bs: light brown gravelly sand with wood pilings, rebar, concrete, and other debris (fill); pea gravel present 1-2 ft bs along the northern edge of the trench near its western terminus; the top of a concrete manhole was identified 2.5 ft bs
- 6-8 ft bs: light brown fill and dark brown very gravelly silt and sand with same debris (fill / dredge spoils)

Segment 2 contained:

- 0-4 ft bs: medium brown sand with wood pilings, rebar, concrete, and other debris (fill)
- 4-6 ft bs: light yellowish brown gravelly sand with same debris (fill)
- 6-8 ft bs: dark gray silt and sand with wood pilings (fill / dredge spoils)

Segment 3 contained:

- 0-5 ft bs: light brown gravelly sand with wood pilings, rebar, concrete, and other debris (fill)
- 5-6 ft bs: grayish brown very gravelly sand with same debris (fill)
- 6-8 ft bs: grayish brown sand with same debris (fill); removed concrete manhole and associated pipes
- 8-10 ft bs: dark gray silt and sand with wood pilings (fill / dredge spoils)

Segment 4 contained:

- 0-5 ft bs: light brown gravelly sand with rebar, concrete, and other debris (fill)
- 5-6 ft bs: grayish brown very gravelly sand with same debris (fill)
- 6-8: grayish brown sand with same debris (fill)
- 8-10: dark gray very gravelly silt and sand with wood pilings (fill / dredge spoils)

Segment 5 contained:

- 0-3 ft bs: light brown gravelly sand with rebar, concrete, and other debris (fill)
- 3-4 ft bs: gray and dark brown very gravelly sand with same debris (fill)
- 4-8 ft bs: mottled yellowish brown and gray sand and dark gray sand with wood pilings (fill / dredge spoils)
- 8-10 ft bs: gray silt and sand (fill); concrete, wood, and metal pipe at base of trench

Segment 6 contained:

- 0-5 ft bs: light brown to yellowish brown gravelly sand with rebar, concrete, and other debris (fill)
- 5-6 ft bs: above fill and gray sand and silt (fill / dredge spoils)
- 6-10 ft bs: gray silt and sand with wood debris and concrete, wood, and metal pipe (fill / dredge spoils)

Segment 7 contained:

- 0-5 ft bs: light brown to yellowish brown gravelly sand with rebar, concrete, and other debris (fill); linear concrete panels and concrete, wood, and metal pipe identified; removal required expanding the size of the trench
- 5-6 ft bs: above fill and gray sand and silt, concrete debris (fill / dredge spoils)
- 6-12 ft bs: gray silt and sand with concrete, wood pilings, and concrete, wood, and metal pipe (fill / dredge spoils)

No archaeological materials were observed during trench excavation. Trench excavation paused at 4:15 PM. The archaeologist departed shortly thereafter.

FIGURES



Figure 1. Utility pre-digging at the project location. Segment 1 is present in the foreground, Segment 2 on the left side of the image. View to the east.



Figure 2. Typical stratigraphic profile observed during utility pre-digging as seen in Segments 1 and 3.



Figure 3. Typical stratigraphic profile observed during utility pre-digging as seen in Segment 6.



Figure 4. Typical stratigraphic profile observed during utility pre-digging as seen in Segment 7.

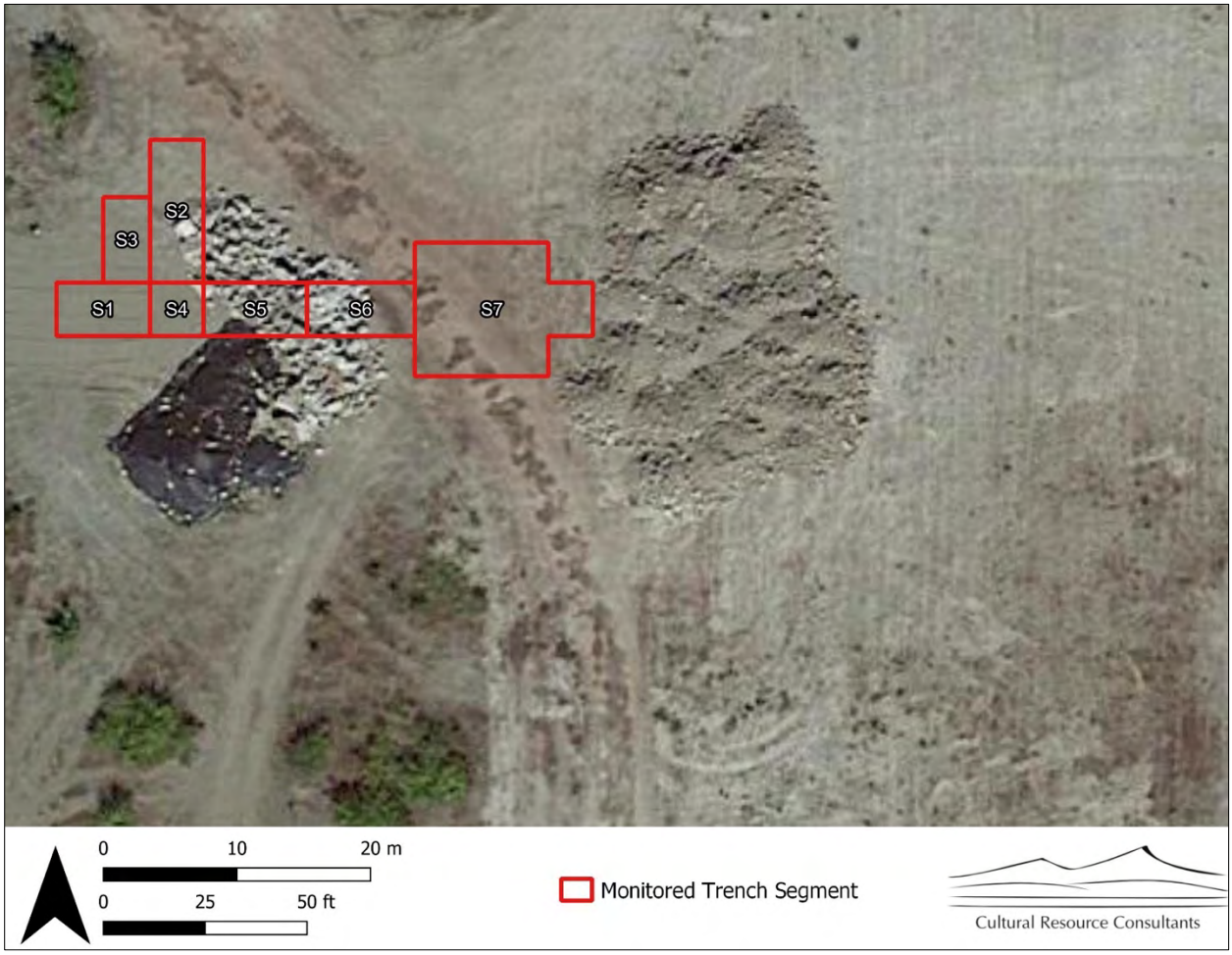

Figure 5. Locations of monitored trench segments at the project location.

DAILY ARCHAEOLOGICAL MONITORING LOG
PORT OF EVERETT - MIE/MTCA 3RD INTERIM ACTION
CRC PROJECT NO. 2110B

DATE AND TIME: January 18, 2022, 7:50 AM to 4:20 PM.

MONITOR: Ian Kretzler.

PROJECT COMPONENT MONITORED: Utility pre-digging with potential to encounter non-fill deposits.

GENERAL FIELD CONDITIONS: Weather was overcast with periodic light rain; temperatures were in the low to high 40s Fahrenheit.

ARCHAEOLOGY OBSERVED: None.

NARRATIVE:

The archaeologist arrived on site at 7:50 AM and met with Strider Construction Company staff to review excavation plans for the day. Excavation methodology remained unchanged from the previous day. A Hitachi ZX245USLC excavator was used to extend the utility trench east and south in order to identify and remove debris and buried structural features (Figure 1). The trench was then backfilled. The archaeologist divided the monitored area into eight trench segments. (Segment numbers were continued from the previous day.) They measured 14 feet wide and varied in length. Segment 13 was expanded to isolate and remove larger debris. Segments were excavated to between 8 and 12 feet below surface (ft bs). They contained fill and dredge spoils, which decreased in thickness as trench excavation proceeded to the east. Redeposited tide flat and, at the base of the trench, likely intact tide flat deposits were present below fill and dredge spoils (Figures 2 – 6). Groundwater was encountered between 9 and 10 ft bs. Trench segment locations are shown in Figure 7.

Segment 8 contained:

- 0-4 ft bs: light brown gravelly sand with rebar, concrete, and other debris (fill)
- 4-8 ft bs: light grayish brown gravelly sand, same debris (fill)
- 8-12 ft bs: dark gray sand and silt, concrete, wood and concrete pilings (fill / dredge spoils)

Segment 9 contained:

- 0-3 ft bs: light brown gravelly sand with rebar, concrete, and other debris (fill)
- 3-6 ft bs: light grayish brown to light yellowish brown gravelly sand, same debris (fill)
- 6-7 ft bs: dark gray sand and silt, same debris (fill / dredge spoils)
- 7-8 ft bs: medium brown and gray sand, little debris (tide flat)

Segment 10 contained:

- 0-3 ft bs: light brown gravelly sand with rebar, concrete, and other debris (fill)

- 3-5 ft bs: dark gray sand and silt with concrete and wood pilings and other debris (fill / dredge spoils)
- 5-9 ft bs: medium brown to yellowish brown sand with same pilings and debris (dredge spoils / redeposited tide flat)
- 9-12: gray sand, no debris (tide flat)

Segment 11 contained:
- 0-2 ft bs: light brown gravelly sand with rebar, concrete, and other debris (fill)
- 2-4 ft bs: dark gray to dark brown gravelly sand with same debris (fill)
- 4-9: light gray and light brown sand with wood and concrete pilings and little other debris (dredge spoils / redeposited tide flat)
- 9-12: gray sand, no debris (tide flat)

Segment 12 contained:
- 0-3 ft bs: light brown sand with rebar, concrete, and other debris (fill)
- 3-5 ft bs: dark brown and dark gray very gravelly sand with buried concrete pad, I beams, and concrete pilings (fill)
- 5-9 ft bs: medium brown and gray sand, concrete with wood and concrete pilings and little other debris (dredge spoils / redeposited tide flat)

Segment 13 contained:
- 0-3 ft bs: light brown sand with rebar, concrete, and other debris (fill)
- 3-5 ft bs: dark brown and dark gray very gravelly sand with buried concrete structures and other debris (fill); removal required expanding the size of the trench
- 5-9 ft bs: medium brown and gray sand, concrete with wood and concrete pilings and little other debris, <1% shell fragments (dredge spoils / redeposited tide flat)

Segment 14 contained:
- 0-3 ft bs: light brown sand with rebar, concrete, and other debris (fill)
- 3-4 ft bs: dark brown and dark gray sand and silt with buried concrete structures and other debris (fill)
- 4-8 ft bs: medium brown to yellowish brown gravelly sand with buried constructed structures and other debris, concentration of bricks along eastern wall, <1% shell fragments (dredge spoils / redeposited tide flat)
- 8-10 ft bs: gray sand, <1% shell fragments, below concrete structures (tide flat)

No archaeological materials were observed during trench excavation. Trench excavation paused at 4:20 PM. The archaeologist departed shortly thereafter.

FIGURES



Figure 1. Utility pre-digging at the project location. Segments 11 and 12 are present in the center of the image. View to the east-northeast.



Figure 2. Typical stratigraphic profile observed during utility pre-digging as seen in Segment 8.



Figure 3. Typical stratigraphic profile observed during utility pre-digging as seen in Segment 10.



Figure 4. Typical stratigraphic profile observed during utility pre-digging as seen in Segment 11.



Figure 5. Representative image of buried concrete structures observed during utility pre-digging as seen in Segment 12.



Figure 6. Representative image of buried concrete structures observed during utility pre-digging as seen in Segments 13 and 14.

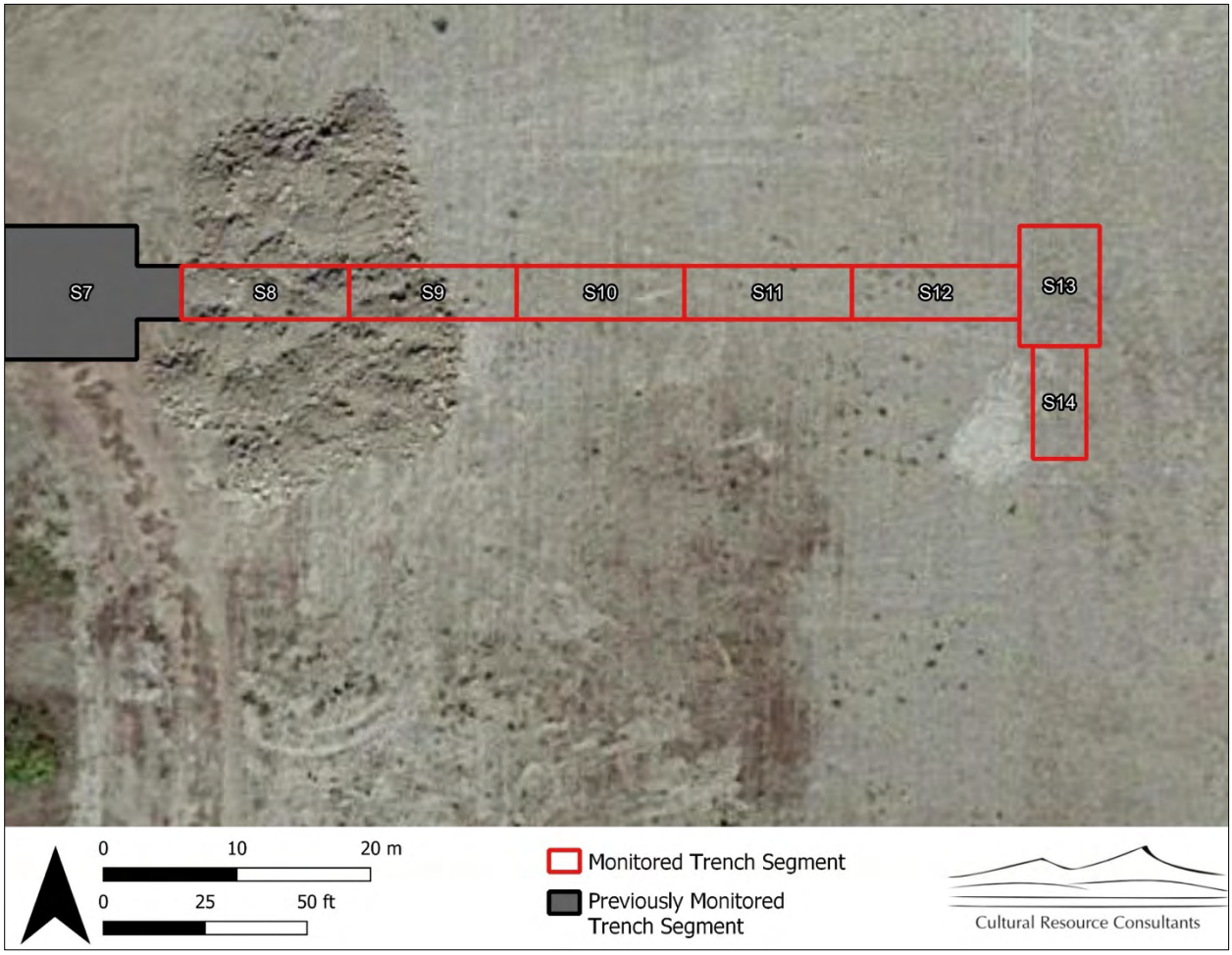

Figure 7. Locations of monitored trench segments at the project location.

DAILY ARCHAEOLOGICAL MONITORING LOG
PORT OF EVERETT - MIE/MTCA 3RD INTERIM ACTION
CRC PROJECT NO. 2110B

DATE AND TIME: January 19, 2022, 7:50 AM to 3:50 PM.

MONITOR: Ian Kretzler.

PROJECT COMPONENT MONITORED: Utility pre-digging with potential to encounter non-fill deposits.

GENERAL FIELD CONDITIONS: Weather was overcast with periodic light rain; temperatures were in the low to high 40s Fahrenheit.

ARCHAEOLOGY OBSERVED: None.

NARRATIVE:

The archaeologist arrived on site at 7:50 AM and met with Strider Construction Company staff to review excavation plans for the day. Excavation methodology remained mostly unchanged from the previous day. A Hitachi ZX245USLC excavator was used to extend the utility trench south in order to identify and remove debris and buried structural features (Figure 1). A series of smaller trenches were excavated to the southeast (Figure 2). All trenches were backfilled once debris was identified and removed. The archaeologist divided the monitored area into eight trench segments. (Segment numbers were continued from the previous day.) They measured 14 feet wide and varied in length. In the main trench, segments were excavated up to 8 feet below surface (ft bs). Groundwater was usually encountered about 8 ft bs. Buried concrete structures and associated debris were identified throughout the trench. These structures were present under thin deposits of fill and surrounded by redeposited tide flat sediments, likely dredge spoils (Figure 3). Visibility of deposits underlying concrete structures was limited due to the density of debris and presence of groundwater. When visible, these deposits appeared to consist primarily of dredge spoils, with limited intact tide flats. Excavation of the smaller trenches reached about 5 ft bs. They contained fill and redeposited tide flat sediments (Figure 4). Trench segment locations are shown in Figure 5.

Segment 15 contained:

- 0-1 ft bs: light brown gravelly sand with concrete, rebar, and other debris (fill)
- 1-2 ft bs: dark gray gravelly sand with same debris (fill)
- 2-8 ft bs: medium brown and dark gray gravelly sand with concrete, rebar, ceramic pipes, and concrete structures, <1% shell fragments (dredge spoils / redeposited tide flat)

Segment 16 contained:

- 0-1 ft bs: light brown gravelly sand with concrete, rebar, and other debris (fill)
- 1-1.5 ft bs: dark gray gravelly sand with same debris (fill)

- 1.5-8 ft bs: medium brown and gray very gravelly sand with concrete, rebar, and buried concrete structures, <1% shell fragments (dredge spoils / redeposited tide flat)

Segment 17 contained:
- 0-4 ft bs: light brown to medium brown gravelly sand with concrete, rebar, and concrete structures, <1% shell fragments (dredge spoils / redeposited tide flat)
- 4-5 ft bs: dark gray sand and silt with same debris (fill / dredge spoils)
- 5-8 ft bs: when visible, dark gray sand and silt with same debris (fill / dredge spoils)

Segment 18 contained:
- 0-2 ft bs: light brown gravelly sand with concrete, rebar, and other debris (fill)
- 2-4 ft bs: gray and dark gray gravelly sand with same debris and buried concrete structures (fill / dredge spoils); southern wall contained grayish brown sand (redeposited tide flat) between 3 and 4 ft bs

Segment 19 contained:
- 0-3 ft bs: light brown gravelly sand with concrete, rebar, and other debris (fill)
- 3-5: gray, dark gray, and medium brown gravelly sand with same debris (fill / dredge spoils / redeposited tide flat)

Segments 20, 21, and 22 contained:
- 0-5 ft bs: light brown to light yellowish brown sand with little debris, concrete at base of trench, <1% shell fragments (fill / dredge spoils / redeposited tide flat)

No archaeological materials were observed during trench excavation. Trench excavation paused at 3:50 PM. The archaeologist departed shortly thereafter.

FIGURES



Figure 1. Utility pre-digging at the project location. Segments 15 and 16 are present in the center of the image. View to the south.



Figure 2. Utility pre-digging at the project location. Segment 18 is present in the center of the image. View to the east.


Figure 3. Typical stratigraphic profile observed during utility pre-digging as seen in Segment 17.



Figure 4. Typical stratigraphic profile observed during utility pre-digging as seen in Segment 20.



Figure 5. Locations of monitored trench segments and identified shell deposit at the project location.

DAILY ARCHAEOLOGICAL MONITORING LOG
PORT OF EVERETT - MIE/MTCA 3RD INTERIM ACTION
CRC PROJECT NO. 2110B

DATE AND TIME: January 20, 2022, 8:00 AM to 2:15 PM.

MONITOR: Ian Kretzler.

PROJECT COMPONENT MONITORED: Utility pre-digging with potential to encounter non-fill deposits.

GENERAL FIELD CONDITIONS: Weather was overcast with periodic light rain; temperatures were in the low to high 40s Fahrenheit.

ARCHAEOLOGY OBSERVED: None.

NARRATIVE:

The archaeologist arrived on site at 8:00 AM and met with Strider Construction Company staff to review excavation plans for the day. Excavation methodology remained mostly unchanged from the previous day. A Deere 245G LC excavator was used to extend the utility trench south in order to identify and remove debris and buried structural features (Figure 1). The trench was backfilled once debris was identified and removed. The archaeologist divided the monitored area into two trench segments. (Segment numbers were continued from the previous day.) Segments measured 14 feet wide and varied in length. They were excavated up to 10 feet below surface (ft bs). Groundwater was usually encountered about 8 ft bs. Buried concrete and rebar pilings were identified throughout the trench. Pilings were buried under and surrounded by redeposited tide flat sediments, likely dredge spoils. Deposits of dense shell similar to the one identified the previous day were observed in near-surface dredge spoils and near the base of concrete pilings. Shells near the base of the pilings were situated in a sedimentary matrix consisting of gray to dark gray sand. These sediments may represent intact or redeposited portions of the tide flat. The archaeologist inspected excavated shell deposits for characteristic midden soils, charcoal, fire-modified rock, faunal remains, and other artifacts. None were observed. The archaeologist interpreted the shell deposits as non-cultural in origin and determined that most if not all had been disturbed by the installation of the pilings and/or dredging. Trench segment locations are shown in Figure 4.

Segment 23 contained:

- 0-5 ft bs: light brown to medium brown gravelly sand with rebar, concrete, and other debris, <1% shell fragments (dredge spoils / redeposited tide flat)
- 5-8 ft bs: light brown and dark gray gravelly sand with buried concrete pilings and other debris (dredge spoils / redeposited tide flat)
- 8-10 ft bs: gray sand, little debris (tide flat)

Segment 24 contained:

- 0-6 ft bs: medium brown gravelly sand with rebar, concrete, and other debris, pockets of dense shell (dredge spoils / redeposited tide flat)
- 6-7 ft bs: dark gray gravelly sand, concrete with buried concrete pilings and other debris (dredge spoils / redeposited tide flat)
- 7-8 ft bs: gray to dark gray sand, pockets of dense shell (redeposited / intact tide flat)

No archaeological materials were observed monitoring of trench excavation. Ground disturbing activities concluded at 2:15 PM. The archaeologist departed shortly thereafter.

FIGURES



Figure 1. Utility pre-digging at the project location. Segments 23 and 24 are present in the center of the image. View to the south-southwest.



Figure 2. Typical stratigraphic profile observed during utility pre-digging as seen in Segment 23.


Figure 3. Typical stratigraphic profile observed during utility pre-digging as seen in Segment 24.



Figure 4. Locations of monitored trench segments at the project location.

DAILY ARCHAEOLOGICAL MONITORING LOG
PORT OF EVERETT - MIE/MTCA 3RD INTERIM ACTION
CRC PROJECT NO. 2110B

DATE AND TIME: March 14, 2022, 7:40 AM to 1:20 PM.

MONITOR: Margaret Berger

PROJECT COMPONENT MONITORED: Utility vault excavation with potential to exceed depth of fill.

GENERAL FIELD CONDITIONS: Weather was overcast with some light rain showers and temperatures in the 40s to low 50s Fahrenheit.

ARCHAEOLOGY OBSERVED: None.

NARRATIVE:

The archaeologist arrived on site at 7:40 AM and was directed to Strider Construction Company's utility vault installation crew. The day's work was planned to consist of excavation of trenches to house utility vaults in the west-central part of the property at the west end of a previously excavated duct bank trench. Depths of excavation were anticipated to potentially exceed the depth of fill deposits on site. Excavation was conducted using a Hitachi 245 US LC with a 6-ft wide smooth bucket, switching to a 4-ft wide toothed bucket when needed.

Two adjacent but slightly offset, roughly square trenches were excavated. Each was approximately 20-x-20-ft, with sloped or stepped walls. The maximum depth of excavation was within an 11-x-11-ft square approximately in the center of each trench. The first trench reached a maximum depth of 10 ft below surface. Sediments consisted entirely of brown to grayish brown medium- to coarse-grained sand with rebar, concrete rubble, and brick fragments (fill). The second trench was offset to the northeast and reached a maximum depth of 12 ft below surface. This trench contained the same medium- to coarse-grained sand with rebar, concrete rubble, and brick fragments (fill) with concrete and rebar in the base of the trench.

No native sediments were observed. Cultural materials were limited to demolition debris from the previously documented mill buildings. No archaeological material was observed. The archaeologist departed after utility vault excavation was complete for the day, with plans to return the following work day.

FIGURES



Figure 1. Satellite imagery annotated with the approximate location of the monitored utility vault excavation.



Figure 2. Overview of utility vault excavation on March 14, 2022; view to the east-southeast.


Figure 3. Typical stratigraphic profile observed during utility vault excavation on March 14, 2022; view to the northwest.

DAILY ARCHAEOLOGICAL MONITORING LOG
PORT OF EVERETT - MIE/MTCA 3RD INTERIM ACTION
CRC PROJECT NO. 2110B

DATE AND TIME: March 15, 2022, 8:00 AM to 4:00 PM.

MONITOR: Margaret Berger

PROJECT COMPONENT MONITORED: Utility vault excavation with potential to exceed depth of fill.

GENERAL FIELD CONDITIONS: Weather was overcast to partly cloudy with temperatures in the high 40s to low 50s Fahrenheit.

ARCHAEOLOGY OBSERVED: None.

NARRATIVE:

The archaeologist arrived on site at 8:00 AM and located Strider Construction Company's utility vault installation crew. The day's work was planned to consist of excavation of trenches to house utility vaults in the southwestern part of the property, south of a previously excavated duct bank trench directly south of the vaults installed yesterday. Depths of excavation were anticipated to potentially exceed the depth of fill deposits on site. Excavation was conducted using a Hitachi 245 US LC with a 6-ft wide smooth bucket, switching to a 4-ft wide toothed bucket when needed.

Two pairs of adjacent but slightly offset, roughly square trenches were excavated. Each trench was approximately 20-x-20-ft, with sloped or stepped walls. The maximum depth of excavation was within an 11-x-11-ft square approximately in the center of each trench.

The first trench reached a maximum depth of 10 ft below surface. Sediments consisted entirely of brown to grayish brown medium- to coarse-grained sand with rebar, concrete rubble, and brick fragments (fill). The second trench was offset to the southeast and also reached a maximum depth of 10 ft below surface. This trench contained the same sandy sediments and pockets of black and reddish brown (burned) sand with rebar, concrete rubble, and brick fragments (fill), with potentially native gleyed gray finer sands exposed in the bottom < 0.25 ft (marine/tide flat deposit) that were quickly covered by groundwater.

The second pair of trenches was located south of the first, at the south end of an already installed utility duct bank. Both trenches reached a maximum depth of 10 ft below surface and contained brown to grayish brown medium- to coarse-grained sand with rebar, concrete rubble, small waterworn shell fragments, and brick fragments (fill and reworked dredge spoils) down to approximately 9.75 ft below surface, underlain by potentially native gleyed gray finer sands (marine/tide flat deposit) from 9.75 to 10 ft below surface.

Excavation into native sediments today was limited to scraping in the bottom < 0.25 ft of the trenches. Cultural materials were limited to demolition debris from the previously documented mill buildings and reworked dredge spoils. No archaeological material was observed. The archaeologist departed after utility vault excavation was complete for the day, with plans to return the following work day.

FIGURES



Figure 1. Satellite imagery annotated with the approximate locations of the monitored utility vault excavation.



Figure 2. Overview of subsurface conditions during utility vault excavation the morning of March 15, 2022; view to the northeast.



Figure 3. Overview of subsurface conditions during utility vault excavation the afternoon of March 15, 2022; view to the southeast.

DAILY ARCHAEOLOGICAL MONITORING LOG
PORT OF EVERETT - MIE/MTCA 3RD INTERIM ACTION
CRC PROJECT NO. 2110B

DATE AND TIME: March 16, 2022, 8:00 AM to 1:30 PM.

MONITOR: Margaret Berger

PROJECT COMPONENT MONITORED: Utility vault excavation with potential to exceed depth of fill.

GENERAL FIELD CONDITIONS: Weather was mostly cloudy with temperatures in the 40s to low 50s Fahrenheit.

ARCHAEOLOGY OBSERVED: None.

NARRATIVE:

The archaeologist arrived on site at 8:00 AM and located Strider Construction Company's utility vault installation crew. The day's work was planned to consist of excavation of trenches to house utility vaults in the southern and central parts of the property. Depths of excavation were anticipated to potentially exceed the depth of fill deposits on site. Excavation was conducted using a Hitachi 245 US LC with a 6-ft wide smooth bucket, switching to a 4-ft wide toothed bucket when needed.

Two pairs of adjacent but slightly offset, roughly square trenches were excavated. Each trench was approximately 20-x-20-ft, with sloped or stepped walls. The maximum depth of excavation was within an 11-x-11-ft square approximately in the center of each trench.

The first pair was located at the east end of a previously installed duct bank south of the vaults installed yesterday, and reached a maximum depth of 10 ft below surface. Sediments consisted of brown to grayish brown medium- to coarse-grained sand with pockets of black and reddish brown (burned) sand, small waterworn shell fragments, rebar, dimensional lumber, concrete rubble, and brick fragments (fill and reworked dredge spoils). The second trench was offset to the southeast, also reached a maximum depth of 10 ft below surface, and encountered the same sediments.

The second pair of trenches was located north of the vaults installed on March 14. Both trenches reached a maximum depth of 8 ft below surface and contained the same massive brown to grayish brown medium- to coarse-grained sand (fill) from 0 to 6 ft below surface. Finer gray sands were present 6 to 6.5 ft below surface and interpreted as dredge spoils due to the presence of more fill sands with pockets of black and reddish brown (burned) sand, rebar, concrete rubble, and brick fragments from 6.5 ft to 8 ft below surface.

No native sediments were observed today. Cultural materials were limited to demolition debris from the previously documented mill buildings and reworked dredge spoils. No archaeological material was observed. The archaeologist departed after utility vault excavation was complete for the day, with plans for another CRC archaeologist to be on site the following work day.

FIGURES



Figure 1. Satellite imagery annotated with the approximate locations of the monitored utility vault excavation.



Figure 2. Typical subsurface conditions observed the morning of March 16, 2022; view to the northeast.



Figure 3. Typical stratigraphic profile observed during utility vault excavation the afternoon of March 16, 2022; view to the north.

DAILY ARCHAEOLOGICAL MONITORING LOG
PORT OF EVERETT - MIE/MTCA 3RD INTERIM ACTION
CRC PROJECT NO. 2110B

DATE AND TIME: March 17, 2022, 8:00 AM to 3:00 PM.

MONITOR: Ian Kretzler.

PROJECT COMPONENT MONITORED: Utility vault excavation with the potential to encounter non-fill deposits.

GENERAL FIELD CONDITIONS: Weather was overcast with periodic light rain, with temperatures between 45 and 50 degrees Fahrenheit.

ARCHAEOLOGY OBSERVED: None.

NARRATIVE:

The archaeologist arrived on site at 8:00 AM and met with Strider Construction Company staff to review excavation plans for the day. Construction personnel planned to install multiple concrete utility vaults in the west-central portion of the project. A Komatsu PC 490LC excavator was used to excavate a pit measuring approximately 15 feet wide (N-S) and 30 feet long (E-W) to a depth of 8 feet below surface (Figure 1). The pit contained light brown, pebbly sand with little debris and less than 1 percent shell fragments up to 5 feet below surface (Figure 2). These sediments were interpreted as dredge spoils or redeposited tide flat. Between 5 and 8 feet below surface, the pit contained dark gray sand and silt, likely redeposited tide flat, with concrete, rebar, wood pilings, and other debris. No archaeological materials were identified.

After installing the vault, the pit was extended to the north (Figure 3). The extension measured 30 feet wide (N-S) and 20 feet long (E-W) and was excavated to about 5 feet below surface. As in the larger pit, subsurface deposits consisted of light brown, pebbly sand with few shell fragments and little debris. No archaeological materials were identified. Three vaults were installed in the pit extension.

The locations of monitored vault pits are shown in Figure 5.

Ground disturbing activities concluded at 3:00 PM. The archaeologist departed shortly thereafter.

FIGURES



Figure 1. Utility vault excavation at the project location. View to the east.



Figure 2. Subsurface deposits at the base and along the south sidewall of the vault pit. View to the southeast.



Figure 3. Excavation of the pit extension. View to the northeast.



Figure 4. Utility vaults installed by the end of the day. View to the southeast.



Figure 5. Locations of utility vault pits.

DAILY ARCHAEOLOGICAL MONITORING LOG
PORT OF EVERETT – MIE/MTCA 3RD INTERIM ACTION
CRC PROJECT NO. 2110B

DATE: March 21, 2022

MONITOR: Jessica Gardner

GENERAL FIELD CONDITIONS: Weather was cool and rainy, with an occasional wind and temperatures ranging from 40 to 50 degrees Fahrenheit.

PROJECT COMPONENT MONITORED: Excavation of two vault locations and a pair of utility trenches within the project, which had a potential to encounter non-fill deposits.

ARCHAEOLOGY OBSERVED: None.

NARRATIVE: The archaeologist arrived on site at 8 am and met with construction personnel to discuss the proposed excavations. The crew intends to excavate a series of vaults which may reach or exceed 7 feet (ft) below the current surface. An additional crew appears to be a floating crew who continued the excavation of a utility trench near the center of the project and who initiated vault excavations in locations where cement was expected. Excavations were conducted with a pair of large Hitachi and Deere excavation rigs using 4 ft smooth and 2 to 3 ft toothed buckets, as necessary. Encountered concrete foundations were broken up using a hydraulic breaker attachment. Observed excavations included the continuation of an east-to-west utility trench near the center of the project location and two vault pits (Figure 1).

The archaeologist observed the excavation of a 22 m segment of a parallel pair of utility trenches, being just west of center and a set of concrete forms located there. The northern trench ranged from 7 to 9 ft wide and ranged in depth from 3 ft at the west end to near 7 ft at the east end as it descended to avoid a previously installed pipe. The profile can be described as approximately 2 ft of recent fill (brown gravelly sand) above rebar-reenforced concrete forms set in dredge spoils (dark gray silty sand) to depth (Figure 2). There was a significant volume of concrete foundations present which took much time to break apart for removal. The southern trench was 3 ft wide and remained shallow at 3 ft or less, with sediments composed of recent fill materials.

A single-vault pit was excavated in the southeast corner of the project location, within 40 m north of the existing Kimberly-Clark Warehouse at the south end of the project. The excavation was anticipated to be up to 5 ft deep and the crew started without the archaeologist. However, location conditions necessitated a deeper excavation, which was observed. A steel-cased cement piling was present in the southwest corner and required a mass-excavation to remove. Much of the removed sediment was saturated and ground water was present less than 5 ft below the surface. A profile can be described as approximately 2 ft of recent fill (brown gravelly sand) above dredge materials (dark gray silty sand) to depth (Figure 3). Several wood pilings were noted on the west half of the pit and were broken and partially removed during excavation. A mass of concrete was noted in the dredge materials along the south edge of the pit but did not

impede the excavation. A buried main was encountered along the east edge of the pit, at the toe of the bench-slope, and surrounded in pea gravels.

Excavation of a vault pit was started approximately 75 m south of the utility trench, and along the center line of the project location for a pair of vaults. Excavation was not completed by the end of the day due to the significant present of rebar-reenforced cement in the pit location. The profile can be described as approximately 2 ft of recent fill (brown gravelly sand) above cement foundations with 2-3 ft of pit-run fill (gray to brownish gray gravelly sand) (Figure 4).

No archaeological materials or deposits were observed.

FIGURES



Figure 1. Satellite image of south half of the project location, annotated with locations of the observed utility trench segment (red line) and south and southeast vault pits.



Figure 2. Representative image of northern utility trench profile, showing recent fill above a concrete mass with rebar, surrounded by dredged sediments. View to the east-southeast.



Figure 3. Representative image of southeast vault pit profile, showing recent fill above dredged sediments and steel-cased and wood pilings. View to the northwest.



Figure 4. Representative image of the south vault pit, showing recent fill above rebar-reenforced concrete and older sandy fill deposits. View to the south-southeast.

DAILY ARCHAEOLOGICAL MONITORING LOG
PORT OF EVERETT – MIE/MTCA 3RD INTERIM ACTION
CRC PROJECT NO. 2110B

DATE: March 22, 2022

MONITOR: Jessica Gardner

GENERAL FIELD CONDITIONS: Weather was mild and sunny, with an occasion wind and temperatures ranging from 50 to 60 degrees Fahrenheit.

PROJECT COMPONENT MONITORED: Excavation of three vault pit locations and continued excavation of a utility trench.

ARCHAEOLOGY OBSERVED: None.

NARRATIVE: The archaeologist arrived on site at 8 am and met with construction personnel to discuss the proposed excavations. The crew will continue with the planned excavations and methods as outlined in yesterday's monitoring log (3-21-2022). Excavations observed today included the continued excavation of the utility trench and southern vault, as well as the excavation of two pairs of vaults near the center of the project location (Figure 1).

The southern pit from yesterday was continued and completed for the installation of a pair of vaults. The pit reached a depth of approximately 7 ft at the northwest vault and 8 ft at the southeast vault. This was due to the presence of a concrete slab under the northwest vault which allowed for less fill. The southeast vault was set above a foundation/wall surrounded by saturated dredge fine sand/silty sand which had to be removed and replaced with additional quarry rock fill. The wall was demolished by a hydraulic crimper attachment on an excavator. The final profile appeared to be approximately 2 ft of recent fill above rebar-reenforced concrete surrounded by fill (Figure 2). This fill appeared to be approximately 3 ft of imported gravelly sand above silty sand/ fine grained sand, determined likely to be dredged sediments.

Two vault pairs were installed near the center of the project (center vaults 1 and 2). Given their proximity, it is unsurprising that both pits had similar profiles, with approximately 2 ft of recent fill (brown gravelly sand) above rebar-reenforced concrete over dredged sediments (dark gray silty sand). The southern of the two pits (center vault 2) included lenses of wood debris and wood pilings in the dredged deposits (Figure 3).

The crew continued trying to break up the concrete present in the utility trench and to extend the trench further to the east. Progress was slow and the trench was only extended approximately 5 m east at the surface fill level. No changes were observed in the profile. The trench was partially backfilled by the end of the day to stabilize the trench and provide a pad for the excavator to sit on while digging.

No archaeological materials or deposits were observed.

FIGURES



Figure 5. Satellite image of the south half of the project location, annotated with locations of the observed utility trench segment (red line) and center and south vault pits.



Figure 6. Representative image of south vault location. Profile shows recent fill above concrete and rebar masses, surrounded by sandy fill above dredged sediments. View to the northeast.



Figure 7. Representative image of the profiles of the center vault pits, showing the north wall of the southeast vault of the center vault 2 location. Profile of recent fill above concrete and rebar masses over dredged sediments with wood pilings and lenses of wood debris.

DAILY ARCHAEOLOGICAL MONITORING LOG
PORT OF EVERETT – MIE/MTCA 3RD INTERIM ACTION
CRC PROJECT NO. 2110B

DATE: March 23, 2022

MONITOR: Jessica Gardner

GENERAL FIELD CONDITIONS: Weather was mild and sunny in the morning becoming blustery and rainy by the afternoon. Temperatures ranged in the 40 and 50 degrees Fahrenheit.

PROJECT COMPONENT MONITORED: Excavation of three vault pit locations.

ARCHAEOLOGY OBSERVED: None**.**

NARRATIVE: The archaeologist arrived on site at 8 am and met with construction personnel to discuss the proposed excavations. The crew will continue with the planned excavations and methods as outlined in Monday's monitoring log (3-21-2022). Excavations observed today included the excavation of three pairs of vaults spread out across the southern half of the project location (Figure 1). These are noted as the east, west, and south vault pits.

The west vault pit was located along the western edge of the project, near the northeast corner of the dock. The profile can be described as approximately 2 feet (ft) of recent fill (brown gravelly sand) above 2-3 ft of rubble and fill (brownish-gray fine to medium grained sand with some gravels) above gray sand. Metal pipes were observed approximately 2-3 ft below the surface, including a steel-cased, wood-lined or capped pipe at the southwest edge of the pit (Figure 2). Wood pilings were observed at the base of the northwestern half of the pit, while a concrete pipe approximately 12 inch in diameter was noted at the base of the pit for the southeast of the two vaults, and oriented east-to-west (Figure 3). The pipe shattered where excavated but remained largely intact in the side walls. The crew capped it with grout before installing the quarry spall base and vault. The pipe sat in a layer of dark gray silty sand to very fine sand, which was likely a dredged fill deposit.

A second pit (South vault 2) was excavated just southwest of the south vault pit observed on Monday and Tuesday. The profile can be described as approximately 2 ft of recent fill above a concrete slab, supported by gridded, rebar-reenforced, concrete, foundational footers, which extended 7-8 ft below the surface (Figure 4). The footers were surrounded by dredge materials (dark gray silty sand).

A pit was excavated for a pair of vaults east of center of the project location. The profile varied between each vault portion, being the northwest and southeast vaults (Figure 5 and 6). The profile for the southeast vault can be described as

- 1.5-2 ft of recent fill (brown gravelly sand)
- 6-10 inches dark gray silty sand,
- 6 inches matted wood debris

- Approximately 2 ft of gray sand
- Approximately 2 ft of dark gray silty sand

Wood pilings were noted in the lower deposits. Given the profile observed in the adjacent vault pit, all deposits are likely composed of fill and/or dredge sediments.

The northwest vault profile can be described as

- 2 ft of recent fill (brown gravelly sand)
- 2 ft of grayish brown medium grained sand
- 1-2 ft of yellowish-brown silt/ silt loam
- 1-2 ft of dark gray silty sand above
- a sloping deposit (0-12 inches) of gray to dark gray fine to medium grained sand with a dense deposit of whole to moderately fragmented bent-nosed clam (*Macoma)* shells.

A small portion of the matted wood observed in the southeast vault pit was also visible in the southeast corner of the northwest vault pit. The shell deposit was investigated and determined to be natural given the presence of a single species, a lack of organic or charcoal staining, and a lack of definitively cultural materials (fire-modified rock, wood or stone tools, plant fibers, etc.).

No archaeological materials or deposits were observed.

FIGURES



Figure 8. Satellite image of the south half of the project location, annotated with locations of the monitored vault pits.



Figure 9. Image of steel-cased pipe with wood lining or cap. View of north end of pipe, in south wall of the northwest vault, view to the southeast.



Figure 10. West wall of the southeast vault at the west vault pit, showing concrete pipe at base. View to the west-northwest.



Figure 11. Representative image of south vault pit, showing deep foundations. View to the northeast.



Figure 12. West wall of the southeast vault of the east vault pit. Taken from the east edge, view to the west.



Figure 13. East wall of the northwest vault of the east vault pit. Taken from the northwest corner, view to the east.

DAILY ARCHAEOLOGICAL MONITORING LOG
PORT OF EVERETT - MIE/MTCA 3RD INTERIM ACTION
CRC PROJECT NO. 2110B

DATE AND TIME: March 24, 2022, 8:00 AM to 4:00 PM.

MONITOR: Margaret Berger

PROJECT COMPONENT MONITORED: Utility vault excavation with potential to exceed depth of fill.

GENERAL FIELD CONDITIONS: Weather was partly cloudy with temperatures in the high 30s to low 50s Fahrenheit.

ARCHAEOLOGY OBSERVED: None.

NARRATIVE:

The archaeologist arrived on site at 8:00 AM and located Strider Construction Company's utility vault installation crew. The day's work was planned to consist of excavation of trenches to house utility vaults in the east-central and southeastern parts of the property. Depths of excavation were anticipated to potentially exceed the depth of fill deposits on site. Excavation was conducted using a Komatsu PC 490 LC with a 6-ft wide smooth bucket, switching to a 4-ft wide toothed bucket when needed.

The first vault excavated was in the east-central part of the property, approximately 100 meters north of the warehouse and directly north of a utility vault monitored by CRC the previous day. Sediments from the ground surface to a depth of 6 feet consisted of the same loose brown sand (fill) seen near surface throughout the property. Gleyed sands with a peaty aroma and wood debris were present from 6 to 8 ft below surface below surface along with some small, waterworn shell fragments, interpreted as disturbed tide flat sediments or dredge spoils.

A pair of adjacent but slightly offset, roughly square trenches was then excavated in the southeastern part of the property. Each trench was approximately 20-x-20-ft, with sloped or stepped walls. The maximum depth of excavation was within an 11-x-11-ft square approximately in the center of each trench. The profile of both trenches was brown very gravelly sand (recent fill) from surface to 2 ft; uniform grayish brown loose sand (fill) from 2 to 4 ft below surface; and gleyed gray sands with concrete footings and rubble (dredge spoils or disturbed tide flat) from 4 to 8 ft below surface. Metal cables and rebar were present in the base of the second trench in this pair.

No intact native sediments were observed today. Cultural materials were limited to demolition debris from the previously documented mill buildings. No archaeological material was observed. The archaeologist departed after utility vault excavation was complete for the day, with plans for another CRC archaeologist to be on site the following work day.

FIGURES



Figure 1. Satellite imagery annotated with the approximate locations of the monitored utility vault excavation.



Figure 2. Subsurface conditions observed the morning of March 24, 2022; view to the west-northwest.



Figure 3. Overview of utility vault excavation the afternoon of March 24, 2022; view to the south-southeast.

DAILY ARCHAEOLOGICAL MONITORING LOG
PORT OF EVERETT – MIE/MTCA 3RD INTERIM ACTION
CRC PROJECT NO. 2110B

DATE: March 25, 2022

MONITOR: Jessica Gardner

GENERAL FIELD CONDITIONS: Weather was mild and sunny with temperatures in the 50s degrees Fahrenheit.

PROJECT COMPONENT MONITORED: Excavation of one vault pit location.

ARCHAEOLOGY OBSERVED: None**.**

NARRATIVE: The archaeologist arrived on site at 8 am and met with construction personnel to discuss the proposed excavations. The crew will continue with the planned excavations and methods as outlined in Monday's monitoring log (3-21-2022). Excavations observed today included the excavation of a pair of vaults at a single location, northeast of center of the project location (Figure 1).

The profile varied between each vault portion, being the northeast and southwest vaults. The profile for the southwest vault can be described as

- 1.5-2 feet (ft) of recent fill (brown gravelly sand)
- 4-6 inches of asphalt or concrete pad in sections,
- 2-3 ft dark gray to very dark brown loamy sand with brick and other construction debris,
- 1-3 ft of very dark brown to black sandy loam with construction debris and sulfur concentrations over a slanting surface of
- Brown and gray silty sand (Figure 2).

These were all determined to be fill deposits. A very large log lay at the base of the pit within the very dark brown to black sandy loam, was oriented north to south, and measured 3-4 ft in diameter. The pit was extended to 8 ft below the surface (10 ft below finished grade) to remove it.

The northeast vault profile can be described as:

- 2 ft of recent fill (brown gravelly sand)
- 5 ft of brown and gray silty sand with some debris, crossed by seven modern-era utility pipes set in pea gravel (Figure 3).

Pipes included, in order of depth: one 2-inch PVC pipe, two 8-inch HDPE pipes, one 6-inch cast-iron/steel pipe, two 12-inch HDPE pipes, and one 8-inch steel pipe. The pipes were oriented east to west, northwest to southeast, and variations in between. The upper four were broken off and capped with grout, the lower three being left in place.

No archaeological material or deposits were present.

FIGURES



Figure 14. Satellite image of a portion of the project location, annotated with local road names and the location of the monitored vault pit.



Figure 15. Image of the west wall and base of the southwest vault location, showing log prior to demolition.



Figure 16. Image of west wall and base of northeast vault location, showing the seven pipes and utility trenches present.

DAILY ARCHAEOLOGICAL MONITORING LOG
PORT OF EVERETT - MIE/MTCA 3RD INTERIM ACTION
CRC PROJECT NO. 2110B

DATE AND TIME: April 4, 2022, 8:10 AM to 4:10 PM.

MONITOR: Margaret Berger

PROJECT COMPONENT MONITORED: Utility vault excavation with potential to exceed depth of fill.

GENERAL FIELD CONDITIONS: After a brief weather delay due to hail and heavy rain, weather was partly cloudy to sunny with temperatures in the mid- to high 40s Fahrenheit.

ARCHAEOLOGY OBSERVED: None.

NARRATIVE:

The archaeologist arrived on site at 8:10 AM and located Strider Construction Company's utility vault installation crew. The day's work was planned to consist of excavation of trenches to house utility vaults in the west-central and eastern parts of the property. Depths of excavation were anticipated to potentially exceed the depth of fill deposits on site. Excavation was conducted using a Komatsu PC 490 LC with a 6-ft wide smooth bucket, switching to a 4-ft wide toothed bucket when needed. Each trench was approximately 20-x-20-ft, with sloped or stepped walls. The maximum depth of excavation was within an 11-x-11-ft square approximately in the center of each trench.

Beginning at 9:00 AM after the hail and heavy rain passed, the first vault was excavated in the west-central part of the property and encountered loose brown very gravelly sand (recent fill) to a depth of 2.5 ft below surface; loose gray gravelly sand with wood debris and brick fragments (fill) from 2.5 to 6 ft below surface; and gleyed gray silt and sand (dredge spoils) from 6 to 7 ft below surface. The second vault was located approximately 10 meters to the south and contained loose brown very gravelly sand (recent fill) to a depth of 2 ft below surface, underlain by gray to black gravelly sand with wood debris, old pipes, and concrete rubble (fill). A third vault was adjacent to the southeast of the second, and exposed the same sedimentary profile.

A pair of adjacent but slightly offset, roughly square trenches was then excavated in the eastern part of the property. The profile of both trenches was brown very gravelly sand (recent fill) from surface to 4 ft, underlain by gray sand, silt and clay with wood debris, old pipes, rebar, and steel I-beams (disturbed tide flat) from 4 to 8 ft below surface.

No intact native sediments were observed today. Cultural materials were limited to demolition debris from the previously documented mill buildings. No archaeological material was observed. The archaeologist departed after utility vault excavation was complete for the day, with plans to return the following work day.

FIGURES



Figure 1. Satellite imagery annotated with the approximate locations of the monitored utility vault excavation.



Figure 2. Typical subsurface conditions observed during utility vault excavation the morning of April 4, 2022; view to the south.



Figure 3. Typical stratigraphic profile observed during utility vault excavation on April 4, 2022; view to the southeast.

DAILY ARCHAEOLOGICAL MONITORING LOG
PORT OF EVERETT - MIE/MTCA 3RD INTERIM ACTION
CRC PROJECT NO. 2110B

DATE AND TIME: April 5, 2022, 8:30 AM to 12:30 PM.

MONITOR: Margaret Berger

PROJECT COMPONENT MONITORED: Utility vault excavation with potential to exceed depth of fill.

GENERAL FIELD CONDITIONS: Weather was overcast to mostly cloudy with temperatures in the low 40s to low 50s Fahrenheit.

ARCHAEOLOGY OBSERVED: None.

NARRATIVE:

The archaeologist arrived on site at 8:30 AM and located Strider Construction Company's utility vault installation crew. The day's work was planned to consist of excavation of trenches to house utility vaults in the northeastern part of the property. Depths of excavation were anticipated to potentially exceed the depth of fill deposits on site. Excavation was conducted using a Komatsu PC 490 LC with a 6-ft wide smooth bucket, switching to a 4-ft wide toothed bucket when needed.

A pair of adjacent but slightly offset, roughly square trenches was excavated approximately 100 meters north of the vaults placed yesterday afternoon and exposed similar sediments. Each trench was approximately 20-x-20-ft, with sloped or stepped walls. The maximum depth of excavation was within an 11-x-11-ft square approximately in the center of each trench. The profile of the first trench was brown very gravelly sand (recent fill) from surface to 4 ft, underlain by gray sand, silt and clay with wood debris, old pipes, rebar, and steel I-beams (dredge spoils) from 4 to 8 ft below surface. The second trench, adjacent and offset slightly to the southwest, contained the same brown very gravelly sand (recent fill) from surface to 4 ft; the same gray sand, silt and clay with wood debris, old pipes, rebar, and steel I-beams (dredge spoils) from 4 to 6 ft below surface; and wood chips, sawdust, and other milled wood debris in a matrix of gray gravelly coarse sand (fill/disturbed beach) from 6 to 15 ft below surface.

No intact native sediments were observed today. Cultural materials were limited to demolition debris and wood waste from the previously documented mill. No archaeological material was observed. The archaeologist departed after utility vault excavation was complete for the day, with plans to return when requested by the Port (schedule to be determined).

FIGURES



Figure 1. Satellite imagery annotated with the approximate locations of the monitored utility vault excavation.



Figure 2. Subsurface conditions observed the morning of April 5, 2022; view to the south.



Figure 3. Typical stratigraphic profile observed during utility vault excavation on April 5, 2022; view to the northwest.

DAILY ARCHAEOLOGICAL MONITORING LOG
PORT OF EVERETT - MIE/MTCA 3RD INTERIM ACTION
CRC PROJECT NO. 2110B

DATE AND TIME: April 11, 2022, 8:30 AM to 2:00 PM.

MONITOR: Margaret Berger

PROJECT COMPONENT MONITORED: Outfall M/Stormwater facilities excavation with potential to exceed depth of fill.

GENERAL FIELD CONDITIONS: Weather was overcast with temperatures in the low 40s to low 50s Fahrenheit.

ARCHAEOLOGY OBSERVED: None.

NARRATIVE:

The archaeologist arrived on site at 8:30 AM and located Strider Construction Company's utility vault installation crew. The day's work was planned to consist of excavation of a 20-ft deep trench to house Outfall M and stormwater structures in the west-central part of the property, which was anticipated to potentially exceed the depth of fill deposits on site. Excavation was conducted using a Komatsu PC 490 LC with a 6-ft wide smooth bucket, switching to a 4-ft wide toothed bucket when needed.

The maximum depth of excavation was within an approximately 20-x-20-ft square bounded by the shoring box. The profile consisted of mixed gray and brown gravelly sand with woody debris and milled lumber scraps (mixed fill) to a depth of 10 ft below surrounding grade. This was underlain by loose gray sand with logs and pilings (dredge spoils) from 10 to 16 ft below surrounding grade. Groundwater was present approximately 15 ft below surface. Excavation halted for the day so that the trench could be dewatered.

No intact native sediments were observed today. Cultural materials were limited to demolition debris and wood waste from the previously documented mill. No archaeological material was observed. The archaeologist departed after excavation was finished for the day, with plans to return for completion of the trench the following work day.

FIGURES



Figure 1. Satellite imagery annotated with the approximate location of the monitored excavation.



Figure 2. Overview of the excavation monitored on April 11, 2022; view to the south.


Figure 3. Typical sediments observed during excavation on April 11, 2022; view to the southeast.

DAILY ARCHAEOLOGICAL MONITORING LOG
PORT OF EVERETT - MIE/MTCA 3RD INTERIM ACTION
CRC PROJECT NO. 2110B

DATE AND TIME: April 12, 2022, 8:30 AM to 12:00 PM.

MONITOR: Margaret Berger

PROJECT COMPONENT MONITORED: Outfall M/Stormwater facilities excavation with potential to exceed depth of fill.

GENERAL FIELD CONDITIONS: Weather was mostly cloudy with temperatures in the 40s Fahrenheit.

ARCHAEOLOGY OBSERVED: None.

NARRATIVE:

The archaeologist arrived on site at 8:30 AM and located Strider Construction Company's utility vault installation crew. The day's work was planned to consist of completing the excavation of a 20-ft deep the trench to house Outfall M and stormwater structures in the west-central part of the property, which was anticipated to potentially exceed the depth of fill deposits on site. Excavation was conducted using a Komatsu PC 490 LC with a 6-ft wide smooth bucket, switching to a 4-ft wide toothed bucket when needed.

Work resumed where it left off yesterday afternoon. The maximum depth of excavation was within an approximately 20-x-20-ft square bounded by the shoring box. The profile consisted of loose coarse gray sand (dredge spoils) with logs, wooden pilings, wood debris, and metal cables from 16 to 20 ft below surrounding grade.

No intact native sediments were observed today. Cultural materials were limited to demolition debris and wood waste from the previously documented mill. No archaeological material was observed. The archaeologist departed after excavation was finished for the day, with plans to return when requested by the Port (schedule to be determined).

FIGURES



Figure 1. Satellite imagery annotated with the approximate location of the monitored excavation.



Figure 2. Typical subsurface conditions observed during excavation on April 12, 2022.

DAILY ARCHAEOLOGICAL MONITORING LOG
PORT OF EVERETT - MIE/MTCA 3RD INTERIM ACTION
CRC PROJECT NO. 2110B

DATE AND TIME: April 19, 2022, 8:15 AM to 10:15 AM.

MONITOR: Margaret Berger

PROJECT COMPONENT MONITORED: Utility vault excavation with potential to exceed depth of fill.

GENERAL FIELD CONDITIONS: Weather was overcast to mostly cloudy with temperatures in the low 40s to low 50s Fahrenheit.

ARCHAEOLOGY OBSERVED: None.

NARRATIVE:

The archaeologist arrived on site at 8:15 AM and located Strider Construction Company's utility vault installation crew. The day's work was planned to consist of excavation of trenches to house utility vaults in the northeastern part of the property. Depths of excavation were anticipated to potentially exceed the depth of fill deposits on site. Excavation was conducted using a Komatsu PC 490 LC with a 6-ft wide smooth bucket, switching to a 4-ft wide toothed bucket when needed.

A roughly square trench was excavated approximately 25 feet east of the vaults monitored on April 5, 2022 and exposed similar sediments. The trench was approximately 20-x-20-ft, with sloped or stepped walls. The maximum depth of excavation was within an 11-x-11-ft square approximately in the center of the trench. The profile was brown very gravelly loose sand (recent fill) from surface to 5 ft, underlain by gray gravelly sand, silt and clay with steel I-beams (disturbed tide flat) from 5 to 8 ft below surface.

No intact native sediments were observed today. Cultural materials were limited to demolition debris and wood waste from the previously documented mill. No archaeological material was observed. The archaeologist departed after utility vault excavation was complete for the day, with plans to return the following work day.

FIGURES

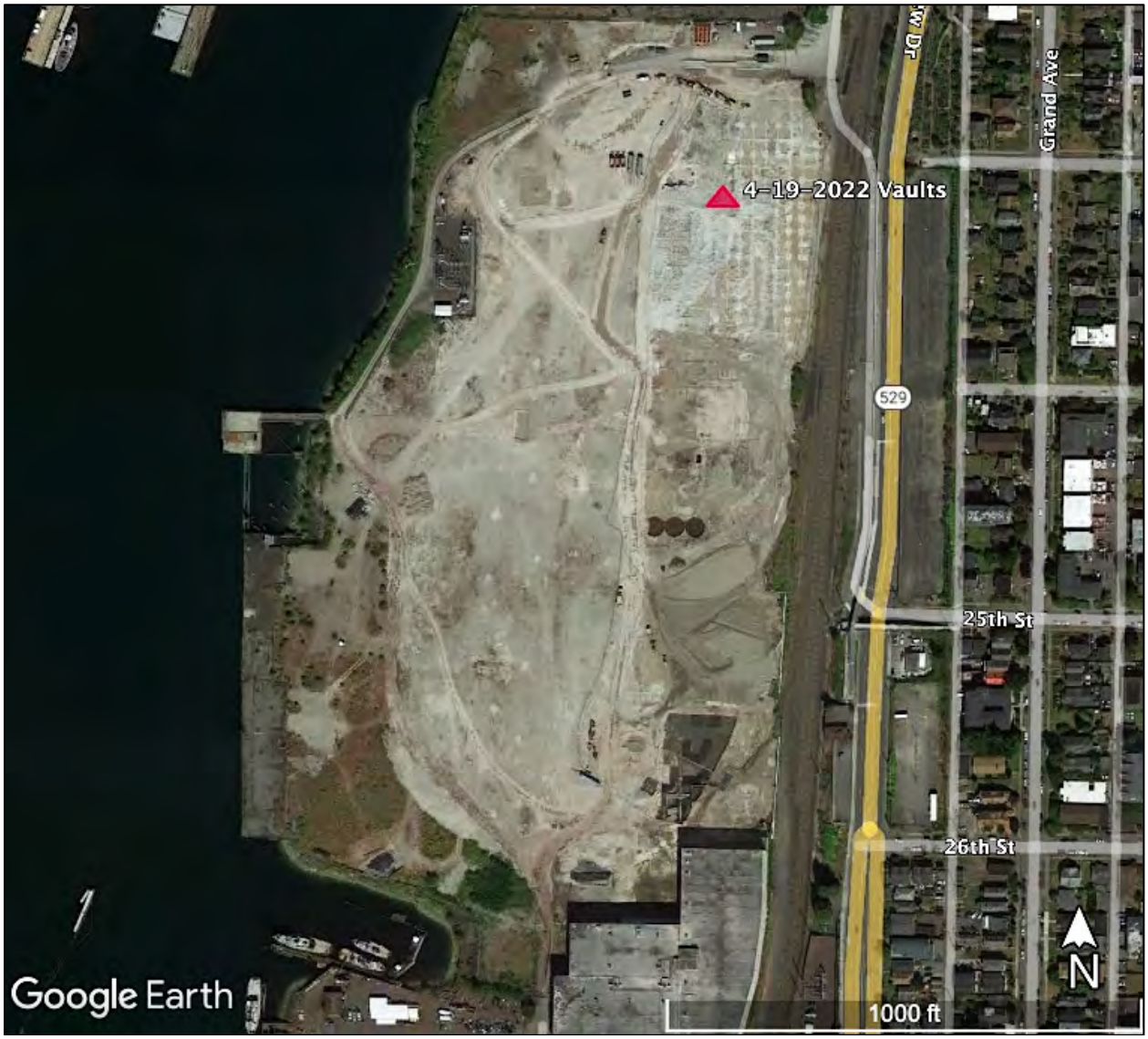

Figure 1. Satellite imagery annotated with the approximate locations of the monitored utility vault excavation.



Figure 2. Subsurface conditions observed the morning of April 19, 2022; view to the north.

DAILY ARCHAEOLOGICAL MONITORING LOG
PORT OF EVERETT - MIE/MTCA 3RD INTERIM ACTION
CRC PROJECT NO. 2110B

DATE AND TIME: April 20, 2022, 8:30 AM to 12:45 PM.

MONITOR: Margaret Berger

PROJECT COMPONENT MONITORED: Outfall M/Stormwater facilities excavation with potential to exceed depth of fill.

GENERAL FIELD CONDITIONS: Weather was mostly cloudy with temperatures in the low 40s to mid 50s Fahrenheit.

ARCHAEOLOGY OBSERVED: None.

NARRATIVE:

The archaeologist arrived on site at 8:30 AM and located Strider Construction Company's utility vault installation crew. The day's work was planned to consist of excavation of an approximately 20-ft deep trench to house Outfall M and stormwater structures in the west-central part of the property, which was anticipated to potentially exceed the depth of fill deposits on site. Excavation was conducted using a Komatsu PC 490 LC with a 6-ft wide smooth bucket, switching to a 4-ft wide toothed bucket when needed.

The maximum depth of excavation was within an approximately 20-x-20-ft square bounded by the shoring box. The profile consisted of brown sand with some gravels, concrete rubble, milled lumber scraps, metal fragments, a few bricks, and remnants of wooden pilings (fill) to a depth of 10 ft below surrounding grade. This was underlain by loose gray sand with logs and pilings (dredge spoils or disturbed tide flat) from 10 to 18 ft below surrounding grade. Groundwater was present approximately 15 ft below surface.

No intact native sediments were observed today. Cultural materials were limited to demolition debris and wood waste from the previously documented mill. No archaeological material was observed. The archaeologist departed after excavation was finished for the day, with plans to return the following work day.

FIGURES



Figure 1. Satellite imagery annotated with the approximate location of the monitored excavation.



Figure 2. Overview of the excavation monitored on April 20, 2022; view to the south-southwest.


Figure 3. Typical sediments observed during excavation on April 20, 2022; view to the south.

DAILY ARCHAEOLOGICAL MONITORING LOG
PORT OF EVERETT - MIE/MTCA 3RD INTERIM ACTION
CRC PROJECT NO. 2110B

DATE AND TIME: April 21, 2022, 8:40 AM to 1:25 PM.

MONITOR: Margaret Berger

PROJECT COMPONENT MONITORED: Outfall M/Stormwater facilities and utility pothole excavation with potential to exceed depth of fill.

GENERAL FIELD CONDITIONS: Weather was mostly cloudy with temperatures in the mid 40s to mid 50s Fahrenheit.

ARCHAEOLOGY OBSERVED: None.

NARRATIVE:

The archaeologist arrived on site at 8:30 AM and located Strider Construction Company's utility vault installation crew. The day's work was planned to consist of excavation of an approximately 20-ft deep trench to house Outfall M and stormwater structures in the west-central part of the property, which was anticipated to potentially exceed the depth of fill deposits on site. Excavation was conducted using a Komatsu PC 490 LC with a 6-ft wide smooth bucket, switching to a 4-ft wide toothed bucket when needed.

The work area was directly north of the excavation monitored on April 11, 2022. The maximum depth of excavation was within an approximately 20-x-20-ft square bounded by the shoring box. The profile consisted of brown gravelly sand from surface to 5 ft (recent fill), brown laminated silt and sand from 5 to 7 ft, gray laminated silt and sand with dimensional lumber and pilings from 7 to 9 ft, and loose gray sand with concrete pilings from 9 to 15 ft below surrounding grade. Groundwater was present approximately 15 ft below surface, obscuring any visibility of deeper sediments.

Following completion of the above, a utility pothole was excavated in the southern part of the project, near TP 1 monitored in October 2021. Sediments in the pothole consisted of angular gravel from 0 to 6 inches (recent fill) and brownish gray gravelly sand with demolition debris (fill) to a depth of 8 ft below surface. Groundwater was present approximately 7 ft below surface. Total dimensions of the pothole were approximately 10 ft east-west by 25 ft north-south.

No intact native sediments were observed today. Cultural materials were limited to demolition debris and pilings from the previously documented mill. No archaeological material was observed. The archaeologist departed after excavation was finished for the day, with plans to return the following work day.

FIGURES



Figure 1. Satellite imagery annotated with the approximate locations of the excavations monitored on April 21, 2022.



Figure 2. Overview of the Outfall M/Stormwater excavation monitored on April 21, 2022; view to the northeast.


Figure 3. Typical sediments observed in pothole excavation on April 21, 2022; view to the southwest.

DAILY ARCHAEOLOGICAL MONITORING LOG
PORT OF EVERETT - MIE/MTCA 3RD INTERIM ACTION
CRC PROJECT NO. 2110B

DATE AND TIME: May 3, 2022, 8:15 AM to 11:00 AM.

MONITOR: Margaret Berger

PROJECT COMPONENT MONITORED: Trenches for dewatering wells in SDMH 7 stormwater facilities location with potential to exceed depth of fill.

GENERAL FIELD CONDITIONS: Light rain with temperatures around 50 degrees Fahrenheit.

ARCHAEOLOGY OBSERVED: None.

NARRATIVE:

The archaeologist arrived on site at 8:15 AM and located the Strider Construction Company crew tasked with excavating trenches to install dewatering wells ahead of installing the SDMH 7 stormwater facilities in the southern part of the property. This work was anticipated to reach up to 10 ft below surface and potentially exceed the depth of fill deposits in this location. Excavation was conducted using a Komatsu PC 490 LC with a 6-ft wide smooth bucket, switching to a 4-ft wide toothed bucket when needed.

This work occurred near the pothole excavation monitored on April 21, 2022, and generally exposed the same subsurface conditions. Five trenches were excavated and each trench measured approximately 8-x-10-ft in area. The profile in each consisted of brown to brownish gray gravelly sand with demolition debris including brick fragments, concrete rubble, and wood (fill) to a depth of 4 to 8 ft below surface, underlain by mixed brown and gray sand, silt, and clay with concrete rubble (disturbed tide flat) to a depth of 10 ft below surface. Groundwater was present approximately 8 ft below surface.

No intact native sediments were observed today. Cultural materials were limited to demolition debris from the previously documented mill. No archaeological material was observed. The archaeologist departed after excavation was finished for the day, with plans to return the following work day.

FIGURES

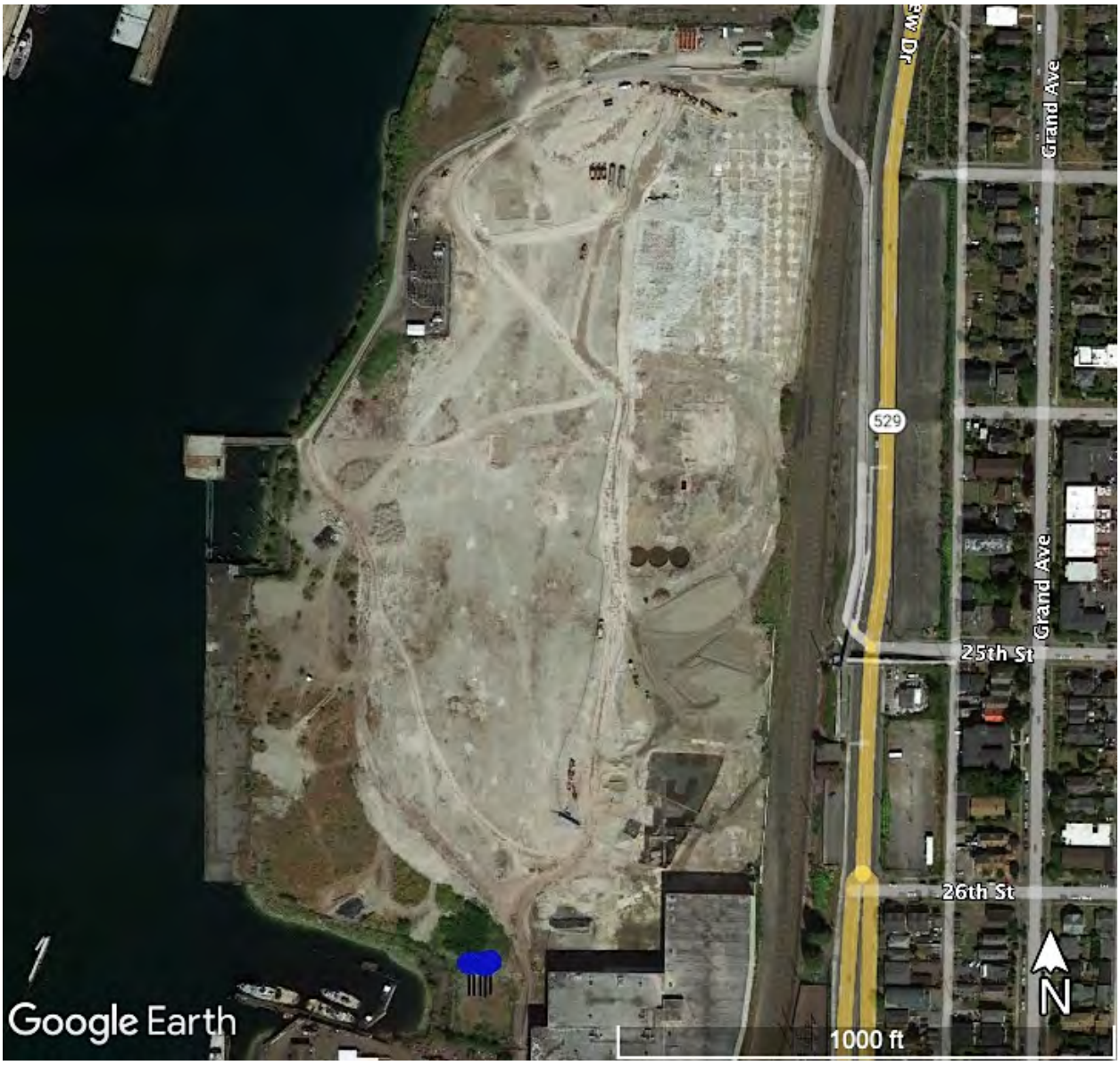

Figure 1. Satellite imagery annotated with the approximate locations of the dewatering well trenches monitored on May 3, 2022 in the south end of the project.



Figure 2. Overview of the dewatering well trench excavation monitored on May 3, 2022; view to the east.



Figure 3. Typical sediments observed in dewatering trench excavation on May 3, 2022; view to the southeast.

DAILY ARCHAEOLOGICAL MONITORING LOG
PORT OF EVERETT - MIE/MTCA 3RD INTERIM ACTION
CRC PROJECT NO. 2110B

DATE AND TIME: May 4, 2022, 8:00 AM to 11:30 AM.

MONITOR: Margaret Berger

PROJECT COMPONENT MONITORED: Utility vault excavation with potential to exceed depth of fill.

GENERAL FIELD CONDITIONS: Weather was overcast with temperatures in the high 40s to mid 50s Fahrenheit.

ARCHAEOLOGY OBSERVED: None.

NARRATIVE:

The archaeologist arrived on site at 8:00 AM and located Strider Construction Company's utility vault installation crew. The day's work was planned to consist of excavation of trenches to house utility vaults in the western and central parts of the property. Depths of excavation were anticipated to potentially exceed the depth of fill deposits on site. Excavation was conducted using a Komatsu PC 490 LC with a 6-ft wide smooth bucket, switching to a 4-ft wide toothed bucket when needed.

One roughly square trench was excavated immediately south of the previously monitored Outfall M/Stormwater facilities. The trench measured approximately 20-x-20-ft, with sloped or stepped walls. The maximum depth of excavation was within an 11-x-11-ft square approximately in the center of the trench. The profile consisted of brown gravelly sand (recent fill) to a depth of 2 ft, underlain by laminar beds of brown, gray, and orange-brown silt and sand from 2 to 4 ft, and massive gray silt and sand with wood, metal, and concrete (fill) from 4 to 8 ft below surface.

Next, two adjacent but slightly offset, roughly square trenches were excavated in the central part of the property. Each was approximately 20-x-20-ft, with sloped or stepped walls. The maximum depth of excavation was within an 11-x-11-ft square approximately in the center of each trench. The sediments in both trenches consisted of brown gravelly sand (recent fill) to a depth of 2 ft underlain by dark gray to black stained gravelly sand with brick fragments, metal wires, rebar, concrete rubble, and metal pipe fragments (fill) from 2 to 10 ft below surface.

No intact native sediments were observed today. Cultural materials were limited to demolition debris from the previously documented mill. No archaeological material was observed. The archaeologist departed after excavation was finished for the day, with plans to return when requested by the Port (schedule to be determined).

FIGURES



Figure 1. Satellite imagery annotated with the approximate locations of the monitored utility vault excavation.



Figure 2. Conditions observed during excavation in the western part of the project on May 4, 2022; view to the south-southwest.



Figure 3. Typical sediments observed during excavation in the central part of the project on May 4, 2022; view to the southwest.

DAILY ARCHAEOLOGICAL MONITORING LOG
PORT OF EVERETT - MIE/MTCA 3RD INTERIM ACTION
CRC PROJECT NO. 2110B

DATE AND TIME: May 9, 2022, 7:30 to 11:30 AM.

MONITOR: Ian Kretzler.

PROJECT COMPONENT MONITORED: Utility vault excavation with the potential to encounter non-fill deposits (Figure 1).

GENERAL FIELD CONDITIONS: Weather was overcast to partly sunny, with temperatures between 45 and 50 degrees Fahrenheit.

ARCHAEOLOGY OBSERVED: None.

NARRATIVE:

The archaeologist arrived on site at 7:30 AM and met with Strider Construction Company staff to review excavation plans for the day. Construction personnel planned to install one concrete utility vault (SDMH 7) near the southern boundary of the project. The area had been previously excavated, and several dewatering pumps had been installed (Figure 2). A Komatsu PC 490LC excavator was used to reexcavate a pit measuring approximately 10 feet long and 10 feet wide to a depth of 10 feet below surface. Subsurface deposits consisted of brown, pebbly sand with some concrete, brick, and other construction debris (recent backfill) and brown to dark brown, pebbly sand with extensive construction debris and contaminated soils (fill / dredge spoils) (Figure 3). Groundwater was present at the base of the pit. Installation of the utility vault required that the pit be excavated to approximately 13 feet below surface. Because of extensive groundwater, additional dewatering pumps were installed (Figure 4). Excavation paused until the following day.

No non-fill sediments or archaeological materials were identified. The archaeologist departed at 11:30 AM following the pause in excavation.

FIGURES



Figure 1. Area of monitored excavation, May 9, 2022.



Figure 2. Previously installed dewatering pumps. View to the northeast.



Figure 3. Fill deposits and groundwater in the vault pit. View to the northwest.



Figure 4. Dewatering pumps installed in the vault pit.

DAILY ARCHAEOLOGICAL MONITORING LOG
PORT OF EVERETT - MIE/MTCA 3RD INTERIM ACTION
CRC PROJECT NO. 2110B

DATE AND TIME: May 10, 2022, 7:30 AM to 2:45 PM.

MONITOR: Ian Kretzler.

PROJECT COMPONENT MONITORED: Utility vault excavation with the potential to encounter non-fill deposits (Figure 1).

GENERAL FIELD CONDITIONS: Weather was overcast to partly sunny, with temperatures between 45 and 60 degrees Fahrenheit.

ARCHAEOLOGY OBSERVED: None.

NARRATIVE:

The archaeologist arrived on site at 7:30 AM and met with Strider Construction Company staff to review excavation plans for the day. The previous day, several dewatering pumps were installed in the excavation pit for SDMH 7. Due to overnight rainfall, significant groundwater remained in the pit. Construction personnel decided to wait until dewatering pumps cleared the pit of most standing water. This occurred around 10:30 AM. A Komatsu PC 490LC excavator was then used to extend the depth of the pit to 13 feet below surface, revealing the same fill / dredge spoils observed closer to the surface (Figure 2). The utility vault was installed, and a new trench was excavated. The 6-foot-wide trench extended 80 feet west from the utility vault and was excavated to about 10 feet below surface. Subsurface deposits consisted of mixed gray, brown, and grayish brown, pebbly sand to silty sand with ample construction debris, particularly brick fragments and large pieces of concrete (Figure 3). These sediments were interpreted as fill / dredge spoils. Near the base of the trench, multiple wood pilings and black, contaminated soils were observed. The trench terminated near the western edge of the project. There, the trench was expanded to 8 feet wide and excavated to 13 feet below surface (Figure 4). Between 12 and 13 feet below surface, fill / dredge spoils were underlain by gray, silty sand with no construction debris. These were likely tide flat deposits. No archaeological materials were observed.

At 2:45 PM, construction personnel shifted from trench excavation to utility installation and backfilling. The archaeologist departed soon thereafter.

FIGURES

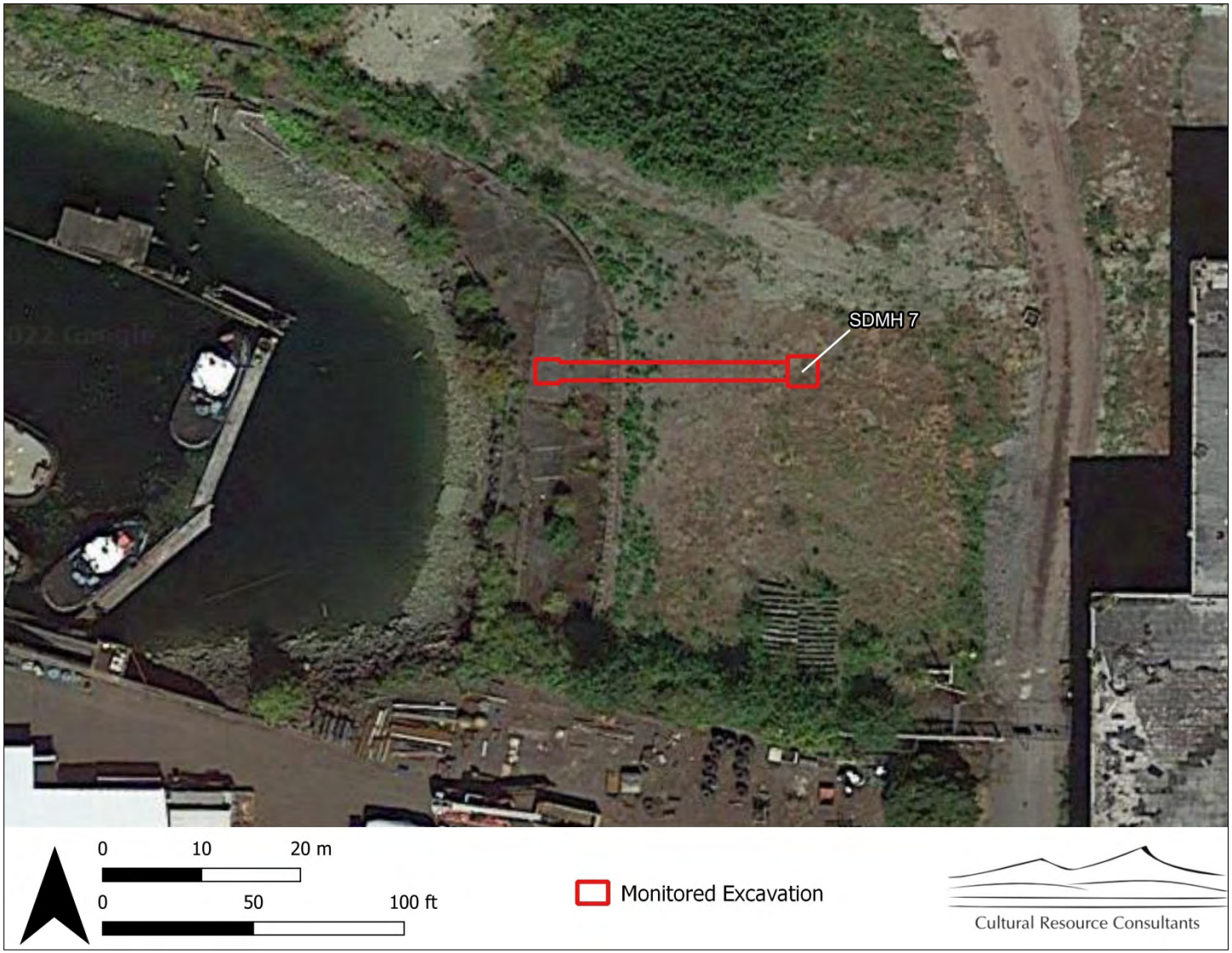

Figure 1. Area of monitored excavation, May 10, 2022.



Figure 2. Dewatering and excavation in the utility vault pit.



Figure 3. Mixed fill / dredge spoils in the excavation trench west of SDMH 7. View to the northwest.



Figure 4. Excavation of mixed fill / dredge spoils at the trench terminus. View to the northeast.

DAILY ARCHAEOLOGICAL MONITORING LOG
PORT OF EVERETT - MIE/MTCA 3RD INTERIM ACTION
CRC PROJECT NO. 2110B

DATE AND TIME: May 11, 2022, 7:30 AM to 2:15 PM.

MONITOR: Ian Kretzler.

PROJECT COMPONENT MONITORED: Utility vault excavation with the potential to encounter non-fill deposits (Figure 1).

GENERAL FIELD CONDITIONS: Weather was overcast to partly sunny, with temperatures between 45 and 60 degrees Fahrenheit.

ARCHAEOLOGY OBSERVED: None.

NARRATIVE:

The archaeologist arrived on site at 7:30 AM and met with Strider Construction Company staff to review excavation plans for the day. Shortly thereafter, a Komatsu PC 490LC excavator began digging a new trench extending east of SDMH 7 (Figure 2). The 6-foot-wide trench was excavated to 8 feet below surface. Near SDMH 7, the trench contained fill consisting of brown, pebbly and cobbly sand with ample concrete debris. A large deposit of brick fragments was present between 1 and 3 feet below surface in this area (Figure 3). As the trench was extended east, construction personnel encountered existing utilities. Two of these utilities were left in place, one was removed. A concrete manhole was also left in place. Subsurface deposits in the vicinity of existing utilities consisted of brown to yellowish brown sand with few rocks and no construction debris. It likely stemmed from more recent fill deposition. At its eastern terminus, the trench was expanded to about 10 feet long and 10 feet wide and excavated to 14 feet below surface. At about 12.5 feet below surface, fill transitioned to gray, pebbly silty sand (Figure 4). Some of these sediments were contaminated, based on the oily smell they emitted. Otherwise, however, they appeared to be intact, tide flat deposits. No archaeological materials were observed.

At 2:15 PM, construction personnel shifted from trench excavation to backfilling and installation of SDMH 9 at the eastern terminus of the trench. The archaeologist departed soon thereafter.

FIGURES

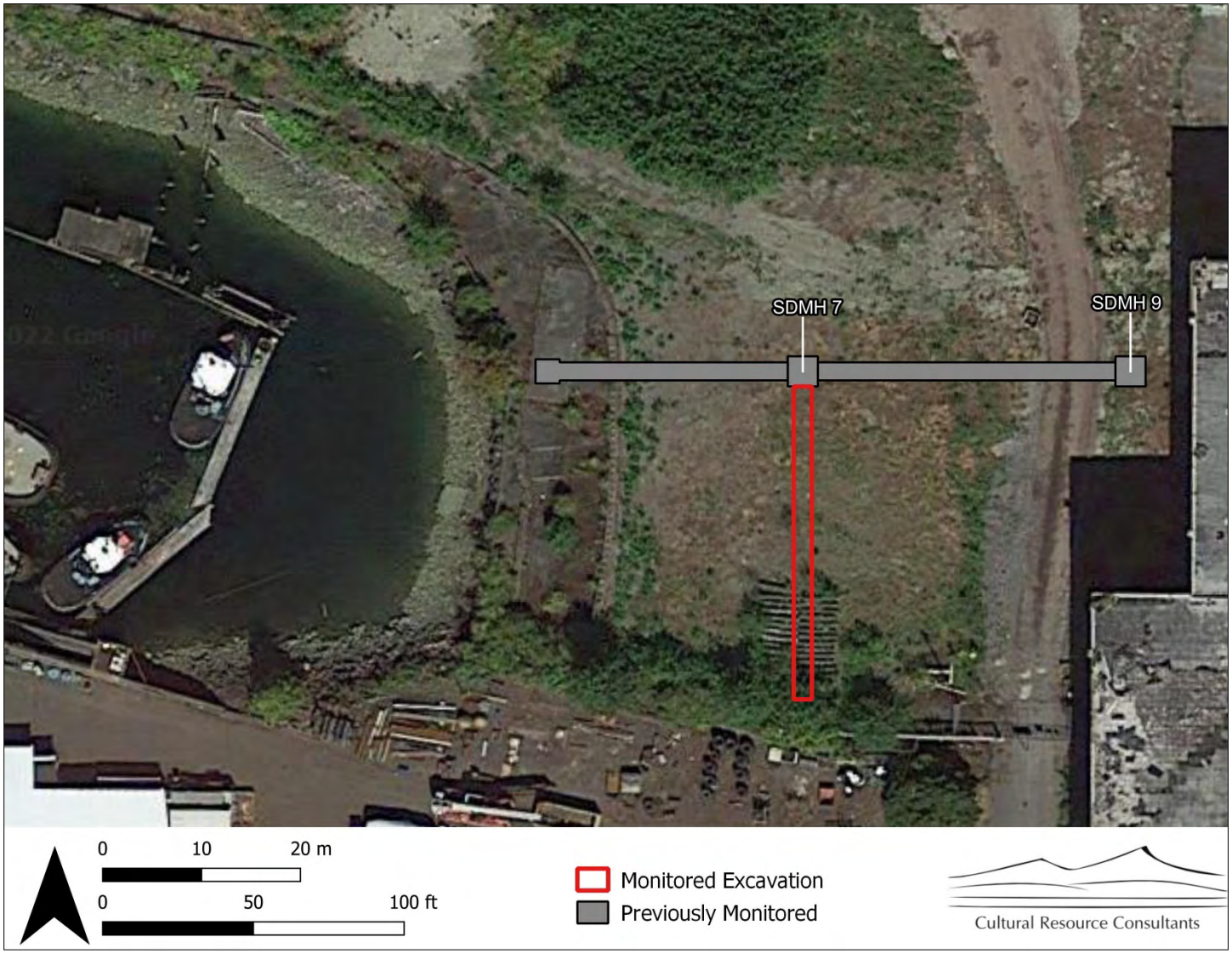

Figure 1. Area of monitored excavation, May 11, 2022.



Figure 2. Excavation trench east of SDMH 7, visible in the foreground. View to the east.



Figure 3. Brick deposit in the excavation trench east of SDMH 7. View to the southeast.



Figure 4. Gray, tide flat deposits underlying fill at the eastern terminus of the excavation trench.

DAILY ARCHAEOLOGICAL MONITORING LOG
PORT OF EVERETT - MIE/MTCA 3RD INTERIM ACTION
CRC PROJECT NO. 2110B

DATE AND TIME: May 12, 2022, 7:40 AM to 12:40 PM.

MONITOR: Ian Kretzler.

PROJECT COMPONENT MONITORED: Utility excavation with the potential to encounter non-fill deposits (Figure 1).

GENERAL FIELD CONDITIONS: Weather was overcast to rainy, with temperatures between 50 and 55 degrees Fahrenheit.

ARCHAEOLOGY OBSERVED: None.

NARRATIVE:

The archaeologist arrived on site at 7:40 AM and met with Strider Construction Company staff to review excavation plans for the day. Shortly thereafter, a Hitachi ZX 240 LC excavator began digging a new trench extending south from SDMH 7 (Figure 2). The 6-foot-wide trench was excavated to 10 feet below surface. The trench contained fill consisting of brown with some yellowish brown and gray, pebbly sand with ample construction debris, especially brick fragments, concrete, and wood pilings (Figure 3). The trench was extended approximately 100 feet to the south, terminating at the previously installed SDMH 8 at the southern edge of the project (Figure 4).

No non-fill sediments and no archaeological materials were observed. At 12:40 PM, construction personnel shifted to installing utilities and backfilling. The archaeologist departed shortly thereafter.

FIGURES

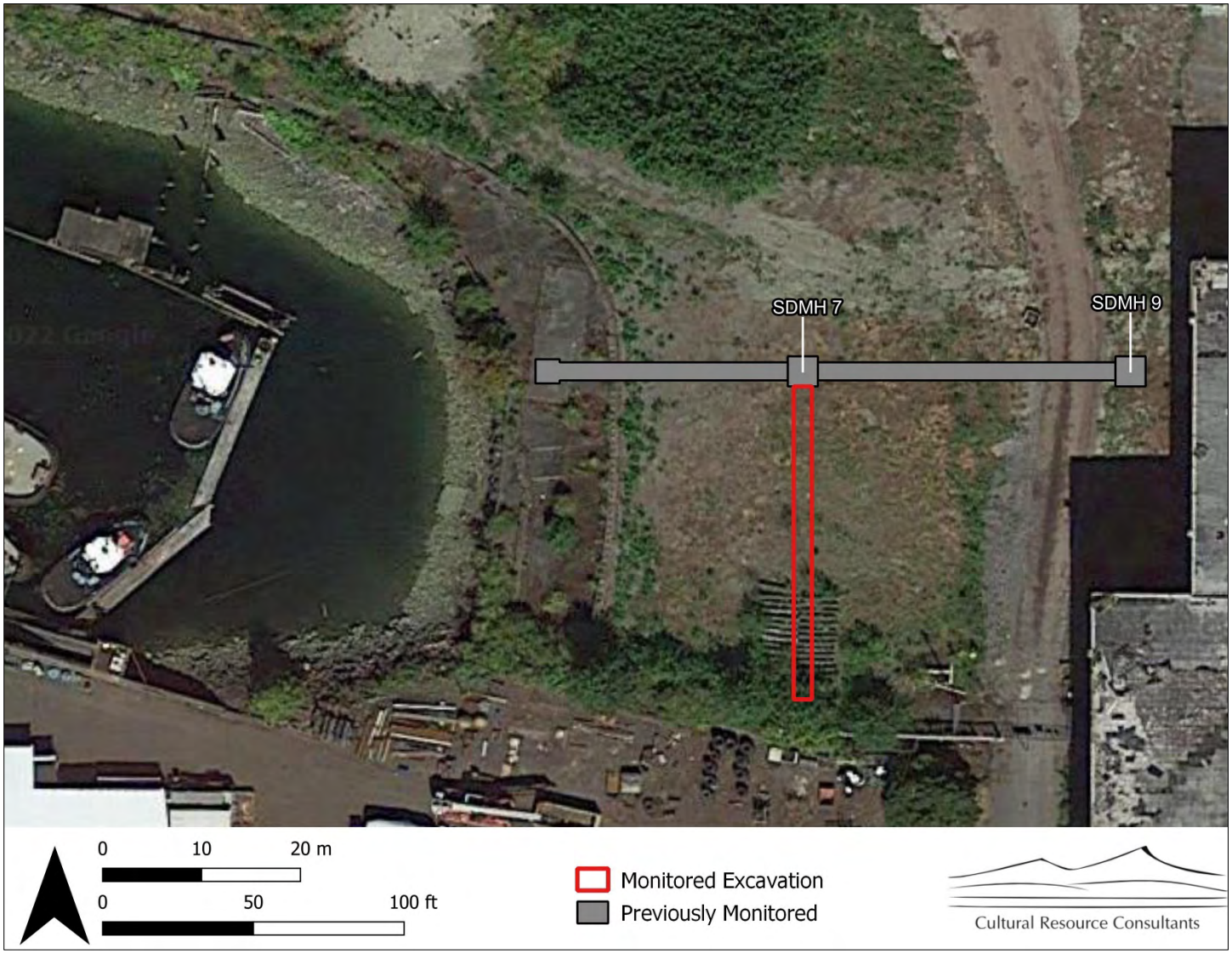

Figure 1. Area of monitored excavation, May 12, 2022.



Figure 2. Excavation trench south of SDMH 7, visible in the foreground. View to the southwest.


Figure 3. Fill deposits in the excavation trench south of SDMH 7.



Figure 4. Excavation of the trench toward previously installed SDMH 8, visible in the foreground. View to the northwest.

DAILY ARCHAEOLOGICAL MONITORING LOG
PORT OF EVERETT - MIE/MTCA 3RD INTERIM ACTION
CRC PROJECT NO. 2110B

DATE AND TIME: May 23, 2022, 7:30 AM to 2:15 PM.

MONITOR: Ian Kretzler.

PROJECT COMPONENT MONITORED: Utility excavation with the potential to encounter non-fill deposits (Figure 1).

GENERAL FIELD CONDITIONS: Weather was overcast, with temperatures between 55 and 61 degrees Fahrenheit.

ARCHAEOLOGY OBSERVED: None.

NARRATIVE:

The archaeologist arrived on site at 7:30 AM and met with Strider Construction Company staff to review excavation plans for the day. Shortly thereafter, a Deere 245G LC Mid-Size Excavator began digging a square pit measuring about 10 feet long on each side (Figure 2). The pit was located about 150 feet northeast of previously installed SDMH 7. It contained fill and non-fill sediments (Figure 3). Fill consisting of brown to yellowish brown sand to silty sand with trace construction debris extended to 5 feet below surface. Fill / dredge spoils consisting of dark grayish brown silty sand with wood pilings were present between 5 and 7 feet below surface. Likely intact tide flat deposits consisting of very dark gray silty sand with 40 percent small to medium shell fragments were present between 7 and 9 feet below surface. Shell fragments were not localized but spread across the entire base of the pit. They were interpreted as a natural, non-midden shell deposit. They likely represent the former surface of the tide flat. Wood pilings extended into tide flat deposits. Additional tide flat deposits were present between 9 and 11 feet below surface. They contained 5 percent small to medium shell fragments. Once excavation was completed, construction personnel placed angular spalls and fine sand fill at the base of the pit. An electrical vault was then installed (Figure 4).

Following installation, a new 10-foot-square pit was excavated northwest of the first pit. A similar stratigraphic sequence was observed, and an electrical vault was installed following excavation (Figure 5).

A third 10-foot-square pit was then excavated about 30 feet south of the first pit and south of a previously installed vault. The pit contained fill consisting of brown, yellowish brown, and gray sand to silty sand, which extended to 5 feet below surface. About 10 percent small to medium shell fragments were observed between 4 and 5 feet below surface. Likely intact tide flat deposits consisting of very dark gray sand with no shell fragments were present between 5 and 10 feet below surface. A utility vault was installed following excavation.

Lastly, a fourth 10-foot-square pit was excavated between the third pit and the previously installed vault. It contained a similar stratigraphic sequence as the third pit. A utility vault was installed following excavation.

No archaeological materials were observed during excavation. At 2:15 PM, construction personnel shifted to final installation tasks and pit backfilling. The archaeologist departed shortly thereafter.

FIGURES



Figure 1. Area of monitored excavation, May 23, 2022.



Figure 2. Excavation of vault #1 on May 23, 2022. View to the east.


Figure 3. Fill, dredge spoils, and tide flat deposits in vault #1.



Figure 4. Excavation pit following installation of vault #1. View to the southeast.



Figure 5. Vaults #1 and #2. View to the northwest.

DAILY ARCHAEOLOGICAL MONITORING LOG
PORT OF EVERETT - MIE/MTCA 3RD INTERIM ACTION
CRC PROJECT NO. 2110B

DATE AND TIME: May 26, 2022, 8:00 AM to 2:30 PM.

MONITOR: Margaret Berger

PROJECT COMPONENT MONITORED: Utility vault excavation with potential to exceed depth of fill.

GENERAL FIELD CONDITIONS: Weather was mostly cloudy to overcast with temperatures in the mid 50s to low 60s degrees Fahrenheit.

ARCHAEOLOGY OBSERVED: None.

NARRATIVE:

The archaeologist arrived on site at 8:00 AM and located the Strider Construction Company's utility vault installation crew. The day's work was planned to consist of excavation of trenches to house utility vaults in the southern part of the property. Depths of excavation were anticipated to potentially exceed the depth of fill deposits on site. Excavation was conducted using a Komatsu PC 490 LC with a 6-ft wide smooth bucket, switching to a 4-ft wide toothed bucket when needed.

This work occurred near the SDMH 7 facilities monitored during the week of May 9, 2022, and exposed similar subsurface conditions. Two pairs of adjacent but slightly offset, roughly square trenches were excavated in the southern part of the property. Each trench was approximately 20-x-20-ft, with sloped or stepped walls. The maximum depth of excavation was within an 11-x-11-ft square approximately in the center of each trench. The sediments in all four trenches consisted of grayish to yellowish brown gravelly sand with ceramic and metal pipe fragments, wooden pilings, brick fragments, and concrete rubble (fill) to a depth of 7.5 ft, underlain by moist dark gray to black silt, sand, and clay (tide flat) from 7.5 to 8 ft below surface.

Intact native sediments observed today were limited to the bottom 6 inches of the excavations. Cultural materials were limited to demolition debris from the previously documented mill. No archaeological material was observed. The archaeologist departed after excavation was finished for the day, with plans to return when requested by the Port (schedule to be determined).

FIGURES



Figure 1. Satellite imagery annotated with the approximate locations of the utility vault excavation monitored on May 26, 2022 in the south end of the project.



Figure 2. Overview of the utility vault excavation monitored on May 26, 2022; view to the southwest.



Figure 3. Typical sediments observed in utility vault excavations on May 26, 2022; view to the south.

DAILY ARCHAEOLOGICAL MONITORING LOG
PORT OF EVERETT - MIE/MTCA 3RD INTERIM ACTION
CRC PROJECT NO. 2110B

DATE AND TIME: July 6, 2022, 8:00 AM to 4:00 PM.

MONITOR: Margaret Berger

PROJECT COMPONENT MONITORED: Utility vault excavation with potential to exceed depth of fill.

GENERAL FIELD CONDITIONS: Weather was mostly cloudy with temperatures in the low 60s to low 70s °F.

ARCHAEOLOGY OBSERVED: None.

NARRATIVE:

The archaeologist arrived on site at 8:00 AM and located Strider Construction Company's utility vault installation crew. The day's work was planned to consist of excavation of trenches to house utility vaults in the northcentral of the property. Depths of excavation were anticipated to potentially exceed the depth of fill deposits on site. Excavation was conducted using a Komatsu PC 490 LC with a 6-ft wide smooth bucket, switching to a 4-ft wide toothed bucket when needed.

Two adjacent but slightly offset, roughly square trenches were excavated. Each was approximately 20-x-20-ft, with sloped or stepped walls. The maximum depth of excavation was within an 11-x-11-ft square approximately in the center of each trench. The sediments in both trenches consisted of brown gravelly sand (recent fill) to a depth of 3 ft underlain by gray silt, sand, and clay from 3 to 8 ft, and gray soft wet sandy clay (tide flat) from 8 to 10 ft below surface. A few steel I-beams were present beginning approximately 1-ft below surface.

A second pair of trenches with approximately the same dimensions was excavated approximately 120 ft to the north of the first. Sediments consisted of brown gravelly sand with asphalt, concrete, and rebar (recent fill) to a depth of 2.5 ft, underlain by gray silt, sand, and clay from 2.5 to 7 ft, and gray soft wet sandy clay (tide flat) from 7 to 10 ft below surface. Four metal-wrapped concrete piles were present beginning approximately 1 ft below surface.

A third pair of trenches with approximately the same dimensions was excavated approximately 120 ft to the north of the second. Sediments consisted of brown gravelly sand (recent fill) to a depth of 2.5 ft, underlain by gray silt, sand, and clay from 2.5 to 7 ft, and gray soft wet sandy clay (tide flat) from 7 to 10 ft below surface. Concrete beams and steel I-beams were exposed approximately 8 ft below surface.

Another trench with approximately the same dimensions was excavated approximately 80 ft to the north of the third. Sediments consisted of brown sand with sparse gravels (recent fill) to a depth of 4 ft, underlain by gray gravelly cobbly sand with wood and concrete rubble (older fill) from 4 to 5 ft, and gray soft wet sandy clay (tide flat) from 5 to 10 ft below surface. An existing water line was present in the south edge of the trench approximately 3 ft below surface. The second trench in this pair will be excavated tomorrow.

Some areas of apparently intact tide flat deposits were observed today underlying older and recent fill deposits. Cultural materials were limited to demolition debris from the previously documented mill. No archaeological material was observed. The archaeologist departed after excavation was finished for the day, with plans to return the following day.

FIGURES



Figure 1. Satellite imagery annotated with the approximate locations of the monitored utility vault excavation.



Figure 2. Conditions observed during excavation in the north-central part of the project on July 6, 2022; view to the north-northwest.

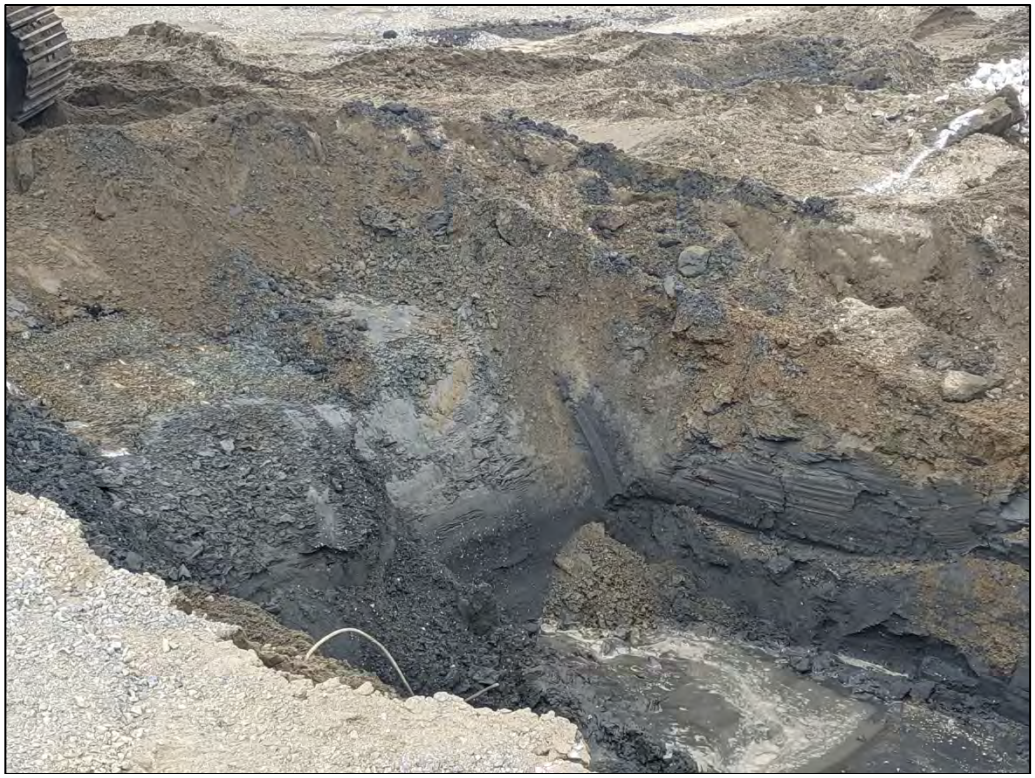

Figure 3. Typical sediments observed during excavation in the central part of the project on July 6, 2022; view to the northwest.

DAILY ARCHAEOLOGICAL MONITORING LOG
PORT OF EVERETT - MIE/MTCA 3RD INTERIM ACTION
CRC PROJECT NO. 2110B

DATE AND TIME: July 7, 2022, 7:00 AM to 9:15 AM.

MONITOR: Margaret Berger

PROJECT COMPONENT MONITORED: Utility vault excavation with potential to exceed depth of fill.

GENERAL FIELD CONDITIONS: Weather was mostly cloudy with temperatures in the low 60s °F.

ARCHAEOLOGY OBSERVED: None.

NARRATIVE:

The archaeologist arrived on site at 7:00 AM and located Strider Construction Company's utility vault installation crew. The day's work was planned to consist of excavation of trenches to house utility vaults in the northcentral of the property. Depths of excavation were anticipated to potentially exceed the depth of fill deposits on site. Excavation was conducted using a Komatsu PC 490 LC with a 6-ft wide smooth bucket, switching to a 4-ft wide toothed bucket when needed.

Work continued with excavation of the second trench in the pair begun yesterday afternoon. Sediments consisted of brown sand with sparse gravels (recent fill) to a depth of 4 ft, underlain by gray gravelly cobbly sand with wood and concrete rubble (older fill) from 4 to 5 ft, and gray soft wet sandy clay (tide flat) from 5 to 10 ft below surface.

Two adjacent but slightly offset, roughly square trenches were excavated approximately 50 ft to the east. Each was approximately 20-x-20-ft, with sloped or stepped walls. The maximum depth of excavation was within an 11-x-11-ft square approximately in the center of each trench. The sediments in both trenches consisted of brown gravelly sand (recent fill) to a depth of 5 ft underlain by gray gravelly silt, sand, and clay from 5 to 6 ft, and gray soft wet sandy clay (tide flat) from 6 to 9 ft below surface. Wooden pilings and a drain pipe were encountered approximately 7 ft below surface.

Some areas of apparently intact tide flat deposits were observed today underlying older and recent fill deposits. Cultural materials were limited to demolition debris from the previously documented mill. No archaeological material was observed. The archaeologist departed after excavation was finished for the day, with plans to return when requested by the Port (schedule to be determined).

FIGURES



Figure 1. Satellite imagery annotated with the approximate locations of the monitored utility vault excavation.



Figure 2. Conditions observed during excavation in the north-central part of the project on July 7, 2022; view to the northwest.

DAILY ARCHAEOLOGICAL MONITORING LOG
PORT OF EVERETT - MIE/MTCA 3RD INTERIM ACTION
CRC PROJECT NO. 2110B

DATE AND TIME: July 13, 2022, 8:00 AM to 2:00 PM.

MONITOR: Ian Kretzler.

PROJECT COMPONENT MONITORED: Utility excavation with the potential to encounter non-fill deposits (Figure 1).

GENERAL FIELD CONDITIONS: Weather was clear and sunny, with temperatures between 60 and 72 degrees Fahrenheit.

ARCHAEOLOGY OBSERVED: None.

NARRATIVE:

The archaeologist arrived on site at 8:00 AM and met with Strider Construction Company staff to review excavation plans for the day. Soon after, construction personnel began excavating holes for utility vaults. Over the course of the day, a Hitachi ZX245USLC and a Komatsu PC 490LC were used to excavate seven vaults (Figures 1 – 3, Table 1). Each vault hole measured approximately 8.5-feet-square and extended to between eight and 10 feet below surface. They contained fill consisting of brown, pebbly and cobbly sand with concrete, rebar, and other construction debris (Figure 4). Fill extended to about five feet below surface. It was underlain by dredge spoils consisting of dark gray, sandy silt to silty sand with debris from wood pilings (Figure 4). In five vaults, dredge spoils extended to the base of excavation. In vault #3, tide flat deposits consisting of dark gray coarse sand with no construction debris were present between six and nine feet below surface. Similar tide flat deposits appeared mixed with dredge spoils between seven and nine feet below surface in vault #6. In vault #7, concrete and rebar structural elements were encountered three feet below surface (Figure 5). Removal of these elements slowed excavation. The base of the hole, approximately eight feet below surface, did not extend below the base of the concrete. Angular spalls and fabric were placed at the base of each vault hole following excavation.

No shell fragments or other archaeological sites were observed during archaeological monitoring. At 2:30 PM, construction personnel shifted to backfilling and installing utility vaults. The archaeologist departed shortly thereafter.

FIGURES

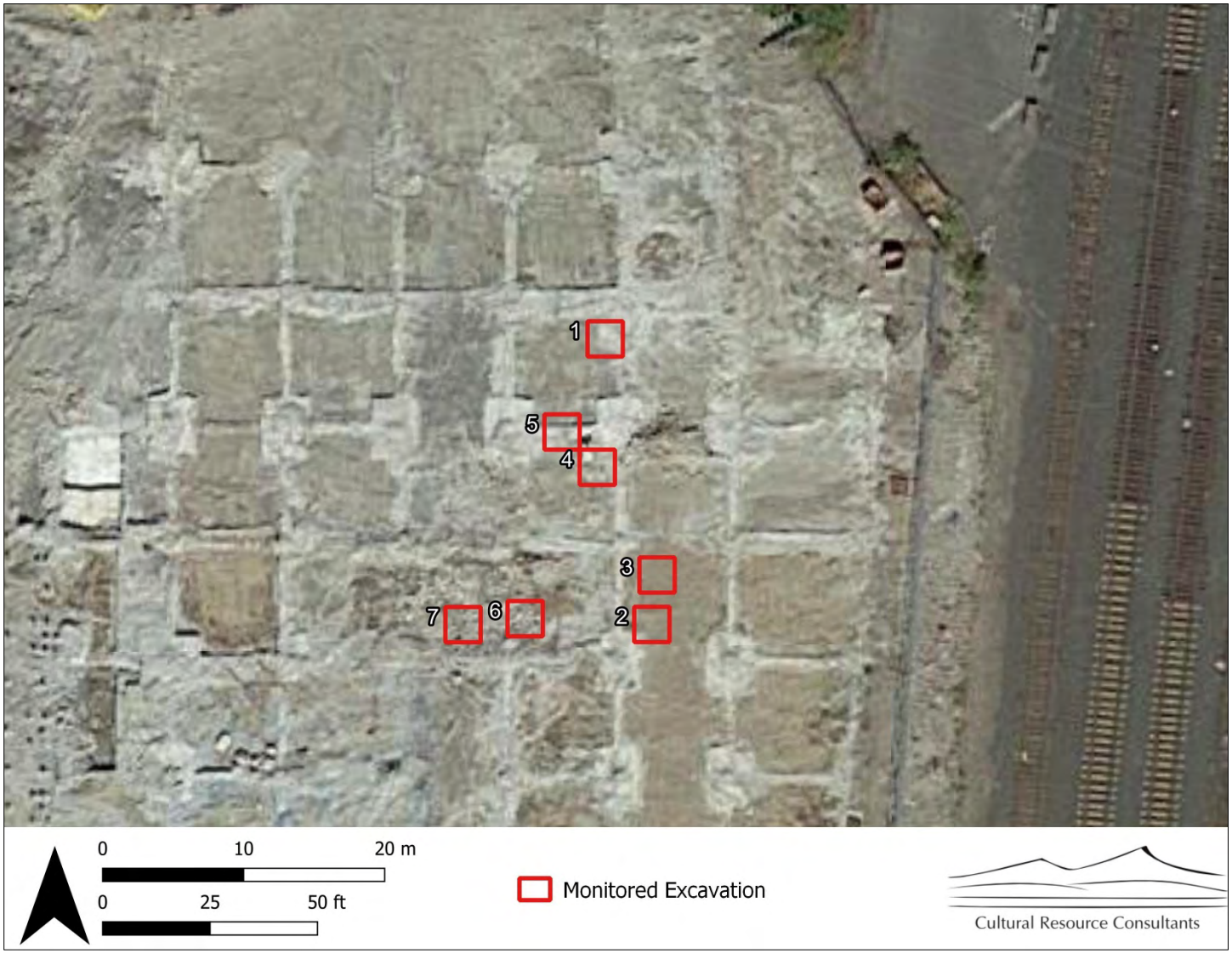

Figure 1. Area of monitored excavation, July 13, 2022.



Figure 2. Excavation of vault #1 on July 13, 2022. View to the west.



Figure 3. Excavation of vault #2 on July 13, 2022. View to the northwest.

Table 1. Results of utility vault excavation on July 13, 2022.

Vault #	Location (UTM's)	Stratigraphic Description (feet below surface)	Cultural Materials (cmbs)
1	558577 m E 5315194 m N N end of project location	0-4: brown, pebbly and cobbly medium sand, concrete and rebar debris (fill) 4-8: dark gray, fine sandy silt, wood debris (pilings) (dredge spoils)	None
2	558580 m E 5315173 m N ~70 feet SE of #1	0-5: brown, pebbly and cobbly medium sand, ample concrete and rebar debris (fill) 5-9: dark brown to dark grayish brown, fine sandy silt, wood debris (pilings) (dredge spoils)	None
3	558581 m E 5315177 m N ~12 feet N of #2	0-6: brown, pebbly and cobbly medium sand, concrete and rebar debris (fill) 6-9: dark gray, coarse sand, no construction debris (tide flat deposits)	None
4	558576 m E 5315185 m N ~30 feet NW of #3	0-4: brown, pebbly and cobbly medium sand, concrete and rebar debris (fill) 4-6: dark brown to dark grayish brown, pebbly coarse sand, asphalt debris (fill) 6-10: dark gray, fine sandy silt, wood debris (pilings) (dredge spoils)	None
5	558574 m E 5315187 m N ~10 feet NW of #4	0-5: brown, pebbly and cobbly medium sand, concrete and rebar debris (fill) 5-8: dark gray, pebbly coarse sand, asphalt debris (fill) 8-10: dark gray, fine sandy silt, wood debris (pilings) (dredge spoils)	None
6	558571 m E 5315174 m N ~45 feet S of #5	0-4.5: brown, pebbly and cobbly medium sand, concrete, rebar, and brick debris (fill) 4.5-7: dark gray, medium sandy silt to silty sand, wood debris (pilings) (dredge spoils) 7-9: dark gray, coarse sand, no construction debris (dredge spoils / tide flat deposits)	None

Vault #	Location (UTM's)	Stratigraphic Description (feet below surface)	Cultural Materials (cmbs)
7	558567 m E 5315173 m N ~15 feet W of #6	0-4: brown, pebbly and cobbly medium sand, concrete, rebar, and wood debris; concrete and rebar structural element encountered at 3 feet below surface (fill) 4-8: dark gray, medium sand to silty sand within and abutting concrete and rebar structural elements (dredge spoils)	None



Figure 4. Fill (brown), asphalt fill (dark gray), and dredge spoils (dark brown) in vault #4.



Figure 5. Removal of structural elements in vault #7. View to the west.

DAILY ARCHAEOLOGICAL MONITORING LOG
PORT OF EVERETT - MIE/MTCA 3RD INTERIM ACTION
CRC PROJECT NO. 2110B

DATE AND TIME: July 25, 2022, 7:00 AM to 10:00 AM.

MONITOR: Margaret Berger

PROJECT COMPONENT MONITORED: Excavation of Outfall A and Outfall M spillways with potential to exceed depth of fill.

GENERAL FIELD CONDITIONS: Weather was sunny with temperatures in the low 60s °F.

ARCHAEOLOGY OBSERVED: None.

NARRATIVE:

The archaeologist arrived on site at 7:00 AM and located Strider Construction Company's utility excavation crew. The day's work was planned to consist of excavation of two spillways for outfalls on the western edge of the property. Depths of excavation were anticipated to potentially exceed the depth of fill deposits on site. Excavation in the upland portions of both work areas was monitored previously and did not identify any native soils or potential archaeological deposits. However, the spillways would involve excavation at the toe of the existing riprap seawall, which was not involved in any prior monitored activities.

Excavation was conducted using a Komatsu PC 490 LC with a 4-ft wide toothed bucket. The target depth of excavation was -2 ft MLLW (mean lower low water) in an approximately 10-x-15-ft area waterward of the seawall in both locations. The spillway at Outfall A in the southern part of the project was excavated first. The ground surface in this location consisted of riprap boulders, concrete rubble, and a few brick fragments. The underlying sediments consisted of wet brown very gravelly sand with small (naturally occurring) shells. The target depth of excavation was -2 ft MLLW (mean lower low water) in an approximately 10-x-15-ft area waterward of the seawall.

The spillway at Outfall M was then excavated using the same equipment and methods. Additionally, an existing PVC drain pipe was removed. The surface of this work area consisted of riprap boulders and concrete. Underlying sediments consisted of very gravelly brown sand and black-stained wet silt and sand with small (naturally occurring) shells and a very strong hydrogen sulfide odor.

No archaeological material was observed, nor were any clearly native sediments. The archaeologist departed after excavation in the previously unmonitored locations was completed, with plans to return when requested by the Port (schedule to be determined).

FIGURES



Figure 1. Satellite imagery annotated with the approximate locations of the monitored spillway excavation.



Figure 2. Overview of Outfall A spillway location; view to the southwest.


Figure 3. Overview of Outfall M spillway location; view to the south-southwest.



Figure 4. Subsurface conditions observed at Outfall A spillway; view to the south.



Figure 5. Subsurface conditions observed at Outfall M spillway; view to the northwest.

DAILY ARCHAEOLOGICAL MONITORING LOG
PORT OF EVERETT - MIE/MTCA 3RD INTERIM ACTION
CRC PROJECT NO. 2110B

DATE AND TIME: August 1, 2022, 7:45 AM to 9:15 AM.

MONITOR: Margaret Berger

PROJECT COMPONENT MONITORED: Excavation at SDMH 9 with potential to exceed depth of fill.

GENERAL FIELD CONDITIONS: Weather was partly cloudy with temperatures in the low 70s °F.

ARCHAEOLOGY OBSERVED: None.

NARRATIVE:

The archaeologist arrived on site at 7:45 AM and located Strider Construction Company's utility excavation crew. The activity to be monitored consisted of excavating a trench connecting to the existing SDMH (storm drain manhole) 9. Depths of excavation were anticipated to potentially exceed the depth of fill deposits on site. Excavation was conducted using a Komatsu PC 490 LC mounted with a 4-ft wide toothed bucket, 6-ft wide smooth bladed bucket, or 2-ft wide smooth bladed bucket depending on conditions.

The ground surface in this location consisted of angular gravels. This was underlain by clean brown sand (fill) to a depth of approximately 10 ft below surface. Wet gray sand with some gravel and cobbles was present 10 to 10.5 ft below surface. The trench was approximately 6 ft wide and 15 ft long. One piece of lumber was found 8 ft below surface, metal pipes were encountered 3 to 4 ft below surface, and geotextile fabric was found 1.5 ft below surface.

Potentially native sediments were encountered in the deepest 6 inches of the trench, but no archaeological material was observed. The archaeologist departed after excavation was completed. This was the final project activity slated for archaeological monitoring.

FIGURES

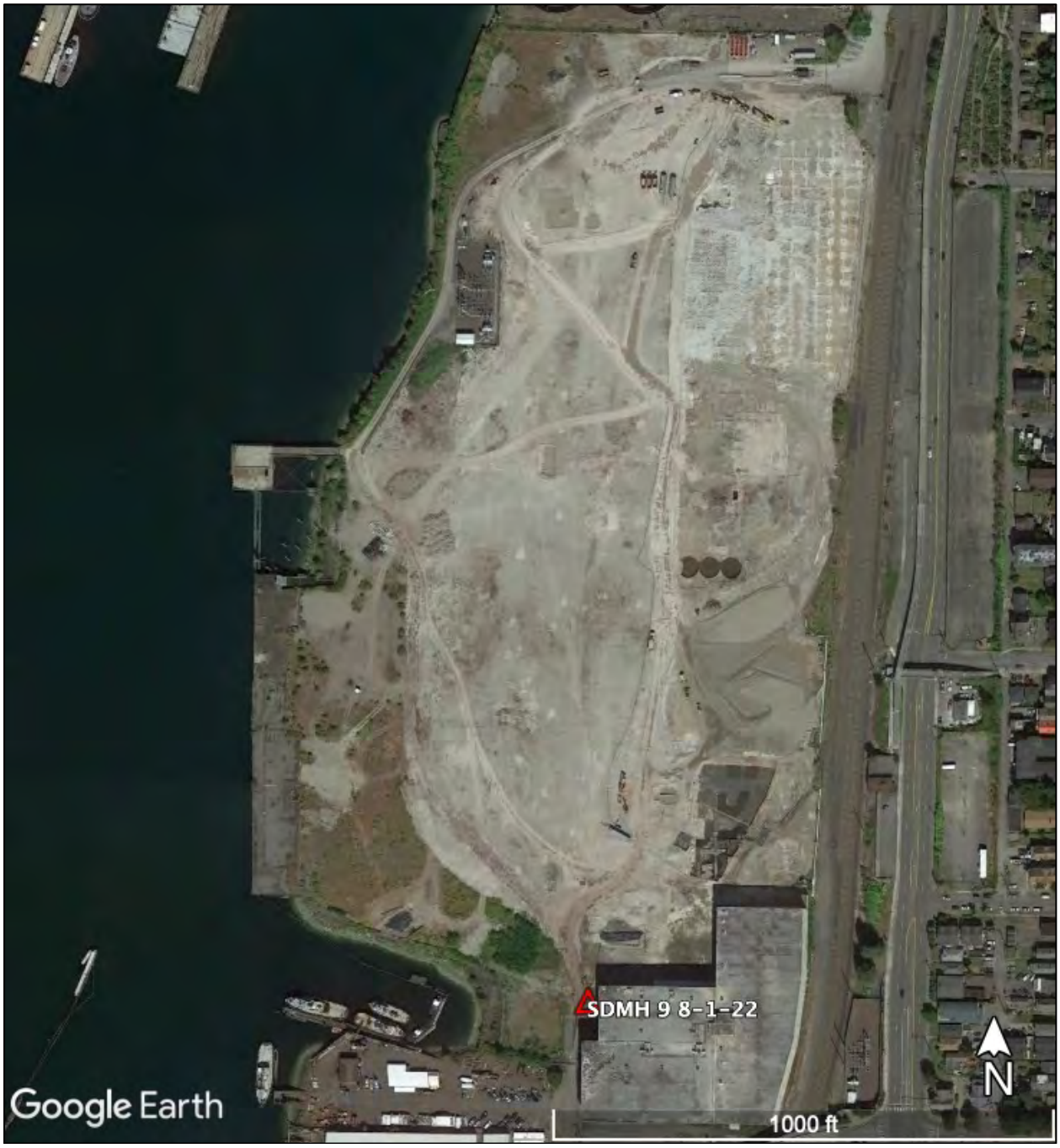

Figure 1. Satellite imagery annotated with the approximate location of the monitored excavation.



Figure 2. Overview of SDMH 9 excavation area; view to the east.


Figure 3. Typical subsurface conditions observed during SDMH 9 excavation; view to the northeast.

REMEDIAL INVESTIGATION AND FEASIBILITY STUDY

Kimberly-Clark Worldwide Site Upland Area, Everett, Washington

Appendices B through D

Prepared for: Port of Everett

Project No. AS190583A-08 • May 21, 2025 • Final

Aspect
A Geosyntec Company

earth + water

APPENDIX B

Boring/Well Construction Logs and Water Level Data for Explorations Incorporated into RI

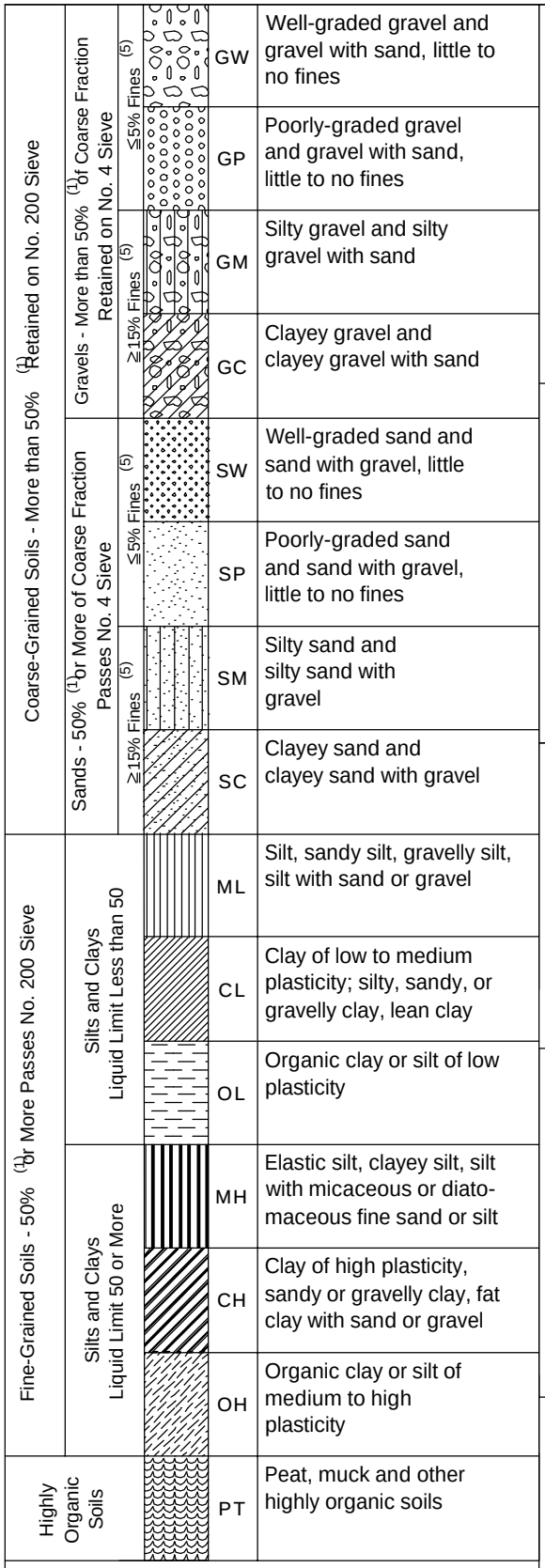

Terms Describing Relative Density and Consistency

	Density	SPT (2) blows/foot
Coarse-Grained Soils	Very Loose	0 to 4
	Loose	4 to 10
	Medium Dense	10 to 30
	Dense	30 to 50
	Very Dense	>50

	Consistency	SPT (2) blows/foot
Fine-Grained Soils	Very Soft	0 to 2
	Soft	2 to 4
	Medium Stiff	4 to 8
	Stiff	8 to 15
	Very Stiff	15 to 30
	Hard	>30

Test Symbols

FC = Fines Content
G = Grain Size
M = Moisture Content
A = Atterberg Limits
C = Consolidation
DD = Dry Density
K = Permeability
Str = Shear Strength
Env = Environmental
PiD = Photoionization Detector

Component Definitions

Descriptive Term	Size Range and Sieve Number
Boulders	Larger than 12"
Cobbles	3" to 12"
Gravel	3" to No. 4 (4.75 mm)
Coarse Gravel	3" to 3/4"
Fine Gravel	3/4" to No. 4 (4.75 mm)
Sand	No. 4 (4.75 mm) to No. 200 (0.075 mm)
Coarse Sand	No. 4 (4.75 mm) to No. 10 (2.00 mm)
Medium Sand	No. 10 (2.00 mm) to No. 40 (0.425 mm)
Fine Sand	No. 40 (0.425 mm) to No. 200 (0.075 mm)
Silt and Clay	Smaller than No. 200 (0.075 mm)

(3) Estimated Percentage

Percentage by Weight	Modifier
<5	Trace
5 to 15	Slightly (sandy, silty, clayey, gravelly)
15 to 30	Sandy, silty, clayey, gravelly)
30 to 49	Very (sandy, silty, clayey, gravelly)

Moisture Content

Dry - Absence of moisture, dusty, dry to the touch
Slightly Moist - Perceptible moisture
Moist - Damp but no visible water
Very Moist - Water visible but not free draining
Wet - Visible free water, usually from below water table

Symbols

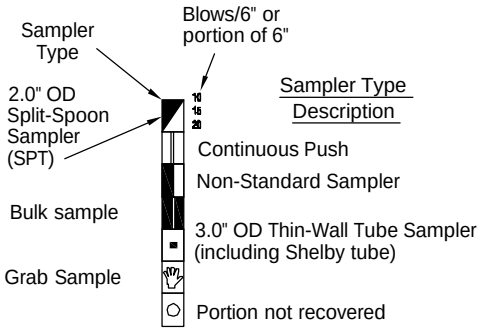

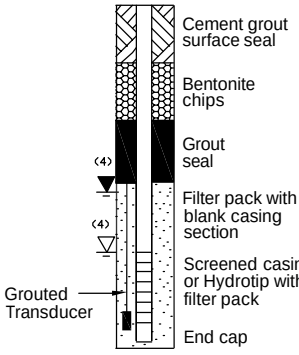

(1) Percentage by dry weight
(2) (SPT) Standard Penetration Test (ASTM D-1586)
(3) In General Accordance with Standard Practice for Description and Identification of Soils (ASTM D-2488)
(4) Depth of groundwater — ATD = At time of drilling; Static water level (date); BGS = below ground surface
(5) Combined USCS symbols used for fines between 5% and 15% as estimated in General Accordance with Standard Practice for Description and Identification of Soils (ASTM D-2488)

Classifications of soils in this report are based on visual field and/or laboratory observations, which include density/consistency, moisture condition, grain size, and plasticity estimates and should not be construed to imply field or laboratory testing unless presented herein. Visual-manual and/or laboratory classification methods of ASTM D-2487 and D-2488 were used as an identification guide for the Unified Soil Classification System.

Aspect CONSULTING

Exploration Log Key

DATE:
DESIGNED BY:
DRAWN BY:
REVISED BY:

PROJECT NO. 110207

FIGURE NO. A-1

Q:_ACAD Standards\Standard Details\Exploration Log Key A1.dwg

Boring Log

Aspect CONSULTING

Project Number	Boring Number	Sheet
110207	AP-MW-01	1 of 1

Project Name: Kimberly Clark
Location: Everett, WA
Driller/Method: Cascade Drilling / Direct Push Probe
Sampling Method: Grab

Ground Surface Elev.: 15.84
Depth to Water (ft BGS):
Start/Finish Date: 6/29/2012

Depth / Elevation (feet)	Borehole Completion	Sample Type/ID	Tests	PID (ppm)	Blows/ 6"	Material Type	Description	Depth (ft)
15	8" Flush-mount monument and thermos cap Concrete surface seal 0' to 2'		AP-MW-1-1-2	0			Asphalt	
				0			Moist, brown, iron-oxide-gray mottled SAND (SP); trace fine gravel, fine sand, scattered organics-seashells	
		CC-1		0				
	3/8" Hydrated bentonite chips 2' to 3' 10/20 pre-pack Silica sand filter pack 3' to 14'			0				
				0			Moist, dark gray SAND (SP); fine sand	
5				0			Moist, brown SAND (SP); fine sand	5
10			AP-MW-1-6-7	0				
				0			Wet, dark gray, silty SAND (SM); fine sand, rapid dilatency, scattered organics-seashells	
		CC-2		0			Numerous organics-seashells- 8' to 8.5'	
	2" Diameter PVC pre-packed .001 slot screen 4' to 14'			0			Wet, dark gray SAND (SP); trace gravel, fine to medium sand	
10				0				10
5				0				
		CC-3		0				
				0				
	Threaded cap			0				
	Slough							
15				0			Bottom of boring at 15' BGS	15
0								

Sampler Type:
- ◯ No Recovery
- ▌▌ Continuous Core

PID - Photoionization Detector (Headspace Measurement)
- ▼ Static Water Level
- ▽ Water Level (ATD)

Logged by: AET
Approved by: SJG
Figure No. A- 2

_ENV BORING LOG KIMBERLY CLARK-EVERETT.GPJ July 31, 2014

Aspect CONSULTING

Boring Log

Project Number	Boring Number	Sheet
110207	AP-MW-01R	1 of 1

Project Name: Kimberly Clark
Location: Everett, WA
Driller/Method: Holt / Direct Push Probe
Sampling Method: Continuous Core 3"

Ground Surface Elev.: 18.31
Depth to Water (ft BGS):
Start/Finish Date: 11/11/2013

Depth / Elevation (feet)	Borehole Completion	Sample Type/ID	Tests	PID (ppm)	Blows/ 6"	Material Type	Description	Depth (ft)
	8" Flush-mount monument and thermos cap Concrete surface seal 0' to 1'						Recycled demo debris	
		CC-1						
15	3/8" Hydrated bentonite chips 1' to 7'						No recovery	
5								5
				0			Slightly moist, dark gray, slightly sandy, SILT (ML) Becomes dark brown, sandy; fine to coarse, subangular sand	
		CC-2	AP-MW-1R-7 AP-MW-501-7	0 0				
				0			Dry, light gray, very silty, GRAVEL (GM); fine, subrounded gravel	
10				0			Slightly moist, dark brown, sandy, SILT (ML); fine sand with shell fragments	
	▽ 11/11/2013		AP-MW-1R-9 AP-MW-501-9	0			Moist, gray, silty, SAND (SM); fine to medium sand	
							No recovery	
10	10/20 pre-pack Silica sand filter pack 7' to 18.25'			0			Moist, gray, silty, SAND (SM); fine to medium sand Becomes brown to dark brown, gravelly; fine, subrounded gravel	10
				0			Wet, gray, sandy, SILT (ML); fine sand	
		CC-3		0			Wet, gray, SAND (SP); medium, subangular sand	
5			AP-MW-1R-13 AP-MW-501-13	0				
				0				
15	2" Diameter PVC pre-packed 10-slot screen 8' to 18'			0				15
				0			Wet, gray, slightly sandy, SILT (ML); fine sand	
		CC-4		0				
0	Threaded cap						Wet, gray SAND (SP)	
	Slough 18.25' to 20'						No recovery	
20							Bottom of boring at 20 feet	20

Sampler Type:
- ○ No Recovery
- ▌▌ Continuous Core

PID - Photoionization Detector (Headspace Measurement)
- ▼ Static Water Level
- ▽ Water Level (ATD)

Logged by: AHP
Approved by: SJG
Figure No. A- 3

_ENV BORING LOG KIMBERLY CLARK-EVERETT.GPJ July 31, 2014

Boring Log

Aspect CONSULTING

Project Number	Boring Number	Sheet
110207	BA-B01	1 of 1

Project Name: Kimberly Clark
Location: Everett, WA
Driller/Method: Holt / Direct Push Probe
Sampling Method: Continous Core 2"

Ground Surface Elev.:
Depth to Water (ft BGS):
Start/Finish Date: 11/13/2013

Depth / Elevation (feet)	Borehole Completion	Sample Type/ID	Tests	PID (ppm)	Blows/ 6"	Material Type	Description	Depth (ft)
							Recycled demo debris	
		CC-01					No recovery	
5	Hydrated bentonite chip backfill		BA-B1-5				Medium stiff, grading from dry to moist, brown, slightly gravelly, silty SAND (SM); fine to coarse sand	5
			BA-B1-6.5				Woody debris	
		CC-02					Medium stiff, wet, gray, slighty sandy SILT (ML)	
	▽ 11/13/2013		BA-B1-8					
							No recovery	
10							Medium stiff, wet, gray, slightly sandy SILT (ML)	10
			BA-B1-11					
		CC-03					Medium dense, wet, gray, silty SAND (SM)	
							No recovery	
15							Bottom of boring 15 feet Note: Density and consistency was estimated based on sample observations.	15

Sampler Type:
- ◯ No Recovery
- ▌▌ Continuous Core

PID - Photoionization Detector (Headspace Measurement)
- ▼ Static Water Level
- ▽ Water Level (ATD)

Logged by: AHP
Approved by: SJG
Figure No. A- 4

_ENV BORING LOG KIMBERLY CLARK-EVERETT.GPJ July 31, 2014

Boring Log

Aspect CONSULTING

Project Number	Boring Number	Sheet
110207	BA-B02	1 of 1

Project Name: Kimberly Clark
Location: Everett, WA
Driller/Method: Holt / Direct Push Probe
Sampling Method: Continous Core 2"

Ground Surface Elev.
Depth to Water (ft BGS)
Start/Finish Date 11/13/2013

Depth / Elevation (feet)	Borehole Completion	Sample Type/ID	Tests	PID (ppm)	Blows/ 6"	Material Type	Description	Depth (ft)
							Recycled demo debris	
		CC-01					No recovery	
5	Hydrated bentonite chip backfill							5
				0			Medium dense, slightly moist, grayish brown, silty SAND (SM); very fine sand	
			BA-B2-6	0				
				0			Medium stiff, slightly moist, brown, silty SAND (SM); trace very fine gravel, fine to medium sand	
			BA-B2-7	0				
		CC-02		0				
	11/13/2013		BA-B2-8	0				
							No recovery	
10								10
				0			Medium stiff, slightly moist, brown, gravelly sandy SILT (SM)	
				0			Medium stiff, moist, brown, SILT (ML)	
				0			Medium stiff, wet, gray SILT (ML)	
			BA-B2-12	0				
		CC-03		0				
				0			Medium dense, wet, gray, SAND (SP); medium subangular sand	
				0				
							No recovery	
15								15
							Bottom of boring 15 feet Note: Density and consistency was estimated based on sample observations.	

Sampler Type:
- ◯ No Recovery
- ▌▌ Continuous Core

PID - Photoionization Detector (Headspace Measurement)

- ▼ Static Water Level
- ▽ Water Level (ATD)

Logged by: AHP
Approved by: SJG
Figure No. A- 5

_ENV BORING LOG KIMBERLY CLARK-EVERETT.GPJ July 31, 2014

Boring Log

Aspect CONSULTING

Project Number	Boring Number	Sheet
110207	BA-B03	1 of 1

Project Name: Kimberly Clark
Location: Everett, WA
Driller/Method: Holt / Direct Push Probe
Sampling Method: Continous Core 2"

Ground Surface Elev.:
Depth to Water (ft BGS):
Start/Finish Date: 11/20/2013

Depth / Elevation (feet)	Borehole Completion	Sample Type/ID	Tests	PID (ppm)	Blows/ 6"	Material Type	Description	Depth (ft)
		CC-01					Recycled demo debris	
							No recovery	
5	Hydrated bentonite chip backfill							5
				0			Medium dense, moist, brown SAND (SW); fine to coarse subangular sand	
			BA-B3-6	0				
				0			Medium dense, moist, brown silty SAND (SM); fine sand	
			BA-B3-7	0			Becomes wet, gray	
		CC-02		0				
	11/20/2013			0				
				0				
			BA-B3-9				No recovery	
10							Slough	10
							Medium dense, wet, gray, silty SAND (SM); fine sand	
		CC-03						
							No recovery	
15							Bottom of boring 15 feet Note: Density and consistency was estimated based on sample observations.	15

Sampler Type:
- No Recovery
- Continuous Core

PID - Photoionization Detector (Headspace Measurement)
- Static Water Level
- Water Level (ATD)

Logged by: AHP
Approved by: SJG
Figure No. A- 6

_ENV BORING LOG KIMBERLY CLARK-EVERETT.GPJ July 31, 2014

Boring Log

Aspect CONSULTING

Project Number	Boring Number	Sheet
110207	BA-MW-01	1 of 1

Project Name: Kimberly Clark
Location: Everett, WA
Driller/Method: Holt / Direct Push Probe
Sampling Method: Continuous Core 3"

Ground Surface Elev.: 16.25
Depth to Water (ft BGS):
Start/Finish Date: 10/29/2013

Depth / Elevation (feet)	Borehole Completion	Sample Type/ID	Tests	PID (ppm)	Blows/ 6"	Material Type	Description	Depth (ft)
	8" Flush-mount monument and thermos cap Concrete surface seal 0' to 1'						Recycled demo debris and SILT (FILL)	
15				0			Slightly moist, brown, slightly gravelly, SILT (ML); fine, subrounded gravel, brick fragments	
							Becomes dark brown, gravelly	
		CC-1		0			Dry, light gray, GRAVEL (GW); fine to coarse, angular to subangular gravel	
	3/8" Hydrated bentonite chips 1' to 5'		BA-MW-1-3	0			Slightly moist, brown, slightly gravelly, SAND (SP); medium to coarse sand, fine, subrounded gravel	
				0			No recovery	
5								5
			BA-MW-1-6	0			Moist, brown, slightly gravelly, SAND (SP); medium sand, fine, subrounded, gravel, bottom 6 inches wet	
10				0				
		CC-2		0				
	10/29/2013			0				
			BA-MW-1-8.5	0			No recovery	
10	10/20 pre-pack Silica sand filter pack 5' to 16.25'						Wet, gray, slightly gravelly, SAND (SP); fine to medium sand, fine, subangular to subrounded, gravel, trace silt	10
5				0				
			BA-MW-1-12	0				
		CC-3		0				
				0				
				0				
							No recovery	
15	2" Diameter PVC pre-packed 10-slot screen 6' to 16'			0			Wet, dark gray, slightly gravelly, silty, SAND (SM); fine to medium sand, fine, subrounded, gravel, trace shell fragments	15
	Threaded cap							
0				0				
		CC-4		0				
				0				
	Slough 16.25' to 20'						No recovery	
20							Bottom of boring at 20 feet	20

Sampler Type:
- ◯ No Recovery
- ▌▌ Continuous Core

PID - Photoionization Detector (Headspace Measurement)
- ▼ Static Water Level
- ▽ Water Level (ATD)

Logged by: JLO
Approved by: SJG
Figure No. A- 7

_ENV BORING LOG KIMBERLY CLARK-EVERETT.GPJ July 31, 2014

Boring Log

Aspect CONSULTING

Project Number	Boring Number	Sheet
110207	BA-MW-02	1 of 1

Project Name: Kimberly Clark
Location: Everett, WA
Driller/Method: Holt / Direct Push Probe
Sampling Method: Continuous Core 3"

Ground Surface Elev.: 17.69
Depth to Water (ft BGS):
Start/Finish Date: 10/29/2013

Depth / Elevation (feet)	Borehole Completion	Sample Type/ID	Tests	PID (ppm)	Blows/ 6"	Material Type	Description	Depth (ft)
	8" Flush-mount monument and thermos cap Concrete surface seal 0' to 1'						Recycled demo debris	
15	3/8" Hydrated bentonite chips 1' to 5'	CC-1	BA-MW-2-2				Slightly moist, brown, gravelly, sandy, SILT (ML)	
							No recovery	
5							Slightly moist, light gray, gravelly, SILT (ML) becomes brown to gray, sandy; trace gravel, fine sand	5
10	10/29/2013	CC-2	BA-MW-2-7 BA-MW-2-8				Becomes wet	
							No recovery	
10	10/20 pre-pack Silica sand filter pack 5' to 16.25'						Wet, gray, gravelly, very sandy, SILT (ML); fine to coarse sand	10
5		CC-3	BA-MW-2-12					
							No recovery	
15	2" Diameter PVC pre-packed 10-slot screen 6' to 16' Threaded cap						Wet, gray, SAND (SP); medium to coarse sand	15
0		CC-4					Wet, gray, silty SAND (SM); fine to medium, subrounded sand	
							Wet, gray, SILT (ML)	
	Slough 16.25' to 20'						Wet, gray, silty SAND (SM); fine to medium sand	
							No recovery	
20							Bottom of boring	20

Sampler Type:
- ◯ No Recovery
- ▌▌ Continuous Core

PID - Photoionization Detector (Headspace Measurement)
- ▼ Static Water Level
- ▽ Water Level (ATD)

Logged by: AHP
Approved by: SJG
Figure No. A- 8

_ENV BORING LOG KIMBERLY CLARK-EVERETT.GPJ July 31, 2014

Boring Log

Aspect CONSULTING

Project Number	Boring Number	Sheet
110207	BA-MW-03	1 of 1

Project Name: Kimberly Clark
Location: Everett, WA
Driller/Method: Holt / Direct Push Probe
Sampling Method: Continuous Core 3"

Ground Surface Elev.: 16.07
Depth to Water (ft BGS):
Start/Finish Date: 10/29/2013

Depth / Elevation (feet)	Borehole Completion	Sample Type/ID	Tests	PID (ppm)	Blows/ 6"	Material Type	Description	Depth (ft)
15	8" Flush-mount monument and thermos cap Concrete surface seal 0' to 1'						Recycled demo debris	
							Brick	
	3/8" Hydrated bentonite chips 1' to 5'	CC-1	BA-MW-3-2.5	0 0			Slightly moist, light brown, slightly silty SAND (SP-SM); fine to medium sand	
							No Recovery	
5								5
				0			Slightly moist, light brown, slightly gravelly, silty, SAND (SM); fine to coarse, subangular sand	
10			BA-MW-3-6					
				0 0			Becomes moist	
	▽ 10/29/2013	CC-2		0			Wood chips	
			BA-MW-3-8	0 0			Wet, gray and light brown, sandy, SILT (ML); medium, subangular sand	
							No Recovery	
10	10/20 pre-pack Silica sand filter pack 5' to 16.25'						Wet, gray, SILT (ML); trace sand	10
5							Wet, gray, silty, sandy GRAVEL (GM); medium to coarse, subrounded gravel	
				0 0			Wet, gray, sandy, SILT (ML); fine sand	
		CC-3	BA-MW-3-12					
				0 0			becomes trace sand	
				0			Wet, gray, silty, SAND (SM); medum, subrounded sand	
							No Recovery	
15	2" Diameter PVC pre-packed 10-slot screen 6' to 16'						Wet, gray, silty, SAND (SM); fine to medium sand	15
0	Threaded cap							
		CC-4					Wet, gray, sandy, SILT (ML); fine sand	
							No Recovery	
	Slough 16.25' to 20'							
20							Bottom of boring at 20 feet	20

Sampler Type:
- ◯ No Recovery
- ▌▌ Continuous Core

PID - Photoionization Detector (Headspace Measurement)
- ▼ Static Water Level
- ▽ Water Level (ATD)

Logged by: AHP
Approved by: SJG
Figure No. A- 9

_ENV BORING LOG KIMBERLY CLARK-EVERETT.GPJ July 31, 2014

Boring Log

Aspect CONSULTING

Project Number	Boring Number	Sheet
110207	BA-MW-04	1 of 1

Project Name: Kimberly Clark
Location: Everett, WA
Driller/Method: Holt / Direct Push Probe
Sampling Method: Continuous Core 3"

Ground Surface Elev.: 16.94
Depth to Water (ft BGS):
Start/Finish Date: 10/28/2013

Depth / Elevation (feet)	Borehole Completion	Sample Type/ID	Tests	PID (ppm)	Blows/ 6"	Material Type	Description	Depth (ft)
	8" Flush-mount monument and thermos cap Concrete surface seal 0' to 1' 3/8" Hydrated bentonite chips 1' to 3'	CC-1					Recycled demo debris	
15				0			Slightly moist, light brown and brown, SAND (SP); medium to coarse, subrounded sand	
			BA-MW-4-3.5				No Recovery	
5							Slightly moist, brown, SAND (SP); medium to coarse sand	5
			BA-MW-4-5.5					
	10/28/2013		BA-MW-4-6	0			Slightly moist, gray and brown, sandy, SILT (ML); fine sand Becomes trace sand	
10	10/20 pre-pack Silica sand filter pack 3' to 14.25'	CC-2		0			Becomes sandy; fine to medium sand	
				0				
				0			No Recovery	
10	2" Diameter PVC pre-packed 10-slot screen 4' to 14'						Wet, gray, slightly sandy, SILT (ML); fine sand, hydrogen sulfide-like odor	10
				0				
5				0				
		CC-3	BA-MW-4-10	0			Wet, gray, SAND (SP); medium to coarse, subrounded sand	
				0				
	Threaded cap						No Recovery	
15							Wet, gray, SAND (SP); medium to coarse, subrounded sand	15
				0				
0				0				
		CC-4		0			Wet, gray, silty, SAND (SM); fine sand	
				0				
	Slough 14.25' to 20'						No Recovery	
20							Bottom of boring at 20 feet	20

Sampler Type:
- No Recovery
- Continuous Core

PID - Photoionization Detector (Headspace Measurement)
- Static Water Level
- Water Level (ATD)

Logged by: AHP
Approved by: SJG
Figure No. A- 10

_ENV BORING LOG KIMBERLY CLARK-EVERETT.GPJ July 31, 2014

Boring Log

Aspect CONSULTING

Project Number	Boring Number	Sheet
110207	BA-MW-05	1 of 1

Project Name: Kimberly Clark
Location: Everett, WA
Driller/Method: Holt / Direct Push Probe
Sampling Method: Continuous Core 3"

Ground Surface Elev.: 14.47
Depth to Water (ft BGS):
Start/Finish Date: 10/25/2013

Depth / Elevation (feet)	Borehole Completion	Sample Type/ID	Tests	PID (ppm)	Blows/ 6"	Material Type	Description	Depth (ft)
	8" Flush-mount monument and thermos cap Concrete surface seal 0' to 1'						Concrete rubble (FILL)	
							Crushed crystalline rock	
							Wood chips	
	3/8" Hydrated bentonite chips 1' to 3'	CC-1	BA-MW-5-2	0 0 0			Slightly moist, light gray, silty, SAND (SM); fine sand	
							No Recovery	
5							Slightly moist, light gray, silty, SAND (SM); fine sand	5
	10/25/2013			0 0			Becomes wet	
	10/20 pre-pack Silica sand filter pack 3' to 14.25'	CC-2		0 0 0 0			Moist, mottled black and white, SAND (SP); coarse, subrounded sand, trace gravel	
							No Recovery	
10	2" Diameter PVC pre-packed 10-slot screen 4' to 14'						Moist, brown and gray, sandy, gravelly, SILT (SM); with woody debris	10
		CC-3					Moist, dark gray, silty, sandy GRAVEL (GM); fine to coarse sand, fine to coarse gravel	
	Threaded cap						No Recovery	
15							Moist, black and gray, sandy, GRAVEL (GW); fine to coarse gravel	15
		CC-4					Moist, dark gray, gravelly, SAND (SP); fine to medium sand	
	Slough 14.25' to 20'						No Recovery	
20							Bottom of boring at 20 feet	20

10 / 5 / 0 / -5

Sampler Type:
- No Recovery
- Continuous Core

PID - Photoionization Detector (Headspace Measurement)
- Static Water Level
- Water Level (ATD)

Logged by: AHP
Approved by: SJG
Figure No. A- 11

_ENV BORING LOG KIMBERLY CLARK-EVERETT.GPJ July 31, 2014

Boring Log

Aspect CONSULTING

Project Number	Boring Number	Sheet
110207	BA-MW-06	1 of 1

Project Name: Kimberly Clark
Location: Everett, WA
Driller/Method: Holt / Direct Push Probe
Sampling Method: Continuous Core 3"

Ground Surface Elev.: 11.64
Depth to Water (ft BGS):
Start/Finish Date: 10/25/2013

Depth / Elevation (feet)	Borehole Completion	Sample Type/ID	Tests	PID (ppm)	Blows/ 6"	Material Type	Description	Depth (ft)
10	8" Flush-mount monument and thermos cap Concrete surface seal 0' to 1' 3/8" Hydrated bentonite chips 1' to 2'	CC-1	BA-MW-6-1.5, BA-MW-10-1.5	0 0 0			Concrete rubble (FILL) Slightly moist, gray-brown, silty, SAND (SM); fine sand, trace medium to coarse sand becomes gravelly Very moist, dark gray, slightly sandy, SILT (ML); fine sand	
	▽ 10/25/2013						No Recovery	
5								5
	10/20 pre-pack Silica sand filter pack 2' to 13.25'	CC-2		0 0 0			Very moist, dark gray, silty, SAND (SM); fine to coarse sand, trace gravel Very moist, white and dark gray, slightly silty, gravelly SAND (SW-SM); fine to coarse sand Very moist, dark gray, slightly silty, slightly gravelly, SAND (SP-SM); fine to medium sand, fine, subangular gravel No Recovery	
10	2" Diameter PVC pre-packed 10-slot screen 3' to 13'	CC-3		0 0 0			Very moist, white and dark gray, slightly silty, gravelly, SAND (SW-SM); fine to coarse sand, fine, subrounded to subangular gravel	10
	Threaded cap Slough 13.25' to 20'							
15							Bottom of boring at 15 feet	15

Sampler Type:
- ◯ No Recovery
- ▌▌ Continuous Core

PID - Photoionization Detector (Headspace Measurement)
- ▼ Static Water Level
- ▽ Water Level (ATD)

Logged by: JLO
Approved by: SJG
Figure No. A- 12

_ENV BORING LOG KIMBERLY CLARK-EVERETT.GPJ July 31, 2014

Boring Log

Aspect CONSULTING

Project Number	Boring Number	Sheet
110207	BA-MW-07	1 of 1

Project Name: Kimberly Clark
Location: Everett, WA
Driller/Method: Holt / Direct Push Probe
Sampling Method: Continuous Core 3"

Ground Surface Elev.: 13.24
Depth to Water (ft BGS):
Start/Finish Date: 10/25/2013

Depth / Elevation (feet)	Borehole Completion	Sample Type/ID	Tests	PID (ppm)	Blows/ 6"	Material Type	Description	Depth (ft)
	8" Flush-mount monument and thermos cap Concrete surface seal 0' to 1'						Concrete rubble (FILL)	
			BA-MW-7-1.5	0			Moist, brown, slightly silty, gravelly, SAND (SW-SM); fine to coarse sand, wood chips	
				0			Moist, brown, slightly gravelly, SAND (SP); medium sand, trace fine and coarse sand	
		CC-1		0				
10	3/8" Hydrated bentonite chips 1' to 4'			0				
							No Recovery	
5							Very moist, brown, slightly gravelly, SAND (SP); medium sand, trace fine and coarse sand	5
				0			Wet, gray and brown, GRAVEL (GP); coarse, subangular gravel	
	10/25/2013			0			Wet, dark brown, slightly sandy wood waste (FILL); fine sand, decomposing wood waste	
		CC-2		0			No Recovery	
5								
10	10/20 pre-pack Silica sand filter pack 4' to 15.25'						Wet, dark gray, slightly sandy, silty, GRAVEL (GM); coarse gravel, medium to coarse, subrounded sand	10
							Wet, dark gray, slightly sandy, very gravelly, SILT (ML); fine to medium sand, coarse, subrounded gravel, sheen on bottom 0.25", petroleum odor	
				0				
		CC-3	BA-MW-7-12.5	0				
0	2" Diameter PVC pre-packed 10-slot screen 5' to 15'			0			No Recovery	
15	Threaded cap						Wet, dark gray, slightly gravelly, silty, SAND (SM); coarse, subrounded gravel	15
				0				
				0				
		CC-4	BA-MW-7-15	0			Wet, dark gray, sandy, SILT (ML); fine sand, wood chips, micaceous	
-5				0				
	Slough 15.25' to 20'						No Recovery	
20							Bottom of boring at 20 feet	20

Sampler Type:
- ○ No Recovery
- ▌ Continuous Core

PID - Photoionization Detector (Headspace Measurement)
- ▼ Static Water Level
- ▽ Water Level (ATD)

Logged by: JLO
Approved by: SJG
Figure No. A- 13

_ENV BORING LOG KIMBERLY CLARK-EVERETT.GPJ July 31, 2014

Monitoring Well Construction Log

Aspect CONSULTING

Project Number	Well Number	Sheet
110207	BBH-MW-101	1 of 1

Project Name: Kimberly Clark
Location: Everett, WA
Driller/Method: Holt / Direct Push Probe-Limited Access
Sampling Method: Continuous Core

Ground Surface Elev.
Top of Casing Elev.
Depth to Water (ft BGS)
Start/Finish Date: 4/25/2014

Depth / Elevation (feet)	Borehole Completion	Sample Type/ID	Tests	PID (ppm)	Blows/ 6"	Material Type	Description	Depth (ft)
	8" Flush-mount monument and thermos cap Concrete surface seal 0' to 2'			0.0			Recycled demo debris	
				0.0			Moist, brown, silty, gravelly SAND (SM); fine to medium sand, fine gravel	
	3/8" Hydrated bentonite chips 2' to 3'	S1					No recovery	
	10/20 pre-pack Silica sand filter pack 3' to 14'							
5	▽ 4/25/2014							5
				0.0			Moist, brown, silty, gravelly SAND (SM); fine to medium sand, fine gravel	
							Wet, dark gray, slightly gravelly, SAND (SP); fine to medium sand, fine gravel	
				0.0				
	▼	S2		0.0			Grades to wet, gray, very silty SAND (SM); fine sand	
	2" Diameter PVC pre-packed 10-slot screen 4' to 14'						No recovery	
10								10
				0.0			Wet, gray, very silty SAND (SM); fine sand	
				0.0			Scattered organics	
		S3		0.0				
	Threaded cap						No recovery	
	Slough							
15							Bottom of boring at 15' bgs	15

Sampler Type:
- ◯ No Recovery
- ▮ Continuous Core

PID - Photoionization Detector
- ▼ Static Water Level
- ▽ Water Level (ATD)

Logged by: AET/MML
Approved by: SJG
Figure No. A-

_MONITORING WELL_KIMBERLY CLARK-EVERETT.GPJ October 14, 2015

Monitoring Well Construction Log

Aspect CONSULTING

Project Number	Well Number	Sheet
110207	BBH-MW-102	1 of 1

Project Name: Kimberly Clark
Location: Everett, WA
Driller/Method: Holt / Direct Push Probe-Limited Access
Sampling Method: Continuous Core

Ground Surface Elev.:
Top of Casing Elev.:
Depth to Water (ft BGS):
Start/Finish Date: 4/28/2014

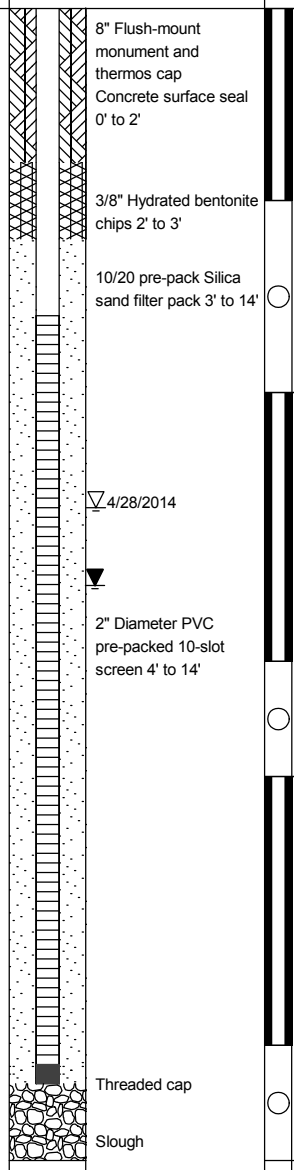

Depth / Elevation (feet)	PID (ppm)	Blows/ 6"	Material Type	Description	Depth (ft)
	0.0			Recycled demo debris	
	0.0			Moist, brown, silty SAND (SM); trace gravel	
	0.0			Moist, brown SAND (SP); fine to medium sand, iron oxide staining	
				No Recovery	
5	0.0			Moist, brownish gray, very sandy SILT (ML); fine sand, scattered organics	5
	0.0			Wet, gray, very silty SAND (SM); fine sand, scattered organics	
	0.0			No Recovery	
10	0.0			Wet, gray, slightly silty SAND (SP-SM); fine sand, scattered organics	10
	0.0			Grades to very moist to wet, gray, sandy SILT (ML); fine sand, scattered organics	
	0.0			No Recovery	
15				Bottom of boring at 15' bgs	15

Sampler Type:
- ◯ No Recovery
- ▮ Continuous Core

PID - Photoionization Detector
- ▼ Static Water Level
- ▽ Water Level (ATD)

Logged by: AET/MML
Approved by: SJG
Figure No. A-

_MONITORING WELL_KIMBERLY CLARK-EVERETT.GPJ October 14, 2015

Monitoring Well Construction Log

Aspect CONSULTING

Project Number	Well Number	Sheet
110207	BBH-MW-103	1 of 1

Project Name: Kimberly Clark
Location: Everett, WA
Driller/Method: Holt / Direct Push Probe-Limited Access
Sampling Method: Continuous Core

Ground Surface Elev.:
Top of Casing Elev.:
Depth to Water (ft BGS):
Start/Finish Date: 4/28/2014

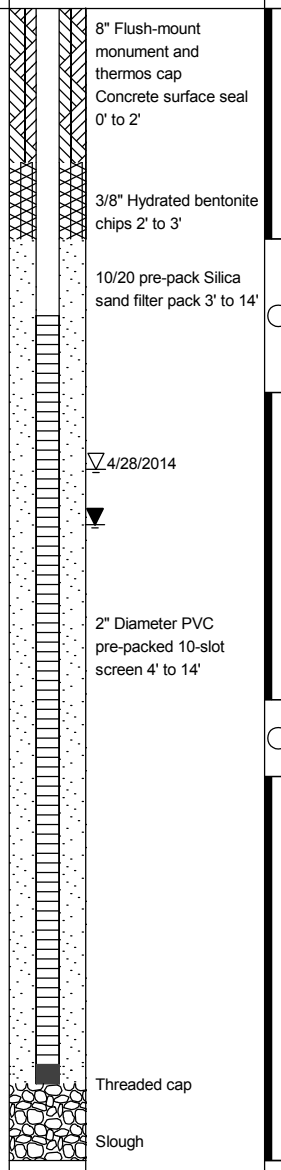

Depth / Elevation (feet)	PID (ppm)	Blows/ 6"	Material Type	Description	Depth (ft)
	0.0			Recycled demo debris	
	0.0				
	0.0			Moist, brown, slightly silty SAND (SP-SM); fine sand, iron oxide staining	
				No recovery	
5				Moist, brown, slightly silty SAND (SP-SM); fine sand	5
	0.0			Grades to wet, brown SAND (SP), fine sand, scattered organics	
	0.0				
	0.0			Becomes gray	
	0.0				
				No recovery	
10				Wet, gray SAND (SP), fine sand, scattered organics	10
	0.0				
	0.0				
	0.0			Grades to wet, gray, silty SAND (SM); fine sand	
	0.0				
	0.0			Grades to wet, gray, sandy SILT (ML); fine sand	
15				Bottom of boring at 15' bgs	15

Sampler Type:
- ◯ No Recovery
- ▮ Continuous Core

PID - Photoionization Detector
- ▼ Static Water Level
- ▽ Water Level (ATD)

Logged by: AET/MML
Approved by: SJG
Figure No. A-

_MONITORING WELL_KIMBERLY CLARK-EVERETT.GPJ October 14, 2015

Monitoring Well Construction Log

Aspect CONSULTING

Project Number	Well Number	Sheet
110207	BBH-MW-104	1 of 1

Project Name: Kimberly Clark
Location: Everett, WA
Driller/Method: Holt / Direct Push Probe-Limited Access
Sampling Method: Continuous Core

Ground Surface Elev.:
Top of Casing Elev.:
Depth to Water (ft BGS):
Start/Finish Date: 4/28/2014

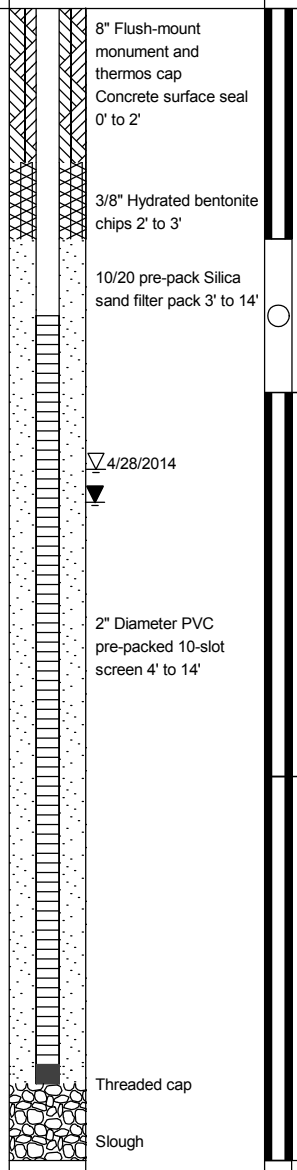

Depth / Elevation (feet)	PID (ppm)	Blows/ 6"	Material Type	Description	Depth (ft)
	0.0			Recycled demo debris	
	0.0			Moist, brown, slightly silty SAND (SP-SM); fine sand, iron oxide staining	
	0.0			Wood chips abundant	
				No recovery	
5					5
	0.0			Moist, brown, slightly silty SAND (SP-SM); fine sand, iron oxide staining	
	0.0			Wet, gray SAND (SP); fine sand, trace silt, scattered organics	
	0.0				
	0.0				
	0.0			Grades to wet, gray, slightly silty SAND (SP-SM); fine sand	
10					10
	0.0			Grades to wet, gray SAND (SP); fine sand, trace silt, trace organics	
	0.0				
	0.0				
	0.0				
	0.0			Grades to wet, gray, very sandy SILT (ML); fine sand, scattered organics	
15				Bottom of boring at 15' bgs	15

Sampler Type:
- ◯ No Recovery
- ▮ Continuous Core

PID - Photoionization Detector
- ▼ Static Water Level
- ▽ Water Level (ATD)

Logged by: AET
Approved by: SJG
Figure No. A-

_MONITORING WELL_KIMBERLY CLARK-EVERETT.GPJ October 14, 2015

Monitoring Well Construction Log

Aspect CONSULTING

Project Number	Well Number	Sheet
110207	BCT-MW-101	1 of 1

Project Name: Kimberly Clark
Location: Everett, WA
Driller/Method: Holt / Direct Push Probe-Limited Access
Sampling Method: Continuous Core

Ground Surface Elev.:
Top of Casing Elev.:
Depth to Water (ft BGS):
Start/Finish Date: 4/29/2014

Depth / Elevation (feet)	Borehole Completion	Sample Type/ID	Tests	PID (ppm)	Blows/ 6"	Material Type	Description	Depth (ft)
	8" Flush-mount monument and thermos cap Concrete surface seal 0' to 1'			0.0			Recycled demo debris	
				0.0			Moist, brown SAND (SP); fine to medium sand, trace silt	
	3/8" Hydrated bentonite chips 2' to 3'	S1		0.0			No recovery	
	10/20 pre-pack Silica sand filter pack 3' to 14'							
5		S2						5
	2" Diameter PVC pre-packed 10-slot screen 4' to 14'							
10	▽4/29/2014			0.0			Very moist, gray-brown SAND (SP); fine to medium sand, trace silt	10
				0.0			Wet, gray, sandy SILT (ML); fine sand	
		S3		0.0 0.0			Wet, gray SAND (SP); fine to medium sand, predominantly medium, trace silt	
				0.0				
	Threaded cap						No recovery	
15	Slough						Bottom of boring at 15' bgs	15

Sampler Type:
- ◯ No Recovery
- ▮ Continuous Core

PID - Photoionization Detector
- ▼ Static Water Level
- ▽ Water Level (ATD)

Logged by: AET/MML
Approved by: SJG
Figure No. A-

MONITORING WELL KIMBERLY CLARK-EVERETT.GPJ October 14, 2015

Monitoring Well Construction Log

Aspect CONSULTING

Project Number	Well Number	Sheet
110207	BCT-MW-102	1 of 1

Project Name: Kimberly Clark
Location: Everett, WA
Driller/Method: Holt / Direct Push Probe-Limited Access
Sampling Method: Continuous Core

Ground Surface Elev.
Top of Casing Elev.
Depth to Water (ft BGS)
Start/Finish Date 5/2/2014

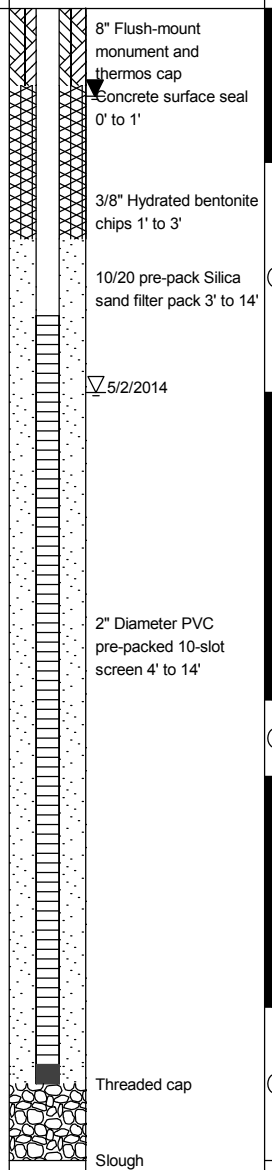

Depth / Elevation (feet)	PID (ppm)	Blows/ 6"	Material Type	Description	Depth (ft)
	0.0			Recycled demo debris	
	0.0			Moist, dark brown SAND (SP); fine to medium sand, predominantly medium, trace silt	
				No recovery	
5					5
	0.0			Wet, brown SAND (SP); fine to medium sand, predominantly medium, trace silt	
	0.0			Becomes gravelly	
	0.0			Becomes gray; trace gravel	
	0.0				
				No recovery	
10					10
	0.0			Wet, gray, gravelly SAND (SP); fine to medium sand, predominantly medium	
	0.0			Woody debris and numerous seashells	
	0.0			Grades to moist, deep brown, slightly sandy, ORGANIC SILT (OL); woodchip, sawdust, and fiber matrix, trace gravel	
				No recovery	
15					15
				Bottom of boring at 15' bgs	

Sampler Type:
- ◯ No Recovery
- ▮ Continuous Core

PID - Photoionization Detector
- ▼ Static Water Level
- ▽ Water Level (ATD)

Logged by: AET/MML
Approved by: SJG
Figure No. A-

MONITORING WELL KIMBERLY CLARK-EVERETT.GPJ October 14, 2015

Monitoring Well Construction Log

Aspect CONSULTING

Project Number	Well Number	Sheet
110207	BCT-MW-102D	1 of 1

Project Name: Kimberly Clark
Location: Everett, WA
Driller/Method: Holt / Direct Push Probe-Limited Access
Sampling Method: Continuous Core

Ground Surface Elev.:
Top of Casing Elev.:
Depth to Water (ft BGS):
Start/Finish Date: 4/29/2014

Depth / Elevation (feet)	Borehole Completion	Sample Type/ID	Tests	PID (ppm)	Blows/ 6"	Material Type	Description	Depth (ft)
				0.0			Recycled Demo Debris	
				0.0			Moist, brown SAND (SP); fine to medium sand, trace silt, trace gravel	
		S1					No recovery	
5	Decommissioned with hydrated bentonite chips ▽							5
				0.0			Wet, brown, slightly gravelly SAND (SP); fine to medium sand	
				0.0				
		S2		0.0			Wet, gray GRAVEL (GP); crushed rock	
							No recovery	
10								10
				0.0			Wet, gray SAND (SP); fine to medium sand	
				0.0			3" bed of brown ORGANIC SILT (OL)	
		S3		0.0				
				0.0			4" bed of brown ORGANIC SILT (OL)	
				0.0				
15								15

Sampler Type:
- ◯ No Recovery
- ▮ Continuous Core

PID - Photoionization Detector
- ▼ Static Water Level
- ▽ Water Level (ATD)

Logged by: AET/MML
Approved by: SJG
Figure No. A-

_MONITORING WELL_KIMBERLY CLARK-EVERETT.GPJ October 14, 2015

Monitoring Well Construction Log

Aspect CONSULTING

Project Number	Well Number	Sheet
110207	BCT-MW-103	1 of 1

Project Name: Kimberly Clark
Location: Everett, WA
Driller/Method: Holt / Direct Push Probe-Limited Access
Sampling Method: Continuous Core

Ground Surface Elev.:
Top of Casing Elev.:
Depth to Water (ft BGS):
Start/Finish Date: 5/2/2014

Depth / Elevation (feet)	Borehole Completion	Sample Type/ID	Tests	PID (ppm)	Blows/ 6"	Material Type	Description	Depth (ft)
	8" Flush-mount monument and thermos cap Concrete surface seal 0' to 1'			0.0			Recycled demo debris	
	▽ 5/2/2014			0.0			Wet, gray, silty SAND (SM); fine sand	
	3/8" Hydrated bentonite chips 1' to 3'	S1					No recovery	
	10/20 pre-pack Silica sand filter pack 3' to 14'							
5	▼							5
				0.0			Wet, gray, silty SAND (SM); fine sand, numerous seashells	
				40.4			Wet, gray SAND (SP); fine to medium sand, predominantly medium, trace silt, very strong petroleum odor	
		S2		285 107				
	2" Diameter PVC pre-packed 10-slot screen 4' to 14'			90.0			No recovery	
10								10
				388 119 99.6 490			Wet, gray SAND (SP); fine to medium sand, predominantly medium, trace silt, very strong petroleum odor	
		S3		923				
				29.5			Moist, dark brown, slightly sandy ORGANIC SILT (OL); wood chips, fibers, and sawdust abundant	
	Threaded cap			24.2 18.2 5.7			Wet, gray SAND (SP); fine to medium sand, predominantly medium, trace silt, faint petroleum smell, scattered woodchips and charcoal	
15	Slough						Bottom of boring at 15' bgs	15

Sampler Type:
○ No Recovery
▮ Continuous Core

PID - Photoionization Detector
▼ Static Water Level
▽ Water Level (ATD)

Logged by: AET/MML
Approved by: SJG
Figure No. A-

MONITORING WELL KIMBERLY CLARK-EVERETT.GPJ October 14, 2015

Monitoring Well Construction Log

Aspect CONSULTING

Project Number	Well Number	Sheet
110207	BCT-MW-104	1 of 1

Project Name: Kimberly Clark
Location: Everett, WA
Driller/Method: Holt / Direct Push Probe-Limited Access
Sampling Method: Continuous Core

Ground Surface Elev.:
Top of Casing Elev.:
Depth to Water (ft BGS):
Start/Finish Date: 5/2/2014

Depth / Elevation (feet)	Borehole Completion	Sample Type/ID	Tests	PID (ppm)	Blows/ 6"	Material Type	Description	Depth (ft)
	8" Flush-mount monument and thermos cap Concrete surface seal 0' to 1' 3/8" Hydrated bentonite chips 1' to 3'	S1		0.0 0.0 0.0			Recycled demo debris Moist, brown, sandy SILT (ML); numerous seashells	
	10/20 pre-pack Silica sand filter pack 3' to 14'						No recovery	
5	▽5/2/2014	S2		0.0 0.0 0.0			Moist, grayish brown SAND (SP); fine to medium sand, predominantly medium Becomes wet Becomes gray	5
	2" Diameter PVC pre-packed 10-slot screen 4' to 14'			0.0			No recovery	
10		S3		0.0 0.0 0.0 0.0 0.0			Wet, gray SAND (SP); fine to medium sand, predominantly medium, faint petroleum odor Petroleum odor becomes strong, 2" pocket of gray, sandy SILT (ML) Abundant charcoal	10
	Threaded cap Slough							
15							Bottom of boring at 15' bgs	15

Sampler Type:
- ○ No Recovery
- ▮ Continuous Core

PID - Photoionization Detector
- ▼ Static Water Level
- ▽ Water Level (ATD)

Logged by: AET/MML
Approved by: SJG
Figure No. A-

MONITORING WELL KIMBERLY CLARK-EVERETT.GPJ October 14, 2015

Monitoring Well Construction Log

Aspect CONSULTING

Project Number	Well Number	Sheet
110207	BCT-MW-105	1 of 1

Project Name: Kimberly Clark
Location: Everett, WA
Driller/Method: Holt / Direct Push Probe-Limited Access
Sampling Method: Continuous Core

Ground Surface Elev.:
Top of Casing Elev.:
Depth to Water (ft BGS):
Start/Finish Date: 5/2/2014

Depth / Elevation (feet)	Borehole Completion	Sample Type/ID	Tests	PID (ppm)	Blows/ 6"	Material Type	Description	Depth (ft)
	8" Flush-mount monument and thermos cap Concrete surface seal 0' to 1' ▽ 5/2/2014 3/8" Hydrated bentonite chips 1' to 3' 10/20 pre-pack Silica sand filter pack 3' to 14'	S1		0.0 0.0 0.0			Recycled demo debris Moist, brown, silty SAND (SM); fine sand Becomes wet, gray, numerous seashells	
							No recovery	
5		S2		0.0 0.0 0.0 0.0			Wet, gray, silty SAND (SM); fine sand Wet, gray SAND (SP); fine to medium sand, predominantly medium, trace silt	5
	2" Diameter PVC pre-packed 10-slot screen 4' to 14'						No recovery	
10		S3		0.0 0.0 0.0 0.0 0.0			Wet, gray SAND (SP); fine to medium sand, predominantly medium, trace silt Grades to wet, gray, silty SAND (SM); fine to medium sand, predominantly medium, numerous seashells 3" pocket of coarse sand and fine gravel at 14.75' bgs	10
	Threaded cap Slough							
15							Bottom of boring at 15' bgs	15

Sampler Type:
- ○ No Recovery
- ▮ Continuous Core

PID - Photoionization Detector
- ▼ Static Water Level
- ▽ Water Level (ATD)

Logged by: AET/MML
Approved by: SJG
Figure No. A-

MONITORING WELL KIMBERLY CLARK-EVERETT.GPJ October 14, 2015

Monitoring Well Construction Log

Aspect CONSULTING

Project Number	Well Number	Sheet
110207	BCT-MW-106	1 of 3

Project Name: Kimberly Clark
Location: Everett, WA
Driller/Method: Holt / Direct Push Probe-Limited Access
Sampling Method: Continuous Core

Ground Surface Elev.:
Top of Casing Elev.:
Depth to Water (ft BGS):
Start/Finish Date: 4/28/2014

Depth / Elevation (feet)	Borehole Completion	Sample Type/ID	Tests	PID (ppm)	Blows/ 6"	Material Type	Description	Depth (ft)
	8" Flush-mount monument and thermos cap Concrete surface seal 0' to 1' 3/8" Hydrated bentonite chips 1' to 2.5' 10/20 pre-pack Silica sand filter pack 2.5' to 13.5' 2" Diameter PVC pre-packed 10-slot screen 3.5' to 13.5' Threaded cap Slough	S1		0.0			Recycled demo debris	
				0.0			Moist pea gravel (FILL)	
				0.0			No recovery	
5	▽4/28/2014	S2		0.0			Moist pea gravel (FILL) becomes wet	5
				0.0			Wet, gray SAND (SP); fine to medium sand, predominantly medium	
				0.0			No recovery	
10		S3		0.0			Wet, gray, silty SAND (SM); fine to medium sand, silt increases with depth, last 3" is sandy SILT (ML)	10
							Wet, gray, sandy SILT (ML)	
				0.0			Wet, gray SAND (SP); fine to medium sand, predominantly medium, trace silt, slight petroleum odor	
							Wet, gray, sandy SILT (ML); fine sand, petroleum odor	
				0.0			Wet, gray SAND (SP); fine to medium sand, predominantly medium, trace silt, strong petroleum odor	
				0.0			No recovery	
15							Bottom of boring at 15' bgs	15

Sampler Type:
- ◯ No Recovery
- ▮ Continuous Core

PID - Photoionization Detector
- ▼ Static Water Level
- ▽ Water Level (ATD)

Logged by: AET/MML
Approved by: SJG
Figure No. A-

_MONITORING WELL_KIMBERLY CLARK-EVERETT.GPJ October 14, 2015

Monitoring Well Construction Log

Aspect CONSULTING

Project Number	Well Number	Sheet
110207	BCT-MW-107	1 of 1

Project Name: Kimberly Clark
Location: Everett, WA
Driller/Method: Holt / Direct Push Probe-Limited Access
Sampling Method: Continuous Core

Ground Surface Elev.:
Top of Casing Elev.:
Depth to Water (ft BGS):
Start/Finish Date: 4/30/2014

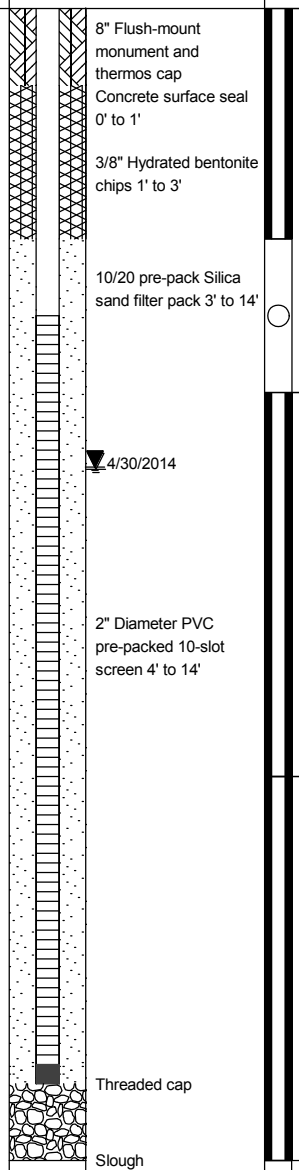

Depth / Elevation (feet)	PID (ppm)	Blows/ 6"	Material Type	Description	Depth (ft)
	0.0			Recycled demo debris	
	0.0			Moist, brown, sandy SILT (ML); fine sand	
	0.0			Becomes gray and wet	
				No recovery	
5					5
	0.0			Moist, brown, sandy SILT (ML); fine sand	
	0.0			Becomes wet	
	0.0			numerous seashells	
	0.0			3" pocket of wet, gray, clayey SILT (ML); sticky, low plasticity with slight petroleum odor	
10	0.0			Wet, gray SAND (SP); fine to medium sand, predominantly medium sand, trace silt, slight petroleum odor	10
	0.0			Becomes gravelly; numerous seashells	
	0.0				
	0.0			Grades to wet, gray, sandy SILT (ML); fine sand	
	0.0			Wet, gray SAND (SP); fine to medium sand, trace silt	
15				Bottom of boring at 15' bgs	15

Sampler Type:
- ◯ No Recovery
- ▮ Continuous Core

PID - Photoionization Detector
- ▼ Static Water Level
- ▽ Water Level (ATD)

Logged by: AET/MML
Approved by: SJG
Figure No. A-

MONITORING WELL KIMBERLY CLARK-EVERETT.GPJ October 14, 2015

Monitoring Well Construction Log

Aspect CONSULTING

Project Number	Well Number	Sheet
110207	BCT-MW-108	1 of 1

Project Name: Kimberly Clark
Location: Everett, WA
Driller/Method: Holt / Direct Push Probe-Limited Access
Sampling Method: Continuous Core

Ground Surface Elev.
Top of Casing Elev.
Depth to Water (ft BGS)
Start/Finish Date 5/2/2014

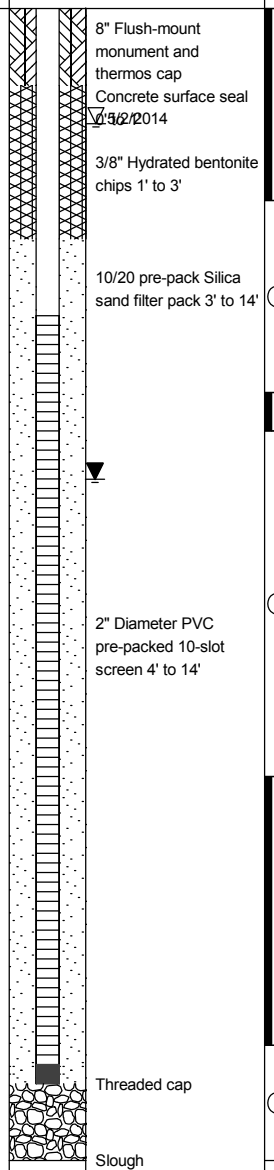

Depth / Elevation (feet)	PID (ppm)	Blows/ 6"	Material Type	Description	Depth (ft)
	0.0			Recycled demo debris	
	0.0			Wet, gray, silty SAND (SM); fine sand	
	0.0			No recovery	
5				Wet, slighty sandy SILT (ML); fine sand	5
	0.0			No recovery	
10				Wet, gray SAND (SP); fine to medium sand, predominantly medium, trace silt, slight petroleum odor	10
	0.0			3" thick pocket of sandy SILT (ML); numerous seashells	
	0.0			Trace gravel, slight petroleum odor	
	0.0			No recovery	
15				Bottom of boring at 15' bgs	15

Sampler Type:
- No Recovery
- Continuous Core

PID - Photoionization Detector
- Static Water Level
- Water Level (ATD)

Logged by: AET
Approved by: SJG
Figure No. A-

MONITORING WELL KIMBERLY CLARK-EVERETT.GPJ October 14, 2015

Boring Log

Project Number	Boring Number	Sheet
110207	Boiler-B-01	1 of 1

Project Name: Kimberly Clark
Location: Everett, WA
Driller/Method: Aspect / Hand Auger
Sampling Method: Grab
Ground Surface Elev.
Depth to Water (ft BGS)
Start/Finish Date 7/6/2012

Depth / Elevation (feet)	Borehole Completion	Sample Type/ID	Tests	PID (ppm)	Blows/ 6"	Material Type	Description	Depth (ft)
0							**ASPHALT**	0
1	Backfilled boring with same material that was pulled from hole.		Boiler-B-1-1-2-070512				**FILL** Moist, brown and dark brown, gravelly SAND (SW); subrounded gravel and fine to coarse sand.	1
2							Bottom of boring at 2 ft BGS.	2
3								3
4								4
5								5
6								6
7								7
8								8
9								9
10								10
11								11
12								12
13								13
14								14
15								15
16								16
17								17
18								18
19								19
20								20
21								21
22								22
23								23
24								24
25								25
26								26
27								27
28								28
29								29

Sampler Type:
- No Recovery
- Grab Sample

PID - Photoionization Detector (Headspace Measurement)
- Static Water Level
- Water Level (ATD)

Logged by: GL
Approved by: SJG
Figure No. A- 14

_ENV BORING LOG KIMBERLY CLARK-EVERETT.GPJ July 31, 2014

Boring Log

Aspect CONSULTING

Project Number	Boring Number	Sheet
110207	Boiler-B-02	1 of 1

Project Name: Kimberly Clark
Location: Everett, WA
Driller/Method: Aspect / Hand Auger
Sampling Method: Grab

Ground Surface Elev.
Depth to Water (ft BGS)
Start/Finish Date 7/6/2012

Depth / Elevation (feet)	Borehole Completion	Sample Type/ID	Tests	PID (ppm)	Blows/ 6"	Material Type	Description	Depth (ft)
0							**ASPHALT**	0
1	Backfilled boring with same material that was pulled from hole.		Boiler-B-2-1-2-070512				**FILL** Moist, brown and dark brown, gravelly SAND (SW); subrounded gravel and fine to coarse sand.	1
2							Bottom of boring at 2 ft BGS.	2
3								3
4								4
5								5
6								6
7								7
8								8
9								9
10								10
11								11
12								12
13								13
14								14
15								15
16								16
17								17
18								18
19								19
20								20
21								21
22								22
23								23
24								24
25								25
26								26
27								27
28								28
29								29

Sampler Type:
- No Recovery
- Grab Sample

PID - Photoionization Detector (Headspace Measurement)
- Static Water Level
- Water Level (ATD)

Logged by: GL
Approved by: SJG
Figure No. A- 15

_ENV BORING LOG KIMBERLY CLARK-EVERETT.GPJ July 31, 2014

Boring Log

Aspect CONSULTING

Project Number	Boring Number	Sheet
110207	Boiler-B-03	1 of 1

Project Name: Kimberly Clark
Location: Everett, WA
Driller/Method: Aspect / Hand Auger
Sampling Method: Grab

Ground Surface Elev.
Depth to Water (ft BGS)
Start/Finish Date 7/6/2012

Depth / Elevation (feet)	Borehole Completion	Sample Type/ID	Tests	PID (ppm)	Blows/ 6"	Material Type	Description	Depth (ft)
1	Backfilled boring with same material that was pulled from hole.		Boiler-B-3-1-2-070512				**ASPHALT**	1
2							**FILL** Moist, brown and dark brown, gravelly SAND (SW); subrounded gravel and fine to coarse sand; sticky with apparent petroleum-based product.	2
3							Bottom of boring at 2 ft BGS.	3
4								4
5								5
6								6
7								7
8								8
9								9
10								10
11								11
12								12
13								13
14								14
15								15
16								16
17								17
18								18
19								19
20								20
21								21
22								22
23								23
24								24
25								25
26								26
27								27
28								28
29								29

Sampler Type:
- No Recovery
- Grab Sample

PID - Photoionization Detector (Headspace Measurement)
- Static Water Level
- Water Level (ATD)

Logged by: GL
Approved by: SJG
Figure No. A- 16

_ENV BORING LOG KIMBERLY CLARK-EVERETT.GPJ July 31, 2014

Boring Log

Aspect CONSULTING

Project Number	Boring Number	Sheet
110207	Boiler-B-03A	1 of 1

Project Name: Kimberly Clark
Location: Everett, WA
Driller/Method: Cascade Drilling / Direct Push Probe-Limited Access
Sampling Method: Continuous core

Ground Surface Elev.:
Depth to Water (ft BGS):
Start/Finish Date: 9/5/2012

Depth / Elevation (feet)	Borehole Completion	Sample Type/ID	Tests	PID (ppm)	Blows/ 6"	Material Type	Description	Depth (ft)
							Concrete	
	3/8" hydrated bentonite chips	CC-1	BOILER-B-3A-1-2	0			Moist, brown black, silty, gravelly SAND (SM); fine sand	
				0			Crushed rock	
							No recovery	
		CC-2	BOILER-B-3A-4-5	0			Moist, brown to gray, slightly gravelly SAND (SP); fine to medium sand	
5				0			No recovery	5
		CC-3	BOILER-B-3A-6.5-7.5	0			Wet, brown to gray, slightly gravelly SAND (SP); fine to medium sand, trace silt	
				0				
				0				
10				0			Bottom of boring at 10' BGS	10
15								15
20								20
25								25

Sampler Type:
- No Recovery
- Continuous Core

PID - Photoionization Detector (Headspace Measurement)
- Static Water Level
- Water Level (ATD)

Logged by: MAR
Approved by: SJG
Figure No. A- 17

_ENV BORING LOG KIMBERLY CLARK-EVERETT.GPJ July 31, 2014

Boring Log

Aspect CONSULTING

Project Number	Boring Number	Sheet
110207	Boiler-B-03B	1 of 1

Project Name: Kimberly Clark
Location: Everett, WA
Driller/Method: Cascade Drilling / Direct Push Probe-Limited Access
Sampling Method: Continuous core

Ground Surface Elev.
Depth to Water (ft BGS)
Start/Finish Date 9/5/2012

Depth / Elevation (feet)	Borehole Completion	Sample Type/ID	Tests	PID (ppm)	Blows/ 6"	Material Type	Description	Depth (ft)
	3/8" hydrated bentonite chips	CC-1	BOILER-B-3B-1-2	0 0 0			Concrete	
							Moist, dark brown, gravelly, very sandy SILT (ML) Iron staining and fill debris 1.5' to 2'	
							Moist, brown SAND (SP); fine sand	
							No recovery	
		CC-2	BOILER-B-3B-4-5	0 0 0			Moist, brown SAND (SP); fine sand	
							Wood and concrete	
5		CC-3					No recovery	5
							Refusal at 6' BGS	
10								10
15								15
20								20
25								25

Sampler Type:
- ◯ No Recovery
- ▌▌ Continuous Core

PID - Photoionization Detector (Headspace Measurement)
- ▼ Static Water Level
- ▽ Water Level (ATD)

Logged by: MAR
Approved by: SJG
Figure No. A- 18

_ENV BORING LOG KIMBERLY CLARK-EVERETT.GPJ July 31, 2014

Boring Log

Project Number	Boring Number	Sheet
110207	Boiler-B-04	1 of 1

Project Name: Kimberly Clark
Location: Everett, WA
Driller/Method: Aspect / Hand Auger
Sampling Method: Grab
Ground Surface Elev.
Depth to Water (ft BGS)
Start/Finish Date 7/6/2012

Depth / Elevation (feet)	Borehole Completion	Sample Type/ID	Tests	PID (ppm)	Blows/ 6"	Material Type	Description	Depth (ft)
1	Backfilled boring with same material that was pulled from hole.		Boiler-B-4-1-1.5-070612				**ASPHALT**	1
1							**FILL** Moist, brown and dark brown, gravelly SAND (SP); sand and concrete rubble; soil concrete slab at 1.5 ft BGS.	1
2							Hit refusal on concrete slab at 1.5 ft BGS (bottom of boring).	2
3								3
4								4
5								5
6								6
7								7
8								8
9								9
10								10
11								11
12								12
13								13
14								14
15								15
16								16
17								17
18								18
19								19
20								20
21								21
22								22
23								23
24								24
25								25
26								26
27								27
28								28
29								29

Sampler Type:
- No Recovery
- Grab Sample

PID - Photoionization Detector (Headspace Measurement)
- Static Water Level
- Water Level (ATD)

Logged by: GL
Approved by: SJG
Figure No. A- 19

_ENV BORING LOG KIMBERLY CLARK-EVERETT.GPJ July 31, 2014

Boring Log

Project Number	Boring Number	Sheet
110207	Boiler-B-05	1 of 1

Project Name: Kimberly Clark
Location: Everett, WA
Driller/Method: Aspect / Hand Auger
Sampling Method: Grab
Ground Surface Elev.
Depth to Water (ft BGS)
Start/Finish Date 7/6/2012

Depth / Elevation (feet)	Borehole Completion	Sample Type/ID	Tests	PID (ppm)	Blows/ 6"	Material Type	Description	Depth (ft)
1	Backfilled boring with same material that was pulled from hole.		Boiler-B-5-1-1.5-070612				**ASPHALT**	
1							**FILL**	1
2							Moist, brown and dark brown, gravelly SAND (SP); sand and concrete rubble; soil concrete slab at 1.5 ft BGS.	2
3							Hit refusal on concrete slab at 1.5 ft BGS (bottom of boring).	3
4								4
5								5
6								6
7								7
8								8
9								9
10								10
11								11
12								12
13								13
14								14
15								15
16								16
17								17
18								18
19								19
20								20
21								21
22								22
23								23
24								24
25								25
26								26
27								27
28								28
29								29

Sampler Type:
- No Recovery
- Grab Sample

PID - Photoionization Detector (Headspace Measurement)
- Static Water Level
- Water Level (ATD)

Logged by: GL
Approved by: SJG
Figure No. A- 20

_ENV BORING LOG KIMBERLY CLARK-EVERETT.GPJ July 31, 2014

Boring Log

Aspect CONSULTING

Project Number	Boring Number	Sheet
110207	Boiler-HA-02A	1 of 1

Project Name: Kimberly Clark
Location: Everett, WA
Driller/Method: Aspect / Hand Auger
Sampling Method: Grab

Ground Surface Elev.
Depth to Water (ft BGS)
Start/Finish Date 9/5/2012

Depth / Elevation (feet)	Borehole Completion	Sample Type/ID	Tests	PID (ppm)	Blows/ 6"	Material Type	Description	Depth (ft)
	Backfilled with excavated material		Boiler-HA-B2A-0-1				Asphalt	
							Moist, brown, gravelly SAND (SP); poorly graded fine to medium sand, no odor	
			Boiler-HA-B2A-2-3					
							Bottom of boring at 3' BGS	
5								5
10								10
15								15
20								20
25								25

Sampler Type:
- No Recovery
- Grab Sample

PID - Photoionization Detector (Headspace Measurement)
- Static Water Level
- Water Level (ATD)

Logged by: AET/ERP
Approved by: SJG
Figure No. A- 21

_ENV BORING LOG KIMBERLY CLARK-EVERETT.GPJ July 31, 2014

Boring Log

Project Number	Boring Number	Sheet
110207	Boiler-HA-02B	1 of 1

Project Name: Kimberly Clark
Location: Everett, WA
Driller/Method: Aspect / Hand Auger
Sampling Method: Grab
Ground Surface Elev.
Depth to Water (ft BGS)
Start/Finish Date 9/5/2012

Depth / Elevation (feet)	Borehole Completion	Sample Type/ID	Tests	PID (ppm)	Blows/ 6"	Material Type	Description	Depth (ft)
	Backfilled with excavated material		Boiler-HA-B2B-0-1				Asphalt	
							Slightly moist, brown to gray, gravelly SAND (SP)	
							Refusal at 1' BGS	
5								5
10								10
15								15
20								20
25								25

Sampler Type:
- No Recovery
- Grab Sample

PID - Photoionization Detector (Headspace Measurement)
- Static Water Level
- Water Level (ATD)

Logged by: AET/ERP
Approved by: SJG
Figure No. A- 22

_ENV BORING LOG KIMBERLY CLARK-EVERETT.GPJ July 31, 2014

Boring Log

Aspect CONSULTING

Project Number	Boring Number	Sheet
110207	Boiler-HA-02C	1 of 1

Project Name: Kimberly Clark
Location: Everett, WA
Driller/Method: Aspect / Hand Auger
Sampling Method: Grab

Ground Surface Elev.
Depth to Water (ft BGS)
Start/Finish Date 9/5/2012

Depth / Elevation (feet)	Borehole Completion	Sample Type/ID	Tests	PID (ppm)	Blows/ 6"	Material Type	Description	Depth (ft)
	Backfilled with excavated material		Boiler-HA-B2C-0-1				Asphalt	
							Moist, brown, gravelly SAND (SP); subround gravel, fine to coarse sand	
			Boiler-HA-B2C-2-3				Bottom of boring at 3' BGS	
5								5
10								10
15								15
20								20
25								25

Sampler Type:
- No Recovery
- Grab Sample

PID - Photoionization Detector (Headspace Measurement)
- Static Water Level
- Water Level (ATD)

Logged by: AET/ERP
Approved by: SJG
Figure No. A- 23

_ENV BORING LOG KIMBERLY CLARK-EVERETT.GPJ July 31, 2014

Boring Log

Aspect CONSULTING

Project Number	Boring Number	Sheet
110207	Boiler-MW-01	1 of 1

Project Name: Kimberly Clark
Location: Everett, WA
Driller/Method: Cascade Drilling / Direct Push Probe-Limited Access
Sampling Method: Continuous Core

Ground Surface Elev.:
Depth to Water (ft BGS):
Start/Finish Date: 9/5/2012

Depth / Elevation (feet)	Borehole Completion	Sample Type/ID	Tests	PID (ppm)	Blows/ 6"	Material Type	Description	Depth (ft)
	8" flush-mount monument and thermos cap Concrete surface seal 0' to 2'						Concrete	
				29.7			Moist, dark gray, sandy, gravelly SILT (ML); numerous organics; petroleum-like odor	
	3/8" hydrated bentonite chips 2' to 4'	CC-1		19.2 1.3			Moist, dark gray SAND (SP); fine sand; slight petroleum-like odor	
	10/20 silica sand filter pack 4' to 15'						No recovery	
5								5
	2" diameter PVC pre-packed .001 slot screen 5' to 15'	CC-2		0.8 0.9 0.9			Moist, dark gray SAND (SP); medium sand, faint petroleum-like odor	
				0.9			No recovery	
10			BOILER-MW-01-10-11	0.4			Wet, gray SAND (SW); fine to coarse sand	10
		CC-3	BOILER-MW-01-12-13	0.7 24.4 36.4			Visible separate phase product and strong petroleum-like odor at 12'	
				0.7			No recovery	
15	Threaded cap							15
	Slough and bentonite	CC-4	BOILER-MW-01-16-17	0.4 0.2 0.2 0.2			Wet, gray SAND (SP); medium sand, trace coarse sand; numerous seashell fragments	
20				0.3			Bottom of boring at 20' BGS	20
25								25

Sampler Type:
- No Recovery
- Continuous Core

PID - Photoionization Detector (Headspace Measurement)
- Static Water Level
- Water Level (ATD)

Logged by: AET
Approved by: SJG
Figure No. A- 24

_ENV BORING LOG KIMBERLY CLARK-EVERETT.GPJ July 31, 2014

Boring Log

Project Number	Boring Number	Sheet
110207	CD-B-1	1 of 1

Project Name: Kimberly Clark
Location: Everett, WA
Driller/Method: Holt / Direct Push Probe
Sampling Method: Continuous Core

Ground Surface Elev:
Depth to Water (ft BGS):
Start/Finish Date: 9/23/2015

Depth / Elevation (feet)	Borehole Completion	Sample Type/ID	Tests	PID (ppm)	Drive/ Recovery (inches)	Material Type	Description	Depth (ft)
0							Recycled demo debris	0
				0.0			Moist, brown, gravelly, silty SAND (SM); fine gravel	
1								1
	3/8" hydrated bentonite chips						Moist, brown, sandy SILT (ML); fine sand, iron oxide staining, trace wood chips, and mica	
2							Becomes dark gray	2
		S1						
3								3
4								4
5		S2		0.0				5
6							Bottom of boring at 6' BGS	6
7								7
8								8
9								9

Sampler Type:
- ◯ No Recovery
- ▮ Continuous Core

PID - Photoionization Detector (Headspace Measurement)
- ▼ Static Water Level
- ▽ Water Level (ATD)

Logged by: MML
Approved by: SJG
Figure No. A-

_ENV PROBE LOG KIMBERLY CLARK-EVERETT.GPJ October 14, 2015

Boring Log

Aspect CONSULTING

Project Number	Boring Number	Sheet
110207	CD-B-2	1 of 1

Project Name: Kimberly Clark
Location: Everett, WA
Driller/Method: Holt / Direct Push Probe
Sampling Method: Continuous Core

Ground Surface Elev
Depth to Water (ft BGS)
Start/Finish Date 9/23/2015

Depth / Elevation (feet)	Borehole Completion	Sample Type/ID	Tests	PID (ppm)	Drive/ Recovery (inches)	Material Type	Description	Depth (ft)
1	3/8" hydrated bentonite chips						Recycled demo debris	1
2		S1					No recovery	2
3								3
4								4
5							Refusal on concrete at 5' BGS (bottom of boring)	5

Sampler Type:
- ◯ No Recovery
- ▮ Continuous Core

PID - Photoionization Detector (Headspace Measurement)
- ▼ Static Water Level
- ▽ Water Level (ATD)

Logged by: MML
Approved by: SJG
Figure No. A-

_ENV PROBE LOG KIMBERLY CLARK-EVERETT.GPJ October 14, 2015

Boring Log

Aspect CONSULTING

Project Number	Boring Number	Sheet
110207	CD-B-3	1 of 1

Project Name: Kimberly Clark
Location: Everett, WA
Driller/Method: Holt / Direct Push Probe
Sampling Method: Continuous Core

Ground Surface Elev
Depth to Water (ft BGS)
Start/Finish Date 9/23/2015

Depth / Elevation (feet)	Borehole Completion	Sample Type/ID	Tests	PID (ppm)	Drive/ Recovery (inches)	Material Type	Description	Depth (ft)
							Moist, brown, slightly silty, slightly gravelly SAND (SP-SM); fine sand, subrounded fine gravel	
	3/8" hydrated bentonite chips	S1	CD-B-3-3.5				Becomes gray 1.5" thick pocket of CLAY (CL)	
5								5
							0.25" thick pocket of bark	
				0.0				
	▽9/23/2015	S2	CD-B-3-7.5				Becomes wet	
10			CD-B-3-10					10
				0.0				
		S3						
							Wood chips with fine sand	
15							Bottom of boring at 15' BGS	15

Sampler Type:
- ◯ No Recovery
- ▮ Continuous Core

PID - Photoionization Detector (Headspace Measurement)
- ▼ Static Water Level
- ▽ Water Level (ATD)

Logged by: MML
Approved by: SJG
Figure No. A-

_ENV PROBE LOG KIMBERLY CLARK-EVERETT.GPJ October 14, 2015

Boring Log

Aspect CONSULTING

Project Number	Boring Number	Sheet
110207	CD-B-4	1 of 1

Project Name: Kimberly Clark
Location: Everett, WA
Driller/Method: Holt / Direct Push Probe
Sampling Method: Continuous Core

Ground Surface Elev
Depth to Water (ft BGS)
Start/Finish Date 9/23/2015

Depth / Elevation (feet)	Borehole Completion	Sample Type/ID	Tests	PID (ppm)	Drive/ Recovery (inches)	Material Type	Description	Depth (ft)
							Moist, brown, silty SAND (SM)	
							Moist, dark gray, slightly silty SAND (SP-SM); fine sand, mica, pockets of clayey silt	
	3/8' hydrated bentonite chips	S1						
5			CD-B-4-5.5	0.0			trace shells from 6' to 7'	5
	▽9/23/2015	S2	CD-B-4-7.5				Becomes very moist to wet at 7.5'	
10		S3	CD-B-4-13	0.0				10
15							Bottom of boring at 15' BGS	15

Sampler Type:
○ No Recovery
▮ Continuous Core

PID - Photoionization Detector (Headspace Measurement)
▼ Static Water Level
▽ Water Level (ATD)

Logged by: MML
Approved by: SJG
Figure No. A-

_ENV PROBE LOG KIMBERLY CLARK-EVERETT.GPJ October 14, 2015

Boring Log

Project Number	Boring Number	Sheet
110207	CMS-B-1	1 of 1

Project Name: Kimberly Clark
Location: Everett, WA
Driller/Method: Aspect / Hand Auger
Sampling Method: Continuous Grab
Ground Surface Elev.
Depth to Water (ft BGS)
Start/Finish Date 7/6/2012

Depth / Elevation (feet)	Borehole Completion	Sample Type/ID	Tests	PID (ppm)	Blows/ 6"	Material Type	Description	Depth (ft)
0	Backfilled with material that was pulled from hole.						**CONCRETE**	
1			CMS-1-0-1-070612				**FILL**	1
2							Moist, dark brown and gray, gravelly SAND (SW); subrounded gravel and fine to coarse sand. Wet at 2 ft BGS	2
3			CMS-1-2-3-070612				Bottom of boring at 3 ft BGS.	3
4								4
5								5
6								6
7								7
8								8
9								9
10								10
11								11
12								12
13								13
14								14
15								15
16								16
17								17
18								18
19								19
20								20
21								21
22								22
23								23
24								24
25								25
26								26
27								27
28								28
29								29

Sampler Type:
- No Recovery
- Grab Sample

PID - Photoionization Detector (Headspace Measurement)
- Static Water Level
- Water Level (ATD)

Logged by: GL
Approved by: SJG
Figure No. A- 28

_ENV BORING LOG KIMBERLY CLARK-EVERETT.GPJ July 31, 2014

Boring Log

Aspect CONSULTING

Project Number	Boring Number	Sheet
110207	CMS-B-2	1 of 1

Project Name: Kimberly Clark
Location: Everett, WA
Driller/Method: Aspect / Hand Auger
Sampling Method: Continuous Grab

Ground Surface Elev.:
Depth to Water (ft BGS):
Start/Finish Date: 7/6/2012

Depth / Elevation (feet)	Borehole Completion	Sample Type/ID	Tests	PID (ppm)	Blows/ 6"	Material Type	Description	Depth (ft)
0	Backfilled with the material that was pulled from the hole.						**CONCRETE**	0
1			CMS-2-0-1-070612				**FILL** Moist, gray, gravelly SAND (SW); subrounded gravel and fine to coarse sand; trace silt.	1
2								2
3			CMS-2-2-3-070612				Bottom of boring at 3 ft BGS.	3
4								4
5								5
6								6
7								7
8								8
9								9
10								10
11								11
12								12
13								13
14								14
15								15
16								16
17								17
18								18
19								19
20								20
21								21
22								22
23								23
24								24
25								25
26								26
27								27
28								28
29								29

Sampler Type:
- No Recovery
- Grab Sample

PID - Photoionization Detector (Headspace Measurement)
- Static Water Level
- Water Level (ATD)

Logged by: GL
Approved by: SJG
Figure No. A- 29

_ENV BORING LOG KIMBERLY CLARK-EVERETT.GPJ July 31, 2014

Boring Log

Project Number	Boring Number	Sheet
110207	CMS-B-3	1 of 1

Project Name: Kimberly Clark
Location: Everett, WA
Driller/Method: Aspect / Hand Auger
Sampling Method: Continuous Grab
Ground Surface Elev.
Depth to Water (ft BGS)
Start/Finish Date 7/6/2012

Depth / Elevation (feet)	Borehole Completion	Sample Type/ID	Tests	PID (ppm)	Blows/ 6"	Material Type	Description	Depth (ft)
0							**CONCRETE**	
1			CMS-3-0-1-070612				**FILL** Moist, gray, gravelly, silty SAND (SM); subrounded gravel and fine to coarse sand.	1
2								2
3			CMS-3-2-3-070612				Bottom of boring at 3 ft BGS	3
4								4
5								5
6								6
7								7
8								8
9								9
10								10
11								11
12								12
13								13
14								14
15								15
16								16
17								17
18								18
19								19
20								20
21								21
22								22
23								23
24								24
25								25
26								26
27								27
28								28
29								29

Sampler Type:
- No Recovery
- Grab Sample

PID - Photoionization Detector (Headspace Measurement)
- Static Water Level
- Water Level (ATD)

Logged by: GL
Approved by: SJG
Figure No. A- 30

_ENV BORING LOG KIMBERLY CLARK-EVERETT.GPJ July 31, 2014

Boring Log

Aspect CONSULTING

Project Number	Boring Number	Sheet
110207	CMS-B04	1 of 1

Project Name: Kimberly Clark
Location: Everett, WA
Driller/Method: Holt / Direct Push Probe
Sampling Method: Continous Core 2"

Ground Surface Elev.
Depth to Water (ft BGS)
Start/Finish Date 11/20/2013

Depth / Elevation (feet)	Borehole Completion	Sample Type/ID	Tests	PID (ppm)	Blows/ 6"	Material Type	Description	Depth (ft)
							Recycled demo debris	
				0			Moist, brown, slightly silty, slightly gravelly SAND (SP-SM); fine sand	
		CC-01		0				
			CMS-B4-3	0			No recovery	
	11/20/2013							
5	Hydrated bentonite chip backfill		CMS-B4-5				Wet, gray, slightly silty SAND (SP-SM); shells, fine to medium sand	5
				0				
				0			Wet, brown gray, slightly gravelly SAND (SP); medium to coarse sand	
		CC-02		0				
			CMS-B4-8	0				
				0				
							No recovery	
10							Wet, dark gray, SAND (SP); fine sand	10
				0				
				0				
		CC-03		0				
				0				
				0			Wet, gray SAND (SP); medium to coarse sand	
							No recovery	
15							Bottom of boring 15 feet Note: Density and consistency was estimated based on sample observations.	15

Sampler Type:
- No Recovery
- Continuous Core

PID - Photoionization Detector (Headspace Measurement)
- Static Water Level
- Water Level (ATD)

Logged by: AET
Approved by: SJG
Figure No. A- 25

_ENV BORING LOG KIMBERLY CLARK-EVERETT.GPJ July 31, 2014

Boring Log

Aspect CONSULTING

Project Number	Boring Number	Sheet
110207	CMS-B05	1 of 1

Project Name: Kimberly Clark
Location: Everett, WA
Driller/Method: Holt / Direct Push Probe
Sampling Method: Continous Core 2"

Ground Surface Elev.:
Depth to Water (ft BGS):
Start/Finish Date: 11/13/2013

Depth / Elevation (feet)	Borehole Completion	Sample Type/ID	Tests	PID (ppm)	Blows/ 6"	Material Type	Description	Depth (ft)
			CMS-B5-1	0			Recycled demo debris	
				0				
				0			Stiff, wet, brown, slightly sandy SILT (ML)	
		CC-01	CMS-B5-2.5				No recovery	
	▽ 11/13/2013							
5	Hydrated bentonite chip backfill						Stiff, wet, brown, slightly sandy SILT (ML)	5
				0			Pea gravel	
				0			Medium stiff, moist, gray, slightly sandy SILT (ML); fine sand	
				0				
		CC-02	CMS-B5-7	0				
				0			No recovery	
10							Loose, wet, gray, SAND (SP); medium sand	10
							Loose, wet, gray, SAND (SP); medium to coarse subangular sand	
		CC-03					Medium stiff, wet, gray SILT (ML)	
							No recovery	
15							Bottom of boring 15 feet Note: Density and consistency was estimated based on sample observations.	15

Sampler Type:
- ◯ No Recovery
- ▌▌ Continuous Core

PID - Photoionization Detector (Headspace Measurement)
- ▼ Static Water Level
- ▽ Water Level (ATD)

Logged by: AHP
Approved by: SJG
Figure No. A- 26

_ENV BORING LOG KIMBERLY CLARK-EVERETT.GPJ July 31, 2014

Boring Log

Aspect CONSULTING

Project Number	Boring Number	Sheet
110207	CMS-B06	1 of 1

Project Name: Kimberly Clark
Location: Everett, WA
Driller/Method: Holt / Direct Push Probe
Sampling Method: Continous Core 2"

Ground Surface Elev.
Depth to Water (ft BGS)
Start/Finish Date 11/20/2013

Depth / Elevation (feet)	Borehole Completion	Sample Type/ID	Tests	PID (ppm)	Blows/ 6"	Material Type	Description	Depth (ft)
1							Recycled demo debris	1
2			CMS-B6-2	0			Very moist to wet, dark gray SAND (SP); fine to medium sand, shell fragments	2
3	▽ 11/20/2013	CC-01	CMS-B6-2.5					3
4							No recovery	4
5	Hydrated bentonite chip backfill						Wet, dark gray, slightly gravelly SAND (SP); medium to coarse sand	5
6				0				6
7			CMS-B6-7	0				7
		CC-02		0				
8				0			Woody debris	8
9				0				9
10							Bottom of boring 10 feet Note: Density and consistency was estimated based on sample observations.	10

Sampler Type:
- ◯ No Recovery
- ▌▌ Continuous Core

PID - Photoionization Detector (Headspace Measurement)
- ▼ Static Water Level
- ▽ Water Level (ATD)

Logged by: AET
Approved by: SJG
Figure No. A- 27

_ENV BORING LOG KIMBERLY CLARK-EVERETT.GPJ July 31, 2014

Boring Log

Aspect CONSULTING

Project Number	Boring Number	Sheet
110207	CMS-B-7	1 of 1

Project Name: Kimberly Clark
Location: Everett, WA
Driller/Method: Holt / Direct Push Probe
Sampling Method: Continuous Core
Ground Surface Elev
Depth to Water (ft BGS)
Start/Finish Date 9/24/2015

Depth / Elevation (feet)	Borehole Completion	Sample Type/ID	Tests	PID (ppm)	Drive/ Recovery (inches)	Material Type	Description	Depth (ft)
0							Recycled demo debris	0
1								1
2	3/8" hydrated bentonite chips	S1						2
3							Moist, dark gray, silty SAND (SM); trace rounded fine gravel, fine to medium sand, mica	3
4								4
5								5
6			CMS-B-7-6	0.0				6
7	▽ 9/24/2015	S2	CMS-B-7-7				Wet, dark gray, sandy SILT (ML); fine sand, mica	7
8								8
9			CMS-B-7-9					9
10							Bottom of boring at 10' BGS	10
11								11

Sampler Type:
- ◯ No Recovery
- ▮ Continuous Core

PID - Photoionization Detector (Headspace Measurement)
- ▼ Static Water Level
- ▽ Water Level (ATD)

Logged by: MML
Approved by: SJG
Figure No. A-

_ENV PROBE LOG KIMBERLY CLARK-EVERETT.GPJ October 14, 2015

Boring Log

Aspect CONSULTING

Project Number	Boring Number	Sheet
110207	CMS-B-8	1 of 1

Project Name: Kimberly Clark
Location: Everett, WA
Driller/Method: Holt / Direct Push Probe
Sampling Method: Continuous Core

Ground Surface Elev:
Depth to Water (ft BGS):
Start/Finish Date: 9/24/2015

Depth / Elevation (feet)	Borehole Completion	Sample Type/ID	Tests	PID (ppm)	Drive/ Recovery (inches)	Material Type	Description	Depth (ft)
0							Recycled demo debris	0
1	3/8" hydrated bentonite chips							1
2		S1					Moist, dark brown, sandy, gravelly SILT (ML); fine subangular gravel, fine sand	2
3								3
4								4
5			CMS-B-8-5					5
6	▽9/24/2015	S2		0.0			Becomes gray with no gravel at 5.5'	6
7			CMS-B-8-6.5				Becomes very moist to wet at 6.5'	7
8			CMS-B-8-8				Refusal at 8' BGS (bottom of boring)	8
9								9

Sampler Type:
○ No Recovery
▮ Continuous Core

PID - Photoionization Detector (Headspace Measurement)
▼ Static Water Level
▽ Water Level (ATD)

Logged by: MML
Approved by: SJG
Figure No. A-

_ENV PROBE LOG KIMBERLY CLARK-EVERETT.GPJ October 14, 2015

Boring Log

Aspect CONSULTING

Project Number	Boring Number	Sheet
110207	CMS-B-9	1 of 1

Project Name: Kimberly Clark
Location: Everett, WA
Driller/Method: Holt / Direct Push Probe
Sampling Method: Continuous Core

Ground Surface Elev:
Depth to Water (ft BGS):
Start/Finish Date: 9/24/2015

Depth / Elevation (feet)	Borehole Completion	Sample Type/ID	Tests	PID (ppm)	Drive/ Recovery (inches)	Material Type	Description	Depth (ft)
0							Recycled demo debris	0
1	3/8" hydrated bentonite chips	S1						1
2							Moist, dark brown, sitly, gravelly SAND (SM); fine sand	2
3								3
4								4
5			CMS-B-9-5	0.0				5
6	▽ 9/24/2015	S2	CMS-B-9-6				Becomes wet at 6'	6
7							Wet, dark gray, GRAVEL (GP); angular gravel fill	7
8								8
9								9
10							Bottom of boring at 10' BGS	10
11								11

Sampler Type:
- ◯ No Recovery
- ▮ Continuous Core

PID - Photoionization Detector (Headspace Measurement)
- ▼ Static Water Level
- ▽ Water Level (ATD)

Logged by: MML
Approved by: SJG
Figure No. A-

_ENV PROBE LOG KIMBERLY CLARK-EVERETT.GPJ October 14, 2015

Boring Log

Project Number	Boring Number	Sheet
110207	CMS-B-10	1 of 1

Project Name: Kimberly Clark
Location: Everett, WA
Driller/Method: Holt / Direct Push Probe
Sampling Method: Continuous Core

Ground Surface Elev:
Depth to Water (ft BGS):
Start/Finish Date: 9/24/2015

Depth / Elevation (feet)	Borehole Completion	Sample Type/ID	Tests	PID (ppm)	Drive/ Recovery (inches)	Material Type	Description	Depth (ft)
0							Recycled demo debris	0
1								1
2	3/8" hydrated bentonite chips	S1					Moist, dark gray, silty SAND (SM); trace fine rounded gravel, medium sand	2
3								3
4			CMS-B-10-4.5				Wet, dark gray, slightly silty SAND (SP-SM); trace shells, trace fine rounded gravel, medium sand	4
5	▽ 9/24/2015						Becomes wet at 5'	5
6		S2	CMS-B-10-6	0.0				6
7								7
8			CMS-B-10-8				Wet, dark gray, sandy SILT (ML); trace shells, trace fine subrounded gravel, mica, fine sand	8
9								9
10							Bottom of boring at 10' BGS	10
11								11

Sampler Type:
- ○ No Recovery
- ▮ Continuous Core

PID - Photoionization Detector (Headspace Measurement)

- ▼ Static Water Level
- ▽ Water Level (ATD)

Logged by: MML
Approved by: SJG
Figure No. A-

_ENV PROBE LOG KIMBERLY CLARK-EVERETT.GPJ October 14, 2015

Boring Log

Aspect CONSULTING

Project Number	Boring Number	Sheet
110207	CMS-MW-01	1 of 1

Project Name: Kimberly Clark
Location: Everett, WA
Driller/Method: Cascade Drilling / Direct Push Probe
Sampling Method: Continuous Core

Ground Surface Elev.: 15.22
Depth to Water (ft BGS):
Start/Finish Date: 6/28/2012

Depth / Elevation (feet)	Borehole Completion	Sample Type/ID	Tests	PID (ppm)	Blows/ 6"	Material Type	Description	Depth (ft)
15	8" Flush-mount monument and thermos cap						No Recovery	
14	Concrete surface seal 0' to 1'							1
13	3/8" Hydrated bentonite chips 1' to 1.5'	CC-1						2
12	10/20 pre-pack Silica sand filter pack 1.5' to 12.5'							3
11								4
10				0			Wet, dark gray, slightly silty SAND (SP-SM); fine sand	5
9	2" Diameter PVC pre-packed .001 slot screen 2.5' to 12.5'			0				6
8		CC-2		0			Wet, dark gray SAND (SP); trace gravel, fine to medium sand	7
7				0				8
6				0			Wet, dark gray, silty CLAY (CL)	9
5							Wet, dark gray, slightly gravelly SAND (SP); fine to medium sand, fine gravel	10
4				0				11
3	Threaded cap	CC-3					Wet, dark brown, organic SILT (OL); peat-like	12
2				0.4				13
1	Slough			0.1			Wet, dark brown, sandy organic SILT (OL); fine to medium sand	14
0							Bottom of boring at 15' BGS	15
-1								16
-2								17
-3								18
-4								19
-5								20
-6								21
-7								22
-8								23
-9								24
-10								25
-11								26
-12								27
-13								28
-14								29

Sampler Type:
- ◯ No Recovery
- ▌▌ Continuous Core

PID - Photoionization Detector (Headspace Measurement)
- ▼ Static Water Level
- ▽ Water Level (ATD)

Logged by: AET
Approved by: SJG
Figure No. A- 31

_ENV BORING LOG KIMBERLY CLARK-EVERETT.GPJ July 31, 2014

Boring Log

Aspect CONSULTING

Project Number	Boring Number	Sheet
110207	CMS-MW-01R	1 of 1

Project Name: Kimberly Clark
Location: Everett, WA
Driller/Method: Holt / Direct Push Probe
Sampling Method: Continuous Core 3"

Ground Surface Elev. 16.82
Depth to Water (ft BGS)
Start/Finish Date 11/12/2013

Depth / Elevation (feet)	Borehole Completion	Sample Type/ID	Tests	PID (ppm)	Blows/ 6"	Material Type	Description	Depth (ft)
	8" Flush-mount monument and thermos cap Concrete surface seal 0' to 1' 3/8" Hydrated bentonite chips 1' to 2'						Recycled demo debris	
15		CC-1	CMS-MW-1R-2.5				Moist to wet, dark gray, slightly silty, SAND (SP-SM); trace gravel	
							No recovery	
5	▽ 11/12/2013						Wet, black, silty, SAND (SM); fine to medium sand	5
	20/40 pre-pack Silica sand filter pack 2' to 13.25'			0				
10				.1			Grades to wet, black, SAND (SP); fine to medium sand, trace silt	
		CC-2		1.2			Sheen and slight petroleum-like odor at 8 feet	
			CMS-MW-1R-8.5	.8				
	2" Diameter PVC pre-packed 10-slot screen 3' to 13'			2.1			No recovery	
10				0			Wet, gray, SAND (SP); fine to medium sand, no odor, no sheen	10
			CMS-MW-1R-10.5				Wet, gray, clayey, SILT (ML)	
				0			Wet, gray, SAND (SP); fine to medium sand, trace gravel, no odor, no sheen	
5				0				
		CC-3						
	Threaded cap			0			No recovery	
	Slough							
15							Bottom of boring at 15 feet	15

Sampler Type:
- ○ No Recovery
- ▌▌ Continuous Core

PID - Photoionization Detector (Headspace Measurement)
- ▼ Static Water Level
- ▽ Water Level (ATD)

Logged by: AET
Approved by: SJG
Figure No. A- 32

_ENV BORING LOG KIMBERLY CLARK-EVERETT.GPJ July 31, 2014

Boring Log

Aspect CONSULTING

Project Number	Boring Number	Sheet
110207	CMS-MW-02	1 of 1

Project Name: Kimberly Clark
Location: Everett, WA
Driller/Method: Holt / Direct Push Probe
Sampling Method: Continuous Core 3"

Ground Surface Elev.: 17.69
Depth to Water (ft BGS):
Start/Finish Date: 10/30/2013

Depth / Elevation (feet)	Borehole Completion	Sample Type/ID	Tests	PID (ppm)	Blows/ 6"	Material Type	Description	Depth (ft)
	8" Flush-mount monument and thermos cap Concrete surface seal 0' to 1' 3/8" Hydrated bentonite chips 1' to 2'						Recycled demo debris	
15		CC-1		0			Moist, brown, SAND (SP); fine sand	
			CMS-MW-2-3.5	0			No recovery	
	▽ 10/30/2013							
5	20/40 pre-pack Silica sand filter pack 2' to 13.25'		CMS-MW-2-5 CMS-MW-20-5				Wet, gray, SAND (SP); fine sand, trace gravel	5
				0				
				0				
		CC-2		0			Wet, gray, slightly gravelly, SAND (SW); fine to coarse sand, fine gravel	
10				0			Wet, gray, SAND (SP); fine sand, numerous shell fragments	
	2" Diameter PVC pre-packed 10-slot screen 3' to 13'			0				
							becomes fine to medium sand	10
							Wood chips	
5		CC-3	CMS-MW-2-12.5				No recovery	
	Threaded cap							
	Slough 13.25' to 15'							
15							Bottom of boring at 15 feet	15

Sampler Type:
- ◯ No Recovery
- ▌▌ Continuous Core

PID - Photoionization Detector (Headspace Measurement)
- ▼ Static Water Level
- ▽ Water Level (ATD)

Logged by: AET
Approved by: SJG
Figure No. A- 33

_ENV BORING LOG KIMBERLY CLARK-EVERETT.GPJ July 31, 2014

Boring Log

Aspect CONSULTING

Project Number	Boring Number	Sheet
110207	CN-B01	1 of 1

Project Name: Kimberly Clark
Location: Everett, WA
Driller/Method: Holt / Direct Push Probe
Sampling Method: Continous Core 2"

Ground Surface Elev.
Depth to Water (ft BGS)
Start/Finish Date 12/5/2013

Depth / Elevation (feet)	Borehole Completion	Sample Type/ID	Tests	PID (ppm)	Blows/ 6"	Material Type	Description	Depth (ft)
							Recycled demo debris	
			CN-B1-1				Medium dense, slightly moist, brown, GRAVELLY SILTY SAND (SM); fine to medium gravel, fine to very coarse sand	
							Dense, dry, white, SILTY GRAVEL (GM); fine gravel, crushed rock	
		CC-01					Medium dense, slightly moist, brown, gravelly, silty, SAND (SM); fine to medium gravel, fine to coarse sand	
							No recovery	
5	Hydrated bentonite chip backfill							5
	12/5/2013		CN-B1-6				Dense, wet, gray, silty, gravelly SAND (SM); fine to coarse sand, fine gravel	
		CC-02					trace gravel, shell fragments	
							No recovery	
10								10
							Dense, wet, gray, silty SAND (SM); fine to coarse sand, shell fragments	
		CC-03	CN-B1-10				Stiff, black and brown organic SILT (OL) and woody debris	
							No recovery	
15							Bottom of boring 15 feet Note: Density and consistency was estimated based on sample observations.	15

Sampler Type:
- No Recovery
- Continuous Core

PID - Photoionization Detector (Headspace Measurement)
- Static Water Level
- Water Level (ATD)

Logged by: AHP
Approved by: SJG
Figure No. A- 34

_ENV BORING LOG KIMBERLY CLARK-EVERETT.GPJ July 31, 2014

Boring Log

Aspect CONSULTING

Project Number	Boring Number	Sheet
110207	CN-B02	1 of 1

Project Name: Kimberly Clark
Location: Everett, WA
Driller/Method: Holt / Direct Push Probe
Sampling Method: Continous Core 2"

Ground Surface Elev.
Depth to Water (ft BGS)
Start/Finish Date 12/5/2013

Depth / Elevation (feet)	Borehole Completion	Sample Type/ID	Tests	PID (ppm)	Blows/ 6"	Material Type	Description	Depth (ft)
							Recycled demo debris	
				0			Stiff, slightly moist, gray, silty SAND (SM); fine sand, with frequent, thick, dense, coarse sandy GRAVEL (GP) beds	
			CN-B2-1.5	0				
		CC-01		0			Stiff, slightly moist, gray, sandy SILT (ML); fine sand	
				0			No recovery	
5	12/5/2013							5
							Stiff, slightly moist, gray, sandy SILT (ML); fine sand	
				0			Wood waste and organic SILT (OL); petroleum sheen	
			CN-B2-6	0			Medium dense, wet, dark gray, silty, gravelly SAND (SM); fine to coarse sand; petroleum sheen	
				0			Organic SILT (OL); with woody debris	
	Hydrated bentonite chip backfill	CC-02		0			No recovery	
10								10
				0			Loose, wet, gray, silty, gravelly SAND (SM); fine to coarse sand	
				0				
				0			Wood	
		CC-03	CN-B2-10	0			No recovery	
15							Wood	15
				0			Medium dense, wet, gray SAND (SW); fine to coarse sand	
							No recovery	
		CC-04						
20							Bottom of boring 20 feet Note: Density and consistency was estimated based on sample observations.	20

Sampler Type:
- No Recovery
- Continuous Core

PID - Photoionization Detector (Headspace Measurement)
- Static Water Level
- Water Level (ATD)

Logged by: AHP
Approved by: SJG
Figure No. A- 35

_ENV BORING LOG KIMBERLY CLARK-EVERETT.GPJ July 31, 2014

Boring Log

Aspect CONSULTING

Project Number	Boring Number	Sheet
110207	CN-B03	1 of 1

Project Name: Kimberly Clark
Location: Everett, WA
Driller/Method: Holt / Direct Push Probe
Sampling Method: Continous Core 2"

Ground Surface Elev.
Depth to Water (ft BGS)
Start/Finish Date 12/4/2013

Depth / Elevation (feet)	Borehole Completion	Sample Type/ID	Tests	PID (ppm)	Blows/ 6"	Material Type	Description	Depth (ft)
							Asphalt pavement	
				0			Loose, slightly moist, brown/tan/gray, gravelly, silty SAND (SM); fine to coarse sand	
				0				
				0				
				0				
		CC-01		0				
			CN-B3-3				Medium dense, very moist, gray, slightly gravelly SAND (SW); fine to coarse sand, fine to coarse gravel	
				0			Stiff, moist, gray SILT (ML)	
							No recovery	
5	12/4/2013							5
							Stiff, wet, gray SILT (ML)	
			CN-B3-5.5	0				
			CN-B3-6	0			Medium dense, wet, gray SAND (SW); fine to coarse subangular sand	
				0			Medium stiff, wet, black/gray/red organic SILT (OL) and woody debris	
	Hydrated bentonite chip backfill			0				
		CC-02		0				
				0				
				0				
				0				
							No recovery	
10								10
							Woody debris	
		CC-03					No recovery	
15								15
							Bottom of boring 15 feet Note: Density and consistency was estimated based on sample observations.	

Sampler Type:
- No Recovery
- Continuous Core

PID - Photoionization Detector (Headspace Measurement)
- Static Water Level
- Water Level (ATD)

Logged by: AHP
Approved by: SJG
Figure No. A- 36

_ENV BORING LOG KIMBERLY CLARK-EVERETT.GPJ July 31, 2014

Boring Log

Aspect CONSULTING

Project Number	Boring Number	Sheet
110207	CN-B04	1 of 1

Project Name: Kimberly Clark
Location: Everett, WA
Driller/Method: Holt / Direct Push Probe
Sampling Method: Continous Core 2"
Ground Surface Elev.
Depth to Water (ft BGS)
Start/Finish Date 11/22/2013

Depth / Elevation (feet)	Borehole Completion	Sample Type/ID	Tests	PID (ppm)	Blows/ 6"	Material Type	Description	Depth (ft)
0							Recycled demo debris	0
1								1
2		CC-01	CN-B4-2	0 0			Moist, brown, gravelly SAND (SP); fine to medium sand, fine gravel	2
3							No recovery	3
4								4
5	▽ 11/22/2013	CC-02					Wet, brown, sandy GRAVEL (GP); trace silt, fine sand	5
6				0				6
7	Hydrated bentonite chip backfill		CB-B4-5	0 0			Wet, gray, sandy SILT (ML); fine sand	7
8			CN-B4-8	0			Wet, gray, SAND (SP); medium sand Wood at 9'	8
9							No recovery	9
10							Bottom of boring 10 feet Note: Density and consistency was estimated based on sample observations.	10

Sampler Type:
○ No Recovery
▌▌ Continuous Core

PID - Photoionization Detector (Headspace Measurement)
▼ Static Water Level
▽ Water Level (ATD)

Logged by: AET
Approved by: SJG
Figure No. A- 37

_ENV BORING LOG KIMBERLY CLARK-EVERETT.GPJ July 31, 2014

Boring Log

Aspect CONSULTING

Project Number	Boring Number	Sheet
110207	CN-B05	1 of 1

Project Name: Kimberly Clark
Location: Everett, WA
Driller/Method: Holt / Direct Push Probe
Sampling Method: Continous Core 2"

Ground Surface Elev.
Depth to Water (ft BGS)
Start/Finish Date 11/22/2013

Depth / Elevation (feet)	Borehole Completion	Sample Type/ID	Tests	PID (ppm)	Blows/ 6"	Material Type	Description	Depth (ft)
0							Recycled demo debris	0
1								1
2		CC-01						2
3								3
4							No recovery	4
5	Hydrated bentonite chip backfill						Moist, brown gray, gravelly SAND (SP); medium sand	5
6			CN-B5-5.5	0				6
7	▽ 11/22/2013		CN-B5-7				Wood	7
8		CC-02		0 0				8
9							No recovery	9
10							Woody debris with sand matrix	10
11		CC-03	CN-B5-10.5				No recovery	11
12								12
13							Refusal 12.5 feet Note: Density and consistency was estimated based on sample observations.	13

Sampler Type:
- ◯ No Recovery
- ▌▌ Continuous Core

PID - Photoionization Detector (Headspace Measurement)
- ▼ Static Water Level
- ▽ Water Level (ATD)

Logged by: AET
Approved by: SJG
Figure No. A- 38

_ENV BORING LOG KIMBERLY CLARK-EVERETT.GPJ July 31, 2014

Boring Log

Aspect CONSULTING

Project Number	Boring Number	Sheet
110207	CN-B06	1 of 1

Project Name: Kimberly Clark
Location: Everett, WA
Driller/Method: Holt / Direct Push Probe
Sampling Method: Continous Core 2"

Ground Surface Elev.
Depth to Water (ft BGS)
Start/Finish Date 12/5/2013

Depth / Elevation (feet)	Borehole Completion	Sample Type/ID	Tests	PID (ppm)	Blows/ 6"	Material Type	Description	Depth (ft)
							Sandy, gravelly FILL	
							Stiff, slightly moist, gray sandy SILT (SM); fine sand	
	12/5/2013		CN-B6-2				Wood	
		CC-01					Stiff, wet, gray sandy SILT (SM); very fine sand	
			CN-B6-3					
							No recovery	
5								5
							Stiff, wet, gray sandy SILT (SM); very fine sand	
							Medium sand	
	Hydrated bentonite chip backfill	CC-02	CN-B6-8				Medium dense, wet, gray, slightly silty SAND (SW-SM); fine to coarse sand, shell fragments	
							No recovery	
10								10
							Medium dense, wet, gray, slightly silty SAND (SW-SM); fine to coarse sand, shell fragments	
		CC-03					Stiff, wet, gray SILT (ML)	
							Woody debris	
							No recovery	
15								15
							Bottom of boring 15 feet Note: Density and consistency was estimated based on sample observations.	

Sampler Type:
- No Recovery
- Continuous Core

PID - Photoionization Detector (Headspace Measurement)
- Static Water Level
- Water Level (ATD)

Logged by: AHP
Approved by: SJG
Figure No. A- 39

_ENV BORING LOG KIMBERLY CLARK-EVERETT.GPJ July 31, 2014

Boring Log

Aspect CONSULTING

Project Number	Boring Number	Sheet
110207	CN-B07	1 of 1

Project Name: Kimberly Clark
Location: Everett, WA
Driller/Method: Holt / Direct Push Probe
Sampling Method: Continous Core 2"

Ground Surface Elev.
Depth to Water (ft BGS)
Start/Finish Date 12/5/2013

Depth / Elevation (feet)	Borehole Completion	Sample Type/ID	Tests	PID (ppm)	Blows/ 6"	Material Type	Description	Depth (ft)
							Sandy, gravelly FILL	
		CC-01	CN-B7-2				Stiff, slightly moist, gray sandy SILT (ML); fine sand	
							No recovery	
5								5
	12/5/2013						Stiff, slightly moist, gray sandy SILT (ML); fine sand	
	Hydrated bentonite chip backfill	CC-02	CN-B7-6				Wet	
							No recovery	
10								10
		CC-03	CN-B7-12				Stiff, slightly moist, gray sandy SILT (ML); fine sand	
							Organic SILT (OL), and woody debris	
							Stiff, slightly moist, gray sandy SILT (ML); fine sand	
							No recovery	
15								15
							Bottom of boring 15 feet Note: Density and consistency was estimated based on sample observations.	

Sampler Type:
- No Recovery
- Continuous Core

PID - Photoionization Detector (Headspace Measurement)
- Static Water Level
- Water Level (ATD)

Logged by: AHP
Approved by: SJG
Figure No. A- 40

_ENV BORING LOG KIMBERLY CLARK-EVERETT.GPJ July 31, 2014

Boring Log

Aspect CONSULTING

Project Number	Boring Number	Sheet
110207	CN-B08	1 of 1

Project Name: Kimberly Clark
Location: Everett, WA
Driller/Method: Holt / Direct Push Probe
Sampling Method: Continous Core 2"
Ground Surface Elev.
Depth to Water (ft BGS)
Start/Finish Date 12/4/2013

Depth / Elevation (feet)	Borehole Completion	Sample Type/ID	Tests	PID (ppm)	Blows/ 6"	Material Type	Description	Depth (ft)
							Asphalt pavement	
				0			Medium stiff, slightly moist, brown, slightly sandy, gravelly SILT (ML); medium to coarse subangular gravel, trace fine sand	
				0				
				0				
			CN-B8-2				No recovery	
		CC-01						
5	▽12/4/2013							5
				0			Medium stiff, moist to wet, gray, sandy SILT (ML); fine sand	
				0				
							Woody debris	
	Hydrated bentonite chip backfill							
		CC-02	CN-B8-5	0			No recovery	
10								10
							Woody debris	
		CC-03		0				
				0				
				0			Medium dense, wet, gray silty SAND (SM); fine to medium sand	
				0				
			CN-B8-14	0				
				0			Woody debris	
15								15
							Bottom of boring 15 feet Note: Density and consistency was estimated based on sample observations.	

Sampler Type:
- ◯ No Recovery
- ▌▌ Continuous Core

PID - Photoionization Detector (Headspace Measurement)
- ▼ Static Water Level
- ▽ Water Level (ATD)

Logged by: AHP
Approved by: SJG
Figure No. A- 41

_ENV BORING LOG KIMBERLY CLARK-EVERETT.GPJ July 31, 2014

Boring Log

Aspect CONSULTING

Project Number	Boring Number	Sheet
110207	CN-B09	1 of 1

Project Name: Kimberly Clark
Location: Everett, WA
Driller/Method: Holt / Direct Push Probe
Sampling Method: Continous Core 2"

Ground Surface Elev.
Depth to Water (ft BGS)
Start/Finish Date 11/22/2013

Depth / Elevation (feet)	Borehole Completion	Sample Type/ID	Tests	PID (ppm)	Blows/ 6"	Material Type	Description	Depth (ft)
							Asphalt Pavement	
				0			Moist, gray, sandy GRAVEL (GP); medium to coarse sand, fine gravel	
				0			Moist, gray, silty SAND (SM); fine sand	
	11/22/2013	CC-01	CN-B9-2.5				Wet	
				0			Moist, gray, clayey SILT (ML); brick debris	
							No recovery	
5			CN-B9-5				Wet, gray, sandy silty GRAVEL (GM); with wood and brick debris	5
							Brick debris	
							Charcoal	
	Hydrated bentonite chip backfill						Wood	
				0			Wet, gray SAND (SP); medium sand	
		CC-02		0			No recovery	
			CN-B9-8					
10							Wet, gray SAND (SP); medium sand, trace gravel; H2S odor	10
				0				
				0				
		CC-03		0			Wood	
							No recovery	
15							Bottom of boring 15 feet Note: Density and consistency was estimated based on sample observations.	15

Sampler Type:
- No Recovery
- Continuous Core

PID - Photoionization Detector (Headspace Measurement)
- Static Water Level
- Water Level (ATD)

Logged by: AET
Approved by: SJG
Figure No. A- 42

_ENV BORING LOG KIMBERLY CLARK-EVERETT.GPJ July 31, 2014

Boring Log

Aspect CONSULTING

Project Number	Boring Number	Sheet
110207	CN-B10	1 of 1

Project Name: Kimberly Clark
Location: Everett, WA
Driller/Method: Holt / Direct Push Probe
Sampling Method: Continous Core 2"

Ground Surface Elev.
Depth to Water (ft BGS)
Start/Finish Date 12/5/2013

Depth / Elevation (feet)	Borehole Completion	Sample Type/ID	Tests	PID (ppm)	Blows/ 6"	Material Type	Description	Depth (ft)
							Asphalt pavement	
							Dense, moist, brown, silty SAND (SM); coarse sand	
			CN-B10-2				Dense, very moist, gray, slightly silty, gravelly SAND (SP-SM); medium to very coarse sand, fine gravel	
		CC-01					No recovery	
5	▽12/5/2013							5
							Dense, wet, brown gray, slightly silty SAND (SP-SM); fine to medium sand	
							Dense, wet, gray, silty SAND (SM); fine to coarse sand	
	Hydrated bentonite chip backfill						Woody debris	
		CC-02	CN-B10-5				No recovery	
10								10
							Loose to medium dense, wet, gray, silty, gravelly SAND (SM); fine to medium sand	
		CC-03	CN-B10-10				Woody debris	
							Stiff, wet, gray SILT (ML)	
							Woody debris	
							Medium dense, wet, gray SAND (SW); fine to coarse sand	
15								15
							Bottom of boring 15 feet Note: Density and consistency was estimated based on sample observations.	

Sampler Type:
◯ No Recovery
▌▌ Continuous Core

PID - Photoionization Detector (Headspace Measurement)
▼ Static Water Level
▽ Water Level (ATD)

Logged by: AHP
Approved by: SJG
Figure No. A- 43

_ENV BORING LOG KIMBERLY CLARK-EVERETT.GPJ July 31, 2014

Boring Log

Aspect CONSULTING

Project Number	Boring Number	Sheet
110207	CN-B11	1 of 1

Project Name: Kimberly Clark
Location: Everett, WA
Driller/Method: Holt / Direct Push Probe
Sampling Method: Continous Core 2"
Ground Surface Elev.
Depth to Water (ft BGS)
Start/Finish Date 12/4/2013

Depth / Elevation (feet)	Borehole Completion	Sample Type/ID	Tests	PID (ppm)	Blows/ 6"	Material Type	Description	Depth (ft)
				0			Asphalt pavement	
				0			Crushed concrete	
				0			Crushed asphalt	
			CN-B11-2	0			Medium dense, slightly moist, gray, silty, gravelly SAND (SM); fine to coarse gravel, fine to coarse sand	
		CC-01		0				
				0				
				0				
			CN-B11-3.5	0			Wet	
							No recovery	
5	12/4/2013							5
				0			Medium dense, slightly moist, gray, silty, gravelly SAND (SM); fine to coarse gravel, fine to coarse sand	
			CN-B11-6	0				
				0			Wet, organic SILT (OL); with woody debris	
	Hydrated bentonite chip backfill			0				
		CC-02		0				
				0				
				0				
							No recovery	
10							Wood waste	10
							No recovery	
		CC-03						
15							Bottom of boring 15 feet Note: Density and consistency was estimated based on sample observations.	15

Sampler Type:
- ◯ No Recovery
- ▌▌ Continuous Core

PID - Photoionization Detector (Headspace Measurement)
- ▼ Static Water Level
- ▽ Water Level (ATD)

Logged by: AHP
Approved by: SJG
Figure No. A- 44

_ENV BORING LOG KIMBERLY CLARK-EVERETT.GPJ July 31, 2014

Boring Log

Aspect CONSULTING

Project Number	Boring Number	Sheet
110207	CN-B12	1 of 1

Project Name: Kimberly Clark
Location: Everett, WA
Driller/Method: Holt / Direct Push Probe
Sampling Method: Continous Core 2"

Ground Surface Elev.
Depth to Water (ft BGS)
Start/Finish Date 12/4/2013

Depth / Elevation (feet)	Borehole Completion	Sample Type/ID	Tests	PID (ppm)	Blows/ 6"	Material Type	Description	Depth (ft)
							Asphalt pavement	
				0			Medium dense, slightly moist, white brown and gray mottled, silty, gravelly SAND (SM); fine to coarse sand, fine to medium gravel	
				0			Dense, slightly moist, gray SAND (SP); fine sand	
			CN-B12-2	0				
		CC-01		0			Medium dense, moist, gray silty SAND (SM); fine to medium sand, shell fragments	
				0				
				0			No recovery	
5	12/4/2013							5
				0			Medium dense, wet, gray silty SAND (SM); fine to medium sand, shell fragments	
				0				
				0				
	Hydrated bentonite chip backfill			0				
		CC-02	CN-B12-5	0				
				0				
				0			Woody debris at 8.25'	
				0				
				0			Woody debris at 9'	
			CN-B12-9.5	0				
10							Woody debris	10
		CC-03						
							No recovery	
15							Bottom of boring 15 feet Note: Density and consistency was estimated based on sample observations.	15

Sampler Type:
- ◯ No Recovery
- ▌▌ Continuous Core

PID - Photoionization Detector (Headspace Measurement)
- ▼ Static Water Level
- ▽ Water Level (ATD)

Logged by: AHP
Approved by: SJG
Figure No. A- 45

_ENV BORING LOG KIMBERLY CLARK-EVERETT.GPJ July 31, 2014

Boring Log

Aspect CONSULTING

Project Number	Boring Number	Sheet
110207	CN-B13	1 of 1

Project Name: Kimberly Clark
Location: Everett, WA
Driller/Method: Holt / Direct Push Probe
Sampling Method: Continous Core 2"

Ground Surface Elev.
Depth to Water (ft BGS)
Start/Finish Date 12/4/2013

Depth / Elevation (feet)	Borehole Completion	Sample Type/ID	Tests	PID (ppm)	Blows/ 6"	Material Type	Description	Depth (ft)
				0			Grass, topsoil	
				0			Medium dense, slightly moist, brown, SILTY SAND (SM); roots	
			CN-B13-1.5	0			Dense, moist, gray, SAND (SP); fine sand	
		CC-01		0				
				0			Wet	
			CN-B13-3	0			Black, organic SILT (OL) with woody debris	
							No recovery	
5	12/4/2013							5
							Woody debris	
				0				
				0				
	Hydrated bentonite chip backfill						No recovery	
		CC-02		0				
10								10
							Woody debris	
				0				
				0			Medium dense, wet, gray silty SAND (SM); fine to medium sand; odor	
			CN-B13-11.5	0				
							No recovery	
		CC-03		0				
15								15
							Bottom of boring 15 feet Note: Density and consistency was estimated based on sample observations.	

Sampler Type:
- No Recovery
- Continuous Core

PID - Photoionization Detector (Headspace Measurement)
- Static Water Level
- Water Level (ATD)

Logged by: AHP
Approved by: SJG
Figure No. A- 46

_ENV BORING LOG KIMBERLY CLARK-EVERETT.GPJ July 31, 2014

Boring Log

Aspect CONSULTING

Project Number	Boring Number	Sheet
110207	CN-B14	1 of 1

Project Name: Kimberly Clark
Location: Everett, WA
Driller/Method: Holt / Direct Push Probe
Sampling Method: Continous Core 2"

Ground Surface Elev.
Depth to Water (ft BGS)
Start/Finish Date 12/5/2013

Depth / Elevation (feet)	Borehole Completion	Sample Type/ID	Tests	PID (ppm)	Blows/ 6"	Material Type	Description	Depth (ft)
	12/5/2013		CN-B14-0.5	0			Recycled demo debris Wet	
			CN-B14-1.25	0			Stiff, wet, brownish gray, sandy SILT (ML); fine sand	
		CC-01		0			No recovery	
5								5
				0			Loose, wet, brown, gravelly SILT (ML)	
							Woody debris	
	Hydrated bentonite chip backfill	CC-02		0 0			Medium dense, wet, gray, silty SAND (SM); fine to medium sand	
							No recovery	
10								10
		CC-03	CN-B14-10				Medium dense, wet, gray, silty SAND (SM); fine to medium sand	
							No Recovery	
15								15
							Bottom of boring 15 feet Note: Density and consistency was estimated based on sample observations.	

Sampler Type:
- No Recovery
- Continuous Core

PID - Photoionization Detector (Headspace Measurement)
- Static Water Level
- Water Level (ATD)

Logged by: AHP
Approved by: SJG
Figure No. A- 47

_ENV BORING LOG KIMBERLY CLARK-EVERETT.GPJ July 31, 2014

Boring Log

Aspect CONSULTING

Project Number	Boring Number	Sheet
110207	CN-MW-01	1 of 1

Project Name: Kimberly Clark
Location: Everett, WA
Driller/Method: Holt / Direct Push Probe
Sampling Method: Continuous Core 3"

Ground Surface Elev.: 14.41
Depth to Water (ft BGS):
Start/Finish Date: 10/22/2013

Depth / Elevation (feet)	Borehole Completion	Sample Type/ID	Tests	PID (ppm)	Blows/ 6"	Material Type	Description	Depth (ft)
	8" Flush-mount monument and thermos cap Concrete surface seal 0' to 1' 3/8" Hydrated bentonite chips 1' to 2'	CC-1	CN-MW-1-4.5				Dry, brown to black, gravelly, silty, SAND (SM); organics (woody debris)	
							Dry, light gray, slightly silty, slightly sandy, GRAVEL (GP-GM)	
							Slightly moist, dark gray, interbedded SAND (SP) and SILT (ML); fine sand	
							No recovery	
10								
5	20/40 pre-pack Silica sand filter pack 2' to 13.25'						Slightly moist, dark gray, interbedded SAND (SP) and SILT (ML); fine sand	5
	▽ 10/22/2013		CN-MW-1-9.5				Wet, SAND (SW) and SILT (ML); fine to coarse, rounded, sand, shell fragments	
		CC-2					No recovery	
5	2" Diameter PVC pre-packed 10-slot screen 3' to 13'							
10							Wet, gray, SAND (SW); fine to coarse sand	10
			CN-MW-1-13				Wet, gray, SILT (ML); interbedded with wood chips	
		CC-3					No recovery	
	Threaded cap							
0	Slough 13.25' to 15'							
15							Bottom of boring at 15 feet	15

Sampler Type:
- ◯ No Recovery
- ▌▌ Continuous Core

PID - Photoionization Detector (Headspace Measurement)
- ▼ Static Water Level
- ▽ Water Level (ATD)

Logged by: AHP
Approved by: SJG
Figure No. A- 48

_ENV BORING LOG KIMBERLY CLARK-EVERETT.GPJ July 31, 2014

Boring Log

Aspect CONSULTING

Project Number	Boring Number	Sheet
110207	CN-MW-02	1 of 1

Project Name: Kimberly Clark
Location: Everett, WA
Driller/Method: Holt / Direct Push Probe
Sampling Method: Continuous Core 3"

Ground Surface Elev.: 15.01
Depth to Water (ft BGS):
Start/Finish Date: 10/22/2013

Depth / Elevation (feet)	Borehole Completion	Sample Type/ID	Tests	PID (ppm)	Blows/ 6"	Material Type	Description	Depth (ft)
	8" Flush-mount monument and thermos cap Concrete surface seal 0' to 1' 3/8" Hydrated bentonite chips 1' to 2'						Asphalt pavement	
							Dry, gray to green gray, gravelly, SAND (SP); fine, subrounded sand	
							Dry, gray, SAND (SP); fine sand	
							Dry, gray, SILT (ML)	
				0			Dry, gray, SAND (SP); fine sand	
		CC-1					Dry, gray, SILT (ML)	
							No recovery	
			CN-MW-2-4					
5 / 10	20/40 pre-pack Silica sand filter pack 2' to 12.75'						Wet, gray, sandy, SILT (ML); numerous shell fragments	5
	▽ 10/22/2013			0				
		CC-2						
			CN-MW-2-8	0			Trace shell fragments	
							No recovery	
	2" Diameter PVC pre-packed 10-slot screen 2.5' to 12.5'		CN-MW-2-9.5					
10 / 5							Wood chips	10
	Threaded cap	CC-3					No recovery	
	Slough 12.75' to 15'							
15 / 0							Bottom of boring at 15 feet	15

Sampler Type:
- ◯ No Recovery
- ▌▌ Continuous Core

PID - Photoionization Detector (Headspace Measurement)
- ▼ Static Water Level
- ▽ Water Level (ATD)

Logged by: AHP
Approved by: SJG
Figure No. A- 49

_ENV BORING LOG KIMBERLY CLARK-EVERETT.GPJ July 31, 2014

Boring Log

Aspect CONSULTING

Project Number	Boring Number	Sheet
110207	CN-MW-03	1 of 1

Project Name: Kimberly Clark
Location: Everett, WA
Driller/Method: Holt / Direct Push Probe
Sampling Method: Continuous Core 3"

Ground Surface Elev.: 13.50
Depth to Water (ft BGS):
Start/Finish Date: 10/22/2013

Depth / Elevation (feet)	Borehole Completion	Sample Type/ID	Tests	PID (ppm)	Blows/ 6"	Material Type	Description	Depth (ft)
	8" Flush-mount monument and thermos cap Concrete surface seal 0' to 1' 3/8" Hydrated bentonite chips 1' to 2'						Asphalt pavement	
							Dry to slightly moist, gray, silty, gravelly, SAND (SM); fine to medium sand, fine gravel	
							Wood chips	
		CC-1	CN-MW-3-4	0			Moist, gray, SILT (ML)	
	10/22/2013		CN-MW-3-4.5	0			Wet, gray, SAND; fine to medium, subrounded, sand	
10							No recovery	
5	20/40 pre-pack Silica sand filter pack 2' to 13.25'						Wood chips	5
			CN-MW-3-6	0				
		CC-2						
5	2" Diameter PVC pre-packed 10-slot screen 3' to 13'							
							No recovery	
10							Wood chips	10
		CC-3						
							No recovery	
0	Threaded cap							
	Slough 13.25' to 15'							
15							Bottom of boring at 15 feet	15

Sampler Type:
- ◯ No Recovery
- ▌▌ Continuous Core

PID - Photoionization Detector (Headspace Measurement)
- ▼ Static Water Level
- ▽ Water Level (ATD)

Logged by: AHP
Approved by: SJG
Figure No. A- 50

_ENV BORING LOG KIMBERLY CLARK-EVERETT.GPJ July 31, 2014

Monitoring Well Construction Log

Aspect CONSULTING

Project Number	Well Number	Sheet
110207	CN-MW-101	1 of 1

Project Name: Kimberly Clark
Location: Everett, WA
Driller/Method: Holt / Direct Push Probe-Limited Access
Sampling Method: Continuous Core

Ground Surface Elev.:
Top of Casing Elev.:
Depth to Water (ft BGS):
Start/Finish Date: 4/22/2014

Depth / Elevation (feet)	Borehole Completion	Sample Type/ID	Tests	PID (ppm)	Blows/ 6"	Material Type	Description	Depth (ft)
	8" Flush-mount monument and thermos cap Concrete surface seal 0' to 2'			0.0			Recycled demo debris	
				0.0				
		S1		0.0			Moist, dark gray, sandy SILT (ML); fine sand	
	3/8" Hydrated bentonite chips 2' to 4'						No recovery	
	10/20 pre-pack Silica sand filter pack 4' to 15'							
5							Moist, dark gray, sandy SILT (ML); fine sand	5
				0.0				
	4/22/2014			0.0			Grades to wet, dark gray SAND (SP); fine to medium sand, scattered shells	
		S2		0.0				
				0.0				
	2" Diameter PVC pre-packed 10-slot screen 5' to 15'			0.0			Wet, black, solid wood	
10				0.0			becomes sawdust	10
				1.3				
		S3					No recovery	
15	Threaded cap						Bottom of boring at 15 feet	15

Sampler Type:
- ◯ No Recovery
- ▮ Continuous Core

PID - Photoionization Detector
- ▼ Static Water Level
- ▽ Water Level (ATD)

Logged by: AET/MML
Approved by: SJG
Figure No. A-

MONITORING WELL KIMBERLY CLARK-EVERETT.GPJ October 14, 2015

Monitoring Well Construction Log

Aspect CONSULTING

Project Number	Well Number	Sheet
110207	CN-MW-102	1 of 1

Project Name: Kimberly Clark
Location: Everett, WA
Driller/Method: Holt / Direct Push Probe-Limited Access
Sampling Method: Continuous Core

Ground Surface Elev.:
Top of Casing Elev.:
Depth to Water (ft BGS):
Start/Finish Date: 4/22/2014

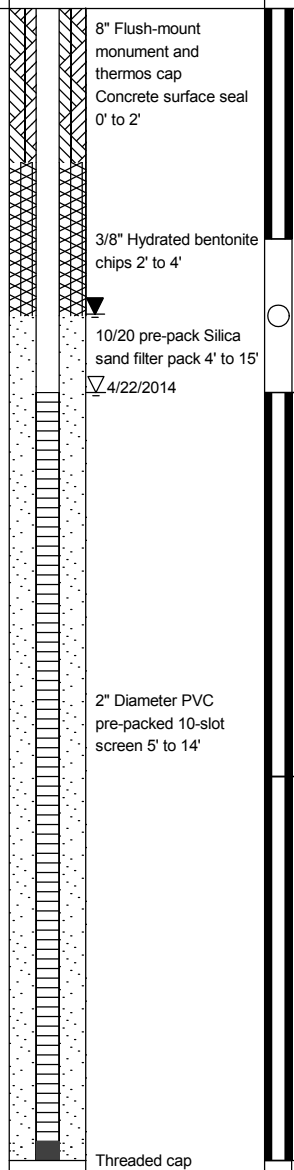

Depth / Elevation (feet)	PID (ppm)	Blows/ 6"	Material Type	Description	Depth (ft)
	0.0			Recycled demo debris	
	0.0				
	0.0			Moist, dark gray, very sandy SILT (ML); fine sand, scattered organics	
				No recovery	
5				Wet, dark gray SAND (SW); fine to coarse sand	5
	0.0			Wet, gray SAND (SP); fine to medium sand, scattered fibrous organics and shells	
	0.0				
	0.0				
	0.0			Wet, light gray, sandy, GRAVEL (GP), fine, crushed gravel	
	0.0			Wood debris	
10					10
	0.0			Wet, dark gray, slightly gravelly SAND (SP); medium sand, scattered organics and shells	
	0.0			slight sheen at 11', no odor	
	0.0			Wood debris and sawdust	
	0.0				
	0.0				
15				Bottom of boring at 15 feet	15

Sampler Type:
- ◯ No Recovery
- ▮ Continuous Core

PID - Photoionization Detector
- ▼ Static Water Level
- ▽ Water Level (ATD)

Logged by: AET/MML
Approved by: SJG
Figure No. A-

MONITORING WELL KIMBERLY CLARK-EVERETT.GPJ October 14, 2015

Monitoring Well Construction Log

Aspect CONSULTING

Project Number	Well Number	Sheet
110207	CN-MW-103	1 of 1

Project Name: Kimberly Clark
Location: Everett, WA
Driller/Method: Holt / Direct Push Probe-Limited Access
Sampling Method: Continuous Core

Ground Surface Elev.
Top of Casing Elev.
Depth to Water (ft BGS)
Start/Finish Date: 4/22/2014

Depth / Elevation (feet)	Borehole Completion	Sample Type/ID	Tests	PID (ppm)	Blows/ 6"	Material Type	Description	Depth (ft)
	8" Flush-mount monument and thermos cap Concrete surface seal 0' to 2'			0.0			Recycled demo debris	
				60.0			Loose, moist, brown, sandy GRAVEL (GP); subrounded to subangular fine gravel	
		S1					Moist, gray, sandy SILT (ML); fine sand, trace organics	
	3/8" Hydrated bentonite chips 2' to 4'						No recovery	
	10/20 pre-pack Silica sand filter pack 4' to 15'							
5	▽4/22/2014			0.0			Moist, gray and brown mottled, sandy, gravelly SILT (ML)	5
				0.0			Wet, gray SAND (SP); fine to medium sand	
		S2		0.0				
				0.0				
	2" Diameter PVC pre-packed 10-slot screen 5' to 14'						No recovery	
10				0.0			Dense, wet, gray SAND (SP); fine to medium sand	10
		S3		0.0			Medium dense, wet, sandy ORGANIC SILT (OL); sawdust and woodchips	
				0.0				
				0.0			Dark brown, wood debris and sawdust	
15	Threaded cap			0.0			Bottom of boring at 15 feet	15

Sampler Type:
- ◯ No Recovery
- ▮ Continuous Core

PID - Photoionization Detector
- ▼ Static Water Level
- ▽ Water Level (ATD)

Logged by: AET/MML
Approved by: SJG
Figure No. A-

MONITORING WELL KIMBERLY CLARK-EVERETT.GPJ October 14, 2015

Monitoring Well Construction Log

Aspect CONSULTING

Project Number	Well Number	Sheet
110207	CN-MW-104	1 of 1

Project Name: Kimberly Clark
Location: Everett, WA
Driller/Method: Holt / Direct Push Probe-Limited Access
Sampling Method: Continuous Core

Ground Surface Elev.:
Top of Casing Elev.:
Depth to Water (ft BGS):
Start/Finish Date: 4/22/2014

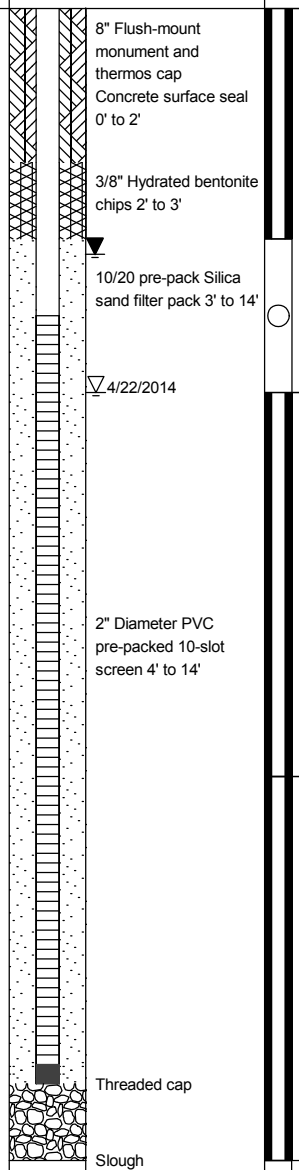

Depth / Elevation (feet)	PID (ppm)	Blows/ 6"	Material Type	Description	Depth (ft)
	0.0			Recycled demo debris	
	0.0			Moist, brown, slightly gravelly SAND (SP); fine to medium sand	
	0.0			Wet	
				No recovery	
5					5
	0.0			Wet, brown, slightly gravelly SAND (SP); fine to medium sand	
	0.0				
				Wet, gray, silty SAND (SM); fine sand	
	0.0			Wet, dark gray SAND (SP); fine to medium sand	
	0.0				
	0.0			Wet, gray to brown sawdust	
10					10
	0.0			Wet, brown SAND (SW); fine to coarse sand, trace gravel	
	0.0				
	0.0			Wet, gray SAND (SP); fine to medium sand	
	0.0			Wood debris	
	0.0				
15				Bottom of boring at 15 feet	15

Sampler Type:
- ◯ No Recovery
- ▮ Continuous Core

PID - Photoionization Detector
- ▼ Static Water Level
- ▽ Water Level (ATD)

Logged by: AET/MML
Approved by: SJG
Figure No. A-

MONITORING WELL KIMBERLY CLARK-EVERETT.GPJ October 14, 2015

Boring Log

Aspect CONSULTING

Project Number	Boring Number	Sheet
110207	CSB-B01	1 of 1

Project Name: Kimberly Clark
Location: Everett, WA
Driller/Method: Holt / Direct Push Probe
Sampling Method: Continous Core 2"

Ground Surface Elev.
Depth to Water (ft BGS)
Start/Finish Date 11/19/2013

Depth / Elevation (feet)	Borehole Completion	Sample Type/ID	Tests	PID (ppm)	Blows/ 6"	Material Type	Description	Depth (ft)
							Recycled demo debris	
				0			Medium dense, moist, brown sandy GRAVEL (GW); fine to coarse sand, fine to coarse subangular gravel	
		CC-01		0			No recovery	
5							Medium dense, moist, brown sandy GRAVEL (GW); fine to coarse sand, fine to coarse subangular gravel	5
				0			Medium dense, moist to wet, brown, slightly gravelly SAND (SW); fine gravel, fine to coarse sand	
			CSB-B1-6	0				
	Hydrated bentonite chip backfill			0				
		CC-02		0				
	11/19/2013			0				
			CSB-B1-8	0				
				0				
							No recovery	
10							Medium dense, moist to wet, brown, slightly gravelly SAND (SW); fine gravel, fine to coarse sand	10
				0				
				0				
				0				
			CSB-B1-12	0			Medium stiff, wet, gray, silty SAND (SM); fine sand	
		CC-03		0				
				0				
				0			trace shells	
				0			Fine to coarse sand	
							No recovery	
15							Bottom of boring 15 feet Note: Density and consistency was estimated based on sample observations.	15

Sampler Type:
- ◯ No Recovery
- ▌▌ Continuous Core

PID - Photoionization Detector (Headspace Measurement)
- ▼ Static Water Level
- ▽ Water Level (ATD)

Logged by: AHP
Approved by: SJG
Figure No. A- 51

_ENV BORING LOG KIMBERLY CLARK-EVERETT.GPJ July 31, 2014

Boring Log

Aspect CONSULTING

Project Number	Boring Number	Sheet
110207	CSB-B02	1 of 1

Project Name: Kimberly Clark
Location: Everett, WA
Driller/Method: Holt / Direct Push Probe
Sampling Method: Continous Core 2"

Ground Surface Elev.
Depth to Water (ft BGS)
Start/Finish Date 11/19/2013

Depth / Elevation (feet)	Borehole Completion	Sample Type/ID	Tests	PID (ppm)	Blows/ 6"	Material Type	Description	Depth (ft)
0							Recycled demo debris	0
1								1
2			CSB-B2-2-111913				Medium stiff, slightly moist, gray, slightly gravelly, silty SAND (SM); fine to medium sand	2
		CC-01					Stiff	
3	Hydrated bentonite chip backfill		CSB-B2-3-111913					3
		◯					No recovery	
4								4
5							Bottom of boring 5 feet Note: Density and consistency was estimated based on sample observations.	5
6								6
7								7
8								8
9								9

Sampler Type:
◯ No Recovery
▌▌ Continuous Core

PID - Photoionization Detector (Headspace Measurement)
▼ Static Water Level
▽ Water Level (ATD)

Logged by: AHP
Approved by: SJG
Figure No. A- 52

_ENV BORING LOG KIMBERLY CLARK-EVERETT.GPJ July 31, 2014

Boring Log

Project Number	Boring Number	Sheet
110207	DA-B-01	1 of 1

Project Name: Kimberly Clark
Location: Everett, WA
Driller/Method: Cascade Drilling / Direct Push Probe-Limited Access
Sampling Method: Continuous Core

Ground Surface Elev.:
Depth to Water (ft BGS):
Start/Finish Date: 9/5/2012

Depth / Elevation (feet)	Borehole Completion	Sample Type/ID	Tests	PID (ppm)	Blows/ 6"	Material Type	Description	Depth (ft)
	3/8" hydrated bentonite chips	CC-1	DA-B-01-1-2	0			Asphalt	
				0			Moist to wet, brown, gravelly SAND (SP); poorly graded fine to medium sand	
				0			Thin bed silt Becomes wet, black, slightly gravelly	
				0			No recovery	
5			DA-B-01-5-6	0			Wet, gray to black, gravelly SAND (SP); poorly graded medium sand	5
		CC-2		0				
			DA-B-01-7-8	0				
				0				
				0			Numerous seashells	
10				0			Bottom of boring at 10' BGS	10
15								15
20								20
25								25

Sampler Type:
- ◯ No Recovery
- ▌▌ Continuous Core

PID - Photoionization Detector (Headspace Measurement)
- ▼ Static Water Level
- ▽ Water Level (ATD)

Logged by: AET/MAR
Approved by: SJG
Figure No. A- 53

_ENV BORING LOG KIMBERLY CLARK-EVERETT.GPJ July 31, 2014

Boring Log

Aspect CONSULTING

Project Number	Boring Number	Sheet
110207	DA-MW-01	1 of 1

Project Name: Kimberly Clark
Location: Everett, WA
Driller/Method: Cascade Drilling / Direct Push Probe-Limited Access
Sampling Method: Continuous Core

Ground Surface Elev.
Depth to Water (ft BGS)
Start/Finish Date 9/7/2012

Depth / Elevation (feet)	Borehole Completion	Sample Type/ID	Tests	PID (ppm)	Blows/ 6"	Material Type	Description	Depth (ft)
	8" flush-mount monument and thermos cap Concrete surface seal 3/8" hydrated bentonite chips 10/20 silica sand filter pack	CC-1	DA-MW-01-1-2	0 0 0			Asphalt Moist, dark gray, gravelly, very silty SAND (SM); fine sand No recovery	
5	2" diameter PVC pre-packed .001 slot screen	CC-2	DA-MW-01-5-6 DA-MW-01-7-8	1.7 1.8 1.4 1.1 0.7 0.5			Wet, dark gray, gravelly, very silty SAND (SM); fine sand Plastic sheeting Wet, dark gray SAND (SP); fine to medium sand; trace gravel	5
10	Threaded cap	CC-3		0 0			No recovery Wet, dark gray SAND (SP); fine to medium sand; trace gravel	10
	Slough						Wet, gray, clayey SILT (ML) Wet, brown PEAT (PT); fibrous peat Wet, brown gray SAND (SP); fine to medium sand, numerous organics	
15							Wet, brown PEAT (PT); fibrous peat Bottom of boring at 15' BGS	15
20								20
25								25

Sampler Type:
- No Recovery
- Continuous Core

PID - Photoionization Detector (Headspace Measurement)
- Static Water Level
- Water Level (ATD)

Logged by: AET/MAR
Approved by: SJG
Figure No. A- 54

_ENV BORING LOG KIMBERLY CLARK-EVERETT.GPJ July 31, 2014

Monitoring Well Construction Log

Aspect CONSULTING

Project Number	Well Number	Sheet
110207	DAST-MW-101	1 of 1

Project Name: Kimberly Clark
Location: Everett, WA
Driller/Method: Holt / Direct Push Probe-Limited Access
Sampling Method: Continuous Core

Ground Surface Elev.
Top of Casing Elev.
Depth to Water (ft BGS)
Start/Finish Date: 4/28/2014

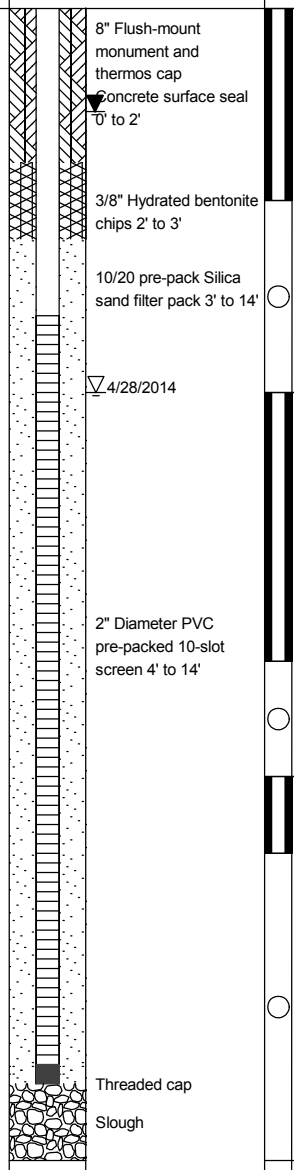

Depth / Elevation (feet)	PID (ppm)	Blows/ 6"	Material Type	Description	Depth (ft)
	0.0			Recycled demo debris	
	0.0			Burnt organic material, charcoal	
				Moist, gray SAND (SP); fine to medium sand	
	0.0			No recovery	
5					5
	0.0			Moist, gray SAND (SP); fine to medium sand	
	0.0			Becomes wet and black	
	0.0			2" silt bed	
	0.0			2" silt bed	
				No recovery	
10					10
	0.0			Loose, wet, brown SAND (SP); possibly slough	
				No recovery	
15				Bottom of boring at 15' bgs	15

Sampler Type:
- ○ No Recovery
- ▮ Continuous Core

PID - Photoionization Detector
- ▼ Static Water Level
- ▽ Water Level (ATD)

Logged by: AET
Approved by: SJG
Figure No. A-

_MONITORING WELL_KIMBERLY CLARK-EVERETT.GPJ October 14, 2015

Boring Log

Aspect CONSULTING

Project Number	Boring Number	Sheet
110207	DP-01	1 of 1

Project Name: Kimberly Clark
Location: Everett, WA
Driller/Method: Cascade Drilling / Direct Push Probe-Limited Access
Sampling Method: Continuous Core

Ground Surface Elev.
Depth to Water (ft BGS)
Start/Finish Date 2/14/2012

Depth / Elevation (feet)	Borehole Completion	Sample Type/ID	Tests	PID (ppm)	Blows/ 6"	Material Type	Description	Depth (ft)
	Concrete						Asphalt	
				0			Wet, brown to gray, slightly sandy GRAVEL (GP); trace silt, fine angular gravel	
	Hydrated medium bentonite chips	CC-1	DP-1-2.5-3	0			Wet, dark brown, slightly silty, gravelly SAND (SP); fine to medium sand	
				0			Gray sand, trace gravel	
				0.7			No recovery	
5			DP-2-5.5-6	0.7			Wet, dark brown, slightly silty, gravelly SAND (SP); fine to medium sand	5
		CC-2		0			No recovery	
				0				
				0				
10				0			Wet, dark brown, slightly silty, gravelly SAND (SP); fine to medium sand, scattered shell fragments	10
				0				
				0			Wet, gray, sandy GRAVEL (GP); fine to medium gravel, scattered shell fragments	
		CC-3		0			No recovery	
				0			Wet, gray SAND (SP); trace gravel and silt, fine to medium sand	
				0				
15				0			Bottom of boring at 15' BGS	15

Sampler Type:
- ◯ No Recovery
- ▌▌ Continuous Core

PID - Photoionization Detector (Headspace Measurement)
- ▼ Static Water Level
- ▽ Water Level (ATD)

Logged by: MAR
Approved by: SJG
Figure No. A- 56

_ENV BORING LOG KIMBERLY CLARK-EVERETT.GPJ July 31, 2014

Boring Log

Aspect CONSULTING

Project Number	Boring Number	Sheet
110207	DP-02	1 of 1

Project Name: Kimberly Clark
Location: Everett, WA
Driller/Method: Cascade Drilling / Direct Push Probe-Limited Access
Sampling Method: Continuous Core

Ground Surface Elev.
Depth to Water (ft BGS)
Start/Finish Date 2/14/2012

Depth / Elevation (feet)	Borehole Completion	Sample Type/ID	Tests	PID (ppm)	Blows/ 6"	Material Type	Description	Depth (ft)
	Concrete						Concrete	
			DP-2-1.5-2.5	0			Wet brown to gray, slightly sandy to sandy GRAVEL (GP); trace silt, fine-to-medium subangular gravel	
	Hydrated medium bentonite chips	CC-1		0			Wet, brown SAND (SP); trace gravel, fine to medium sand	
				0				
			DP-2-4-5	9.5			Becomes black, gravelly, scattered wood	
5				57.7			Becomes gray	5
			DP-2-6-7	2.9			No recovery	
		CC-2						
10				0			Wet, brown SILT (ML)	10
				0			Wet, gray, slightly gravelly SAND (SP); fine to medium sand	
				0				
		CC-3		0			No recovery	
15							Bottom of boring at 15' BGS	15

Sampler Type:
- ◯ No Recovery
- ▌▌ Continuous Core

PID - Photoionization Detector (Headspace Measurement)
- ▼ Static Water Level
- ▽ Water Level (ATD)

Logged by: MAR
Approved by: SJG
Figure No. A- 57

_ENV BORING LOG KIMBERLY CLARK-EVERETT.GPJ July 31, 2014

Boring Log

Aspect CONSULTING

Project Number	Boring Number	Sheet
110207	DP-03	1 of 1

Project Name: Kimberly Clark
Location: Everett, WA
Driller/Method: Cascade Drilling / Direct Push Probe-Limited Access
Sampling Method: Continuous Core

Ground Surface Elev.:
Depth to Water (ft BGS):
Start/Finish Date: 2/14/2012

Depth / Elevation (feet)	Borehole Completion	Sample Type/ID	Tests	PID (ppm)	Blows/ 6"	Material Type	Description	Depth (ft)
	Concrete						Concrete to 9"	
			DP-3-1-2	0			Wet, brown, sandy GRAVEL (GP); trace silt, fine angular gravel	
	▼			0.1			Wet, brown to gray, silty, gravelly SAND (SP); fine to medium sand	
	Hydrated medium bentonite chips	CC-1		0				
			DP-3-4-5				Product from 3.5' to 5'	
							Wood at 4', strong petroleum-like odor	
5				28.7				5
			DP-3-6-7				Black SILT (ML)	
				1.5			Wet, gray SAND (SP); trace gravel, medium sand	
		CC-2		1.5				
				1.5				
10				1.5			Wet, dark gray, silty SAND (SM); fine sand	10
				0.2			Wet, gray SAND (SP); trace gravel, fine to medium sand	
		CC-3		0.2				
				0.2				
				0.2				
15				0.2			Bottom of boring at 15' BGS	15

Sampler Type:
- ◯ No Recovery
- ▌▌ Continuous Core

PID - Photoionization Detector (Headspace Measurement)
- ▼ Static Water Level
- ▽ Water Level (ATD)

Logged by: MAR
Approved by: SJG
Figure No. A- 58

_ENV BORING LOG KIMBERLY CLARK-EVERETT.GPJ July 31, 2014

Boring Log

Aspect CONSULTING

Project Number	Boring Number	Sheet
110207	DP-04	1 of 1

Project Name: Kimberly Clark
Location: Everett, WA
Driller/Method: Cascade Drilling / Direct Push Probe-Limited Access
Sampling Method: Continuous Core

Ground Surface Elev.
Depth to Water (ft BGS)
Start/Finish Date 2/14/2012

Depth / Elevation (feet)	Borehole Completion	Sample Type/ID	Tests	PID (ppm)	Blows/ 6"	Material Type	Description	Depth (ft)
	Concrete						Asphalt	
			DP-4-1-2	0			Wet, brown, slightly sandy GRAVEL (GP); subangular fine-medium gravel	
							Wet, gray, SAND (SP); fine to medium sand	
	Hydrated medium bentonite chips	CC-1		0			Wet, gray, silty SAND (SM); fine sand, brick fragment	
				0				
				0			Wet, gray SAND (SP); fine to medium sand	
5				0				5
		CC-2		0				
				0				
				0				
			DP-4-9-10	0			Very silty SAND (SP); numerous organics	
10				0				10
		CC-3		0				
				0			Fibrous brown PEAT (PT); hydrogen sulfide odor	
				0			Sand lens	
				0			Fibrous brown PEAT (PT); hydrogen sulfide odor	
				0				
15				0			Silty SAND (SM); fine sand, numerous organics	15
							Bottom of boring at 15' BGS	

Sampler Type:
- ◯ No Recovery
- ▌▌ Continuous Core

PID - Photoionization Detector (Headspace Measurement)
- ▼ Static Water Level
- ▽ Water Level (ATD)

Logged by: MAR
Approved by: SJG
Figure No. A- 59

_ENV BORING LOG KIMBERLY CLARK-EVERETT.GPJ July 31, 2014

Boring Log

Aspect CONSULTING

Project Number	Boring Number	Sheet
110207	DP-05	1 of 1

Project Name: Kimberly Clark
Location: Everett, WA
Driller/Method: Cascade Drilling / Direct Push Probe-Limited Access
Sampling Method: Continuous Core

Ground Surface Elev.
Depth to Water (ft BGS)
Start/Finish Date 2/14/2012

Depth / Elevation (feet)	Borehole Completion	Sample Type/ID	Tests	PID (ppm)	Blows/ 6"	Material Type	Description	Depth (ft)
	Concrete						Concrete to 9"	
			DP-5-1.5-2.5	0.2			Wet, brown, sandy GRAVEL (GP); angular fine-to-medium gravel	
	Hydrated medium bentonite chips	CC-1		0.2			Wet, gray, slightly sandy SILT (ML); trace gravel	
				0.3				
				0.2			Wet, gray SAND (SP); fine to medium sand	
5				65.9			Wet, gray, slightly sandy SILT (ML)	5
		CC-2	DP-5-7-8	65.9				
				65.9				
				65.9				
10				0			Wet, gray SAND (SP); fine to medium sand	10
		CC-3		0				
				0				
			DP-5-13-14	0			Wet, brown, organic SILT (OL)	
				0			Wet, gray SAND (SP); fine to medium sand	
				0			Wet, gray SAND (SW); fine to coarse sand	
15				0			Bottom of boring at 15' BGS	15

Sampler Type:
- ◯ No Recovery
- ▌▌ Continuous Core

PID - Photoionization Detector (Headspace Measurement)
- ▼ Static Water Level
- ▽ Water Level (ATD)

Logged by: MAR
Approved by: SJG
Figure No. A- 60

_ENV BORING LOG KIMBERLY CLARK-EVERETT.GPJ July 31, 2014

Boring Log

Aspect CONSULTING

Project Number	Boring Number	Sheet
110207	DP-06	1 of 1

Project Name: Kimberly Clark
Location: Everett, WA
Driller/Method: Cascade Drilling / Direct Push Probe-Limited Access
Sampling Method: Continuous Core

Ground Surface Elev.
Depth to Water (ft BGS)
Start/Finish Date 2/14/2012

Depth / Elevation (feet)	Borehole Completion	Sample Type/ID	Tests	PID (ppm)	Blows/ 6"	Material Type	Description	Depth (ft)
	Concrete						Asphalt	
				0.2			Moist, gray, slightly silty, sandy GRAVEL (GP); fine-to-medium subrounded gravel	
							Moist, brown, SILT (ML)	
	Hydrated medium bentonite chips	CC-1		0.2			Wet, brown, sandy GRAVEL (GP); fine to medium subrounded gravel	
			DP-6-3-4	0.2			Wet, dark gray, slightly sandy SILT (ML)	
5				0.2				5
				0				
		CC-2	DP-6-7-8	0				
				0				
				0			Wet, dark gray SAND (SP); trace gravel, fine to medium sand	
10				0				10
				0				
		CC-3		0				
				0				
				0			4" organic SILT (OL)	
				0			Wet, gray, silty SAND (SP); fine to medium sand, numerous organics	
15				0			Bottom of boring at 15' BGS	15

Sampler Type:
- No Recovery
- Continuous Core

PID - Photoionization Detector (Headspace Measurement)
- Static Water Level
- Water Level (ATD)

Logged by: MAR
Approved by: SJG
Figure No. A- 61

_ENV BORING LOG KIMBERLY CLARK-EVERETT.GPJ July 31, 2014

Boring Log

Aspect CONSULTING

Project Number	Boring Number	Sheet
110207	DP-08	1 of 1

Project Name: Kimberly Clark
Location: Everett, WA
Driller/Method: Cascade Drilling / Direct Push Probe-Limited Access
Sampling Method: Continuous Core

Ground Surface Elev.
Depth to Water (ft BGS)
Start/Finish Date 2/14/2012

Depth / Elevation (feet)	Borehole Completion	Sample Type/ID	Tests	PID (ppm)	Blows/ 6"	Material Type	Description	Depth (ft)
	Concrete						Asphalt	
				0			Moist, brown, silty, sandy GRAVEL (GM); fine angular gravel	
	Hydrated medium bentonite chips	CC-1		0				
				0				
			DP-8-4-5	0			Very moist, brown SAND (SP); trace gravel, fine sand	
5				1.8			Wet, dark gray, very silty SAND (SM); fine sand, scattered shell fragments	5
			DP-8-6-7	1.8				
				1.8			3" bed organic SILT (OL)	
		CC-2					Wet, dark gray SAND (SP); fine to medium sand	
				1.8				
				1.8				
10				35.8				10
				35.8				
			DP-8-12-13	35.8				
		CC-3						
				35.8				
				35.8				
15							Bottom of boring at 15' BGS	15

Sampler Type:
- No Recovery
- Continuous Core

PID - Photoionization Detector (Headspace Measurement)
- Static Water Level
- Water Level (ATD)

Logged by: MAR
Approved by: SJG
Figure No. A- 62

_ENV BORING LOG KIMBERLY CLARK-EVERETT.GPJ July 31, 2014

Boring Log

Aspect CONSULTING

Project Number	Boring Number	Sheet
110207	DP-10	1 of 1

Project Name: Kimberly Clark
Location: Everett, WA
Driller/Method: Cascade Drilling / Direct Push Probe-Limited Access
Sampling Method: Continuous Core

Ground Surface Elev.
Depth to Water (ft BGS)
Start/Finish Date 2/14/2012

Depth / Elevation (feet)	Borehole Completion	Sample Type/ID	Tests	PID (ppm)	Blows/ 6"	Material Type	Description	Depth (ft)
	Concrete						Asphalt	
							Concrete	
				0.2			Moist, brown to gray, silty SAND (SM); fine sand, alternating bands of gray and brown	
	Hydrated medium bentonite chips	CC-1	DP-10-3-4	0.2				
				0.2				
				0.2			Moist to wet, dark gray SAND (SP); fine to medium sand with numerous shell fragments	
5				0.8				5
				0.8				
		CC-2		0.8				
			DP-10-9-10	0.8				
10				0.8			2" silt interbed	10
				21.4			Wet, dark gray, silty SAND (SM); fine sand	
				21.4			Wet, dark gray SAND (SP); fine to medium sand	
		CC-3		21.4			Wet, dark gray, silty SAND (SM); fine sand	
				21.4				
				21.4			Wet, dark gray SAND (SP); fine to medium sand	
15				21.4			Bottom of boring at 15' BGS	15

Sampler Type:
- ◯ No Recovery
- ▌▌ Continuous Core

PID - Photoionization Detector (Headspace Measurement)
- ▼ Static Water Level
- ▽ Water Level (ATD)

Logged by: MAR
Approved by: SJG
Figure No. A- 63

_ENV BORING LOG KIMBERLY CLARK-EVERETT.GPJ July 31, 2014

Boring Log

Aspect CONSULTING

Project Number	Boring Number	Sheet
110207	DP-11	1 of 1

Project Name: Kimberly Clark
Location: Everett, WA
Driller/Method: Cascade Drilling / Direct Push Probe-Limited Access
Sampling Method: Continuous Core

Ground Surface Elev.:
Depth to Water (ft BGS):
Start/Finish Date: 2/15/2012

Depth / Elevation (feet)	Borehole Completion	Sample Type/ID	Tests	PID (ppm)	Blows/ 6"	Material Type	Description	Depth (ft)
	Concrete						Asphalt	
				0			Very moist, brown to dark brown, gravelly SAND (SP); poorly graded fine-to-medium sand	
	Hydrated medium bentonite chips	CC-1		0				
			DP-11-4-5	0				
5				0			Wet, dark gray SILT (ML); scattered organics (wood), slight H2S odor	5
		CC-2		0				
			DP-11-8.5-9.5	0				
				0				
10				0				10
				0				
		CC-3		2.7			Wet, black, SAND (SP); fine to medium sand, scattered shell fragments, H2S odor	
				2.7				
			DP-11-14-15	2.7				
15				10.0			Bottom of boring at 15' BGS	15

Sampler Type:
- No Recovery
- Continuous Core

PID - Photoionization Detector (Headspace Measurement)
- Static Water Level
- Water Level (ATD)

Logged by: MAR
Approved by: SJG
Figure No. A- 64

_ENV BORING LOG KIMBERLY CLARK-EVERETT.GPJ July 31, 2014

Boring Log

Aspect CONSULTING

Project Number	Boring Number	Sheet
110207	DP-12	1 of 1

Project Name: Kimberly Clark
Location: Everett, WA
Driller/Method: Cascade Drilling / Direct Push Probe-Limited Access
Sampling Method: Continuous Core

Ground Surface Elev.
Depth to Water (ft BGS)
Start/Finish Date 2/15/2012

Depth / Elevation (feet)	Borehole Completion	Sample Type/ID	Tests	PID (ppm)	Blows/ 6"	Material Type	Description	Depth (ft)
	Concrete						Asphalt	
				0			Moist, brown, very silty GRAVEL (GM); trace sand, no odor	
	Hydrated medium bentonite chips	CC-1		0				
				0			Moist, brown, gravelly SAND (SP); fine to medium sand; debris (burnt/melted plastic, charred brick)	
5				0				5
			DP-12-6.5-7.5	0			Wet, brown, very silty GRAVEL (GM); fine to medium subangular gravel; debris (burnt/melted plastic, charred brick) to 8'	
		CC-2		0				
			DP-12-9-10	0				
							Wet, black, SAND (SP); fine to medium sand	
10				0			Wet, dark brown to dark gray, very sandy GRAVEL (GP); trace black silt, fine to medium subrounded gravel	10
		CC-3		0				
				0			H2S odor at 14'	
15				0			Bottom of boring at 15' BGS	15

Sampler Type:
- No Recovery
- Continuous Core

PID - Photoionization Detector (Headspace Measurement)
- Static Water Level
- Water Level (ATD)

Logged by: MAR
Approved by: SJG
Figure No. A- 65

_ENV BORING LOG KIMBERLY CLARK-EVERETT.GPJ July 31, 2014

Boring Log

Aspect CONSULTING

Project Number	Boring Number	Sheet
110207	DP-13	1 of 1

Project Name: Kimberly Clark
Location: Everett, WA
Driller/Method: Cascade Drilling / Direct Push Probe-Limited Access
Sampling Method: Continuous Core

Ground Surface Elev.
Depth to Water (ft BGS)
Start/Finish Date 2/15/2012

Depth / Elevation (feet)	Borehole Completion	Sample Type/ID	Tests	PID (ppm)	Blows/ 6"	Material Type	Description	Depth (ft)
	Concrete						Asphalt	
				0			Very moist, brown, very gravelly SAND (SP); poorly graded fine-to-medium sand	
	Hydrated medium bentonite chips	CC-1	DP-13-3-4	0				
				0			Very moist, dark brown, slightly gravelly SILT (ML)	
5				0				5
				0			Wet, brown, very silty GRAVEL (GM); fine to medium subangular gravel; debris (firebrick, ceramic, wood)	
		CC-2		0				
				0				
10				0				10
				0			Wet, dark gray to black, sandy SILT (ML), no odor	
		CC-3	DP-13-12-13	0				
				0				
				0				
				0			Wet, black SAND (SP); trace silt, fine to medium sand	
15				0			Bottom of boring at 15' BGS	15

Sampler Type:
- ◯ No Recovery
- ▌▌ Continuous Core

PID - Photoionization Detector (Headspace Measurement)
- ▼ Static Water Level
- ▽ Water Level (ATD)

Logged by: MAR
Approved by: SJG
Figure No. A- 66

_ENV BORING LOG KIMBERLY CLARK-EVERETT.GPJ July 31, 2014

Boring Log

Aspect CONSULTING

Project Number	Boring Number	Sheet
110207	DP-18	1 of 1

Project Name: Kimberly Clark
Location: Everett, WA
Driller/Method: Cascade Drilling / Direct Push Probe-Limited Access
Sampling Method: Continuous Core

Ground Surface Elev.:
Depth to Water (ft BGS):
Start/Finish Date: 2/16/2012

Depth / Elevation (feet)	Borehole Completion	Sample Type/ID	Tests	PID (ppm)	Blows/ 6"	Material Type	Description	Depth (ft)
	Concrete			0			Wood chips	
	Hydrated medium bentonite chips	CC-1	DP-18-2.5-3.5	0			Moist, gray, sandy, gravelly SILT (ML); poorly graded fine-to-medium subrounded gravel	
5				0				5
		CC-2		0				
10				0			Bottom of boring at 10' BGS	10
15								15

Sampler Type:
- ◯ No Recovery
- ▌▌ Continuous Core

PID - Photoionization Detector (Headspace Measurement)
- ▼ Static Water Level
- ▽ Water Level (ATD)

Logged by: MAR
Approved by: SJG
Figure No. A- 67

_ENV BORING LOG KIMBERLY CLARK-EVERETT.GPJ July 31, 2014

Boring Log

Aspect CONSULTING

Project Number	Boring Number	Sheet
110207	DP-19	1 of 1

Project Name: Kimberly Clark
Location: Everett, WA
Driller/Method: Cascade Drilling / Direct Push Probe-Limited Access
Sampling Method: Continuous Core

Ground Surface Elev.
Depth to Water (ft BGS)
Start/Finish Date 2/16/2012

Depth / Elevation (feet)	Borehole Completion	Sample Type/ID	Tests	PID (ppm)	Blows/ 6"	Material Type	Description	Depth (ft)
	Concrete			0			Wood chips	
	Hydrated medium bentonite chips	CC-1	DP-19-2.5-3.5	0			Moist, gray, slightly gravelly, very silty SAND (SM); fine sand	
5				0				5
		CC-2		0			Wet, gray to blue-gray, slightly gravelly SILT (ML); slight H2S odor	
10				0				10
		CC-3		0				
15							Bottom of boring at 15' BGS	15

Sampler Type:
- ◯ No Recovery
- ▌▌ Continuous Core

PID - Photoionization Detector (Headspace Measurement)
- ▼ Static Water Level
- ▽ Water Level (ATD)

Logged by: MAR
Approved by: SJG
Figure No. A- 68

_ENV BORING LOG KIMBERLY CLARK-EVERETT.GPJ July 31, 2014

Boring Log

Aspect CONSULTING

Project Number	Boring Number	Sheet
110207	DP-20	1 of 1

Project Name: Kimberly Clark
Location: Everett, WA
Driller/Method: Cascade Drilling / Direct Push Probe-Limited Access
Sampling Method: Continuous Core

Ground Surface Elev.:
Depth to Water (ft BGS):
Start/Finish Date: 2/16/2012

Depth / Elevation (feet)	Borehole Completion	Sample Type/ID	Tests	PID (ppm)	Blows/ 6"	Material Type	Description	Depth (ft)
	Concrete			0			Wood chips	
	Hydrated medium bentonite chips	CC-1	DP-20-2.5-3.5	0			Moist, gray, gravelly, silty SAND (SM); fine sand	
				0			Moist, dark gray, gravelly, sandy SILT (ML)	
5				0			Concrete rubble 5' to 6'	5
		CC-2		0			Wet, black, gravelly, silty SAND (SM); Wood chips at 7', fine sand	
				0			Wet, brown, sandy SILT (ML)	
10							Bottom of boring at 10' BGS	10
15								15

Sampler Type:
- No Recovery
- Continuous Core

PID - Photoionization Detector (Headspace Measurement)
- Static Water Level
- Water Level (ATD)

Logged by: MAR
Approved by: SJG
Figure No. A- 69

_ENV BORING LOG KIMBERLY CLARK-EVERETT.GPJ July 31, 2014

Boring Log

Aspect CONSULTING

Project Number	Boring Number	Sheet
110207	DP-21	1 of 1

Project Name: Kimberly Clark
Location: Everett, WA
Driller/Method: Cascade Drilling / Direct Push Probe-Limited Access
Sampling Method: Continuous Core

Ground Surface Elev.:
Depth to Water (ft BGS):
Start/Finish Date: 2/16/2012

Depth / Elevation (feet)	Borehole Completion	Sample Type/ID	Tests	PID (ppm)	Blows/ 6"	Material Type	Description	Depth (ft)
	Concrete			0			Wood chips	
	Hydrated medium bentonite chips	CC-1		0				
				0				
			DP-21-4-5	0			Moist, dark gray, gravelly, silty SAND (SM)	
5				0				5
				0			Concrete rubble from 6' to 7'	
		CC-2		0			Very moist to wet, dark gray, gravelly, sandy SILT (ML)	
				0				
				0				
10							Bottom of boring at 10' BGS	10
15								15

Sampler Type:
- No Recovery
- Continuous Core

PID - Photoionization Detector (Headspace Measurement)
- Static Water Level
- Water Level (ATD)

Logged by: MAR
Approved by: SJG
Figure No. A- 70

_ENV BORING LOG KIMBERLY CLARK-EVERETT.GPJ July 31, 2014

Boring Log

Aspect CONSULTING

Project Number	Boring Number	Sheet
110207	DP-22	1 of 1

Project Name: Kimberly Clark
Location: Everett, WA
Driller/Method: Cascade Drilling / Direct Push Probe-Limited Access
Sampling Method: Continuous Core

Ground Surface Elev.
Depth to Water (ft BGS)
Start/Finish Date 2/16/2012

Depth / Elevation (feet)	Borehole Completion	Sample Type/ID	Tests	PID (ppm)	Blows/ 6"	Material Type	Description	Depth (ft)
	Concrete						Wood chips	
	Hydrated medium bentonite chips	CC-1	DP-22-3-4	0				
				0				
				0			Moist, gray, very silty SAND (SM); fine sand	
				0			Moist, dark gray, sandy, gravelly SILT (ML)	
5				0				5
				0			Concrete rubble 6' to 7'	
		CC-2		0			Moist, gray, sandy SILT (ML); silt is mottled brown and gray	
				0				
				0				
10							Bottom of boring at 10' BGS	10
15								15

Sampler Type:
- ◯ No Recovery
- ▌▌ Continuous Core

PID - Photoionization Detector (Headspace Measurement)
- ▼ Static Water Level
- ▽ Water Level (ATD)

Logged by: MAR
Approved by: SJG
Figure No. A- 71

_ENV BORING LOG KIMBERLY CLARK-EVERETT.GPJ July 31, 2014

Boring Log

Aspect CONSULTING

Project Number	Boring Number	Sheet
110207	EM-B-1	1 of 1

Project Name: Kimberly Clark
Location: Everett, WA
Driller/Method: Holt / Direct Push Probe-Limited Access
Sampling Method: Continuous Core

Ground Surface Elev.
Depth to Water (ft BGS)
Start/Finish Date 4/23/2014

Depth / Elevation (feet)	Borehole Completion	Sample Type/ID	Tests	PID (ppm)	Blows/ 6"	Material Type	Description	Depth (ft)
		S1		0.0			Recycled demo debris	
				0.0				
				0.0			No recovery	
5	Hydrated medium bentonite chips							5
	▽4/23/2014	S2	EM-B-1-6	0.0			Moist, brown, slightly silty SAND (SP-SM); fine to medium sand	
			EM-B-1-7	0.0				
				0.0			No recovery	
10		S3		0.0			Wet, brown, sandy SILT (ML); mica flakes common	10
							Grades to gray	
				0.0				
							Wet, gray SAND (SP); fine to medium sand, trace silt	
			EM-B-1-12.5	0.0			No recovery	
15							Bottom of boring at 15' bgs	15

Sampler Type:
- ◯ No Recovery
- ▌▌ Continuous Core

PID - Photoionization Detector (Headspace Measurement)
- ▼ Static Water Level
- ▽ Water Level (ATD)

Logged by: AET/MML
Approved by: SJG
Figure No. A- 72

_ENV BORING LOG KIMBERLY CLARK-EVERETT.GPJ July 31, 2014

Boring Log

Aspect CONSULTING

Project Number	Boring Number	Sheet
110207	GF-B-01	1 of 2

Project Name: Kimberly Clark
Location: Everett, WA
Driller/Method: Cascade Drilling / Hollow Stem Auger
Sampling Method: Splitspoon

Ground Surface Elev.
Depth to Water (ft BGS)
Start/Finish Date 5/25/2012

Depth / Elevation (feet)	Borehole Completion	Sample Type/ID	Tests	PID (ppm)	Blows/ 6"	Material Type	Description	Depth (ft)
	Hydrated medium bentonite chips	S-1	GF-B-1-1-2.5	0	4 5 5		Loose, slightly moist, gray, slightly silty, gravelly SAND (SW-SM); well-graded fine to coarse sand, poorly graded fine gravel	
							Loose, moist to wet, gray, silty SAND (SM); poorly graded fine sand	
5		S-2		0	2 6 6		Wood chips.	5
		S-3		0	6 5 2		Becomes loose	
10		S-4		0	1 1 3		Becomes very loose	10
15		S-5		0	1 0 0		Very loose, wet, gray, SAND (SW); trace silt, well-graded fine to coarse sand, sampler driven with just weight of hammer	15

Sampler Type:
- No Recovery
- Grab Sample
- 3.25" OD D&M Split-Spoon Ring Sampler

PID - Photoionization Detector (Headspace Measurement)
- Static Water Level
- Water Level (ATD)

Logged by: MV
Approved by: SJG
Figure No. A- 84

_ENV BORING LOG KIMBERLY CLARK-EVERETT.GPJ July 31, 2014

Boring Log

Aspect CONSULTING

Project Number	Boring Number	Sheet
110207	GF-B-01	2 of 2

Project Name: Kimberly Clark
Location: Everett, WA
Driller/Method: Cascade Drilling / Hollow Stem Auger
Sampling Method: Splitspoon

Ground Surface Elev.
Depth to Water (ft BGS)
Start/Finish Date 5/25/2012

Depth / Elevation (feet)	Borehole Completion	Sample Type/ID	Tests	PID (ppm)	Blows/ 6"	Material Type	Description	Depth (ft)
	Hydrated medium bentonite chips	S-6		0	0 0 0			
25		S-7		0	6 12 16		Becomes medium dense	25
							Bottom of boring at 26.5' BGS	
30								30
35								35

Sampler Type:
- No Recovery
- Grab Sample
- 3.25" OD D&M Split-Spoon Ring Sampler

PID - Photoionization Detector (Headspace Measurement)
- Static Water Level
- Water Level (ATD)

Logged by: MV
Approved by: SJG
Figure No. A- 84

_ENV BORING LOG KIMBERLY CLARK-EVERETT.GPJ July 31, 2014

Boring Log

Aspect CONSULTING

Project Number	Boring Number	Sheet
110207	GF-B-02	1 of 2

Project Name: Kimberly Clark
Location: Everett, WA
Driller/Method: Cascade Drilling / Hollow Stem Auger
Sampling Method: Splitspoon

Ground Surface Elev.
Depth to Water (ft BGS)
Start/Finish Date 5/25/2012

Depth / Elevation (feet)	Borehole Completion	Sample Type/ID	Tests	PID (ppm)	Blows/ 6"	Material Type	Description	Depth (ft)
	Hydrated medium bentonite chips	S-1	GF-B-2-2.5-4	0	8 30 32		ft	
5		S-2		0	4 9 7		Medium dense, wet, black, silty SAND (SM); poorly graded fine sand	5
		S-3		0	4 5 5		Becomes wood chips	
10		S-4		0	11 15 4			10
15		S-5		0	3 5 4		Very loose, wet, gray, SAND (SP); trace silt, poorly graded fine to medium sand	15

Sampler Type:
- No Recovery
- 3.25" OD D&M Split-Spoon Ring Sampler

PID - Photoionization Detector (Headspace Measurement)
- Static Water Level
- Water Level (ATD)

Logged by: MV
Approved by: SJG
Figure No. A- 85

_ENV BORING LOG KIMBERLY CLARK-EVERETT.GPJ July 31, 2014

Boring Log

Aspect CONSULTING

Project Number	Boring Number	Sheet
110207	GF-B-02	2 of 2

Project Name: Kimberly Clark
Location: Everett, WA
Driller/Method: Cascade Drilling / Hollow Stem Auger
Sampling Method: Splitspoon

Ground Surface Elev.
Depth to Water (ft BGS)
Start/Finish Date 5/25/2012

Depth / Elevation (feet)	Borehole Completion	Sample Type/ID	Tests	PID (ppm)	Blows/ 6"	Material Type	Description	Depth (ft)
	Hydrated medium bentonite chips	S-6		0	0 1 3			
25		S-7		0	3 5 8		Medium dense, wet, gray, SAND (SW); trace silt	25
							Bottom of boring at 26.5' BGS	
30								30
35								35

Sampler Type:
- ◯ No Recovery
- 3.25" OD D&M Split-Spoon Ring Sampler

PID - Photoionization Detector (Headspace Measurement)

- ▼ Static Water Level
- ▽ Water Level (ATD)

Logged by: MV
Approved by: SJG
Figure No. A- 85

_ENV BORING LOG KIMBERLY CLARK-EVERETT.GPJ July 31, 2014

Boring Log

Aspect CONSULTING

Project Number	Boring Number	Sheet
110207	GF-B-03	1 of 2

Project Name: Kimberly Clark
Location: Everett, WA
Driller/Method: Cascade Drilling / Hollow Stem Auger
Sampling Method: Splitspoon

Ground Surface Elev.
Depth to Water (ft BGS)
Start/Finish Date 5/29/2012

Depth / Elevation (feet)	Borehole Completion	Sample Type/ID	Tests	PID (ppm)	Blows/ 6"	Material Type	Description	Depth (ft)
			GF-B-3-1-2.5				Loose, slightly moist. gray, gravelly to very gravelly SAND (SW); gravel rounded, size up to 2"	
	Hydrated medium bentonite chips	S-1		0	4 2 3		Loose, moist, gray, clean fine SAND (SP)	
5		S-2		0	0 1 2		Very loose, wet, gray, silty SAND (SM); trace gravel, trace wood	5
		S-3	GF-B-3-7.5-9	0	1 2 4		Loose, wet, gray, slightly silty SAND (SP); poorly graded fine sand	
10		S-4	GF-B-3-11-12.5	0	5 2 3		Becomes wood chips	10
							Very loose, wet, gray, gravelly SAND (SP/SW); trace wood chips, grades from SP to SW	
15		S-5		0	0 0 1		Very loose, wet, gray SAND (SM); poorly graded medium coarse sand, no fine sand	15
							Very loose, wet, gray SAND (SM); poorly graded medium coarse sand, no fine sand	

Sampler Type:
- No Recovery
- Grab Sample
- 3.25" OD D&M Split-Spoon Ring Sampler

PID - Photoionization Detector (Headspace Measurement)
- Static Water Level
- Water Level (ATD)

Logged by: GL
Approved by: SJG
Figure No. A- 86

_ENV BORING LOG KIMBERLY CLARK-EVERETT.GPJ July 31, 2014

Boring Log

Aspect CONSULTING

Project Number	Boring Number	Sheet
110207	GF-B-03	2 of 2

Project Name: Kimberly Clark
Location: Everett, WA
Driller/Method: Cascade Drilling / Hollow Stem Auger
Sampling Method: Splitspoon

Ground Surface Elev.
Depth to Water (ft BGS)
Start/Finish Date 5/29/2012

Depth / Elevation (feet)	Borehole Completion	Sample Type/ID	Tests	PID (ppm)	Blows/ 6"	Material Type	Description	Depth (ft)
	Hydrated medium bentonite chips	S-6		0	1 1 3			
25		S-7		0	5 15 23		Becomes dense	25
							Bottom of boring at 26.5' BGS	
30								30
35								35

Sampler Type:
- No Recovery
- Grab Sample
- 3.25" OD D&M Split-Spoon Ring Sampler

PID - Photoionization Detector (Headspace Measurement)
- Static Water Level
- Water Level (ATD)

Logged by: GL
Approved by: SJG
Figure No. A- 86

_ENV BORING LOG KIMBERLY CLARK-EVERETT.GPJ July 31, 2014

Boring Log

Aspect CONSULTING

Project Number	Boring Number	Sheet
110207	GF-B-04	1 of 2

Project Name: Kimberly Clark
Location: Everett, WA
Driller/Method: Cascade Drilling / Hollow Stem Auger
Sampling Method: Splitspoon

Ground Surface Elev.
Depth to Water (ft BGS)
Start/Finish Date 5/25/2012

Depth / Elevation (feet)	Borehole Completion	Sample Type/ID	Tests	PID (ppm)	Blows/ 6"	Material Type	Description	Depth (ft)
							Slightly moist, gray-brown, slightly silty, slightly sandy GRAVEL (GW)	
	Hydrated medium bentonite chips	S-1	GF-B-4-2.5-4	0	4 4 4		Loose, moist, gray, silty SAND (SM); poorly graded fine sand	
5		S-2		0	1 2 2		Becomes very loose	5
		S-3	GF-B-4-7.5-9	0	1 3 5		Loose, moist, gray, silty SAND (SM); poorly graded fine sand with wood chips present	
10		S-4		0	0 1 1		Very loose, wet, gray SAND (SP); trace silt, poorly graded fine to medium sand	10
15		S-5		0	0 0 3		Soft, wet, gray, sandy SILT (ML) interbedded with wet, gray, silty SAND (SM); poorly graded fine to medium sand	15
							Very loose, wet, gray, silty SAND (SM); poorly graded fine to medium sand with wood chips present	

Sampler Type:
- No Recovery
- 3.25" OD D&M Split-Spoon Ring Sampler

PID - Photoionization Detector (Headspace Measurement)
- Static Water Level
- Water Level (ATD)

Logged by: MV
Approved by: SJG
Figure No. A- 87

_ENV BORING LOG KIMBERLY CLARK-EVERETT.GPJ July 31, 2014

Boring Log

Aspect CONSULTING

Project Number	Boring Number	Sheet
110207	GF-B-04	2 of 2

Project Name: Kimberly Clark
Location: Everett, WA
Driller/Method: Cascade Drilling / Hollow Stem Auger
Sampling Method: Splitspoon

Ground Surface Elev.
Depth to Water (ft BGS)
Start/Finish Date 5/25/2012

Depth / Elevation (feet)	Borehole Completion	Sample Type/ID	Tests	PID (ppm)	Blows/ 6"	Material Type	Description	Depth (ft)
	Hydrated medium bentonite chips	S-6		0	0 1 2			
25		S-7		0	5 5 4		Loose, wet, gray, SAND (SW); trace silt, well-graded fine to coarse sand	25
							Bottom of boring at 26.5' BGS	
30								30
35								35

Sampler Type:
- ◯ No Recovery
- 3.25" OD D&M Split-Spoon Ring Sampler

PID - Photoionization Detector (Headspace Measurement)

- ▼ Static Water Level
- ▽ Water Level (ATD)

Logged by: MV
Approved by: SJG
Figure No. A- 87

_ENV BORING LOG KIMBERLY CLARK-EVERETT.GPJ July 31, 2014

Boring Log

Aspect CONSULTING

Project Number	Boring Number	Sheet
110207	GF-B-05	1 of 2

Project Name: Kimberly Clark
Location: Everett, WA
Driller/Method: Cascade Drilling / Hollow Stem Auger
Sampling Method: Splitspoon

Ground Surface Elev.
Depth to Water (ft BGS)
Start/Finish Date 5/29/2012

Depth / Elevation (feet)	Borehole Completion	Sample Type/ID	Tests	PID (ppm)	Blows/ 6"	Material Type	Description	Depth (ft)
			GF-B-5-1-2.5				Loose, slightly moist, gray, gravelly SAND (SW)	
	Hydrated medium bentonite chips	S-1		0	5 4 2		Loose, very moist, slightly gravelly SAND (SP); trace coarse sand, poorly graded fine to medium sand	
5		S-2		0	2 2 2		Very loose, wet, slightly gravelly SAND (SP); poorly graded medium sand	5
		S-3	GF-B-5-7.5-9	0	3 3 3		Shells present, organic or slight hydrocarbon odor	
10		S-4		0	1 1 3		Trace silt, shells present Becomes coarser grained, poorly graded medium to coarse sand, shells present	10
15		S-5		0	0 1 2		Very loose silty SAND (SP); poorly graded fine sand, wood detritus present Medium dense, wet, gray SAND (SP); trace organics, poorly graded medium sand, organic or slight hydrocarbon odor	15

Sampler Type:
- No Recovery
- Grab Sample
- 3.25" OD D&M Split-Spoon Ring Sampler

PID - Photoionization Detector (Headspace Measurement)
- Static Water Level
- Water Level (ATD)

Logged by: GL
Approved by: SJG
Figure No. A- 88

_ENV BORING LOG KIMBERLY CLARK-EVERETT.GPJ July 31, 2014

Boring Log

Aspect CONSULTING

Project Number	Boring Number	Sheet
110207	GF-B-05	2 of 2

Project Name: Kimberly Clark
Location: Everett, WA
Driller/Method: Cascade Drilling / Hollow Stem Auger
Sampling Method: Splitspoon

Ground Surface Elev.
Depth to Water (ft BGS)
Start/Finish Date 5/29/2012

Depth / Elevation (feet)	Borehole Completion	Sample Type/ID	Tests	PID (ppm)	Blows/ 6"	Material Type	Description	Depth (ft)
	Hydrated medium bentonite chips	S-6		0	6 5 7			
25		S-7		0	3 4 5		Becomes coarse grained SAND (SP); trace shells, poorly graded medium to coarse sand, slight marine/ organic/ slight hydrocarbon odor	25
							Bottom of boring at 26.5' BGS	
30								30
35								35

Sampler Type:
- No Recovery
- Grab Sample
- 3.25" OD D&M Split-Spoon Ring Sampler

PID - Photoionization Detector (Headspace Measurement)
- Static Water Level
- Water Level (ATD)

Logged by: GL
Approved by: SJG
Figure No. A- 88

_ENV BORING LOG KIMBERLY CLARK-EVERETT.GPJ July 31, 2014

Boring Log

Aspect CONSULTING

Project Number	Boring Number	Sheet
110207	GF-B-06	1 of 2

Project Name: Kimberly Clark
Location: Everett, WA
Driller/Method: Cascade Drilling / Hollow Stem Auger
Sampling Method: Splitspoon

Ground Surface Elev.
Depth to Water (ft BGS)
Start/Finish Date 5/29/2012

Depth / Elevation (feet)	Borehole Completion	Sample Type/ID	Tests	PID (ppm)	Blows/ 6"	Material Type	Description	Depth (ft)
			GF-B-6-1-2.5				Loose, slightly moist, gray, slightly musty odor, very gravelly SAND (SW)	
	Hydrated medium bentonite chips	S-1		0	6 7 9		Medium dense, slightly moist, gray SAND (SP); trace silt, poorly graded fine to medium sand	
5		S-2		0	3 3 3		Loose, wet, medium to course SAND (SP)	5
							Loose, slightly moist, gray SAND (SP); trace silt, poorly graded medium to coarse sand	
		S-3	GF-B-6-7.5-9	0	8 13 24		Becomes medium dense Becomes wood chips	
10		S-4		0	8 13 4			10
							Loose, wet, gravelly SAND (SP); trace fine grains	
15		S-5		0	6 5 4			15
							Medium dense, wet, gray, gravelly SAND (SP); trace woody debris, poorly graded medium to coarse grains, fine to medium rounded gravel	

Sampler Type:
- No Recovery
- Grab Sample
- 3.25" OD D&M Split-Spoon Ring Sampler

PID - Photoionization Detector (Headspace Measurement)
- Static Water Level
- Water Level (ATD)

Logged by: GL
Approved by: SJG
Figure No. A- 89

_ENV BORING LOG KIMBERLY CLARK-EVERETT.GPJ July 31, 2014

Boring Log

Aspect CONSULTING

Project Number	Boring Number	Sheet
110207	GF-B-06	2 of 2

Project Name: Kimberly Clark
Location: Everett, WA
Driller/Method: Cascade Drilling / Hollow Stem Auger
Sampling Method: Splitspoon

Ground Surface Elev.
Depth to Water (ft BGS)
Start/Finish Date 5/29/2012

Depth / Elevation (feet)	Borehole Completion	Sample Type/ID	Tests	PID (ppm)	Blows/ 6"	Material Type	Description	Depth (ft)
	Hydrated medium bentonite chips	S-6	GF-B-6-20-21.5	0	2 2 14			
25		S-7		0	3 9 15			25
							Bottom of boring at 26.5' BGS	
30								30
35								35

Sampler Type:
- No Recovery
- Grab Sample
- 3.25" OD D&M Split-Spoon Ring Sampler

PID - Photoionization Detector (Headspace Measurement)
- Static Water Level
- Water Level (ATD)

Logged by: GL
Approved by: SJG
Figure No. A- 89

_ENV BORING LOG KIMBERLY CLARK-EVERETT.GPJ July 31, 2014

Boring Log

Aspect CONSULTING

Project Number	Boring Number	Sheet
110207	GF-B-07	1 of 2

Project Name: Kimberly Clark
Location: Everett, WA
Driller/Method: Cascade Drilling / Hollow Stem Auger
Sampling Method: Splitspoon

Ground Surface Elev.
Depth to Water (ft BGS)
Start/Finish Date 5/21/2012

Depth / Elevation (feet)	Borehole Completion	Sample Type/ID	Tests	PID (ppm)	Blows/ 6"	Material Type	Description	Depth (ft)
	Hydrated medium bentonite chips	S-1	GF-B-7-1-2.5	0	1 2 2		Very loose, moist to wet, brown, slightly silty, slightly gravelly SAND (SW-SM); well-graded fine to coarse sand	
5		S-2		0	4 4 2		Becomes loose and gray Becomes trace silt	5
		S-3	GF-B-7-7.5-9	0	1 2 3			
10		S-4		0	2 2 3		Becomes woody debris	10
							Soft, wet, gray, sandy SILT (ML); laminae rusty brown organic silt	
15		S-5		0	0 0 3			15

Sampler Type:
- No Recovery
- Grab Sample
- 3.25" OD D&M Split-Spoon Ring Sampler

PID - Photoionization Detector (Headspace Measurement)
- Static Water Level
- Water Level (ATD)

Logged by: MV
Approved by: SJG
Figure No. A- 90

_ENV BORING LOG KIMBERLY CLARK-EVERETT.GPJ July 31, 2014

Boring Log

Aspect CONSULTING

Project Number	Boring Number	Sheet
110207	GF-B-07	2 of 2

Project Name: Kimberly Clark
Location: Everett, WA
Driller/Method: Cascade Drilling / Hollow Stem Auger
Sampling Method: Splitspoon

Ground Surface Elev.
Depth to Water (ft BGS)
Start/Finish Date 5/21/2012

Depth / Elevation (feet)	Borehole Completion	Sample Type/ID	Tests	PID (ppm)	Blows/ 6"	Material Type	Description	Depth (ft)
	Hydrated medium bentonite chips	S-6		0	1 5 11		Becomes very stiff	
25		S-7		0	15 15 25		Dense, wet, brown, silty SAND (SM); trace gravel, poorly graded fine to medium sand, diamict fabric present	25
							Bottom of boring at 26.5' BGS	
30								30
35								35

Sampler Type:
- No Recovery
- Grab Sample
- 3.25" OD D&M Split-Spoon Ring Sampler

PID - Photoionization Detector (Headspace Measurement)
- Static Water Level
- Water Level (ATD)

Logged by: MV
Approved by: SJG
Figure No. A- 90

_ENV BORING LOG KIMBERLY CLARK-EVERETT.GPJ July 31, 2014

Boring Log

Aspect CONSULTING

Project Number	Boring Number	Sheet
110207	GF-B-08	1 of 2

Project Name: Kimberly Clark
Location: Everett, WA
Driller/Method: Cascade Drilling / Direct Push Probe
Sampling Method: Continuous Core

Ground Surface Elev.:
Depth to Water (ft BGS):
Start/Finish Date: 5/30/2012

Depth / Elevation (feet)	Borehole Completion	Sample Type/ID	Tests	PID (ppm)	Blows/ 6"	Material Type	Description	Depth (ft)
0	Hydrated medium bentonite chips	CC-1	GF-B-8-1-2.5	0			Moist, gray, gravelly, silty SAND (SM)	0
5		CC-2	GF-B-8-7.5-9	0			Moist, brown, SAND (SP); poorly graded medium to coarse sand Becomes poorly graded fine sand with iron staining Very moist, dark gray, very sandy SILT (ML) and very silty SAND (SM)	5
10		CC-3		0			Very moist, brown SAND (SP); poorly graded fine sand Becomes medium grained sand Becomes black Becomes wet, gray, and well-graded fine to coarse sand Wet, gray, sandy, GRAVEL (GP); poorly graded fine gravel	10
15		CC-4		0			Wet, gray, slightly gravelly SAND (SP); trace course grains poorly graded fine to medium sand Becomes woody debris	15

Sampler Type:
- ○ No Recovery
- ▌ Continuous Core

PID - Photoionization Detector (Headspace Measurement)
- ▼ Static Water Level
- ▽ Water Level (ATD)

Logged by: MAR
Approved by: SJG
Figure No. A- 91

_ENV BORING LOG KIMBERLY CLARK-EVERETT.GPJ July 31, 2014

Boring Log

Aspect CONSULTING

Project Number	Boring Number	Sheet
110207	GF-B-08	2 of 2

Project Name: Kimberly Clark
Location: Everett, WA
Driller/Method: Cascade Drilling / Direct Push Probe
Sampling Method: Continuous Core

Ground Surface Elev.:
Depth to Water (ft BGS):
Start/Finish Date: 5/30/2012

Depth / Elevation (feet)	Borehole Completion	Sample Type/ID	Tests	PID (ppm)	Blows/ 6"	Material Type	Description	Depth (ft)
	Hydrated medium bentonite chips	CC-4		0			Becomes mostly medium grained	
				0				
				0				
				1.5			Slight hydrogen sulfide odor	
				2.7				
25				0			Bottom of boring at 25' BGS	25
30								30
35								35

Sampler Type:
- No Recovery
- Continuous Core

PID - Photoionization Detector (Headspace Measurement)
- Static Water Level
- Water Level (ATD)

Logged by: MAR
Approved by: SJG
Figure No. A- 91

_ENV BORING LOG KIMBERLY CLARK-EVERETT.GPJ July 31, 2014

Boring Log

Aspect CONSULTING

Project Number	Boring Number	Sheet
110207	GF-B-09	1 of 1

Project Name: Kimberly Clark
Location: Everett, WA
Driller/Method: Cascade Drilling / Direct Push Probe
Sampling Method: Continuous Core

Ground Surface Elev.:
Depth to Water (ft BGS):
Start/Finish Date: 6/28/2012

Depth / Elevation (feet)	Borehole Completion	Sample Type/ID	Tests	PID (ppm)	Blows/ 6"	Material Type	Description	Depth (ft)
							Asphalt	
				0			Moist, brown, gravelly, slightly silty SAND (SM); poorly graded fine to medium sand, well-graded fine to coarse gravel, crushed rocks	
	Hydrated medium bentonite chips	CC-1	GF-B-9-1-2.5	0				
				0				
5								5
				0			Wet, brown, slightly gravelly SAND (SP); poorly graded fine to medium sand	
		CC-2	GF-B-9-7.5-9	0				
				0				
				0				
				0			Wet, black, sandy, gravelly SILT (ML)	
10				0			Bottom of boring at 10' BGS	10
15								15

Sampler Type:
- ◯ No Recovery
- ▌▌ Continuous Core

PID - Photoionization Detector (Headspace Measurement)
- ▼ Static Water Level
- ▽ Water Level (ATD)

Logged by: AET
Approved by: SJG
Figure No. A- 92

_ENV BORING LOG KIMBERLY CLARK-EVERETT.GPJ July 31, 2014

Boring Log

Aspect CONSULTING

Project Number	Boring Number	Sheet
110207	GF-B-10	1 of 2

Project Name: Kimberly Clark
Location: Everett, WA
Driller/Method: Cascade Drilling / Hollow Stem Auger
Sampling Method: Splitspoon

Ground Surface Elev.
Depth to Water (ft BGS)
Start/Finish Date 5/24/2012

Depth / Elevation (feet)	Borehole Completion	Sample Type/ID	Tests	PID (ppm)	Blows/ 6"	Material Type	Description	Depth (ft)
			GF-B-10-1-2.5				Concrete	
		S-1		0	1 1 3		Loose, moist, brown-gray, silty SAND (SM); poorly graded fine sand	
5	Backfilled with medium bentonite chips						Medium stiff, moist, brown, sandy SILT (ML)	5
		S-2		0	1 2 3		Loose, moist, gray, silty SAND (SM)	
			GF-B-10-7.5-9				Stiff, wet, brown, sandy SILT (ML)	
		S-3		0	3 4 5		Loose, wet, gray, SAND (SP); trace silt, poorly sorted medium to coarse sand	
10		S-4		0	2 3 2			10
15		S-5		0	5 7 14		Becomes slightly gravelly and medium dense	15

Sampler Type:
- No Recovery
- Grab Sample
- 3.25" OD D&M Split-Spoon Ring Sampler

PID - Photoionization Detector (Headspace Measurement)
- Static Water Level
- Water Level (ATD)

Logged by: MV
Approved by: SJG
Figure No. A- 93

_ENV BORING LOG KIMBERLY CLARK-EVERETT.GPJ July 31, 2014

Boring Log

Aspect CONSULTING

Project Number	Boring Number	Sheet
110207	GF-B-10	2 of 2

Project Name: Kimberly Clark
Location: Everett, WA
Driller/Method: Cascade Drilling / Hollow Stem Auger
Sampling Method: Splitspoon

Ground Surface Elev.
Depth to Water (ft BGS)
Start/Finish Date 5/24/2012

Depth / Elevation (feet)	Borehole Completion	Sample Type/ID	Tests	PID (ppm)	Blows/ 6"	Material Type	Description	Depth (ft)
		S-6		0	0 1 1		Becomes very loose, poorly sorted fine to medium sand	
25		S-7		0	5 6 9		Medium dense, wet, gray, silty SAND (SM); trace coarse sand, poorly graded fine to medium sand	25
							Bottom of boring at 26.5' BGS	
30								30
35								35

Sampler Type:
- No Recovery
- Grab Sample
- 3.25" OD D&M Split-Spoon Ring Sampler

PID - Photoionization Detector (Headspace Measurement)
- Static Water Level
- Water Level (ATD)

Logged by: MV
Approved by: SJG
Figure No. A- 93

_ENV BORING LOG KIMBERLY CLARK-EVERETT.GPJ July 31, 2014

Boring Log

Aspect CONSULTING

Project Number	Boring Number	Sheet
110207	GF-B-11	1 of 2

Project Name: Kimberly Clark
Location: Everett, WA
Driller/Method: Cascade Drilling / Hollow Stem Auger
Sampling Method: Splitspoon

Ground Surface Elev.
Depth to Water (ft BGS)
Start/Finish Date 5/24/2012

Depth / Elevation (feet)	Borehole Completion	Sample Type/ID	Tests	PID (ppm)	Blows/ 6"	Material Type	Description	Depth (ft)
							Asphalt	
			GF-B-11-1-2.5				Loose, black, silty SAND (SM); poorly graded fine sand, charcoal odor	
		S-1		0	4 2 3			
5	Backfilled with medium bentonite chips	S-2		0	2 2 2			5
		S-3	GF-B-11-7.5-9	0	1 1 3			
10		S-4		0	1 3 4		Loose, wet, dark gray, silty SAND (SM); poorly graded fine to medium sand	10
							Medium dense, wet, gray SAND (SP); trace silt, trace fine sand, poorly graded medium to coarse sand	
15		S-5		0	6 5 11			15

Sampler Type:
- No Recovery
- Grab Sample
- 3.25" OD D&M Split-Spoon Ring Sampler

PID - Photoionization Detector (Headspace Measurement)
- Static Water Level
- Water Level (ATD)

Logged by: MV
Approved by: SJG
Figure No. A- 94

ENV BORING LOG KIMBERLY CLARK-EVERETT.GPJ July 31, 2014

Boring Log

Aspect CONSULTING

Project Number	Boring Number	Sheet
110207	GF-B-11	2 of 2

Project Name: Kimberly Clark
Location: Everett, WA
Driller/Method: Cascade Drilling / Hollow Stem Auger
Sampling Method: Splitspoon

Ground Surface Elev.
Depth to Water (ft BGS)
Start/Finish Date 5/24/2012

Depth / Elevation (feet)	Borehole Completion	Sample Type/ID	Tests	PID (ppm)	Blows/ 6"	Material Type	Description	Depth (ft)
		S-6		0	3 9 34		Becomes trace gravel (1" thick layer of wood chips)	
25		S-7		0	2 9 12		Becomes trace silt, trace fine sand, and wood fragments	25
							Bottom of boring at 26.5' BGS	
30								30
35								35

Sampler Type:
- No Recovery
- Grab Sample
- 3.25" OD D&M Split-Spoon Ring Sampler

PID - Photoionization Detector (Headspace Measurement)
- Static Water Level
- Water Level (ATD)

Logged by: MV
Approved by: SJG
Figure No. A- 94

_ENV BORING LOG KIMBERLY CLARK-EVERETT.GPJ July 31, 2014

Boring Log

Aspect CONSULTING

Project Number	Boring Number	Sheet
110207	GF-B-12	1 of 1

Project Name: Kimberly Clark
Location: Everett, WA
Driller/Method: Cascade Drilling / Direct Push Probe
Sampling Method: Continuous Core

Ground Surface Elev.:
Depth to Water (ft BGS):
Start/Finish Date: 6/28/2012

Depth / Elevation (feet)	Borehole Completion	Sample Type/ID	Tests	PID (ppm)	Blows/ 6"	Material Type	Description	Depth (ft)
		CC-1	GF-B-12-1-2.5	0			Asphalt debris	
							Very moist, brown orange, mottled slightly silty gravelly SAND (SP); poorly graded fine to medium sand	
5	Backfilled with medium bentonite chips			0				5
							Becomes wet	
		CC-2		0			Wet, dark gray, very sandy SILT (ML); poorly graded fine sand, rapid dilatancy	
			GF-B-12-7.5-9	0			Wood	
10				0			Bottom of boring at 10' BGS	10
15								15

Sampler Type:
- ◯ No Recovery
- ▌▌ Continuous Core

PID - Photoionization Detector (Headspace Measurement)
- ▼ Static Water Level
- ▽ Water Level (ATD)

Logged by: AET
Approved by: SJG
Figure No. A- 95

_ENV BORING LOG KIMBERLY CLARK-EVERETT.GPJ July 31, 2014

Boring Log

Aspect CONSULTING

Project Number	Boring Number	Sheet
110207	GF-B-13	1 of 2

Project Name: Kimberly Clark
Location: Everett, WA
Driller/Method: Cascade Drilling / Hollow Stem Auger
Sampling Method: Splitspoon

Ground Surface Elev.:
Depth to Water (ft BGS):
Start/Finish Date: 5/24/2012

Depth / Elevation (feet)	Borehole Completion	Sample Type/ID	Tests	PID (ppm)	Blows/ 6"	Material Type	Description	Depth (ft)
			GF-B-13-1-2.5				Loose, moist, gray-brown, slightly silty, gravelly, SAND (SW); well-graded fine to coarse sand, angular gravel	
		S-1		0	2 2 4		Becomes wet	
5	Backfilled with medium bentonite chips	S-2		0	1 1 1		Becomes trace gravel	5
		S-3		0	1 3 5		Loose, wet, SAND (SP); trace coarse sand, poorly graded fine to medium sand, shell fragments	
10		S-4	GF-B-13-10-11.5	0	4 5 4		Loose, wet SAND (SW); well-graded fine to coarse sand and shell fragments Becomes trace coarse sand	10
		S-5		0	3 2 2		Becomes very loose with wood chips from 12 to 13'	
15		S-6		0	0 1 1		Very loose, wet, slightly silty SAND (SP); trace coarse sand, poorly sorted fine to medium sand, shell fragments, slight sulfide odor	15

Sampler Type:
- No Recovery
- Grab Sample
- 3.25" OD D&M Split-Spoon Ring Sampler

PID - Photoionization Detector (Headspace Measurement)
- Static Water Level
- Water Level (ATD)

Logged by: MV
Approved by: SJG
Figure No. A- 96

_ENV BORING LOG KIMBERLY CLARK-EVERETT.GPJ July 31, 2014

Boring Log

Aspect CONSULTING

Project Number	Boring Number	Sheet
110207	GF-B-13	2 of 2

Project Name: Kimberly Clark
Location: Everett, WA
Driller/Method: Cascade Drilling / Hollow Stem Auger
Sampling Method: Splitspoon

Ground Surface Elev.
Depth to Water (ft BGS)
Start/Finish Date 5/24/2012

Depth / Elevation (feet)	Borehole Completion	Sample Type/ID	Tests	PID (ppm)	Blows/ 6"	Material Type	Description	Depth (ft)
		S-7		0				
25		S-8		0			Very dense, wet, gray, very silty, SAND (SM); trace coarse sand, poorly graded fine to medium sand, diamict fabric	25
							Bottom of boring at 25.5' BGS	
30								30
35								35

Sampler Type:
- No Recovery
- Grab Sample
- 3.25" OD D&M Split-Spoon Ring Sampler

PID - Photoionization Detector (Headspace Measurement)
- Static Water Level
- Water Level (ATD)

Logged by: MV
Approved by: SJG
Figure No. A- 96

_ENV BORING LOG KIMBERLY CLARK-EVERETT.GPJ July 31, 2014

Boring Log

Aspect CONSULTING

Project Number	Boring Number	Sheet
110207	GF-B-14	1 of 2

Project Name: Kimberly Clark
Location: Everett, WA
Driller/Method: Cascade Drilling / Hollow Stem Auger
Sampling Method: Splitspoon

Ground Surface Elev.
Depth to Water (ft BGS)
Start/Finish Date 5/23/2012

Depth / Elevation (feet)	Borehole Completion	Sample Type/ID	Tests	PID (ppm)	Blows/ 6"	Material Type	Description	Depth (ft)
		S-1	GF-B-14-1-2.5	0	1 1 1		Very loose, slightly moist, brown, slightly gravelly SAND (SW-SM); petroleum-like odor	
	▼	S-2		0	2 4 2		Becomes wet, gray, poorly sorted fine sand, faint petroleum-like odor, and trace shells	
5	Backfilled with medium bentonite chips	S-3		0	1 2 3			5
		S-4	GF-B-14-7.5-9	0	1 2 2		Very loose, wet, gray SAND (SW); trave fine gravel, trace silt, well-graded fine to coarse sand	
10		S-5		0	3 8 15		Becomes medium dense	10
15		S-6		0	5 10 15			15

Sampler Type:
- ◯ No Recovery
- 3.25" OD D&M Split-Spoon Ring Sampler

PID - Photoionization Detector (Headspace Measurement)
- ▼ Static Water Level
- ▽ Water Level (ATD)

Logged by: MV
Approved by: SJG
Figure No. A- 97

_ENV BORING LOG KIMBERLY CLARK-EVERETT.GPJ July 31, 2014

Boring Log

Aspect CONSULTING

Project Number	Boring Number	Sheet
110207	GF-B-14	2 of 2

Project Name: Kimberly Clark
Location: Everett, WA
Driller/Method: Cascade Drilling / Hollow Stem Auger
Sampling Method: Splitspoon

Ground Surface Elev.
Depth to Water (ft BGS)
Start/Finish Date 5/23/2012

Depth / Elevation (feet)	Borehole Completion	Sample Type/ID	Tests	PID (ppm)	Blows/ 6"	Material Type	Description	Depth (ft)
		S-7		0	3 18 30		Becomes dense	
							Dense, wet, gray SAND (SP); trace silt, poorly graded medium to coarse sand	
25		S-8		0	8 16 32		0.5 inch bed organic SILT (ML); woody debris	25
							Very soft, wet, brown, SILT (ML); slight hydrogen sulfide odor	
30		S-9		0	0 0 0			30
							Bottom of boring at 31.5' BGS	
35								35

Sampler Type:
- ◯ No Recovery
- 3.25" OD D&M Split-Spoon Ring Sampler

PID - Photoionization Detector (Headspace Measurement)

- ▼ Static Water Level
- ▽ Water Level (ATD)

Logged by: MV
Approved by: SJG
Figure No. A- 97

_ENV BORING LOG KIMBERLY CLARK-EVERETT.GPJ July 31, 2014

Boring Log

Aspect CONSULTING

Project Number	Boring Number	Sheet
110207	GF-B-15A	1 of 2

Project Name: Kimberly Clark
Location: Everett, WA
Driller/Method: Cascade Drilling / Hollow Stem Auger
Sampling Method: Splitspoon

Ground Surface Elev.
Depth to Water (ft BGS)
Start/Finish Date 5/23/2012

Depth / Elevation (feet)	Borehole Completion	Sample Type/ID	Tests	PID (ppm)	Blows/ 6"	Material Type	Description	Depth (ft)
		S-1	GF-B-15A-1-2.5	0	5 7 8		Medium dense, wet, brown, slightly gravelly SAND (SW-SM); trace building debris	
		S-2		0	3 5 6			
5	Backfilled with medium bentonite chips	S-3		0	1 1 1		Becomes very loose	5
		S-4	GF-B-15A-7.5-9	0	3 2 1			
10		S-5	GF-B-15A-10-11.5	0	2 3 3		Becomes loose, wet, and gray to black	10
							Medium dense, wet, black, slightly silty GRAVEL (GM);	
15		S-6	GF-B-15A-15-16.5	0	4 9 7			15
							Very loose, wet, dark gray to black, slightly silty SAND (SW-SM); trace shell fragments	

Sampler Type:
- No Recovery
- 3.25" OD D&M Split-Spoon Ring Sampler

PID - Photoionization Detector (Headspace Measurement)
- Static Water Level
- Water Level (ATD)

Logged by: MV
Approved by: SJG
Figure No. A- 98

_ENV BORING LOG KIMBERLY CLARK-EVERETT.GPJ July 31, 2014

Boring Log

Aspect CONSULTING

Project Number	Boring Number	Sheet
110207	GF-B-15A	2 of 2

Project Name: Kimberly Clark
Location: Everett, WA
Driller/Method: Cascade Drilling / Hollow Stem Auger
Sampling Method: Splitspoon

Ground Surface Elev.:
Depth to Water (ft BGS):
Start/Finish Date: 5/23/2012

Depth / Elevation (feet)	Borehole Completion	Sample Type/ID	Tests	PID (ppm)	Blows/ 6"	Material Type	Description	Depth (ft)
		S-7		0	1 1 3			
25		S-8	GF-B-15A-25-26.5	0	2 3 5		Becomes dark gray, trace gravel, well-graded fine to coarse sand	25
							Very dense, wet, gray, slightly gravelly SAND (SW); trace silt, trace shell fragments	
30		S-9		0	5 15 40			30
							Bottom of boring at 31.5 BGS	
35								35

Sampler Type:
- ◯ No Recovery
- 3.25" OD D&M Split-Spoon Ring Sampler

PID - Photoionization Detector (Headspace Measurement)

- ▼ Static Water Level
- ▽ Water Level (ATD)

Logged by: MV
Approved by: SJG
Figure No. A- 98

_ENV BORING LOG KIMBERLY CLARK-EVERETT.GPJ July 31, 2014

Boring Log

Aspect CONSULTING

Project Number	Boring Number	Sheet
110207	GF9-B-01	1 of 1

Project Name: Kimberly Clark
Location: Everett, WA
Driller/Method: Cascade Drilling / Direct Push Probe-Limited Access
Sampling Method: Continuous Core

Ground Surface Elev.
Depth to Water (ft BGS)
Start/Finish Date 9/6/2012

Depth / Elevation (feet)	Borehole Completion	Sample Type/ID	Tests	PID (ppm)	Blows/ 6"	Material Type	Description	Depth (ft)
							Wood chips	
				0			Moist, dark gray, gravelly, very silty SAND (SM); fine sand, trace organics	
	3/8" hydrated bentonite chips	CC-1		0				
				0				
			GF9-B-01-4-4.5	0				
5							No recovery	5
			GF9-B-01-5-6				Wet, dark gray, clayey SILT (ML)	
				0				
		CC-2		0				
			GF9-B-01-8-9	0				
				0			No recovery	
10				0			Bottom of boring at 10' BGS	10
15								15
20								20
25								25

Sampler Type:
- ◯ No Recovery
- ▌▌ Continuous Core

PID - Photoionization Detector (Headspace Measurement)
- ▼ Static Water Level
- ▽ Water Level (ATD)

Logged by: AET/MAR
Approved by: SJG
Figure No. A- 77

_ENV BORING LOG KIMBERLY CLARK-EVERETT.GPJ July 31, 2014

Boring Log

Aspect CONSULTING

Project Number	Boring Number	Sheet
110207	GF9-B-02	1 of 1

Project Name: Kimberly Clark
Location: Everett, WA
Driller/Method: Cascade Drilling / Direct Push Probe-Limited Access
Sampling Method: Continuous Core

Ground Surface Elev.
Depth to Water (ft BGS)
Start/Finish Date 9/6/2012

Depth / Elevation (feet)	Borehole Completion	Sample Type/ID	Tests	PID (ppm)	Blows/ 6"	Material Type	Description	Depth (ft)
							Asphalt	
				0			Moist, brown SAND (SW); fine to coarse sand	
				0			Moist, dark brown, gravelly, silty SAND (SM)	
	3/8" hydrated bentonite chips	CC-1	GF9-B-01-3-3.5	0			Moist to wet, brown, gravelly SAND (SP); poorly graded fine to medium sand	
				0			No recovery	
5		CC-2	GF9-B-01-6-7	0			Wet, dark brown to dark gray, gravelly SAND (SP); poorly-graded fine-to-medium sand, numerous organics	5
				0				
				0				
			GF9-B-01-9-9.5	0			Wet, dark brown to black PEAT (PT)	
				0			No recovery	
10							Bottom of boring at 10' BGS	10
15								15
20								20
25								25

Sampler Type:
- No Recovery
- Continuous Core

PID - Photoionization Detector (Headspace Measurement)
- Static Water Level
- Water Level (ATD)

Logged by: AET/MAR
Approved by: SJG
Figure No. A- 78

_ENV BORING LOG KIMBERLY CLARK-EVERETT.GPJ July 31, 2014

Boring Log

Aspect CONSULTING

Project Number	Boring Number	Sheet
110207	GF9-B03	1 of 1

Project Name: Kimberly Clark
Location: Everett, WA
Driller/Method: Holt / Direct Push Probe
Sampling Method: Continous Core 2"

Ground Surface Elev.:
Depth to Water (ft BGS):
Start/Finish Date: 11/19/2013

Depth / Elevation (feet)	Borehole Completion	Sample Type/ID	Tests	PID (ppm)	Blows/ 6"	Material Type	Description	Depth (ft)
		CC-01					Recycled demo debris	
							No recovery	
5								5
				0			Medium stiff, slightly moist, black SILT (ML); trace woody debris	
				0			Stiff, slightly moist, gray SILT (ML)	
	Hydrated bentonite chip backfill			0				
		CC-02		0				
	11/19/2013			0			Becomes black	
				0				
							No recovery	
10								10
				0			Stiff, slightly moist, black SILT (ML)	
			GF9-B3-11	0				
				0				
			GF9-B3-12	0			Wet	
		CC-03		0				
				0				
			GF9-B3-13	0			Medium dense, wet, brown silty SAND (SM); fine to medium sand	
				0			Stiff, wet, gray SILT (ML)	
				0			Medium dense, wet, brown, silty SAND (SM); fine to medium sand	
				0			Stiff, wet, gray SILT (ML)	
							No recovery	
15								15
							Bottom of boring 15 feet Note: Density and consistency was estimated based on sample observations.	

Sampler Type:
- No Recovery
- Continuous Core

PID - Photoionization Detector (Headspace Measurement)
- Static Water Level
- Water Level (ATD)

Logged by: AHP
Approved by: SJG
Figure No. A- 79

_ENV BORING LOG KIMBERLY CLARK-EVERETT.GPJ July 31, 2014

Boring Log

Aspect CONSULTING

Project Number	Boring Number	Sheet
110207	GF9-B04	1 of 1

Project Name: Kimberly Clark
Location: Everett, WA
Driller/Method: Holt / Direct Push Probe
Sampling Method: Continous Core 2"

Ground Surface Elev.
Depth to Water (ft BGS)
Start/Finish Date 11/19/2013

Depth / Elevation (feet)	Borehole Completion	Sample Type/ID	Tests	PID (ppm)	Blows/ 6"	Material Type	Description	Depth (ft)
				0			Recycled demo debris	
		CC-01		0			Medium dense, slightly moist, brown, gravelly, silty SAND (SM); fine to medium sand	
							No recovery	
5								5
				0			Medium dense, slightly moist, brown, gravelly, silty SAND (SM); fine to medium sand	
				0			Wet	
			GF9-B4-6.5	0				
	Hydrated bentonite chip backfill						No recovery	
		CC-02		0				
	▽ 11/19/2013							
10								10
				0			Medium dense, slightly moist, brown, gravelly, silty SAND (SM); fine to medium sand	
				0				
			GF9-B4-11.5	0				
				0			Stiff, wet, gray SILT (ML)	
		CC-03		0				
				0				
				0				
			GF9-B4-13.5	0				
				0			shell fragments at 14 feet	
				0			No recovery	
15								15
							Bottom of boring 15 feet Note: Density and consistency was estimated based on sample observations.	

Sampler Type:
- ◯ No Recovery
- ▌▌ Continuous Core

PID - Photoionization Detector (Headspace Measurement)

- ▼ Static Water Level
- ▽ Water Level (ATD)

Logged by: AHP
Approved by: SJG
Figure No. A- 80

_ENV BORING LOG KIMBERLY CLARK-EVERETT.GPJ July 31, 2014

Boring Log

Aspect CONSULTING

Project Number	Boring Number	Sheet
110207	GF9-MW-01	1 of 1

Project Name: Kimberly Clark
Location: Everett, WA
Driller/Method: Cascade Drilling / Direct Push Probe-Limited Access
Sampling Method: Continuous Core

Ground Surface Elev.:
Depth to Water (ft BGS):
Start/Finish Date: 9/6/2012

Depth / Elevation (feet)	Borehole Completion	Sample Type/ID	Tests	PID (ppm)	Blows/ 6"	Material Type	Description	Depth (ft)
	8" flush-mount monument and thermos cap Concrete surface seal						Asphalt	
				0			Moist, brown, gravelly, very silty SAND (SM); fine sand	
				0			Moist, brown, gravelly SAND (SP); fine to medium sand Brick debris	
	3/8" hydrated bentonite chips	CC-1		0			No recovery	
5			GF9-MW-01-5.5-6.5				Wet, dark gray and brown, gravelly SAND (SP); fine to medium sand	5
				0			Wet, dark gray, very silty SAND (SM); fine to medium sand	
	2/12 silica sand filter pack	CC-2		0				
				0			No recovery	
10	2" diameter PVC pre-packed 0.010 slot screen		GF9-MW-01-10-11				Wet, dark gray, silty SAND (SM); fine to medium sand	10
				6.8				
		CC-3	GF9-MW-01-13-14	2.8 0			Wet, dark gray, slightly silty SAND (SP-SM); fine to medium sand	
15	Threaded cap						Bottom of boring at 15' BGS	15
20								20
25								25

Sampler Type:
- No Recovery
- Continuous Core

PID - Photoionization Detector (Headspace Measurement)
- Static Water Level
- Water Level (ATD)

Logged by: AET/MAR
Approved by: SJG
Figure No. A- 81

_ENV BORING LOG KIMBERLY CLARK-EVERETT.GPJ July 31, 2014

Boring Log

Aspect CONSULTING

Project Number	Boring Number	Sheet
110207	GF9-MW-02	1 of 2

Project Name: Kimberly Clark
Location: Everett, WA
Driller/Method: Holt / Direct Push Probe
Sampling Method: Continuous Core 3"

Ground Surface Elev.: 18.66
Depth to Water (ft BGS):
Start/Finish Date: 10/29/2013

Depth / Elevation (feet)	Borehole Completion	Sample Type/ID	Tests	PID (ppm)	Blows/ 6"	Material Type	Description	Depth (ft)
	8" Flush-mount monument and thermos cap Concrete surface seal 0' to 1'						Recycled demo debris and SILT	
				0			Dry, light gray and brown, silty GRAVEL (GM); fine to coarse, angular to subangular gravel, brick fragments	
		CC-1		0				
	3/8" Hydrated bentonite chips 1' to 5'						No recovery	
15								
5							Dry, gray, sandy GRAVEL (GW); fine sand, fine to coarse, subangular gravel	5
				0			Slightly moist, dark brown, gravelly, SILT (ML); fine, subrounded gravel	
				0			Dry, light gray, sandy, GRAVEL (GW); fine sand, fine to coarse, subrounded to subangular gravel	
	▽10/29/2013	CC-2	GF9-MW-2-7.5	0			Slightly moist, dark brown, slightly gravelly, silty, SAND (SM); fine to medium sand, fine, subrounded gravel	
				0			Slightly moist, light brown, sandy, GRAVEL (GP); fine to medium sand, fine, subrounded gravel	
10							Moist, dark brown, silty, SAND (SM); fine to medium sand, trace, fine, subrounded gravel, silt lens present	
							No recovery	
10	10/20 pre-pack Silica sand filter pack 5' to 16.25'						Slough	10
			GF9-MW-2-11				Wet, dark gray, slightly gravelly, silty, SAND (SM); fine to medium sand, fine, subrounded gravel	
		CC-3		0				
				0				
5				0				
15	2" Diameter PVC pre-packed 10-slot screen 6' to 16'		GF9-MW-2-15	0			Wet, dark gray, slightly gravelly, silty, SAND (SM); fine to medium sand, fine, subrounded gravel, silt lenses present	15
	Threaded cap			0				
		CC-4						
0				0				
	Slough 16.25' to 20'						No recovery	
20								20

Sampler Type:
- ◯ No Recovery
- ▌▌ Continuous Core

PID - Photoionization Detector (Headspace Measurement)
- ▼ Static Water Level
- ▽ Water Level (ATD)

Logged by: JLO
Approved by: SJG
Figure No. A- 82

_ENV BORING LOG KIMBERLY CLARK-EVERETT.GPJ July 31, 2014

Boring Log

Aspect CONSULTING

Project Number	Boring Number	Sheet
110207	GF9-MW-03	1 of 1

Project Name: Kimberly Clark
Location: Everett, WA
Driller/Method: Holt / Direct Push Probe
Sampling Method: Continuous Core 3"

Ground Surface Elev.: 19.13
Depth to Water (ft BGS):
Start/Finish Date: 11/1/2013

Depth / Elevation (feet)	Borehole Completion	Sample Type/ID	Tests	PID (ppm)	Blows/ 6"	Material Type	Description	Depth (ft)
	8" Flush-mount monument and thermos cap Concrete surface seal 0' to 1'						Recycled demo debris	
	3/8" Hydrated bentonite chips 1' to 3.75'	CC-1					Slightly moist, gray, silty, SAND (SM); fine to medium sand	
15							No recovery	
5							Slightly moist, dark gray, slightly gravelly, silty, SAND (SM); fine to coarse sand, fine to coarse gravel	5
			GF9-MW-3-6					
	10/20 pre-pack Silica sand filter pack 3.75' to 15'	CC-2						
	▽ 11/1/2013		GF9-MW-3-8				Wet, black, slightly sandy, SILT (ML); trace gravel	
							Wet, green gray, silty, SAND (SM); fine to coarse sand	
10							Wet, black, silty, SAND (SM); fine to coarse sand	
							No recovery	
	2" Diameter PVC pre-packed 10-slot screen 4.75' to 14.75'						Wet, black, slightly gravelly, SILT (ML)	10
							Wet, green gray, SILT (ML); trace gravel	
			GF9-MW-3-12					
		CC-3					No recovery	
5								
	Threaded cap							
15							Bottom of boring at 15 feet	15

Sampler Type:
- ◯ No Recovery
- ▌▌ Continuous Core

PID - Photoionization Detector (Headspace Measurement)
- ▼ Static Water Level
- ▽ Water Level (ATD)

Logged by: AHP
Approved by: SJG
Figure No. A- 83

_ENV BORING LOG KIMBERLY CLARK-EVERETT.GPJ July 31, 2014

Monitoring Well Construction Log

Aspect CONSULTING

Project Number	Well Number	Sheet
110207	GF9-MW-4	1 of 1

Project Name: Kimberly Clark
Location: Everett, WA
Driller/Method: Holt / Direct Push Probe
Sampling Method: Continuous Core

Ground Surface Elev.:
Top of Casing Elev.:
Depth to Water (ft BGS): 8.53 - 9/25/2015
Start/Finish Date: 9/23/2015

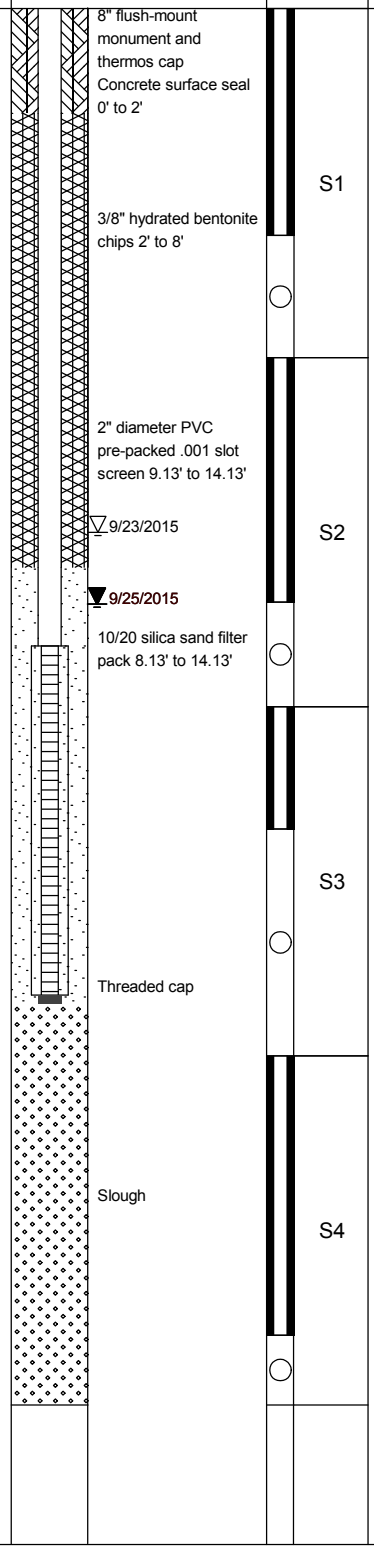

Depth / Elevation (feet)	Tests	PID (ppm)	Blows/ 6"	Material Type	Description	Depth (ft)
					Recycled demo debris	
					Moist, dark brown, slightly gravelly, silty SAND (SM); fine to medium sand, fine subrounded gravel	
5						5
	GF9-MW-4-6.5	0.0			Moist, brown SAND (SP); fine to medium sand, no odor	
	GF9-MW-4-7.5				Becomes wet at 7.5'	
10					Wet GRAVEL (GP); fine rounded gravel	10
		0.0			Wet, tan GRAVEL (GP); crushed brick	
	GF9-MW-4-11				Wet, sandy, sitly GRAVEL (GP-GM); fine angular gravel, no odor	
					Wet, dark gray, slightly gravelly, slightly silty SAND (SP-SM); fine to medium sand, fine subrounded gravel, no odor	
15						15
		0.0				
20					Bottom of boring at 20' BGS	20

Sampler Type:
- No Recovery
- Continuous Core

PID - Photoionization Detector
- Static Water Level
- Water Level (ATD)

Logged by: MML
Approved by: SJG
Figure No. A-

MONITORING WELL KIMBERLY CLARK-EVERETT.GPJ October 14, 2015

Boring Log

Project Number	Boring Number	Sheet
110207	GF11-B-01	1 of 1

Project Name: Kimberly Clark
Location: Everett, WA
Driller/Method: Cascade Drilling / Direct Push Probe-Limited Access
Sampling Method: Continuous Core

Ground Surface Elev.
Depth to Water (ft BGS)
Start/Finish Date 9/5/2012

Depth / Elevation (feet)	Borehole Completion	Sample Type/ID	Tests	PID (ppm)	Blows/ 6"	Material Type	Description	Depth (ft)
			GF11-B-01-0-1	0			Asphalt	
							Moist, brown gray, silty GRAVEL (GM); fine subangular gravel	
	3/8" hydrated bentonite chips		GF11-B-01-2-3	0			Moist, black, slightly gravelly SAND (SP); trace silt; fine sand	
		CC-1					Thin bed silt	
				0			No recovery	
5			GF11-B-01-5-6					5
				0			Wet, black, slightly gravelly, slightly silty SAND (SP-SM); fine sand, trace organics	
				0			Wet, black SAND (SP); fine sand	
		CC-2		0			No recovery	
10							Bottom of boring at 10' BGS	10
15								15
20								20
25								25

Sampler Type:
- No Recovery
- Continuous Core

PID - Photoionization Detector (Headspace Measurement)
- Static Water Level
- Water Level (ATD)

Logged by: AET/MAR
Approved by: SJG
Figure No. A- 73

_ENV BORING LOG KIMBERLY CLARK-EVERETT.GPJ July 31, 2014

Boring Log

Aspect CONSULTING

Project Number	Boring Number	Sheet
110207	GF11-B-02	1 of 1

Project Name: Kimberly Clark
Location: Everett, WA
Driller/Method: Cascade Drilling / Direct Push Probe-Limited Access
Sampling Method: Continuous Core

Ground Surface Elev.
Depth to Water (ft BGS)
Start/Finish Date 9/5/2012

Depth / Elevation (feet)	Borehole Completion	Sample Type/ID	Tests	PID (ppm)	Blows/ 6"	Material Type	Description	Depth (ft)
	3/8" hydrated bentonite chips	CC-1	GF11-B-02-0-1				Asphalt	
							Moist, brown, sandy, silty GRAVEL (GM); fine subround gravel	
			GF11-B-02-2-3				Moist, brown, sandy GRAVEL (GP); fine subround gravel	
							Moist, brown SAND (SP); fine sand	
							No recovery	
5			GF11-B-02-5-6				Wet, brown, slightly silty, gravelly SAND (SP-SM); fine sand	5
		CC-2					Becomes black	
			GF11-B-02-7-8					
							Wet, black SAND (SP); fine sand	
							No recovery	
10							Bottom of boring at 10' BGS	10
15								15
20								20
25								25

Sampler Type:
- No Recovery
- Continuous Core

PID - Photoionization Detector (Headspace Measurement)
- Static Water Level
- Water Level (ATD)

Logged by: AET/MAR
Approved by: SJG
Figure No. A- 74

_ENV BORING LOG KIMBERLY CLARK-EVERETT.GPJ July 31, 2014

Boring Log

Aspect CONSULTING

Project Number	Boring Number	Sheet
110207	GF11-B-03	1 of 1

Project Name: Kimberly Clark
Location: Everett, WA
Driller/Method: Cascade Drilling / Direct Push Probe-Limited Access
Sampling Method: Continuous Core
Ground Surface Elev.
Depth to Water (ft BGS)
Start/Finish Date 9/5/2012

Depth / Elevation (feet)	Borehole Completion	Sample Type/ID	Tests	PID (ppm)	Blows/ 6"	Material Type	Description	Depth (ft)
			GF11-B-03-0-1	0			Asphalt	
	3/8" hydrated bentonite chips						Moist, brown, gravelly SAND (SP); poorly graded fine to medium sand	
			GF11-B-03-2-3	0			Becomes dark gray to black, slightly gravelly; fine sand	
		CC-1		0			Becomes wet, gray; medium to coarse sand	
				0			Becomes brown	
							No recovery	
5			GF11-B-03-5-6				Wet, gray to brown, gravelly SAND (SP); poorly graded fine to medium sand	5
				0			Thin bed silty sand	
		CC-2		0			Becomes gray	
				0			Thin bed black clayey silt	
				0			Thin bed sandy organic silt	
							No recovery	
10							Bottom of boring at 10' BGS	10
15								15
20								20
25								25

Sampler Type:
- ◯ No Recovery
- ▌▌ Continuous Core

PID - Photoionization Detector (Headspace Measurement)
- ▼ Static Water Level
- ▽ Water Level (ATD)

Logged by: AET/MAR
Approved by: SJG
Figure No. A- 75

_ENV BORING LOG KIMBERLY CLARK-EVERETT.GPJ July 31, 2014

Monitoring Well Construction Log

Aspect CONSULTING

Project Number	Well Number	Sheet
110207	GF11-MW-101	1 of 3

Project Name: Kimberly Clark
Location: Everett, WA
Driller/Method: Holt / Direct Push Probe-Limited Access
Sampling Method: Continuous Core

Ground Surface Elev.:
Top of Casing Elev.:
Depth to Water (ft BGS):
Start/Finish Date: 4/28/2014

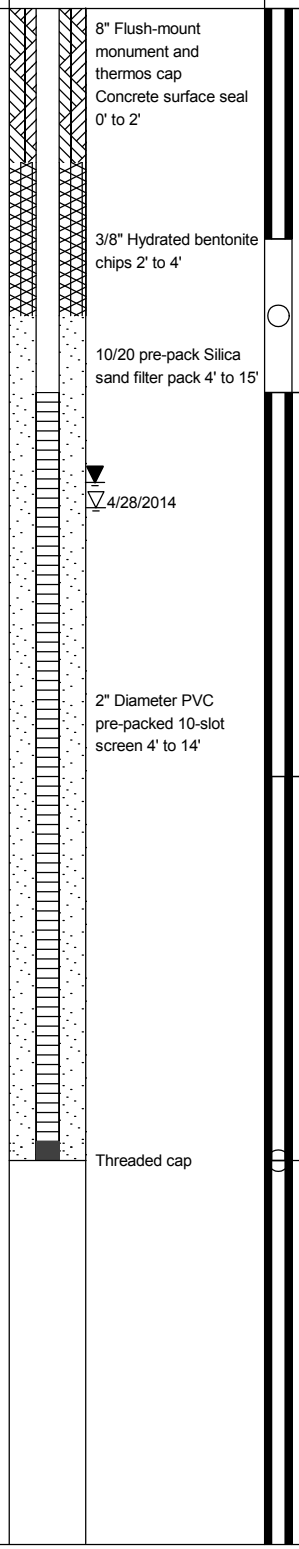

Depth / Elevation (feet)	PID (ppm)	Blows/ 6"	Material Type	Description	Depth (ft)
	0.0			Recycled demo debris	
	0.0				
	0.0			Moist, black, sandy SILT (ML); numerous organics	
				No recovery	
5	0.0			Moist, black, silty SAND (SM); fine sand, trace gravel, burnt appearance	5
	0.0				
	0.0			Wet, black, sandy SILT (ML); fine sand	
	0.0				
				No recovery	
10	0.0			Wet, black, slightly silty SAND (SP); with scattered, thick, sandy SILT (SM) interbeds	10
	0.0				
	0.0				
	0.0				
	0.0				
15				Bottom of boring at 15' bgs	15

Sampler Type:
- ◯ No Recovery
- ▮ Continuous Core

PID - Photoionization Detector
- ▼ Static Water Level
- ▽ Water Level (ATD)

Logged by: AET
Approved by: SJG
Figure No. A-

MONITORING WELL KIMBERLY CLARK-EVERETT.GPJ October 14, 2015

Boring Log

Aspect CONSULTING

Project Number	Boring Number	Sheet
110207	HB-B-01	1 of 1

Project Name: Kimberly Clark
Location: Everett, WA
Driller/Method: Cascade Drilling / Direct Push Probe-Limited Access
Sampling Method: Continuous Core

Ground Surface Elev.:
Depth to Water (ft BGS):
Start/Finish Date: 9/7/2012

Depth / Elevation (feet)	Borehole Completion	Sample Type/ID	Tests	PID (ppm)	Blows/ 6"	Material Type	Description	Depth (ft)
							Asphalt	
							Concrete	
	3/8" hydrated bentonite chips	CC-1	HB-B-01-2-3				Moist, dark brown, slightly gravelly, slightly silty SAND (SP); fine to medium sand	
			HB-B-01-3-4				Moist to wet, black, gravelly SAND (SP); poorly graded fine to medium sand	
							No recovery	
5							Wet, dark brown to black, slightly gravelly SAND (SP); poorly graded fine to medium sand	5
		CC-2	HB-B-01-6-7				Brick	
							Wet, black SAND (SP); trace gravel	
							No recovery	
10							Bottom of boring at 10' BGS	10
15								15
20								20
25								25

Sampler Type:
- No Recovery
- Continuous Core

PID - Photoionization Detector (Headspace Measurement)
- Static Water Level
- Water Level (ATD)

Logged by: AET/MAR
Approved by: SJG
Figure No. A- 99

_ENV BORING LOG KIMBERLY CLARK-EVERETT.GPJ July 31, 2014

Boring Log

Project Number	Boring Number	Sheet
110207	HB-B-02	1 of 1

Project Name: Kimberly Clark
Location: Everett, WA
Driller/Method: Cascade Drilling / Direct Push Probe-Limited Access
Sampling Method: Continuous Core
Ground Surface Elev.:
Depth to Water (ft BGS):
Start/Finish Date: 9/7/2012

Depth / Elevation (feet)	Borehole Completion	Sample Type/ID	Tests	PID (ppm)	Blows/ 6"	Material Type	Description	Depth (ft)
							Concrete	
							Void space	
	3/8" hydrated bentonite chips		HB-B-02-1-1.5	0				
				0			Moist, brown, slightly silty, gravelly SAND (SP-SM)	
		CC-1					No recovery	
5	▽		HB-B-02-5-6	0			Moist, brown, gravelly SAND (SP); trace silt	5
				0			Becomes wet	
		CC-2	HB-B-02-7-8	0			Becomes brown to black	
							No recovery	
10							Wet, dark brown to black SAND (SP); trace silt, trace gravel	10
		CC-3						
15							Bottom of boring at 15' BGS	15
20								20
25								25

Sampler Type:
- ◯ No Recovery
- ▌▌ Continuous Core

PID - Photoionization Detector (Headspace Measurement)
- ▼ Static Water Level
- ▽ Water Level (ATD)

Logged by: AET/MAR
Approved by: SJG
Figure No. A- 100

_ENV BORING LOG KIMBERLY CLARK-EVERETT.GPJ July 31, 2014

Boring Log

Project Number	Boring Number	Sheet
110207	HB-B-03	1 of 1

Project Name: Kimberly Clark
Location: Everett, WA
Driller/Method: Cascade Drilling / Direct Push Probe-Limited Access
Sampling Method: Continuous Core

Ground Surface Elev.
Depth to Water (ft BGS)
Start/Finish Date 9/6/2012

Depth / Elevation (feet)	Borehole Completion	Sample Type/ID	Tests	PID (ppm)	Blows/ 6"	Material Type	Description	Depth (ft)
							Concrete	
				0			Void space	
	3/8" hydrated bentonite chips		HB-B-02-1-1.5				Moist, brown SAND (SP); trace gravel, fine sand	
				0			Becomes fine to medium sand	
		CC-1					No recovery	
5	▽		HB-B-02-5-6	0			Wet, brown SAND (SP); fine to medium sand, trace gravel	5
				0			Wood 5.5' to 6'	
		CC-2	HB-B-02-7-8	0			Wet, brown SAND (SP); fine to medium sand, trace gravel	
							No recovery	
10							Bottom of boring at 10' BGS	10
15								15
20								20
25								25

Sampler Type:
- ◯ No Recovery
- ▌▌ Continuous Core

PID - Photoionization Detector (Headspace Measurement)
- ▼ Static Water Level
- ▽ Water Level (ATD)

Logged by: AET/MAR
Approved by: SJG
Figure No. A- 101

_ENV BORING LOG KIMBERLY CLARK-EVERETT.GPJ July 31, 2014

Boring Log

Aspect CONSULTING

Project Number	Boring Number	Sheet
110207	HB-B04	1 of 1

Project Name: Kimberly Clark
Location: Everett, WA
Driller/Method: Holt / Direct Push Probe
Sampling Method: Continous Core 2"
Ground Surface Elev.
Depth to Water (ft BGS)
Start/Finish Date 11/18/2013

Depth / Elevation (feet)	Borehole Completion	Sample Type/ID	Tests	PID (ppm)	Blows/ 6"	Material Type	Description	Depth (ft)
		CC-01					Recycled demo debris	
							No recovery	
5	Hydrated bentonite chip backfill							5
			HB-B4-5.5	0				
				0				
			HB-B4-6.5	0			Stiff, wet, brown, slightly gravelly, sandy SILT (ML); fine gravel, medium to coarse sand	
	11/18/2013			0				
		CC-02	HB-B4-7.5	0			Loose, moist, light brown, SAND (SW); fine to coarse sand	
				0			Medium dense, moist, black sandy, gravelly, SILT (ML)	
							No recovery	
10								10
				0			Medium dense, wet, black, silty SAND (SM); fine to very coarse sand	
				0				
				0				
				0			Stiff, moist, black and brown ORGANIC SILT (OL)	
		CC-03		0				
				0			Medium dense, wet, black silty SAND (SM); fine to coarse sand	
							No recovery	
15								15
							Bottom of boring 15 feet Note: Density and consistency was estimated based on sample observations.	

Sampler Type:
- No Recovery
- Continuous Core

PID - Photoionization Detector (Headspace Measurement)
- Static Water Level
- Water Level (ATD)

Logged by: AHP
Approved by: SJG
Figure No. A- 102

_ENV BORING LOG KIMBERLY CLARK-EVERETT.GPJ July 31, 2014

Boring Log

Aspect CONSULTING

Project Number	Boring Number	Sheet
110207	HB-B05	1 of 1

Project Name: Kimberly Clark
Location: Everett, WA
Driller/Method: Holt / Direct Push Probe
Sampling Method: Continous Core 2"

Ground Surface Elev.
Depth to Water (ft BGS)
Start/Finish Date 11/18/2013

Depth / Elevation (feet)	Borehole Completion	Sample Type/ID	Tests	PID (ppm)	Blows/ 6"	Material Type	Description	Depth (ft)
0							Recycled demo debris	0
1								1
2		CC-01						2
3								3
4							No recovery	4
5	Hydrated bentonite chip backfill							5
6		CC-02					Stiff, moist, black, slightly gravelly, sandy SILT (ML); fine to medium sand, coarse subangualr gravel	6
7			HB-B5-7					7
8							Bottom of boring 8 feet Note: Density and consistency was estimated based on sample observations.	8
9								9

Sampler Type:
- ◯ No Recovery
- ▌▌ Continuous Core

PID - Photoionization Detector (Headspace Measurement)
- ▼ Static Water Level
- ▽ Water Level (ATD)

Logged by: AHP
Approved by: SJG
Figure No. A- 103

_ENV BORING LOG KIMBERLY CLARK-EVERETT.GPJ July 31, 2014

Boring Log

Aspect CONSULTING

Project Number	Boring Number	Sheet
110207	HB-B06	1 of 1

Project Name: Kimberly Clark
Location: Everett, WA
Driller/Method: Holt / Direct Push Probe
Sampling Method: Continous Core 2"

Ground Surface Elev.
Depth to Water (ft BGS)
Start/Finish Date 11/18/2013

Depth / Elevation (feet)	Borehole Completion	Sample Type/ID	Tests	PID (ppm)	Blows/ 6"	Material Type	Description	Depth (ft)
							Recycled demo debris	
				0			Medium dense, moist, brown, sandy GRAVEL (GP); fine to medium subangular gravel	
		CC-01		0			Medium dense, slightly moist, brown, slightly gravelly, silty SAND (SM); fine to medium sand	
							No recovery	
5	Hydrated bentonite chip backfill							5
				0			Medium dense, slightly moist, brown, slightly gravelly, silty SAND (SM); fine to medium sand	
				0			Crushed concrete	
				0			Stiff, moist, dark brown, SILT and GRAVEL (GM-ML); coarse gravel	
				0			Soft, wet, black, SILT (ML)	
		CC-02		0			Medium dense, wet, brown, silty SAND (SM)	
	▽ 11/18/2013			0			No recovery	
10								10
				0			Soft, wet, brown, gravelly, silty SAND (SM); medium sand, fine gravel	
			HB-B6-11	0				
				0				
				0				
		CC-03	HB-B6-12.5	0			Medium dense, wet, gray slightly silty SAND (SW-SM); fine to coarse sand, sheen	
				69.4				
				2.2				
				2.3				
				1.4			Medium stiff, wet, dark brown, ORGANIC SILT (OL)	
				1.3			Medium dense, wet, brown, SAND (SP); medium sand	
15			HB-B6-15					15
							Bottom of boring 15 feet Note: Density and consistency was estimated based on sample observations.	

Sampler Type:
◯ No Recovery
▌▌ Continuous Core

PID - Photoionization Detector (Headspace Measurement)
▼ Static Water Level
▽ Water Level (ATD)

Logged by: AHP
Approved by: SJG
Figure No. A- 104

_ENV BORING LOG KIMBERLY CLARK-EVERETT.GPJ July 31, 2014

Boring Log

Aspect CONSULTING

Project Number	Boring Number	Sheet
110207	HB-MW-01	1 of 1

Project Name: Kimberly Clark
Location: Everett, WA
Driller/Method: Cascade Drilling / Direct Push Probe-Limited Access
Sampling Method: Continuous Core

Ground Surface Elev.:
Depth to Water (ft BGS):
Start/Finish Date: 9/7/2012

Depth / Elevation (feet)	Borehole Completion	Sample Type/ID	Tests	PID (ppm)	Blows/ 6"	Material Type	Description	Depth (ft)
0	8" flush-mount monument and thermos cap Concrete surface seal						Asphalt	0
			HB-MW-01-1.5-2	0			Moist, brown, slightly gravelly, slightly silty SAND (SP-SM)	
	3/8" hydrated bentonite chips	CC-1					No recovery	
	2/12 silica sand filter pack		HB-MW-01-3-3.5					
5							Moist, brown, slightly gravelly SAND (SP); with brick debris	5
	▽		HB-MW-01-6-7	0			Wet, black, slightly silty, gravelly SAND (SP-SM); fine to medium sand	
		CC-2		0				
	2" diameter PVC pre-packed .001 slot screen						No recovery	
10							Wet, dark gray SAND (SP); fine to medium sand, trace gravel	10
				1.4				
				1.9			Wood	
		CC-3		0.4			Wet, gray, slightly gravelly SAND (SP); fine to medium sand	
	Threaded cap			0				
15							Bottom of boring at 15' BGS	15
20								20
25								25

Sampler Type:
- ◯ No Recovery
- ▌▌ Continuous Core

PID - Photoionization Detector (Headspace Measurement)
- ▼ Static Water Level
- ▽ Water Level (ATD)

Logged by: AET/MAR
Approved by: SJG
Figure No. A- 105

_ENV BORING LOG KIMBERLY CLARK-EVERETT.GPJ July 31, 2014

Boring Log

Aspect CONSULTING

Project Number	Boring Number	Sheet
110207	HB-MW-01R	1 of 1

Project Name: Kimberly Clark
Location: Everett, WA
Driller/Method: Holt / Direct Push Probe
Sampling Method: Continuous Core 3"

Ground Surface Elev. 20.42
Depth to Water (ft BGS)
Start/Finish Date 11/11/2013

Depth / Elevation (feet)	Borehole Completion	Sample Type/ID	Tests	PID (ppm)	Blows/ 6"	Material Type	Description	Depth (ft)
20	8" Flush-mount monument and thermos cap Concrete surface seal 0' to 1'	CC-1					Recycled demo debris	
	3/8" Hydrated bentonite chips 1' to 5'						No recovery	
5 / 15		CC-2	HB-MW-1R-7	0 0 0 0			Slightly moist, dark brown, silty, SAND (SM); medium to coarse, subangular sand Wet at 7.5 feet	5
	▽ 11/11/2013						No recovery	
10 / 10	10/20 pre-pack Silica sand filter pack 5' to 16.25'	CC-3	HB-MW-1R-12	0 0 0 0 0 0 0			Slightly moist, brown, silty, gravelly, SAND (SM) Wet, brown, gravelly, very silty, SAND (SM); fine to medium sand Wet, dark gray, silty, SAND (SM); medium sand, petroleum odor, sheen Moist, brown, organic SILT (OL) with wood debris	10
							No recovery	
15 / 5	2" Diameter PVC pre-packed 10-slot screen 6' to 16' Threaded cap	CC-4	HB-MW-1R-17				Wet, gray, gravelly, silty, SAND (SM); fine to coarse sand Slight petroleum odor at 15.5 feet	15
	Slough 16.25' to 20'						No recovery	
20 / 0							Bottom of boring at 20 feet	20

Sampler Type:
- ◯ No Recovery
- ▌▌ Continuous Core

PID - Photoionization Detector (Headspace Measurement)
- ▼ Static Water Level
- ▽ Water Level (ATD)

Logged by: AHP
Approved by: SJG
Figure No. A- 106

_ENV BORING LOG KIMBERLY CLARK-EVERETT.GPJ July 31, 2014

Monitoring Well Construction Log

Aspect CONSULTING

Project Number	Well Number	Sheet
110207	HBV-MW-101	1 of 1

Project Name: Kimberly Clark
Location: Everett, WA
Driller/Method: Holt / Direct Push Probe-Limited Access
Sampling Method: Direct Push Probe-Limited Access

Ground Surface Elev.
Top of Casing Elev.
Depth to Water (ft BGS)
Start/Finish Date: 4/23/2014

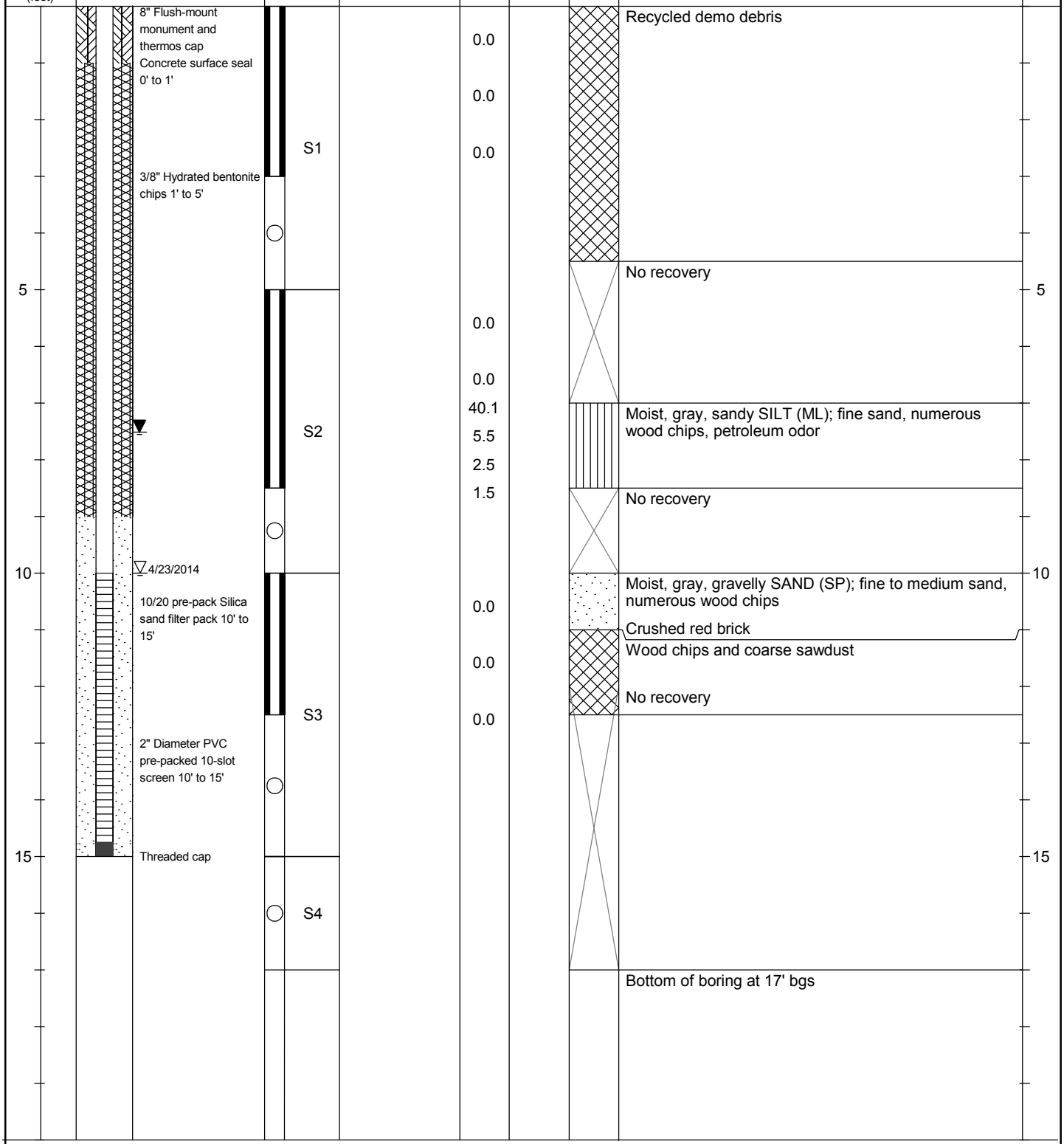

Depth / Elevation (feet)	PID (ppm)	Blows/ 6"	Material Type	Description	Depth (ft)
	0.0			Recycled demo debris	
	0.0				
	0.0				
5				No recovery	5
	0.0				
	0.0				
	40.1			Moist, gray, sandy SILT (ML); fine sand, numerous wood chips, petroleum odor	
	5.5				
	2.5				
	1.5			No recovery	
10					10
	0.0			Moist, gray, gravelly SAND (SP); fine to medium sand, numerous wood chips	
				Crushed red brick	
	0.0			Wood chips and coarse sawdust	
				No recovery	
	0.0				
15					15
				Bottom of boring at 17' bgs	

Sampler Type:
- ○ No Recovery
- ▮ Continuous Core

PID - Photoionization Detector
- ▼ Static Water Level
- ▽ Water Level (ATD)

Logged by: AET/MML
Approved by: SJG
Figure No. A-

MONITORING WELL KIMBERLY CLARK-EVERETT.GPJ October 14, 2015

Boring Log

Project Number	Boring Number	Sheet
110207	HW-B-01	1 of 1

Project Name: Kimberly Clark
Location: Everett, WA
Driller/Method: Cascade Drilling / Direct Push Probe
Sampling Method: Continuous Core

Ground Surface Elev.
Depth to Water (ft BGS)
Start/Finish Date 6/29/2012

Depth / Elevation (feet)	Borehole Completion	Sample Type/ID	Tests	PID (ppm)	Blows/ 6"	Material Type	Description	Depth (ft)
			HW-B-1-0-1	0.3			Asphalt Slightly moist, dark brown and brown mottled, slightly silty, very gravelly SAND (SP-SM); fine sand	
	Backfilled with medium bentonite chips	CC-1		0				
			HW-B-1-3-4	0			Moist, brown-orange mottled, slightly gravelly SAND (SP); fine to medium sand	
				0			No recovery	
5				0				5
			HW-B-1-6-7	0				
		CC-2		0			Wet, dark gray, sandy SILT (ML); trace gravel, fine sand	
				0				
10				0				10
				0				
		CC-3		0			Wet, dark gray, silty, very gravelly SAND (SM); fine to coarse gravel	
				0			Wet, dark gray, slightly gravelly, slightly sandy SILT (ML); trace fibrous organics	
				0				
15				0			Bottom of boring at 15 ' BGS	15

Sampler Type:
- ◯ No Recovery
- ▌▌ Continuous Core

PID - Photoionization Detector (Headspace Measurement)
- ▼ Static Water Level
- ▽ Water Level (ATD)

Logged by: AET
Approved by: SJG
Figure No. A- 107

_ENV BORING LOG KIMBERLY CLARK-EVERETT.GPJ July 31, 2014

Boring Log

Aspect CONSULTING

Project Number	Boring Number	Sheet
110207	HW-B-02	1 of 1

Project Name: Kimberly Clark
Location: Everett, WA
Driller/Method: Cascade Drilling / Direct Push Probe
Sampling Method: Continuous Core

Ground Surface Elev.
Depth to Water (ft BGS)
Start/Finish Date 6/29/2012

Depth / Elevation (feet)	Borehole Completion	Sample Type/ID	Tests	PID (ppm)	Blows/ 6"	Material Type	Description	Depth (ft)
			HW-B-2-0-1	0			Wood chips	
				0			Very moist, gray SAND (SW); trace gravel, fine to coarse sand	
	Backfilled with medium bentonite chips	CC-1	HW-B-2-3-4	0				
				0			Moist, dark brown, gravelly, sandy SILT (ML)	
				0			Wet, gray, slightly gravelly SAND (SW); fine to coarse sand, fine gravel	
5				0			Wet, dark brown, sandy SILT (ML)	5
			HW-B-2-6-7	0			Wet, gray, gravelly SAND (SW); fine to coarse sand, fine gravel	
		CC-2		0			Wet, gray, gravelly, sandy SILT (ML); scattered organic- wood- debris	
				0				
							Slightly clayey	
10				0				10
		CC-3		0				
				0				
				0				
				0				
15				0			Bottom of boring at 15 ' BGS	15

Sampler Type:
- ◯ No Recovery
- ▌▌ Continuous Core

PID - Photoionization Detector (Headspace Measurement)
- ▼ Static Water Level
- ▽ Water Level (ATD)

Logged by: AET
Approved by: SJG
Figure No. A- 108

_ENV BORING LOG KIMBERLY CLARK-EVERETT.GPJ July 31, 2014

Boring Log

Project Number	Boring Number	Sheet
110207	HW-B-03	1 of 1

Project Name: Kimberly Clark
Location: Everett, WA
Driller/Method: Cascade Drilling / Direct Push Probe-Limited Access
Sampling Method: Continuous Core

Ground Surface Elev.:
Depth to Water (ft BGS):
Start/Finish Date: 9/6/2012

Depth / Elevation (feet)	Borehole Completion	Sample Type/ID	Tests	PID (ppm)	Blows/ 6"	Material Type	Description	Depth (ft)
0	3/8" hydrated bentonite chips	CC-1	HW-B-3-0-1	0			Moist, dark brown, gravelly, silty SAND (SP); numerous organics	0
				0			Becomes gray	
				0				
		CC-2	HW-B-3-3-4	0			Becomes dark gray	
				0			Becomes gray	
5							No recovery	5
			HW-B-3-6-7				Very moist to wet, gray, slightly clayey, gravelly, sandy SILT (ML); fine sand	
		CC-3					Wet, black, slightly silty, gravelly SAND (SP-SM)	
10							No recovery	10
							Bottom of boring at 11' BGS	
15								15
20								20
25								25

Sampler Type:
- No Recovery
- Continuous Core

PID - Photoionization Detector (Headspace Measurement)
- Static Water Level
- Water Level (ATD)

Logged by: AET/MAR
Approved by: SJG
Figure No. A- 109

_ENV BORING LOG KIMBERLY CLARK-EVERETT.GPJ July 31, 2014

Boring Log

Aspect CONSULTING

Project Number	Boring Number	Sheet
110207	HW-B-04	1 of 1

Project Name: Kimberly Clark
Location: Everett, WA
Driller/Method: Cascade Drilling / Direct Push Probe-Limited Access
Sampling Method: Continuous Core

Ground Surface Elev.:
Depth to Water (ft BGS):
Start/Finish Date: 9/6/2012

Depth / Elevation (feet)	Borehole Completion	Sample Type/ID	Tests	PID (ppm)	Blows/ 6"	Material Type	Description	Depth (ft)
	3/8" hydrated bentonite chips	CC-1	HW-B-04-0-1	0			Moist, dark gray, gravelly, sandy SILT (ML); numerous organics	
				0				
				0			Wet, gray SAND (SW); poorly graded fine to coarse sand	
				0			Pea gravel	
			HW-B-04-3.5-4				Moist, gray, slightly gravelly, sandy SILT (ML)	
5				0				5
		CC-2		0				
			HW-B-04-6-6.5	0			Cobbles	
							No recovery	
							Moist, gray, slightly gravelly, sandy SILT (ML)	
10		CC-3						10
							No recovery	
							Bottom of boring at 13' BGS	
15								15
20								20
25								25

Sampler Type:
- No Recovery
- Continuous Core

PID - Photoionization Detector (Headspace Measurement)
- Static Water Level
- Water Level (ATD)

Logged by: AET/MAR
Approved by: SJG
Figure No. A- 110

_ENV BORING LOG KIMBERLY CLARK-EVERETT.GPJ July 31, 2014

Boring Log

Aspect CONSULTING

Project Number	Boring Number	Sheet
110207	HW-MW-01	1 of 1

Project Name: Kimberly Clark
Location: Everett, WA
Driller/Method: Cascade Drilling / Direct Push Probe
Sampling Method: Continuous Core

Ground Surface Elev.: 15.5
Depth to Water (ft BGS):
Start/Finish Date: 6/29/2012

Depth / Elevation (feet)	Borehole Completion	Sample Type/ID	Tests	PID (ppm)	Blows/ 6"	Material Type	Description	Depth (ft)
0 / 15	8" Flush-mount monument and thermos cap Concrete surface seal 0' to 2'		HW-MW-1-0-1	0			Wood chips	0
1 / 14				0			Moist, gray, brown, gravelly, sandy SILT (ML); scattered organics	1
2 / 13	3/8" Hydrated bentonite chips 2' to 3'	CC-1		0				2
3 / 12	2/12 pre-pack Silica sand filter pack 3' to 14'		HW-MW-1-3-4	0				3
4 / 11				0				4
5 / 10				0				5
6 / 9			HW-MW-1-6-7	0				6
7 / 8		CC-2		0				7
8 / 7	2" Diameter PVC pre-packed .001 slot screen 4' to 14'			0				8
9 / 6				0			Clayey at 9' 4" of back gravel at 9.5'	9
10 / 5				0				10
11 / 4				0				11
12 / 3		CC-3		0				12
13 / 2				0				13
14 / 1	Threaded cap			0			Refusal at 14'; bottom of boring at 14 ' BGS	14
15 / 0								15
16 / -1								16
17 / -2								17
18 / -3								18
19 / -4								19
20 / -5								20
21 / -6								21
22 / -7								22
23 / -8								23
24 / -9								24
25 / -10								25
26 / -11								26
27 / -12								27
28 / -13								28
29 / -14								29

Sampler Type:
- ◯ No Recovery
- ▌▌ Continuous Core

PID - Photoionization Detector (Headspace Measurement)
- ▼ Static Water Level
- ▽ Water Level (ATD)

Logged by: AET
Approved by: SJG
Figure No. A- 111

_ENV BORING LOG KIMBERLY CLARK-EVERETT.GPJ July 31, 2014

Aspect CONSULTING	Kimberly Clark Everett Mill - 110207		Environmental Exploration Log	
	Project Address & Site Specific Location		*Coordinates (SPN NAD83 ft)*	*Exploration Number*
	Everett, WA 98201, Log Pond		E:1301535 N:362634 (est)	**LP-B-01**
Contractor	*Equipment*	*Sampling Method*	*Ground Surface (GS) Elev. (NAVD88)*	
Holt Services, Inc.	Rotary sonic drill rig	Grab	18.31905'(est)	
Operator	*Exploration Method(s)*	*Work Start/Completion Dates*	*Top of Casing Elev. (NAVD88)*	*Depth to Water (Below GS)*
Brian Owens	Rotary sonic	5/16/2017	NA	30' (ATD)

Depth (feet)	Elev. (feet)	Exploration Completion and Notes	Sample Type/ID	Analytical Sample Number & Lab Test(s)	Field Tests	Material Type	Description	Depth (ft)
							CRUSHED MATERIAL Slightly moist, gray, crushed Concrete and Brick; no odor, no sheen.	
	15	Backfilled with 3/8-inch bentonite chips					**FILL**	
5			S1	Soil: LP-B-01-4 TPH, VOCs, SVOCs, Metals, PCBs	PID= 0.0		Moist, gray brown, sandy, gravelly, silty SAND (SM); fine to medium sand, predominantly fine rounded gravel, with trace debris (metal, wires, etc.), no odor, no sheen.	5
							Grades to dark brown. Becomes brown.	
	10				PID= 0.0			
10							Becomes very moist to wet, with trace shell fragments, and scattered cobble sized concrete clasts.	10
	5						Wet, gray brown, very sandy SILT (ML); fine to medium sand, with trace shell fragments, no odor, no sheen.	
					PID= 0.0			
15			S2				Grades to dark brown.	15
	0				PID= 0.0			
20							Becomes gray brown.	20
	-5						Wet, dark brown, silty SAND (SM); predominantly fine to medium sand, with trace shells and woody debris, no odor, no sheen.	
					PID= 0.0			
25			S3				Grades to gray brown and gravelly (fine subrounded)	25
	-10				PID= 0.0			
		▽ 5/16/2017						

Legend

Sample Method
- ◯ No Soil Sample Recovery
- ◧ Continuous core 6" ID

Water Level
- ▽ Water Level ATD

See Exploration Log Key for explanation of symbols

Logged by: MML
Approved by: CEB

Exploration Log LP-B-01
Sheet 1 of 2

ASPECT STANDARD EXPLORATION LOG TEMPLATE \\BISERVER1.ASPECT.LOCAL\PROJECTS\GINTW\PROJECTS\KIMBERLY CLARK-110207_POST AUG 2015.GPJ February 15, 2018

Aspect CONSULTING	Kimberly Clark Everett Mill - 110207		Environmental Exploration Log	
	Project Address & Site Specific Location Everett, WA 98201, Log Pond		*Coordinates (SPN NAD83 ft)* E:1301535 N:362634 (est)	*Exploration Number* **LP-B-01**
Contractor Holt Services, Inc.	*Equipment* Rotary sonic drill rig	*Sampling Method* Grab	*Ground Surface (GS) Elev. (NAVD88)* 18.31905'(est)	
Operator Brian Owens	*Exploration Method(s)* Rotary sonic	*Work Start/Completion Dates* 5/16/2017	*Top of Casing Elev. (NAVD88)* NA	*Depth to Water (Below GS)* 30' (ATD)

Depth (feet)	Elev. (feet)	Exploration Completion and Notes	Sample Type/ID	Analytical Sample Number & Lab Test(s)	Field Tests	Material Type	Description	Depth (ft)
35	-15		S4		PID= 0.9		Wet, dark brown, silty SAND (SM); predominantly fine to medium sand, with trace shells and woody debris, no odor, no sheen. (continued)	35
	-20			Soil: LP-B-01-38 TPH, VOCs, SVOCs, Metals, PCBs	PID= 72.0		Moist, dark brown, sandy SAWDUST; fine sand, petroleum-like odor, organic sheen. Wire mesh screen	
40							Wet, gray brown, silty SAND (SM); fine to medium sand, with trace shell fragments, no odor, no sheen.	40
	-25				PID= 0.6			
45			S5				Moist, dark brown SAWDUST; decomposing, with decomposition-like odor, slight sheen.	45
	-30			Soil: LP-B-01-47 TPH, VOCs, SVOCs, Metals, PCBs	PID= 19.0		**NATIVE SEDIMENTS** Wet, gray, SAND (SW); fine to coarse salt-and-pepper sand, no odor, no sheen.	
50							Bottom of exploration at 50 ft. bgs.	50
55	-35							55
	-40							

Legend

Sample Method
- ◯ No Soil Sample Recovery
- ◧ Continuous core 6" ID

Water Level
- ▽ Water Level ATD

See Exploration Log Key for explanation of symbols

Logged by: MML
Approved by: CEB

Exploration Log LP-B-01
Sheet 2 of 2

ASPECT STANDARD EXPLORATION LOG TEMPLATE \\BISERVER1.ASPECT.LOCAL\PROJECTS\GINTW\PROJECTS\KIMBERLY CLARK-110207_POST AUG 2015.GPJ February 15, 2018

Aspect CONSULTING	Kimberly Clark Everett Mill - 110207		Environmental Exploration Log	
	Project Address & Site Specific Location Everett, WA 98201, Log Pond		*Coordinates (SPN NAD83 ft)* E:1301319 N:362686 (est)	*Exploration Number* **LP-B-02**
Contractor Holt Services, Inc.	*Equipment* Rotary sonic drill rig	*Sampling Method* Grab	*Ground Surface (GS) Elev. (NAVD88)* 16.50456'(est)	
Operator Brian Owens	*Exploration Method(s)* Rotary sonic	*Work Start/Completion Dates* 5/16/2017	*Top of Casing Elev. (NAVD88)* NA	*Depth to Water (Below GS)* No Water Encountered

Depth (feet)	Elev. (feet)	Exploration Completion and Notes	Sample Type/ID	Analytical Sample Number & Lab Test(s)	Field Tests	Material Type	Description	Depth (ft)
0	15	Backfilled with 3/8-inch bentonite chips	S1	Soil: LP-B-02-3 TPH, VOCs, SVOCs, Metals, PCBs	PID= 0.0		**FILL** Moist, black, decomposing woody Fill; wood chip pile.	0
							Moist, gray brown, sandy, gravelly SILT (ML); fine to medium sand, fine to coarse subrounded to rounded gravel, with no odor, no sheen.	
5	10				PID= 2.4			5
10	5		S2		PID= 1.3		With trace woody debris, no odor, no sheen.	10
15	0							15
20	-5		S3		PID= 10.6		With some black mottling, woody debris, no odor, no sheen.	20
25	-10				PID= 10.1			25

Legend

Sample Method
- No Soil Sample Recovery
- Continuous core 6" ID

Water Level
- No Water Encountered

See Exploration Log Key for explanation of symbols

Logged by: MML
Approved by: CEB

Exploration Log LP-B-02

Sheet 1 of 2

ASPECT STANDARD EXPLORATION LOG TEMPLATE \\BISERVER1.ASPECT.LOCAL\PROJECTS\GINTW\PROJECTS\KIMBERLY CLARK-110207_POST AUG 2015.GPJ February 15, 2018

Aspect CONSULTING	Kimberly Clark Everett Mill - 110207		Environmental Exploration Log	
	Project Address & Site Specific Location Everett, WA 98201, Log Pond		*Coordinates (SPN NAD83 ft)* E:1301319 N:362686 (est)	*Exploration Number* **LP-B-02**
Contractor Holt Services, Inc.	*Equipment* Rotary sonic drill rig	*Sampling Method* Grab	*Ground Surface (GS) Elev. (NAVD88)* 16.50456'(est)	
Operator Brian Owens	*Exploration Method(s)* Rotary sonic	*Work Start/Completion Dates* 5/16/2017	*Top of Casing Elev. (NAVD88)* NA	*Depth to Water (Below GS)* No Water Encountered

Depth (feet)	Elev. (feet)	Exploration Completion and Notes	Sample Type/ID	Analytical Sample Number & Lab Test(s)	Field Tests	Material Type	Description	Depth (ft)
							Very moist, gray brown SAND (SP); trace silt, predominantly fine sand, with no odor, no sheen.	
	-15				PID= 5.7			
35	-20		S4	Soil: LP-B-02-36 TPH, VOCs, SVOCs, Metals, PCBs	PID= 1.1		Moist, brown, sandy SAWDUST; 50% fine sand, with decomposition--like odor, organic sheen.	35
40	-25				PID= 2.5		**NATIVE SEDIMENTS** Moist, brown, gravelly, slightly silty SAND (SP-SM); fine to medium sand, fine rounded gravel, with abundant shell fragments, no sheen, no odor.	40
45	-30		S5	Soil: LP-B-02-49 TPH, VOCs, SVOCs, Metals, PCBs	PID= 0.0		Very moist, gray brown SAND (SW); fine to coarse sand, with trace shell fragments, no odor, no sheen, scattered clasts of fine sand.	45
50	-35						Bottom of exploration at 50 ft. bgs.	50
55	-40							55

Legend

Sample Method
- ◯ No Soil Sample Recovery
- ◧ Continuous core 6" ID

Water Level
- No Water Encountered

See Exploration Log Key for explanation of symbols

Logged by: MML
Approved by: CEB

Exploration Log LP-B-02
Sheet 2 of 2

ASPECT STANDARD EXPLORATION LOG TEMPLATE \\BISERVER1.ASPECT.LOCAL\PROJECTS\GINTW\PROJECTS\KIMBERLY CLARK-110207_POST AUG 2015.GPJ February 15, 2018

Aspect CONSULTING	Kimberly Clark Everett Mill - 110207		Environmental Exploration Log	
	Project Address & Site Specific Location Everett, WA 98201, Log Pond		*Coordinates (SPN NAD83 ft)* E:1301490 N:362664 (est)	*Exploration Number* **LP-B-03**
Contractor Holt Services, Inc.	*Equipment* Rotary sonic drill rig	*Sampling Method* Grab	*Ground Surface (GS) Elev. (NAVD88)* 17.94705'(est)	
Operator Brian Owens	*Exploration Method(s)* Rotary sonic	*Work Start/Completion Dates* 5/16/2017	*Top of Casing Elev. (NAVD88)* NA	*Depth to Water (Below GS)* 10' (ATD)

Depth (feet)	Elev. (feet)	Exploration Completion and Notes	Sample Type/ID	Analytical Sample Number & Lab Test(s)	Field Tests	Material Type	Description	Depth (ft)
0	15	Backfilled with 3/8-inch bentonite chips			PID= 0.1		**CRUSHED MATERIAL** Slightly moist, gray, crushed Concrete and Brick; no odor, no sheen.	0
5	10		S1	Soil: LP-B-03-6 TPH, VOCs, SVOCs, Metals, PCBs	PID= 0.3		**FILL** Moist, brown, Fill; woody debris, with no odor, no sheen. Moist, dark brown, sandy SILT (ML); trace fine subrounded gravel, fine sand, no odor, no sheen.	5
10	5	5/16/2017			PID= 0.0		Moist, dark brown, decomposing Woody Debris Fill; sulfide odor, weak organic sheen. Wet, dark brown, sandy, silty GRAVEL (GM); fine subrounded gravel, fine to coarse sand, with trace debris (crushed concrete, wire), no odor, no sheen.	10
15	0		S2		PID= 0.0		Wet, dark brown, gravelly, silty SAND (SM); fine to medium sand, fine subrounded to rounded gravel, with trace woody debris, no odor, no sheen. Grades to brown.	15
20	-5				PID= 0.0		With trace shell fragments, woody debris, with weak sulfide odor, no sheen. Gravel content becomes trace.	20
25	-10		S3		PID= 0.1		Wet, brown, sandy, silty GRAVEL (GM); fine to coarse sand, fine subrounded to rounded gravel, with trace woody debris and shell fragments, no odor, no sheen.	25
30	-15		S4		PID= 0.0		Wet, brown, silty SAND (SM); trace subrounded gravel, fine to coarse sand, with trace shell fragments, no odor, no sheen.	30

Legend

Sample Method
- ◯ No Soil Sample Recovery
- ◧ Continuous core 6" ID

Water Level
- ▽ Water Level ATD

See Exploration Log Key for explanation of symbols

Logged by: MML
Approved by: CEB

Exploration Log LP-B-03
Sheet 1 of 2

ASPECT STANDARD EXPLORATION LOG TEMPLATE \\BISERVER1.ASPECT.LOCAL\PROJECTS\GINTW\PROJECTS\KIMBERLY CLARK-110207_POST AUG 2015.GPJ February 15, 2018

Aspect CONSULTING	Kimberly Clark Everett Mill - 110207		Environmental Exploration Log	
	Project Address & Site Specific Location		*Coordinates (SPN NAD83 ft)*	*Exploration Number*
	Everett, WA 98201, Log Pond		E:1301490 N:362664 (est)	**LP-B-03**
Contractor	*Equipment*	*Sampling Method*	*Ground Surface (GS) Elev. (NAVD88)*	
Holt Services, Inc.	Rotary sonic drill rig	Grab	17.94705'(est)	
Operator	*Exploration Method(s)*	*Work Start/Completion Dates*	*Top of Casing Elev. (NAVD88)*	*Depth to Water (Below GS)*
Brian Owens	Rotary sonic	5/16/2017	NA	10' (ATD)

Depth (feet)	Elev. (feet)	Exploration Completion and Notes	Sample Type/ID	Analytical Sample Number & Lab Test(s)	Field Tests	Material Type	Description	Depth (ft)
40	-20		S4				Wet, brown, silty SAND (SM); trace subrounded gravel, fine to coarse sand, with trace shell fragments, no odor, no sheen. (continued)	40
45	-25		S5	Soil: LP-B-03-42 TPH, VOCs, SVOCs, Metals, PCBs, PCB Cogener	PID= 229		Moist, dark brown to black SAWDUST; decomposing sawdust, trace woody debris, with petroleum-like odor, slight sheen.	45
50	-30				PID= 72		**NATIVE SEDIMENTS** Wet, gray brown, sandy SILT (ML); trace fine subrounded gravel, fine to medium sand, with trace woody debris, no odor, no sheen.	50
55	-35		S6		PID= 0.1		Becomes moist.	55
60	-40			Soil: LP-B-03-59 TPH, VOCs, SVOCs, Metals, PCBs	PID= 0.0		Wet, gray, SAND (SW); fine to coarse salt-and-pepper sand, no odor, no sheen.	60
65	-45						Bottom of exploration at 60 ft. bgs.	65
	-50							

Legend

Sample Method
- ◯ No Soil Sample Recovery
- ◧ Continuous core 6" ID

Water Level
- ▽ Water Level ATD

See Exploration Log Key for explanation of symbols

Logged by: MML
Approved by: CEB

Exploration Log LP-B-03
Sheet 2 of 2

ASPECT STANDARD EXPLORATION LOG TEMPLATE \\BISERVER1.ASPECT.LOCAL\PROJECTS\GINTW\PROJECTS\KIMBERLY CLARK-110207_POST AUG 2015.GPJ February 15, 2018

Aspect CONSULTING	Kimberly Clark Everett Mill - 110207		Environmental Exploration Log	
	Project Address & Site Specific Location Everett, WA 98201, Log Pond		*Coordinates (SPN NAD83 ft)* E:1301575 N:362631 (est)	*Exploration Number* **LP-B-04**
Contractor Holt Services, Inc.	*Equipment* Rotary sonic drill rig	*Sampling Method* Grab	*Ground Surface (GS) Elev. (NAVD88)* 18.97755'(est)	
Operator Brian Owens	*Exploration Method(s)* Rotary sonic	*Work Start/Completion Dates* 5/15/2017	*Top of Casing Elev. (NAVD88)* NA	*Depth to Water (Below GS)* 40' (ATD)

Depth (feet)	Elev. (feet)	Exploration Completion and Notes	Sample Type/ID	Analytical Sample Number & Lab Test(s)	Field Tests	Material Type	Description	Depth (ft)
							CRUSHED MATERIAL Slightly moist, gray, crushed Concrete and Brick; no odor, no sheen.	
		Backfilled with 3/8-inch bentonite chips					**FILL** Moist, dark brown, gravel, silty SAND (SM); fine to medium sand, fine subrounded gravel, woody debris, no odor, no sheen.	
5	15		S1		PID= 0.0			5
					PID= 0.0		Becomes light gray brown.	
10	10							10
	5		S2	LP-B-04-17 TPH, VOCs, SVOCs, Metals, PCBs	PID= 0		Wet, black, gravel-sized to cobble-sized pieces of Asphalt; slight sheen, slight asphalt odor.	
15								15
	0						Moist, gray, gravelly, silty SAND (SM); fine to medium sand, with trace shells and woody debris, no odor, no sheen.	
20					PID= 0.0			20
	-5		S3					
25					PID= 0.0			25
	-10							

Legend

Sample Method: Continuous core 6" ID

Water Level: Water Level ATD

See Exploration Log Key for explanation of symbols

Logged by: MvdA
Approved by: CEB

Exploration Log LP-B-04

Sheet 1 of 2

ASPECT STANDARD EXPLORATION LOG TEMPLATE \\BISERVER1.ASPECT.LOCAL\PROJECTS\GINTW\PROJECTS\KIMBERLY CLARK-110207_POST AUG 2015.GPJ February 15, 2018

Aspect CONSULTING	Kimberly Clark Everett Mill - 110207		Environmental Exploration Log	
	Project Address & Site Specific Location Everett, WA 98201, Log Pond		*Coordinates (SPN NAD83 ft)* E:1301575 N:362631 (est)	*Exploration Number* **LP-B-04**
Contractor Holt Services, Inc.	*Equipment* Rotary sonic drill rig	*Sampling Method* Grab	*Ground Surface (GS) Elev. (NAVD88)* 18.97755'(est)	
Operator Brian Owens	*Exploration Method(s)* Rotary sonic	*Work Start/Completion Dates* 5/15/2017	*Top of Casing Elev. (NAVD88)* NA	*Depth to Water (Below GS)* 40' (ATD)

Depth (feet)	Elev. (feet)	Exploration Completion and Notes	Sample Type/ID	Analytical Sample Number & Lab Test(s)	Field Tests	Material Type	Description	Depth (ft)
35	-15		S4				Moist, dark brown, gravelly, silty SAND (SM); fine to medium sand, fine to coarse subrounded gravel, with cobbles.	35
40	-20	▽ 5/13/2017			PID= 0 PID= 0		Wet, gray, slightly silty SAND (SP-SM); predominantly medium sand, no odor, no sheen.	40
45	-25		S5	LP-B-04-45	PID= 9		Cobble-sized concrete clast. Moist, dark brown to black SAWDUST; decomposing sawdust, trace woody debris, with petroleum-like odor, organic sheen.	45
50	-30			LP-B-04-49 TPH, VOCs, SVOCs, Metals, PCBs	PID= 46		**NATIVE SEDIMENTS** Wet, gray, SAND (SP); fine to coarse salt-and-pepper sand, no odor, no sheen. Bottom of exploration at 50 ft. bgs.	50
55	-35							55
	-40							

Legend

Sample Method: ◫ Continuous core 6" ID

Water Level: ▽ Water Level ATD

See Exploration Log Key for explanation of symbols

Logged by: MvdA
Approved by: CEB

Exploration Log LP-B-04
Sheet 2 of 2

ASPECT STANDARD EXPLORATION LOG TEMPLATE \\BISERVER1.ASPECT.LOCAL\PROJECTS\GINTW\PROJECTS\KIMBERLY CLARK-110207_POST AUG 2015.GPJ February 15, 2018

Aspect CONSULTING	Kimberly Clark Everett Mill - 110207		Environmental Exploration Log	
	Project Address & Site Specific Location Everett, WA 98201, Log Pond		*Coordinates (SPN NAD83 ft)* E:1301721 N:362590 (est)	*Exploration Number* **LP-B-05**
Contractor Holt Services, Inc.	*Equipment* Rotary sonic drill rig	*Sampling Method* Grab	*Ground Surface (GS) Elev. (NAVD88)* 19.4369'(est)	
Operator Brian Owens	*Exploration Method(s)* Rotary sonic	*Work Start/Completion Dates* 05/15/2017	*Top of Casing Elev. (NAVD88)* NA	*Depth to Water (Below GS)* No Water Encountered

Depth (feet)	Elev. (feet)	Exploration Completion and Notes	Sample Type/ID	Analytical Sample Number & Lab Test(s)	Field Tests	Material Type	Description	Depth (ft)
		Backfilled with 3/8-inch bentonite chips			PID= 0.0		**CRUSHED MATERIAL** Slightly moist, gray, crushed Concrete and Brick; no odor, no sheen.	
							FILL Wet, black, silty SAND (SM); trace gravel, no odor, no sheen.	
5	15		S1				Moist, gray, silty SAND (SM); with trace shell fragments, no odor, no sheen. Becomes gray brown.	5
					PID= 0.0			
10	10						Moist, gray, gravelly, sandy SILT (ML); with few cobbles, no odor, no sheen.	10
					PID= 0.0			
15	5		S2					15
					PID= 0.0			
20	0						With concrete debris.	20
					PID= 0.0			
25	-5		S3	Soil: LP-B-05-28 TPH, VOCs, SVOCs, Metals, PCBs				25
					PID= 0.0		3-inch lens of wet, black, silty SAND; with woody debris.	
30	-10							30
			S4		PID= 0.0			
	-15						With concrete debris.	

Legend

Sample Method: Continuous core 6" ID

Water Level: No Water Encountered

See Exploration Log Key for explanation of symbols

Logged by: MvdA
Approved by: CEB

Exploration Log LP-B-05

Sheet 1 of 2

ASPECT STANDARD EXPLORATION LOG TEMPLATE P:\GINTWPROJECTS\KIMBERLY CLARK-110207_POST AUG 2015.GPJ 2018 April 02

Aspect CONSULTING	Kimberly Clark Everett Mill - 110207		Environmental Exploration Log	
	Project Address & Site Specific Location		*Coordinates (SPN NAD83 ft)*	*Exploration Number*
	Everett, WA 98201, Log Pond		E:1301721 N:362590 (est)	**LP-B-05**
Contractor	*Equipment*	*Sampling Method*	*Ground Surface (GS) Elev. (NAVD88)*	
Holt Services, Inc.	Rotary sonic drill rig	Grab	19.4369'(est)	
Operator	*Exploration Method(s)*	*Work Start/Completion Dates*	*Top of Casing Elev. (NAVD88)*	*Depth to Water (Below GS)*
Brian Owens	Rotary sonic	05/15/2017	NA	No Water Encountered

Depth (feet)	Elev. (feet)	Exploration Completion and Notes	Sample Type/ID	Analytical Sample Number & Lab Test(s)	Field Tests	Material Type	Description	Depth (ft)
40	-20		S4		PID= 0.0		Moist, gray, gravelly, sandy SILT (ML); with few cobbles, no odor, no sheen. (continued) With woody and brick debris. 6-inch bed of black silty SAND; with woody debris.	40
					PID= 0.0			
45	-25		S5				Moist, brown SAWDUST; decomposing sawdust, no odor, no sheen.	45
					PID= 0.0			
50	-30			Soil: LP-B-05-52 TPH, VOCs, SVOCs, Metals, PCBs			**NATIVE SEDIMENTS** Moist, gray, gravelly, SAND (SW); fine to coarse salt-and-pepper sand, no odor, no sheen.	50
					PID= 0.0			
55	-35		S6				Wet, gray, sandy, silty GRAVEL (GM); fine to coarse sand, fine to coarse subrounded to rounded gravel, with no odor, no sheen.	55
					PID= 0.0			
60	-40						Bottom of exploration at 60 ft. bgs.	60
65	-45							65
	-50							

Legend

Sample Method: Continuous core 6" ID

Water Level: No Water Encountered

See Exploration Log Key for explanation of symbols

Logged by: MvdA
Approved by: CEB

Exploration Log LP-B-05
Sheet 2 of 2

ASPECT STANDARD EXPLORATION LOG TEMPLATE P:\GINTWPROJECTS\KIMBERLY CLARK-110207_POST AUG 2015.GPJ 2018 April 02

Aspect CONSULTING	Kimberly Clark Everett Mill - 110207		Environmental Exploration Log	
	Project Address & Site Specific Location Everett, WA 98201, Log Pond		*Coordinates (SPN NAD83 ft)* E:1301798 N:362686 (est)	*Exploration Number* **LP-B-06**
Contractor Holt Services, Inc.	*Equipment* Rotary sonic drill rig	*Sampling Method* Grab	*Ground Surface (GS) Elev. (NAVD88)* 19.58086'(est)	
Operator Brian Owens	*Exploration Method(s)* Rotary sonic	*Work Start/Completion Dates* 5/15/2017	*Top of Casing Elev. (NAVD88)* NA	*Depth to Water (Below GS)* No Water Encountered

Depth (feet)	Elev. (feet)	Exploration Completion and Notes	Sample Type/ID	Analytical Sample Number & Lab Test(s)	Field Tests	Material Type	Description	Depth (ft)
							CRUSHED MATERIAL Slightly moist, gray, crushed Concrete and Brick; no odor, no sheen.	
		Backfilled with 3/8-inch bentonite chips			PID= 0.0		**FILL** Moist, dark brown to black, gravelly, silty SAND (SM); fine to medium sand, trace metal debris, no odor, no sheen.	
5	15		S1					5
					PID= 0.0		Becomes gray.	
10	10						Becomes wet.	10
							With concrete debris.	
					PID= 0.0			
15	5		S2					15
					PID= 0.0		Becomes very silty.	
20	0						With concrete debris.	20
				Soil: LP-B-06-24 TPH, VOCs, SVOCs, Metals, PCBs, PCB Cogener	PID= 0.0		Oily sheen between 24 and 28 ft bgs.	
25	-5		S3				With concrete debris.	25
					PID= 0.0		With brick debris.	
	-10							

Legend

Sample Method: Continuous core 6" ID

Water Level: No Water Encountered

See Exploration Log Key for explanation of symbols

Logged by: MvdA
Approved by: CEB

Exploration Log LP-B-06
Sheet 1 of 2

ASPECT STANDARD EXPLORATION LOG TEMPLATE \\BISERVER1.ASPECT.LOCAL\PROJECTS\GINTW\PROJECTS\KIMBERLY CLARK-110207_POST AUG 2015.GPJ February 15, 2018

Aspect CONSULTING	Kimberly Clark Everett Mill - 110207		Environmental Exploration Log	
	Project Address & Site Specific Location Everett, WA 98201, Log Pond		*Coordinates (SPN NAD83 ft)* E:1301798 N:362686 (est)	*Exploration Number* **LP-B-06**
Contractor Holt Services, Inc.	*Equipment* Rotary sonic drill rig	*Sampling Method* Grab	*Ground Surface (GS) Elev. (NAVD88)* 19.58086'(est)	
Operator Brian Owens	*Exploration Method(s)* Rotary sonic	*Work Start/Completion Dates* 5/15/2017	*Top of Casing Elev. (NAVD88)* NA	*Depth to Water (Below GS)* No Water Encountered

Depth (feet)	Elev. (feet)	Exploration Completion and Notes	Sample Type/ID	Analytical Sample Number & Lab Test(s)	Field Tests	Material Type	Description	Depth (ft)
35	-15		S4	Soil: LP-B-06-32 TPH, VOCs, SVOCs, Metals, PCBs	PID= 0.0		**NATIVE SEDIMENTS** Moist, gray, SAND (SW); fine to coarse salt-and-pepper sand, no odor, no sheen. (continued) Includes trace fine subrounded gravel.	35
					PID= 0.0			
40	-20						Bottom of exploration at 40 ft. bgs.	40
45	-25							45
50	-30							50
55	-35							55
	-40							

Legend

Sample Method: Continuous core 6" ID

Water Level: No Water Encountered

See Exploration Log Key for explanation of symbols

Logged by: MvdA
Approved by: CEB

Exploration Log LP-B-06
Sheet 2 of 2

ASPECT STANDARD EXPLORATION LOG TEMPLATE \\BISERVER1.ASPECT.LOCAL\PROJECTS\GINTW\PROJECTS\KIMBERLY CLARK-110207_POST AUG 2015.GPJ February 15, 2018

Aspect CONSULTING	Kimberly Clark Everett Mill - 110207		Environmental Exploration Log	
	Project Address & Site Specific Location Everett, WA 98201, Log Pond		*Coordinates (SPN NAD83 ft)* E:1301614 N:362758 (est)	*Exploration Number* **LP-B-07**
Contractor Holt Services, Inc.	*Equipment* Rotary sonic drill rig	*Sampling Method* Grab	*Ground Surface (GS) Elev. (NAVD88)* 18.13105'(est)	
Operator Brian Owens	*Exploration Method(s)* Rotary sonic	*Work Start/Completion Dates* 5/15/2017	*Top of Casing Elev. (NAVD88)* NA	*Depth to Water (Below GS)* No Water Encountered

Depth (feet)	Elev. (feet)	Exploration Completion and Notes	Sample Type/ID	Analytical Sample Number & Lab Test(s)	Field Tests	Material Type	Description	Depth (ft)
							CRUSHED MATERIAL Slightly moist, gray, crushed Concrete and Brick; no odor, no sheen.	
	15	Backfilled with 3/8-inch bentonite chips			PID= 0		**FILL** Moist, dark gray, sandy SILT (ML); trace fine subrounded gravel, fine to medium sand, with trace woody debris, no odor, no sheen.	
5			S1					5
	10				PID= 0			
10								10
	5						Wet, gray, very silty SAND (SM); fine to medium sand, with no odor, no sheen.	
15			S2				Wet, gray brown, sandy SILT (ML); trace fine subrounded to rounded gravel, no odor, no sheen.	15
	0						With concrete debris.	
20					PID= 0 PID= 0 PID= 0			20
	-5							
25			S3				With crushed brick debris.	25
							Moist, sand-sized to cobble-sized pieces of Asphalt	
	-10						Moist, gray brown, sandy, gravelly SILT (ML); fine to medium sand, fine subrounded gravel, no odor, no sheen.	

Legend

Sample Method: Continuous core 6" ID

Water Level: No Water Encountered

See Exploration Log Key for explanation of symbols

Logged by: MvdA
Approved by: CEB

Exploration Log LP-B-07

Sheet 1 of 2

ASPECT STANDARD EXPLORATION LOG TEMPLATE \\BISERVER1.ASPECT.LOCAL\PROJECTS\GINTW\PROJECTS\KIMBERLY CLARK-110207_POST AUG 2015.GPJ February 15, 2018

Aspect CONSULTING	Kimberly Clark Everett Mill - 110207		Environmental Exploration Log	
	Project Address & Site Specific Location Everett, WA 98201, Log Pond		*Coordinates (SPN NAD83 ft)* E:1301614 N:362758 (est)	*Exploration Number* **LP-B-07**
Contractor Holt Services, Inc.	*Equipment* Rotary sonic drill rig	*Sampling Method* Grab	*Ground Surface (GS) Elev. (NAVD88)* 18.13105'(est)	
Operator Brian Owens	*Exploration Method(s)* Rotary sonic	*Work Start/Completion Dates* 5/15/2017	*Top of Casing Elev. (NAVD88)* NA	*Depth to Water (Below GS)* No Water Encountered

Depth (feet)	Elev. (feet)	Exploration Completion and Notes	Sample Type/ID	Analytical Sample Number & Lab Test(s)	Field Tests	Material Type	Description	Depth (ft)
					PID= 0 PID= 0 PID= 0		Moist, gray brown, sandy, gravelly SILT (ML); fine to medium sand, fine subrounded gravel, no odor, no sheen. (continued)	
				Soil: LP-B-07-31 Soil: LP-B-07-32 TPH, VOCs, SVOCs, Metals, PCBs, PCB Cogener			Moist, black SAWDUST; with petroleum-like odor, sheen.	
	-15						Sawdust becomes brown.	
35			S4					35
	-20							
40					PID= 0 PID= 0 PID= 15 PID= 0		**NATIVE SEDIMENTS** Wet, gray, SAND (SW); fine to coarse salt-and-pepper sand, no odor, no sheen.	40
	-25			Soil: LP-B-07-42 TPH, VOCs, SVOCs, Metals, PCBs				
45			S5				Wet, gray, silty SAND (SM); fine to medium sand, no odor, no sheen.	45
	-30						Wet, gray, sandy SILT (ML); fine sand, no odor, no sheen.	
50					PID= 0 PID= 0 PID= 0		Bottom of exploration at 50 ft. bgs.	50
	-35							
55								55
	-40							

Legend

Sample Method: Continuous core 6" ID

Water Level: No Water Encountered

See Exploration Log Key for explanation of symbols

Logged by: MvdA
Approved by: CEB

Exploration Log LP-B-07
Sheet 2 of 2

ASPECT STANDARD EXPLORATION LOG TEMPLATE \\BISERVER1.ASPECT.LOCAL\PROJECTS\GINTW\PROJECTS\KIMBERLY CLARK-110207_POST AUG 2015.GPJ February 15, 2018

Aspect CONSULTING	Kimberly Clark Everett Mill - 110207		Environmental Exploration Log	
	Project Address & Site Specific Location Everett, WA 98201, Log Pond		*Coordinates (SPN NAD83 ft)* E:1301537 N:362760 (est)	*Exploration Number* **LP-B-08**
Contractor Holt Services, Inc.	*Equipment* Rotary sonic drill rig	*Sampling Method* Grab	*Ground Surface (GS) Elev. (NAVD88)* 17.24682'(est)	
Operator Brian Owens	*Exploration Method(s)* Rotary sonic	*Work Start/Completion Dates* 5/16/2017	*Top of Casing Elev. (NAVD88)* NA	*Depth to Water (Below GS)* 20' (ATD)

Depth (feet)	Elev. (feet)	Exploration Completion and Notes	Sample Type/ID	Analytical Sample Number & Lab Test(s)	Field Tests	Material Type	Description	Depth (ft)
							CRUSHED MATERIAL Slightly moist, gray, crushed Concrete and Brick; no odor, no sheen.	
	15	Backfilled with 3/8-inch bentonite chips					Decomposing woody debris, no odor, no sheen.	
			S1	Soil: LP-B-08-5 TPH, VOCs, SVOCs, Metals, PCBs	PID= 0.0		**FILL** Moist, gray brown, sandy, gravelly SILT (ML); fine sand, fine subrounded to rounded gravel, no odor, no sheen.	
5								5
	10				PID= 0.0			
10								10
	5							
			S2					
15								15
	0							
20		▽ 5/16/2017					Includes some black mottling, with trace woody debris, no odor, no sheen.	20
	-5							
					PID= 0.0			
25			S3					25
	-10							
					PID= 0.1			
30							Wet, dark brown, gravelly, silty SAND (SM); fine to medium sand, fine to coarse subrounded to rounded gravel, with no odor, no sheen.	30
	-15				PID= 0.1		With concrete debris.	
			S4					
35								35

Legend

Sample Method
- ◯ No Soil Sample Recovery
- ◧ Continuous core 6" ID

Water Level
- ▽ Water Level ATD

See Exploration Log Key for explanation of symbols

Logged by: MML
Approved by: CEB

Exploration Log LP-B-08
Sheet 1 of 2

ASPECT STANDARD EXPLORATION LOG TEMPLATE \\BISERVER1.ASPECT.LOCAL\PROJECTS\GINTW\PROJECTS\KIMBERLY CLARK-110207_POST AUG 2015.GPJ February 15, 2018

Aspect CONSULTING	Kimberly Clark Everett Mill - 110207		Environmental Exploration Log	
	Project Address & Site Specific Location Everett, WA 98201, Log Pond		*Coordinates (SPN NAD83 ft)* E:1301537 N:362760 (est)	*Exploration Number* **LP-B-08**
Contractor Holt Services, Inc.	*Equipment* Rotary sonic drill rig	*Sampling Method* Grab	*Ground Surface (GS) Elev. (NAVD88)* 17.24682'(est)	
Operator Brian Owens	*Exploration Method(s)* Rotary sonic	*Work Start/Completion Dates* 5/16/2017	*Top of Casing Elev. (NAVD88)* NA	*Depth to Water (Below GS)* 20' (ATD)

Depth (feet)	Elev. (feet)	Exploration Completion and Notes	Sample Type/ID	Analytical Sample Number & Lab Test(s)	Field Tests	Material Type	Description	Depth (ft)
40	-20		S4				Wet, dark brown, gravelly, silty SAND (SM); fine to medium sand, fine to coarse subrounded to rounded gravel, with no odor, no sheen. (continued) Solid wood timber laying horizontally, approximately 1 foot thick.	40
	-25			Soil: LP-B-08-42 TPH, VOCs, SVOCs, Metals, PCBs	PID= 391		Moist, dark brown to black SAWDUST; with petroleum-like odor, slight sheen.	
45			S5		PID= 409			45
	-30				PID= 334			
50							**NATIVE SEDIMENTS** Wet, gray brown, SAND (SW); fine to coarse sand, with abundant woody debris (~40%), no odor, no sheen.	50
	-35				PID= 0.0		Woody debris content decreases with depth.	
55			S6					55
	-40			Soil: LP-B-08-57 TPH, VOCs, SVOCs, Metals, PCBs	PID= 0.1		Wet, gray brown, SAND (SW); fine to coarse salt-and-pepper sand, with trace shell fragments, no odor, no sheen.	
60							Wet, gray brown, slightly silty SAND (SP-SM); predominantly fine sand, no silt, with trace shell fragments, no odor, no sheen, no mottling, no wood, massive texture.	60
	-45				PID= 0.0			
65			S7					65
	-50				PID= 0.0			
70							Bottom of exploration at 70 ft. bgs.	70

Legend

Sample Method
- ◯ No Soil Sample Recovery
- ◧ Continuous core 6" ID

Water Level
- ▽ Water Level ATD

See Exploration Log Key for explanation of symbols

Logged by: MML
Approved by: CEB

Exploration Log LP-B-08
Sheet 2 of 2

ASPECT STANDARD EXPLORATION LOG TEMPLATE \\BISERVER1.ASPECT.LOCAL\PROJECTS\GINTW\PROJECTS\KIMBERLY CLARK-110207_POST AUG 2015.GPJ February 15, 2018

Boring Log

Aspect CONSULTING

Project Number	Boring Number	Sheet
110207	LP-MW-01	1 of 1

Project Name: Kimberly Clark
Location: Everett, WA
Driller/Method: Holt / Direct Push Probe
Sampling Method: Continuous Core 3"

Ground Surface Elev.: 17.65
Depth to Water (ft BGS):
Start/Finish Date: 10/24/2013

Depth / Elevation (feet)	Borehole Completion	Sample Type/ID	Tests	PID (ppm)	Blows/ 6"	Material Type	Description	Depth (ft)
	8" Flush-mount monument and thermos cap Concrete surface seal 0' to 1' 3/8" Hydrated bentonite chips 1' to 2'						Recycled demo debris	
15		CC-1					No Recovery	
	▽ 10/24/2013							
5	20/40 pre-pack Silica sand filter pack 2' to 13.25'		LP-MW-1-5.5				Wet, black, gravelly, ORGANIC SILT (OL); burnt wood	5
10		CC-2					No Recovery	
	2" Diameter PVC pre-packed 10-slot screen 3' to 13'							
10							Wet, dark gray, SAND (SP); fine to medium sand	10
			LP-MW-1-12				Wet, black, silty, GRAVEL (GM); burnt odor	
5		CC-3					Wet, gray, sandy, SILT (ML); trace gravel	
	Threaded cap							
	Slough 13.25' to 20'		LP-MW-1-14.5				No Recovery	
15							Wet, gray, slightly gravelly, sandy, SILT (ML)	15
							No Recovery	
0		CC-4						
20							Bottom of boring at 20 feet	20

Sampler Type:
- ◯ No Recovery
- ▌▌ Continuous Core

PID - Photoionization Detector (Headspace Measurement)
- ▼ Static Water Level
- ▽ Water Level (ATD)

Logged by: AET, AHP
Approved by: SJG
Figure No. A- 112

_ENV BORING LOG KIMBERLY CLARK-EVERETT.GPJ July 31, 2014

Boring Log

Aspect CONSULTING

Project Number	Boring Number	Sheet
110207	LP-MW-02	1 of 1

Project Name: Kimberly Clark
Location: Everett, WA
Driller/Method: Holt / Direct Push Probe
Sampling Method: Continuous Core 3"

Ground Surface Elev.: 18.00
Depth to Water (ft BGS):
Start/Finish Date: 10/24/2013

Depth / Elevation (feet)	Borehole Completion	Sample Type/ID	Tests	PID (ppm)	Blows/ 6"	Material Type	Description	Depth (ft)
	8" Flush-mount monument and thermos cap Concrete surface seal 0' to 1'	CC-1		0			Asphalt pavement	
				0			Crushed rock	
15	3/8" Hydrated bentonite chips 1' to 7'			0			Wood chips	
							No Recovery	
5		CC-2	LP-MW-2-7	0			Wood chips	5
				0			Moist, mottled black and red and gray and brown, gravelly, silty, SAND (SM) with charcoal, brick debris, crushed rocks	
10				0				10
	10/24/2013	CC-3	LP-MW-2-10	0			Moist, mottled green gray and gray, slightly sandy, SILT (ML); trace gravel	
				0			Wet, gray, sandy, SILT (ML)	
	10/20 pre-pack Silica sand filter pack 7' to 18.25'			0			Wet, gray, SAND (SP); fine to medium sand, trace silt	
5				0			No Recovery	
15	2" Diameter PVC pre-packed 10-slot screen 8' to 18'	CC-4	LP-MW-2-16				Wet, gray, sandy, SILT (ML); fine to medium sand, trace gravel	15
0	Threaded cap						No Recovery	
	Slough 18.25' to 20'							
20							Bottom of boring at 20 feet	20

Sampler Type:
- ◯ No Recovery
- ▌▌ Continuous Core

PID - Photoionization Detector (Headspace Measurement)
- ▼ Static Water Level
- ▽ Water Level (ATD)

Logged by: AET
Approved by: SJG
Figure No. A- 113

_ENV BORING LOG KIMBERLY CLARK-EVERETT.GPJ July 31, 2014

Aspect CONSULTING	Kimberly Clark Everett Mill - 110207		Environmental Exploration Log	
	Project Address & Site Specific Location Everett, WA 98201, Center-S Log Pond		*Coordinates (SPN NAD83 ft)* E:1301501 N:362644	*Exploration Number* **LP-MW-03**
Contractor Holt Services, Inc.	*Equipment* Rotary drill rig	*Sampling Method* Autohammer; 140 lb hammer; 30" drop	*Ground Surface (GS) Elev. (NAVD88)* 17.69'	
Operator Todd Knipschield	*Exploration Method(s)* 8.5" OD X 4.25" ID Hollow-Stem Auger	*Work Start/Completion Dates* 6/23/2017	*Top of Casing Elev. (NAVD88)* 17.46'	*Depth to Water (Below GS)* 13.5' (ATD)

Depth (feet)	Elev. (feet)	Exploration Completion and Notes	Sample Type/ID	Analytical Sample Number & Lab Test(s)	Field Tests	Material Type	Description	Depth (ft)
0	15	8" flush-mounted steel monument Concrete surface seal					**CRUSHED MATERIAL** Slightly moist, gray, crushed Concreteand Brick; no odor, no sheen.	0
5	10				SPT= 7,22,28 PID= 0.0		**FILL** Dense, moist, gray silty SAND (SM); brick fragments, trace coarse to fine gravel, no odor, no sheen	5
10	5	▼ 6/26/2017 ▽ 6/23/2017	S1		SPT= 2,5,7 PID= 0.0		Becomes slightly gravelly Becomes wet	10
15	0	Hydrated bentonite chips and pellets	S2		SPT= 3,3,1 PID= 0.1		Dense, moist, gray silty SAND (SM) interbedded with organic-rich, black, sandy SILT (ML); no odor, no sheen	15
20	-5				SPT= 3,5,4 PID= 0.1		Loose, wet, gray, gravelly, slightly silty SAND (SW-SM); abundant organic material, no odor, no sheen	20
25	-10				SPT= 32,14,24 PID= 0.0		Dense, wet, gray, silty GRAVEL (GM); no odor, no sheen	25

Legend

Sample Method
- No Soil Sample Recovery
- Split Barrel 2" X 1.375" (SPT)
- Split Barrel 3" X 2.375" (Mod Cal)

Water Level
- ▼ Static Water Level
- ▽ Water Level ATD

See Exploration Log Key for explanation of symbols

Logged by: KB
Approved by: CEB

Exploration Log LP-MW-03
Sheet 1 of 2

ASPECT STANDARD EXPLORATION LOG TEMPLATE \\BISERVER1.ASPECT.LOCAL\PROJECTS\GINTW\PROJECTS\KIMBERLY CLARK-110207_POST AUG 2015.GPJ February 15, 2018

Aspect CONSULTING	Kimberly Clark Everett Mill - 110207		Environmental Exploration Log	
	Project Address & Site Specific Location Everett, WA 98201, Center-S Log Pond		*Coordinates (SPN NAD83 ft)* E:1301501 N:362644	*Exploration Number* **LP-MW-03**
Contractor Holt Services, Inc.	*Equipment* Rotary drill rig	*Sampling Method* Autohammer; 140 lb hammer; 30" drop	*Ground Surface (GS) Elev. (NAVD88)* 17.69'	
Operator Todd Knipschield	*Exploration Method(s)* 8.5" OD X 4.25" ID Hollow-Stem Auger	*Work Start/Completion Dates* 6/23/2017	*Top of Casing Elev. (NAVD88)* 17.46'	*Depth to Water (Below GS)* 13.5' (ATD)

Depth (feet)	Elev. (feet)	Exploration Completion and Notes	Sample Type/ID	Analytical Sample Number & Lab Test(s)	Field Tests	Material Type	Description	Depth (ft)
35	-15	Schedule 40 PVC casing in 10/20 silica sand filter pack			SPT= 32,10,6 PID= 0.0		Medium dense, very moist, gray-black, silty, sandy GRAVEL (GW); fine gravel with trace coarse gravel, medium to coarse sand, no odor, no sheen (continued)	35
					SPT= 5,3,6 PID= 0.0		Medium dense, moist, gray-black, slightly gravelly, silty SAND (SM); brick fragments, shell fragments, no odor, no sheen	
40	-20	0.010" screen			Blows (non-SPT)= 8,9,10,8 PID= 0.5		Meduim hard, moist, black to brown SAWDUST; petroleum-like odor, some wood chips resemble bark, slight sheen	40
	-25		S3		Blows (non-SPT)= 11,9,7,13 PID= 23.9			
					Blows (non-SPT)= 8,5,7,18 PID= 49.6		**NATIVE SEDIMENTS** Dense, wet, gray silty SAND (SM); medium to fine sand, no odor, no sheen	
45					Blows (non-SPT)= 7,18,17			45
					Blows (non-SPT)= 3,5,8,13 PID= 44.0			
	-30						Bottom of exploration at 47 ft. bgs.	
50	-35							50
55	-40							55

Legend

Sample Method
- No Soil Sample Recovery
- Split Barrel 2" X 1.375" (SPT)
- Split Barrel 3" X 2.375" (Mod Cal)

Water Level
- Static Water Level
- Water Level ATD

See Exploration Log Key for explanation of symbols

Logged by: KB
Approved by: CEB

Exploration Log LP-MW-03
Sheet 2 of 2

ASPECT STANDARD EXPLORATION LOG TEMPLATE \\BISERVER1.ASPECT.LOCAL\PROJECTS\GINTW\PROJECTS\KIMBERLY CLARK-110207_POST AUG 2015.GPJ February 15, 2018

Aspect CONSULTING	Kimberly Clark Everett Mill - 110207		Environmental Exploration Log	
	Project Address & Site Specific Location Everett, WA 98201, SE Log Pond		*Coordinates (SPN NAD83 ft)* E:1301767 N:362702 (est)	*Exploration Number* **LP-MW-04**
Contractor Holt Services, Inc.	*Equipment* Rotary drill rig	*Sampling Method* Autohammer; 140 lb hammer; 30" drop	*Ground Surface (GS) Elev. (NAVD88)* 19.58'(est)	
Operator Todd Knipschield	*Exploration Method(s)* 8.5" OD X 4.25" ID Hollow-Stem Auger	*Work Start/Completion Dates* 6/22/2017	*Top of Casing Elev. (NAVD88)* 19.16'	*Depth to Water (Below GS)* 8' (ATD)

Depth (feet)	Elev. (feet)	Exploration Completion and Notes	Sample Type/ID	Analytical Sample Number & Lab Test(s)	Field Tests	Material Type	Description	Depth (ft)
		8" flush-mounted steel monument Concrete surface seal					**CRUSHED MATERIAL** Slightly moist, gray, crushed Concreteand Brick; no odor, no sheen.	
							FILL Loose, moist, dark gray silty SAND (SM); fine sand, trace coarse gravel, woody fragments, no odor, no sheen	
5	15	6/22/2017 6/26/2017			SPT= 6,6,7 PID= 0.0			5
10	10		S1		SPT= 5,1,8 PID= 0.0		Becomes coarse to medium sand	10
15	5	Hydrated bentonite chips and pellets			SPT= 0,2,43 PID= 0.0		Becomes fine to medium sand	15
20	0	Schedule 40 PVC casing in 10/20 silica sand filter pack			SPT= 2,2,2 PID= 0.0			20
25	-5		S2		SPT= 0,0,0 PID= 0.0		Soft, moist, dark gray, sandy SILT (ML); woody fragments, no odor, organic sheen	25
	-10	0.010" screen	S3		SPT= 0,2,4 PID= 1.9			

Legend

Sample Method
- No Soil Sample Recovery
- Split Barrel 2" X 1.375" (SPT)

Water Level
- Static Water Level
- Water Level ATD

See Exploration Log Key for explanation of symbols

Logged by: KB
Approved by: CEB

Exploration Log LP-MW-04
Sheet 1 of 2

ASPECT STANDARD EXPLORATION LOG TEMPLATE \\BISERVER1.ASPECT.LOCAL\PROJECTS\GINTW\PROJECTS\KIMBERLY CLARK-110207_POST AUG 2015.GPJ February 15, 2018

Aspect CONSULTING	Kimberly Clark Everett Mill - 110207		Environmental Exploration Log	
	Project Address & Site Specific Location Everett, WA 98201, SE Log Pond		*Coordinates (SPN NAD83 ft)* E:1301767 N:362702 (est)	*Exploration Number* **LP-MW-04**
Contractor Holt Services, Inc.	*Equipment* Rotary drill rig	*Sampling Method* Autohammer; 140 lb hammer; 30" drop	*Ground Surface (GS) Elev. (NAVD88)* 19.58'(est)	
Operator Todd Knipschield	*Exploration Method(s)* 8.5" OD X 4.25" ID Hollow-Stem Auger	*Work Start/Completion Dates* 6/22/2017	*Top of Casing Elev. (NAVD88)* 19.16'	*Depth to Water (Below GS)* 8' (ATD)

Depth (feet)	Elev. (feet)	Exploration Completion and Notes	Sample Type/ID	Analytical Sample Number & Lab Test(s)	Field Tests	Material Type	Description	Depth (ft)
							Loose, moist, black, silty SAND (SM); coarse sand with abundant black woody fragments, no odor, organic sheen	
					SPT= 2,2,5,5 PID= 6.3			
			S4				Medium dense to dense, wet, gray-black, slightly gravelly silty SAND (SM); no odor, no sheen	
					SPT= 7,6,8,9 PID= 1.3			
35	-15				SPT= 12,34,34 PID= 0.2			35
		Hydrated bentonite pellets						
					SPT= 14,12,11,17 PID= 0.2		**NATIVE SEDIMENTS** Dense, wet, gray, slightly silty SAND (SP); trace fine gravel, no odor, no sheen	
			S5					
	-20				SPT= 13,10,13,39 PID= 0.0		Bottom of exploration at 39.5 ft. bgs.	
40								40
	-25							
45								45
	-30							
50								50
	-35							
55								55
	-40							

Legend

Sample Method
- ◯ No Soil Sample Recovery
- ◩ Split Barrel 2" X 1.375" (SPT)

Water Level
- ▼ Static Water Level
- ▽ Water Level ATD

See Exploration Log Key for explanation of symbols

Logged by: KB
Approved by: CEB

Exploration Log LP-MW-04
Sheet 2 of 2

ASPECT STANDARD EXPLORATION LOG TEMPLATE \\BISERVER1.ASPECT.LOCAL\PROJECTS\GINTW\PROJECTS\KIMBERLY CLARK-110207_POST AUG 2015.GPJ February 15, 2018

Aspect CONSULTING	Kimberly Clark Everett Mill - 110207		Environmental Exploration Log	
	Project Address & Site Specific Location Everett, WA 98201, NE Log Pond		*Coordinates (SPN NAD83 ft)* E:1301505 N:362762 (est)	*Exploration Number* **LP-MW-05**
Contractor Holt Services, Inc.	*Equipment* Rotary drill rig	*Sampling Method* Autohammer; 140 lb hammer; 30" drop	*Ground Surface (GS) Elev. (NAVD88)* 16.95'(est)	
Operator Todd Knipschield	*Exploration Method(s)* 8.5" OD X 4.25" ID Hollow-Stem Auger	*Work Start/Completion Dates* 6/26/2017	*Top of Casing Elev. (NAVD88)* 16.46'	*Depth to Water (Below GS)* 13' (ATD)

Depth (feet)	Elev. (feet)	Exploration Completion and Notes	Sample Type/ID	Analytical Sample Number & Lab Test(s)	Field Tests	Material Type	Description	Depth (ft)
0	15	8" flush-mounted steel monument Concrete surface seal					**CRUSHED MATERIAL** Slightly moist, gray, crushed Concreteand Brick; no odor, no sheen.	0
5	10	6/27/2017			SPT= 6,9,6 PID= 0.1		**FILL** Loose, moist, gray-brown silty SAND (SM); fine, medium, and coarse sand, trace fine gravel, no odor, no sheen	5
10	5	6/26/2017	S1		SPT= 3,2,4 PID= 0.0		Brick fragments	10
15	0				SPT= 5,9,7 PID= 0.0		Loose, moist, black, gravelly Asphalt; crushed to fine gravel and coarse sand sizes, asphalt-like odor, slight sheen	15
20	-5	Hydrated bentonite chips and pellets			SPT= 4,2,2 PID= 0.0		Loose, wet, gray-blue slightly gravelly silty SAND (SM) interbedded with coarse SAND (SP); fine to medium sand, fine gravel, no odor, slight sheen	20
25	-10				SPT= 3,4,3 PID= 0.0		No sheen	25
					Blows (non-SPT)= 2,3,3,7 PID= 0.0		Medium dense, moist, brown, slightly gravelly slightly silty SAND (SW-SM); medium to coarse sand, fine gravel, wood and brick fragments, no odor, no sheen	

Legend

Sample Method
- No Soil Sample Recovery
- Split Barrel 2" X 1.375" (SPT)
- Split Barrel 3" X 2.375" (Mod Cal)

Water Level
- Static Water Level
- Water Level ATD

See Exploration Log Key for explanation of symbols

Logged by: KB
Approved by: CEB

Exploration Log LP-MW-05
Sheet 1 of 2

ASPECT STANDARD EXPLORATION LOG TEMPLATE \\BISERVER1.ASPECT.LOCAL\PROJECTS\GINTW\PROJECTS\KIMBERLY CLARK-110207_POST AUG 2015.GPJ February 15, 2018

Aspect CONSULTING	Kimberly Clark Everett Mill - 110207		Environmental Exploration Log	
	Project Address & Site Specific Location Everett, WA 98201, NE Log Pond		*Coordinates (SPN NAD83 ft)* E:1301505 N:362762 (est)	*Exploration Number* **LP-MW-05**
Contractor Holt Services, Inc.	*Equipment* Rotary drill rig	*Sampling Method* Autohammer; 140 lb hammer; 30" drop	*Ground Surface (GS) Elev. (NAVD88)* 16.95'(est)	
Operator Todd Knipschield	*Exploration Method(s)* 8.5" OD X 4.25" ID Hollow-Stem Auger	*Work Start/Completion Dates* 6/26/2017	*Top of Casing Elev. (NAVD88)* 16.46'	*Depth to Water (Below GS)* 13' (ATD)

Depth (feet)	Elev. (feet)	Exploration Completion and Notes	Sample Type/ID	Analytical Sample Number & Lab Test(s)	Field Tests	Material Type	Description	Depth (ft)
					PID= 0.0		Medium dense, moist, brown, slightly gravelly slightly silty SAND (SW-SM); medium to coarse sand, fine gravel, wood and brick fragments, no odor, no sheen (continued)	
	-15				Blows (non-SPT)= 5,6,9			
					Blows (non-SPT)= 2,12,8,5 PID= 0.0		SAWDUST	
35			S2				Loose, wet, dark gray silty SAND (SM); coarse and fine sand, shell fragments, trace wood fragments, no odor, slight sheen	35
	-20				Blows (non-SPT)= 2,4,6,8 PID= 1.8			
					Blows (non-SPT)= 6,6,8,9 PID= 2.1		Medium dense, moist, gray-brown silty SAND (SM); coarse to fine sand, trace fine gravel, shell, brick, and wood fragments, no odor, slight sheen	
40					Blows (non-SPT)= 7,5,8			40
	-25				Blows (non-SPT)= 2,7,8,7 PID= 41.2		Dense, moist, black SAWDUST; petroleum-like odor, shell fragments, slight to moderate sheen	
		Schedule 40 PVC casing in 10/20 silica sand filter pack			SPT= 6,6,12 PID= 52.5			
45			S3		SPT= 0,3,3 PID= 117.2			45
	-30				SPT= 2,4,4,8 PID= 239.9			
		0.010" screen			SPT= 5,5,6 PID= 212.6			
50					SPT= 4,5,6 PID= 219.9			50
	-35				SPT= 2,2,5,8 PID= 252		**NATIVE SEDIMENTS** Dense, wet, gray SAND (SP); medium to coarse sand, no odor, no sheen	
			S4		SPT= 7,9,9,12 PID= 176.6			
55								55
					SPT= 3,4,27,28 PID= 0.0		Bottom of exploration at 56 ft. bgs.	
	-40							

Legend

Sample Method
- No Soil Sample Recovery
- Split Barrel 2" X 1.375" (SPT)
- Split Barrel 3" X 2.375" (Mod Cal)

Water Level
- Static Water Level
- Water Level ATD

See Exploration Log Key for explanation of symbols

Logged by: KB
Approved by: CEB

Exploration Log LP-MW-05
Sheet 2 of 2

ASPECT STANDARD EXPLORATION LOG TEMPLATE \\BISERVER1.ASPECT.LOCAL\PROJECTS\GINTW\PROJECTS\KIMBERLY CLARK-110207_POST AUG 2015.GPJ February 15, 2018

Aspect CONSULTING	Kimberly Clark Everett Mill - 110207		Environmental Exploration Log	
	Project Address & Site Specific Location Everett, WA 98201, SW Log Pond		*Coordinates (SPN NAD83 ft)* E:1301679 N:362588 (est)	*Exploration Number* **LP-MW-06**
Contractor Holt Services, Inc.	*Equipment* Rotary drill rig	*Sampling Method* Autohammer; 140 lb hammer; 30" drop	*Ground Surface (GS) Elev. (NAVD88)* 19.54'(est)	
Operator Todd Knipschield	*Exploration Method(s)* 8.5" OD X 4.25" ID Hollow-Stem Auger	*Work Start/Completion Dates* 6/22/2017	*Top of Casing Elev. (NAVD88)* 19.17'	*Depth to Water (Below GS)* 26.5' (ATD)

Depth (feet)	Elev. (feet)	Exploration Completion and Notes	Sample Type/ID	Analytical Sample Number & Lab Test(s)	Field Tests	Material Type	Description	Depth (ft)
0	20	8" flush-mounted steel monument Concrete surface seal					**CRUSHED MATERIAL** Slightly moist, gray, crushed Concreteand Brick; no odor, no sheen.	0
5	15				SPT= 2,3,5 PID= 0.2		**FILL** Soft, very moist, black, silty SAND (SM); organic-rich, fine sand, no odor, organic sheen	5
10	10	6/26/2017			SPT= 5,4,6 PID= 0.2		Medium hard, moist, silty SAND (SM); fine sand, trace coarse gravel, trace organic material, no odor, no sheen	10
15	5		S1		SPT= 1,1,2 PID= 0.2		Soft, moist, green-brown, sandy SILT (ML); coarse sand, trace fine gravel, brick and wood fragments, no odor, no sheen	15
20	0	Hydrated bentonite chips and pellets			SPT= 4,2,6 PID= 0.2			20
25	-5	6/22/2017	S2		SPT= 3,4,3,8 PID= 0.2 SPT= 3,2,3,5 PID= 0.2 SPT= 1,4,6,8 PID= 0.2		Becomes more gravelly	25
	-10							

Legend

Sample Method
- No Soil Sample Recovery
- Split Barrel 2" X 1.375" (SPT)

Water Level
- Static Water Level
- Water Level ATD

See Exploration Log Key for explanation of symbols

Logged by: KB
Approved by: CEB

Exploration Log LP-MW-06
Sheet 1 of 2

ASPECT STANDARD EXPLORATION LOG TEMPLATE \\BISERVER1.ASPECT.LOCAL\PROJECTS\GINTW\PROJECTS\KIMBERLY CLARK-110207_POST AUG 2015.GPJ February 15, 2018

Aspect CONSULTING	Kimberly Clark Everett Mill - 110207		Environmental Exploration Log	
	Project Address & Site Specific Location Everett, WA 98201, SW Log Pond		*Coordinates (SPN NAD83 ft)* E:1301679 N:362588 (est)	*Exploration Number* **LP-MW-06**
Contractor Holt Services, Inc.	*Equipment* Rotary drill rig	*Sampling Method* Autohammer; 140 lb hammer; 30" drop	*Ground Surface (GS) Elev. (NAVD88)* 19.54'(est)	
Operator Todd Knipschield	*Exploration Method(s)* 8.5" OD X 4.25" ID Hollow-Stem Auger	*Work Start/Completion Dates* 6/22/2017	*Top of Casing Elev. (NAVD88)* 19.17'	*Depth to Water (Below GS)* 26.5' (ATD)

Depth (feet)	Elev. (feet)	Exploration Completion and Notes	Sample Type/ID	Analytical Sample Number & Lab Test(s)	Field Tests	Material Type	Description	Depth (ft)
					SPT= 7,1,4 PID= 0.2		Soft, moist, green-brown, sandy SILT (ML); coarse sand, trace fine gravel, brick and wood fragments, no odor, no sheen (continued)	
					SPT= 0,0,0,6 PID= 0.2			
35	-15						Soft, wet, gray, slightly gravelly, sandy SILT (ML); fine, medium, and coarse sand, fine gravel, woody fragments, no odor, no sheen	35
					SPT= 2,3,5,11 PID= 0.2			
					SPT= 6,5,6,7 PID= 0.2		Soft, wet, black, SILT (ML); sulfurous odor, trace fine gravel, organic sheen	
40	-20	Schedule 40 PVC casing in 10/20 silica sand filter pack	S3		SPT= 4,1,3 PID= 2.0			40
					SPT= 3,4,3,6 PID= 0.3			
					SPT= 2,3,4,5 PID= 1.0		Soft, wet, brown, silty SAND (SM) interbedded with black SILT (ML); medium sand, no odor, slight sheen	
45	-25	0.010" screen	LP-MW-6-45	TPH, Metals, PCBs, PAHs	SPT= 1,1,4,3 PID= 1.0		Dense, moist, black SAWDUST interbedded with fine SAND (SW); petroluem-like odor, moderate sheen	45
					Blows (non-SPT)= 3,5,10,15 PID= 5.0		**NATIVE SEDIMENTS**	
50	-30		LP-MW-6-48.5 S6	TPH, Metals, PCBs, PAHs	Blows (non-SPT)= 1,3,4 PID= 2.3		Dense, wet, gray, slightly silty, SAND (SP); medium sand, no odor, no sheen	50
					Blows (non-SPT)= 3,11,14,23 PID= 0.2		Bottom of exploration at 52 ft. bgs.	
55	-35							55
	-40							

Legend

Sample Method
- ◯ No Soil Sample Recovery
- ◩ Split Barrel 2" X 1.375" (SPT)

Water Level
- ▼ Static Water Level
- ▽ Water Level ATD

See Exploration Log Key for explanation of symbols

Logged by: KB
Approved by: CEB

Exploration Log LP-MW-06
Sheet 2 of 2

ASPECT STANDARD EXPLORATION LOG TEMPLATE \\BISERVER1.ASPECT.LOCAL\PROJECTS\GINTW\PROJECTS\KIMBERLY CLARK-110207_POST AUG 2015.GPJ February 15, 2018

Aspect CONSULTING	Kimberly Clark Everett Mill - 110207		Environmental Exploration Log	
	Project Address & Site Specific Location Everett, WA 98201, W Log Pond		*Coordinates (SPN NAD83 ft)* E:1301243 N:362774 (est)	*Exploration Number* **LP-MW-07**
Contractor Holt Services, Inc.	*Equipment* Rotary drill rig	*Sampling Method* Autohammer; 140 lb hammer; 30" drop	*Ground Surface (GS) Elev. (NAVD88)* 20.17'(est)	
Operator Todd Knipschield	*Exploration Method(s)* 8.5" OD X 4.25" ID Hollow-Stem Auger	*Work Start/Completion Dates* 6/27/2017	*Top of Casing Elev. (NAVD88)* 19.81'	*Depth to Water (Below GS)* 14' (ATD)

Depth (feet)	Elev. (feet)	Exploration Completion and Notes	Sample Type/ID	Analytical Sample Number & Lab Test(s)	Field Tests	Material Type	Description	Depth (ft)
0	20	8" flush-mounted steel monument Concrete surface seal					Asphalt Gravel basecourse.	0
							FILL SAWDUST	
5	15				SPT= 4,10,15 PID= 0.1		Medium dense, moist, gray, slightly gravelly silty SAND (SM); fine, medium, and coarse sand, fine gravel, brick and asphalt fragments, no odor, no sheen	5
10	10		S1		SPT= 2,2,3 PID= 0.0		Loose, moist, gray, silty SAND (SM); fine to medium sand, trace fine gravel, wood fragments, no odor, no sheen	10
		▽ 6/27/2017					Very soft, wet, gray silty SAND (SM); trace fine gravel, brick and wood fragments, no odor, no sheen	
15	5		S2		SPT= 0,0,0 PID= 0.0			15
20	0	Hydrated bentonite chips and pellets			SPT= 8,18,18 PID= 0.0		Dense, moist, gray, silty, sandy GRAVEL (GW); fine to coarse gravel, medium to coarse sand, no odor, no sheen	20
							Medium dense, moist, gray-brown silty SAND (SM); trace coarse gravel, no odor, no sheen	
25	-5				SPT= 27,12,5 PID= 0.0		Hard, moist, brown PEAT (PT); minimally decomposed, medium to coarse sand, brick fragments, no odor, no sheen	25
							Soft, wet, gray, silty SAND (SM); trace fine gravel, brick fragments, no odor, no sheen	

Legend

Sample Method
- ◯ No Soil Sample Recovery
- ◪ Split Barrel 2" X 1.375" (SPT)
- ◧ Split Barrel 3" X 2.375" (Mod Cal)

Water Level
- ▽ Water Level ATD

See Exploration Log Key for explanation of symbols

Logged by: KB
Approved by: CEB

Exploration Log LP-MW-07
Sheet 1 of 2

ASPECT STANDARD EXPLORATION LOG TEMPLATE \\BISERVER1.ASPECT.LOCAL\PROJECTS\GINTW\PROJECTS\KIMBERLY CLARK-110207_POST AUG 2015.GPJ February 15, 2018

Aspect CONSULTING	Kimberly Clark Everett Mill - 110207		Environmental Exploration Log	
	Project Address & Site Specific Location Everett, WA 98201, W Log Pond		*Coordinates (SPN NAD83 ft)* E:1301243 N:362774 (est)	*Exploration Number* **LP-MW-07**
Contractor Holt Services, Inc.	*Equipment* Rotary drill rig	*Sampling Method* Autohammer; 140 lb hammer; 30" drop	*Ground Surface (GS) Elev. (NAVD88)* 20.17'(est)	
Operator Todd Knipschield	*Exploration Method(s)* 8.5" OD X 4.25" ID Hollow-Stem Auger	*Work Start/Completion Dates* 6/27/2017	*Top of Casing Elev. (NAVD88)* 19.81'	*Depth to Water (Below GS)* 14' (ATD)

Depth (feet)	Elev. (feet)	Exploration Completion and Notes	Sample Type/ID	Analytical Sample Number & Lab Test(s)	Field Tests	Material Type	Description	Depth (ft)
	-10		S3		SPT= 5,2,2 PID= 0.0		Soft, wet, gray, silty SAND (SM); trace fine gravel, brick fragments, no odor, no sheen (continued)	
35	-15	Schedule 40 PVC casing in 10/20 silica sand filter pack			SPT= 5,2,4 PID= 0.0		Loose, wet, gray, gravelly, slightly silty SAND (SW-SM); fine gravel, coarse sand, no odor, no sheen	35
40	-20	0.010" screen	LP-MW-7-40.5 S5	TPH, Metals, PCBs, PAHs	SPT= 5,8,12,13 PID= 4.9		Medium dense, moist, black, silty SAWDUST; shell fragments, red bark, petroleum-like odor, slight sheen	40
45	-25		S6		SPT= 4,6,11,18 PID= 24 SPT= 5,8,13,18 PID= 0.1 Blows (non-SPT)= 2,5,13,11 PID= 0.0		**NATIVE SEDIMENTS** Medium dense, moist, gray, silty SAND (SM); fine sand, wood fragments, abundant shell fragments, no odor, no sheen	45
50	-30		S7		Blows (non-SPT)= 5,15,18 PID= 0.0 SPT= 5,8,9,7 PID= 0.0		Bottom of exploration at 52 ft. bgs.	50
55	-35							55

Legend

Sample Method
- No Soil Sample Recovery
- Split Barrel 2" X 1.375" (SPT)
- Split Barrel 3" X 2.375" (Mod Cal)

Water Level
- Water Level ATD

See Exploration Log Key for explanation of symbols

Logged by: KB
Approved by: CEB

Exploration Log LP-MW-07
Sheet 2 of 2

ASPECT STANDARD EXPLORATION LOG TEMPLATE \\BISERVER1.ASPECT.LOCAL\PROJECTS\GINT\WPROJECTS\KIMBERLY CLARK-110207_POST AUG 2015.GPJ February 15, 2018

Boring Log

Aspect CONSULTING

Project Number	Boring Number	Sheet
110207	MW-01 (DP-15)	1 of 1

Project Name: Kimberly Clark
Location: Everett, WA
Driller/Method: Cascade Drilling / Direct Push Probe-Limited Access
Sampling Method: Continuous Core

Ground Surface Elev.: 14.41
Depth to Water (ft BGS):
Start/Finish Date: 2/15/2012

Depth / Elevation (feet)	Borehole Completion	Sample Type/ID	Tests	PID (ppm)	Blows/ 6"	Material Type	Description	Depth (ft)
14 to -15	5" Flush-mount monument and thermos cap; Concrete surface seal 0' to 2'; 3/8" Hydrated bentonite chips 2' to 2.5"; 2/12 Silica sand filter pack 2.5' to 13'; 1" Diameter PVC pre-packed .001 slot screen 3' to 13'; Threaded cap; Slough	CC-1	DP-15-3-4	0		Asphalt	Asphalt, gravel	
				0		Gravel	Very moist, brown to gray, silty, sandy GRAVEL (GM); poorly graded fine-to-medium, subrounded gravel, 2" bed of charred organics at 1'	1
				0		Sand	Very moist, brown, gravelly SAND (SP); poorly graded fine-to-medium sand	2
				0				3
				0		Silty Sand	Very moist, brown, very silty SAND (SM); fine sand	4
		CC-2	DP-15-6.5-7.5	0		Sand	Very moist, brown SAND (SP); poorly graded fine-to-medium sand Fill debris from 4.75' to 6.5': charred wood, nails, ceramic, black and orange debris	5
				0				6
				0				7
				0		Gravel	Wet, gray, very sandy GRAVEL (GP); fine, rounded gravel	8
				0		Sand	Wet, gray SAND (SP); poorly graded fine-to-medium sand	9
				0				10
				0				11
		CC-3		0		Silt	Wet, gray, sandy SILT (ML)	12
				0		Sand	Wet, gray SAND (SP); poorly graded fine-to-medium sand, frequent silt laminae	13
				0				14
				0			Bottom of boring at 15 ' BGS	15
16 to 29								16 to 29

Sampler Type:
- No Recovery
- Continuous Core

PID - Photoionization Detector (Headspace Measurement)
- Static Water Level
- Water Level (ATD)

Logged by: MAR
Approved by: SJG
Figure No. A- 114

_ENV BORING LOG KIMBERLY CLARK-EVERETT.GPJ July 31, 2014

Boring Log

Aspect CONSULTING

Project Number	Boring Number	Sheet
110207	MW-02 (DP-14)	1 of 1

Project Name: Kimberly Clark
Location: Everett, WA
Driller/Method: Cascade Drilling / Direct Push Probe-Limited Access
Sampling Method: Continuous Core

Ground Surface Elev.: 13.62
Depth to Water (ft BGS):
Start/Finish Date: 2/15/2012

Depth / Elevation (feet)	Borehole Completion	Sample Type/ID	Tests	PID (ppm)	Blows/ 6"	Material Type	Description	Depth (ft)
0 / 13	5" Flush-mount monument and thermos cap; Concrete surface seal 0' to 2'; 3/8" Hydrated bentonite chips 2' to 2.5"; 2/12 Silica sand filter pack 2.5' to 13'						Asphalt	0
1 / 12				0			Very moist, gray to brown, gravelly SAND (SP); poorly graded fine-to-medium sand	1
2 / 11		CC-1		0				2
3 / 10			DP-14-3-4	0				3
4 / 9				0			Landfill debris: brick, wood, plastic	4
5 / 8				0			Wet, brown to gray, slightly sandy, very silty GRAVEL (GM); poorly graded fine-to- medium subrounded gravel, debris: brick, plastic, tile/ceramics, wood	5
6 / 7	▼			0				6
7 / 6	1" Diameter PVC pre-packed .001 slot screen 3' to 13'	CC-2		0				7
8 / 5				0				8
9 / 4			DP-14-9-10	0				9
10 / 3				0				10
11 / 2				0				11
12 / 1		CC-3		0			Black from 12' to 15'	12
13 / 0	Threaded cap			0				13
14 / -1	Slough			0				14
15 / -2				0			Bottom of boring at 15' BGS	15
16 / -3								16
17 / -4								17
18 / -5								18
19 / -6								19
20 / -7								20
21 / -8								21
22 / -9								22
23 / -10								23
24 / -11								24
25 / -12								25
26 / -13								26
27 / -14								27
28 / -15								28
29 / -16								29

Sampler Type:
- ◯ No Recovery
- ▌▌ Continuous Core

PID - Photoionization Detector (Headspace Measurement)
- ▼ Static Water Level
- ▽ Water Level (ATD)

Logged by: MAR
Approved by: SJG
Figure No. A- 115

_ENV BORING LOG KIMBERLY CLARK-EVERETT.GPJ July 31, 2014

Boring Log

Aspect CONSULTING

Project Number	Boring Number	Sheet
110207	MW-03 (DP-09)	1 of 1

Project Name: Kimberly Clark
Location: Everett, WA
Driller/Method: Cascade Drilling / Direct Push Probe-Limited Access
Sampling Method: Continuous Core

Ground Surface Elev.: 15.45
Depth to Water (ft BGS):
Start/Finish Date: 2/15/2012

Depth / Elevation (feet)	Borehole Completion	Sample Type/ID	Tests	PID (ppm)	Blows/ 6"	Material Type	Description	Depth (ft)
15	5" Flush-mount monument and thermos cap						Asphalt	
14	Concrete surface seal 0' to 2'			0			V. moist, gray, sandy, silty GRAVEL (GP); poorly graded fine-to-medium subrounded gravel	1
13	3/8" Hydrated bentonite chips 2' to 2.5"	CC-1		0			Wet, gray, slightly gravelly SAND (SP); poorly graded fine-to-medium sand	2
12	2/12 Silica sand filter pack 2.5' to 13'			0				3
11			DP-9-3.5-4.5	0				4
10							Wet, dark gray, silty SAND (SM), fine sand, numerous shell fragments	5
9				5.4				6
8	1" Diameter PVC pre-packed .001 slot screen 3' to 13'	CC-2	DP-9-7.5-8.5				Wet, gray, SAND (SP); poorly graded fine-to-medium sand	7
7								8
6				25.9				9
5								10
4				20.3				11
3		CC-3						12
2	Threaded cap		DP-9-13-14					13
1	Slough			12.3			Wet, gray, silty SAND (SM); fine sand	14
0							Wet, gray, slightly gravelly SAND (SP); poorly graded fine-to-medium sand	15
-1							Bottom of boring at 15' BGS	16
-2								17
-3								18
-4								19
-5								20
-6								21
-7								22
-8								23
-9								24
-10								25
-11								26
-12								27
-13								28
-14								29

Sampler Type:
- ◯ No Recovery
- ▌▌ Continuous Core

PID - Photoionization Detector (Headspace Measurement)
- ▼ Static Water Level
- ▽ Water Level (ATD)

Logged by: MAR
Approved by: SJG
Figure No. A- 116

_ENV BORING LOG KIMBERLY CLARK-EVERETT.GPJ July 31, 2014

Boring Log

Aspect CONSULTING

Project Number	Boring Number	Sheet
110207	MW-04 (DP-07)	1 of 1

Project Name: Kimberly Clark
Location: Everett, WA
Driller/Method: Cascade Drilling / Direct Push Probe-Limited Access
Sampling Method: Continuous Core

Ground Surface Elev.: 15.53
Depth to Water (ft BGS):
Start/Finish Date: 2/15/2012

Depth / Elevation (feet)	Borehole Completion	Sample Type/ID	Tests	PID (ppm)	Blows/ 6"	Material Type	Description	Depth (ft)
0 – 15	5" Flush-mount monument and thermos cap; Concrete surface seal 0' to 2'; 3/8" Hydrated bentonite chips 2' to 2.5"; 2/12 Silica sand filter pack 2.5' to 13'; 1" Diameter PVC pre-packed .001 slot screen 3' to 13'; Threaded cap; Slough	CC-1	DP-7-4-5	0		Asphalt	Asphalt	0
1 – 14				0		Moist, gray, slightly silty, sandy GRAVEL (GP); fine subangular gravel	Moist, gray, slightly silty, sandy GRAVEL (GP); fine subangular gravel	1
2 – 13				0				2
3 – 12				0		Wet, gray, sandy SILT (ML)	Wet, gray, sandy SILT (ML)	3
4 – 11				0		Moist, gray, slightly silty, sandy GRAVEL (GP); fine subangular gravel	Moist, gray, slightly silty, sandy GRAVEL (GP); fine subangular gravel	4
5 – 10		CC-2	DP-7-7-8	0.1		Wet, gray, sandy SILT (ML)	Wet, gray, sandy SILT (ML)	5
6 – 9				0.1				6
7 – 8				0.1				7
8 – 7				0.1				8
9 – 6				0.1		Wet, dark gray SAND (SP); poorly graded fine-to-medium sand	Wet, dark gray SAND (SP); poorly graded fine-to-medium sand	9
10 – 5		CC-3		0				10
11 – 4				0				11
12 – 3				0		Wet, dark gray SILT (ML)	Wet, dark gray SILT (ML)	12
13 – 2				0		Wet, dark gray to dark brown, slightly silty SAND (SP); poorly graded fine-to-medium sand, numerous organics	Wet, dark gray to dark brown, slightly silty SAND (SP); poorly graded fine-to-medium sand, numerous organics	13
14 – 1				0				14
15 – 0						Bottom of boring at 15' BGS	Bottom of boring at 15' BGS	15
16 – -1								16
17 – -2								17
18 – -3								18
19 – -4								19
20 – -5								20
21 – -6								21
22 – -7								22
23 – -8								23
24 – -9								24
25 – -10								25
26 – -11								26
27 – -12								27
28 – -13								28
29 – -14								29

Sampler Type:
- ◯ No Recovery
- ▌▌ Continuous Core

PID - Photoionization Detector (Headspace Measurement)
- ▼ Static Water Level
- ▽ Water Level (ATD)

Logged by: MAR
Approved by: SJG
Figure No. A- 117

_ENV BORING LOG KIMBERLY CLARK-EVERETT.GPJ July 31, 2014

Boring Log

Aspect CONSULTING

Project Number	Boring Number	Sheet
110207	MW-05 (DP-16)	1 of 1

Project Name: Kimberly Clark
Ground Surface Elev.: 13.69
Location: Everett, WA
Driller/Method: Cascade Drilling / Direct Push Probe-Limited Access
Depth to Water (ft BGS):
Sampling Method: Continuous Core
Start/Finish Date: 2/16/2012

Depth / Elevation (feet)	Borehole Completion	Sample Type/ID	Tests	PID (ppm)	Blows/ 6"	Material Type	Description	Depth (ft)
1 (13)	5" Flush-mount monument and thermos cap; Concrete surface seal 0' to 2'; 3/8" Hydrated bentonite chips 2' to 2.5"; 2/12 Silica sand filter pack 2.5' to 13'	CC-1		0			Grass over topsoil	1
2 (12)				0			Very moist, brown to gray, sandy SILT (ML); fine sand	2
3 (11)				0				3
4 (10)			DP-7-4-5	0			Very moist, dark gray, sandy, gravelly SILT (ML)	4
5 (9)				0.1				5
6 (8)				0.1				6
7 (7)	1" Diameter PVC pre-packed .001 slot screen 3' to 13'	CC-2	DP-7-7-8	0.1				7
8 (6)				0.1				8
9 (5)				0.1				9
10 (4)				0				10
11 (3)				0			Wet, organic SILT (OL); numerous wood organics	11
12 (2)		CC-3		0				12
13 (1)	Threaded cap			0			Wet, dark gray SAND (SP); poorly graded fine-to-medium sand, numerous shells and wood debris	13
14 (0)	Slough			0				14
15 (-1)							Bottom of boring at 15' BGS	15
16 (-2)								16
17 (-3)								17
18 (-4)								18
19 (-5)								19
20 (-6)								20
21 (-7)								21
22 (-8)								22
23 (-9)								23
24 (-10)								24
25 (-11)								25
26 (-12)								26
27 (-13)								27
28 (-14)								28
29 (-15)								29
(-16)								

Sampler Type:
- ◯ No Recovery
- ▌▌ Continuous Core

PID - Photoionization Detector (Headspace Measurement)
- ▼ Static Water Level
- ▽ Water Level (ATD)

Logged by: MAR
Approved by: SJG
Figure No. A- 118

_ENV BORING LOG KIMBERLY CLARK-EVERETT.GPJ July 31, 2014

Boring Log

Aspect CONSULTING

Project Number	Boring Number	Sheet
110207	MW-06 (DP-17)	1 of 1

Project Name: Kimberly Clark
Ground Surface Elev.: 20.67
Location: Everett, WA
Driller/Method: Cascade Drilling / Direct Push Probe-Limited Access
Depth to Water (ft BGS):
Sampling Method: Continuous Core
Start/Finish Date: 2/16/2012

Depth / Elevation (feet)	Borehole Completion	Sample Type/ID	Tests	PID (ppm)	Blows/ 6"	Material Type	Description	Depth (ft)
0 / 20	5" Flush-mount monument and thermos cap					Asphalt	Asphalt	0
1 / 19	Concrete surface seal 0' to 2'			0		Concrete	Concrete	1
2 / 18		CC-1		0		Gravel	Moist, dark gray, sandy GRAVEL (GP); poorly graded fine-to-medium subrounded to angular gravel	2
3 / 17				0				3
4 / 16			DP-17-4-5	0		Sand	Moist, dark gray, SAND (SP); fine sand, occasional shell fragments	4
5 / 15		CC-2		0.1				5
6 / 14				0.1				6
7 / 13	3/8" Hydrated bentonite chips 2' to 12'			0.1				7
8 / 12				0.1				8
9 / 11				0.1		Concrete	Concrete rubble	9
10 / 10		CC-3		0		Silt	Moist, gray, slightly gravelly, slightly sandy SILT (ML); fine sand	10
11 / 9				0		Clay	Moist, gray-green CLAY (CL)	11
12 / 8				0		Silt	Moist, gray, slightly gravelly, sandy SILT (ML); fine sand	12
13 / 7	2/12 Silica sand filter pack 12' to 24'			0				13
14 / 6				0				14
15 / 5								15
16 / 4	▼						Wet from 16' to 18'	16
17 / 3		CC-4						17
18 / 2	1" Diameter PVC pre-packed .001 slot screen 14' to 24'			0			Wood debris at 17.5'	18
19 / 1								19
20 / 0							Wet, gray to dark gray, gravelly SILT (ML); no odor	20
21 / -1								21
22 / -2		CC-5	DP-17-22-23	0				22
23 / -3				0				23
24 / -4	Threaded cap Slough							24
25 / -5							Bottom of boring at 25' BGS	25
26 / -6								26
27 / -7								27
28 / -8								28
29 / -9								29

Sampler Type:
- ◯ No Recovery
- ▌▌ Continuous Core

PID - Photoionization Detector (Headspace Measurement)
- ▼ Static Water Level
- ▽ Water Level (ATD)

Logged by: MAR
Approved by: SJG
Figure No. A- 119

_ENV BORING LOG KIMBERLY CLARK-EVERETT.GPJ July 31, 2014

Boring Log

Aspect CONSULTING

Project Number	Boring Number	Sheet
110207	NRP-B-01	1 of 1

Project Name: Kimberly Clark
Location: Everett, WA
Driller/Method: Cascade Drilling / Direct Push Probe
Sampling Method: Continuous Core

Ground Surface Elev.:
Depth to Water (ft BGS):
Start/Finish Date: 6/1/2012

Depth / Elevation (feet)	Borehole Completion	Sample Type/ID	Tests	PID (ppm)	Blows/ 6"	Material Type	Description	Depth (ft)
							Grass over topsoil	
	Backfilled with medium bentonite chips	CC-1		0.2 0.2			Moist, brown, gravelly, very silty SAND (SM); fine sand	
				0.2 0.2			Moist, gray, gravelly SAND (SP); poorly graded fine-to-medium sand Fine sand, no gravel	
5		CC-2		0.2 0.3 0.3 0.3			Poor recovery 5' to 10'	5
			NRP-B-1-9-12	0.3				
10		CC-3		0.3 0.3 0.3 0.3 0.3			Wet, gray, slightly silty SAND (SP-SM)	10
15				0.3			Bottom of boring at 15' BGS	15
20								20

Sampler Type:
- ◯ No Recovery
- ▌▌ Continuous Core

PID - Photoionization Detector (Headspace Measurement)
- ▼ Static Water Level
- ▽ Water Level (ATD)

Logged by: MAR
Approved by: SJG
Figure No. A- 120

_ENV BORING LOG KIMBERLY CLARK-EVERETT.GPJ July 31, 2014

Boring Log

Aspect CONSULTING

Project Number	Boring Number	Sheet
110207	NRP-B-02	1 of 1

Project Name: Kimberly Clark
Location: Everett, WA
Driller/Method: Cascade Drilling / Direct Push Probe
Sampling Method: Continuous Core

Ground Surface Elev.:
Depth to Water (ft BGS):
Start/Finish Date: 6/1/2012

Depth / Elevation (feet)	Borehole Completion	Sample Type/ID	Tests	PID (ppm)	Blows/ 6"	Material Type	Description	Depth (ft)
							Asphalt	
	Backfilled with medium bentonite chips	CC-1		1.2			Moist, gray, slightly silty, sandy GRAVEL (GW); poorly graded fine-to-coarse angular gravel	
				1.2				
			NRP-B-2-3-4	12.7			Moist, gray SAND (SP); fine sand	
				47.8				
				61.3				
				16.8			Silt lens at 4.5'	
5				21.5				5
				26.0			Dark gray, strong petroleum-like odor, moderate metallic/rainbow sheen	
		CC-2		190.5				
				152.0				
				89.0				
			NRP-B-2-8-10	446.8				
				397.7				
				353.7				
				360.2				
10				356.3				10
				464.3				
				426.8				
				46.5			Silt and wood 11.5' to 12'	
		CC-3		7.3				
			NRP-B-2-14-15	4.6				
15				2.5				15
							Bottom of boring at 15' BGS	
20								20

Sampler Type:
- ◯ No Recovery
- ▌▌ Continuous Core

PID - Photoionization Detector (Headspace Measurement)
- ▼ Static Water Level
- ▽ Water Level (ATD)

Logged by: MAR
Approved by: SJG
Figure No. A- 121

_ENV BORING LOG KIMBERLY CLARK-EVERETT.GPJ July 31, 2014

Boring Log

Aspect CONSULTING

Project Number	Boring Number	Sheet
110207	NRP-B-03	1 of 1

Project Name: Kimberly Clark
Location: Everett, WA
Driller/Method: Cascade Drilling / Direct Push Probe
Sampling Method: Continuous Core

Ground Surface Elev.:
Depth to Water (ft BGS):
Start/Finish Date: 6/1/2012

Depth / Elevation (feet)	Borehole Completion	Sample Type/ID	Tests	PID (ppm)	Blows/ 6"	Material Type	Description	Depth (ft)
0	Backfilled with medium bentonite chips	CC-1		0.2			Grass over topsoil	0
				0.2			Moist, brown, very gravelly SAND (SW); poorly graded fine-to-coarse sand, subrounded gravel, cobble at 2.5'	
				0.3			Moist, gray, very gravelly, very silty SAND (SM); fine sand	
5		CC-2		0.3				5
				0.2				
				0.2				
			NRP-B-3-8.5-9.5	0			Wet, gray, SAND (SP); trace silt and gravel, fine to medium sand	
10				0				10
				0				
		CC-3		0				
				0				
				0			Wood at 14'	
15				0			Silt at 14.75'	15
							Bottom of boring at 15' BGS	
20								20

Sampler Type:
- ◯ No Recovery
- ▌▌ Continuous Core

PID - Photoionization Detector (Headspace Measurement)

- ▼ Static Water Level
- ▽ Water Level (ATD)

Logged by: MAR
Approved by: SJG
Figure No. A- 122

_ENV BORING LOG KIMBERLY CLARK-EVERETT.GPJ July 31, 2014

Boring Log

Aspect CONSULTING

Project Number	Boring Number	Sheet
110207	NRP-B-04	1 of 1

Project Name: Kimberly Clark
Location: Everett, WA
Driller/Method: Cascade Drilling / Direct Push Probe
Sampling Method: Continuous Core

Ground Surface Elev.:
Depth to Water (ft BGS):
Start/Finish Date: 6/1/2012

Depth / Elevation (feet)	Borehole Completion	Sample Type/ID	Tests	PID (ppm)	Blows/ 6"	Material Type	Description	Depth (ft)
							Asphalt	
	Backfilled with medium bentonite chips	CC-1		0.2			Moist, gray, sandy GRAVEL (GW); trace silt, angular, fine to coarse gravel	
				0.2				
				0.2				
				0.3				
5				0.3				5
		CC-2		0.3				
				0.2			Becomes wet, slightly silty	
10				0.1			Wet, gray, silty GRAVEL (GM); poorly graded fine-to-coarse angular gravel, faint petroleum-like odor, rainbow sheen 15' to 20'	10
		CC-3		3.4				
				3.6				
			NRP-B-4-13.5-14.5	4.5				
				6.0				
15				5.0				15
				3.4				
		CC-4		3.5				
				3.5				
				3.5				
20				3.5			Bottom of boring at 20' BGS	20

Sampler Type:
- ◯ No Recovery
- ▌▌ Continuous Core

PID - Photoionization Detector (Headspace Measurement)
- ▼ Static Water Level
- ▽ Water Level (ATD)

Logged by: MAR
Approved by: SJG
Figure No. A- 123

_ENV BORING LOG KIMBERLY CLARK-EVERETT.GPJ July 31, 2014

Boring Log

Aspect CONSULTING

Project Number	Boring Number	Sheet
110207	NRP-B-05	1 of 1

Project Name: Kimberly Clark
Location: Everett, WA
Driller/Method: Cascade Drilling / Direct Push Probe
Sampling Method: Continuous Core

Ground Surface Elev.:
Depth to Water (ft BGS):
Start/Finish Date: 6/1/2012

Depth / Elevation (feet)	Borehole Completion	Sample Type/ID	Tests	PID (ppm)	Blows/ 6"	Material Type	Description	Depth (ft)
							Asphalt	
	Backfilled with medium bentonite chips	CC-1		0 0 0 0			Moist, gray, slightly sandy GRAVEL (GW); poorly graded fine-to-coarse subangular to subrounded gravel	
5		CC-2		0 2.0 2.0 1.6			Refusal at 4.5', moved hole over ~1/2'; Moist, brown to gray, sandy, silty GRAVEL (GM); poorly graded fine-to-coarse angular gravel	5
			NRP-B-5-9-10	17.0 18.3 30.6			Wet, gray, slightly silty, gravelly SAND (SP); poorly graded fine-to-medium sand, trace organics: wood; petroleum-like odor, moderate rainbow and bleb sheen	
10		CC-3					Wet, gray GRAVEL (GP); fine rounded gravel	10
							Refusal at 11', bottom of boring at 11' BGS	
15								15
20								20

Sampler Type:
- ◯ No Recovery
- ▌▌ Continuous Core

PID - Photoionization Detector (Headspace Measurement)
- ▼ Static Water Level
- ▽ Water Level (ATD)

Logged by: MAR
Approved by: SJG
Figure No. A- 124

_ENV BORING LOG KIMBERLY CLARK-EVERETT.GPJ July 31, 2014

Boring Log

Aspect CONSULTING

Project Number	Boring Number	Sheet
110207	NRP-B-06	1 of 1

Project Name: Kimberly Clark
Location: Everett, WA
Driller/Method: Cascade Drilling / Direct Push Probe
Sampling Method: Continuous Core
Ground Surface Elev.:
Depth to Water (ft BGS):
Start/Finish Date: 6/1/2012

Depth / Elevation (feet)	Borehole Completion	Sample Type/ID	Tests	PID (ppm)	Blows/ 6"	Material Type	Description	Depth (ft)
	Backfilled with medium bentonite chips	CC-1		0			Asphalt	
				0			Slightly moist, gray, sandy GRAVEL (GW); poorly graded fine-to-coarse angular gravel	
				0				
				0			Bottom of boring at 4' BGS	
5								5
10								10
15								15
20								20

Sampler Type:
- No Recovery
- Continuous Core

PID - Photoionization Detector (Headspace Measurement)
- Static Water Level
- Water Level (ATD)

Logged by: MAR
Approved by: SJG
Figure No. A- 125

_ENV BORING LOG KIMBERLY CLARK-EVERETT.GPJ July 31, 2014

Boring Log

Aspect CONSULTING

Project Number	Boring Number	Sheet
110207	NRP-B-07	1 of 1

Project Name: Kimberly Clark
Location: Everett, WA
Driller/Method: Cascade Drilling / Direct Push Probe
Sampling Method: Continuous Core

Ground Surface Elev.:
Depth to Water (ft BGS):
Start/Finish Date: 6/1/2012

Depth / Elevation (feet)	Borehole Completion	Sample Type/ID	Tests	PID (ppm)	Blows/ 6"	Material Type	Description	Depth (ft)
							Asphalt, post-holed to 1' because of utilities	
	Backfilled with medium bentonite chips	CC-1		0			Moist, brown, silty, sandy GRAVEL (GM); fine angular gravel	
				0				
				0			Concrete rubble 3.25' to 4'	
				0			Moist, very silty, very sandy GRAVEL (GM); poorly graded fine-to-coarse angular gravel	
5				0				5
		CC-2		6.7			Very moist, gray SAND (SP); poorly graded fine-to-medium sand, strong petroleum-like odor, heavy rainbow and bleb sheen	
				10.8				
			NRP-B-7-9-10	15.1			Numerous organics at 9'	
				109.8				
10				10.8				10
				10.7				
		CC-3		7.1				
				7.1				
				6.8			Wet, dark gray, very silty SAND (SM); fine sand	
15				5.0			Wet, gray, SAND (SP); fine sand, trace organics	15
				10.1				
		CC-4		12.1			Wet, dark gray, very silty SAND (SM); fine sand	
				10.1				
			NRP-B-7-19-20	10.1				
20				7.1			Wood at 19.75'	20
							Bottom of boring at 20' BGS	

Sampler Type:
- ◯ No Recovery
- ▌▌ Continuous Core

PID - Photoionization Detector (Headspace Measurement)
- ▼ Static Water Level
- ▽ Water Level (ATD)

Logged by: MAR
Approved by: SJG
Figure No. A- 126

_ENV BORING LOG KIMBERLY CLARK-EVERETT.GPJ July 31, 2014

Boring Log

Aspect CONSULTING

Project Number	Boring Number	Sheet
110207	NRP-B-08	1 of 1

Project Name: Kimberly Clark
Location: Everett, WA
Driller/Method: Cascade Drilling / Direct Push Probe
Sampling Method: Continuous Core
Ground Surface Elev.:
Depth to Water (ft BGS):
Start/Finish Date: 6/1/2012

Depth / Elevation (feet)	Borehole Completion	Sample Type/ID	Tests	PID (ppm)	Blows/ 6"	Material Type	Description	Depth (ft)
							Asphalt	
	Backfilled with medium bentonite chips	CC-1		0.3 0.3 0.3 0.3 0.8			Moist, gray, slightly sandy GRAVEL (GW); poorly graded fine-to-coarse angular gravel	
5							Very moist, gray, sandy, very silty GRAVEL (GM); poorly graded fine-to-coarse angular gravel	5
		CC-2		6.7 8.5 7.6			Moist, gray, sandy SILT (ML)	
	▼		NRP-B-8-8.5-9.5	8.5 8.3			Wet, gray, SAND (SP); poorly graded fine-to-medium sand Wood at 9.5'	
10				0				10
		CC-3	NRP-B-8-11-12	0				
				0			Wet, dark gray SILT (ML)	
				0			Wet, gray, SAND (SP); poorly graded fine-to-medium sand, wood at 13'	
				0			Refusal at 13.5'; bottom of boring at 13.5' BGS	
15								15
20								20

Sampler Type:
- ◯ No Recovery
- ▌▌ Continuous Core

PID - Photoionization Detector (Headspace Measurement)
- ▼ Static Water Level
- ▽ Water Level (ATD)

Logged by: MAR
Approved by: SJG
Figure No. A- 127

_ENV BORING LOG KIMBERLY CLARK-EVERETT.GPJ July 31, 2014

Boring Log

Aspect CONSULTING

Project Number	Boring Number	Sheet
110207	NRP-B-09	1 of 1

Project Name: Kimberly Clark
Location: Everett, WA
Driller/Method: Cascade Drilling / Direct Push Probe
Sampling Method: Continuous Core

Ground Surface Elev.:
Depth to Water (ft BGS):
Start/Finish Date: 6/27/2012

Depth / Elevation (feet)	Borehole Completion	Sample Type/ID	Tests	PID (ppm)	Blows/ 6"	Material Type	Description	Depth (ft)
	Backfilled with medium bentonite chips	CC-1	NRP-B-8-0-1	0			Asphalt	
				0			Slightly moist, brown-gray, sandy GRAVEL (GP); crushed rock	
			NRP-B-8-3-4	0			Moist, dark gray, sandy SILT (ML); fine sand	
5		CC-2		0				5
				0				
				0				
				0			Wood	
10				0			Wet, dark gray SAND (SP); poorly graded fine-to-medium sand	10
							Bottom of boring at 10' BGS	
15								15
20								20

Sampler Type:
- No Recovery
- Continuous Core

PID - Photoionization Detector (Headspace Measurement)
- Static Water Level
- Water Level (ATD)

Logged by: AET
Approved by: SJG
Figure No. A- 128

_ENV BORING LOG KIMBERLY CLARK-EVERETT.GPJ July 31, 2014

Boring Log

Aspect CONSULTING

Project Number	Boring Number	Sheet
110207	NRP-B-10	1 of 1

Project Name: Kimberly Clark
Location: Everett, WA
Driller/Method: Cascade Drilling / Direct Push Probe
Sampling Method: Continuous Core

Ground Surface Elev.:
Depth to Water (ft BGS):
Start/Finish Date: 6/27/2012

Depth / Elevation (feet)	Borehole Completion	Sample Type/ID	Tests	PID (ppm)	Blows/ 6"	Material Type	Description	Depth (ft)
	Backfilled with medium bentonite chips	CC-1	NRP-B-10-0-1	0			Asphalt	
				0			Slightly moist, gray to brown, sandy GRAVEL (GP); crushed rock	
			NRP-B-10-3-4	0			Moist, dark gray, sandy SILT (ML); fine sand	
				0			Wood debris at 3' and 4.5'	
5				0				5
		CC-2						
							Wood	
10							Wet, gray SAND (SP); poorly graded fine-to-medium sand	10
							Bottom of boring at 10' BGS	
15								15
20								20

Sampler Type:
- No Recovery
- Continuous Core

PID - Photoionization Detector (Headspace Measurement)
- Static Water Level
- Water Level (ATD)

Logged by: AET
Approved by: SJG
Figure No. A- 129

_ENV BORING LOG KIMBERLY CLARK-EVERETT.GPJ July 31, 2014

Boring Log

Aspect CONSULTING

Project Number	Boring Number	Sheet
110207	NRP-B-11	1 of 1

Project Name: Kimberly Clark
Location: Everett, WA
Driller/Method: Cascade Drilling / Direct Push Probe
Sampling Method: Continuous Core

Ground Surface Elev.:
Depth to Water (ft BGS):
Start/Finish Date: 6/6/2012

Depth / Elevation (feet)	Borehole Completion	Sample Type/ID	Tests	PID (ppm)	Blows/ 6"	Material Type	Description	Depth (ft)
			NRP-B-11-0-1	1.5			Asphalt	
	Backfilled with medium bentonite chips	CC-1		0			Moist, gray, sandy, silty GRAVEL (GM); crushed rock	
			NRP-B-11-3-4	0			Moist, dark gray SAND (SP)	
				0			Moist, gray, slightly sandy CLAY (CL)	
5		CC-2		0				5
				0				
				0				
				0			Wood	
				0			Wet, gray, SAND (SP); poorly graded fine-to-medium sand	
10				0			Bottom of boring at 10' BGS	10
15								15
20								20

Sampler Type:
- No Recovery
- Continuous Core

PID - Photoionization Detector (Headspace Measurement)
- Static Water Level
- Water Level (ATD)

Logged by: MAR
Approved by: SJG
Figure No. A- 130

_ENV BORING LOG KIMBERLY CLARK-EVERETT.GPJ July 31, 2014

Boring Log

Aspect CONSULTING

Project Number	Boring Number	Sheet
110207	NRP-B-12	1 of 1

Project Name: Kimberly Clark
Location: Everett, WA
Driller/Method: Cascade Drilling / Direct Push Probe
Sampling Method: Continuous Core

Ground Surface Elev.:
Depth to Water (ft BGS):
Start/Finish Date: 6/6/2012

Depth / Elevation (feet)	Borehole Completion	Sample Type/ID	Tests	PID (ppm)	Blows/ 6"	Material Type	Description	Depth (ft)
	Backfilled with medium bentonite chips	CC-1	NRP-B-12-0-1	2.0			Asphalt	
				0.5			Moist, gray, sandy GRAVEL (GP); crushed rock	
			NRP-B-12-3-4	0			Moist, gray, very silty SAND (SM); fine sand	
				0			Moist, gray, slightly sandy SILT (ML); numerous organics, wood	
5		CC-2		0				5
							Refusal at 7.5'; bottom of boring at 7.5' BGS	
10								10
15								15
20								20

Sampler Type:
- ◯ No Recovery
- ▌▌ Continuous Core

PID - Photoionization Detector (Headspace Measurement)
- ▼ Static Water Level
- ▽ Water Level (ATD)

Logged by: MAR
Approved by: SJG
Figure No. A- 131

_ENV BORING LOG KIMBERLY CLARK-EVERETT.GPJ July 31, 2014

Boring Log

Aspect CONSULTING

Project Number	Boring Number	Sheet
110207	NRP-B-13	1 of 1

Project Name: Kimberly Clark
Location: Everett, WA
Driller/Method: Cascade Drilling / Direct Push Probe
Sampling Method: Continuous Core

Ground Surface Elev.:
Depth to Water (ft BGS):
Start/Finish Date: 6/6/2012

Depth / Elevation (feet)	Borehole Completion	Sample Type/ID	Tests	PID (ppm)	Blows/ 6"	Material Type	Description	Depth (ft)
			NRP-B-13-0-1	1.5			Asphalt	
							Moist, gray, sandy GRAVEL (GP); crushed rock	
	Backfilled with medium bentonite chips	CC-1		0			Moist, gray SAND (SP); fine sand	
			NRP-B-13-3-4	0				
				0			Moist, gray SILT (ML)	
							Wood	
5				0			Wet. gray SAND (SP); poorly graded fine-to-medium sand	5
		CC-2		0				
				0				
				0				
				0				
10				0			Bottom of boring at 10' BGS	10
15								15
20								20

Sampler Type:
- No Recovery
- Continuous Core

PID - Photoionization Detector (Headspace Measurement)
- Static Water Level
- Water Level (ATD)

Logged by: MAR
Approved by: SJG
Figure No. A- 132

_ENV BORING LOG KIMBERLY CLARK-EVERETT.GPJ July 31, 2014

Boring Log

Aspect CONSULTING

Project Number	Boring Number	Sheet
110207	NRP-B-14	1 of 1

Project Name: Kimberly Clark
Location: Everett, WA
Driller/Method: Cascade Drilling / Direct Push Probe
Sampling Method: Continuous Core

Ground Surface Elev.:
Depth to Water (ft BGS):
Start/Finish Date: 6/27/2012

Depth / Elevation (feet)	Borehole Completion	Sample Type/ID	Tests	PID (ppm)	Blows/ 6"	Material Type	Description	Depth (ft)
			NRP-B-14-0-1	0			Asphalt	
	Backfilled with medium bentonite chips			0			Slightly moist, gray, sandy gravel (GP); crushed rock	
		CC-1		0			Moist, dark gray, sandy SILT (ML)	
			NRP-B-14-3-4	0				
				0				
5				0				5
				0			Wet, black/brown wood debris	
		CC-2		0				
				0			Wet, gray SAND (SP); poorly graded fine-to-medium sand	
				0				
10				0			Bottom of boring at 10' BGS	10
15								15
20								20

Sampler Type:
- ◯ No Recovery
- ▮▮ Continuous Core

PID - Photoionization Detector (Headspace Measurement)

- ▼ Static Water Level
- ▽ Water Level (ATD)

Logged by: AET
Approved by: SJG
Figure No. A- 133

_ENV BORING LOG KIMBERLY CLARK-EVERETT.GPJ July 31, 2014

Boring Log

Aspect CONSULTING

Project Number	Boring Number	Sheet
110207	NRP-B-15	1 of 1

Project Name: Kimberly Clark
Location: Everett, WA
Driller/Method: Cascade Drilling / Direct Push Probe
Sampling Method: Continuous Core

Ground Surface Elev.:
Depth to Water (ft BGS):
Start/Finish Date: 6/6/2012

Depth / Elevation (feet)	Borehole Completion	Sample Type/ID	Tests	PID (ppm)	Blows/ 6"	Material Type	Description	Depth (ft)
			NRP-B-15-0-1	2.5			Asphalt	
				0.5			Moist, light gray GRAVEL (GP); crushed rock	
	Backfilled with medium bentonite chips	CC-1	NRP-B-15-3-4	0.5			Moist, dark gray, very silty SAND (SM); fine sand	
				0.4				
5				0.4				5
		CC-2		0			Wet, gray sandy SILT (ML)	
				0				
				0				
				0			Wet, dark brown PEAT (PT)	
10				0			Bottom of boring at 10' BGS	10
15								15
20								20

Sampler Type:
- ◯ No Recovery
- ▌▌ Continuous Core

PID - Photoionization Detector (Headspace Measurement)
- ▼ Static Water Level
- ▽ Water Level (ATD)

Logged by: MAR
Approved by: SJG
Figure No. A- 134

_ENV BORING LOG KIMBERLY CLARK-EVERETT.GPJ July 31, 2014

Boring Log

Aspect CONSULTING

Project Number	Boring Number	Sheet
110207	NRP-B-16	1 of 1

Project Name: Kimberly Clark
Location: Everett, WA
Driller/Method: Cascade Drilling / Direct Push Probe
Sampling Method: Continuous Core

Ground Surface Elev.:
Depth to Water (ft BGS):
Start/Finish Date: 6/27/2012

Depth / Elevation (feet)	Borehole Completion	Sample Type/ID	Tests	PID (ppm)	Blows/ 6"	Material Type	Description	Depth (ft)
0	Backfilled with medium bentonite chips	CC-1	NRP-B-15-0-1	2.5		Asphalt	Asphalt, crushed rock and gravel	0
				0.5		Silt	Moist, dark gray, slightly sandy SILT (ML)	
			NRP-B-15-3-4	0.5				
				0.4				
5		CC-2		0.4				5
				0			2" of gravel at 6'	
				0		Clay	Wet, dark gray, silty CLAY (CL)	
				0		Wood	Wood	
				0		Sand	Wet, gray, sand (SP); poorly graded fine-to-medium sand	
10				0			Bottom of boring at 10' BGS	10
15								15
20								20

Sampler Type:
- ◯ No Recovery
- ▌▌ Continuous Core

PID - Photoionization Detector (Headspace Measurement)
- ▼ Static Water Level
- ▽ Water Level (ATD)

Logged by: AET
Approved by: SJG
Figure No. A- 135

_ENV BORING LOG KIMBERLY CLARK-EVERETT.GPJ July 31, 2014

Boring Log

Project Number	Boring Number	Sheet
110207	NRP-B-17	1 of 1

Project Name: Kimberly Clark
Location: Everett, WA
Driller/Method: Cascade Drilling / Direct Push Probe-Limited Access
Sampling Method: Continuous Core

Ground Surface Elev.:
Depth to Water (ft BGS):
Start/Finish Date: 9/6/2012

Depth / Elevation (feet)	Borehole Completion	Sample Type/ID	Tests	PID (ppm)	Blows/ 6"	Material Type	Description	Depth (ft)
							Grass over topsoil	
				0			Moist, light brown to gray, slightly silty SAND (SW-SM); poorly graded fine to coarse sand	
	3/8" hydrated bentonite chips	CC-1		0				
				0				
5				0				5
		CC-2		0				
				0				
			NRP-B-17-8-9	0				
				0				
10				0			Wet, black, silty, gravelly SAND (SM); poorly graded fine to medium sand	10
			NRP-B-17-11-12	0				
		CC-3	NRP-B-17-12-13	2.8			Slight petroleum-like odor 12' to 13'	
				1.8				
							No recovery	
							Refusal at 14' BGS	
15								15
20								20
25								25

Sampler Type:
- ◯ No Recovery
- ▌▌ Continuous Core

PID - Photoionization Detector (Headspace Measurement)
- ▼ Static Water Level
- ▽ Water Level (ATD)

Logged by: AET/MAR
Approved by: SJG
Figure No. A- 136

_ENV BORING LOG KIMBERLY CLARK-EVERETT.GPJ July 31, 2014

Boring Log

Aspect CONSULTING

Project Number	Boring Number	Sheet
110207	NRP-B-18	1 of 1

Project Name: Kimberly Clark
Location: Everett, WA
Driller/Method: Cascade Drilling / Direct Push Probe-Limited Access
Sampling Method: Continuous Core
Ground Surface Elev.:
Depth to Water (ft BGS):
Start/Finish Date: 9/6/2012

Depth / Elevation (feet)	Borehole Completion	Sample Type/ID	Tests	PID (ppm)	Blows/ 6"	Material Type	Description	Depth (ft)
							Asphalt	
				0.3			Moist, gray GRAVEL (FILL); crushed rock with silt matrix	
	3/8" hydrated bentonite chips	CC-1		0.4				
				0.3			Moist, brown to dark gray SAND (SP); fine sand Thin bed silt	
							No recovery	
5				0.9			Moist, brown to dark gray SAND (SP); fine sand	5
				1.5				
		CC-2		0				
			NRP-B-18-8-9	6.6			Becomes medium sand	
				24.1			Becomes fine sand; numerous organics	
10				258				10
			NRP-B-18-11.5-12.5	6.6				
		CC-3		456			Sheen at 12'	
				1.4				
			NRP-B-18-14-15	0.2				
15				1.2			Bottom of boring at 15' BGS	15
20								20
25								25

Sampler Type:
- No Recovery
- Continuous Core

PID - Photoionization Detector (Headspace Measurement)
- Static Water Level
- Water Level (ATD)

Logged by: AET/MAR
Approved by: SJG
Figure No. A- 137

_ENV BORING LOG KIMBERLY CLARK-EVERETT.GPJ July 31, 2014

Boring Log

Aspect CONSULTING

Project Number	Boring Number	Sheet
110207	NRP-B-19	1 of 1

Project Name: Kimberly Clark
Location: Everett, WA
Driller/Method: Cascade Drilling / Direct Push Probe-Limited Access
Sampling Method: Continuous Core
Ground Surface Elev.
Depth to Water (ft BGS)
Start/Finish Date 9/6/2012

Depth / Elevation (feet)	Borehole Completion	Sample Type/ID	Tests	PID (ppm)	Blows/ 6"	Material Type	Description	Depth (ft)
							Asphalt	
	3/8" hydrated bentonite chips	CC-1		0			Moist, gray, silty GRAVEL (FILL); crushed rock	
				0				
				0			Moist, light brown to dark gray SAND (SP); fine sand, silt beds	
							No recovery	
5								5
							Very moist to wet, dark gray, sandy SILT (ML)	
				0				
		CC-2		9.6			Wet, dark gray SAND (SP); medium sand, trace seashells	
				204				
			NRP-B-19-8-9	949				
				984				
				32.9			Very thin interbeds wood and organic silt	
10			NRP-B-19-10-11	16.4			Sheen at 9.5'	10
				41.5				
				17.3			Trace silt 11' to 13'	
		CC-3		0.2				
			NRP-B-19-13-14	6.4				
				0.8				
							Wood	
15							Bottom of boring at 15' BGS	15
20								20
25								25

Sampler Type:
- No Recovery
- Continuous Core

PID - Photoionization Detector (Headspace Measurement)
- Static Water Level
- Water Level (ATD)

Logged by: AET/MAR
Approved by: SJG
Figure No. A- 138

_ENV BORING LOG KIMBERLY CLARK-EVERETT.GPJ July 31, 2014

Boring Log

Project Number	Boring Number	Sheet
110207	NRP-B-20	1 of 1

Project Name: Kimberly Clark
Location: Everett, WA
Driller/Method: Cascade Drilling / Direct Push Probe-Limited Access
Sampling Method: Continuous Core
Ground Surface Elev.:
Depth to Water (ft BGS):
Start/Finish Date: 9/6/2012

Depth / Elevation (feet)	Borehole Completion	Sample Type/ID	Tests	PID (ppm)	Blows/ 6"	Material Type	Description	Depth (ft)
							Asphalt	
				0			Moist, gray, very gravelly, very silty SAND (SM); fine sand	
	3/8" hydrated bentonite chips	CC-1		0			Moist, gray, slightly silty SAND (SP-SM); fine sand	
				0			Thin bed silt	
							No recovery	
5				0			Wet, gray SAND (SP); poorly graded fine to medium sand, trace seashells	5
				2.8				
		CC-2		0				
			NRP-B-20-8-9	147				
				748				
				17.5				
10			NRP-B-20-10-11	25.2				10
				518				
				71.3				
		CC-3	NRP-B-20-12-13	3.7				
				2.3			Wet, dark gray, very silty SAND (SM); fine sand, numerous organics, wood	
				5.9			Wet, gray SAND (SP); trace organics	
				4.5				
15				1.8			Bottom of boring at 15' BGS	15
20								20
25								25

Sampler Type:
- ◯ No Recovery
- ▌▌ Continuous Core

PID - Photoionization Detector (Headspace Measurement)
- ▼ Static Water Level
- ▽ Water Level (ATD)

Logged by: AET/MAR
Approved by: SJG
Figure No. A- 139

_ENV BORING LOG KIMBERLY CLARK-EVERETT.GPJ July 31, 2014

Boring Log

Aspect CONSULTING

Project Number	Boring Number	Sheet
110207	NRP-B-21	1 of 1

Project Name: Kimberly Clark
Location: Everett, WA
Driller/Method: Cascade Drilling / Direct Push Probe-Limited Access
Sampling Method: Continuous Core
Ground Surface Elev.
Depth to Water (ft BGS)
Start/Finish Date 9/7/2012

Depth / Elevation (feet)	Borehole Completion	Sample Type/ID	Tests	PID (ppm)	Blows/ 6"	Material Type	Description	Depth (ft)
							Asphalt	
	3/8" hydrated bentonite chips	CC-1		0			Moist, brown, very gravelly, very silty SAND (SM); fine sand	
				0			Moist, gray SAND (SP); poorly graded fine to medium sand	
				9.6				
				16.6				
				1.1			No recovery	
5				4.1			Wet, gray SAND (SP); poorly graded fine to medium sand, trace seashells	5
		CC-2	NRP-B-21-7-8	0.6				
				290				
				351				
				331				
10			NRP-B-21-10.5-11.5	9.4				10
		CC-3		807				
				371			Wet, dark gray SILT (ML); numerous organics, wood	
				32.2			Wet, gray SAND (SP); fine to medium sand, numerous organics and seashells, wood	
			NRP-B-21-14-15	21.5				
				15.6				
15				1.2			Bottom of boring at 15' BGS	15
20								20
25								25

Sampler Type:
- ◯ No Recovery
- ▌▌ Continuous Core

PID - Photoionization Detector (Headspace Measurement)
- ▼ Static Water Level
- ▽ Water Level (ATD)

Logged by: AET/MAR
Approved by: SJG
Figure No. A- 140

_ENV BORING LOG KIMBERLY CLARK-EVERETT.GPJ July 31, 2014

Boring Log

Aspect CONSULTING

Project Number	Boring Number	Sheet
110207	NRP-B-22	1 of 1

Project Name: Kimberly Clark
Location: Everett, WA
Driller/Method: Cascade Drilling / Direct Push Probe-Limited Access
Sampling Method: Continuous Core
Ground Surface Elev.:
Depth to Water (ft BGS):
Start/Finish Date: 9/6/2012

Depth / Elevation (feet)	Borehole Completion	Sample Type/ID	Tests	PID (ppm)	Blows/ 6"	Material Type	Description	Depth (ft)
							Asphalt	
	3/8" hydrated bentonite chips	CC-1		0			Moist, gray, silty GRAVEL (GM); angular gravel - crushed rock	
				0				
				0			No recovery	
5		CC-2	NRP-B-22-7-8	0.7			Moist, gray, silty GRAVEL (GM); angular gravel - crushed rock	5
				1.7				
				1.8			No recovery	
10		CC-3	NRP-B-22-11-12	16.9			Wet, gray, gravelly, silty SAND (SM); fine sand	10
				26.4			Wet, dark gray SAND (SP); fine sand, trace silt Sheen and strong petroleum-like odor 11' to 12'	
				13.5				
				0			No recovery	
15		CC-4	NRP-B-22-15.5-16.5				Wet, dark gray SAND (SP); fine sand, numerous organics	15
							Wood	
							Wet, dark gray SAND (SP); fine sand, numerous organics	
							No recovery	
20							Bottom of boring at 20' BGS	20
25								25

Sampler Type:
- No Recovery
- Continuous Core

PID - Photoionization Detector (Headspace Measurement)
- Static Water Level
- Water Level (ATD)

Logged by: AET/MAR
Approved by: SJG
Figure No. A- 141

_ENV BORING LOG KIMBERLY CLARK-EVERETT.GPJ July 31, 2014

Boring Log

Aspect CONSULTING

Project Number	Boring Number	Sheet
110207	NRP-MW-01	1 of 1

Project Name: Kimberly Clark
Location: Everett, WA
Driller/Method: Cascade Drilling / Direct Push Probe
Sampling Method: Continuous Core

Ground Surface Elev.: 13.99
Depth to Water (ft BGS):
Start/Finish Date: 6/6/2012

Depth / Elevation (feet)	Borehole Completion	Sample Type/ID	Tests	PID (ppm)	Blows/ 6"	Material Type	Description	Depth (ft)
0 – 14	8" Flush-mount monument and thermos cap Concrete surface seal 0' to 2'						Asphalt and crushed rock	0
1 – 13							(Refer to boring log for NRP-B-2 for PID readings)	1
2 – 12		CC-1					Moist, gray SAND (SP); poorly graded fine-to-medium sand	2
3 – 11	3/8" Hydrated bentonite chips 2' to 4'							3
4 – 10								4
5 – 9	10/20 pre-pack Silica sand filter pack 4' to 15'							5
6 – 8							Moist, gray, silty SAND (SM); fine sand	6
7 – 7		CC-2					Moist, gray SAND (SP); poorly graded fine-to-medium sand, trace organics: shells and wood, strong petroleum-like odor, sheen at 8'	7
8 – 6								8
9 – 5	2" Diameter PVC pre-packed .001 slot screen 5' to 15'							9
10 – 4								10
11 – 3		CC-3					Wet, gray, silty SAND (SM); trace gravel medium to coarse sand, slight petroleum-like odor, slight sheen	11
12 – 2							Wood chips at 12'	12
13 – 1								13
14 – 0							Wet, gray SAND (SP); medium sand, trace organics, trace seashell fragments	14
15 – -1	Threaded cap						Bottom of boring at 15' BGS	15
16 – -2								16
17 – -3								17
18 – -4								18
19 – -5								19
20 – -6								20
21 – -7								21
22 – -8								22
23 – -9								23
24 – -10								24
25 – -11								25
26 – -12								26
27 – -13								27
28 – -14								28
29 – -15								29

Sampler Type:
- ◯ No Recovery
- ▌▌ Continuous Core

PID - Photoionization Detector (Headspace Measurement)
- ▼ Static Water Level
- ▽ Water Level (ATD)

Logged by: MAR
Approved by: SJG
Figure No. A- 142

_ENV BORING LOG KIMBERLY CLARK-EVERETT.GPJ July 31, 2014

Boring Log

Aspect CONSULTING

Project Number	Boring Number	Sheet
110207	NRP-MW-02	1 of 1

Project Name: Kimberly Clark
Location: Everett, WA
Driller/Method: Cascade Drilling / Direct Push Probe
Sampling Method: Continuous Core

Ground Surface Elev.: 15.37
Depth to Water (ft BGS):
Start/Finish Date: 5/29/2012

Depth / Elevation (feet)	Borehole Completion	Sample Type/ID	Tests	PID (ppm)	Blows/ 6"	Material Type	Description	Depth (ft)
0 to 15	8" Flush-mount monument and thermos cap Concrete surface seal 0' to 2' 3/8" Hydrated bentonite chips 2' to 4' 10/20 pre-pack Silica sand filter pack 4' to 15' 2" Diameter PVC pre-packed .001 slot screen 5' to 15' Threaded cap	CC-1 CC-2 CC-3		0			Grass over topsoil; post-holed to 2 feet for utilities	0
1				0			Moist, dark gray, gravelly, very silty SAND (SM); fine sand	1
2				0				2
3				0				3
4				0			Moist, dark gray SAND (SP); fine sand interbedded with 1/4" lenses of silt	4
5				0				5
6				0				6
7				0			4" lens of dark gray SILT (ML) Moist to wet, dark gray SAND (SP); fine sand	7
8				0				8
9				0			Medium sand at 9', trace organics-shell fragments	9
10				0				10
11				0				11
12				0				12
13				0				13
14				0			Wet, dark gray SILT (ML)	14
15				0			Wet, dark gray SAND (SP); numerous organics-wood	15
							Bottom of boring at 15' BGS	

Sampler Type:
- No Recovery
- Continuous Core

PID - Photoionization Detector (Headspace Measurement)
- Static Water Level
- Water Level (ATD)

Logged by: MAR
Approved by: SJG
Figure No. A- 143

_ENV BORING LOG KIMBERLY CLARK-EVERETT.GPJ July 31, 2014

Boring Log

Aspect CONSULTING

Project Number	Boring Number	Sheet
110207	NRP-MW-03	1 of 1

Project Name: Kimberly Clark
Location: Everett, WA
Driller/Method: Cascade Drilling / Direct Push Probe
Sampling Method: Continuous Core

Ground Surface Elev.: 13.67
Depth to Water (ft BGS):
Start/Finish Date: 5/29/2012

Depth / Elevation (feet)	Borehole Completion	Sample Type/ID	Tests	PID (ppm)	Blows/ 6"	Material Type	Description	Depth (ft)
1 / 13	8" Flush-mount monument and thermos cap Concrete surface seal 0' to 2'			0			Grass over topsoil; post-holed to 2 feet for utilities	
2 / 12				0			Moist, dark gray SAND (SP); fine sand, trace organics-wood	1
3 / 11	3/8" Hydrated bentonite chips 2' to 4'	CC-1		0				2
4 / 10				0			Moist, dark gray SILT (ML)	3
5 / 9	10/20 pre-pack Silica sand filter pack 4' to 15'			0			Moist, dark gray SAND (SP); fine sand	4
6 / 8				0			Moist, dark gray SILT (ML)	5
7 / 7		CC-2		0			Moist to wet, dark gray SAND (SP); poorly graded fine-to-medium sand	6
8 / 6				0				7
9 / 5	2" Diameter PVC pre-packed .001 slot screen 5' to 15'			0				8
10 / 4				0			Wet, dark gray SILT (ML)	9
11 / 3				0			Moist, dark gray SAND (SP); poorly graded fine-to-medium sand, numerous organics-wood- every 2"	10
12 / 2		CC-3		0				11
13 / 1				0				12
14 / 0				0			Wet, dark gray SILT (ML); numerous organics-wood	13
15 / -1	Threaded cap			0				14
16 / -2							Bottom of boring at 15' BGS	15
17 / -3								16
18 / -4								17
19 / -5								18
20 / -6								19
21 / -7								20
22 / -8								21
23 / -9								22
24 / -10								23
25 / -11								24
26 / -12								25
27 / -13								26
28 / -14								27
29 / -15								28
								29

Boring Log

Aspect CONSULTING

Project Number	Boring Number	Sheet
110207	NRP-MW-04	1 of 1

Project Name: Kimberly Clark
Location: Everett, WA
Driller/Method: Cascade Drilling / Direct Push Probe
Sampling Method: Continuous Core

Ground Surface Elev.: 15.7
Depth to Water (ft BGS):
Start/Finish Date: 6/6/2012

Depth / Elevation (feet)	Borehole Completion	Sample Type/ID	Tests	PID (ppm)	Blows/ 6"	Material Type	Description	Depth (ft)
1 (15)	8" Flush-mount monument and thermos cap Concrete surface seal 0' to 2'			0		Asphalt	Asphalt	1
2 (14)				0		Slightly moist, sandy, silty GRAVEL (GM); fine gravel	Slightly moist, sandy, silty GRAVEL (GM); fine gravel	2
3 (13)	3/8" Hydrated bentonite chips 2' to 3'	CC-1		0				3
4 (12)	10/20 pre-pack Silica sand filter pack 3' to 14'			0		Moist, gray, slightly silty SAND (SP-SM); fine sand	Moist, gray, slightly silty SAND (SP-SM); fine sand	4
5 (11)				0		Wet, gray, sandy SILT (ML)	Wet, gray, sandy SILT (ML)	5
6 (10)				0				6
7 (9)				0				7
8 (8)	2" Diameter PVC pre-packed .001 slot screen 4' to 14'	CC-2		0		Wet, gray CLAY (CL)	Wet, gray CLAY (CL)	8
9 (7)				0		Wet, dark brown to black PEAT (PT)	Wet, dark brown to black PEAT (PT)	9
10 (6)				0		Wet, gray SAND (SP)l fine-to-medium sand, trace organics-wood- at 11' and 12'	Wet, gray SAND (SP)l fine-to-medium sand, trace organics-wood- at 11' and 12'	10
11 (5)				0				11
12 (4)		CC-3		0				12
13 (3)				0		Fine sand 12.5' to 14'	Fine sand 12.5' to 14'	13
14 (2)	Threaded cap			0			Refusal at 14'; bottom of boring at 14' BGS	14
15 (1)								15
16 (0)								16
17 (-1)								17
18 (-2)								18
19 (-3)								19
20 (-4)								20
21 (-5)								21
22 (-6)								22
23 (-7)								23
24 (-8)								24
25 (-9)								25
26 (-10)								26
27 (-11)								27
28 (-12)								28
29 (-13)								29
(-14)								

Sampler Type:
- ◯ No Recovery
- ▌▌ Continuous Core

PID - Photoionization Detector (Headspace Measurement)
- ▼ Static Water Level
- ▽ Water Level (ATD)

Logged by: MAR
Approved by: SJG
Figure No. A- 145

_ENV BORING LOG KIMBERLY CLARK-EVERETT.GPJ July 31, 2014

Boring Log

Aspect CONSULTING

Project Number	Boring Number	Sheet
110207	NRP-MW-05	1 of 1

Project Name: Kimberly Clark
Location: Everett, WA
Driller/Method: Cascade Drilling / Direct Push Probe
Sampling Method: Continuous Core

Ground Surface Elev.: 15.39
Depth to Water (ft BGS):
Start/Finish Date: 6/27/2012

Depth / Elevation (feet)	Borehole Completion	Sample Type/ID	Tests	PID (ppm)	Blows/ 6"	Material Type	Description	Depth (ft)
15 to 1	8" Flush-mount monument and thermos cap; Concrete surface seal 0' to 2'						Moist, gray, slightly silty, sandy GRAVEL (GP-GM); crushed rock, fine to coarse sand	1
14 to 2								2
13 to 3	3/8" Hydrated bentonite chips 2' to 3'	CC-1		0			Moist, gray to dark gray, clayey SILT (ML)	3
12 to 4	2/12 pre-pack Silica sand filter pack 3' to 14'			0			Moist to wet, dark gray SAND (SP); fine sand	4
11 to 5				0				5
10 to 6				0			Moist, gray, sandy, silty GRAVEL (GM)	6
9 to 7	▼			0			Wet, dark gray, silty CLAY (CL)	7
8 to 8		CC-2		0			Wet, dark gray, very sandy GRAVEL (GP); poorly graded fine-to-medium sand, fine gravel, charred wood debris	8
7 to 9	2" Diameter PVC pre-packed .001 slot screen 4' to 14'			0			Wet, gray SAND (SP); poorly graded fine-to-medium sand	9
6 to 10				0				10
5 to 11				0				11
4 to 12				0			6" slightly silty sand layer at 12'	12
3 to 13		CC-3		0			Scattered organics-seashells	13
2 to 14	Threaded cap			0				14
1 to 15				0			Bottom of boring at 15' BGS	15
0 to 16								16
-1 to 17								17
-2 to 18								18
-3 to 19								19
-4 to 20								20
-5 to 21								21
-6 to 22								22
-7 to 23								23
-8 to 24								24
-9 to 25								25
-10 to 26								26
-11 to 27								27
-12 to 28								28
-13 to 29								29
-14								

Sampler Type:
- ◯ No Recovery
- ▌▌ Continuous Core

PID - Photoionization Detector (Headspace Measurement)
- ▼ Static Water Level
- ▽ Water Level (ATD)

Logged by: AET
Approved by: SJG
Figure No. A- 146

_ENV BORING LOG KIMBERLY CLARK-EVERETT.GPJ July 31, 2014

Monitoring Well Construction Log

Aspect CONSULTING

Project Number	Well Number	Sheet
110207	NRS-MW-101	1 of 1

Project Name: Kimberly Clark
Location: Everett, WA
Driller/Method: Holt / Direct Push Probe-Limited Access
Sampling Method: Continuous Core

Ground Surface Elev.
Top of Casing Elev.
Depth to Water (ft BGS)
Start/Finish Date: 5/1/2014

Depth / Elevation (feet)	Borehole Completion	Sample Type/ID	Tests	PID (ppm)	Blows/ 6"	Material Type	Description	Depth (ft)
	8" Flush-mount monument and thermos cap Concrete surface seal 0' to 1' 3/8" Hydrated bentonite chips 1' to 4'	S1		0.0			Grass, roots, sandy, gravelly soil	
				0.0			Moist, brown, silty SAND (SM); fine to coarse sand, predominantly fine, trace fine gravel	
				0.0			No recovery	
5	10/20 pre-pack Silica sand filter pack 4' to 15'							5
	▽ 5/1/2014	S2		0.0			Moist, brown, silty SAND (SM); fine to coarse sand, predominantly fine, trace fine gravel	
				0.0			Becomes wet and gray	
	2" Diameter PVC pre-packed 10-slot screen 5' to 15'			0.0			No recovery	
10		S3		47.3			Wet, gray, silty SAND (SM); fine to coarse sand, predominantly fine, numerous wood chips, strong petroleum odor	10
				130				
				57.5				
				14.4			3" pocket of SILT (ML); trace sand	
				0.0			Wet, gray SAND (SP); fine to medium sand, predominantly medium	
				0.0				
				0.0			Wet, gray, slightly sandy SILT (ML); fine sand	
15	Threaded cap						Bottom of boring at 15' bgs	15

Sampler Type:
- ◯ No Recovery
- ▮ Continuous Core

PID - Photoionization Detector
- ▼ Static Water Level
- ▽ Water Level (ATD)

Logged by: AET/MML
Approved by: SJG
Figure No. A-

MONITORING WELL KIMBERLY CLARK-EVERETT.GPJ October 14, 2015

Monitoring Well Construction Log

Aspect CONSULTING

Project Number	Well Number	Sheet
110207	NRU-MW-101	1 of 1

Project Name: Kimberly Clark
Location: Everett, WA
Driller/Method: Holt / Direct Push Probe-Limited Access
Sampling Method: Continuous Core

Ground Surface Elev.:
Top of Casing Elev.:
Depth to Water (ft BGS):
Start/Finish Date: 5/1/2014

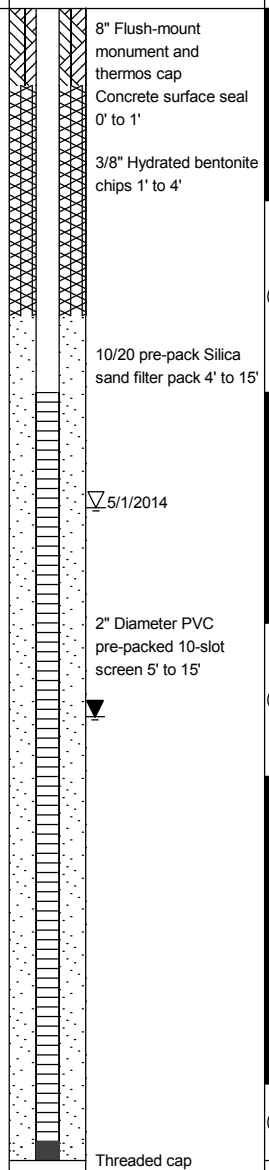

Depth / Elevation (feet)	PID (ppm)	Blows/ 6"	Material Type	Description	Depth (ft)
	0.0			Moist, brown, sandy GRAVEL (GP); medium to coarse sand, fine gravel, trace silt	
	0.0			Moist, gray, gravelly, sandy SILT (ML); fine gravel, fine to coarse sand, predominantly fine	
	0.0			Moist, brown, gravelly SAND (SW); fine to coarse sand, fine gravel, trace silt	
				No recovery	
5	0.0			Moist, brown, gravelly, sandy SILT (ML); fine sand, fine gravel, mica flakes common	5
	0.0			Becomes wet and gray	
	0.0			Wet, gray, silty SAND (SM); fine sand coarsens with depth	
				No recovery	
10	0.0			Wet, gray, silty SAND (SM); fine sand	10
	0.0			numerous Wood chips	
	0.0			Wet, gray SILT (ML)	
	0.0			Wet, gray, silty SAND (SM); numerous wood chips	
				No recovery	
15				Bottom of boring at 15' bgs	15

Sampler Type:
- ◯ No Recovery
- ▮ Continuous Core

PID - Photoionization Detector
- ▼ Static Water Level
- ▽ Water Level (ATD)

Logged by: AET/MML
Approved by: SJG
Figure No. A-

MONITORING WELL KIMBERLY CLARK-EVERETT.GPJ October 14, 2015

Monitoring Well Construction Log

Aspect CONSULTING

Project Number	Well Number	Sheet
110207	NRU-MW-102	1 of 1

Project Name: Kimberly Clark
Location: Everett, WA
Driller/Method: Holt / Direct Push Probe-Limited Access
Sampling Method: Continuous Core

Ground Surface Elev.:
Top of Casing Elev.:
Depth to Water (ft BGS):
Start/Finish Date: 5/1/2014

Depth / Elevation (feet)	Borehole Completion	Sample Type/ID	Tests	PID (ppm)	Blows/ 6"	Material Type	Description	Depth (ft)
	8" Flush-mount monument and thermos cap Concrete surface seal 0' to 1' 3/8" Hydrated bentonite chips 1' to 4'			0.0			Grass, roots, soil	
				0.0			Moist, dark brown, gravelly, sandy SILT (ML); fine sand, fine gravel	
		S1					No recovery	
5	10/20 pre-pack Silica sand filter pack 4' to 15'							5
	▽ 5/1/2014			0.0			Moist, gray, gravelly, sandy SILT (ML); fine sand, fine gravel	
				0.0			Wet	
		S2		0.0			No recovery	
	2" Diameter PVC pre-packed 10-slot screen 5' to 15'							
10				0.0			Wet, gray, silty, sandy GRAVEL (GM); coarse, angular sand, and angular crushed gravel	10
				0.0			Wet, gray, sandy SILT (ML); fine sand, trace fine gravel	
		S3					No recovery	
15	Threaded cap						Bottom of boring at 15' bgs	15

Sampler Type:
- ◯ No Recovery
- ▮ Continuous Core

PID - Photoionization Detector
- ▼ Static Water Level
- ▽ Water Level (ATD)

Logged by: AET/MML
Approved by: SJG
Figure No. A-

MONITORING WELL KIMBERLY CLARK-EVERETT.GPJ October 14, 2015

Monitoring Well Construction Log

Aspect CONSULTING

Project Number	Well Number	Sheet
110207	NRS-MW-102	1 of 1

Project Name: Kimberly Clark
Location: Everett, WA
Driller/Method: Holt / Direct Push Probe-Limited Access
Sampling Method: Continuous Core

Ground Surface Elev.:
Top of Casing Elev.:
Depth to Water (ft BGS):
Start/Finish Date: 5/1/2014

Depth / Elevation (feet)	Borehole Completion	Sample Type/ID	Tests	PID (ppm)	Blows/ 6"	Material Type	Description	Depth (ft)
	8" Flush-mount monument and thermos cap Concrete surface seal 0' to 1' 3/8" Hydrated bentonite chips 1' to 4'	S1		0.0 0.0 0.0			Grass, roots, soil Moist, brown, sandy GRAVEL (GW); fine to coarse sand, fine to coarse gravel, trace silt Moist, brownish gray, sandy SILT (ML); fine sand Becomes wet and gray No recovery	
5	10/20 pre-pack Silica sand filter pack 4' to 15' 5/1/2014	S2		0.0 0.0 0.0 0.0			Moist, gray, sandy SILT (ML); fine sand Moist, gray, silty SAND (SM); fine to medium sand Becomes wet becomes predominantly fine sand No recovery	5
10	2" Diameter PVC pre-packed 10-slot screen 5' to 15'	S3		0.0 0.0 0.0 0.0 0.0			Wet, gray, silty SAND (SM); fine to medium sand, predominantly fine, numerous seashells 3" pocket of woodchips 3" pocket of woodchips	10
15	Threaded cap						Bottom of boring at 15' bgs	15

Sampler Type:
- ◯ No Recovery
- ▮ Continuous Core

PID - Photoionization Detector
- ▼ Static Water Level
- ▽ Water Level (ATD)

Logged by: AET/MML
Approved by: SJG
Figure No. A-

_MONITORING WELL_KIMBERLY CLARK-EVERETT.GPJ October 14, 2015

Boring Log

Project Number	Boring Number	Sheet
110207	OMS-B-1	1 of 1

Project Name: Kimberly Clark
Location: Everett, WA
Driller/Method: Aspect / Hand Auger
Sampling Method: Continuous Grab
Ground Surface Elev.
Depth to Water (ft BGS)
Start/Finish Date 7/5/2012

Depth / Elevation (feet)	Borehole Completion	Sample Type/ID	Tests	PID (ppm)	Blows/ 6"	Material Type	Description	Depth (ft)
			OMS-B-1-0-1-070512				**CONCRETE SLAB FLOOR**	
			OMS-B-1-2-3-070512				**FILL** Slightly moist, brown, slightly gravelly, SAND (SP); perdominantly medium sand.	
							Bottom of boring at 3 ft BGS. Backfilled boring with same material that was pulled from hole.	
5								5
10								10
15								15

Sampler Type:
- No Recovery
- Grab Sample

PID - Photoionization Detector (Headspace Measurement)
- Static Water Level
- Water Level (ATD)

Logged by: GL
Approved by: SJG
Figure No. A- 147

_ENV BORING LOG KIMBERLY CLARK-EVERETT.GPJ July 31, 2014

Boring Log

Project Number	Boring Number	Sheet
110207	OMS-B-2	1 of 1

Project Name: Kimberly Clark
Location: Everett, WA
Driller/Method: Aspect / Hand Auger
Sampling Method: Continuous Grab
Ground Surface Elev.
Depth to Water (ft BGS)
Start/Finish Date 7/5/2012

Depth / Elevation (feet)	Borehole Completion	Sample Type/ID	Tests	PID (ppm)	Blows/ 6"	Material Type	Description	Depth (ft)
0			OMS-B-2-0-1-070512				**CONCRETE SLAB FLOOR**	0
1							**FILL** Slight moist, brown, slightly gravelly, SAND (SP); perdominantly medium sand; shells present; plastic debris.	1
2			OMS-B-2-2-3-070512					2
3							Bottom of boring at 3 ft BGS. Backfilled boring with same material that was pulled from hole.	3
4								4
5								5
6								6
7								7
8								8
9								9
10								10
11								11
12								12
13								13
14								14
15								15
16								16
17								17
18								18
19								19
20								20
21								21
22								22
23								23
24								24
25								25
26								26
27								27
28								28
29								29

Sampler Type:
- ◯ No Recovery
- Grab Sample

PID - Photoionization Detector (Headspace Measurement)
- Static Water Level
- Water Level (ATD)

Logged by: GL
Approved by: SJG
Figure No. A- 148

_ENV BORING LOG KIMBERLY CLARK-EVERETT.GPJ July 31, 2014

Boring Log

Project Number	Boring Number	Sheet
110207	OMS-B-3	1 of 1

Project Name: Kimberly Clark
Location: Everett, WA
Driller/Method: Aspect / Hand Auger
Sampling Method: Continuous Grab
Ground Surface Elev.
Depth to Water (ft BGS)
Start/Finish Date 7/5/2012-7/6/2012

Depth / Elevation (feet)	Borehole Completion	Sample Type/ID	Tests	PID (ppm)	Blows/ 6"	Material Type	Description	Depth (ft)
0							**CONCRETE SLAB FLOOR**	0
1			OMS-B-3-1-2-070512				**FILL** Slightly moist, brown, slightly sandy GRAVEL (GP); perdominantly coarse gravel with sandy and cobbles; recycled concrete rubble.	1
2								2
3			OMS-B-3-2-3-070612				Bottom of boring at 3 ft BGS. Backfilled boring with same material that was pulled from hole.	3
4								4
5								5
6								6
7								7
8								8
9								9
10								10
11								11
12								12
13								13
14								14
15								15
16								16
17								17
18								18
19								19
20								20
21								21
22								22
23								23
24								24
25								25
26								26
27								27
28								28
29								29

Sampler Type:
- No Recovery
- Grab Sample

PID - Photoionization Detector (Headspace Measurement)
- Static Water Level
- Water Level (ATD)

Logged by: GL
Approved by: SJG
Figure No. A- 149

_ENV BORING LOG KIMBERLY CLARK-EVERETT.GPJ July 31, 2014

Boring Log

Aspect CONSULTING

Project Number	Boring Number	Sheet
110207	OMS-B-4	1 of 1

Project Name: Kimberly Clark
Location: Everett, WA
Driller/Method: Holt / Direct Push Probe
Sampling Method: Continuous Core

Ground Surface Elev:
Depth to Water (ft BGS):
Start/Finish Date: 9/23/2015

Depth / Elevation (feet)	Borehole Completion	Sample Type/ID	Tests	PID (ppm)	Drive/ Recovery (inches)	Material Type	Description	Depth (ft)
	3/8" hydrated bentonite chips	S1					Crushed concrete and firebrick	
							Moist, brown silty, gravelly SAND (SM); fine gravel, fine to medium sand	
							Moist, brown SAND (SP); trace fine gravel, medium sand	
5		S2	OMS-B-4-7.5	0.0			Becomes gravelly at 5'	5
							Becomes very moist at 7.5'	
10		S3	OMS-B-4-11	0.0			Grades to dark gray with biological odor	10
			OMS-B-4-13.5					
15		S4		0.0			Sand grades finer with depth	15
20							Bottom of boring at 20' BGS	20

Sampler Type:
- ◯ No Recovery
- ▮ Continuous Core

PID - Photoionization Detector (Headspace Measurement)

- ▼ Static Water Level
- ▽ Water Level (ATD)

Logged by: MML
Approved by: SJG
Figure No. A-

_ENV PROBE LOG KIMBERLY CLARK-EVERETT.GPJ October 14, 2015

Boring Log

Project Number	Boring Number	Sheet
110207	OMS-B-5	1 of 1

Project Name: Kimberly Clark
Location: Everett, WA
Driller/Method: Holt / Direct Push Probe
Sampling Method: Continuous Core

Ground Surface Elev:
Depth to Water (ft BGS):
Start/Finish Date: 9/23/2015

Depth / Elevation (feet)	Borehole Completion	Sample Type/ID	Tests	PID (ppm)	Drive/ Recovery (inches)	Material Type	Description	Depth (ft)
0								0
							Moist, brown, slightly gravelly SAND (SP); trace silt, fine subrounded gravel, fine sand	
1	3/8" hydrated bentonite chips			0.0				1
2		S1	OMS-B-5-2				Black crystalline material present from 2' to 2.25' BGS	2
3			OMS-B-5-3					3
4								4
5							Refusal on concrete slab at 5' BGS (bottom of boring)	5
6								6

Sampler Type:
- ◯ No Recovery
- ▮ Continuous Core

PID - Photoionization Detector (Headspace Measurement)
- ▼ Static Water Level
- ▽ Water Level (ATD)

Logged by: MML
Approved by: SJG
Figure No. A-

_ENV PROBE LOG KIMBERLY CLARK-EVERETT.GPJ October 14, 2015

Boring Log

Aspect CONSULTING

Project Number	Boring Number	Sheet
110207	OMS-MW-01	1 of 1

Project Name: Kimberly Clark
Location: Everett, WA
Driller/Method: Cascade Drilling / Direct Push Probe
Sampling Method: Continuous Core

Ground Surface Elev.: 14.77
Depth to Water (ft BGS):
Start/Finish Date: 6/4/2012

Depth / Elevation (feet)	Borehole Completion	Sample Type/ID	Tests	PID (ppm)	Blows/ 6"	Material Type	Description	Depth (ft)
0 / 14	8" Flush-mount monument and thermos cap					Gravel surface	Gravel surface	0
1 / 13	Concrete surface seal 0' to 2'			0		Sand	Moist, brown SAND (SP); poorly graded fine-to-medium sand	1
2 / 12		CC-1		0		Sand	Moist, brown SAND (SW); trace gravel, fine to coarse sand	2
3 / 11	3/8" Hydrated bentonite chips 2' to 4'			0		Sand	Moist, brown sand (SP); trace gravel, fine-to-medium sand	3
4 / 10				0		Sand		4
5 / 9	10/20 pre-pack Silica sand filter pack 4' to 15'			0		Sand		5
6 / 8				0		Sand		6
7 / 7		CC-2		0		Sand	Iron oxide staining at 6.5' Slightly gravelly 7' to 8'	7
8 / 6				0		Gravel	Moist, brown, very sandy GRAVEL (GP); fine subrounded gravel	8
9 / 5	2" Diameter PVC pre-packed .001 slot screen 5' to 15'			0		Gravel		9
10 / 4				0		Sand	Wet, brown SAND (SP); poorly graded fine-to-medium sand	10
11 / 3				0		Sand		11
12 / 2		CC-3		0		Sand		12
13 / 1				0		Sand		13
14 / 0				0		Sand	Dark gray 13.5' to 15'	14
15 / -1	Threaded cap			0		Sand	H2S smell	15
16 / -2							Bottom of boring at 15' BGS	16
17 / -3								17
18 / -4								18
19 / -5								19
20 / -6								20
21 / -7								21
22 / -8								22
23 / -9								23
24 / -10								24
25 / -11								25
26 / -12								26
27 / -13								27
28 / -14								28
29 / -15								29

Sampler Type:
- ◯ No Recovery
- ▌▌ Continuous Core

PID - Photoionization Detector (Headspace Measurement)
- ▼ Static Water Level
- ▽ Water Level (ATD)

Logged by: MAR
Approved by: SJG
Figure No. A- 150

_ENV BORING LOG KIMBERLY CLARK-EVERETT.GPJ July 31, 2014

Monitoring Well Construction Log

Aspect CONSULTING

Project Number	Well Number	Sheet
110207	OMS-MW-02	1 of 1

Project Name: Kimberly Clark
Location: Everett, WA
Driller/Method: Holt / Direct Push Probe
Sampling Method: Continuous Core

Ground Surface Elev.:
Top of Casing Elev.:
Depth to Water (ft BGS):
Start/Finish Date: 9/23/2015

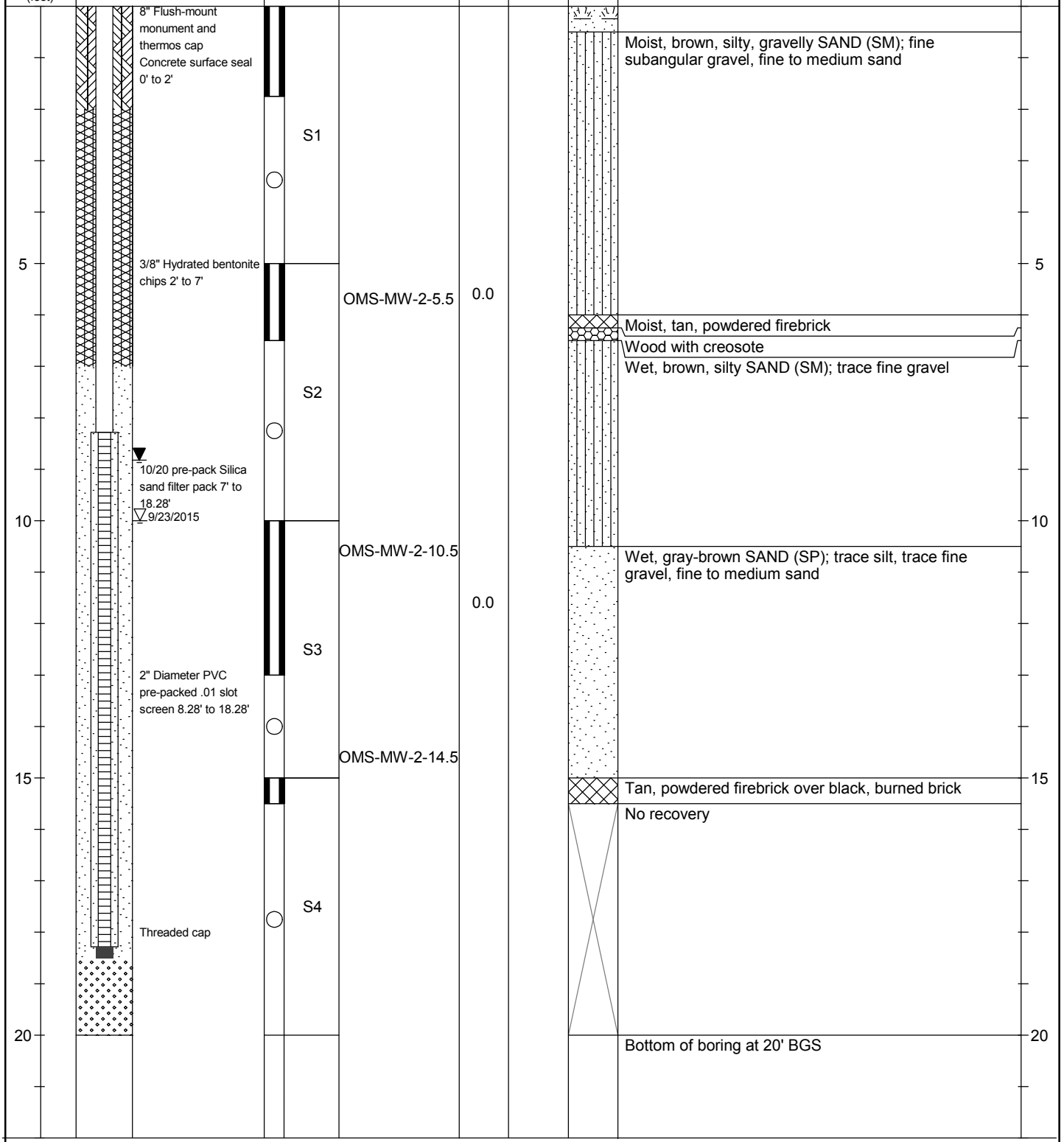

Sampler Type:
- ◯ No Recovery
- ▮ Continuous Core

PID - Photoionization Detector
- ▼ Static Water Level
- ▽ Water Level (ATD)

Logged by: MML
Approved by: SJG
Figure No. A-

MONITORING WELL KIMBERLY CLARK-EVERETT.GPJ October 14, 2015

Boring Log

Aspect CONSULTING

Project Number	Boring Number	Sheet
110207	OPS-MW-01	1 of 1

Project Name: Kimberly Clark
Location: Everett, WA
Driller/Method: Holt / Direct Push Probe
Sampling Method: Continuous Core 3"

Ground Surface Elev.: 17.71
Depth to Water (ft BGS):
Start/Finish Date: 10/30/2013

Depth / Elevation (feet)	Borehole Completion	Sample Type/ID	Tests	PID (ppm)	Blows/ 6"	Material Type	Description	Depth (ft)
	8" Flush-mount monument and thermos cap Concrete surface seal 0' to 1' 3/8" Hydrated bentonite chips 1' to 4'	CC-1					Recycled demo debris	
15								
							Brick rubble	
5	20/40 pre-pack Silica sand filter pack 4' to 15'		OPS-MW-1-5.5	0			Moist, brown, gravelly, very sandy, SILT (ML); fine to medium sand	5
				0			Moist, gray, SAND (SP); medium to coarse sand	
	▽ 10/30/2013		OPS-MW-1-7 OPS-MW-20-7	0			Moist to wet, brown gray, slightly silty, SAND (SP-SM); fine sand, trace gravel	
10		CC-2		0			Wet, dark gray, SAND (SP); fine sand	
	2" Diameter PVC pre-packed 10-slot screen 5' to 15'			0			No recovery	
10							Wet, dark gray, SAND (SW); fine to coarse sand, trace, fine gravel	10
				0				
				0			Wet, dark gray, SAND (SP); fine to medium sand, predominantly medium	
5		CC-3		0				
				0				
			OPS-MW-1-14					
				0				
15	Threaded cap			0			Bottom of boring at 15 feet	15

Sampler Type:
- ◯ No Recovery
- ▌▌ Continuous Core

PID - Photoionization Detector (Headspace Measurement)
- ▼ Static Water Level
- ▽ Water Level (ATD)

Logged by: AET
Approved by: SJG
Figure No. A- 151

_ENV BORING LOG KIMBERLY CLARK-EVERETT.GPJ July 31, 2014

Boring Log

Aspect CONSULTING

Project Number	Boring Number	Sheet
110207	PM-B01	1 of 1

Project Name: Kimberly Clark
Location: Everett, WA
Driller/Method: Holt / Direct Push Probe
Sampling Method: Continous Core 2"

Ground Surface Elev.
Depth to Water (ft BGS)
Start/Finish Date 11/20/2013

Depth / Elevation (feet)	Borehole Completion	Sample Type/ID	Tests	PID (ppm)	Blows/ 6"	Material Type	Description	Depth (ft)
							Recycled demo debris	
			PM-B1-1.5 PM-B501-1.5	0 0			Moist, brown, gravelly, slightly silty SAND (SP-SM); fine to medium sand	
		CC-01					No recovery	
5	Hydrated bentonite chip backfill ▽ 11/20/2013						Moist, brown, slightly silty gravelly SAND (SP-SM); fine to medium sand; brick debris	5
			PM-B1-6	0			Moist, brown, silty SAND (SM); trace gravel	
		CC-02		0 0 0			Wet, gray to dark gray SAND (SP); fine sand; trace gravel; trace silt	
							No recovery	
10							Wet, gray/dark gray, SAND (SP); fine sand, scattered organics	10
		CC-03	PM-B1-10	0 0 0 0 0			Grades to silty SAND (SM); fine sand	
							No recovery	
15							Bottom of boring 15 feet Note: Density and consistency was estimated based on sample observations.	15

Sampler Type:
◯ No Recovery
▌▌ Continuous Core

PID - Photoionization Detector (Headspace Measurement)
▼ Static Water Level
▽ Water Level (ATD)

Logged by: AET
Approved by: SJG
Figure No. A- 152

_ENV BORING LOG KIMBERLY CLARK-EVERETT.GPJ July 31, 2014

Boring Log

Aspect CONSULTING

Project Number	Boring Number	Sheet
110207	PM-B02	1 of 1

Project Name: Kimberly Clark
Location: Everett, WA
Driller/Method: Holt / Direct Push Probe
Sampling Method: Continous Core 2"

Ground Surface Elev.:
Depth to Water (ft BGS):
Start/Finish Date: 11/13/2013

Depth / Elevation (feet)	Borehole Completion	Sample Type/ID	Tests	PID (ppm)	Blows/ 6"	Material Type	Description	Depth (ft)
							Recycled demo debris	
				0			Stiff, slightly moist, gray with reddish brown staining, slightly gravelly SILT (ML)	
				0				
			PM-B2-2	0				
		CC-01					No recovery	
5	Hydrated bentonite chip backfill		PM-B2-5				Stiff, slightly moist, gray with reddish brown staining, slightly gravelly SILT (ML)	5
				0			Woody debris	
				0			Stiff, slightly moist, brown, silty SAND (SM); fine sand	
			PM-B2-6.5	0			Stiff, wet, gray, slightly sandy SILT (ML)	
	▽ 11/13/2013			0				
		CC-02		0				
				0				
				0				
			PM-B2-9	0				
							No recovery	
10							Stiff, wet, gray, slightly sandy SILT (ML)	10
				0				
				0				
				0				
				0				
		CC-03		0			Medium dense, wet, gray, SILTY SAND (SM); fine to medium sand	
				0				
				0				
							No recovery	
15							Bottom of boring 15 feet Note: Density and consistency was estimated based on sample observations.	15

Sampler Type:
- ◯ No Recovery
- ▌▌ Continuous Core

PID - Photoionization Detector (Headspace Measurement)

- ▼ Static Water Level
- ▽ Water Level (ATD)

Logged by: AHP
Approved by: SJG
Figure No. A- 153

_ENV BORING LOG KIMBERLY CLARK-EVERETT.GPJ July 31, 2014

Boring Log

Aspect CONSULTING

Project Number	Boring Number	Sheet
110207	PM-B03	1 of 1

Project Name: Kimberly Clark
Location: Everett, WA
Driller/Method: Holt / Direct Push Probe
Sampling Method: Continous Core 2"
Ground Surface Elev.
Depth to Water (ft BGS)
Start/Finish Date 11/15/2013

Depth / Elevation (feet)	Borehole Completion	Sample Type/ID	Tests	PID (ppm)	Blows/ 6"	Material Type	Description	Depth (ft)
							Recycled demo debris	
			PM-B3-2	0			Medium stiff, slightly moist, gray SILT (ML)	
		CC-01					No recovery	
5	Hydrated bentonite chip backfill						Medium stiff, slightly moist, gray SILT (ML)	5
				0			Medium dense, dry, light brown, gravelly, silty SAND (SM); fine to medium sand, medium gravel	
				0				
			PM-B3-6.5	0			Medium stiff, slightly moist, brown SILT (ML)	
				0				
		CC-02	PM-B3-7.5	0			Wet, gray	
				0				
				0				
				0				
							No recovery	
10							Medium stiff, wet, gray SILT (ML)	10
			PM-B3-11					
		CC-03						
							No recovery	
15							Bottom of boring 15 feet Note: Density and consistency was estimated based on sample observations.	15

Sampler Type:
- ◯ No Recovery
- ▌ Continuous Core

PID - Photoionization Detector (Headspace Measurement)
- ▼ Static Water Level
- ▽ Water Level (ATD)

Logged by: AHP
Approved by: SJG
Figure No. A- 154

_ENV BORING LOG KIMBERLY CLARK-EVERETT.GPJ July 31, 2014

Boring Log

Aspect CONSULTING

Project Number	Boring Number	Sheet
110207	PM-B04	1 of 1

Project Name: Kimberly Clark
Location: Everett, WA
Driller/Method: Holt / Direct Push Probe
Sampling Method: Continous Core 2"

Ground Surface Elev.
Depth to Water (ft BGS)
Start/Finish Date 11/13/2013

Depth / Elevation (feet)	Borehole Completion	Sample Type/ID	Tests	PID (ppm)	Blows/ 6"	Material Type	Description	Depth (ft)
							Recycled demo debris	
				0			Loose to medium dense, slightly moist, brown SAND (SW); fine to coarse sand	
			PM-B4-2	0				
		CC-01					No recovery	
5	Hydrated bentonite chip backfill							5
			PM-B4-5.5	0			Loose to medium dense, slightly moist, brown SAND (SW); fine to coarse sand	
				0				
				0			Medium dense, moist, grayish brown, SAND (SP); coarse subangular sand	
	11/13/2013			0				
		CC-02		0				
				0				
			PM-B4-8	0			Stiff, moist, gray SILT (ML)	
				0				
							No recovery	
10								10
			PM-B4-10.5				Loose, wet, brown, slightly gravelly, silty SAND (SM)	
							Stiff, wet, gray, slightly sandy SILT (ML)	
							Loose, wet, brown, slightly gravelly, silty SAND (SM)	
		CC-03					Stiff, wet, gray, slightly sandy SILT (ML)	
							Medium dense, wet, gray, silty SAND (SM)	
15								15
							Bottom of boring 15 feet Note: Density and consistency was estimated based on sample observations.	

Sampler Type:
- ◯ No Recovery
- ▌▌ Continuous Core

PID - Photoionization Detector (Headspace Measurement)
- ▼ Static Water Level
- ▽ Water Level (ATD)

Logged by: AHP
Approved by: SJG
Figure No. A- 155

_ENV BORING LOG KIMBERLY CLARK-EVERETT.GPJ July 31, 2014

Boring Log

Aspect CONSULTING

Project Number	Boring Number	Sheet
110207	PM-B05	1 of 1

Project Name: Kimberly Clark
Location: Everett, WA
Driller/Method: Holt / Direct Push Probe
Sampling Method: Continous Core 2"
Ground Surface Elev.
Depth to Water (ft BGS)
Start/Finish Date 11/18/2013

Depth / Elevation (feet)	Borehole Completion	Sample Type/ID	Tests	PID (ppm)	Blows/ 6"	Material Type	Description	Depth (ft)
							Recycled demo debris	
							No recovery	
		CC-01						
5	Hydrated bentonite chip backfill							5
							No recovery	
		CC-02						
	11/18/2013							
10							Soft, wet, gray silty SAND (SM); medium to coarse subangular sand	10
				0				
				0				
				0				
			PM-B5-12	0				
		CC-03		0				
				0				
							No recovery	
15							Bottom of boring 15 feet Note: Density and consistency was estimated based on sample observations.	15

Sampler Type:
- No Recovery
- Continuous Core

PID - Photoionization Detector (Headspace Measurement)
- Static Water Level
- Water Level (ATD)

Logged by: AHP
Approved by: SJG
Figure No. A- 156

_ENV BORING LOG KIMBERLY CLARK-EVERETT.GPJ July 31, 2014

Boring Log

Project Number	Boring Number	Sheet
110207	PM-B06	1 of 1

Project Name: Kimberly Clark
Location: Everett, WA
Driller/Method: Holt / Direct Push Probe
Sampling Method: Continous Core 2"

Ground Surface Elev.
Depth to Water (ft BGS)
Start/Finish Date 11/20/2013

Depth / Elevation (feet)	Borehole Completion	Sample Type/ID	Tests	PID (ppm)	Blows/ 6"	Material Type	Description	Depth (ft)
							Recycled demo debris	
1								1
2			PM-B6-2	0			Moist, black, silty SAND (SM); trace gravel, burnt odor	2
		CC-01		0				
3			PM-B6-3				No recovery	3
4								4
5	Hydrated bentonite chip backfill						Moist, black, silty SAND (SM); trace gravel, burnt odor	5
	▽11/20/2013	CC-02		0				
6			PM-B6-6	0			Refusal 6 feet Note: Density and consistency was estimated based on sample observations.	6

Sampler Type:
- ◯ No Recovery
- ▌▌ Continuous Core

PID - Photoionization Detector (Headspace Measurement)
- ▼ Static Water Level
- ▽ Water Level (ATD)

Logged by: AET
Approved by: SJG
Figure No. A- 157

_ENV BORING LOG KIMBERLY CLARK-EVERETT.GPJ July 31, 2014

Boring Log

Project Number	Boring Number	Sheet
110207	PM-B07	1 of 1

Project Name: Kimberly Clark
Location: Everett, WA
Driller/Method: Holt / Direct Push Probe
Sampling Method: Continous Core 2"

Ground Surface Elev.
Depth to Water (ft BGS)
Start/Finish Date 11/20/2013

Depth / Elevation (feet)	Borehole Completion	Sample Type/ID	Tests	PID (ppm)	Blows/ 6"	Material Type	Description	Depth (ft)
0							Recycled demo debris	0
1								1
2		CC-01	PM-B7-2.5	0			Moist, brown, gravelly silty SAND (SM); fine sand	2
3							No recovery	3
4								4
5	Hydrated bentonite chip backfill ▽ 11/20/2013						Wet, dark gray, silty SAND (SM); fine sand	5
6				0			Wet, black, SAND (SP); trace gravel, fine to medium sand, predominantly fine	6
7		CC-02	PM-B7-5	0				7
8				0				8
9							No recovery	9
10							Bottom of boring 10 feet Note: Density and consistency was estimated based on sample observations.	10

Sampler Type:
- ◯ No Recovery
- ▌▌ Continuous Core

PID - Photoionization Detector (Headspace Measurement)
- ▼ Static Water Level
- ▽ Water Level (ATD)

Logged by: AET
Approved by: SJG
Figure No. A- 158

_ENV BORING LOG KIMBERLY CLARK-EVERETT.GPJ July 31, 2014

Boring Log

Aspect CONSULTING

Project Number	Boring Number	Sheet
110207	PM-B08	1 of 1

Project Name: Kimberly Clark
Location: Everett, WA
Driller/Method: Holt / Direct Push Probe
Sampling Method: Continous Core 2"

Ground Surface Elev.
Depth to Water (ft BGS)
Start/Finish Date 11/20/2013

Depth / Elevation (feet)	Borehole Completion	Sample Type/ID	Tests	PID (ppm)	Blows/ 6"	Material Type	Description	Depth (ft)
0							Recycled demo debris	0
1								1
2		CC-01		0				2
3			PM-B8-3				Moist, brown SAND (SP); fine to medium sand No recovery	3
4								4
5	▽ 11/20/2013		PM-B8-5				Wet, brown, SAND (SP); fine to medium sand, trace silt	5
6				0				6
7	Hydrated bentonite chip backfill	CC-02		0			Grades to gray	7
8				0				8
9							Wet, dark gray, very silty SAND (SM); fine sand No recovery	9
10							Bottom of boring 10 feet Note: Density and consistency was estimated based on sample observations.	10

Sampler Type:
- ◯ No Recovery
- ▌▌ Continuous Core

PID - Photoionization Detector (Headspace Measurement)
- ▼ Static Water Level
- ▽ Water Level (ATD)

Logged by: AET
Approved by: SJG
Figure No. A- 159

_ENV BORING LOG KIMBERLY CLARK-EVERETT.GPJ July 31, 2014

Boring Log

Aspect CONSULTING

Project Number	Boring Number	Sheet
110207	PM-B09	1 of 1

Project Name: Kimberly Clark
Location: Everett, WA
Driller/Method: Holt / Direct Push Probe
Sampling Method: Continous Core 2"

Ground Surface Elev.
Depth to Water (ft BGS)
Start/Finish Date 11/20/2013

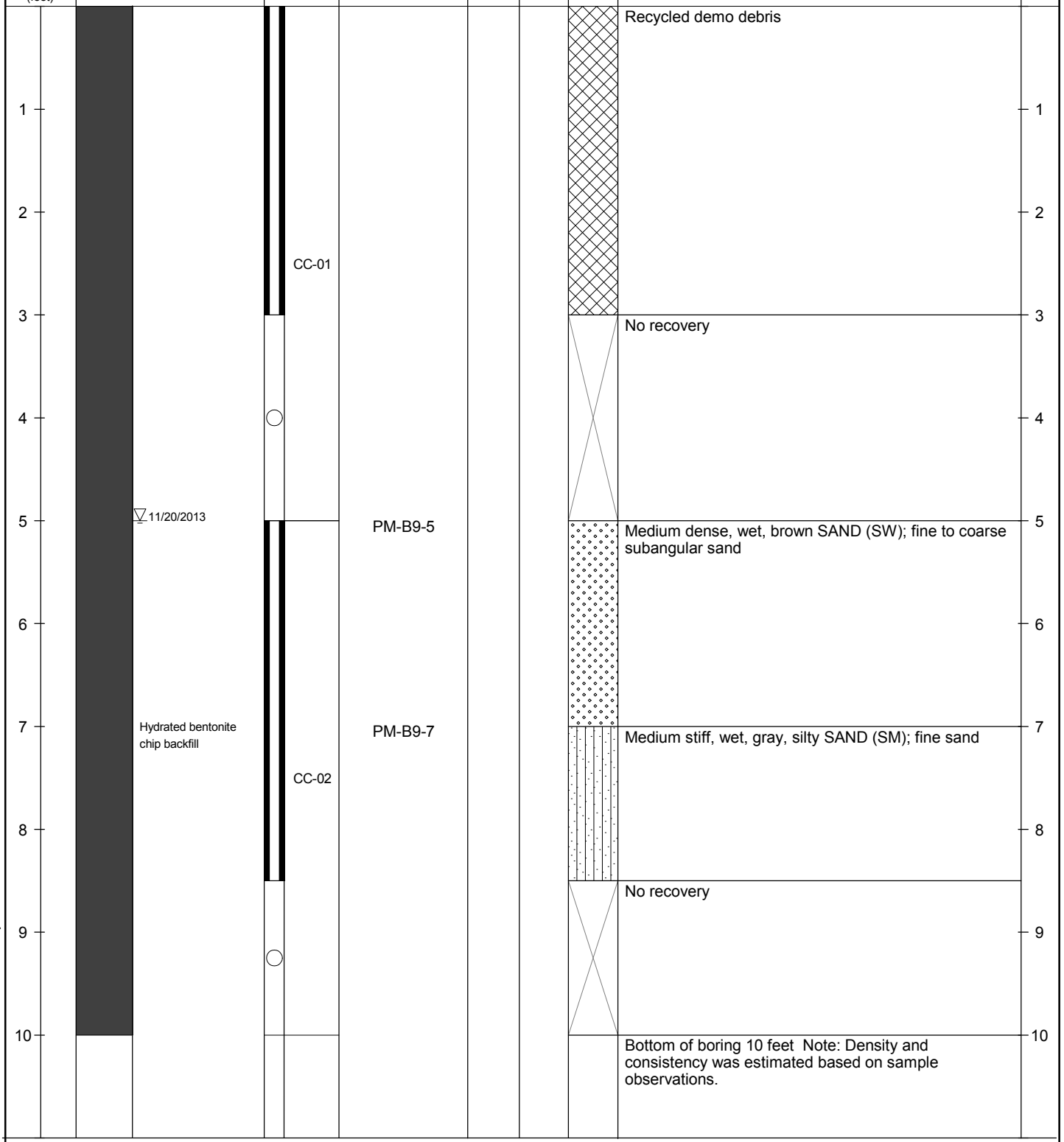

Sampler Type:
- No Recovery
- Continuous Core

PID - Photoionization Detector (Headspace Measurement)
- Static Water Level
- Water Level (ATD)

Logged by: AHP
Approved by: SJG
Figure No. A- 160

_ENV BORING LOG KIMBERLY CLARK-EVERETT.GPJ July 31, 2014

Boring Log

Aspect CONSULTING

Project Number	Boring Number	Sheet
110207	PM-B10	1 of 1

Project Name: Kimberly Clark
Location: Everett, WA
Driller/Method: Holt / Direct Push Probe
Sampling Method: Continous Core 2"

Ground Surface Elev.:
Depth to Water (ft BGS):
Start/Finish Date: 11/20/2013

Depth / Elevation (feet)	Borehole Completion	Sample Type/ID	Tests	PID (ppm)	Blows/ 6"	Material Type	Description	Depth (ft)
0							Recycled demo debris	0
1								1
2		CC-01		0				2
2.5							Very moist, brown gray, gravelly SAND (SP); coarse sand	2.5
3			PM-B10-3					3
3.5							No recovery	3.5
4								4
5	Hydrated bentonite chip backfill						Moist, brown, SAND (SP); fine sand	5
6				0				6
6.5	▽ 11/20/2013						Wet	6.5
7				0				7
7.5		CC-02	PM-B10-5	0				7.5
8				0			Becomes fine to medium sand with shells	8
9								9
9.5							No recovery	9.5
10								10
							Bottom of boring 10 feet Note: Density and consistency was estimated based on sample observations.	

Sampler Type:
- ◯ No Recovery
- ▌▌ Continuous Core

PID - Photoionization Detector (Headspace Measurement)
- ▼ Static Water Level
- ▽ Water Level (ATD)

Logged by: AET
Approved by: SJG
Figure No. A- 161

_ENV BORING LOG KIMBERLY CLARK-EVERETT.GPJ July 31, 2014

Boring Log

Aspect CONSULTING

Project Number	Boring Number	Sheet
110207	PM-B-11	1 of 1

Project Name: Kimberly Clark
Location: Everett, WA
Driller/Method: Holt / Direct Push Probe
Sampling Method: Continuous Core

Ground Surface Elev
Depth to Water (ft BGS)
Start/Finish Date 9/24/2015

Depth / Elevation (feet)	Borehole Completion	Sample Type/ID	Tests	PID (ppm)	Drive/ Recovery (inches)	Material Type	Description	Depth (ft)
							Recycled demo debris	
	3/8" hydrated bentonite chips	S1					Moist, brown, silty SAND (SM); fine to medium sand, iron oxide staining	
5		S2	PM-B-11-7	0.0			Moist, brown, slightly silty SAND (SP-SM); fine to medium sand 3" thick piece of wood at 7.25'	5
10	▽9/23/2015	S3	PM-B-11-10 PM-B-11-11.5	0.0			Wet, gray, sandy SILT (ML); trace mica, fine sand	10
15							Bottom of boring at 15' bgs	15

Sampler Type:
○ No Recovery
▮ Continuous Core

PID - Photoionization Detector (Headspace Measurement)
▼ Static Water Level
▽ Water Level (ATD)

Logged by: MML
Approved by: SJG
Figure No. A-

_ENV PROBE LOG KIMBERLY CLARK-EVERETT.GPJ October 14, 2015

Boring Log

Aspect CONSULTING

Project Number	Boring Number	Sheet
110207	PM-B-12	1 of 1

Project Name: Kimberly Clark
Location: Everett, WA
Driller/Method: Holt / Direct Push Probe
Sampling Method: Continuous Core

Ground Surface Elev:
Depth to Water (ft BGS):
Start/Finish Date: 9/24/2015

Depth / Elevation (feet)	Borehole Completion	Sample Type/ID	Tests	PID (ppm)	Drive/ Recovery (inches)	Material Type	Description	Depth (ft)
0							Recycled demo debris	0
1								1
2	3/8" hydrated bentonite chips	S1						2
2.5							Very moist, brown sandy SILT (ML); fine sand with gray mottling	2.5
3								3
4								4
5		S2						5
6			PM-B-12-6	0.0				6
7	▽ 9/24/2015		PM-B-12-7				Refusal at 7' BGS (bottom of boring)	7
8								8

Sampler Type:
- ◯ No Recovery
- ▮ Continuous Core

PID - Photoionization Detector (Headspace Measurement)
- ▼ Static Water Level
- ▽ Water Level (ATD)

Logged by: MML
Approved by: SJG
Figure No. A-

_ENV PROBE LOG KIMBERLY CLARK-EVERETT.GPJ October 14, 2015

Boring Log

Aspect CONSULTING

Project Number	Boring Number	Sheet
110207	PM-B-13	1 of 1

Project Name: Kimberly Clark
Location: Everett, WA
Driller/Method: Holt / Direct Push Probe
Sampling Method: Continuous Core

Ground Surface Elev:
Depth to Water (ft BGS):
Start/Finish Date: 9/24/2015

Depth / Elevation (feet)	Borehole Completion	Sample Type/ID	Tests	PID (ppm)	Drive/ Recovery (inches)	Material Type	Description	Depth (ft)
0							Recycled demo debris	0
1	3/8" hydrated bentonite chips						Moist, brown-gray, gravelly, silty SAND (SM); fine subrounded gravel with brick fragments	1
2		S1						2
3							No recovery	3
4								4
5							Moist, brown-gray, gravelly, silty SAND (SM); fine subrounded gravel with brick fragments	5
6			PM-B-13-6	0.0			Moist, brown-gray, silty SAND (SM); fine sand with brown mottling	6
7	▽ 9/24/2015	S2	PM-B-13-7				Becomes wet	7
8							Grades to dark gray	8
9			PM-B-13-9				Bottom of boring at 10' BGS	9
10								10
11								11

Sampler Type:
○ No Recovery
▮ Continuous Core

PID - Photoionization Detector (Headspace Measurement)
▼ Static Water Level
▽ Water Level (ATD)

Logged by: MML
Approved by: SJG
Figure No. A-

_ENV PROBE LOG KIMBERLY CLARK-EVERETT.GPJ October 14, 2015

Boring Log

Aspect CONSULTING

Project Number	Boring Number	Sheet
110207	PM-B-14	1 of 1

Project Name: Kimberly Clark
Location: Everett, WA
Driller/Method: Holt / Direct Push Probe
Sampling Method: Continuous Core

Ground Surface Elev:
Depth to Water (ft BGS):
Start/Finish Date: 9/24/2015

Depth / Elevation (feet)	Borehole Completion	Sample Type/ID	Tests	PID (ppm)	Drive/ Recovery (inches)	Material Type	Description	Depth (ft)
0							Recycled demo debris	0
1								1
2	3/8" hydrated bentonite chips	S1					Silty GRAVEL (GM); subangular gravel	2
3								3
4								4
5		S2						5
6			PM-B-14-6	0.0			Moist, gray, sandy SILT (ML); trace shell fragments, mica present	6
7	▽ 9/24/2015						Becomes wet at 7' BGS	7
			PM-B-14-7.5				Refusal at 7.5' BGS (bottom of boring)	
8								8

Sampler Type:
- ○ No Recovery
- ▮ Continuous Core

PID - Photoionization Detector (Headspace Measurement)
- ▼ Static Water Level
- ▽ Water Level (ATD)

Logged by: MML
Approved by: SJG
Figure No. A-

_ENV PROBE LOG KIMBERLY CLARK-EVERETT.GPJ October 14, 2015

Boring Log

Aspect CONSULTING

Project Number	Boring Number	Sheet
110207	PM-B-15	1 of 1

Project Name: Kimberly Clark
Location: Everett, WA
Driller/Method: Holt / Direct Push Probe
Sampling Method: Continuous Core

Ground Surface Elev:
Depth to Water (ft BGS):
Start/Finish Date: 9/24/2015

Depth / Elevation (feet)	Borehole Completion	Sample Type/ID	Tests	PID (ppm)	Drive/ Recovery (inches)	Material Type	Description	Depth (ft)
0							Recycled demo debris	0
1								1
2	3/8" hydrated bentonite chips	S1					Moist, brown, gravelly, silty SAND (SM); fine subangular gravel, fine sand, micaceous and iron oxide stained throughout	2
3								3
4								4
5							Red clay pipe material	5
6			PM-B-15-6				Very moist, gray, sandy SILT (ML);	6
7	▽ 9/24/2015	S2	PM-B-15-7.5	0.0			Becomes wet at 7.5	7
8								8
9			PM-B-15-9					9
10							Bottom of boring at 10' BGS	10
11								11

Sampler Type:
○ No Recovery
▮ Continuous Core

PID - Photoionization Detector (Headspace Measurement)
▼ Static Water Level
▽ Water Level (ATD)

Logged by: MML
Approved by: SJG
Figure No. A-

_ENV PROBE LOG KIMBERLY CLARK-EVERETT.GPJ October 14, 2015

Boring Log

Aspect CONSULTING

Project Number	Boring Number	Sheet
110207	PM-B-16	1 of 1

Project Name: Kimberly Clark
Location: Everett, WA
Driller/Method: Holt / Direct Push Probe
Sampling Method: Continuous Core

Ground Surface Elev
Depth to Water (ft BGS)
Start/Finish Date 9/24/2015

Depth / Elevation (feet)	Borehole Completion	Sample Type/ID	Tests	PID (ppm)	Drive/ Recovery (inches)	Material Type	Description	Depth (ft)
	3/8" hydrated bentonite chips	S1					Recycled demo debris	
5			PM-B-16-6				Moist, dark brown, gravelly, silty SAND (SM); fine subrounded gravel, fine sand, iron oxide staining	5
	▽9/24/2015	S2	PM-B-16-7.5	0.0			0.25' thick piece of concrete	
			PM-B-16-9				Wet, dark gray, sandy SILT (ML); fine sand, contains mica	
10		S3						10
15							Bottom of boring at 15' GBS	15

Sampler Type:
○ No Recovery
▮ Continuous Core

PID - Photoionization Detector (Headspace Measurement)
▼ Static Water Level
▽ Water Level (ATD)

Logged by: MML
Approved by: SJG
Figure No. A-

_ENV PROBE LOG KIMBERLY CLARK-EVERETT.GPJ October 14, 2015

Boring Log

Aspect CONSULTING

Project Number	Boring Number	Sheet
110207	PM-MW-01	1 of 1

Project Name: Kimberly Clark
Location: Everett, WA
Driller/Method: Holt / Direct Push Probe
Sampling Method: Continuous Core 3"

Ground Surface Elev.: 16.13
Depth to Water (ft BGS):
Start/Finish Date: 10/28/2013

Depth / Elevation (feet)	Borehole Completion	Sample Type/ID	Tests	PID (ppm)	Blows/ 6"	Material Type	Description	Depth (ft)
15	8" Flush-mount monument and thermos cap Concrete surface seal 0' to 1' 3/8" Hydrated bentonite chips 1' to 4'	CC-1	PM-MW-1-2.5	0 0			Recycled demo debris Slightly moist, gray and light brown, slightly gravelly, sandy, SILT (ML); fine to medium sand, fine gravel	
							No Recovery	
5	20/40 pre-pack Silica sand filter pack 4' to 15'		PM-MW-1-5.5	0			Slightly moist, gray and light brown, slightly silty, slightly gravelly, SAND (SW-SM); fine to coarse sand	5
10	▽ 10/28/2013			0			Becomes saturated at 6.5	
		CC-2		0			Wet, gray, sandy, SILT (ML); fine sand, strong sulfurous odor	
	2" Diameter PVC pre-packed 10-slot screen 5' to 15'		PM-MW-1-8.5	0			No Recovery	
10							Wet, gray, sandy, SILT (ML); fine sand	10
5		CC-3		0 0 0 0				
							No Recovery	
15	Threaded cap						Wet, gray, sandy, SILT (ML); fine sand	15
0	Slough			0 0				
		CC-4		0 0 0			Wet, gray, silty, gravelly, SAND (SM); fine to coarse sand	
							No Recovery	
20							Wet, green gray, sandy, SILT (ML)	20
-5		CC-5		0 0 0 0 0			Wet, green gray, sandy, GRAVEL (GP)	
			PM-MW-1-24				No Recovery	
25							Bottom of boring at 25 feet	25

Sampler Type:
- ◯ No Recovery
- ▌▌ Continuous Core

PID - Photoionization Detector (Headspace Measurement)
- ▼ Static Water Level
- ▽ Water Level (ATD)

Logged by: AHP
Approved by: SJG
Figure No. A- 162

_ENV BORING LOG KIMBERLY CLARK-EVERETT.GPJ July 31, 2014

Boring Log

Aspect CONSULTING

Project Number	Boring Number	Sheet
110207	PM-MW-02	1 of 1

Project Name: Kimberly Clark
Location: Everett, WA
Driller/Method: Holt / Direct Push Probe
Sampling Method: Continuous Core 3"

Ground Surface Elev.: 15.87
Depth to Water (ft BGS):
Start/Finish Date: 11/12/2013

Depth / Elevation (feet)	Borehole Completion	Sample Type/ID	Tests	PID (ppm)	Blows/ 6"	Material Type	Description	Depth (ft)
15	8" Flush-mount monument and thermos cap Concrete surface seal 0' to 1'	CC-01					No recovery	
5	3/8" Hydrated bentonite chips 1' to 5'		PM-MW-2-5				Moist, mottled brown and dark gray, sandy, SILT (ML); fine sand	5
10	11/12/2013	CC-02		0			No recovery	
	10/20 pre-pack Silica sand filter pack 5' to 16.25'		PM-MW-2-10				Wet, black, slightly silty, SAND (SP-SM); fine sand, numerous shell fragments	10
5				0				
		CC-03		0			Wet, dark gray, SAND (SP); medium sand, numerous shell fragments	
				0				
				0			No recovery	
15	2" Diameter PVC pre-packed 10-slot screen 6' to 16'		PM-MW-2-15				Wet, dark gray to black, SAND (SP); medium sand	15
0	Threaded cap						Wet, dark gray, sandy, clayey, SILT (ML); fine sand	
				0				
		CC-04		0			Wet, dark gray, SAND (SW); fine to coarse sand, trace silt, trace gravel	
				0				
	Slough 16.25' to 20'						No recovery	
20							Bottom of boring at 20 feet	20
-5								

Sampler Type:
- ◯ No Recovery
- ▌▌ Continuous Core

PID - Photoionization Detector (Headspace Measurement)
- ▼ Static Water Level
- ▽ Water Level (ATD)

Logged by: AET
Approved by: SJG
Figure No. A- 163

_ENV BORING LOG KIMBERLY CLARK-EVERETT.GPJ July 31, 2014

Boring Log

Aspect CONSULTING

Project Number	Boring Number	Sheet
110207	PM-MW-03	1 of 2

Project Name: Kimberly Clark
Location: Everett, WA
Driller/Method: Holt / Direct Push Probe
Sampling Method: Continuous Core 3"

Ground Surface Elev.: 17.23
Depth to Water (ft BGS):
Start/Finish Date: 10/30/2013

Depth / Elevation (feet)	Borehole Completion	Sample Type/ID	Tests	PID (ppm)	Blows/ 6"	Material Type	Description	Depth (ft)
	8" Flush-mount monument and thermos cap Concrete surface seal 0' to 1'						Recycled demo debris	
15	3/8" Hydrated bentonite chips 1' to 3'	CC-1		0			Moist, brown with iron oxide staining, SAND (SP); fine sand	
			PM-MW-3-3 PM-MW-20-3				No recovery	
5	10/20 pre-pack Silica sand filter pack 3' to 14.25'						Moist, brown with iron oxide staining, SAND (SP); fine sand	5
			PM-MW-3-6	0				
	▽ 10/30/2013		PM-MW-3-7	0			Wet, gray to dark gray, SAND (SP); fine sand, trace gravel, scattered fibrous organics	
10		CC-2		0				
				0				
				0				
10	2" Diameter PVC pre-packed 10-slot screen 4' to 14'						Wet, dark gray, SAND (SP); fine sand	10
				0				
5		CC-3		0				
				0				
			PM-MW-3-13	0			Wet, dark gray, slightly silty, SAND (SP-SM); fine sand	
	Threaded cap			0				
15							Bottom of boring at 15 feet	15

Sampler Type:
- ◯ No Recovery
- ▌▌ Continuous Core

PID - Photoionization Detector (Headspace Measurement)
- ▼ Static Water Level
- ▽ Water Level (ATD)

Logged by: AET
Approved by: SJG
Figure No. A- 164

_ENV BORING LOG KIMBERLY CLARK-EVERETT.GPJ July 31, 2014

Boring Log

Aspect CONSULTING

Project Number	Boring Number	Sheet
110207	PM-MW-04	1 of 2

Project Name: Kimberly Clark
Location: Everett, WA
Driller/Method: Holt / Direct Push Probe
Sampling Method: Continuous Core 3"

Ground Surface Elev.: 15.36
Depth to Water (ft BGS):
Start/Finish Date: 11/13/2013

Depth / Elevation (feet)	Borehole Completion	Sample Type/ID	Tests	PID (ppm)	Blows/ 6"	Material Type	Description	Depth (ft)
15	8" Flush-mount monument and thermos cap Concrete surface seal 0' to 1' 3/8" Hydrated bentonite chips 1' to 4'						Recycled demo debris	
		CC-01		0 0			Slightly moist, brown, sandy, SILT (ML); fine sand	
			PM-MW-2-3 PM-MW-502-3				No recovery	
5	20/40 pre-pack Silica sand filter pack 4' to 15'							5
10				0			Slighlty moist, brown, silty, SAND (SM); medium to coarse sand, trace gravel,	
			PM-MW-2-6 PM-MW-502-6	0 0				
	▽ 11/13/2013		PM-MW-2-7 PM-MW-502-7	0			Wet, gray, slightly sandy, SILT (ML); fine sand	
		CC-02		0 0				
	2" Diameter PVC pre-packed 10-slot screen 5' to 15'						No recovery	
10								10
5				0			Wet, gray, SAND (SW); fine to coarse, subangular sand	
			PM-MW-2-12 PM-MW-502-12	0				
		CC-03		0 0				
							No recovery	
15	Threaded cap							15
0							Bottom of boring at 15.25 feet	

Sampler Type:
- ○ No Recovery
- ▌▌ Continuous Core

PID - Photoionization Detector (Headspace Measurement)

- ▼ Static Water Level
- ▽ Water Level (ATD)

Logged by: AHP
Approved by: SJG
Figure No. A- 165

_ENV BORING LOG KIMBERLY CLARK-EVERETT.GPJ July 31, 2014

Boring Log

Aspect CONSULTING

Project Number	Boring Number	Sheet
110207	PM-MW-05	1 of 1

Project Name: Kimberly Clark
Location: Everett, WA
Driller/Method: Holt / Direct Push Probe
Sampling Method: Continuous Core 3"

Ground Surface Elev.: 16.02
Depth to Water (ft BGS):
Start/Finish Date: 10/30/2013

Depth / Elevation (feet)	Borehole Completion	Sample Type/ID	Tests	PID (ppm)	Blows/ 6"	Material Type	Description	Depth (ft)
15	8" Flush-mount monument and thermos cap Concrete surface seal 0' to 1' 3/8" Hydrated bentonite chips 1' to 4'	CC-1	PM-MW-5-3	0			Recycled demo debris	
							Moist, brown, slightly gravelly, SAND (SW); fine to coarse sand, fine gravel	
							No recovery	
5	20/40 pre-pack Silica sand filter pack 4' to 15'						Moist to wet, brown, slightly gravelly, SAND (SP); medium sand, fine gravel	5
10				0				
	10/30/2013		PM-MW-5-7	0				
		CC-2		0			Wet, dark gray, slightly silty, SAND (SP-SM); fine to medium sand	
				0				
	2" Diameter PVC pre-packed 10-slot screen 5' to 15'			0				
10				0			Wet, black, silty, SAND (SM); fine sand, numerous organics, no odor	10
5			PM-MW-5-11	0				
							Decaying organics odor at 11.5 feet	
		CC-3						
				0			Moist, gray, silty, SAND (SM); fine sand	
			PM-MW-5-14	0			Wet at 14 feet	
15	Threaded cap							15
0	Slough			0			Wet, black, gravelly, SAND (SW); fine to coarse sand, fine to coarse gravel, hydrogen sulfide odor	
		CC-4		0				
				0				
				0				
							No recovery	
20							Bottom of boring at 20 feet	20

Sampler Type:
- ◯ No Recovery
- ▌▌ Continuous Core

PID - Photoionization Detector (Headspace Measurement)
- ▼ Static Water Level
- ▽ Water Level (ATD)

Logged by: AET
Approved by: SJG
Figure No. A- 166

_ENV BORING LOG KIMBERLY CLARK-EVERETT.GPJ July 31, 2014

Boring Log

Aspect CONSULTING

Project Number	Boring Number	Sheet
110207	PM-MW-06	1 of 1

Project Name: Kimberly Clark
Location: Everett, WA
Driller/Method: Holt / Direct Push Probe
Sampling Method: Continuous Core 3"

Ground Surface Elev.: 16.11
Depth to Water (ft BGS):
Start/Finish Date: 10/28/2013

Depth / Elevation (feet)	Borehole Completion	Sample Type/ID	Tests	PID (ppm)	Blows/ 6"	Material Type	Description	Depth (ft)
	8" Flush-mount monument and thermos cap						Concrete rubble	
15	Concrete surface seal 0' to 1'						Slightly moist, light brown, SAND (SP) and GRAVEL (GP); fine sand, fine gravel	
							Concrete rubble	
		CC-01	PM-MW-6-2.5 PM-MW-11-2.5	0 0 0			Slightly moist, light brown, silty, SAND (SM); fine sand	
	3/8" Hydrated bentonite chips 1' to 5'						Slightly moist, gray, SILT (ML)	
							Slightly moist, light brown, silty, SAND (SM); fine sand	
							No Recovery	
5							Slightly moist, light brown, silty, SAND (SM); fine sand	5
10		CC-02	PM-MW-6-6 PM-MW-11-6	0 0 0			Gray and light brown, very thinly bedded CLAY (CL) and silty SAND (SM).	
	10/28/2013		PM-MW-6-8 PM-MW-11-8				Wet, gray, slightly sandy, SILT (ML)	
				0			No Recovery	
10	10/20 pre-pack Silica sand filter pack 5' to 16.25'						Wet, gray, silty, SAND (SM); fine sand	10
		CC-03	PM-MW-6-11 PM-MW-11-11	0 0 0				
15	2" Diameter PVC pre-packed 10-slot screen 6' to 16'						Wet, mottled gray and white, SAND (SP); medium to coarse, subrounded sand SILT lens an 15.5 feet	15
	Threaded cap			0				
		CC-04		0			No Recovery	
	Slough 16.25' to 20'							
20							Bottom of boring at 20 feet	20

Sampler Type:
- ◯ No Recovery
- ▌▌ Continuous Core

PID - Photoionization Detector (Headspace Measurement)
- ▼ Static Water Level
- ▽ Water Level (ATD)

Logged by: AHP
Approved by: SJG
Figure No. A- 167

_ENV BORING LOG KIMBERLY CLARK-EVERETT.GPJ July 31, 2014

Boring Log

Aspect CONSULTING

Project Number	Boring Number	Sheet
110207	PM-MW-07	1 of 1

Project Name: Kimberly Clark
Location: Everett, WA
Driller/Method: Holt / Direct Push Probe
Sampling Method: Continuous Core 3"

Ground Surface Elev.: 15.38
Depth to Water (ft BGS):
Start/Finish Date: 10/28/2013

Depth / Elevation (feet)	Borehole Completion	Sample Type/ID	Tests	PID (ppm)	Blows/ 6"	Material Type	Description	Depth (ft)
15	8" Flush-mount monument and thermos cap Concrete surface seal 0' to 1' 3/8" Hydrated bentonite chips 1' to 7'						Concrete rubble	
			PM-MW-7-1.5	0			Slightly moist, brown and black, gravelly, silty, SAND (SM); fine to coarse, subrounded sand, fine to medium, rounded gravel	
		CC-01		0				
				0			No recovery	
5	20/40 pre-pack Silica sand filter pack 7' to 18'							5
10							Slightly moist, brown and black, gravelly, silty, SAND (SM); fine to coarse, subrounded sand, fine to medium, rounded gravel	
			PM-MW-7-6.5	0				
		CC-02		0				
				0			No recovery	
10	2" Diameter PVC pre-packed 10-slot screen 8' to 18'							10
5	▽ 10/28/2013		PM-MW-7-10.5				Slightly moist, brown and black, gravelly, silty, SAND (SM); fine to coarse, subrounded sand, fine to medium, rounded gravel Wet at 10.5 feet	
				0				
		CC-03		0				
				0			No recovery	
15								15
0			PM-MW-7-15.5				Wet, gray, silty, SAND (SM); fine to coarse, subrounded sand, trace organics (wood chips)	
							Wet, gray, slightly sandy, SILT (ML); trace organics (shell fragments)	
		CC-04						
	Threaded cap						Wet, gray, slightly sandy, SILT (ML)	
	Slough						No recovery	
20								20
-5							Bottom of boring at 20 feet	

Sampler Type:
- ◯ No Recovery
- ▌▌ Continuous Core

PID - Photoionization Detector (Headspace Measurement)
- ▼ Static Water Level
- ▽ Water Level (ATD)

Logged by: AHP
Approved by: SJG
Figure No. A- 168

_ENV BORING LOG KIMBERLY CLARK-EVERETT.GPJ July 31, 2014

Boring Log

Aspect CONSULTING

Project Number	Boring Number	Sheet
110207	PM-MW-08	1 of 1

Project Name: Kimberly Clark
Location: Everett, WA
Driller/Method: Holt / Direct Push Probe
Sampling Method: Continuous Core 3"

Ground Surface Elev.: 13.79
Depth to Water (ft BGS):
Start/Finish Date: 10/25/2013

Depth / Elevation (feet)	Borehole Completion	Sample Type/ID	Tests	PID (ppm)	Blows/ 6"	Material Type	Description	Depth (ft)
	8" Flush-mount monument and thermos cap Concrete surface seal 0' to 1' 3/8" Hydrated bentonite chips 1' to 4'						Concrete rubble	
		CC-01	PM-MW-8-2.5	0 0			Slightly moist, light brown, slightly gravelly, slightly silty, SAND (SM); medium to coarse, subangular sand, coarse, rounded gravel	
10							No recovery	
5	20/40 pre-pack Silica sand filter pack 4' to 15'							5
			PM-MW-8-5.5	0			Slightly moist, light brown, gravelly, silty, SAND (SM)	
			PM-MW-8-7	0			Moist, brown, SILT (ML); trace, fine sand, organics at 6.9'	
	▽ 10/25/2013	CC-02		0			Wet, brown, slightly silty, gravelly, SAND (SW-SM); fine to coarse sand, fine gravel	
5	2" Diameter PVC pre-packed 10-slot screen 5' to 15'						No recovery	
10							Wet, brown, silty, gravelly, SAND (SM); fine to coarse sand, fine, subangular gravel	10
				0			Wet, gray, sandy, SILT (ML); fine, micaceous sand	
		CC-03	PM-MW-8-12	0 0				
							Wet, gray, silty, sandy, GRAVEL (GM)	
0				0			Wet, gray, slightly sandy, SILT (ML); trace gravel	
							Wet, gray, silty, SAND (SM)	
15	Threaded cap							15
	Slough			0			Wet, mottled gray and white and black, gravelly, SAND (SW); fine to coarse, subangular to subrounded sand, fine to coarse, subangular to subrounded gravel	
				0				
		CC-04		0			Wet, gray, slightly silty, SAND (SW-SM); fine to coarse, subrounded sand	
-5							No recovery	
20							Bottom of boring at 20 feet	20

Sampler Type:
- ◯ No Recovery
- ▌▌ Continuous Core

PID - Photoionization Detector (Headspace Measurement)
- ▼ Static Water Level
- ▽ Water Level (ATD)

Logged by: AHP
Approved by: SJG
Figure No. A- 169

_ENV BORING LOG KIMBERLY CLARK-EVERETT.GPJ July 31, 2014

Monitoring Well Construction Log

Aspect CONSULTING

Project Number	Well Number	Sheet
110207	RCD-MW-101	1 of 1

Project Name: Kimberly Clark
Location: Everett, WA
Driller/Method: Holt / Direct Push Probe-Limited Access
Sampling Method: Continuous Core

Ground Surface Elev.:
Top of Casing Elev.:
Depth to Water (ft BGS):
Start/Finish Date: 4/24/2014

Depth / Elevation (feet)	Borehole Completion	Sample Type/ID	Tests	PID (ppm)	Blows/ 6"	Material Type	Description	Depth (ft)
	8" Flush-mount monument and thermos cap Concrete surface seal 0' to 2'			0.0			Moist, brown gray SAND (SP); fine to medium sand, trace gravel Becomes wet	
				0.0			Moist, brown gray, silty SAND (SM); fine to medium sand	
	3/8" Hydrated bentonite chips 2' to 4'	S1					No recovery	
5	10/20 pre-pack Silica sand filter pack 4' to 15'							5
		S2		0.0 0.0 0.0			Moist, red brown SAND (SP); fine to medium sand grades to gray brown No recovery	
10	2" Diameter PVC pre-packed 10-slot screen 5' to 15' ▽ 4/24/2014	S3		0.0 0.0 0.0 0.0 0.0			Moist, red brown and gray mottled SAND (SP); fine to medium sand Becomes wet	10
15	Threaded cap						No recovery Bottom of boring at 15' bgs	15

Sampler Type:
○ No Recovery
▮ Continuous Core

PID - Photoionization Detector
▼ Static Water Level
▽ Water Level (ATD)

Logged by: AET/MML
Approved by: SJG
Figure No. A-

_MONITORING WELL_KIMBERLY CLARK-EVERETT.GPJ October 14, 2015

Boring Log

Aspect CONSULTING

Project Number	Boring Number	Sheet
110207	REC1-MW-01	1 of 1

Project Name: Kimberly Clark
Location: Everett, WA
Driller/Method: Cascade Drilling / Direct Push Probe-Limited Access
Sampling Method: Continuous Core

Ground Surface Elev.: 19.18
Depth to Water (ft BGS):
Start/Finish Date: 9/4/2012

Depth / Elevation (feet)	Borehole Completion	Sample Type/ID	Tests	PID (ppm)	Blows/ 6"	Material Type	Description	Depth (ft)
	8" flush-mount monument and thermos cap						Concrete	
							Void space	
	Concrete surface seal			0			Moist, gray, SAND (SP); poorly graded fine to medium sand	
	3/8" hydrated bentonite chips			0				
		CC-1					No recovery	
	10/20 silica sand filter pack							
15								
5			REC1-MW-1-5-6	0.3			Wet, gray, slightly silty SAND (SP-SM); poorly graded fine to medium sand, trace gravel	5
				0.2			Wet, gray, very gravelly SAND (SP); poorly graded fine to medium sand	
	3/4" diameter PVC pre-packed .001 slot screen			0				
		CC-2					No recovery	
10								
10				10			Wet, gray, gravelly SAND (SP); poorly graded fine to medium sand	10
			REC1-MW-1-11-12	69.5			Very moist to wet ORGANIC SILT (OL); very woody, trace gravel	
		CC-3		7.6				
			REC1-MW-1-13-14	3.6				
				2.7				
5	Threaded cap			0.8			No recovery	
15	Slough						Bottom of boring at 15'	15
0								
20								20
-5								
25								25

Sampler Type:
- ◯ No Recovery
- ▌▌ Continuous Core

PID - Photoionization Detector (Headspace Measurement)
- ▼ Static Water Level
- ▽ Water Level (ATD)

Logged by: AET & MAR
Approved by: SJG
Figure No. A- 170

_ENV BORING LOG KIMBERLY CLARK-EVERETT.GPJ July 31, 2014

Boring Log

Aspect CONSULTING

Project Number	Boring Number	Sheet
110207	REC1-MW-02	1 of 1

Project Name: Kimberly Clark
Ground Surface Elev.: 19.1
Location: Everett, WA
Driller/Method: Cascade Drilling / Direct Push Probe-Limited Access
Depth to Water (ft BGS):
Sampling Method: Continuous Core
Start/Finish Date: 9/4/2012

Depth / Elevation (feet)	Borehole Completion	Sample Type/ID	Tests	PID (ppm)	Blows/ 6"	Material Type	Description	Depth (ft)
	8" flush-mount monument and thermos cap						Concrete	
							Void space	
	Concrete surface seal			0			Moist, brown gravelly, SAND (SW); well graded fine to coarse sand	
							Wood	
	3/8" hydrated bentonite chips	CC-1		0			Moist, brown, slightly gravelly SAND (SP); fine sand	
	10/20 silica sand filter pack			0				
15							No recovery	
5							Moist, brown, slightly gravelly SAND (SP); poorly graded fine to medium sand	5
			REC1-MW-2-6-7 REC1-MW-2-6.5					
	3/4" diameter PVC pre-packed .001 slot screen	CC-2						
							Wet, gray, silty SAND (SM); fine sand	
10							No recovery	
				0			Wet, gray, slightly gravelly SAND (SP); poorly graded fine to medium sand, fine gravel	10
		CC-3		0				
				0				
				0				
5	Threaded cap			0				
15	Slough and bentonite			0				15
		CC-4		0				
				0				
				0				
0				0				
20							Bottom of boring at 20' BGS	20
-5								
25								25

Sampler Type:
- No Recovery
- Continuous Core

PID - Photoionization Detector (Headspace Measurement)
- Static Water Level
- Water Level (ATD)

Logged by: AET & MAR
Approved by: SJG
Figure No. A- 171

_ENV BORING LOG KIMBERLY CLARK-EVERETT.GPJ July 31, 2014

Boring Log

Aspect CONSULTING

Project Number	Boring Number	Sheet
110207	REC1-MW-03	1 of 1

Project Name: Kimberly Clark
Location: Everett, WA
Driller/Method: Cascade Drilling / Direct Push Probe-Limited Access
Sampling Method: Continuous Core

Ground Surface Elev.: 19.08
Depth to Water (ft BGS):
Start/Finish Date: 9/4/2012

Depth / Elevation (feet)	Borehole Completion	Sample Type/ID	Tests	PID (ppm)	Blows/ 6"	Material Type	Description	Depth (ft)
	8" flush-mount monument and thermos cap						Concrete	
	Concrete surface seal			0			Void space	
				0			Moist, brown, gravelly SAND (SP); poorly graded fine to medium sand	
	3/8" hydrated bentonite chips	CC-1		0				
15				0			No recovery	
	10/20 silica sand filter pack							
5			REC1-MW-3-5.5-6.5				Moist, brown, slightly gravelly SAND (SP); fine sand, scattered shells	5
							Wet, gray, silty SAND (SM); fine sand	
				42.1			Wet, gray, SAND (SW); well graded fine to coarse sand, abundant shells	
		CC-2		4.7				
	3/4" diameter PVC pre-packed .001 slot screen			37.8				
10							No recovery	10
				223			Wet, gray, SAND (SP); poorly graded fine to medium sand	
			REC1-MW-3-12-13	1719				
		CC-3		2434				
5				381				
15	Threaded cap			29.0				15
				1811				
	Slough and bentonite			381				
		CC-4		117			Wet, brown to gray SAND interbedded with SILT (SP/ML); thin interbeds, numerous organics in silt beds	
0								
20				47.1			Wet, brown to gray, SAND (SP); poorly graded fine to medium sand, trace fine gravel	20
				1.9				
		CC-5		1.9				
-5				5.0				
			REC1-MW-3-24-25					
25				26.8			Bottom of boring at 25' BGS	25

Sampler Type:
- ◯ No Recovery
- ▌▌ Continuous Core

PID - Photoionization Detector (Headspace Measurement)
- ▼ Static Water Level
- ▽ Water Level (ATD)

Logged by: AET & MAR
Approved by: SJG
Figure No. A- 172

_ENV BORING LOG KIMBERLY CLARK-EVERETT.GPJ July 31, 2014

Boring Log

Aspect CONSULTING

Project Number	Boring Number	Sheet
110207	REC1-MW-04	1 of 1

Project Name: Kimberly Clark
Location: Everett, WA
Driller/Method: Cascade Drilling / Direct Push Probe-Limited Access
Sampling Method: Continuous Core

Ground Surface Elev.: 15.12
Depth to Water (ft BGS):
Start/Finish Date: 9/7/2012

Depth / Elevation (feet)	Borehole Completion	Sample Type/ID	Tests	PID (ppm)	Blows/ 6"	Material Type	Description	Depth (ft)
15	8" flush-mount monument and thermos cap; Concrete surface seal						Asphalt	
				0			Moist, brown, SAND (SP); fine sand, trace silt	
		CC-1		0				
	3/8" hydrated bentonite chips			0			Very thin bed medium sand	
							Moist, gray SILT (ML)	
							Moist, brown SAND (SP); medium sand	
							No recovery	
5 10	10/20 silica sand filter pack							5
				0			Very moist to wet, SAND (SP); poorly graded fine to medium sand	
			REC1-MW-4-6.5-7.5	0				
		CC-2		0				
	2" diameter PVC pre-packed .001 slot screen			2.2			Becomes gray	
				8.4			No recovery	
10 5								10
				32			Wet, gray SAND (SP); medium sand	
			REC1-MW-4-11-12	11.8			Becomes fine sand	
		CC-3		17.1			Wet, gray, very sandy SILT (ML)	
			REC1-MW-4-13-14	11.1			Wet, gray SAND (SP); medium sand	
				13.3			Wood	
15 0	Threaded cap			3.2			Bottom of boring at 15' BGS	15
20 -5								20
25 -10								25

Sampler Type:
- ◯ No Recovery
- ▌▌ Continuous Core

PID - Photoionization Detector (Headspace Measurement)
- ▼ Static Water Level
- ▽ Water Level (ATD)

Logged by: AET & MAR
Approved by: SJG
Figure No. A- 173

_ENV BORING LOG KIMBERLY CLARK-EVERETT.GPJ July 31, 2014

Boring Log

Aspect CONSULTING

Project Number	Boring Number	Sheet
110207	REC1-MW-05	1 of 1

Project Name: Kimberly Clark
Location: Everett, WA
Driller/Method: Cascade Drilling / Direct Push Probe-Limited Access
Sampling Method: Continuous Core

Ground Surface Elev.
Depth to Water (ft BGS)
Start/Finish Date 9/10/2012

Depth / Elevation (feet)	Borehole Completion	Sample Type/ID	Tests	PID (ppm)	Blows/ 6"	Material Type	Description	Depth (ft)
	8" flush-mount monument and thermos cap						Asphalt	
							Concrete	
	Concrete surface seal			0			Moist, brown SAND (SP); poorly graded fine to medium sand	
				0			Pocket of fine sand	
	Medium bentonite chips	CC-1		0				
	10/20 silica sand filter pack						No recovery	
5				9.8			Moist, brown SAND (SP); poorly graded fine to medium sand	5
			REC1-MW-05-6.5-7.5	2.8				
		CC-2		66.7				
	2" diameter PVC pre-packed .001 slot screen			87.9				
				141			No recovery	
10				24.4			Wet, dark gray, SAND (SP); fine sand, sheen and strong petroleum-like odor	10
				104				
			REC1-MW-05-12-13	112			Becomes medium sand, gravelly	
		CC-3		169				
				87				
15	Threaded cap			10.0			Becomes fine to medium sand; trace gravel, trace silt	15
				45.7				
	Slough and bentonite			17.7			Wood at 16.5'	
		CC-4		13.4				
				7.0			Pocket of silt	
20				16.0				20
				7.0				
			REC1-MW-05-22-23	3.6				
		CC-5		1.8				
				26.4			Wet, brown SILT (ML)	
							Wet, gray SAND (SP); poorly graded fine to medium sand	
25				33.8			Bottom of boring at 25' BGS	25

Sampler Type:
- No Recovery
- Continuous Core

PID - Photoionization Detector (Headspace Measurement)
- Static Water Level
- Water Level (ATD)

Logged by: AET & MAR
Approved by: SJG
Figure No. A- 174

_ENV BORING LOG KIMBERLY CLARK-EVERETT.GPJ July 31, 2014

Boring Log

Aspect CONSULTING

Project Number	Boring Number	Sheet
110207	REC1-MW-06	1 of 1

Project Name: Kimberly Clark
Location: Everett, WA
Driller/Method: Cascade Drilling / Direct Push Probe-Limited Access
Sampling Method: Continuous Core

Ground Surface Elev.
Depth to Water (ft BGS)
Start/Finish Date 9/10/2012

Depth / Elevation (feet)	Borehole Completion	Sample Type/ID	Tests	PID (ppm)	Blows/ 6"	Material Type	Description	Depth (ft)
	6" flush-mount monument and thermos cap Concrete surface seal in sonotube						Concrete	
							Void space	
5	3/8" hydrated bentonite chips							5
	10/20 silica sand filter pack		REC1-MW-06-7.5-8.5	0			Moist, dark brown, silty, sandy GRAVEL (GM)	
				0			Moist, brown, sandy SILT (ML); fine sand	
		CC-1		0			Wet, very gravelly	
	2" diameter PVC pre-packed .001 slot screen			0			Wet, gray, slightly gravelly SAND (SP); poorly graded fine to medium sand	
							No recovery	
10				0			Wet, gray, slightly gravelly SAND (SP); poorly graded fine to medium sand	10
				0			Wet, brown and gray mottled, gravelly, sandy SILT (ML); poorly graded fine to medium sand, fine angular gravel	
		CC-2	REC1-MW-06-12.5-13.5	1.6			Wet, brown PEAT (PT); fibrous	
				4.7			Wet, gray, sandy, silty GRAVEL (GM); numerous organics	
							No recovery	
15				0			Wet, gray, very gravelly SAND (SP)	15
		CC-3		2.6				
			REC1-MW-06-17-18	1.8			Wet, brown PEAT (PT); fibrous	
	Threaded cap			1.9				
							Bottom of boring at 18' BGS	
20								20
25								25

Sampler Type:
- No Recovery
- Continuous Core

PID - Photoionization Detector (Headspace Measurement)
- Static Water Level
- Water Level (ATD)

Logged by: AET & MAR
Approved by: SJG
Figure No. A- 175

_ENV BORING LOG KIMBERLY CLARK-EVERETT.GPJ July 31, 2014

Boring Log

Aspect CONSULTING

Project Number	Boring Number	Sheet
110207	REC1-MW-07	1 of 1

Project Name: Kimberly Clark
Location: Everett, WA
Driller/Method: Cascade Drilling / Direct Push Probe-Limited Access
Sampling Method: Continuous Core

Ground Surface Elev.
Depth to Water (ft BGS)
Start/Finish Date 9/10/2012

Depth / Elevation (feet)	Borehole Completion	Sample Type/ID	Tests	PID (ppm)	Blows/ 6"	Material Type	Description	Depth (ft)
	6" flush-mount monument and thermos cap Concrete surface seal in sonotube						Concrete	
							Void space	
5	3/8" hydrated bentonite chips 10/20 silica sand filter pack 2" diameter PVC pre-packed .001 slot screen	CC-1	REC1-MW-07-7-8	0 0 0 0			Moist, brown, slightly silty SAND (SP-SM); fine sand, trace gravel Wet. gray, slightly gravelly, silty SAND (SM) No recovery	5
10		CC-2	REC1-MW-07-13-14	0 0 0 1.4 0.6			Wet, brown, sandy SILT (ML); trace gravel Becomes gray Wood Wet, gray SAND (SP); poorly graded fine to medium sand, trace gravel Wet, gray, clayey SILT (ML) Wet, gray SAND (SP); poorly graded fine to medium sand No recovery	10
15	Threaded cap	CC-3	REC1-MW-07-16.5-17.5	0 0.3 1.4 1.5			Wet, gray SAND (SP); poorly graded fine to medium sand Wet, brown gray, clayey SILT (ML); numerous organics Wet, gray SAND (SP); poorly graded fine to medium sand Bottom of boring at 17.5' BGS	15
20								20
25								25

Sampler Type:
- No Recovery
- Continuous Core

PID - Photoionization Detector (Headspace Measurement)
- Static Water Level
- Water Level (ATD)

Logged by: AET & MAR
Approved by: SJG
Figure No. A- 176

_ENV BORING LOG KIMBERLY CLARK-EVERETT.GPJ July 31, 2014

Boring Log

Aspect CONSULTING

Project Number	Boring Number	Sheet
110207	REC1-MW-08	1 of 1

Project Name: Kimberly Clark
Location: Everett, WA
Driller/Method: Cascade Drilling / Direct Push Probe-Limited Access
Sampling Method: Continuous Core

Ground Surface Elev.:
Depth to Water (ft BGS):
Start/Finish Date: 9/4/2012

Depth / Elevation (feet)	Borehole Completion	Sample Type/ID	Tests	PID (ppm)	Blows/ 6"	Material Type	Description	Depth (ft)
	8" flush-mount monument and thermos cap Concrete surface seal 3/8" hydrated bentonite chips 10/20 silica sand filter pack	CC-1		0 0 0 1.4		Asphalt Moist, brown, gravelly, silty SAND (SM); poorly graded fine to medium sand Moist, brown SAND (SP); poorly graded fine to medium sand, brick debris, trace gravel Moist, black, silty, sandy GRAVEL (GM); with cobbles, fine sand No recovery	
5				0		Moist, brown, gravelly SAND (SP); poorly graded fine to medium sand		5
	2" diameter PVC pre-packed .001 slot screen	CC-2	REC1-MW-08-7-8	1.0 0		Moist, black, silty, sandy GRAVEL (GM); with cobbles, fine sand Wet, brown, sandy GRAVEL (GP) No recovery		
10		CC-3	REC1-MW-08-12-13	0 0 3.7 0.4		Wet, brown gray SAND (SW); poorly graded fine to coarse sand Wet, brown, sandy GRAVEL (GP); with cobbles Becomes black Becomes red No recovery		10
15	Threaded cap Slough and bentonite	CC-4	REC1-MW-08-15-16	0 0 0 0		Wet, gray, trace to slightly gravelly SAND (SP); poorly graded fine to medium sand		15
20						Bottom of boring at 20' BGS		20
25								25

Sampler Type:
- ◯ No Recovery
- ▌▌ Continuous Core

PID - Photoionization Detector (Headspace Measurement)
- ▼ Static Water Level
- ▽ Water Level (ATD)

Logged by: AET & MAR
Approved by: SJG
Figure No. A- 177

_ENV BORING LOG KIMBERLY CLARK-EVERETT.GPJ July 31, 2014

Boring Log

Aspect CONSULTING

Project Number	Boring Number	Sheet
110207	REC1-MW-09	1 of 1

Project Name: Kimberly Clark
Location: Everett, WA
Driller/Method: Cascade Drilling / Direct Push Probe-Limited Access
Sampling Method: Continuous Core

Ground Surface Elev.
Depth to Water (ft BGS)
Start/Finish Date 9/5/2012

Depth / Elevation (feet)	Borehole Completion	Sample Type/ID	Tests	PID (ppm)	Blows/ 6"	Material Type	Description	Depth (ft)
	8" flush-mount monument and thermos cap Concrete surface seal						Asphalt	
				0			Moist, brown, slightly silty SAND (SP-SM); fine sand	
				0			Moist, dark brown to dark gray, silty, sandy GRAVEL (GM); fine subround gravel, fill debris	
	3/8" hydrated bentonite chips	CC-1		0			Very moist, brown, very silty SAND (SM); fine sand, trace gravel, fill debris	
	10/20 silica sand filter pack						No recovery	
5								5
			REC1-MW-09-6-7	0			Very moist, dark brown, silty, very gravelly SAND (SP); fine sand, fill debris including brick	
				0			Becomes slightly gravelly Black 6.5' to 7' Brown at 7'	
		CC-2		0			Black 7.75'-8'	
	2" diameter PVC pre-packed .001 slot screen						Wet, dark gray, gravelly SAND (SP)	
							No recovery	
10							Wet, brown, gravelly SAND (SP)	10
							Wet, gray, silty, gravelly SAND (SM); poorly graded fine to medium sand	
		CC-3					Wet, black, gravelly SAND (SP); poorly graded fine to medium sand	
							Brown 13.5' to 14.5'	
	Threaded cap Slough and bentonite						Wet, dark brown, gravelly, very silty SAND (SM); fine sand	
15							Bottom of boring at 15' BGS	15
20								20
25								25

Sampler Type:
- No Recovery
- Continuous Core

PID - Photoionization Detector (Headspace Measurement)
- Static Water Level
- Water Level (ATD)

Logged by: AET & MAR
Approved by: SJG
Figure No. A- 178

_ENV BORING LOG KIMBERLY CLARK-EVERETT.GPJ July 31, 2014

Boring Log

Aspect CONSULTING

Project Number	Boring Number	Sheet
110207	REC1-MW-10	1 of 1

Project Name: Kimberly Clark
Location: Everett, WA
Driller/Method: Holt / Direct Push Probe
Sampling Method: Continuous Core 3"

Ground Surface Elev. 18.8
Depth to Water (ft BGS)
Start/Finish Date 11/1/2013

Depth / Elevation (feet)	Borehole Completion	Sample Type/ID	Tests	PID (ppm)	Blows/ 6"	Material Type	Description	Depth (ft)
	8" flush-mount monument and thermos cap						Concrete slab	
							Void space	
	Concrete surface seal 0' to 5'		REC1-MW-10-2					
	11/1/2013							
15								
5			REC1-MW-10-5				Slightly moist, light brown, silty, SAND (SM); fine to medium sand, trace, fine gravel	5
	3/8" hydrated bentonite chips 5' to 7'							
			REC1-MW-10-7				Slightly moist, gray, silty, SAND (SM)	
		CC-2						
							No recovery	
10	20/40 pre-packed silica sand filter 7' to 13'							10
	2" diameter PVC pre-packed 10-slot screen 8' to 13'						Wet, gray, SAND (SW) and GRAVEL (GP); fine to coarse, subrounded sand, fine, subrounded gravel	
							Wet, brown, organic SILT (OL); numerous fibrous organics, wood chips	
		CC-3					Wood chips	
	Threaded cap							
5							No reccovery	
	Slough							
15							Bottom of boring 15'	15

Sampler Type:
- No Recovery
- Continuous Core

PID - Photoionization Detector (Headspace Measurement)
- Static Water Level
- Water Level (ATD)

Logged by: AHP
Approved by: SJG
Figure No. A- 179

_ENV BORING LOG KIMBERLY CLARK-EVERETT.GPJ July 31, 2014

Boring Log

Aspect CONSULTING

Project Number	Boring Number	Sheet
110207	REC1-MW-11	1 of 1

Project Name: Kimberly Clark
Location: Everett, WA
Driller/Method: Holt / Direct Push Probe
Sampling Method: Continuous Core 3"

Ground Surface Elev.: 18.89
Depth to Water (ft BGS):
Start/Finish Date: 11/1/2013

Depth / Elevation (feet)	Borehole Completion	Sample Type/ID	Tests	PID (ppm)	Blows/ 6"	Material Type	Description	Depth (ft)
	8" Flush-mount monument and thermos cap Concrete surface seal 0' to 1' 3/8" Hydrated bentonite chips 1' to 2'						Recycled demo debris, hand cleared	
							Brown, slightly moist, silty, gravelly, SAND (SM)	
			REC1-MW-11-2				Slightly moist, brown, slightly silty, SAND (SP-SM); medium, subrounded sand	
		CC-1					Slightly moist, brown, silty, gravelly, SAND (SM)	
15							No recovery	
5	11/1/2013		REC1-MW-11-5				Wet, brown, sandy, silty, GRAVEL (GM); fine, subrounded gravel	5
	20/40 pre-pack Silica sand filter pack 2' to 13.25'						Wet, gray, SILT (ML)	
			REC1-MW-11-7				Wet, gray, silty, SAND (SM); fine to coarse sand	
		CC-2					Wet, brown and black, organic SILT (OL); numerous organics, wood chips	
10	2" Diameter PVC pre-packed 10-slot screen 3' to 13'						No recovery	
							Wet, brown and black, organic SILT (OL); wood chips	10
		CC-3						
	Threaded cap							
5	Slough						No recovery	
15							Bottom of boring 15 feet	15

Sampler Type:
- ◯ No Recovery
- ▌▌ Continuous Core

PID - Photoionization Detector (Headspace Measurement)

- ▼ Static Water Level
- ▽ Water Level (ATD)

Logged by: AHP
Approved by: SJG
Figure No. A- 180

_ENV BORING LOG KIMBERLY CLARK-EVERETT.GPJ July 31, 2014

Boring Log

Aspect CONSULTING

Project Number	Boring Number	Sheet
110207	REC1-MW-12	1 of 1

Project Name: Kimberly Clark
Location: Everett, WA
Driller/Method: Holt / Direct Push Probe
Sampling Method: Continuous Core 3"

Ground Surface Elev.: 18.82
Depth to Water (ft BGS):
Start/Finish Date: 10/31/2013

Depth / Elevation (feet)	Borehole Completion	Sample Type/ID	Tests	PID (ppm)	Blows/ 6"	Material Type	Description	Depth (ft)
	8" Flush-mount monument and thermos cap Concrete surface seal 0' to 1'						Concrete floor	
				1.2			Slightly moist, brown, gravelly, SAND (SW); fine to coarse, subrounded sand	
		CC-1		1.7				
	3/8" Hydrated bentonite chips 1' to 5'		REC1-MW-12-3 REC1-MW-22-3	1.4			No recovery	
15								
5							Slightly moist, brown, SAND (SW) and GRAVEL (GP); fine, rounded gravel	5
				2.6			Slightly moist, brown, slightly gravelly, silty, SAND (SM); fine to medium, subrounded sand, fine, rounded gravel	
	10/31/2013						Wet, brown, sandy, SILT (ML)	
		CC-2	REC1-MW-12-7 REC1-MW-22-7	7			Wet, gray and brown, silty, SAND (SM); coarse, rounded sand	
				4.2				
10							No recovery	
	10/20 pre-pack Silica sand filter pack 5' to 16.25'						Wet, gray, slightly gravelly, SAND (SW); fine to coarse, subrounded sand	10
			REC1-MW-12-11 REC1-MW-22-11	1.3			Wet, red brown, organic SILT (OL); numerous organics, wood chips	
		CC-3		1.6				
				2.1			No recovery	
5								
15	2" Diameter PVC pre-packed 10-slot screen 6' to 16'						Wet, red brown, organic SILT (OL); numerous organics, wood debris	15
	Threaded cap			1.1				
				1.3				
		CC-4						
				1.4			Wet, gray, SILT (ML)	
0							No recovery	
	Slough 16.25' to 20'			0.8				
20							Bottom of boring at 20 feet	20

Sampler Type:
- No Recovery
- Continuous Core

PID - Photoionization Detector (Headspace Measurement)
- Static Water Level
- Water Level (ATD)

Logged by: AHP
Approved by: SJG
Figure No. A- 181

_ENV BORING LOG KIMBERLY CLARK-EVERETT.GPJ July 31, 2014

Boring Log

Aspect CONSULTING

Project Number	Boring Number	Sheet
110207	REC1-MW-14	1 of 1

Project Name: Kimberly Clark
Location: Everett, WA
Driller/Method: Holt / Direct Push Probe
Sampling Method: Continuous Core 3"

Ground Surface Elev.: 18.82
Depth to Water (ft BGS):
Start/Finish Date: 10/31/2013

Depth / Elevation (feet)	Borehole Completion	Sample Type/ID	Tests	PID (ppm)	Blows/ 6"	Material Type	Description	Depth (ft)
	8" Flush-mount monument and thermos cap						Concrete floor	
	Concrete surface seal 0' to 1'						Dry, brown, SAND (SP) and GRAVEL (GP); fine to medium sand, fine gravel	
	3/8" Hydrated bentonite chips 1' to 4'			.3			Slightly moist, brown, slightly silty, SAND (SP-SM) and GRAVEL (GP-GM); fine gravel	
		CC-1		.2				
				.7			Slightly moist, dark gray, SILT (ML)	
				.4			Slightly moist, light brown and red brown, silty GRAVEL (GM) and GRAVEL (GP); fine gravel	
15				.3			Slightly moist, brown, silty, SAND (SM); medium to coarse sand	
							No recovery	
5	20/40 pre-pack Silica sand filter pack 4' to 15'			4			Slightly moist, brown, slightly gravelly, SAND (SP); fine to medium sand	5
				2				
				7				
				14.5				
	10/31/2013		REC1-MW-14-7	32.1			Wet, gray and light brown, slightly gravelly, SAND (SP); fine to medium sand, gas odor	
		CC-2		364				
				158				
10	2" Diameter PVC pre-packed 10-slot screen 5' to 15'			318			Wet, gray, slightly silty, SAND (SW-SM); fine to coarse sand, fine gravel	
							No recovery	
				834			Wet, gray, slightly silty, SAND (SW-SM) and GRAVEL (GP-GM); fine to coarse sand, fine gravel, strong petroleum-like odor	10
				1908				
			REC1-MW-14-11	3251				
				1596				
		CC-3		60				
5							No recovery	
15	Threaded cap			25.4			Wet, gray, slightly silty, SAND (SP-SM) with gravel; medium to coarse sand, no odor	15
	Slough			14.3				
				26.7				
				7.8				
			REC1-MW-14-17	4.3				
		CC-4		2.7				
0							No recovery	
20							Bottom of boring at 20 feet	20

Sampler Type:
- ◯ No Recovery
- ▌▌ Continuous Core

PID - Photoionization Detector (Headspace Measurement)
- ▼ Static Water Level
- ▽ Water Level (ATD)

Logged by: AHP
Approved by: SJG
Figure No. A- 182

_ENV BORING LOG KIMBERLY CLARK-EVERETT.GPJ July 31, 2014

Boring Log

Aspect CONSULTING

Project Number	Boring Number	Sheet
110207	REC1-MW-15	1 of 1

Project Name: Kimberly Clark
Location: Everett, WA
Driller/Method: Holt / Direct Push Probe
Sampling Method: Continuous Core 3"

Ground Surface Elev.: 14.44
Depth to Water (ft BGS):
Start/Finish Date: 11/13/2013

Depth / Elevation (feet)	Borehole Completion	Sample Type/ID	Tests	PID (ppm)	Blows/ 6"	Material Type	Description	Depth (ft)
	8" Flush-mount monument and thermos cap Concrete surface seal 0' to 1' 3/8" Hydrated bentonite chips 1' to 4'						Recycled demo debris	
				0			Slightly moist, brown, SAND (SW); fine to coarse, subangular sand	
			REC1-MW-15-2	0				
		CC-1					No recovery	
10								
5	20/40 pre-pack Silica sand filter pack 4' to 15'							5
	▽ 11/13/2013			0			Wet, brown to gray, silty, SAND (SM); fine to coarse, subangular sand	
			REC1-MW-15-6	0				
				0				
				0				
		CC-2	REC1-MW-15-7.5	0				
				0			Wet, gray, SILT (ML)	
				0			Wet, dark brown, organic SILT (OL); wood chips	
	2" Diameter PVC pre-packed 10-slot screen 5' to 15'						No recovery	
5								
10				0			Very moist, red brown, SILT (ML)	10
				0			Very moist, gray, silty, SAND (SM); fine to medium sand	
				0			Very moist, red brown, organic SILT (OL); woody debris	
				0			Wet, gray, silty, SAND (SM); trace woody debris	
		CC-3		0				
				0				
				0			No recovery	
0								
15	Threaded cap						Bottom of boring at 15 feet	15

Sampler Type:
- ◯ No Recovery
- ▌▌ Continuous Core

PID - Photoionization Detector (Headspace Measurement)
- ▼ Static Water Level
- ▽ Water Level (ATD)

Logged by: AHP
Approved by: SJG
Figure No. A- 183

_ENV BORING LOG KIMBERLY CLARK-EVERETT.GPJ July 31, 2014

Boring Log

Aspect CONSULTING

Project Number	Boring Number	Sheet
110207	REC2-B-01	1 of 1

Project Name: Kimberly Clark
Location: Everett, WA
Driller/Method: Cascade Drilling / Direct Push Probe-"Mini Me"
Sampling Method: Continuous Core

Ground Surface Elev.
Depth to Water (ft BGS)
Start/Finish Date 6/28/2012

Depth / Elevation (feet)	Borehole Completion	Sample Type/ID	Tests	PID (ppm)	Blows/ 6"	Material Type	Description	Depth (ft)
							Concrete	
							Void	
	Backfilled with medium bentonite chips	CC-1		0			Moist, brown, gravelly SAND (SW); poorly graded fine-to-coarse sand, fine gravel	
				0			Moist, brown, gravelly SAND (SP); fine sand, fine gravel	
				0				
5			REC2-B-1-5-6	0				5
				0			Moist, brown, gravelly SAND (SW); poorly graded fine-to-coarse sand, fine gravel	
		CC-2	REC2-B-1-7-8	0				
				0			Wet, dark gray SAND (SP); fine sand with scattered seashells	
			REC2-B-1-9-10	0				
10				0			No recovery from 10' to 15'	10
		CC-3						
15							Bottom of boring at 15' BGS	15

Sampler Type:
- ◯ No Recovery
- ▌▌ Continuous Core

PID - Photoionization Detector (Headspace Measurement)

- ▼ Static Water Level
- ▽ Water Level (ATD)

Logged by: AET
Approved by: SJG
Figure No. A- 184

_ENV BORING LOG KIMBERLY CLARK-EVERETT.GPJ July 31, 2014

Boring Log

Aspect CONSULTING

Project Number	Boring Number	Sheet
110207	REC2-B-02	1 of 1

Project Name: Kimberly Clark
Location: Everett, WA
Driller/Method: Cascade Drilling / Direct Push Probe-"Mini Me"
Sampling Method: Continuous Core

Ground Surface Elev.:
Depth to Water (ft BGS):
Start/Finish Date: 6/28/2012

Depth / Elevation (feet)	Borehole Completion	Sample Type/ID	Tests	PID (ppm)	Blows/ 6"	Material Type	Description	Depth (ft)
							Concrete	
							Void	
	Backfilled with medium bentonite chips	CC-1		0			Moist, brown, gravelly SAND (SW); poorly graded fine-to-coarse sand, fine gravel	
				0				
				0				
			REC2-B-2-4.5-5.5					
5				0			Moist, brown, slightly gravelly SAND (SP); fine sand, fine gravel	5
			REC2-B-2-6-7	0				
		CC-2		0				
			REC2-B-2-8-9	0				
				0				
10				0				10
				0				
		CC-3		0				
				0				
				0				
15				0			Bottom of boring at 15' BGS	15

Sampler Type:
- ◯ No Recovery
- ▌▌ Continuous Core

PID - Photoionization Detector (Headspace Measurement)
- ▼ Static Water Level
- ▽ Water Level (ATD)

Logged by: AET
Approved by: SJG
Figure No. A- 185

_ENV BORING LOG KIMBERLY CLARK-EVERETT.GPJ July 31, 2014

Boring Log

Aspect CONSULTING

Project Number	Boring Number	Sheet
110207	REC2-B-03	1 of 1

Project Name: Kimberly Clark
Location: Everett, WA
Driller/Method: Cascade Drilling / Direct Push Probe-"Mini Me"
Sampling Method: Continuous Core

Ground Surface Elev.
Depth to Water (ft BGS)
Start/Finish Date 6/28/2012

Depth / Elevation (feet)	Borehole Completion	Sample Type/ID	Tests	PID (ppm)	Blows/ 6"	Material Type	Description	Depth (ft)
							Concrete	
							Void	
	Backfilled with medium bentonite chips	CC-1		0			Moist, brown, gravelly SAND (SW); poorly graded fine-to-coarse sand, fine gravel	
				0			Moist, orange-brown, gravelly SAND (SP); fine sand, fine gravel	
5				0				5
			REC2-B-3-5.5-6.5	0			Very moist, gray SAND (SW); poorly graded fine-to-coarse sand	
							Moist, gray-orange SILT (ML)	
		CC-2	REC2-B-3-7-8	0			Wet, brown SAND (SW); poorly graded fine-to-coarse sand	
				0				
			REC2-B-3-9-10	0			Wet, brown gravelly SAND (SP); poorly graded fine-to-medium sand	
10		CC-3		0				10
							Refusal at 11'; bottom of boring at 11' BGS	
15								15

Sampler Type:
- ◯ No Recovery
- ▌▌ Continuous Core

PID - Photoionization Detector (Headspace Measurement)
- ▼ Static Water Level
- ▽ Water Level (ATD)

Logged by: AET
Approved by: SJG
Figure No. A- 186

_ENV BORING LOG KIMBERLY CLARK-EVERETT.GPJ July 31, 2014

Boring Log

Aspect CONSULTING

Project Number	Boring Number	Sheet
110207	REC2-B-04	1 of 1

Project Name: Kimberly Clark
Location: Everett, WA
Driller/Method: Cascade Drilling / Direct Push Probe
Sampling Method: Continuous Core

Ground Surface Elev.:
Depth to Water (ft BGS):
Start/Finish Date: 5/23/2012

Depth / Elevation (feet)	Borehole Completion	Sample Type/ID	Tests	PID (ppm)	Blows/ 6"	Material Type	Description	Depth (ft)
							Asphalt	
	Backfilled with medium bentonite chips		REC2-B-4-1.5-2.5	9.5			Very moist, brown to black GRAVEL (GP); fine subangular to angular gravel; slight petroleum-like odor and bleb sheen	
		CC-1		11.8			Very moist, gray SAND (SP); poorly graded fine-to-medium sand	
				1.2				
			REC2-B-4-4-5	1.3			Wet at 3.5' BGS	
5				1.2				5
				0.3				
			REC2-B-4-6.5-7.5					
				0.3			Trace gravel, fine sand from 7' to 9.5' BGS with shell fragments	
		CC-2		0.3				
				0.3				
10				0.3				10
				0.3			Fine sand interbedded with medium sand; shell fragments from 11' to 13' BGS	
		CC-3		0.3				
				0.3				
				0.3				
15				0.3				15
							Bottom of boring at 15' BGS	

Sampler Type:
- ◯ No Recovery
- ▌▌ Continuous Core

PID - Photoionization Detector (Headspace Measurement)
- ▼ Static Water Level
- ▽ Water Level (ATD)

Logged by: MAR
Approved by: SJG
Figure No. A- 187

_ENV BORING LOG KIMBERLY CLARK-EVERETT.GPJ July 31, 2014

Boring Log

Aspect CONSULTING

Project Number	Boring Number	Sheet
110207	REC2-B-05	1 of 1

Project Name: Kimberly Clark
Location: Everett, WA
Driller/Method: Cascade Drilling / Direct Push Probe
Sampling Method: Continuous Core

Ground Surface Elev.:
Depth to Water (ft BGS):
Start/Finish Date: 5/24/2012

Depth / Elevation (feet)	Borehole Completion	Sample Type/ID	Tests	PID (ppm)	Blows/ 6"	Material Type	Description	Depth (ft)
				0.5			Asphalt	
				0.5			Very moist, brown SAND (SW); poorly graded fine-to-coarse sand	
		CC-1	REC2-B-5-2-3	0.2			Wet at 2' BGS	
				0.2			Wet, gray, silty SAND (SM); fine sand	
5	Backfilled with medium bentonite chips			0.1				5
		CC-2	REC2-B-5-7-8	0.1			Wet, brown SAND (SW); poorly graded fine-to-coarse sand	
				0.2			Gray at 8' to 10' BGS	
10				0.3			Wet, gray SAND (SP); trace gravel, medium to coarse sand	10
		CC-3		0.3				
				0.6				
				0.6			Wood 14' to 15' BGS	
15							Bottom of boring at 15' BGS	15

Sampler Type:
- No Recovery
- Continuous Core

PID - Photoionization Detector (Headspace Measurement)
- Static Water Level
- Water Level (ATD)

Logged by: MAR
Approved by: SJG
Figure No. A- 188

_ENV BORING LOG KIMBERLY CLARK-EVERETT.GPJ July 31, 2014

Boring Log

Aspect CONSULTING

Project Number	Boring Number	Sheet
110207	REC2-B-06	1 of 1

Project Name: Kimberly Clark
Location: Everett, WA
Driller/Method: Cascade Drilling / Direct Push Probe-"Mini Me"
Sampling Method: Continuous Core

Ground Surface Elev.
Depth to Water (ft BGS)
Start/Finish Date 6/28/2012

Depth / Elevation (feet)	Borehole Completion	Sample Type/ID	Tests	PID (ppm)	Blows/ 6"	Material Type	Description	Depth (ft)
							Concrete	
							Void	
	Backfilled with medium bentonite chips	CC-1		0			Moist, brown, gravelly SAND (SW); poorly graded fine-to-coarse sand, fine gravel	
				0				
				0				
5				0				5
			REC2-B-6-6-7	0			Moist to wet, brown SAND (SP); poorly graded fine-to-medium sand	
		CC-2		0				
			REC2-B-6-8-9	0				
				0			Wet, gray, sandy SILT (ML); fine sand	
				0				
10			REC2-B-6-10-11				Wet, brown SAND (SP); poorly graded fine-to-medium sand	10
		CC-3		0			1' vertically split wet, brown SAND (SP); poorly graded fine-to-medium sand, and wet, gray SILT (ML)	
				0			Wet, brown SAND (SP); poorly graded fine-to-medium sand	
				0				
15							Bottom of boring at 15' BGS	15

Sampler Type:
- ◯ No Recovery
- ▌▌ Continuous Core

PID - Photoionization Detector (Headspace Measurement)
- ▼ Static Water Level
- ▽ Water Level (ATD)

Logged by: AET
Approved by: SJG
Figure No. A- 189

_ENV BORING LOG KIMBERLY CLARK-EVERETT.GPJ July 31, 2014

Boring Log

Aspect CONSULTING

Project Number	Boring Number	Sheet
110207	REC2-B-07	1 of 1

Project Name: Kimberly Clark
Location: Everett, WA
Driller/Method: Cascade Drilling / Direct Push Probe
Sampling Method: Continuous Core

Ground Surface Elev.:
Depth to Water (ft BGS):
Start/Finish Date: 5/23/2012

Depth / Elevation (feet)	Borehole Completion	Sample Type/ID	Tests	PID (ppm)	Blows/ 6"	Material Type	Description	Depth (ft)
							Asphalt	
							Very moist, slightly silty GRAVEL (GP)	
	Backfilled with medium bentonite chips			16.8				
				1.6			Very moist, gray to brown SAND (SP); poorly graded fine-to-medium sand	
		CC-1		0.8				
	▼		REC2-B-7-4-5	0.6			Wet at 4' BGS	
5				0.6				5
				0.3				
			REC2-B-7-6.5-7.5	0.3			Slightly silty, gray SAND (SP); fine sand	
		CC-2		0.3				
				0.3			Shell fragments 9' to 10', fine-to-medium sand	
10				0.3				10
				0.3				
				0.3				
		CC-3		0.3				
				0.3				
				0.3			Slightly gravelly at 14' BGS	
15				0.3			Bottom of boring at 15' BGS	15

Sampler Type:
- ◯ No Recovery
- ▌▌ Continuous Core

PID - Photoionization Detector (Headspace Measurement)
- ▼ Static Water Level
- ▽ Water Level (ATD)

Logged by: MAR
Approved by: SJG
Figure No. A- 190

_ENV BORING LOG KIMBERLY CLARK-EVERETT.GPJ July 31, 2014

Boring Log

Aspect CONSULTING

Project Number	Boring Number	Sheet
110207	REC2-B-08	1 of 1

Project Name: Kimberly Clark
Location: Everett, WA
Driller/Method: Cascade Drilling / Direct Push Probe
Sampling Method: Continuous Core

Ground Surface Elev.:
Depth to Water (ft BGS):
Start/Finish Date: 5/23/2012

Depth / Elevation (feet)	Borehole Completion	Sample Type/ID	Tests	PID (ppm)	Blows/ 6"	Material Type	Description	Depth (ft)
							Asphalt	
							Moist, brown, silty, sandy GRAVEL (GM); fine subangular gravel, slight bleb sheen	
	Backfilled with medium bentonite chips	CC-1	REC2-B-8-4-5	2.7 10.3 1.4			Moist, dark gray, slightly silty, slightly gravelly SAND (SP); poorly graded fine-to-medium sand	
5				7.3			Wet at 4.5' BGS, Faint petroleum-like odor from 4.5' to 7' BGS	5
		CC-2		8.0 1.5 0.8 0.8			Wet, gray SAND (SP); trace gravel, fine-to-medium sand	
10		CC-3	REC2-B-8-10-11	0.8 0.3 0.3 0.3				10
				0.3			Wet, gray, very sandy SILT (ML)	
							Wet, brown PEAT (PT)	
15				0.3			Bottom of boring at 15' BGS	15

Sampler Type:
- ◯ No Recovery
- ▌▌ Continuous Core

PID - Photoionization Detector (Headspace Measurement)
- ▼ Static Water Level
- ▽ Water Level (ATD)

Logged by: MAR
Approved by: SJG
Figure No. A- 191

_ENV BORING LOG KIMBERLY CLARK-EVERETT.GPJ July 31, 2014

Boring Log

Aspect CONSULTING

Project Number	Boring Number	Sheet
110207	REC2-B-09	1 of 1

Project Name: Kimberly Clark
Location: Everett, WA
Driller/Method: Cascade Drilling / Direct Push Probe
Sampling Method: Continuous Core

Ground Surface Elev.:
Depth to Water (ft BGS):
Start/Finish Date: 5/24/2012

Depth / Elevation (feet)	Borehole Completion	Sample Type/ID	Tests	PID (ppm)	Blows/ 6"	Material Type	Description	Depth (ft)
							Asphalt	
	▼	CC-1	REC2-B-9-2-3	0.4 0.5 21.3			Very moist, gravelly SAND (SW); poorly graded fine-to-coarse sand, strong petroleum-like odor, moderate to heavy bleb sheen Wet at 2' BGS	
	Backfilled with medium bentonite chips			28.0				
		○		30.0 6.0			Wet, gray, silty, sandy GRAVEL (GM); fine subangular gravel, strong petroleum-like odor, moderate to heavy bleb sheen, black product present in soil sample	
				7.0			Wet, gray SAND (SP); medium to coarse sand, trace gravel, strong petroleum-like odor	
5				3.5 382.2				5
		CC-2	REC2-B-9-6-7 REC2-B-9-7.5-8.5	101.5 156.5 9.5			Wet, gray, SAND (SP); fine sand	
				7.0				
				7.0				
10				2.0				10
				1.8				
		CC-3		2.0			Medium to coarse sand 12' to 14' BGS	
				1.7				
		○		1.3			Wet, gray, very sandy GRAVEL (GP); fine, subrounded gravel.	
15				2.7			Bottom of boring at 15' BGS	15

Sampler Type:
○ No Recovery
▌▌ Continuous Core

PID - Photoionization Detector (Headspace Measurement)
▼ Static Water Level
▽ Water Level (ATD)

Logged by: MAR
Approved by: SJG
Figure No. A- 192

_ENV BORING LOG KIMBERLY CLARK-EVERETT.GPJ July 31, 2014

Boring Log

Project Number	Boring Number	Sheet
110207	REC2-B-10	1 of 1

Project Name: Kimberly Clark
Location: Everett, WA
Driller/Method: Cascade Drilling / Direct Push Probe-"Mini Me"
Sampling Method: Continuous Core
Ground Surface Elev.
Depth to Water (ft BGS)
Start/Finish Date 6/28/2012

Depth / Elevation (feet)	Borehole Completion	Sample Type/ID	Tests	PID (ppm)	Blows/ 6"	Material Type	Description	Depth (ft)
	Backfilled with medium bentonite chips	CC-1		0			Void	
				0			Concrete rubble	
				0			Slightly moist, brown, gravelly SAND (SW); poorly graded fine-to-coarse sand, fine gravel	
5			REC2-B-10-5-6				Moist, brown, slightly silty, gravelly SAND (SP-SM); poorly graded fine-to-medium sand, fine gravel, fine gravel	5
		CC-2	REC2-B-10-7-8	0.5			Very moist to wet, blue-gray SAND (SP); poorly graded fine-to-medium sand	
				1.3			Very moist, dark brown, sandy SILT (ML); poorly graded fine-to-medium sand	
				0.6			Very moist to wet, blue-gray SAND (SP); poorly graded fine-to-medium sand	
10			REC2-B-10-10-11	0				10
		CC-3		0				
15				0			Bottom of boring at 15' BGS	15

Sampler Type:
- ◯ No Recovery
- ▌▌ Continuous Core

PID - Photoionization Detector (Headspace Measurement)
- ▼ Static Water Level
- ▽ Water Level (ATD)

Logged by: AET
Approved by: SJG
Figure No. A- 193

_ENV BORING LOG KIMBERLY CLARK-EVERETT.GPJ July 31, 2014

Boring Log

Aspect CONSULTING

Project Number	Boring Number	Sheet
110207	REC2-B-11	1 of 1

Project Name: Kimberly Clark
Location: Everett, WA
Driller/Method: Cascade Drilling / Direct Push Probe
Sampling Method: Continuous Core

Ground Surface Elev.:
Depth to Water (ft BGS):
Start/Finish Date: 5/24/2012

Depth / Elevation (feet)	Borehole Completion	Sample Type/ID	Tests	PID (ppm)	Blows/ 6"	Material Type	Description	Depth (ft)
							Asphalt	
	Backfilled with medium bentonite chips						Moist, black, gravelly SAND (SP); poorly graded fine-to-medium sand, very strong petroleum-like odor, moderate to heavy rainbow and bleb sheen mix	
		CC-1		18.4				
				46.9				
			REC2-B-11-3-4	107.5			Wet, color changes to brown, fine sand, no gravel	
				179.4				
				103.8			Wet, gray SAND (SP); poorly graded fine-to-medium sand, strong petroleum-like odor, moderate metallic sheen	
5				46.6				5
				43.2				
				36.0				
				37.5				
				55.6			Slightly silty	
				296.8				
		CC-2	REC2-B-11-7.5-8.5	123.6				
				69.8			Wet, gray, gravelly SAND (SP/SW); poorly graded fine-to-coarse sand	
				42.2				
				15.6				
10				13.8				10
			REC2-B-11-11-12	1.3				
				1.2				
		CC-3		1.2				
				1.8				
15				1.2				15
							Bottom of boring at 15' BGS	

Sampler Type:
- ◯ No Recovery
- ▌▌ Continuous Core

PID - Photoionization Detector (Headspace Measurement)
- ▼ Static Water Level
- ▽ Water Level (ATD)

Logged by: MAR
Approved by: SJG
Figure No. A- 194

_ENV BORING LOG KIMBERLY CLARK-EVERETT.GPJ July 31, 2014

Boring Log

Aspect CONSULTING

Project Number	Boring Number	Sheet
110207	REC2-B-12	1 of 1

Project Name: Kimberly Clark
Location: Everett, WA
Driller/Method: Cascade Drilling / Direct Push Probe
Sampling Method: Continuous Core

Ground Surface Elev.:
Depth to Water (ft BGS):
Start/Finish Date: 5/23/2012

Depth / Elevation (feet)	Borehole Completion	Sample Type/ID	Tests	PID (ppm)	Blows/ 6"	Material Type	Description	Depth (ft)
							Asphalt	
							Concrete rubble, fill debris: burlap	
	Backfilled with medium bentonite chips	CC-1		0.5				
				2.8			Moist, gray SAND (SW); trace silt, fine to coarse sand, petroleum-like odor	
				11.8			Moist, brown, silty SAND (SM); trace gravel, fine-to-medium sand, numerous organics-roots	
5			REC2-B-12-5-6	4.5			Wet, dark gray SAND (SP); poorly graded fine-to-medium sand, strong petroleum-like odor, moderate to heavy bleb sheen from 5' to 10' BGS, sticky brown to black product present	5
				28.8				
				76.8				
		CC-2		108.9				
			REC2-B-12-8-9	110.1				
				466.6				
10				84.5				10
				43.5				
				91.7			Trace gravel	
		CC-3		63.7				
				42.5			Refusal at 14' BGS, moved hole ~6 inches to re-drill	
15							Wet, dark brown to dark gray SAND (SP); trace silt and trace gravel	15
				8.0				
			REC2-B-12-17-18	1.7				
		CC-4		0.8				
				0.8				
				0.8			Bottom of boring at 20' BGS	

Sampler Type:
- ◯ No Recovery
- ▌▌ Continuous Core

PID - Photoionization Detector (Headspace Measurement)

- ▼ Static Water Level
- ▽ Water Level (ATD)

Logged by: MAR
Approved by: SJG
Figure No. A- 195

_ENV BORING LOG KIMBERLY CLARK-EVERETT.GPJ July 31, 2014

Boring Log

Aspect CONSULTING

Project Number	Boring Number	Sheet
110207	REC2-B13	1 of 1

Project Name: Kimberly Clark
Location: Everett, WA
Driller/Method: Holt / Direct Push Probe
Sampling Method: Continous Core 2"

Ground Surface Elev.
Depth to Water (ft BGS)
Start/Finish Date 11/14/2013

Depth / Elevation (feet)	Borehole Completion	Sample Type/ID	Tests	PID (ppm)	Blows/ 6"	Material Type	Description	Depth (ft)
				0			Medium stiff, slightly moist, brown, sandy, gravelly SILT (ML)	
				0				
				0				
				7				
		CC-01		0				
				29			Stiff, slightly moist, dark brown, slightly gravelly, slightly sandy SILT (ML)	
							No recovery	
5	Hydrated bentonite chip backfill		REC2-B13-5 REC2-B513-5				Medium stiff, slightly moist, dark brown, slightly sandy SILT (ML)	5
				52			Medium dense, slightly moist, gray, SAND (SW); fine to coarse sand	
				44			Woody debris	
				58			Medium stiff, slightly moist, gray SILT (ML)	
				45				
		CC-02		10				
	▽ 11/14/2013			22				
				76			Wet	
				471			Medium dense, wet, gray SAND (SW); fine to coarse sand, petroleum-like odor	
							No recovery	
10							Medium stiff, wet, gray SILT (ML)	10
				69			Medium dense, wet, gray, slightly silty SAND (SW-SM); fine to coarse sand, petroleum-like odor	
				799				
				649				
			REC2-B13-12 REC2-B513-12	843				
		CC-03		94				
				397				
				51			Stiff, wet, gray brown, silty SAND (SM)	
				41				
			REC2-B13-14					
15							Bottom of boring 15 feet Note: Density and consistency was estimated based on sample observations.	15

Sampler Type:
- ◯ No Recovery
- ▌▌ Continuous Core

PID - Photoionization Detector (Headspace Measurement)
- ▼ Static Water Level
- ▽ Water Level (ATD)

Logged by: AHP
Approved by: SJG
Figure No. A- 196

_ENV BORING LOG KIMBERLY CLARK-EVERETT.GPJ July 31, 2014

Boring Log

Aspect CONSULTING

Project Number	Boring Number	Sheet
110207	REC2-B14	1 of 1

Project Name: Kimberly Clark
Location: Everett, WA
Driller/Method: Holt / Direct Push Probe
Sampling Method: Continous Core 2"

Ground Surface Elev.
Depth to Water (ft BGS)
Start/Finish Date 11/14/2013

Depth / Elevation (feet)	Borehole Completion	Sample Type/ID	Tests	PID (ppm)	Blows/ 6"	Material Type	Description	Depth (ft)
		CC-01		1			Loose, dry, light brown, silty, sandy GRAVEL (GM); fine rounded gravel, fine to coarse sand	
				2			Medium stiff, slightly moist, brown, sandy SILT (ML); fine to medium sand	
				2				
				2			Dense, slightly moist, dark brown, silty, GRAVEL (GM); fine to medium subangular gravel	
				2			Becomes medium dense, gray	
				2				
							No recovery	
5	Hydrated bentonite chip backfill							5
							Medium stiff, slightly moist, brownish gray, slightly gravelly SILT (ML)	
				1			Loose, dry, light gray, silty GRAVEL (GM); fine rounded gravel	
				2			Medium stiff, slightly moist, dark brown SILT (ML)	
			REC2-B14-6.5	2			Medium dense, slighlty moist, brown, silty SAND (SM)	
	11/14/2013			6			Wet	
		CC-02		1				
				20				
				1364			Becomes gray, petroleum-like odor	
				840				
			REC2-B14-9	1116				
							No recovery	
10								10
							Medium dense, wet, gray, silty SAND (SM); fine to coarse sand	
				195				
				68				
				39				
				27				
		CC-03		202				
				22				
			REC2-B14-13	22			Medium stiff, wet, gray SILT (ML)	
				21				
							No recovery	
15								15
							Bottom of boring 15 feet Note: Density and consistency was estimated based on sample observations.	

Sampler Type:
- No Recovery
- Continuous Core

PID - Photoionization Detector (Headspace Measurement)
- Static Water Level
- Water Level (ATD)

Logged by: AHP
Approved by: SJG
Figure No. A- 197

_ENV BORING LOG KIMBERLY CLARK-EVERETT.GPJ July 31, 2014

Boring Log

Aspect CONSULTING

Project Number	Boring Number	Sheet
110207	REC2-B15	1 of 1

Project Name: Kimberly Clark
Location: Everett, WA
Driller/Method: Holt / Direct Push Probe
Sampling Method: Continous Core 2"

Ground Surface Elev.:
Depth to Water (ft BGS):
Start/Finish Date: 11/15/2013

Depth / Elevation (feet)	Borehole Completion	Sample Type/ID	Tests	PID (ppm)	Blows/ 6"	Material Type	Description	Depth (ft)
				0.3			Medium dense, slightly moist, brown, silty SAND (SM); fine to medium sand	
			REC2-B15-2	0.2				
				0.1				
		CC-01		1			No recovery	
	11/15/2013							
5	Hydrated bentonite chip backfill							5
				69			Medium dense, wet, gray, slightly silty, gravelly SAND (SW-SM); fine to coarse subrounded sand, fine gravel, petroleum-like odor	
				95				
			REC2-B15-6.5	59				
				58			Stiff, moist, dark brown, organic SILT (OL)	
		CC-02		74				
				64			No recovery	
10								10
				18			Medium stiff, wet, gray silty SAND (SM); fine to medium subangular sand	
			REC2-B15-11	15				
				13				
				12				
		CC-03		17				
				11				
				10				
				10				
							No recovery	
15								15
							Bottom of boring 15 feet Note: Density and consistency was estimated based on sample observations.	

Sampler Type:
- ◯ No Recovery
- ▌▌ Continuous Core

PID - Photoionization Detector (Headspace Measurement)
- ▼ Static Water Level
- ▽ Water Level (ATD)

Logged by: AHP
Approved by: SJG
Figure No. A- 198

_ENV BORING LOG KIMBERLY CLARK-EVERETT.GPJ July 31, 2014

Boring Log

Aspect CONSULTING

Project Number	Boring Number	Sheet
110207	REC2-B16	1 of 1

Project Name: Kimberly Clark
Location: Everett, WA
Driller/Method: Holt / Direct Push Probe
Sampling Method: Continous Core 2"

Ground Surface Elev.
Depth to Water (ft BGS)
Start/Finish Date 11/15/2013

Depth / Elevation (feet)	Borehole Completion	Sample Type/ID	Tests	PID (ppm)	Blows/ 6"	Material Type	Description	Depth (ft)
0				0			Medium stiff, slightly moist, brown, slightly gravelly, silty SAND (SM); fine to coarse sand, fine subrounded gravel	0
1				0				1
				0				
2				0			Becomes gray, trace gravel	2
		CC-01		0			No recovery	
3								3
4								4
5	▽ 11/15/2013		REC2-B16-5				Same as above	5
				33			Medium dense, wet, gray SAND (SW); fine to coarse subrounded sand, slight petroleum-like odor	
6			REC2-B16-6	6				6
				9				
7	Hydrated bentonite chip backfill		REC2-B16-7	6			Medium stiff, wet, brown, ORGANIC SILT (OL), with woody debris	7
		CC-02		0				
8				49				8
							No recovery	
9								9
10							Refusal at 10 feet due to wood Note: Density and consistency was estimated based on sample observations.	10

Sampler Type:
- ◯ No Recovery
- ▌▌ Continuous Core

PID - Photoionization Detector (Headspace Measurement)
- ▼ Static Water Level
- ▽ Water Level (ATD)

Logged by: AHP
Approved by: SJG
Figure No. A- 199

_ENV BORING LOG KIMBERLY CLARK-EVERETT.GPJ July 31, 2014

Boring Log

Aspect CONSULTING

Project Number	Boring Number	Sheet
110207	REC2-B17	1 of 1

Project Name: Kimberly Clark
Location: Everett, WA
Driller/Method: Holt / Direct Push Probe
Sampling Method: Continous Core 2"

Ground Surface Elev.
Depth to Water (ft BGS)
Start/Finish Date 11/14/2013

Depth / Elevation (feet)	Borehole Completion	Sample Type/ID	Tests	PID (ppm)	Blows/ 6"	Material Type	Description	Depth (ft)
				0			Loose, dry, brown, slightly silty, slightly gravelly SAND (SW-SM); fine to coarse, subrounded sand	
				0				
				0			Medium stiff, slightly moist, reddish brown, silty SAND (SM); fine to medium sand	
		CC-01		0			No recovery	
5	Hydrated bentonite chip backfill							5
			REC2-B17-5.5	0			Medium stiff, slightly moist, brown, sandy SILT (ML); fine to very coarse, subrounded sand	
				0				
			REC2-B17-6.5	0			Wet	
	11/14/2013			0				
		CC-02		0			No recovery	
10								10
							Soft, wet, gray SILT (ML)	
			REC2-B17-11	0			Medium dense, wet, gray, slightly silty SAND (SW-SM); fine to coarse subrounded sand	
				0				
				0				
		CC-03		0				
							No recovery	
15								15
							Bottom of boring 15 feet Note: Density and consistency was estimated based on sample observations.	

Sampler Type:
- ◯ No Recovery
- ▌▌ Continuous Core

PID - Photoionization Detector (Headspace Measurement)
- ▼ Static Water Level
- ▽ Water Level (ATD)

Logged by: AHP
Approved by: SJG
Figure No. A- 200

_ENV BORING LOG KIMBERLY CLARK-EVERETT.GPJ July 31, 2014

Boring Log

Aspect CONSULTING

Project Number	Boring Number	Sheet
110207	REC2-B18	1 of 1

Project Name: Kimberly Clark
Location: Everett, WA
Driller/Method: Holt / Direct Push Probe
Sampling Method: Continous Core 2"

Ground Surface Elev.
Depth to Water (ft BGS)
Start/Finish Date 11/14/2013

Depth / Elevation (feet)	Borehole Completion	Sample Type/ID	Tests	PID (ppm)	Blows/ 6"	Material Type	Description	Depth (ft)
				36			Loose, dry, brown gray, silty, gravelly SAND (SM)	
			REC2-B18-1	1			Medium stiff, slightly moist, brown fine to medium SAND (SP)	
	▽ 11/14/2013			0			Becomes wet, coarse sand	
			REC2-B18-2	0			Medium stiff, wet, gray SILT (ML)	
		CC-01		9			Medium dense, wet, gray, silty SAND (SM); fine to coarse sand	
				0			No recovery	
5	Hydrated bentonite chip backfill							5
				0			Medium dense, wet, gray, silty SAND (SM); fine to coarse sand	
			REC2-B18-6	0				
				0				
				0				
		CC-02		0				
				0				
				0				
							No recovery	
10								10
							Medium dense, wet, gray, silty SAND (SM)	
							Soft, wet, gray SILT (ML)	
							Medium stiff, very moist, reddish brown, organic SILT (OL); with woody debris	
		CC-03						
							No recovery	
15								15
							Bottom of boring 15 feet Note: Density and consistency was estimated based on sample observations.	

Sampler Type:
◯ No Recovery
▌▌ Continuous Core

PID - Photoionization Detector (Headspace Measurement)
▼ Static Water Level
▽ Water Level (ATD)

Logged by: AHP
Approved by: SJG
Figure No. A- 201

_ENV BORING LOG KIMBERLY CLARK-EVERETT.GPJ July 31, 2014

Boring Log

Aspect CONSULTING

Project Number	Boring Number	Sheet
110207	REC2-B19	1 of 1

Project Name: Kimberly Clark
Location: Everett, WA
Driller/Method: Holt / Direct Push Probe
Sampling Method: Continous Core 2"

Ground Surface Elev.:
Depth to Water (ft BGS):
Start/Finish Date: 11/14/2013

Depth / Elevation (feet)	Borehole Completion	Sample Type/ID	Tests	PID (ppm)	Blows/ 6"	Material Type	Description	Depth (ft)
				0			Medium dense, slightly moist, light brown, slightly silty SAND (SW-SM); fine to coarse sand	
				0				
				0			Medium dense, slightly moist, brown, sandy, gravelly SILT (ML); fine gravel, fine to coarse sand	
				0				
		CC-01		0			No recovery	
5	Hydrated bentonite chip backfill							5
			REC2-B19-5.5	0			Medium dense, slightly moist, brown, sandy, gravelly SILT (ML); fine gravel, fine to coarse sand	
				0				
	▽ 11/14/2013			0			Wet	
			REC2-B19-7	0				
		CC-02		0				
				0			Becomes gray, with medium sand	
				0				
			REC2-B19-8.5					
							No recovery	
10								10
							Stiff, moist, gray SILT (ML)	
							Medium dense, wet, dark gray, silty GRAVEL (GM); medium subrounded gravel	
							Stiff, moist, brown organic SILT (OL)	
		CC-03					No recovery	
15								15
							Bottom of boring 15 feet Note: Density and consistency was estimated based on sample observations.	

Sampler Type:
- ◯ No Recovery
- ▌▌ Continuous Core

PID - Photoionization Detector (Headspace Measurement)
- ▼ Static Water Level
- ▽ Water Level (ATD)

Logged by: AHP
Approved by: SJG
Figure No. A- 202

_ENV BORING LOG KIMBERLY CLARK-EVERETT.GPJ July 31, 2014

Boring Log

Aspect CONSULTING

Project Number	Boring Number	Sheet
110207	REC2-B20	1 of 1

Project Name: Kimberly Clark
Location: Everett, WA
Driller/Method: Holt / Direct Push Probe
Sampling Method: Continous Core 2"

Ground Surface Elev.:
Depth to Water (ft BGS):
Start/Finish Date: 11/14/2013

Depth / Elevation (feet)	Borehole Completion	Sample Type/ID	Tests	PID (ppm)	Blows/ 6"	Material Type	Description	Depth (ft)
				0			Medium stiff, slightly moist, dark gray, silty, gravelly, SAND (SM)	
							Crushed crystalline rock	
			REC2-B20-1	0.2			Stiff, moist, gray, slightly gravelly SILT (ML)	
				0				
		CC-01		0			No recovery	
5	▽ 11/14/2013							5
				0			Soft, wet, gray, sandy gravelly SILT (ML); fine to medium sand Becomes slightly gravelly	
			REC2-B20-6	0.2				
				0.8			Stiff, moist, light brown and dark brown, organic SILT (OL), with woody debris	
	Hydrated bentonite chip backfill			0.7			Stiff, wet, black SILT (ML), with woody debris	
		CC-02		0			No recovery	
10								10
				0			Stiff, moist, black and brown, organic SILT (OL)	
				0				
				0			Dense, wet, gray, slightly silty SAND (SW-SM); fine to coarse subangular sand	
			REC2-B20-12	0				
		CC-03		0				
				0				
				0				
							No recovery	
15								15
							Bottom of boring 15 feet Note: Density and consistency was estimated based on sample observations.	

Sampler Type:
- ◯ No Recovery
- ▌▌ Continuous Core

PID - Photoionization Detector (Headspace Measurement)

- ▼ Static Water Level
- ▽ Water Level (ATD)

Logged by: AHP
Approved by: SJG
Figure No. A- 203

_ENV BORING LOG KIMBERLY CLARK-EVERETT.GPJ July 31, 2014

Boring Log

Aspect CONSULTING

Project Number	Boring Number	Sheet
110207	REC2-B21	1 of 1

Project Name: Kimberly Clark
Location: Everett, WA
Driller/Method: Holt / Direct Push Probe
Sampling Method: Continous Core 2"

Ground Surface Elev.
Depth to Water (ft BGS)
Start/Finish Date 11/14/2013

Depth / Elevation (feet)	Borehole Completion	Sample Type/ID	Tests	PID (ppm)	Blows/ 6"	Material Type	Description	Depth (ft)
				0			Loose, moist, dark brown, silty SAND (SM)	
	▽ 11/14/2013			0			Soft, wet, gray SILT (ML)	
				0				
		CC-01		0			No recovery	
5	Hydrated bentonite chip backfill							5
				0			Soft, wet, gray SILT (ML)	
				0			Becomes stiff	
				0			Medium dense, wet, gray SAND (SP); medium sand	
							Woody debris	
			REC2-B21-7	0			Medium dense, wet, gray SAND (SP); medium sand	
		CC-02		0			Stiff, wet, brown SILT (ML)	
				0				
				0			Becomes gray	
				0			Dense, wet, black, gravelly, silty SAND (SM); trace woody debris	
			REC2-B21-9				No recovery	
10								10
							Soft, wet, gray to black silty SAND (SM)	
			REC2-B21-11				Stiff, wet, black and brown, organic SILT (OL); with woody debris	
		CC-03						
							No recovery	
15								15
							Bottom of boring 15 feet Note: Density and consistency was estimated based on sample observations.	

Sampler Type:
◯ No Recovery
▌▌ Continuous Core

PID - Photoionization Detector (Headspace Measurement)
▼ Static Water Level
▽ Water Level (ATD)

Logged by: AHP
Approved by: SJG
Figure No. A- 204

_ENV BORING LOG KIMBERLY CLARK-EVERETT.GPJ July 31, 2014

Boring Log

Aspect CONSULTING

Project Number	Boring Number	Sheet
110207	REC2-B-22	1 of 1

Project Name: Kimberly Clark
Location: Everett, WA
Driller/Method: Holt / Direct Push Probe
Sampling Method: Continuous Core 3"

Ground Surface Elev.:
Depth to Water (ft BGS):
Start/Finish Date: 11/1/2013

Depth / Elevation (feet)	Borehole Completion	Sample Type/ID	Tests	PID (ppm)	Blows/ 6"	Material Type	Description	Depth (ft)
0							Concrete slab	
1							Dry, brown, gravelly, silty, SAND (SM)	1
			REC-2-B-22-1.5 REC1-MW-23-1.5	0				
2	▽ 11/1/2013		REC2-B-22-2 REC1-MW-23-2				Wet, brown, gravelly, silty, SAND (SM)	2
	3/8" hydrated bentonite chips 0' to 7'	CC-1		2.1			Wet, gray, silty, SAND (SM)	
3				1.7				3
							Wet, dark gray, SILT (ML)	
4		○					No recovery	4
5							Wet, gray, SILT (ML)	5
		CC-2	REC2-B-22-6 REC1-MW-23-6	14.1			Wet, gray, silty, SAND (SM) and silty, GRAVEL (GM); fine to coarse, subangular gravel	
6				64.2				6
7				24.8			Refusal at 7 feet	7

Sampler Type:
○ No Recovery
▌▌ Continuous Core

PID - Photoionization Detector (Headspace Measurement)
▼ Static Water Level
▽ Water Level (ATD)

Logged by: AHP
Approved by: SJG
Figure No. A- 205

_ENV BORING LOG KIMBERLY CLARK-EVERETT.GPJ July 31, 2014

Boring Log

Aspect CONSULTING

Project Number	Boring Number	Sheet
110207	REC2-MW-05	1 of 1

Project Name: Kimberly Clark
Location: Everett, WA
Driller/Method: Cascade Drilling / Direct Push Probe
Sampling Method: Continuous Core

Ground Surface Elev.: 15.4
Depth to Water (ft BGS):
Start/Finish Date: 5/29/2012

Depth / Elevation (feet)	Borehole Completion	Sample Type/ID	Tests	PID (ppm)	Blows/ 6"	Material Type	Description	Depth (ft)
15	8" Flush-mount monument set in concrete and thermos cap		REC2-MW-5-0-2	9.4			Post-holed to 2' for utilities Moist, dark gray to black, slightly gravelly, very silty SAND (SM); fine sand, petroleum-like odor, slight bleb sheen from 0' to 2' BGS	
	10/20 pre-pack Silica sand filter pack 1' to 12'		REC2-MW-5-2.5-3.5	0				
		CC-1		0			Wet, gray, slightly silty, slightly gravelly SAND (SP); poorly graded fine-to-medium sand	
5				0				5
10	2" Diameter PVC pre-packed .001 slot screen 2' to 12'			0				
		CC-2	REC2-MW-5-7-8	0				
				0			Black at 8'	
				0			Wet, gray SILT (ML) Wet, dark gray, SAND (SP); fine sand	
10				0			Wet, gray SILT (ML)	10
5				0			Wet, dark gray, slightly silty SAND (SP); fine sand	
		CC-3		0				
	Threaded cap			0				
	Slough			0			Numerous organics (shell fragments) from 12.5' to 13' BGS	
							Bottom of boring at 13' BGS	
15								15
0								

Sampler Type:
- ◯ No Recovery
- ▌▌ Continuous Core

PID - Photoionization Detector (Headspace Measurement)
- ▼ Static Water Level
- ▽ Water Level (ATD)

Logged by: MAR
Approved by: SJG
Figure No. A- 206

_ENV BORING LOG KIMBERLY CLARK-EVERETT.GPJ July 31, 2014

Boring Log

Aspect CONSULTING

Project Number	Boring Number	Sheet
110207	REC3-MW-01	1 of 1

Project Name: Kimberly Clark
Ground Surface Elev.: 15.02
Location: Everett, WA
Driller/Method: Cascade Drilling / Direct Push Probe
Depth to Water (ft BGS):
Sampling Method: Continuous Core
Start/Finish Date: 6/5/2012

Depth / Elevation (feet)	Borehole Completion	Sample Type/ID	Tests	PID (ppm)	Blows/ 6"	Material Type	Description	Depth (ft)
	8" Flush-mount monument and thermos cap Concrete surface seal 0' to 2'						Concrete-top 8" cored	
				0			Moist, brown SAND (SP); trace silt, trace gravel, fine-to-medium sand	
				0				
	3/8" Hydrated bentonite chips 2' to 4'	CC-1		0				
				0				
	10/20 pre-pack Silica sand filter pack 4' to 15'			0				
5 / 10				0				5
				0				
		CC-2		0				
			REC3-MW-1-8.5-9.5	0				
	2" Diameter PVC pre-packed .001 slot screen 5' to 15'			0			Wet, slightly silty	
10 / 5				0				10
				0				
		CC-3		0				
				0				
				0				
				0			1" lens of silt at 14' BGS	
15 / 0	Threaded cap			0			Bottom of boring at 15' BGS	15

Sampler Type:
- ◯ No Recovery
- ▌▌ Continuous Core

PID - Photoionization Detector (Headspace Measurement)
- ▼ Static Water Level
- ▽ Water Level (ATD)

Logged by: MAR
Approved by: SJG
Figure No. A- 207

_ENV BORING LOG KIMBERLY CLARK-EVERETT.GPJ July 31, 2014

Boring Log

Aspect CONSULTING

Project Number	Boring Number	Sheet
110207	REC3-MW-01R	1 of 1

Project Name: Kimberly Clark
Location: Everett, WA
Driller/Method: Holt / Direct Push Probe
Sampling Method: Continuous Core 3"

Ground Surface Elev.: 15.07
Depth to Water (ft BGS):
Start/Finish Date: 11/11/2013

Depth / Elevation (feet)	Borehole Completion	Sample Type/ID	Tests	PID (ppm)	Blows/ 6"	Material Type	Description	Depth (ft)
	8" Flush-mount monument and thermos cap Concrete surface seal 0' to 1'						Gravelly, sandy crushed concrete FILL	
		CC-1		0 0 0			Slightly moist, brown to dark brown, gravelly, silty, SAND (SM); fine to coarse sand, fine gravel	
	3/8" Hydrated bentonite chips 1' to 5'						No recovery	
5 / 10				0 0 0 0			Slightly moist, brown to dark brown, gravelly, silty, SAND (SM); fine to coarse sand, fine gravel	5
		CC-2					No recovery	
10 / 5	10/20 pre-pack Silica sand filter pack 5' to 16.25'			0 0 0			Wet, brown to dark brown, gravelly, silty, SAND (SM); fine to coarse sand, fine gravel	10
		CC-3					No recovery	
15 / 0	2" Diameter PVC pre-packed 10-slot screen 6' to 16' Threaded cap			0 0 0 0 0 0 0			Wet, gray, silty, gravelly, SAND (SM); fine to coarse sand, fine, subangular gravel	15
		CC-4					Wood chips at 17 feet	
	Slough 16.25' to 20'						No recovery	
20 / -5							Bottom of boring at 20 feet	20

Sampler Type:
- No Recovery
- Continuous Core

PID - Photoionization Detector (Headspace Measurement)
- Static Water Level
- Water Level (ATD)

Logged by: AHP
Approved by: SJG
Figure No. A- 208

_ENV BORING LOG KIMBERLY CLARK-EVERETT.GPJ July 31, 2014

Boring Log

Project Number	Boring Number	Sheet
110207	REC5-HA-01	1 of 1

Project Name: Kimberly Clark
Location: Everett, WA
Driller/Method: Aspect / Hand Auger
Sampling Method: Continuous Grab
Ground Surface Elev.
Depth to Water (ft BGS)
Start/Finish Date 9/5/2012

Depth / Elevation (feet)	Borehole Completion	Sample Type/ID	Tests	PID (ppm)	Blows/ 6"	Material Type	Description	Depth (ft)
	Backfilled with excavated material		REC5-H4-01-0-1				Asphalt	
			REC5-H4-01-1-2				Slightly moist, brown, SAND (SP); poorly graded fine to medium sand Becomes gravelly	
							Refusal at 2' BGS (concrete slab)	
5								5
10								10
15								15
20								20
25								25

Sampler Type:
- No Recovery
- Grab Sample

PID - Photoionization Detector (Headspace Measurement)
- Static Water Level
- Water Level (ATD)

Logged by: AET/ERP
Approved by: SJG
Figure No. A- 209

_ENV BORING LOG KIMBERLY CLARK-EVERETT.GPJ July 31, 2014

Boring Log

Project Number	Boring Number	Sheet
110207	REC5-HA-02	1 of 1

Project Name: Kimberly Clark
Location: Everett, WA
Driller/Method: Aspect / Hand Auger
Sampling Method: Continuous Grab
Ground Surface Elev.
Depth to Water (ft BGS)
Start/Finish Date 9/5/2012

Depth / Elevation (feet)	Borehole Completion	Sample Type/ID	Tests	PID (ppm)	Blows/ 6"	Material Type	Description	Depth (ft)
	Backfilled with excavated material		REC5-HA-02-0-1				Asphalt	
			REC5-HA-02-2-3				Slightly moist, brown, slightly gravelly SAND (SP); poorly graded fine to medium sand	
							Bottom of boring at 3' BGS	
5								5
10								10
15								15
20								20
25								25

Sampler Type:
- No Recovery
- Grab Sample

PID - Photoionization Detector (Headspace Measurement)
- Static Water Level
- Water Level (ATD)

Logged by: AET/ERP
Approved by: SJG
Figure No. A- 210

_ENV BORING LOG KIMBERLY CLARK-EVERETT.GPJ July 31, 2014

Boring Log

Project Number	Boring Number	Sheet
110207	REC5-HA-03	1 of 1

Project Name: Kimberly Clark
Location: Everett, WA
Driller/Method: Aspect / Hand Auger
Sampling Method: Continuous Grab
Ground Surface Elev.
Depth to Water (ft BGS)
Start/Finish Date 9/5/2012

Depth / Elevation (feet)	Borehole Completion	Sample Type/ID	Tests	PID (ppm)	Blows/ 6"	Material Type	Description	Depth (ft)
	Backfilled with excavated material		REC5-HA-03-0-1				Asphalt	
							Slightly moist, brown to gray, slightly silty SAND (SP-SM)	
			REC5-HA-03-2-3				Bottom of boring at 3' BGS	
5								5
10								10
15								15
20								20
25								25

Sampler Type:
- No Recovery
- Grab Sample

PID - Photoionization Detector (Headspace Measurement)
- Static Water Level
- Water Level (ATD)

Logged by: AET/ERP
Approved by: SJG
Figure No. A- 211

_ENV BORING LOG KIMBERLY CLARK-EVERETT.GPJ July 31, 2014

Boring Log

Aspect CONSULTING

Project Number	Boring Number	Sheet
110207	REC5-HA-04	1 of 1

Project Name: Kimberly Clark
Location: Everett, WA
Driller/Method: Aspect / Hand Auger
Sampling Method: Continuous Grab

Ground Surface Elev.:
Depth to Water (ft BGS):
Start/Finish Date: 9/5/2012

Depth / Elevation (feet)	Borehole Completion	Sample Type/ID	Tests	PID (ppm)	Blows/ 6"	Material Type	Description	Depth (ft)
	Backfilled with excavated material		REC5-HA-04- 0-1				Asphalt	
							Slightly moist, brown to gray, slightly gravelly SAND (SP)	
			REC5-HA-04- 2-3					
							Bottom of boring at 3' BGS	
5								5
10								10
15								15
20								20
25								25

Sampler Type:
- No Recovery
- Grab Sample

PID - Photoionization Detector (Headspace Measurement)
- Static Water Level
- Water Level (ATD)

Logged by: AET/ERP
Approved by: SJG
Figure No. A- 212

_ENV BORING LOG KIMBERLY CLARK-EVERETT.GPJ July 31, 2014

Boring Log

Aspect CONSULTING

Project Number	Boring Number	Sheet
110207	REC5-HA-05	1 of 1

Project Name: Kimberly Clark
Location: Everett, WA
Driller/Method: Aspect / Hand Auger
Sampling Method: Continuous Grab

Ground Surface Elev.
Depth to Water (ft BGS)
Start/Finish Date 9/5/2012

Depth / Elevation (feet)	Borehole Completion	Sample Type/ID	Tests	PID (ppm)	Blows/ 6"	Material Type	Description	Depth (ft)
	Backfilled with excavated material		REC5-HA-05-0-1				Asphalt	
							Slightly moist, brown to gray, slightly gravelly SAND (SP)	
			REC5-HA-05-2-3					
							Bottom of boring at 3' BGS	
5								5
10								10
15								15
20								20
25								25

Sampler Type:
- No Recovery
- Grab Sample

PID - Photoionization Detector (Headspace Measurement)
- Static Water Level
- Water Level (ATD)

Logged by: AET/ERP
Approved by: SJG
Figure No. A- 213

_ENV BORING LOG KIMBERLY CLARK-EVERETT.GPJ July 31, 2014

Boring Log

Aspect CONSULTING

Project Number	Boring Number	Sheet
110207	REC5-MW-01	1 of 1

Project Name: Kimberly Clark
Location: Everett, WA
Driller/Method: Cascade Drilling / Direct Push Probe
Sampling Method: Continuous Core

Ground Surface Elev.: 15.83
Depth to Water (ft BGS):
Start/Finish Date: 6/5/2012

Depth / Elevation (feet)	Borehole Completion	Sample Type/ID	Tests	PID (ppm)	Blows/ 6"	Material Type	Description	Depth (ft)
15	8" Flush-mount monument and thermos cap Concrete surface seal 0' to 2'			0			Concrete-cored to 1'	
							Moist, dark gray SAND (SP); trace gravel, fine-to-medium sand	
		CC-1		0.4				
				1.5				
	3/8" Hydrated bentonite chips 2' to 4'			7.5			Slight metallic sheen at 3' BGS, fine sand	
				137.5				
				60.5			Wood at 4' BGS	
	10/20 pre-pack Silica sand filter pack 4' to 15'			13.5				
5				1.5				5
10				1.2				
			REC5-MW-1-6.5-7.5				Wet, gray, silty SAND (SM); fine sand	
		CC-2		0.3				
				0.2				
	2" Diameter PVC pre-packed .001 slot screen 5' to 15'			0.2			Wet, gray, SAND (SP); poorly graded fine-to-medium sand, trace coarse sand	
10				0.2				10
5		CC-3					Wet, dark gray, very silty SAND (SM); fine sand, wood at 12.5' BGS	
							Wet, gray SILT (ML); frequent organics-shell fragments	
	Threaded cap						Wet, gray, very silty SAND (SM); fine sand	
15							Bottom of boring at 15' BGS	15
0								

Sampler Type:
- ◯ No Recovery
- ▌▌ Continuous Core

PID - Photoionization Detector (Headspace Measurement)
- ▼ Static Water Level
- ▽ Water Level (ATD)

Logged by: MAR
Approved by: SJG
Figure No. A- 214

_ENV BORING LOG KIMBERLY CLARK-EVERETT.GPJ July 31, 2014

Boring Log

Aspect CONSULTING

Project Number	Boring Number	Sheet
110207	REC5-MW-01R	1 of 1

Project Name: Kimberly Clark
Location: Everett, WA
Driller/Method: Cascade Drilling / Direct Push Probe
Sampling Method: Continuous Core 3"

Ground Surface Elev.: 16.22
Depth to Water (ft BGS):
Start/Finish Date: 11/11/2013

Depth / Elevation (feet)	Borehole Completion	Sample Type/ID	Tests	PID (ppm)	Blows/ 6"	Material Type	Description	Depth (ft)
	8" flush-mount monument and thermos cap Concrete surface seal 0' to 1'						Recycled demo debris	
				0			Moist, brown, SAND (SP); medium, subangular sand	
	3/8" hydrated bentonite chips 1' to 5'	CC-1		0			Slightly moist, light gray to gray, SILT (ML) with interbedded wood chips	
				0				
							No recovery	
5				0			Slightly moist, gray, SILT (ML)	5
				0				
				0				
	▽11/11/2013			0				
		CC-2		0			Becomes wet at 7.5 feet	
	10/20 pre-packed silica sand filter 5' to 16'			0			Wet, gray, SAND (SP); medium sand	
				0				
							No recovery	
10				0			Slightly moist, brown, very silty, SAND (SM)	10
				0				
				0			Wet, gray, SAND (SP); medium to coarse sand	
				0				
	2" diameter PVC pre-packed 10-slot screen 5.75' to 15.75'	CC-3		0			Wet, gray, slightly sandy, SILT (ML); fine sand	
				0				
				0				
				0				
				0				
15							No recovery	15
		CC-4						
	Threaded cap						Bottom of boring at 16 feet	

Sampler Type:
- ◯ No Recovery
- ▌▌ Continuous Core

PID - Photoionization Detector (Headspace Measurement)
- ▼ Static Water Level
- ▽ Water Level (ATD)

Logged by: AHP
Approved by: SJG
Figure No. A- 215

_ENV BORING LOG KIMBERLY CLARK-EVERETT.GPJ July 31, 2014

Boring Log

Aspect CONSULTING

Project Number	Boring Number	Sheet
110207	REC6-MW-01	1 of 1

Project Name: Kimberly Clark
Location: Everett, WA
Driller/Method: Cascade Drilling / Direct Push Probe
Sampling Method: Continuous Core

Ground Surface Elev.: 15.66
Depth to Water (ft BGS):
Start/Finish Date: 6/27/2012

Depth / Elevation (feet)	Borehole Completion	Sample Type/ID	Tests	PID (ppm)	Blows/ 6"	Material Type	Description	Depth (ft)
15	8" Flush-mount monument set in concrete and thermos cap						Concrete	
	3/8" Hydrated bentonite chips 1' to 1.5'						Pea gravel, white liquid at bottom of pea gravel	
	10/20 pre-pack Silica sand filter pack 1.5' to 12.5'	CC-1		7			Wet, brown, SAND (SP); poorly graded fine-to-medium sand	
				1			Pea gravel	
5				1			Wet, dark gray, sandy SILT (ML); trace gravel , strong sweet odor	5
10	2" Diameter PVC pre-packed .001 slot screen 2.5' to 12.5'	CC-2	REC6-MW-1-6	55				
		CC-3		20				
	Threaded cap			50				10
15				50			Bottom of boring at 12.5' BGS	15

Sampler Type:
- ◯ No Recovery
- ▌▌ Continuous Core

PID - Photoionization Detector (Headspace Measurement)
- ▼ Static Water Level
- ▽ Water Level (ATD)

Logged by: AET
Approved by: SJG
Figure No. A- 216

_ENV BORING LOG KIMBERLY CLARK-EVERETT.GPJ July 31, 2014

Boring Log

Aspect CONSULTING

Project Number	Boring Number	Sheet
110207	REC6-MW-02	1 of 1

Project Name: Kimberly Clark
Location: Everett, WA
Driller/Method: Cascade Drilling / Direct Push Probe
Sampling Method: Continuous Core

Ground Surface Elev.: 17.12
Depth to Water (ft BGS):
Start/Finish Date: 5/25/2012

Depth / Elevation (feet)	Borehole Completion	Sample Type/ID	Tests	PID (ppm)	Blows/ 6"	Material Type	Description	Depth (ft)
	8" Flush-mount monument and thermos cap Concrete surface seal 0' to 2'			0			Asphalt	
							Top 2' post-holed for utilities; Wood chips	
15	3/8" Hydrated bentonite chips 2' to 4'	CC-1		0			Moist, dark gray, sandy, very silty GRAVEL (GM); poorly graded fine-to-coarse gravel	
	10/20 pre-pack Silica sand filter pack 4' to 15'			0			Wood chips	
5				0			Wet, dark gray, very silty GRAVEL (GM); poorly graded fine-to-coarse subrounded gravel	5
10		CC-2		0				
	2" Diameter PVC pre-packed .001 slot screen 5' to 15'			0			Wet, gray and brown (mottled), slightly sandy, gravelly SILT (ML)	
10				0				10
				0			Wet, black to dark gray, very sandy, very silty GRAVEL (GM); poorly graded fine-to-coarse subrounded to subangular gravel; slight H2S odor	
5		CC-3		0				
				0				
	Threaded cap			0				
15				0			Bottom of boring at 15' BGS	15
0								

Sampler Type:
- ◯ No Recovery
- ▌▌ Continuous Core

PID - Photoionization Detector (Headspace Measurement)

- ▼ Static Water Level
- ▽ Water Level (ATD)

Logged by: MAR
Approved by: SJG
Figure No. A- 217

_ENV BORING LOG KIMBERLY CLARK-EVERETT.GPJ July 31, 2014

Boring Log

Aspect CONSULTING

Project Number	Boring Number	Sheet
110207	REC7-MW-01	1 of 1

Project Name: Kimberly Clark
Location: Everett, WA
Driller/Method: Cascade Drilling / Direct Push Probe
Sampling Method: Continuous Core

Ground Surface Elev.: 13.53
Depth to Water (ft BGS):
Start/Finish Date: 5/29/2012

Depth / Elevation (feet)	Borehole Completion	Sample Type/ID	Tests	PID (ppm)	Blows/ 6"	Material Type	Description	Depth (ft)
	8" Flush-mount monument and thermos cap Concrete surface seal 0' to 2'			0			Gravel fill; driller post-holed to 2' BGS for utilities	
				0			Moist, brown, silty, gravelly SAND (SM); fine sand, iron-staining	
10	3/8" Hydrated bentonite chips 2' to 4'	CC-1		0			Moist, gray SILT (ML)	
	10/20 pre-pack Silica sand filter pack 4' to 15'			0			Moist, gray SAND (SP); fine sand	
5				0				5
				0			Moist, brown SAND (SP); medium sand	
		CC-2		0			Woody debris at 7' BGS	
				0			Wet, gray SAND (SP); medium sand, rare organics-shell fragments	
5	2" Diameter PVC pre-packed .001 slot screen 5' to 15'			0				
10				0				10
							Trace to numerous organics 11' to 15' BGS	
		CC-3						
0								
15	Threaded cap						Bottom of boring at 15' BGS	15
-5								

Sampler Type:
- ◯ No Recovery
- ▌▌ Continuous Core

PID - Photoionization Detector (Headspace Measurement)
- ▼ Static Water Level
- ▽ Water Level (ATD)

Logged by: MAR
Approved by: SJG
Figure No. A- 218

_ENV BORING LOG KIMBERLY CLARK-EVERETT.GPJ July 31, 2014

Boring Log

Aspect CONSULTING

Project Number	Boring Number	Sheet
110207	REC7-MW-02	1 of 1

Project Name: Kimberly Clark
Location: Everett, WA
Driller/Method: Cascade Drilling / Direct Push Probe
Sampling Method: Continuous Core

Ground Surface Elev.: 15.49
Depth to Water (ft BGS):
Start/Finish Date: 5/25/2012

Depth / Elevation (feet)	Borehole Completion	Sample Type/ID	Tests	PID (ppm)	Blows/ 6"	Material Type	Description	Depth (ft)
15	8" Flush-mount monument and thermos cap Concrete surface seal 0' to 2'			0			Asphalt	
				0			Moist, brown, sandy, very gravelly SILT (ML); fine subrounded gravel	
	3/8" Hydrated bentonite chips 2' to 3'	CC-1		0				
	10/20 pre-pack Silica sand filter pack 3' to 15'			0				
5				0			Black, charred debris	5
10				0			Wet, brown, silty SAND (SM); fine sand	
				0			Color changes to gray at 7'	
		CC-2		0			Wet, dark gray SAND (SP); medium sand	
	2" Diameter PVC pre-packed .001 slot screen 4' to 14'			0				
				0				
10				0				10
5				0				
		CC-3		0				
				0				
	Threaded cap			0				
	Slough							
15				0			Bottom of boring at 15' BGS	15
0								

Sampler Type:
- ◯ No Recovery
- ▌▌ Continuous Core

PID - Photoionization Detector (Headspace Measurement)
- ▼ Static Water Level
- ▽ Water Level (ATD)

Logged by: MAR
Approved by: SJG
Figure No. A- 219

_ENV BORING LOG KIMBERLY CLARK-EVERETT.GPJ July 31, 2014

Boring Log

Aspect CONSULTING

Project Number	Boring Number	Sheet
110207	REC7-MW-03	1 of 1

Project Name: Kimberly Clark
Ground Surface Elev.: 15.48
Location: Everett, WA
Driller/Method: Cascade Drilling / Direct Push Probe
Depth to Water (ft BGS):
Sampling Method: Continuous Core
Start/Finish Date: 6/4/2012

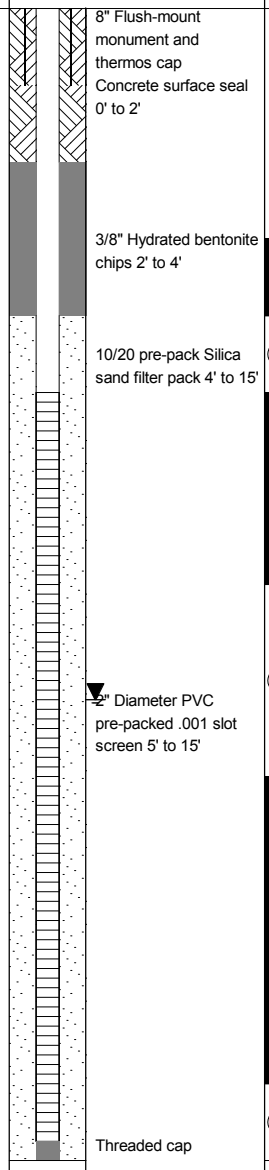

Depth / Elevation (feet)	PID (ppm)	Blows/ 6"	Material Type	Description	Depth (ft)
15	0			Post-holed to 3' for utilities	
	0				
	0			Concrete rubble	
	0			Moist, brown, SILT (ML)	
5				Numerous wood organics at 4.5'	5
10	0			Concrete rubble	
	0				
	0				
	0			Wet, brown, silty SAND (SM); fine sand	
	0			Wet, brown SAND (SP); fine sand 9 to 9.5', grades to medium sand from 10' to 15'	
10	0				10
5	0				
	0				
	0				
	0				
	0			Gravelly at 14.5'	
15	0			Bottom of boring at 15' BGS	15
0					

Sampler Type:
- No Recovery
- Continuous Core

PID - Photoionization Detector (Headspace Measurement)
- Static Water Level
- Water Level (ATD)

Logged by: MAR
Approved by: SJG
Figure No. A- 220

_ENV BORING LOG KIMBERLY CLARK-EVERETT.GPJ July 31, 2014

Boring Log

Aspect CONSULTING

Project Number	Boring Number	Sheet
110207	REC7-MW-04	1 of 1

Project Name: Kimberly Clark
Location: Everett, WA
Driller/Method: Cascade Drilling / Direct Push Probe
Sampling Method: Continuous Core

Ground Surface Elev.: 12.92
Depth to Water (ft BGS):
Start/Finish Date: 5/24/2012

Depth / Elevation (feet)	Borehole Completion	Sample Type/ID	Tests	PID (ppm)	Blows/ 6"	Material Type	Description	Depth (ft)
	8" Flush-mount monument and thermos cap						Asphalt	
	Concrete surface seal 0' to 3'			0.1			Moist, brown SAND (SP); trace gravel, fine sand; brick, concrete rubble debris	
		CC-1		0.2				
10				0.3				
	3/8" Hydrated bentonite chips 3' to 4'			0.4			Moist, brown SILT(ML)	
	10/20 pre-pack Silica sand filter pack 4' to 15'			0.4			Very moist, brown to gray sandy GRAVEL (GP): trace silt and concrete rubble, coarse, subrounded to subangular gravel	
5								5
		CC-2						
5							Wet, brown to gray, slightly gravelly SAND (SP); medium to coarse sand	
	2" Diameter PVC pre-packed .001 slot screen 5' to 15'							
10							No recovery 10' to 15'	10
		CC-3						
0								
	Threaded cap							
15							Bottom of boring at 15' BGS	15
-5								

Sampler Type:
- ◯ No Recovery
- ▌▌ Continuous Core

PID - Photoionization Detector (Headspace Measurement)
- ▼ Static Water Level
- ▽ Water Level (ATD)

Logged by: MAR
Approved by: SJG
Figure No. A- 221

_ENV BORING LOG KIMBERLY CLARK-EVERETT.GPJ July 31, 2014

Boring Log

Aspect CONSULTING

Project Number	Boring Number	Sheet
110207	SHB-B01	1 of 1

Project Name: Kimberly Clark
Location: Everett, WA
Driller/Method: Holt / Direct Push Probe
Sampling Method: Continous Core 2"

Ground Surface Elev.
Depth to Water (ft BGS)
Start/Finish Date 11/19/2013

Depth / Elevation (feet)	Borehole Completion	Sample Type/ID	Tests	PID (ppm)	Blows/ 6"	Material Type	Description	Depth (ft)
							Recycled demo debris	
							No recovery	
		CC-01						
5	Hydrated bentonite chip backfill							5
				0			Medium dense, slightly moist, light brown, silty SAND (SM); fine sand	
				0				
			SHB-B1-6.5	0				
	▽ 11/19/2013			0				
		CC-02	SHB-B1-7.5	0				
				0			Becomes wet, gray	
				0				
							Medium dense, wet, gray SAND (SW); fine to very coarse sand	
							No recovery	
10								10
							Medium dense, wet, gray SAND (SW); fine to coarse sand	
			SHB-B1-10.5	0				
				0				
				0				
				0				
		CC-03		0				
				0				
				0				
				0				
				0				
							No recovery	
15								15
							Bottom of boring 15 feet Note: Density and consistency was estimated based on sample observations.	

Sampler Type:
- ◯ No Recovery
- ▌▌ Continuous Core

PID - Photoionization Detector (Headspace Measurement)
- ▼ Static Water Level
- ▽ Water Level (ATD)

Logged by: AHP
Approved by: SJG
Figure No. A- 222

_ENV BORING LOG KIMBERLY CLARK-EVERETT.GPJ July 31, 2014

Boring Log

Aspect CONSULTING

Project Number	Boring Number	Sheet
110207	SHB-B02	1 of 1

Project Name: Kimberly Clark
Location: Everett, WA
Driller/Method: Holt / Direct Push Probe
Sampling Method: Continous Core 2"

Ground Surface Elev.
Depth to Water (ft BGS)
Start/Finish Date 11/19/2013

Depth / Elevation (feet)	Borehole Completion	Sample Type/ID	Tests	PID (ppm)	Blows/ 6"	Material Type	Description	Depth (ft)
							Recycled demo debris	
				0			Medium dense, slightly moist, light brown, silty SAND (SM); fine sand	
		CC-01		0				
				0				
				0			No recovery	
5	Hydrated bentonite chip backfill							5
				0			Medium dense, slightly moist, light brown, silty SAND (SM); fine sand	
			SHB-B2-6	0				
				0				
				0				
		CC-02		0			Wet	
	▽ 11/19/2013			0				
			SHB-B2-8	0			Becomes gray	
				0				
			SHB-B2-9	0				
							Medium dense, wet, gray SAND (SW); fine to coarse sand	
							No recovery	
10								10
							Medium dense, wet, light brown, silty SAND (SM); fine sand	
							Medium dense, wet, gray SAND (SW); fine to coarse sand	
		CC-03					Medium dense, wet, gray silty SAND (SM); very fine sand	
							No recovery	
15							Bottom of boring 15 feet Note: Density and consistency was estimated based on sample observations.	15

Sampler Type:
- ◯ No Recovery
- ▌▌ Continuous Core

PID - Photoionization Detector (Headspace Measurement)
- ▼ Static Water Level
- ▽ Water Level (ATD)

Logged by: AHP
Approved by: SJG
Figure No. A- 223

_ENV BORING LOG KIMBERLY CLARK-EVERETT.GPJ July 31, 2014

Boring Log

Aspect CONSULTING

Project Number	Boring Number	Sheet
110207	SHB-B03	1 of 1

Project Name: Kimberly Clark
Location: Everett, WA
Driller/Method: Holt / Direct Push Probe
Sampling Method: Continous Core 2"

Ground Surface Elev.
Depth to Water (ft BGS)
Start/Finish Date 11/19/2013

Depth / Elevation (feet)	Borehole Completion	Sample Type/ID	Tests	PID (ppm)	Blows/ 6"	Material Type	Description	Depth (ft)
							Recycled demo debris	
				0			Stiff, slightly moist, gray, silty SAND (SM); fine sand	
		CC-01		0				
			SHB-B3-3				No recovery	
5	Hydrated bentonite chip backfill						Stiff, slightly moist, gray, silty SAND (SM); fine sand	5
				0			Medium dense, slightly moist, brown, gravelly, silty SAND (SM); fine to medium sand, medium subrounded gravel	
			SHB-B3-6	0			Medium stiff, wet, gray SILT (ML)	
				0				
				0			Medium dense, wet, light brown SAND (SP); medium sand, trace fine gravel	
	▽ 11/19/2013	CC-02		0				
				0				
				0				
							Woody debris	
							No recovery	
10							Medium dense, wet, brown, gravelly, silty SAND (SM); medium sand, fine gravel	10
				0				
			SHB-B3-11	0			Medium dense, wet, gray, SAND (SW); fine to coarse sand	
				0				
				0			Medium stiff, wet, gray, silty SAND (SM); fine sand	
		CC-03		0				
				0				
							No recovery	
15							Bottom of boring 15 feet Note: Density and consistency was estimated based on sample observations.	15

Sampler Type:
- ◯ No Recovery
- ▌▌ Continuous Core

PID - Photoionization Detector (Headspace Measurement)
- ▼ Static Water Level
- ▽ Water Level (ATD)

Logged by: AHP
Approved by: SJG
Figure No. A- 224

_ENV BORING LOG KIMBERLY CLARK-EVERETT.GPJ July 31, 2014

Boring Log

Aspect CONSULTING

Project Number	Boring Number	Sheet
110207	SHB-B04	1 of 1

Project Name: Kimberly Clark
Location: Everett, WA
Driller/Method: Holt / Direct Push Probe
Sampling Method: Continous Core 2"

Ground Surface Elev.
Depth to Water (ft BGS)
Start/Finish Date 11/19/2013

Depth / Elevation (feet)	Borehole Completion	Sample Type/ID	Tests	PID (ppm)	Blows/ 6"	Material Type	Description	Depth (ft)
		CC-01					Recycled demo debris	
				0			Stiff, slightly moist, gray, slightly gravelly, sandy SILT (SM); fine sand	
							No recovery	
5	Hydrated bentonite chip backfill							5
			SHB-B4-5.5	0			Stiff, moist, gray, slightly gravelly, silty SAND (SM); fine to medium sand	
				0				
				0			Becomes medium dense, wet, red brown	
				0				
		CC-02	SHB-B4-7.5	0			No recovery	
	11/19/2013			0				
10								10
				0			Medium dense, wet, red brown, slightly gravelly, silty SAND (SM); medium sand	
				0				
			SHB-B4-11	0			Medium dense, wet, gray SAND (SW); fine to coarse, subangular sand	
				0				
		CC-03		0				
				0				
				0				
							No recovery	
15								15
							Bottom of boring 15 feet Note: Density and consistency was estimated based on sample observations.	

Sampler Type:
- ◯ No Recovery
- ▌▌ Continuous Core

PID - Photoionization Detector (Headspace Measurement)
- ▼ Static Water Level
- ▽ Water Level (ATD)

Logged by: AHP
Approved by: SJG
Figure No. A- 225

_ENV BORING LOG KIMBERLY CLARK-EVERETT.GPJ July 31, 2014

Boring Log

Aspect CONSULTING

Project Number	Boring Number	Sheet
110207	SHB-MW-01	1 of 1

Project Name: Kimberly Clark
Location: Everett, WA
Driller/Method: Holt / Direct Push Probe
Sampling Method: Continuous Core 3"

Ground Surface Elev.: 15.99
Depth to Water (ft BGS):
Start/Finish Date: 10/24/2013

Depth / Elevation (feet)	Borehole Completion	Sample Type/ID	Tests	PID (ppm)	Blows/ 6"	Material Type	Description	Depth (ft)
15	8" Flush-mount monument and thermos cap Concrete surface seal 0' to 1' 3/8" Hydrated bentonite chips 1' to 2'						Recycled demo debris	
				0			Moist, gray, silty, sandy, GRAVEL (GM)	
		CC-1		0				
			SHB-MW-1-3	233			Moist, black, ORGANIC SILT (OL); numerous wood chips	
				0			Moist, red brown, gravelly, SAND (SP); fine to medium sand	
							No recovery	
5							Moist, red brown, gravelly, SAND (SP); fine to medium sand with white and yellow slag-like material	5
10	20/40 pre-pack Silica sand filter pack 2' to 13.25'			0				
	▽ 10/24/2013			0			Wet, gray, SAND (SP); fine sand, trace gravel	
		CC-2	SHB-MW-1-7.5	0				
	2" Diameter PVC pre-packed 10-slot screen 3' to 13'						No recovery	
10							Wet, gray, SAND (SP); fine sand, trace gravel	10
5				0				
				0			Wet, gray, slightly gravelly, SAND (SP); medium to coarse sand	
		CC-3		0				
	Threaded cap		SHB-MW-1-13	0				
	Slough						No recovery	
15							Wet, gray, slightly gravelly, SAND (SP); medium to coarse sand	15
0				0			Wet, gray, silty, SAND (SM); fine sand, organics (wood chips)	
				0			Wet, gray, slightly gravelly, SAND (SP); medium to coarse sand	
		CC-4		0			Wet, gray, SAND (SP); fine sand	
				0				
				0			lense of silty SAND (SM)	
							No recovery	
20							Bottom of boring at 20 feet	20

Sampler Type:
- ◯ No Recovery
- ▌▌ Continuous Core

PID - Photoionization Detector (Headspace Measurement)
- ▼ Static Water Level
- ▽ Water Level (ATD)

Logged by: AET
Approved by: SJG
Figure No. A- 226

_ENV BORING LOG KIMBERLY CLARK-EVERETT.GPJ July 31, 2014

Boring Log

Aspect CONSULTING

Project Number	Boring Number	Sheet
110207	SHB-MW-02	1 of 1

Project Name: Kimberly Clark
Location: Everett, WA
Driller/Method: Holt / Direct Push Probe
Sampling Method: Continuous Core 3"

Ground Surface Elev.: 14.90
Depth to Water (ft BGS):
Start/Finish Date: 10/24/2013

Depth / Elevation (feet)	Borehole Completion	Sample Type/ID	Tests	PID (ppm)	Blows/ 6"	Material Type	Description	Depth (ft)
0	8" Flush-mount monument and thermos cap Concrete surface seal 0' to 1' 3/8" Hydrated bentonite chips 1' to 4'	CC-1		0			Moist, gray, gravelly, SAND (SP); fine to medium sand	0
				0			Moist, dark brown, sandy, SILT (ML); angular contact with below	
				0			Moist, brown, SAND (SP); fine to medium sand	
							No recovery	
5 / 10	20/40 pre-pack Silica sand filter pack 4' to 15'		SHB-MW-2-5				Moist, brown, SAND (SP); fine to medium sand	5
				0			Moist, dark brown, ORGANIC SILT (OL); wood chips	
	10/24/2013		SHB-MW-2-7	0			Very moist to wet, gray, SAND (SP); fine sand	
		CC-2		0			Wet, brown and gray, SAND (SP); medium sand, trace gravel	
				0			Grades to gray	
	2" Diameter PVC pre-packed 10-slot screen 5' to 15'						No recovery	
10 / 5							Wet, brown and gray, SAND (SP); medium sand, trace gravel	10
				0			Very moist to wet, brown, silty, sandy, GRAVEL (GM); fine sand	
				0			Wet, gray, SAND (SP); medium sand, slightly gravelly	
		CC-3		0				
			SHB-MW-2-13	0				
				0				
15 / 0	Threaded cap						Becomes medium to coarse sand	15
	Slough			0				
		CC-4		0				
				0				
				0				
20 / -5							Bottom of well at 20 feet	20

Sampler Type:
- No Recovery
- Continuous Core

PID - Photoionization Detector (Headspace Measurement)
- Static Water Level
- Water Level (ATD)

Logged by: AET
Approved by: SJG
Figure No. A- 227

_ENV BORING LOG KIMBERLY CLARK-EVERETT.GPJ July 31, 2014

Monitoring Well Construction Log

Aspect CONSULTING

Project Number	Well Number	Sheet
110207	SHB-MW-101	1 of 1

Project Name: Kimberly Clark
Location: Everett, WA
Driller/Method: Holt / Direct Push Probe-Limited Access
Sampling Method: Continuous Core

Ground Surface Elev.:
Top of Casing Elev.:
Depth to Water (ft BGS):
Start/Finish Date: 4/23/2014

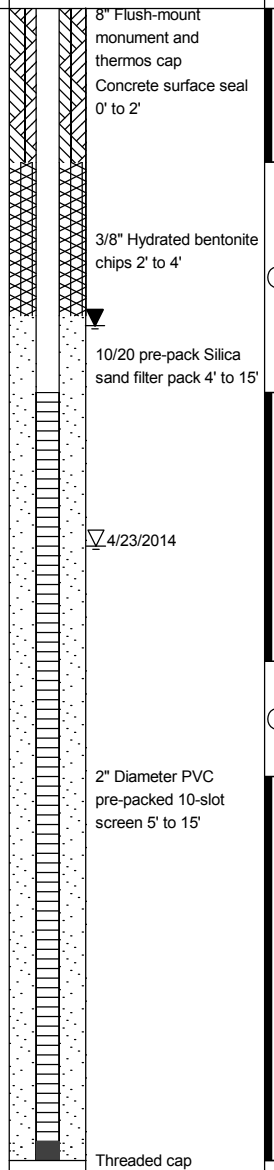

Depth / Elevation (feet)	Sample Type/ID	Tests	PID (ppm)	Blows/ 6"	Material Type	Description	Depth (ft)
			0.0			Recycled demo debris	
			0.0			Moist, dark brown, sandy GRAVEL (GP); fine to coarse sand, fine gravel 3" thick layer of wood	
	S1					No recovery	
5							5
			0.0			Wet, gray, sandy SILT (ML); fine sand	
			0.0				
	S2		0.0				
						Wet, gray brown, SAND (SW)	
			0.0			No recovery	
10							10
			0.0			Wet, gray SAND (SW); fine to coarse sand	
			0.0				
	S3		0.0				
			0.0				
			0.0				
15							15
						Bottom of boring at 15' bgs	

Sampler Type:
- ◯ No Recovery
- ▮ Continuous Core

PID - Photoionization Detector
- ▼ Static Water Level
- ▽ Water Level (ATD)

Logged by: AET/MML
Approved by: SJG
Figure No. A-

MONITORING WELL KIMBERLY CLARK-EVERETT.GPJ October 14, 2015

Monitoring Well Construction Log

Aspect CONSULTING

Project Number	Well Number	Sheet
110207	SHB-MW-102	1 of 1

Project Name: Kimberly Clark
Location: Everett, WA
Driller/Method: Holt / Direct Push Probe-Limited Access
Sampling Method: Continuous Core

Ground Surface Elev.:
Top of Casing Elev.:
Depth to Water (ft BGS):
Start/Finish Date: 4/23/2014

Depth / Elevation (feet)	Borehole Completion	Sample Type/ID	Tests	PID (ppm)	Blows/ 6"	Material Type	Description	Depth (ft)
	8" Flush-mount monument and thermos cap Concrete surface seal 0' to 2'			0.0			Recycled demo debris	
				0.0			Moist, gray, sandy SILT (ML); fine sand, trace gravel	
		S1		0.0			becomes brown	
	3/8" Hydrated bentonite chips 2' to 4'						No recovery	
	10/20 pre-pack Silica sand filter pack 4' to 15'							
5								5
	▽4/23/2014			0.0			Moist, brown and gray mottled, sandy SILT (ML); fine sand	
		S2		0.0				
	▼			0.0			Becomes wet	
				0.0			Becomes gray	
				0.0				
10	2" Diameter PVC pre-packed 10-slot screen 5' to 15'							10
				0.0			Wet, gray and brown mottled SAND (SW); fine to coarse sand, trace gravel	
		S3		0.0				
				0.0				
				0.0			No recovery	
15	Threaded cap						Bottom of boring at 15' bgs	15

Sampler Type:
- ◯ No Recovery
- ▮ Continuous Core

PID - Photoionization Detector
- ▼ Static Water Level
- ▽ Water Level (ATD)

Logged by: AET/MML
Approved by: SJG
Figure No. A-

_MONITORING WELL_KIMBERLY CLARK-EVERETT.GPJ October 14, 2015

Boring Log

Aspect CONSULTING

Project Number	Boring Number	Sheet
110207	TM-B01	1 of 1

Project Name: Kimberly Clark
Location: Everett, WA
Driller/Method: Holt / Direct Push Probe
Sampling Method: Continous Core 2"

Ground Surface Elev.
Depth to Water (ft BGS)
Start/Finish Date 11/22/2013

Depth / Elevation (feet)	Borehole Completion	Sample Type/ID	Tests	PID (ppm)	Blows/ 6"	Material Type	Description	Depth (ft)
							No recovery	
		CC-01					Recycled demo debris	
				0			Moist, brown, slightly silty, gravelly SAND (SP-SM); fine sand, scattered burnt wood	
			TM-B1-4.5	0				
5	Hydrated bentonite chip backfill							5
				0				
			TM-B1-6				Moist to wet, dark gray, silty SAND (SM); trace gravel, fine to medium sand	
				0				
	11/22/2013	CC-02	TM-B1-7.5	0				
				0				
							No recovery	
10								10
							Wet, gray, slightly silty SAND (SP-SM); fine to medium sand, trace gravel	
			TM-B1-11	0				
		CC-03					No recovery	
				0				
15								15
							Bottom of boring 15 feet Note: Density and consistency was estimated based on sample observations.	

Sampler Type:
- ○ No Recovery
- ▌ Continuous Core

PID - Photoionization Detector (Headspace Measurement)

- ▼ Static Water Level
- ▽ Water Level (ATD)

Logged by: AET
Approved by: SJG
Figure No. A- 228

_ENV BORING LOG KIMBERLY CLARK-EVERETT.GPJ July 31, 2014

Boring Log

Aspect CONSULTING

Project Number	Boring Number	Sheet
110207	TM-B02	1 of 1

Project Name: Kimberly Clark
Location: Everett, WA
Driller/Method: Holt / Direct Push Probe
Sampling Method: Continous Core 2"

Ground Surface Elev.
Depth to Water (ft BGS)
Start/Finish Date 11/22/2013

Depth / Elevation (feet)	Borehole Completion	Sample Type/ID	Tests	PID (ppm)	Blows/ 6"	Material Type	Description	Depth (ft)
							No recovery	
		CC-01					Recycled demo debris	
			TM-B2-4.5	0			Moist, brown, gravelly, silty SAND (SM); fine sand	
5	Hydrated bentonite chip backfill							5
	▽ 11/22/2013			0			Wet, dark gray, sandy GRAVEL (GP)	
			TM-B2-6.5				No recovery	
		CC-02		0				
10			TM-B2-10				Wet, dark gray/black, slightly sandy GRAVEL (GP); crushed rock, crushed brick, wood debris	10
				0				
		CC-03					No recovery	
				0				
15							Bottom of boring 15 feet Note: Density and consistency was estimated based on sample observations.	15

Sampler Type:
- ◯ No Recovery
- ▌▌ Continuous Core

PID - Photoionization Detector (Headspace Measurement)
- ▼ Static Water Level
- ▽ Water Level (ATD)

Logged by: AET
Approved by: SJG
Figure No. A- 229

_ENV BORING LOG KIMBERLY CLARK-EVERETT.GPJ July 31, 2014

Boring Log

Aspect CONSULTING

Project Number	Boring Number	Sheet
110207	TM-B03	1 of 1

Project Name: Kimberly Clark
Location: Everett, WA
Driller/Method: Holt / Direct Push Probe
Sampling Method: Continous Core 2"
Ground Surface Elev.
Depth to Water (ft BGS)
Start/Finish Date 11/21/2013

Depth / Elevation (feet)	Borehole Completion	Sample Type/ID	Tests	PID (ppm)	Blows/ 6"	Material Type	Description	Depth (ft)
							No recovery	
		CC-01		0			Recycled demo debris	
5	Hydrated bentonite chip backfill		TM-B3-5.5	0			Moist, brown SAND (SP)	5
				0			Moist, brown, silty SAND (SM); fine sand	
	▽ 11/21/2013		TM-B3-7	0			Very moist to wet, brown SAND (SP)	
		CC-02		0			Becomes gray	
				0			No recovery	
10				0			Wet, gray SAND (SP); medium sand, shells	10
		CC-03	TM-B3-10	0			No recovery	
15				0			Bottom of boring 15 feet Note: Density and consistency was estimated based on sample observations.	15

Sampler Type:
- ◯ No Recovery
- ▌▌ Continuous Core

PID - Photoionization Detector (Headspace Measurement)
- ▼ Static Water Level
- ▽ Water Level (ATD)

Logged by: AET
Approved by: SJG
Figure No. A- 230

_ENV BORING LOG KIMBERLY CLARK-EVERETT.GPJ July 31, 2014

Boring Log

Aspect CONSULTING

Project Number	Boring Number	Sheet
110207	TM-B04	1 of 1

Project Name: Kimberly Clark
Location: Everett, WA
Driller/Method: Holt / Direct Push Probe
Sampling Method: Continous Core 2"
Ground Surface Elev.
Depth to Water (ft BGS)
Start/Finish Date 12/5/2013

Depth / Elevation (feet)	Borehole Completion	Sample Type/ID	Tests	PID (ppm)	Blows/ 6"	Material Type	Description	Depth (ft)
		CC-01					Recycled demo debris	
5	▽12/5/2013						No recovery	5
	Hydrated bentonite chip backfill		TM-B4-6.5				Stiff, moist, gray SILT (ML)	
		CC-02					No recovery	
10			TM-B4-10				Stiff, moist, gray SILT (ML)	10
							Woody debris	
		CC-03					No recovery	
15							Woody debris	15
			TM-B4-15.5				Medium dense, wet, gray, silty, gravelly SAND (SM); fine to medium gravel, fine to coarse sand	
			TM-B4-17				No recovery	
		CC-04						
20							Bottom of boring 20 feet Note: Density and consistency was estimated based on sample observations.	20

Sampler Type:
- ○ No Recovery
- ▌ Continuous Core

PID - Photoionization Detector (Headspace Measurement)
- ▼ Static Water Level
- ▽ Water Level (ATD)

Logged by: AHP
Approved by: SJG
Figure No. A- 231

_ENV BORING LOG KIMBERLY CLARK-EVERETT.GPJ July 31, 2014

Boring Log

Aspect CONSULTING

Project Number	Boring Number	Sheet
110207	TM-B05	1 of 1

Project Name: Kimberly Clark
Location: Everett, WA
Driller/Method: Holt / Direct Push Probe
Sampling Method: Continous Core 2"

Ground Surface Elev.
Depth to Water (ft BGS)
Start/Finish Date 11/21/2013

Depth / Elevation (feet)	Borehole Completion	Sample Type/ID	Tests	PID (ppm)	Blows/ 6"	Material Type	Description	Depth (ft)
							No recovery	
		CC-01					Recycled demo debris	
5	Hydrated bentonite chip backfill							5
	▽ 11/21/2013		TM-B5-5.5	0			Moist, gray, sandy GRAVEL (GP); fine to medium sand, coarse gravel and cobbles	
			TM-B5-6.5	0			Wet, gray SAND (SP); fine sand, trace gravel	
		CC-02		0				
							No recovery	
10								10
			TM-B5-10.5	0			Wet, gray SAND (SP); fine sand, trace gravel	
		CC-03		0				
				0			Wood	
15								15
							Bottom of boring 15 feet Note: Density and consistency was estimated based on sample observations.	

Sampler Type:
- ◯ No Recovery
- ▌▌ Continuous Core

PID - Photoionization Detector (Headspace Measurement)
- ▼ Static Water Level
- ▽ Water Level (ATD)

Logged by: AET
Approved by: SJG
Figure No. A- 232

_ENV BORING LOG KIMBERLY CLARK-EVERETT.GPJ July 31, 2014

Boring Log

Aspect CONSULTING

Project Number	Boring Number	Sheet
110207	TM-B06	1 of 1

Project Name: Kimberly Clark
Location: Everett, WA
Driller/Method: Holt / Direct Push Probe
Sampling Method: Continous Core 2"

Ground Surface Elev.
Depth to Water (ft BGS)
Start/Finish Date 11/21/2013

Depth / Elevation (feet)	Borehole Completion	Sample Type/ID	Tests	PID (ppm)	Blows/ 6"	Material Type	Description	Depth (ft)
0							No recovery	0
1								1
2		CC-01					Recycled demo debris	2
3								3
4			TM-B6-4				Moist, brown, slightly gravelly SAND (SP); fine to medium sand	4
			TM-B6-4.5					
5	Hydrated bentonite chip backfill							5
	▽ 11/21/2013		TM-B6-5.5 TM-B505-5.5					
6								6
7		CC-02	TM-B6-7.5					7
8							Wet, gray, very sandy SILT (ML); fine sand	8
							Wet, gray, clayey SILT (ML)	
9							Wet, gray, SAND (SP); medium sand, trace gravel	9
10							No recovery	10
							Bottom of boring 10 feet Note: Density and consistency was estimated based on sample observations.	

Sampler Type:
- ○ No Recovery
- ▌▌ Continuous Core

PID - Photoionization Detector (Headspace Measurement)
- ▼ Static Water Level
- ▽ Water Level (ATD)

Logged by: AET
Approved by: SJG
Figure No. A- 233

_ENV BORING LOG KIMBERLY CLARK-EVERETT.GPJ July 31, 2014

Boring Log

Aspect CONSULTING

Project Number	Boring Number	Sheet
110207	TM-B07	1 of 1

Project Name: Kimberly Clark
Location: Everett, WA
Driller/Method: Holt / Direct Push Probe
Sampling Method: Continous Core 2"

Ground Surface Elev.:
Depth to Water (ft BGS):
Start/Finish Date: 11/21/2013

Depth / Elevation (feet)	Borehole Completion	Sample Type/ID	Tests	PID (ppm)	Blows/ 6"	Material Type	Description	Depth (ft)
0							No recovery	0
1								1
2							Recycled demo debris	2
3		CC-01						3
4				0			Moist, brown, slightly silty, gravelly SAND (SP-SM); fine to medium sand	4
			TM-B7-4.5	0				
5	Hydrated bentonite chip backfill						Wood at 4.8'	5
				0				
6								6
			TM-B7-6.5	0				
7								7
		CC-02		0			Grades to gray with shell fragments	
8								8
				0				
9							Grades to moist, brown, silty, gravelly SAND (SM); fine to medium sand	9
							No recovery	
10							Bottom of boring 10 feet Note: Density and consistency was estimated based on sample observations.	10

Sampler Type:
- ◯ No Recovery
- ▌▌ Continuous Core

PID - Photoionization Detector (Headspace Measurement)

- ▼ Static Water Level
- ▽ Water Level (ATD)

Logged by: AET
Approved by: SJG
Figure No. A- 234

_ENV BORING LOG KIMBERLY CLARK-EVERETT.GPJ July 31, 2014

Boring Log

Aspect CONSULTING

Project Number	Boring Number	Sheet
110207	TM-B08	1 of 1

Project Name: Kimberly Clark
Location: Everett, WA
Driller/Method: Holt / Direct Push Probe
Sampling Method: Continous Core 2"
Ground Surface Elev.
Depth to Water (ft BGS)
Start/Finish Date 11/22/2013

Depth / Elevation (feet)	Borehole Completion	Sample Type/ID	Tests	PID (ppm)	Blows/ 6"	Material Type	Description	Depth (ft)
							Recycled demo debris	
				0			Moist, brown, SAND (SP); fine to medium sand, trace gravel	
1			TM-B8-1					1
				0				
2								2
		CC-01		0				
3	▽ 11/22/2013		TM-B8-3				No recovery	3
4								4
5	Hydrated bentonite chip backfill						Wet, brown SAND (SP); fine to medium sand, trace gravel	5
6				0			Becomes gray, medium sand	6
7				0			Grades to medium to coarse sand	7
		CC-02		0				
8				0				8
							No recovery	
9								9
10							Bottom of boring 10 feet Note: Density and consistency was estimated based on sample observations.	10

Sampler Type:
- ○ No Recovery
- ▌ Continuous Core

PID - Photoionization Detector (Headspace Measurement)
- ▼ Static Water Level
- ▽ Water Level (ATD)

Logged by: AET
Approved by: SJG
Figure No. A- 235

_ENV BORING LOG KIMBERLY CLARK-EVERETT.GPJ July 31, 2014

Boring Log

Aspect CONSULTING

Project Number	Boring Number	Sheet
110207	TM-B09	1 of 1

Project Name: Kimberly Clark
Location: Everett, WA
Driller/Method: Holt / Direct Push Probe
Sampling Method: Continous Core 2"
Ground Surface Elev.:
Depth to Water (ft BGS):
Start/Finish Date: 11/22/2013

Depth / Elevation (feet)	Borehole Completion	Sample Type/ID	Tests	PID (ppm)	Blows/ 6"	Material Type	Description	Depth (ft)
0							Recycled demo debris	0
							No recovery	
1								1
2				0			Moist, brown SAND (SP); medium sand, trace gravel	2
		CC-01	TM-B9-2.5					
3				0				3
4				0				4
			TM-B9-4.5					
5	Hydrated bentonite chip backfill							5
6	▽ 11/22/2013			0			Wet	6
							Wet, gray, gravelly SAND (SP); medium sand	
7				0				7
		CC-02		0				
8				0			Trace gravel at 8'	8
9				0			Wet, gray, silty SAND (SM); fine sand, wood debris	9
							No recovery	
10							Bottom of boring 10 feet Note: Density and consistency was estimated based on sample observations.	10

Sampler Type:
○ No Recovery
▌▌ Continuous Core

PID - Photoionization Detector (Headspace Measurement)
▼ Static Water Level
▽ Water Level (ATD)

Logged by: AET
Approved by: SJG
Figure No. A- 236

_ENV BORING LOG KIMBERLY CLARK-EVERETT.GPJ July 31, 2014

Boring Log

Aspect CONSULTING

Project Number	Boring Number	Sheet
110207	TM-B10	1 of 1

Project Name: Kimberly Clark
Location: Everett, WA
Driller/Method: Holt / Direct Push Probe
Sampling Method: Continous Core 2"

Ground Surface Elev.
Depth to Water (ft BGS)
Start/Finish Date 11/21/2013

Depth / Elevation (feet)	Borehole Completion	Sample Type/ID	Tests	PID (ppm)	Blows/ 6"	Material Type	Description	Depth (ft)
1							Recycled demo debris	1
2								2
3		CC-01						3
4							No recovery	4
5	Hydrated bentonite chip backfill		TM-B10-5.5				Moist to wet, brown, slightly gravelly SAND (SP); fine to medium sand	5
6				0			Wet, gray SAND (SP); fine sand, numerous shell fragments	6
7				0				7
8		CC-02	TM-B10-7.5	0 0			Grades to fine to medium sand at 7.5'	8
9							No recovery	9
10							Bottom of boring 10 feet Note: Density and consistency was estimated based on sample observations.	10

Sampler Type:
- ◯ No Recovery
- ▌▌ Continuous Core

PID - Photoionization Detector (Headspace Measurement)
- ▼ Static Water Level
- ▽ Water Level (ATD)

Logged by: AET
Approved by: SJG
Figure No. A- 237

_ENV BORING LOG KIMBERLY CLARK-EVERETT.GPJ July 31, 2014

Boring Log

Aspect CONSULTING

Project Number	Boring Number	Sheet
110207	TM-B11	1 of 1

Project Name: Kimberly Clark
Location: Everett, WA
Driller/Method: Holt / Direct Push Probe
Sampling Method: Continous Core 2"
Ground Surface Elev.
Depth to Water (ft BGS)
Start/Finish Date 11/21/2013

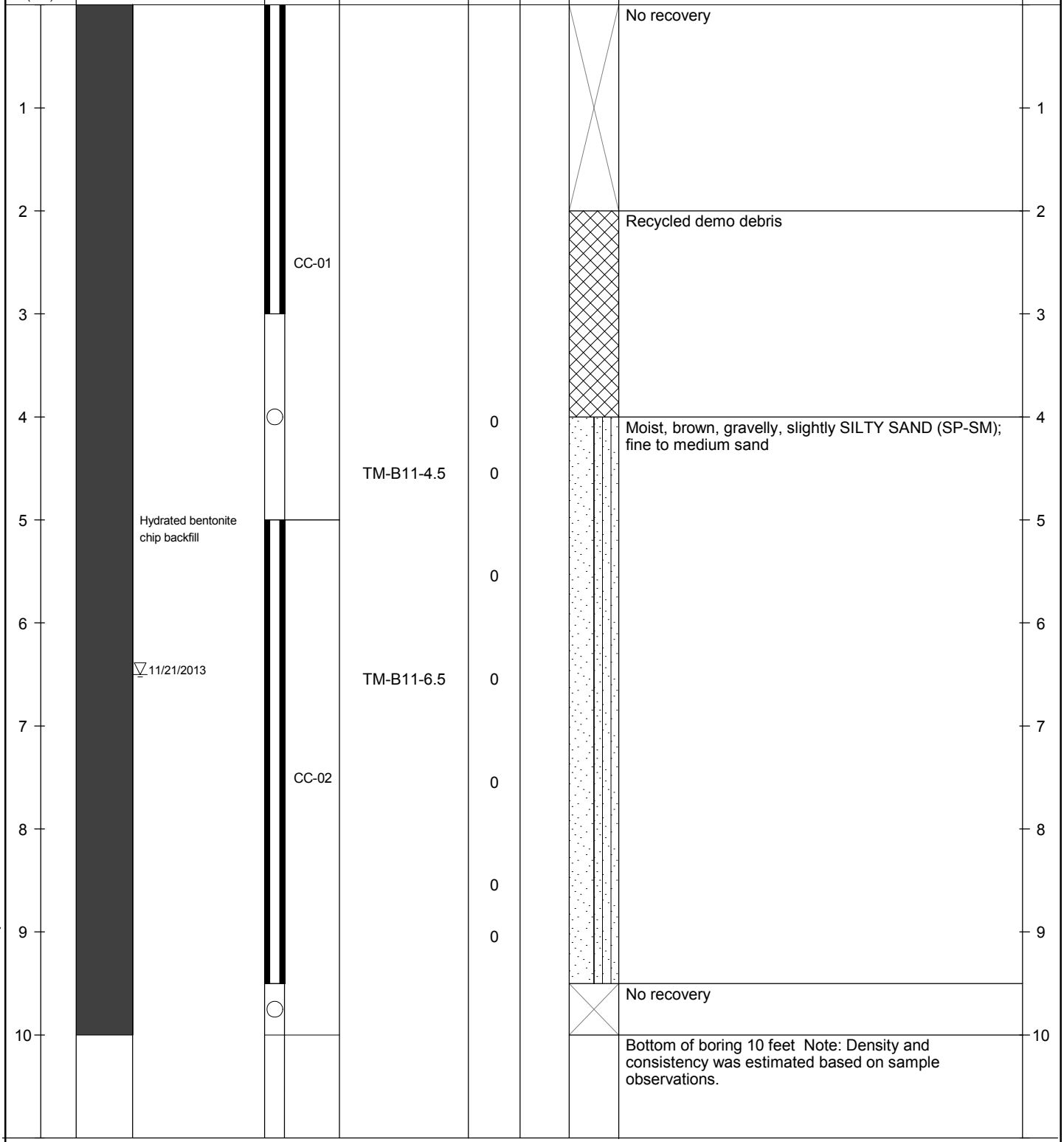

Sampler Type:
- No Recovery
- Continuous Core

PID - Photoionization Detector (Headspace Measurement)
- Static Water Level
- Water Level (ATD)

Logged by: AET
Approved by: SJG
Figure No. A- 238

_ENV BORING LOG KIMBERLY CLARK-EVERETT.GPJ July 31, 2014

Boring Log

Aspect CONSULTING

Project Number	Boring Number	Sheet
110207	TM-B12	1 of 1

Project Name: Kimberly Clark
Location: Everett, WA
Driller/Method: Holt / Direct Push Probe
Sampling Method: Continous Core 2"
Ground Surface Elev.
Depth to Water (ft BGS)
Start/Finish Date 11/21/2013

Depth / Elevation (feet)	Borehole Completion	Sample Type/ID	Tests	PID (ppm)	Blows/ 6"	Material Type	Description	Depth (ft)
0							No recovery	0
1								1
2							Recycled demo debris	2
3		CC-01						3
4				0			Moist, brown, slightly silty, gravelly SAND (SP-SM); fine to medium sand	4
			TM-B12-4.5					
5	Hydrated bentonite chip backfill							5
6				0				6
			TM-B12-6.5					
7				0				7
		CC-02		0			No recovery	
8								8
9								9
10							Bottom of boring 10 feet Note: Density and consistency was estimated based on sample observations.	10

Sampler Type:
- ◯ No Recovery
- ▌▌ Continuous Core

PID - Photoionization Detector (Headspace Measurement)
- ▼ Static Water Level
- ▽ Water Level (ATD)

Logged by: AET
Approved by: SJG
Figure No. A- 239

_ENV BORING LOG KIMBERLY CLARK-EVERETT.GPJ July 31, 2014

Boring Log

Aspect CONSULTING

Project Number	Boring Number	Sheet
110207	TM-MW-01	1 of 1

Project Name: Kimberly Clark
Location: Everett, WA
Driller/Method: Holt / Direct Push Probe
Sampling Method: Continuous Core 3"

Ground Surface Elev.: 15.48
Depth to Water (ft BGS):
Start/Finish Date: 10/22/2013

Depth / Elevation (feet)	Borehole Completion	Sample Type/ID	Tests	PID (ppm)	Blows/ 6"	Material Type	Description	Depth (ft)
15	8" Flush-mount monument and thermos cap Concrete surface seal 0' to 1' 3/8" Hydrated bentonite chips 1' to 2'						Recycled demo debris	
							Dry, gray and light brown, slightly silty, SAND (SP-SM) and GRAVEL (GP-GM); medium to coarse sand, fine to medium gravel	
		CC-1					No recovery	
5	▽ 10/22/2013							5
10							Wet, gray, SILT (ML)	
	20/40 pre-pack Silica sand filter pack 2' to 13.25'						Wet, dark gray SAND (SP); medium sand	
		CC-2					No recovery	
	2" Diameter PVC pre-packed 10-slot screen 3' to 13'		TM-MW-1-9.5					
10							Wet, dark gray, very silty, SAND (SM)	10
5							Wood chips	
			TM-MW-1-12					
		CC-3						
	Threaded cap							
	Slough						No recovery	
15							Wood chips	15
0								
		CC-4					No recovery	
							Bottom of boring at 18 feet	

Sampler Type:
- ◯ No Recovery
- ▌▌ Continuous Core

PID - Photoionization Detector (Headspace Measurement)
- ▼ Static Water Level
- ▽ Water Level (ATD)

Logged by: AHP
Approved by: SJG
Figure No. A- 240

_ENV BORING LOG KIMBERLY CLARK-EVERETT.GPJ July 31, 2014

Boring Log

Aspect CONSULTING

Project Number	Boring Number	Sheet
110207	TM-MW-02	1 of 1

Project Name: Kimberly Clark
Location: Everett, WA
Driller/Method: Holt / Direct Push Probe
Sampling Method: Continuous Core 3"

Ground Surface Elev.: 18.28
Depth to Water (ft BGS):
Start/Finish Date: 10/23/2013

Depth / Elevation (feet)	Borehole Completion	Sample Type/ID	Tests	PID (ppm)	Blows/ 6"	Material Type	Description	Depth (ft)
	8" Flush-mount monument and thermos cap Concrete surface seal 0' to 1' 3/8" Hydrated bentonite chips 1' to 2'						Recycled demo debris	
		CC-1					Dry, light brown to light gray, silty, gravelly, SAND (SM); fine to coarse sand, fine to coarse gravel	
15			TM-MW-2-4				Slightly moist, dark gray, SILT (ML); trace gravel, trace woody debris	
							Dry, white, GRAVEL (GP); pulverized rock	
							No recovery	
5							Dry, white and green gray, silty, sandy, GRAVEL (GM); fine to coarse sand, fine to coarse gravel, pulverized rock	5
	20/40 pre-pack Silica sand filter pack 2' to 13.25'						Slightly moist, dark gray, SAND (SP); fine sand	
			TM-MW-2-6.5					
		CC-2					Slightly moist, dark gray, slightly sandy, SILT (ML); fine sand	
			TM-MW-2-8				Dry, red, crushed BRICK	
10							Slightly moist, black, gravelly, SILT (ML); woody debris	
	2" Diameter PVC pre-packed 10-slot screen 3' to 13'						No recovery	
	▽ 10/23/2013							
10							Wet, gray, slightly sandy, gravelly, SILT (ML)	10
			TM-MW-2-10.5				Moist, slightly silty, SAND (SP-SM) and GRAVEL (GP-GM); medium to coarse sand, fine gravel	
							Wood chips	
		CC-3						
	Threaded cap							
5							No recovery	
	Slough							
15							Wood chips	15
		CC-4						
							No recovery	
0							Bottom of boring at 18 feet	

Sampler Type:
- ○ No Recovery
- ▌▌ Continuous Core

PID - Photoionization Detector (Headspace Measurement)
- ▼ Static Water Level
- ▽ Water Level (ATD)

Logged by: AHP
Approved by: SJG
Figure No. A- 241

_ENV BORING LOG KIMBERLY CLARK-EVERETT.GPJ July 31, 2014

Boring Log

Aspect CONSULTING

Project Number	Boring Number	Sheet
110207	TM-MW-03	1 of 1

Project Name: Kimberly Clark
Location: Everett, WA
Driller/Method: Holt / Direct Push Probe
Sampling Method: Continuous Core 3"

Ground Surface Elev.: 18.67
Depth to Water (ft BGS):
Start/Finish Date: 10/22/2013

Depth / Elevation (feet)	Borehole Completion	Sample Type/ID	Tests	PID (ppm)	Blows/ 6"	Material Type	Description	Depth (ft)
	8" Flush-mount monument and thermos cap Concrete surface seal 0' to 1' 3/8" Hydrated bentonite chips 1' to 2'						Recycled demo debris, hand cleared	
		CC-1					Dry, gray, sandy, silty, GRAVEL (GM); gravel up to 2"	
15							No recovery	
5							Slightly moist, brown to tan, slightly silty, gravelly, SAND (SP-SM)	5
	20/40 pre-pack Silica sand filter pack 2' to 13.25'						Wet, black and tan and gray, silty, SAND (SM); fine to coarse subangular sand	
	▽ 10/22/2013	CC-2	TM-MW-3-7					
			TM-MW-3-8				No recovery	
10	2" Diameter PVC pre-packed 10-slot screen 3' to 13'							
			TM-MW-3-10				Wood chips	10
		CC-3						
	Threaded cap						No recovery	
5	Slough							
15							Wood chips	15
		CC-4						
							Wet, black, SAND (SP); medium to coarse, subangular sand	
							No recovery	
0							Bottom of boring at 18 feet	

Sampler Type:
- ◯ No Recovery
- ▌▌ Continuous Core

PID - Photoionization Detector (Headspace Measurement)
- ▼ Static Water Level
- ▽ Water Level (ATD)

Logged by: AHP
Approved by: SJG
Figure No. A- 242

_ENV BORING LOG KIMBERLY CLARK-EVERETT.GPJ July 31, 2014

Boring Log

Aspect CONSULTING

Project Number	Boring Number	Sheet
110207	TM-MW-04	1 of 1

Project Name: Kimberly Clark
Location: Everett, WA
Driller/Method: Holt / Direct Push Probe
Sampling Method: Continuous Core 3"

Ground Surface Elev.: 18.87
Depth to Water (ft BGS):
Start/Finish Date: 10/23/2013

Depth / Elevation (feet)	Borehole Completion	Sample Type/ID	Tests	PID (ppm)	Blows/ 6"	Material Type	Description	Depth (ft)
	8" Flush-mount monument and thermos cap Concrete surface seal 0' to 1' 3/8" Hydrated bentonite chips 1' to 4'	CC-1					Recycled demo debris	
15							No recovery	
5	20/40 pre-pack Silica sand filter pack 4' to 15'							5
							Dry, red brown, SAND and GRAVEL (SP-GW): medium to coarse, subrounded sand, fine to coarse, gravel	
		CC-2	TM-MW-4-7				Slightly moist, gravelly, silty, SAND (SM); fine to coarse sand	
	▽ 10/23/2013		TM-MW-4-7.75 TM-MW-4-8				Wet, light to dark gray, SAND (SP); fine sand	
10	2" Diameter PVC pre-packed 10-slot screen 5' to 15'						No recovery	
							Wet, gray, SAND (SP), fine sand	10
		CC-3	TM-MW-4-10				Wood chips	
5							No recovery	
15	Threaded cap						Wood chips	15
	Slough						Moist, dark gray, silty SAND and GRAVEL (SM-GM); medium to coarse, subangular sand, fine gravel	
		CC-4						
0							No recovery	
20							Bottom of boring at 20 feet	20

Sampler Type:
- ○ No Recovery
- ▌▌ Continuous Core

PID - Photoionization Detector (Headspace Measurement)
- ▼ Static Water Level
- ▽ Water Level (ATD)

Logged by: AHP
Approved by: SJG
Figure No. A- 243

_ENV BORING LOG KIMBERLY CLARK-EVERETT.GPJ July 31, 2014

Boring Log

Aspect CONSULTING

Project Number	Boring Number	Sheet
110207	TM-MW-05	1 of 1

Project Name: Kimberly Clark
Location: Everett, WA
Driller/Method: Holt / Direct Push Probe
Sampling Method: Continuous Core 3"

Ground Surface Elev.: 15.26
Depth to Water (ft BGS):
Start/Finish Date: 10/23/2013

Depth / Elevation (feet)	Borehole Completion	Sample Type/ID	Tests	PID (ppm)	Blows/ 6"	Material Type	Description	Depth (ft)
15	8" Flush-mount monument and thermos cap Concrete surface seal 0' to 1' 3/8" Hydrated bentonite chips 1' to 4'						FILL: Recycled demo debris	
		CC-1	TM-MW-5-2	0			Moist, mottled gray and white and dark gray, gravelly, SAND (SP); fine to medium sand	
				0			Moist, gray, interbedded SAND (SP) and silty, SAND (SM); fine sand	
				0			No recovery	
5 10	▽ 10/23/2013		TM-MW-5-5				Wet, dark gray, SAND (SP); fine to medium sand, numerous shell fragments, trace fibrous organics	5
	20/40 pre-pack Silica sand filter pack 4' to 19'	CC-2		0				
				0				
				0			No recovery	
10 5	2" Diameter PVC pre-packed 10-slot screen 5' to 19'						Wet, dark gray, SAND (SP); fine to medium sand, numerous shell fragments, trace fibrous organics	10
		CC-3		0				
				0			2" layer of unidentified yellow slag-like material	
				0			Wet, black, unknown material with white crushed concrete and brick	
							No recovery	
15 0	Threaded cap Slough		TM-MW-5-15				Wet, black, GRAVEL (GP); organics (wood chips), sheen, oil odor	15
							Wood chips, no odor or sheen	
		CC-4		0			Wet, gray, SAND (SP); fine to medium sand, no odor or sheen	
			TM-MW-5-18	0			No recovery	
20 -5							Bottom of boring at 20 feet	20

Sampler Type:
- ◯ No Recovery
- ▌▌ Continuous Core

PID - Photoionization Detector (Headspace Measurement)
- ▼ Static Water Level
- ▽ Water Level (ATD)

Logged by: AHP, AET
Approved by: SJG
Figure No. A- 244

_ENV BORING LOG KIMBERLY CLARK-EVERETT.GPJ July 31, 2014

Boring Log

Aspect CONSULTING

Project Number	Boring Number	Sheet
110207	TM-MW-06	1 of 1

Project Name: Kimberly Clark
Location: Everett, WA
Driller/Method: Holt / Direct Push Probe
Sampling Method: Continuous Core 3"

Ground Surface Elev.: 16.47
Depth to Water (ft BGS):
Start/Finish Date: 10/23/2013

Depth / Elevation (feet)	Borehole Completion	Sample Type/ID	Tests	PID (ppm)	Blows/ 6"	Material Type	Description	Depth (ft)
	8" Flush-mount monument and thermos cap Concrete surface seal 0' to 1' 3/8" Hydrated bentonite chips 1' to 4'						Asphalt debris	
15			TM-MW-6-1	0			Moist, gray brown, slightly silty, sandy, GRAVEL (GP); fine sand	
		CC-1		0			Moist, brown, gravelly, silty, SAND (SM) with brick debris; fine sand, fine gravel	
							No recovery	
5	20/40 pre-pack Silica sand filter pack 4' to 15'						Moist, brown, gravelly, silty, SAND (SM) with brick debris; fine sand, fine gravel	5
10			TM-MW-6-6.5	0				
		CC-2		0			No recovery	
	▽10/23/2013 2" Diameter PVC pre-packed 10-slot screen 5' to 15'							
10								10
5		CC-3		0				
15	Threaded cap						Wet, dark gray, SAND (SP); fine to medium sand	15
	Slough			0				
0				0			Wood chips at 17 feet	
		CC-4	TM-MW-6-15	0				
				0			Wood chips and abundant seashells at 18 feet	
				0				
							No recovery	
20							Bottom of boring at 20 feet	20

Sampler Type:
- ◯ No Recovery
- ▌▌ Continuous Core

PID - Photoionization Detector (Headspace Measurement)
- ▼ Static Water Level
- ▽ Water Level (ATD)

Logged by: AHP, AET
Approved by: SJG
Figure No. A- 245

_ENV BORING LOG KIMBERLY CLARK-EVERETT.GPJ July 31, 2014

Boring Log

Aspect CONSULTING

Project Number	Boring Number	Sheet
110207	UG-MW-01	1 of 1

Project Name: Kimberly Clark
Ground Surface Elev.: 17.23
Location: Everett, WA
Driller/Method: Cascade Drilling / Direct Push Probe
Depth to Water (ft BGS):
Sampling Method: Continuous Core
Start/Finish Date: 6/27/2012

Depth / Elevation (feet)	Borehole Completion	Sample Type/ID	Tests	PID (ppm)	Blows/ 6"	Material Type	Description	Depth (ft)
0 / 17	8" Flush-mount monument and thermos cap Concrete surface seal 0' to 2'						Asphalt debris, crushed rock, and gravel fill	0
1 / 16				0.4				1
2 / 15	3/8" Hydrated bentonite chips 2' to 3'	CC-1		0				2
3 / 14	2/12 pre-pack Silica sand filter pack 3' to 14'			0			Slightly moist, dark gray SAND (SP); fine sand	3
4 / 13				0			Wood debris at 4'	4
5 / 12	▼			0				5
6 / 11				0			Wet, dark gray, slightly clayey, slightly sandy SILT (ML); numerous wood organic debris from 8' to 12.5'	6
7 / 10		CC-2		0				7
8 / 9	2" Diameter PVC pre-packed .001 slot screen 4' to 14'			0			Difficult to drill through wood, hole moved over 2' east to re-drill	8
9 / 8				0				9
10 / 7				0				10
11 / 6				0				11
12 / 5		CC-3		0				12
13 / 4				0			Wet, gray with iron-oxide staining, SAND (SW); trace fine gravel, fine to coarse sand	13
14 / 3	Threaded cap Slough			0				14
15 / 2				0			Bottom of boring at 15' BGS	15
16 / 1								16
17 / 0								17
18 / -1								18
19 / -2								19
20 / -3								20
21 / -4								21
22 / -5								22
23 / -6								23
24 / -7								24
25 / -8								25
26 / -9								26
27 / -10								27
28 / -11								28
29 / -12								29

Sampler Type:
○ No Recovery
▌▌ Continuous Core

PID - Photoionization Detector (Headspace Measurement)
▼ Static Water Level
▽ Water Level (ATD)

Logged by: AET
Approved by: SJG
Figure No. A- 246

_ENV BORING LOG KIMBERLY CLARK-EVERETT.GPJ July 31, 2014

Boring Log

Aspect CONSULTING

Project Number	Boring Number	Sheet
110207	UG-MW-02	1 of 1

Project Name: Kimberly Clark
Location: Everett, WA
Driller/Method: Cascade Drilling / Direct Push Probe
Sampling Method: Continuous Core

Ground Surface Elev.: 18.3
Depth to Water (ft BGS):
Start/Finish Date: 6/27/2012

Depth / Elevation (feet)	Borehole Completion	Sample Type/ID	Tests	PID (ppm)	Blows/ 6"	Material Type	Description	Depth (ft)
0 / 18	8" Flush-mount monument and thermos cap					Concrete	Concrete	0
1 / 17	Concrete surface seal 0' to 1'			0.4			Moist, dark gray SAND (SP); brick debris	1
2 / 16	3/8" Hydrated bentonite chips 1' to 2'	CC-1		0				2
3 / 15	2/12 pre-pack Silica sand filter pack 2' to 13'			0			Moist to wet, dark gray SILT (ML); trace gravel	3
4 / 14				0				4
5 / 13				0				5
6 / 12				0				6
7 / 11		CC-2		0				7
8 / 10	2" Diameter PVC pre-packed .001 slot screen 3' to 13'			0			Wet, dark, gray, slightly gravelly SAND (SW); poorly graded fine-to-coarse sand	8
9 / 9				0			Orange-gray color 9' to 12.5'	9
10 / 8								10
11 / 7								11
12 / 6		CC-3						12
13 / 5	Threaded cap							13
14 / 4	Slough						Wet, dark gray, sandy SILT (ML); fine sand	14
15 / 3							Bottom of boring at 15' BGS	15
16 / 2								16
17 / 1								17
18 / 0								18
19 / -1								19
20 / -2								20
21 / -3								21
22 / -4								22
23 / -5								23
24 / -6								24
25 / -7								25
26 / -8								26
27 / -9								27
28 / -10								28
29 / -11								29

Sampler Type:
- ◯ No Recovery
- ▌▌ Continuous Core

PID - Photoionization Detector (Headspace Measurement)
- ▼ Static Water Level
- ▽ Water Level (ATD)

Logged by: AET
Approved by: SJG
Figure No. A- 247

_ENV BORING LOG KIMBERLY CLARK-EVERETT.GPJ July 31, 2014

Boring Log

Aspect CONSULTING

Project Number	Boring Number	Sheet
110207	UG-MW-02R	1 of 1

Project Name: Kimberly Clark
Location: Everett, WA
Driller/Method: Holt Drilling / Direct Push Probe
Sampling Method: Continuous Core

Ground Surface Elev.: 19.18
Depth to Water (ft BGS):
Start/Finish Date: 10/31/2013

Depth / Elevation (feet)	Borehole Completion	Sample Type/ID	Tests	PID (ppm)	Blows/ 6"	Material Type	Description	Depth (ft)
	8" Flush-mount monument and thermos cap Concrete surface seal 0' to 1' 3/8" Hydrated bentonite chips 1' to 4'	CC-1					Recycled demo debris	
				0			Slightly moist, brown, slightly sandy, gravelly, SILT (ML); fine, rounded gravel	
15				0			No recovery	
5	20/40 pre-pack Silica sand filter pack 4' to 15'							5
				0			Slightly moist, brown with red staining, gravelly, sandy, SILT (ML)	
							Slightly moist, gray, gravelly, sandy, SILT (ML)	
			UG-MW-2R-6	0			Moist, light brown, silty SAND (SM) and GRAVEL (GM); fine to medium, subangular sand, fine, subrounded, gravel	
	▽ 10/31/2013		UG-MW-2R-7	0				
		CC-2					Wet, gray, GRAVEL (GP); fine, subrounded gravel	
				0			No recovery	
10	2" Diameter PVC pre-packed 10-slot screen 5' to 15'							10
				0			Wet, brown to gray, silty, SAND (SM) and GRAVEL (GM); fine to medium sand, fine gravel	
				0			Wet, gray, SAND (SW) and GRAVEL (GP); fine to coarse sand, fine gravel	
				0			Wet, gray, sandy, SILT (ML): fine to medium sand	
			UG-MW-2R-12	0			Wet, light brown to gray, SAND (SW); trace fine gravel, fine to coarse, subrounded sand	
		CC-3						
				0			No recovery	
5								
15	Threaded cap						Bottom of boring at 15 feet	15

Sampler Type:
- ◯ No Recovery
- ▌▌ Continuous Core

PID - Photoionization Detector (Headspace Measurement)
- ▼ Static Water Level
- ▽ Water Level (ATD)

Logged by: AHP
Approved by: SJG
Figure No. A- 248

_ENV BORING LOG KIMBERLY CLARK-EVERETT.GPJ July 31, 2014

Boring Log

Aspect CONSULTING

Project Number	Boring Number	Sheet
110207	UST29-MW-01	1 of 1

Project Name: Kimberly Clark
Location: Everett, WA
Driller/Method: Cascade Drilling / Direct Push Probe
Sampling Method: Continuous Core

Ground Surface Elev.: 15.49
Depth to Water (ft BGS):
Start/Finish Date: 6/27/2012

Depth / Elevation (feet)	Borehole Completion	Sample Type/ID	Tests	PID (ppm)	Blows/ 6"	Material Type	Description	Depth (ft)
15	8" Flush-mount monument set in concrete and thermos cap 3/8" Hydrated bentonite chips 1' to 1.5' #2/12 pre-pack Silica sand filter pack 1.5' to 12.5'						Asphalt	
							Moist, brown, slightly silty, gravely SAND (SP-SM); poorly graded fine-to-medium sand	
		CC-1		0.7			Pea gravel with white liquid at bottom of pea gravel	
							Wet, brown to orange, SAND (SP); poorly graded fine-to-medium sand with a layer comprised of a plastic sheet at 3.5'	
				0.8			Pea gravel with white liquid 6.9' to 7'	
5								5
10	2" Diameter PVC pre-packed .001 slot screen 2.5' to 12.5'			0.8				
		CC-2	UST29-MW-1-7-8	2700			Wet, dark gray, sandy silt (ML); trace gravel, very strong sweet odor	
			UST29-MW-1-8-9					
10								10
5		CC-3		629				
				84				
	Threaded cap			105				
15							Refusal at 12.5'; bottom of boring at 12.5' BGS	15
0								

Sampler Type:
- ◯ No Recovery
- ▌▌ Continuous Core

PID - Photoionization Detector (Headspace Measurement)
- ▼ Static Water Level
- ▽ Water Level (ATD)

Logged by: AET
Approved by: SJG
Figure No. A- 249

_ENV BORING LOG KIMBERLY CLARK-EVERETT.GPJ July 31, 2014

Monitoring Well Construction Log

Aspect CONSULTING

Project Number	Well Number	Sheet
110207	UST29-MW-101	1 of 1

Project Name: Kimberly Clark
Location: Everett, WA
Driller/Method: Holt / Direct Push Probe-Limited Access
Sampling Method: Continuous Core

Ground Surface Elev.:
Top of Casing Elev.:
Depth to Water (ft BGS):
Start/Finish Date: 4/22/2014

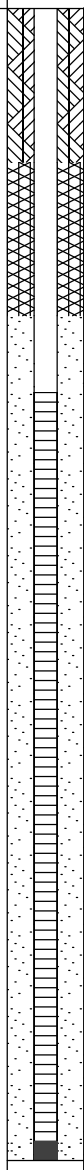

Depth / Elevation (feet)	PID (ppm)	Blows/ 6"	Material Type	Description	Depth (ft)
	0.0			Recycled demo debris	
	0.0			No recovery: rock in shoe	
5					5
	0.0			Peagravel	
	0.0			Wet, brown SAND (SW); fine to coarse sand	
	0.0			Wet, gray to dark gray SAND (SP); fine to medium sand	
	0.0			No recovery	
10					10
	0.0			Wet, gray SAND (SP); fine to medium sand	
	0.0				
	0.0			Grades to wet, gray, sandy SILT (ML); fine sand	
	0.0			No recovery	
15				Bottom of boring at 15' bgs	15

Sampler Type:
- ◯ No Recovery
- ▮ Continuous Core

PID - Photoionization Detector
- ▼ Static Water Level
- ▽ Water Level (ATD)

Logged by: AET
Approved by: SJG
Figure No. A-

_MONITORING WELL_KIMBERLY CLARK-EVERETT.GPJ October 14, 2015

Monitoring Well Construction Log

Aspect CONSULTING

Project Number	Well Number	Sheet
110207	UST29-MW-102	1 of 1

Project Name: Kimberly Clark
Location: Everett, WA
Driller/Method: Holt / Direct Push Probe-Limited Access
Sampling Method: Continuous Core

Ground Surface Elev.:
Top of Casing Elev.:
Depth to Water (ft BGS):
Start/Finish Date: 4/23/2014

Depth / Elevation (feet)	Borehole Completion	Sample Type/ID	Tests	PID (ppm)	Blows/ 6"	Material Type	Description	Depth (ft)
	8" Flush-mount monument and thermos cap Concrete surface seal 0' to 2'			0.0			Recycled demo debris	
				0.0				
	3/8" Hydrated bentonite chips 2' to 7'	S1		0.0			No recovery	
5								5
	▽ 4/23/2014			0.0			Moist, brown SAND (SW); fine to coarse sand, trace gravel	
				0.0			Wet, brown SAND (SP); fine to medium sand	
	10/20 pre-pack Silica sand filter pack 7' to 18'	S2		0.0				
				0.0			becomes gray	
							No recovery	
10	2" Diameter PVC pre-packed 10-slot screen 8' to 18'							10
				0.0			Wet, gray, SAND (SP); fine to medium sand, trace silt	
				0.0			grades to fine sand	
		S3		0.0				
				0.0			Wet, gray, sandy SILT (ML); fine sand	
				0.0				
				0.0			No recovery	
15								15
				0.0			Wet, gray, sandy SILT (ML); fine sand	
				0.0				
		S4		0.0			Wet, gray, silty SAND (SM); fine to coarse sand	
	Threaded cap			0.0				
				0.0				
20	Slough			0.0			Bottom of boring at 20' bgs	20

Sampler Type:
- ◯ No Recovery
- ▮ Continuous Core

PID - Photoionization Detector
- ▼ Static Water Level
- ▽ Water Level (ATD)

Logged by: AET/MML
Approved by: SJG
Figure No. A-

MONITORING WELL KIMBERLY CLARK-EVERETT.GPJ October 14, 2015

Monitoring Well Construction Log

Aspect CONSULTING

Project Number	Well Number	Sheet
110207	UST29-MW-103	1 of 1

Project Name: Kimberly Clark
Location: Everett, WA
Driller/Method: Holt / Direct Push Probe-Limited Access
Sampling Method: Continuous Core

Ground Surface Elev.:
Top of Casing Elev.:
Depth to Water (ft BGS):
Start/Finish Date: 4/23/2014

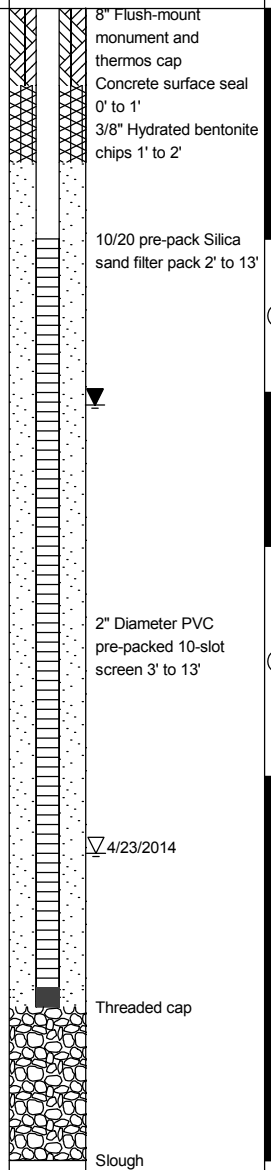

Depth / Elevation (feet)	Sample Type/ID	Tests	PID (ppm)	Blows/ 6"	Material Type	Description	Depth (ft)
	S1		0.0			Recycled demo debris	
			0.0				
			0.0			Moist, grayish brown, SAND (SW); fine to coarse sand	
						No recovery	
5							5
						Moist, gray brown, SAND (SW); fine to coarse sand	
			0.0			Moist, brown SAND (SP); fine to medium sand, trace silt	
			0.0				
	S2					No recovery	
10							10
			0.0			Moist, brown SAND (SP); fine to medium sand, trace silt	
			0.0			Becomes wet, trace gravel	
	S3		0.0				
			0.0			Wet, brown SAND (SW); fine to coarse sand, trace silt, trace fine gravel	
			0.0				
15							15
						Bottom of boring at 15' bgs	
						Dark gray crushed rock	

Sampler Type:
- ◯ No Recovery
- ▮ Continuous Core

PID - Photoionization Detector
- ▼ Static Water Level
- ▽ Water Level (ATD)

Logged by: AET/MML
Approved by: SJG
Figure No. A-

MONITORING WELL KIMBERLY CLARK-EVERETT.GPJ October 14, 2015

Boring Log

Aspect CONSULTING

Project Number	Boring Number	Sheet
110207	UST68-MW-01	1 of 1

Project Name: Kimberly Clark
Ground Surface Elev.: 15.4
Location: Everett, WA
Driller/Method: Cascade Drilling / Direct Push Probe
Depth to Water (ft BGS):
Sampling Method: Continuous Core
Start/Finish Date: 5/25/2012

Depth / Elevation (feet)	Borehole Completion	Sample Type/ID	Tests	PID (ppm)	Blows/ 6"	Material Type	Description	Depth (ft)
15	8" Flush-mount monument and thermos cap			0			Asphalt	
	Concrete surface seal 0' to 2'			0			Moist, brown SAND (SP); trace gravel, fine sand	
	3/8" Hydrated bentonite chips 2' to 4'	CC-1		0				
	10/20 pre-pack Silica sand filter pack 4' to 15'			0				
5 10				0				5
				0			Very moist, gray SILT (ML)	
		CC-2	UST68-MW-1-7-8	0			Wet, brown SAND (SP); fine sand	
				0			Color changes to gray	
	2" Diameter PVC pre-packed .001 slot screen 5' to 15'			0			2" layer of silt at 9'	
10 5				0				10
		CC-3		0				
				0				
				0			Wet, gray silty SAND (SM); fine sand	
15 0	Threaded cap			0			Bottom of boring at 15' BGS	15

Sampler Type:
- ◯ No Recovery
- ▌▌ Continuous Core

PID - Photoionization Detector (Headspace Measurement)
- ▼ Static Water Level
- ▽ Water Level (ATD)

Logged by: MAR
Approved by: SJG
Figure No. A- 250

_ENV BORING LOG KIMBERLY CLARK-EVERETT.GPJ July 31, 2014

Boring Log

Aspect CONSULTING

Project Number	Boring Number	Sheet
110207	UST68-MW-02	1 of 1

Project Name: Kimberly Clark
Location: Everett, WA
Driller/Method: Cascade Drilling / Direct Push Probe
Sampling Method: Continuous Core

Ground Surface Elev.: 15.77
Depth to Water (ft BGS):
Start/Finish Date: 5/30/2012

Depth / Elevation (feet)	Borehole Completion	Sample Type/ID	Tests	PID (ppm)	Blows/ 6"	Material Type	Description	Depth (ft)
15	8" Flush-mount monument and thermos cap						Asphalt	
	Concrete surface seal 0' to 2'						Pea gravel	
	3/8" Hydrated bentonite chips 2' to 4'	CC-1		0			Moist, brown, slightly silty SAND (SP-SM); fine sand. iron staining	
				0			1" lens of silt at 4'	
5	10/20 pre-pack Silica sand filter pack 4' to 15'			0			Trace to numerous organics (shell fragments and wood) 5' to 8.5'	5
10		CC-2		0				
				0				
				0				
				0			Wet, gray, silty SAND (SM); fine sand	
							1" lens of silt at 8.5'	
	2" Diameter PVC pre-packed .001 slot screen 5' to 15'			0			Wet, brown SAND (SP); poorly graded fine-to-medium sand	
10							Wet, brown SAND (SW); poorly graded fine-to-coarse sand	10
			UST68-MW-2-10-11	0			Wet, gray SAND (SP); poorly graded fine-to-medium sand, slight petroleum-like odor and sheen from 10' to 11'	
5				51.5				
				46.8				
				3.7				
				1.8				
		CC-3						
				0.8			Trace organics (shell fragments) 13' to 14'	
				2.0			Fine sand at 14'	
15	Threaded cap			2.0			Bottom of boring at 15' BGS	15
0								

Sampler Type:
- ◯ No Recovery
- ▌▌ Continuous Core

PID - Photoionization Detector (Headspace Measurement)
- ▼ Static Water Level
- ▽ Water Level (ATD)

Logged by: MAR
Approved by: SJG
Figure No. A- 251

_ENV BORING LOG KIMBERLY CLARK-EVERETT.GPJ July 31, 2014

Boring Log

Aspect CONSULTING

Project Number	Boring Number	Sheet
110207	UST68-MW-04	1 of 1

Project Name: Kimberly Clark
Location: Everett, WA
Driller/Method: Cascade Drilling / Direct Push Probe
Sampling Method: Continuous Core

Ground Surface Elev.: 14.67
Depth to Water (ft BGS):
Start/Finish Date: 5/24/2012

Depth / Elevation (feet)	Borehole Completion	Sample Type/ID	Tests	PID (ppm)	Blows/ 6"	Material Type	Description	Depth (ft)
	8" Flush-mount monument and thermos cap						Asphalt	
	Concrete surface seal 0' to 2'			0.2			Moist, brown, slightly silty SAND (SP-SM); trace gravel, fine sand	
	3/8" Hydrated bentonite chips 2' to 4'	CC-1		0.2				
				0.2				
				0.2				
10	10/20 pre-pack Silica sand filter pack 4' to 15'							
5				0.2				5
			UST68-MW-4-6-6.5	0.1			Wet	
		CC-2		0.1			Wet, brown, very silty SAND (SM); fine sand	
				0.1			Wet, gray, slightly silty SAND (SP); fine sand	
5	2" Diameter PVC pre-packed .001 slot screen 5' to 15'			0.1				
10				0.1				10
			UST68-MW-4-11-12	7.0			Wet, dark gray SAND (SP); medium to coarse sand, faint odor	
		CC-3						
				1.4				
0	Threaded cap							
15				2.0			Bottom of boring at 15' BGS	15
-5								

Sampler Type:
- ◯ No Recovery
- ▌▌ Continuous Core

PID - Photoionization Detector (Headspace Measurement)
- ▼ Static Water Level
- ▽ Water Level (ATD)

Logged by: MAR
Approved by: SJG
Figure No. A- 252

_ENV BORING LOG KIMBERLY CLARK-EVERETT.GPJ July 31, 2014

Boring Log

Aspect CONSULTING

Project Number	Boring Number	Sheet
110207	UST68-MW-05	1 of 1

Project Name: Kimberly Clark
Location: Everett, WA
Driller/Method: Cascade Drilling / Direct Push Probe
Sampling Method: Continuous Core

Ground Surface Elev.: 14.57
Depth to Water (ft BGS):
Start/Finish Date: 5/24/2012

Depth / Elevation (feet)	Borehole Completion	Sample Type/ID	Tests	PID (ppm)	Blows/ 6"	Material Type	Description	Depth (ft)
	8" Flush-mount monument and thermos cap						Asphalt	
	Concrete surface seal 0' to 2'			0.2			Moist, gray to brown, gravelly SAND (SP); trace fine sand, mostly medium sand	
	3/8" Hydrated bentonite chips 2' to 4'	CC-1		0.2				
10				0.2				
	10/20 pre-pack Silica sand filter pack 4' to 15'			0.2				
5				0.2				5
		CC-2	UST68-MW-5-7-8	0.3			Wet, brown to gray SAND (SP); trace fine sand, mostly medium sand	
				0.8				
				0.7				
	2" Diameter PVC pre-packed .001 slot screen 5' to 15'			0.7			Dark brown 9' to 12'	
5								
10				0.4				10
			UST68-MW-5-12-13	0.4				
		CC-3		3.2			Dark gray to black in color 12' to 15', slight H2S odor	
				7.2				
				6.1				
0								
	Threaded cap			0.3				
15							Bottom of boring at 15' BGS	15
-5								

Sampler Type:
- No Recovery
- Continuous Core

PID - Photoionization Detector (Headspace Measurement)
- Static Water Level
- Water Level (ATD)

Logged by: MAR
Approved by: SJG
Figure No. A- 253

_ENV BORING LOG KIMBERLY CLARK-EVERETT.GPJ July 31, 2014

Boring Log

Aspect CONSULTING

Project Number	Boring Number	Sheet
110207	UST68-MW-06	1 of 1

Project Name: Kimberly Clark
Location: Everett, WA
Driller/Method: Cascade Drilling / Direct Push Probe-Limited Access
Sampling Method: Continuous Core

Ground Surface Elev.: 14.57
Depth to Water (ft BGS):
Start/Finish Date: 9/10/2012

Depth / Elevation (feet)	Borehole Completion	Sample Type/ID	Tests	PID (ppm)	Blows/ 6"	Material Type	Description	Depth (ft)
	8" flush-mount monument and thermos cap						Asphalt	
	Concrete surface seal						(Post-holed to 5' to clear for utilities) Moist, brown to gray SAND (SP); poorly graded fine to medium sand	
	3/8" hydrated bentonite chips							
	10/20 silica sand filter pack							
10								
5				0				5
				0			Wet, dark gray SAND (SP); fine sand	
				0			Wet, dark gray, slightly sandy SILT (ML)	
		CC-1		0			Wet, dark gray SAND (SP); fine sand, trace silt	
				0			Medium sand	
	2" diameter PVC pre-packed .001 slot screen			1.8				
5							No recovery	
10				0			Wet, dark gray, slightly gravelly SAND (SP); poorly graded medium to coarse sand, trace silt	10
				1.2				
		CC-2		0				
				2.3				
	Threaded cap		UST68-MW-06-14-15	3.0				
0								
15				1.8				15
	Slough and bentonite			0			Becomes gravelly	
							Becomes trace gravel	
		CC-3		0				
				0				
-5				0				
20							Bottom of boring at 20' BGS	20
-10								
25								25

Sampler Type:
- No Recovery
- Continuous Core

PID - Photoionization Detector (Headspace Measurement)
- Static Water Level
- Water Level (ATD)

Logged by: MAR/AET
Approved by: SJG
Figure No. A- 254

_ENV BORING LOG KIMBERLY CLARK-EVERETT.GPJ July 31, 2014

Boring Log

Aspect CONSULTING

Project Number	Boring Number	Sheet
110207	UST69-MW-01	1 of 1

Project Name: Kimberly Clark
Location: Everett, WA
Driller/Method: Cascade Drilling / Direct Push Probe
Sampling Method: Continuous Core

Ground Surface Elev.: 15.16
Depth to Water (ft BGS):
Start/Finish Date: 5/25/2012

Depth / Elevation (feet)	Borehole Completion	Sample Type/ID	Tests	PID (ppm)	Blows/ 6"	Material Type	Description	Depth (ft)
15	8" Flush-mount monument and thermos cap						Asphalt	
	Concrete surface seal 0' to 2'						Post-holed to 2' for utilities	
	3/8" Hydrated bentonite chips 2' to 4'	CC-1		0			Moist, brown, slightly gravelly SAND (SP); poorly graded fine-to-medium sand, mostly medium	
	10/20 pre-pack Silica sand filter pack 4' to 15'			0				
5 10				0				5
			UST69-MW-1-6-7	0			Wet sand at 6'	
		CC-2		0			Color changes to dark gray and becomes mostly fine sand at 6.5'	
				0				
	2" Diameter PVC pre-packed .001 slot screen 5' to 15'			0				
10 5				0				10
				0				
				0			4" SILT (ML) lens from 11.75' to 12'	
		CC-3		0			Wet, dark gray SAND (SP); fine sand	
				0				
				0			Medium to coarse sand 14' to 14.5'	
15 0	Threaded cap			0			Wood debris from 14.5' to 15'	15
							Bottom of boring at 15' BGS	

Sampler Type:
- No Recovery
- Continuous Core

PID - Photoionization Detector (Headspace Measurement)
- Static Water Level
- Water Level (ATD)

Logged by: MAR
Approved by: SJG
Figure No. A- 255

_ENV BORING LOG KIMBERLY CLARK-EVERETT.GPJ July 31, 2014

Boring Log

Aspect CONSULTING

Project Number	Boring Number	Sheet
110207	UST70-B-01	1 of 1

Project Name: Kimberly Clark
Location: Everett, WA
Driller/Method: Cascade Drilling / Direct Push Probe-Limited Access
Sampling Method: Continuous Core

Ground Surface Elev.
Depth to Water (ft BGS)
Start/Finish Date 5/31/2012

Depth / Elevation (feet)	Borehole Completion	Sample Type/ID	Tests	PID (ppm)	Blows/ 6"	Material Type	Description	Depth (ft)
							Wood chips-hogged fuel	
							Moist, gray, sandy, very silty GRAVEL (GM)	
				25.1			Pea gravel	
	Backfilled with medium bentonite chips	CC-1						
			UST70-B-1-3-4	95.5			Moist, gray SAND (SP); poorly graded fine-to-medium sand, strong petroleum-like odor	
				75.1				
5				85.9				5
				99.7			Moist, gray, slightly silty SAND (SP-SM); poorly graded fine-to-medium sand, strong petroleum-like odor from 6' to 12'	
		CC-2		100.5				
				99.5				
				25.5				
10				25.5				10
				25.5			Slightly gravelly 11' to 12'	
				25.5				
		CC-3						
			UST70-B-1-13.5-14.5	6.0				
				6.0				
15				4.5			Bottom of boring at 15' BGS	15

Sampler Type:
- No Recovery
- Continuous Core

PID - Photoionization Detector (Headspace Measurement)
- Static Water Level
- Water Level (ATD)

Logged by: MAR
Approved by: SJG
Figure No. A- 256

_ENV BORING LOG KIMBERLY CLARK-EVERETT.GPJ July 31, 2014

Boring Log

Aspect CONSULTING

Project Number	Boring Number	Sheet
110207	UST70-B-02	1 of 1

Project Name: Kimberly Clark
Location: Everett, WA
Driller/Method: Cascade Drilling / Direct Push Probe-Limited Access
Sampling Method: Continuous Core
Ground Surface Elev.
Depth to Water (ft BGS)
Start/Finish Date 5/31/2012

Depth / Elevation (feet)	Borehole Completion	Sample Type/ID	Tests	PID (ppm)	Blows/ 6"	Material Type	Description	Depth (ft)
							Wood chips-hogged fuel	
				0.4			Moist, brown, slightly gravelly SAND (SP)	
	Backfilled with medium bentonite chips	CC-1		0.4				
				0.4				
				0.4			Moist, dark brown, slightly silty SAND (SP-SM)	
5				0.4				5
		CC-2		0.4				
				0.4				
				0.4			Concrete rubble	
			UST70-B-1-9-10	0.4			Wet, gray, slightly silty, gravelly SAND (SP-SM); trace coarse sand, fine-to-medium sand	
10				0.4				10
		CC-3						
15							Bottom of boring at 15' BGS	15

Sampler Type:
- No Recovery
- Continuous Core

PID - Photoionization Detector (Headspace Measurement)
- Static Water Level
- Water Level (ATD)

Logged by: MAR
Approved by: SJG
Figure No. A- 257

_ENV BORING LOG KIMBERLY CLARK-EVERETT.GPJ July 31, 2014

Boring Log

Aspect CONSULTING

Project Number	Boring Number	Sheet
110207	UST70-B-03	1 of 1

Project Name: Kimberly Clark
Location: Everett, WA
Driller/Method: Cascade Drilling / Direct Push Probe-Limited Access
Sampling Method: Continuous Core

Ground Surface Elev.:
Depth to Water (ft BGS):
Start/Finish Date: 5/31/2012

Depth / Elevation (feet)	Borehole Completion	Sample Type/ID	Tests	PID (ppm)	Blows/ 6"	Material Type	Description	Depth (ft)
				1.0			Wood chips-hogged fuel	
	Backfilled with medium bentonite chips	CC-1		0.5			Moist, brown, slightly gravelly SAND (SP); poorly graded fine-to-medium sand	
				0.6				
				0.6			Brick rubble at 4'	
5				0.6				5
		CC-2		0.6				
				0				
			UST70-B-3-8-9	0.6				
				0.5			Concrete rubble	
10				0.5			Wet, gray, slightly silty SAND (SP-SM); poorly graded fine-to-medium sand	10
		CC-3		0.5				
				0.5				
				0.5				
				0.5				
15				0.5			Bottom of boring at 15' BGS	15

Sampler Type:
- ◯ No Recovery
- ▌▌ Continuous Core

PID - Photoionization Detector (Headspace Measurement)
- ▼ Static Water Level
- ▽ Water Level (ATD)

Logged by: MAR
Approved by: SJG
Figure No. A- 258

_ENV BORING LOG KIMBERLY CLARK-EVERETT.GPJ July 31, 2014

Boring Log

Aspect CONSULTING

Project Number	Boring Number	Sheet
110207	UST70-B-04	1 of 1

Project Name: Kimberly Clark
Location: Everett, WA
Driller/Method: Cascade Drilling / Direct Push Probe-Limited Access
Sampling Method: Continuous Core

Ground Surface Elev.
Depth to Water (ft BGS)
Start/Finish Date 5/31/2012

Depth / Elevation (feet)	Borehole Completion	Sample Type/ID	Tests	PID (ppm)	Blows/ 6"	Material Type	Description	Depth (ft)
	Backfilled with medium bentonite chips	CC-1	UST70-B-4-0-1	245.5			Moist, gray, sandy, very silty GRAVEL (GM); fine subrounded gravel	
				15.8				
				7.8				
				1.2				
5			UST70-B-4-4.5-5.5	1.2			Moist, dark gray to brown, gravelly SAND (SP); fine sand	5
		CC-2		1.0				
				0.8				
				1.0			Wet	
				1.0				
10				1.0			Moist, dark gray to brown SAND (SP); fine sand	10
		CC-3		0			Wet, gray to brown, gravelly SAND (SW); poorly graded fine-to-coarse sand	
				0				
				0				
				0				
15				0			Bottom of boring at 15' BGS	15

Sampler Type:
- ◯ No Recovery
- ▌ Continuous Core

PID - Photoionization Detector (Headspace Measurement)
- ▼ Static Water Level
- ▽ Water Level (ATD)

Logged by: MAR
Approved by: SJG
Figure No. A- 259

_ENV BORING LOG KIMBERLY CLARK-EVERETT.GPJ July 31, 2014

Boring Log

Aspect CONSULTING

Project Number	Boring Number	Sheet
110207	UST70-MW-01	1 of 1

Project Name: Kimberly Clark
Location: Everett, WA
Driller/Method: Cascade Drilling / Direct Push Probe
Sampling Method: Continuous Core

Ground Surface Elev.: 14.91
Depth to Water (ft BGS):
Start/Finish Date: 6/5/2012

Depth / Elevation (feet)	Borehole Completion	Sample Type/ID	Tests	PID (ppm)	Blows/ 6"	Material Type	Description	Depth (ft)
	8" Flush-mount monument and thermos cap						Wood chips-hogged fuel	
	Concrete surface seal 0' to 2'			0			Moist, gray, silty, very sandy GRAVEL (GM); fine subrounded gravel	
	3/8" Hydrated bentonite chips 2' to 4'	CC-1		0.8			Moist, gray SAND (SP); trace gravel, fine-to-medium sand	
				2.5				
				2.3				
	10/20 pre-pack Silica sand filter pack 4' to 15'							
5 / 10				1.8				5
				3.0				
		CC-2		4.0				
				1.8			Wet, gray fine sand	
	2" Diameter PVC pre-packed .001 slot screen 5' to 15'			0.8				
10 / 5				0.4			Medium sand 10' to 12'	10
				2.5				
		CC-3		2.5			Wet, gray SAND (SW); poorly graded fine-to-coarse sand, H2S odor	
				3.0			Wet, gray SAND (SP); poorly graded fine-to-medium sand	
				1.2				
15 / 0	Threaded cap			0.8			Bottom of boring at 15' BGS	15
-5								

Sampler Type:
- ◯ No Recovery
- ▌▌ Continuous Core

PID - Photoionization Detector (Headspace Measurement)
- ▼ Static Water Level
- ▽ Water Level (ATD)

Logged by: MAR
Approved by: SJG
Figure No. A- 260

_ENV BORING LOG KIMBERLY CLARK-EVERETT.GPJ July 31, 2014

Boring Log

Aspect CONSULTING

Project Number	Boring Number	Sheet
110207	UST70-MW-02	1 of 1

Project Name: Kimberly Clark
Location: Everett, WA
Driller/Method: Cascade Drilling / Direct Push Probe
Sampling Method: Continuous Core

Ground Surface Elev.: 14.5
Depth to Water (ft BGS):
Start/Finish Date: 6/5/2012

Depth / Elevation (feet)	Borehole Completion	Sample Type/ID	Tests	PID (ppm)	Blows/ 6"	Material Type	Description	Depth (ft)
	8" Flush-mount monument and thermos cap						Moist, dark brown, gravelly, silty SAND (SM); fine sand	
				0			Concrete rubble	
	Concrete surface seal 0' to 2'						Moist, brown, slightly silty, slightly gravelly SAND (SP); poorly graded fine-to-medium sand	
	3/8" Hydrated bentonite chips 2' to 4'	CC-1		0				
				0				
				0			Iron staining at 4'	
10	10/20 pre-pack Silica sand filter pack 4' to 15'							
5				0				5
				0			Moist, brown, gravelly SAND (SP); poorly graded fine-to-medium sand	
		CC-2		0				
				0				
				0			Wet, gray sand	
	2" Diameter PVC pre-packed .001 slot screen 5' to 15'			0				
5							1" lens of very silty sand	
10				0			Wet, gray, gravelly SAND (SP); poorly graded fine-to-medium sand	10
				0				
		CC-3		0				
				0				
				0				
0	Threaded cap							
15				0			Bottom of boring at 15' BGS	15
-5								

Sampler Type:
- ◯ No Recovery
- ▌▌ Continuous Core

PID - Photoionization Detector (Headspace Measurement)
- ▼ Static Water Level
- ▽ Water Level (ATD)

Logged by: MAR
Approved by: SJG
Figure No. A- 261

_ENV BORING LOG KIMBERLY CLARK-EVERETT.GPJ July 31, 2014

Monitoring Well Construction Log

Aspect CONSULTING

Project Number	Well Number	Sheet
110207	UST70-MW-101	1 of 1

Project Name: Kimberly Clark
Location: Everett, WA
Driller/Method: Holt / Direct Push Probe-Limited Access
Sampling Method: Continuous Core

Ground Surface Elev.:
Top of Casing Elev.:
Depth to Water (ft BGS):
Start/Finish Date: 4/24/2014

Depth / Elevation (feet)	Borehole Completion	Sample Type/ID	Tests	PID (ppm)	Blows/ 6"	Material Type	Description	Depth (ft)
	8" Flush-mount monument and thermos cap Concrete surface seal 0' to 1' 3/8" Hydrated bentonite chips 2' to 4' 10/20 pre-pack Silica sand filter pack 4' to 15' 4/24/2014 2" Diameter PVC pre-packed 10-slot screen 5' to 15' Threaded cap	S1		0.0			Moist, brown SAND (SP); fine to medium sand	
				0.0			Moist, brown, slightly silty SAND (SP-SM); fine to medium sand	
				0.0			Moist, brown, gravelly SAND (SP); coarse crushed gravel, fine to medium sand	
							No recovery	
5		S2		0.0			Moist, red and brown mottled SAND (SP); fine to medium sand	5
				0.0			Crushed rock	
							Wet, gray, sandy SILT (ML); fine sand	
				0.0			No recovery	
10		S3		0.0			Wet, gray, slightly gravelly SAND (SP); fine to medium sand, fine gravel	10
				0.0				
				0.0				
				0.0			No recovery	
15							Bottom of boring at 15' bgs	15

Sampler Type:
- ○ No Recovery
- ▮ Continuous Core

PID - Photoionization Detector
- ▼ Static Water Level
- ▽ Water Level (ATD)

Logged by: AET
Approved by: SJG
Figure No. A-

MONITORING WELL KIMBERLY CLARK-EVERETT.GPJ October 14, 2015

Monitoring Well Construction Log

Aspect CONSULTING

Project Number	Well Number	Sheet
110207	UST70-MW-102	1 of 1

Project Name: Kimberly Clark
Location: Everett, WA
Driller/Method: Holt / Direct Push Probe-Limited Access
Sampling Method: Continuous Core

Ground Surface Elev.:
Top of Casing Elev.:
Depth to Water (ft BGS):
Start/Finish Date: 4/24/2014

Depth / Elevation (feet)	Borehole Completion	Sample Type/ID	Tests	PID (ppm)	Blows/ 6"	Material Type	Description	Depth (ft)
	8" Flush-mount monument and thermos cap Concrete surface seal 0' to 2'			0.0			Moist, brown SAND (SP); fine to medium sand,	
				0.0			3" pocket of silty sand	
				0.0			3" pocket of crushed rock artificial fill	
		S1					No recovery	
	3/8" Hydrated bentonite chips 2' to 4'							
	10/20 pre-pack Silica sand filter pack 4' to 15'							
5								5
				0.0			Moist, brown, gravelly SAND (SP); fine to medium sand, fine gravel, woodchips	
				0.0				
	▽4/24/2014	S2		0.0			Wet, gray, gravelly, sandy SILT (ML); fine sand and gravel	
	▼						No recovery	
10	2" Diameter PVC pre-packed 10-slot screen 5' to 15'							10
				0.0			Wet, gray, gravelly, sandy SILT (ML); fine sand and gravel	
				0.0				
		S3		0.0			Wet, gray, gravelly SAND (SP); fine to medium sand, predominantly medium sand, fine gravel	
				0.0				
							No recovery	
15	Threaded cap						Bottom of boring at 15' bgs	15

Sampler Type:
○ No Recovery
▮ Continuous Core

PID - Photoionization Detector
▼ Static Water Level
▽ Water Level (ATD)

Logged by: AET/MML
Approved by: SJG
Figure No. A-

_MONITORING WELL_KIMBERLY CLARK-EVERETT.GPJ October 14, 2015

Boring Log

Aspect CONSULTING

Project Number	Boring Number	Sheet
110207	UST71-B-01	1 of 1

Project Name: Kimberly Clark
Location: Everett, WA
Driller/Method: Cascade Drilling / Direct Push Probe-Limited Access
Sampling Method: Continuous Core

Ground Surface Elev.:
Depth to Water (ft BGS):
Start/Finish Date: 5/31/2012

Depth / Elevation (feet)	Borehole Completion	Sample Type/ID	Tests	PID (ppm)	Blows/ 6"	Material Type	Description	Depth (ft)
	Backfilled with medium bentonite chips	CC-1		4.0			Wood chips-hog fuel	
				1.7			Moist, gray SILT (ML)	
5				3.0			Moist, gray SAND (SP); fine sand 4' to 4.5', medium sand 4.5' to 15'	5
		CC-2		2.0				
				2.5				
				1.7				
				1.5			Silty	
				1.5				
10				1.5				10
		CC-3	UST71-B-1-12-13	140.0				
				9.0				
15				5.0			Bottom of boring at 15' BGS	15

Sampler Type:
- ◯ No Recovery
- ▌▌ Continuous Core

PID - Photoionization Detector (Headspace Measurement)
- ▼ Static Water Level
- ▽ Water Level (ATD)

Logged by: MAR
Approved by: SJG
Figure No. A- 262

_ENV BORING LOG KIMBERLY CLARK-EVERETT.GPJ July 31, 2014

Boring Log

Aspect CONSULTING

Project Number	Boring Number	Sheet
110207	UST71-B-02	1 of 1

Project Name: Kimberly Clark
Location: Everett, WA
Driller/Method: Cascade Drilling / Direct Push Probe-Limited Access
Sampling Method: Continuous Core

Ground Surface Elev.
Depth to Water (ft BGS)
Start/Finish Date 5/31/2012

Depth / Elevation (feet)	Borehole Completion	Sample Type/ID	Tests	PID (ppm)	Blows/ 6"	Material Type	Description	Depth (ft)
							Wood chips-hogged fuel	
	Backfilled with medium bentonite chips	CC-1					Concrete rubble	
							Wood chips	
				2.5			Very moist, gray, sandy, very silty GRAVEL (GM); fine subrounded gravel	
5				3.2				5
		CC-2		16.9			Wet, gray GRAVEL (GP); coarse subrounded gravel, petroleum-like odor	
				10.5				
				11.5			Moderate rainbow sheen	
10		CC-3	UST71-B-2-13-14	15.5			Wet, dark brown to black SAND (SP); numerous organics: Wood chips	10
				75			Heavy bleb sheen	
				85				
				75.0				
				80.0			Wet, dark gray to dark brown, silty SAND (SM); heavy sheen	
15				75.8			Bottom of boring at 15' BGS	15

Sampler Type:
- ◯ No Recovery
- ▌▌ Continuous Core

PID - Photoionization Detector (Headspace Measurement)
- ▼ Static Water Level
- ▽ Water Level (ATD)

Logged by: MAR
Approved by: SJG
Figure No. A- 263

_ENV BORING LOG KIMBERLY CLARK-EVERETT.GPJ July 31, 2014

Boring Log

Aspect CONSULTING

Project Number	Boring Number	Sheet
110207	UST71-B-03	1 of 1

Project Name: Kimberly Clark
Location: Everett, WA
Driller/Method: Cascade Drilling / Direct Push Probe-Limited Access
Sampling Method: Continuous Core

Ground Surface Elev.
Depth to Water (ft BGS)
Start/Finish Date 5/31/2012

Depth / Elevation (feet)	Borehole Completion	Sample Type/ID	Tests	PID (ppm)	Blows/ 6"	Material Type	Description	Depth (ft)
	Backfilled with medium bentonite chips	CC-1					Wood chips-hogged fuel	
				6.5			Moist, gray, sandy, very silty GRAVEL (GM); fine, subrounded gravel	
5				7.0			Wet, gray GRAVEL (GP)	5
		CC-2		9.0				
				6.0				
				6.0				
				5.0				
10		CC-3		5.0				10
				52.0				
				75.0				
				75.0				
				60.0			Wood chips; heavy bleb sheen, strong petroleum-like odor	
15		CC-4		50				15
				53.6				
				75.3				
			UST71-B-3-18-19	89.2				
			UST71-B-3-19-20	88.5				

Sampler Type:
- ◯ No Recovery
- ▌▌ Continuous Core

PID - Photoionization Detector (Headspace Measurement)
- ▼ Static Water Level
- ▽ Water Level (ATD)

Logged by: MAR
Approved by: SJG
Figure No. A- 264

_ENV BORING LOG KIMBERLY CLARK-EVERETT.GPJ July 31, 2014

Boring Log

Aspect CONSULTING

Project Number	Boring Number	Sheet
110207	UST71-B-04	1 of 2

Project Name: Kimberly Clark
Location: Everett, WA
Driller/Method: Cascade Drilling / Direct Push Probe-Limited Access
Sampling Method: Continuous Core

Ground Surface Elev.
Depth to Water (ft BGS)
Start/Finish Date 5/31/2012

Depth / Elevation (feet)	Borehole Completion	Sample Type/ID	Tests	PID (ppm)	Blows/ 6"	Material Type	Description	Depth (ft)
	Backfilled with medium bentonite chips	CC-1		10.7 11.5 61.2 12.7			Wood chips-hogged fuel	
5				12.7			Moist, gray, sandy, very silty GRAVEL (GM); fine subrounded gravel, slight petroleum-like odor, moderate sheen	5
		CC-2					Moist, gray GRAVEL (GP); poor recovery after hitting a rock 2 separate times	
10	▼	CC-3	UST71-B-4-12.5-13.5	66 84.5 61.5 89.7 101.9			Wet, dark brown, very silty SAND (SM); trace gravel, fine sand, strong petroleum-like odor, heavy bleb sheen	10
				28.5 47.8			Wet, gray SAND (SP); trace silt, fine sand	
15		CC-4		27.5 31.8 8.8 21.5 11.8 15.7			Medium sand 18' to 19'	15

Sampler Type:
- ◯ No Recovery
- ▌▌ Continuous Core

PID - Photoionization Detector (Headspace Measurement)
- ▼ Static Water Level
- ▽ Water Level (ATD)

Logged by: MAR
Approved by: SJG
Figure No. A- 265

_ENV BORING LOG KIMBERLY CLARK-EVERETT.GPJ July 31, 2014

Boring Log

Project Number	Boring Number	Sheet
110207	UST71-B-04	2 of 2

Project Name: Kimberly Clark
Location: Everett, WA
Driller/Method: Cascade Drilling / Direct Push Probe-Limited Access
Sampling Method: Continuous Core
Ground Surface Elev.
Depth to Water (ft BGS)
Start/Finish Date 5/31/2012

Depth / Elevation (feet)	Borehole Completion	Sample Type/ID	Tests	PID (ppm)	Blows/ 6"	Material Type	Description	Depth (ft)
		CC-5		69.0				
				90.0				
				91.1				
				76.8				
				22.0				
				7.9				
				5.4				
25				12.9				25
		CC-6		62.7				
				25.7				
				14.7				
			UST71-B-4-28-29	29.5			Moderate metallic sheen	
				31.4				
				19.5				
30				7.8			Bottom of boring at 30' BGS	30
35								35

Sampler Type:
- ◯ No Recovery
- ▌▌ Continuous Core

PID - Photoionization Detector (Headspace Measurement)
- ▼ Static Water Level
- ▽ Water Level (ATD)

Logged by: MAR
Approved by: SJG
Figure No. A- 265

_ENV BORING LOG KIMBERLY CLARK-EVERETT.GPJ July 31, 2014

Boring Log

Aspect CONSULTING

Project Number	Boring Number	Sheet
110207	UST71-MW-01	1 of 1

Project Name: Kimberly Clark
Location: Everett, WA
Driller/Method: Cascade Drilling / Direct Push Probe-Limited Access
Sampling Method: Continuous Core

Ground Surface Elev.: 14.1
Depth to Water (ft BGS):
Start/Finish Date: 5/31/2012

Depth / Elevation (feet)	Borehole Completion	Sample Type/ID	Tests	PID (ppm)	Blows/ 6"	Material Type	Description	Depth (ft)
	8" Flush-mount monument and thermos cap						(Top 3.5 feet of Wood chips cleared away by CAT in order to set a concrete well monument) Moist, gray, very sandy, very silty GRAVEL (GM); fine subrounded gravel	
	Concrete surface seal 0' to 2'			5.9				
	10/20 pre-pack Silica sand filter pack 2' to 13'	CC-1		3.1				
				2.3				
10				1.7				
5				3.5			Wet, gray GRAVEL (GP); coarse subrounded gravel	5
				2.7			Wet, gray, gravelly SAND (SW); poorly graded fine-to-coarse sand, moderate rainbow sheen	
	2" Diameter PVC pre-packed .001 slot screen 3' to 13'	CC-2		5.0				
				31.3			Wet, black SAND (SP); poorly graded fine-to-medium sand, strong petroleum-like odor, heavy bleb sheen	
5				34.0				
				85.0				
10				85.0				10
				75.0				
				115.0				
				115.0				
				120.0			Wet, dark gray, very silty SAND (SM); fine sand	
		CC-3		28.5				
	Threaded cap			16.5				
				23.3			Wet, gray SAND (SP); fine sand, trace organics	
0	Slough			28.3			Coarser sand at 14'	
15				38.0			Bottom of boring at 15' BGS	15
-5								

Sampler Type:
- ◯ No Recovery
- ▌▌ Continuous Core

PID - Photoionization Detector (Headspace Measurement)
- ▼ Static Water Level
- ▽ Water Level (ATD)

Logged by: MAR
Approved by: SJG
Figure No. A- 266

_ENV BORING LOG KIMBERLY CLARK-EVERETT.GPJ July 31, 2014

Monitoring Well Construction Log

Aspect CONSULTING

Project Number	Well Number	Sheet
110207	UST71-MW-101	1 of 1

Project Name: Kimberly Clark
Location: Everett, WA
Driller/Method: Holt / Direct Push Probe-Limited Access
Sampling Method: Continuous Core

Ground Surface Elev.:
Top of Casing Elev.:
Depth to Water (ft BGS):
Start/Finish Date: 4/24/2014

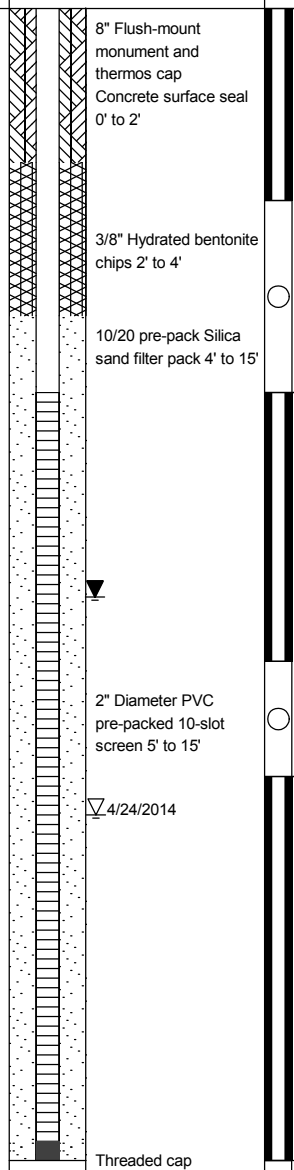

Depth / Elevation (feet)	PID (ppm)	Blows/ 6"	Material Type	Description	Depth (ft)
	0.0			Moist, brown SAND (SP); fine to medium sand	
	0.0				
	0.0			Moist, brown, slightly silty SAND (SP-SM); fine to medium sand	
				No recovery	
5					5
	0.0			Moist, brown, silty SAND (SM)	
	0.0			Moist, gray, sandy SILT (ML); fine sand, numerous wood chips	
	0.0				
	0.0			Moist, gray SAND (SP); fine to medium sand, trace gravel	
				No recovery	
10					10
	0.0			Moist, gray SAND (SP); fine to medium sand, trace gravel	
				Wet, brownish gray, sandy SILT (ML); fine to medium sand	
	0.0				
	0.0			Wet, gray SAND (SP); fine to medium sand, trace gravel	
	0.0				
	0.0				
15				Bottom of boring at 15' bgs	15

Sampler Type:
- ◯ No Recovery
- ▮ Continuous Core

PID - Photoionization Detector
- ▼ Static Water Level
- ▽ Water Level (ATD)

Logged by: AET/MML
Approved by: SJG
Figure No. A-

_MONITORING WELL_KIMBERLY CLARK-EVERETT.GPJ October 14, 2015

Monitoring Well Construction Log

Aspect CONSULTING

Project Number	Well Number	Sheet
110207	UST71-MW-102	1 of 1

Project Name: Kimberly Clark
Location: Everett, WA
Driller/Method: Holt / Direct Push Probe-Limited Access
Sampling Method: Continuous Core

Ground Surface Elev.:
Top of Casing Elev.:
Depth to Water (ft BGS):
Start/Finish Date: 4/25/2014

Depth / Elevation (feet)	Borehole Completion	Sample Type/ID	Tests	PID (ppm)	Blows/ 6"	Material Type	Description	Depth (ft)
	8" Flush-mount monument and thermos cap Concrete surface seal 0' to 2'			0.0			Moist, brown, SAND (SP); fine to medium sand, trace fine gravel	
				0.0			Silt lense, petroleum odor	
	3/3" Hydrated bentonite chips 2' to 4'	S1		29.5			No recovery	
5	▽ 4/25/2014 #0/20 pre-pack Silica sand filter pack 4' to 15'			11.4			Wet, gray, sandy SILT (ML); fine sand, slight petroleum odor	5
				0.0			No odor	
	2" Diameter PVC pre-packed 10-slot screen 5' to 15'	S2		0.0				
				0.0			Wet, gray SAND (SP); fine to medium sand, rare seashells	
							No recovery	
10				0.0			Wet, gray SAND (SP) with scattered thing SILT (ML) inerbeds; fine to medium sand, rare seashells	10
	Threaded cap	S3		0.0				
				0.0				
				0.0				
							Refusal at 14' bgs	
15								15

Sampler Type:
- ◯ No Recovery
- ▮ Continuous Core

PID - Photoionization Detector
- ▼ Static Water Level
- ▽ Water Level (ATD)

Logged by: AET/MML
Approved by: SJG
Figure No. A-

_MONITORING WELL_KIMBERLY CLARK-EVERETT.GPJ October 14, 2015

Monitoring Well Construction Log

Aspect CONSULTING

Project Number	Well Number	Sheet
110207	UST71-MW-103	1 of 1

Project Name: Kimberly Clark
Location: Everett, WA
Driller/Method: Holt / Direct Push Probe-Limited Access
Sampling Method: Continuous Core

Ground Surface Elev.:
Top of Casing Elev.:
Depth to Water (ft BGS):
Start/Finish Date: 4/25/2014

Depth / Elevation (feet)	Borehole Completion	Sample Type/ID	Tests	PID (ppm)	Blows/ 6"	Material Type	Description	Depth (ft)
	8" Flush-mount monument and thermos cap Concrete surface seal 0' to 1' 3/8" Hydrated bentonite chips 1' to 5'	S1		0.0 0.0 0.0			Moist, brown SAND (SP); fine to medium sand, trace fine gravel Crushed rock, crushed concrete Wet, brown gray, slightly silty, gravelly SAND (SP-SM); fine to medium sand No recovery	
5	▽ 4/25/2014 10/20 pre-pack Silica sand filter pack 6' to 12'	S2		0.0 0.0 0.0			Wet, brown gray, slightly silty, gravelly SAND (SP-SM); fine to medium sand Moist to wet, black, fibrous organics/wood in sandy matrix No recovery	5
10	2" Diameter PVC pre-packed 10-slot screen 7' to 12' Threaded cap			0.0 0.0 0.0 0.0 0.0			Moist to wet, black, fibrous organics/wood in sandy matrix Wet, dark gray, sandy GRAVEL (GP); coarse sand, fine gravel Wet, dark gray and brown mottled SAND (SP); fine to medium sand Brick fragments Mild petroleum odor, and dark brown mottling	10
15							Bottom of boring at 15' bgs	15

Sampler Type:
- ◯ No Recovery
- ▮ Continuous Core

PID - Photoionization Detector
- ▼ Static Water Level
- ▽ Water Level (ATD)

Logged by: AET
Approved by: SJG
Figure No. A-

_MONITORING WELL_KIMBERLY CLARK-EVERETT.GPJ October 14, 2015

Monitoring Well Construction Log

Aspect CONSULTING

Project Number	Well Number	Sheet
110207	UST71-MW-104	1 of 1

Project Name: Kimberly Clark
Location: Everett, WA
Driller/Method: Holt / Direct Push Probe-Limited Access
Sampling Method: Continuous Core

Ground Surface Elev.:
Top of Casing Elev.:
Depth to Water (ft BGS):
Start/Finish Date: 4/25/2014

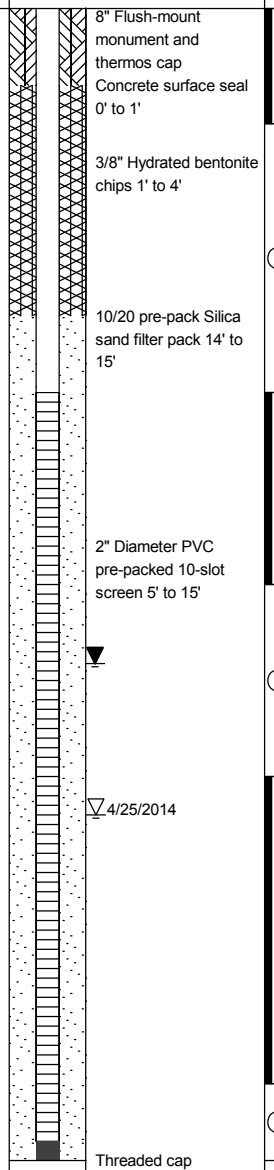

Depth / Elevation (feet)	PID (ppm)	Blows/ 6"	Material Type	Description	Depth (ft)
	0.0			Moist, brown SAND (SP); fine to medium sand, trace fine gravel	
	0.0			Wet, brown, slightly silty SAND (SP-SM); fine to medium sand	
				No recovery	
5	0.0			Wet, brown, slightly silty SAND (SP-SM); fine to medium sand	5
	0.0			Very moist, dark brown, slightly gravelly SAND (SP); trace silt	
	0.0			No recovery	
10	0.0			Very moist, dark brown, slightly gravelly SAND (SP); trace silt	10
	0.0			Wet, gray, slightly gravelly SAND (SW); fine to coarse sand, fine gravel, numerous shells	
	0.0			Grades to wet, gray, slightly gravelly SAND (SP); fine to medium sand, fine gravel, numerous shells	
15	0.0			Bottom of boring at 15' bgs	15

Sampler Type:
- ◯ No Recovery
- ▮ Continuous Core

PID - Photoionization Detector
- ▼ Static Water Level
- ▽ Water Level (ATD)

Logged by: AET/MML
Approved by: SJG
Figure No. A-

_MONITORING WELL_KIMBERLY CLARK-EVERETT.GPJ October 14, 2015

Table B-1 - Water Level Data, 2012-2017

Project No. 190583 K-C Worldwide Site Upland Area, Everett, Washington

				February 2012 (Snapshot at Low Tide)			July 2012 (Snapshot at Low Tide)			July 2012 (Snapshot at High Tide)			July 2012 (Average from Tidal Study*)		September 2012 (Snapshot at Low Tide)		
Location	Easting	Northing	Top of Casing Elevation (NAVD88)	Date/Time	Depth to Water	Groundwater Elevation	Date/Time	Depth to Water	Groundwater Elevation	Date/Time	Depth to Water	Groundwater Elevation	Date Range	Groundwater Elevation	Date/Time	Depth to Water	Groundwater Elevation
AP-MW-1	1301638	362341	15.45	-	-	-	7/3/12 10:56	5.83	9.62	7/6/12 7:47	5.83	9.62	7/3 to 6/12	9.6	9/14/12 11:00	6.90	8.55
AP-MW-1R	1301627	362337	17.99	-	-	-	-	-	-	-	-	-	-	-	-	-	-
BA6-MW-101	1301123	362261	14.72	-	-	-	-	-	-	-	-	-	-	-	-	-	-
BA-MW-1	1301350	362285	15.83	-	-	-	-	-	-	-	-	-	-	-	-	-	-
BA-MW-2	1301485	362288	17.46	-	-	-	-	-	-	-	-	-	-	-	-	-	-
BA-MW-3	1301345	362166	15.63	-	-	-	-	-	-	-	-	-	-	-	-	-	-
BA-MW-4	1301460	362175	16.59	-	-	-	-	-	-	-	-	-	-	-	-	-	-
BA-MW-5	1301148	362327	14.10	-	-	-	-	-	-	-	-	-	-	-	-	-	-
BA-MW-6	1301153	362260	11.30	-	-	-	-	-	-	-	-	-	-	-	-	-	-
BA-MW-7	1301031	362281	12.86	-	-	-	-	-	-	-	-	-	-	-	-	-	-
BBH-MW-101	1301271	362117	15.68	-	-	-	-	-	-	-	-	-	-	-	-	-	-
BBH-MW-102	1301270	362088	15.63	-	-	-	-	-	-	-	-	-	-	-	-	-	-
BBH-MW-103	1301417	362106	16.34	-	-	-	-	-	-	-	-	-	-	-	-	-	-
BBH-MW-104	1301391	362079	15.99	-	-	-	-	-	-	-	-	-	-	-	-	-	-
BCT-MW-101	1301832	361582	14.55	-	-	-	-	-	-	-	-	-	-	-	-	-	-
BCT-MW-102	1301759	361578	14.48	-	-	-	-	-	-	-	-	-	-	-	-	-	-
BCT-MW-103	1301683	361575	15.44	-	-	-	-	-	-	-	-	-	-	-	-	-	-
BCT-MW-104	1301588	361576	14.80	-	-	-	-	-	-	-	-	-	-	-	-	-	-
BCT-MW-105	1301594	361618	14.76	-	-	-	-	-	-	-	-	-	-	-	-	-	-
BCT-MW-106	1301597	361645	14.72	-	-	-	-	-	-	-	-	-	-	-	-	-	-
BCT-MW-107	1301595	361701	14.76	-	-	-	-	-	-	-	-	-	-	-	-	-	-
BCT-MW-108	1301668	361728	15.48	-	-	-	-	-	-	-	-	-	-	-	-	-	-
BOILER-MW 1	1301246	362183	14.99	-	-	-	-	-	-	-	-	-	-	-	9/14/12 9:48	8.14	6.85
CMS-MW-1	1301860	361961	14.70	-	-	-	7/3/12 11:05	1.72	12.98	7/6/12 7:50	1.73	12.97	7/3 to 6/12	13.0	9/14/12 11:48	2.35	12.35
CMS-MW-1R	1301858	361949	16.57	-	-	-	-	-	-	-	-	-	-	-	-	-	-
CMS-MW-2	1301997	361951	17.34	-	-	-	-	-	-	-	-	-	-	-	-	-	-
CN-MW-1	1301556	363792	13.84	-	-	-	-	-	-	-	-	-	-	-	-	-	-
CN-MW-101	1301499	363202	13.46	-	-	-	-	-	-	-	-	-	-	-	-	-	-
CN-MW-102	1301496	363155	13.93	-	-	-	-	-	-	-	-	-	-	-	-	-	-
CN-MW-103	1301499	363123	14.25	-	-	-	-	-	-	-	-	-	-	-	-	-	-
CN-MW-104	1301518	363179	13.65	-	-	-	-	-	-	-	-	-	-	-	-	-	-
CN-MW-2	1301938	363885	14.56	-	-	-	-	-	-	-	-	-	-	-	-	-	-
CN-MW-3	1301947	364173	13.35	-	-	-	-	-	-	-	-	-	-	-	-	-	-
DA-MW 1	1301858	361850	14.63	-	-	-	-	-	-	-	-	-	-	-	9/14/12 11:45	1.41	13.22
DAST-MW-101	1301856	361796	15.77	-	-	-	-	-	-	-	-	-	-	-	-	-	-
GF11-MW-101	1301786	362077	17.22	-	-	-	-	-	-	-	-	-	-	-	-	-	-
GF9-MW 1	1301606	362523	15.18	-	-	-	-	-	-	-	-	-	-	-	9/14/12 11:49	6.95	8.23
GF9-MW-2	1301610	362500	18.44	-	-	-	-	-	-	-	-	-	-	-	-	-	-
GF9-MW-3	1301729	362536	18.73	-	-	-	-	-	-	-	-	-	-	-	-	-	-
GF9-MW-4	1301794	362535	19.02	-	-	-	-	-	-	-	-	-	-	-	-	-	-
HB-MW 1	1301867	362657	15.96	-	-	-	-	-	-	-	-	-	-	-	9/14/12 11:51	5.05	10.91
HB-MW-1R	1301866	362649	20.03	-	-	-	-	-	-	-	-	-	-	-	-	-	-
HBV-MW-101	1301907	362777	19.65	-	-	-	-	-	-	-	-	-	-	-	-	-	-

Table B-1 - Water Level Data, 2012-2017

Project No. 190583 K-C Worldwide Site Upland Area, Everett, Washington

				February 2012 (Snapshot at Low Tide)			July 2012 (Snapshot at Low Tide)			July 2012 (Snapshot at High Tide)			July 2012 (Average from Tidal Study*)		September 2012 (Snapshot at Low Tide)		
Location	Easting	Northing	Top of Casing Elevation (NAVD88)	Date/Time	Depth to Water	Groundwater Elevation	Date/Time	Depth to Water	Groundwater Elevation	Date/Time	Depth to Water	Groundwater Elevation	Date Range	Groundwater Elevation	Date/Time	Depth to Water	Groundwater Elevation
HW-MW-1	1301704	362732	15.43	-	-	-	7/3/12 11:30	5.08	10.35	7/6/12 7:59	3.72	11.71	7/3 to 6/12	11.0	9/14/12 10:48	4.68	10.75
LP-MW-1	1301459	362673	17.17	-	-	-	-	-	-	-	-	-	-	-	-	-	-
LP-MW-2	1301183	362668	17.69	-	-	-	-	-	-	-	-	-	-	-	-	-	-
LP-MW-3	1301505	362641	17.46	-	-	-	-	-	-	-	-	-	-	-	-	-	-
LP-MW-4	1301771	362700	19.16	-	-	-	-	-	-	-	-	-	-	-	-	-	-
LP-MW-5	1301508	362763	16.46	-	-	-	-	-	-	-	-	-	-	-	-	-	-
LP-MW-6	1301683	362589	19.17	-	-	-	-	-	-	-	-	-	-	-	-	-	-
LP-MW-7	1301240	362769	19.81	-	-	-	-	-	-	-	-	-	-	-	-	-	-
MW-1	1301334	361628	14.15	2/17/12 16:13	7.95	6.20	7/3/12 10:50	8.78	5.37	7/6/12 7:32	6.48	7.67	7/3 to 6/12	6.5	9/14/12 11:06	8.94	5.21
MW-2	1301390	361597	13.23	2/17/12 16:09	8.91	4.32	7/3/12 11:02	8.55	4.68	7/6/12 7:34	5.10	8.13	7/3 to 6/12	6.4	9/14/12 10:57	9.08	4.15
MW-3	1301616	361596	15.11	2/17/12 14:59	6.68	8.43	7/3/12 11:31	7.24	7.87	7/6/12 7:49	6.93	8.18	7/3 to 6/12	8.0	9/14/12 11:25	7.50	7.61
MW-4	1301672	361660	15.20	2/17/12 15:00	6.59	8.61	7/3/12 11:26	7.02	8.18	7/6/12 7:53	6.34	8.86	7/3 to 6/12	8.5	9/14/12 11:23	7.32	7.88
MW-5	1301427	363433	13.36	2/17/12 17:41	9.29	4.07	7/3/12 10:17	8.85	4.51	7/6/12 7:34	5.92	7.44	7/3 to 6/12	6.0	9/14/12 10:19	9.50	3.86
MW-6	1301239	362762	20.43	2/17/12 17:34	13.11	7.32	7/3/12 10:50	13.04	7.39	7/6/12 7:29	13.10	7.33	7/3 to 6/12	7.5	9/14/12 10:05	13.44	6.99
NRP-MW-1	1301454	363324	13.56	-	-	-	7/3/12 11:02	6.07	7.49	7/6/12 7:41	5.72	7.84	-	-	9/14/12 10:14	6.57	6.99
NRP-MW-2	1301424	363405	15.09	-	-	-	7/3/12 11:12	8.50	6.59	7/6/12 7:37	7.99	7.10	7/3 to 6/12	6.9	9/14/12 10:17	9.28	5.81
NRP-MW-3	1301445	363454	13.30	-	-	-	7/3/12 10:28	7.72	5.58	7/6/12 7:30	5.93	7.37	7/3 to 6/12	6.5	9/14/12 10:21	8.16	5.14
NRP-MW-4	1301808	363345	15.39	-	-	-	7/3/12 10:54	5.05	10.34	7/6/12 7:48	4.94	10.45	7/3 to 6/12	10.4	9/14/12 10:31	5.34	10.05
NRP-MW-5	1301810	363382	15.14	-	-	-	7/3/12 10:50	4.48	10.66	7/6/12 7:49	4.43	10.71	7/3 to 6/12	10.7	9/14/12 10:32	4.77	10.37
NRS-MW-101	1301412	363349	14.07	-	-	-	-	-	-	-	-	-	-	-	-	-	-
NRS-MW-102	1301402	363309	13.44	-	-	-	-	-	-	-	-	-	-	-	-	-	-
NRU-MW-101	1301419	363383	14.98	-	-	-	-	-	-	-	-	-	-	-	-	-	-
NRU-MW-102	1301429	363419	14.48	-	-	-	-	-	-	-	-	-	-	-	-	-	-
OMS-MW-1	1301247	361669	14.68	-	-	-	7/3/12 10:45	11.41	3.27	7/6/12 7:27	7.11	7.57	7/3 to 6/12	5.4	9/14/12 11:02	11.46	3.22
OMS-MW-2	1301204	361687	14.10	-	-	-	-	-	-	-	-	-	-	-	-	-	-
OPS-MW-1	1301883	362054	17.27	-	-	-	-	-	-	-	-	-	-	-	-	-	-
PM-MW-1	1301425	362030	15.66	-	-	-	-	-	-	-	-	-	-	-	-	-	-
PM-MW-2	1301546	361947	15.56	-	-	-	-	-	-	-	-	-	-	-	-	-	-
PM-MW-3	1301630	362091	16.85	-	-	-	-	-	-	-	-	-	-	-	-	-	-
PM-MW-4	1301353	361857	15.11	-	-	-	-	-	-	-	-	-	-	-	-	-	-
PM-MW-5	1301651	361912	15.76	-	-	-	-	-	-	-	-	-	-	-	-	-	-
PM-MW-6	1301231	362063	15.64	-	-	-	-	-	-	-	-	-	-	-	-	-	-
PM-MW-7	1301043	361875	14.97	-	-	-	-	-	-	-	-	-	-	-	-	-	-
PM-MW-8	1301050	362038	13.48	-	-	-	-	-	-	-	-	-	-	-	-	-	-
RCD-MW-101	1301050	362354	14.60	-	-	-	-	-	-	-	-	-	-	-	-	-	-
REC1-MW-1	1301953	361519	18.87	-	-	-	-	-	-	-	-	-	-	-	9/14/12 11:31	5.15	13.72
REC1-MW-10	1301702	361426	18.54	-	-	-	-	-	-	-	-	-	-	-	-	-	-
REC1-MW-11	1301920	361307	18.55	-	-	-	-	-	-	-	-	-	-	-	-	-	-
REC1-MW-12	1301916	361522	18.57	-	-	-	-	-	-	-	-	-	-	-	-	-	-
REC1-MW-14	1301773	361498	18.53	-	-	-	-	-	-	-	-	-	-	-	-	-	-
REC1-MW-15	1301618	361500	13.65	-	-	-	-	-	-	-	-	-	-	-	-	-	-
REC1-MW-2	1301775	361459	18.85	-	-	-	-	-	-	-	-	-	-	-	9/14/12 11:31	6.10	12.75

Table B-1 - Water Level Data, 2012-2017

Project No. 190583 K-C Worldwide Site Upland Area, Everett, Washington

				February 2012 (Snapshot at Low Tide)			July 2012 (Snapshot at Low Tide)			July 2012 (Snapshot at High Tide)			July 2012 (Average from Tidal Study*)		September 2012 (Snapshot at Low Tide)		
Location	Easting	Northing	Top of Casing Elevation (NAVD88)	Date/Time	Depth to Water	Groundwater Elevation	Date/Time	Depth to Water	Groundwater Elevation	Date/Time	Depth to Water	Groundwater Elevation	Date Range	Groundwater Elevation	Date/Time	Depth to Water	Groundwater Elevation
REC1-MW-3	1301751	361535	18.74	-	-	-	-	-	-	-	-	-	-	-	9/14/12 11:34	5.82	12.92
REC1-MW-4	1301607	361547	14.81	-	-	-	-	-	-	-	-	-	-	-	9/14/12 11:28	7.14	7.67
REC1-MW-5	1301569	361412	14.91	-	-	-	-	-	-	-	-	-	-	-	9/14/12 11:21	6.97	7.94
REC1-MW-6	1301767	361307	18.77	-	-	-	-	-	-	-	-	-	-	-	9/14/12 11:28	8.26	10.51
REC1-MW-7	1301638	361316	18.83	-	-	-	-	-	-	-	-	-	-	-	9/14/12 11:26	9.44	9.39
REC1-MW-8	1301499	361411	13.30	-	-	-	-	-	-	-	-	-	-	-	9/14/12 11:19	7.09	6.21
REC1-MW-9	1301429	361441	12.49	-	-	-	-	-	-	-	-	-	-	-	9/14/12 11:12	6.78	5.71
REC2-MW-5	1301882	361789	15.05	-	-	-	7/3/12 11:10	0.73	14.32	7/6/12 7:56	0.91	14.14	7/3 to 6/12	14.2	9/14/12 11:43	1.47	13.58
REC3-MW-1	1301051	362102	14.43	-	-	-	7/3/12 10:30	8.91	5.52	7/6/12 7:38	7.45	6.98	-	-	9/14/12 10:43	7.66	6.77
REC3-MW-1R	1301056	362116	14.79	-	-	-	-	-	-	-	-	-	-	-	-	-	-
REC5-MW-1	1301248	362287	15.49	-	-	-	7/3/12 10:41	6.85	8.64	7/6/12 7:42	7.05	8.44	7/3 to 6/12	8.7	9/14/12 10:04	8.16	7.33
REC5-MW-1R	1301248	362282	15.89	-	-	-	-	-	-	-	-	-	-	-	-	-	-
REC6-MW-1	1301673	362819	15.38	-	-	-	7/3/12 11:45	5.49	9.89	-	-	-	-	-	9/14/12 10:41	4.01	11.37
REC6-MW-2	1301331	362874	16.67	-	-	-	7/3/12 11:53	9.05	7.62	7/6/12 7:25	8.83	7.84	7/3 to 6/12	7.7	9/14/12 10:08	9.73	6.94
REC7-MW-1	1301520	363659	13.14	-	-	-	7/3/12 10:35	7.70	5.44	7/6/12 7:20	5.86	7.28	7/3 to 6/12	6.9	9/14/12 10:24	7.33	5.81
REC7-MW-2	1301358	363144	15.11	-	-	-	7/3/12 11:50	7.01	8.10	7/6/12 7:43	6.64	8.47	7/3 to 6/12	8.5	9/14/12 10:10	7.42	7.69
REC7-MW-3	1301068	361727	14.92	-	-	-	7/3/12 10:40	9.43	5.49	7/6/12 7:25	6.97	7.95	7/3 to 6/12	6.9	9/14/12 11:04	10.31	4.61
REC7-MW-4	1301406	361493	12.69	-	-	-	7/3/12 11:16	9.18	3.51	7/6/12 7:39	4.93	7.76	7/3 to 6/12	6.5	9/14/12 11:14	9.46	3.23
SHB-MW-1	1301243	362553	15.44	-	-	-	-	-	-	-	-	-	-	-	-	-	-
SHB-MW-101	1301229	362581	16.10	-	-	-	-	-	-	-	-	-	-	-	-	-	-
SHB-MW-102	1301231	362554	15.81	-	-	-	-	-	-	-	-	-	-	-	-	-	-
SHB-MW-2	1301149	362491	14.50	-	-	-	-	-	-	-	-	-	-	-	-	-	-
TM-MW-1	1301626	363170	15.18	-	-	-	-	-	-	-	-	-	-	-	-	-	-
TM-MW-2	1301795	363125	17.95	-	-	-	-	-	-	-	-	-	-	-	-	-	-
TM-MW-3	1302003	363148	18.39	-	-	-	-	-	-	-	-	-	-	-	-	-	-
TM-MW-4	1301857	362922	18.45	-	-	-	-	-	-	-	-	-	-	-	-	-	-
TM-MW-5	1301544	363044	14.73	-	-	-	-	-	-	-	-	-	-	-	-	-	-
TM-MW-6	1301342	363006	15.98	-	-	-	-	-	-	-	-	-	-	-	-	-	-
UG-MW-1	1302148	363340	16.95	-	-	-	7/3/12 11:58	1.21	15.74	7/6/12 7:55	1.20	15.75	7/3 to 6/12	15.8	9/14/12 10:34	1.30	15.65
UG-MW-2	1302024	362365	18.05	-	-	-	7/3/12 11:00	4.55	13.50	7/6/12 7:55	4.50	13.55	7/3 to 6/12	13.5	9/14/12 11:45	5.09	12.96
UG-MW-2R	1302000	362356	18.80	-	-	-	-	-	-	-	-	-	-	-	-	-	-
UST29-MW-1	1301647	362816	15.24	-	-	-	7/3/12 11:40	4.69	10.55	-	-	-	-	-	9/14/12 10:43	4.03	11.21
UST29-MW-101	1301584	362861	16.95	-	-	-	-	-	-	-	-	-	-	-	-	-	-
UST29-MW-102	1301605	362819	17.54	-	-	-	-	-	-	-	-	-	-	-	-	-	-
UST29-MW-103	1301657	362816	17.36	-	-	-	-	-	-	-	-	-	-	-	-	-	-
UST68-MW-1	1301537	361783	15.12	-	-	-	7/3/12 11:16	7.55	7.57	7/6/12 7:46	7.19	7.93	7/3 to 6/12	7.9	9/14/12 11:20	8.01	7.11
UST68-MW-2	1301411	361732	15.33	-	-	-	7/3/12 11:27	7.98	7.35	7/6/12 7:43	7.92	7.41	7/3 to 6/12	7.4	9/14/12 11:18	8.59	6.74
UST68-MW-4	1301483	361601	14.34	-	-	-	7/3/12 11:07	6.85	7.49	7/6/12 7:37	6.54	7.80	-	-	9/14/12 11:14	7.25	7.09
UST68-MW-5	1301375	361645	14.12	-	-	-	7/3/12 11:00	7.10	7.02	7/6/12 7:31	6.89	7.23	7/3 to 6/12	7.2	9/14/12 11:10	7.69	6.43
UST68-MW-6	1301587	361639	15.20	-	-	-	-	-	-	-	-	-	-	-	9/14/12 11:26	7.89	7.31
UST69-MW-1	1301555	362846	14.88	-	-	-	7/3/12 11:41	4.60	10.28	7/6/12 7:30	3.60	11.28	7/3 to 6/12	11.0	9/14/12 10:45	3.76	11.12
UST70-MW-1	1301076	362234	14.65	-	-	-	7/3/12 10:35	8.23	6.42	7/6/12 7:34	7.13	7.52	7/3 to 6/12	7.0	9/14/12 10:51	8.82	5.83
UST70-MW-101	1301056	362238	14.73	-	-	-	-	-	-	-	-	-	-	-	-	-	-

Table B-1 - Water Level Data, 2012-2017

Project No. 190583 K-C Worldwide Site Upland Area, Everett, Washington

				February 2012 (Snapshot at Low Tide)			July 2012 (Snapshot at Low Tide)			July 2012 (Snapshot at High Tide)			July 2012 (Average from Tidal Study*)		September 2012 (Snapshot at Low Tide)		
Location	Easting	Northing	Top of Casing Elevation (NAVD88)	Date/Time	Depth to Water	Groundwater Elevation	Date/Time	Depth to Water	Groundwater Elevation	Date/Time	Depth to Water	Groundwater Elevation	Date Range	Groundwater Elevation	Date/Time	Depth to Water	Groundwater Elevation
UST70-MW-102	1301058	362208	14.72	-	-	-	-	-	-	-	-	-	-	-	-	-	-
UST70-MW-2	1301043	362221	14.23	-	-	-	7/3/12 10:33	7.64	6.59	7/6/12 7:32	6.90	7.33	7/3 to 6/12	7.6	9/14/12 10:49	8.69	5.54
UST71-MW-1	1301192	362185	13.66	-	-	-	7/3/12 10:41	6.43	7.23	7/6/12 7:35	5.96	7.70	7/3 to 6/12	7.5	9/14/12 10:38	7.29	6.37
UST71-MW-101	1301169	362210	14.53	-	-	-	-	-	-	-	-	-	-	-	-	-	-
UST71-MW-102	1301166	362160	14.74	-	-	-	-	-	-	-	-	-	-	-	-	-	-
UST71-MW-103	1301171	362136	15.16	-	-	-	-	-	-	-	-	-	-	-	-	-	-
UST71-MW-104	1301242	362214	15.98	-	-	-	-	-	-	-	-	-	-	-	-	-	-
TM-1 (tide @ dock)	1300951	362325	16.63	-	-	-	7/3/12 11:05	19.47	-2.84	7/6/12 7:44	9.00	7.63	7/3 to 6/12	4.6	9/14/12 10:48	17.99	-1.36

Notes:

"R" in well ID denotes a replacement well.

"-" denotes no measurement collected.

All depths to water and elevations are in feet.

Horizontal coordinates relative to Washington State Plane North. Elevations relative to NAVD88 vertical datum.

*: Refer to tidal study description in Section 2.

**: Measurements collected during groundwater sampling; therefore measurements collected at variable tidal stages - not a snapshot set of measurements.

Table B-1 - Water Level Data, 2012-2017

Project No. 190583 K-C Worldwide Site Upland Area, Everett, Washington

				September 2012 (Snapshot at High Tide)			November 2013 (Snapshot at Middle Tide)			February 2014 (Measurements at Variable Tide Stages**)			May 2014 (Snapshot at Middle Tide)			August 2014 (Measurements at Variable Tide Stages**)		
Location	Easting	Northing	Top of Casing Elevation (NAVD88)	Date/Time	Depth to Water	Groundwater Elevation	Date/Time	Depth to Water	Groundwater Elevation	Date/Time	Depth to Water	Groundwater Elevation	Date/Time	Depth to Water	Groundwater Elevation	Date/Time	Depth to Water	Groundwater Elevation
AP-MW-1	1301638	362341	15.45	9/13/12 16:49	6.78	8.67	-	-	-	-	-	-	-	-	-	-	-	-
AP-MW-1R	1301627	362337	17.99	-	-	-	11/26/13 8:45	9.17	8.82	2/23/14 20:05	8.13	9.86	5/8/14 11:46	8.39	9.60	-	-	-
BA6-MW-101	1301123	362261	14.72	-	-	-	-	-	-	-	-	-	5/8/14 11:23	8.17	6.55	8/11/14 9:34	8.33	6.39
BA-MW-1	1301350	362285	15.83	-	-	-	11/26/13 8:45	9.17	6.66	2/27/14 13:56	6.70	9.13	5/8/14 11:34	7.43	8.40	-	-	-
BA-MW-2	1301485	362288	17.46	-	-	-	11/26/13 8:50	9.79	7.67	2/25/14 17:19	7.51	9.95	5/8/14 11:42	8.36	9.10	-	-	-
BA-MW-3	1301345	362166	15.63	-	-	-	11/26/13 8:34	9.29	6.34	2/25/14 16:28	6.34	9.29	5/8/14 12:03	7.21	8.42	-	-	-
BA-MW-4	1301460	362175	16.59	-	-	-	11/26/13 8:38	8.40	8.19	2/25/14 15:33	4.80	11.79	5/8/14 11:58	6.14	10.45	-	-	-
BA-MW-5	1301148	362327	14.10	-	-	-	11/26/13 8:10	8.36	5.74	2/24/14 16:05	6.85	7.25	5/8/14 11:25	7.10	7.00	-	-	-
BA-MW-6	1301153	362260	11.30	-	-	-	11/26/13 8:07	6.04	5.26	2/23/14 15:33	4.36	6.94	-	-	-	-	-	-
BA-MW-7	1301031	362281	12.86	-	-	-	11/26/13 8:05	7.83	5.03	2/23/14 18:36	7.59	5.27	5/8/14 11:23	7.08	5.78	-	-	-
BBH-MW-101	1301271	362117	15.68	-	-	-	-	-	-	-	-	-	5/8/14 11:32	7.62	8.06	8/12/14 9:54	8.82	6.86
BBH-MW-102	1301270	362088	15.63	-	-	-	-	-	-	-	-	-	5/8/14 11:29	7.44	8.19	8/12/14 9:15	8.92	6.71
BBH-MW-103	1301417	362106	16.34	-	-	-	-	-	-	-	-	-	5/8/14 11:54	6.54	9.80	8/13/14 9:59	8.75	7.59
BBH-MW-104	1301391	362079	15.99	-	-	-	-	-	-	-	-	-	5/8/14 11:51	6.37	9.62	8/13/14 9:07	8.67	7.32
BCT-MW-101	1301832	361582	14.55	-	-	-	-	-	-	-	-	-	5/8/14 11:52	0.58	13.97	8/14/14 11:48	0.87	13.68
BCT-MW-102	1301759	361578	14.48	-	-	-	-	-	-	-	-	-	5/8/14 12:00	1.01	13.47	8/14/14 11:04	1.50	12.98
BCT-MW-103	1301683	361575	15.44	-	-	-	-	-	-	-	-	-	5/8/14 12:04	5.15	10.29	8/12/14 13:59	6.14	9.30
BCT-MW-104	1301588	361576	14.80	-	-	-	-	-	-	-	-	-	5/8/14 11:24	5.83	8.97	8/12/14 9:13	6.48	8.32
BCT-MW-105	1301594	361618	14.76	-	-	-	-	-	-	-	-	-	5/8/14 11:28	5.79	8.97	8/13/14 12:20	6.52	8.24
BCT-MW-106	1301597	361645	14.72	-	-	-	-	-	-	-	-	-	5/8/14 11:36	5.82	8.90	8/13/14 11:55	6.55	8.17
BCT-MW-107	1301595	361701	14.76	-	-	-	-	-	-	-	-	-	5/8/14 11:39	6.08	8.68	8/14/14 10:18	6.59	8.17
BCT-MW-108	1301668	361728	15.48	-	-	-	-	-	-	-	-	-	5/8/14 11:44	6.41	9.07	8/14/14 9:22	6.60	8.88
BOILER-MW 1	1301246	362183	14.99	9/13/12 16:42	8.07	6.92	-	-	-	-	-	-	-	-	-	-	-	-
CMS-MW-1	1301860	361961	14.70	9/13/12 15:57	2.31	12.39	-	-	-	-	-	-	-	-	-	-	-	-
CMS-MW-1R	1301858	361949	16.57	-	-	-	11/26/13 9:11	3.86	12.71	2/21/14 11:38	2.68	13.89	5/8/14 12:19	2.97	13.60	-	-	-
CMS-MW-2	1301997	361951	17.34	-	-	-	11/26/13 9:14	3.57	13.77	2/21/14 10:23	2.34	15.00	5/8/14 12:14	2.52	14.82	-	-	-
CN-MW-1	1301556	363792	13.84	-	-	-	11/26/13 9:04	5.40	8.44	2/25/14 18:17	5.01	8.83	5/8/14 10:33	5.17	8.67	-	-	-
CN-MW-101	1301499	363202	13.46	-	-	-	-	-	-	-	-	-	5/8/14 11:15	4.21	9.25	8/12/14 10:05	5.00	8.46
CN-MW-102	1301496	363155	13.93	-	-	-	-	-	-	-	-	-	5/8/14 11:19	3.44	10.49	8/12/14 13:05	4.42	9.51
CN-MW-103	1301499	363123	14.25	-	-	-	-	-	-	-	-	-	5/8/14 11:21	3.33	10.92	8/12/14 13:06	4.42	9.83
CN-MW-104	1301518	363179	13.65	-	-	-	-	-	-	-	-	-	5/8/14 11:17	3.10	10.55	8/12/14 13:54	3.70	9.95
CN-MW-2	1301938	363885	14.56	-	-	-	11/26/13 9:13	3.75	10.81	2/27/14 12:54	3.44	11.12	5/8/14 11:53	3.51	11.05	-	-	-
CN-MW-3	1301947	364173	13.35	-	-	-	11/26/13 9:20	3.35	10.00	2/25/14 14:25	3.21	10.14	5/8/14 12:01	2.97	10.38	-	-	-
DA-MW 1	1301858	361850	14.63	9/13/12 15:15	1.38	13.25	-	-	-	-	-	-	-	-	-	-	-	-
DAST-MW-101	1301856	361796	15.77	-	-	-	-	-	-	-	-	-	5/8/14 11:48	1.39	14.38	8/13/14 11:31	1.80	13.97
GF11-MW-101	1301786	362077	17.22	-	-	-	-	-	-	-	-	-	5/8/14 12:11	5.86	11.36	8/13/14 10:48	7.42	9.80
GF9-MW 1	1301606	362523	15.18	9/13/12 16:55	6.57	8.61	11/26/13 8:32	6.46	8.72	2/19/14 13:57	5.05	10.13	-	-	-	-	-	-
GF9-MW-2	1301610	362500	18.44	-	-	-	11/26/13 8:30	10.05	8.39	2/19/14 14:30	8.63	9.81	5/8/14 11:50	8.87	9.57	-	-	-
GF9-MW-3	1301729	362536	18.73	-	-	-	11/26/13 8:55	7.68	11.05	2/19/14 13:15	6.01	12.72	5/8/14 11:54	6.45	12.28	-	-	-
GF9-MW-4	1301794	362535	19.02	-	-	-	-	-	-	-	-	-	-	-	-	-	-	-
HB-MW 1	1301867	362657	15.96	9/13/12 15:47	4.99	10.97	-	-	-	-	-	-	-	-	-	-	-	-
HB-MW-1R	1301866	362649	20.03	-	-	-	11/26/13 8:56	8.83	11.20	2/25/14 10:45	7.08	12.95	5/8/14 12:00	7.48	12.55	-	-	-
HBV-MW-101	1301907	362777	19.65	-	-	-	-	-	-	-	-	-	5/8/14 11:58	7.35	12.30	8/13/14 11:15	8.28	11.37

Table B-1 - Water Level Data, 2012-2017

Project No. 190583 K-C Worldwide Site Upland Area, Everett, Washington

				September 2012 (Snapshot at High Tide)			November 2013 (Snapshot at Middle Tide)			February 2014 (Measurements at Variable Tide Stages**)			May 2014 (Snapshot at Middle Tide)			August 2014 (Measurements at Variable Tide Stages**)		
Location	Easting	Northing	Top of Casing Elevation (NAVD88)	Date/Time	Depth to Water	Groundwater Elevation	Date/Time	Depth to Water	Groundwater Elevation	Date/Time	Depth to Water	Groundwater Elevation	Date/Time	Depth to Water	Groundwater Elevation	Date/Time	Depth to Water	Groundwater Elevation
HW-MW-1	1301704	362732	15.43	9/13/12 15:51	4.79	10.64	11/26/13 8:58	3.68	11.75	-	-	-	-	-	-	-	-	-
LP-MW-1	1301459	362673	17.17	-	-	-	11/26/13 8:25	2.13	15.04	2/24/14 14:34	1.39	15.78	5/8/14 11:42	3.50	13.67	-	-	-
LP-MW-2	1301183	362668	17.69	-	-	-	11/26/13 8:20	7.86	9.83	2/24/14 17:25	3.14	14.55	5/8/14 10:51	3.72	13.97	-	-	-
LP-MW-3	1301505	362641	17.46	-	-	-	-	-	-	-	-	-	-	-	-	-	-	-
LP-MW-4	1301771	362700	19.16	-	-	-	-	-	-	-	-	-	-	-	-	-	-	-
LP-MW-5	1301508	362763	16.46	-	-	-	-	-	-	-	-	-	-	-	-	-	-	-
LP-MW-6	1301683	362589	19.17	-	-	-	-	-	-	-	-	-	-	-	-	-	-	-
LP-MW-7	1301240	362769	19.81	-	-	-	-	-	-	-	-	-	-	-	-	-	-	-
MW-1	1301334	361628	14.15	9/13/12 16:15	7.46	6.69	11/26/13 7:56	6.43	7.72	2/23/14 16:11	6.14	8.01	5/8/14 10:36	8.57	5.58	-	-	-
MW-2	1301390	361597	13.23	9/13/12 16:13	5.00	8.23	11/26/13 8:00	7.61	5.62	2/23/14 16:52	8.14	5.09	5/8/14 10:41	8.73	4.50	-	-	-
MW-3	1301616	361596	15.11	9/13/12 15:55	7.46	7.65	-	-	-	-	-	-	-	-	-	-	-	-
MW-4	1301672	361660	15.20	9/13/12 15:50	7.35	7.85	11/26/13 9:00	6.55	8.65	-	-	-	-	-	-	-	-	-
MW-5	1301427	363433	13.36	9/13/12 16:32	6.96	6.40	11/26/13 8:43	7.42	5.94	2/25/14 18:58	7.85	5.51	5/8/14 10:45	7.36	6.00	-	-	-
MW-6	1301239	362762	20.43	9/13/12 16:14	13.03	7.40	11/26/13 8:23	13.43	7.00	2/23/14 18:04	14.18	6.25	5/8/14 10:35	12.80	7.63	-	-	-
NRP-MW-1	1301454	363324	13.56	9/13/12 16:24	6.40	7.16	11/26/13 7:50	6.30	7.26	-	-	-	-	-	-	-	-	-
NRP-MW-2	1301424	363405	15.09	9/13/12 16:30	9.02	6.07	11/26/13 8:40	8.90	6.19	2/25/14 19:33	8.60	6.49	5/8/14 10:54	8.51	6.58	8/12/14 12:23	8.26	6.83
NRP-MW-3	1301445	363454	13.30	9/13/12 16:35	6.92	6.38	11/26/13 8:47	7.41	5.89	2/25/14 18:16	7.20	6.10	5/8/14 10:42	7.02	6.28	-	-	-
NRP-MW-4	1301808	363345	15.39	9/13/12 16:45	5.25	10.14	-	-	-	-	-	-	-	-	-	-	-	-
NRP-MW-5	1301810	363382	15.14	9/13/12 16:48	4.74	10.40	-	-	-	-	-	-	-	-	-	-	-	-
NRS-MW-101	1301412	363349	14.07	-	-	-	-	-	-	-	-	-	5/8/14 10:58	8.96	5.11	8/12/14 11:53	9.24	4.83
NRS-MW-102	1301402	363309	13.44	-	-	-	-	-	-	-	-	-	5/8/14 11:00	8.33	5.11	8/12/14 11:27	8.19	5.25
NRU-MW-101	1301419	363383	14.98	-	-	-	-	-	-	-	-	-	5/8/14 10:56	9.26	5.72	8/12/14 12:24	8.99	5.99
NRU-MW-102	1301429	363419	14.48	-	-	-	-	-	-	-	-	-	5/8/14 10:51	8.36	6.12	8/12/14 11:49	7.93	6.55
OMS-MW-1	1301247	361669	14.68	9/13/12 16:19	7.92	6.76	11/26/13 8:16	9.69	4.99	2/24/14 18:21	11.11	3.57	5/8/14 10:35	9.3	5.38	-	-	-
OMS-MW-2	1301204	361687	14.10	-	-	-	-	-	-	-	-	-	-	-	-	-	-	-
OPS-MW-1	1301883	362054	17.27	-	-	-	11/26/13 9:07	5.40	11.87	2/24/14 14:51	3.67	13.60	5/8/14 12:14	4.20	13.07	-	-	-
PM-MW-1	1301425	362030	15.66	-	-	-	11/26/13 8:55	7.72	7.94	2/24/14 16:20	5.46	10.20	5/8/14 11:47	6.14	9.52	-	-	-
PM-MW-2	1301546	361947	15.56	-	-	-	11/26/13 8:58	8.12	7.44	2/25/14 16:06	6.22	9.34	5/8/14 12:09	6.88	8.68	-	-	-
PM-MW-3	1301630	362091	16.85	-	-	-	11/26/13 9:04	6.61	10.24	2/25/14 15:18	3.73	13.12	5/8/14 12:20	4.93	11.92	-	-	-
PM-MW-4	1301353	361857	15.11	-	-	-	11/26/13 8:24	8.97	6.14	2/23/14 20:56	7.59	7.52	5/8/14 11:40	7.87	7.24	-	-	-
PM-MW-5	1301651	361912	15.76	-	-	-	11/26/13 9:00	5.22	10.54	2/23/14 16:59	4.26	11.50	5/8/14 12:14	5.04	10.72	-	-	-
PM-MW-6	1301231	362063	15.64	-	-	-	11/26/13 8:26	9.89	5.75	2/23/14 19:55	8.66	6.98	5/8/14 11:25	8.78	6.86	-	-	-
PM-MW-7	1301043	361875	14.97	-	-	-	11/26/13 8:09	9.99	4.98	2/24/14 19:11	9.40	5.57	5/8/14 10:46	8.89	6.08	-	-	-
PM-MW-8	1301050	362038	13.48	-	-	-	11/26/13 8:02	8.73	4.75	2/24/14 18:20	8.10	5.38	5/8/14 10:54	7.75	5.73	-	-	-
RCD-MW-101	1301050	362354	14.60	-	-	-	-	-	-	-	-	-	5/8/14 11:11	10.26	4.34	8/11/14 11:20	10.62	3.98
REC1-MW-1	1301953	361519	18.87	9/13/12 16:48	5.14	13.73	11/26/13 9:33	4.51	14.36	2/20/14 11:08	4.11	14.76	5/8/14 11:02	3.97	14.90	-	-	-
REC1-MW-10	1301702	361426	18.54	-	-	-	11/26/13 9:39	6.47	12.07	2/20/14 14:30	6.16	12.38	5/8/14 10:42	6.14	12.40	-	-	-
REC1-MW-11	1301920	361307	18.55	-	-	-	11/26/13 9:33	3.31	15.24	2/20/14 11:50	3.75	14.80	5/8/14 10:57	3.46	15.09	-	-	-
REC1-MW-12	1301916	361522	18.57	-	-	-	11/26/13 9:30	4.90	13.67	2/20/14 10:31	4.43	14.14	5/8/14 10:59	4.23	14.34	-	-	-
REC1-MW-14	1301773	361498	18.53	-	-	-	11/26/13 9:23	5.61	12.92	2/20/14 9:07	5.25	13.28	5/8/14 10:47	5.08	13.45	-	-	-
REC1-MW-15	1301618	361500	13.65	-	-	-	11/26/13 8:40	5.61	8.04	2/25/14 8:58	5.26	8.39	5/8/14 11:15	4.51	9.14	-	-	-
REC1-MW-2	1301775	361459	18.85	9/13/12 16:51	6.09	12.76	11/26/13 9:27	5.74	13.11	2/20/14 10:00	5.43	13.42	5/8/14 10:45	5.29	13.56	-	-	-

Table B-1 - Water Level Data, 2012-2017

Project No. 190583 K-C Worldwide Site Upland Area, Everett, Washington

				September 2012 (Snapshot at High Tide)			November 2013 (Snapshot at Middle Tide)			February 2014 (Measurements at Variable Tide Stages**)			May 2014 (Snapshot at Middle Tide)			August 2014 (Measurements at Variable Tide Stages**)		
Location	Easting	Northing	Top of Casing Elevation (NAVD88)	Date/Time	Depth to Water	Groundwater Elevation	Date/Time	Depth to Water	Groundwater Elevation	Date/Time	Depth to Water	Groundwater Elevation	Date/Time	Depth to Water	Groundwater Elevation	Date/Time	Depth to Water	Groundwater Elevation
REC1-MW-3	1301751	361535	18.74	9/13/12 16:53	5.81	12.93	11/26/13 9:19	5.60	13.14	2/20/14 8:30	5.09	13.65	5/8/14 10:50	4.93	13.81	-	-	-
REC1-MW-4	1301607	361547	14.81	9/13/12 15:59	7.05	7.76	11/26/13 8:47	6.36	8.45	2/25/14 9:33	6.47	8.34	5/8/14 11:18	5.20	9.61	-	-	-
REC1-MW-5	1301569	361412	14.91	9/13/12 16:40	6.74	8.17	11/26/13 9:20	6.42	8.49	2/23/14 19:04	5.80	9.11	5/8/14 11:09	5.57	9.34	-	-	-
REC1-MW-6	1301767	361307	18.77	9/13/12 16:45	8.22	10.55	11/26/13 9:46	7.94	10.83	2/20/14 12:42	7.44	11.33	5/8/14 10:54	7.35	11.42	-	-	-
REC1-MW-7	1301638	361316	18.83	9/13/12 16:43	9.46	9.37	11/26/13 9:43	8.56	10.27	2/20/14 13:32	8.47	10.36	5/8/14 10:39	8.58	10.25	-	-	-
REC1-MW-8	1301499	361411	13.30	9/13/12 16:02	6.42	6.88	11/26/13 8:20	7.31	5.99	2/23/14 15:30	6.71	6.59	5/8/14 11:05	6.96	6.34	-	-	-
REC1-MW-9	1301429	361441	12.49	9/13/12 16:04	6.23	6.26	11/26/13 8:12	7.41	5.08	2/24/14 17:21	6.49	6.00	5/8/14 10:53	5.40	7.09	-	-	-
REC2-MW-5	1301882	361789	15.05	9/13/12 15:54	1.43	13.62	-	-	-	-	-	-	-	-	-	-	-	-
REC3-MW-1	1301051	362102	14.43	9/13/12 16:20	8.76	5.67	-	-	-	-	-	-	-	-	-	-	-	-
REC3-MW-1R	1301056	362116	14.79	-	-	-	11/26/13 8:06	10.30	4.49	2/24/14 17:33	9.30	5.49	5/8/14 11:01	9.12	5.67	-	-	-
REC5-MW-1	1301248	362287	15.49	9/13/12 16:44	8.16	7.33	-	-	-	2/27/14 14:48	6.94	8.55	-	-	-	-	-	-
REC5-MW-1R	1301248	362282	15.89	-	-	-	11/26/13 8:40	9.80	6.09	-	-	-	5/8/14 11:31	7.70	8.19	-	-	-
REC6-MW-1	1301673	362819	15.38	9/13/12 15:55	4.01	11.37	-	-	-	-	-	-	-	-	-	-	-	-
REC6-MW-2	1301331	362874	16.67	9/13/12 16:04	9.60	7.07	11/26/13 8:22	9.40	7.27	2/24/14 18:10	8.70	7.97	5/8/14 11:31	8.48	8.19	-	-	-
REC7-MW-1	1301520	363659	13.14	9/13/12 16:39	6.01	7.13	11/26/13 8:56	7.00	6.14	2/25/14 19:12	6.87	6.27	5/8/14 10:37	6.77	6.37	-	-	-
REC7-MW-2	1301358	363144	15.11	9/13/12 16:20	7.18	7.93	11/26/13 8:03	7.15	7.96	2/25/14 20:00	6.83	8.28	5/8/14 11:06	6.57	8.54	-	-	-
REC7-MW-3	1301068	361727	14.92	9/13/12 16:23	6.95	7.97	11/26/13 8:14	10.04	4.88	2/24/14 19:09	9.78	5.14	5/8/14 10:41	9.45	5.47	-	-	-
REC7-MW-4	1301406	361493	12.69	9/13/12 16:31	4.43	8.26	11/26/13 8:05	7.14	5.55	2/23/14 17:52	9.31	3.38	5/8/14 10:46	8.41	4.28	-	-	-
SHB-MW-1	1301243	362553	15.44	-	-	-	11/26/13 8:17	9.45	5.99	-	-	-	-	-	-	-	-	-
SHB-MW-101	1301229	362581	16.10	-	-	-	-	-	-	2/23/14 20:16	8.38	7.72	5/8/14 10:54	9.11	6.99	8/11/14 12:20	9.62	6.48
SHB-MW-102	1301231	362554	15.81	-	-	-	-	-	-	-	-	-	5/8/14 10:55	8.80	7.01	8/11/14 12:20	9.30	6.51
SHB-MW-2	1301149	362491	14.50	-	-	-	11/26/13 8:15	8.72	5.78	2/23/14 16:36	7.50	7.00	5/8/14 10:58	7.64	6.86	-	-	-
TM-MW-1	1301626	363170	15.18	-	-	-	11/26/13 9:37	6.60	8.58	2/26/14 11:45	2.43	12.75	5/8/14 11:28	2.96	12.22	-	-	-
TM-MW-2	1301795	363125	17.95	-	-	-	11/26/13 10:02	6.37	11.58	2/26/14 12:50	4.93	13.02	5/8/14 11:32	5.39	12.56	-	-	-
TM-MW-3	1302003	363148	18.39	-	-	-	11/26/13 10:08	4.27	14.12	2/25/14 12:35	3.72	14.67	5/8/14 11:41	3.68	14.71	-	-	-
TM-MW-4	1301857	362922	18.45	-	-	-	11/26/13 9:56	6.15	12.30	2/25/14 11:30	4.34	14.11	5/8/14 11:36	5.08	13.37	-	-	-
TM-MW-5	1301544	363044	14.73	-	-	-	11/26/13 9:45	4.66	10.07	2/26/14 10:46	3.64	11.09	5/8/14 11:25	3.29	11.44	-	-	-
TM-MW-6	1301342	363006	15.98	-	-	-	11/26/13 8:08	8.25	7.73	2/24/14 18:50	7.33	8.65	5/8/14 11:09	7.36	8.62	-	-	-
UG-MW-1	1302148	363340	16.95	9/13/12 16:52	1.25	15.70	11/26/13 10:16	0.84	16.11	2/25/14 13:25	0.68	16.27	5/8/14 11:46	0.44	16.51	-	-	-
UG-MW-2	1302024	362365	18.05	9/13/12 16:51	5.08	12.97	-	-	-	-	-	-	-	-	-	-	-	-
UG-MW-2R	1302000	362356	18.80	-	-	-	11/26/13 9:05	5.65	13.15	2/24/14 15:48	4.47	14.33	5/8/14 12:03	4.95	13.85	-	-	-
UST29-MW-1	1301647	362816	15.24	9/13/12 16:01	4.02	11.22	-	-	-	-	-	-	-	-	-	-	-	-
UST29-MW-101	1301584	362861	16.95	-	-	-	-	-	-	-	-	-	5/8/14 11:50	4.83	12.12	8/13/14 9:02	6.54	10.41
UST29-MW-102	1301605	362819	17.54	-	-	-	-	-	-	-	-	-	5/8/14 11:51	5.48	12.06	8/13/14 9:39	7.15	10.39
UST29-MW-103	1301657	362816	17.36	-	-	-	-	-	-	-	-	-	5/8/14 11:53	5.14	12.22	8/13/14 10:33	6.85	10.51
UST68-MW-1	1301537	361783	15.12	9/13/12 15:49	7.98	7.14	-	-	-	-	-	-	-	-	-	-	-	-
UST68-MW-2	1301411	361732	15.33	9/13/12 15:48	8.59	6.74	-	-	-	-	-	-	-	-	-	-	-	-
UST68-MW-4	1301483	361601	14.34	9/13/12 16:37	7.12	7.22	-	-	-	-	-	-	-	-	-	-	-	-
UST68-MW-5	1301375	361645	14.12	9/13/12 16:11	7.65	6.47	11/26/13 8:26	6.98	7.14	-	-	-	5/8/14 10:57	6.62	7.50	-	-	-
UST68-MW-6	1301587	361639	15.20	9/13/12 16:35	7.76	7.44	-	-	-	-	-	-	-	-	-	-	-	-
UST69-MW-1	1301555	362846	14.88	9/13/12 15:57	3.75	11.13	-	-	-	-	-	-	-	-	-	-	-	-
UST70-MW-1	1301076	362234	14.65	9/13/12 16:31	8.18	6.47	-	-	-	-	-	-	-	-	-	-	-	-
UST70-MW-101	1301056	362238	14.73	-	-	-	-	-	-	-	-	-	5/8/14 11:15	8.58	6.15	8/11/14 10:25	8.78	5.95

Table B-1 - Water Level Data, 2012-2017

Project No. 190583 K-C Worldwide Site Upland Area, Everett, Washington

				September 2012 (Snapshot at High Tide)			November 2013 (Snapshot at Middle Tide)			February 2014 (Measurements at Variable Tide Stages**)			May 2014 (Snapshot at Middle Tide)			August 2014 (Measurements at Variable Tide Stages**)		
Location	Easting	Northing	Top of Casing Elevation (NAVD88)	Date/Time	Depth to Water	Groundwater Elevation	Date/Time	Depth to Water	Groundwater Elevation	Date/Time	Depth to Water	Groundwater Elevation	Date/Time	Depth to Water	Groundwater Elevation	Date/Time	Depth to Water	Groundwater Elevation
UST70-MW-102	1301058	362208	14.72	-	-	-	-	-	-	-	-	-	5/8/14 11:17	8.68	6.04	8/11/14 11:18	9.31	5.41
UST70-MW-2	1301043	362221	14.23	9/13/12 16:27	8.10	6.13	11/26/13 7:58	8.65	5.58	2/23/14 17:49	7.68	6.55	5/8/14 11:17	7.55	6.68	8/11/14 10:28	7.81	6.42
UST71-MW-1	1301192	362185	13.66	9/13/12 16:38	7.15	6.51	-	-	-	-	-	-	-	-	-	-	-	-
UST71-MW-101	1301169	362210	14.53	-	-	-	-	-	-	-	-	-	5/8/14 11:11	7.79	6.74	8/12/14 11:07	8.19	6.34
UST71-MW-102	1301166	362160	14.74	-	-	-	-	-	-	-	-	-	5/8/14 11:07	7.96	6.78	8/11/14 9:40	8.20	6.54
UST71-MW-103	1301171	362136	15.16	-	-	-	-	-	-	-	-	-	5/8/14 11:14	7.45	7.71	8/12/14 13:25	8.34	6.82
UST71-MW-104	1301242	362214	15.98	-	-	-	-	-	-	-	-	-	5/8/14 11:19	8.57	7.41	8/11/14 13:25	9.43	6.55
TM-1 (tide @ dock)	1300951	362325	16.63	9/13/12 16:35	8.58	8.05	-	-	-	-	-	-	5/8/14 11:09	10.94	5.69	-	-	-

Notes:

"R" in well ID denotes a replacement well.

"-" denotes no measurement collected.

All depths to water and elevations are in feet.

Horizontal coordinates relative to Washington State Plane North. Elevations relative to NAVD88 vertical datum.

*: Refer to tidal study description in Section 2.

**: Measurements collected during groundwater sampling; therefore measurements collected at variable tidal stages - not a snapshot set of measurements.

Table B-1 - Water Level Data, 2012-2017

Project No. 190583 K-C Worldwide Site Upland Area, Everett, Washington

				November 2014 (Measurements at Variable Tide Stages**)			February 2015 (Measurements at Variable Tide Stages**)			September 2015 (Measurements at Variable Tide Stages**)			November 2015 (Measurements at Variable Tide Stages**)			February 2016 (Snapshot at Middle Tide)		
Location	Easting	Northing	Top of Casing Elevation (NAVD88)	Date/Time	Depth to Water	Groundwater Elevation	Date/Time	Depth to Water	Groundwater Elevation	Date/Time	Depth to Water	Groundwater Elevation	Date/Time	Depth to Water	Groundwater Elevation	Date/Time	Depth to Water	Groundwater Elevation
AP-MW-1	1301638	362341	15.45	-	-	-	-	-	-	-	-	-	-	-	-	-	-	-
AP-MW-1R	1301627	362337	17.99	-	-	-	-	-	-	-	-	-	-	-	-	2/8/16 10:41	7.63	10.36
BA6-MW-101	1301123	362261	14.72	11/5/14 19:16	7.21	7.51	2/18/15 20:16	7.76	6.96	-	-	-	-	-	-	2/8/16 10:30	7.61	7.11
BA-MW-1	1301350	362285	15.83	-	-	-	-	-	-	-	-	-	-	-	-	2/8/16 11:25	6.60	9.23
BA-MW-2	1301485	362288	17.46	-	-	-	-	-	-	-	-	-	-	-	-	2/8/16 11:31	7.50	9.96
BA-MW-3	1301345	362166	15.63	-	-	-	-	-	-	-	-	-	-	-	-	2/8/16 11:20	6.23	9.40
BA-MW-4	1301460	362175	16.59	-	-	-	-	-	-	-	-	-	-	-	-	2/8/16 12:16	4.37	12.22
BA-MW-5	1301148	362327	14.10	-	-	-	-	-	-	-	-	-	-	-	-	2/8/16 12:20	6.61	7.49
BA-MW-6	1301153	362260	11.30	-	-	-	-	-	-	-	-	-	-	-	-	-	-	-
BA-MW-7	1301031	362281	12.86	-	-	-	-	-	-	-	-	-	-	-	-	-	-	-
BBH-MW-101	1301271	362117	15.68	11/3/14 14:26	6.02	9.66	2/18/15 16:58	6.83	8.85	-	-	-	11/16/15 20:30	5.32	10.36	2/8/16 11:13	5.76	9.92
BBH-MW-102	1301270	362088	15.63	11/3/14 15:09	5.72	9.91	2/17/15 18:36	6.41	9.22	-	-	-	11/18/15 21:28	5.58	10.05	2/8/16 11:10	6.23	9.40
BBH-MW-103	1301417	362106	16.34	11/3/14 16:36	4.55	11.79	2/17/15 16:56	5.42	10.92	-	-	-	11/18/15 20:27	4.37	11.97	2/8/16 11:38	4.91	11.43
BBH-MW-104	1301391	362079	15.99	11/3/14 15:58	4.76	11.23	2/17/15 17:52	5.52	10.47	-	-	-	11/16/15 22:25	4.51	11.48	2/8/16 11:45	5.32	10.67
BCT-MW-101	1301832	361582	14.55	11/3/14 13:27	0.49	14.06	2/19/15 19:11	0.63	13.92	-	-	-	-	-	-	2/8/16 11:08	0.60	13.95
BCT-MW-102	1301759	361578	14.48	11/3/14 15:02	0.92	13.56	2/19/15 18:33	1.09	13.39	-	-	-	-	-	-	2/8/16 11:06	1.02	13.46
BCT-MW-103	1301683	361575	15.44	11/3/14 15:54	4.58	10.86	2/19/15 17:44	5.29	10.15	-	-	-	11/19/15 20:25	3.09	12.35	2/8/16 11:04	5.27	10.17
BCT-MW-104	1301588	361576	14.80	11/3/14 17:04	5.28	9.52	2/17/15 17:01	5.69	9.11	-	-	-	11/19/15 21:30	5.04	9.76	2/8/16 10:33	5.76	9.04
BCT-MW-105	1301594	361618	14.76	11/4/14 15:36	5.09	9.67	2/17/15 17:49	5.73	9.03	-	-	-	11/19/15 22:20	4.96	9.80	2/8/16 10:35	5.69	9.07
BCT-MW-106	1301597	361645	14.72	11/4/14 15:35	4.93	9.79	2/18/15 19:18	5.05	9.67	-	-	-	11/17/15 21:33	4.74	9.98	2/8/16 10:52	4.84	9.88
BCT-MW-107	1301595	361701	14.76	11/4/14 16:24	5.20	9.56	2/19/15 17:46	5.89	8.87	-	-	-	11/17/15 20:30	5.16	9.60	2/8/16 10:55	5.84	8.92
BCT-MW-108	1301668	361728	15.48	11/4/14 16:28	5.43	10.05	2/19/15 18:55	5.87	9.61	-	-	-	11/18/15 21:20	5.21	10.27	2/8/16 10:59	5.02	10.46
BOILER-MW 1	1301246	362183	14.99	-	-	-	-	-	-	-	-	-	-	-	-	-	-	-
CMS-MW-1	1301860	361961	14.70	-	-	-	-	-	-	-	-	-	-	-	-	-	-	-
CMS-MW-1R	1301858	361949	16.57	-	-	-	-	-	-	-	-	-	-	-	-	2/8/16 11:47	2.85	13.72
CMS-MW-2	1301997	361951	17.34	-	-	-	-	-	-	-	-	-	-	-	-	2/8/16 11:36	2.45	14.89
CN-MW-1	1301556	363792	13.84	-	-	-	-	-	-	-	-	-	-	-	-	2/8/16 9:30	5.12	8.72
CN-MW-101	1301499	363202	13.46	11/6/14 21:15	3.66	9.80	2/19/15 21:16	4.52	8.94	-	-	-	11/18/16 0:30	3.87	9.59	2/8/16 10:36	4.68	8.78
CN-MW-102	1301496	363155	13.93	11/5/14 21:07	2.39	11.54	2/19/15 21:14	4.42	9.51	-	-	-	-	-	-	2/8/16 10:32	4.69	9.24
CN-MW-103	1301499	363123	14.25	11/6/14 20:29	1.97	12.28	2/19/15 21:53	3.33	10.92	-	-	-	-	-	-	2/8/16 10:27	4.40	9.85
CN-MW-104	1301518	363179	13.65	11/6/14 20:30	0.51	13.14	2/19/15 21:59	1.88	11.77	-	-	-	-	-	-	2/8/16 10:40	1.47	12.18
CN-MW-2	1301938	363885	14.56	-	-	-	-	-	-	-	-	-	-	-	-	2/8/16 11:13	3.61	10.95
CN-MW-3	1301947	364173	13.35	-	-	-	-	-	-	-	-	-	-	-	-	2/8/16 11:19	3.21	10.14
DA-MW 1	1301858	361850	14.63	-	-	-	-	-	-	-	-	-	-	-	-	-	-	-
DAST-MW-101	1301856	361796	15.77	11/5/14 17:27	0.97	14.80	2/19/15 20:03	1.45	14.32	9/30/15 11:59	2.09	13.68				2/8/16 11:42	1.32	14.45
GF11-MW-101	1301786	362077	17.22	11/3/14 17:17	4.78	12.44	2/18/15 16:14	5.47	11.75	-	-	-	11/17/15 22:27	4.88	12.34	2/8/16 11:59	5.08	12.14
GF9-MW 1	1301606	362523	15.18	-	-	-	-	-	-	-	-	-	-	-	-	-	-	-
GF9-MW-2	1301610	362500	18.44	-	-	-	-	-	-	-	-	-	-	-	-	2/8/16 10:32	8.24	10.20
GF9-MW-3	1301729	362536	18.73	-	-	-	-	-	-	-	-	-	-	-	-	2/8/16 10:55	5.93	12.80
GF9-MW-4	1301794	362535	19.02	-	-	-	-	-	-	9/30/15 12:49	8.59	10.43				2/8/16 11:00	6.54	12.48
HB-MW 1	1301867	362657	15.96	-	-	-	-	-	-	-	-	-	-	-	-	-	-	-
HB-MW-1R	1301866	362649	20.03	11/4/14 17:44	6.00	14.03	-	-	-	-	-	-	-	-	-	2/8/16 11:04	7.03	13.00
HBV-MW-101	1301907	362777	19.65	11/4/14 17:33	6.98	12.67	2/18/15 16:13	7.71	11.94	-	-	-	-	-	-	2/8/16 11:08	6.48	13.17

Table B-1 - Water Level Data, 2012-2017

Project No. 190583 K-C Worldwide Site Upland Area, Everett, Washington

				November 2014 (Measurements at Variable Tide Stages**)			February 2015 (Measurements at Variable Tide Stages**)			September 2015 (Measurements at Variable Tide Stages**)			November 2015 (Measurements at Variable Tide Stages**)			February 2016 (Snapshot at Middle Tide)		
Location	Easting	Northing	Top of Casing Elevation (NAVD88)	Date/Time	Depth to Water	Groundwater Elevation	Date/Time	Depth to Water	Groundwater Elevation	Date/Time	Depth to Water	Groundwater Elevation	Date/Time	Depth to Water	Groundwater Elevation	Date/Time	Depth to Water	Groundwater Elevation
HW-MW-1	1301704	362732	15.43	-	-	-	-	-	-	-	-	-	-	-	-	-	-	-
LP-MW-1	1301459	362673	17.17	-	-	-	2/17/15 20:25	3.43	13.74	9/25/15 10:10	3.66	13.51	-	-	-	2/8/16 10:10	3.07	14.10
LP-MW-2	1301183	362668	17.69	-	-	-	2/17/15 20:20	4.10	13.59	9/25/15 10:15	11.04	6.65	-	-	-	2/8/16 9:40	4.12	13.57
LP-MW-3	1301505	362641	17.46	-	-	-	-	-	-	-	-	-	-	-	-	-	-	-
LP-MW-4	1301771	362700	19.16	-	-	-	-	-	-	-	-	-	-	-	-	-	-	-
LP-MW-5	1301508	362763	16.46	-	-	-	-	-	-	-	-	-	-	-	-	-	-	-
LP-MW-6	1301683	362589	19.17	-	-	-	-	-	-	-	-	-	-	-	-	-	-	-
LP-MW-7	1301240	362769	19.81	-	-	-	-	-	-	-	-	-	-	-	-	-	-	-
MW-1	1301334	361628	14.15	-	-	-	-	-	-	-	-	-	-	-	-	2/8/16 9:42	7.48	6.67
MW-2	1301390	361597	13.23	-	-	-	-	-	-	-	-	-	11/18/15 1:43	8.78	4.45	2/8/16 9:47	8.14	5.09
MW-3	1301616	361596	15.11	-	-	-	-	-	-	-	-	-	-	-	-	-	-	-
MW-4	1301672	361660	15.20	-	-	-	-	-	-	-	-	-	-	-	-	-	-	-
MW-5	1301427	363433	13.36	-	-	-	-	-	-	-	-	-	-	-	-	2/8/16 9:46	6.70	6.66
MW-6	1301239	362762	20.43	-	-	-	-	-	-	-	-	-	-	-	-	2/8/16 9:45	12.69	7.74
NRP-MW-1	1301454	363324	13.56	-	-	-	-	-	-	-	-	-	-	-	-	-	-	-
NRP-MW-2	1301424	363405	15.09	11/5/14 20:47	7.67	7.42	2/17/15 21:47	8.23	6.86	-	-	-	-	-	-	2/8/16 9:57	8.00	7.09
NRP-MW-3	1301445	363454	13.30	-	-	-	-	-	-	-	-	-	-	-	-	2/8/16 9:40	6.56	6.74
NRP-MW-4	1301808	363345	15.39	-	-	-	-	-	-	-	-	-	-	-	-	-	-	-
NRP-MW-5	1301810	363382	15.14	-	-	-	-	-	-	-	-	-	-	-	-	-	-	-
NRS-MW-101	1301412	363349	14.07	11/4/14 20:56	9.03	5.04	2/17/15 20:59	9.13	4.94	-	-	-	-	-	-	2/8/16 10:04	8.35	5.72
NRS-MW-102	1301402	363309	13.44	11/4/14 20:20	7.84	5.60	2/17/15 21:40	8.10	5.34	-	-	-	-	-	-	2/8/16 10:07	7.35	6.09
NRU-MW-101	1301419	363383	14.98	11/5/14 21:25	8.48	6.50	2/17/15 20:30	8.78	6.20	-	-	-	-	-	-	2/8/16 10:00	8.53	6.45
NRU-MW-102	1301429	363419	14.48	11/5/14 21:23	7.48	7.00	2/17/15 21:09	8.23	6.25	-	-	-	-	-	-	2/8/16 9:52	7.70	6.78
OMS-MW-1	1301247	361669	14.68	-	-	-	-	-	-	-	-	-	-	-	-	2/8/16 9:35	7.99	6.69
OMS-MW-2	1301204	361687	14.10	-	-	-	-	-	-	9/30/15 13:42	8.82	5.28				2/8/16 9:30	7.82	6.28
OPS-MW-1	1301883	362054	17.27	-	-	-	-	-	-	-	-	-	-	-	-	2/8/16 11:53	3.87	13.40
PM-MW-1	1301425	362030	15.66	-	-	-	-	-	-	-	-	-	-	-	-	2/8/16 11:51	4.59	11.07
PM-MW-2	1301546	361947	15.56	-	-	-	-	-	-	-	-	-	-	-	-	2/8/16 12:11	6.03	9.53
PM-MW-3	1301630	362091	16.85	-	-	-	-	-	-	-	-	-	-	-	-	2/8/16 12:03	3.66	13.19
PM-MW-4	1301353	361857	15.11	-	-	-	-	-	-	-	-	-	-	-	-	2/8/16 11:56	6.70	8.41
PM-MW-5	1301651	361912	15.76	-	-	-	-	-	-	9/30/15 10:55	4.38	11.38	-	-	-	2/8/16 12:07	4.01	11.75
PM-MW-6	1301231	362063	15.64	-	-	-	-	-	-	-	-	-	-	-	-	2/8/16 11:05	7.88	7.76
PM-MW-7	1301043	361875	14.97	-	-	-	-	-	-	-	-	-	-	-	-	2/8/16 9:36	8.20	6.77
PM-MW-8	1301050	362038	13.48	-	-	-	-	-	-	-	-	-	11/17/15 0:40	6.67	6.81	2/8/16 9:45	6.99	6.49
RCD-MW-101	1301050	362354	14.60	11/4/14 19:33	10.35	4.25	2/18/15 21:48	10.61	3.99	-	-	-	11/17/15 1:08	10.81	3.79	2/8/16 9:32	8.68	5.92
REC1-MW-1	1301953	361519	18.87	-	-	-	-	-	-	-	-	-	-	-	-	2/8/16 11:43	4.06	14.81
REC1-MW-10	1301702	361426	18.54	-	-	-	-	-	-	-	-	-	-	-	-	2/8/16 11:30	6.12	12.42
REC1-MW-11	1301920	361307	18.55	-	-	-	-	-	-	-	-	-	-	-	-	2/8/16 11:43	3.71	14.84
REC1-MW-12	1301916	361522	18.57	-	-	-	-	-	-	-	-	-	-	-	-	2/8/16 11:46	4.33	14.24
REC1-MW-14	1301773	361498	18.53	-	-	-	-	-	-	-	-	-	-	-	-	2/8/16 11:55	5.06	13.47
REC1-MW-15	1301618	361500	13.65	-	-	-	-	-	-	-	-	-	-	-	-	2/8/16 10:25	4.45	9.20
REC1-MW-2	1301775	361459	18.85	-	-	-	-	-	-	-	-	-	-	-	-	2/8/16 11:52	5.27	13.58

Table B-1 - Water Level Data, 2012-2017

Project No. 190583 K-C Worldwide Site Upland Area, Everett, Washington

				November 2014 (Measurements at Variable Tide Stages**)			February 2015 (Measurements at Variable Tide Stages**)			September 2015 (Measurements at Variable Tide Stages**)			November 2015 (Measurements at Variable Tide Stages**)			February 2016 (Snapshot at Middle Tide)		
Location	Easting	Northing	Top of Casing Elevation (NAVD88)	Date/Time	Depth to Water	Groundwater Elevation	Date/Time	Depth to Water	Groundwater Elevation	Date/Time	Depth to Water	Groundwater Elevation	Date/Time	Depth to Water	Groundwater Elevation	Date/Time	Depth to Water	Groundwater Elevation
REC1-MW-3	1301751	361535	18.74	-	-	-	-	-	-	-	-	-	-	-	-	2/8/16 12:00	4.86	13.88
REC1-MW-4	1301607	361547	14.81	-	-	-	-	-	-	-	-	-	-	-	-	2/8/16 10:30	5.15	9.66
REC1-MW-5	1301569	361412	14.91	-	-	-	-	-	-	-	-	-	-	-	-	2/8/16 10:22	5.46	9.45
REC1-MW-6	1301767	361307	18.77	-	-	-	-	-	-	-	-	-	-	-	-	2/8/16 11:40	7.24	11.53
REC1-MW-7	1301638	361316	18.83	-	-	-	-	-	-	-	-	-	-	-	-	2/8/16 11:35	8.43	10.40
REC1-MW-8	1301499	361411	13.30	-	-	-	-	-	-	9/30/15 9:52	5.34	7.96				2/8/16 10:07	6.05	7.25
REC1-MW-9	1301429	361441	12.49	-	-	-	-	-	-	-	-	-	-	-	-	2/8/16 10:08	5.58	6.91
REC2-MW-5	1301882	361789	15.05	-	-	-	-	-	-	-	-	-	-	-	-	-	-	-
REC3-MW-1	1301051	362102	14.43	-	-	-	-	-	-	-	-	-	-	-	-	-	-	-
REC3-MW-1R	1301056	362116	14.79	-	-	-	-	-	-	-	-	-	11/17/15 1:24	8.71	6.08	2/8/16 9:50	8.58	6.21
REC5-MW-1	1301248	362287	15.49	-	-	-	-	-	-	-	-	-	-	-	-	-	-	-
REC5-MW-1R	1301248	362282	15.89	-	-	-	-	-	-	-	-	-	-	-	-	2/8/16 10:40	6.92	8.97
REC6-MW-1	1301673	362819	15.38	-	-	-	-	-	-	-	-	-	-	-	-	-	-	-
REC6-MW-2	1301331	362874	16.67	-	-	-	-	-	-	-	-	-	-	-	-	2/8/16 9:53	8.21	8.46
REC7-MW-1	1301520	363659	13.14	-	-	-	-	-	-	-	-	-	-	-	-	2/8/16 9:36	6.16	6.98
REC7-MW-2	1301358	363144	15.11	-	-	-	-	-	-	-	-	-	-	-	-	2/8/16 10:15	6.49	8.62
REC7-MW-3	1301068	361727	14.92	-	-	-	-	-	-	-	-	-	-	-	-	2/8/16 9:30	8.70	6.22
REC7-MW-4	1301406	361493	12.69	-	-	-	-	-	-	-	-	-	-	-	-	2/8/16 9:58	7.82	4.87
SHB-MW-1	1301243	362553	15.44	-	-	-	-	-	-	-	-	-	-	-	-	-	-	-
SHB-MW-101	1301229	362581	16.10	11/5/14 19:56	6.34	9.76	2/18/15 21:10	8.46	7.64	9/25/15 9:55	9.56	6.54	11/18/15 0:41	6.33	9.77	2/8/16 9:58	8.26	7.84
SHB-MW-102	1301231	362554	15.81	11/5/14 20:35	7.66	8.15	2/18/15 20:15	8.15	7.66	9/25/15 9:50	9.31	6.50	9/25/15 9:50	9.31	6.50	2/8/16 10:03	7.96	7.85
SHB-MW-2	1301149	362491	14.50	-	-	-	-	-	-	-	-	-	-	-	-	2/8/16 9:36	7.00	7.50
TM-MW-1	1301626	363170	15.18	-	-	-	-	-	-	-	-	-	-	-	-	2/8/16 10:53	2.72	12.46
TM-MW-2	1301795	363125	17.95	-	-	-	-	-	-	-	-	-	-	-	-	2/8/16 10:57	4.74	13.21
TM-MW-3	1302003	363148	18.39	-	-	-	-	-	-	-	-	-	-	-	-	2/8/16 11:03	3.55	14.84
TM-MW-4	1301857	362922	18.45	-	-	-	-	-	-	-	-	-	-	-	-	2/8/16 11:14	3.92	14.53
TM-MW-5	1301544	363044	14.73	-	-	-	-	-	-	-	-	-	-	-	-	2/8/16 10:46	3.41	11.32
TM-MW-6	1301342	363006	15.98	-	-	-	-	-	-	-	-	-	-	-	-	2/8/16 10:21	7.36	8.62
UG-MW-1	1302148	363340	16.95	-	-	-	-	-	-	-	-	-	-	-	-	2/8/16 11:52	0.68	16.27
UG-MW-2	1302024	362365	18.05	-	-	-	-	-	-	-	-	-	-	-	-	-	-	-
UG-MW-2R	1302000	362356	18.80	-	-	-	-	-	-	-	-	-	-	-	-	2/8/16 11:24	4.67	14.13
UST29-MW-1	1301647	362816	15.24	-	-	-	-	-	-	-	-	-	-	-	-	-	-	-
UST29-MW-101	1301584	362861	16.95	11/5/14 18:21	2.63	14.32	2/18/15 18:21	3.68	13.27	-	-	-	11/16/15 22:14	2.24	14.71	2/8/16 10:16	3.09	13.86
UST29-MW-102	1301605	362819	17.54	11/6/14 19:35	3.74	13.80	2/18/15 17:37	4.59	12.95	-	-	-				2/8/16 10:19	3.43	14.11
UST29-MW-103	1301657	362816	17.36	11/6/14 19:38	3.06	14.30	2/18/15 16:55	4.01	13.35	-	-	-	-	-	-	2/8/16 10:22	3.37	13.99
UST68-MW-1	1301537	361783	15.12	-	-	-	-	-	-	-	-	-	-	-	-	-	-	-
UST68-MW-2	1301411	361732	15.33	-	-	-	-	-	-	-	-	-	-	-	-	-	-	-
UST68-MW-4	1301483	361601	14.34	-	-	-	-	-	-	-	-	-	-	-	-	-	-	-
UST68-MW-5	1301375	361645	14.12	-	-	-	-	-	-	-	-	-	-	-	-	2/8/16 9:52	6.28	7.84
UST68-MW-6	1301587	361639	15.20	-	-	-	-	-	-	-	-	-	-	-	-	-	-	-
UST69-MW-1	1301555	362846	14.88	-	-	-	-	-	-	-	-	-	-	-	-	-	-	-
UST70-MW-1	1301076	362234	14.65	-	-	-	-	-	-	-	-	-	-	-	-	-	-	-
UST70-MW-101	1301056	362238	14.73	11/4/14 21:16	8.16	6.57	2/18/15 22:29	8.76	5.97	-	-	-	11/17/15 1:50	7.62	7.11	2/8/16 10:00	8.06	6.67

Table B-1 - Water Level Data, 2012-2017

Project No. 190583 K-C Worldwide Site Upland Area, Everett, Washington

				November 2014 (Measurements at Variable Tide Stages**)			February 2015 (Measurements at Variable Tide Stages**)			September 2015 (Measurements at Variable Tide Stages**)			November 2015 (Measurements at Variable Tide Stages**)			February 2016 (Snapshot at Middle Tide)		
Location	Easting	Northing	Top of Casing Elevation (NAVD88)	Date/Time	Depth to Water	Groundwater Elevation	Date/Time	Depth to Water	Groundwater Elevation	Date/Time	Depth to Water	Groundwater Elevation	Date/Time	Depth to Water	Groundwater Elevation	Date/Time	Depth to Water	Groundwater Elevation
UST70-MW-102	1301058	362208	14.72	11/4/14 19:30	8.16	6.56	2/18/15 22:18	8.77	5.95	-	-	-				2/8/16 9:56	8.03	6.69
UST70-MW-2	1301043	362221	14.23	11/4/14 20:19	6.71	7.52	2/19/15 22:53	7.28	6.95	-	-	-	11/17/15 2:24	6.84	7.39	2/8/16 10:06	7.15	7.08
UST71-MW-1	1301192	362185	13.66	-	-	-	-	-	-	-	-	-	-	-	-	-	-	-
UST71-MW-101	1301169	362210	14.53	11/5/14 19:22	6.89	7.64	2/17/15 19:16	7.42	7.11	-	-	-	11/17/15 23:41	7.21	7.32	2/8/16 10:50	7.38	7.15
UST71-MW-102	1301166	362160	14.74	11/4/14 18:43	6.81	7.93	2/17/15 19:30	7.31	7.43	-	-	-	11/17/15 23:40	6.50	8.24	2/8/16 10:56	7.33	7.41
UST71-MW-103	1301171	362136	15.16	11/5/14 18:47	6.57	8.59	2/18/15 20:19	7.24	7.92	-	-	-	11/16/16 0:45	6.56	8.60	2/8/16 11:00	6.49	8.67
UST71-MW-104	1301242	362214	15.98	11/5/14 17:45	7.07	8.91	2/18/15 17:57	7.95	8.03	-	-	-	-	-	-	2/8/16 10:47	8.00	7.98
TM-1 (tide @ dock)	1300951	362325	16.63	-	-	-	-	-	-	-	-	-	-	-	-	2/8/16 10:23	11.85	4.78

Notes:

"R" in well ID denotes a replacement well.

"-" denotes no measurement collected.

All depths to water and elevations are in feet.

Horizontal coordinates relative to Washington State Plane North. Elevations relative to NAVD88 vertical datum.

*: Refer to tidal study description in Section 2.

**: Measurements collected during groundwater sampling; therefore measurements collected at variable tidal stages - not a snapshot set of measurements.

Table B-1 - Water Level Data, 2012-2017

Project No. 190583 K-C Worldwide Site Upland Area, Everett, Washington

				May 2016 (Measurements at Variable Tide Stages**)			August 2016 (Measurements at Variable Tide Stages**)			March 2017 (Measurements at Variable Tide Stages**)			July 2017 (Measurements at Variable Tide Stages**)			September 2017 (Measurements at Variable Tide Stages**)		
Location	Easting	Northing	Top of Casing Elevation (NAVD88)	Date/Time	Depth to Water	Groundwater Elevation	Date/Time	Depth to Water	Groundwater Elevation	Date/Time	Depth to Water	Groundwater Elevation	Date/Time	Depth to Water	Groundwater Elevation	Date/Time	Depth to Water	Groundwater Elevation
AP-MW-1	1301638	362341	15.45	-	-	-	-	-	-	-	-	-	-	-	-	-	-	-
AP-MW-1R	1301627	362337	17.99	-	-	-	-	-	-	3/7/17 15:23	7.43	10.56	7/11/17 10:48	9.37	8.62	9/18/17 13:09	9.75	8.24
BA6-MW-101	1301123	362261	14.72	-	-	-	-	-	-	3/8/17 20:09	7.94	6.78	7/11/17 11:35	8.47	6.25	9/18/17 9:45	8.52	6.20
BA-MW-1	1301350	362285	15.83	-	-	-	-	-	-	-	-	-	-	-	-	-	-	-
BA-MW-2	1301485	362288	17.46	-	-	-	-	-	-	-	-	-	-	-	-	9/18/17 13:16	9.64	7.82
BA-MW-3	1301345	362166	15.63	-	-	-	-	-	-	3/8/17 15:43	5.97	9.66	7/11/17 16:41	8.00	7.63	9/18/17 13:34	8.35	7.28
BA-MW-4	1301460	362175	16.59	-	-	-	-	-	-	-	-	-	-	-	-	-	-	-
BA-MW-5	1301148	362327	14.10	-	-	-	-	-	-	3/8/17 19:17	6.56	7.54	7/11/17 11:15	7.37	6.73	9/18/17 9:49	7.58	6.52
BA-MW-6	1301153	362260	11.30	-	-	-	-	-	-	-	-	-	-	-	-	-	-	-
BA-MW-7	1301031	362281	12.86	-	-	-	-	-	-	-	-	-	-	-	-	-	-	-
BBH-MW-101	1301271	362117	15.68	5/23/16 9:23	8.42	7.26	8/18/16 12:52	8.91	6.77	3/8/17 14:51	5.72	9.96	7/11/17 16:11	8.65	7.03	9/18/17 14:06	8.96	6.72
BBH-MW-102	1301270	362088	15.63	5/23/16 10:10	8.42	7.21	8/18/16 9:50	9.15	6.48	3/8/17 15:45	5.65	9.98	7/11/17 15:56	8.56	7.07	9/18/17 14:11	9.09	6.54
BBH-MW-103	1301417	362106	16.34	5/23/16 15:08	8.46	7.88	8/17/16 13:30	9.06	7.28	3/8/17 13:54	4.47	11.87	7/11/17 11:44	8.21	8.13	9/18/17 14:24	9.10	7.24
BBH-MW-104	1301391	362079	15.99	5/24/16 10:41	7.99	8.00	8/18/16 13:50	8.80	7.19	3/8/17 15:07	4.71	11.28	7/11/17 15:31	8.30	7.69	9/18/17 14:20	8.99	7.00
BCT-MW-101	1301832	361582	14.55	-	-	-	-	-	-	-	-	-	-	-	-	-	-	-
BCT-MW-102	1301759	361578	14.48	-	-	-	-	-	-	3/7/17 13:40	0.60	13.88	7/11/17 16:06	1.40	13.08	9/18/17 8:20	1.38	13.10
BCT-MW-103	1301683	361575	15.44	5/23/16 9:26	6.17	9.27	8/17/16 12:14	6.65	8.79	3/7/17 12:52	2.93	12.51	7/11/17 17:12	6.40	9.04	9/18/17 8:18	6.43	9.01
BCT-MW-104	1301588	361576	14.80	5/24/16 15:27	6.66	8.14	8/18/16 14:02	7.01	7.79	3/8/17 13:33	5.41	9.39	7/11/17 15:34	6.75	8.05	9/18/17 8:23	6.70	8.10
BCT-MW-105	1301594	361618	14.76	5/24/16 14:07	6.63	8.13	8/18/16 12:31	6.99	7.77	3/8/17 13:53	5.31	9.45	7/11/17 10:53	6.59	8.17	9/18/17 8:25	6.71	8.05
BCT-MW-106	1301597	361645	14.72	5/23/16 15:11	6.33	8.39	8/18/16 13:16	6.89	7.83	-	-	-	-	-	-	-	-	-
BCT-MW-107	1301595	361701	14.76	5/24/16 11:58	6.77	7.99	8/18/16 13:38	7.24	7.52	3/8/17 16:20	5.40	9.36	7/11/17 10:25	6.75	8.01	9/18/17 8:28	6.85	7.91
BCT-MW-108	1301668	361728	15.48	5/24/16 11:24	6.76	8.72	8/18/16 14:41	6.71	8.77	3/7/17 14:27	5.07	10.41	7/11/17 9:30	6.30	9.18	9/18/17 8:30	6.37	9.11
BOILER-MW 1	1301246	362183	14.99	-	-	-	-	-	-	-	-	-	-	-	-	-	-	-
CMS-MW-1	1301860	361961	14.70	-	-	-	-	-	-	-	-	-	-	-	-	-	-	-
CMS-MW-1R	1301858	361949	16.57	5/23/16 15:18	3.78	12.79	8/17/16 15:55	4.07	12.50	3/7/17 13:51	2.24	14.33	7/11/17 10:43	3.75	12.82	9/18/17 14:55	3.82	12.75
CMS-MW-2	1301997	361951	17.34	5/24/16 14:47	3.46	13.88	8/17/16 14:15	3.69	13.65	-	-	-	-	-	-	9/18/17 14:53	3.42	13.92
CN-MW-1	1301556	363792	13.84	-	-	-	-	-	-	-	-	-	-	-	-	-	-	-
CN-MW-101	1301499	363202	13.46	5/23/16 12:51	5.38	8.08	8/17/16 11:49	5.60	7.86	-	-	-	-	-	-	-	-	-
CN-MW-102	1301496	363155	13.93	-	-	-	-	-	-	-	-	-	-	-	-	-	-	-
CN-MW-103	1301499	363123	14.25	-	-	-	-	-	-	3/7/17 16:45	2.69	11.56	7/10/17 10:12	4.40	9.85	9/18/17 11:57	4.94	9.31
CN-MW-104	1301518	363179	13.65	-	-	-	-	-	-	-	-	-	-	-	-	-	-	-
CN-MW-2	1301938	363885	14.56	-	-	-	-	-	-	-	-	-	-	-	-	-	-	-
CN-MW-3	1301947	364173	13.35	-	-	-	-	-	-	-	-	-	-	-	-	-	-	-
DA-MW 1	1301858	361850	14.63	-	-	-	-	-	-	-	-	-	-	-	-	-	-	-
DAST-MW-101	1301856	361796	15.77							3/7/17 16:33	0.90	14.87	7/11/17 9:25	1.81	13.96	9/18/17 15:00	1.80	13.97
GF11-MW-101	1301786	362077	17.22	5/24/16 10:05	6.98	10.24	8/17/16 14:29	7.68	9.54	3/8/16 15:05	5.02	12.20	7/11/17 11:21	7.04	10.18	9/18/17 14:43	7.50	9.72
GF9-MW 1	1301606	362523	15.18	-	-	-	-	-	-	-	-	-	-	-	-	-	-	-
GF9-MW-2	1301610	362500	18.44	5/23/16 13:52	10.06	8.38	8/18/16 10:03	10.25	8.19	3/7/17 12:53	8.20	10.24	7/11/17 9:58	9.86	8.58	9/18/17 12:46	10.29	8.15
GF9-MW-3	1301729	362536	18.73	5/24/16 9:04	7.35	11.38	8/18/16 12:38	8.06	10.67	3/7/17 15:04	5.53	13.20	7/11/17 9:38	7.70	11.03	9/18/17 12:50	7.79	10.94
GF9-MW-4	1301794	362535	19.02	-	-	-	-	-	-	-	-	-	7/11/17 0:00	8.38	10.64	9/18/17 12:56	8.69	10.33
HB-MW 1	1301867	362657	15.96	-	-	-	-	-	-	-	-	-	-	-	-	-	-	-
HB-MW-1R	1301866	362649	20.03	5/24/16 13:00	8.82	11.21	8/17/16 14:50	9.24	10.79	3/7/17 15:26	6.29	13.74	7/10/17 14:23	8.81	11.22	9/18/17 12:21	9.05	10.98
HBV-MW-101	1301907	362777	19.65	-	-	-	-	-	-	3/7/17 13:51	6.57	13.08	7/10/17 14:08	9.34	10.31	9/18/17 12:15	8.02	11.63

Table B-1 - Water Level Data, 2012-2017

Project No. 190583 K-C Worldwide Site Upland Area, Everett, Washington

				May 2016 (Measurements at Variable Tide Stages**)			August 2016 (Measurements at Variable Tide Stages**)			March 2017 (Measurements at Variable Tide Stages**)			July 2017 (Measurements at Variable Tide Stages**)			September 2017 (Measurements at Variable Tide Stages**)		
Location	Easting	Northing	Top of Casing Elevation (NAVD88)	Date/Time	Depth to Water	Groundwater Elevation	Date/Time	Depth to Water	Groundwater Elevation	Date/Time	Depth to Water	Groundwater Elevation	Date/Time	Depth to Water	Groundwater Elevation	Date/Time	Depth to Water	Groundwater Elevation
HW-MW-1	1301704	362732	15.43	-	-	-	-	-	-	-	-	-	-	-	-	-	-	-
LP-MW-1	1301459	362673	17.17	5/23/16 13:11	3.33	13.84	8/18/16 9:15	6.54	10.63	3/8/17 13:33	2.67	14.50	7/10/17 10:06	3.38	13.79	9/18/17 12:36	7.62	9.55
LP-MW-2	1301183	362668	17.69	5/24/16 11:33	10.97	6.72	8/17/16 11:25	11.32	6.37	3/8/17 18:56	3.78	13.91	7/10/17 12:25	11.05	6.64	9/18/17 10:15	11.38	6.31
LP-MW-3	1301505	362641	17.46	-	-	-	-	-	-	-	-	-	7/10/17 10:28	9.22	8.24	9/18/17 12:33	9.74	7.72
LP-MW-4	1301771	362700	19.16	-	-	-	-	-	-	-	-	-	7/10/17 15:15	8.23	10.93	9/18/17 12:24	8.36	10.80
LP-MW-5	1301508	362763	16.46	-	-	-	-	-	-	-	-	-	7/10/17 14:31	7.90	8.56	9/18/17 12:29	8.12	8.34
LP-MW-6	1301683	362589	19.17	-	-	-	-	-	-	-	-	-	7/10/17 17:04	10.55	8.62	9/18/17 12:40	10.79	8.38
LP-MW-7	1301240	362769	19.81	-	-	-	-	-	-	-	-	-	7/10/17 11:52	12.65	7.16	9/18/17 10:22	12.65	7.16
MW-1	1301334	361628	14.15	5/24/16 13:00	9.20	4.95	8/17/16 11:21	9.28	4.87	-	-	-	-	-	-	-	-	-
MW-2	1301390	361597	13.23	5/24/16 13:41	8.99	4.24	8/17/16 10:28	8.90	4.33	3/7/17 17:59	8.87	4.36	7/10/17 12:04	8.98	4.25	9/18/17 8:47	9.09	4.14
MW-3	1301616	361596	15.11	-	-	-	-	-	-	-	-	-	-	-	-	-	-	-
MW-4	1301672	361660	15.20	-	-	-	-	-	-	-	-	-	-	-	-	-	-	-
MW-5	1301427	363433	13.36	-	-	-	-	-	-	-	-	-	-	-	-	-	-	-
MW-6	1301239	362762	20.43	5/24/16 12:05	13.08	7.35	8/17/16 12:10	11.62	8.81	3/8/17 19:00	12.82	7.61	7/10/17 13:10	12.98	7.45	9/18/17 10:20	13.33	7.10
NRP-MW-1	1301454	363324	13.56	-	-	-	-	-	-	-	-	-	-	-	-	-	-	-
NRP-MW-2	1301424	363405	15.09	5/23/16 11:17	8.42	6.67	8/17/16 10:20	8.59	6.50	-	-	-	-	-	-	-	-	-
NRP-MW-3	1301445	363454	13.30	-	-	-	-	-	-	-	-	-	-	-	-	-	-	-
NRP-MW-4	1301808	363345	15.39	-	-	-	-	-	-	-	-	-	-	-	-	-	-	-
NRP-MW-5	1301810	363382	15.14	-	-	-	-	-	-	-	-	-	-	-	-	-	-	-
NRS-MW-101	1301412	363349	14.07	-	-	-	-	-	-	-	-	-	-	-	-	-	-	-
NRS-MW-102	1301402	363309	13.44	-	-	-	-	-	-	3/8/17 19:33	6.85	6.59	7/11/17 12:34	8.26	5.18	9/18/17 10:36	8.24	5.20
NRU-MW-101	1301419	363383	14.98	-	-	-	-	-	-	-	-	-	-	-	-	-	-	-
NRU-MW-102	1301429	363419	14.48	-	-	-	-	-	-	3/8/17 19:37	7.63	6.85	7/11/17 12:09	8.62	5.86	9/18/17 10:41	8.42	6.06
OMS-MW-1	1301247	361669	14.68	-	-	-	-	-	-	3/7/17 17:52	10.04	4.64	7/11/17 12:25	11.16	3.52	9/18/17 9:30	10.69	3.99
OMS-MW-2	1301204	361687	14.10	-	-	-	-	-	-	-	-	-	-	-	-	-	-	-
OPS-MW-1	1301883	362054	17.27	5/23/16 14:35	5.21	12.06	8/17/16 14:35	5.66	11.61	3/7/17 14:35	3.31	13.96	7/11/17 11:01	5.15	12.12	9/18/17 14:48	5.40	11.87
PM-MW-1	1301425	362030	15.66	-	-	-	-	-	-	-	-	-	-	-	-	9/18/17 14:30	8.48	7.18
PM-MW-2	1301546	361947	15.56	-	-	-	-	-	-	-	-	-	-	-	-	-	-	-
PM-MW-3	1301630	362091	16.85	-	-	-	-	-	-	-	-	-	-	-	-	9/18/17 14:38	8.39	8.46
PM-MW-4	1301353	361857	15.11	-	-	-	-	-	-	3/8/17 15:39	5.63	9.48	7/11/17 10:04	8.44	6.67	9/18/17 15:16	8.75	6.36
PM-MW-5	1301651	361912	15.76	-	-	-	-	-	-	3/8/17 13:54	3.89	11.87	7/11/17 9:44	4.09	11.67	9/18/17 15:08	4.32	11.44
PM-MW-6	1301231	362063	15.64	-	-	-	-	-	-	3/8/17 16:21	6.81	8.83	7/11/17 10:23	8.69	6.95	9/18/17 14:16	9.25	6.39
PM-MW-7	1301043	361875	14.97	5/23/16 11:37	8.95	6.02	8/17/16 10:05	9.48	5.49	3/7/17 18:54	8.38	6.59	7/11/17 12:34	8.99	5.98	9/18/17 9:04	9.24	5.73
PM-MW-8	1301050	362038	13.48	5/23/16 12:01	7.85	5.63	8/18/16 11:35	8.40	5.08	3/7/17 18:59	7.38	6.10	7/11/17 13:04	7.92	5.56	9/18/17 9:18	8.15	5.33
RCD-MW-101	1301050	362354	14.60	5/23/16 11:00	10.58	4.02	8/18/16 11:31	11.20	3.40	3/8/17 17:58	10.48	4.12	7/11/17 13:24	11.07	3.53	9/18/17 9:52	6.77	7.83
REC1-MW-1	1301953	361519	18.87	-	-	-	-	-	-	-	-	-	-	-	-	-	-	-
REC1-MW-10	1301702	361426	18.54	-	-	-	-	-	-	-	-	-	-	-	-	-	-	-
REC1-MW-11	1301920	361307	18.55	-	-	-	-	-	-	-	-	-	-	-	-	-	-	-
REC1-MW-12	1301916	361522	18.57	-	-	-	-	-	-	-	-	-	-	-	-	-	-	-
REC1-MW-14	1301773	361498	18.53	-	-	-	-	-	-	-	-	-	-	-	-	-	-	-
REC1-MW-15	1301618	361500	13.65	-	-	-	-	-	-	-	-	-	-	-	-	-	-	-
REC1-MW-2	1301775	361459	18.85	-	-	-	-	-	-	-	-	-	-	-	-	-	-	-

Table B-1 - Water Level Data, 2012-2017

Project No. 190583 K-C Worldwide Site Upland Area, Everett, Washington

				May 2016 (Measurements at Variable Tide Stages**)			August 2016 (Measurements at Variable Tide Stages**)			March 2017 (Measurements at Variable Tide Stages**)			July 2017 (Measurements at Variable Tide Stages**)			September 2017 (Measurements at Variable Tide Stages**)		
Location	Easting	Northing	Top of Casing Elevation (NAVD88)	Date/Time	Depth to Water	Groundwater Elevation	Date/Time	Depth to Water	Groundwater Elevation	Date/Time	Depth to Water	Groundwater Elevation	Date/Time	Depth to Water	Groundwater Elevation	Date/Time	Depth to Water	Groundwater Elevation
REC1-MW-3	1301751	361535	18.74	-	-	-	-	-	-	-	-	-	-	-	-	-	-	-
REC1-MW-4	1301607	361547	14.81	-	-	-	-	-	-	-	-	-	-	-	-	-	-	-
REC1-MW-5	1301569	361412	14.91	-	-	-	-	-	-	-	-	-	7/11/17 17:10	6.11	8.80	-	-	-
REC1-MW-6	1301767	361307	18.77	-	-	-	-	-	-	-	-	-	-	-	-	-	-	-
REC1-MW-7	1301638	361316	18.83	-	-	-	-	-	-	-	-	-	-	-	-	-	-	-
REC1-MW-8	1301499	361411	13.30							-	-	-	-	-	-	-	-	-
REC1-MW-9	1301429	361441	12.49	-	-	-	-	-	-	-	-	-	-	-	-	-	-	-
REC2-MW-5	1301882	361789	15.05	-	-	-	-	-	-	-	-	-	-	-	-	-	-	-
REC3-MW-1	1301051	362102	14.43	-	-	-	-	-	-	-	-	-	-	-	-	-	-	-
REC3-MW-1R	1301056	362116	14.79	5/23/16 12:37	9.49	5.30	8/18/16 10:18	9.46	5.33	3/7/17 19:16	9.00	5.79	7/11/17 13:25	9.58	5.21	9/18/17 9:23	9.35	5.44
REC5-MW-1	1301248	362287	15.49	-	-	-	-	-	-	-	-	-	-	-	-	-	-	-
REC5-MW-1R	1301248	362282	15.89	-	-	-	-	-	-	3/8/17 16:47	6.71	9.18	-	-	-	9/18/17 13:26	8.79	7.10
REC6-MW-1	1301673	362819	15.38	-	-	-	-	-	-	-	-	-	-	-	-	-	-	-
REC6-MW-2	1301331	362874	16.67	5/23/16 12:39	9.33	7.34	8/17/16 23:38	9.86	6.81	3/8/17 18:46	8.07	8.60	7/10/17 12:42	9.45	7.22	9/18/17 10:25	9.53	7.14
REC7-MW-1	1301520	363659	13.14	5/23/16 10:31	6.64	6.50	8/17/16 9:08	6.78	6.36	-	-	-	-	-	-	-	-	-
REC7-MW-2	1301358	363144	15.11	5/23/16 11:50	7.25	7.86	8/17/16 10:56	7.58	7.53	3/8/17 19:44	6.45	8.66	7/11/17 12:57	7.37	7.74	9/18/17 10:33	7.45	7.66
REC7-MW-3	1301068	361727	14.92	5/23/16 11:04	9.46	5.46	8/17/16 9:40	9.80	5.12	3/7/17 18:04	9.31	5.61	7/11/17 12:11	9.74	5.18	9/18/17 8:58	9.52	5.40
REC7-MW-4	1301406	361493	12.69	5/23/16 9:55	8.40	4.29	8/17/16 9:05	9.29	3.40	3/7/17 17:55	9.23	3.46	7/10/17 11:50	9.28	3.41	9/18/17 8:39	8.06	4.63
SHB-MW-1	1301243	362553	15.44	-	-	-	-	-	-	-	-	-	-	-	-	-	-	-
SHB-MW-101	1301229	362581	16.10	5/23/16 11:49	9.31	6.79	8/17/16 9:14	9.63	6.47	3/8/17 18:05	7.21	8.89	7/11/17 13:32	9.36	6.74	9/18/17 10:11	9.49	6.61
SHB-MW-102	1301231	362554	15.81			-			-	-	-	-	7/11/17 13:51	9.23	6.58	-	-	-
SHB-MW-2	1301149	362491	14.50	5/23/16 12:18	7.89	6.61	8/17/16 22:50	8.21	6.29	3/8/17 17:58	7.21	7.29	7/11/17 13:49	7.98	6.52	9/18/17 10:07	7.95	6.55
TM-MW-1	1301626	363170	15.18	-	-	-	-	-	-	-	-	-	-	-	-	-	-	-
TM-MW-2	1301795	363125	17.95	5/23/16 13:37	5.64	12.31	8/17/16 13:48	6.49	11.46	3/8/16 13:42	4.13	13.82	7/10/17 9:19	5.89	12.06	9/18/17 11:55	6.05	11.90
TM-MW-3	1302003	363148	18.39	5/23/16 14:42	4.11	14.28	8/17/16 14:56	4.39	14.00	3/7/17 12:58	3.25	15.14	7/10/17 9:34	3.99	14.40	9/18/17 11:52	4.04	14.35
TM-MW-4	1301857	362922	18.45	5/23/16 15:13	6.29	12.16	8/18/16 8:44	6.73	11.72	3/8/17 14:23	3.45	15.00	7/10/17 10:32	6.16	12.29	9/18/17 12:12	6.38	12.07
TM-MW-5	1301544	363044	14.73	-	-	-	-	-	-	3/8/17 15:16	2.62	12.11	7/10/17 9:50	4.60	10.13	9/18/17 12:02	4.83	9.90
TM-MW-6	1301342	363006	15.98	-	-	-	-	-	-	3/8/17 18:52	6.94	9.04	7/11/17 13:12	8.57	7.41	9/18/17 10:28	8.64	7.34
UG-MW-1	1302148	363340	16.95	-	-	-	-	-	-	-	-	-	-	-	-	-	-	-
UG-MW-2	1302024	362365	18.05	-	-	-	-	-	-	-	-	-	-	-	-	-	-	-
UG-MW-2R	1302000	362356	18.80	-	-	-	-	-	-	3/7/17 16:32	4.35	14.45	7/11/17 10:23	5.83	12.97	9/18/17 13:04	6.12	12.68
UST29-MW-1	1301647	362816	15.24	-	-	-	-	-	-	-	-	-	-	-	-	-	-	-
UST29-MW-101	1301584	362861	16.95	5/24/16 8:48	5.70	11.25	8/18/16 8:57	6.61	10.34	3/8/17 13:31	2.19	14.76	7/10/17 11:14	5.81	11.14	9/18/17 12:08	6.49	10.46
UST29-MW-102	1301605	362819	17.54	-	-	-	-	-	-	-	-	-	7/10/17 11:02	6.54	11.00	-	-	-
UST29-MW-103	1301657	362816	17.36	5/23/16 15:39	6.15	11.21	8/18/16 7:28	6.96	10.40	3/7/17 16:31	2.75	14.61	7/10/17 10:48	6.25	11.11	9/18/17 12:05	6.80	10.56
UST68-MW-1	1301537	361783	15.12	-	-	-	-	-	-	-	-	-	-	-	-	-	-	-
UST68-MW-2	1301411	361732	15.33	-	-	-	-	-	-	-	-	-	-	-	-	-	-	-
UST68-MW-4	1301483	361601	14.34	-	-	-	-	-	-	-	-	-	-	-	-	-	-	-
UST68-MW-5	1301375	361645	14.12	-	-	-	-	-	-	-	-	-	-	-	-	9/18/17 8:43	5.80	8.32
UST68-MW-6	1301587	361639	15.20	-	-	-	-	-	-	-	-	-	-	-	-	-	-	-
UST69-MW-1	1301555	362846	14.88	-	-	-	-	-	-	-	-	-	-	-	-	-	-	-
UST70-MW-1	1301076	362234	14.65	-	-	-	-	-	-	-	-	-	-	-	-	-	-	-
UST70-MW-101	1301056	362238	14.73	5/23/16 13:31	9.11	5.62	8/17/16 10:27	9.20	5.53	3/8/17 18:42	7.33	7.40	-	-	-	-	-	-

Table B-1 - Water Level Data, 2012-2017

Project No. 190583 K-C Worldwide Site Upland Area, Everett, Washington

				May 2016 (Measurements at Variable Tide Stages**)			August 2016 (Measurements at Variable Tide Stages**)			March 2017 (Measurements at Variable Tide Stages**)			July 2017 (Measurements at Variable Tide Stages**)			September 2017 (Measurements at Variable Tide Stages**)		
Location	Easting	Northing	Top of Casing Elevation (NAVD88)	Date/Time	Depth to Water	Groundwater Elevation	Date/Time	Depth to Water	Groundwater Elevation	Date/Time	Depth to Water	Groundwater Elevation	Date/Time	Depth to Water	Groundwater Elevation	Date/Time	Depth to Water	Groundwater Elevation
UST70-MW-102	1301058	362208	14.72	5/24/16 12:36	9.17	5.55	8/17/16 11:10	9.52	5.20	3/8/17 18:05	7.14	7.58	7/11/17 13:04	9.28	5.44	9/18/17 9:26	8.85	5.87
UST70-MW-2	1301043	362221	14.23	5/24/16 13:10	7.98	6.25	8/18/16 10:44	8.15	6.08	3/7/17 18:50	8.55	5.68	7/11/17 13:50	8.06	6.17	9/18/17 9:42	7.98	6.25
UST71-MW-1	1301192	362185	13.66	-	-	-	-	-	-	-	-	-	-	-	-	-	-	-
UST71-MW-101	1301169	362210	14.53	5/23/16 10:49	8.26	6.27	8/17/16 9:30	8.49	6.04	-	-	-	7/11/17 15:44	8.52	6.01	9/18/17 9:36	8.24	6.29
UST71-MW-102	1301166	362160	14.74	5/23/16 13:36	8.86	5.88	8/17/16 13:01	8.65	6.09	-	-	-	-	-	-	-	-	-
UST71-MW-103	1301171	362136	15.16	5/23/16 14:48	7.71	7.45	8/18/16 12:40	9.26	5.90	3/7/17 19:55	6.52	8.64	7/11/17 16:07	7.79	7.37	9/18/17 9:33	8.19	6.97
UST71-MW-104	1301242	362214	15.98	-	-	-	-	-	-	3/8/17 14:58	7.71	8.27	7/11/17 16:33	9.44	6.54	9/18/17 13:29	9.55	6.43
TM-1 (tide @ dock)	1300951	362325	16.63	-	-	-	-	-	-	-	-	-	-	-	-	-	-	-

Notes:

"R" in well ID denotes a replacement well.

"-" denotes no measurement collected.

All depths to water and elevations are in feet.

Horizontal coordinates relative to Washington State Plane North. Elevations relative to NAVD88 vertical datum.

*: Refer to tidal study description in Section 2.

**: Measurements collected during groundwater sampling; therefore measurements collected at variable tidal stages - not a snapshot set of measurements.

APPENDIX C

RI Data Validation Reports

Data Validation Report

Kimberly Clark Everett Mill Pre-RI Sampling
Bellingham, Washington

February and May 2012 Soil and Groundwater Sampling

Prepared for:

Aspect Consulting LLC
401 Second Ave South, Suite 201
Seattle, WA 98014

Prepared by:

Pyron Environmental, Inc.
3530 32nd Way, NW
Olympia, WA 98502

August 10, 2012

ACRONYMS

%R	percent recovery
BTEX	benzene, ethylbenzene, toluene, *m-, p-, & o*-xylenes
CLP	U.S. EPA Contract Laboratory Program
COC	chain-of-custody
CVAFS	Cold vapor atomic fluorescent spectrometry
EPA	U.S. Environmental Protection Agency
GC/ECD	gas chromatograph/electron capture detector
GC/FID	gas chromatograph/flame ionization detector
GC/MS	gas chromatograph/mass spectrometer
GC/PID	gas chromatograph/photo ionization detector
ICP/MS	inductively coupled plasma/ mass spectrometer
LCS	laboratory control sample
LCSD	laboratory control sample duplicate
MS	matrix spike
MSD	matrix spike duplicate
NFGs	CLP National Functional Guidelines for Data Review (EPA 2008 – Organics; EPA 2010 – Inorganics)
PAHs	Polycyclic aromatic hydrocarbons
PCBs	polychlorinated biphenyls
QA/QC	quality assurance/quality control
RL	reporting limit
RPD	relative percent difference
SDG	sample delivery group
SVOCs	semi-volatile organic compounds
TDS	total dissolved solids
TPH	Total petroleum hydrocarbons
TSS	total suspended solids
VOCs	Volatile organic compounds

INTRODUCTION

This report presents and discusses findings of the data validation performed on analytical data for soil and groundwater samples collected during the months of February and May in 2012 for the referenced project. The laboratory reports reviewed herein were submitted by Friedman & Bruya, Inc.

A summary (Level II) data review was performed on these laboratory reports. The review followed the procedures specified in USEPA CLP Functional Guidelines ([NFGs], EPA 2008 – Organics; EPA 2010 – Inorganics), with modifications to accommodate analytical method requirements. The numerical quality assurance/quality control (QA/QC) criteria applied to the review were based on the current performance-based control limits established by the laboratory (laboratory control limits).

The data review findings are discussed in each section pertinent to the QC parameter for each type of analysis. Qualified data with applied data qualifiers are summarized in the **Summary** section at the end of this report. Samples and the associated analyses validated herein are summarized as follows:

				Analysis						
Field Sample ID	**Laboratory Sample ID**	**Sampling Date**	**Matrix**	**VOCs**	**SVOCs PAHs**	**PCBs**	**TPH-G BTEX TPH-Dx**	**Metals**	**EDB**	**TSS TDS**
DP-1-2.5-3	202157-01	02/14/12	Soil		PAHs		X			
DP-1-5.5-6	202157-02	02/14/12	Soil		PAHs		X			
DP-2-1.5-2.5	202157-04	02/14/12	Soil				X			
DP-2-6-7	202157-05	02/14/12	Soil				X			
DP-3-4-5	202157-07	02/14/12	Soil	X	PAHs		X	Lead		
DP-3-6-7	202157-08	02/14/12	Soil		PAHs		X			
DP-4-1-2	202157-09	02/14/12	Soil				X			
DP-4-9-10	202157-10	02/14/12	Soil				X			
DP-5-7-8	202157-12	02/14/12	Soil				X			
DP-5-13-14	202157-13	02/14/12	Soil				X			
DP-6-3-4	202157-14	02/14/12	Soil				X			
DP-6-7-8	202157-15	02/14/12	Soil				X			
DP-7-4-5	202157-16	02/14/12	Soil				X			
DP-7-7-8	202157-17	02/14/12	Soil				X			
DP-8-6-7	202157-19	02/14/12	Soil				X			
DP-8-12-13	202157-20	02/14/12	Soil				X			
DP-10-3-4	202157-21	02/14/12	Soil				X			

Field Sample ID	Laboratory Sample ID	Sampling Date	Matrix	Analysis						
				VOCs	SVOCs PAHs	PCBs	TPH-G BTEX TPH-Dx	Metals	EDB	TSS TDS
DP-10-9-10	202157-22	02/14/12	Soil				X			
DP-9-7.5-8.5	202174-02	02/15/12	Soil				X			
DP-9-13-14	202174-03	02/15/12	Soil				X			
DP-15-3-4	202174-04	02/15/12	Soil				X			
DP-15-6.5-7.5	202174-05	02/15/12	Soil				X			
DP-14-3-4	202174-06	02/15/12	Soil				X			
DP-14-9-10	202174-07	02/15/12	Soil				X			
DP-13-3-4	202174-08	02/15/12	Soil				X			
DP-13-12-13	202174-09	02/15/12	Soil				X			
DP-12-6.5-7.5	202174-10	02/15/12	Soil				X			
DP-12-9-10	202174-11	02/15/12	Soil				X			
DP-11-8.5-9.5	202174-13	02/15/12	Soil				X			
DP-11-14-15	202174-14	02/15/12	Soil				X			
DP-16-6-7	202189-01	02/16/12	Soil		SVOCs	X	X	X		
DP-17-22-23	202189-03	02/16/12	Soil		SVOCs	X	X	X		
DP-18-2.5-3.5	202189-04	02/16/12	Soil		SVOCs	X	X	X		
DP-19-2.5-3.5	202189-05	02/16/12	Soil		SVOCs	X	X	X		
DP-20-2.5-3.5	202189-06	02/16/12	Soil		SVOCs	X	X	X		
DP-21-4-5	202189-07	02/16/12	Soil		SVOCs	X	X	X		
DP-22-3-4	202189-08	02/16/12	Soil		SVOCs	X	X	X		
MW-3-021712	202212-01	02/17/12	Water	X	PAHs		X	Lead	X	X
MW-4-021712	202212-02	02/17/12	Water	X	PAHs		X	Lead	X	X
MW-1-021712	202212-03	02/17/12	Water		PAHs		X	Lead		X
MW-2-021712	202212-04	02/17/12	Water		PAHs		X	Lead		X
MW-5-021712	202212-05	02/17/12	Water		X		X	X		X
MW-6-021712	202212-06	02/17/12	Water		X		X	X		X
CB-1	205382-01	05/24/12	Soil	X	SVOCs	X	X[(A)]	X[(B)]		
CB-2	205382-02	05/24/12	Soil	X	SVOCs	X	X[(A)]	X[(B		
CB-3	205382-03	05/24/12	Soil	X	SVOCs	X	X[(A)]	X[(B		

Notes:

[(A)]: The sample was not analyzed for BTEX.

[(B)]: Metals analyzed for this sample included antimony, arsenic, beryllium, cadmium, chromium, copper, lead, mercury, nickel, selenium, silver, thallium, and zinc.

EDB: 1,2-Dibromoethane

Hg: Mercury; For water samples, analyses were performed on filtered aliquots and reported as “dissolved mercury”.

Metals: Arsenic, cadmium, chromium, copper, lead, mercury, nickel, selenium, silver, and zinc. For water samples, metals analyses were performed on filtered aliquots and reported as "dissolved metals".
PAHs: Polycyclic aromatic hydrocarbons
PCBs: Polychlorinated biphenyls
SVOCs: Semivolatile organic compounds
TDS: Total dissolved solids
TPH-Dx: Diesel and motor oil range total petroleum hydrocarbon (TPH)
TPH-G: Gasoline range TPH; sample was also analyzed for BTEX (benzene, ethylbenzene, toluene, *m-, p-, & o*-xylenes).
TSS: Tot.al suspended solids
VOCs: Volatile organic compounds
X: The analysis was requested and performed on the sample.

The analytical parameters requested for the samples, the respective analytical methods, and the analytical laboratories are summarized below:

Parameter	Analytical Method	Analytical Laboratory
Volatile Organic Compounds (VOCs)	SW846 Method 8260C	Friedman & Bruya, Inc. Seattle, Washington
Semi-volatile Organic Compounds (SVOCs)	SW846 Method 8270D	
Polycyclic Aromatic Hydrocarbons (PAHs)	SW846 Method 8270D-SIM	
PCB Aroclors	SW846 Method 8082A	
BTEX	SW846 Method 8021B	
1,2-Dibromoethane (EDB)	SW846 Method 8011	
TPH - Gasoline Range	NWTPH-Gx	
TPH - Diesel & Motor Oil Range	NWTPH-Dx	
Metals	EPA Method 200.8	
Mercury	EPA Method 1631E	
Total Suspended Solids (TSS)	SM Method 2540D	
Total Dissolved Solids (TDS)	SM Method 2540C	Aquatic Research Inc. Seattle, Washington

Notes:

1. SW846 - *USEPA Test Methods for Evaluating Solid Waste, Physical/Chemical Methods,* SW-846, Third Edition, December 1996.
2. EPA Methods - *USEPA Methods for Chemical Analysis of Water and Wastes,* EPA–600/4-79-020, March 1983 Revision.
3. EPA Method 1631E - *Mercury in Water by Oxidation, Purge and Trap, and Cold Vapor Atomic Fluorescence Spectrometry,* Office of Water, U.S. Environmental Protection Agency, August 2002, EPA-821-R-02-019.
4. SM – Standard Methods for the Examination of Water and Wastewater, American Public Health Association, 20th Edition, 1995.
5. NWTPH Methods – *Washington State Department of Ecology, Analytical Methods for Petroleum Hydrocarbons*, Publication No. ECY 97-602, June 1997.

DATA VALIDATION FINDINGS

1. VOCs by GC/MS (EPA Method SW8260C)

1.1 Sample Management and Holding Time

Samples were received in the laboratory intact and in consistence with the accompanying chain-of-custody (COC) documentation. No anomalies were identified in relation to sample preservation, handling, and transport.

Soil and water samples should be extracted (soil only) and analyzed within 14 days of collection. All samples were analyzed within the required holding time.

1.2 Method Blanks

Method blanks were prepared and analyzed as required. Target compounds were not detected at or above the reporting limits (RLs) in the method blanks.

1.3 Laboratory Control Sample (LCS) and LCS Duplicate (LCSD)

LCS and LCSD were prepared and analyzed for soil and water samples as required by the method. All percent recovery (%R) and relative percent difference (RPD) values met the laboratory control criteria.

1.4 Surrogate Spikes

Surrogate spikes were added to all samples as required by the method. All surrogate spike %R values were within the project control limits.

1.5 Matrix Spike (MS)

MS analyses were performed on water sample MW-4-021712. The %R values were within the laboratory control limits.

1.6 Overall Assessment of VOCs Data Usability

Based on the information submitted by the laboratory in the laboratory reports, VOCs data are acceptable for use.

2. SVOCs by GC/MS (EPA Method SW8270D)

2.1 Sample Management and Holding Times

No anomalies were identified in relation to sample preservation, handling, and transport.

Soil samples should be extracted within 14 days and water within seven days of collection. Extracts should be analyzed within 40 days of extraction. All samples were extracted and analyzed within the required holding times.

2.2 Method Blanks

Method blanks were prepared and analyzed as required. Target compounds were not detected at or above RLs in the method blanks.

2.3 Surrogate Spikes

Surrogate spikes were added to all samples as required by the method. All percent recovery (%R) values were within the laboratory control limits.

2.4 Matrix Spike and Matrix Spike Duplicate (MS/MSD)

MS/MSD analyses were performed on soil sample DP-19-2.5-3.5. LCS/LCSD analyses were performed for water samples in lieu of MS/MSD (see Section 2.6). All %R and RPD values met the laboratory control criteria.

2.5 Laboratory Duplicate

Laboratory duplicate analyses were performed on soil sample DP-19-2.5-3.5. All RPD or concentration difference values met the laboratory control criteria.

2.6 Laboratory Control Sample (LCS) and LCS Duplicate (LCSD)

LCS and LCSD analyses were performed for soil and water samples as required by the method. All %R and RPD values met the project control criteria.

2.7 Overall Assessment of SVOCs Data Usability

Based on the information submitted in the laboratory reports, SVOCs data are acceptable for use.

3. PAHs by GC/MS - SIM (EPA Method SW8270D-SIM)

3.1 Sample Management and Holding Times

No anomalies were identified in relation to sample preservation, handling, and transport, as discussed in Section 1.1.

Soil samples should be extracted within 14 days and water within seven days of collection. Extracts should be analyzed within 40 days of extraction. All samples were extracted and analyzed within the required holding times.

3.2 Method Blanks

Method blanks were prepared and analyzed as required. Target compounds were not detected at or above the MDLs in the method blanks.

3.3 Surrogate Spikes

Surrogate spikes were added to all samples as required by the method. All surrogate spike %R values were either within the project control limits or at levels that had no adverse effects on data quality (*e.g.,* biased-high recovery for compounds that were not detected in samples). In some cases surrogate spike %R values were inapplicable for data evaluation because the samples contained high levels of target PAHs and requested dilution analysis; no data were qualified on this basis.

3.4 Laboratory Control Sample (LCS) and LCS Duplicate (LCSD)

LCS and LCSD analyses were performed with each analytical batch. All %R and RPD values were either within the project control limits or the outliers had no adverse effects on data usability (*e.g.,* biased-high recovery for compounds that were not detected in samples).

3.5 Overall Assessment of PAHs Data Usability

Based on the information submitted in the laboratory reports, PAHs data are acceptable for use.

4. PCB Aroclors by GC/EDC (EPA Method SW8082A)

4.1 Sample Management and Holding Times

No anomalies were identified in relation to sample preservation, handling, and transport, as discussed in Section 1.1.

Soil samples should be extracted within 14 days of collection. Extracts should be analyzed within 40 days of extraction. All samples were extracted and analyzed within the required holding times.

4.2 Method Blanks

Method blanks were prepared and analyzed as required. PCB Aroclors were not detected at or above the RLs in the method blanks.

4.3 Surrogate Spikes

Surrogate spikes were added to all samples as required by the method. All surrogate spike %R values were within the laboratory control limits.

4.4 Laboratory Duplicate

Laboratory duplicate analyses were performed on samples DP-19-2.5-3.5 and CB-2. All RPD or concentration difference values met the laboratory control criteria.

4.5 Laboratory Control Sample (LCS) and LCS Duplicate (LCSD)

LCS and LCSD analyses were performed for soil and water samples as required by the method. All %R and RPD values were within the project control limits.

4.6 Overall Assessment of PCB Aroclors Data Usability

Sample CB-1 was re-extracted and re-analyzed for confirmative purposes. PCB Aroclors results for this sample should be reported from the initial analysis; the results from the re-analysis were to be disregarded.

Based on the information submitted in the laboratory reports, PCB Aroclor data are acceptable for use.

5. TPH-Gasoline and BTEX by GC/FID-PID (NWTPH-Gx/EPA Method SW8021B)

5.1 Sample Management and Holding Times

No anomalies were identified in relation to sample preservation, handling, and transport.

Soil and water samples should be extracted (soil samples only) and analyzed within 14 days. All samples were extracted and analyzed within the required holding times.

5.2 Method Blanks

Method blanks were prepared and analyzed as required. No target compounds were detected at or above RLs in the method blanks.

5.3 Surrogate Spikes

Surrogate spikes were added to all samples as required by the method. All surrogate spike %R values were within the project control limits, outside the control limits due to matrix interference, or diluted below quantitation limits due to high analyte concentrations. No data qualifying actions were taken in these cases.

5.4 Laboratory Duplicate

Laboratory duplicate analyses were performed on soil samples DP-1-2.5-3, DP-16-6-7. Laboratory duplicate analyses for water samples were performed on a batch QC sample. The RPD or concentration difference values met the laboratory control criteria.

5.5 Laboratory Control Sample (LCS)

LCS analyses were performed as required by the method. All %R values met the laboratory control limits.

5.6 Overall Assessment of TPH-G and BTEX Data Usability

Based on the information submitted in the laboratory reports, TPH-G and BTEX data are acceptable for use.

6. TPH-Diesel & Motor Oil (Methods NWTPH-Dx)

6.1 Holding Time

Soil samples should be extracted within 14 days of collection, and extracts analyzed within 40 days of extraction. All samples were extracted and analyzed within the recommended holding time.

6.2 Method Blanks

Method blanks were prepared and analyzed as required. No target compounds were detected at or above the RLs in the method blanks.

6.3 Surrogate Spikes

Surrogate spikes were added to all samples as required by the method. All surrogate spike %R values were within the project control limits, outside the control limits due to matrix interference, or diluted below quantitation limits due to high analyte concentrations. No data qualifying actions were taken in these cases.

6.4 Matrix Spike (MS) and MS Duplicate (MSD)

MS and MSD analyses were performed on sample were performed for soils on samples DP-14-3-4, DP-19-2.5-3.5. LCS/LCSD analyses were performed in lieu of MS/MSD for water samples (see Section 6.5). The %R and RPD values met the laboratory control criteria.

6.5 Laboratory Control Sample (LCS) and LCS Duplicate (LCSD)

LCS analyses were performed for soil; LCS/LCSD analyses were performed for water samples as required by the method. All %R and RPD values met the project control criteria.

6.6 Target Compound Identification

Sample extracts were cleaned up with acid and silica gel treatment to minimize the biogenic interference with target compound identification, as required by the project. The laboratory reported results as diesel #2 (C10 - C25) and motor oil (C25 - C36), as required by the method.

6.7 Overall Assessment of TPH-Diesel and Motor Oil Data Usability

Based on the information submitted in the laboratory reports, TPH-Diesel and TPH-Motor Oil data are acceptable for use.

7. Total Metals by ICP/MS and CVAFS (EPA Methods 200.8 and 1631E)

7.1 Sample Management and Holding Times

No anomalies were identified in relation to sample preservation, handling, and transport, as discussed in Section 1.1.

Soil and water samples should be analyzed within 180 days for ICP/MS metals and 28 days for mercury. Samples were analyzed within the required holding times.

7.2 Method Blanks

Method blanks were prepared and analyzed as required. Target analytes were not detected at or above the RLs in the method blanks.

7.3 Laboratory Control Sample (LCS) and LCS Duplicate (LCSD)

LCS analyses were performed for soil; LCS/LCSD analyses were performed for water samples as required by the method. All %R and RPD values met the project control criteria.

7.4 Matrix Spike (MS) and Matrix Spike Duplicate (MSD)

MS and MSD analyses were performed on soil samples DP-16-6-7 and CB-1 for total metals (analyzed with ICP/MS) and mercury. MS analysis was performed on water sample MW-5-021712 for dissolved mercury. All %R and RPD values met the laboratory control criteria.

7.5 Internal Standards

At least three internal standards were added to all field and QC samples for ICP/MS analyses. All percent relative intensity values were within the method criteria (60 - 125%).

7.6 Overall Assessment of Metals Data Usability

Based on the information submitted in the laboratory reports, metals data are acceptable for use.

8. 1,2-Dibromoethane (EDB) by GC/ECD (EPA Method SW8011)

8.1 Sample Management and Holding Time

No anomalies were identified in relation to sample preservation, handling, and transport.

Water samples should be extracted and analyzed within 28 days of collection. All samples were analyzed within the required holding time.

8.2 Method Blank

Method blanks were prepared and analyzed at the required frequency. EDB was not detected at or above the RL in method blanks.

8.3 Matrix Spike (MS) and Matrix Spike Duplicate (MSD)

MS and MSD analyses were not performed on a project samples. LCS/LCSD analyses were performed in lieu of MS/MSD (see Section 8.4).

8.4 Laboratory Control Sample (LCS) and LCS Duplicate (LCSD)

LCS and LCSD analyses were performed as required by the methods. All %R and RPD values met the laboratory control criteria.

8.5 Overall Assessment of EDB Data

Based on the information submitted in the laboratory report, EDB data are acceptable for use.

9. Total Dissolved Solids (TDS) and Total Suspended Solids (TSS)

9.1 Sample Management and Holding Time

No anomalies were identified in relation to sample preservation, handling, and transport. Water samples should be analyzed within seven days of collection for TDS and TSS. All samples were analyzed within the required holding times.

9.2 Method Blanks

Method blanks were prepared and analyzed as required by the methods. TDS and TSS were not detected at or above the RLs in method blanks.

9.3 Laboratory Duplicate

Laboratory duplicate analysis was performed on sample MW6-021712. The RPD value met the laboratory control criteria.

9.4 Laboratory Control Samples (LCS) and LCS Duplicate (LCSD)

LCS and LCSD analyses were performed for TSS. The %R and RPD values were within the laboratory control limits.

9.5 Overall Assessment of TDS and TSS Data Usability

Based on the information submitted in the laboratory report, TDS and TSS data are acceptable for use.

SUMMARY

Data qualification is summarized as follows:

Laboratory ID	Sample ID	Analyte	Adjusted Result	Qualifier	Qualified Reason
No data qualifiers were assigned as a result of QC outliers in these SDGs.					

Data Qualifiers are defined as follows:

Data Qualifier	Definition
R	The sample results are unusable due to the quality of the data generated because certain criteria were not met. The analyte may or may not be present in the sample.
J	The analyte was detected above the reported quantitation limit, and the reported concentration was an estimated value.
U	The analyte was analyzed for, but was considered not detected at the reporting limit or reported value.
UJ	The analyte was analyzed for, and the associated quantitation limit was an estimated value.

Approved By: _____ Date: ***8/10/2012***

Mingta Lin

REFERENCES

USEPA *Contract Laboratory Program National Functional Guidelines for Inorganic Superfund Data Review,* Office of Superfund Remediation and Technical Innovation, U.S. Environmental Protection Agency, January 2010, USEPA 540/R-10/011

USEPA *Contract Laboratory Program National Functional Guidelines for Superfund Organic Methods Data Review,* Office of Superfund Remediation and Technical Innovation, U.S. Environmental Protection Agency, June 2008, USEPA-540-R-08-01.

USEPA *Method 1631, Revision E: Mercury in Water by Oxidation, Purge and Trap, and Cold Vapor Atomic Fluorescence Spectrometry,* Office of Water, U.S. Environmental Protection Agency, August 2002, EPA-821-R-02-019.

USEPA *Test Methods for Evaluating Solid Waste (SW-846). Third Edition and Revised Update IIIA.* Office of Solid Waste and Emergency Response, Washington, D.C. April 1998.

USEPA *Methods for Chemical Analysis of Water and Wastes,* EPA-600/4-79-020, March 1983 and updates.

Standard Methods for the Examination of Water and Wastewater, American Public Health Association, 20th Edition, 1995.

Ecology (Washington State Department of) *Analytical Methods for Petroleum Hydrocarbons.* Publication No. ECY 97-602. June 1997.

Data Validation Report

Port of Bellingham Former GP Mill Property RI/FS
Kimberly Clark, Washington

May and June 2012 Soil and Groundwater Sampling

Prepared for:

Aspect Consulting LLC
401 Second Ave South, Suite 201
Seattle, WA 98014

Prepared by:

Pyron Environmental, Inc.
3530 32nd Way, NW
Olympia, WA 98502

Approved By: _____ Date: ***8/21/2012***

Mingta Lin, Senior Project Chemist

ACRONYMS

%D	percent difference
%D_f	percent drift
%R	percent recovery
%RSD	percent relative standard deviation
AMU	atomic mass unit
ARI	Analytical Resources, Inc. – Tukwila, Washington
CCB	continuing calibration blank
CCC	calibration check compound
CCV	continuing calibration verification
CDD	chlorinated dibenzo-p-dioxin
CDF	chlorinated dibenzofuran
CF	calibration factor
CLP	U.S. EPA Contract Laboratory Program
COC	chain-of-custody
CVAFS	cold vapor atomic fluorescent spectrometry
DDD	dichlorodiphenyldichloroethane
DDE	dichlorodiphenyldichloroethylene
DDT	dichlorodiphenyltrichloroethane
DFTPP	decafluorotriphenylphosphine
ECD	electron capture detector
EDB	1,2-dibromoethane
EDL	estimated detection limit
EMPC	estimated maximum possible concentration
EPA	U.S. Environmental Protection Agency
FID	Flame ionization detector
GC/MS	gas chromatograph/mass spectrometer
GPC	gel permeation chromatography
HPLC	high performance liquid chromatography
HRGC	high-resolution gas chromatograph
HRMS	high-resolution mass spectrometer
ICAL	initial calibration
ICB	initial calibration blank
ICP	inductively coupled plasma
ICP/MS	inductively coupled plasma/ mass spectrometer

ICSA	ICP interference check sample solution A
ICV	initial calibration verification
IPR	initial precision and recovery
ISC	isomer specificity check
LCS	laboratory control sample
LCSD	laboratory control sample duplicate
m/z	mass-to-charge ratio
MDL	method detection limit
MS	matrix spike
MSD	matrix spike duplicate
NFGs	CLP National Functional Guidelines for Data Review (EPA 2008 – Organics; EPA 2010 – Inorganics; EPA 2011 – Dioxins/Furans)
OPR	ongoing precision and recovery
pg/g	pictogram per gram
PCBs	polychlorinated biphenyls
PCDD	polychlorinated dibenzo-*p*-dioxin
PCDF	polychlorinated dibenzofuran
PEM	performance evaluation mixture
PSEP	Puget Sound Estuary Program
QA/QC	quality assurance/quality control
QAPP	quality assurance project plan
RF	response factor
RL	reporting limit
RPD	relative percent difference
RRT	relative retention time
S/N	signal-to-noise ratio
SAP	sampling and analysis plan
SDG	sample delivery group
SICP	selected ion current profile
SIM	selective ion monitoring
SRM	standard reference material
SVOCs	semi-volatile organic compounds
TDS	total dissolved solids
TSS	total suspended solids
TOC	total organic carbon
TS	total solids

VOCs	volatile organic compounds
WDM	window defining mixture
µg/kg	microgram per kilogram

INTRODUCTION

This report presents and discusses findings of the data validation performed on analytical data for soil samples collected during May and June 2012 for the referenced project. The laboratory reports validated herein were submitted by Friedman & Bruya, Inc. and Columbia Analytical Services, Inc. (CAS, part of ALS Group).

A level III data validation was performed on this laboratory report. The validation followed the procedures specified in USEPA CLP Functional Guidelines ([NFGs], EPA 2008 – Organics; EPA 2010 – Inorganics; EPA 2011 – Dioxins/Furans) and EPA Region 10 SOP (EPA 1996), with modifications to accommodate project and analytical method requirements. The numerical quality assurance/quality control (QA/QC) criteria applied to the validation were in accordance with those specified in the quality assurance project plans ([QAPPs], Aspect, 2009) and the current performance-based control limits established by the laboratory (laboratory control limits). Instrument calibration, frequency of QC analyses, and analytical sequence requirements were evaluated against the respective analytical methods.

Validation findings are discussed in each section pertinent to the QC parameter for each type of analysis. Qualified data with applied data qualifiers are summarized in the **Summary** section at the end of this report.

Samples and the associated analyses validated herein are summarized as follows:

				Analysis					
Field Sample ID	**Laboratory Sample ID**	**Sampling Date**	**Sample Type**	**VOCs**	**SVOCs PAHs**	**PCBs**	**TPH-G TPH-Dx**	**Metals TOC**	**Dioxins Furans**
GF-B-15A-1-2.5	205364-03	23-May-12	Soil	X	X	X	X	X	X
GF-B-15A-7.5-9	205364-04	23-May-12	Soil	X	X	X	X	Metals	
GF-B-15A-10-11.5	205364-05	23-May-12	Soil	X	X	X	X	X	
GF-B-15A-15-16.5	205364-06	23-May-12	Soil		PAHs		TPH-Dx		
GF-B-15A-25-26.5	205364-08	23-May-12	Soil		PAHs		TPH-Dx		
REC2-B-12-5-6	205364-10	23-May-12	Soil		PAHs		TPH-Dx		
REC2-B-12-8-9	205364-11	23-May-12	Soil		PAHs		TPH-Dx		
REC2-B-12-17-18	205364-12	23-May-12	Soil		PAHs		TPH-Dx		
REC2-B-8-4-5	205364-13	23-May-12	Soil		PAHs		TPH-Dx		
REC2-B-8-10-11	205364-14	23-May-12	Soil		PAHs		TPH-Dx		
REC2-B-7-4-5	205364-15	23-May-12	Soil		PAHs		TPH-Dx		
REC2-B-7-6.5-7.5	205364-16	23-May-12	Soil		PAHs		TPH-Dx		
REC2-B-4-1.5-2.5	205364-17	23-May-12	Soil		PAHs		TPH-Dx		
REC2-B-4-4-5	205364-18	23-May-12	Soil		PAHs		TPH-Dx		

Field Sample ID	Laboratory Sample ID	Sampling Date	Sample Type	Analysis					
				VOCs	SVOCs PAHs	PCBs	TPH-G TPH-Dx	Metals TOC	Dioxins Furans
REC2-B-4-6.5-7.5	205364-19	23-May-12	Soil		PAHs		TPH-Dx		
GF-B-14-1-2.5	205364-20	23-May-12	Soil	X	SVOCs	X	X	Metals	
GF-B-14-7.5-9	205364-21	23-May-12	Soil	X	SVOCs	X	X	X	
Trip Blank_05/23/12	205364-22	23-May-12	Water	X					
GF-B-10-1-2.5	205381-01	24-May-12	Soil	X	SVOCs	X	X	X	X
GF-B-13-1-2.5	205381-02	24-May-12	Soil	X	SVOCs	X	X	X	X
GF-B-13-10-11.5	205381-03	24-May-12	Soil	X	SVOCs	X	X	X	X
GF-B-11-1-2.5	205381-04	24-May-12	Soil	X	SVOCs	X	X	X	X
GF-B-11-7.5-9	205381-05	24-May-12	Soil	X	SVOCs	X	X	X	X
GF-B-7-1-2.5	205381-06	24-May-12	Soil	X	SVOCs	X	X	X	X
GF-B-7-7.5-9	205381-07	24-May-12	Soil	X	SVOCs		X	Metals	
GF-B-7-10-11.5	205381-08	24-May-12	Soil					TOC	X
GF-B-10-7.5-9	205381-09	24-May-12	Soil	X	SVOCs	X	X	Metals	
GF-B-10-10-11.5	205381-10	24-May-12	Soil					TOC	X
REC2-B-11-3-4	205381-11	24-May-12	Soil		PAHs		TPH-Dx		
REC2-B-11-7.5-8.5	205381-12	24-May-12	Soil		PAHs		TPH-Dx		
REC2-B-11-11-12	205381-13	24-May-12	Soil		PAHs		TPH-Dx		
REC2-B-9-2-6	205381-14	24-May-12	Soil		PAHs		TPH-Dx		
REC2-B-9-6-7	205381-15	24-May-12	Soil		PAHs		TPH-Dx		
REC2-B-9-7.5-8.5	205381-16	24-May-12	Soil		PAHs		TPH-Dx		
REC2-B-5-2-3	205381-17	24-May-12	Soil		PAHs		TPH-Dx		
REC2-B-5-7-8	205381-18	24-May-12	Soil		PAHs		TPH-Dx		
UST68-MW-4-11-12	205381-20	24-May-12	Soil	X			TPH-G		
UST68-MW-4-11-12-D	205381-21	24-May-12	Soil	X			TPH-G		
UST68-MW-5-7-8	205381-22	24-May-12	Soil	X			TPH-G		
UST68-MW-5-12-13	205381-23	24-May-12	Soil	X			TPH-G		
GF-B-2-2.5-4	205404-01	25-May-12	Soil	X	SVOCs	X	X		
GF-B-1-1-2.5	205404-02	25-May-12	Soil	X	SVOCs	X	X		
UST68-MW-1-7-8	205404-03	25-May-12	Soil	X			TPH-G		
UST69-MW-1-6-7	205404-04	25-May-12	Soil	X			TPH-G		
UST69-MW-1-6-7-D	205404-05	25-May-12	Soil	X			TPH-G		
GF-B-4-2.5-4	205404-06	25-May-12	Soil	X		X	X		
GF-B-4-7.5-9	205404-07	25-May-12	Soil	X		X	X		
GF-B-3-1-2.5	205423-01	29-May-12	Soil	X	X	X	X	X	X

Field Sample ID	Laboratory Sample ID	Sampling Date	Sample Type	Analysis					
				VOCs	SVOCs PAHs	PCBs	TPH-G TPH-Dx	Metals TOC	Dioxins Furans
GF-B-3-7.5-9	205423-02	29-May-12	Soil	X	X	X	X	Metals	
GF-B-3-11-12.5	205423-03	29-May-12	Soil	X	X	X	X	X	
GF-B-5-1-2.5	205423-04	29-May-12	Soil	X	X	X	X	X	X
GF-B-5-7.5-9	205423-05	29-May-12	Soil	X	X	X	X	X	
GF-B-6-1-2.5	205423-06	29-May-12	Soil	X	X	X	X	X	X
GF-B-6-7.5-9	205423-07	29-May-12	Soil	X	X	X	X	X	
GF-B-6-20-21.5	205423-08	29-May-12	Soil	X	X	X	X	X	
NRP-MW-2-7.5-8.5	205423-09	29-May-12	Soil	X	PAHs		X	Metals	
NRP-MW-3-6.5-7.5	205423-10	29-May-12	Soil	X	PAHs		X	Metals	
REC2-MW-5-0-2	205423-11	29-May-12	Soil		PAHs		TPH-Dx		
REC2-MW-5-2.5-3.5	205423-12	29-May-12	Soil		PAHs		TPH-Dx		
REC2-MW-5-7-8	205423-13	29-May-12	Soil		PAHs		TPH-Dx		
GF-B-8-1-2.5	205441-01	30-May-12	Soil	X	SVOCs	X	X	X	X
GF-B-8-7.5-9	205441-02	30-May-12	Soil	X	SVOCs	X	X	X	
UST68-MW-2-10-11	205441-03	30-May-12	Soil	X			TPH-G		
UST68-MW-2-10-11-D	205441-04	30-May-12	Soil	X			TPH-G		
UST71-B-1-12-13	206006-01	31-May-12	Soil	X	PAHs		TPH-Dx		
UST71-B-2-13-14	206006-02	31-May-12	Soil	X	PAHs		TPH-Dx		
UST71-B-3-18-19	206006-03	31-May-12	Soil	X	PAHs		TPH-Dx		
UST71-B-3-19-20	206006-04	31-May-12	Soil	X	PAHs		TPH-Dx		
UST71-B-4-12.5-13.5	206006-05	31-May-12	Soil	X	PAHs		TPH-Dx		
UST71-B-4-28-29	206006-06	31-May-12	Soil	X	PAHs		TPH-Dx		
UST70-B-1-3-4	206006-07	31-May-12	Soil	X	PAHs		TPH-Dx		
UST70-B-1-3-4-D	206006-08	31-May-12	Soil	X	PAHs		TPH-Dx		
UST70-B-1-13.5-14.5	206006-09	31-May-12	Soil	X	PAHs		TPH-Dx		
UST70-B-2-9-10	206006-10	31-May-12	Soil	X	PAHs		TPH-Dx		
UST70-B-3-8-9	206006-11	31-May-12	Soil	X	PAHs		TPH-Dx		
UST70-B-4-0-1	206006-12	31-May-12	Soil	X	PAHs		TPH-Dx		
UST70-B-4-4.5-5.5	206006-13	31-May-12	Soil	X	PAHs		TPH-Dx		
NRP-B-7-9-10	206022-01	01-Jun-12	Soil	X	PAHs		X	Metals	
NRP-B-7-19-20	206022-02	01-Jun-12	Soil	X	PAHs		X	Metals	
NRP-B-5-9-10	206022-03	01-Jun-12	Soil	X	PAHs		X	Metals	
NRP-B-8-8.5-9.5	206022-04	01-Jun-12	Soil	X	PAHs		X	Metals	
NRP-B-8-11-12	206022-05	01-Jun-12	Soil	X	PAHs		X	Metals	

Field Sample ID	Laboratory Sample ID	Sampling Date	Sample Type	Analysis					
				VOCs	SVOCs PAHs	PCBs	TPH-G TPH-Dx	Metals TOC	Dioxins Furans
NRP-B-2-8-10	206022-07	01-Jun-12	Soil	X	PAHs		X	Metals	
NRP-B-2-8-10-D	206022-08	01-Jun-12	Soil	X	PAHs		X	Metals	
NRP-B-2-14-15	206022-09	01-Jun-12	Soil	X	PAHs		X	Metals	
NRP-B-4-13.5-14.5	206022-10	01-Jun-12	Soil	X	PAHs		X	Metals	
NRP-B-1-9-12	206022-11	01-Jun-12	Soil	X	PAHs		X	Metals	
NRP-B-3-8.5-9.5	206022-12	01-Jun-12	Soil	X	PAHs		X	Metals	
RB-NRP-3-060112	206022-13	01-Jun-12	Water	X	PAHs			Metals	
REC7-MW-1-060512	206067-01	05-Jun-12	Water	X	SVOCs			Metals**	
NRP-MW-3-060512	206067-02	05-Jun-12	Water	X	X		X	Metals**	
REC7-MW-2-060512	206067-03	05-Jun-12	Water	X	SVOCs			Metals**	
NRP-MW-2-060512	206067-04	05-Jun-12	Water	X	X		X	Metals**	
REC6-MW-2-060512	206067-05	05-Jun-12	Water	X	SVOCs		TPH-G	Metals***	
MW-5-060512	206067-06	05-Jun-12	Water	X	X		X	Metals**	
MW-3-060512	206067-07	05-Jun-12	Water	X	PAHs		X	Metals*	
NRP-MW-3-060512D	206067-08	05-Jun-12	Water		SVOCs				
REC3-MW-1-8.5-9.5	206068-01	05-Jun-12	Soil	X	PAHs	X	TPH-Dx	Lead	
UST70-MW-2-8-9	206068-02	05-Jun-12	Soil	X	PAHs		TPH-Dx		
REC5-MW-1-6.5-7.5	206068-03	05-Jun-12	Soil	X				Metals	
NRP-B-11-0-1	206097-01	06-Jun-12	Soil					Metals	
NRP-B-11-3-4	206097-02	06-Jun-12	Soil					Metals	
NRP-B-12-0-1	206097-03	06-Jun-12	Soil					Metals	
NRP-B-12-3-4	206097-04	06-Jun-12	Soil					Metals	
NRP-B-13-0-1	206097-05	06-Jun-12	Soil					Metals	
NRP-B-13-3-4	206097-06	06-Jun-12	Soil					Metals	
NRP-B-15-0-1	206097-07	06-Jun-12	Soil					Metals	
NRP-B-15-3-4	206097-08	06-Jun-12	Soil					Metals	
UST68-MW-1-060612	206098-01	06-Jun-12	Water	X			TPH-G	X^	
UST68-MW-2-060612	206098-02	06-Jun-12	Water	X			TPH-G	X^	
UST68-MW-4-060612	206098-03	06-Jun-12	Water	X			TPH-G	X^	
UST68-MW-5-060612	206098-04	06-Jun-12	Water	X			TPH-G	X^	
REC7-MW-3-060612	206098-05	06-Jun-12	Water	X	SVOCs			Metals**	
REC7-MW-4-060612	206098-06	06-Jun-12	Water	X	SVOCs			Metals**	
MW-1-060612	206098-07	06-Jun-12	Water	X	X		X	Metals**	
MW-2-060612	206098-08	06-Jun-12	Water	X	X		X	Metals**	

Field Sample ID	Laboratory Sample ID	Sampling Date	Sample Type	Analysis					
				VOCs	SVOCs PAHs	PCBs	TPH-G TPH-Dx	Metals TOC	Dioxins Furans
OMS-MW-1-060612	206098-09	06-Jun-12	Water	X	X		X	Metals**	
MW-6-060712	206136-01	07-Jun-12	Water	X	X		X	Metals**	
REC3-MW-1-060712	206136-02	07-Jun-12	Water	X	X		TPH-G	Metals**	
UST70-MW-1-060712	206136-03	07-Jun-12	Water	X	PAHs		TPH-G		
UST71-MW-1-060712	206136-04	07-Jun-12	Water	X	PAHs		TPH-G		
UST70-MW-2-060712	206136-05	07-Jun-12	Water	X	X		TPH-G	Metals**	
MW-4-060812	206136-06	08-Jun-12	Water	X	PAHs		X	Metals*	
MW-4-060812-D	206136-07	08-Jun-12	Water	X	PAHs		X	Metals*	
UST69-MW-1-060812	206136-08	08-Jun-12	Water	X			TPH-Dx	Metals^	
UST69-MW-1-060812-D	206136-09	08-Jun-12	Water	X			TPH-Dx	X^	
REC2-MW-5-060812	206136-10	08-Jun-12	Water	X	PAHs		X	X *	
NRP-MW-1-060812	206136-11	08-Jun-12	Water	X	PAHs		X	Metals**	
NRP-MW-1-060812-D	206136-12	08-Jun-12	Water		PAHs		TPH-G	Metals^^	
REC5-MW-1-060812	206136-13	08-Jun-12	Water	X				Metals*	
REC5-MW-1-060812-D	206136-14	08-Jun-12	Water					Metals	

Notes:

* Sample was also analyzed for total suspended solids (TSS)
** Sample was also analyzed for total suspended solids (TSS), ammonia, and dissolved sulfide
*** Sample was also analyzed for TSS, ammonia, dissolved sulfide, and formaldehyde
^ Sample was also analyzed for TSS and dibromoethane (EDB)
^^ Sample was also analyzed for dissolved sulfide, and ammonia.
Metals: Antimony, arsenic, beryllium, cadmium, chromium, copper, lead, mercury, nickel, selenium, silver, thallium, and zinc
PAHs - Polycyclic aromatic hydrocarbons
PCBs - Polychlorinated biphenyls
SVOCs - Semivolatile Organic Compounds
TOC – Total Organic carbon
TPH-Dx - Diesel and motor oil range total petroleum hydrocarbon
TPH-G - Gasoline range total petroleum hydrocarbon
VOCs - Volatile Organic Compounds
X - The analysis was requested and performed on the sample.

The analytical parameters requested for the samples, the respective analytical methods, and the analytical laboratories are summarized below:

Parameter	Analytical Method	Analytical Laboratory
Volatile Organic Compounds (VOCs)	SW846 Method 8260C	Friedman & Bruya, Inc. Seattle, WA
Semivolatile Organic Compounds (SVOCs)	SW846 Method 8270D	
Polycyclic Aromatic Hydrocarbons (PAHs)	SW846 Method 8270D-SIM	
PCB Aroclors	SW846 Method 8082A	
TPH - Gasoline Range	NWTPH-Gx	
TPH - Diesel & Motor Oil Range	NWTPH-Dx	
Total Metals	EPA Method 200.8	
Mercury	EPA Method 1631E	
Total Organic Carbon (TOC)	ASTM D4129-05M	Columbia Analytical Services, Inc. Kelso, WA (Part of ALS Group)
Total Suspended Solids (TSS)	SM Method 2540D	
Dissolved sulfide	SM 4500-S2-D	
1,2-Dibromoethane (EDB)	SW846 Method 8011	
Ammonia as Nitrogen	EPA Method 350.1	
Formaldehyde	SW846 Method 8315A	
Dioxins/Furans	SW846 Method 8290	Columbia Analytical Services, Inc. Houston, TX (Part of ALS Group)

Notes:

1. SW846 - *USEPA Test Methods for Evaluating Solid Waste, Physical/Chemical Methods,* SW-846, Third Edition, December 1996.
2. EPA Methods - *USEPA Methods for Chemical Analysis of Water and Wastes,* EPA–600/4-79-020, March 1983 Revision.
3. EPA Method 1631E - *Mercury in Water by Oxidation, Purge and Trap, and Cold Vapor Atomic Fluorescence Spectrometry,* Office of Water, U.S. Environmental Protection Agency, August 2002, EPA-821-R-02-019.
4. ASTM – American Society of Testing and Materials
5. NWTPH Methods – *Washington State Department of Ecology, Analytical Methods for Petroleum Hydrocarbons*, Publication No. ECY 97-602, June 1997.
6. SM – Standard Methods for the Examination of Water and Wastewater, American Public Health Association, 20th Edition, 1995.

DATA VALIDATION FINDINGS

1. VOCs by GC/MS (EPA Method SW8260C)

1.1 Sample Management and Holding Time

Samples were received in the laboratory intact and in consistence with the accompanying chain-of-custody (COC) documentation. No anomalies were identified in relation to sample preservation, handling, and transport.

Soil and water samples should be extracted (soil only) and analyzed within 14 days of collection. All samples were analyzed within the required holding time.

1.2 GC/MS Instrument Performance Check

The method require that (1) gas chromatograph/mass spectrometer (GC/MS) tuning analysis be performed, using bromofluorobenzene (BFB), at the beginning of each 12-hour period prior to any analysis, and (2) specific mass ions meet the criteria provided in the method. All instrument performance checks met the requirements.

1.3 Initial Calibration (ICAL)

The method linearity criteria require that (1) if linear average RFs is chosen as the quantitation option, the percent relative standard deviation (%RSD) of response factors (RFs) be ≤20% for the analyte, (2) if least-square linear regression is chosen for quantitation, the correlation coefficient (r) be >0.995, (3) if six-point non-linear (quadratic) curve is chosen for quantitation, the coefficient of determination (r^2) be >0.99, and (4) the RF be >0.01 for poor response compounds and >0.05 for all other compounds.. All ICALs met the requirements.

An initial calibration verification (ICV) standard (second source standard) was analyzed to verify the calibration curve. Percent difference (%D) values were either within ±20%, or the exceedance had no adverse effects on data usability (*e.g.,* biased high ICV recovery for a compound not detected in samples), with the exceptions of following:

ICV ID	Compound	%D (%)	Bias	Affected Sample	Data Qualifier
GCMS9 5/23/12, 2:43	Dichlorodifluoromethane Chloromethane	26.3 22.2	Low	All soil samples in SDGs 205364 205381 205404 205423	**UJ**

ICV ID	Compound	%D (%)	Bias	Affected Sample	Data Qualifier
GCMS9 5/30/12, 15:55	Dichlorodifluoromethane	32.1	Low	All soil in SDGs 205441 206006 206068	**UJ**

1.4 Calibration Verification (CCV)

The analytical method requires that (1) continuing calibrations be analyzed at the beginning of each 12-hour analysis period prior to the analysis of method blank and samples, (2) the %D be within ±20%, and (3) the RF be >0.01 for poor response compounds and >0.05 for all other compounds.

Calibration verifications were performed at the required frequency. %D values were either within ±20%, or the exceedance had no adverse effects on data usability (*e.g.,* biased high CCV recovery for a compound not detected in samples), with the exceptions as follows:

CCV ID	Compound	%D (%)	Bias	Affected Sample	Data Qualifier
GCMS9 6/1/12, 2:55	Dichlorodifluoromethane	25.6	Low	GF-B-8-7.5-9 UST68-MW-2-10-11 UST68-MW-2-10-11D	**UJ**
GCMS4 6/1/12, 16:31	Bromomethane Chloroethane Hexachlorobutadiene	20.1 21.5 21.4	Low	UST71-B-1-12-13 UST71-B-2-13-14 UST71-B-3-18-19 UST71-B-4-12.5-13.5 UST70-B-1-3-4 UST70-B-1-3-4-D	**UJ**
GCMS4 6/5/12, 10:44	Bromomethane Chloroethane	21.8 20.6	Low	NRP-B-8-11-12	**UJ**
GCMS9 6/7/12, 17:50	Dibromochloromethane Bromoform 1,2-Dibromo-3-chloropropane	26.2 37.2 20.7	Low	UST68-MW-1-060612 UST68-MW-2-060612 UST68-MW-4-060612 UST68-MW-5-060612 REC7-MW-3-060612 REC7-MW-4-060612	**UJ**
GCMS9 6/8/12, 9:53	Methylene chloride Bromoform	24.3 23.7	Low	MW-1-060612 MW-2-060612 OMS-MW-1-060612	**UJ**
GCMS9 6/12/12, 16:33	Dichlorodifluoromethane Bromoform	21.7 34.3	Low	REC3-MW-1-060712 MW-4-060812 MW-4-060812-D	**UJ**

1.5 Blanks

Method Blanks: Method blanks were prepared and analyzed as required. Target compounds were either not detected at or above the reporting limits (RLs), or detected in the method blanks at levels that had no significant effects on data quality (*e.g.,* sample results >5x the level found in the method blank).

Trip Blanks: One trip blank was collected on 5/23/2012 and analyzed for VOCs. Target compounds were not detected at or above the RLs in this trip blank.

Equipment Rinsate Blank: One equipment rinsate blank, sample RB-NRP-3-060112, was collected on 6/1/2012 and analyzed for VOCs. Target compounds were not detected at or above the RLs in this sample.

1.6 Laboratory Control Sample (LCS) and LCS Duplicate (LCSD)

LCS and LCSD were prepared and analyzed as required by the method. Percent recovery (%R) and relative percent difference (RPD) values either met the project control limits, or the outliers had no adverse effects on data usability (*e.g.,* biased high recovery for a compound not detected in samples), with the exceptions as follows:

LCS ID	Compound	%R (%)		Control Limit (%)	Associated Sample	Data Qualifier
		LCS	LCSD			
02-0880 LCS 02-0880 LCSD (SDG: 206067)	Dichlorodifluoromethane Bromoform	67 - -	68 68	70-130	REC7-MW-1-060512 NRP-MW-3-060512 REC7-MW-2-060512 NRP-MW-2-060512 REC6-MW-2-060512 MW-5-060512 MW-3-060512	**UJ**
02-0996 LCS 02-0996 LCSD	Bromoform	64	65	70-130	REC3-MW-1-060712 MW-4-060812 MW-4-060812-D	**UJ**
02-1013 LCS 02-1013 LCSD	Bromoform	- -	68		UST71-MW-1-060712 UST70-MW-2-060712 REC5-MW-1-060812	**UJ**

1.7 Surrogate Spikes

Surrogate spikes were added to all samples as required by the method. All surrogate spike %R values were within the project control limits.

1.8 Matrix Spike (MS)

MS analyses were performed on samples GF-B-10-1-2.5, GF-B-1-1-2.5, NRP-MW-3-6.5-7.5, UST71-B-1-12-13, NRP-B-7-19-20, and UST68-MW-2-060612. The %R values were within the project control limits, except for the following:

SDG#	Parent Sample ID	Compound	MS %R (%)	Control Limit (%)	Data Qualifier
205381	GF-B-10-1-2.5	Dichlorodifluoromethane Chloromethane	19 47	50-150	**UJ**
205404	GF-B-1-1-2.5	Dichlorodifluoromethane	23	50-150	**UJ**
205423 205441	NRP-MW-3-6.5-7.5	Dichlorodifluoromethane Chloromethane Vinyl chloride Bromomethane Chloroethane Trichlorofluoromethane 1,1-Dichloroethene Methylene chloride trans-1,2-Dichloroethene 1,1-Dichloroethane 2,2-Dichloropropane Chloroform 1,1,1-Trichloroethane 1,1-Dichloropropene Carbon tetrachloride Benzene Trichloroethene (TCE) Tetrachloroethene (PCE) 1,2,4-Trichlorobenzene Hexachlorobutadiene 1,2,3-Trichlorobenzene	4 23 19 30 30 15 30 46 30 45 40 49 39 40 35 47 44 43 49 45 49	50-150	**UJ**
206006	NRP-B-7-19-20	Dichlorodifluoromethane	7	50-150	**UJ**

1.9 Laboratory Duplicate Analysis

Duplicate analyses were performed on sample REC7-MW-1-060512 (SDG: 206067). All RPD or concentration difference values met the laboratory control criteria.

1.10 Internal Standards

The method requires that (1) internal standard retention time be within ±30 seconds from that of the associated 12-hour calibration standard, and (2) the area counts of all internal standards be within –50% to +100% of the associated 12-hour calibration standard. All internal standards in the sample and associated QC analyses met the criteria.

1.11 Reporting Limit and Target Compound Quantitation

The sample-specific MDLs and MRLs were adjusted with sample amount extracted and MRLs were supported with adequate initial calibration concentrations. The project requirements for quantitation limits were achieved.

Vinyl acetate and 1,4-dioxane reported in samples REC6-MW-2-060512 and MW-3-060512 and the method blank associated with these samples were based on a tentatively identified compound (TIC) search against the laboratory library. The compounds were not detected in any of the samples; the MRLs reported were based on 10 times the standard MRLs for other VOCs. Vinyl acetate and 1,4-dioxane results in samples REC6-MW-2-060512 and MW-3-060512 were qualified (UJ) as estimated.

1.12 Field Duplicates

Seven sets of field duplicates were submitted for VOCs analyses. Field duplicate results for detected target compounds, RPD (or concentration difference) values, and data qualification were presented in **Appendix A**.

1.13 Overall Assessment of VOCs Data Usability

VOCs data are of known quality and acceptable for use, as qualified.

2. SVOCs by GC/MS (EPA Method SW8270D)

2.1 Sample Management and Holding Times

No anomalies were identified in relation to sample preservation, handling, and transport.

Soil samples should be extracted within 14 days and water samples within seven days of collection. Extracts should be analyzed within 40 days of extraction. All samples were extracted and analyzed within the required holding times.

2.2 GC/MS Instrument Performance Check

The method require that a GC/MS tuning analysis be performed using decafluorotriphenylphosphine (DFTPP) at the beginning of each 12-hour period prior to any analysis, and specific mass ions meet the criteria provided in the method. All instrument performance checks met the requirements.

2.3 Initial Calibration (ICAL)

The method linearity criteria require that (1) if linear average RFs is chosen as the quantitation option, the %RSD of RFs be ≤20% for the analyte, (2) if least-square linear regression is chosen for quantitation, the correlation coefficient (r) be >0.995, (3) if six-point non-linear (quadratic) curve is chosen for quantitation, the coefficient of determination (r^2) be >0.99, and (4) the RF be >0.01 for poor response compounds and >0.05 for all other compounds.. All ICALs met the requirements.

An ICV (second source) standard was analyzed to verify the calibration curve. %D values were either within ±20%, or the exceedance had no adverse effects on data usability (*e.g.,* biased high ICV recovery for a compound not detected in samples).

2.4 Calibration Verification (CCV)

The analytical method requires that (1) continuing calibrations be analyzed at the beginning of each 12-hour analysis period prior to the analysis of method blank and samples, (2) the %D be within ±20%, and (3) the RF be >0.01 for poor response compounds and >0.05 for all other compounds.

Calibration verifications were performed at the required frequency. %D values were either within ±20%, or the exceedance had no adverse effects on data usability (*e.g.,* biased high CCV recovery for a compound not detected in samples), with the exceptions as follows:

CCV ID	Compound	%D	Bias	Affected Sample	Data Qualifier
GCMS8 5/31/12, 11:33	Pyrene	36.1%	High	GF-B-14-7.5-9 GF-B-2-2.5-4	**J**

2.5 Method Blanks

Method blanks were prepared and analyzed as required. Target compounds were not detected at or above the RLs in the method blanks.

2.6 Surrogate Spikes

Surrogate spikes were added to all samples as required by the method. All %R values were within the laboratory control limits.

2.7 Matrix Spike (MS) and MS Duplicate (MSD)

MS/MSD analyses were not performed for SVPCs analyses; instead, laboratory duplicates in combination with LCS/LCSD analyses were performed.

2.8 Laboratory Control Sample (LCS) and LCS Duplicate (LCSD)

LCS and LCSD were prepared and analyzed as required by the method. All %R and RPD values either met the project control criteria, or the outliers had no adverse effects on data usability (*e.g.,* biased high %R or RPD value for a compound that was not detected in samples).

2.9 Laboratory Duplicate Analysis

Duplicate analyses were performed on sample GF-B-10-1-2.5 (SDG: 205381) and GF-B-8-7.5-9 (SDG: 205441). All RPD or concentration difference values met the laboratory control criteria.

2.10 Internal Standards

The method requires that (1) internal standard retention time be within ±30 seconds from that of the associated 12-hour calibration standard, and (2) the area counts of all internal standards be within –50% to +100% of the associated 12-hour calibration standard. All internal standards in the sample and associated QC analyses met the criteria, except for the following:

SDG #	Sample ID	Internal Standard	Internal Standard %R	Control Limit	Affected Compound	Data Qualifier
205423	GF-B-6-1-2.5	Perylene-d_{12}	49.4%	50-200%	Di-*n*-octyl phthalate	**UJ**

Sample GF-B-11-1-2.5 was diluted and re-analyzed with acceptable internal standard recoveries. Both results were reported and original data (undiluted) should be used for data interpretation.

2.11 Reporting Limits and Compound Quantitation

The sample-specific MDLs and reporting limits (RLs) were adjusted with sample amount extracted and moisture content. RLs were supported with adequate initial calibration concentrations and achieved the project target quantitation limits.

2.12 Field Duplicates

Samples NRP-MW-3-060512 and NRP-MW-3-060512D were field duplicates. Sample results, RPD (or concentration difference) values, and data qualification for detected compounds were summarized in **Appendix A**.

2.13 Overall Assessment of SVOCs Data Usability

SVOCs data are of known quality and acceptable for use, as qualified.

3. PAHs by GC/MS - SIM (EPA Method SW8270D-SIM)

3.1 Sample Management and Holding Times

No anomalies were identified in relation to sample preservation, handling, and transport. Soil samples should be extracted within 14 days and water should be extracted within seven days of collection. Extracts should be analyzed within 40 days of extraction. All samples were extracted and analyzed within the required holding times.

3.2 GC/MS Instrument Performance Check

DFTPP tuning was performed within each 12-hour interval. All required ion abundance ratios met the method requirements.

3.3 Initial Calibration (ICAL)

The method linearity criteria require that (1) if linear average RFs is chosen as the quantitation option, the %RSD of RFs be ≤20% for the analyte, (2) if least-square linear regression is chosen for quantitation, the correlation coefficient (r) be >0.995, (3) if six-point non-linear (quadratic) curve is chosen for quantitation, the coefficient of determination (r^2) be >0.99, and (4) the RF be >0.01 for poor response compounds and >0.05 for all other compounds.. All ICALs met the requirements.

An ICV (second source) standard was analyzed to verify the calibration curve. %D values were either within ±20%, or the exceedance had no adverse effects on data usability (*e.g.,* biased high ICV recovery for a compound not detected in samples).

3.4 Calibration Verification (CCV)

The analytical method requires that (1) continuing calibration verifications be analyzed at the beginning of each 12-hour analysis period prior to the analysis of method blank and samples, (2) the %D be within ±20%, and (3) the RF be >0.01 for poor response compounds and >0.05 for all other compounds.

Calibration verifications were performed at the required frequency. %D values were either within ±20%, or the exceedance had no adverse effects on data usability (*e.g.,* biased high CCV recovery for a compound not detected in samples).

3.5 Blanks

Method Blanks: Method blanks were prepared and analyzed as required. Target compounds were not detected at or above the RLs in the method blanks.

Equipment Rinsate Blank: One **equipment** rinsate blank, sample RB-NRP-3-060112, was collected on 6/1/2012 and analyzed for PAHs. Target compounds were not detected at or above the RLs in this sample.

3.6 Surrogate Spikes

Surrogate spikes were added to all samples as required by the method. All surrogate spike %R values were either within the project control limits or at levels that had no adverse effects on data quality (*e.g.,* biased-high recovery for compounds that were not detected in samples), except qualified below. In some cases surrogate spike %R values were inapplicable for data evaluation because the samples contained high levels of target PAHs and requested dilution analysis; no data were qualified on this basis. The remaining anomalies were summarized in the following:

Sample ID	Surrogate	%R (%)	Control Limit (%)	Affected Compound	Data Qualifier
NRP-B-2-8-10D	Benzo(a)anthracene-d_{12}	162	35-159	Fluoranthene Pyrene Chrysene Indeno(1,2,3-cd)pyrene	**J**
MW-1-060612 MW-2-060612 OMS-MW-1-060612	Benzo(a)anthracene-d_{12}	29 28 31	50-129	Fluoranthene Pyrene Benz(a)anthracene Chrysene Benzo(a)pyrene Benzo(b)fluoranthene Benzo(k)fluoranthene Indeno(1,2,3-cd)pyrene Dibenzo(a,h)anthracene Benzo(g,h,i)perylene	**UJ**
REC3-MW-1-060712 UST70-MW-2-060712	Benzo(a)anthracene-d_{12}	35 45	50-129	Fluoranthene Pyrene Benz(a)anthracene Chrysene Benzo(a)pyrene Benzo(b)fluoranthene Benzo(k)fluoranthene Indeno(1,2,3-cd)pyrene Dibenzo(a,h)anthracene Benzo(g,h,i)perylene	**UJ**

3.7 Matrix Spike (MS) and MS Duplicate (MSD)

MS and MSD analyses were performed on samples REC2-B-12-17-18 (SDG: 205364), REC2-B-5-7-8 (SDG: 205381), NRP-MW-3-6.5-7.5 (SDG: 205423), UST71-B-4-28-29 (SDG: 206006), and REC3-MW-1-8.5-9.5 (SDG: 206068). The %R and RPD values met the project control criteria, except for the following:

SDG#	Parent Sample ID	Compound	MS %R	MSD %R	RPD	Control Limit	Data Qualifier
205423	NRP-MW-3-6.5-7.5	Naphthalene	37	- -	- -	44-129	**J**

Note: "- -" indicated that the value was within the control limit.

3.8 Laboratory Control Sample (LCS) and LCS Duplicate (LCSD)

LCS and LCSD analyses were performed as required by the method. All %R and RPD values were within the project control limits.

3.9 Internal Standards

The method requires that (1) internal standard retention time be within ±30 seconds from that of the associated 12-hour calibration standard, and (2) the area counts of all internal standards be within –50% to +100% of the associated 12-hour calibration standard. All internal standards in the sample and associated QC analyses met the criteria, except for the following:

Sample ID	Internal Standard	Internal Standard %R	Control Limit	Affected Compound	Data Qualification
UST-70-B-1-3-4	Phenanthrene-d_{10}	49.9%	50-200%	Anthracene Fluoranthene Phenanthrene	**UJ** **J** **J**

3.10 Reporting Limits and Target Compound Quantitation

The sample-specific RLs were adjusted with sample amount extracted and RLs were supported with adequate initial calibration concentrations.

3.11 Field Duplicates

Four sets of field duplicates were submitted for PAHs analyses. Field duplicate results for detected target compounds, RPD (or concentration difference) values, and data qualification were presented in **Appendix A**.

3.12 Overall Assessment of PAHs Data Usability

PAHs data are of known quality and acceptable for use, as qualified.

4. PCB Aroclors (EPA Method SW8082A)

4.1 Sample Management and Holding Times

No anomalies were identified in relation to sample preservation, handling, and transport.

Soil samples should be extracted within 14 days and water should be extracted within seven days of collection. Extracts should be analyzed within 40 days of extraction. All samples were extracted and analyzed within the required holding times.

4.2 Initial Calibration

The method requires that (1) a minimum of 5-point calibration be performed using the mixture of Aroclor 1016 and 1260, (2) a single-point calibration be performed for the other five Aroclors to establish calibration factors (CFs) and for Aroclor pattern recognition, (3) at least 3 peaks (preferably 5 peaks) must be chosen for each Aroclor for characterization, (4) the %RSD values of Aroclor 1016 and 1260 CFs must be ≤20%, and (5) if dual column analysis is chosen, both columns should meet the requirements.

All ICALs met the requirements.

4.3 Calibration Verification

CCV analyses should be performed for each 12-hour analysis sequence prior to sample analyses, and the %D be within ±20%.

Calibration verifications were performed at the required frequency. All %D values either met the control criteria or biased high for target compounds that were not detected in the associated samples.

4.4 Method Blanks

Method blanks were prepared and analyzed as required. PCB Aroclors were not detected at or above the MDLs in the method blanks.

4.5 Surrogate Spikes

Surrogate spikes were added to all samples as required by the method. All surrogate spike %R values were within the laboratory control limits, except for the following:

Sample ID	Surrogate	%R	Control Limit	Affected Compound	Data Qualifier
GF-B-14-1-2.5	Tetrachloro-*m*-xylene	17%	50-150%	All PCB Aroclors	**UJ**

4.6 Matrix Spike and Matrix Spike Duplicate (MS/MSD)

MS/MSD analyses were not performed for PCB Aroclors analyses; instead, duplicate and LCS/LCSD analyses in combination were performed.

4.7 Laboratory Control Sample (LCS) and LCS Duplicate (LCSD)

LCS and LCSD analyses were performed as required by the method. All %R and RPD values were within the project control limits.

4.8 Laboratory Duplicate Analysis

Duplicate analyses were performed on client samples REC3-MW-1-8.5-9.5 (SDG: 206068), GF-B-10-1-2.5 (SDG: 205381), GF-B-8-7.5-9 (SDG: 205441), and REC3-MW-1-8.5-9.5 (SDG: 206068). All RPD or concentration difference values met the laboratory control criteria.

4.9 Method Reporting Limits and Target Compound Quantitation

Sample-specific RLs were adjusted with sample amount extracted and moisture content. RLs were supported with adequate initial calibration concentrations and achieved the project target quantitation limits.

Aroclor 1260 was detected in sample GF-B-15A-10-11.5. Aroclor 1254 was detected in sample GF-B-8-1-2.5. The dual column RPD values were less than 40% for both detections.

4.10 Field Duplicates

Field duplicates were not submitted for PCB analyses in these SDGs.

4.11 Overall Assessment of PCB Aroclors Data Usability

PCB Aroclor data are of known quality and acceptable for use, as qualified.

5. TPH-Gasoline by GC/FID (Method NWTPH-Gx)

5.1 Sample Management and Holding Times

No anomalies were identified in relation to sample preservation, handling, and transport. Soil and water samples should be extracted (soil only) and analyzed within 14 days. All samples were extracted and analyzed within the required holding times.

5.2 Initial Calibration (ICAL)

The method linearity criteria require that (1) if linear average RFs is chosen as the quantitation option, the %RSD of RFs be <20% for the analyte, (2) if least-square linear regression is chosen for quantitation, the correlation coefficient (r) be >0.995, and (3) if six-point non-linear (quadratic) curve is chosen for quantitation, the coefficient of determination (r^2) be >0.990. Initial calibration met the criteria for all target compounds.

An ICV (second source) standard was analyzed to verify the calibration curve. %D values were within ±20%.

5.3 Calibration Verification

Continuing calibration verification (CCV) analyses were performed at the required frequency for all analytical sequences as required by the method. The %D values for all CCVs met the method criterion (±20%).

5.4 Method Blanks

Method blanks were prepared and analyzed as required. No target compounds were detected at or above the RLs in the method blanks.

5.5 Surrogate Spikes

Surrogate spikes were added to all samples as required by the method. All surrogate spike %R values were within the project control limits, outside the control limits due to matrix interference, or diluted below quantitation limits due to high analyte concentrations. No data qualifying actions were taken in these cases.

5.6 Matrix Spike and Matrix Spike Duplicate

MS/MSD analyses were not performed for TPH-Gasoline analyses; instead, duplicate and LCS analyses in combination were performed.

5.7 Laboratory Control Sample (LCS)

LCS analyses were performed as required by the method. All %R values were within the laboratory control limits.

5.8 Laboratory Duplicate Analysis

Duplicate analyses were performed on samples Gf-B-13-10-11.5, GF-B-2-2.5-4, GF-B-3-1-2.5, NRP-B-8-8.5-9.5, and NRP-MW-2-060512 and several non-client samples. All RPD and concentration difference values met the laboratory control criteria.

5.9 Reporting Limits and Target Compound Quantitation

The sample-specific RLs were adjusted with sample amount extracted and supported with adequate initial calibration concentrations.

5.10 Field Duplicates

Six sets of field duplicates were submitted for TPH-Gasoline analyses. Field duplicate results for detected target compounds, RPD (or concentration difference) values, and data qualification were presented in **Appendix A**.

5.11 Overall Assessment of TPH-Gasoline Data Usability

TPH-Gasoline data are of known quality and acceptable for use.

6. TPH-Diesel & Motor Oil by GC/FID (Method NWTPH-Dx)

6.1 Holding Time

No anomalies were identified in relation to sample preservation, handling, and transport. Soil samples should be extracted within 14 days and water should be extracted within seven days of collection. Extracts should be analyzed within 40 days of extraction. All samples were extracted and analyzed within the recommended holding times.

6.2 Initial Calibration

The method requires that (1) a minimum of 5-point calibration be performed using individual petroleum product reference standards to ensure the proper identification and quantitation of petroleum hydrocarbons in samples, (2) the calibration curve include a sufficiently low standard to provide the necessary reporting limits, and (3) the linear working range of the instrument be defined.

The ICAL met the method requirements. The linearity of the ICAL curves were verified with %RSD values of RFs (%RSD ≤20%, according to EPA SW 846 Method 8000), and was acceptable for both TPH-Diesel and TPH-Motor Oil.

6.3 Calibration Verification

The method requires that (1) a mid-range check standard be analyzed prior to and after each analytical batch, and (2) the percent drift (%D) value be within ±15% of the true value.

Calibration verification was performed at required frequency. The %D values were either within the ±15% criterion or at levels that had no adverse effects on data quality (e.g., high-bias %D value where the target compound was not detected in associated sample), except for the following:

Instrument ID	Compound	%D (%)	Bias	Affected Sample	Data Qualifier
GC#1 6/1/12, 15:26	TPH-Diesel	18.5	Low	GF-B-3-1-2.5 GF-B-3-7.5-9 GF-B-3-11-12.5 GF-B-5-1-2.5 GF-B-5-7.5-9 GF-B-6-1-2.5 GF-B-6-7.5-9	**UJ** **UJ** **UJ** **J** **J** **UJ** **J**
GC#6 6/10/12, 12:18	TPH-Diesel	21.3	High	UST71-B-2-13-14 UST71-B-3-18-19 UST71-B-4-12.5-13.5 UST70-B-1-3-4	**J**
GC#6 6/10/12, 12:18	TPH-Diesel	21.3	High	UST70-B-1-3-4-D UST70-B-2-9-10	**J** **J**
GC#6 6/10/12, 14:30	TPH-Motor Oil	21.3	High	UST71-B-2-13-14 UST71-B-3-18-19 UST71-B-4-12.5-13.5	**J**
GC#4 6/11/12, 15:00 6/11/12, 21:40	TPH-Motor Oil	15.8 19.2	Low	NRP-B-2-8-10 NRP-B-2-8-10-D NRP-B-2-14-15 NRP-B-4-13.5-14.5 NRP-B-1-9-12 NRP-B-3-8.5-9.5	**J** **J** **UJ** **UJ** **UJ** **UJ**

Instrument ID	Compound	%D (%)	Bias	Affected Sample	Data Qualifier
GC#4 6/14/12, 20:58 6/15/12, 2:06	TPH-Motor Oil	15.6 16.7	Low	MW-1-060612	**UJ**
				MW-2-060612	**UJ**
				OMS-MW-1-060612	**UJ**
				MW-6-060712	**UJ**
				REC3-MW-1-060712	**UJ**
				UST70-MW-1-060712	**UJ**
				UST71-MW-1-060712	**J**
				UST70-MW-2-060712	**UJ**
				MW-4-060812	**UJ**
				MW-4-060812-D	**UJ**
				REC2-MW-5-060812	**UJ**
				NRP-MW-1-060812	**UJ**
				NRP-MW-1-060812-D	**UJ**

6.4 Method Blanks

Method blanks were prepared and analyzed as required. Target compounds were not detected at or above the RLs in the method blanks.

6.5 Surrogate Spikes

Surrogate spikes were added to all samples as required by the method. All surrogate spike %R values were within the project control limits, outside the control limits due to matrix interference, or diluted below quantitation limits due to high analyte concentrations. No data qualifying actions were taken in these cases.

6.6 Matrix Spike (MS) and MS Duplicate (MSD)

MS and MSD analyses were performed at the required frequency. The %R and RPD values met the laboratory control limits.

6.7 Laboratory Control Sample (LCS)

LCS analyses were performed as required. All %R values met the project control limits.

6.8 Target Compound Identification

Sample extracts were cleaned up with acid and silica gel treatment to minimize the biogenic interference with target compound identification, as required by the project. The laboratory reported results as diesel #2 (C10 - C25) and motor oil (C25 - C36), as required by the method.

6.9 Reporting Limits and Target Compound Quantitation

The reported RLs were supported with adequate ICAL concentrations. Sample-specific RLs were adjusted to sample weight and moisture content.

Several positive TPH-Diesel and TPH-Motor Oil detections had chromatographic pattern that did not resemble the fuel standard for quantitation.

6.10 Field Duplicates

Four sets of field duplicates were submitted for TPH-Diesel and TPH-Motor Oil analyses. Field duplicate results, RPD (or concentration difference) values, and data qualification were presented in **Appendix A**.

6.11 Overall Assessment of TPH-Diesel and Motor Oil Data Usability

TPH-Diesel and TPH-Motor Oil data are of known quality and acceptable for use, as qualified.

7. Total Metals by ICP/MS and CVAFS (EPA Methods 200.8 and 1631E)

7.1 Sample Management and Holding Times

No anomalies were identified in relation to sample preservation, handling, and transport, as discussed in Section 1.1.

Soil and water samples should be analyzed within 180 days for metals and 28 days for mercury. Samples were analyzed within the required holding time.

7.2 ICP/MS Tuning

Instrument tuning was performed at the required frequency. The stability check (%RSD <5%), mass calibration (mass difference <0.1 AMU), and resolution check (peak width <1.0 AMU at 5% peak height) met the NFG and method criteria.

7.3 Initial Calibration (ICAL)

The ICP/MS method requires that (1) a blank and one calibration standard be used in establishing the analytical curve, and (2) the average of replicate exposures be reported for all standards, QC, and sample analyses.

For mercury, the method requires that (1) a blank and five calibration standards be employed to establish the analytical curve, and (2) the linearity of the calibration curve should meet the criteria of correlation coefficient ≥ 0.995.

All ICALs met the method requirements.

7.4 Calibration Verification (ICV and CCV)

Initial calibration verifications (ICVs) and continuing calibration verifications (CCVs) were analyzed at the required frequency. The %R values either met the control criteria (90 – 110% for metals, 80 – 120% for mercury) or the exceedance had no adverse effects on data usability (e.g., high-bias %D value where the target compound was not detected in associated sample), except for the following:

CCAL ID	Analyte	%R	Affected Sample	Data Qualifier
25 ppb i2-40d (3) 6/8/12, 13:59	Total Arsenic	84.4%	REC-MW-4-060612 MW-2-060612	**J**
25 ppb i2-40d (9) 6/12/12, 14:25	Dissolved Arsenic Dissolved Selenium	116.4% 77.2%	REC3-MW-1-060712	**J**

7.5 Blanks

Calibration Blanks: Initial calibration blanks (ICBs) and continuing calibration blanks (CCBs) were not analyzed after calibration verification standards. Target analytes were not detected at or above the RLs in the ICBs and CCBs.

Preparation Blanks: Preparation blanks were prepared and analyzed as required. Target analytes were not detected at or above the RLs in the preparation blanks.

Equipment Rinsate Blank: One equipment rinsate blank, sample RB-NRP-3-060112, was collected on 6/1/2012 and analyzed for metals and mercury as required. Trace amount of zinc was detected in this rinse blank at 1.43 µg/L. Zinc concentrations in the associated samples were greater than 10 times the level found in the equipment rinsate blank. No data qualification action was necessary. No other target analytes were detected at or above the RLs in this sample.

7.6 Laboratory Control Sample (LCS)

LCS analyses were performed as required by the method. All %R values were within the project control limits, or the exceedance had no adverse effects on data usability (e.g., high-bias %R value where the target compound was not detected in associated sample).

7.7 Matrix Spike (MS) and Matrix Spike Duplicate (MSD)

MS and MSD analyses were performed on client samples GF-B-10-1-2.5 (SDG: 205381), GF-B-4-2.5-4 (SDG: 205404), GF-B-8-1-2.5 (SDG: 205441), RB-NRP-3-060112 (SDG: 206022), REC7-MW-1-060512 (SDG: 206067), REC5-MW-1-6.5-7.5 (SDG: 206068), and REC7-MW-4-060612 (SDG: 206098) for all target analytes. The %R and RPD values met the laboratory control limits, except for the following:

SDG#	Parent Sample ID	Analyte	MS %R	MSD %R	RPD	Control Limit	Affected Sample	Data Qualifier
206067	REC7-MW-1-060512	Dissolved Selenium	- -	- -	22	20	REC7-MW-1-060512 NRP-MW-3-060512 REC7-MW-2-060512 NRP-MW-2-060512 REC6-MW-2-060512 MW-5-060512 MW-3-060512	**J**
206098	REC7-MW-4-060612	Beryllium Cadmium	45 - -	46 46	- - 62	68-151 86-115	UST68-MW-1-060612 UST68-MW-2-060612 UST68-MW-4-060612 UST68-MW-5-060612 REC7-MW-3-060612 REC7-MW-4-060612 MW-1-060612 MW-2-060612 OMS-MW-1-060612	**J/UJ**

Note: "- -" indicated that the value was within the control limit.

7.8 Internal Standards

At least three internal standards were added to all field and QC samples for ICP/MS analyses. All percent relative intensity values were within the method criteria (60 - 125%), except for the following:

Sample ID	Internal Standard	%R	Control limit	Affected Analytes	Data Qualifier
REC7-MW-3-060612	Germanium Indium Holmium	40% 49% 55%	60-125%	All dissolved metals	**J/UJ**
REC7-MW-4-060612	Germanium Indium Holmium	39% 46% 52%	60-125%	All dissolved metals	**J/UJ**
MW-1-060612	Germanium Indium Holmium	41% 49% 56%	60-125%	All dissolved metals	**J/UJ**

Sample ID	Internal Standard	%R	Control limit	Affected Analytes	Data Qualifier
MW-2-060612	Germanium Indium Holmium	39% 45% 53%	60-125%	All dissolved metals	**J/UJ**
OMS-MW-1-060612	Germanium Indium Holmium	40% 46% 55%	60-125%	All dissolved metals	**J/UJ**
REC7-MW-4-060612	Germanium Indium Holmium	34% 39% 47%	60-125%	All total metals	**J/UJ**
MW-2-060612	Germanium Indium Holmium	33% 39% 49%	60-125%	All total metals	**J/UJ**
REC3-MW-1-060712	Germanium Indium Holmium	38% 40% 40%	60-125%	All dissolved metals	**J/UJ**
UST70-MW-2-060712	Germanium Indium Holmium	54% 57% 59%	60-125%	All dissolved metals	**J/UJ**

7.9 Method Reporting Limits and Analyte Quantitation

The sample-specific RLs were adjusted with sample amount extracted and supported with adequate initial calibration concentrations. The QAPP requirements for RLs were achieved.

7.10 Field Duplicates

Five sets of field duplicates were submitted for Metals analyses. Field duplicate results, RPD (or concentration difference) values, and data qualification were presented in **Appendix A**.

7.11 Overall Assessment of Metals Data Usability

Metal data are of known quality and acceptable for use, as qualified.

8. 1,2-Dibromoehtane (EDB) by GC/ECD (EPA Method SW8011A)

8.1 Holding Times

Soil and water samples should be extraction and analyzed within 28 days of collection. All samples were analyzed within the required holding time.

8.2 Initial Calibration (ICAL)

The method linearity criteria require that (1) if linear average RFs is chosen as the quantitation option, the %RSD of RFs be <20% for the analyte, (2) if least-square linear regression is chosen for quantitation, the correlation coefficient (r) be >0.995, and (3) if six-point non-linear (quadratic) curve is chosen for quantitation, the coefficient of determination (r^2) be >0.990. Initial calibration met the criteria for all target compounds.

An ICV (second source) standard was analyzed to verify the calibration curve. The %R value were within the control limits of 80 – 120%.

8.3 Continuing Calibration Verification (CCV)

Continuing calibration verification (CCV) analyses were performed at the required frequency. All %R values were within the control limits of 80 – 120%.

8.4 Method Blank

Method Blank: Method blanks were analyzed at the required frequency. EDB was not detected at or above the RL in method blanks.

8.5 Matrix Spike (MS) and Matrix Spike Duplicate (MSD)

MS and MSD analyses were not performed on a project sample in these SDGs. EDB was not detected in samples requiring this analysis; the analytical precision and accuracy was evaluated against the LCS/LCSD results.

8.6 Laboratory Control Sample (LCS) and LCS Duplicate (LCSD)

LCS and LCSD analyses were performed as required by the methods. All %R and RPD values were within the laboratory control limits.

8.7 Field Duplicates

One set of field duplicates was submitted for EDB analysis. EDB was not detected at or above the RL in either sample; the field precision met the project control criteria.

8.8 Reporting Limits and Target Compound Quantitation

The reported RL was supported with adequate ICAL concentrations. EDB was not detected in samples in these SDGs; a second column confirmation was therefore not required.

8.9 Overall Assessment of EDB Data

EDB data are of known quality and acceptable for use.

9. Polychlorinated Dioxins/Furans by HRGC/HRMS (EPA Method SW8290)

9.1 Sample Management and Holding Times

No anomalies were identified in relation to sample preservation, handling, and transport, as discussed in Section 1.1.

EPA SW846 Method 8290 recommends a holding time of 30 days for solid samples stored in the dark at 4°C and completely analyzed within 45 days of extraction (Section 6.4). All samples were extracted and analyzed within the recommended holding times.

9.2 HRGC/HRMS Instrument Performance Check

The method requires that (1) for mass calibration and resolution, the laboratory must provides evidence of mass spectrometer resolution > 10,000 at the beginning and end of each 12-hour analytical sequence. If mass calibration and resolution tuning are not correctly performed, interferences may degrade chlorinated dibenzo-p-dioxin and chlorinated dibenzofuran (CDD/CDF) identification and quantitation; (2) the mass spectrometer selected ion monitoring (SIM) scan descriptor switching times are determined by the analysis of the Window Defining Mixture (WDM) which contains the first and last eluting isomers in each homologue; and (3) chromatographic resolution is verified by analyzing one of two Isomer Specificity Check (ISC) solutions, depending on the Gas Chromatograph (GC) column used for analysis.

All HRGC/HRMS instrument performance checks met the criteria.

9.3 Initial Calibration (ICAL)

The method requires that (1) the chromatographic peak separation between the 2,3,7,8-TCDD peak and the 1,2,3,8-TCDD peak and between the 2,3,7,8-TCDF peak and the 2,3,4,7-TCDF peak and must be resolved with a valley of < 25%; (2) the ion abundance ratio be within a ± 15% window around the theoretical abundance ratio; (3) the retention times (RTs) of the isomers must fall within the appropriate RT windows established by the WDM analysis. In addition, the absolute RT of the internal standard $^{13}C_{12}$-1,2,3,4-TCDD must exceed 25 minutes on the DB-5 (or equivalent) column and 15 minutes on the DB-225 (or equivalent) column; (4) the instrument sensitivity (signal-to-noise [S/N] ratio) must be >10:1; (5) the percent relative standard deviation (%RSD) be <20% for native isomers and < 30% for labeled isomers; (6) all initial calibration standards (CSs) must be

analyzed at the correct concentration levels; (7) initial calibrations must be performed when the contract is awarded, whenever significant instrument maintenance is performed (e.g., ion source cleaning, GC column replacement, etc.), or if calibration verification criteria are not met.

All ICALs met the method requirements.

9.4 Calibration Verification

The method requires that (1) continuing calibrations be analyzed at the beginning of each 12-hour analysis period prior to the analysis of method blank and samples, (2) the percent difference (%D) be within ±20% for native isomers and be within ±30% for labeled isomers, and (3) the ion abundance ratio, retention times, relative retention times, instrument sensitivity meet the criteria for initial calibrations.

All calibration verification analyses met the criteria.

9.5 Method Blanks

Method blanks were prepared and analyzed as required for each preparation batch. Target compounds were either not detected at or above their estimated detection limits (EDLs), or associated sample results were >5x the level found in the method blanks. Note that positive detections in method blanks were not used to assess data quality if the detection in method blanks did not meet the method ion abundance ratio requirements. No data were qualified in relation to detections in method blanks.

9.6 Laboratory Control Samples (LCS)

LCS analyses were performed as required by the method. The recovery met the method control limits for all target and labeled compounds.

9.7 Matrix Spike and Matrix Spike Duplicate (MS/MSD)

MS and MSD analyses were performed on sample GF-B-2-2.5-4. The %R and RPD values met the control limits for all spiked congeners, except that the RPD value for OCDD (52%) was outside the control criteria (20%). The OCDD result for sample GF-B-2-2.5-4 was qualified (J) as estimated.

9.8 Labeled Compounds

Nine labeled internal standards and one cleanup recovery standard were added to all samples as required by the method.

The %R values for selected internal standards and cleanup standard were less than the lower control limit of 40%. Affected sample results were qualified as follows:

Sample ID	Internal Standard	%R (%)	Affected Congener	Data Qualification
GF-B-4-2.5-4	$^{13}C_{12}$-OCDD	32	OCDD	**J**
			OCDF	**UJ**
GF-B-5-1-2.5	$^{13}C_{12}$-OCDD	29	OCDD	**J**
			OCDF	**J**
GF-B-13-10-11.5	$^{13}C_{12}$-1,2,3,6,7,8-HxCDD	39	2,3,7,8-TCDD	**UJ**
	$^{13}C_{12}$-1,2,3,4,6,7,8-HpCDD	39	1,2,3,7,8-PeCDD	**UJ**
	$^{13}C_{12}$-OCDD	32	1,2,3,4,7,8-HxCDD	**UJ**
	$^{13}C_{12}$-2,3,7,8-TCDF	39	1,2,3,6,7,8-HxCDD	**UJ**
	$^{37}Cl_4$-2,3,7,8-TCDD	39	1,2,3,7,8,9-HxCDD	**UJ**
			1,2,3,4,6,7,8-HpCDD	None (U, IAR out)
			OCDD	**J**
			2,3,7,8-TCDF	**UJ**
			1,2,3,7,8-PeCDF	**UJ**
			2,3,47,8-PeCDF	**UJ**
			1,2,3,4,7,8-HxCDF	**UJ**
			1,2,3,6,7,8-HxCDF	**UJ**
			1,2,3,7,8,9-HxCDF	**UJ**
			2,3,4,6,7,8-HxCDF	**UJ**
			1,2,3,4,6,7,8-HpCDF	**J**
			1,2,3,4,7,8,9-HpCDF	**J**
			OCDF	**UJ**
			Total TCDD	**UJ**
			Total PeCDD	**J**
			Total HxCDD	**J**
			Total HpCDD	**UJ**
			Total TCDF	**UJ**
			Total PeCDF	**J**
			Total HxCDF	**UJ**
			Total HpCDF	**J**
GF-B-7-1-2.5	$^{13}C_{12}$-OCDD	37	OCDD	**J**
			OCDF	**J**

Note: Positive detections were flagged (J) and non-detects were flagged (UJ). In a case where the ion ratio for the detection did not meet the method criteria (IAR out), the result was not qualified herein.

9.9 Target Compound Identification

All detected target congeners were properly identified. The ion ratios for a number of detection did not meet the method criteria; these results were qualified as non-detected at their reported values, as summarized below:

Sample ID	Congener	Ion Abundance Ratio	Control Limits	Data Qualification
GF-B-15A-1-2.5	2,3,7,8-TCDD	0.51	0.65-0.89	**0.537 U**
	1,2,3,7,8-PeCDD	1.90	1.32-1.78	**0.876 U**
	1,2,3,7,8-PeCDF	2.11	1.32-1.78	**0.938 U**
	2,3,47,8-PeCDF	1.28	1.32-1.78	**1.5 U**
	1,2,3,7,8,9-HxCDF	0.75	1.05-1.43	**0.268 U**
GF-B-2-2.5-4	2,3,7,8-TCDD	0.59	0.65-0.89	**0.467 U**
	1,2,3,7,8-PeCDD	2.58	1.32-1.78	**0.831 U**
	1,2,3,4,7,8-HxCDD	1.46	1.05-1.43	**1.2 U**
	1,2,3,4,7,8,9-HpCDF	0.83	0.88-1.20	**0.444 U**
GF-B-1-1-2.5	1,2,3,4,7,8-HxCDD	1.74	1.05-1.43	**0.151 U**
	1,2,3,7,8,9-HxCDD	1.55	1.05-1.43	**0.453 U**
	2,3,7,8-TCDF	1.17	0.65-0.89	**0.519 U**
	OCDF	1.09	0.76-1.02	**1.06 U**
GF-B-3-1-2.5	1,2,3,7,8,9-HxCDD	0.78	1.05-1.43	**0.376 U**
	2,3,7,8-TCDF	1.10	0.65-0.89	**0.672 U**
	2,3,4,7,8-PeCDF	1.23	1.32-1.78	**0.248 U**
	1,2,3,4,7,8-HxCDF	1.48	1.05-1.43	**0.273 U**
	1,2,3,6,7,8-HxCDF	1.48	1.05-1.43	**0.216 U**
GF-B-5-1-2.5	2,3,7,8-TCDD	0.92	0.65-0.89	**0.687 U**
	1,2,3,4,7,8,9-HpCDF	0.68	0.88-1.20	**1.65 U**
GF-B-6-1-2.5	1,2,3,6,7,8-HxCDD	0.91	1.05-1.43	**0.419 U**
	2,3,7,8-TCDF	0.62	0.65-0.89	**0.398 U**
GF-B-8-1-2.5	1,2,3,7,8-PeCDD	1.09	1.32-1.78	**0.513 U**
	2,3,7,8-TCDF	0.94	0.65-0.89	**3.37 U**
	2,3,4,7,8-PeCDF	1.88	1.32-1.78	**1.65 U**
GF-B-10-1-1.25	2,3,7,8-TCDF (DB-225)	0.64	0.65-0.89	**0.661 U**
GF-B-13-1-2.5	2,3,7,8-TCDF	0.64	0.65-0.89	**0.739 U**
	1,2,3,7,8-PeCDF	1.06	1.32-1.78	**0.208 U**
	OCDF	0.72	0.76-1.02	**2.29 U**
GF-B-13-10-11.5	1,2,3,4,6,7,8-HpCDD	1.32	0.88-1.20	**0.587 U**
GF-B-11-1-2.5	1,2,3,4,7,8-HxCDD	1.57	1.05-1.43	**1.63 U**
	1,2,3,7,8,9-HxCDD	1.51	1.05-1.43	**3.33 U**
GF-B-7-1-2.5	1,2,3,4,7,8-HxCDF	0.72	1.05-1.43	**0.288 U**
	1,2,3,4,6,7,8-HpCDF	1.24	0.88-1.20	**0.57 U**
GF-B-7-10-11.5	1,2,3,7,8-PeCDF	1.03	1.32-1.43	**0.255 U**
	1,2,3,4,7,8-HxCDF	1.96	1.05-1.43	**0.355 U**
	2,3,7,8-TCDF	0.64	0.65-0.89	**1.21 U**
	2,3,7,8-TCDF (DB-225)	0.61	0.65-0.89	**0.401 U**

Note: 2,3,7,8-TCDF (DB-225) - the 2,3,7,8-TCDF result reported from the DB-225 column.

9.10 Reporting Limits, Estimated Detection Limits (EDLs), and Compound Quantitation

Correct internal standards, quantitation ions, and average RFs were used to quantitate target compound detections. The RLs were supported with adequate ICAL calibration concentrations. Sample-specific EDLs and MRLs were adjusted with sample weights, internal standard peak height, and noise levels as required by the method.

The following target congeners had chlorodiphenyl ether interference present in their retention time region.

Sample ID	Congener	Sample Conc.	Data Qualification
GF-B-15A-1-2.5	1,2,3,7,8-PeCDD	0.876 J	**None (U)**
	1,2,3,4,7,8-HxCDF	1.91 J	**J**
GF-B-2-2.5-4	1,2,3,7,8-PeCDF	1.07 J	**J**
	1,2,3,4,7,8-HxCDF	1.63 J	**J**
	2,3,4,6,7,8-HxCDF	2.97	**J**
GF-B-5-1-2.5	1,2,3,7,8-PeCDF	1.98 J	**J**
	1,2,3,4,7,8-HxCDF	5.91	**J**
GF-B-8-1-2.5	1,2,3,7,8-PeCDF	1.26 J	**J**
	2,3,4,6,7,8-HxCDF	1.17 J	**J**
GF-B-10-1-1.25	1,2,3,7,8-PeCDF	0.456 J	**J**

The 1,2,3,7,8-PeCDD result in sample GF-B-15A-1-2.5 was previously qualified as non-detect (0.876 U) due to ion abundance ratio anomaly and no additional qualification needed. All other positive detections in samples above were flagged (J).

9.11 Second Column Confirmation

Second-column confirmation is required for any sample analyzed on a DB-5 (or equivalent) column in which 2,3,7,8-TCDF is reported, or where 2,3,7,8-TCDF is reported as an Estimated Maximum Possible Concentration (EMPC) at or above the MRLs.

All positive detection of 2,3,7,8-TCDF were re-analyzed on the DB-225 column for confirmation and results reported from the second column (DB-225) should be used for data interpretation.

9.12 Overall Assessment of Polychlorinated Dioxins/Furans Data Usability

Polychlorinated dioxins and furans data were of known quality and acceptable for use as qualified.

10. Formaldehyde by HPLC/UV (EPA Method 8315A)

10.1 Sample Management and Holding Time

No anomalies were identified in relation to sample preservation, handling, and transport, as discussed in Section 1.1. Note that only one water sample, sample REC6-MW-2-060512, was analyzed for formaldehyde in these SDGs.

Water samples should be derivatized and extracted within 3 days of sample collection. All derivatized sample extracts should be analyzed within 3 days after preparation. The sample was prepared and analyzed within the required holding times.

10.2 Instrument Calibration

Initial calibration data for formaldehyde analysis were not provided in the data package.

10.3 Calibration Verification

Calibration verification data were not provided in the data package.

10.4 Method Blank

Method Blank: A method blank was prepared and analyzed in the preparation batch as required. Formaldehyde was not detected at or above the RL in method blank.

10.5 Matrix Spike (MS)

MS analyses were performed on project samples at the required frequency (one per batch or <20 samples) for sulfide, formaldehyde, and ammonia. The %R and RPD values for ammonia, formaldehyde, and sulfide were within the control limits.

10.6 Laboratory Control Samples (LCS) and LCS Duplicate (LCSD)

LCS and LCSD analyses were performed as required by the methods. The %R and RPD values were within the laboratory control limits.

10.7 Overall Assessment of Formaldehyde Data Usability

Based on the information submitted by the laboratory, the formaldehyde result for sample REC6-MW-2-060512 was acceptable for use.

11. Conventional Parameters (TOC, TSS, Ammonia, and Dissolved Sulfide)

11.1 Sample Management and Holding Time

No anomalies were identified in relation to sample preservation, handling, and transport, as discussed in Section 1.1.

Aqueous samples should be analyzed within 7 days of collection for dissolved sulfide and TSS, and 28 days for ammonia. TOC in soil samples should be anayzed within 28 days.

11.2 Instrument Calibration

The initial calibrations were established for ammonia and sulfide analyses using one blank and at least five levels of standards. The correlation coefficients (r) of the initial calibration curves were >0.995, and met the method criteria.

11.3 Calibration Verification

ICV and CCV analyses were performed for ammonia and sulfide as required by the methods. All ICV and CCV %R values were within the laboratory control limits (90 – 110%).

11.4 Blanks

Calibration Blanks: ICBs and CCBs were analyzed for ammonia and sulfide as required by the methods. No target analytes were positively reported in ICBs and CCBs at or above the MDLs.

Method Blanks: Method blanks were prepared and analyzed for TOC, TSS, ammonia, and sulfide as required by the methods. No target analytes were detected at or above the RLs in method blanks.

11.5 Laboratory Replicate Analyses

Laboratory duplicate analyses were formed on sample REC6-MW-2-060512 for sulfide and a batch QC sample for ammonia at the required frequency (one per batch or <20 samples). The RPD values were within the project control limits.

11.6 Matrix Spike (MS)

MS analyses were performed on project samples at the required frequency (one per batch or <20 samples) for TOC, sulfide, and ammonia. The %R values were within the control limits.

11.7 Laboratory Control Samples (LCS)

LCS analyses were performed as required by the methods. All LCS %R values were within the laboratory control limits.

11.8 Method Reporting Limits

The MRLs were supported with adequate initial calibration concentrations. Sample-specific RLs achieved the project requirements for quantitation limits.

11.9 Field Duplicates

Two sets of field duplicates were submitted for TSS analyses. One set of field duplicates was submitted for 1,2-dibromoethane analyses. Field duplicate results, RPD (or concentration difference) values, and data qualification were presented in **Appendix A**.

11.10 Overall Assessment of Conventional Parameters Data Usability

Data are of known quality and acceptable for use.

SUMMARY

Data qualification is summarized as follows:

Laboratory ID	Sample ID	Analyte	Qualifier	Qualified Reason
205364-03 205364-04 205364-05 205364-20 205364-21	GF-B-15A-1-2.5 GF-B-15A-7.5-9 GF-B-15A-10-11.5 GF-B-14-1-2.5 GF-B-14-7.5-9	Dichlorodifluoromethane Chloromethane	**UJ**	ICV %D values outside the control limit - low bias
205364-21	GF-B-14-7.5-9	Pyrene	**J**	CCV %D value > 20% - high bias
205364-20	GF-B-14-1-2.5	Aroclor 1016 Aroclor 1221 Aroclor 1232 Aroclor 1242 Aroclor 1248 Aroclor 1254 Aroclor 1260	**UJ**	TCMX surrogate recovery low
205364-03	GF-B-15A-1-2.5	1,2,3,4,7,8-HxCDF	**J**	Chlorodiphenyl ether interference present
205381-01 205381-02 205381-03 205381-04 205381-05 205381-06 205381-07 205381-09 205381-20 205381-21 205381-22 205381-23	GF-B-10-1-2.5 GF-B-13-1-2.5 GF-B-13-10-11.5 GF-B-11-1-2.5 GF-B-11-7.5-9 GF-B-7-1-2.5 GF-B-7-7.5-9 GF-B-10-7.5-9 UST68-MW-4-11-12 UST68-MW-4-11-12-D UST68-MW-5-7-8 UST68-MW-5-12-13	Dichlorodifluoromethane Chloromethane	**UJ**	ICV %D values outside the control limit - low bias
205381-01	GF-B-10-1-1-2.5	1,2,3,7,8-PeCDF	**J**	Chlorodiphenyl ether interference present
205381-03	GF-B-13-10-11.5	All Dioxins and Furans Data, except 1,2,3,4,6,7,8-HpCDD	**J/UJ**	Internal standards and cleanup standard recoveries low.
205381-06	GF-B-7-1-2.5	OCDD OCDF	**J**	Internal standard recovery anomaly
205404-01	GF-B-2-2.5-4	Chloromethane Dichlorodifluoromethane	**UJ**	ICV %D value outside the control limit - low bias
		Pyrene	**J**	CCV %D value > 20% - high bias
205404-02	GF-B-1-1-2.5	Chloromethane Dichlorodifluoromethane	**UJ**	ICV %D value outside the control limit - low bias
205404-03	UST68-MW-1-7-8	Chloromethane Dichlorodifluoromethane	**UJ**	ICV %D value outside the control limit - low bias
205404-04	UST69-MW-1-6-7	Chloromethane Dichlorodifluoromethane	**UJ**	ICV %D value outside the control limit - low bias

Laboratory ID	Sample ID	Analyte	Qualifier	Qualified Reason
205404-05	UST69-MW-1-6-7-D	Chloromethane Dichlorodifluoromethane	**UJ**	ICV %D value outside the control limit - low bias
205404-06	GF-B-4-2.5-4	Chloromethane Dichlorodifluoromethane	**UJ**	ICV %D value outside the control limit - low bias
205404-07	GF-B-4-7.5-9	Chloromethane Dichlorodifluoromethane	**UJ**	ICV %D value outside the control limit - low bias
205404-01	GF-B-2-2.5-4	OCDD	**J**	MS/MSD RPD value outside the control limit
		1,2,3,7,8-PeCDF 1,2,3,4,7,8-HxCDF 2,3,4,6,7,8-HxCDF	**J**	Chlorodiphenyl ether interference present
205404-06	GF-B-4-2.5-4	OCDD OCDF	**J** **UJ**	Internal standard recoveries anomalies
205423-01	GF-B-3-1-2.5	Chloromethane Dichlorodifluoromethane	**UJ**	ICV %D value outside the control limit - low bias
205423-02	GF-B-3-7.5-9	Chloromethane Dichlorodifluoromethane	**UJ**	ICV %D value outside the control limit - low bias
205423-03	GF-B-3-11-12.5	Chloromethane Dichlorodifluoromethane	**UJ**	ICV %D value outside the control limit - low bias
205423-04	GF-B-5-1-2.5	Chloromethane Dichlorodifluoromethane	**UJ**	ICV %D value outside the control limit - low bias
205423-05	GF-B-5-7.5-9	Chloromethane Dichlorodifluoromethane	**UJ**	ICV %D value outside the control limit - low bias
205423-06	GF-B-6-1-2.5	Chloromethane Dichlorodifluoromethane	**UJ**	ICV %D value outside the control limit - low bias
		Di-n-octyl phthalate	**UJ**	Internal standard recovery anomaly
205423-07	GF-B-6-7.5-9	Chloromethane Dichlorodifluoromethane	**UJ**	ICV %D value outside the control limit - low bias
205423-08	GF-B-6-20-21.5	Chloromethane Dichlorodifluoromethane	**UJ**	ICV %D value outside the control limit - low bias
205423-09	NRP-MW-2-7.5-8.5	Chloromethane Dichlorodifluoromethane	**UJ**	ICV %D value outside the control limit - low bias
205423-10	NRP-MW-3-6.5-7.5	1,1,1-Trichloroethane 1,1-Dichloroethane 1,1-Dichloroethene 1,1-Dichloropropene 1,2,3-Trichlorobenzene	**UJ**	MS recoveries anomalies - Low bias

Laboratory ID	Sample ID	Analyte	Qualifier	Qualified Reason
205423-10	NRP-MW-3-6.5-7.5	1,2,4-Trichlorobenzene 2,2-Dichloropropane Benzene Bromomethane Carbon tetrachloride Chloroethane Chloroform Hexachlorobutadiene Methylene chloride Tetrachloroethene (PCE) trans-1,2-Dichloroethene Trichloroethene (TCE) Trichlorofluoromethane Vinyl chloride	**UJ**	MS recoveries anomalies - Low bias
		Naphthalene	**J**	MS recovery anomaly - Low bias
205423-10	NRP-MW-3-6.5-7.5	Chloromethane Dichlorodifluoromethane	**UJ**	ICV %D value outside the control limit - low bias
205423-11	REC2-MW-5-0-2	Benzo(g,h,i)perylene Indeno(1,2,3-cd)pyrene	**J**	Concentration exceeded the valid calibration range
205423-01	GF-B-3-1-2.5	Diesel Range Hydrocarbons	**UJ**	
205423-02	GF-B-3-7.5-9		**UJ**	
205423-03	GF-B-3-11-12.5		**UJ**	
205423-04	GF-B-5-1-2.5		**J**	
205423-05	GF-B-5-7.5-9		**J**	
205423-06	GF-B-6-1-2.5		**UJ**	CCV %D value outside the control limit - low bias
205423-07	GF-B-6-7.5-9		**J**	
205423-04	GF-B-5-1-2.5	OCDD OCDF	**J**	Internal standard recoveries anomalies
		1,2,3,7,8-PeCDF 1,2,3,4,7,8-HxCDF	**J**	chlorodiphenyl ether interference present
205441-02	GF-B-8-7.5-9	Dichlorodifluoromethane	**UJ**	CCV %D value outside the control limit - low bias
205441-03	UST68-MW-2-10-11	Dichlorodifluoromethane	**UJ**	CCV %D value outside the control limit - low bias
205441-04	UST68-MW-2-10-11-D	Dichlorodifluoromethane	**UJ**	CCV %D value outside the control limit - low bias
205441-01	GF-B-8-1-2.5	1,2,3,7,8-PeCDF 2,3,4,6,7,8-HxCDF	**J**	Chlorodiphenyl ether interference present
206006-01	UST71-B-1-12-13	Bromomethane	**UJ**	CCV %D value outside the control limit - low bias
		Chloroethane		
		Hexachlorobutadiene		
		Dichlorodifluoromethane	**UJ**	ICV %D value outside the control limit - low bias
206006-02	UST71-B-2-13-14	Bromomethane Chloroethane Hexachlorobutadiene	**UJ**	CCV %D value outside the control limit - low bias
		Dichlorodifluoromethane	**UJ**	ICV %D value outside the control limit - low bias

Laboratory ID	Sample ID	Analyte	Qualifier	Qualified Reason
206006-03	UST71-B-3-18-19	Bromomethane Chloroethane Hexachlorobutadiene	**UJ**	CCV %D value outside the control limit - low bias
		Dichlorodifluoromethane	**UJ**	ICV %D value outside the control limit - low bias
206006-04	UST71-B-3-19-20	Dichlorodifluoromethane	**UJ**	ICV %D value outside the control limit - low bias
206006-05	UST71-B-4-12.5-13.5	Bromomethane Chloroethane Hexachlorobutadiene	**UJ**	ICV %D value outside the control limit - low bias
		Dichlorodifluoromethane	**UJ**	ICV %D value outside the control limit - low bias
206006-06	UST71-B-4-28-29	Dichlorodifluoromethane	**UJ**	ICV %D value outside the control limit - low bias
206006-07	UST70-B-1-3-4	Bromomethane Chloroethane Hexachlorobutadiene	**UJ**	CCV %D value outside the control limit - low bias
		Dichlorodifluoromethane	**UJ**	ICV %D value outside the control limit - low bias
206006-08	UST70-B-1-3-4-D	Bromomethane Chloroethane Hexachlorobutadiene	**UJ**	CCV %D value outside the control limit - low bias
		Dichlorodifluoromethane	**UJ**	ICV %D value outside the control limit - low bias
206006-09	UST70-B-1-13.5-14.5	Dichlorodifluoromethane	**UJ**	ICV %D value outside the control limit - low bias
206006-10	UST70-B-2-9-10	Dichlorodifluoromethane	**UJ**	ICV %D value outside the control limit - low bias
206006-11	UST70-B-3-8-9	Dichlorodifluoromethane	**UJ**	ICV %D value outside the control limit - low bias
206006-12	UST70-B-4-0-1	Dichlorodifluoromethane	**UJ**	ICV %D value outside the control limit - low bias
206006-13	UST70-B-4-4.5-5.5	Dichlorodifluoromethane	**UJ**	ICV %D value outside the control limit - low bias
206006-02	UST71-B-2-13-14	Diesel Range Hydrocarbons Lube Oil Range Hydrocarbons	**J**	CCV %D value outside the control limit - High bias
206006-03	UST71-B-3-18-19	Diesel Range Hydrocarbons Lube Oil Range Hydrocarbons	**J**	CCV %D value outside the control limit - High bias
206006-05	UST71-B-4-12.5-13.5	Diesel Range Hydrocarbons Lube Oil Range Hydrocarbons	**J**	CCV %D value outside the control limit - High bias
206006-07	UST70-B-1-3-4	Diesel Range Hydrocarbons	**J**	CCV %D value outside the control limit - High bias & Field duplicate imprecision
206006-08	UST70-B-1-3-4-D	Diesel Range Hydrocarbons		
206006-10	UST70-B-2-9-10	Diesel Range Hydrocarbons	**J**	CCV %D value outside the control limit - High bias
206022-01	NRP-B-7-9-10	Dichlorodifluoromethane	**UJ**	ICV %D value outside the control limit - low bias

Laboratory ID	Sample ID	Analyte	Qualifier	Qualified Reason
206022-02	NRP-B-7-19-20	Dichlorodifluoromethane	**UJ**	ICV %D value outside the control limit - low bias
206022-03	NRP-B-5-9-10	Dichlorodifluoromethane	**UJ**	ICV %D value outside the control limit - low bias
206022-04	NRP-B-8-8.5-9.5	Dichlorodifluoromethane	**UJ**	ICV %D value outside the control limit - low bias
206022-05	NRP-B-8-11-12	Bromomethane Chloroethane	**UJ**	CCV %D value outside the control limit - low bias
		Dichlorodifluoromethane	**UJ**	ICV %D value outside the control limit - low bias
206022-07	NRP-B-2-8-10	Gasoline Range Hydrocarbons	**J**	Field Duplicate Imprecision
		Dichlorodifluoromethane	**UJ**	ICV %D value outside the control limit - low bias
206022-08	NRP-B-2-8-10-D	Gasoline Range Hydrocarbons	**J**	Field Duplicate Imprecision
		Dichlorodifluoromethane	**UJ**	ICV %D value outside the control limit - low bias
		Chrysene Fluoranthene Indeno(1,2,3-cd)pyrene Pyrene	**J**	Surrogate recovery anomaly - High bias
206022-09	NRP-B-2-14-15	Dichlorodifluoromethane	**UJ**	ICV %D value outside the control limit - low bias
206022-10	NRP-B-4-13.5-14.5	Dichlorodifluoromethane	**UJ**	ICV %D value outside the control limit - low bias
206022-11	NRP-B-1-9-12	Dichlorodifluoromethane	**UJ**	ICV %D value outside the control limit - low bias
		Phenanthrene	**J**	Concentration exceeded the valid instrument calibration range
206022-12	NRP-B-3-8.5-9.5	Dichlorodifluoromethane	**UJ**	ICV %D value outside the control limit - low bias
206022-07	NRP-B-2-8-10	Lube Oil Range Hydrocarbons	**UJ**	CCV %D value outside the control limit - low bias
206022-07	NRP-B-2-8-10	Gasoline Range Hydrocarbons	**J**	Field Duplicate Imprecision
206022-08	NRP-B-2-8-10-D	Lube Oil Range Hydrocarbons	**UJ**	CCV %D value outside the control limit - low bias
206022-08	NRP-B-2-8-10-D	Gasoline Range Hydrocarbons	**J**	Field Duplicate Imprecision
206022-09	NRP-B-2-14-15	Lube Oil Range Hydrocarbons	**UJ**	CCV %D value outside the control limit - low bias
206022-10	NRP-B-4-13.5-14.5	Lube Oil Range Hydrocarbons	**UJ**	CCV %D value outside the control limit - low bias
206022-11	NRP-B-1-9-12	Lube Oil Range Hydrocarbons	**UJ**	CCV %D value outside the control limit - low bias
206022-12	NRP-B-3-8.5-9.5	Lube Oil Range Hydrocarbons	**UJ**	CCV %D value outside the control limit - low bias
206067-01	REC7-MW-1-060512	Selenium	**J**	MS/MSD RPD value greater than the control limit

Laboratory ID	Sample ID	Analyte	Qualifier	Qualified Reason
		Bromoform Dichlorodifluoromethane	**UJ**	LCS and LCSD recovery anomalies - Low bias
206067-02	NRP-MW-3-060512	Selenium	**J**	MS/MSD RPD value greater than the control limit
		Bromoform Dichlorodifluoromethane	**UJ**	LCS and LCSD recovery anomalies - Low bias
206067-03	REC7-MW-2-060512	Bromoform Dichlorodifluoromethane	**UJ**	LCS and LCSD recovery anomalies - Low bias
206067-04	NRP-MW-2-060512	Selenium	**J**	MS/MSD RPD value greater than the control limit
		Bromoform Dichlorodifluoromethane	**UJ**	LCS and LCSD recovery anomalies - Low bias
206067-05	REC6-MW-2-060512	Selenium	**J**	MS/MSD RPD value greater than the control limit
		1,4-Dioxane Vinyl acetate	**R**	No initial and continuing calibration data
		Bromoform Dichlorodifluoromethane	**UJ**	LCS and LCSD recovery anomalies - Low bias
206067-06	MW-5-060512	Selenium	**J**	MS/MSD RPD value greater than the control limit
		Bromoform Dichlorodifluoromethane	**UJ**	LCS and LCSD recovery anomalies - Low bias
206067-07	MW-3-060512	1,4-Dioxane Vinyl acetate	**UJ**	Reported MRL based on TIC search
		Bromoform Dichlorodifluoromethane	**UJ**	LCS and LCSD recovery anomalies - Low bias
		Acenaphthene Fluorene	**J**	Concentration exceeded the valid calibration range
206068-01	REC3-MW-1-8.5-9.5	Dichlorodifluoromethane	**UJ**	ICV %D value outside the control limit - low bias
206068-02	UST70-MW-2-8-9	Dichlorodifluoromethane	**UJ**	ICV %D value outside the control limit - low bias
206068-03	REC5-MW-1-6.5-7.5	Dichlorodifluoromethane	**UJ**	ICV %D value outside the control limit - low bias
206098-07	MW-1-060612	All dissolved metals	**J/UJ**	Internal standard recovery anomalies - Low bias
206098-08	MW-2-060612	All dissolved metals	**J/UJ**	Internal standard recovery anomalies - Low bias
206098-09	OMS-MW-1-060612	All dissolved metals	**J/UJ**	Internal standard recovery anomalies - Low bias
206098-05	REC7-MW-3-060612	All dissolved metals	**J/UJ**	Internal standard recovery anomalies - Low bias
206098-06	REC7-MW-4-060612	All dissolved metals	**J/UJ**	Internal standard recovery anomalies - Low bias
206098-08	MW-2-060612	All total metals	**J/UJ**	Internal standard recovery anomalies - Low bias
206098-06	REC7-MW-4-060612	All total metals	**J/UJ**	Internal standard recovery anomalies - Low bias

Laboratory ID	Sample ID	Analyte	Qualifier	Qualified Reason
206098-07	MW-1-060612	Bromoform Methylene chloride	**UJ**	CCV %D value outside the control limit - low bias
206098-08	MW-2-060612	Bromoform Methylene chloride	**UJ**	CCV %D value outside the control limit - low bias
206098-09	OMS-MW-1-060612	Bromoform Methylene chloride	**UJ**	CCV %D value outside the control limit - low bias
206098-05	REC7-MW-3-060612	1,2-Dibromo-3-chloropropane Bromoform Dibromochloromethane	**UJ**	CCV %D value outside the control limit - low bias
206098-06	REC7-MW-4-060612	1,2-Dibromo-3-chloropropane Bromoform Dibromochloromethane	**UJ**	CCV %D value outside the control limit - low bias
206098-01	UST68-MW-1-060612	1,2-Dibromo-3-chloropropane Bromoform Dibromochloromethane	**UJ**	CCV %D value outside the control limit - low bias
206098-02	UST68-MW-2-060612	1,2-Dibromo-3-chloropropane Bromoform Dibromochloromethane	**UJ**	CCV %D value outside the control limit - low bias
206098-03	UST68-MW-4-060612	1,2-Dibromo-3-chloropropane Bromoform Dibromochloromethane	**UJ**	CCV %D value outside the control limit - low bias
206098-04	UST68-MW-5-060612	1,2-Dibromo-3-chloropropane Bromoform Dibromochloromethane	**UJ**	CCV %D value outside the control limit - low bias
206098-07	MW-1-060612	Benz(a)anthracene Benzo(a)pyrene Benzo(b)fluoranthene Benzo(g,h,i)perylene Benzo(k)fluoranthene Chrysene Dibenzo(a,h)anthracene Fluoranthene Indeno(1,2,3-cd)pyrene Pyrene	**UJ**	Surrogate recovery anomalies - Low bias
206098-08	MW-2-060612	Benz(a)anthracene Benzo(a)pyrene Benzo(b)fluoranthene Benzo(g,h,i)perylene Benzo(k)fluoranthene Chrysene	**UJ**	Surrogate recovery anomalies - Low bias
206098-08	MW-2-060612	Dibenzo(a,h)anthracene Fluoranthene Indeno(1,2,3-cd)pyrene Pyrene	**UJ**	Surrogate recovery anomalies - Low bias

Laboratory ID	Sample ID	Analyte	Qualifier	Qualified Reason
206098-09	OMS-MW-1-060612	Benz(a)anthracene Benzo(a)pyrene Benzo(b)fluoranthene Benzo(g,h,i)perylene Benzo(k)fluoranthene Chrysene Dibenzo(a,h)anthracene Fluoranthene Indeno(1,2,3-cd)pyrene Pyrene	**UJ**	Surrogate recovery anomalies - Low bias
206098-07	MW-1-060612	Lube Oil Range Hydrocarbons	**UJ**	CCV %D value outside the control limit - low bias
206098-08	MW-2-060612	Lube Oil Range Hydrocarbons	**UJ**	CCV %D value outside the control limit - low bias
206098-09	OMS-MW-1-060612	Lube Oil Range Hydrocarbons	**UJ**	CCV %D value outside the control limit - low bias
206136-02	REC3-MW-1-060712	Antimony Arsenic Chromium Copper Nickel Selenium Zinc	**J**	Internal standard recovery anomalies - Low bias
206136-02	REC3-MW-1-060712	Beryllium Cadmium Lead	**UJ**	Internal standard recovery anomalies - Low bias
206136-02	REC3-MW-1-060712	Silver Thallium	**UJ**	Internal standard recovery anomalies - Low bias
206136-02	REC3-MW-1-060712	Bromoform	**UJ**	CCV %D value outside the control limit - low bias
206136-02	REC3-MW-1-060712	Benz(a)anthracene Benzo(a)pyrene Benzo(b)fluoranthene Benzo(g,h,i)perylene Benzo(k)fluoranthene Chrysene Dibenzo(a,h)anthracene Fluoranthene Indeno(1,2,3-cd)pyrene Pyrene	**UJ**	Surrogate recovery anomalies - Low bias
206136-04	UST71-MW-1-060712	Bromoform	**UJ**	LCS and LCSD recovery anomalies - Low bias
206136-04	UST71-MW-1-060712	Acenaphthene Anthracene Fluorene Phenanthrene Pyrene	**J**	Concentration exceeded the valid calibration range

Laboratory ID	Sample ID	Analyte	Qualifier	Qualified Reason
206136-05	UST70-MW-2-060712	Antimony Arsenic Beryllium Cadmium Chromium Copper Lead Nickel Selenium Silver Thallium Zinc	**J/UJ**	Internal standard recovery anomalies - Low bias
206136-05	UST70-MW-2-060712	Bromoform	**UJ**	LCS and LCSD recovery anomalies - Low bias
206136-05	UST70-MW-2-060712	Benz(a)anthracene Benzo(a)pyrene Benzo(b)fluoranthene Benzo(g,h,i)perylene Benzo(k)fluoranthene Chrysene Dibenzo(a,h)anthracene Fluoranthene Indeno(1,2,3-cd)pyrene Pyrene	**UJ**	Surrogate recovery anomalies - Low bias
206136-06	MW-4-060812	Lube Oil Range Hydrocarbons	**UJ**	CCV %D value outside the control limit - low bias
206136-07	MW-4-060812-D	Lube Oil Range Hydrocarbons	**UJ**	CCV %D value outside the control limit - low bias
206136-01	MW-6-060712	Lube Oil Range Hydrocarbons	**UJ**	CCV %D value outside the control limit - low bias
206136-11	NRP-MW-1-060812	Lube Oil Range Hydrocarbons	**UJ**	CCV %D value outside the control limit - low bias
206136-12	NRP-MW-1-060812-D	Lube Oil Range Hydrocarbons	**UJ**	CCV %D value outside the control limit - low bias
206136-10	REC2-MW-5-060812	Lube Oil Range Hydrocarbons	**UJ**	CCV %D value outside the control limit - low bias
206136-02	REC3-MW-1-060712	Lube Oil Range Hydrocarbons	**UJ**	CCV %D value outside the control limit - low bias
206136-03	UST70-MW-1-060712	Lube Oil Range Hydrocarbons	**UJ**	CCV %D value outside the control limit - low bias
206136-05	UST70-MW-2-060712	Lube Oil Range Hydrocarbons	**UJ**	CCV %D value outside the control limit - low bias
206136-04	UST71-MW-1-060712	Lube Oil Range Hydrocarbons	**J**	CCV %D value outside the control limit - low bias
206136-06	MW-4-060812	Lead	**J**	Field duplicate imprecision
206136-06	MW-4-060812	Bromoform	**UJ**	CCV %D value outside the control limit - low bias
206136-06	MW-4-060812	Naphthalene	**J**	Concentration exceeded the valid calibration range

Laboratory ID	Sample ID	Analyte	Qualifier	Qualified Reason
206136-07	MW-4-060812-D	Lead	**J**	Field duplicate imprecision
206136-07	MW-4-060812-D	Bromoform	**UJ**	CCV %D value outside the control limit - low bias
206136-07	MW-4-060812-D	Naphthalene	**J**	Concentration exceeded the valid calibration range
206136-10	REC2-MW-5-060812	Acenaphthene	**J**	Concentration exceeded the valid calibration range
206136-13	REC5-MW-1-060812	Mercury	**J**	Field duplicate imprecision
206136-13	REC5-MW-1-060812	Copper	**J**	Field duplicate imprecision
206136-13	REC5-MW-1-060812	Lead	**J**	Field duplicate imprecision
206136-13	REC5-MW-1-060812	Zinc	**J**	Field duplicate imprecision
206136-13	REC5-MW-1-060812	Bromoform	**UJ**	LCS and LCSD recovery anomalies - Low bias
206136-14	REC5-MW-1-060812-D	Mercury	**J**	Field duplicate imprecision
206136-14	REC5-MW-1-060812-D	Copper	**J**	Field duplicate imprecision
206136-14	REC5-MW-1-060812-D	Lead	**J**	Field duplicate imprecision
206136-14	REC5-MW-1-060812-D	Zinc	**J**	Field duplicate imprecision

Data affected by ion abundance ratio anomalies are qualified and results adjusted as follows:

SDG #	Sample ID	Compound	Original Result	Adjusted Result	Unit	Report Section
205364	GF-B-15A-1-2.5	2,3,7,8-TCDD	0.537 J	**0.537 U**	ng/kg	**9.9**
205364	GF-B-15A-1-2.5	1,2,3,7,8-PeCDD	0.876 J	**0.876 U**	ng/kg	**9.9**
205364	GF-B-15A-1-2.5	1,2,3,7,8-PeCDF	0.938 J	**0.938 U**	ng/kg	**9.9**
205364	GF-B-15A-1-2.5	2,3,4,7,8-PeCDF	1.5 J	**1.5 U**	ng/kg	**9.9**
205364	GF-B-15A-1-2.5	1,2,3,7,8,9-HxCDF	0.268 J	**0.268 U**	ng/kg	**9.9**
205381	GF-B-10-1-1-2.5	2,3,7,8-TCDF (DB-225)	0.661 J	**0.661 U**	ng/kg	**9.9**
205381	GF-B-13-1-2.5	2,3,7,8-TCDF	0.739 J	**0.739 U**	ng/kg	**9.9**
205381	GF-B-13-1-2.5	1,2,3,7,8-PeCDF	0.208 J	**0.208 U**	ng/kg	**9.9**
205381	GF-B-13-1-2.5	OCDF	2.29 J	**2.29 U**	ng/kg	**9.9**
205381	GF-B-13-10-11.5	1,2,3,4,6,7,8-HpCDD	0.587 J	**0.587 U**	ng/kg	**9.9**
205381	GF-B-11-1-2.5	1,2,3,4,7,8-HxCDD	1.63 J	**1.63 U**	ng/kg	**9.9**
205381	GF-B-11-1-2.5	1,2,3,7,8,9-HxCDD	3.33	**3.33 U**	ng/kg	**9.9**
205381	GF-B-7-1-2.5	1,2,3,4,7,8-HxCDF	0.228 J	**0.288 U**	ng/kg	**9.9**
205381	GF-B-7-1-2.5	1,2,3,4,6,7,8-HpCDF	0.57 J	**0.57 U**	ng/kg	**9.9**

SDG #	Sample ID	Compound	Original Result	Adjusted Result	Unit	Report Section
205381	GF-B-7-10-11.5	1,2,3,7,8-PeCDF	0.255 J	**0.255 U**	ng/kg	**9.9**
205381	GF-B-7-10-11.5	1,2,3,4,7,8-HxCDF	0.355 J	**0.355 U**	ng/kg	**9.9**
205381	GF-B-7-10-11.5	2,3,7,8-TCDF	1.21	**1.21 U**	ng/kg	**9.9**
205381	GF-B-7-10-11.5	2,3,7,8-TCDF (DB-225)	0.401 J	**0.401 U**	ng/kg	**9.9**
205404	GF-B-2-2.5-4	2,3,7,8-TCDD	0.467 J	**0.467 U**	ng/kg	**9.9**
205404	GF-B-2-2.5-4	1,2,3,7,8-PeCDD	0.831 J	**0.831 U**	ng/kg	**9.9**
205404	GF-B-2-2.5-4	1,2,3,4,7,8-HxCDD	1.2 J	**1.2 U**	ng/kg	**9.9**
205404	GF-B-2-2.5-4	1,2,3,4,7,8,9-HpCDF	0.444 J	**0.444 U**	ng/kg	**9.9**
205404	GF-B-1-1-2.5	1,2,3,4,7,8-HxCDD	0.151 J	**0.151 U**	ng/kg	**9.9**
205404	GF-B-1-1-2.5	1,2,3,7,8,9-HxCDD	0.453 J	**0.453 U**	ng/kg	**9.9**
205404	GF-B-1-1-2.5	2,3,7,8-TCDF	0.519 J	**0.519 U**	ng/kg	**9.9**
205404	GF-B-1-1-2.5	OCDF	1.06 J	**1.06 U**	ng/kg	**9.9**
205423	GF-B-3-1-2.5	1,2,3,7,8,9-HxCDD	0.376 J	**0.376 U**	ng/kg	**9.9**
205423	GF-B-3-1-2.5	2,3,7,8-TCDF	0.672 J	**0.672 U**	ng/kg	**9.9**
205423	GF-B-3-1-2.5	2,3,4,7,8-PeCDF	0.248 J	**0.248 U**	ng/kg	**9.9**
205423	GF-B-3-1-2.5	1,2,3,4,7,8-HxCDF	0.273 J	**0.273 U**	ng/kg	**9.9**
205423	GF-B-3-1-2.5	1,2,3,6,7,8-HxCDF	0.216 J	**0.216 U**	ng/kg	**9.9**
205423	GF-B-5-1-2.5	2,3,7,8-TCDD	0.687 J	**0.687 U**	ng/kg	**9.9**
205423	GF-B-5-1-2.5	1,2,3,4,7,8,9-HpCDF	1.65 J	**1.65 U**	ng/kg	**9.9**
205423	GF-B-6-1-2.5	1,2,3,6,7,8-HxCDD	0.419 J	**0.419 U**	ng/kg	**9.9**
205423	GF-B-6-1-2.5	2,3,7,8-TCDF	0.398 J	**0.398 U**	ng/kg	**9.9**
205441	GF-B-8-1-2.5	1,2,3,7,8-PeCDD	0.513 J	**0.513 U**	ng/kg	**9.9**
205441	GF-B-8-1-2.5	2,3,7,8-TCDF	3.37	**3.37 U**	ng/kg	**9.9**
205441	GF-B-8-1-2.5	2,3,4,7,8-PeCDF	1.65 J	**1.65 U**	ng/kg	**9.9**

Data Qualifiers are defined as follows:

Data Qualifier	Definition
R	The sample results are unusable due to the quality of the data generated because certain criteria were not met. The analyte may or may not be present in the sample.
J	The analyte was detected above the reported quantitation limit, and the reported concentration was an estimated value.
U	The analyte was analyzed for, but was considered not detected at the reporting limit or reported value.
UJ	The analyte was analyzed for, and the associated quantitation limit was an estimated value.

REFERENCES

USEPA *Contract Laboratory Program National Functional Guidelines for Chlorinated Dibenzo-p-Dioxins (CDDs) and Chlorinated Dibenzofurans (CDFs) Data Review,* Office of Superfund Remediation and Technical Innovation, U.S. Environmental Protection Agency, September 2011, USEPA 540/R-11/016

USEPA *Contract Laboratory Program National Functional Guidelines for Inorganic Superfund Data Review,* Office of Superfund Remediation and Technical Innovation, U.S. Environmental Protection Agency, January 2010, USEPA 540/R-10/011

USEPA *Contract Laboratory Program National Functional Guidelines for Superfund Organic Methods Data Review,* Office of Superfund Remediation and Technical Innovation, U.S. Environmental Protection Agency, June 2008, USEPA-540-R-08-01.

USEPA *Method 1631, Revision E: Mercury in Water by Oxidation, Purge and Trap, and Cold Vapor Atomic Fluorescence Spectrometry, Office of Water, U.S. Environmental Protection Agency, August 2002, EPA-821-R-02-019.*

USEPA *Test Methods for Evaluating Solid Waste (SW-846). Third Edition and Revised Update IIIA.* Office of Solid Waste and Emergency Response, Washington, D.C. April 1998.

USEPA *Region 10 Standard Operating Procedure for the Validation of Polychlorinated Dibenzo-p-Dioxin (PCDD) and Polychlorinated Dibenzofuran (PCDF) Data*, January 1996.

USEPA *Methods for Chemical Analysis of Water and Wastes,* EPA-600/4-79-020, March 1983 and updates.

Standard Methods for the Examination of Water and Wastewater, American Public Health Association, 20th Edition, 1995.

Ecology (Washington State Department of). 1997. *Analytical Methods for Petroleum Hydrocarbons.* Publication No. ECY 97-602. June 1997.

PSEP *Recommended Guidelines for Measuring Organic Compounds in Puget Sound Water, Sediment and Tissue Samples,* Puget Sound Water Quality Authority, April 1997.

Aspect Consulting, LLC. *Quality Assurance Project Plan, Port of Bellingham Former GP Mill Property RI/FS,* Seattle, Washington. September, 2009.

APPENDIX A

The precision criterion (≤ 35%) was applied to evaluating the relative percent difference (RPD) values of field duplicate results greater than five times the RL (5xRL). For results less than 5xMRL, an advisory criterion of 2xRL was applied to evaluating the concentration differences. The RPD and concentration difference values for detected analytes and data qualification are presented as follows:

SDG No.	Sample ID		Analyte	Unit	RL	Result		RPD	Conc. Difference	Data Qualifier
	Parent Sample	Field Duplicate				Parent Sample	Field Duplicate			
206006	UST70-B-1-3-4	UST70-B-1-3-4-D	1,2,4-Trimethylbenzene	mg/kg	0.05	0.076	0.088		0.012	
206006	UST70-B-1-3-4	UST70-B-1-3-4-D	Naphthalene	mg/kg	0.05	0.67	0.66	1.5%		
206006	UST70-B-1-3-4	UST70-B-1-3-4-D	n-Propylbenzene	mg/kg	0.05	0.06	0.067		0.007	
206006	UST70-B-1-3-4	UST70-B-1-3-4-D	p-Isopropyltoluene	mg/kg	0.05	0.14	0.16		0.02	
206006	UST70-B-1-3-4	UST70-B-1-3-4-D	sec-Butylbenzene	mg/kg	0.05	0.13	0.14		0.01	
206136	MW-4-060812	MW-4-060812-D	Naphthalene	µg/L	1	43	44	2.3%		
206006	UST70-B-1-3-4	UST70-B-1-3-4-D	Acenaphthene	mg/kg	0.01	0.18	0.40	**76%**		**J**
206006	UST70-B-1-3-4	UST70-B-1-3-4-D	Chrysene	mg/kg	0.01	0.017	0.033		0.016	
206006	UST70-B-1-3-4	UST70-B-1-3-4-D	Fluoranthene	mg/kg	0.01	0.037	0.01 U		**0.027**	**J/UJ**
206006	UST70-B-1-3-4	UST70-B-1-3-4-D	Fluorene	mg/kg	0.01	0.33	0.18	**59%**		**J**
206006	UST70-B-1-3-4	UST70-B-1-3-4-D	Naphthalene	mg/kg	0.01	0.083	0.18	**74%**		**J**
206006	UST70-B-1-3-4	UST70-B-1-3-4-D	Phenanthrene	mg/kg	0.01	0.47	0.31	**41%**		**J**
206006	UST70-B-1-3-4	UST70-B-1-3-4-D	Pyrene	mg/kg	0.01	0.047	0.085		**0.038**	**J**
206006	UST70-B-1-3-4	UST70-B-1-3-4-D	Acenaphthene	mg/kg	0.1	0.24	0.15		0.09	
206006	UST70-B-1-3-4	UST70-B-1-3-4-D	Fluorene	mg/kg	0.1	0.36	0.21		0.15	
206006	UST70-B-1-3-4	UST70-B-1-3-4-D	Naphthalene	mg/kg	0.1	0.1 U	0.21		0.11	
206006	UST70-B-1-3-4	UST70-B-1-3-4-D	Phenanthrene	mg/kg	0.1	0.4	0.22		0.18	
206006	UST70-B-1-3-4	UST70-B-1-3-4-D	Pyrene	mg/kg	0.1	0.1 U	0.11		0.01	
206022	NRP-B-2-8-10	NRP-B-2-8-10-D	Acenaphthene	mg/kg	0.01	0.045	0.048		0.003	
206022	NRP-B-2-8-10	NRP-B-2-8-10-D	Chrysene	mg/kg	0.01	0.011	0.012		0.001	

SDG No.	Sample ID		Analyte	Unit	RL	Result		RPD	Conc. Difference	Data Qualifier
	Parent Sample	Field Duplicate				Parent Sample	Field Duplicate			
206022	NRP-B-2-8-10	NRP-B-2-8-10-D	Fluoranthene	mg/kg	0.01	0.042	0.035		0.007	
206022	NRP-B-2-8-10	NRP-B-2-8-10-D	Fluorene	mg/kg	0.01	0.038	0.034		0.004	
206022	NRP-B-2-8-10	NRP-B-2-8-10-D	Indeno(1,2,3-cd)pyrene	mg/kg	0.01	0.01 U	0.011		0.001	
206022	NRP-B-2-8-10	NRP-B-2-8-10-D	Naphthalene	mg/kg	0.01	0.043	0.052		0.009	
206022	NRP-B-2-8-10	NRP-B-2-8-10-D	Phenanthrene	mg/kg	0.01	0.044	0.039		0.005	
206022	NRP-B-2-8-10	NRP-B-2-8-10-D	Pyrene	mg/kg	0.01	0.042	0.039		0.003	
206136	MW-4-060812	MW-4-060812-D	Acenaphthene	µg/L	0.05	1	0.97	3.0%		
206136	MW-4-060812	MW-4-060812-D	Benz(a)anthracene	µg/L	0.01	0.011	0.011		0.000	
206136	MW-4-060812	MW-4-060812-D	Benzo(a)pyrene	µg/L	0.01	0.017	0.019		0.002	
206136	MW-4-060812	MW-4-060812-D	Chrysene	µg/L	0.01	0.032	0.035		0.003	
206136	MW-4-060812	MW-4-060812-D	Fluorene	µg/L	0.05	0.35	0.28	22.2%		
206136	MW-4-060812	MW-4-060812-D	Naphthalene	µg/L	0.05	23	18	24.4%		
206136	MW-4-060812	MW-4-060812-D	Phenanthrene	µg/L	0.05	0.15	0.13		0.020	
206136	MW-4-060812	MW-4-060812-D	Pyrene	µg/L	0.05	0.061	0.06		0.001	
206136	MW-4-060812	MW-4-060812-D	Naphthalene	µg/L	5	23	19		4.0	
206136	NRP-MW-1-060812	NRP-MW-1-060812-D	Acenaphthene	µg/L	0.05	0.2	0.19		0.01	
206136	NRP-MW-1-060812	NRP-MW-1-060812-D	Fluorene	µg/L	0.05	0.089	0.084		0.005	
206136	NRP-MW-1-060812	NRP-MW-1-060812-D	Phenanthrene	µg/L	0.05	0.17	0.17		0.00	
205441	UST68-MW-2-10-11	UST68-MW-2-10-11-D	TPH-Gx	mg/kg	2	4.9	2		2.9	
206022	NRP-B-2-8-10	NRP-B-2-8-10-D	TPH-Gx	mg/kg	20	4400	220	**181%**		**J**
206006	UST70-B-1-3-4	UST70-B-1-3-4-D	TPH-Diesel	mg/kg	50	12000	8300	**36.5%**		**J**
206006	UST70-B-1-3-4	UST70-B-1-3-4-D	TPH - Motor Oil	mg/kg	250	330	250 U		80.0	
206022	NRP-B-2-8-10	NRP-B-2-8-10-D	TPH-Diesel	mg/kg	50	780	920	16.5%		
206022	NRP-B-2-8-10	NRP-B-2-8-10-D	TPH - Motor Oil	mg/kg	250	1600	1900	17.1%		
206136	MW-4-060812	MW-4-060812-D	TPH-Diesel	µg/L	50	150	89		61.0	
205404	UST69-MW-1-6-7	UST69-MW-1-6-7-D	Lead	mg/kg	1	2.91	2.1		0.8	
206022	NRP-B-2-8-10	NRP-B-2-8-10-D	Arsenic	mg/kg	1	4.14	5.07		0.9	

SDG No.	Sample ID		Analyte	Unit	RL	Result		RPD	Conc. Difference	Data Qualifier
	Parent Sample	Field Duplicate				Parent Sample	Field Duplicate			
206022	NRP-B-2-8-10	NRP-B-2-8-10-D	Chromium	mg/kg	1	13	12.9	0.8%		
206022	NRP-B-2-8-10	NRP-B-2-8-10-D	Copper	mg/kg	1	11.4	12.6	10.0%		
206022	NRP-B-2-8-10	NRP-B-2-8-10-D	Lead	mg/kg	1	3.95	2.56		1.4	
206022	NRP-B-2-8-10	NRP-B-2-8-10-D	Nickel	mg/kg	1	23.3	26	11.0%		
206022	NRP-B-2-8-10	NRP-B-2-8-10-D	Zinc	mg/kg	1	37.6	39.2	4.2%		
206136	MW-4-060812	MW-4-060812-D	Dissolved Lead	µg/L	1	14.3	5.56	**88.0%**		**J**
206136	MW-4-060812	MW-4-060812-D	Total Lead	µg/L	1	23.1	24.3	5.1%		
206136	NRP-MW-1-060812	NRP-MW-1-060812-D	Arsenic - Dissolved	µg/L	1	1.6	1.51		0.1	
206136	NRP-MW-1-060812	NRP-MW-1-060812-D	Chromium - Dissolved	µg/L	1	1.13	1.04		0.1	
206136	NRP-MW-1-060812	NRP-MW-1-060812-D	Copper - Dissolved	µg/L	1	1 U	1.92		0.9	
206136	NRP-MW-1-060812	NRP-MW-1-060812-D	Nickel - Dissolved	µg/L	1	3.2	2.94		0.3	
206136	NRP-MW-1-060812	NRP-MW-1-060812-D	Selenium - Dissolved	µg/L	1	3.61	3.12		0.5	
206136	NRP-MW-1-060812	NRP-MW-1-060812-D	Zinc - Dissolved	µg/L	1	2.01	1 U		1.01	
206136	REC5-MW-1-060812	REC5-MW-1-060812-D	Antimony - Dissolved	µg/L	1	3.96	8.95		5.0	
206136	REC5-MW-1-060812	REC5-MW-1-060812-D	Arsenic - Dissolved	µg/L	1	201	235	15.6%		
206136	REC5-MW-1-060812	REC5-MW-1-060812-D	Cadmium - Dissolved	µg/L	1	1 U	3.87		2.9	
206136	REC5-MW-1-060812	REC5-MW-1-060812-D	Chromium - Dissolved	µg/L	1	52	72.7	33.2%		
206136	REC5-MW-1-060812	REC5-MW-1-060812-D	Copper - Dissolved	µg/L	1	44.9	167	**115.2%**		**J**
206136	REC5-MW-1-060812	REC5-MW-1-060812-D	Lead - Dissolved	µg/L	1	37.3	174	**129.4%**		**J**
206136	REC5-MW-1-060812	REC5-MW-1-060812-D	Nickel - Dissolved	µg/L	1	3.37	10.8		7.4	
206136	REC5-MW-1-060812	REC5-MW-1-060812-D	Selenium - Dissolved	µg/L	1	1 U	1.11		0.1	
206136	REC5-MW-1-060812	REC5-MW-1-060812-D	Zinc - Dissolved	µg/L	1	42.3	203	**131.0%**		**J**
206136	REC5-MW-1-060812	REC5-MW-1-060812-D	Antimony - Total	µg/L	1	9.02	9.86	8.9%		
206136	REC5-MW-1-060812	REC5-MW-1-060812-D	Arsenic - Total	µg/L	1	218	236	7.9%		
206136	REC5-MW-1-060812	REC5-MW-1-060812-D	Cadmium - Total	µg/L	1	5.22	5.26	0.8%		
206136	REC5-MW-1-060812	REC5-MW-1-060812-D	Chromium - Total	µg/L	1	83.8	84.8	1.2%		
206136	REC5-MW-1-060812	REC5-MW-1-060812-D	Copper - Total	µg/L	1	226	225	0.4%		

SDG No.	Sample ID		Analyte	Unit	RL	Result		RPD	Conc. Difference	Data Qualifier
	Parent Sample	Field Duplicate				Parent Sample	Field Duplicate			
206136	REC5-MW-1-060812	REC5-MW-1-060812-D	Lead - Total	µg/L	1	234	242	3.4%		
206136	REC5-MW-1-060812	REC5-MW-1-060812-D	Nickel - Total	µg/L	1	14.8	14.7	0.7%		
206136	REC5-MW-1-060812	REC5-MW-1-060812-D	Selenium - Total	µg/L	1	1.51	1.68		0.2	
206136	REC5-MW-1-060812	REC5-MW-1-060812-D	Zinc - Total	µg/L	1	274	274	0.0%		
206136	REC5-MW-1-060812	REC5-MW-1-060812-D	Mercury - Dissolved	µg/L	0.1	0.12	0.41		**0.3**	**J**
206136	REC5-MW-1-060812	REC5-MW-1-060812-D	Mercury - Total	µg/L	0.1	0.57	0.55	3.6%		
206136	MW-4-060812	MW-4-060812-D	Total Suspended Solids	mg/L	10	10	12		2.0	

Note:
mg/kg – milligram per kilogram
µg/kg – microgram per kilogram
Conc. Difference – Concentration difference between the parent sample and the field duplicate
MRL – Method reporting limit
ND – Not detected at or above the method detection limit
RPD – Relative percent difference
U – The analyte was not detected at or above the reported value.

Data Validation Report

Port of Bellingham Former GP Mill Property RI/FS
Kimberly Clark, Washington

Round 2 Soil and Groundwater Sampling
(Batch 2 Data)

Prepared for:

Aspect Consulting LLC
401 Second Ave South, Suite 201
Seattle, WA 98014

Prepared by:

Pyron Environmental, Inc.
3530 32nd Way, NW
Olympia, WA 98502

Approved By: _____ Date: ***10/22/2012***

Mingta Lin, Senior Project Chemist

ACRONYMS

%D	percent difference
%D_f	percent drift
%R	percent recovery
%RSD	percent relative standard deviation
AMU	atomic mass unit
CCB	continuing calibration blank
CCC	calibration check compound
CCV	continuing calibration verification
CDD	chlorinated dibenzo-p-dioxin
CDF	chlorinated dibenzofuran
CF	calibration factor
CLP	U.S. EPA Contract Laboratory Program
COC	chain-of-custody
CVAFS	cold vapor atomic fluorescent spectrometry
DDD	dichlorodiphenyldichloroethane
DDE	dichlorodiphenyldichloroethylene
DDT	dichlorodiphenyltrichloroethane
DFTPP	decafluorotriphenylphosphine
ECD	electron capture detector
EDB	1,2-dibromoethane
EDL	estimated detection limit
EMPC	estimated maximum possible concentration
EPA	U.S. Environmental Protection Agency
FID	Flame ionization detector
GC/MS	gas chromatograph/mass spectrometer
GPC	gel permeation chromatography
HPLC	high performance liquid chromatography
HRGC	high-resolution gas chromatograph
HRMS	high-resolution mass spectrometer
ICAL	initial calibration
ICB	initial calibration blank
ICP	inductively coupled plasma
ICP/MS	inductively coupled plasma/ mass spectrometer
ICSA	ICP interference check sample solution A

ICV	initial calibration verification
IPR	initial precision and recovery
ISC	isomer specificity check
LCS	laboratory control sample
LCSD	laboratory control sample duplicate
m/z	mass-to-charge ratio
MDL	method detection limit
µg/kg	microgram per kilogram
µg/L	microgram per liter
mg/kg	milligram per kilogram
mg/L	Milligram per liter
MS	matrix spike
MSD	matrix spike duplicate
NFGs	CLP National Functional Guidelines for Data Review (EPA 2008 – Organics; EPA 2010 – Inorganics; EPA 2011 – Dioxins/Furans)
OPR	ongoing precision and recovery
pg/g	pictogram per gram
PCBs	polychlorinated biphenyls
PCDD	polychlorinated dibenzo-*p*-dioxin
PCDF	polychlorinated dibenzofuran
PEM	performance evaluation mixture
PSEP	Puget Sound Estuary Program
QA/QC	quality assurance/quality control
QAPP	quality assurance project plan
RF	response factor
RL	reporting limit
RPD	relative percent difference
RRT	relative retention time
S/N	signal-to-noise ratio
SAP	sampling and analysis plan
SDG	sample delivery group
SICP	selected ion current profile
SIM	selective ion monitoring
SRM	standard reference material
SVOCs	semi-volatile organic compounds
TSS	total suspended solids

TOC	total organic carbon
VOCs	volatile organic compounds
WDM	window defining mixture

INTRODUCTION

This report presents and discusses findings of the data validation performed on analytical data for soil samples collected during June and July 2012 for the referenced project. The laboratory reports validated herein were submitted by Friedman & Bruya, Inc. and Columbia Analytical Services, Inc. (CAS, part of ALS Group).

A level III data validation was performed on this laboratory report. The validation followed the procedures specified in USEPA CLP Functional Guidelines ([NFGs], EPA 2008 – Organics; EPA 2010 – Inorganics; EPA 2011 – Dioxins/Furans) and EPA Region 10 SOP (EPA 1996), with modifications to accommodate project and analytical method requirements. The numerical quality assurance/quality control (QA/QC) criteria applied to the validation were in accordance with those specified in the quality assurance project plans ([QAPPs], Aspect, 2009) and the current performance-based control limits established by the laboratory (laboratory control limits). Instrument calibration, frequency of QC analyses, and analytical sequence requirements were evaluated against the respective analytical methods.

Validation findings are discussed in each section pertinent to the QC parameter for each type of analysis. Qualified data with applied data qualifiers are summarized in the **Summary** section at the end of this report.

Samples and the associated analyses validated herein are summarized as follows:

				Analysis					
Field Sample ID	**Laboratory Sample ID**	**Sample Date**	**Sample Type**	**VOCs**	**SVOCs PAHs**	**PCBs**	**TPH-G TPH-Dx**	**Metals**	**Miscellaneous**
NRP-B-16-0-1	206410-01	6/27/12	Soil					X	
NRP-B-16-3-4	206410-02	6/27/12	Soil					X	
NRP-B-14-0-1	206410-03	6/27/12	Soil					X	
NRP-B-14-3-4	206410-04	6/27/12	Soil					X	
NRP-B-9-0-1	206410-05	6/27/12	Soil					X	
NRP-B-9-3-4	206410-06	6/27/12	Soil					X	
NRP-B-10-0-1	206410-07	6/27/12	Soil					X	
NRP-B-10-3-4	206410-08	6/27/12	Soil					X	
REC6-MW-1-6	206410-09	6/28/12	Soil	X			TPH-G		
REC6-MW-1-6-D	206410-10	6/27/12	Soil	X			TPH-G		
UST29-MW-1-7-8	206410-11	6/27/12	Soil	X			X		
UST29-MW-1-7-8-D	206410-12	6/27/12	Soil	X			TPH-Dx		
UST29-MW-1-8-9	206410-13	6/27/12	Soil		PAHs				
UST29-MW-1-8-9-D	206410-14	6/27/12	Soil		PAHs				

Field Sample ID	Laboratory Sample ID	Sample Date	Sample Type	Analysis					
				VOCs	SVOCs PAHs	PCBs	TPH-G TPH-Dx	Metals	Miscellaneous
REC2-B-10-5-6	206410-15	6/28/12	Soil		PAHs		TPH-Dx		
REC2-B-10-7-8	206410-16	6/28/12	Soil		PAHs		TPH-Dx		
REC2-B-10-10-11	206410-17	6/28/12	Soil		PAHs		TPH-Dx		
REC2-B-10-7-8-D	206410-18	6/28/12	Soil		PAHs		TPH-Dx		
REC2-B-6-6-7	206410-19	6/28/12	Soil		PAHs		TPH-Dx		
REC2-B-6-8-9	206410-20	6/28/12	Soil		PAHs		TPH-Dx		
REC2-B-6-10-11	206410-21	6/28/12	Soil		PAHs		TPH-Dx		
REC2-B-3-5.5-6.5	206410-22	6/28/12	Soil		PAHs		TPH-Dx		
REC2-B-3-7-8	206410-23	6/28/12	Soil		PAHs		TPH-Dx		
REC2-B-3-9-10	206410-24	6/28/12	Soil		PAHs		TPH-Dx		
REC2-B-2-4.5-5.5	206410-25	6/28/12	Soil		PAHs		TPH-Dx		
REC2-B-2-6-7	206410-26	6/28/12	Soil		PAHs		TPH-Dx		
REC2-B-2-8-9	206410-27	6/28/12	Soil		PAHs		TPH-Dx		
REC2-B-1-5-6	206410-28	6/28/12	Soil		PAHs		TPH-Dx		
REC2-B-1-7-8	206410-29	6/28/12	Soil		PAHs		TPH-Dx		
REC2-B-1-9-10	206410-30	6/28/12	Soil		PAHs		TPH-Dx		
GF-B-9-1-2.5	206410-31	6/28/12	Soil	X	SVOCs	X	X	X	
GF-B-9-2.5-3.5	206410-32	6/28/12	Soil						Dioxin/TOC
GF-B-9-2.5-3.5-D	206410-33	6/28/12	Soil						Dioxin/TOC
GF-B-9-7.5-9	206410-34	6/28/12	Soil	X	SVOCs	X	X	X	TOC
GF-B-9-7.5-9D	206410-35	6/28/12	Soil		SVOCs	X			
GF-B-12-1-2.5	206410-36	6/28/12	Soil	X	X	X	X	X	Dioxins/TOC
GF-B-12-7.5-9	206410-37	6/28/12	Soil	X	X	X	X	X	TOC
AP-MW-1-1-2	206446-01	6/29/12	Soil					X	pH
AP-MW-1-1-2-D	206446-02	6/29/12	Soil					X	pH
AP-MW-1-6-7	206446-03	6/29/12	Soil					X	pH
AP-MW-1-6-7-D	206446-04	6/29/12	Soil					X	
HW-MW-1-0-1	206446-05	6/29/12	Soil	X	SVOCs	X		X	
HW-MW-1-3-4	206446-06	6/29/12	Soil	X	SVOCs	X		X	
HW-MW-1-6-7	206446-07	6/29/12	Soil	X	SVOCs	X		X	
HW-B-2-0-1	206446-08	6/29/12	Soil	X	SVOCs	X		X	
HW-B-2-3-4	206446-09	6/29/12	Soil	X	SVOCs	X		X	
HW-B-2-6-7	206446-10	6/29/12	Soil	X	SVOCs	X		X	
HW-B-1-0-1	206446-11	6/29/12	Soil	X	SVOCs	X	TPH-Dx	X	

Field Sample ID	Laboratory Sample ID	Sample Date	Sample Type	Analysis					
				VOCs	SVOCs PAHs	PCBs	TPH-G TPH-Dx	Metals	Miscellaneous
HW-B-1-3-4	206446-12	6/29/12	Soil	X	SVOCs	X		X	
HW-B-1-6-7	206446-13	6/29/12	Soil	X	SVOCs	X		X	
UST29-MW-1-070212	207033-01	7/2/12	Water	X	PAHs		X		TSS
UST29-MW-1-070212D	207033-02	7/2/12	Water		PAHs		TPH-Dx		TSS
REC6-MW-1-070212	207033-03	7/2/12	Water	X			TPH-G		TSS
REC6-MW-1-070212D	207033-04	7/2/12	Water	X			TPH-G		TSS
CMS-MW-1-070212	207033-05	7/2/12	Water	X	PAHs		X	X (T)	TSS
HW-MW-1-070212	207033-06	7/2/12	Water		PAHs			X (T)	
HW-MW-1-070312	207033-07	7/3/12	Water	X				X (D)	TSS
CMS-MW-1-070312	207033-08	7/3/12	Water					X (D)	
UG-MW-2-070312	207033-09	7/3/12	Water					X (D)	TSS
NRP-MW-5-070312	207033-10	7/3/12	Water					X (T,D)	
NRP-MW-4-070312	207033-11	7/3/12	Water					X (T,D)	TSS
AP-MW-1-070312-D	207033-12	7/3/12	Water					X (T,D)	
AP-MW-1-070312	207033-13	7/3/12	Water					X (T,D)	TSS
UG-MW-1-070312	207039-01	7/3/12	Water					X (T,D)	TSS
OMS-B-1-0-1-070512	207068-01	7/5/12	Soil	X	PAHs	X	X	X	
OMS-B-1-2-3-070512	207068-02	7/5/12	Soil	X	PAHs	X	X	X	
OMS-B-2-0-1-070512	207068-03	7/5/12	Soil	X	PAHs	X	X	X	
OMS-B-2-2-3-070512	207068-04	7/5/12	Soil	X	PAHs	X	X	X	
OMS-B-3-0-1-070512	207068-05	7/5/12	Soil	X	PAHs	X	X	X	
Boiler-B-1-1-2-070512	207068-06	7/5/12	Soil	X	SVOCs			X	Dioxin
Boiler-B-2-1-2-070512	207068-07	7/5/12	Soil	X	SVOCs			X	Dioxin
Boiler-B-3-1-2-070512	207068-08	7/5/12	Soil	X	SVOCs		TPH-Dx	X	Dioxin
Boiler-B-4-1-1.5-070612	207068-09	7/6/12	Soil	X	SVOCs			X	Dioxin
Boiler-B-5-1-1.5-070612	207068-10	7/6/12	Soil	X	SVOCs			X	Dioxin
OMS-B-3-2-3-070612	207068-11	7/6/12	Soil	X	PAHs	X	X	X	
CMS-B-1-0-122-070612	207085-01	7/6/12	Soil	X	PAHs	X	X	X	
CMS-B-1-2-3-070612	207085-02	7/6/12	Soil	X	PAHs	X	X	X	
CMS-B-2-0-1-070612	207085-03	7/6/12	Soil	X	PAHs	X	X	X	
CMS-B-2-2-3-070612	207085-04	7/6/12	Soil	X	PAHs	X	X	X	
CMS-B-3-0-1-070612	207085-05	7/6/12	Soil	X	PAHs	X	X	X	
CMS-B-3-2-3-070612	207085-06	7/6/12	Soil	X	PAHs	X	X	X	
REC7-MW-1-060512	K1205474-001	6/5/12	Water						AS

Field Sample ID	Laboratory Sample ID	Sample Date	Sample Type	Analysis					
				VOCs	SVOCs PAHs	PCBs	TPH-G TPH-Dx	Metals	Miscellaneous
NRP-MW-3-060512	K1205474-002	6/5/12	Water						AS
REC7-MW-2-060512	K1205474-003	6/5/12	Water						AS
NRP-MW-2-060512	K1205474-004	6/5/12	Water						AS
REC6-MW-2-060512	K1205474-005	6/5/12	Water						ASF
MW-5-060512	K1205474-006	6/5/12	Water						AS
REC7-MW-3-060612	K1205560-001	6/6/12	Water					X (D)	AS
REC7-MW-4-060612	K1205560-002	6/6/12	Water					X (T,D)	AS
MW-1-060612	K1205560-003	6/6/12	Water					X (D)	AS
MW-2-060612	K1205560-004	6/6/12	Water					X (T,D)	AS
OMS-MW-1-060612	K1205560-005	6/6/12	Water					X (D)	AS
MW-6-060712	K1205623-001	6/7/12	Water						AS
REC3-MW-1-060712	K1205623-002	6/7/12	Water					X (D)	AS
UST70-MW-2-060712	K1205623-003	6/7/12	Water					X (D)	AS
NRP-MW-1-060812	K1205623-004	6/8/12	Water						AS
NRP-MW-1-060812-D	K1205623-005	6/8/12	Water						AS
REC6-MW-1-070612	K1206542-001	7/6/12	Water						F
REC6-MW-1-070612-D	K1206542-002	7/6/12	Water						F
GF-B-15A-1-2.5	E1200626-002	5/23/12	Soil						Dioxin
GF-B-2-2.5-4	E1200652-001	5/25/12	Soil						Dioxin
GF-B-1-1-2.5	E1200652-002	5/25/12	Soil						Dioxin
GF-B-4-2.5-4	E1200652-003	5/25/12	Soil						Dioxin
Boiler-B-3-1-2-070512	E1201140-001	7/5/12	Soil						Dioxin

Notes:

Laboratory sample ID prefixed with "K" was a laboratory identity assigned by CAS-ALS in Kelso, Washington. Metals analyses performed by CAS-ALS included a reductive precipitation procedure for sample preparation. Selenium was analyzed with SW846 Method 7742 - a borohydride reduction atomic absorption method. Mercury was not included (analyzed by F&BI and reported separately in previous SDGs).

Laboratory sample ID prefixed with "E" was a laboratory identity assigned by CAS-ALS in Houston, Texas.

A - Ammonia

D – Dissolved metals

Dioxin - Polychlorinated dioxins and furans

F – Formaldehyde

Metals: Antimony, arsenic, beryllium, cadmium, chromium, copper, lead, mercury, nickel, selenium, silver, thallium, and zinc

PAHs - Polycyclic aromatic hydrocarbons

PCBs - Polychlorinated biphenyls

S – Dissolved sulfide

SVOCs - Semivolatile Organic Compounds

T – Total metals

TOC – Total Organic carbon
TSS - Total suspended solids
TPH-Dx - Diesel and motor oil range total petroleum hydrocarbon
TPH-G - Gasoline range total petroleum hydrocarbon
VOCs - Volatile Organic Compounds
X - The analysis was requested and performed on the sample.

The analytical parameters requested for the samples, the respective analytical methods, and the analytical laboratories are summarized below:

Parameter	Analytical Method	Analytical Laboratory
Volatile Organic Compounds (VOCs)	SW846 Method 8260C	Friedman & Bruya, Inc. Seattle, WA
Semivolatile Organic Compounds (SVOCs)	SW846 Method 8270D	
Polycyclic Aromatic Hydrocarbons (PAHs)	SW846 Method 8270D-SIM	
PCB Aroclors	SW846 Method 8082A	
TPH - Gasoline Range	NWTPH-Gx	
TPH - Diesel & Motor Oil Range	NWTPH-Dx	
Total Metals	EPA Method 200.8	
Mercury	EPA Method 1631E	
pH	SW846 Method 9045D	
Total Organic Carbon (TOC)	ASTM D4129-05M	Columbia Analytical Services, Inc. Kelso, WA (Part of ALS Group)
Total Suspended Solids (TSS)	SM Method 2540D	
Dissolved Sulfide	SM 4500-S2-D	
Selenium	SW846 Method 7742	
Ammonia as Nitrogen	EPA Method 350.1	
Formaldehyde	SW846 Method 8315A	
Dioxins/Furans	SW846 Method 8290	Columbia Analytical Services, Inc. Houston, TX (Part of ALS Group)

Notes:

1. SW846 - *USEPA Test Methods for Evaluating Solid Waste, Physical/Chemical Methods,* SW-846, Third Edition, December 1996.
2. EPA Methods - *USEPA Methods for Chemical Analysis of Water and Wastes,* EPA–600/4-79-020, March 1983 Revision.
3. EPA Method 1631E - *Mercury in Water by Oxidation, Purge and Trap, and Cold Vapor Atomic Fluorescence Spectrometry,* Office of Water, U.S. Environmental Protection Agency, August 2002, EPA-821-R-02-019.
4. ASTM – American Society of Testing and Materials
5. NWTPH Methods – *Washington State Department of Ecology, Analytical Methods for Petroleum Hydrocarbons*, Publication No. ECY 97-602, June 1997.
6. SM – Standard Methods for the Examination of Water and Wastewater, American Public Health Association, 20th Edition, 1995.

DATA VALIDATION FINDINGS

1. VOCs by GC/MS (EPA Method SW8260C)

1.1 Sample Management and Holding Time

Samples were received in the laboratory intact and in consistence with the accompanying chain-of-custody (COC) documentation. No anomalies were identified in relation to sample preservation, handling, and transport.

Soil samples should be preserved at the time of collection. Soil and water samples should be analyzed within 14 days of collection. All samples were analyzed within the required holding times.

1.2 GC/MS Instrument Performance Check

The method require that (1) gas chromatograph/mass spectrometer (GC/MS) tuning analysis be performed, using bromofluorobenzene (BFB), at the beginning of each 12-hour period prior to any analysis, and (2) specific mass ions meet the criteria provided in the method. All instrument performance checks met the requirements.

1.3 Initial Calibration (ICAL)

The ICAL criteria require that (1) if linear average RFs is chosen as the quantitation option, at least five standards at different concentrations should be analyzed and the percent relative standard deviation (%RSD) of response factors (RFs) be ≤20% for the analyte, (2) if least-square linear regression is chosen for quantitation, the correlation coefficient (r) be >0.995, (3) if six-point non-linear (quadratic) curve is chosen for quantitation, the coefficient of determination (r^2) be >0.99, and (4) the RF be >0.01 for poor response compounds and >0.05 for all other compounds.. All ICALs met the requirements.

An initial calibration verification (ICV) standard (second source standard) was analyzed to verify the calibration curve. Percent difference (%D) values were either within ±20%, or the exceedance had no adverse effects on data usability (*e.g.,* biased high ICV recovery for a compound not detected in samples).

1.4 Calibration Verification (CCV)

The CCV criteria requires that (1) continuing calibrations be analyzed at the beginning of each 12-hour analysis period prior to the analysis of method blank and samples, (2) the %D be within ±20%, and (3) the RF be >0.01 for poor response compounds and >0.05 for all other compounds.

Calibration verifications were performed at the required frequency. %D values were either within ±20%, or the exceedance had no adverse effects on data usability (*e.g.,* biased high CCV recovery for a compound not detected in samples).

1.5 Method Blanks

Method blanks were prepared and analyzed as required. Target compounds were not detected at or above the reporting limits (RLs).

1.6 Laboratory Control Sample (LCS) and LCS Duplicate (LCSD)

LCS and LCSD were prepared and analyzed as required by the method. Percent recovery (%R) and relative percent difference (RPD) values either met the project control limits, or the outliers had no adverse effects on data usability (*e.g.,* biased high recovery for a compound not detected in samples.

1.7 Surrogate Spikes

Surrogate spikes were added to all samples as required by the method. All surrogate spike %R values were within the project control limits.

1.8 Matrix Spike (MS)

MS analyses were performed on samples GF-B-12-1-2.5, OMS-B-1-0-1-070512, and CMS-B-1-2-3-070612. The %R values were within the project control limits, except for the following:

SDG#	Parent Sample ID	Compound	MS %R (%)	Control Limit (%)	Data Qualifier
206410	GF-B-12-1-2.5	1,1,1-Trichloroethane 1,1-Dichloroethane Chloroethane Trichlorofluoromethane 1,1-Dichloroethene 1,1-Dichloropropene 2,2-Dichloropropane *cis*-1,2-Dichloroethene Bromomethane *trans*-1,2-Dichloroethene Chloromethane Tetrachloroethene	44 48 43 24 38 43 35 49 43 47 31 49	50-150	**UJ**
206410	GF-B-12-1-2.5	Dichlorodifluoromethane	6	50-150	**R**
207068	OMS-B-1-0-1-070512	Dichlorodifluoromethane Trichlorofluoromethane Vinyl chloride Chloromethane	13 49 45 47	50-150	**UJ**

SDG#	Parent Sample ID	Compound	MS %R (%)	Control Limit (%)	Data Qualifier
207085	CMS-B-1-2-3-070612	Dichlorodifluoromethane	5	50-150	**R**

1.9 Internal Standards

The method requires that (1) internal standard retention time be within ±30 seconds from that of the associated 12-hour calibration standard, and (2) the area counts of all internal standards be within –50% to +100% of the associated 12-hour calibration standard. All internal standards in the sample and associated QC analyses met the criteria.

1.10 Reporting Limit and Target Compound Quantitation

RLs were supported with adequate initial calibration concentrations. In cases where target compound concentrations exceeded ICAL calibration ranges, proper dilution analyses were performed for definitive quantitation of the compounds. Only affected compounds were to be reported from dilution analyses.

Vinyl acetate and 1,4-dioxane were reported in selected samples and the method blanks associated with these samples. These compounds were subjected to the tentative identification search (TIC) in the instrument library and were not detected in these samples. The reported MRLs for these compounds were based on 10 times the standard MRLs for other VOCs. Vinyl acetate and 1,4-dioxane results in these samples were qualified (UJ) as estimated.

Naphthalene, 1,2,4-trichlorobenzene, 1,2-dichlioriobenzene, 1,3-dichlorobenzene, and 1,4-dichliorobenzene were also reported from SVOCs analysis (Method 8270D). These compounds were to be reported from the SVOCs analysis, in favor of the lower detection limits, for samples analyzed by both methods except samples Boiler-B-3-1-2-070512 and HW-B-1-0-1 due to their excessive dilution for the SVOCs analysis.

1.11 Field Duplicates

Three sets of field duplicates were submitted for VOCs analyses. Field duplicate results for detected target compounds, RPD (or concentration difference) values, and data qualification were presented in **Appendix A**.

1.12 Overall Assessment of VOCs Data Usability

VOCs data are of known quality and acceptable for use, as qualified.

2. SVOCs by GC/MS (EPA Method SW8270D)

2.1 Sample Management and Holding Times

No anomalies were identified in relation to sample preservation, handling, and transport.

Soil samples should be extracted within 14 days and water samples within seven days of collection. Extracts should be analyzed within 40 days of extraction. All samples were extracted and analyzed within the required holding times.

2.2 GC/MS Instrument Performance Check

The method require that a GC/MS tuning analysis be performed using decafluorotriphenylphosphine (DFTPP) at the beginning of each 12-hour period prior to any analysis, and specific mass ions meet the criteria provided in the method. All instrument performance checks met the requirements.

2.3 Initial Calibration (ICAL)

The ICAL criteria require that (1) if linear average RFs is chosen as the quantitation option, at least five standards at different concentrations should be analyzed and the %RSD of RFs be ≤20% for the analyte, (2) if least-square linear regression is chosen for quantitation, the correlation coefficient (r) be >0.995, (3) if six-point non-linear (quadratic) curve is chosen for quantitation, the coefficient of determination (r^2) be >0.99, and (4) the RF be >0.01 for poor response compounds and >0.05 for all other compounds.. All ICALs met the requirements.

An ICV standard (second source standard) was analyzed to verify the calibration curve. %D values were either within ±20%, or the exceedance had no adverse effects on data usability (*e.g.,* biased high ICV recovery for a compound not detected in samples).

2.4 Calibration Verification (CCV)

The CCV criteria require that (1) continuing calibrations be analyzed at the beginning of each 12-hour analysis period prior to the analysis of method blank and samples, (2) the %D be within ±20%, and (3) the RF be >0.01 for poor response compounds and >0.05 for all other compounds.

Calibration verifications were performed at the required frequency. %D values were either within ±20%, or the exceedance had no adverse effects on data usability (*e.g.,* biased high CCV recovery for a compound not detected in samples), with the exceptions as follows:

SDG	CCV ID	Compound	%D	Bias	Affected Sample	Data Qualifier
206410	GCMS8 7/6/12, 18:55	Pyrene	-32.6%	High	GF-B-9-7.5-9D	**J**
206446	GCMS8 7/9/12, 7:53	Pyrene	-32.6%	High	HW-B-2-3-4 HW-MW-1-0-1 HW-MW-1-3-4 HW-MW-1-6-7	**J**

2.5 Method Blanks

Method blanks were prepared and analyzed as required. Target compounds were not detected at or above the RLs in the method blanks.

2.6 Surrogate Spikes

Surrogate spikes were added to all samples as required by the method. All %R values were within the laboratory control limits.

2.7 Matrix Spike (MS) and MS Duplicate (MSD)

MS/MSD analyses were not performed for SVOCs analyses; instead, laboratory duplicates in combination with LCS/LCSD analyses were performed.

2.8 Laboratory Control Sample (LCS) and LCS Duplicate (LCSD)

LCS and LCSD were prepared and analyzed as required by the method. All %R and RPD values either met the laboratory control criteria, or the outliers had no adverse effects on data usability (*e.g.,* biased high %R or RPD value for a compound that was not detected in samples), except for the following:

SDG	Compound	%R (%)		Control Limit (%)	RPD (%)	Control Limit (%)	Affected Sample	Data Qualifier
		LCSD	LCSD					
206410	Pyrene	86	126	58-120	38	20	GF-B-9-1-2.5 GF-B-9-7.5-9 GF-B-9-7.5-9D	**J**
206446	Pyrene	86	126	58-120	38	20	HW-B-1-6-7 HW-B-2-3-4 HW-B-2-6-7 HW-MW-1-0-1 HW-MW-1-3-4 HW-MW-1-6-7	**J**

2.9 Laboratory Duplicate Analysis

Duplicate analyses were performed on sample GF-B-12-7.5-9 (SDG: 206410) and Boiler-B-5-1-1.5-070612 (SDG: 207068). All RPD or concentration difference values met the laboratory control criteria.

2.10 Internal Standards

The method requires that (1) internal standard retention time be within ±30 seconds from that of the associated 12-hour calibration standard, and (2) the area counts of all internal standards be within –50% to +100% of the associated 12-hour calibration standard. All internal standards in the sample and associated QC analyses met the criteria, except for the following:

Sample ID	Internal Standard	Internal Standard %R	Control Limit	Affected Compound	Data Qualifier
HW-B-1-0-1	Perylene-d_{12}	40.3%	50-200%	Indeno(1,2,3-cd)pyrene Di-n-octyl phthalate Benzo(a)pyrene Benzo(b)fluoranthene Dibenzo(a,h)anthracene Benzo(g,h,i)perylene Benzo(k)fluoranthene	**UJ**
HW-B-1-6-7	Phenanthrene-d_{12}	48.4%	50-200%	N-Nitrosodiphenylamine 4-Nitroaniline 4,6-Dinitro-2-methylphenol 4-Bromophenyl phenyl ether Hexachlorobenzene Pentachlorophenol Phenanthrene Anthracene Carbazole Di-*n*-butyl phthalate Fluoranthene	**UJ** **UJ** **UJ** **UJ** **UJ** **UJ** **J** **UJ** **UJ** **UJ** **J**
Boiler-B-4-1-1.5-070612	Perylene-d_{12}	212%	50-200%	Benzo(b)fluoranthene	**J**

2.11 Reporting Limits and Compound Quantitation

Sample-specific RLs were supported with adequate initial calibration concentrations. Samples Boiler-B-3-1-2-070512 and HW-B-1-0-1 required a 1:100 dilution due to the high levels of target and non-target compounds in these samples; the RLs were raised accordingly.

Selected samples were also analyzed for PAHs with Method 8270D-SIM. PAHs results for these samples were to be reported from the Method 8270D-SIM analysis, in favor of the lower detection limits.

2.12 Field Duplicates

Samples GF-B-9-7.5-9 and GF-B-9-7.5-9D were field duplicates. SVOCs were not detected at or above the RLs in either sample. The field precision met the project advisory criteria.

2.13 Overall Assessment of SVOCs Data Usability

SVOCs data are of known quality and acceptable for use, as qualified.

3. PAHs by GC/MS - SIM (EPA Method SW8270D-SIM)

3.1 Sample Management and Holding Times

No anomalies were identified in relation to sample preservation, handling, and transport. Soil samples should be extracted within 14 days and water within seven days of collection. Extracts should be analyzed within 40 days of extraction. All samples were extracted and analyzed within the required holding times.

3.2 GC/MS Instrument Performance Check

DFTPP tuning was performed within each 12-hour interval. All required ion abundance ratios met the method requirements.

3.3 Initial Calibration (ICAL)

The ICAL criteria require that (1) if linear average RFs is chosen as the quantitation option, at least five standards at different concentrations should be analyzed and the %RSD of RFs be ≤20% for the analyte, (2) if least-square linear regression is chosen for quantitation, the correlation coefficient (r) be >0.995, (3) if six-point non-linear (quadratic) curve is chosen for quantitation, the coefficient of determination (r^2) be >0.99, and (4) the RF be >0.01 for poor response compounds and >0.05 for all other compounds.. All ICALs met the requirements.

An ICV standard (second source standard) was analyzed to verify the calibration curve. %D values were either within ±20%, or the exceedance had no adverse effects on data usability (*e.g.,* biased high ICV recovery for a compound not detected in samples).

3.4 Calibration Verification (CCV)

The analytical method requires that (1) continuing calibration verifications be analyzed at the beginning of each 12-hour analysis period prior to the analysis of method blank and samples, (2) the %D be within ±20%, and (3) the RF be >0.05 for all compounds.

Calibration verifications were performed at the required frequency. %D values were either within ±20%, or the exceedance had no adverse effects on data usability (*e.g.,* biased high CCV recovery for a compound not detected in samples).

3.5 Method Blanks

Method blanks were prepared and analyzed as required. Target compounds were not detected at or above the RLs in the method blanks.

3.6 Surrogate Spikes

Surrogate spikes were added to all samples as required by the method. All surrogate spike %R values were either within the project control limits or at levels that had no adverse effects on data quality (*e.g.,* biased-high recovery for compounds that were not detected in samples), except qualified below. In some cases surrogate spike %R values were inapplicable for data evaluation because the samples contained high levels of target PAHs and requested dilution analysis; no data were qualified on this basis. The remaining anomalies were summarized in the following:

Sample ID	Surrogate	%R (%)	Control Limit (%)	Affected Compound	Data Qualifier
REC2-B-10-5-6	Anthracene-d_{10} Benzo(a)anthracene-d_{12}	0 162	50-150 35-159	All PAHs	**J/UJ**

3.7 Matrix Spike (MS)

MS analyses were performed on samples GF-B-12-7.5-9 (SDG: 206410), REC2-B-10-10-11 (SDG: 206410), OMS-B-2-2-3-070512 (SDG: 207068). The %R values met the project control criteria.

3.8 Laboratory Control Sample (LCS) and LCS Duplicate (LCSD)

LCS and LCSD analyses were performed as required by the method. All %R and RPD values were within the project control limits.

3.9 Internal Standards

The method requires that (1) internal standard retention time be within ±30 seconds from that of the associated 12-hour calibration standard, and (2) the area counts of all internal standards be within –50% to +100% of the associated 12-hour calibration standard. All internal standards in the sample and associated QC analyses met the criteria. The recovery for one of the surrogates, phenanthrene-d_{10}, in sample OMS-B-3-2-3-070612 (SDG: 207068) was less than the lower control limit. The sample was diluted and re-analyzed with acceptable internal standard recovery. Compounds associated with phenanthrene-d_{10} were to be reported from the dilution analysis for this sample.

3.10 Reporting Limits and Target Compound Quantitation

Sample-specific RLs were supported with adequate initial calibration concentrations.

3.11 Field Duplicates

Three sets of field duplicates were submitted for PAHs analyses. Field duplicate results for detected target compounds, RPD (or concentration difference) values, and data qualification were presented in **Appendix A**.

3.12 Overall Assessment of PAHs Data Usability

PAHs data are of known quality and acceptable for use, as qualified.

4. PCB Aroclors (EPA Method SW8082A)

4.1 Sample Management and Holding Times

No anomalies were identified in relation to sample preservation, handling, and transport. Soil samples should be extracted within 14 days of collection and extracts analyzed within 40 days of extraction. All samples were extracted and analyzed within the required holding times.

4.2 Initial Calibration

The method requires that (1) a minimum of 5-point calibration be performed using the mixture of Aroclor 1016 and 1260, (2) a single-point calibration be performed for the other five Aroclors to establish calibration factors (CFs) and for Aroclor pattern recognition, (3) at least 3 peaks (preferably 5 peaks) must be chosen for each Aroclor for characterization, (4) the %RSD values of Aroclor 1016 and 1260 CFs must be ≤20%, and (5) if dual column analysis is chosen, both columns should meet the requirements. All ICALs met the requirements.

4.3 Calibration Verification

CCV analyses should be performed for each 12-hour analysis sequence prior to sample analyses, and the %D be within ±20%.

Calibration verifications were performed at the required frequency. All %D values either met the control criteria or biased high for target compounds that were not detected in the associated samples.

4.4 Method Blanks

Method blanks were prepared and analyzed as required. PCB Aroclors were not detected at or above the MDLs in the method blanks.

4.5 Surrogate Spikes

Surrogate spikes were added to all samples as required by the method. All surrogate spike %R values were within the laboratory control limits.

4.6 Matrix Spike and Matrix Spike Duplicate (MS/MSD)

MS/MSD analyses were not performed for PCB Aroclors analyses; instead, duplicate and LCS/LCSD analyses in combination were performed.

4.7 Laboratory Control Sample (LCS) and LCS Duplicate (LCSD)

LCS and LCSD analyses were performed as required by the method. All %R and RPD values were within the project control limits.

4.8 Laboratory Duplicate Analysis

Duplicate analyses were performed on samples HW-B-2-0-1 (SDG: 206448) and OMS-B-1-0-1-070512 (SDG: 207068), and REC3-MW-1-8.5-9.5 (SDG: 206068). All RPD or concentration difference values met the laboratory control criteria.

4.9 Method Reporting Limits and Target Compound Quantitation

Sample-specific RLs were supported with adequate initial calibration concentrations and achieved the project target quantitation limits.

Aroclor 1254 and Aroclor 1260 were detected in four samples in SDG 207085. The dual column RPD values were less than 40% for both detections.

4.10 Field Duplicates

Samples GF-B-9-7.5-9 and GF-B-9-7.5-9D were field duplicates. PCB Aroclors were not detected at or above the RLs in either sample. The field precision met the project advisory criteria.

4.11 Overall Assessment of PCB Aroclors Data Usability

PCB Aroclor data are of known quality and acceptable for use.

5. TPH-Gasoline by GC/FID (Method NWTPH-Gx)

5.1 Sample Management and Holding Times

No anomalies were identified in relation to sample preservation, handling, and transport.

Soil samples should be preserved at the time of collection. Soil and water samples should be analyzed within 14 days of collection. All samples were analyzed within the required holding times.

5.2 Initial Calibration (ICAL)

The method linearity criteria require that (1) if linear average RFs is chosen as the quantitation option, the %RSD of RFs be <20% for the analyte, (2) if least-square linear regression is chosen for quantitation, the correlation coefficient (r) be >0.995, and (3) if six-point non-linear (quadratic) curve is chosen for quantitation, the coefficient of determination (r^2) be >0.990. Initial calibration met the criteria for all target compounds.

An ICV (second source) standard was analyzed to verify the calibration curve. %D values were within ±20%.

5.3 Calibration Verification

Continuing calibration verification (CCV) analyses were performed at the required frequency for all analytical sequences as required by the method. The %D values for all CCVs met the method criterion (±20%).

5.4 Method Blanks

Method blanks were prepared and analyzed as required. No target compounds were detected at or above the RLs in the method blanks.

5.5 Surrogate Spikes

Surrogate spikes were added to all samples as required by the method. All surrogate spike %R values were within the project control limits, outside the control limits due to matrix interference, or diluted below quantitation limits due to high analyte concentrations. No data qualifying actions were taken in these cases.

5.6 Matrix Spike and Matrix Spike Duplicate

MS/MSD analyses were not performed for TPH-Gasoline analyses; instead, duplicate and LCS analyses in combination were performed.

5.7 Laboratory Control Sample (LCS)

LCS analyses were performed as required by the method. All %R values were within the laboratory control limits.

5.8 Laboratory Duplicate Analysis

Duplicate analyses were performed on batch QC samples. All RPD and concentration difference values met the laboratory control criteria.

5.9 Reporting Limits and Target Compound Quantitation

Sample-specific RLs were supported with adequate initial calibration concentrations.

5.10 Field Duplicates

Two sets (one for soil and one for water) of field duplicates were submitted for TPH-Gasoline analysis. Field duplicate results, RPD (or concentration difference) values, and data qualification were presented in **Appendix A**.

5.11 Overall Assessment of TPH-Gasoline Data Usability

TPH-Gasoline data are of known quality and acceptable for use.

6. TPH-Diesel & Motor Oil by GC/FID (Method NWTPH-Dx)

6.1 Holding Time

No anomalies were identified in relation to sample preservation, handling, and transport. Soil samples should be extracted within 14 days and water should be extracted within seven days of collection. Extracts should be analyzed within 40 days of extraction. All samples were extracted and analyzed within the recommended holding times, except that sample Boiler-B-3-1-2-070512 was extracted six days past the required holding time. TPH-Diesel and TPH-Motor Oil results for this sample were qualified (J) as estimated.

6.2 Initial Calibration

The method requires that (1) a minimum of 5-point calibration be performed using individual petroleum product reference standards to ensure the proper identification and quantitation of petroleum hydrocarbons in samples, (2) the calibration curve include a sufficiently low standard to provide the necessary reporting limits, and (3) the linear working range of the instrument be defined.

The ICAL met the method requirements. The linearity of the ICAL curves were verified with %RSD values of RFs (%RSD ≤20%, according to EPA SW 846 Method 8000), and was acceptable for both TPH-Diesel and TPH-Motor Oil.

6.3 Calibration Verification

The method requires that (1) a mid-range check standard be analyzed prior to and after each analytical batch, and (2) the percent drift (%D) value be within ±15% of the true value.

Calibration verification was performed at required frequency. The %D values were either within the ±15% criterion or at levels that had no adverse effects on data quality (e.g., high-bias %D value where the target compound was not detected in associated sample).

6.4 Method Blanks

Method blanks were prepared and analyzed as required. Target compounds were not detected at or above the RLs in the method blanks.

6.5 Surrogate Spikes

Surrogate spikes were added to all samples as required by the method. All surrogate spike %R values were within the project control limits, outside the control limits due to

matrix interference, or diluted below quantitation limits due to high petroleum hydrocarbon concentrations. No data qualifying actions were taken in these cases.

6.6 Matrix Spike (MS) and MS Duplicate (MSD)

MS and MSD analyses were performed on samples GF-B-9-1-2.5 (SDG: 206410), and CMS-B-1-0-1-070612 (SDG: 207085). The %R and RPD values met the laboratory control criteria.

6.7 Laboratory Control Sample (LCS)

LCS analyses were performed as required. All %R values met the project control limits.

6.8 Target Compound Identification

Selected sample extracts were cleaned up with acid and silica gel treatment to minimize the biogenic interference with target compound identification, as required by the project. The laboratory reported results as diesel #2 (C10 - C25) and motor oil (C25 - C36), as required by the method.

The TPH-Diesel reported in sample CMS-B-2-2-3-070612 did not match chromatographic patterns with those of the calibration standards.

6.9 Reporting Limits and Target Compound Quantitation

The reported RLs were supported with adequate ICAL concentrations.

6.10 Field Duplicates

Three sets of field duplicates were submitted for TPH-Diesel and TPH-Motor Oil analyses. Field duplicate results, RPD (or concentration difference) values, and data qualification were presented in **Appendix A**.

6.11 Overall Assessment of TPH-Diesel and Motor Oil Data Usability

TPH-Diesel and TPH-Motor Oil data are of known quality and acceptable for use, as qualified.

7. Total Metals by ICP/MS and CVAFS (EPA Methods 200.8 and 1631E)

7.1 Sample Management and Holding Times

No anomalies were identified in relation to sample preservation, handling, and transport, as discussed in Section 1.1.

Soil and water samples should be analyzed within 180 days for metals and 28 days for mercury. Samples were analyzed within the required holding time.

7.2 ICP/MS Tuning

Instrument tuning was performed at the required frequency. The stability check (%RSD <5%), mass calibration (mass difference <0.1 AMU), and resolution check (peak width <1.0 AMU at 5% peak height) met the NFG and method criteria.

7.3 Initial Calibration (ICAL)

The ICP/MS method requires that (1) a blank and one calibration standard be used in establishing the analytical curve, and (2) the average of replicate exposures be reported for all standards, QC, and sample analyses.

For mercury, the method requires that (1) a blank and five calibration standards be employed to establish the analytical curve, and (2) the linearity of the calibration curve should meet the criteria of correlation coefficient ≥ 0.995.

All ICALs met the method requirements.

7.4 Calibration Verification (ICV and CCV)

Initial calibration verifications (ICVs) and continuing calibration verifications (CCVs) were analyzed at the required frequency. The %R values either met the control criteria (90 – 110% for metals, 80 – 120% for mercury) or the exceedance had no adverse effects on data usability (e.g., high-bias %D value where the target compound was not detected in associated sample), except for the following:

CCAL ID	Analyte	%R	Affected Sample	Data Qualifier
7/9/12, 16:42:54	Mercury	128%	Boiler-B-2-1-2-070512	**J**

7.5 Blanks

Calibration Blanks: Initial calibration blanks (ICBs) and continuing calibration blanks (CCBs) were not analyzed after calibration verification standards. Target analytes were either not detected at or above the RLs in the ICBs and CCBs, or sample results affected by the ICB/CCB detections were qualified as results of detections in preparation blanks.

Preparation Blanks: Preparation blanks were prepared and analyzed as required. Target analytes were either not detected at or above the RLs in the preparation blanks, or sample results were greater than 10X the detection in the associated blank, except for the following:

Blank ID	Analyte	Detection In Blank	Affected Sample	Original Result	Adjusted Result	Unit
K1205623-MB	Dissolved Beryllium	0.0005 J	REC3-MW-1-060712 UST70-MW-2-060712	0.0012 J 0.0014 J	0.02 U 0.02 U	µg/L
K1205623-MB	Dissolved Thallium	0.005 J	REC3-MW-1-060712 UST70-MW-2-060712	0.007 J 0.014 J	0.02 U 0.02 U	µg/L
K1205560-MB	Dissolved Beryllium	0.0005 J	MW-2-060612 MW-2-060612 OMS-MW-1-060612 REC7-MW-3-060612 REC7-MW-4-060612 REC7-MW-4-060612	0.0005 J 0.0023 J 0.0012 J 0.0009 J 0.0090 J 0.0005 J	0.02 U 0.02 U 0.02 U 0.02 U 0.02 U 0.02 U	µg/L
K1205560-MB	Total Thallium	0.005 J	REC7-MW-4-060612 MW-2-060612	0.008 J 0.004 J	0.02 U 0.02 U	µg/L
K1205560-MB	Dissolved Thallium	0.005 J	MW-1-060612 MW-2-060612 OMS-MW-1-060612 REC7-MW-3-060612 REC7-MW-4-060612	0.005 J 0.005 J 0.026 0.006 J 0.012 J	0.02 U 0.02 U 0.026 J 0.02 U 0.02 U	µg/L

7.6 Laboratory Control Sample (LCS)

LCS analyses were performed as required by the method. All %R values were within the project control limits, or the exceedance had no adverse effects on data usability (e.g., high-bias %R value where the target compound was not detected in associated sample).

7.7 Matrix Spike (MS) and Matrix Spike Duplicate (MSD)

MS and MSD analyses were performed on project samples at the adequate frequency (>5% of field sample). The %R and RPD values met the laboratory control limits, except for the following:

SDG#	Parent Sample ID	Analyte	MS %R	Control Limit	RPD	Control Limit	Affected Sample	Data Qualifier
206410	NRP-B-16-0-1	Chromium Nickel	148 130	63-120 54-125	54 50	20	GF-B-12-1-2.5 GF-B-12-7.5-9 GF-B-9-1-2.5 GF-B-9-7.5-9 NRP-B-10-0-1 NRP-B-10-3-4 NRP-B-14-0-1 NRP-B-14-3-4 NRP-B-16-0-1 NRP-B-16-3-4 NRP-B-9-0-1 NRP-B-9-3-4	**J**
207068	OMS-B-1-0-1-070512	Nickel	- -	- -	23	20	Boiler-B-1-1-2-070512 Boiler-B-2-1-2-070512 Boiler-B-3-1-2-070512 Boiler-B-4-1-1.5-070612 Boiler-B-5-1-1.5-070612 OMS-B-1-0-1-070512 OMS-B-1-2-3-070512 OMS-B-2-0-1-070512 OMS-B-2-2-3-070512 OMS-B-3-0-1-070512 OMS-B-3-2-3-070612	**J**
207085	CMS-B-2-0-1-070612	Chromium	- -	- -	23	20	CMS-B-1-0-1-070612 CMS-B-1-2-3-070612 CMS-B-2-0-1-070612 CMS-B-2-2-3-070612 CMS-B-3-0-1-070612 CMS-B-3-2-3-070612	**J**
207085	CMS-B-2-0-1-070612	Lead	178 89	64-139	67	20	CMS-B-1-0-1-070612 CMS-B-1-2-3-070612 CMS-B-2-0-1-070612 CMS-B-2-2-3-070612 CMS-B-3-0-1-070612 CMS-B-3-2-3-070612	**J**

Note: "- -" indicated that the value was within the control limit.

7.8 Internal Standards

At least three internal standards were added to all field and QC samples for ICP/MS analyses. All percent relative intensity values were within the method criteria (60 - 125%).

7.9 Method Reporting Limits and Analyte Quantitation

Sample-specific RLs were supported with adequate initial calibration concentrations.

7.10 Field Duplicates

Three sets of field duplicates were submitted for Metals analyses. Field duplicate results, RPD (or concentration difference) values, and data qualification were presented in **Appendix A**.

7.11 Overall Assessment of Metals Data Usability

Metal data are of known quality and acceptable for use, as qualified.

8. Polychlorinated Dioxins/Furans by HRGC/HRMS (EPA Method SW8290)

8.1 Sample Management and Holding Times

No anomalies were identified in relation to sample preservation, handling, and transport, as discussed in Section 1.1.

EPA SW846 Method 8290 recommends a holding time of 30 days for solid samples stored in the dark at 4°C and completely analyzed within 45 days of extraction. All samples were extracted and analyzed within the recommended holding times.

8.2 HRGC/HRMS Instrument Performance Check

The method requires that (1) for mass calibration and resolution, the laboratory must provides evidence of mass spectrometer resolution > 10,000 at the beginning and end of each 12-hour analytical sequence. If mass calibration and resolution tuning are not correctly performed, interferences may degrade chlorinated dibenzo-*p*-dioxin and chlorinated dibenzofuran (CDD/CDF) identification and quantitation; (2) the mass spectrometer selected ion monitoring (SIM) scan descriptor switching times are determined by the analysis of the Window Defining Mixture (WDM) which contains the first and last eluting isomers in each homologue; and (3) chromatographic resolution is verified by analyzing one of two Isomer Specificity Check (ISC) solutions, depending on the Gas Chromatograph (GC) column used for analysis. All HRGC/HRMS instrument performance checks met the criteria.

8.3 Initial Calibration (ICAL)

The method requires that (1) the chromatographic peak separation between the 2,3,7,8-TCDD peak and the 1,2,3,8-TCDD peak and between the 2,3,7,8-TCDF peak and the 2,3,4,7-TCDF peak and must be resolved with a valley of < 25%; (2) the ion abundance ratio be within a ± 15% window around the theoretical abundance ratio; (3) the retention

times (RTs) of the isomers must fall within the appropriate RT windows established by the WDM analysis. In addition, the absolute RT of the internal standard $^{13}C_{12}$-1,2,3,4-TCDD must exceed 25 minutes on the DB-5 (or equivalent) column and 15 minutes on the DB-225 (or equivalent) column; (4) the instrument sensitivity (signal-to-noise [S/N] ratio) must be >10:1; (5) the percent relative standard deviation (%RSD) be <20% for native isomers and < 30% for labeled isomers; (6) all initial calibration standards (CSs) must be analyzed at the correct concentration levels; (7) initial calibrations must be performed when the contract is awarded, whenever significant instrument maintenance is performed (e.g., ion source cleaning, GC column replacement, etc.), or if calibration verification criteria are not met. All ICALs met the method requirements.

8.4 Calibration Verification

The method requires that (1) continuing calibrations be analyzed at the beginning of each 12-hour analysis period prior to the analysis of method blank and samples, (2) the percent difference (%D) be within ±20% for native isomers and be within ±30% for labeled isomers, and (3) the ion abundance ratio, retention times, relative retention times, instrument sensitivity meet the criteria for initial calibrations. All calibration verification analyses met the criteria.

8.5 Method Blanks

Method blanks were prepared and analyzed as required for each preparation batch. Selected target compounds were detected in method blanks. Sample results less than 5x the level found in the associated method blank were qualified (U) as non-detects at the reported values. Qualified data were summarized in **SUAMMRY** section at the end of this report.

8.6 Laboratory Control Samples (LCS)

LCS analyses were performed as required by the method. The recovery met the method control limits for all target and labeled compounds.

8.7 Matrix Spike and Matrix Spike Duplicate (MS/MSD)

MS and MSD analyses were performed on sample GF-B-2-2.5-4. The %R and RPD values met the control limits for all spiked congeners, except that the RPD value for OCDD (52%) was outside the control criteria (20%). The OCDD result for sample GF-B-2-2.5-4 was qualified (J) as estimated.

8.8 Labeled Compounds

Nine labeled internal standards and one cleanup recovery standard were added to all samples as required by the method.

The %R values for selected internal standards and cleanup standard were less than the lower control limit of 40%. Affected sample results were qualified as follows:

Sample ID	Internal Standard	%R (%)	Affected Congener	Data Qualifier
Boiler-B-3-1-2-070512	$^{13}C_{12}$-OCDD $^{13}C_{12}$-1,2,3,4,7,8-HxCDF $^{13}C_{12}$-2,3,4,6,7,8-HxCDF $^{13}C_{12}$-1,2,3,4,6,7,8-HpCDF	27 34 31 37	OCDD OCDF 1,2,3,4,7,8-HxCDF 2,3,4,6,7,8-HxCDF 1,2,3,4,6,7,8-HpCDF	**J** **J** **UJ** **UJ** **J**
GF-B-4-2.5-4	$^{13}C_{12}$-OCDD	32	OCDD OCDF	**J** **UJ**

8.9 Target Compound Identification

All detected target congeners were properly identified. The ion ratios for a number of detection did not meet the method criteria; these results were qualified as non-detected at their reported values, as summarized as follows:

Laboratory ID	Sample ID	Congener	Ion Ratio	Control Limit	Data Qualifier
E1200626-002	GF-B-15A-1-2.5	1,2,3,7,8,9-HxCDF	0.75	1.05-1.43	**U**
E1200626-002	GF-B-15A-1-2.5	1,2,3,7,8-PeCDD	1	1.32-1.78	**U**
E1200626-002	GF-B-15A-1-2.5	1,2,3,7,8-PeCDF	1.9	1.32-1.78	**U**
E1200626-002	GF-B-15A-1-2.5	2,3,4,7,8-PeCDF	1.28	1.32-1.78	**U**
E1200626-002	GF-B-15A-1-2.5	2,3,7,8-TCDD	51	0.65-0.89	**U**
E1200650-001	GF-B-14-1-2.5	1,2,3,6,7,8-HxCDF	1.44	1.05-1.43	**U**
E1200650-001	GF-B-14-1-2.5	1,2,3,7,8,9-HxCDD	1.48	1.05-1.43	**U**
E1200652-001	GF-B-2-2.5-4	1,2,3,4,7,8,9-HpCDF	0.83	0.88-1.20	**U**
E1200652-001	GF-B-2-2.5-4	1,2,3,4,7,8-HxCDD	1.46	1.05-1.43	**U**
E1200652-001	GF-B-2-2.5-4	1,2,3,7,8-PeCDD	2.58	1.32-1.78	**U**
E1200652-001	GF-B-2-2.5-4	2,3,7,8-TCDD	0.59	0.65-0.89	**U**
E1200652-002	GF-B-1-1-2.5	1,2,3,4,7,8-HxCDD	1.74	1.05-1.43	**U**
E1200652-002	GF-B-1-1-2.5	1,2,3,7,8,9-HxCDD	1.55	1.05-1.43	**U**
E1200652-002	GF-B-1-1-2.5	OCDF	1.09	0.76-1.02	**U**
E1200868-001	GF-B-9-2.5-3.5	1,2,3,4,7,8-HxCDF	1.02	1.05-1.43	**U**
E1200868-001	GF-B-9-2.5-3.5	2,3,4,6,7,8-HxCDF	0.91	1.05-1.43	**U**
E1200868-002	GF-B-9-2.5-3.5-D	1,2,3,4,7,8,9-HpCDF	0.79	0.88-1.20	**U**
E1200868-002	GF-B-9-2.5-3.5-D	1,2,3,4,7,8-HxCDD	0.98	1.05-1.43	**U**

Laboratory ID	Sample ID	Congener	Ion Ratio	Control Limit	Data Qualifier
E1200868-002	GF-B-9-2.5-3.5-D	1,2,3,6,7,8-HxCDF	1.59	1.05-1.43	**U**
E1200868-002	GF-B-9-2.5-3.5-D	1,2,3,7,8,9-HxCDD	0.86	1.05-1.43	**U**
E1200868-002	GF-B-9-2.5-3.5-D	1,2,3,7,8-PeCDD	1.3	1.32-1.78	**U**
E1200868-002	GF-B-9-2.5-3.5-D	1,2,3,7,8-PeCDF	1.29	1.32-1.78	**U**
E1200868-003	GF-B-12-1-2.5	1,2,3,6,7,8-HxCDF	1.48	1.05-1.43	**U**
E1200868-003	GF-B-12-1-2.5	2,3,4,7,8-PeCDF	1.18	1.32-1.78	**U**
E1200868-004	Boiler-B-1-1-2-070512	2,3,7,8-TCDD	0.46	0.65-0.89	**U**
E1200868-005	Boiler-B-2-1-2-070512	1,2,3,7,8-PeCDD	1.22	1.32-1.78	**U**
E1200868-007	Boiler-B-4-1-1.5-070512	1,2,3,7,8,9-HxCDF	1.46	1.05-1.43	**U**
E1200868-008	Boiler-B-5-1-1.5-070512	1,2,3,4,7,8,9-HpCDF	1.32	0.88-1.20	**U**
E1200868-008	Boiler-B-5-1-1.5-070512	1,2,3,7,8,9-HxCDD	0.93	1.05-1.43	**U**
E1201140-001	Boiler-B-3-1-2-070512	1,2,3,7,8,9-HxCDD	1.47	1.05-1.43	**U**
E1201140-001	Boiler-B-3-1-2-070512	2,3,7,8-TCDF	0.94	0.65-0.89	**U**

8.10 Reporting Limits, Estimated Detection Limits (EDLs), and Compound Quantitation

Correct internal standards, quantitation ions, and average RFs were used to quantitate target compound detections. The RLs were supported with adequate ICAL calibration concentrations. Sample-specific EDLs and RLs were adjusted with sample weights, internal standard peak height, and noise levels as required by the method.

Selected target congeners in a number of samples had chlorodiphenyl ether interference present in their retention time region. The affected results were qualified (J) as estimated.

8.11 Second Column Confirmation

All positive detection of 2,3,7,8-TCDF were re-analyzed on the DB-225 column for confirmation and results reported from the second column (DB-225) should be used for data interpretation.

8.12 Field Duplicates

Samples GF-B-9-2.5-3.5 and GF-B-9-2.5-3.5-D were field duplicates submitted for dioxins/furans analysis. Field duplicate results, RPD (or concentration difference) values, and data qualification were presented in **Appendix A**.

8.13 Overall Assessment of Polychlorinated Dioxins/Furans Data Usability

Polychlorinated dioxins and furans data were of known quality and acceptable for use as qualified.

9. Formaldehyde by HPLC/UV (EPA Method 8315A)

9.1 Sample Management and Holding Time

No anomalies were identified in relation to sample preservation, handling, and transport, as discussed in Section 1.1.

Water samples should be derivatized and extracted within 3 days of sample collection. All derivatized sample extracts should be analyzed within 3 days after preparation. The sample was prepared and analyzed within the required holding times.

9.2 Instrument Calibration

The method linearity criteria require that (1) if linear average RFs is chosen as the quantitation option, the %RSD of RFs be <15% for the analyte, (2) if least-square linear regression is chosen for quantitation, the correlation coefficient (r) be >0.995, and (3) if six-point non-linear (quadratic) curve is chosen for quantitation, the coefficient of determination (r^2) be >0.990. Initial calibration met the criteria for all target compounds.

An ICV (second source) standard was analyzed to verify the calibration curve. %D values were within ±20%.

9.3 Calibration Verification

Continuing calibration verification (CCV) analyses were performed at the required frequency for all analytical sequences as required by the method. The %D values for all CCVs met the method criterion (±20%).

9.4 Method Blanks

A method blank was prepared and analyzed in each preparation batch as required. Formaldehyde was not detected at or above the RL in method blanks.

9.5 Matrix Spike (MS) and MS Duplicate (MSD)

MS and MSD analyses were performed on samples REC6-MW-1-070612-D and REC6-MW-2-060512. The %R and RPD values met the laboratory control criteria, except that the RPD value (56%) was outside the control criterion (40%) in the MS/MSD performed on REC6-MW-1-070612-D. The formaldehyde result for sample REC6-MW-1-070612-D was qualified (J) as estimated.

9.6 Laboratory Control Samples (LCS)

LCS analyses were performed as required by the methods. The %R values were within the laboratory control limits.

9.7 Field Duplicates

Samples REC6-MW-1-070612 and REC6-MW-1-070612-D were field duplicates submitted for formaldehyde analysis. Field duplicate results, concentration difference value, and data qualification were presented in **Appendix A**.

9.8 Overall Assessment of Formaldehyde Data Usability

Formaldehyde data are of known quality and acceptable for use as qualified.

10. Conventional Parameters (TOC, TSS, pH, Ammonia, and Dissolved Sulfide)

10.1 Sample Management and Holding Time

No anomalies were identified in relation to sample preservation, handling, and transport, as discussed in Section 1.1.

Water samples should be analyzed within 7 days of collection for dissolved sulfide and TSS, and 28 days for ammonia. TOC in soil samples should be analyzed within 28 days.

10.2 Instrument Calibration

The initial calibrations were established for ammonia and sulfide analyses using one blank and at least five levels of standards. The correlation coefficients (r) of the initial calibration curves were >0.995, and met the method criteria.

10.3 Calibration Verification

ICV and CCV analyses were performed for ammonia and sulfide as required by the methods. All ICV and CCV %R values were within the laboratory control limits (90 – 110%).

10.4 Blanks

Calibration Blanks: ICBs and CCBs were analyzed for ammonia and sulfide as required by the methods. No target analytes were positively reported in ICBs and CCBs at or above the MDLs.

Method Blanks: Method blanks were prepared and analyzed for TOC, TSS, ammonia, and sulfide as required by the methods. No target analytes were detected at or above the RLs in method blanks, except for the following:

Blank ID	Analyte	Detection In Blank	Affected Sample	Original Result	Adjusted Result	Unit
K1205623-MB	Ammonia	0.023 J	REC3-MW-1-060712	0.041 J	0.05 U	**µg/L**

10.5 Laboratory Replicate Analyses

Laboratory duplicate analyses were formed on samples REC7-MW-1-060512, REC7-MW-3-060612 for sulfide, sample GF-B-12-7.5-9 for TOC, batch QC samples for ammonia and pH. The RPD (or concentration difference) values were within the project control limits.

10.6 Matrix Spike (MS) and MS Duplicate (MSD)

MS and MSD analyses were performed on sample REC7-MW-3-060612 for sulfide. The %R and RPD values met the laboratory control criteria.

10.7 Laboratory Control Samples (LCS)

LCS analyses were performed as required by the methods fort ammonia, sulfide, TOC, and pH analysis. All LCS %R values were within the laboratory control limits. LCS/LCSD analyses were performed for TSS; the %R and RPD values met the laboratory control criteria.

10.8 Method Reporting Limits

The MRLs were supported with adequate initial calibration concentrations.

10.9 Field Duplicates

Two sets of field duplicates were submitted for TSS analyses. One set of field duplicates was submitted for TOC, TSS, pH, and ammonia analyses. Field duplicate results, RPD (or concentration difference) values, and data qualification were presented in **Appendix A**.

10.10 Overall Assessment of Conventional Parameters Data Usability

Conventional parameters data are of known quality and acceptable for use.

SUMMARY

Table I. Data Affected by QC Anomalies:

Laboratory ID	Sample ID	Analyte	Qualifier	Qualified Reason
207068-07	Boiler-B-2-1-2-070512	Mercury	J	Closing OPR %R >120% (high bias)
206410-01	NRP-B-16-0-1	Chromium (Total)	J	MS %R > UCL and RPD >20%
206410-01	NRP-B-16-0-1	Nickel	J	MS %R > UCL and RPD >20%
206410-02	NRP-B-16-3-4	Chromium (Total)	J	MS %R > UCL and RPD >20%
206410-02	NRP-B-16-3-4	Nickel	J	MS %R > UCL and RPD >20%
206410-03	NRP-B-14-0-1	Chromium (Total)	J	MS %R > UCL and RPD >20%
206410-03	NRP-B-14-0-1	Nickel	J	MS %R > UCL and RPD >20%
206410-04	NRP-B-14-3-4	Chromium (Total)	J	MS %R > UCL and RPD >20%
206410-04	NRP-B-14-3-4	Nickel	J	MS %R > UCL and RPD >20%
206410-05	NRP-B-9-0-1	Chromium (Total)	J	MS %R > UCL and RPD >20%
206410-05	NRP-B-9-0-1	Nickel	J	MS %R > UCL and RPD >20%
206410-06	NRP-B-9-3-4	Chromium (Total)	J	MS %R > UCL and RPD >20%
206410-06	NRP-B-9-3-4	Nickel	J	MS %R > UCL and RPD >20%
206410-07	NRP-B-10-0-1	Chromium (Total)	J	MS %R > UCL and RPD >20%
206410-07	NRP-B-10-0-1	Nickel	J	MS %R > UCL and RPD >20%
206410-08	NRP-B-10-3-4	Chromium (Total)	J	MS %R > UCL and RPD >20%
206410-08	NRP-B-10-3-4	Nickel	J	MS %R > UCL and RPD >20%
206410-31	GF-B-9-1-2.5	Chromium (Total)	J	MS %R > UCL and RPD >20%
206410-31	GF-B-9-1-2.5	Nickel	J	MS %R > UCL and RPD >20%
206410-34	GF-B-9-7.5-9	Chromium (Total)	J	MS %R > UCL and RPD >20%
206410-34	GF-B-9-7.5-9	Nickel	J	MS %R > UCL and RPD >20%
206410-36	GF-B-12-1-2.5	Chromium (Total)	J	MS %R > UCL and RPD >20%
206410-36	GF-B-12-1-2.5	Nickel	J	MS %R > UCL and RPD >20%
206410-37	GF-B-12-7.5-9	Chromium (Total)	J	MS %R > UCL and RPD >20%
206410-37	GF-B-12-7.5-9	Nickel	J	MS %R > UCL and RPD >20%
206446-03	AP-MW-1-6-7	Arsenic	J	Field duplicate analysis concentration difference was > 2RL
206446-03	AP-MW-1-6-7	Copper	J	Field duplicate analysis RPD >35%
206446-04	AP-MW-1-6-7-D	Arsenic	J	Field duplicate analysis concentration difference was > 2RL
206446-04	AP-MW-1-6-7-D	Copper	J	Field duplicate analysis RPD >35%
207068-01	OMS-B-1-0-1-070512	Nickel	J	MS/MSD RPD value was >20%
207068-02	OMS-B-1-2-3-070512	Nickel	J	MS/MSD RPD value was >20%
207068-03	OMS-B-2-0-1-070512	Nickel	J	MS/MSD RPD value was >20%
207068-04	OMS-B-2-2-3-070512	Nickel	J	MS/MSD RPD value was >20%
207068-05	OMS-B-3-0-1-070512	Nickel	J	MS/MSD RPD value was >20%

Laboratory ID	Sample ID	Analyte	Qualifier	Qualified Reason
207068-06	Boiler-B-1-1-2-070512	Nickel	**J**	MS/MSD RPD value was >20%
207068-07	Boiler-B-2-1-2-070512	Nickel	**J**	MS/MSD RPD value was >20%
207068-08	Boiler-B-3-1-2-070512	Nickel	**J**	MS/MSD RPD value was >20%
207068-09	Boiler-B-4-1-1.5-070612	Nickel	**J**	MS/MSD RPD value was >20%
207068-10	Boiler-B-5-1-1.5-070612	Nickel	**J**	MS/MSD RPD value was >20%
207068-11	OMS-B-3-2-3-070612	Nickel	**J**	MS/MSD RPD value was >20%
207085-01	CMS-B-1-0-1-070612	Chromium (Total)	**J**	MS/MSD RPD value was >20%
207085-01	CMS-B-1-0-1-070612	Lead	**J**	MS %R > UCL and RPD >20%
207085-02	CMS-B-1-2-3-070612	Chromium (Total)	**J**	MS/MSD RPD value was >20%
207085-02	CMS-B-1-2-3-070612	Lead	**J**	MS %R > UCL and RPD >20%
207085-03	CMS-B-2-0-1-070612	Chromium (Total)	**J**	MS/MSD RPD value was >20%
207085-03	CMS-B-2-0-1-070612	Lead	**J**	MS %R > UCL and RPD >20%
207085-04	CMS-B-2-2-3-070612	Chromium (Total)	**J**	MS/MSD RPD value was >20%
207085-04	CMS-B-2-2-3-070612	Lead	**J**	MS %R > UCL and RPD >20%
207085-05	CMS-B-3-0-1-070612	Chromium (Total)	**J**	MS/MSD RPD value was >20%
207085-05	CMS-B-3-0-1-070612	Lead	**J**	MS %R > UCL and RPD >20%
207085-06	CMS-B-3-2-3-070612	Chromium (Total)	**J**	MS/MSD RPD value was >20%
207085-06	CMS-B-3-2-3-070612	Lead	**J**	MS %R > UCL and RPD >20%
206410-16	REC2-B-10-7-8	Diesel Range Hydrocarbons	**J**	Field duplicate analysis RPD >35%
206410-16	REC2-B-10-7-8	Oil Range Hydrocarbons	**J**	Field duplicate analysis RPD >35%
206410-18	REC2-B-10-7-8-D	Diesel Range Hydrocarbons	**J**	Field duplicate analysis RPD >35%
206410-18	REC2-B-10-7-8-D	Oil Range Hydrocarbons	**J**	Field duplicate analysis RPD >35%
207068-08	Boiler-B-3-1-2-070512	Diesel Range Hydrocarbons	**J**	Extraction was performed past required holding time
207068-08	Boiler-B-3-1-2-070512	Oil Range Hydrocarbons	**J**	Extraction was performed past required holding time
206410-09	REC6-MW-1-6	1,4-Dioxane	**UJ**	RL based on TIC search
206410-09	REC6-MW-1-6	Naphthalene	**J**	Field duplcate analysis RPD >35%
206410-09	REC6-MW-1-6	Vinyl acetate	**UJ**	RL based on TIC search
206410-10	REC6-MW-1-6-D	1,4-Dioxane	**UJ**	RL based on TIC search
206410-10	REC6-MW-1-6-D	Naphthalene	**J**	Field duplcate analysis RPD >35%
206410-10	REC6-MW-1-6-D	Vinyl acetate	**UJ**	RL based on TIC search
206410-37	GF-B-12-7.5-9	1,1,1-Trichloroethane	**UJ**	MS %R value was <LCL (low bias)
206410-37	GF-B-12-7.5-9	1,1-Dichloroethane	**UJ**	MS %R value was <LCL (low bias)
206410-37	GF-B-12-7.5-9	1,1-Dichloroethene	**UJ**	MS %R value was <LCL (low bias)
206410-37	GF-B-12-7.5-9	1,1-Dichloropropene	**UJ**	MS %R value was <LCL (low bias)

Laboratory ID	Sample ID	Analyte	Qualifier	Qualified Reason
206410-37	GF-B-12-7.5-9	2,2-Dichloropropane	**UJ**	MS %R value was <LCL (low bias)
206410-37	GF-B-12-7.5-9	Benzene	**UJ**	MS %R value was <LCL (low bias)
206410-37	GF-B-12-7.5-9	Bromomethane	**UJ**	MS %R value was <LCL (low bias)
206410-37	GF-B-12-7.5-9	Carbon tetrachloride	**R**	MS%R value <10%
206410-37	GF-B-12-7.5-9	Chloroethane	**UJ**	MS %R value was <LCL (low bias)
206410-37	GF-B-12-7.5-9	Chloromethane	**UJ**	MS %R value was <LCL (low bias)
206410-37	GF-B-12-7.5-9	cis-1,2-Dichloroethene	**UJ**	MS %R value was <LCL (low bias)
206410-37	GF-B-12-7.5-9	Dichlorodifluoromethane	**UJ**	MS %R value was <LCL (low bias)
206410-37	GF-B-12-7.5-9	Tetrachloroethene	**UJ**	MS %R value was <LCL (low bias)
206410-37	GF-B-12-7.5-9	trans-1,2-Dichloroethene	**UJ**	MS %R value was <LCL (low bias)
206410-37	GF-B-12-7.5-9	Trichloroethene	**UJ**	MS %R value was <LCL (low bias)
206410-37	GF-B-12-7.5-9	Trichlorofluoromethane	**UJ**	MS %R value was <LCL (low bias)
206410-37	GF-B-12-7.5-9	Vinyl chloride	**UJ**	MS %R value was <LCL (low bias)
207033-03	REC6-MW-1-070212	1,4-Dioxane	**UJ**	Reporting limit was based on TIC search
207033-03	REC6-MW-1-070212	Vinyl acetate	**UJ**	Reporting limit was based on TIC search
207033-04	REC6-MW-1-070212D	1,4-Dioxane	**UJ**	RL based on TIC search
207033-04	REC6-MW-1-070212D	Vinyl acetate	**UJ**	RL based on TIC search
207068-01	OMS-B-1-0-1-070512	Chloromethane	**UJ**	MS %R value was <LCL (low bias)
207068-01	OMS-B-1-0-1-070512	Dichlorodifluoromethane	**UJ**	MS %R value was <LCL (low bias)
207068-01	OMS-B-1-0-1-070512	Trichlorofluoromethane	**UJ**	MS %R value was <LCL (low bias)
207068-01	OMS-B-1-0-1-070512	Vinyl chloride	**UJ**	MS %R value was <LCL (low bias)
207085-02	CMS-B-1-2-3-070612	Dichlorodifluoromethane	**R**	MS %R value <10%.
206410-31	GF-B-9-1-2.5	Pyrene	**J**	LCS/LCSD RPD value was >20%
206410-34	GF-B-9-7.5-9	Pyrene	**J**	LCS/LCSD RPD value was >20%
206410-35	GF-B-9-7.5-9D	Pyrene	**J**	CCV recovery biased high (%D <-20%); LCS/LCSD RPD value was >20% (Low precision)
206446-05	HW-MW-1-0-1	Pyrene	**J**	CCV %D value was <-20% (high bias); LCD %R (high bias) and LCS/LCSD RPD values outside control criteria
206446-06	HW-MW-1-3-4	Pyrene	**J**	CCV %D value was <-20% (high bias); LCD %R (high bias) and LCS/LCSD RPD values outside control criteria
206446-07	HW-MW-1-6-7	Pyrene	**J**	CCV %D value was <-20% (high bias); LCD %R (high bias) and LCS/LCSD RPD values outside control criteria
206446-09	HW-B-2-3-4	Pyrene	**J**	CCV %D value was <-20% (high bias); LCD %R (high bias) and LCS/LCSD RPD values outside control criteria
206446-10	HW-B-2-6-7	Pyrene	**J**	LCD %R and LCS/LCSD RPD values outside control criteria
206446-11	HW-B-1-0-1	Benzo(a)pyrene	**UJ**	Internal standard recovery biased low

Laboratory ID	Sample ID	Analyte	Qualifier	Qualified Reason
206446-11	HW-B-1-0-1	Benzo(b)fluoranthene	**UJ**	Internal standard recovery biased low
206446-11	HW-B-1-0-1	Benzo(g,h,i)perylene	**UJ**	Internal standard recovery biased low
206446-11	HW-B-1-0-1	Benzo(k)fluoranthene	**UJ**	Internal standard recovery biased low
206446-11	HW-B-1-0-1	Dibenzo(a,h)anthracene	**UJ**	Internal standard recovery biased low
206446-11	HW-B-1-0-1	Di-n-octyl phthalate	**UJ**	Internal standard recovery biased low
206446-11	HW-B-1-0-1	Indeno(1,2,3-cd)pyrene	**UJ**	Internal standard recovery biased low
206446-13	HW-B-1-6-7	4,6-Dinitro-2-methylphenol	**UJ**	Internal standard recovery biased low
206446-13	HW-B-1-6-7	4-Bromophenyl phenyl ether	**UJ**	Internal standard recovery biased low
206446-13	HW-B-1-6-7	4-Nitroaniline	**UJ**	Internal standard recovery biased low
206446-13	HW-B-1-6-7	Anthracene	**UJ**	Internal standard recovery biased low
206446-13	HW-B-1-6-7	Carbazole	**UJ**	Internal standard recovery biased low
206446-13	HW-B-1-6-7	Di-n-butyl phthalate	**UJ**	Internal standard recovery biased low
206446-13	HW-B-1-6-7	Fluoranthene	**J**	Internal standard recovery biased low
206446-13	HW-B-1-6-7	Hexachlorobenzene	**UJ**	Internal standard recovery biased low
206446-13	HW-B-1-6-7	N-Nitrosodiphenylamine	**UJ**	Internal standard recovery biased low
206446-13	HW-B-1-6-7	Pentachlorophenol	**UJ**	Internal standard recovery biased low
206446-13	HW-B-1-6-7	Phenanthrene	**J**	Internal standard recovery biased low
206446-13	HW-B-1-6-7	Pyrene	**J**	LCD %R and LCS/LCSD RPD values outside control criteria
207068-09	Boiler-B-4-1-1.5-070612	Benzo(b)fluoranthene	**J**	Internal standard recovery biased high
206410-13	UST29-MW-1-8-9	Fluoranthene	**J**	Field duplicate analysis concentration difference was > 2RL
206410-14	UST29-MW-1-8-9-D	Fluoranthene	**J**	Field duplicate analysis concentration difference was > 2RL
206410-15	REC2-B-10-5-6	Acenaphthene	**UJ**	Low surrogate recovery
206410-15	REC2-B-10-5-6	Acenaphthylene	**UJ**	Low surrogate recovery
206410-15	REC2-B-10-5-6	Anthracene	**UJ**	Low surrogate recovery
206410-15	REC2-B-10-5-6	Benz(a)anthracene	**UJ**	Low surrogate recovery
206410-15	REC2-B-10-5-6	Benzo(a)pyrene	**J**	Low surrogate recovery
206410-15	REC2-B-10-5-6	Benzo(b)fluoranthene	**J**	Low surrogate recovery
206410-15	REC2-B-10-5-6	Benzo(g,h,i)perylene	**J**	Low surrogate recovery
206410-15	REC2-B-10-5-6	Benzo(k)fluoranthene	**UJ**	Low surrogate recovery
206410-15	REC2-B-10-5-6	Chrysene	**J**	Low surrogate recovery
206410-15	REC2-B-10-5-6	Dibenzo(a,h)anthracene	**UJ**	Low surrogate recovery
206410-15	REC2-B-10-5-6	Fluoranthene	**UJ**	Low surrogate recovery
206410-15	REC2-B-10-5-6	Fluorene	**UJ**	Low surrogate recovery
206410-15	REC2-B-10-5-6	Indeno(1,2,3-cd)pyrene	**UJ**	Low surrogate recovery
206410-15	REC2-B-10-5-6	Naphthalene	**UJ**	Low surrogate recovery
206410-15	REC2-B-10-5-6	Phenanthrene	**UJ**	Low surrogate recovery

Laboratory ID	Sample ID	Analyte	Qualifier	Qualified Reason
206410-15	REC2-B-10-5-6	Pyrene	**J**	Low surrogate recovery
206410-15	REC2-B-10-5-6	Total cPAHs TEQ	**J**	Low surrogate recovery
K1206542-002	REC6-MW-1-070612-D	Formaldehyde	**J**	MS/MSD RPD value was >30%
E1200626-002	GF-B-15A-1-2.5	1,2,3,4,7,8-HxCDF	**J**	Chlorobiphenyl ether interference was present
E1200626-002	GF-B-15A-1-2.5	1,2,3,7,8,9-HxCDF	**U**	Ion abundance ratio did not meet method requirement
E1200626-002	GF-B-15A-1-2.5	1,2,3,7,8-PeCDD	**U**	Ion abundance ratio did not meet method requirement
E1200626-002	GF-B-15A-1-2.5	1,2,3,7,8-PeCDF	**U**	Ion abundance ratio did not meet method requirement
E1200626-002	GF-B-15A-1-2.5	2,3,4,7,8-PeCDF	**U**	Ion abundance ratio did not meet method requirement
E1200626-002	GF-B-15A-1-2.5	2,3,7,8-TCDD	**U**	Ion abundance ratio did not meet method requirement
E1200650	GF-B-14-1-2.5	1,2,3,4,7,8-HxCDF	**J**	Chlorodiphenyl ether interference was present
E1200650	GF-B-14-1-2.5	1,2,3,6,7,8-HxCDF	**U**	Ion abundance ratio did not meet method requirement
E1200650	GF-B-14-1-2.5	1,2,3,7,8,9-HxCDD	**U**	Ion abundance ratio did not meet method requirement
E1200650	GF-B-14-1-2.5	1,2,3,7,8-PeCDF	**J**	Chlorodiphenyl ether interference
E1200650	GF-B-14-1-2.5	2,3,4,6,7,8-HxCDF	**J**	Chlorodiphenyl ether
E1200650	GF-B-14-1-2.5	OCDD	**J**	Labeled compound recovery biased low
E1200650	GF-B-14-1-2.5	OCDF	**J**	Labeled compound recovery biased low
E1200652-001	GF-B-2-2.5-4	1,2,3,4,7,8,9-HpCDF	**U**	Ion abundance ratio did not meet method requirement
E1200652-001	GF-B-2-2.5-4	1,2,3,4,7,8-HxCDD	**U**	Ion abundance ratio did not meet method requirement
E1200652-001	GF-B-2-2.5-4	1,2,3,4,7,8-HxCDF	**J**	Chlorobiphneyl ether interference
E1200652-001	GF-B-2-2.5-4	1,2,3,7,8-PeCDD	**U**	Ion abundance ratio did not meet method requirement
E1200652-001	GF-B-2-2.5-4	1,2,3,7,8-PeCDF	**J**	Chlorobiphneyl ether interference
E1200652-001	GF-B-2-2.5-4	2,3,4,6,7,8-HxCDF	**J**	Chlorobiphneyl ether interference
E1200652-001	GF-B-2-2.5-4	2,3,7,8-TCDD	**U**	Ion abundance ratio did not meet method requirement
E1200652-001	GF-B-2-2.5-4	OCDD	**J**	MS/MSD RPD value was >20%
E1200652-002	GF-B-1-1-2.5	1,2,3,4,7,8-HxCDD	**U**	Ion abundance ratio did not meet method requirement
E1200652-002	GF-B-1-1-2.5	1,2,3,7,8,9-HxCDD	**U**	Ion abundance ratio did not meet method requirement
E1200652-002	GF-B-1-1-2.5	OCDF	**U**	Ion abundance ratio did not meet method requirement
E1200652-003	GF-B-4-2.5-4	OCDD	**J**	Labeled compound recovery biased low
E1200652-003	GF-B-4-2.5-4	OCDF	**UJ**	Labeled compound recovery biased low

Laboratory ID	Sample ID	Analyte	Qualifier	Qualified Reason
E1200868	Boiler-B-5-1-1.5-070512	1,2,3,4,7,8,9-HpCDF	**U**	Ion abundance ratio did not meet method requirement
E1200868	GF-B-9-2.5-3.5-D	1,2,3,4,7,8,9-HpCDF	**U**	Ion abundance ratio did not meet method requirement
E1200868	GF-B-9-2.5-3.5-D	1,2,3,4,7,8-HxCDD	**U**	Ion abundance ratio did not meet method requirement
E1200868	Boiler-B-1-1-2-070512	1,2,3,4,7,8-HxCDF	**J**	Chlorobiphenyl ether interference
E1200868	Boiler-B-2-1-2-070512	1,2,3,4,7,8-HxCDF	**J**	Chlorobiphenyl ether interference
E1200868	Boiler-B-4-1-1.5-070512	1,2,3,4,7,8-HxCDF	**J**	Chlorobiphenyl ether interference
E1200868	GF-B-9-2.5-3.5	1,2,3,4,7,8-HxCDF	**U**	Ion abundance ratio did not meet method requirement
E1200868	GF-B-9-2.5-3.5-D	1,2,3,4,7,8-HxCDF	**J**	Chlorobiphenyl ether interference
E1200868	Boiler-B-5-1-1.5-070512	1,2,3,4,7,8-HxCDF	**U**	Ion abundance ratio did not meet method requirement
E1200868	GF-B-12-1-2.5	1,2,3,4,7,8-HxCDF	**U**	Ion abundance ratio did not meet method requirement
E1200868	GF-B-12-1-2.5	1,2,3,6,7,8-HxCDF	**U**	Ion abundance ratio did not meet method requirement
E1200868	GF-B-9-2.5-3.5-D	1,2,3,6,7,8-HxCDF	**U**	Ion abundance ratio did not meet method requirement
E1200868	Boiler-B-5-1-1.5-070512	1,2,3,7,8,9-HxCDD	**U**	Ion abundance ratio did not meet method requirement
E1200868	GF-B-9-2.5-3.5-D	1,2,3,7,8,9-HxCDD	**U**	Ion abundance ratio did not meet method requirement
E1200868	Boiler-B-2-1-2-070512	1,2,3,7,8,9-HxCDF	**J**	Chlorobiphenyl ether interference
E1200868	Boiler-B-4-1-1.5-070512	1,2,3,7,8,9-HxCDF	**U**	Ion abundance ratio did not meet method requirement
E1200868	Boiler-B-2-1-2-070512	1,2,3,7,8-PeCDD	**U**	Ion abundance ratio did not meet method requirement
E1200868	GF-B-9-2.5-3.5-D	1,2,3,7,8-PeCDD	**U**	Ion abundance ratio did not meet method requirement
E1200868	Boiler-B-1-1-2-070512	1,2,3,7,8-PeCDF	**J**	Chlorobiphenyl ether interference
E1200868	Boiler-B-2-1-2-070512	1,2,3,7,8-PeCDF	**J**	Chlorobiphenyl ether interference
E1200868	Boiler-B-4-1-1.5-070512	1,2,3,7,8-PeCDF	**J**	Chlorobiphenyl ether interference
E1200868	GF-B-9-2.5-3.5-D	1,2,3,7,8-PeCDF	**U**	Ion abundance ratio did not meet method requirement
E1200868	Boiler-B-1-1-2-070512	2,3,4,6,7,8-HxCDF	**J**	Chlorobiphenyl ether interference was present
E1200868	Boiler-B-4-1-1.5-070512	2,3,4,6,7,8-HxCDF	**J**	Chlorobiphenyl ether interference

Laboratory ID	Sample ID	Analyte	Qualifier	Qualified Reason
E1200868	GF-B-9-2.5-3.5	2,3,4,6,7,8-HxCDF	**U**	Ion abundance ratio did not meet method requirement
E1200868	Boiler-B-2-1-2-070512	2,3,4,7,8-PeCDF	**J**	Chlorobiphenyl ether interference
E1200868	Boiler-B-4-1-1.5-070512	2,3,4,7,8-PeCDF	**J**	Chlorobiphenyl ether interference was present
E1200868	GF-B-12-1-2.5	2,3,4,7,8-PeCDF	**U**	Ion abundance ratio did not meet method requirement
E1200868	Boiler-B-1-1-2-070512	2,3,7,8-TCDD	**U**	Ion abundance ratio did not meet method requirement
E1200868	GF-B-9-2.5-3.5	OCDD	**J**	Field duplicate analysis concentration difference >2RL
E1200868	GF-B-9-2.5-3.5-D	OCDD	**J**	Field duplicate analysis concentration difference >2RL
E1200868	Boiler-B-1-1-2-070512	OCDF	**J**	Chlorobiphenyl ether interference
E1200868	Boiler-B-2-1-2-070512	OCDF	**J**	Chlorobiphenyl ether interference
E1200868	GF-B-9-2.5-3.5	Total HpCDD	**J**	Field duplicate analysis concentration difference >2RL
E1200868	GF-B-9-2.5-3.5-D	Total HpCDD	**J**	Field duplicate analysis concentration difference >2RL
E1200868	GF-B-9-2.5-3.5	Total HxCDD	**J**	Field duplicate analysis concentration difference >2RL
E1200868	GF-B-9-2.5-3.5-D	Total HxCDD	**J**	Field duplicate analysis concentration difference >2RL
E1200868	GF-B-9-2.5-3.5	Total PeCDD	**J**	Field duplicate analysis concentration difference >2RL
E1200868	GF-B-9-2.5-3.5-D	Total PeCDD	**J**	Field duplicate analysis concentration difference >2RL
E1200868	GF-B-9-2.5-3.5	Total TCDD	**J**	Field duplicate analysis concentration difference >2RL
E1200868	GF-B-9-2.5-3.5-D	Total TCDD	**J**	Field duplicate analysis concentration difference >2RL
E1201140-001	Boiler-B-3-1-2-070512	1,2,3,4,6,7,8-HpCDF	**J**	Labeled compound recovery biased low
E1201140-001	Boiler-B-3-1-2-070512	1,2,3,4,7,8-HxCDF	**UJ**	Labeled compound recovery biased low
E1201140-001	Boiler-B-3-1-2-070512	1,2,3,7,8,9-HxCDD	**U**	Ion abundance ratio did not meet method requirement
E1201140-001	Boiler-B-3-1-2-070512	2,3,4,6,7,8-HxCDF	**UJ**	Labeled compound recovery biased low
E1201140-001	Boiler-B-3-1-2-070512	OCDD	**J**	Labeled compound recovery biased low
E1201140-001	Boiler-B-3-1-2-070512	OCDF	**J**	Labeled compound recovery biased low

Table II. Data Affected by Detections in Method Blank

SDG #	Sample ID	Compound	Original Result	Adjusted Result	Unit	Report Section
206098_CASK	MW-2-060612	Dissolved Beryllium	0.0023 J	**0.02 U**	µg/L	**7.4**
206098_CASK	OMS-MW-1-060612	Dissolved Beryllium	0.0012 J	**0.02 U**	µg/L	**7.4**
206098_CASK	REC7-MW-3-060612	Dissolved Beryllium	0.0009 J	**0.02 U**	µg/L	**7.4**
206098_CASK	REC7-MW-4-060612	Dissolved Beryllium	0.009 J	**0.02 U**	µg/L	**7.4**
206098_CASK	MW-1-060612	Dissolved Thallium	0.005 J	**0.02 U**	µg/L	**7.4**
206098_CASK	MW-2-060612	Dissolved Thallium	0.005 J	**0.02 U**	µg/L	**7.4**
206098_CASK	REC7-MW-3-060612	Dissolved Thallium	0.006 J	**0.02 U**	µg/L	**7.4**
206098_CASK	REC7-MW-4-060612	Dissolved Thallium	0.012 J	**0.02 U**	µg/L	**7.4**
206098_CASK	OMS-MW-1-060612	Dissolved Thallium	0.026	**0.026J**	µg/L	**7.4**
206098_CASK	MW-2-060612	Total Beryllium	0.0005 J	**0.02 U**	µg/L	**7.4**
206098_CASK	REC7-MW-4-060612	Total Beryllium	0.0005 J	**0.02 U**	µg/L	**7.4**
206098_CASK	MW-2-060612	Total Thallium	0.004 J	**0.02 U**	µg/L	**7.4**
206098_CASK	REC7-MW-4-060612	Total Thallium	0.008 J	**0.02 U**	µg/L	**7.4**
206136_CASK	REC3-MW-1-060712	Dissolved Beryllium	0.0012 J	**0.02 U**	µg/L	**7.4**
206136_CASK	UST70-MW-2-060712	Dissolved Beryllium	0.0014 J	**0.02 U**	µg/L	**7.4**
206136_CASK	REC3-MW-1-060712	Dissolved Thallium	0.007 J	**0.02 U**	µg/L	**7.4**
206136_CASK	UST70-MW-2-060712	Dissolved Thallium	0.014 J	**0.02 U**	µg/L	**7.4**
E1200868	Boiler-B-5-1-1.5-070512	1,2,3,4,7,8-HxCDF	0.212 J	**0.212 U**	*n*g/kg	**8.5**
E1200868	GF-B-12-1-2.5	1,2,3,4,7,8-HxCDF	0.247 J	**0.247 U**	*n*g/kg	**8.5**
E1200868	GF-B-12-1-2.5	2,3,4,6,7,8-HxCDF	0.195 J	**0.195 U**	*n*g/kg	**8.5**
E1200868	GF-B-9-2.5-3.5	2,3,4,6,7,8-HxCDF	0.0998 J	**0.0998 U**	*n*g/kg	**8.5**
206136_CASK	REC3-MW-1-060712	Ammonia as Nitrogen	0.041 J	**0.05 U**	mg/L	**10.4**

Table III. Data Qualifiers are defined as follows:

Data Qualifier	Definition
R	The sample results are unusable due to the quality of the data generated because certain criteria were not met. The analyte may or may not be present in the sample.
J	The analyte was detected above the reported quantitation limit, and the reported concentration was an estimated value.
U	The analyte was analyzed for, but was considered not detected at the reporting limit or reported value.
UJ	The analyte was analyzed for, and the associated quantitation limit was an estimated value.

REFERENCES

USEPA *Contract Laboratory Program National Functional Guidelines for Chlorinated Dibenzo-p-Dioxins (CDDs) and Chlorinated Dibenzofurans (CDFs) Data Review,* Office of Superfund Remediation and Technical Innovation, U.S. Environmental Protection Agency, September 2011, USEPA 540/R-11/016

USEPA *Contract Laboratory Program National Functional Guidelines for Inorganic Superfund Data Review,* Office of Superfund Remediation and Technical Innovation, U.S. Environmental Protection Agency, January 2010, USEPA 540/R-10/011

USEPA *Contract Laboratory Program National Functional Guidelines for Superfund Organic Methods Data Review,* Office of Superfund Remediation and Technical Innovation, U.S. Environmental Protection Agency, June 2008, USEPA-540-R-08-01.

USEPA *Method 1631, Revision E: Mercury in Water by Oxidation, Purge and Trap, and Cold Vapor Atomic Fluorescence Spectrometry, Office of Water, U.S. Environmental Protection Agency, August 2002, EPA-821-R-02-019.*

USEPA *Test Methods for Evaluating Solid Waste (SW-846). Third Edition and Revised Update IIIA.* Office of Solid Waste and Emergency Response, Washington, D.C. April 1998.

USEPA *Region 10 Standard Operating Procedure for the Validation of Polychlorinated Dibenzo-p-Dioxin (PCDD) and Polychlorinated Dibenzofuran (PCDF) Data*, January 1996.

USEPA *Methods for Chemical Analysis of Water and Wastes,* EPA-600/4-79-020, March 1983 and updates.

Standard Methods for the Examination of Water and Wastewater, American Public Health Association, 20th Edition, 1995.

Ecology (Washington State Department of). 1997. *Analytical Methods for Petroleum Hydrocarbons.* Publication No. ECY 97-602. June 1997.

PSEP *Recommended Guidelines for Measuring Organic Compounds in Puget Sound Water, Sediment and Tissue Samples,* Puget Sound Water Quality Authority, April 1997.

Aspect Consulting, LLC. *Quality Assurance Project Plan, Port of Bellingham Former GP Mill Property RI/FS,* Seattle, Washington. September, 2009.

Appendix A

Field duplicate RPD is indicative of field and laboratory precision and sample homogeneity in combination. The CLP National Functional Guidelines or *Work Plan* do not specify criteria for field duplicate evaluation. An advisory criterion of 35% was applied to evaluating the RPD values of field duplicate results that are ≥5xRL. For results that are <5xRL, an advisory criterion of ±2RL was applied to evaluating the concentration differences. The RPD (or concentration difference as applicable) values and data qualification for detected compounds in field duplicates are presented as follows:

Analyte	Units	RL	Parent & Field Duplicate Sample Result				RPD	Delta	Data Qualifier
			AP-MW-1-070312		AP-MW-1-070312-D				
Arsenic, Dissolved	µg/L	1	1.2		1.22			0.02	
Arsenic, Total	µg/L	1	1	U	1.11			0.11	
Nickel, Dissolved	µg/L	1	1.85		2.04			0.19	
Nickel, Total	µg/L	1	1.8		2.02			0.22	
Zinc, Dissolved	µg/L	1	1.39		1.74			0.35	
Zinc, Total	µg/L	1	1.68		1.82			0.14	
			AP-MW-1-1-2		AP-MW-1-1-2-D				
Antimony	mg/kg	1	1	U	1	U		0	
Arsenic	mg/kg	1	4.86		4.62			0.24	
Beryllium	mg/kg	1	1	U	1	U		0	
Cadmium	mg/kg	1	1	U	1	U		0	
Chromium	mg/kg	1	11.6		11		5%		
Copper	mg/kg	1	11.8		9.5		22%		
Lead	mg/kg	1	2.42		2.89			0.47	
Mercury	mg/kg	0.1	0.1	U	0.1	U		0	
Nickel	mg/kg	1	19		18.6		2%		
Selenium	mg/kg	1	1	U	1	U		0	
Silver	mg/kg	1	1	U	1	U		0	
Thallium	mg/kg	1	1	U	1	U		0	
Zinc	mg/kg	1	21.9		21.5		2%		
pH	units	0.1	7.44		7.45		0%		
			AP-MW-1-6-7		AP-MW-1-6-7-D				
Antimony	mg/kg	1	1	U	1	U		0	
Arsenic	mg/kg	1	5.72		2.57			3.15	**J/J**
Beryllium	mg/kg	1	1	U	1	U		0	
Cadmium	mg/kg	1	1	U	1	U		0	
Chromium	mg/kg	1	18.3		14.6		22%		

Analyte	Units	RL	Parent & Field Duplicate Sample Result				RPD	Delta	Data Qualifier
Copper	mg/kg	1	17.2		12		36%		**J/J**
Lead	mg/kg	1	2.52		2.13			0.39	
Mercury	mg/kg	0.1	0.1	U	0.1	U		0	
Nickel	mg/kg	1	28.7		20.6		33%		
Selenium	mg/kg	1	1	U	1	U		0	
Silver	mg/kg	1	1	U	1	U		0	
Thallium	mg/kg	1	1	U	1	U		0	
Zinc	mg/kg	1	32.2		27.2		17%		
			GF-B-9-2.5-3.5		**GF-B-9-2.5-3.5-D**				
1,2,3,4,6,7,8-HpCDD	*p*g/g	2.56	3.73	B	8.01	B		4.28	
1,2,3,4,6,7,8-HpCDF	*p*g/g	2.56	0.72	BJ	1.22	BJ		0.5	
1,2,3,4,7,8,9-HpCDF	*p*g/g	2.56	2.56	U	0.0979	JK		0.098	
1,2,3,4,7,8-HxCDD	*p*g/g	2.56	0.107	J	0.186	JK		0.079	
1,2,3,4,7,8-HxCDF	*p*g/g	2.56	0.169	BJK	0.36	BJ		0.191	
1,2,3,6,7,8-HxCDD	*p*g/g	2.56	0.27	J	0.443	J		0.173	
1,2,3,6,7,8-HxCDF	*p*g/g	2.56	0.0983	J	0.167	JK		0.069	
1,2,3,7,8,9-HxCDD	*p*g/g	2.56	0.232	J	0.255	JK		0.023	
1,2,3,7,8,9-HxCDF	*p*g/g	2.56	2.56	U	2.15	U		0	
1,2,3,7,8-PeCDD	*p*g/g	2.56	2.56	U	0.175	JK		0.175	
1,2,3,7,8-PeCDF	*p*g/g	2.56	2.56	U	0.193	JK		0.193	
2,3,4,6,7,8-HxCDF	*p*g/g	2.56	0.0998	BJK	0.219	BJ		0.119	
2,3,4,7,8-PeCDF	*p*g/g	2.56	2.56	U	0.264	J		2.296	
2,3,7,8-TCDD	*p*g/g	1.02	1.02	U	0.86	U		0	
2,3,7,8-TCDF	*p*g/g	1.02	1.02	U	0.86	U		0	
OCDD	*p*g/g	5.11	19	B	139	B		120	**J/J**
OCDF	*p*g/g	5.11	1.51	BJ	4.24	BJ		2.73	
Total HpCDD	*p*g/g	2.56	8.28		16.8			8.52	**J/J**
Total HpCDF	*p*g/g	2.56	2.1	J	3.1			1	
Total HxCDD	*p*g/g	2.56	8.76		16.2			7.44	**J/J**
Total HxCDF	*p*g/g	2.56	1.16	J	1.89			0.73	
Total PeCDD	*p*g/g	2.56	4.69		10.7	J		6.01	**J/J**
Total PeCDF	*p*g/g	2.56	0.446	J	3.38			2.934	
Total TCDD	*p*g/g	1.02	3.88		10			6.12	**J/J**
Total TCDF	*p*g/g	1.02	1.02	U	1.03			1.03	
			GF-B-9-7.5-9		**GF-B-9-7.5-9-D**				
Pyrene	mg/kg	0.06	0.03		0.03			0	

Analyte	Units	RL	Parent & Field Duplicate Sample Result				RPD	Delta	Data Qualifier
			NRP-MW-1-060812		**NRP-MW-1-060812D**				
Ammonia	mg/L	0.05	3.26		3.26		0%		
Dissolved Sulfide	mg/L	0.05	0.05	U	0.05	U		0	
			REC2-B-10-7-8		**REC2-B-10-7-8-D**				
TPH-Motor Oil	mg/kg	250	3100		1800		53%		**J/J**
TPH-Diesel	mg/kg	50	990		540		59%		**J/J**
Acenaphthene	mg/kg	0.1	0.1	U	0.1	UJ		0	
Acenaphthylene	mg/kg	0.1	0.1	U	0.1	UJ		0	
Anthracene	mg/kg	0.1	0.1	U	0.1	UJ		0	
Benz(a)anthracene	mg/kg	0.1	0.1	U	0.1	UJ		0	
Benzo(a)pyrene	mg/kg	0.1	0.26		0.26	J		0	
Benzo(b)fluoranthene	mg/kg	0.1	0.1	U	0.11	J		0.01	
Benzo(g,h,i)perylene	mg/kg	0.1	0.54		0.41	J		0.13	
Benzo(k)fluoranthene	mg/kg	0.1	0.1	U	0.1	UJ		0	
Chrysene	mg/kg	0.1	0.31		0.21	J		0.1	
Dibenzo(a,h)anthracene	mg/kg	0.1	0.1	U	0.1	UJ		0	
Fluoranthene	mg/kg	0.1	0.1	U	0.1	UJ		0	
Fluorene	mg/kg	0.1	0.1	U	0.1	UJ		0	
Indeno(1,2,3-cd)pyrene	mg/kg	0.1	0.25		0.2	J		0.05	
Naphthalene	mg/kg	0.1	0.1	U	0.1	U		0	
Phenanthrene	mg/kg	0.1	0.1	U	0.1	UJ		0	
Pyrene	mg/kg	0.1	0.14		0.27	J		0.13	
			REC6-MW-1-070212		**REC6-MW-1070212D**				
TPH-Gasoline	µg/L	2000	24000		25000	4%			
1,2,4-Trimethylbenzene	µg/L	1	9.3		8.9	4%			
1,3,5-Trimethylbenzene	µg/L	1	4.3		4.2		0.1		
Acetone	µg/L	10	14		14		0		
Ethylbenzene	µg/L	100	2000		2000	0%			
Isopropylbenzene	µg/L	1	14		13	7%			
m,p-Xylenes	µg/L	200	6900		6900	0%			
Naphthalene	µg/L	1	1.7		1.4		0.3		
n-Propylbenzene	µg/L	1	7.7		7.4	4%			
o-Xylene	µg/L	100	1600		1600	0%			
Toluene	µg/L	1	18		17	6%			
			REC6-MW-1-070612		**REC6-MW-1-070612D**				
Formaldehyde	µg/L	100	30	J	29	J		1	

Analyte	Units	RL	Parent & Field Duplicate Sample Result				RPD	Delta	Data Qualifier
			REC6-MW-1-6		**REC6-MW-1-6-D**				
TPH-Gasoline	mg/kg	200	9700		7900		20%		
1,2,4-Trimethylbenzene	mg/kg	0.05	9.3		9.5		2%		
1,2-Dichlorobenzene	mg/kg	0.05	0.4		0.42		5%		
1,3,5-Trimethylbenzene	mg/kg	0.05	5.1		4.6		10%		
1,3,5-Trimethylbenzene	mg/kg	2.5	5.5		4.5			1	
Ethylbenzene	mg/kg	25	630		660		5%		
Isopropylbenzene	mg/kg	0.05	9.6		7.9		19%		
m,p-Xylenes	mg/kg	50	1800		2300		24%		
Naphthalene	mg/kg	0.05	0.9		1.3		36%		**J/J**
n-Propylbenzene	mg/kg	0.05	7.6		6.9		10%		
o-Xylene	mg/kg	2.5	450		500		11%		
p-Isopropyltoluene	mg/kg	0.05	0.33		0.29		13%		
sec-Butylbenzene	mg/kg	0.05	0.27		0.22		20%		
Toluene	mg/kg	0.05	1.6		2.2		32%		
			UST29-MW-1-070212		**UST29-MW-1-070212D**				
TPH-Motor Oil	µg/L	500	500	U	500	U		0	
TPH_Diesel	µg/L	100	100	U	100	U		0	
Total Suspended Solids	mg/L	10	10	U	10	U		0	
Acenaphthene	µg/L	0.05	0.18		0.19		5%		
Acenaphthylene	µg/L	0.05	0.05	U	0.05	U		0	
Anthracene	µg/L	0.05	0.059		0.065			0.006	
Benz(a)anthracene	µg/L	0.01	0.036		0.042			0.006	
Benzo(a)pyrene	µg/L	0.01	0.018		0.023			0.005	
Benzo(b)fluoranthene	µg/L	0.01	0.026		0.033			0.007	
Benzo(k)fluoranthene	µg/L	0.01	0.01	U	0.011			0.001	
Chrysene	µg/L	0.01	0.037		0.041			0.004	
Fluoranthene	µg/L	0.05	0.19		0.22			0.03	
Fluorene	µg/L	0.05	0.085		0.09			0.005	
Indeno(1,2,3-cd)pyrene	µg/L	0.01	0.01	U	0.011			0.001	
Naphthalene	µg/L	0.05	0.064		0.065			0.001	
Phenanthrene	µg/L	0.05	0.29		0.31			0.02	
Pyrene	µg/L	0.05	0.16		0.18			0.02	
			UST29-MW-1-7-8		**UST29-MW-1-7-8-D**				
TPH-Motor Oil	mg/kg	250	920		990		7%		
TPH-Diesel	mg/kg	50	1700		1500		13%		

Analyte	Units	RL	Parent & Field Duplicate Sample Result				RPD	Delta	Data Qualifier
Ethylbenzene	mg/kg	0.05	0.056		0.05	U		0.056	
Isopropylbenzene	mg/kg	0.05	1.1		1		10%		
m,p-Xylenes	mg/kg	0.1	0.18		0.12			0.06	
Naphthalene	mg/kg	0.05	0.2		0.19		5%		
n-Propylbenzene	mg/kg	0.05	0.83		0.76		9%		
			UST29-MW-1-8-9		**UST29-MW-1-8-9-D**				
Anthracene	mg/kg	10	10	U	12			2	
Benz(a)anthracene	mg/kg	10	18		30			12	
Benzo(a)pyrene	mg/kg	10	12		24			12	
Benzo(b)fluoranthene	mg/kg	10	15		30			15	
Benzo(g,h,i)perylene	mg/kg	10	10	U	12			12	
Benzo(k)fluoranthene	mg/kg	10	10	U	12			12	
Chrysene	mg/kg	10	20		34			14	
Fluoranthene	mg/kg	10	37		58			21	**J/J**
Indeno(1,2,3-cd)pyrene	mg/kg	10	10	U	15			15	
Phenanthrene	mg/kg	10	25		37			12	
Pyrene	mg/kg	10	32		49			17	

Notes:

B – The anakyte was also detected in the associated blank.
Delta – Concentration difference between the parent sample and its field duplicate
J – The reported value for the analyte was an estimated value.
K – The ion ratio for this detection did not meet the method requirement.
mg/kg – milligram per kilogram
mg/L – milligram per liter
*p*g/g – pictogram per gram
RL – Reporting limit
RPD – Relative percent difference
U – The analyte was not detected at or above the reporting limit.
µg/L – microgram per liter

Data Validation Report

Port of Bellingham Former GP Mill Property RI/FS
Kimberly Clark, Washington

Round 3 Soil and Groundwater Sampling

Prepared for:

Aspect Consulting LLC
401 Second Ave South, Suite 201
Seattle, WA 98014

Prepared by:

Pyron Environmental, Inc.
3530 32nd Way, NW
Olympia, WA 98502

Approved By: _____ Date: ***12/23/2012***

Mingta Lin, Senior Project Chemist

ACRONYMS

%D	percent difference
%D_f	percent drift
%R	percent recovery
%RSD	percent relative standard deviation
AMU	atomic mass unit
CCB	continuing calibration blank
CCC	calibration check compound
CCV	continuing calibration verification
CF	calibration factor
CLP	U.S. EPA Contract Laboratory Program
COC	chain-of-custody
CVAFS	cold vapor atomic fluorescent spectrometry
DDD	dichlorodiphenyldichloroethane
DDE	dichlorodiphenyldichloroethylene
DDT	dichlorodiphenyltrichloroethane
DFTPP	decafluorotriphenylphosphine
ECD	electron capture detector
EDB	1,2-dibromoethane
EPA	U.S. Environmental Protection Agency
FID	Flame ionization detector
GC/MS	gas chromatograph/mass spectrometer
GFAA	graphite furnace atomic absorption spectrometer
GPC	gel permeation chromatography
HPLC	high performance liquid chromatography
ICAL	initial calibration
ICB	initial calibration blank
ICP/MS	inductively coupled plasma/ mass spectrometer
ICSA	ICP interference check sample solution A
ICV	initial calibration verification
LCS	laboratory control sample
LCSD	laboratory control sample duplicate
MDL	method detection limit
µg/kg	microgram per kilogram
µg/L	microgram per liter

mg/kg	milligram per kilogram
mg/L	Milligram per liter
MS	matrix spike
MSD	matrix spike duplicate
NFGs	CLP National Functional Guidelines for Data Review (EPA 2008 – Organics; EPA 2010 – Inorganics)
OPR	ongoing precision and recovery
PCBs	polychlorinated biphenyls
QA/QC	quality assurance/quality control
QAPP	quality assurance project plan
RF	response factor
RL	reporting limit
RPD	relative percent difference
RRT	relative retention time
SDG	sample delivery group
SIM	selective ion monitoring
SVOCs	semi-volatile organic compounds
TSS	total suspended solids
VOCs	volatile organic compounds

INTRODUCTION

This report presents and discusses findings of the data validation performed on analytical data for soil samples collected during August and September 2012 for the referenced project. The laboratory reports validated herein were submitted by Friedman & Bruya, Inc. and Columbia Analytical Services, Inc. (CAS, part of ALS Group) in Kelso, Washington.

A level III data validation was performed on this laboratory report. The validation followed the procedures specified in USEPA CLP Functional Guidelines ([NFGs], EPA 2008 – Organics; EPA 2010 – Inorganics), with modifications to accommodate project and analytical method requirements. The numerical quality assurance/quality control (QA/QC) criteria applied to the validation were in accordance with those specified in the quality assurance project plans ([QAPPs], Aspect, 2009) and the current performance-based control limits established by the laboratory (laboratory control limits). Instrument calibration, frequency of QC analyses, and analytical sequence requirements were evaluated against the respective analytical methods.

Validation findings are discussed in each section pertinent to the QC parameter for each type of analysis. Qualified data with applied data qualifiers are summarized in the **Summary** section at the end of this report.

Samples and the associated analyses validated herein are summarized as follows:

Field Sample ID	Laboratory Sample ID	Sample Date	Sample Type	Analysis					
				VOCs	SVOCs PAHs	PCBs	TPH-G TPH-Dx	Metals	Miscellaneous
MW-1-082712	208375-01	8/27/12	Water	X	X		X	X(T)	TSS
MW-2-082712	208375-02	8/27/12	Water	X	X		X	X(T,D)	TSS
MW-4-082712	208375-03	8/27/12	Water	X	PAHs		X	Pb(T,D)	TSS
MW-3-082712	208375-04	8/27/12	Water	X	PAHs		X		TSS
MW-4-082712-D	208375-05	8/27/12	Water	X	PAHs		X	Pb(T,D)	TSS
UST68-MW-1-082712	208375-06	8/27/12	Water	X			TPH-G		EDB,TSS
UST68-MW-2-082712	208375-07	8/27/12	Water	X			TPH-G		EDB,TSS
REC2-MW-5-082712	208375-08	8/27/12	Water	X	PAHs		X		TSS
UST68-MW-4-082712	208375-09	8/27/12	Water	X			TPH-G		EDB,TSS
OMS-MW-1-082812	208404-01	8/28/12	Water	X	X		X	X(D)	TSS
REC7-MW-3-082812	208404-02	8/28/12	Water	X	SVOCs			X(D)	TSS
UST68-MW-5-082812	208404-03	8/28/12	Water	X			TPH-G		EDB,TSS
REC7-MW-4-082812	208404-04	8/28/12	Water	X	SVOCs		X	X(T,D)	TSS
HW-MW-1-082812	208404-05	8/28/12	Water	X	PAHs		X	X(D)	TSS
REC6-MW-1-082812	208404-06	8/28/12	Water	X			X		

Field Sample ID	Laboratory Sample ID	Sample Date	Sample Type	Analysis					
				VOCs	SVOCs PAHs	PCBs	TPH-G TPH-Dx	Metals	Miscellaneous
REC6-MW-1-082812-D	208404-07	8/28/12	Water	X					
UST29-MW-1-082812	208404-08	8/28/12	Water	X	PAHs		X		TSS
UST29-MW-1-082812-D	208404-09	8/28/12	Water				TPH-Dx		
UST69-MW-1-082812	208404-10	8/28/12	Water	X			TPH-G	Pb(T,D)	EDB,TSS
UST69-MW-1-082812-D	208404-11	8/28/12	Water	X			TPH-G		EDB,TSS
UST70-MW-1-082912	208426-01	8/29/12	Water		PAHs		TPH-Dx		TSS
REC3-MW-1-082912	208426-02	8/29/12	Water	X	X		TPH-Dx	X(D)	TSS
UST70-MW-2-082912	208426-03	8/29/12	Water	X	X		TPH-Dx	X(D)	TSS
MW-6-082912	208426-04	8/29/12	Water	X	X		X	X(T,D)	TSS
UG-MW-2-082912	208426-05	8/29/12	Water	X				X(D)	
CMS-MW-1-082912	208426-06	8/29/12	Water	X	PAHs		X	X(T,D)	
REC5-MW-1-082912	208426-07	8/29/12	Water	X				X(T,D)	
UST71-MW-1-082912	208426-08	8/29/12	Water	X	PAHs		TPH-Dx		
REC5-MW-1-082912-D	208426-09	8/29/12	Water					X(T,D)	
UG-MW-1-083012	208463-01	8/30/12	Water					X(T,D)	TSS
REC6-MW-2-083012	208463-02	8/30/12	Water	X	SVOCs		X	X(D)	TSS
REC7-MW-2-083012	208463-04	8/30/12	Water	X	SVOCs			X(T,D)	TSS
NRP-MW-3-083012	208463-05	8/30/12	Water	X	X		X	X(D)	TSS
REC7-MW-1-083012	208463-06	8/30/12	Water	X	SVOCs			X(D)	TSS
NRP-MW-5-083012	208463-07	8/30/12	Water					X(T,D)	TSS
NRP-MW-4-083012	208463-08	8/30/12	Water					X(T,D)	TSS
AP-MW-1-083112	208491-01	8/31/12	Water					X(T,D)	TSS
MW-5-083112	208491-02	8/31/12	Water	X	X		X	X(D)	TSS
NRP-MW-2-083112	208491-03	8/31/12	Water	X	X		X	X(D)	TSS
NRP-MW-1-083112	208491-04	8/31/12	Water	X	PAHs		X	X(D)	TSS
NRP-MW-1-083112-D	208491-05	8/31/12	Water					X(D)	
REC1-MW-2-6-7	209028-01	9/4/12	Soil	X	PAHs		X		
REC1-MW-3-5.5-6.5	209028-02	9/4/12	Soil	X	PAHs		X		
REC1-MW-3-12-13	209028-03	9/4/12	Soil	X	PAHs		X		
REC1-MW-3-12-13-D	209028-04	9/4/12	Soil				TPH-Dx		
REC1-MW-3-24-25	209028-05	9/4/12	Soil	X	PAHs		X		
REC1-MW-1-5-6	209028-06	9/4/12	Soil	X	PAHs		X		
REC1-MW-1-11-12	209028-07	9/4/12	Soil	X	PAHs		X		
REC1-MW-1-13-14	209028-08	9/4/12	Soil	X	PAHs		X		

Field Sample ID	Laboratory Sample ID	Sample Date	Sample Type	Analysis					
				VOCs	SVOCs PAHs	PCBs	TPH-G TPH-Dx	Metals	Miscellaneous
REC1-MW-1-11-12-D	209028-09	9/4/12	Soil		PAHs				
REC1-MW-8-7-8	209028-10	9/4/12	Soil	X	PAHs		X		
REC1-MW-8-12-13	209028-11	9/4/12	Soil	X	PAHs		X		
REC1-MW-8-15-16	209028-12	9/4/12	Soil	X	PAHs		X		
REC1-MW-9-6-7	209066-01	9/5/12	Soil		PAHs		X		
GF11-B-3-0-1	209066-02	9/5/12	Soil	X				Pb	
GF11-B-3-2-3	209066-03	9/5/12	Soil					Pb	
GF11-B-3-5-6	209066-04	9/5/12	Soil					Pb	
GF11-B-1-0-1	209066-06	9/5/12	Soil					Pb	
GF11-B-1-2-3	209066-07	9/5/12	Soil					Pb	
GF11-B-1-2-3-D	209066-08	9/5/12	Soil					Pb	
GF11-B-1-5-6	209066-09	9/5/12	Soil					Pb	
GF11-B-2-0-1	209066-11	9/5/12	Soil					Pb	
GF11-B-2-2-3	209066-12	9/5/12	Soil					Pb	
GF11-B-2-5-6	209066-13	9/5/12	Soil					Pb	
GF11-B-2-7-8	209066-14	9/5/12	Soil					Pb	
Boiler-B-3A-1-2	209066-15	9/5/12	Soil		PAHs		TPH-Dx	X	
Boiler-B-3A-4-5	209066-16	9/5/12	Soil		PAHs		TPH-Dx	X	
Boiler-B-3A-6.5-7.5	209066-17	9/5/12	Soil		PAHs		TPH-Dx	X	
Boiler-MW-1-10-11	209066-20	9/5/12	Soil		PAHs		TPH-Dx	X	
Boiler-MW-1-12-13	209066-21	9/5/12	Soil		PAHs		TPH-Dx	X	
Boiler-MW-1-16-17	209066-22	9/5/12	Soil		PAHs		TPH-Dx	X	
Boiler-B-3B-1-2	209066-23	9/5/12	Soil		PAHs		TPH-Dx	X	
Boiler-B-3B-4-5	209066-24	9/5/12	Soil		PAHs		TPH-Dx	X	
DA-B-1-1-2	209066-25	9/5/12	Soil		PAHs		TPH-Dx		
DA-B-1-5-6	209066-26	9/5/12	Soil		PAHs		TPH-Dx		
DA-B-1-7-8	209066-27	9/5/12	Soil		PAHs		TPH-Dx		
Boiler-HA-2A-1-1	209066-28	9/5/12	Soil		PAHs		TPH-Dx	As, Pb	
Boiler-HA-2A-2-3	209066-29	9/5/12	Soil		PAHs		TPH-Dx	As, Pb	
Boiler-HA-2C-0-1	209066-30	9/5/12	Soil		PAHs		TPH-Dx	As, Pb	
Boiler-HA-2C-2-3	209066-31	9/5/12	Soil		PAHs		TPH-Dx	As, Pb	
Boiler-HA-2B-0-1	209066-32	9/5/12	Soil		PAHs		TPH-Dx	As, Pb	
Boiler-HA-2B-0-1-D	209066-33	9/5/12	Soil					As, Pb	
REC5-HA-1-0-1	209066-34	9/5/12	Soil					X	

Field Sample ID	Laboratory Sample ID	Sample Date	Sample Type	Analysis					
				VOCs	SVOCs PAHs	PCBs	TPH-G TPH-Dx	Metals	Miscellaneous
REC5-HA-1-0-1-D	209066-35	9/5/12	Soil					X	
REC5-HA-1-2	209066-36	9/5/12	Soil					X	
REC5-HA-2-0-1	209066-37	9/5/12	Soil					X	
REC5-HA-2-2-3	209066-38	9/5/12	Soil					X	
REC5-HA-3-0-1	209066-39	9/5/12	Soil					X	
REC5-HA-3-2-3	209066-40	9/5/12	Soil					X	
REC5-HA-4-0-1	209066-41	9/5/12	Soil					X	
REC5-HA-4-0-1-D	209066-42	9/5/12	Soil					X	
REC5-HA-4-2-3	209066-43	9/5/12	Soil					X	
REC5-HA-5-0-1	209066-44	9/5/12	Soil					X	
REC5-HA-5-2-3	209066-45	9/5/12	Soil					X	
GF9-B-1-4-4.5	209066-46	9/6/12	Soil		PAHs		TPH-Dx		
GF9-B-1-5-6	209066-47	9/6/12	Soil		PAHs		TPH-Dx		
GF9-B-1-8-9	209066-48	9/6/12	Soil		PAHs		TPH-Dx		
GF9-MW-1-5.5-6.5	209066-50	9/6/12	Soil		PAHs		TPH-Dx		
GF9-MW-1-5.5-6.5-D	209066-51	9/6/12	Soil		PAHs		TPH-Dx		
GF9-MW-1-10-11	209066-52	9/6/12	Soil		PAHs		TPH-Dx		
GF9-MW-1-13-14	209066-53	9/6/12	Soil		PAHs		TPH-Dx		
GF9-B-2-3-3.5	209066-54	9/6/12	Soil		PAHs		TPH-Dx		
GF9-B-2-6-7	209066-55	9/6/12	Soil		PAHs		TPH-Dx		
GF9-B-2-9-9.5	209066-56	9/6/12	Soil		PAHs		TPH-Dx		
HW-B-3-0-1	209066-57	9/6/12	Soil					As, Pb	
HW-B-3-3-4	209066-58	9/6/12	Soil					As, Pb	
HW-B-3-6-7	209066-59	9/6/12	Soil					As, Pb	
HW-B-4-0-1	209066-61	9/6/12	Soil					As, Pb	
HW-B-4-3.5-4	209066-62	9/6/12	Soil					As, Pb	
HW-B-4-6-6.5	209066-63	9/6/12	Soil					As, Pb	
NRP-B-17-8-9	209066-65	9/6/12	Soil	X	PAHs		X		
NRP-B-17-8-9-D	209066-66	9/6/12	Soil				TPH-G		
NRP-B-17-11-12	209066-67	9/6/12	Soil	X	PAHs		X		
NRP-B-17-12-13	209066-68	9/6/12	Soil	X	PAHs		X		
NRP-B-22-7-8	209066-69	9/6/12	Soil	X	PAHs		X		
NRP-B-22-11-12	209066-70	9/6/12	Soil	X	PAHs		X		
NRP-B-22-11-12-D	209066-71	9/6/12	Soil	X	PAHs		X		

Field Sample ID	Laboratory Sample ID	Sample Date	Sample Type	Analysis					
				VOCs	SVOCs PAHs	PCBs	TPH-G TPH-Dx	Metals	Miscellaneous
NRP-B-22-15.5-16.5	209066-72	9/6/12	Soil	X	PAHs		X		
NRP-B-18-8-9	209066-73	9/6/12	Soil	X	PAHs		X		
NRP-B-18-11.5-12.5	209066-74	9/6/12	Soil	X	PAHs		X		
NRP-B-18-11.5-12.5-D	209066-75	9/6/12	Soil	X	PAHs		X		
NRP-B-18-14-15	209066-76	9/6/12	Soil	X	PAHs		X		
NRP-B-19-8-9	209066-77	9/6/12	Soil	X	PAHs		X		
NRP-B-19-10-11	209066-78	9/6/12	Soil	X	PAHs		X		
NRP-B-19-13-14	209066-79	9/6/12	Soil	X	PAHs		X		
HB-B-3-1-2	209066-80	9/6/12	Soil	X	PAHs	X	TPH-Dx	X	
HB-B-3-3-4	209066-81	9/6/12	Soil	X	PAHs		TPH-Dx	X	
HB-B-3-6-7	209066-82	9/6/12	Soil	X	PAHs		TPH-Dx	X	
NRP-B-21-7-8	209095-01	9/7/12	Soil	X	PAHs		X		
NRP-B-21-10.5-11.5	209095-02	9/7/12	Soil	X	PAHs		X		
NRP-B-21-14-15	209095-03	9/7/12	Soil	X	PAHs		X		
NRP-B-20-8-9	209095-04	9/7/12	Soil	X	PAHs		X		
NRP-B-20-10-11	209095-05	9/7/12	Soil	X	PAHs		X		
NRP-B-20-12-13	209095-06	9/7/12	Soil	X	PAHs		X		
HB-B-1-2-3	209095-07	9/7/12	Soil	X	SVOCs	X	TPH-Dx	X	
HB-B-1-2-3-D	209095-08	9/7/12	Soil	X	SVOCs		TPH-Dx	X	
HB-B-1-3-4	209095-09	9/7/12	Soil	X	SVOCs		TPH-Dx	X	
HB-B-1-6-7	209095-10	9/7/12	Soil	X	SVOCs		TPH-Dx	X	
HB-MW-1-1.5-2	209095-11	9/7/12	Soil	X	SVOCs	X	TPH-Dx	X	
HB-MW-1-1.5-2-D	209095-12	9/7/12	Soil		SVOCs				
HB-MW-1-3-3.5	209095-13	9/7/12	Soil	X	SVOCs		TPH-Dx	X	
HB-MW-1-6-7	209095-14	9/7/12	Soil	X	SVOCs		TPH-Dx	X	
DA-MW-1-1-2	209095-15	9/7/12	Soil	X	PAHs		TPH-Dx		
DA-MW-1-5-6	209095-16	9/7/12	Soil	X	PAHs		TPH-Dx		
DA-MW-1-7-8	209095-17	9/7/12	Soil	X	PAHs		TPH-Dx		
REC1-MW-4-6.5-7.5	209095-18	9/7/12	Soil	X	PAHs		X		
REC1-MW-4-11-12	209095-19	9/7/12	Soil	X	PAHs		X		
REC1-MW-4-13-14	209095-20	9/7/12	Soil	X	PAHs		X		
HB-B-2-1-1.5	209095-21	9/7/12	Soil	X	SVOCs	X	TPH-Dx	X	
HB-B-2-5-6	209095-22	9/7/12	Soil	X	SVOCs		TPH-Dx	X	
HB-B-2-6-7	209095-23	9/7/12	Soil	X	SVOCs		TPH-Dx	X	

Field Sample ID	Laboratory Sample ID	Sample Date	Sample Type	Analysis					
				VOCs	SVOCs PAHs	PCBs	TPH-G TPH-Dx	Metals	Miscellaneous
REC1-MW-7-7-8	209130-01	9/10/12	Soil	X	PAHs		X		
REC1-MW-7-13-14	209130-02	9/10/12	Soil	X	PAHs		X		
REC1-MW-7-16.5-17.5	209130-03	9/10/12	Soil	X	PAHs		X		
REC1-MW-6-7.5-8.5	209130-04	9/10/12	Soil	X	PAHs		X		
REC1-MW-6-12.5-13.5	209130-05	9/10/12	Soil	X	PAHs		X		
REC1-MW-6-17-18	209130-06	9/10/12	Soil	X	PAHs		X		
REC1-MW-5-6.5-7.5	209130-07	9/10/12	Soil	X	PAHs		X		
REC1-MW-5-12-13	209130-08	9/10/12	Soil	X	PAHs		X		
REC1-MW-5-22-23	209130-09	9/10/12	Soil	X	PAHs		X		
UST68-MW-6-14-15	209130-10	9/10/12	Soil	X			TPH-G		
UST68-MW-6-14-15-D	209130-11	9/10/12	Soil	X					
REC1-MW-9-091312	209213-01	9/13/12	Water	X	X		X		TSS
REC1-MW-8-091312	209213-03	9/13/12	Water	X	PAHs		X		TSS
REC1-MW-6-091312	209213-04	9/13/12	Water	X	PAHs		X		TSS
REC1-MW-5-091312	209213-05	9/13/12	Water	X	PAHs		X		TSS
REC1-MW-4-091312	209213-06	9/13/12	Water	X	PAHs		X		TSS
REC1-MW-7-091312	209213-07	9/13/12	Water	X	PAHs		X		TSS
REC1-MW-3-091312	209213-08	9/13/12	Water	X	PAHs		X		TSS
REC1-MW-3-091312-D	209213-09	9/13/12	Water	X			TPH-G		TSS
REC1-MW-1-091312	209213-10	9/13/12	Water	X	PAHs		X		TSS
REC1-MW-2-091312	209213-11	9/13/12	Water	X	PAHs		X		TSS
UST68-MW-6-091312	209213-12	9/13/12	Water	X			TPH-G		TSS
DA-MW-1-091312	209213-13	9/13/12	Water		PAHs		TPH-Dx		TSS
DA-MW-1-091312-D	209213-14	9/13/12	Water		PAHs		TPH-Dx		TSS
Boiler-MW-1-091412	209220-01	9/14/12	Water		PAHs		TPH-Dx	X(D)	TSS
HB-MW-1-091412	209220-02	9/14/12	Water	X	X		TPH-Dx	X(D)	TSS
GF9-MW-1-091412	209220-03	9/14/12	Water		PAHs		TPH-Dx		
Boiler-MW-1-091412-D	209220-04	9/14/12	Water					X(D)	
HB-MW-1-091412-D	209220-05	9/14/12	Water		SVOCs				
MW-1-082712	K1208528-001	8/27/12	Water						NS
MW-2-082712	K1208528-002	8/27/12	Water						NS
OMS-MW-1-082812	K1208593-001	8/28/12	Water					X(D)	NS
REC7-MW-3-082812	K1208593-002	8/28/12	Water					X(D)	NS
REC7-MW-4-082812	K1208593-003	8/28/12	Water					X(D,T)	NS

Field Sample ID	Laboratory Sample ID	Sample Date	Sample Type	Analysis					
				VOCs	SVOCs PAHs	PCBs	TPH-G TPH-Dx	Metals	Miscellaneous
REC6-MW-1-082812	K1208593-005	8/28/12	Water						F
REC6-MW-1-082812-D	K1208593-006	8/28/12	Water						F
REC3-MW-1-082912	K1208657-001	8/29/12	Water					X(D)	NS
UST70-MW-2-082912	K1208657-002	8/29/12	Water					X(D)	NS
MW-6-082912	K1208657-003	8/29/12	Water						NS
REC6-MW-2-083012	K1208721-002	8/30/12	Water						FNS
REC6-MW-2-083012-D	K1208721-003	8/30/12	Water						NS
REC7-MW-2-083012	K1208721-004	8/30/12	Water						NS
NRP-MW-3-083012	K1208721-005	8/30/12	Water						NS
REC7-MW-1-083012	K1208721-006	8/30/12	Water						NS
MW-5-083112	K1208771-002	8/31/12	Water						NS
NRP-MW-2-083112	K1208771-003	8/31/12	Water						NS
MW-1-082712	K1209191-001	8/27/12	Water					X(D)	
MW-2-082712	K1209191-002	8/27/12	Water					X(D,T)	
REC1-MW-9-091312	K1209267-001	9/13/12	Water						TSS, NS
REC1-MW-9-091312-D	K1209267-002	9/13/12	Water						NS
GF9-MW-1-091412	K1209268-004	9/14/12	Water						TSS

Notes:

Laboratory sample ID prefixed with "K" was a laboratory identity assigned by CAS-ALS in Kelso, Washington. Metals analyses performed by CAS-ALS included a reductive precipitation procedure for sample preparation. Selenium was analyzed with SW846 Method 7742 - a borohydride reduction atomic absorption method. Mercury was not included (analyzed by F&BI and reported separately in previous SDGs).

As - Arsenic
D – Dissolved metals
EDB - 1,2-dibromoethane
F – Formaldehyde
Metals: Antimony, arsenic, beryllium, cadmium, chromium, copper, lead, mercury, nickel, selenium, silver, thallium, and zinc
N – Ammonia as Nitrogen
PAHs - Polycyclic aromatic hydrocarbons
Pb - Lead
PCBs - Polychlorinated biphenyls
S – Dissolved sulfide
SVOCs - Semivolatile Organic Compounds
T – Total metals
TSS - Total suspended solids
TPH-Dx - Diesel and motor oil range total petroleum hydrocarbon
TPH-G - Gasoline range total petroleum hydrocarbon
VOCs - Volatile Organic Compounds
X - The analysis was requested and performed on the sample.

The analytical parameters requested for the samples, the respective analytical methods, and the analytical laboratories are summarized below:

Parameter	Analytical Method	Analytical Laboratory
Volatile Organic Compounds (VOCs)	SW846 Method 8260C	Friedman & Bruya, Inc. (F&BI) Seattle, WA
Semi-volatile Organic Compounds (SVOCs)	SW846 Method 8270D	
Polycyclic Aromatic Hydrocarbons (PAHs)	SW846 Method 8270D-SIM	
PCB Aroclors	SW846 Method 8082A	
TPH - Gasoline Range	NWTPH-Gx	
TPH - Diesel & Motor Oil Range	NWTPH-Dx	
1,2-Dibromothenae (EDB)	SW846 Method 8011A	
Total Metals	EPA Method 200.8	
Mercury	EPA Method 1631E	
Total Suspended Solids (TSS)	SM Method 2540D	Columbia Analytical Services, Inc. Kelso, WA (Part of ALS Group)
Dissolved Sulfide	SM 4500-S2-D	
Metals (for brackish water samples)	EPA Method 200.8	
Selenium (for brackish water samples)	SW846 Method 7742	
Ammonia as Nitrogen	EPA Method 350.1	
Formaldehyde	SW846 Method 8315A	

Notes:

1. SW846 - *USEPA Test Methods for Evaluating Solid Waste, Physical/Chemical Methods,* SW-846, Third Edition, December 1996.
2. EPA Methods - *USEPA Methods for Chemical Analysis of Water and Wastes,* EPA–600/4-79-020, March 1983 Revision.
3. EPA Method 1631E - *Mercury in Water by Oxidation, Purge and Trap, and Cold Vapor Atomic Fluorescence Spectrometry,* Office of Water, U.S. Environmental Protection Agency, August 2002, EPA-821-R-02-019.
4. ASTM – American Society of Testing and Materials
5. NWTPH Methods – *Washington State Department of Ecology, Analytical Methods for Petroleum Hydrocarbons*, Publication No. ECY 97-602, June 1997.
6. SM – Standard Methods for the Examination of Water and Wastewater, American Public Health Association, 20th Edition, 1995.

DATA VALIDATION FINDINGS

1. VOCs by GC/MS (EPA Method SW8260C)

1.1 Sample Management and Holding Time

Samples were received in the laboratory intact and in consistence with the accompanying chain-of-custody (COC) documentation. In some cases where cooler temperature was outside the 4±2°C criteria; samples were hand-delivered to the laboratory the same day of collection. The cooler temperature exceedance had no significant effects on data quality. No other anomalies were identified in relation to sample preservation, handling, and transport.

Soil samples should be preserved at the time of collection. Soil and water samples should be analyzed within 14 days of collection. All samples were analyzed within the required holding times.

Sample REC1-MW-5-6.5-7.5 was not preserved immediately upon collection as required by the method. Target compounds were not detected in this sample at or above their reporting limits. Since the analysis was performed in a relatively short holding time (3 days) of collection, rather than rejected, VOCs results for this sample were qualified (UJ) as estimated.

1.2 GC/MS Instrument Performance Check

The method require that (1) gas chromatograph/mass spectrometer (GC/MS) tuning analysis be performed, using bromofluorobenzene (BFB), at the beginning of each 12-hour period prior to any analysis, and (2) specific mass ions meet the criteria provided in the method. All instrument performance checks met the requirements.

1.3 Initial Calibration (ICAL)

The ICAL criteria require that (1) if linear average RFs is chosen as the quantitation option, at least five standards at different concentrations should be analyzed and the percent relative standard deviation (%RSD) of response factors (RFs) be ≤20% for the analyte, (2) if least-square linear regression is chosen for quantitation, the correlation coefficient (r) be >0.995, (3) if six-point non-linear (quadratic) curve is chosen for quantitation, the coefficient of determination (r^2) be >0.99, and (4) the RF be >0.01 for poor response compounds and >0.05 for all other compounds.. ICALs either met the requirements or the outliers had no adverse effects on data usability (*e.g.,* %RSD >15% for a compound not detected in samples).

An initial calibration verification (ICV) standard (second source standard) was analyzed to verify the calibration curve. Percent difference (%D) values were either within ±20%, or

the exceedance had no adverse effects on data usability (*e.g.,* biased high ICV recovery for a compound not detected in samples).

1.4 Calibration Verification (CCV)

The CCV criteria requires that (1) continuing calibrations be analyzed at the beginning of each 12-hour analysis period prior to the analysis of method blank and samples, (2) the %D be within ±20%, and (3) the RF be >0.01 for poor response compounds and >0.05 for all other compounds.

Calibration verifications either met the requirements, or the exceedance had no adverse effects on data usability (*e.g.,* biased high CCV recovery for a compound not detected in samples), except for the following:

SDG	CCV ID	Compound	%D	Bias	Affected Sample	Data Qualifier
208463	GCMS9 090414.D	Bromoform	20.4%	Low	NRP-MW-3-083012 REC6-MW-2-083012 REC7-MW-1-083012 REC7-MW-2-083012	**UJ**
208491	GCMS9 090414.D	Bromoform	20.4%	Low	NRP-MW-1-083112 NRP-MW-2-083112	**UJ**

1.5 Method Blanks

Method blanks were prepared and analyzed as required. Target compounds were not detected at or above the reporting limits (RLs).

1.6 Laboratory Control Sample (LCS) and LCS Duplicate (LCSD)

LCS and LCSD were prepared and analyzed as required by the method. Percent recovery (%R) and relative percent difference (RPD) values either met the project control limits, or the outliers had no adverse effects on data usability (*e.g.,* biased high recovery for a compound not detected in samples).

1.7 Surrogate Spikes

Surrogate spikes were added to all samples as required by the method. All surrogate spike %R values were within the project control limits.

1.8 Matrix Spike (MS)

MS analyses were performed on project and batch QC samples at the proper frequency (≥5% of the samples analyzed for VOCs). All %R values were within the project control limits, except for the following:

SDG#	Parent Sample ID	Compound	MS %R (%)	Control Limit (%)	Data Qualifier
209028	REC1-MW-1-13-14	Dichlorodifluoromethane	9	10-60	**R**
209066	NRP-B-19-13-14	Dichlorodifluoromethane	9	10-60	**R**
209095	NRP-B-20-12-13	Dichlorodifluoromethane	8	10-60	**R**

1.9 Internal Standards

The method requires that (1) internal standard retention time be within ±30 seconds from that of the associated 12-hour calibration standard, and (2) the area counts of all internal standards be within –50% to +100% of the associated 12-hour calibration standard. All internal standards in the sample and associated QC analyses met the criteria.

1.10 Reporting Limit and Target Compound Quantitation

RLs were supported with adequate initial calibration concentrations. In cases where target compound concentrations exceeded ICAL calibration ranges, proper dilution analyses were performed for definitive quantitation of the compounds. Only affected compounds were to be reported from dilution analyses. The RLs were raised due to high moisture content in samples REC1-MW-7-13-14, REC1-MW-6-12.5-13.5 and REC1-MW-6-17-18.

Vinyl acetate and 1,4-dioxane were reported in selected samples and the method blanks associated with these samples. These compounds were subjected to the tentative identification search (TIC) in the instrument library and were not detected in these samples. The reported MRLs for these compounds were based on 10 times the standard MRLs for other VOCs; vinyl acetate and 1,4-dioxane results in these samples were qualified (UJ) as estimated.

Naphthalene, 1,2,4-trichlorobenzene, 1,2-dichlioriobenzene, 1,3-dichlorobenzene, and 1,4-dichliorobenzene were also reported from SVOCs analysis (Method 8270D). These compounds were to be reported from the SVOCs analysis, in favor of the lower detection limits.

1.11 Field Duplicates

Eight sets of field duplicates were submitted for VOCs analyses. Field duplicate results for detected target compounds, RPD (or concentration difference) values, and data qualification were presented in **Appendix A**.

1.12 Overall Assessment of VOCs Data Usability

VOCs data are of known quality and acceptable for use, as qualified.

2. SVOCs by GC/MS (EPA Method SW8270D)

2.1 Sample Management and Holding Times

No anomalies were identified in relation to sample preservation, handling, and transport as discussed in Section 1.1.

Soil samples should be extracted within 14 days and water samples within seven days of collection. Extracts should be analyzed within 40 days of extraction. All samples were extracted and analyzed within the required holding times.

2.2 GC/MS Instrument Performance Check

The method require that a GC/MS tuning analysis be performed using decafluorotriphenylphosphine (DFTPP) at the beginning of each 12-hour period prior to any analysis, and specific mass ions meet the criteria provided in the method. All instrument performance checks met the requirements.

2.3 Initial Calibration (ICAL)

The ICAL criteria require that (1) if linear average RFs is chosen as the quantitation option, at least five standards at different concentrations should be analyzed and the %RSD of RFs be ≤20% for the analyte, (2) if least-square linear regression is chosen for quantitation, the correlation coefficient (r) be >0.995, (3) if six-point non-linear (quadratic) curve is chosen for quantitation, the coefficient of determination (r^2) be >0.99, and (4) the RF be >0.01 for poor response compounds and >0.05 for all other compounds.. All ICALs met the requirements.

An ICV standard (second source standard) was analyzed to verify the calibration curve. %D values were either within ±20%, or the exceedance had no adverse effects on data usability (*e.g.,* biased high ICV recovery for a compound not detected in samples).

2.4 Calibration Verification (CCV)

The CCV criteria require that (1) continuing calibrations be analyzed at the beginning of each 12-hour analysis period prior to the analysis of method blank and samples, (2) the %D be within ±20%, and (3) the RF be >0.01 for poor response compounds and >0.05 for all other compounds.

Calibration verifications were performed at the required frequency. %D values were either within ±20%, or the exceedance had no adverse effects on data usability (*e.g.,* biased high CCV recovery for a compound not detected in samples), with the exceptions as follows:

SDG	CCV ID	Compound	%D	Bias	Affected Sample	Data Qualifier
209213	GCMS8 9/17/12, 18:31	*bis*(2-Chloroisopropyl)ether	27.6%	Low	REC1-MW-9-091312	**UJ**
209220	GCMS8 9/19/12, 18:57	*bis*(2-Chloroisopropyl)ether	26.7%	Low	HB-MW-1-091412 HB-MW-1-091412-D	**UJ**
209095	GCMS8 9/21/12, 1:26	*bis*(2-Chloroisopropyl)ether	30.7%	Low	HB-B-1-2-3 HB-B-1-3-4 HB-B-1-6-7 HB-B-2-1-1.5 HB-MW-1-1.5-2 HB-MW-1-6-7	**UJ**
209095	GCMS8 9/22/12, 12:21	*bis*(2-Chloroisopropyl)ether Benzoic Acid	29.7% 31.6%	Low	HB-B-1-2-3 HB-B-2-5-6 HB-B-2-6-7 HB-MW-1-1.5-2-D HB-MW-1-3-3.5	**UJ**

2.5 Method Blanks

Method blanks were prepared and analyzed as required. Target compounds were not detected at or above the RLs in the method blanks, except for the following:

SDG	Method Blank ID	Compound	MB Conc.	Affected Sample	Result	Data Qualifier	Unit
208426	083116.D	Diethyl phthalate	2	REC3-MW-1-082912 MW-6-082912	1 1	**U**	**µg/L**

2.6 Surrogate Spikes

Surrogate spikes were added to all samples as required by the method. All %R values were within the laboratory control limits.

2.7 Matrix Spike (MS) and MS Duplicate (MSD)

MS/MSD analyses were not performed for SVOCs analyses; instead, laboratory duplicates in combination with LCS/LCSD analyses were performed.

2.8 Laboratory Control Sample (LCS) and LCS Duplicate (LCSD)

LCS and LCSD were prepared and analyzed as required by the method. All %R and RPD values either met the laboratory control criteria, or the outliers had no adverse effects on data usability (*e.g.,* biased high %R or RPD value for a compound that was not detected in samples).

2.9 Laboratory Duplicate Analysis

Duplicate analyses were performed on project and batch QC samples at the proper frequency. All RPD or concentration difference values either met the laboratory control criteria or the outlier had no adverse effects on data usability (*e.g.,* high RPD value for a compound that was not detected in samples).

2.10 Internal Standards

The method requires that (1) internal standard retention time be within ±30 seconds from that of the associated 12-hour calibration standard, and (2) the area counts of all internal standards be within –50% to +100% of the associated 12-hour calibration standard. All internal standards in the sample and associated QC analyses met the criteria, except for the following:

Sample ID	Internal Standard	Sample Response Area	CCV Response Area	Affected Compound	Data Qualifier
HB-MW-1-091412	Perylene-d_{12}	1211792	2573250	Di-n-octyl phthalate	**UJ**
HB-MW-1-1.5-2	Perylene-d_{12}	3240706	1272460	Di-n-octyl phthalate Benzo(g,h,i)perylene Indeno(1,2,3-cd)pyrene Benzo(b)fluoranthene Benzo(k)fluoranthene Benzo(a)pyrene Dibenzo(a,h)anthracene	**J/UJ**

Note: J/UJ - Detects were qualified (J) and non-detects qualified (UJ) as estimated.

2.11 Reporting Limits and Compound Quantitation

Sample-specific RLs were supported with adequate initial calibration concentrations.

2.12 Field Duplicates

Three sets of field duplicates were submitted for SVOCs analyses. SVOCs were not detected at or above the RLs in these samples. The field precision met the project advisory criteria.

2.13 Overall Assessment of SVOCs Data Usability

SVOCs data are of known quality and acceptable for use, as qualified.

3. PAHs by GC/MS - SIM (EPA Method SW8270D-SIM)

3.1 Sample Management and Holding Times

No anomalies were identified in relation to sample preservation, handling, and transport as discussed in Section 1.1.

Soil samples should be extracted within 14 days and water within seven days of collection. Extracts should be analyzed within 40 days of extraction. All samples were extracted and analyzed within the required holding times.

3.2 GC/MS Instrument Performance Check

DFTPP tuning was performed within each 12-hour interval. All required ion abundance ratios met the method requirements.

3.3 Initial Calibration (ICAL)

The ICAL criteria require that (1) if linear average RFs is chosen as the quantitation option, at least five standards at different concentrations should be analyzed and the %RSD of RFs be ≤20% for the analyte, (2) if least-square linear regression is chosen for quantitation, the correlation coefficient (r) be >0.995, (3) if six-point non-linear (quadratic) curve is chosen for quantitation, the coefficient of determination (r^2) be >0.99, and (4) the RF be >0.01 for poor response compounds and >0.05 for all other compounds.. All ICALs met the requirements.

An ICV standard (second source standard) was analyzed to verify the calibration curve. %D values were either within ±20%, or the exceedance had no adverse effects on data usability (*e.g.,* biased high ICV recovery for a compound not detected in samples).

3.4 Calibration Verification (CCV)

The analytical method requires that (1) continuing calibration verifications be analyzed at the beginning of each 12-hour analysis period prior to the analysis of method blank and samples, (2) the %D be within ±20%, and (3) the RF be >0.05 for all compounds.

Calibration verifications were performed at the required frequency. %D values were either within ±20%, or the exceedance had no adverse effects on data usability (*e.g.,*

biased high CCV recovery for a compound not detected in samples), except for the following:

SDG	CCV ID	Compound	%D	Bias	Affected Sample	Data Qualifier
209066	GCMS6 9/17/12, 17:07	Indeno(1,2,3-cd)pyrene	-21.1%	High	Boiler-B-3B-4-5 Boiler-HA-2A-1-1 Boiler-HA-2B-0-1 Boiler-HA-2C-0-1 Boiler-HA-2C-2-3 DA-B-1-1-2 DA-B-1-5-6 GF9-B-1-5-6 GF9-MW-1-5.5-6.5	**J**
	GCMS6 9/18/12, 06:36	Indeno(1,2,3-cd)pyrene	-28.9%	High	HB-MW-1-091412 HB-MW-1-091412-D	**J**
	GCMS6 9/20/12, 08:23	Indeno(1,2,3-cd)pyrene	-23.4%	High	Boiler-B-3B-1-2	**J**

3.5 Method Blanks

Method blanks were prepared and analyzed as required. Target compounds were not detected at or above the RLs in the method blanks.

3.6 Surrogate Spikes

Surrogate spikes were added to all samples as required by the method. All surrogate spike %R values were either within the project control limits or at levels that had no adverse effects on data quality (*e.g.,* biased-high recovery for compounds that were not detected in samples). In some cases surrogate spike %R values were inapplicable for data evaluation because the samples contained high levels of target PAHs and requested dilution analysis; no data were qualified on this basis.

3.7 Matrix Spike (MS)

MS analyses were performed on project and batch QC samples at the proper frequency (≥5% of samples analyzed). All %R values met the project control criteria.

3.8 Laboratory Control Sample (LCS) and LCS Duplicate (LCSD)

LCS and LCSD analyses were performed as required by the method. All %R and RPD values were within the project control limits, except for the followings:

SDG	Compound	%R (%)		Control Limit (%)	RPD (%)	Control Limit (%)	Affected Sample	Data Qualifier
		LCS	LCSD					
209095	Pyrene	70	101	53-127	36	20	DA-MW-1-1-2 DA-MW-1-5-6 DA-MW-1-7-8 NRP-B-20-10-11 NRP-B-20-12-13 NRP-B-20-8-9 NRP-B-21-10.5-11.5 NRP-B-21-10.5-11.5 NRP-B-21-14-15 NRP-B-21-14-15 NRP-B-21-7-8 REC1-MW-4-13-14	**J**

3.9 Internal Standards

The method requires that (1) internal standard retention time be within ±30 seconds from that of the associated 12-hour calibration standard, and (2) the area counts of all internal standards be within –50% to +100% of the associated 12-hour calibration standard. All internal standards in the sample and associated QC analyses met the criteria, except for the following:

Sample ID	Internal Standard	Sample Response Area	CCV Response Area	Affected Compound	Data Qualifier
MW-3-082712	Naphthalene-d_8 Acenaphthene-d_{10} Phenathrene-d_{10}	98016 65771 153429	294570 171030 332651	Anthracene Fluoranthene Acenaphthylene Phenanthrene Naphthalene	**J/UJ**
MW-4-082712-D	Acenaphthene-d_{10} Phenathrene-d_{10}	75513 130845 140038 124609	171030 332651 347968 312407	Anthracene Pyrene Benzo(g,h,i)perylene Indeno(1,2,3-cd)pyrene Benzo(b)fluoranthene Fluoranthene Benzo(k)fluoranthene Acenaphthylene Chrysene Benzo(a)pyrene Dibenzo(a,h)anthracene Benz(a)anthracene Phenanthrene Fluorene	**J/UJ**

Sample ID	Internal Standard	Sample Response Area	CCV Response Area	Affected Compound	Data Qualifier
UST70-MW-1-082912	Naphthalene-d_8 Acenaphthene-d_{10} Phenathrene-d_{10} Chrysene-d_{12} Perylene-d_{12}	118684 69262 120353 133135 114386	338572 201523 384080 415076 374705	Anthracene Pyrene Benzo(g,h,i)perylene Indeno(1,2,3-cd)pyrene Benzo(b)fluoranthene Fluoranthene Benzo(k)fluoranthene Acenaphthylene Chrysene Benzo(a)pyrene Dibenzo(a,h)anthracene Benz(a)anthracene Phenanthrene Fluorene	**J/UJ**
UST70-MW-2-082912	Perylene-d_{12}	181904	374705	Benzo(g,h,i)perylene Indeno(1,2,3-cd)pyrene Benzo(b)fluoranthene Benzo(k)fluoranthene Benzo(a)pyrene Dibenzo(a,h)anthracene	**UJ**
REC1-MW-1-11-12	Phenathrene-d_{10} Chrysene-d_{12} Perylene-d_{12}	92498 96793 74918	203426 218914 194120	Anthracene Pyrene Benzo(g,h,i)perylene Indeno(1,2,3-cd)pyrene Benzo(b)fluoranthene Fluoranthene Benzo(k)fluoranthene Chrysene Benzo(a)pyrene Dibenzo(a,h)anthracene Benz(a)anthracene Phenanthrene	**J/UJ**
Boiler-B-3B-1-2	Naphthalene-d_8 Acenaphthene-d_{10} Phenathrene-d_{10} Chrysene-d_{12} Perylene-d_{12}	188883 101749 169299 191793 147796	443209 268607 469450 599290 532720	All PAHs	**J/UJ**
GF9-B-1-8-9	Perylene-d_{12}	330998	743007	Benzo(g,h,i)perylene Indeno(1,2,3-cd)pyrene Benzo(b)fluoranthene Benzo(k)fluoranthene Benzo(a)pyrene Dibenzo(a,h)anthracene	**DNR**

Sample ID	Internal Standard	Sample Response Area	CCV Response Area	Affected Compound	Data Qualifier
GF9-B-2-9-9.5	Chrysene-d_{12} Perylene-d_{12}	506260 411669	1094720 1022080	Pyrene Benzo(g,h,i)perylene Indeno(1,2,3-cd)pyrene Benzo(b)fluoranthene Benzo(k)fluoranthene Chrysene Benzo(a)pyrene Dibenzo(a,h)anthracene Benz(a)anthracene	**J**
NRP-B-22-15.5-16.5	Perylene-d_{12}	243887	532720	Benzo(g,h,i)perylene Indeno(1,2,3-cd)pyrene Benzo(b)fluoranthene Benzo(k)fluoranthene Benzo(a)pyrene Dibenzo(a,h)anthracene	**J/UJ**
NRP-B-21-7-8	Naphthalene-d_8 Acenaphthene-d_{10} Chrysene-d_{12} Perylene-d_{12}	158966 104051 181809 69260	334853 211718 494677 423012	Pyrene Benzo(g,h,i)perylene Indeno(1,2,3-cd)pyrene Benzo(b)fluoranthene Benzo(k)fluoranthene Acenaphthylene Chrysene Benzo(a)pyrene Dibenzo(a,h)anthracene Benz(a)anthracene Naphthalene	**J/UJ**
NRP-B-21-10.5-11.5	Perylene-d_{12}	180124	423012	Benzo(g,h,i)perylene Indeno(1,2,3-cd)pyrene Benzo(b)fluoranthene Benzo(k)fluoranthene Benzo(a)pyrene Dibenzo(a,h)anthracene	**J/UJ**
NRP-B-21-14-15	Perylene-d_{12}	164652	423012	Benzo(g,h,i)perylene Indeno(1,2,3-cd)pyrene Benzo(b)fluoranthene Benzo(k)fluoranthene Benzo(a)pyrene Dibenzo(a,h)anthracene	**J/UJ**
NRP-B-20-8-9	Chrysene-d_{12} Perylene-d_{12}	192247 136582	494677 423012	Pyrene Benzo(g,h,i)perylene Indeno(1,2,3-cd)pyrene Benzo(b)fluoranthene Benzo(k)fluoranthene Chrysene Benzo(a)pyrene Dibenzo(a,h)anthracene Benz(a)anthracene	**J/UJ**

Sample ID	Internal Standard	Sample Response Area	CCV Response Area	Affected Compound	Data Qualifier
REC1-MW-5-6.5-7.5	Phenathrene-d_{10} Chrysene-d_{12} Perylene-d_{12}	231873 264580 267595	621241 784967 709542	Anthracene Pyrene Benzo(g,h,i)perylene Indeno(1,2,3-cd)pyrene Benzo(b)fluoranthene Fluoranthene Benzo(k)fluoranthene Chrysene Benzo(a)pyrene Dibenzo(a,h)anthracene Benz(a)anthracene Phenanthrene	**J/UJ**
REC1-MW-5-12-13	Acenaphthene-d_{10} Phenathrene-d_{10} Chrysene-d_{12}	138910 235974 355318	337807 621241 784967	Anthracene Pyrene Fluoranthene Chrysene Benz(a)anthracene	**J/UJ**

Note: J/UJ - Detects were qualified (J) and non-detects qualified (UJ) as estimated.

Internal standard recovery in samples CMS-MW-1-082912, UST71-MW-1-082912, MW-5-083112 biased low and severe matrix interference was observed on these analyses. PAHs results for these samples were to be reported from the dilution analyses.

3.10 Reporting Limits and Target Compound Quantitation

Sample-specific RLs were supported with adequate initial calibration concentrations. The RLs were raised due to high moisture content in samples REC1-MW-7-13-14, REC1-MW-6-12.5-13.5 and REC1-MW-6-17-18.

3.11 Field Duplicates

Six sets of field duplicates were submitted for PAHs analyses. Field duplicate results for detected target compounds, RPD (or concentration difference) values, and data qualification were presented in **Appendix A**.

3.12 Overall Assessment of PAHs Data Usability

PAHs data are of known quality and acceptable for use, as qualified.

4. PCB Aroclors (EPA Method SW8082A)

4.1 Sample Management and Holding Times

No anomalies were identified in relation to sample preservation, handling, and transport as discussed in Section 1.1.

Soil samples should be extracted within 14 days of collection and extracts analyzed within 40 days of extraction. All samples were extracted and analyzed within the required holding times.

4.2 Initial Calibration

The method requires that (1) a minimum of 5-point calibration be performed using the mixture of Aroclor 1016 and 1260, (2) a single-point calibration be performed for the other five Aroclors to establish calibration factors (CFs) and for Aroclor pattern recognition, (3) at least 3 peaks (preferably 5 peaks) must be chosen for each Aroclor for characterization, (4) the %RSD values of Aroclor 1016 and 1260 CFs must be ≤20%, and (5) if dual column analysis is chosen, both columns should meet the requirements. All ICALs met the requirements.

4.3 Calibration Verification

CCV analyses should be performed for each 12-hour analysis sequence prior to sample analyses, and the %D be within ±20%.

Calibration verifications were performed at the required frequency. All %D values either met the control criteria or biased high for target compounds that were not detected in the associated samples.

4.4 Method Blanks

Method blanks were prepared and analyzed as required. PCB Aroclors were not detected at or above the MDLs in the method blanks.

4.5 Surrogate Spikes

Surrogate spikes were added to all samples as required by the method. All surrogate spike %R values were within the laboratory control limits.

4.6 Matrix Spike and Matrix Spike Duplicate (MS/MSD)

MS/MSD analyses were not performed for PCB Aroclors analyses; instead, duplicate and LCS/LCSD analyses in combination were performed.

4.7 Laboratory Control Sample (LCS) and LCS Duplicate (LCSD)

LCS and LCSD analyses were performed as required by the method. All %R and RPD values were within the project control limits.

4.8 Laboratory Duplicate Analysis

Duplicate analyses were performed on project and batch QC samples at the proper frequency. All RPD or concentration difference values met the laboratory control criteria.

4.9 Method Reporting Limits and Target Compound Quantitation

Sample-specific RLs were supported with adequate initial calibration concentrations and achieved the project target quantitation limits.

4.10 Field Duplicates

Field duplicates were not submitted for PCB Aroclors analysis.

4.11 Overall Assessment of PCB Aroclors Data Usability

PCB Aroclor data are of known quality and acceptable for use.

5. TPH-Gasoline by GC/FID (Method NWTPH-Gx)

5.1 Sample Management and Holding Times

No anomalies were identified in relation to sample preservation, handling, and transport as discussed in Section 1.1.

Soil samples should be preserved at the time of collection. Soil and water samples should be analyzed within 14 days of collection. All samples were analyzed within the required holding times.

Sample REC1-MW-5-6.5-7.5 was not preserved immediately upon collection as required by the method. TPH-Gasoline was not detected in this sample at or above their reporting limits. Since the analysis was performed in a relatively short holding time (3 days) of

collection, rather than rejected, TPH-Gasoline result for this sample was qualified (UJ) as estimated.

5.2 Initial Calibration (ICAL)

The method linearity criteria require that (1) if linear average RFs is chosen as the quantitation option, the %RSD of RFs be <20% for the analyte, (2) if least-square linear regression is chosen for quantitation, the correlation coefficient (r) be >0.995, and (3) if six-point non-linear (quadratic) curve is chosen for quantitation, the coefficient of determination (r^2) be >0.990. Initial calibration met the criteria for all target compounds.

An ICV (second source) standard was analyzed to verify the calibration curve. %D values were within ±20%.

5.3 Calibration Verification

Continuing calibration verification (CCV) analyses were performed at the required frequency for all analytical sequences as required by the method. The %D values for all CCVs met the method criterion (±20%).

5.4 Method Blanks

Method blanks were prepared and analyzed as required. No target compounds were detected at or above the RLs in the method blanks.

5.5 Surrogate Spikes

Surrogate spikes were added to all samples as required by the method. All surrogate spike %R values were within the project control limits, outside the control limits due to matrix interference, or diluted below quantitation limits due to high analyte concentrations. No data qualifying actions were taken in these cases.

5.6 Matrix Spike and Matrix Spike Duplicate

MS/MSD analyses were not performed for TPH-Gasoline analyses; instead, duplicate and LCS analyses in combination were performed.

5.7 Laboratory Control Sample (LCS)

LCS analyses were performed as required by the method. All %R values were within the laboratory control limits.

5.8 Laboratory Duplicate Analysis

Duplicate analyses were performed on project and batch QC samples at the proper frequency. All RPD and concentration difference values met the laboratory control criteria.

5.9 Reporting Limits and Target Compound Quantitation

Sample-specific RLs were supported with adequate initial calibration concentrations.

5.10 Field Duplicates

Seven sets of field duplicates were submitted for TPH-Gasoline analysis. Field duplicate results, RPD (or concentration difference) values, and data qualification for detected TPH-Gasoline were presented in **Appendix A**.

5.11 Overall Assessment of TPH-Gasoline Data Usability

TPH-Gasoline data are of known quality and acceptable for use, as qualified.

6. TPH-Diesel & Motor Oil by GC/FID (Method NWTPH-Dx)

6.1 Holding Time

No anomalies were identified in relation to sample preservation, handling, and transport as discussed in Section 1.1.

Soil samples should be extracted within 14 days and water should be extracted within seven days of collection. Extracts should be analyzed within 40 days of extraction. All samples were extracted and analyzed within the recommended holding times.

6.2 Initial Calibration

The method linearity criteria require that (1) if linear average RFs is chosen as the quantitation option, the %RSD of RFs be <20% for the analyte, (2) if least-square linear regression is chosen for quantitation, the correlation coefficient (r) be >0.995, and (3) if six-point non-linear (quadratic) curve is chosen for quantitation, the coefficient of determination (r^2) be >0.990. Initial calibration met the criteria for all target compounds.

An ICV (second source) standard was analyzed to verify the calibration curve. %D values were within ±20%.

6.3 Calibration Verification

The method requires that (1) a mid-range check standard be analyzed prior to and after each analytical batch, and (2) the percent drift (%D) value be within ±20% of the true value.

Calibration verification was performed at required frequency. The %D values were either within the ±20% criterion or at levels that had no adverse effects on data quality (e.g., high-bias %D value where the target compound was not detected in associated sample).

6.4 Method Blanks

Method blanks were prepared and analyzed as required. Target compounds were not detected at or above the RLs in the method blanks.

6.5 Surrogate Spikes

Surrogate spikes were added to all samples as required by the method. All surrogate spike %R values were within the project control limits, outside the control limits due to matrix interference, or diluted below quantitation limits due to high petroleum hydrocarbon concentrations. No data qualifying actions were taken in these cases.

6.6 Matrix Spike (MS) and MS Duplicate (MSD)

MS and MSD analyses were performed on project and batch QC samples at the proper frequency. The %R and RPD values met the laboratory control criteria.

6.7 Laboratory Control Sample (LCS)

LCS analyses were performed as required. All %R values met the project control limits.

6.8 Target Compound Identification

Selected sample extracts were cleaned up with acid and silica gel treatment to minimize the biogenic interference with target compound identification, as required by the project. The laboratory reported results as diesel #2 (C10 - C25) and motor oil (C25 - C36), as required by the method.

6.9 Reporting Limits and Target Compound Quantitation

The reported RLs were supported with adequate ICAL concentrations.

6.10 Field Duplicates

Eight sets of field duplicates were submitted for TPH-Diesel and TPH-Motor Oil analyses. Field duplicate results, RPD (or concentration difference) values, and data qualification for detected TPH-Diesel or Motor Oil were presented in **Appendix A**.

6.11 Overall Assessment of TPH-Diesel and Motor Oil Data Usability

TPH-Diesel and TPH-Motor Oil data are of known quality and acceptable for use, as qualified.

7. Total Metals by ICP/MS and CVAFS (EPA Methods 200.8 and 1631E)

7.1 Sample Management and Holding Times

No anomalies were identified in relation to sample preservation, handling, and transport, as discussed in Section 1.1.

Soil and water samples should be analyzed within 180 days for metals and 28 days for mercury. Samples were analyzed within the required holding times.

7.2 ICP/MS Tuning

Instrument tuning was performed at the required frequency. The stability check (%RSD <5%), mass calibration (mass difference <0.1 AMU), and resolution check (peak width <1.0 AMU at 5% peak height) met the NFG and method criteria.

7.3 Initial Calibration (ICAL)

The ICP/MS method requires that (1) a blank and one calibration standard be used in establishing the analytical curve, and (2) the average of replicate exposures be reported for all standards, QC, and sample analyses.

The CVAFS and GFAA methods require that (1) a blank and five calibration standards be employed to establish the analytical curve, (2) the linearity of the calibration curve should meet the criteria of correlation coefficient ≥ 0.995 for linear regression, and (3) the %RSD <21% if average response factor approach is employed.

All ICALs met the method requirements.

7.4 Calibration Verification (ICV and CCV)

Initial calibration verifications (ICVs) and continuing calibration verifications (CCVs) for ICP/MS and GFAA and ongoing precision recovery (OPR) were analyzed at the required frequency. The %R values either met the control criteria (90 – 110% for metals, 79 – 123% for mercury) or the exceedance had no adverse effects on data usability (e.g., high-bias %D value where the target compound was not detected in associated sample), except for the following:

SDG	CCAL ID	Analyte	%R	Affected Sample	Data Qualifier
208463	9/5/12, 12:27	Arsenic	87.8%	NRP-MW-4-083012 NRP-MW-5-083012 REC7-MW-2-083012	**UJ**
208491	9/5/12, 12:27	Arsenic	87.8%	AP-MW-1-083112	**UJ**
209066	9/14/12, 11:47	Beryllium	87.0%	Boiler-B-3A-1-2 Boiler-B-3A-4-5 Boiler-B-3A-6.5-7.5 Boiler-B-3B-1-2 Boiler-B-3B-4-5 Boiler-MW-1-10-11 Boiler-MW-1-12-13 Boiler-MW-1-16-17 REC5-HA-1-0-1	**UJ**

7.5 Blanks

Calibration Blanks: Initial calibration blanks (ICBs) and continuing calibration blanks (CCBs) were not analyzed after calibration verification standards. Target analytes were either not detected at or above the RLs in the ICBs and CCBs, or sample results affected by the ICB/CCB detections were qualified as results of detections in preparation blanks.

Preparation Blanks: Preparation blanks were prepared and analyzed as required. Target analytes were either not detected at or above the RLs in the preparation blanks, or sample results were greater than 10X the detection in the associated blank, except for the following:

Blank ID	Analyte	Detection In Blank	Affected Sample	Original Result	Adjusted Result	Unit
i2-562mb	Dissolved Zinc	0.838	HW-MW-1-082812	2.07	**2.07 J**	**µg/L**
i2-565mb	Total Zinc	0.947	CMS-MW-1-082912	1.87	**1.87 J**	**µg/L**

Blank ID	Analyte	Detection In Blank	Affected Sample	Original Result	Adjusted Result	Unit
i2-575mb	Total Zinc	0.999 J	NRP-MW-4-083012 NRP-MW-5-083012 REC7-MW-2-083012 UG-MW-1-083012	4.53 2.70 1.82 3.36	**4.53 J** **2.70 J** **1.82 J** **3.36 J**	**µg/L**
i2-590mb	Dissolved Zinc	0.546 J	NRP-MW-2-083112	2.45	**2.45 J**	**µg/L**
K1208593-MB	Dissolved Beryllium	0.0012 J	OMS-MW-1-082812 REC7-MW-3-082812 REC7-MW-4-082812	0.0034 J 0.0005 J 0.0012 J	**0.0222 U** **0.0222 U** **0.0222 U**	**µg/L**
K1208593-MB	Total Beryllium	0.0012 J	REC7-MW-4-082812	0.0086 J	**0.0250 U**	**µg/L**
K1208593-MB	Dissolved Lead	0.017 J	OMS-MW-1-082812 REC7-MW-3-082812	0.058 0.060	**0.058 J** **0.060 J**	**µg/L**
K1208593-MB	Dissolved Thallium	0.003 J	OMS-MW-1-082812 REC7-MW-3-082812 REC7-MW-4-082812	0.004 J 0.016 J 0.012 J	**0.0222 U** **0.0222 U** **0.0222 U**	**µg/L**
K1208593-MB	Total Thallium	0.003 J	REC7-MW-4-082812	0.019 J	**0.0250 U**	**µg/L**
K1208657-MB	Dissolved Beryllium	0.0012 J	REC3-MW-1-082912 UST70-MW-2-082912	0.0018 J 0.0018 J	**0.05 U** **0.05 U**	**µg/L**
K1208657-MB	Dissolved Lead	0.017 J	REC3-MW-1-082912 UST70-MW-2-082912	0.047 J 0.035 J	**0.05 U** **0.05 U**	**µg/L**
K1208657-MB	Dissolved Thallium	0.003 J	UST70-MW-2-082912	0.03 J	**0.05 U**	**µg/L**
K1209191-MB	Dissolved Beryllium	0.0012 J	MW-1-082712	0.0023 J	**0.05 U**	**µg/L**
K1209191-MB	Total Beryllium	0.0012 J	MW-2-082712	0.0016 J	**0.0222 U**	**µg/L**
K1209191-MB	Dissolved Silver	0.020 J	MW-1-082712	0.031 J	**0.05 U**	**µg/L**
K1209191-MB	Total Silver	0.020 J	MW-2-082712	0.005 J	**0.0222 U**	**µg/L**
K1209191-MB	Dissolved Thallium	0.003 J	MW-1-082712	0.012 J	**0.05 U**	**µg/L**

7.6 Laboratory Control Sample (LCS)

LCS analyses were performed as required by the method. All %R values were within the project control limits, or the exceedance had no adverse effects on data usability (e.g., high-bias %R value where the target compound was not detected in associated sample).

7.7 Matrix Spike (MS) and Matrix Spike Duplicate (MSD)

MS and MSD analyses were performed on project and batch QC samples at the adequate frequency (>5% of field sample). The %R and RPD values met the laboratory control limits.

7.8 Internal Standards

At least three internal standards were added to all field and QC samples for ICP/MS analyses. All percent relative intensity values were within the method criteria (60 - 125%), except that the %R value for germanium in sample Boiler-B-3B-1-2 (132%) was outside the upper control limit. All associated analytes were reported from the dilution analysis (internal standard recovery acceptable), except beryllium. The beryllium result was to be reported from the initial analysis and qualified (UJ) as estimated.

7.9 Method Reporting Limits and Analyte Quantitation

Sample-specific RLs were supported with adequate initial calibration concentrations.

7.10 Field Duplicates

Eight sets of field duplicates were submitted for Metals analyses. Field duplicate results, RPD (or concentration difference) values, and data qualification for detected analytes were presented in **Appendix A**.

7.11 Overall Assessment of Metals Data Usability

Metal data are of known quality and acceptable for use, as qualified.

8. Formaldehyde by HPLC/UV (EPA Method 8315A)

8.1 Sample Management and Holding Time

No anomalies were identified in relation to sample preservation, handling, and transport, as discussed in Section 1.1.

Water samples should be derivatized and extracted within 3 days of sample collection. All derivatized sample extracts should be analyzed within 3 days after preparation. The sample was prepared and analyzed within the required holding times, except that sample REC6-MW-2-083012 was extracted four days past the required holding time. The formaldehyde result for this sample was qualified (UJ) as estimated.

8.2 Instrument Calibration

The method linearity criteria require that (1) if linear average RFs is chosen as the quantitation option, the %RSD of RFs be <15% for the analyte, (2) if least-square linear regression is chosen for quantitation, the correlation coefficient (r) be >0.995, and (3) if

six-point non-linear (quadratic) curve is chosen for quantitation, the coefficient of determination (r^2) be >0.990. Initial calibration met the criteria for all target compounds.

An ICV (second source) standard was analyzed to verify the calibration curve. %D values were within ±20%.

8.3 Calibration Verification

CCV analyses were performed at the required frequency for all analytical sequences as required by the method. The %D values for all CCVs met the method criterion (±20%).

8.4 Method Blanks

A method blank was prepared and analyzed in each preparation batch as required. Formaldehyde was not detected at or above the RL in method blanks.

8.5 Matrix Spike (MS) and MS Duplicate (MSD)

MS and MSD analyses were performed on project and batch QC samples at the proper frequency. The %R and RPD values met the laboratory control criteria.

8.6 Laboratory Control Samples (LCS)

LCS analyses were performed as required by the methods. The %R values were within the laboratory control limits.

8.7 Field Duplicates

Samples REC6-MW-1-082812 and REC6-MW-1-082812-D were field duplicates submitted for formaldehyde analysis. Formaldehyde was not detected in either sample; the field precision met the advisory criteria.

8.8 Overall Assessment of Formaldehyde Data Usability

Formaldehyde data are of known quality and acceptable for use, as qualified.

9. Conventional Parameters (TSS, Ammonia, and Dissolved Sulfide)

9.1 Sample Management and Holding Time

No anomalies were identified in relation to sample preservation, handling, and transport, as discussed in Section 1.1.

Water samples should be analyzed within 7 days of collection for dissolved sulfide and TSS, and 28 days for ammonia.

9.2 Instrument Calibration

The initial calibrations were established for ammonia and sulfide analyses using one blank and at least five levels of standards. The correlation coefficients (r) of the initial calibration curves were >0.995, and met the method criteria.

9.3 Calibration Verification

ICV and CCV analyses were performed for ammonia and sulfide as required by the methods. All ICV and CCV %R values were within the laboratory control limits (90 – 110%).

9.4 Blanks

Calibration Blanks: ICBs and CCBs were analyzed for ammonia and sulfide as required by the methods. No target analytes were positively reported in ICBs and CCBs at or above the MDLs.

Method Blanks: Method blanks were prepared and analyzed for TOC, TSS, ammonia, and sulfide as required by the methods. No target analytes were detected at or above the RLs in method blanks.

9.5 Laboratory Replicate Analyses

Laboratory duplicate analyses were formed on samples REC3-MW-1-082912 for ammonia and sulfide, REC7-MW-3-082812 for sulfide. The RPD (or concentration difference) values were within the project control limits.

9.6 Matrix Spike (MS) and MS Duplicate (MSD)

MS and MSD analyses were performed on sample REC3-MW-1-082912 for ammonia and sulfide REC7-MW-3-082812 for sulfide. The %R and RPD values met the laboratory control criteria.

9.7 Laboratory Control Samples (LCS)

LCS analyses were performed as required by the methods fort ammonia and sulfide analysis. All LCS %R values were within the laboratory control limits. LCS/LCSD analyses were performed for TSS; the %R and RPD values met the laboratory control criteria.

9.8 Method Reporting Limits

The MRLs were supported with adequate initial calibration concentrations.

9.9 Field Duplicates

Two sets of field duplicates were submitted for ammonia and sulfide analyses. Four sets of field duplicates were submitted for TSS analyses. Field duplicate results, RPD (or concentration difference) values, and data qualification for detected analytes were presented in **Appendix A**.

9.10 Overall Assessment of Conventional Parameters Data Usability

Conventional parameters data are of known quality and acceptable for use.

10. 1,2-Dibromoehtane (EDB) by GC/ECD (EPA Method SW8011A)

10.1 Holding Times

Water samples should be extraction and analyzed within 28 days of collection. All samples were analyzed within the required holding time.

10.2 Initial Calibration (ICAL)

The method linearity criteria require that (1) if linear average RFs is chosen as the quantitation option, the %RSD of RFs be <20% for the analyte, (2) if least-square linear regression is chosen for quantitation, the correlation coefficient (r) be >0.995, and (3) if six-point non-linear (quadratic) curve is chosen for quantitation, the coefficient of determination (r^2) be >0.990. Initial calibration met the criteria for all target compounds.

An ICV (second source) standard was analyzed to verify the calibration curve. The %R value were within the control limits of 80 – 120%.

10.3 Continuing Calibration Verification (CCV)

Continuing calibration verification (CCV) analyses were performed at the required frequency. All %R values were within the control limits of 80 – 120%.

10.4 Method Blank

Method Blank: Method blanks were analyzed at the required frequency. EDB was not detected at or above the RL in method blanks.

10.5 Matrix Spike (MS) and Matrix Spike Duplicate (MSD)

MS and MSD analyses were not performed on a project sample in these SDGs. EDB was not detected in samples requiring this analysis; the analytical precision and accuracy was evaluated against the LCS/LCSD results.

10.6 Laboratory Control Sample (LCS) and LCS Duplicate (LCSD)

LCS and LCSD analyses were performed as required by the methods. All %R and RPD values were within the laboratory control limits.

10.7 Field Duplicates

One set of field duplicates was submitted for EDB analysis. EDB was not detected at or above the RL in either sample; the field precision met the project control criteria.

10.8 Reporting Limits and Target Compound Quantitation

The reported RL was supported with adequate ICAL concentrations. EDB was not detected in samples in these SDGs; a second column confirmation was therefore not required.

10.9 Overall Assessment of EDB Data Usability

EDB data are of known quality and acceptable for use.

SUMMARY

Table I. Data Affected by QC Anomalies:

Laboratory ID	Sample ID	Analyte	Qualifier	Qualified Reason
K1208721-002	REC6-MW-2-083012	Diss. Sulfide	**J**	Field duplicate RPD >35%.
K1208721-003	REC6-MW-2-083012-D	Diss. Sulfide	**J**	Field duplicate RPD >35%.
208426-07	REC5-MW-1-082912	Diss. Antimony	**J**	Field duplicate concentration difference >2xRL.
208426-07	REC5-MW-1-082912	Diss. Zinc	**J**	Field duplicate concentration difference >2xRL.
208426-07	REC5-MW-1-082912	Diss. Lead	**J**	Field duplicate RPD >35%.
208426-07	REC5-MW-1-082912	Diss. Copper	**J**	Field duplicate RPD >35%.
208426-07	REC5-MW-1-082912	Total Zinc	**J**	Field duplicate RPD >35%.
208426-09	REC5-MW-1-082912-D	Diss. Antimony	**J**	Field duplicate concentration difference >2xRL.
208426-09	REC5-MW-1-082912-D	Diss. Zinc	**J**	Field duplicate concentration difference >2xRL.
208426-09	REC5-MW-1-082912-D	Diss. Lead	**J**	Field duplicate RPD >35%.
208426-09	REC5-MW-1-082912-D	Diss. Copper	**J**	Field duplicate RPD >35%.
208426-09	REC5-MW-1-082912-D	Total Zinc	**J**	Field duplicate RPD >35%.
208463-04	REC7-MW-2-083012	Total Arsenic	**UJ**	CCV recovery biased low.
208463-07	NRP-MW-5-083012	Total Arsenic	**UJ**	CCV recovery biased low.
208463-08	NRP-MW-4-083012	Total Arsenic	**UJ**	CCV recovery biased low.
208491-01	AP-MW-1-083112	Total Arsenic	**UJ**	CCV recovery biased low.
209066-15	Boiler-B-3A-1-2	Beryllium	**UJ**	CCV recovery <90%.
209066-16	Boiler-B-3A-4-5	Beryllium	**UJ**	CCV recovery <90%.
209066-17	Boiler-B-3A-6.5-7.5	Beryllium	**UJ**	CCV recovery <90%.
209066-20	Boiler-MW-1-10-11	Beryllium	**UJ**	CCV recovery <90%.
209066-21	Boiler-MW-1-12-13	Beryllium	**UJ**	CCV recovery <90%.
209066-22	Boiler-MW-1-16-17	Beryllium	**UJ**	CCV recovery <90%.
209066-23	Boiler-B-3B-1-2	Beryllium	**UJ**	CCV recovery <90%; internal standard recovery biased high.
209066-24	Boiler-B-3B-4-5	Beryllium	**UJ**	CCV recovery <90%.
209066-34	REC5-HA-1-0-1	Beryllium	**UJ**	CCV recovery <90%.
209066-41	REC5-HA-4-0-1	Nickel	**J**	Field duplicate RPD >35%.
209066-42	REC5-HA-4-0-1-D	Nickel	**J**	Field duplicate RPD >35%.
209066-70	NRP-B-22-11-12	TPH-Diesel	**J**	Field duplicate RPD >35%.
209066-70	NRP-B-22-11-12	TPH-Motor Oil	**J**	Field duplicate RPD >35%.
209066-71	NRP-B-22-11-12-D	TPH-Diesel	**J**	Field duplicate RPD >35%.
209066-71	NRP-B-22-11-12-D	TPH-Motor Oil	**J**	Field duplicate RPD >35%.
209066-70	NRP-B-22-11-12	TPH-Gasoline	**J**	Field duplicate RPD >35%.
209066-71	NRP-B-22-11-12-D	TPH-Gasoline	**J**	Field duplicate RPD >35%.

Laboratory ID	Sample ID	Analyte	Qualifier	Qualified Reason
209066-74	NRP-B-18-11.5-12.5	TPH-Gasoline	**J**	Field duplicate RPD >35%.
209066-75	NRP-B-18-11.5-12.5-D	TPH-Gasoline	**J**	Field duplicate RPD >35%.
209130-07	REC1-MW-5-6.5-7.5	TPH-Gasoline	**UJ**	Sample was not collected into preserved container.
208404-06	REC6-MW-1-082812	Vinyl acetate	**UJ**	Reported MRL based on TIC search
208404-06	REC6-MW-1-082812	1,4-Dioxane	**UJ**	Reported MRL based on TIC search
208404-07	REC6-MW-1-082812-D	Vinyl acetate	**UJ**	Reported MRL based on TIC search
208404-07	REC6-MW-1-082812-D	1,4-Dioxane	**UJ**	Reported MRL based on TIC search
208404-08	UST29-MW-1-082812	Vinyl acetate	**UJ**	Reported MRL based on TIC search
208404-08	UST29-MW-1-082812	1,4-Dioxane	**UJ**	Reported MRL based on TIC search
208463-02	REC6-MW-2-083012	Bromoform	**UJ**	CCV recovery biased low.
208463-02	REC6-MW-2-083012	Vinyl acetate	**UJ**	Reported MRL based on TIC search
208463-02	REC6-MW-2-083012	1,4-Dioxane	**UJ**	Reported MRL based on TIC search
208463-04	REC7-MW-2-083012	Bromoform	**UJ**	CCV recovery biased low.
208463-05	NRP-MW-3-083012	Bromoform	**UJ**	CCV recovery biased low.
208463-06	REC7-MW-1-083012	Bromoform	**UJ**	CCV recovery biased low.
208491-03	NRP-MW-2-083112	Bromoform	**UJ**	CCV recovery biased low.
208491-04	NRP-MW-1-083112	Bromoform	**UJ**	CCV recovery biased low.
209028-08	REC1-MW-1-13-14	Dichlorodifluoromethane	**R**	MS %R <10%.
209066-70	NRP-B-22-11-12	Ethylbenzene	**J**	Field duplicate RPD >35%.
209066-70	NRP-B-22-11-12	n-Propylbenzene	**J**	Field duplicate RPD >35%.
209066-70	NRP-B-22-11-12	sec-Butylbenzene	**J**	Field duplicate RPD >35%.
209066-70	NRP-B-22-11-12	Naphthalene	**J**	Field duplicate RPD >35%.
209066-70	NRP-B-22-11-12	tert-Butylbenzene	**J**	Field duplicate RPD >35%.
209066-70	NRP-B-22-11-12	Isopropylbenzene	**J**	Field duplicate RPD >35%.
209066-70	NRP-B-22-11-12	p-Isopropyltoluene	**J**	Field duplicate RPD >35%.
209066-71	NRP-B-22-11-12-D	Ethylbenzene	**J**	Field duplicate RPD >35%.
209066-71	NRP-B-22-11-12-D	n-Propylbenzene	**J**	Field duplicate RPD >35%.
209066-71	NRP-B-22-11-12-D	sec-Butylbenzene	**J**	Field duplicate RPD >35%.
209066-71	NRP-B-22-11-12-D	Naphthalene	**J**	Field duplicate RPD >35%.
209066-71	NRP-B-22-11-12-D	tert-Butylbenzene	**J**	Field duplicate RPD >35%.
209066-71	NRP-B-22-11-12-D	Isopropylbenzene	**J**	Field duplicate RPD >35%.
209066-71	NRP-B-22-11-12-D	p-Isopropyltoluene	**J**	Field duplicate RPD >35%.
209066-79	NRP-B-19-13-14	Dichlorodifluoromethane	**R**	MS %R <10%.
209095-06	NRP-B-20-12-13	Dichlorodifluoromethane	**R**	MS %R <10%.
209130-07	REC1-MW-5-6.5-7.5	VOCs	**UJ**	Sample was not collected into preserved container.
209130-10	UST68-MW-6-14-15	n-Propylbenzene	**J**	Field duplicate concentration difference >2xRL.
209130-11	UST68-MW-6-14-15-D	n-Propylbenzene	**UJ**	Field duplicate concentration difference >2xRL.

Laboratory ID	Sample ID	Analyte	Qualifier	Qualified Reason
209095-07	HB-B-1-2-3	Bis(2-chloro-1-methylethyl) ether	**UJ**	CCV recovery biased low.
209095-07	HB-B-1-2-3	Benzoic acid	**UJ**	CCV recovery biased low.
209095-08	HB-B-1-2-3-D	Bis(2-chloro-1-methylethyl) ether	**UJ**	CCV recovery biased low.
209095-09	HB-B-1-3-4	Bis(2-chloro-1-methylethyl) ether	**UJ**	CCV recovery biased low.
209095-10	HB-B-1-6-7	Bis(2-chloroimethylethyl) ether	**UJ**	CCV recovery biased low.
209095-11	HB-MW-1-1.5-2	Bis(2-chloro-1-methylethyl) ether	**UJ**	CCV recovery biased low.
209095-12	HB-MW-1-1.5-2-D	Bis(2-chloro-1-methylethyl) ether	**UJ**	CCV recovery biased low.
209095-12	HB-MW-1-1.5-2-D	Benzoic acid	**UJ**	CCV recovery biased low.
209095-12	HB-MW-1-1.5-2-D	Di-n-octyl phthalate	**UJ**	Internal standard recovery biased low.
209095-12	HB-MW-1-1.5-2-D	Benzo(g,h,i)perylene	**J**	Internal standard recovery biased low.
209095-12	HB-MW-1-1.5-2-D	Indeno(1,2,3-cd)pyrene	**J**	Internal standard recovery biased low.
209095-12	HB-MW-1-1.5-2-D	Benzo(b)fluoranthene	**J**	Internal standard recovery biased low.
209095-12	HB-MW-1-1.5-2-D	Benzo(k)fluoranthene	**UJ**	Internal standard recovery biased low.
209095-12	HB-MW-1-1.5-2-D	Benzo(a)pyrene	**J**	Internal standard recovery biased low.
209095-12	HB-MW-1-1.5-2-D	Dibenzo(a,h)anthracene	**UJ**	Internal standard recovery biased low.
209095-13	HB-MW-1-3-3.5	Bis(2-chloro-1-methylethyl) ether	**UJ**	CCV recovery biased low.
209095-13	HB-MW-1-3-3.5	Benzoic acid	**UJ**	CCV recovery biased low.
209095-14	HB-MW-1-6-7	Bis(2-chloro-1-methylethyl) ether	**UJ**	CCV recovery biased low.
209095-21	HB-B-2-1-1.5	Bis(2-chloro-1-methylethyl) ether	**UJ**	CCV recovery biased low.
209095-22	HB-B-2-5-6	Bis(2-chloro-1-methylethyl) ether	**UJ**	CCV recovery biased low.
209095-22	HB-B-2-5-6	Benzoic acid	**UJ**	CCV recovery biased low.
209095-23	HB-B-2-6-7	Bis(2-chloro-1-methylethyl) ether	**UJ**	CCV recovery biased low.
209095-23	HB-B-2-6-7	Benzoic acid	**UJ**	CCV recovery biased low.
209213-01	REC1-MW-9-091312	Bis(2-chloro-1-methylethyl) ether	**UJ**	CCV recovery biased low.
209220-02	HB-MW-1-091412	Bis(2-chloro-1-methylethyl) ether	**UJ**	CCV recovery biased low.
209220-02	HB-MW-1-091412	Di-n-octyl phthalate	**UJ**	Internal standard recovery biased low.
209220-02	HB-MW-1-091412	4-Nitrophenol	**UJ**	MS/MSD %R <LCL.
209220-02	HB-MW-1-091412	Phenol	**UJ**	MS/MSD %R <LCL.
209220-02	HB-MW-1-091412	Benzoic acid	**UJ**	MS/MSD and LCS/LCSD %R <LCL.
209220-05	HB-MW-1-091412-D	Bis(2-chloro-1-methylethyl) ether	**UJ**	CCV recovery biased low.
209220-05	HB-MW-1-091412-D	Benzoic acid	**UJ**	LCS/LCSD %R <LCL.

Laboratory ID	Sample ID	Analyte	Qualifier	Qualified Reason
208375-03	MW-4-082712	Fluorene	**J**	Field duplicate RPD value >35%.
208375-03	MW-4-082712	Naphthalene	**J**	Field duplicate RPD value >35%.
208375-04	MW-3-082712	Anthracene	**J**	Internal standard recovery biased low.
208375-04	MW-3-082712	Pyrene	**J**	Internal standard recovery biased low.
208375-04	MW-3-082712	Benzo(g,h,i)perylene	**UJ**	Internal standard recovery biased low.
208375-04	MW-3-082712	Fluoranthene	**J**	Internal standard recovery biased low.
208375-04	MW-3-082712	Acenaphthylene	**UJ**	Internal standard recovery biased low.
208375-04	MW-3-082712	Phenanthrene	**J**	Internal standard recovery biased low.
208375-04	MW-3-082712	Naphthalene	**UJ**	Internal standard recovery biased low.
208375-05	MW-4-082712-D	Naphthalene	**J**	Field duplicate RPD value >35%.
208375-05	MW-4-082712-D	Fluorene	**J**	Field duplicate RPD value >35%; internal standard recovery biased low.
208375-05	MW-4-082712-D	Anthracene	**J**	Internal standard recovery biased low.
208375-05	MW-4-082712-D	Pyrene	**J**	Internal standard recovery biased low.
208375-05	MW-4-082712-D	Benzo(g,h,i)perylene	**UJ**	Internal standard recovery biased low.
208375-05	MW-4-082712-D	Indeno(1,2,3-cd)pyrene	**UJ**	Internal standard recovery biased low.
208375-05	MW-4-082712-D	Benzo(b)fluoranthene	**UJ**	Internal standard recovery biased low.
208375-05	MW-4-082712-D	Fluoranthene	**UJ**	Internal standard recovery biased low.
208375-05	MW-4-082712-D	Benzo(k)fluoranthene	**UJ**	Internal standard recovery biased low.
208375-05	MW-4-082712-D	Acenaphthylene	**UJ**	Internal standard recovery biased low.
208375-05	MW-4-082712-D	Chrysene	**J**	Internal standard recovery biased low.
208375-05	MW-4-082712-D	Benzo(a)pyrene	**UJ**	Internal standard recovery biased low.
208375-05	MW-4-082712-D	Dibenzo(a,h)anthracene	**UJ**	Internal standard recovery biased low.
208375-05	MW-4-082712-D	Benz(a)anthracene	**UJ**	Internal standard recovery biased low.
208375-05	MW-4-082712-D	Phenanthrene	**J**	Internal standard recovery biased low.
208426-01	UST70-MW-1-082912	Anthracene	**UJ**	Internal standard recovery biased low.
208426-01	UST70-MW-1-082912	Pyrene	**J**	Internal standard recovery biased low.
208426-01	UST70-MW-1-082912	Benzo(g,h,i)perylene	**UJ**	Internal standard recovery biased low.
208426-01	UST70-MW-1-082912	Indeno(1,2,3-cd)pyrene	**UJ**	Internal standard recovery biased low.
208426-01	UST70-MW-1-082912	Benzo(b)fluoranthene	**UJ**	Internal standard recovery biased low.
208426-01	UST70-MW-1-082912	Fluoranthene	**J**	Internal standard recovery biased low.
208426-01	UST70-MW-1-082912	Benzo(k)fluoranthene	**UJ**	Internal standard recovery biased low.
208426-01	UST70-MW-1-082912	Acenaphthylene	**UJ**	Internal standard recovery biased low.
208426-01	UST70-MW-1-082912	Chrysene	**J**	Internal standard recovery biased low.
208426-01	UST70-MW-1-082912	Benzo(a)pyrene	**UJ**	Internal standard recovery biased low.
208426-01	UST70-MW-1-082912	Dibenzo(a,h)anthracene	**UJ**	Internal standard recovery biased low.
208426-01	UST70-MW-1-082912	Benz(a)anthracene	**J**	Internal standard recovery biased low.
208426-01	UST70-MW-1-082912	Phenanthrene	**J**	Internal standard recovery biased low.
208426-01	UST70-MW-1-082912	Fluorene	**J**	Internal standard recovery biased low.
208426-03	UST70-MW-2-082912	Benzo(g,h,i)perylene	**UJ**	Internal standard recovery biased low.

Laboratory ID	Sample ID	Analyte	Qualifier	Qualified Reason
208426-03	UST70-MW-2-082912	Indeno(1,2,3-cd)pyrene	**UJ**	Internal standard recovery biased low.
208426-03	UST70-MW-2-082912	Benzo(b)fluoranthene	**UJ**	Internal standard recovery biased low.
208426-03	UST70-MW-2-082912	Benzo(k)fluoranthene	**UJ**	Internal standard recovery biased low.
208426-03	UST70-MW-2-082912	Benzo(a)pyrene	**UJ**	Internal standard recovery biased low.
208426-03	UST70-MW-2-082912	Dibenzo(a,h)anthracene	**UJ**	Internal standard recovery biased low.
209028-07	REC1-MW-1-11-12	Pyrene	**J**	Field duplicate RPD >35%.
209028-07	REC1-MW-1-11-12	Acenaphthene	**J**	Field duplicate RPD >35%.
209028-07	REC1-MW-1-11-12	Phenanthrene	**J**	Field duplicate RPD >35%.
209028-07	REC1-MW-1-11-12	Fluorene	**J**	Field duplicate RPD >35%.
209028-07	REC1-MW-1-11-12	Anthracene	**UJ**	Internal standard recovery biased low.
209028-07	REC1-MW-1-11-12	Benzo(g,h,i)perylene	**UJ**	Internal standard recovery biased low.
209028-07	REC1-MW-1-11-12	Indeno(1,2,3-cd)pyrene	**UJ**	Internal standard recovery biased low.
209028-07	REC1-MW-1-11-12	Benzo(b)fluoranthene	**UJ**	Internal standard recovery biased low.
209028-07	REC1-MW-1-11-12	Fluoranthene	**J**	Internal standard recovery biased low.
209028-07	REC1-MW-1-11-12	Benzo(k)fluoranthene	**UJ**	Internal standard recovery biased low.
209028-07	REC1-MW-1-11-12	Chrysene	**UJ**	Internal standard recovery biased low.
209028-07	REC1-MW-1-11-12	Benzo(a)pyrene	**UJ**	Internal standard recovery biased low.
209028-07	REC1-MW-1-11-12	Dibenzo(a,h)anthracene	**UJ**	Internal standard recovery biased low.
209028-07	REC1-MW-1-11-12	Benz(a)anthracene	**UJ**	Internal standard recovery biased low.
209028-09	REC1-MW-1-11-12-D	Pyrene	**J**	Field duplicate RPD >35%.
209028-09	REC1-MW-1-11-12-D	Acenaphthene	**J**	Field duplicate RPD >35%.
209028-09	REC1-MW-1-11-12-D	Phenanthrene	**J**	Field duplicate RPD >35%.
209028-09	REC1-MW-1-11-12-D	Fluorene	**J**	Field duplicate RPD >35%.
209066-23	Boiler-B-3B-1-2	Indeno(1,2,3-cd)pyrene	**J**	CCV recovery biased high; internal standard recovery biased low.
209066-23	Boiler-B-3B-1-2	Anthracene	**J**	Internal standard recovery biased low.
209066-23	Boiler-B-3B-1-2	Pyrene	**J**	Internal standard recovery biased low.
209066-23	Boiler-B-3B-1-2	Benzo(g,h,i)perylene	**J**	Internal standard recovery biased low.
209066-23	Boiler-B-3B-1-2	Benzo(b)fluoranthene	**J**	Internal standard recovery biased low.
209066-23	Boiler-B-3B-1-2	Fluoranthene	**J**	Internal standard recovery biased low.
209066-23	Boiler-B-3B-1-2	Benzo(k)fluoranthene	**J**	Internal standard recovery biased low.
209066-23	Boiler-B-3B-1-2	Acenaphthylene	**UJ**	Internal standard recovery biased low.
209066-23	Boiler-B-3B-1-2	Chrysene	**J**	Internal standard recovery biased low.
209066-23	Boiler-B-3B-1-2	Benzo(a)pyrene	**J**	Internal standard recovery biased low.
209066-23	Boiler-B-3B-1-2	Dibenzo(a,h)anthracene	**UJ**	Internal standard recovery biased low.
209066-23	Boiler-B-3B-1-2	Benz(a)anthracene	**J**	Internal standard recovery biased low.
209066-23	Boiler-B-3B-1-2	Acenaphthene	**UJ**	Internal standard recovery biased low.
209066-23	Boiler-B-3B-1-2	Phenanthrene	**J**	Internal standard recovery biased low.
209066-23	Boiler-B-3B-1-2	Fluorene	**UJ**	Internal standard recovery biased low.
209066-23	Boiler-B-3B-1-2	Naphthalene	**J**	Internal standard recovery biased low.

Laboratory ID	Sample ID	Analyte	Qualifier	Qualified Reason
209066-23	Boiler-B-3B-1-2	Total cPAHs TEQ	J	Internal standard recovery biased low.
209066-24	Boiler-B-3B-4-5	Indeno(1,2,3-cd)pyrene	J	CCV recovery biased high.
209066-25	DA-B-1-1-2	Indeno(1,2,3-cd)pyrene	J	CCV recovery biased high.
209066-26	DA-B-1-5-6	Indeno(1,2,3-cd)pyrene	J	CCV recovery biased high.
209066-28	Boiler-HA-2A-1-1	Indeno(1,2,3-cd)pyrene	J	CCV recovery biased high.
209066-30	Boiler-HA-2C-0-1	Indeno(1,2,3-cd)pyrene	J	CCV recovery biased high.
209066-31	Boiler-HA-2C-2-3	Indeno(1,2,3-cd)pyrene	J	CCV recovery biased high.
209066-32	Boiler-HA-2B-0-1	Indeno(1,2,3-cd)pyrene	J	CCV recovery biased high.
209066-47	GF9-B-1-5-6	Indeno(1,2,3-cd)pyrene	J	CCV recovery biased high.
209066-50	GF9-MW-1-5.5-6.5	Indeno(1,2,3-cd)pyrene	J	CCV recovery biased high.
209066-55	GF9-B-2-6-7	Indeno(1,2,3-cd)pyrene	J	CCV recovery biased high.
209066-56	GF9-B-2-9-9.5	Indeno(1,2,3-cd)pyrene	J	CCV recovery biased high; internal standard recovery biased low.
209066-56	GF9-B-2-9-9.5	Pyrene	J	Internal standard recovery biased low.
209066-56	GF9-B-2-9-9.5	Benzo(g,h,i)perylene	J	Internal standard recovery biased low.
209066-56	GF9-B-2-9-9.5	Benzo(b)fluoranthene	J	Internal standard recovery biased low.
209066-56	GF9-B-2-9-9.5	Benzo(k)fluoranthene	J	Internal standard recovery biased low.
209066-56	GF9-B-2-9-9.5	Chrysene	J	Internal standard recovery biased low.
209066-56	GF9-B-2-9-9.5	Benzo(a)pyrene	J	Internal standard recovery biased low.
209066-56	GF9-B-2-9-9.5	Dibenzo(a,h)anthracene	J	Internal standard recovery biased low.
209066-56	GF9-B-2-9-9.5	Benz(a)anthracene	J	Internal standard recovery biased low.
209066-70	NRP-B-22-11-12	Naphthalene	J	Field duplicate RPD >35%.
209066-71	NRP-B-22-11-12-D	Naphthalene	J	Field duplicate RPD >35%.
209066-72	NRP-B-22-15.5-16.5	Benzo(g,h,i)perylene	J	Internal standard recovery biased low.
209066-72	NRP-B-22-15.5-16.5	Indeno(1,2,3-cd)pyrene	J	Internal standard recovery biased low.
209066-72	NRP-B-22-15.5-16.5	Benzo(b)fluoranthene	J	Internal standard recovery biased low.
209066-72	NRP-B-22-15.5-16.5	Benzo(k)fluoranthene	UJ	Internal standard recovery biased low.
209066-72	NRP-B-22-15.5-16.5	Benzo(a)pyrene	J	Internal standard recovery biased low.
209066-72	NRP-B-22-15.5-16.5	Dibenzo(a,h)anthracene	UJ	Internal standard recovery biased low.
209066-74	NRP-B-18-11.5-12.5	Pyrene	J	Field duplicate concentration difference >2xRL.
209066-74	NRP-B-18-11.5-12.5	Fluoranthene	J	Field duplicate concentration difference >2xRL.
209066-74	NRP-B-18-11.5-12.5	Acenaphthene	J	Field duplicate concentration difference >2xRL.
209066-74	NRP-B-18-11.5-12.5	Phenanthrene	J	Field duplicate concentration difference >2xRL.
209066-74	NRP-B-18-11.5-12.5	Fluorene	J	Field duplicate concentration difference >2xRL.
209066-74	NRP-B-18-11.5-12.5	Naphthalene	J	Field duplicate concentration difference >2xRL.
209066-75	NRP-B-18-11.5-12.5-D	Pyrene	UJ	Field duplicate concentration difference >2xRL.

Laboratory ID	Sample ID	Analyte	Qualifier	Qualified Reason
209066-75	NRP-B-18-11.5-12.5-D	Fluoranthene	**UJ**	Field duplicate concentration difference >2xRL.
209066-75	NRP-B-18-11.5-12.5-D	Acenaphthene	**UJ**	Field duplicate concentration difference >2xRL.
209066-75	NRP-B-18-11.5-12.5-D	Phenanthrene	**UJ**	Field duplicate concentration difference >2xRL.
209066-75	NRP-B-18-11.5-12.5-D	Fluorene	**UJ**	Field duplicate concentration difference >2xRL.
209066-75	NRP-B-18-11.5-12.5-D	Naphthalene	**UJ**	Field duplicate concentration difference >2xRL.
209095-01	NRP-B-21-7-8	Benzo(g,h,i)perylene	**J**	Internal standard recovery biased low.
209095-01	NRP-B-21-7-8	Indeno(1,2,3-cd)pyrene	**J**	Internal standard recovery biased low.
209095-01	NRP-B-21-7-8	Benzo(b)fluoranthene	**J**	Internal standard recovery biased low.
209095-01	NRP-B-21-7-8	Benzo(k)fluoranthene	**J**	Internal standard recovery biased low.
209095-01	NRP-B-21-7-8	Acenaphthylene	**J**	Internal standard recovery biased low.
209095-01	NRP-B-21-7-8	Chrysene	**J**	Internal standard recovery biased low.
209095-01	NRP-B-21-7-8	Benzo(a)pyrene	**J**	Internal standard recovery biased low.
209095-01	NRP-B-21-7-8	Dibenzo(a,h)anthracene	**UJ**	Internal standard recovery biased low.
209095-01	NRP-B-21-7-8	Benz(a)anthracene	**J**	Internal standard recovery biased low.
209095-01	NRP-B-21-7-8	Naphthalene	**J**	Internal standard recovery biased low.
209095-01	NRP-B-21-7-8	Pyrene	**J**	LCS/LCSD RPD >20%; internal standard recovery biased low.
209095-02	NRP-B-21-10.5-11.5	Benzo(g,h,i)perylene	**J**	Internal standard recovery biased low.
209095-02	NRP-B-21-10.5-11.5	Indeno(1,2,3-cd)pyrene	**J**	Internal standard recovery biased low.
209095-02	NRP-B-21-10.5-11.5	Benzo(b)fluoranthene	**J**	Internal standard recovery biased low.
209095-02	NRP-B-21-10.5-11.5	Benzo(k)fluoranthene	**J**	Internal standard recovery biased low.
209095-02	NRP-B-21-10.5-11.5	Benzo(a)pyrene	**J**	Internal standard recovery biased low.
209095-02	NRP-B-21-10.5-11.5	Dibenzo(a,h)anthracene	**UJ**	Internal standard recovery biased low.
209095-02	NRP-B-21-10.5-11.5	Pyrene	**J**	LCS/LCSD RPD >20%.
209095-03	NRP-B-21-14-15	Benzo(g,h,i)perylene	**J**	Internal standard recovery biased low.
209095-03	NRP-B-21-14-15	Indeno(1,2,3-cd)pyrene	**J**	Internal standard recovery biased low.
209095-03	NRP-B-21-14-15	Benzo(b)fluoranthene	**J**	Internal standard recovery biased low.
209095-03	NRP-B-21-14-15	Benzo(k)fluoranthene	**UJ**	Internal standard recovery biased low.
209095-03	NRP-B-21-14-15	Benzo(a)pyrene	**J**	Internal standard recovery biased low.
209095-03	NRP-B-21-14-15	Dibenzo(a,h)anthracene	**UJ**	Internal standard recovery biased low.
209095-03	NRP-B-21-14-15	Pyrene	**J**	LCS/LCSD RPD >20%.
209095-04	NRP-B-20-8-9	Benzo(g,h,i)perylene	**UJ**	Internal standard recovery biased low.
209095-04	NRP-B-20-8-9	Indeno(1,2,3-cd)pyrene	**UJ**	Internal standard recovery biased low.
209095-04	NRP-B-20-8-9	Benzo(b)fluoranthene	**J**	Internal standard recovery biased low.
209095-04	NRP-B-20-8-9	Benzo(k)fluoranthene	**UJ**	Internal standard recovery biased low.
209095-04	NRP-B-20-8-9	Chrysene	**J**	Internal standard recovery biased low.
209095-04	NRP-B-20-8-9	Benzo(a)pyrene	**J**	Internal standard recovery biased low.

Laboratory ID	Sample ID	Analyte	Qualifier	Qualified Reason
209095-04	NRP-B-20-8-9	Dibenzo(a,h)anthracene	**UJ**	Internal standard recovery biased low.
209095-04	NRP-B-20-8-9	Benz(a)anthracene	**J**	Internal standard recovery biased low.
209095-04	NRP-B-20-8-9	Pyrene	**J**	LCS/LCSD RPD >20%; internal standard recovery biased low.
209095-05	NRP-B-20-10-11	Pyrene	**J**	LCS/LCSD RPD >20%.
209095-06	NRP-B-20-12-13	Pyrene	**J**	LCS/LCSD RPD >20%.
209095-15	DA-MW-1-1-2	Pyrene	**J**	LCS/LCSD RPD >20%.
209095-16	DA-MW-1-5-6	Pyrene	**J**	LCS/LCSD RPD >20%.
209095-17	DA-MW-1-7-8	Pyrene	**J**	LCS/LCSD RPD >20%.
209095-20	REC1-MW-4-13-14	Pyrene	**J**	LCS/LCSD RPD >20%.
209130-07	REC1-MW-5-6.5-7.5	Anthracene	**UJ**	Internal standard recovery biased low.
209130-07	REC1-MW-5-6.5-7.5	Pyrene	**J**	Internal standard recovery biased low.
209130-07	REC1-MW-5-6.5-7.5	Benzo(g,h,i)perylene	**J**	Internal standard recovery biased low.
209130-07	REC1-MW-5-6.5-7.5	Indeno(1,2,3-cd)pyrene	**J**	Internal standard recovery biased low.
209130-07	REC1-MW-5-6.5-7.5	Benzo(b)fluoranthene	**UJ**	Internal standard recovery biased low.
209130-07	REC1-MW-5-6.5-7.5	Fluoranthene	**J**	Internal standard recovery biased low.
209130-07	REC1-MW-5-6.5-7.5	Benzo(k)fluoranthene	**UJ**	Internal standard recovery biased low.
209130-07	REC1-MW-5-6.5-7.5	Chrysene	**UJ**	Internal standard recovery biased low.
209130-07	REC1-MW-5-6.5-7.5	Benzo(a)pyrene	**UJ**	Internal standard recovery biased low.
209130-07	REC1-MW-5-6.5-7.5	Dibenzo(a,h)anthracene	**UJ**	Internal standard recovery biased low.
209130-07	REC1-MW-5-6.5-7.5	Benz(a)anthracene	**UJ**	Internal standard recovery biased low.
209130-07	REC1-MW-5-6.5-7.5	Phenanthrene	**UJ**	Internal standard recovery biased low.
209130-08	REC1-MW-5-12-13	Anthracene	**UJ**	Internal standard recovery biased low.
209130-08	REC1-MW-5-12-13	Pyrene	**J**	Internal standard recovery biased low.
209130-08	REC1-MW-5-12-13	Fluoranthene	**J**	Internal standard recovery biased low.
209130-08	REC1-MW-5-12-13	Chrysene	**J**	Internal standard recovery biased low.
209130-08	REC1-MW-5-12-13	Benz(a)anthracene	**J**	Internal standard recovery biased low.
K1208721-002	REC6-MW-2-083012	Formaldehyde	**UJ**	Extraction was performed past required holding time.

Table II. Data Affected by Detections in Method Blank

Sample ID	Compound	Original Result	Adjusted Result	Unit	Report Section
REC3-MW-1-082912 MW-6-082912	Diethyl phthalate	1 1	**1 U** **1 U**	µg/L	**2.5**
NRP-MW-4-083012 NRP-MW-5-083012 REC7-MW-2-083012 UG-MW-1-083012	Total Zinc	4.53 2.70 1.82 3.36	**4.53 J** **2.70 J** **1.82 J** **3.36 J**	µg/L	**7.4**
NRP-MW-2-083112	Dissolved Zinc	2.45	**2.45 J**	µg/L	**7.4**
OMS-MW-1-082812 REC7-MW-3-082812 REC7-MW-4-082812	Dissolved Beryllium	0.0034 J 0.0005 J 0.0012 J	**0.0222 U** **0.0222 U** **0.0222 U**	µg/L	**7.4**
REC7-MW-4-082812	Total Beryllium	0.0086 J	**0.0250 U**	µg/L	**7.4**
OMS-MW-1-082812 REC7-MW-3-082812	Dissolved Lead	0.058 0.060	**0.058 J** **0.060 J**	µg/L	**7.4**
OMS-MW-1-082812 REC7-MW-3-082812 REC7-MW-4-082812	Dissolved Thallium	0.004 J 0.016 J 0.012 J	**0.0222 U** **0.0222 U** **0.0222 U**	µg/L	**7.4**
REC7-MW-4-082812	Total Thallium	0.019 J	**0.0250 U**	µg/L	**7.4**
REC3-MW-1-082912 UST70-MW-2-082912	Dissolved Beryllium	0.0018 J 0.0018 J	**0.05 U** **0.05 U**	µg/L	**7.4**
REC3-MW-1-082912 UST70-MW-2-082912	Dissolved Lead	0.047 J 0.035 J	**0.05 U** **0.05 U**	µg/L	**7.4**
UST70-MW-2-082912	Dissolved Thallium	0.03 J	**0.05 U**	µg/L	**7.4**
MW-1-082712	Dissolved Beryllium	0.0023 J	**0.05 U**	µg/L	**7.4**
MW-2-082712	Total Beryllium	0.0016 J	**0.0222 U**	µg/L	**7.4**
MW-1-082712	Dissolved Silver	0.031 J	**0.05 U**	µg/L	**7.4**
MW-2-082712	Total Silver	0.005 J	**0.0222 U**	µg/L	**7.4**
MW-1-082712	Dissolved Thallium	0.012 J	**0.05 U**	µg/L	**7.4**

Table III. Data Qualifiers are defined as follows:

Data Qualifier	Definition
DNR	Do not report; the result should be reported from an alternative analysis.
J	The analyte was detected above the reported quantitation limit, and the reported concentration was an estimated value.
R	The sample results are unusable due to the quality of the data generated because certain criteria were not met. The analyte may or may not be present in the sample.
U	The analyte was analyzed for, but was considered not detected at the reporting limit or reported value.
UJ	The analyte was analyzed for, and the associated quantitation limit was an estimated value.

REFERENCES

USEPA *Contract Laboratory Program National Functional Guidelines for Inorganic Superfund Data Review,* Office of Superfund Remediation and Technical Innovation, U.S. Environmental Protection Agency, January 2010, USEPA 540/R-10/011

USEPA *Contract Laboratory Program National Functional Guidelines for Superfund Organic Methods Data Review,* Office of Superfund Remediation and Technical Innovation, U.S. Environmental Protection Agency, June 2008, USEPA-540-R-08-01.

USEPA *Method 1631, Revision E: Mercury in Water by Oxidation, Purge and Trap, and Cold Vapor Atomic Fluorescence Spectrometry, Office of Water, U.S. Environmental Protection Agency, August 2002, EPA-821-R-02-019.*

USEPA *Test Methods for Evaluating Solid Waste (SW-846). Third Edition and Revised Update IIIA.* Office of Solid Waste and Emergency Response, Washington, D.C. April 1998.

USEPA *Methods for Chemical Analysis of Water and Wastes,* EPA-600/4-79-020, March 1983 and updates.

Standard Methods for the Examination of Water and Wastewater, American Public Health Association, 20th Edition, 1995.

Ecology (Washington State Department of). 1997. *Analytical Methods for Petroleum Hydrocarbons.* Publication No. ECY 97-602. June 1997.

PSEP *Recommended Guidelines for Measuring Organic Compounds in Puget Sound Water, Sediment and Tissue Samples,* Puget Sound Water Quality Authority, April 1997.

Aspect Consulting, LLC. *Quality Assurance Project Plan, Port of Bellingham Former GP Mill Property RI/FS,* Seattle, Washington. September, 2009.

Appendix A

Field duplicate RPD is indicative of field and laboratory precision and sample homogeneity in combination. The CLP National Functional Guidelines or *Work Plan* do not specify criteria for field duplicate evaluation. An advisory criterion of 35% was applied to evaluating the RPD values of field duplicate results that are ≥5xRL. For results that are <5xRL, an advisory criterion of ±2RL was applied to evaluating the concentration differences. The RPD (or concentration difference as applicable) values and data qualification for detected compounds in field duplicates are presented as follows:

Analyte	Units	RL	Parent & Field Duplicate Sample Result		RPD	Delta	Data Qualifier
			Boiler-HA-2B-0-1	**Boiler-HA-2B-0-1-D**			
Lead	mg/kg	1	1590	1780	11%	-	
Arsenic	mg/kg	1	14.5	20.3	33%	-	
			Boiler-MW-1-091412	**Boiler-MW-1-091412-D**			
Diss Lead	µg/L	1	4.42	4.86	-	0.44	
Diss. Nickel	µg/L	1	1.94	2.09	-	0.15	
Diss. Antimony	µg/L	1	1.78	1.79	-	0.01	
Diss. Arsenic	µg/L	1	2.02	2.03	-	0.01	
Diss. Chromium	µg/L	1	11.3	11.9	5%	-	
Diss. Copper	µg/L	1	17.1	17.2	1%	-	
Diss. Zinc	µg/L	1	2.64	2.95	-	0.31	
			DA-MW-1-091312	**DA-MW-1-091312-D**			
Anthracene	µg/L	0.05	0.11	0.11	-	0	
Pyrene	µg/L	0.05	0.6	0.6	0%	-	
Benzo(b)fluoranthene	µg/L	0.01	0.016	0.013	-	0.003	
Fluoranthene	µg/L	0.05	0.7	0.74	6%	-	
Chrysene	µg/L	0.01	0.042	0.04	-	0.002	
Benzo(a)pyrene	µg/L	0.01	0.01	0.01	-	0	
Benz(a)anthracene	µg/L	0.01	0.055	0.053	4%	-	
Acenaphthene	µg/L	0.5	7	8	13%	-	
Phenanthrene	µg/L	0.05	0.69	0.7	1%	-	
Fluorene	µg/L	0.05	1.2	1.2	0%	-	
Naphthalene	µg/L	0.05	0.33	0.38	14%	-	
			GF11-B-1-2-3	**GF11-B-1-2-3-D**			
Lead	mg/kg	1	43.9	31	34%	-	
			HB-B-1-2-3	**HB-B-1-2-3-D**			
Mercury	mg/kg	0.1	0.13	0.13	0%	-	
Lead	mg/kg	1	119	99.1	18%	-	

Analyte	Units	RL	Parent & Field Duplicate Sample Result		RPD	Delta	Data Qualifier
Nickel	mg/kg	1	19.6	21	7%	-	
Silver	mg/kg	1	ND	ND	-	-	
Thallium	mg/kg	1	ND	ND	-	-	
Antimony	mg/kg	1	1.28	1.62	-	0.34	
Arsenic	mg/kg	1	7.3	7.1	3%	-	
Beryllium	mg/kg	1	ND	ND	-	-	
Cadmium	mg/kg	1	ND	ND	-	-	
Chromium	mg/kg	1	10.1	10.4	3%	-	
Copper	mg/kg	1	34.7	41.4	18%	-	
Zinc	mg/kg	1	82.6	96.9	16%	-	
Pyrene	mg/kg	0.03	0.16	0.13	21%	0.03	
Benzo(g,h,i)perylene	mg/kg	0.03	0.059	0.058	-	0.001	
Indeno(1,2,3-cd)pyrene	mg/kg	0.03	0.055	0.05	-	0.005	
Benzo(b)fluoranthene	mg/kg	0.03	0.096	0.085	-	0.011	
Fluoranthene	mg/kg	0.03	0.13	0.11	17%	-	
Benzo(k)fluoranthene	mg/kg	0.03	0.037	0.03	-	0.007	
Chrysene	mg/kg	0.03	0.086	0.074	15%	-	
Benzo(a)pyrene	mg/kg	0.03	0.081	0.07	-	0.011	
Benz(a)anthracene	mg/kg	0.03	0.071	0.06	-	0.011	
Phenanthrene	mg/kg	0.03	0.075	0.07	-	0.005	
			HB-MW-1-1.5-2	**HB-MW-1-1.5-2-D**			
Benz(a)anthracene	mg/kg	0.03	0.053	0.063	-	0.01	
Benzo(a)pyrene	mg/kg	0.03	0.069	0.08	-	0.011	
Benzo(b)fluoranthene	mg/kg	0.03	0.073	0.091	-	0.018	
Benzo(g,h,i)perylene	mg/kg	0.03	0.054	0.069	-	0.015	
Chrysene	mg/kg	0.03	0.073	0.089	-	0.016	
Fluoranthene	mg/kg	0.03	0.06	0.083	-	0.023	
Indeno(1,2,3-cd)pyrene	mg/kg	0.03	0.04	0.052	-	0.012	
Phenanthrene	mg/kg	0.03	0.033	0.043	-	0.01	
Pyrene	mg/kg	0.03	0.096	0.11	-	0.014	
			MW-4-082712	**MW-4-082712-D**			
Total Lead	µg/L	1	11.7	12.1	3%	-	
TPH-Diesel	µg/L	50	190	210	-	20	
Naphthalene	µg/L	1	130	130	0%	-	
Anthracene	µg/L	0.05	0.087	0.065	-	0.022	
Pyrene	µg/L	0.05	0.062	0.051	-	0.011	

Analyte	Units	RL	Parent & Field Duplicate Sample Result		RPD	Delta	Data Qualifier
Fluoranthene	µg/L	0.05	0.063	ND	-	0.063	
Chrysene	µg/L	0.01	0.013	0.012	-	0.001	
Acenaphthene	µg/L	0.5	6	4.2	35%	-	
Phenanthrene	µg/L	0.5	2.4	1.7	34%	-	
Fluorene	µg/L	0.5	3.3	2.3	36%	-	**J/J**
Naphthalene	µg/L	5	63	41	42%	-	**J/J**
			NRP-B-18-11.5-12.5	**NRP-B-18-11.5-12.5-D**			
TPH-Diesel	mg/kg	50	ND	78	-	78	**UJ/J**
TPH-Gasoline	mg/kg	2	12	310	185%	-	**J/J**
Pyrene	mg/kg	0.01	0.021	ND	-	0.021	**J/UJ**
Fluoranthene	mg/kg	0.01	0.021	ND	-	0.021	**J/UJ**
Acenaphthene	mg/kg	0.01	0.085	ND	-	0.085	**J/UJ**
Phenanthrene	mg/kg	0.01	0.034	ND	-	0.034	**J/UJ**
Fluorene	mg/kg	0.01	0.077	ND	-	0.077	**J/UJ**
Naphthalene	mg/kg	0.01	0.26	ND	-	0.26	**J/UJ**
			NRP-B-22-11-12	**NRP-B-22-11-12-D**			
TPH-Diesel	mg/kg	50	14000	22000	44%	-	**J/J**
TPH-Motor Oil	mg/kg	250	7500	11000	38%	-	**J/J**
TPH-Gasoline	mg/kg	10	230	120	63%	-	**J/J**
Ethylbenzene	mg/kg	0.05	0.5	0.74	39%	-	**J/J**
n-Propylbenzene	mg/kg	0.05	0.5	0.89	56%	-	**J/J**
sec-Butylbenzene	mg/kg	0.05	0.27	0.56	70%	-	**J/J**
m,p-Xylenes	mg/kg	0.1	0.12	0.18	-	0.06	
Naphthalene	mg/kg	0.05	0.39	0.7	57%	-	**J/J**
o-Xylene	mg/kg	0.05	0.052	0.086	-	0.034	
1,2,4-Trimethylbenzene	mg/kg	0.05	0.07	0.12	-	0.05	
tert-Butylbenzene	mg/kg	0.05	0.37	0.7	62%	-	**J/J**
Isopropylbenzene	mg/kg	0.05	0.41	0.72	55%	-	**J/J**
p-Isopropyltoluene	mg/kg	0.05	0.33	0.65	65%	-	**J/J**
Total Xylenes	mg/kg	0.07	0.172	0.266	-	0.094	
Anthracene	mg/kg	1	10	11	10%	-	
Pyrene	mg/kg	1	19	20	5%	-	
Benzo(g,h,i)perylene	mg/kg	1	1.7	1.8	6%	0.1	
Benzo(b)fluoranthene	mg/kg	1	1.8	1.9	-	0.1	
Fluoranthene	mg/kg	1	3.7	3.7	-	0	
Acenaphthylene	mg/kg	1	3	3.8	-	0.8	

Analyte	Units	RL	Parent & Field Duplicate Sample Result		RPD	Delta	Data Qualifier
Chrysene	mg/kg	1	12	13	8%	-	
Benzo(a)pyrene	mg/kg	1	3.6	3.6	-	0	
Benz(a)anthracene	mg/kg	1	6.8	5.8	16%	-	
Acenaphthene	mg/kg	1	12	13	8%	-	
Phenanthrene	mg/kg	1	51	55	8%	-	
Fluorene	mg/kg	1	18	19	5%	-	
Naphthalene	mg/kg	1	5.5	2.8	-	2.7	**J/J**
			NRP-MW-1-083112	**NRP-MW-1-083112-D**			
Diss. Nickel	µg/L	1	4.47	4.88	-	0.41	
Diss. Arsenic	µg/L	1	1.1	1.13	-	0.03	
Diss. Selenium	µg/L	1	3.37	3.51	-	0.14	
			REC5-MW-1-082912	**REC5-MW-1-082912-D**			
Diss. Antimony	µg/L	1	3.65	2.3	-	1.35	**J/J**
Diss. Arsenic	µg/L	1	202	173	15%	-	
Diss. Chromium	µg/L	1	19.6	18.5	6%	-	
Diss. Copper	µg/L	1	12.8	4.29	100%	-	**J/J**
Diss. Lead	µg/L	1	12.2	2.08	142%	-	**J/J**
Diss. Nickel	µg/L	1	2.5	2.49	-	0.01	
Diss. Selenium	µg/L	1	2.62	2.23	-	0.39	
Diss. Zinc	µg/L	1	7.73	4.49	-	3.24	**J/J**
Total Antimony	µg/L	1	5.94	6.02	1%	-	
Total Arsenic	µg/L	1	213	204	4%	-	
Total Chromium	µg/L	1	26.7	26.3	2%	-	
Total Copper	µg/L	1	62.2	63	1%	-	
Total Lead	µg/L	1	88.7	88.5	0%	-	
Total Mercury	µg/L	0.1	0.16	0.17	-	0.01	
Total Nickel	µg/L	1	4.69	4.05	-	0.64	
Total Selenium	µg/L	1	1.58	1.35	-	0.23	
Total Zinc	µg/L	1	42.6	66.8	44%	-	**J/J**
			REC6-MW-1-082812	**REC6-MW-1-082812-D**			
1,2,4-Trimethylbenzene	µg/L	1	2.5	2.2	-	0.3	
1,3,5-Trimethylbenzene	µg/L	1	1.4	1.2	-	0.2	
Isopropylbenzene	µg/L	1	6.2	5.3	16%	-	
n-Propylbenzene	µg/L	1	3.7	3.2	-	0.5	
Toluene	µg/L	1	8	7	13%	-	
Ethylbenzene	µg/L	10	850	790	7%	-	

Analyte	Units	RL	Parent & Field Duplicate Sample Result		RPD	Delta	Data Qualifier
m,p-Xylenes	µg/L	200	3100	2900	7%	-	
o-Xylene	µg/L	10	670	620	8%	-	
Total Xylenes	µg/L	105	3770	3520	7%	-	
			REC6-MW-2-083012	**REC6-MW-2-083012-D**			
Ammonia as Nitrogen	mg/L	0.25	8.15	8.3	2%	-	
Sulfide	mg/L	0.05	0.906	0.551	49%	-	**J/J**
			REC1-MW-1-11-12	**REC1-MW-1-11-12-D**			
Pyrene	mg/kg	0.01	0.087	0.018	131%		**J/J**
Fluoranthene	mg/kg	0.01	0.02	ND		0.02	
Acenaphthene	mg/kg	0.01	0.17	0.048	112%		**J/J**
Phenanthrene	mg/kg	0.01	0.76	0.28	92%		**J/J**
Fluorene	mg/kg	0.01	0.35	0.079	126%		**J/J**
			REC1-MW-3-12-13	**REC1-MW-3-12-13-D**			
TPH-Diesel	mg/kg	50	2600	2800	7%		
			REC5-HA-4-0-1	**REC5-HA-4-0-1-D**			
Lead	mg/kg	1	6.9	6.84	1%		
Nickel	mg/kg	1	22.7	39.6	54%		**J/J**
Arsenic	mg/kg	1	2.23	2.42		0.19	
Chromium	mg/kg	1	10.6	11.3	6%		
Copper	mg/kg	1	6.89	7.44	8%		
Zinc	mg/kg	1	14.2	17.8	23%		
			UST68-MW-6-14-15	**UST68-MW-6-14-15-D**			
n-Propylbenzene	mg/kg	0.05	0.31	ND		0.31	**J/UJ**
sec-Butylbenzene	mg/kg	0.05	0.068	ND		0.068	
Isopropylbenzene	mg/kg	0.05	0.068	ND		0.068	
			REC1-MW-9-091312	**REC1-MW-9-091312-D**			
Ammonia as Nitrogen	mg/L	0.05	0.249	0.236		0.013	

Notes:
Delta – Concentration difference between the parent sample and its field duplicate
mg/kg – milligram per kilogram
mg/L – milligram per liter
ND – The analyte was not detected at or above the RL.
RL – Reporting limit
RPD – Relative percent difference
µg/L – microgram per liter

Data Validation Report

Kimberly-Clark Everett, Washington Site
Upland Area Remedial Investigation/Feasibility Study
Soil Sampling

Prepared for:

Aspect Consulting LLC
401 Second Ave South, Suite 201
Seattle, WA 98014

Prepared by:

Pyron Environmental, Inc.
3530 32nd Way, NW
Olympia, WA 98502

ACRONYMS

%D	percent difference
%D_f	percent drift
%R	percent recovery
%RSD	percent relative standard deviation
AMU	atomic mass unit
CCB	continuing calibration blank
CCV	continuing calibration verification
CDD	chlorinated dibenzo-p-dioxin
CDF	chlorinated dibenzofuran
CF	calibration factor
CLP	U.S. EPA Contract Laboratory Program
COC	chain-of-custody
CVAFS	cold vapor atomic fluorescent spectrometry
DFTPP	decafluorotriphenylphosphine
ECD	electron capture detector
EDL	estimated detection limit
EMPC	estimated maximum possible concentration
EPA	U.S. Environmental Protection Agency
EPH	extractable petroleum hydrocarbon
FID	Flame ionization detector
GC/MS	gas chromatograph/mass spectrometer
HRGC	high-resolution gas chromatograph
HRMS	high-resolution mass spectrometer
ICAL	initial calibration
ICB	initial calibration blank
ICP	inductively coupled plasma
ICP/MS	inductively coupled plasma/ mass spectrometer
ICSA	ICP interference check sample solution A
ICV	initial calibration verification
IPR	initial precision and recovery
ISC	isomer specificity check
LCS	laboratory control sample
LCSD	laboratory control sample duplicate
m/z	mass-to-charge ratio

MDL	method detection limit
µg/kg	microgram per kilogram
mg/kg	milligram per kilogram
MS	matrix spike
MSD	matrix spike duplicate
NFGs	CLP National Functional Guidelines for Data Review (EPA 2008 – Organics; EPA 2010 – Inorganics; EPA 2011 – Dioxins/Furans)
OPR	ongoing precision and recovery
pg/g	pictogram per gram
PCBs	polychlorinated biphenyls
PCDD	polychlorinated dibenzo-*p*-dioxin
PCDF	polychlorinated dibenzofuran
PEM	performance evaluation mixture
PID	photoionization detector
QA/QC	quality assurance/quality control
QAPP	quality assurance project plan
RF	response factor
RL	reporting limit
RPD	relative percent difference
RRT	relative retention time
S/N	signal-to-noise ratio
SDG	sample delivery group
SICP	selected ion current profile
SIM	selective ion monitoring
SPLP	synthetic precipitation leaching procedure
SVOCs	semi-volatile organic compounds
VOCs	volatile organic compounds
VPH	volatile petroleum hydrocarbon
WDM	window defining mixture

INTRODUCTION

This report presents and discusses findings of the data validation performed on analytical data for soil samples collected during October and December 2013 for the referenced project. The laboratory reports validated herein were submitted by Friedman & Bruya, Inc., Fremont Analytical, Inc. in Seattle, Washington, and ALS Environmental Services, Inc. in Houston, Texas.

A level III (or Level 2B as defined in EPA 2009) data validation was performed on these laboratory reports, except those for Extractable Petroleum Hydrocarbon (EPH) and Volatile Petroleum Hydrocarbon (VPH) analyses (performed by Fremont Analytical, Inc.). A Level II (or Level 2A as defined in EPA 2009) validation was performed on EPAH and VPH data.

The validation followed the procedures specified in USEPA CLP Functional Guidelines ([NFGs], EPA 2008 – Organics; EPA 2010 – Inorganics; EPA 2011 – Dioxins/Furans) and EPA Region 10 SOP (EPA 1996), with modifications to accommodate project and analytical method requirements. The numerical quality assurance/quality control (QA/QC) criteria applied to the validation were in accordance with the current performance-based control limits established by the laboratory (laboratory control limits). Instrument calibration, frequency of QC analyses, and analytical sequence requirements were evaluated against the respective analytical methods.

Validation findings are discussed in each section pertinent to the QC parameter for each type of analysis. Qualified data with applied data qualifiers are summarized in the **SUMMARY** section at the end of this report. Samples and the associated analyses validated herein are summarized as follows:

				Analysis						
Field Sample ID	**Laboratory Sample ID**	**Sample Date**	**Sample Type**	**VOCs**	**SVOCs PAHs**	**PCBs**	**Metal**	**TPH-G**	**TPH-Dx**	**Misc.**
CN-MW-3-4-102213	310431-01	10/22/2013	Soil		PAHs		X+Cd		X	
CN-MW-3-4.5-102213	310431-02	10/22/2013	Soil		PAHs		X+Cd		X	
CN-MW-3-6-102213	310431-03	10/22/2013	Soil		PAHs		X+Cd		X	
CN-MW-2-4-102213	310431-04	10/22/2013	Soil		PAHs		X+Cd		X	
CN-MW-2-8-102213	310431-05	10/22/2013	Soil		PAHs		X+Cd		X	
CN-MW-2-9.5-102213	310431-06	10/22/2013	Soil		PAHs		X+Cd		X	
CN-MW-1-4.5-102213	310431-07	10/22/2013	Soil		PAHs		X+Cd		X	
CN-MW-1-4.5-102213-D	310431-08	10/22/2013	Soil		PAHs		X+Cd		X	
CN-MW-1-9.5-102213	310431-09	10/22/2013	Soil		PAHs		X+Cd		X	
CN-MW-1-13-102213	310431-10	10/22/2013	Soil		PAHs		X+Cd		X	
TM-MW-3-7-102213	310431-11	10/22/2013	Soil		SVOCs		X+Cd		X	SPLP/As

Field Sample ID	Laboratory Sample ID	Sample Date	Sample Type	Analysis						
				VOCs	SVOCs PAHs	PCBs	Metal	TPH-G	TPH-Dx	Misc.
TM-MW-3-8-102213	310431-12	10/22/2013	Soil		SVOCs		X+Cd		X	
TM-MW-3-10-102213	310431-13	10/22/2013	Soil		SVOCs		X+Cd		X	
TM-MW-1-9.5-102213	310431-14	10/22/2013	Soil	X	SVOCs		X+Cd		X	
TM-MW-1-12-102213	310431-15	10/22/2013	Soil	X	SVOCs		X+Cd		X	
TM-MW-1-12-102213-D	310431-16	10/22/2013	Soil	X						
TM-MW-2-4.5-102313	310459-01	10/23/2013	Soil			X				
TM-MW-2-7.5-102313	310459-02	10/23/2013	Soil		SVOCs		X		X	
TM-MW-2-9-102313	310459-03	10/23/2013	Soil		SVOCs		X		X	
TM-MW-2-12-102313	310459-04	10/23/2013	Soil		SVOCs		X		X	
TM-MW4-7-102313	310459-05	10/23/2013	Soil			X				
TM-MW4-7.5-102313	310459-06	10/23/2013	Soil		SVOCs		X		X	
TM-MW4-8-102313	310459-07	10/23/2013	Soil		SVOCs	X	X		X	
TM-MW4-10-102313	310459-08	10/23/2013	Soil		SVOCs		X		X	
TM-MW5-2-102313	310459-09	10/23/2013	Soil			X				
TM-MW5-5-102313	310459-10	10/23/2013	Soil		SVOCs	X	X		X	
TM-MW5-15-102313	310459-11	10/23/2013	Soil		SVOCs		X		X	
TM-MW5-18-102313	310459-12	10/23/2013	Soil		SVOCs		X		X	
TM-MW6-1-102313	310459-13	10/23/2013	Soil			X				
TM-MW6-6.5-102313	310459-14	10/23/2013	Soil		SVOCs		X		X	
TM-MW6-15-102313	310459-15	10/23/2013	Soil		SVOCs		X		X	
TM-MW20-6.5-102313	310459-16	10/23/2013	Soil		SVOCs		X		X	
SHB-MW2-5-102413	310487-01	10/24/2013	Soil	X	PAHs		X	X	X	
SHB-MW2-7-102413	310487-02	10/24/2013	Soil	X	PAHs		X	X	X	
SHB-MW20-5-102413	310487-03	10/24/2013	Soil	X	PAHs		X	X	X	
SHB-MW2-13-102413	310487-04	10/24/2013	Soil	X	PAHs		X	X	X	
LP-MW2-7-102413	310487-05	10/24/2013	Soil	X	SVOCs		X		X	
LP-MW2-10.5-102413	310487-06	10/24/2013	Soil	X	SVOCs		X		X	
LP-MW2-16-102413	310487-07	10/24/2013	Soil	X	SVOCs		X		X	
SHB-MW1-3-102413	310487-08	10/24/2013	Soil	X	PAHs	X	X	X	X	SPLP/Cu
SHB-MW1-7.5-102413	310487-09	10/24/2013	Soil	X	PAHs		X	X	X	
SHB-MW1-13-102413	310487-10	10/24/2013	Soil	X	PAHs		X	X	X	
LP-MW1-5.5-102413	310487-11	10/24/2013	Soil	X	SVOCs		X		X	SPLP/Cu
LP-MW1-12-102413	310487-12	10/24/2013	Soil	X	SVOCs		X		X	
LP-MW1-14.5-102413	310487-13	10/24/2013	Soil	X	SVOCs		X		X	

Field Sample ID	Laboratory Sample ID	Sample Date	Sample Type	Analysis						
				VOCs	SVOCs PAHs	PCBs	Metal	TPH-G	TPH-Dx	Misc.
BA-MW-6-1.5-102513	310511-01	10/25/2013	Soil	X	PAHs	X	X+Cd		X	
BA-MW-10-1.5-102513	310511-02	10/25/2013	Soil	X	PAHs		X+Cd		X	
BA-MW-5-2-102513	310511-03	10/25/2013	Soil	X	PAHs		X+Cd		X	
BA-MW-7-1.5-102513	310511-04	10/25/2013	Soil	X	PAHs		X+Cd		X	
BA-MW-7-12.5-102513	310511-05	10/25/2013	Soil		PAHs				X	
BA-MW-7-15-102513	310511-06	10/25/2013	Soil		PAHs				X	
PM-MW-8-2.5-102513	310511-07	10/25/2013	Soil			X				
PM-MW-8-5.5-102513	310511-08	10/25/2013	Soil		SVOCs		X+Cd		X	
PM-MW-8-7-102513	310511-09	10/25/2013	Soil		SVOCs		X+Cd		X	
PM-MW-8-12-102513	310511-10	10/25/2013	Soil		SVOCs		X+Cd		X	
PM-MW-7-1.5-102813	310547-01	10/28/2013	Soil			X				
PM-MW-7-6.5-102813	310547-02	10/28/2013	Soil		SVOCs		X		X	
PM-MW-7-10.5-102813	310547-03	10/28/2013	Soil		SVOCs		X		X	
PM-MW-7-15.5-102813	310547-04	10/28/2013	Soil		SVOCs		X		X	
PM-MW-6-2.5-102813	310547-05	10/28/2013	Soil			X				
PM-MW-6-6-102813	310547-06	10/28/2013	Soil		SVOCs		X		X	
PM-MW-6-8-102813	310547-07	10/28/2013	Soil		SVOCs		X		X	
PM-MW-6-11-102813	310547-08	10/28/2013	Soil		SVOCs		X		X	
PM-MW-11-2.5-102813	310547-09	10/28/2013	Soil			X				
PM-MW-11-6-102813	310547-10	10/28/2013	Soil		SVOCs		X		X	
PM-MW-11-8-102813	310547-11	10/28/2013	Soil		SVOCs		X		X	
PM-MW-11-11-102813	310547-12	10/28/2013	Soil		SVOCs		X		X	
PM-MW-1-2.5-102813	310547-13	10/28/2013	Soil			X				
PM-MW-1-5.5-102813	310547-14	10/28/2013	Soil		SVOCs		X		X	SPLP/Cu
PM-MW-1-8.5-102813	310547-15	10/28/2013	Soil		SVOCs	X	X		X	
PM-MW-1-24-102813	310547-16	10/28/2013	Soil		SVOCs		X		X	
BA-MW-4-3.5-102813	310547-17	10/28/2013	Soil			X				
BA-MW-4-5.5-102813	310547-18	10/28/2013	Soil		SVOCs		X		X	
BA-MW-4-10-102813	310547-19	10/28/2013	Soil		SVOCs		X		X	
BA-MW-4-6-102813	310547-20	10/28/2013	Soil		SVOCs		X		X	SPLP/Cu
BA-MW-3-2.5-102913	310582-01	10/29/2013	Soil			X				
BA-MW-3-6-102913	310582-02	10/29/2013	Soil		SVOCs		X		X	
BA-MW-3-8-102913	310582-03	10/29/2013	Soil		SVOCs		X		X	
BA-MW-3-12-102913	310582-04	10/29/2013	Soil		SVOCs		X		X	

Field Sample ID	Laboratory Sample ID	Sample Date	Sample Type	Analysis						
				VOCs	SVOCs PAHs	PCBs	Metal	TPH-G	TPH-Dx	Misc.
BA-MW-1-3-102913	310582-05	10/29/2013	Soil			X				
BA-MW-1-6-102913	310582-06	10/29/2013	Soil		SVOCs		X		X	
BA-MW-1-8.5-102913	310582-07	10/29/2013	Soil		SVOCs		X		X	
BA-MW-1-12-102913	310582-08	10/29/2013	Soil		SVOCs		X		X	
BA-MW-13-3-102913	310582-09	10/29/2013	Soil			X				
BA-MW-13-6-102913	310582-10	10/29/2013	Soil		SVOCs		X		X	
BA-MW-13-8.5-102913	310582-11	10/29/2013	Soil		SVOCs		X		X	
BA-MW-13-12-102913	310582-12	10/29/2013	Soil		SVOCs		X		X	
BA-MW-2-2-102913	310582-13	10/29/2013	Soil			X				Congener
BA-MW-2-7-102913	310582-14	10/29/2013	Soil		SVOCs		X		X	
BA-MW-2-8-102913	310582-15	10/29/2013	Soil		SVOCs		X		X	
BA-MW-2-12-102913	310582-16	10/29/2013	Soil		SVOCs		X		X	
GF9-MW-2-7.5-102913	310582-17	10/29/2013	Soil		PAHs			X	X	
GF9-MW-2-11-102913	310582-18	10/29/2013	Soil		PAHs			X	X	
GF9-MW-2-15-102913	310582-19	10/29/2013	Soil		PAHs			X	X	
PM-MW3-3-103013	310607-01	10/30/2013	Soil			X				
PM-MW3-6-103013	310607-02	10/30/2013	Soil		SVOCs	X	X		X	
PM-MW3-7-103013	310607-03	10/30/2013	Soil		SVOCs		X		X	
PM-MW3-13-103013	310607-04	10/30/2013	Soil		SVOCs		X		X	
PM-MW20-3-103013	310607-05	10/30/2013	Soil			X				
OPS-MW1-5.5-103013	310607-06	10/30/2013	Soil	X						
OPS-MW1-7-103013	310607-07	10/30/2013	Soil	X			X			
OPS-MW1-14-103013	310607-08	10/30/2013	Soil	X			X			
OPS-MW20-7-103013	310607-09	10/30/2013	Soil	X			X			
CMS-MW2-3.5-103013	310607-10	10/30/2013	Soil		PAHs			X	X	
CMS-MW2-5-103013	310607-11	10/30/2013	Soil		PAHs			X	X	
CMS-MW2-12.5-103013	310607-12	10/30/2013	Soil		PAHs			X	X	
CMS-MW20-5-103013	310607-13	10/30/2013	Soil		PAHs			X	X	
PM-MW5-3-103013	310607-14	10/30/2013	Soil			X				
PM-MW5-7-103013	310607-15	10/30/2013	Soil		SVOCs		X		X	
PM-MW5-11-103013	310607-16	10/30/2013	Soil		SVOCs		X		X	
PM-MW5-14-103013	310607-17	10/30/2013	Soil		SVOCs		X		X	
UG-MW-2R-6-103113	311015-01	10/31/2013	Soil		PAHs		X	X	X	
UG-MW-2R-7-103113	311015-02	10/31/2013	Soil		PAHs		X	X	X	

Field Sample ID	Laboratory Sample ID	Sample Date	Sample Type	Analysis						
				VOCs	SVOCs PAHs	PCBs	Metal	TPH-G	TPH-Dx	Misc.
UG-MW-2R-12-103113	311015-03	10/31/2013	Soil		PAHs		X	X	X	
Rec1-MW14-7-103113	311015-04	10/31/2013	Soil		PAHs			X	X	
Rec1-MW14-11-103113	311015-05	10/31/2013	Soil		PAHs			X	X	EPH/VPH
Rec1-MW14-17-103113	311015-06	10/31/2013	Soil		PAHs			X	X	
Rec1-MW12-3-103113	311015-07	10/31/2013	Soil		PAHs			X	X	
Rec1-MW12-7-103113	311015-08	10/31/2013	Soil		PAHs			X	X	
Rec1-MW12-11-103113	311015-09	10/31/2013	Soil		PAHs			X	X	
Rec1-MW22-3-103113	311015-10	10/31/2013	Soil		PAHs			X	X	
Rec1-MW22-7-103113	311015-11	10/31/2013	Soil		PAHs			X	X	
Rec1-MW22-11-103113	311015-12	10/31/2013	Soil		PAHs			X	X	
Rec1-MW13-1.5-110113	311039-01	11/1/2013	Soil		PAHs			X	X	
Rec1-MW13-2-110113	311039-02	11/1/2013	Soil		PAHs			X	X	
Rec1-MW13-6-110113	311039-03	11/1/2013	Soil		PAHs			X	X	EPH/VPH
Rec1-MW23-1.5-110113	311039-04	11/1/2013	Soil		PAHs			X	X	
Rec1-MW23-2-110113	311039-05	11/1/2013	Soil		PAHs			X	X	
Rec1-MW23-6-110113	311039-06	11/1/2013	Soil		PAHs			X	X	
Rec1-MW11-2-110113	311039-07	11/1/2013	Soil		PAHs		X	X	X	
Rec1-MW11-5-110113	311039-08	11/1/2013	Soil		PAHs		X	X	X	
Rec1-MW11-7-110113	311039-09	11/1/2013	Soil		PAHs		X	X	X	
Rec1-MW10-2-110113	311039-10	11/1/2013	Soil		PAHs			X	X	
Rec1-MW10-5-110113	311039-11	11/1/2013	Soil		PAHs			X	X	
Rec1-MW10-7-110113	311039-12	11/1/2013	Soil		PAHs			X	X	
GF9-MW3-6-110113	311039-13	11/1/2013	Soil		PAHs			X	X	
GF9-MW3-8-110113	311039-14	11/1/2013	Soil		PAHs			X	X	
GF9-MW3-12-110113	311039-15	11/1/2013	Soil		PAHs			X	X	
AP-MW-1R-7-111113	311228-01	11/11/2013	Soil		PAHs		X	X	X	
AP-MW-1R-9-111113	311228-02	11/11/2013	Soil		PAHs		X	X	X	
AP-MW-1R-13-111113	311228-03	11/11/2013	Soil		PAHs		X	X	X	
AP-MW-501-7-111113	311228-04	11/11/2013	Soil		PAHs		X	X	X	
AP-MW-501-9-111113	311228-05	11/11/2013	Soil		PAHs		X	X	X	
AP-MW-501-13-111113	311228-06	11/11/2013	Soil		PAHs		X	X	X	
HB-MW-1R-7-111113	311228-07	11/11/2013	Soil		PAHs				X	
HB-MW-1R-12-111113	311228-08	11/11/2013	Soil		PAHs				X	EPH

Field Sample ID	Laboratory Sample ID	Sample Date	Sample Type	Analysis						
				VOCs	SVOCs PAHs	PCBs	Metal	TPH-G	TPH-Dx	Misc.
HB-MW-1R-17-111113	311228-09	11/11/2013	Soil		PAHs				X	
CMS-MW1R-2.5-111213	311257-01	11/12/2013	Soil		PAHs			X	X	
CMS-MW1R-8.5-111213	311257-02	11/12/2013	Soil		PAHs			X	X	
CMS-MW1R-10.5-111213	311257-03	11/12/2013	Soil		PAHs			X	X	
PM-MW2-5-111213	311257-04	11/12/2013	Soil		SVOCs	X	X		X	
PM-MW2-10-111213	311257-05	11/12/2013	Soil		SVOCs		X		X	
PM-MW2-15-111213	311257-06	11/12/2013	Soil		SVOCs		X		X	
PM-MW-2-3-111313	311294-01	11/13/2013	Soil			X				
PM-MW-2-6-111313	311294-02	11/13/2013	Soil		SVOCs		X		X	
PM-MW-2-7-111313	311294-03	11/13/2013	Soil		SVOCs		X		X	
PM-MW-2-12-111313	311294-04	11/13/2013	Soil		SVOCs		X		X	
PM-MW-502-3-111313	311294-05	11/13/2013	Soil			X				
PM-MW-502-6-111313	311294-06	11/13/2013	Soil		SVOCs		X		X	
PM-MW-502-7-111313	311294-07	11/13/2013	Soil		SVOCs		X		X	
PM-MW-502-12-111313	311294-08	11/13/2013	Soil		SVOCs		X		X	
Rec1-MW-15-2-111313	311294-09	11/13/2013	Soil		PAHs			X	X	
Rec1-MW-15-6-111313	311294-10	11/13/2013	Soil		PAHs			X	X	
Rec1-MW-15-7.5-111313	311294-11	11/13/2013	Soil		PAHs			X	X	
PM-B4-2-111313	311294-12	11/13/2013	Soil		SVOCs	X				
PM-B4-5.5-111313	311294-13	11/13/2013	Soil	X		X	X		X	
PM-B4-8-111313	311294-14	11/13/2013	Soil	X			X		X	
PM-B4-10.5-111313	311294-15	11/13/2013	Soil	X			X		X	
PM-B2-2-111313	311294-16	11/13/2013	Soil			X				
PM-B2-5-111313	311294-17	11/13/2013	Soil		SVOCs		X		X	
PM-B2-6.5-111313	311294-18	11/13/2013	Soil		SVOCs		X		X	SPLP/Cu
PM-B2-9-111313	311294-19	11/13/2013	Soil		SVOCs		X		X	
BA-B1-5-111313	311294-20	11/13/2013	Soil			X				
BA-B1-6.5-111313	311294-21	11/13/2013	Soil		SVOCs		X		X	
BA-B1-8-111313	311294-22	11/13/2013	Soil		SVOCs		X		X	
BA-B1-11-111313	311294-23	11/13/2013	Soil		SVOCs		X		X	
BA-B2-6-111313	311294-24	11/13/2013	Soil			X				
BA-B2-7-111313	311294-25	11/13/2013	Soil		SVOCs	X	X		X	
BA-B2-8-111313	311294-26	11/13/2013	Soil		SVOCs	X	X		X	

Field Sample ID	Laboratory Sample ID	Sample Date	Sample Type	Analysis						
				VOCs	SVOCs PAHs	PCBs	Metal	TPH-G	TPH-Dx	Misc.
BA-B2-12-111313	311294-27	11/13/2013	Soil		SVOCs	X	X		X	
CMS-B5-1-111313	311294-28	11/13/2013	Soil		PAHs			X	X	
CMS-B5-2.5-111313	311294-29	11/13/2013	Soil		PAHs			X	X	
CMS-B5-7-111313	311294-30	11/13/2013	Soil		PAHs			X	X	
Rec2-B13-5-111413	311323-01	11/14/2013	Soil		PAHs		X	X	X	
Rec2-B13-12-111413	311323-02	11/14/2013	Soil		PAHs		X	X	X	
Rec2-B13-14-111413	311323-03	11/14/2013	Soil		PAHs		X	X	X	
Rec2-B513-5-111413	311323-04	11/14/2013	Soil		PAHs		X	X	X	
Rec2-B513-12-111413	311323-05	11/14/2013	Soil		PAHs			X	X	
Rec2-B14-6.5-111413	311323-06	11/14/2013	Soil		PAHs			X	X	
Rec2-B14-9-111413	311323-07	11/14/2013	Soil		PAHs			X	X	EPH/VPH
Rec2-B14-13-111413	311323-08	11/14/2013	Soil		PAHs			X	X	
Rec2-B17-5.5-111413	311323-09	11/14/2013	Soil		PAHs		X	X	X	
Rec2-B17-6.5-111413	311323-10	11/14/2013	Soil		PAHs		X	X	X	
Rec2-B17-11-111413	311323-11	11/14/2013	Soil		PAHs		X	X	X	
Rec2-B21-7-111413	311323-12	11/14/2013	Soil		PAHs			X	X	
Rec2-B21-9-111413	311323-13	11/14/2013	Soil		PAHs			X	X	
Rec2-B21-11-111413	311323-14	11/14/2013	Soil		PAHs			X	X	
Rec2-B18-1-111413	311323-15	11/14/2013	Soil		SVOCs		X	X	X	
Rec2-B18-2-111413	311323-16	11/14/2013	Soil		SVOCs		X	X	X	
Rec2-B18-6-111413	311323-17	11/14/2013	Soil		SVOCs		X	X	X	
Rec2-B20-1-111413	311323-18	11/14/2013	Soil		PAHs		X	X	X	
Rec2-B20-6-111413	311323-19	11/14/2013	Soil		PAHs		X	X	X	
Rec2-B20-12-111413	311323-20	11/14/2013	Soil		PAHs		X	X	X	
Rec2-B19-5.5-111413	311323-21	11/14/2013	Soil		PAHs			X	X	
Rec2-B19-7-111413	311323-22	11/14/2013	Soil		PAHs			X	X	
Rec2-B19-8.5-111413	311323-23	11/14/2013	Soil		PAHs			X	X	
Rec2-B16-5-111513	311340-01	11/15/2013	Soil		PAHs			X	X	
Rec2-B16-6-111513	311340-02	11/15/2013	Soil		PAHs			X	X	
Rec2-B16-7-111513	311340-03	11/15/2013	Soil		PAHs			X	X	
Rec2-B15-2-111513	311340-04	11/15/2013	Soil		PAHs		X	X	X	
Rec2-B15-6.5-111513	311340-05	11/15/2013	Soil		PAHs		X	X	X	EPH/VPH
Rec2-B15-11-111513	311340-06	11/15/2013	Soil		PAHs		X	X	X	
Rec2-B15-111513	311340-07	11/15/2013	GW		PAHs			X	X	TSS

Field Sample ID	Laboratory Sample ID	Sample Date	Sample Type	Analysis						
				VOCs	SVOCs PAHs	PCBs	Metal	TPH-G	TPH-Dx	Misc.
PM-B3-2-111513	311340-08	11/15/2013	Soil		SVOCs	X				
PM-B3-6.5-111513	311340-09	11/15/2013	Soil	X	PAHs		X	X	X	
PM-B3-7.5-111513	311340-10	11/15/2013	Soil	X			X		X	
PM-B3-11-111513	311340-11	11/15/2013	Soil	X			X		X	
PM-B5-12-111813	311375-01	11/18/2013	Soil	X			X		X	
HB-B5-7-111813	311375-02	11/18/2013	Soil		PAHs				X	
HB-B4-5.5-111813	311375-03	11/18/2013	Soil		PAHs			X	X	
HB-B4-6.5-111813	311375-04	11/18/2013	Soil		PAHs			X		
HB-B4-7.5-111813	311375-05	11/18/2013	Soil		PAHs			X	X	
HB-B6-11-111813	311375-06	11/18/2013	Soil		PAHs				X	
HB-B6-12.5-111813	311375-07	11/18/2013	Soil		PAHs				X	
HB-B6-15-111813	311375-08	11/18/2013	Soil		PAHs				X	
GF9-B3-11-111913	311392-01	11/19/2013	Soil		PAHs			X	X	
GF9-B3-12-111913	311392-02	11/19/2013	Soil		PAHs			X	X	
GF9-B3-13-111913	311392-03	11/19/2013	Soil		PAHs			X	X	
SHB-B4-5.5-111913	311392-04	11/19/2013	Soil	X	PAHs		X	X	X	
SHB-B4-7.5-111913	311392-05	11/19/2013	Soil	X	PAHs		X	X	X	SPLP/Cu
SHB-B4-11.5-111913	311392-06	11/19/2013	Soil	X	PAHs		X	X	X	
SHB-B2-6-111913	311392-07	11/19/2013	Soil	X	PAHs		X	X	X	
SHB-B2-8-111913	311392-08	11/19/2013	Soil	X	PAHs		X	X	X	
SHB-B2-9-111913	311392-09	11/19/2013	Soil	X	PAHs		X	X	X	
SHB-B1-6.5-111913	311392-10	11/19/2013	Soil	X	SVOCs		X	X	X	
SHB-B1-7.5-111913	311392-11	11/19/2013	Soil	X	SVOCs		X	X	X	
SHB-B1-10.5-111913	311392-12	11/19/2013	Soil	X	SVOCs		X	X	X	
SHB-B3-3-111913	311392-13	11/19/2013	Soil	X	SVOCs		X	X	X	
SHB-B3-6-111913	311392-14	11/19/2013	Soil	X	SVOCs		X	X	X	
SHB-B3-11-111913	311392-15	11/19/2013	Soil	X	SVOCs		X	X	X	
CSB-B1-6-111913	311392-16	11/19/2013	Soil		PAHs		X	X	X	
CSB-B1-8-111913	311392-17	11/19/2013	Soil		PAHs		X	X	X	
CSB-B1-12-111913	311392-18	11/19/2013	Soil		PAHs		X	X	X	
CSB-B2-2-111913	311392-19	11/19/2013	Soil		PAHs	X			X	
CSB-B2-3-111913	311392-20	11/19/2013	Soil		PAHs	X			X	
GF9-B4-6.5-111913	311392-21	11/19/2013	Soil		PAHs			X	X	
GF9-B4-11.5-111913	311392-22	11/19/2013	Soil		PAHs			X	X	

Field Sample ID	Laboratory Sample ID	Sample Date	Sample Type	Analysis						
				VOCs	SVOCs PAHs	PCBs	Metal	TPH-G	TPH-Dx	Misc.
GF9-B4-13.5-111913	311392-23	11/19/2013	Soil		PAHs			X	X	
BA-B3-6-112013	311420-01	11/20/2013	Soil		PAHs				X	
BA-B3-7-112013	311420-02	11/20/2013	Soil		PAHs				X	
BA-B3-9-112013	311420-03	11/20/2013	Soil		PAHs				X	
PM-B9-5-112013	311420-04	11/20/2013	Soil		PAHs	X			X	
PM-B9-7-112013	311420-05	11/20/2013	Soil		PAHs	X			X	
PM-B1-1.5-112013	311420-06	11/20/2013	Soil	X	SVOCs	X	X		X	
PM-B1-6-112013	311420-07	11/20/2013	Soil	X	SVOCs	X	X		X	
PM-B1-10-112013	311420-08	11/20/2013	Soil	X	SVOCs	X	X		X	
PM-B10-3-112013	311420-09	11/20/2013	Soil		PAHs	X			X	
PM-B10-5-112013	311420-10	11/20/2013	Soil		PAHs	X			X	
PM-B6-2-112013	311420-11	11/20/2013	Soil		SVOCs	X				
PM-B6-3-112013	311420-12	11/20/2013	Soil	X	PAHs		X		X	
PM-B6-6-112013	311420-13	11/20/2013	Soil	X	PAHs	X	X		X	SPLP/Cu
PM-B8-3-112013	311420-14	11/20/2013	Soil		PAHs	X			X	
PM-B8-5-112013	311420-15	11/20/2013	Soil		PAHs	X			X	
PM-B7-2.5-112013	311420-16	11/20/2013	Soil		PAHs	X			X	
PM-B7-5-112013	311420-17	11/20/2013	Soil		PAHs	X			X	
CMS-B6-2-112013	311420-18	11/20/2013	Soil		PAHs		X		X	
CMS-B6-2.5-112013	311420-19	11/20/2013	Soil		PAHs		X		X	
CMS-B6-7-112013	311420-20	11/20/2013	Soil		PAHs		X		X	
CMS-B4-3-112013	311420-21	11/20/2013	Soil		PAHs			X	X	
CMS-B4-5-112013	311420-22	11/20/2013	Soil		PAHs			X	X	
CMS-B4-8-112013	311420-23	11/20/2013	Soil		PAHs			X	X	
TM-B12-4.5-112113	311455-01	11/21/2013	Soil			X			X	
TM-B12-6.5-112113	311455-02	11/21/2013	Soil			X			X	
TM-B11-4.5-112113	311455-03	11/21/2013	Soil			X			X	
TM-B11-6.5-112113	311455-04	11/21/2013	Soil			X			X	
TM-B7-4.5-112113	311455-05	11/21/2013	Soil		PAHs	X			X	
TM-B7-6.5-112113	311455-06	11/21/2013	Soil		PAHs	X			X	
TM-B6-4-112113	311455-07	11/21/2013	Soil		SVOCs	X				
TM-B6-4.5-112113	311455-08	11/21/2013	Soil	X			X		X	
TM-B6-5.5-112113	311455-09	11/21/2013	Soil	X			X		X	
TM-B6-7.5-112113	311455-11	11/21/2013	Soil	X			X		X	

Field Sample ID	Laboratory Sample ID	Sample Date	Sample Type	Analysis						
				VOCs	SVOCs PAHs	PCBs	Metal	TPH-G	TPH-Dx	Misc.
TM-B5-5.5-112113	311455-12	11/21/2013	Soil	X	SVOCs	X	X		X	
TM-B5-6.5-112113	311455-13	11/21/2013	Soil	X		X	X		X	
TM-B5-10.5-112113	311455-14	11/21/2013	Soil	X			X		X	
TM-B10-5.5-112113	311455-15	11/21/2013	Soil			X			X	
TM-B10-7.5-112113	311455-16	11/21/2013	Soil			X			X	
TM-B3-5.5-112113	311455-17	11/21/2013	Soil	X	SVOCs	X	X		X	
TM-B3-7-112113	311455-18	11/21/2013	Soil	X	SVOCs	X	X		X	
TM-B3-10-112113	311455-19	11/21/2013	Soil	X	SVOCs		X		X	
TM-B9-2.5-112213	311474-01	11/22/2013	Soil		PAHs	X			X	
TM-B9-4.5-112213	311474-02	11/22/2013	Soil		PAHs	X			X	
TM-B1-4.5-112213	311474-03	11/22/2013	Soil		SVOCs	X				
TM-B1-6-112213	311474-04	11/22/2013	Soil	X	PAHs		X		X	
TM-B1-7.5-112213	311474-05	11/22/2013	Soil	X	PAHs	X	X		X	
TM-B1-11-112213	311474-06	11/22/2013	Soil	X	PAHs		X		X	
TM-B8-1-112213	311474-07	11/22/2013	Soil		PAHs	X			X	
TM-B8-3-112213	311474-08	11/22/2013	Soil		PAHs	X			X	
CN-B4-2-112213	311474-09	11/22/2013	Soil		PAHs	X	X		X	
CN-B4-5-112213	311474-10	11/22/2013	Soil		PAHs		X		X	
CN-B4-8-112213	311474-11	11/22/2013	Soil		PAHs		X		X	
CN-B5-5.5-112213	311474-12	11/22/2013	Soil		PAHs		X		X	
CN-B5-7-112213	311474-13	11/22/2013	Soil		PAHs		X		X	
CN-B5-10.5-112213	311474-14	11/22/2013	Soil		PAHs		X		X	
TM-B2-4.5-112213	311474-15	11/22/2013	Soil	X	SVOCs	X	X		X	
TM-B2-6.5-112213	311474-16	11/22/2013	Soil	X		X	X		X	
TM-B2-10-112213	311474-17	11/22/2013	Soil	X			X		X	SPLP/Cu,Ni
CN-B9-2.5-112213	311474-18	11/22/2013	Soil		PAHs		X		X	
CN-B9-5-112213	311474-19	11/22/2013	Soil		PAHs		X		X	
CN-B9-8-112213	311474-20	11/22/2013	Soil		PAHs		X		X	
CN-B14-0.5-120513	312099-01	12/5/2013	Soil		PAHs		X		X	
CN-B14-1.25-120513	312099-02	12/5/2013	Soil		PAHs		X		X	
CN-B14-10-120513	312099-03	12/5/2013	Soil		PAHs		X		X	
CN-B7-2-120513	312099-04	12/5/2013	Soil		PAHs		X	X	X	
CN-B7-6-120513	312099-05	12/5/2013	Soil		PAHs		X	X	X	
CN-B7-12-120513	312099-06	12/5/2013	Soil		PAHs		X	X	X	

Field Sample ID	Laboratory Sample ID	Sample Date	Sample Type	Analysis						
				VOCs	SVOCs PAHs	PCBs	Metal	TPH-G	TPH-Dx	Misc.
CN-B6-2-120513	312099-07	12/5/2013	Soil		PAHs		X	X	X	
CN-B6-3-120513	312099-08	12/5/2013	Soil		PAHs		X	X	X	
CN-B6-8-120513	312099-09	12/5/2013	Soil		PAHs		X	X	X	
CN-B2-1.5-120513	312099-10	12/5/2013	Soil		PAHs	X	X		X	
CN-B2-6-120513	312099-11	12/5/2013	Soil		PAHs		X		X	
CN-B2-10-120513	312099-12	12/5/2013	Soil		PAHs		X		X	
CN-B1-1-120513	312099-13	12/5/2013	Soil		PAHs		X		X	
CN-B1-6-120513	312099-14	12/5/2013	Soil		PAHs		X		X	
CN-B1-10-120513	312099-15	12/5/2013	Soil		PAHs		X		X	
TM-B4-6.5-120513	312099-16	12/5/2013	Soil		SVOCs	X				
TM-B4-10-120513	312099-17	12/5/2013	Soil	X			X		X	
TM-B4-15.5-120513	312099-18	12/5/2013	Soil	X		X	X		X	
TM-B4-17-120513	312099-19	12/5/2013	Soil	X			X		X	
CN-B10-2-120513	312099-20	12/5/2013	Soil		PAHs		X		X	
CN-B10-5-120513	312099-21	12/5/2013	Soil		PAHs		X		X	
CN-B10-10-120513	312099-22	12/5/2013	Soil		PAHs		X		X	
CN-B3-3-120413	312100-01	12/4/2013	Soil		PAHs		X		X	
CN-B3-5.5-120413	312100-02	12/4/2013	Soil		PAHs		X		X	
CN-B3-6-120413	312100-03	12/4/2013	Soil		PAHs		X		X	
CN-B12-2-120413	312100-04	12/4/2013	Soil		PAHs		X		X	
CN-B12-5-120413	312100-05	12/4/2013	Soil		PAHs		X		X	
CN-B12-9.5-120413	312100-06	12/4/2013	Soil		PAHs		X		X	
CN-B11-2-120413	312100-07	12/4/2013	Soil		PAHs		X		X	
CN-B11-3.5-120413	312100-08	12/4/2013	Soil		PAHs		X		X	
CN-B11-6-120413	312100-09	12/4/2013	Soil		PAHs		X		X	
CN-B13-1.5-120413	312100-10	12/4/2013	Soil		PAHs		X		X	
CN-B13-3-120413	312100-11	12/4/2013	Soil		PAHs		X		X	
CN-B13-11.5-120413	312100-12	12/4/2013	Soil		PAHs		X		X	
CN-B8-2-120413	312100-13	12/4/2013	Soil		PAHs		X		X	
CN-B8-5-120413	312100-14	12/4/2013	Soil		PAHs		X		X	
CN-B8-14-120413	312100-15	12/4/2013	Soil		PAHs		X		X	
PM-MW5-3-103013	E1301464-001	10/30/2013	Soil							Dioxins
CN-B5-7-112213	E1301601-001	11/22/2013	Soil							Dioxins
BA-B2-6-111313	E1301601-002	11/13/2013	Soil							Dioxins

Field Sample ID	Laboratory Sample ID	Sample Date	Sample Type	Analysis						
				VOCs	SVOCs PAHs	PCBs	Metal	TPH-G	TPH-Dx	Misc.
BA-B1-5-111313	E1301601-003	11/13/2013	Soil							Dioxins
CN-B5-5.5-112213	E1301601-004	11/22/2013	Soil							Dioxins
PM-B1-1.5-112013	E1301601-005	11/20/2013	Soil							Dioxins
PM-B501-112013	E1301601-006	11/20/2013	Soil							Dioxins
PM-B4-2-111313	E1301601-007	11/13/2013	Soil							Dioxins
PM-B2-2-111313	E1301601-008	11/13/2013	Soil							Dioxins
PM-MW-4-3-111313	E1301601-009	11/13/2013	Soil							Dioxins
BA-MW-1-3-102913	E1301601-010	10/29/2013	Soil							Dioxins
BA-MW-4-3.5-102813	E1301601-011	10/28/2013	Soil							Dioxins
BA-MW-2-2-102913	E1301601-012	10/29/2013	Soil							Dioxins
BA-MW-3-2.5-102913	E1301601-013	10/29/2013	Soil							Dioxins
BA-MW-2-7-102913	E1400013-001	10/29/2013	Soil							Dioxins
BA-MW-4-5.5-102813	E1400014-001	10/28/2013	Soil							Dioxins

Notes:

Laboratory sample identities prefixed with "E" were assigned by ALS Environmental Services, Inc. – Houston, Texas.
Congener – PCB congeners
Dioxins – Polychlorinated dioxins and furans
EPH – Extractable petroleum hydrocarbon
GW – Groundwater
Metals - Arsenic, chromium, copper, mercury, nickel, and zinc
Misc. - Miscellaneous
PAHs - Polycyclic aromatic hydrocarbons
PCBs - Polychlorinated biphenyls
SPLP – Synthetic precipitation leaching procedure; leachates were analyzed for copper (SPLP/Cu), nickel (SPLP/Ni), and/or arsenic (SPLP/As)
SVOCs - Semivolatile organic compound
TPH-Dx - Diesel and motor oil range total petroleum hydrocarbon
TPH-Gx - Gasoline range total petroleum hydrocarbon
TSS – Total ksuspended solids
VOCs - Volatile organic compound
VPH – Volatile petroleum hydrocarbon
X - The analysis was requested and performed on the sample.
X+Cd – Metals listed above plus cadmium

The analytical parameters requested for the samples, the respective analytical methods, and the analytical laboratories are summarized below:

Parameter	Analytical Method	Analytical Laboratory
Volatile Organic Compounds (VOCs)	SW846 Method 8260C	Friedman & Bruya, Inc. (F&BI) Seattle, WA
Polycyclic Aromatic Hydrocarbons (PAHs)	SW846 Method 8270D-SIM	
PCB Aroclors	SW846 Method 8082A	
BTEX	SW846 Method 8021B	
TPH - Gasoline Range	NWTPH-Gx	
TPH - Diesel & Motor Oil Range	NWTPH-Dx	
Total Metals	EPA Method 200.8	
Mercury	EPA Method 1631E	
Total Suspended Solids (TSS)	SM2540D	
Extractable Petroleum Hydrocarbon	NWTPH-EPH	Fremont Analytical, Inc. Seattle, WA
Volatile Petroleum Hydrocarbon	NWTPH-VPH	
Polychlorinated Dioxins/Furans	SW846 Method 8290A	ALS Environmental Services, Inc. Houston, Texas
PCB Congeners	SW846 Method 8082A	ALS Environmental Services, Inc. Kelso, Washington

Notes:

1. SW846 - *USEPA Test Methods for Evaluating Solid Waste, Physical/Chemical Methods,* SW-846, Third Edition, December 1996.
2. EPA Methods - *USEPA Methods for Chemical Analysis of Water and Wastes,* EPA–600/4-79-020, March 1983 Revision.
3. EPA Method 1631E - *Mercury in Water by Oxidation, Purge and Trap, and Cold Vapor Atomic Fluorescence Spectrometry,* Office of Water, U.S. Environmental Protection Agency, August 2002, EPA-821-R-02-019.
4. NWTPH Methods – *Washington State Department of Ecology, Analytical Methods for Petroleum Hydrocarbons*, Publication No. ECY 97-602, June 1997.
5. SM – Standard Methods for the Examination of Water and Wastewater, American Public Health Association, 20th Edition, 1995.

DATA VALIDATION FINDINGS

1. VOCs by GC/MS (EPA Method SW8260C)

1.1 Sample Management and Holding Time

Samples were received in the laboratory intact and in consistence with the accompanying chain-of-custody (COC) documentation. In some cases where cooler temperature was outside the 4±2°C criteria; samples were hand-delivered to the laboratory the same day of collection. The cooler temperature exceedance had no significant effects on data quality. No other anomalies were identified in relation to sample preservation, handling, and transport.

Soil samples should be preserved at the time of collection, and analyzed within 14 days of collection. All samples were preserved and analyzed within the required holding times.

Sample HDS-SP-1 was not preserved immediately upon collection as required by the method. Target compounds were not detected in this sample at or above their reporting limits. Since the analysis was performed in a relatively short holding time (4 days) of collection, rather than being rejected, VOCs results for this sample were qualified (UJ) as estimated.

1.2 GC/MS Instrument Performance Check

The method require that (1) gas chromatograph/mass spectrometer (GC/MS) tuning analysis be performed, using bromofluorobenzene (BFB), at the beginning of each 12-hour period prior to any analysis, and (2) specific mass ions meet the criteria provided in the method. All instrument performance checks met the requirements.

1.3 Initial Calibration (ICAL)

The ICAL criteria require that (1) if linear average RFs is chosen as the quantitation option, at least five standards at different concentrations should be analyzed and the percent relative standard deviation (%RSD) of response factors (RFs) be ≤20% for the analyte, (2) if least-square linear regression is chosen for quantitation, the correlation coefficient (r) be >0.995, and (3) if six-point non-linear (quadratic) curve is chosen for quantitation, the coefficient of determination (r^2) be >0.99. ICALs either met the requirements or the outliers had no adverse effects on data usability (*e.g.,* %RSD >20% for a compound not detected in samples).

An initial calibration verification (ICV) standard (second source standard) was analyzed to verify the calibration curve. Percent difference (%D) values were either within ±30%, or the exceedance had no adverse effects on data usability (*e.g.,* biased high ICV recovery for a compound not detected in samples).

1.4 Calibration Verification (CCV)

The CCV criteria requires that (1) continuing calibrations be analyzed at the beginning of each 12-hour analysis period prior to the analysis of method blank and samples, and (2) the %D value be within ±20%.

Calibration verifications either met the requirements, or the exceedance had no adverse effects on data usability (*e.g.,* biased high CCV recovery for a compound not detected in samples), except for the following:

SDG#	CCV ID	Compound	%D	Bias	Affected Sample	Data Qualifier
310487	GCMS9 10/30/13, 7:05	Bromomethane	29.7%	Low	SHB-MW2-7-102413 SHB-MW20-5-102413 SHB-MW2-13-102413 LP-MW2-7-102413 LP-MW2-10.5-102413 LP-MW2-16-102413	**UJ**
311294	GCMS9 11/18/13, 18:05	Acetone	22.6%	Low	PM-B4-10.5-111313	**UJ**
311340	GCMS9 11/18/13, 18:05	Acetone	22.6%	Low	PM-B3-6.5-111513 PM-B3-11-111513	**UJ**

1.5 Method Blanks

Method blanks were prepared and analyzed as required. Target compounds were not detected at or above the reporting limits (RLs). Methylene chloride was present in selected method blanks at levels greater than the method detection limits but less than RLs. Methylene chloride results greater than RLs but less than 10x the levels found in the method blanks were qualified (U) as non-detected at the reported values, as summarized in **SUMMARY, Table I**.

1.6 Laboratory Control Sample (LCS) and LCS Duplicate (LCSD)

LCS and LCSD were prepared and analyzed as required by the method. Percent recovery (%R) and relative percent difference (RPD) values either met the project control limits, or the outliers had no adverse effects on data usability (*e.g.,* biased high recovery for a compound not detected in samples), except for the following:

SDG#	Compound	LCS %R	LCSD %R	Control Limit	RPD	Affected Sample	Data Qualifier
310511	Dibromomethane	81%	79%	80-111%	1%	BA-MW-6-1.5-102513 BA-MW-10-1.5-102513 BA-MW-5-2-102513 BA-MW-7-1.5-102513	**UJ**

SDG#	Compound	LCS %R	LCSD %R	Control Limit	RPD	Affected Sample	Data Qualifier
311375	1,4-Dichlorobenzene	78%	78%	79-117%	0%	PM-B5-12-111813	**UJ**
311392	1,4-Dichlorobenzene	78%	78%	79-117%	0%	SHB-B4-5.5-111913 SHB-B4-7.5-111913 SHB-B4-11.5-111913 SHB-B2-6-111913 SHB-B2-8-111913 SHB-B2-9-111913	**UJ**
311392	1,1,2,2,-Tetrachloroethane	82%	83%	83-125%	1%	SHB-B4-5.5-111913 SHB-B4-7.5-111913 SHB-B4-11.5-111913 SHB-B2-6-111913 SHB-B2-8-111913 SHB-B2-9-111913	**UJ**
311420	1,1,2,2,-Tetrachloroethane	82%	83%	83-125%	1%	PM-B1-1.5-112013 PM-B1-6-112013 PM-B1-10-112013 PM-B6-3-112013 PM-B6-6-112013	**UJ**

Note:
RPD control limit: ≤20%

1.7 Surrogate Spikes

Surrogate spikes were added to all samples as required by the method. All surrogate spike %R values were within the project control limits.

1.8 Matrix Spike (MS)

MS analyses were performed on project and batch QC samples at the proper frequency (≥5% of the samples analyzed for VOCs). All %R values were within the project control limits, or the outliers had no adverse effects on data usability (*e.g.,* biased high recovery for a compound not detected in samples).

1.9 Internal Standards

The method requires that (1) internal standard retention time be within ±30 seconds from that of the associated 12-hour calibration standard, and (2) the area counts of all internal standards be within –50% to +100% of the associated 12-hour calibration standard. All internal standards in the sample and associated QC analyses met the criteria.

1.10 Reporting Limit and Target Compound Quantitation

RLs were supported with adequate initial calibration concentrations. In cases where target compound concentrations exceeded ICAL calibration ranges, proper dilution

analyses were performed for definitive quantitation of the compounds. Only affected compounds were to be reported from dilution analyses.

Naphthalene, 1,2,4-trichlorobenzene, 1,2-dichlioriobenzene, 1,3-dichlorobenzene, and 1,4-dichliorobenzene were also reported from SVOCs analysis (Method 8270D). These compounds were to be reported from the SVOCs analysis, in favor of the lower detection limits.

1.11 Field Duplicates

Two sets of field duplicates were submitted for VOCs analyses. Field duplicate results for detected target compounds, RPD (or concentration difference) values, and data qualification were presented in **Appendix A**.

1.12 Overall Assessment of VOCs Data Usability

1,2-Dichloroenzene, 1,3-dichlorobenezene, 1,4-dichlorobenzene, 1,2,4-trichlorobenezene, hexachlorobutadiene, and, naphthalene were reported from both the VOCs (SW8260C) and SVOCs (SW8270D) analyses. In case where a sample was analyzed for both analyses, results for these compounds were to be reported from the SVOCs analysis in favor of the lower detection limits.

VOCs data are of known quality and acceptable for use, as qualified.

2. SVOCs by GC/MS (EPA Method SW8270D)

2.1 Sample Management and Holding Times

No anomalies were identified in relation to sample preservation, handling, and transport as discussed in Section 1.1.

Soil samples should be extracted within 14 days of collection. Extracts should be analyzed within 40 days of extraction. All samples were extracted and analyzed within the required holding times.

2.2 GC/MS Instrument Performance Check

The method require that a GC/MS tuning analysis be performed using decafluorotriphenylphosphine (DFTPP) at the beginning of each 12-hour period prior to any analysis, and specific mass ions meet the criteria provided in the method. All instrument performance checks met the requirements.

2.3 Initial Calibration (ICAL)

The ICAL criteria require that (1) if linear average RFs is chosen as the quantitation option, at least five standards at different concentrations should be analyzed and the %RSD of RFs be ≤20% for the analyte, (2) if least-square linear regression is chosen for quantitation, the correlation coefficient (r) be >0.995, (3) if six-point non-linear (quadratic) curve is chosen for quantitation, the coefficient of determination (r^2) be >0.99, and (4) the RF be >0.01 for poor response compounds and >0.05 for all other compounds.. All ICALs met the requirements.

An ICV standard (second source standard) was analyzed to verify the calibration curve. %D values were either within ±20%, or the exceedance had no adverse effects on data usability (*e.g.,* biased high ICV recovery for a compound not detected in samples).

2.4 Calibration Verification (CCV)

The CCV criteria require that (1) continuing calibrations be analyzed at the beginning of each 12-hour analysis period prior to the analysis of method blank and samples, (2) the %D be within ±20%, and (3) the RF be >0.01 for poor response compounds and >0.05 for all other compounds.

Calibration verifications were performed at the required frequency. %D values were either within ±20%, or the exceedance had no adverse effects on data usability (*e.g.,* biased high CCV recovery for a compound not detected in samples), with the exceptions as follows:

SDG	CCV ID	Compound	%D	Bias	Affected Sample	Data Qualifier
310431	GCMS8 10/31/13, 12:01	4,6-Dinitro-2-methylphenol	23.5%	Low	TM-MW-3-10-102213 TM-MW-1-12-102213	**UJ**
310459	GCMS8 10/31/13, 12:01	4,6-Dinitro-2-methylphenol	23.5%	Low	TM-MW-2-7.5-102313 TM-MW-2-9-102313 TM-MW-2-12-102313 TM-MW4-7.5-102313 TM-MW4-8-102313 TM-MW4-10-102313 TM-MW5-5-102313 TM-MW5-15-102313 TM-MW5-18-102313 TM-MW6-6.5-102313 TM-MW6-15-102313 TM-MW20-6.5-102313	**UJ**
310511	GCMS8 10/31/13, 23:21	2,4-Dinitrophenol 4,6-Dinitro-2-methylphenol	24.1% 23.3%	Low	PM-MW-8-5.5-102513 PM-MW-8-7-102513 PM-MW-8-12-102513	**UJ**
310607	GCMS8 10/30/13, 8:48	*bis*(2-Chloroethyl) ether	20.7%	Low	PM-MW5-7-103013 PM-MW5-11-103013	**UJ**

SDG	CCV ID	Compound	%D	Bias	Affected Sample	Data Qualifier
311257	GCMS8 11/15/13, 6:46	2-Nitroaniline 4-Nitrophenol *bis*(2-Chloro-1-methylethyl) ether *bis*(2-Chloroethyl) ether	21.3% 31.4% 24.3% 26.4%	Low	PM-MW2-5-111213 PM-MW2-10-111213 PM-MW2-15-111213	**UJ**

2.5 Method Blanks

Method blanks were prepared and analyzed as required. Target compounds were not detected at or above the RLs in the method blanks.

2.6 Surrogate Spikes

Surrogate spikes were added to all samples as required by the method. All %R values were within the laboratory control limits.

2.7 Matrix Spike (MS) and MS Duplicate (MSD)

MS/MSD analyses were performed on project samples or batch QC samples at the required frequency. All %R and RPD values were within the laboratory control limits, except for the following:

SDG#	Parent Sample ID	Compound	MS %R	MSD %R	Control Limit	RPD	Data Qualifier
310459	TM-MW20-6.5-102313	Phenanthrene Fluoranthene Pyrene Indeno(1,2,3-cd)pyrene Benzo(g,h,i)perylene	119% 134% 128% 91% 89%	142% 174% 230% 130% 128%	50-150%	24% 26% 57% 35% 36%	**J**
310487	LP-MW2-10.5-102413	Benzoic acid 2,4-Dinitrophenol Hexachlorocyclopentadiene Fluoranthene Pyrene	7% 40% 54% 159% 110%	7% 29% 45% 150% 140%	50-150%	0% 32% 18% 6% 24%	**R** **UJ** **UJ** **J** **J**
310582	BA-MW-3-6-102913	4-Nitroaniline	3%	99%	50-150%	188%	**UJ**
311474	TM-B1-4.5-112213	2,4-Dinitrophenol 4,6-Dinitro-2-methylphenol Hexachlorocyclopentadiene Pyrene	31% 39% 46% 100%	29% 43% 23% 126%	50-150%	7% 10% 67% 23%	**UJ** **UJ** **UJ** **J**

Note: RPD control limit: ≤20%

2.8 Laboratory Control Sample (LCS) and LCS Duplicate (LCSD)

LCS and LCSD were prepared and analyzed as required by the method. All %R and RPD values either met the laboratory control criteria, or the outliers had no adverse effects on

data usability (*e.g.,* biased high %R or RPD value for a compound that was not detected in samples).

2.9 Internal Standards

The method requires that (1) internal standard retention time be within ±30 seconds from that of the associated 12-hour calibration standard, and (2) the area counts of all internal standards be within –50% to +100% of the associated 12-hour calibration standard. Internal standards in samples and associated QC analyses either met the criteria, or a dilution analysis was performed to determine if the outlying internal standard recovery was a result of matrix interference. Unreportable data for these samples were summarized in **SUMMARY, Table I** in the end of this report; optimal results that were still affected by the internal standard outliers were qualified as follows:

SDG#	Sample ID	Internal Standard	Sample Response Area	CCV Response Area	Affected Compound	Data Qualifier
310487	LP-MW2-10.5-102413	Chrysene-d12 Perylene-d12	771815 527146	1973590 1394590	Benz(a)anthracene Benzo(a)pyrene Benzo(b)fluoranthene Benzo(g,h,i)perylene Benzo(k)fluoranthene Benzyl butyl phthalate Chrysene Dibenzo(a,h)anthracene Di-n-octyl phthalate Indeno(1,2,3-cd)pyrene	**J**
310487	LP-MW1-12-102413	Chrysene-d12 Perylene-d12	619373 452510	1973590 1394590	Benz(a)anthracene Benzo(g,h,i)perylene Chrysene Pyrene	**J**
310487	LP-MW1-14.5-102413	Chrysene-d12 Perylene-d12	903614 688470	1973590 1394590	Benz(a)anthracene Benzo(a)pyrene Benzo(b)fluoranthene Benzo(g,h,i)perylene Benzo(k)fluoranthene Benzyl butyl phthalate Chrysene Dibenzo(a,h)anthracene Di-n-octyl phthalate Indeno(1,2,3-cd)pyrene Pyrene	**J** **J** **J** **J** **J** **UJ** **J** **J** **UJ** **J** **J**

SDG#	Sample ID	Internal Standard	Sample Response Area	CCV Response Area	Affected Compound	Data Qualifier
310607	PM-MW5-11-103013	Chrysene-d12 Perylene-d12	490591 398923	1176310 807714	Benz(a)anthracene Benzo(a)pyrene Benzo(b)fluoranthene Benzo(g,h,i)perylene Benzo(k)fluoranthene Benzyl butyl phthalate *bis*(2-Ethylhexyl) phthalate Chrysene Dibenzo(a,h)anthracene Di-n-octyl phthalate Indeno(1,2,3-cd)pyrene Pyrene	**UJ**
311294	PM-MW-502-12-111313	Chrysene-d12 Perylene-d12	899797 555137	1911560 1321220	Benz(a)anthracene Benzo(a)pyrene Benzo(b)fluoranthene Benzo(g,h,i)perylene Benzo(k)fluoranthene Benzyl butyl phthalate *bis*(2-Ethylhexyl) phthalate Chrysene Dibenzo(a,h)anthracene Di-n-octyl phthalate Indeno(1,2,3-cd)pyrene Pyrene	**UJ**
311294	PM-B2-6.5-111313	Chrysene-d12	831114	1911560	Benz(a)anthracene Benzyl butyl phthalate *bis*(2-Ethylhexyl) phthalate Chrysene Pyrene	**J**
311474	TM-B2-4.5-112213				Benzyl butyl phthalate *bis*(2-Ethylhexyl) phthalate	**UJ**

2.10 Reporting Limits and Compound Quantitation

Sample-specific RLs were supported with adequate initial calibration concentrations.

2.11 Field Duplicates

Ten sets of field duplicates were submitted for SVOCs analyses. Field duplicate results for detected target compounds, RPD (or concentration difference) values, and data qualification were presented in **Appendix A**.

2.12 Overall Assessment of SVOCs Data Usability

Naphthalene was reported from both the SVOCs (SW8270D) and PAHs (SW8270D-SIM) analyses. In case where a sample was analyzed for both analyses, the naphthalene result was to be reported from the PAHs analysis in favor of the lower detection limit. SVOCs data are of known quality and acceptable for use, as qualified.

3. PAHs by GC/MS - SIM (EPA Method SW8270D-SIM)

3.1 Sample Management and Holding Times

No anomalies were identified in relation to sample preservation, handling, and transport as discussed in Section 1.1.

Soil samples should be extracted within 14 days and water within seven days of collection. Extracts should be analyzed within 40 days of extraction. All samples were extracted and analyzed within the required holding times.

3.2 GC/MS Instrument Performance Check

DFTPP tuning was performed within each 12-hour interval. All required ion abundance ratios met the method requirements.

3.3 Initial Calibration (ICAL)

The ICAL criteria require that (1) if linear average RFs is chosen as the quantitation option, at least five standards at different concentrations should be analyzed and the %RSD of RFs be ≤20% for the analyte, (2) if least-square linear regression is chosen for quantitation, the correlation coefficient (r) be >0.995, and (3) if six-point non-linear (quadratic) curve is chosen for quantitation, the coefficient of determination (r^2) be >0.99. All ICALs met the requirements.

An ICV standard (second source standard) was analyzed to verify the calibration curve. %D values were either within ±20%, or the exceedance had no adverse effects on data usability (*e.g.,* biased high ICV recovery for a compound not detected in samples).

3.4 Calibration Verification (CCV)

The analytical method requires that (1) continuing calibration verifications be analyzed at the beginning of each 12-hour analysis period prior to the analysis of method blank and samples, and (2) the %D be within ±20%.

3.5 Method Blanks

Method blanks were prepared and analyzed as required. Target compounds were not detected at or above the RLs in the method blanks.

3.6 Surrogate Spikes

Surrogate spikes were added to all samples as required by the method. All surrogate spike %R values were either within the project control limits or at levels that had no adverse effects on data quality (*e.g.,* biased-high recovery for compounds that were not detected in samples), except for the following:

SDG#	Sample ID	Surrogate Spike	%R	Control Limit	Affected Compound	Data Qualifier
311340	Rec2-B15-111513	Anthracene-d10 Benzo(a)anthracene-d10	20% 19%	50-150% 50-129%	All PAHs	**UJ**

In some cases where surrogate spike %R values were not applicable for data evaluation because the samples contained high levels of target PAHs and required dilution analysis; no data were qualified in these cases.

3.7 Matrix Spike (MS) and MS Duplicate (MSD)

MS and MSD analyses were performed on project and batch QC samples at the proper frequency (≥5% of samples analyzed). All %R and RPD values were within the laboratory control limits, except for the following:

SDG#	Parent Sample ID	Compound	MS %R	MSD %R	Control Limit	RPD	Data Qualifier
311323	Rec2-B13-5-111413	Benzo(g,h,i)perylene Indeno(1,2,3-cd)pyrene Naphthalene	79% 93% 0%	62% 73% 0%	37-133% 28-146% 44-129%	24 24 0	**J**
311392	GF9-B3-11-111913	Anthracene Benz(a)anthracene Benzo(a)pyrene Indeno(1,2,3-cd)pyrene Naphthalene Acenaphthylene Dibenzo(a,h)anthracene Acenaphthene Benzo(g,h,i)perylene Benzo(k)fluoranthene Fluorene	- - - - - - - - - - -	- - - - - 4% 2% 19% 36% 16% 19%	 50-150% 	92% 49% 44% 83% 37% - 191% 131% 79% 138% 133%	**J** **J** **J** **J** **J** **UJ** **UJ** **UJ** **UJ** **UJ** **UJ**

Note:
RPD control limit: ≤20%
"-" indicates that the value was within the control limit.

3.8 Laboratory Control Sample (LCS) and LCS Duplicate (LCSD)

LCS and LCSD analyses were performed as required by the method. All %R and RPD values were within the project control limits.

3.9 Internal Standards

The method requires that (1) internal standard retention time be within ±30 seconds from that of the associated 12-hour calibration standard, and (2) the area counts of all internal standards be within –50% to +100% of the associated 12-hour calibration standard. Internal standards in samples and associated QC analyses either met the criteria, or a dilution analysis was performed to determine if the outlying internal standard recovery was a result of matrix interference. Optimal result for each affected compound was determined between the initial and dilution analyses in these cases. Unreportable data for these samples were summarized in **SUMMARY, Table I** in the end of this report; optimal results that were still affected by the internal standard outliers were qualified as follows:

SDG#	Sample ID	Internal Standard	Sample Response Area	CCV Response Area	Affected Compound	Data Qualifier
311257	CMS-MW1R-8.5-111213	Naphthalene-d8 Acenaphthene-d10 Phenanthrene-d10 Chrysene-d12 Perylene-d12	258754 143015 241274 205316 192188	567879 320195 515501 612037 602298	Naphthalene Benzo(a)pyrene Acenaphthylene Chrysene Benzo(b)fluoranthene Benzo(k)fluoranthene Indeno(1,2,3-cd)pyrene Dibenzo(a,h)anthracene Benz(a)anthracene Benzo(g,h,i)perylene	**J** **UJ** **J** **J** **J** **UJ** **UJ** **UJ** **J** **J**

3.10 Reporting Limits and Target Compound Quantitation

Sample-specific RLs were supported with adequate initial calibration concentrations. In some cases samples required dilution to definitive quantitate target compounds whose concentrations exceeded calibration range during the initial analysis; the af.

3.11 Field Duplicates

Fifteen sets of field duplicates were submitted for PAHs analyses. Field duplicate results for detected target compounds, RPD (or concentration difference) values, and data qualification were presented in **Appendix A**.

3.12 Overall Assessment of PAHs Data Usability

PAHs data are of known quality and acceptable for use, as qualified.

4. PCB Aroclors and PCB Congeners by GC/ECD (EPA Method SW8082A)

4.1 Sample Management and Holding Times

No anomalies were identified in relation to sample preservation, handling, and transport as discussed in Section 1.1.

Soil samples should be extracted within 14 days (one year if frozen at ≤-20°C) of collection and extracts analyzed within 40 days of extraction. All samples were extracted and analyzed within the required holding times.

4.2 Initial Calibration

The method requires that (1) a minimum of 5-point calibration be performed using the mixture of Aroclor 1016 and 1260 for Aroclors and individual compounds for congeners, (2) a single-point calibration be performed for the other five Aroclors to establish calibration factors (CFs) and for Aroclor pattern recognition, (3) at least 3 peaks (preferably 5 peaks) must be chosen for each Aroclor for characterization, (4) the %RSD values of average CFs for Aroclor 1016, Aroclor 1260 and individual congeners must be ≤20%, and (5) if dual column analysis is chosen, both columns should meet the requirements. All ICALs met the requirements.

4.3 Calibration Verification

CCV analyses should be performed for each 12-hour analysis sequence prior to sample analyses, and the %D be within ±20%. Calibration verifications were performed at the required frequency. All %D values either met the control criteria or biased high for target compounds that were not detected in the associated samples, except for the following:

SDG#	CCV ID	Compound	%D	Bias	Affected Sample	Data Qualifier
310582	GC7, 11/1/13, 19:24, CLP1	Aroclor 1016	20.4%	Low	BA-MW-2-2-102913	**UJ**

4.4 Method Blanks

Method blanks were prepared and analyzed as required. PCB Aroclors were not detected at or above the MDLs in the method blanks.

4.5 Surrogate Spikes

Surrogate spikes were added to all samples as required by the method. All surrogate spike %R values were within the laboratory control limits.

4.6 Matrix Spike and Matrix Spike Duplicate (MS/MSD)

MS and MSD analyses were performed on project and batch QC samples at the proper frequency (≥5% of samples analyzed). All %R and RPD values were within the laboratory control limits, except for the following:

SDG#	Parent Sample ID	Compound	MS %R	MSD %R	Control Limit	RPD	Data Qualifier
310582	BA-MW-2-2-102913	PCB 74 PCB 110	52% 77%	44% 67%	70-130%	9% 10%	J

4.7 Laboratory Control Sample (LCS) and LCS Duplicate (LCSD)

LCS and LCSD analyses were performed as required by the method. All %R and RPD values were within the project control limits, except for the following:

SDG#	LCS ID	Compound	LCS %R	Control Limit	Affected Sample	Data Qualifier
310582	KWG1400786-3	PCB 119	64%	70-130%	BA-MW-2-2-102913	UJ

4.8 Method Reporting Limits and Target Compound Quantitation

Sample-specific RLs were supported with adequate initial calibration concentrations and achieved the project target quantitation limits.

In cases where the dual column RPD value was >40% for detections at levels greater than the RL, the result was qualified (J) as estimated. Data qualified in this manner were summarized in **SUMARRY, Table I** at the end of this report.

4.9 Field Duplicates

Four sets of field duplicates were submitted for PCB Aroclors analyses. Field duplicate results for detected target compounds, RPD (or concentration difference) values, and data qualification were presented in **Appendix A**.

4.10 Overall Assessment of PCB Aroclors Data Usability

PCB Aroclors data are of known quality and acceptable for use.

5. TPH-Gasoline by GC/FID (Method NWTPH-Gx)

5.1 Sample Management and Holding Times

No anomalies were identified in relation to sample preservation, handling, and transport as discussed in Section 1.1.

Soil samples should be preserved at the time of collection and analyzed within 14 days of collection. Six of the soil samples were not preserved immediately upon collection as required by the method. TPH-Gasoline was not detected in these samples at or above their reporting limits. Since the analyses on these samples were performed in a relatively short holding time (4 days) of collection. Therefore, rather than rejected, TPH-Gasoline results for these samples were qualified (UJ) as estimated.

5.2 Initial Calibration (ICAL)

The method criteria require that (1) if linear average RFs is chosen as the quantitation option, the %RSD of RFs be ≤20% for the analyte, (2) if least-square linear regression is chosen for quantitation, the correlation coefficient (r) be ≥0.995, (3) if six-point non-linear (quadratic) curve is chosen for quantitation, the coefficient of determination (r^2) be ≥0.990, and (4) the back-calculated %D value for each calibration standard be within ±15%. Initial calibration met the criteria for all target compounds.

An ICV (second source) standard was analyzed to verify the calibration curve. %D values were within ±20%.

5.3 Calibration Verification

Continuing calibration verification (CCV) analyses were performed at the required frequency for all analytical sequences as required by the method. The %D values for all CCVs met the method criterion (±20%).

5.4 Method Blanks

Method blanks were prepared and analyzed as required. No target compounds were detected at or above the RLs in the method blanks.

5.5 Surrogate Spikes

Surrogate spikes were added to all samples as required by the method. All surrogate spike %R values were within the project control limits, outside the control limits due to matrix interference, or diluted below quantitation limits due to high analyte concentrations. No data qualifying actions were taken in these cases.

5.6 Matrix Spike and Matrix Spike Duplicate

MS/MSD analyses were not performed for TPH-Gasoline analyses; instead, duplicate and LCS analyses in combination were performed.

5.7 Laboratory Control Sample (LCS)

LCS analyses were performed as required by the method. All %R values were within the laboratory control limits.

5.8 Laboratory Duplicate Analysis

Duplicate analyses were performed on project and batch QC samples at the proper frequency. All RPD and concentration difference values met the laboratory control criteria.

5.9 Reporting Limits and Target Compound Quantitation

Sample-specific RLs were supported with adequate initial calibration concentrations.

5.10 Field Duplicates

Twelve sets of field duplicates were submitted for TPH-Gasoline analyses. Field duplicate results for detected target compounds, RPD (or concentration difference) values, and data qualification were presented in **Appendix A**.

5.11 Overall Assessment of TPH-Gasoline Data Usability

TPH-Gasoline data are of known quality and acceptable for use, as qualified.

6. TPH-Diesel & Motor Oil by GC/FID (Method NWTPH-Dx)

6.1 Holding Time

No anomalies were identified in relation to sample preservation, handling, and transport as discussed in Section 1.1.

Soil samples should be extracted within 14 days and water should be extracted within seven days of collection. Extracts should be analyzed within 40 days of extraction. All samples were extracted and analyzed within the recommended holding times.

6.2 Initial Calibration

The method criteria require that (1) if linear average RFs is chosen as the quantitation option, the %RSD of RFs be ≤20% for the analyte, (2) if least-square linear regression is chosen for quantitation, the correlation coefficient (r) be ≥0.995, (3) if six-point non-linear (quadratic) curve is chosen for quantitation, the coefficient of determination (r^2) be ≥0.990, and (4) the back-calculated %D value for each calibration standard be within ±15%. Initial calibration met the criteria for all target compounds.

An ICV (second source) standard was analyzed to verify the calibration curve. %D values were within ±20%.

6.3 Calibration Verification

The method requires that (1) a mid-range check standard be analyzed prior to and after each analytical batch, and (2) the percent drift (%D) value be within ±20% of the true value.

Calibration verification was performed at required frequency. The %D values were either within the ±20% criterion or at levels that had no adverse effects on data quality (e.g., high-bias %D value where the target compound was not detected in associated sample).

6.4 Method Blanks

Method blanks were prepared and analyzed as required. Target compounds were not detected at or above the RLs in the method blanks.

6.5 Surrogate Spikes

Surrogate spikes were added to all samples as required by the method. All surrogate spike %R values were within the project control limits, outside the control limits due to matrix interference, or diluted below quantitation limits due to high petroleum hydrocarbon concentrations. No data qualifying actions were taken in these cases.

6.6 Matrix Spike (MS) and MS Duplicate (MSD)

MS and MSD analyses were performed on project and batch QC samples at the proper frequency. The %R and RPD values met the laboratory control criteria.

6.7 Laboratory Control Sample (LCS)

LCS analyses were performed as required. All %R values met the project control limits.

6.8 Target Compound Identification

Selected sample extracts were cleaned up with acid and silica gel treatment to minimize the biogenic interference with target compound identification, as required by the project. The laboratory reported results as diesel #2 (C10 - C25) and motor oil (C25 - C36), as required by the method.

6.9 Reporting Limits and Target Compound Quantitation

The reported RLs were supported with adequate ICAL concentrations.

6.10 Field Duplicates

Twenty-five sets of field duplicates were submitted for TPH-Diesel and TPH-Motor Oil analyses. Field duplicate results, RPD (or concentration difference) values, and data qualification for detected TPH-Diesel or Motor Oil were presented in **Appendix A**.

6.11 Overall Assessment of TPH-Diesel and Motor Oil Data Usability

TPH-Diesel and TPH-Motor Oil data are of known quality and acceptable for use, as qualified.

7. Total Metals by ICP/MS and CVAFS (EPA Methods 200.8 and 1631E)

7.1 Sample Management and Holding Times

No anomalies were identified in relation to sample preservation, handling, and transport, as discussed in Section 1.1.

Soil and water samples should be analyzed within 180 days for metals and 28 days for mercury. Samples were analyzed within the required holding times.

7.2 ICP/MS Tuning

Instrument tuning was performed at the required frequency. The stability check (%RSD <5%), mass calibration (mass difference <0.1 AMU), and resolution check (peak width <1.0 AMU at 5% peak height) met the NFG and method criteria.

7.3 Initial Calibration (ICAL)

The ICP/MS method requires that (1) a blank and one calibration standard be used in establishing the analytical curve, and (2) the average of replicate exposures be reported for all standards, QC, and sample analyses.

The CVAFS method require that (1) a blank and five calibration standards be employed to establish the analytical curve, (2) the linearity of the calibration curve should meet the criteria of correlation coefficient ≥ 0.995 for linear regression, and (3) the %RSD <15% if average response factor approach is employed.

All ICALs met the method requirements.

7.4 Calibration Verification (ICV and CCV)

Initial calibration verifications (ICVs) and continuing calibration verifications (CCVs) for ICP/MS and GFAA and ongoing precision recovery (OPR) were analyzed at the required frequency. The %R values either met the control criteria (90 – 110% for metals, 76 – 123% for mercury) or the exceedance had no adverse effects on data usability (e.g., high-bias %D value where the target compound was not detected in associated sample).

7.5 Blanks

Calibration Blanks: Initial calibration blanks (ICBs) and continuing calibration blanks (CCBs) were not analyzed after calibration verification standards. Target analytes were either not detected at or above the RLs in the ICBs and CCBs, or sample results affected by the ICB/CCB detections were qualified as results of detections in preparation blanks.

Preparation Blanks: Preparation blanks were prepared and analyzed as required. Target analytes were either not detected at or above the RLs in the preparation blanks, or sample results were greater than 10X the detection in the associated blank.

7.6 Laboratory Control Sample (LCS)

LCS analyses were performed as required by the method. All %R values were within the project control limits, or the exceedance had no adverse effects on data usability (e.g., high-bias %R value where the target compound was not detected in associated sample).

7.7 Matrix Spike (MS) and Matrix Spike Duplicate (MSD)

MS and MSD analyses were performed on project and batch QC samples at the adequate frequency (>5% of field sample). The %R and RPD values either met the laboratory control limits or the outliers were not applicable for matrix effect evaluation (e.g. sample concentration >4x spiking level), except for the following:

SDG#	Parent Sample ID	Analyte	MS %R	MSD %R	Control Limit	RPD	Affected Sample	Data Qualifier
311294	PM-MW-2-12-111313	Lead	122%	169%	59-148%	32%	PM-MW-2-12-111313 PM-MW-502-12-111313	**J**
311392	SHB-B4-5.5-111913	Mercury	131%	106%	62-140%	21%	SHB-B4-7.5-111913	**J**
311392	SHB-B4-5.5-111913	Nickel Copper Zinc Arsenic Lead	130% 4270% 267% 142% 398%	64% 108% 162% 116% 96%	69-112% 57-120% 55-129% 70-118% 59-148%	68% 190% 49% 20% 122%	SHB-B4-5.5-111913 SHB-B4-7.5-111913 SHB-B4-11.5-111913 SHB-B2-6-111913 SHB-B2-8-111913 SHB-B2-9-111913 SHB-B1-6.5-111913 SHB-B1-7.5-111913 SHB-B1-10.5-111913 SHB-B3-3-111913 SHB-B3-6-111913 SHB-B3-11-111913	**J**
311474	TM-B9-2.5-112213	Lead	155%	86%	59-148%	-	TM-B1-6-112213 TM-B1-7.5-112213 TM-B1-11-112213 TM-B2-4.5-112213 TM-B2-6.5-112213 TM-B2-10-112213	**J**

Note: RPD control criterion is ≤20%

7.8 Internal Standards

At least three internal standards were added to all field and QC samples for ICP/MS analyses. All percent relative intensity values were within the method criteria (60 - 125%).

7.9 Method Reporting Limits and Analyte Quantitation

Sample-specific RLs were supported with adequate initial calibration concentrations.

7.10 Field Duplicates

Nineteen sets of field duplicates were submitted for metals analyses. Field duplicate results for detected target compounds, RPD (or concentration difference) values, and data qualification were presented in **Appendix A**.

7.11 Overall Assessment of Metals Data Usability

Metal data are of known quality and acceptable for use, as qualified.

8. Extractable Petroleum Hydrocarbon (EPH) by GC/FID (Method NWTPH-EPH)

8.1 Holding Time

No anomalies were identified in relation to sample preservation, handling, and transport as discussed in Section 1.1.

Soil samples should be extracted within 14 days of collection. Extracts should be analyzed within 40 days of extraction. Sample Rec1-MW14-11-103113 (Lab ID: 311015-05) was extracted past the required holding time; EPH results for this sample were qualified (J) for detects and (UJ) for non-detects as estimated.

The extractions of samples HB-MW-1R-12-111113 (Lab ID: 311228-08), Rec1-MW13-6-110113 (Lab ID: 311309-03), Rec2-B14-9-111413 (Lab ID: 311323-07), and Rec2-B15-6.5-111513 (Lab ID: 311340-04) were performed excessively (>2x required holding time) past the required holding time. EPH results for these samples were qualified (J) for detects as estimated and (R) for non-detects to be rejected.

8.2 Initial Calibration

The method linearity criteria require that (1) if linear average RFs is chosen as the quantitation option, the %RSD of RFs be ≤20% for the analyte, (2) if least-square linear regression is chosen for quantitation, the correlation coefficient (r) be >0.990, and (3) if six-point non-linear (quadratic) curve is chosen for quantitation, the coefficient of determination (r^2) be >0.990. Initial calibration met the criteria for all target compounds.

Initial calibration information was not submitted for review in these SDGs.

8.3 Calibration Verification

The method requires that (1) a mid-range check standard be analyzed prior to and after each analytical batch, and (2) the percent drift (%D) value be within ±20% of the true value.

Calibration verification was performed at required frequency. The %D values were either within the ±30% criterion or at levels that had no adverse effects on data quality (e.g., high-bias %D value where the target compound was not detected in associated sample).

8.4 Method Blanks

Method blanks were prepared and analyzed as required. Target compounds were not detected at or above the RLs in the method blanks, except for the following:

SDG	Method Blank ID	Compound	MB Conc.	Affected Sample	Original Result	Qualified Result	Unit
311039	MB-6395	Aliphatic C8-C10 Aromatic C8-C10	0.566 0.911	Rec1-MW13-6-110113	4.03 J 2.08 J	**5.05 U** **5.05 U**	**mg/kg**
311228	MB-6395	Aliphatic C8-C10 Aromatic C8-C10	0.566 0.911	HB-MW-1R-12-111113	1.03 J 1.78 J	**5.52 U** **5.52 U**	**mg/kg**
311323	MB-6395	Aromatic C8-C10	0.911	Rec2-B14-9-111413	2.25 J	**5.55 U**	**mg/kg**
311340	MB-6395	Aromatic C8-C10	0.911	Rec2-B15-6.5-111513	1.88 J	**5.11 U**	**mg/kg**

8.5 Surrogate Spikes

Surrogate spikes were added to all samples as required by the method. All surrogate spike %R values were either within the project control limits, or outside the control limits due to matrix interference, or diluted below quantitation limits due to high levels of target or non-target compounds in the samples. No data qualifying actions were taken in these cases.

8.6 Matrix Spike (MS)

MS analyses were performed on project and batch QC samples at the proper frequency. The %R values met the laboratory control criteria.

8.7 Laboratory Control Sample (LCS) and LCS Duplicate (LCSD)

LCS and LCSD analyses were performed as required. All %R and RPD values met the project control limits, except for the following:

SDG#	LCS ID	Analyte	LCS %R	LCSD %R	Control Limit	RPD	Affected Sample	Data Qualifier
311039	6395	Aliphatic C8-C10 Aromatic C8-C10 Aromatic C10-C12	50.0% 51.1% 39.4%	45.7% 37.0% 21.0%	70-130%	9.03% 32.1% 61.0%	Rec1-MW13-6-110113	**J**
311228	6395	Aliphatic C8-C10 Aromatic C8-C10 Aromatic C10-C12	50.0% 51.1% 39.4%	45.7% 37.0% 21.0%	70-130%	9.03% 32.1% 61.0%	HB-MW-1R-12-111113	**J/UJ**
311323	6395	Aliphatic C8-C10 Aromatic C8-C10 Aromatic C10-C12	50.0% 51.1% 39.4%	45.7% 37.0% 21.0%	70-130%	9.03% 32.1% 61.0%	Rec2-B14-9-111413	**J**
311340	6395	Aliphatic C8-C10 Aromatic C8-C10 Aromatic C10-C12	50.0% 51.1% 39.4%	45.7% 37.0% 21.0%	70-130%	9.03% 32.1% 61.0%	Rec2-B15-6.5-111513	**J**

Note: RPD criteria: ≤20%.

8.8 Reporting Limits and Target Compound Quantitation

Sample-specific RLs were consistent with method-recommended pratical quantitation limits and were adjusted with sample volumes and moisture contents.

8.9 Field Duplicates

Field duplicates were not submitted for EPH analysis in these SDGs.

8.10 Overall Assessment of EPH Data Usability

EPH data are acceptable for use as qualified, based on the information submitted by the laboratory.

9. Volatile Petroleum Hydrocarbon by GC/FID/PID (Method NWTPH-VPH)

9.1 Sample Management and Holding Times

No anomalies were identified in relation to sample preservation, handling, and transport as discussed in Section 1.1.

Soil samples should be preserved with methanol at the time of collection, and analyzed within 14 days of collection. Sample Rec1-MW14-11-103113 (Lab ID: 311015-05) was analyzed past the required holding time; VPH results for this sample were qualified (J) for detects and (UJ) for non-detects as estimated.

The analyses of samples Rec1-MW13-6-110113 (Lab ID: 311309-03), Rec2-B14-9-111413 (Lab ID: 311323-07), and Rec2-B15-6.5-111513 (Lab ID: 311340-04) were performed excessively (>2x required holding time) past the required holding time. VPH results for these samples were qualified (J) for detects as estimated and (R) for non-detects to be rejected.

9.2 Initial Calibration (ICAL)

The method linearity criteria require that (1) if linear average RFs is chosen as the quantitation option, the %RSD of RFs be ≤20%, (2) if least-square linear regression is chosen for quantitation, the correlation coefficient (r) be >0.990, and (3) if six-point non-linear (quadratic) curve is chosen for quantitation, the coefficient of determination (r^2) be >0.990. Initial calibration met the criteria for all target compounds.

Initial calibration information was not submitted for review in these SDGs.

9.3 Calibration Verification

Continuing calibration verification (CCV) analyses were performed at the required frequency for all analytical sequences as required by the method. The %D values for all CCVs met the method criterion (% value within ±20% for the carbon range components and ±15% for individual target compounds).

9.4 Method Blanks

Method blanks were prepared and analyzed as required. Target compounds were either not detected at or above the RLs in the method blanks, or sample results were greater than five times the detection in the associated method blank.

9.5 Surrogate Spikes

Surrogate spikes were added to all samples as required by the method. All surrogate spike %R values were either within the project control limits, or outside the control limits due to matrix interference, or diluted below quantitation limits due to high levels of target and/or non-target compounds in the samples. No data qualifying actions were taken in these cases.

9.6 Matrix Spike (MS)

MS analyses were performed on project or batch QC samples at the required frequency. The %R values were within the laboratory control limits, except for the following:

SDG#	Parent Sample ID	Compound	MS %R	Control Limit	Affected Sample	Data Qualifier
311340	Rec2-B15-6.5-111513	Aliphatics C8-C10 Naphthalene	37.6% -10.5%	70-130%	Rec2-B15-6.5-111513	J

9.7 Laboratory Control Sample (LCS)

LCS analyses were performed as required by the method. All %R values were within the laboratory control limits.

9.8 Laboratory Duplicate Analysis

Duplicate analyses were performed on project and batch QC samples at the proper frequency. All RPD and concentration difference values met the laboratory control criteria.

9.9 Reporting Limits and Target Compound Quantitation

Sample-specific RLs were consistent with method-recommended practical quantitation limits, and were adjusted with sample volumes and moisture contents.

9.10 Field Duplicates

Field duplicates were not submitted for VPH analysis in these SDGs.

9.11 Overall Assessment of VPH Data Usability

VPH data are acceptable for use as qualified, based on the information submitted by the laboratory.

10. Polychlorinated Dioxins/Furans by HRGC/HRMS (EPA Method SW8290A)

10.1 Sample Management and Holding Times

No anomalies were identified in relation to sample preservation, handling, and transport, as discussed in Section 1.1.

EPA SW846 Method 8290A recommends a holding time of 30 days for solid samples stored in the dark at 4°C and completely analyzed within 45 days of extraction. All samples were extracted and analyzed within the recommended holding times.

10.2 HRGC/HRMS Instrument Performance Check

The method requires that (1) for mass calibration and resolution, the laboratory must provides evidence of mass spectrometer resolution > 10,000 at the beginning and end of each 12-hour analytical sequence. If mass calibration and resolution tuning are not correctly performed, interferences may degrade chlorinated dibenzo-*p*-dioxin and chlorinated dibenzofuran (CDD/CDF) identification and quantitation; (2) the mass spectrometer selected ion monitoring (SIM) scan descriptor switching times are determined by the analysis of the Window Defining Mixture (WDM) which contains the first and last eluting isomers in each homologue; and (3) chromatographic resolution is verified by analyzing one of two Isomer Specificity Check (ISC) solutions, depending on the Gas Chromatograph (GC) column used for analysis. All HRGC/HRMS instrument performance checks met the criteria.

10.3 Initial Calibration (ICAL)

The method requires that (1) the chromatographic peak separation between the 2,3,7,8-TCDD peak and the 1,2,3,8-TCDD peak and between the 2,3,7,8-TCDF peak and the 2,3,4,7-TCDF peak and must be resolved with a valley of < 25%; (2) the ion abundance ratio be within a ± 15% window around the theoretical abundance ratio; (3) the retention times (RTs) of the isomers must fall within the appropriate RT windows established by the WDM analysis. In addition, the absolute RT of the internal standard $^{13}C_{12}$-1,2,3,4-TCDD must exceed 25 minutes on the DB-5 (or equivalent) column and 15 minutes on the DB-225 (or equivalent) column; (4) the instrument sensitivity (signal-to-noise [S/N] ratio) must be >10:1; (5) the percent relative standard deviation (%RSD) be <20% for native isomers and < 30% for labeled isomers; (6) all initial calibration standards (CSs) must be analyzed at the correct concentration levels; (7) initial calibrations must be performed when the contract is awarded, whenever significant instrument maintenance is performed (e.g., ion source cleaning, GC column replacement, etc.), or if calibration verification criteria are not met. All ICALs met the method requirements.

10.4 Calibration Verification

The method requires that (1) continuing calibrations be analyzed at the beginning of each 12-hour analysis period prior to the analysis of method blank and samples, (2) the percent difference (%D) be within ±20% for native isomers and be within ±30% for labeled isomers, and (3) the ion abundance ratio, retention times, relative retention times, instrument sensitivity meet the criteria for initial calibrations. All calibration verification analyses met the criteria.

10.5 Method Blanks

Method blanks were prepared and analyzed as required for each preparation batch. Selected target compounds were detected in method blanks. Sample results less than 5x the level found in the associated method blank were qualified (U) as non-detects at the reported values. Qualified data were summarized in **SUAMMRY** section at the end of this report.

10.6 Laboratory Control Samples (LCS)

LCS analyses were performed as required by the method. The recovery met the method control limits for all target and labeled compounds.

10.7 Matrix Spike and Matrix Spike Duplicate (MS/MSD)

MS and MSD analyses were not performed on a project sample in this SDG.

10.8 Labeled Compounds

Nine labeled internal standards and one cleanup recovery standard were added to all samples as required by the method. All %R values for internal standards and cleanup standard met the method requirement.

10.9 Target Compound Identification

All detected target congeners were properly identified. The ion ratios for a number of detection did not meet the method criteria; these results were qualified as non-detected at their reported values, as summarized in **SUMMARY, Table I.**

10.10 Reporting Limits, Estimated Detection Limits (EDLs), and Compound Quantitation

Correct internal standards, quantitation ions, and average RFs were used to quantitate target compound detections. The RLs were supported with adequate ICAL calibration concentrations. Sample-specific EDLs and RLs were adjusted with sample weights, internal standard peak height, and noise levels as required by the method.

Selected target congeners in a number of samples had chlorodiphenyl ether interference present in their retention time region. The affected results were qualified (J) as estimated, as summarized in **SUMMARY, Table I**.

10.11 Second Column Confirmation

All positive detection of 2,3,7,8-TCDF were re-analyzed on the DB-225 column for confirmation and results reported from the second column (DB-225) should be used for data interpretation.

10.12 Field Duplicates

One set of field duplicates were submitted for Dioxins/Furans analyses. Field duplicate results for detected target compounds, RPD (or concentration difference) values, and data qualification were presented in **Appendix A**.

10.13 Overall Assessment of Polychlorinated Dioxins/Furans Data Usability

Polychlorinated dioxins and furans data were of known quality and acceptable for use as qualified.

11. Total Suspended Solids (TSS) by Standard Method 2540D

11.1 Sample Management and Holding Times

No anomalies were identified in relation to sample preservation, handling, and transport, as discussed in Section 1.1.

Water samples should be analyzed within seven days of collection. The sample was analyzed within the required holding time.

11.2 Laboratory Control Sample (LCS)

LCS analysis was performed as required by the method. The %R value was within the laboratory control limits.

11.3 Laboratory Duplicate Analysis

Laboratory duplicate analysis was performed as required by the method. The RPD value (or concentration difference value, as applicable) met the laboratory control criteria.

11.4 Reporting Limits

The reporting limit for TSS (10 mg/L) met the project requirements.

11.5 Field Duplicates

Only one sample was collected for TSS analysis during this phase of sampling. Field duplicate as not collected for TSS analysis.

11.6 Overall Assessment of TSS Data Usability

TSS data are of know quality and acceptable for use.

SUMMARY

Table I. Data Affected by QC Anomalies:

Laboratory ID	Sample ID	Analyte	Qualifier	Qualified Reason
311392-05	SHB-B4-7.5-111913	Mercury	**J**	MS/MSD RPD value was >20%
311294-04 311294-08	PM-MW-2-12-111313 PM-MW-502-12-111313	Lead	**J** **UJ**	Field duplicate difference value was >2xR
311323-01 311323-04	Rec2-B13-5-111413 Rec2-B513-5-111413	Arsenic	**J**	Field duplicate RPD value was >35%
311228-01 311228-04 311294-03 311294-07 311323-01 311323-04	AP-MW-1R-7-111113 AP-MW-501-7-111113 PM-MW-2-7-111313 PM-MW-502-7-111313 Rec2-B13-5-111413 Rec2-B513-5-111413	Copper	**J**	Field duplicate RPD value was >35%
311294-03 311294-07 311323-01 311323-04	PM-MW-2-7-111313 PM-MW-502-7-111313 Rec2-B13-5-111413 Rec2-B513-5-111413	Lead	**J**	Field duplicate RPD value was >35%
311323-01 311323-04	Rec2-B13-5-111413 Rec2-B513-5-111413	Nickel	**J**	Field duplicate RPD value was >35%
310459-14 310459-16 311228-02 311228-05 311294-03 311294-07 311323-01 311323-04	TM-MW6-6.5-102313 TM-MW20-6.5-102313 AP-MW-1R-9-111113 AP-MW-501-9-111113 PM-MW-2-7-111313 PM-MW-502-7-111313 Rec2-B13-5-111413 Rec2-B513-5-111413	Zinc	**J**	Field duplicate RPD value was >35%
311474-04 311474-05 311474-06 311474-15 311474-16 311474-17	TM-B1-6-112213 TM-B1-7.5-112213 TM-B1-11-112213 TM-B2-4.5-112213 TM-B2-6.5-112213 TM-B2-10-112213	Lead	**J**	MS %R value was >LCL: MS/MSD RPD value was >20%
311392-04 311392-05 311392-08 311392-09 311392-10 311392-11 311392-13 311392-14 311392-15	SHB-B4-5.5-111913 SHB-B4-7.5-111913 SHB-B2-8-111913 SHB-B2-9-111913 SHB-B1-6.5-111913 SHB-B1-7.5-111913 SHB-B3-3-111913 SHB-B3-6-111913 SHB-B3-11-111913	Arsenic	**J**	MS %R value was >UCL

Laboratory ID	Sample ID	Analyte	Qualifier	Qualified Reason
311392-04 311392-05 311392-06 311392-07 311392-08 311392-09 311392-11 311392-13 311392-14 311392-15	SHB-B4-5.5-111913 SHB-B4-7.5-111913 SHB-B4-11.5-111913 SHB-B2-6-111913 SHB-B2-8-111913 SHB-B2-9-111913 SHB-B1-7.5-111913 SHB-B3-3-111913 SHB-B3-6-111913 SHB-B3-11-111913	Copper	**J**	MS %R value was >UCL; MS/MSD RPD value was >20%
311392-04 311392-05 311392-06 311392-07 311392-08 311392-09 311392-10 311392-11 311392-13 311392-14 311392-15	SHB-B4-5.5-111913 SHB-B4-7.5-111913 SHB-B4-11.5-111913 SHB-B2-6-111913 SHB-B2-8-111913 SHB-B2-9-111913 SHB-B1-6.5-111913 SHB-B1-7.5-111913 SHB-B3-3-111913 SHB-B3-6-111913 SHB-B3-11-111913	Lead	**J**	MS %R value was >UCL; MS/MSD RPD value was >20%
311392-04 311392-05 311392-06 311392-07 311392-08 311392-09 311392-10 311392-11 311392-12 311392-13 311392-14 311392-15	SHB-B4-5.5-111913 SHB-B4-7.5-111913 SHB-B4-11.5-111913 SHB-B2-6-111913 SHB-B2-8-111913 SHB-B2-9-111913 SHB-B1-6.5-111913 SHB-B1-7.5-111913 SHB-B1-10.5-111913 SHB-B3-3-111913 SHB-B3-6-111913 SHB-B3-11-111913	Nickel	**J**	MS %R value was >UCL; MSD %R value was <LCL; MS/MSD RPD value was >20%
311392-04 311392-05 311392-06 311392-07 311392-08 311392-09 311392-10 311392-11 311392-12 311392-13 311392-14 311392-15	SHB-B4-5.5-111913 SHB-B4-7.5-111913 SHB-B4-11.5-111913 SHB-B2-6-111913 SHB-B2-8-111913 SHB-B2-9-111913 SHB-B1-6.5-111913 SHB-B1-7.5-111913 SHB-B1-10.5-111913 SHB-B3-3-111913 SHB-B3-6-111913 SHB-B3-11-111913	Zinc	**J**	MS/MSD %R values were >UCL; MS/MSD RPD value was >20%
311294-25 311294-26 311294-27	BA-B2-7-111313 BA-B2-8-111313 BA-B2-12-111313	Lead	**J**	MSD %R >UCL; MS/MSD RPD >20%

Laboratory ID	Sample ID	Analyte	Qualifier	Qualified Reason
311228-08	HB-MW-1R-12-111113	Aromatics C10-C12 (EPH)	**R**	Analysis was performed excessively past required holding time; LCS/LCSD %R values were <LCL
311323-07 311340-04 311039-03	Rec2-B14-9-111413 Rec2-B15-6.5-111513 Rec1-MW13-6-110113	Aliphatics C10-C12 (EPH) Aliphatics C12-C16 (EPH) Aliphatics C16-C21 (EPH) Aliphatics C21-C34 (EPH) Aromatics C12-C16 (EPH) Aromatics C16-C21 (EPH) Aromatics C21-C34 (EPH)	**J**	Analysis was performed past required holding time
311228-08	HB-MW-1R-12-111113	Aliphatics C10-C12 (EPH) Aliphatics C16-C21 (EPH) Aliphatics C21-C34 (EPH) Aromatics C12-C16 (EPH) Aromatics C16-C21 (EPH) Aromatics C21-C34 (EPH)	**J**	Analysis was performed past required holding time
311323-07 311340-04 311039-03	Rec2-B14-9-111413 Rec2-B15-6.5-111513 Rec1-MW13-6-110113	Aromatics C10-C12 (EPH)	**J**	Analysis was performed past required holding time; LCS/LCSD %R values were <LCL
311015-05	Rec1-MW14-11-103113	Aliphatics C10-C12 (EPH) Aliphatics C12-C16 (EPH) Aliphatics C16-C21 (EPH) Aliphatics C21-C34 (EPH) Aliphatics C8-C10 (EPH) Aromatics C10-C12 (EPH) Aromatics C12-C16 (EPH) Aromatics C16-C21 (EPH) Aromatics C21-C34 (EPH) Aromatics C8-C10 (EPH)	**J/UJ**	Sample preparation was performed past required holding time
311323-01 311323-04	Rec2-B13-5-111413 Rec2-B513-5-111413	Diesel Range TPH	**J**	Field duplicate difference value was >2xRL
310582-17 310582-18 310582-19 311392-16 311392-17 311392-18	GF9-MW-2-7.5-102913 GF9-MW-2-11-102913 GF9-MW-2-15-102913 CSB-B1-6-111913 CSB-B1-8-111913 CSB-B1-12-111913	Gasoline Range TPH	**UJ**	Sample was not preserved in methanol as required by method
311323-07	Rec2-B14-9-111413	Aliphatics C5-C6 (VPH) Benzene Ethylbenzene Methyl *tert*-butyl ether Toluene	**R**	Analysis was performed excessively past required holding time

Laboratory ID	Sample ID	Analyte	Qualifier	Qualified Reason
311340-04	Rec2-B15-6.5-111513	Aliphatics C5-C6 (VPH) Benzene Ethylbenzene *m,p*-Xylenes Methyl *tert*-butyl ether *o*-Xylene Toluene	**R**	Analysis was performed excessively past required holding time
311039-03	Rec1-MW13-6-110113	Aliphatics C5-C6 (VPH) Aliphatics C6-C8 (VPH) Benzene Ethylbenzene m,p-Xylenes Methyl *tert*-butyl ether o-Xylene Toluene	**R**	Analysis was performed excessively past required holding time
311323-07	Rec2-B14-9-111413	Aliphatics C10-C12 (VPH) Aliphatics C6-C8 (VPH) Aliphatics C8-C10 (VPH) Aromatics C10-C12 (VPH) Aromatics C12-C13 (VPH) Aromatics C8-C10 (VPH) *m,p*-Xylenes Naphthalene *o*-Xylene	**J**	Analysis was performed past required holding time
311340-04	Rec2-B15-6.5-111513	Aliphatics C10-C12 (VPH) Aliphatics C6-C8 (VPH) Aromatics C10-C12 (VPH) Aromatics C12-C13 (VPH) Aromatics C8-C10 (VPH)	**J**	Analysis was performed past required holding time
311039-03	Rec1-MW13-6-110113	Aliphatics C10-C12 (VPH) Aliphatics C8-C10 (VPH) Aromatics C10-C12 (VPH) Aromatics C12-C13 (VPH) Aromatics C8-C10 (VPH) Naphthalene	**J**	Analysis was performed past required holding time
311340-04	Rec2-B15-6.5-111513	Aliphatics C8-C10 (VPH) Naphthalene	**J**	Analysis was performed past required holding time; MS %R value was <LCL

Laboratory ID	Sample ID	Analyte	Qualifier	Qualified Reason
311015-05	Rec1-MW14-11-103113	Naphthalene Aliphatics C10-C12 (VPH) Aliphatics C5-C6 (VPH) Aliphatics C6-C8 (VPH) Aliphatics C8-C10 (VPH) Aromatics C10-C12 (VPH) Aromatics C12-C13 (VPH) Aromatics C8-C10 (VPH) Benzene Ethylbenzene *m,p*-Xylenes Methyl *tert*-butyl ether *o*-Xylene Toluene	**J**	Sample preparation was performed past holding time; analyte was detected in MB and sample was <5xMB
310582-13	BA-MW-2-2-102913	Aroclor 1016	**J**	CCV %D value was >UCL
310582-13	BA-MW-2-2-102913	PCB 74 PCB 105 PCB 153 PCB 167	**J**	Dual column RPD >40%
310582-13	BA-MW-2-2-102913	PCB 74 PCB 110	**J** **J**	MS/MSD %R values were <LCL
310582-13	BA-MW-2-2-102913	PCB 119	**UJ**	LCS %R value was <LCL
310487-02 310487-03 310487-04 310487-05 310487-06 310487-07	SHB-MW2-7-102413 SHB-MW20-5-102413 SHB-MW2-13-102413 LP-MW2-7-102413 LP-MW2-10.5-102413 LP-MW2-16-102413	Bromomethane	**UJ**	CCV %D value was <LCL
311294-15 311340-09 311340-11	PM-B4-10.5-111313 PM-B3-6.5-111513 PM-B3-11-111513	Acetone	**UJ**	CCV %D value was <LCL
311375-01 311392-04 311392-05 311392-06 311392-07 311392-08 311392-09	PM-B5-12-111813 SHB-B4-5.5-111913 SHB-B4-7.5-111913 SHB-B4-11.5-111913 SHB-B2-6-111913 SHB-B2-8-111913 SHB-B2-9-111913	1,4-Dichlorobenzene	**UJ**	LCS/LCSD %R values were <LCL
311392-04 311392-05 311392-06 311392-07 311392-08 311392-09	SHB-B4-5.5-111913 SHB-B4-7.5-111913 SHB-B4-11.5-111913 SHB-B2-6-111913 SHB-B2-8-111913 SHB-B2-9-111913	1,1,2,2-Tetrachloroethane	**UJ**	LCS/LCSD %R values were <LCL
311420-06 311420-07 311420-08 311420-12 311420-13	PM-B1-1.5-112013 PM-B1-6-112013 PM-B1-10-112013 PM-B6-3-112013 PM-B6-6-112013	1,1,2,2-Tetrachloroethane	**UJ**	LCS/LCSD %R values were <LCL

Laboratory ID	Sample ID	Analyte	Qualifier	Qualified Reason
310511-01 310511-02 310511-03 310511-04	BA-MW-6-1.5-102513 BA-MW-10-1.5-102513 BA-MW-5-2-102513 BA-MW-7-1.5-102513	Dibromomethane	**UJ**	LCSD %R value was <LCL
310431-14 310431-15 310487-06 310487-07 310487-11 310487-12 310487-13 311392-10 311392-11 311392-12 311392-13 311392-14 311392-15 311420-06 311420-07 311420-08 311455-12 311455-17 311455-18 311455-19	TM-MW-1-9.5-102213 TM-MW-1-12-102213 LP-MW2-10.5-102413 LP-MW2-16-102413 LP-MW1-5.5-102413 LP-MW1-12-102413 LP-MW1-14.5-102413 SHB-B1-6.5-111913 SHB-B1-7.5-111913 SHB-B1-10.5-111913 SHB-B3-3-111913 SHB-B3-6-111913 SHB-B3-11-111913 PM-B1-1.5-112013 PM-B1-6-112013 PM-B1-10-112013 TM-B5-5.5-112113 TM-B3-5.5-112113 TM-B3-7-112113 TM-B3-10-112113	1,2,4-Trichlorobenzene 1,2-Dichlorobenzene 1,3-Dichlorobenzene 1,4-Dichlorobenzene Hexachlorobutadiene Naphthalene	**DNR**	Report from SW8270D analysis
311392-04 311392-05 311392-06 311392-07 311392-08 311392-09	SHB-B4-5.5-111913 SHB-B4-7.5-111913 SHB-B4-11.5-111913 SHB-B2-6-111913 SHB-B2-8-111913 SHB-B2-9-111913	Naphthalene	**DNR**	Report from SW8270D-SIM analysis
310511-02 310511-03 311392-04 311392-05	BA-MW-10-1.5-102513 BA-MW-5-2-102513 SHB-B4-5.5-111913 SHB-B4-7.5-111913	Methylene Chloride	**U**	The detection was suspected as results of laboratory contamination
310431-13 310431-15 310459-02 310459-03 310459-04 310459-06 310459-07 310459-08 310459-10 310459-11 310459-12 310459-14 310459-15 310459-16	TM-MW-3-10-102213 TM-MW-1-12-102213 TM-MW-2-7.5-102313 TM-MW-2-9-102313 TM-MW-2-12-102313 TM-MW4-7.5-102313 TM-MW4-8-102313 TM-MW4-10-102313 TM-MW5-5-102313 TM-MW5-15-102313 TM-MW5-18-102313 TM-MW6-6.5-102313 TM-MW6-15-102313 TM-MW20-6.5-102313	4,6-Dinitro-2-methylphenol	**UJ**	CCV %D value was <LCL

Laboratory ID	Sample ID	Analyte	Qualifier	Qualified Reason
310511-08 310511-09 310511-10	PM-MW-8-5.5-102513 PM-MW-8-7-102513 PM-MW-8-12-102513	2,4-Dinitrophenol 4,6-Dinitro-2-methylphenol	**UJ**	CCV %D value was <LCL
310607-15 310607-16	PM-MW5-7-103013 PM-MW5-11-103013	*bis*(2-Chloroethyl) ether	**UJ**	CCV %D value was <LCL
311257-04 311257-05 311257-06	PM-MW2-5-111213 PM-MW2-10-111213 PM-MW2-15-111213	2-Nitroaniline 4-Nitrophenol *bis*(2-Chloro-1-methylethyl) ether *bis*(2-Chloroethyl) ether	**UJ**	CCV %D value was <LCL
311294-02	PM-MW-2-6-111313	Benzo(a)pyrene Benzo(b)fluoranthene Chrysene Fluoranthene Pyrene	**J**	Field duplicate difference value was >2xRL
311294-06	PM-MW-502-6-111313	Benzo(a)pyrene Benzo(b)fluoranthene Chrysene Fluoranthene Pyrene	**UJ**	Field duplicate difference value was >2xRL
310487-06	LP-MW2-10.5-102413	Benz(a)anthracene Benzo(a)pyrene Benzo(b)fluoranthene Benzo(g,h,i)perylene Benzo(k)fluoranthene Benzyl butyl phthalate Chrysene Dibenzo(a,h)anthracene Di-n-octyl phthalate Indeno(1,2,3-cd)pyrene	**J**	Internal standard recovery was <LCL
310487-12	LP-MW1-12-102413	Benz(a)anthracene Benzo(g,h,i)perylene Chrysene Pyrene	**J**	Internal standard recovery was <LCL
310487-13	LP-MW1-14.5-102413	Benz(a)anthracene Benzo(a)pyrene Benzo(b)fluoranthene Benzo(g,h,i)perylene Benzo(k)fluoranthene Benzyl butyl phthalate Chrysene Dibenzo(a,h)anthracene Di-n-octyl phthalate Indeno(1,2,3-cd)pyrene Pyrene	**J** **J** **J** **J** **J** **UJ** **J** **J** **UJ** **J** **J**	Internal standard recovery was <LCL

Laboratory ID	Sample ID	Analyte	Qualifier	Qualified Reason
310607-16	PM-MW5-11-103013	Benz(a)anthracene Benzo(a)pyrene Benzo(b)fluoranthene Benzo(g,h,i)perylene Benzo(k)fluoranthene Benzyl butyl phthalate *bis*(2-Ethylhexyl) phthalate Chrysene Dibenzo(a,h)anthracene Di-n-octyl phthalate Indeno(1,2,3-cd)pyrene Pyrene	**UJ**	Internal standard recovery was <LCL
312257-02	CMS-MW1R-8.5-111213	Naphthalene Benzo(a)pyrene Acenaphthylene Chrysene Benzo(b)fluoranthene Benzo(k)fluoranthene Indeno(1,2,3-cd)pyrene Dibenzo(a,h)anthracene Benz(a)anthracene Benzo(g,h,i)perylene	**J** **UJ** **J** **J** **J** **UJ** **UJ** **UJ** **J** **J**	Internal standard recovery was <LCL
311294-08	PM-MW-502-12-111313	Benz(a)anthracene Benzo(a)pyrene Benzo(b)fluoranthene Benzo(g,h,i)perylene Benzo(k)fluoranthene Benzyl butyl phthalate *bis*(2-Ethylhexyl) phthalate Chrysene Dibenzo(a,h)anthracene Di-n-octyl phthalate Indeno(1,2,3-cd)pyrene Pyrene	**UJ**	Internal standard recovery was <LCL
311294-18	PM-B2-6.5-111313	Benz(a)anthracene Benzyl butyl phthalate *bis*(2-Ethylhexyl) phthalate Chrysene Pyrene	**UJ**	Internal standard recovery was <LCL
311474-15	TM-B2-4.5-112213	Benzyl butyl phthalate *bis*(2-Ethylhexyl) phthalate	**UJ**	Internal standard recovery was <LCL
310582-02	BA-MW-3-6-102913	4-Nitroaniline	**UJ**	MS %R value was <10%
310487-06	LP-MW2-10.5-102413	Benzoic acid	**R**	MS/MSD %R values were <10%
310487-06	LP-MW2-10.5-102413	2,4-Dinitrophenol Hexachlorocyclopentadiene	**UJ** **UJ**	MS/MSD %R values were <LCL
311474-03	TM-B1-4.5-112213	2,4-Dinitrophenol 4,6-Dinitro-2-methylphenol Hexachlorocyclopentadiene	**UJ**	MS/MSD %R values were <LCL

Laboratory ID	Sample ID	Analyte	Qualifier	Qualified Reason
310459-16	TM-MW20-6.5-102313	Benzo(g,h,i)perylene Fluoranthene	**J**	MS/MSD RPD value was >20%
311474-03	TM-B1-4.5-112213	Pyrene	**J**	MS/MSD RPD value was >20%
310487-06	LP-MW2-10.5-102413	Pyrene	**J**	MS/MSD RPD value was >20%; Internal standard recovery was <LCL
310459-16	TM-MW20-6.5-102313	Indeno(1,2,3-cd)pyrene	**J**	MSD %R >UCL; MS/MSD RPD >20%
310459-16	TM-MW20-6.5-102313	Phenanthrene Pyrene	**J**	MSD %R >UCL; MS/MSD RPD >20%
310487-06	LP-MW2-10.5-102413	Fluoranthene	**J**	MSD %R value was >UCL
311294-22	BA-B1-8-111313	Di-n-butyl phthalate	**DNR**	Report from dilution analysis
311474-15	TM-B2-4.5-112213	Benz(a)anthracene Chrysene Pyrene	**DNR**	Report from dilution analysis
311474-15DL	TM-B2-4.5-112213	SVOCs except: Benz(a)anthracene Chrysene Pyrene	**DNR**	Report from initial analysis
310487-06DL 310487-12DL 310487-13DL 310607-16DL 311294-18DL 311294-22DL	LP-MW2-10.5-102413 LP-MW1-12-102413 LP-MW1-14.5-102413 PM-MW5-11-103013 PM-B2-6.5-111313 BA-B1-8-111313	SVOCs	**DNR**	Report from initial analysis
310431-07	CN-MW-1-4.5-102213	Acenaphthene Fluorene	**J**	Field duplicate difference value was >2xR
310431-08	CN-MW-1-4.5-102213-D	Acenaphthene Fluorene	**J**	Field duplicate difference value was >2xR
311015-09	Rec1-MW12-11-103113	Benzo(b)fluoranthene	**UJ**	Field duplicate difference value was >2xR
311015-09	Rec1-MW12-11-103113	Chrysene Fluoranthene Naphthalene Pyrene	**UJ**	Field duplicate difference value was >2xR
311015-12	Rec1-MW22-11-103113	Benzo(b)fluoranthene Chrysene Fluoranthene Naphthalene Pyrene	**J**	Field duplicate difference value was >2xR
311228-02	AP-MW-1R-9-111113	Fluoranthene Phenanthrene Pyrene	**UJ**	Field duplicate difference value was >2xR
311228-05	AP-MW-501-9-111113	Fluoranthene Phenanthrene Pyrene	**J**	Field duplicate difference value was >2xR

Laboratory ID	Sample ID	Analyte	Qualifier	Qualified Reason
311323-01	Rec2-B13-5-111413	Benzo(a)pyrene Benzo(b)fluoranthene Fluoranthene Phenanthrene Pyrene	**J**	Field duplicate difference value was >2xR
311323-04	Rec2-B513-5-111413	Benzo(a)pyrene Benzo(b)fluoranthene Benzo(g,h,i)perylene Fluoranthene Indeno(1,2,3-cd)pyrene Phenanthrene Pyrene	**UJ** **J** **J** **J** **J** **J** **J**	Field duplicate difference value was >2xR
310431-07 310431-08	CN-MW-1-4.5-102213 CN-MW-1-4.5-102213-D	Phenanthrene	**J**	Field duplicate RPD value was >35%
310487-01 310487-03	SHB-MW2-5-102413 SHB-MW20-5-102413	Fluoranthene Phenanthrene	**J**	Field duplicate RPD value was >35%
311392-01	GF9-B3-11-111913	Anthracene Benz(a)anthracene Benzo(a)pyrene Indeno(1,2,3-cd)pyrene Naphthalene	**J**	MS/MSD RPD value was >20%
311323-01	Rec2-B13-5-111413	Benzo(g,h,i)perylene Indeno(1,2,3-cd)pyrene Naphthalene	**J**	MS/MSD RPD value was >20%; Field duplicate difference value was >2xRL
311392-01	GF9-B3-11-111913	Acenaphthylene Dibenzo(a,h)anthracene Acenaphthene Benzo(g,h,i)perylene Benzo(k)fluoranthene Fluorene	**UJ**	MSD %R value was <10%; MS/MSD RPD value was >20%
311257-02	CMS-MW1R-8.5-111213	Acenaphthene Anthracene Fluoranthene Fluorene Phenanthrene Pyrene	**DNR**	Report from dilution analysis
311340-05	Rec2-B15-6.5-111513	Fluorene	**DNR**	Report from dilution analysis
311257-02DL	CMS-MW1R-8.5-111213	Acenaphthylene Benz(a)anthracene Benzo(a)pyrene Benzo(b)fluoranthene Benzo(g,h,i)perylene Benzo(k)fluoranthene Chrysene Dibenzo(a,h)anthracene Indeno(1,2,3-cd)pyrene Naphthalene	**DNR**	Report from initial analysis

Laboratory ID	Sample ID	Analyte	Qualifier	Qualified Reason
311340-05DL	Rec2-B15-6.5-111513	Acenaphthene Acenaphthylene Anthracene Benz(a)anthracene Benzo(a)pyrene Benzo(b)fluoranthene Benzo(g,h,i)perylene Benzo(k)fluoranthene Chrysene Dibenzo(a,h)anthracene Fluoranthene Indeno(1,2,3-cd)pyrene Naphthalene Phenanthrene Pyrene	**DNR**	Report from initial analysis
310487-01 310487-02 310487-03 310487-04 310487-08 310487-09 310487-10	SHB-MW2-5-102413 SHB-MW2-7-102413 SHB-MW20-5-102413 SHB-MW2-13-102413 SHB-MW1-3-102413 SHB-MW1-7.5-102413 SHB-MW1-13-102413	Naphthalene	**DNR**	Report from SW8270D-SIM analysis
311340-07	Rec2-B15-111513	Acenaphthene Acenaphthylene Anthracene Benz(a)anthracene Benzo(a)pyrene Benzo(b)fluoranthene Benzo(g,h,i)perylene Benzo(k)fluoranthene Chrysene Dibenzo(a,h)anthracene Fluoranthene Fluorene Indeno(1,2,3-cd)pyrene Naphthalene Phenanthrene Pyrene	**J** **UJ** **UJ** **UJ** **UJ** **UJ** **UJ** **UJ** **J** **UJ** **J** **J** **UJ** **UJ** **J** **J**	Surrogate spike %R value was <LCL
E1301601-007 E1301601-009 E1301601-013	PM-B4-2-111313 PM-MW-4-3-111313 BA-MW-3-2.5-102913	Total HpCDD	**U**	Analyte was detected in MB and saple was <5xMB
E1301601-001	CN-B5-7-112213	1,2,3,7,8-PeCDF	**J**	Chlorodiphenyl ether interference was present
E1301601-003	BA-B1-5-111313	1,2,3,4,7,8-HxCDF OCDF	**J**	Chlorodiphenyl ether interference was present
E1301601-005	PM-B1-1.5-112013	2,3,4,6,7,8-HxCDF OCDF	**J**	Chlorodiphenyl ether interference was present

Laboratory ID	Sample ID	Analyte	Qualifier	Qualified Reason
E1301601-006	PM-B501-112013	1,2,3,4,7,8-HxCDF 1,2,3,7,8-PeCDF 2,3,4,6,7,8-HxCDF OCDF	**J**	Chlorodiphenyl ether interference was present
E1301601-008	PM-B2-2-111313	1,2,3,4,7,8-HxCDF 1,2,3,7,8-PeCDF 2,3,4,6,7,8-HxCDF OCDF	**J**	Chlorodiphenyl ether interference was present
E1301601-010	BA-MW-1-3-102913	1,2,3,4,7,8-HxCDF 1,2,3,7,8-PeCDF 2,3,4,6,7,8-HxCDF OCDF	**J**	Chlorodiphenyl ether interference was present
E1301601-011	BA-MW-4-3.5-102813	1,2,3,4,7,8-HxCDF 1,2,3,7,8,9-HxCDF 1,2,3,7,8-PeCDF 2,3,4,6,7,8-HxCDF 2,3,4,7,8-PeCDF OCDF	**J**	Chlorodiphenyl ether interference was present
E1301601-012	BA-MW-2-2-102913	1,2,3,4,7,8-HxCDF 1,2,3,7,8-PeCDF 2,3,4,6,7,8-HxCDF	**J**	Chlorodiphenyl ether interference was present
E1400013-001	BA-MW-2-7-102913	1,2,3,4,7,8-HxCDF 2,3,4,6,7,8-HxCDF 2,3,4,7,8-PeCDF OCDF	**J**	Chlorodiphenyl ether interference was present
E1301601-005 E1301601-006	PM-B1-1.5-112013 PM-B501-112013	OCDD Total TCDF	**J**	Field duplicate RPD value was >35%
E1301464-001	PM-MW5-3-103013	1,2,3,6,7,8-HxCDF 1,2,3,7,8-PeCDD 2,3,7,8-TCDF 1,2,3,7,8,9-HxCDF 2,3,4,6,7,8-HxCDF 2,3,4,7,8-PeCDF	**U**	Ion abundance ratio did not meet method criteria
E1301601-002	BA-B2-6-111313	1,2,3,4,7,8,9-HpCDF 1,2,3,6,7,8-HxCDD 2,3,7,8-TCDD	**U**	Ion abundance ratio did not meet method criteria
E1301601-003	BA-B1-5-111313	1,2,3,7,8-PeCDF 2,3,7,8-TCDD	**U**	Ion abundance ratio did not meet method criteria
E1301601-004	CN-B5-5.5-112213	1,2,3,6,7,8-HxCDF 1,2,3,7,8-PeCDD 1,2,3,7,8-PeCDF 2,3,7,8-TCDD	**U**	Ion abundance ratio did not meet method criteria
E1301601-005	PM-B1-1.5-112013	1,2,3,4,7,8-HxCDD 1,2,3,7,8-PeCDF	**U**	Ion abundance ratio did not meet method criteria
E1301601-006	PM-B501-112013	1,2,3,4,7,8,9-HpCDF 1,2,3,7,8,9-HxCDD 2,3,7,8-TCDD	**U**	Ion abundance ratio did not meet method criteria

Laboratory ID	Sample ID	Analyte	Qualifier	Qualified Reason
E1301601-007	PM-B4-2-111313	1,2,3,4,7,8,9-HpCDF 1,2,3,4,7,8-HxCDF 1,2,3,6,7,8-HxCDD 1,2,3,6,7,8-HxCDF 2,3,4,7,8-PeCDF	**U**	Ion abundance ratio did not meet method criteria
E1301601-008	PM-B2-2-111313	1,2,3,7,8-PeCDD 2,3,7,8-TCDD	**U**	Ion abundance ratio did not meet method criteria
E1301601-009	PM-MW-4-3-111313	1,2,3,4,7,8-HxCDD 1,2,3,6,7,8-HxCDF 1,2,3,7,8,9-HxCDD 1,2,3,7,8-PeCDF 2,3,4,6,7,8-HxCDF 2,3,7,8-TCDF	**U**	Ion abundance ratio did not meet method criteria
E1301601-010	BA-MW-1-3-102913	1,2,3,7,8,9-HxCDF 1,2,3,7,8-PeCDD 2,3,7,8-TCDD	**U**	Ion abundance ratio did not meet method criteria
E1301601-012	BA-MW-2-2-102913	1,2,3,7,8,9-HxCDF	**U**	Ion abundance ratio did not meet method criteria
E1301601-013	BA-MW-3-2.5-102913	1,2,3,4,7,8-HxCDD 1,2,3,4,7,8-HxCDF 2,3,4,7,8-PeCDF	**U**	Ion abundance ratio did not meet method criteria
E1400013-001	BA-MW-2-7-102913	1,2,3,7,8,9-HxCDF 1,2,3,7,8-PeCDF	**U**	Ion abundance ratio did not meet method criteria
E1400014-001	BA-MW-4-5.5-102813	1,2,3,4,6,7,8-HpCDF 1,2,3,6,7,8-HxCDD 1,2,3,7,8,9-HxCDD	**U**	Ion abundance ratio did not meet method criteria
E1400013-001	BA-MW-2-7-102913	OCDD	**J**	Reported value exceeded calibration range

Notes:
%D – Percent difference
%R - Percent recovery
CCV - Continuing calibration verification
DL - Dilution analysis
LCL - Lower control limit
LCS - Laboratory control sample
LCSD - Laboratory control sample duplicate
MB - Method blank
MS - Matrix spike
MSD - Matrix spike duplicate
RL – Reporting limit
RPD - Relative percent difference
TPH - Total petroleum hydrocarbon
UCL - Upper control limit

Table II. Data Affected by Detections in Method Blanks

SDG#	Sample ID	Compound	Original Result	Adjusted Result	Unit	Report Section
311039	Rec1-MW13-6-110113	Aliphatic C8-C10 Aromatic C8-C10	4.03 J 2.08 J	**5.05 U** **5.05 U**	mg/kg	**8.4**
311228	HB-MW-1R-12-111113	Aliphatic C8-C10 Aromatic C8-C10	1.03 J 1.78 J	**5.52 U** **5.52 U**	mg/kg	**8.4**
311323	Rec2-B14-9-111413	Aromatic C8-C10	2.25 J	**5.55 U**	mg/kg	**8.4**
311340	Rec2-B15-6.5-111513	Aromatic C8-C10	1.88 J	**5.11 U**	mg/kg	**8.4**

Table III. Data Qualifiers are defined as follows:

Data Qualifier	Definition
DNR	Do not report; the result should be reported from an alternative analysis.
J	The analyte was detected above the reported quantitation limit, and the reported concentration was an estimated value.
R	The sample results are unusable due to the quality of the data generated because certain criteria were not met. The analyte may or may not be present in the sample.
U	The analyte was analyzed for, but was considered not detected at the reporting limit or reported value.
UJ	The analyte was analyzed for, and the associated quantitation limit was an estimated value.

Approved By:  Date: *12**/27/2015***

Mingta Lin, Senior Project Chemist

REFERENCES

USEPA *Contract Laboratory Program National Functional Guidelines for Chlorinated Dibenzo-p-Dioxins (CDDs) and Chlorinated Dibenzofurans (CDFs) Data Review,* Office of Superfund Remediation and Technical Innovation, U.S. Environmental Protection Agency, September 2011, USEPA 540/R-11/016

USEPA *Contract Laboratory Program National Functional Guidelines for Inorganic Superfund Data Review,* Office of Superfund Remediation and Technical Innovation, U.S. Environmental Protection Agency, January 2010, USEPA 540/R-10/011

USEPA *Guidance for Labeling Externally Validated Laboratory Analytical Data for Superfund Use*, January 13 2009, USEPA 540-R-08-005.

USEPA *Contract Laboratory Program National Functional Guidelines for Superfund Organic Methods Data Review,* Office of Superfund Remediation and Technical Innovation, U.S. Environmental Protection Agency, June 2008, USEPA-540-R-08-01.

USEPA *Method 1631, Revision E: Mercury in Water by Oxidation, Purge and Trap, and Cold Vapor Atomic Fluorescence Spectrometry, Office of Water, U.S. Environmental Protection Agency, August 2002, EPA-821-R-02-019.*

USEPA *Test Methods for Evaluating Solid Waste (SW-846). Third Edition and Revised Update IIIA.* Office of Solid Waste and Emergency Response, Washington, D.C. April 1998.

USEPA *Region 10 Standard Operating Procedure for the Validation of Polychlorinated Dibenzo-p-Dioxin (PCDD) and Polychlorinated Dibenzofuran (PCDF) Data*, January 1996.

Standard Methods for the Examination of Water and Wastewater, American Public Health Association, 20th Edition, 1995.

Ecology (Washington State Department of). 1997. *Analytical Methods for Petroleum Hydrocarbons.* Publication No. ECY 97-602. June 1997.

Appendix A

Field duplicate RPD is indicative of field and laboratory precision and sample homogeneity in combination. The CLP National Functional Guidelines or *Work Plan* do not specify criteria for field duplicate evaluation. An advisory criterion of 35% was applied to evaluating the RPD values of field duplicate results that are ≥5xRL. For results that are <5xRL, an advisory criterion of ±2RL was applied to evaluating the concentration differences. The RPD (or concentration difference as applicable) values and data qualification for detected compounds in field duplicates are presented as follows:

Analyte	Units	RL	Parent & Field Duplicate Sample Result		RPD	Delta	Data Qualifier
			CN-MW-1-4.5-102213	CN-MW-1-4.5-102213-D			
Arsenic	mg/kg	1	6.53	8.16	22%		
Cadmium	mg/kg	1	ND	ND		0	
Copper	mg/kg	1	25.8	30	15%		
Lead	mg/kg	1	7.24	6.74	7%		
Mercury	mg/kg	0.1	ND	ND		0	
Nickel	mg/kg	1	19	21.7	13%		
Zinc	mg/kg	1	33.1	38.6	15%		
Oil Range TPH	mg/kg	250	ND	ND		0	
Diesel Range TPH	mg/kg	50	ND	ND		0	
Acenaphthene	mg/kg	0.01	0.035	0.014		0.021	**J/J**
Acenaphthylene	mg/kg	0.01	ND	ND		0	
Anthracene	mg/kg	0.01	0.024	0.013		0.011	
Benz(a)anthracene	mg/kg	0.01	0.023	0.024		0.001	
Benzo(a)pyrene	mg/kg	0.01	0.013	0.022		0.009	
Benzo(b)fluoranthene	mg/kg	0.01	0.02	0.03		0.01	
Benzo(g,h,i)perylene	mg/kg	0.01	0.013	0.018		0.005	
Benzo(k)fluoranthene	mg/kg	0.01	ND	ND		0	
Chrysene	mg/kg	0.01	0.024	0.031		0.007	
Dibenzo(a,h)anthracene	mg/kg	0.01	ND	ND		0	
Fluoranthene	mg/kg	0.01	0.12	0.091	27%		
Fluorene	mg/kg	0.01	0.046	0.015		0.031	**J/J**
Indeno(1,2,3-cd)pyrene	mg/kg	0.01	ND	0.015		0.015	
Naphthalene	mg/kg	0.01	0.11	0.12	9%		
Phenanthrene	mg/kg	0.01	0.11	0.066	50%		**J/J**
Pyrene	mg/kg	0.01	0.096	0.086	11%		
			TM-MW6-6.5-102313	TM-MW20-6.5-102313			
Mercury	mg/kg	0.1	ND	ND		0	

Analyte	Units	RL	Parent & Field Duplicate Sample Result		RPD	Delta	Data Qualifier
Arsenic	mg/kg	1	2.02	2.03	0%	0.01	
Copper	mg/kg	1	9.89	8.78	12%	1.11	
Lead	mg/kg	1	6.65	8.44	24%	1.79	
Nickel	mg/kg	1	25.1	23.7	6%	1.4	
Zinc	mg/kg	1	22.3	39.1	55%	16.8	**J/J**
Diesel Range TPH	mg/kg	50	ND	ND		0	
Oil Range TPH	mg/kg	250	ND	ND		0	
Fluoranthene	mg/kg	0.01	0.015	0.024	46%	0.009	
Phenanthrene	mg/kg	0.01	0.01	0.013	26%	0.003	
Pyrene	mg/kg	0.01	0.018	0.03	50%	0.012	
			SHB-MW2-5-102413	**SHB-MW20-5-102413**			
Arsenic	mg/kg	1	4.74	4.68	1%		
Copper	mg/kg	1	9.44	9.78	5%		
Lead	mg/kg	1	2.46	2.18		0.28	
Mercury	mg/kg	0.1	ND	ND		0	
Nickel	mg/kg	1	14	14.3	2%	0.3	
Zinc	mg/kg	1	19.4	20.2	5%		
Oil Range TPH	mg/kg	250	ND	ND		0	
Diesel Range TPH	mg/kg	50	ND	ND		0	
Gasoline Range TPH	mg/kg	2	ND	ND		0	
Acenaphthene	mg/kg	0.01	0.14	0.097	36%		
Anthracene	mg/kg	0.01	0.044	0.028		0.016	
Benz(a)anthracene	mg/kg	0.01	0.03	0.02		0.01	
Benzo(b)fluoranthene	mg/kg	0.01	0.011	ND		0	
Chrysene	mg/kg	0.01	0.026	0.018		0.008	
Fluoranthene	mg/kg	0.01	0.2	0.14	63%		**J/J**
Fluorene	mg/kg	0.01	0.14	0.11	20%		
Naphthalene	mg/kg	0.01	0.065	0.022		0.043	**J/J**
Phenanthrene	mg/kg	0.01	0.4	0.3	51%		**J/J**
Pyrene	mg/kg	0.01	0.12	0.08	18%		
			BA-MW-6-1.5-102513	**BA-MW-10-1.5-102513**			
Arsenic	mg/kg	1	1.27	1.14		0.13	
Cadmium	mg/kg	1	ND	ND		0	
Copper	mg/kg	1	9.13	9.1	0%		
Lead	mg/kg	1	1.94	2.1	8%		
Mercury	mg/kg	0.1	ND	ND		0	

Analyte	Units	RL	Parent & Field Duplicate Sample Result		RPD	Delta	Data Qualifier
Nickel	mg/kg	1	13	12.9	1%		
Zinc	mg/kg	1	17	16.3	4%		
Diesel Range TPH	mg/kg	50	ND	ND		0	
Oil RangeTPH	mg/kg	250	9300	8400	10%		
Fluorene	mg/kg	0.01	ND	0.011		0	
Phenanthrene	mg/kg	0.01	ND	0.018		0	
Pyrene	mg/kg	0.01	0.018	0.024		0.006	
			PM-MW-6-11-102813	**PM-MW-11-11-102813**			
Mercury	mg/kg	0.1	ND	ND		0	
Arsenic	mg/kg	1	3	3.92		0/92	
Cadmium	mg/kg	1	ND	ND		0	
Copper	mg/kg	1	11.4	12.9	12%		
Lead	mg/kg	1	1.9	2.01		0.11	
Nickel	mg/kg	1	13.9	15.9	13%		
Zinc	mg/kg	1	19.7	23.2	16%		
Diesel Range TPH	mg/kg	50	ND	ND		0	
Oil Range TPH	mg/kg	250	ND	ND		0	
			PM-MW-6-6-102813	**PM-MW-11-6-102813**			
Mercury	mg/kg	0.1	0.14	0.1		0.04	
Arsenic	mg/kg	1	4.93	5.18		0.25	
Cadmium	mg/kg	1	ND	ND		0	
Copper	mg/kg	1	15.6	17.5	11%		
Lead	mg/kg	1	2.32	2.62		0.3	
Nickel	mg/kg	1	14.9	15.6	5%		
Zinc	mg/kg	1	24.4	26.8	9%		
Diesel Range TPH	mg/kg	50	ND	ND		0	
Oil Range TPH	mg/kg	250	ND	ND		0	
			PM-MW-6-8-102813	**PM-MW-11-8-102813**			
Mercury	mg/kg	0.1	ND	ND		0	
Arsenic	mg/kg	1	7.99	8.97	12%		
Cadmium	mg/kg	1	ND	ND		0	
Copper	mg/kg	1	32.5	35.6	9%		
Lead	mg/kg	1	5.49	6.57	18%		
Nickel	mg/kg	1	27.2	29.7	9%		
Zinc	mg/kg	1	44.4	47.5	7%		
Diesel Range TPH	mg/kg	50	ND	ND		0	

Analyte	Units	RL	Parent & Field Duplicate Sample Result		RPD	Delta	Data Qualifier
Oil Range TPH	mg/kg	250	ND	ND		0	
			BA-MW-1-12-102913	**BA-MW-13-12-102913**			
Mercury	mg/kg	0.1	ND	ND		0	
Arsenic	mg/kg	1	2.07	1.55		0.52	
Copper	mg/kg	1	5.25	6.71	24%		
Lead	mg/kg	1	2.59	2.71		0.12	
Nickel	mg/kg	1	12.4	13.4	8%		
Zinc	mg/kg	1	10.5	11.9	13%		
Oil Range TPH	mg/kg	250	ND	ND		0	
Diesel Range TPH	mg/kg	50	ND	ND		0	
			BA-MW-1-6-102913	**BA-MW-13-6-102913**			
Mercury	mg/kg	0.1	ND	ND		0	
Arsenic	mg/kg	1	1.76	1.75		0.01	
Copper	mg/kg	1	4.66	5.2		0.54	
Lead	mg/kg	1	1.3	1.42		0.12	
Nickel	mg/kg	1	11.3	12.9	13%		
Zinc	mg/kg	1	8.51	9.35	9%		
Oil Range TPH	mg/kg	250	ND	ND		0	
Diesel Range TPH	mg/kg	50	ND	ND		0	
			BA-MW-1-8.5-102913	**BA-MW-13-8.5-102913**			
Mercury	mg/kg	0.1	ND	ND		0	
Arsenic	mg/kg	1	1.32	1.9	41%	0.58	
Copper	mg/kg	1	6.82	9.63	48%		**J/J**
Lead	mg/kg	1	1.8	2.44	37%		
Nickel	mg/kg	1	15	18.8	33%		
Zinc	mg/kg	1	11.1	14.4	37%		**J/J**
Oil Range TPH	mg/kg	250	ND	ND			
Diesel Range TPH	mg/kg	50	ND	ND			
			OPS-MW1-7-103013	**OPS-MW20-7-103013**			
Mercury	mg/kg	0.1	0.25	0.25		0	
Arsenic	mg/kg	1	2.25	1.94		0.31	
Copper	mg/kg	1	28.2	29.1	3%		
Lead	mg/kg	1	47.4	43.3	9%		
Nickel	mg/kg	1	15.5	16.4	6%		
Zinc	mg/kg	1	33.3	32	4%		
			Rec1-MW12-11-103113	**Rec1-MW22-11-103113**			

Analyte	Units	RL	Parent & Field Duplicate Sample Result		RPD	Delta	Data Qualifier
Diesel Range TPH	mg/kg	50	ND	85		85	
Oil Range TPH	mg/kg	250	ND	ND		0	
Gasoline Range TPH	mg/kg	2	15	14	7%		
Acenaphthene	mg/kg	0.01	ND	ND		0	
Acenaphthylene	mg/kg	0.01	ND	ND		0	
Anthracene	mg/kg	0.01	ND	ND		0	
Benz(a)anthracene	mg/kg	0.01	ND	0.016		0.016	
Benzo(a)pyrene	mg/kg	0.01	ND	0.016		0.016	
Benzo(b)fluoranthene	mg/kg	0.01	ND	0.024		0.024	**UJ/J**
Benzo(g,h,i)perylene	mg/kg	0.01	ND	0.014		0.014	
Benzo(k)fluoranthene	mg/kg	0.01	ND	ND		0	
Chrysene	mg/kg	0.01	ND	0.022		0.022	**UJ/J**
Dibenzo(a,h)anthracene	mg/kg	0.01	ND	ND		0	
Fluoranthene	mg/kg	0.01	ND	0.035		0.035	**UJ/J**
Fluorene	mg/kg	0.01	ND	ND		0	
Indeno(1,2,3-cd)pyrene	mg/kg	0.01	ND	0.012		0.012	
Naphthalene	mg/kg	0.01	ND	0.027		0.027	**UJ/J**
Phenanthrene	mg/kg	0.01	ND	0.018		0.018	
Pyrene	mg/kg	0.01	ND	0.034		0.024	**UJ/J**
			Rec1-MW12-7-103113	**Rec1-MW22-7-103113**			
Diesel Range TPH	mg/kg	50	ND	ND		0	
Oil Range TPH	mg/kg	250	ND	ND		0	
Gasoline Range TPH	mg/kg	2	ND	ND		0	
Fluoranthene	mg/kg	0.01	ND	0.01		0.01	
Pyrene	mg/kg	0.01	ND	0.012		0.012	
			Rec1-MW13-6-110113	**Rec1-MW23-6-110113**			
Diesel Range TPH	mg/kg	50	610	760	22%		
Oil Range TPH	mg/kg	250	ND	ND		0	
Gasoline Range TPH	mg/kg	2	79	97	20%		
Acenaphthene	mg/kg	0.01	0.1	0.083	19%		
Benz(a)anthracene	mg/kg	0.01	0.036	0.034		0.002	
Benzo(a)pyrene	mg/kg	0.01	0.022	0.02		0.002	
Benzo(b)fluoranthene	mg/kg	0.01	0.043	0.034		0.009	
Benzo(g,h,i)perylene	mg/kg	0.01	0.027	0.015		0.012	
Benzo(k)fluoranthene	mg/kg	0.01	0.013	0.01		0.003	
Chrysene	mg/kg	0.01	0.074	0.055	29%		

Analyte	Units	RL	Parent & Field Duplicate Sample Result		RPD	Delta	Data Qualifier
Fluoranthene	mg/kg	0.01	0.11	0.11	0%		
Fluorene	mg/kg	0.01	0.37	0.35	6%		
Indeno(1,2,3-cd)pyrene	mg/kg	0.01	0.022	0.014		0.008	
Naphthalene	mg/kg	0.01	0.41	0.29	34%		
Phenanthrene	mg/kg	0.01	0.47	0.43	9%		
Pyrene	mg/kg	0.01	0.12	0.11	9%		
			AP-MW-1R-13-111113	**AP-MW-501-13-111113**			
Mercury	mg/kg	0.1	ND	ND		0	
Arsenic	mg/kg	1	1.66	ND		0	
Copper	mg/kg	1	5	4.83		0.17	
Lead	mg/kg	1	1.82	1.88		0.06	
Nickel	mg/kg	1	12.8	11	15%	1.8	
Zinc	mg/kg	1	11.3	10.5	7%	0.8	
Diesel Range TPH	mg/kg	50	ND	ND		0	
Oil Range TPH	mg/kg	250	ND	ND		0	
Gasoline Range TPH	mg/kg	2	ND	ND		0	
			AP-MW-1R-7-111113	**AP-MW-501-7-111113**			
Mercury	mg/kg	0.1	ND	ND			
Arsenic	mg/kg	1	3.59	3.41		0.18	
Copper	mg/kg	1	38.5	98.3	87%		**J/J**
Lead	mg/kg	1	40.5	48.4	18%		
Nickel	mg/kg	1	31	35.7	14%		
Zinc	mg/kg	1	46.2	49.8	7%		
Diesel Range TPH	mg/kg	50	ND	ND		0	
Oil Range TPH	mg/kg	250	ND	ND		0	
Gasoline Range TPH	mg/kg	2	ND	ND		0	
Benz(a)anthracene	mg/kg	0.01	0.019	0.02		0.001	
Benzo(a)pyrene	mg/kg	0.01	0.031	0.025		0.006	
Benzo(b)fluoranthene	mg/kg	0.01	0.037	0.03		0.007	
Benzo(g,h,i)perylene	mg/kg	0.01	0.031	0.022		0.009	
Benzo(k)fluoranthene	mg/kg	0.01	0.015	0.013		0.002	
Chrysene	mg/kg	0.01	0.028	0.028		0	
Fluoranthene	mg/kg	0.01	0.028	0.028		0	
Indeno(1,2,3-cd)pyrene	mg/kg	0.01	0.031	0.021		0.01	
Phenanthrene	mg/kg	0.01	0.015	0.014		0.001	
Pyrene	mg/kg	0.01	0.034	0.035		0.001	

Analyte	Units	RL	Parent & Field Duplicate Sample Result		RPD	Delta	Data Qualifier
			AP-MW-1R-9-111113	**AP-MW-501-9-111113**			
Mercury	mg/kg	0.1	ND	ND			
Arsenic	mg/kg	1	1.87	2.65		0.78	
Copper	mg/kg	1	12.9	16.4	24%		
Lead	mg/kg	1	2.98	12.7		9.72	
Nickel	mg/kg	1	14.3	18	23%		
Zinc	mg/kg	1	18.8	30	46%		**J/J**
Diesel Range TPH	mg/kg	50	ND	ND		0	
Oil Range TPH	mg/kg	250	ND	ND		0	
Gasoline Range TPH	mg/kg	2	ND	ND		0	
1-Methylnaphthalene	mg/kg	0.01	ND	0.018		0.018	
2-Methylnaphthalene	mg/kg	0.01	0.012	0.016		0.004	
Benz(a)anthracene	mg/kg	0.01	ND	0.015		0.015	
Benzo(a)pyrene	mg/kg	0.01	ND	0.013		0.013	
Benzo(b)fluoranthene	mg/kg	0.01	ND	0.014		0.014	
Chrysene	mg/kg	0.01	ND	0.018		0.018	
Dibenzo(a,h)anthracene	mg/kg	0.01	ND	ND			
Fluoranthene	mg/kg	0.01	ND	0.03		0.03	**UJ/J**
Naphthalene	mg/kg	0.01	0.014	0.017		0.003	
Phenanthrene	mg/kg	0.01	ND	0.034		0.034	**U/J**
Pyrene	mg/kg	0.01	ND	0.03		0.03	**UJ/J**
			PM-MW-2-12-111313	**PM-MW-502-12-111313**			
Mercury	mg/kg	0.1	ND	ND		0	
Arsenic	mg/kg	1	ND	ND		0	
Copper	mg/kg	1	5.12	4.01	24%	1.11	
Lead	mg/kg	1	2.11	ND		2.11	**J/UJ**
Nickel	mg/kg	1	13.6	10.5	26%		
Zinc	mg/kg	1	10.1	7.41	31%		
Diesel Range TPH	mg/kg	50	ND	ND		0	
Oil Range TPH	mg/kg	250	ND	ND		0	
			PM-MW-2-3-111313	**PM-MW-502-3-111313**			
Aroclor 1254	mg/kg	0.02	0.11	ND		0.11	
			PM-MW-2-6-111313	**PM-MW-502-6-111313**			
Mercury	mg/kg	0.1	ND	ND		0	
Arsenic	mg/kg	1	3.24	3.07		0.17	
Copper	mg/kg	1	12.2	12.4	2%		

Analyte	Units	RL	Parent & Field Duplicate Sample Result		RPD	Delta	Data Qualifier
Lead	mg/kg	1	8.03	8.43	5%		
Nickel	mg/kg	1	17.9	17.4	3%		
Zinc	mg/kg	1	22.4	21.8	3%		
Benz(a)anthracene	mg/kg	0.01	0.03	ND		0.03	
Benzo(a)pyrene	mg/kg	0.01	0.022	ND		0.022	**J/UJ**
Benzo(b)fluoranthene	mg/kg	0.01	0.032	ND		0.032	**J/UJ**
Benzo(g,h,i)perylene	mg/kg	0.01	0.018	ND		0.018	
Benzo(k)fluoranthene	mg/kg	0.01	0.012	ND		0.012	
Chrysene	mg/kg	0.01	0.033	ND		0.033	**J/UJ**
Fluoranthene	mg/kg	0.01	0.051	ND		0.051	**J/UJ**
Indeno(1,2,3-cd)pyrene	mg/kg	0.01	0.018	ND		0.018	
Phenanthrene	mg/kg	0.01	0.012	ND		0.012	
Pyrene	mg/kg	0.01	0.045	ND		0.045	**J/UJ**
			PM-MW-2-7-111313	**PM-MW-502-7-111313**			
Mercury	mg/kg	0.1	ND	ND			
Arsenic	mg/kg	1	4.84	6.86		2.02	**J/J**
Copper	mg/kg	1	12.7	23.4	59%		**J/J**
Lead	mg/kg	1	2.25	3.89		1.64	
Nickel	mg/kg	1	11.6	24.8	73%		**J/J**
Zinc	mg/kg	1	17.9	36.7	69%		**J/J**
			Rec2-B13-12-111413	**Rec2-B513-12-111413**			
Diesel Range TPH	mg/kg	50	1800	1800	0%		
Oil Range TPH	mg/kg	250	ND	ND		0	
Gasoline Range TPH	mg/kg	20	1000	1000	0%		
Acenaphthene	mg/kg	0.01	0.25	0.25	0%		
Anthracene	mg/kg	0.01	0.046	0.055		0.009	
Benz(a)anthracene	mg/kg	0.01	0.03	0.035		0.005	
Benzo(a)pyrene	mg/kg	0.01	0.014	0.016		0.002	
Benzo(b)fluoranthene	mg/kg	0.01	0.017	0.021		0.004	
Chrysene	mg/kg	0.01	0.03	0.03		0	
Fluoranthene	mg/kg	0.01	0.083	0.1	19%		
Fluorene	mg/kg	0.01	0.096	0.12	22%		
Phenanthrene	mg/kg	0.01	0.074	0.086	15%		
Pyrene	mg/kg	0.01	0.1	0.11	10%		
			Rec2-B13-5-111413	**Rec2-B513-5-111413**			
Mercury	mg/kg	0.1	ND	ND		0	

Analyte	Units	RL	Parent & Field Duplicate Sample Result		RPD	Delta	Data Qualifier
Arsenic	mg/kg	1	3.88	1.5		2.38	**J/J**
Copper	mg/kg	1	29.2	7.01	123 %		**J/J**
Lead	mg/kg	1	179	25.2	151 %		**J/J**
Nickel	mg/kg	1	15.1	12	23%		**J/J**
Zinc	mg/kg	1	326	48.6	148		**J/J**
Diesel Range TPH	mg/kg	50	210	ND	0%	210	**J/UJ**
Oil Range TPH	mg/kg	250	ND	ND		0	
Gasoline Range TPH	mg/kg	2	7.7	5.7		2	
Benz(a)anthracene	mg/kg	0.01	0.02	ND		0.02	
Benzo(a)pyrene	mg/kg	0.01	0.025	ND		0.025	**J/UJ**
Benzo(b)fluoranthene	mg/kg	0.01	0.047	0.02		0.027	**J/J**
Benzo(g,h,i)perylene	mg/kg	0.01	0.037	0.013		0.024	**J/J**
Benzo(k)fluoranthene	mg/kg	0.01	0.013	ND		0.013	
Chrysene	mg/kg	0.01	0.033	0.015		0.018	
Fluoranthene	mg/kg	0.01	0.057	0.02		0.037	**J/J**
Indeno(1,2,3-cd)pyrene	mg/kg	0.01	0.035	0.012		0.023	**J/J**
Naphthalene	mg/kg	0.01	0.53	0.057	161		
Phenanthrene	mg/kg	0.01	0.06	0.017		0.043	**J/J**
Pyrene	mg/kg	0.01	0.073	0.024		0.049	**J/J**
			PM-B1-1.5-112013	**PM-B501-112013**			
1,2,3,4,6,7,8-HpCDD	ng/kg	2.9	31	39.2	23%		
1,2,3,4,6,7,8-HpCDF	ng/kg	2.9	2.61	5.04		2.43	
1,2,3,4,7,8,9-HpCDF	ng/kg	2.9	0.208	ND		0.208	
1,2,3,4,7,8-HxCDD	ng/kg	2.9	ND	1.67		1.67	
1,2,3,4,7,8-HxCDF	ng/kg	2.9	0.914	1.63		0.716	
1,2,3,6,7,8-HxCDD	ng/kg	2.9	2.78	3.37		0.59	
1,2,3,6,7,8-HxCDF	ng/kg	2.9	0.491	0.694		0.203	
1,2,3,7,8,9-HxCDD	ng/kg	2.9	2.41	ND		2.4	
1,2,3,7,8,9-HxCDF	ng/kg	2.9	ND	ND		0	
1,2,3,7,8-PeCDD	ng/kg	2.9	0.758	1.16		0.402	
1,2,3,7,8-PeCDF	ng/kg	2.9	ND	0.793		0.793	
2,3,4,6,7,8-HxCDF	ng/kg	2.9	0.562	0.851		0.289	
2,3,4,7,8-PeCDF	ng/kg	2.9	1	1.28		0.28	
2,3,7,8-TCDD	ng/kg	ND	ND	ND		0	
2,3,7,8-TCDF	ng/kg	0.58	1.39	1.82		0.43	

Analyte	Units	RL	Parent & Field Duplicate Sample Result		RPD	Delta	Data Qualifier
OCDD	ng/kg	5.81	114	165	37%		**J/J**
OCDF	ng/kg	5.81	5.34	10.5		5.16	
Total HpCDD	ng/kg	2.9	57.4	74.6	26%		
Total HpCDF	ng/kg	2.9	6.57	12.2		5.63	
Total HxCDD	ng/kg	2.9	138	163	17%		
Total HxCDF	ng/kg	2.9	3.98	7.87		3.89	
Total PeCDD	ng/kg	2.9	75.5	69.3	9%		
Total PeCDF	ng/kg	2.9	10.7	14.6		3.9	
Total TCDD	ng/kg	0.58	63.9	78.4	20%		
Total TCDF	ng/kg	0.58	11.5	17.7	42%		**J/J**

Notes:
Delta – Concentration difference between the parent sample and its field duplicate
mg/kg – milligram per kilogram
ND – The analyte was not detected at or above the RL.
RL – Reporting limit
RPD – Relative percent difference

Data Validation Report

Former GP Mill Property RI/FS
Kimberly Clark, Washington

Round 1 Groundwater Sampling 2013

Prepared for:

Aspect Consulting LLC
401 Second Ave South, Suite 201
Seattle, WA 98014

Prepared by:

Pyron Environmental, Inc.
3530 32nd Way, NW
Olympia, WA 98502

Approved By: _____ Date: ***12/23/2015***

Mingta Lin, Senior Project Chemist

ACRONYMS

%D	percent difference
%D_f	percent drift
%R	percent recovery
%RSD	percent relative standard deviation
AMU	atomic mass unit
CCB	continuing calibration blank
CCC	calibration check compound
CCV	continuing calibration verification
CF	calibration factor
CLP	U.S. EPA Contract Laboratory Program
COC	chain-of-custody
CVAFS	cold vapor atomic fluorescent spectrometry
DFTPP	decafluorotriphenylphosphine
EPA	U.S. Environmental Protection Agency
FID	Flame ionization detector
GC/MS	gas chromatograph/mass spectrometer
ICAL	initial calibration
ICB	initial calibration blank
ICP/MS	inductively coupled plasma/ mass spectrometer
ICSA	ICP interference check sample solution A
ICV	initial calibration verification
LCS	laboratory control sample
LCSD	laboratory control sample duplicate
MDL	method detection limit
µg/L	microgram per liter
mg/L	Milligram per liter
MS	matrix spike
MSD	matrix spike duplicate
ng/L	Nanogram per liter
NFGs	CLP National Functional Guidelines for Data Review (EPA 2008 – Organics; EPA 2010 – Inorganics)
OPR	ongoing precision and recovery
QA/QC	quality assurance/quality control
QAPP	quality assurance project plan

RF	response factor
RL	reporting limit
RPD	relative percent difference
RRT	relative retention time
SDG	sample delivery group
SIM	selective ion monitoring
SVOCs	semi-volatile organic compounds
TSS	total suspended solids
VOCs	volatile organic compounds

INTRODUCTION

This report presents and discusses findings of the data validation performed on analytical data for soil samples collected during November 2013 for the referenced project. The laboratory reports validated herein were submitted by Friedman & Bruya, Inc. and Columbia Analytical Services, Inc. (CAS, part of ALS Group) in Kelso, Washington.

A level III data validation was performed on this laboratory report. The validation followed the procedures specified in USEPA CLP Functional Guidelines ([NFGs], EPA 2008 – Organics; EPA 2010 – Inorganics), with modifications to accommodate project and analytical method requirements. The numerical quality assurance/quality control (QA/QC) criteria applied to the validation were in accordance with those specified in the quality assurance project plans ([QAPPs], Aspect, 2009) and the current performance-based control limits established by the laboratory (laboratory control limits). Instrument calibration, frequency of QC analyses, and analytical sequence requirements were evaluated against the respective analytical methods.

Validation findings are discussed in each section pertinent to the QC parameter for each type of analysis. Qualified data with applied data qualifiers are summarized in the **Summary** section at the end of this report.

Samples and the associated analyses validated herein are summarized as follows:

				Analysis					
Field Sample ID	Laboratory Sample ID	Sample Date	Sample Type	VOCs	SVOCs	PAHs	TPH-G TPH-Dx	Metals	Miscellaneous
CN-MW3-110413	311093-01	11/04/13	GW			X	TPH-Dx		TSS
SHB-MW1-110413	311093-02	11/04/13	GW	X		X	X		TSS
CN-MW1-110413	311093-03	11/04/13	GW			X	TPH-Dx		TSS
REC7-MW1-110413	311093-04	11/04/13	GW			X			TSS
PM-MW6-110513	311093-05	11/05/13	GW	X	X	X	TPH-Dx		TSS
CN-MW2-110513	311093-06	11/05/13	GW			X	TPH-Dx		TSS
BA-MW-1-110413	311093-07	11/04/13	GW		X	X	TPH-Dx		TSS
BA-MW-7-110413	311093-08	11/04/13	GW		X	X	TPH-Dx		TSS
PM-MW-8-110513	311093-09	11/05/13	GW	X	X	X	TPH-Dx		TSS
BA-MW-5-110513	311093-10	11/05/13	GW		X	X	TPH-Dx		TSS
UG-MW1-110513	311105-01	11/05/13	GW			X	X		TSS
TM-MW3-110513	311105-02	11/05/13	GW			X	TPH-Dx		TSS
TM-MW2-110513	311105-03	11/05/13	GW	X	X	X	TPH-Dx		TSS
NRP-MW3-110513	311105-04	11/05/13	GW						TSS
NRP-MW2-110613	311105-05	11/06/13	GW						TSS

Field Sample ID	Laboratory Sample ID	Sample Date	Sample Type	Analysis					
				VOCs	SVOCs	PAHs	TPH-G TPH-Dx	Metals	Miscellaneous
MW-5-110613	311105-06	11/06/13	GW						TSS
REC1-MW5-110613	311105-07	11/06/13	GW			X	X		TSS
BA-MW-4-110513	311105-08	11/05/13	GW		X	X	TPH-Dx		TSS
BA-MW-3-110513	311105-09	11/05/13	GW		X	X	TPH-Dx		TSS
LP-MW-2-110513	311105-10	11/05/13	GW			X	TPH-Dx		TSS
MW-6-110613	311105-11	11/06/13	GW						TSS
BA-MW-6-110613	311105-12	11/06/13	GW		X	X	TPH-Dx		TSS
TM-MW1-110613	311145-01	11/06/13	GW	X		X			TSS
TM-MW5-110613	311145-02	11/06/13	GW		X	X			TSS
TM-MW4-110613	311145-03	11/06/13	GW	X		X			TSS
LP-MW1-110613	311145-04	11/06/13	GW			X			TSS
GF9-MW3-110613	311145-05	11/06/13	GW			X			TSS
REC7-MW2-110613	311145-06	11/06/13	GW		X	X			TSS
TM-MW6-110713	311145-07	11/07/13	GW	X	X	X			TSS
REC6-MW2-110713	311145-08	11/07/13	GW		X	X			TSS
SHB-MW2-110713	311145-09	11/07/13	GW	X		X			TSS
UST70-MW2-110713	311145-10	11/07/13	GW			X			TSS
PM-MW-1-110613	311145-11	11/06/13	GW		X	X			TSS
PM-MW-5-110613	311145-12	11/06/13	GW		X	X			TSS
REC7-MW-3-110613	311145-13	11/06/13	GW			X			TSS
OMS-MW-1-110713	311145-14	11/07/13	GW						TSS
MW-1-110713	311145-15	11/07/13	GW						TSS
PM-MW7-110713	311145-16	11/07/13	GW	X	X	X			TSS
PM-MW500-110713	311145-17	11/07/13	GW	X	X	X			TSS
GF9-MW2-110713	311175-01	11/07/13	GW			X	X		TSS
GF9-MW500-110713	311175-02	11/07/13	GW			X	X		TSS
GF9-MW1-110713	311175-03	11/07/13	GW			X	X		TSS
REC1-MW8-110713	311175-04	11/07/13	GW			X	X		TSS
REC7-MW4-110813	311175-05	11/08/13	GW			X	X		TSS
UG-MW2R-110713	311175-06	11/07/13	GW			X	X		TSS
OPS-MW1-110713	311175-07	11/07/13	GW	X					TSS
CMS-MW2-110713	311175-08	11/07/13	GW			X	X		TSS
Rec1-MW9-110813	311175-09	11/08/13	GW			X	X		TSS
HB-MW1R-111313	311293-01	11/13/13	GW			X	TPH-Dx		TSS

Field Sample ID	Laboratory Sample ID	Sample Date	Sample Type	Analysis					
				VOCs	SVOCs	PAHs	TPH-G TPH-Dx	Metals	Miscellaneous
AP-MW1R-111313	311293-02	11/13/13	GW			X	X		TSS
CMS-MW1R-111313	311293-03	11/13/13	GW			X	X		TSS
PM-MW3-111313	311293-04	11/13/13	GW		X	X	TPH-Dx		TSS
REC5-MW1R-111313	311293-05	11/13/13	GW		X	X	TPH-Dx		TSS
REC1-MW14-111413	311322-01	11/14/13	GW			X	X		TSS
REC1-MW3-111413	311322-02	11/14/13	GW	X		X	X		TSS
REC1-MW2-111413	311322-03	11/14/13	GW			X	X		TSS
REC1-MW12-111413	311322-04	11/14/13	GW			X	X		TSS
REC1-MW1-111413	311322-05	11/14/13	GW			X	X		TSS
REC1-MW6-111413	311322-06	11/14/13	GW			X	X		TSS
REC1-MW7-111413	311322-07	11/14/13	GW			X	X		TSS
REC1-MW11-111413	311322-08	11/14/13	GW			X	X		TSS
REC1-MW10-111413	311322-09	11/14/13	GW		X	X	X		TSS
REC1-MW500-111413	311322-10	11/14/13	GW		X	X	X		TSS
MW-2-111413	311322-11	11/14/13	GW						TSS
REC3-MW1-111413	311322-12	11/14/13	GW						TSS
BA-MW2-111513	311339-01	11/15/13	GW		X	X	TPH-Dx		TSS
BA-MW500-111513	311339-02	11/15/13	GW		X	X	TPH-Dx		TSS
PM-MW2-111513	311339-03	11/15/13	GW		X	X	TPH-Dx		TSS
PM-MW4-111813	311353-01	11/18/13	GW		X	X	TPH-Dx		TSS
REC1-MW15-111813	311353-02	11/18/13	GW			X	X		TSS
REC1-MW4-111813	311353-03	11/18/13	GW	X		X	X		TSS
RB-GW-111813	311353-04	11/18/13	GW	X	X	X	X		TSS
TM-MW3-110513	K1312150-001	11/05/13	GW					T	
TM-MW2-110513	K1312150-002	11/05/13	GW					T	
NRP-MW3-110513	K1312150-003	11/05/13	GW					T	NH_3, S^{-2}
NRP-MW2-110613	K1312150-004	11/06/13	GW					T	NH_3, S^{-2}
MW-5-110613	K1312150-005	11/06/13	GW					T	NH_3, S^{-2}
REC1-MW5-110613	K1312150-006	11/06/13	GW					T	
BA-MW-4-110513	K1312150-007	11/05/13	GW					T	
BA-MW-3-110513	K1312150-008	11/05/13	GW					T	
LP-MW-2-110513	K1312150-009	11/05/13	GW					T	NH_3, S^{-2}
MW-6-110613	K1312150-010	11/06/13	GW					T	NH_3, S^{-2}
BA-MW-6-110613	K1312150-011	11/06/13	GW					T	

Field Sample ID	Laboratory Sample ID	Sample Date	Sample Type	Analysis					
				VOCs	SVOCs	PAHs	TPH-G TPH-Dx	Metals	Miscellaneous
CN-MW3-110413	K1312168-001	11/04/13	GW					T	
SHB-MW1-110413	K1312168-002	11/04/13	GW					T	
CN-MW1-110413	K1312168-003	11/04/13	GW					T	NH_3, S^{-2}
REC7-MW1-110413	K1312168-004	11/04/13	GW					T	NH_3, S^{-2}
PM-MW6-110513	K1312168-005	11/05/13	GW					T	
CN-MW2-110513	K1312168-006	11/05/13	GW					T	
BA-MW-1-110413	K1312168-007	11/04/13	GW					T	
BA-MW-7-110413	K1312168-008	11/04/13	GW					T	NH_3, S^{-2}
PM-MW-8-110513	K1312168-009	11/05/13	GW					T	NH_3, S^{-2}
BA-MW-5-110513	K1312168-010	11/05/13	GW					T	
REC1-MW8-110713	K1312255-001	11/07/13	GW					T	
REC7-MW4-110813	K1312255-002	11/08/13	GW					T	NH_3, S^{-2}
Rec1-MW9-110813	K1312255-003	11/08/13	GW					T	NH_3, S^{-2}
TM-MW1-110613	K1312256-001	11/06/13	GW					T	
TM-MW5-110613	K1312256-002	11/06/13	GW					T	
TM-MW4-110613	K1312256-003	11/06/13	GW					T	
LP-MW1-110613	K1312256-004	11/06/13	GW					T	NH_3, S^{-2}
REC7-MW2-110613	K1312256-005	11/06/13	GW					T	NH_3, S^{-2}
TM-MW6-110713	K1312256-006	11/07/13	GW					T	NH_3, S^{-2}
REC6-MW2-110713	K1312256-007	11/07/13	GW					T	NH_3, S^{-2}
SHB-MW2-110713	K1312256-008	11/07/13	GW					T	NH_3, S^{-2}
UST70-MW2-110713	K1312256-009	11/07/13	GW					T	NH_3, S^{-2}
PM-MW-1-110613	K1312256-010	11/06/13	GW					T	
PM-MW-5-110613	K1312256-011	11/06/13	GW					T	
REC7-MW-3-110613	K1312256-012	11/06/13	GW					T	NH_3, S^{-2}
OMS-MW-1-110713	K1312256-013	11/07/13	GW					T	NH_3, S^{-2}
MW-1-110713	K1312256-014	11/07/13	GW					T	NH_3, S^{-2}
PM-MW7-110713	K1312256-015	11/07/13	GW					T	NH_3, S^{-2}
PM-MW500-110713	K1312256-016	11/07/13	GW					T	NH_3, S^{-2}
BA-MW2-111513	K1312665-001	11/15/13	GW					T	
BA-MW500-111513	K1312665-002	11/15/13	GW					T	
PM-MW2-111513	K1312665-003	11/15/13	GW					T	
PM-MW3-111313	K1312667-001	11/13/13	GW					T	
REC5-MW1R-111313	K1312667-002	11/13/13	GW					T	

Field Sample ID	Laboratory Sample ID	Sample Date	Sample Type	Analysis					
				VOCs	SVOCs	PAHs	TPH-G TPH-Dx	Metals	Miscellaneous
REC1-MW14-111413	K1312668-001	11/14/13	GW					T	
REC1-MW6-111413	K1312668-002	11/14/13	GW					T	
MW-2-111413	K1312668-003	11/14/13	GW					X	NH_3, S^{-2}
REC3-MW1-111413	K1312668-004	11/14/13	GW					T	NH_3, S^{-2}
PM-MW4-111813	K1312703-001	11/18/13	GW					T	
REC1-MW4-111813	K1312703-002	11/18/13	GW					T	
RB-GW-111813	K1312703-003	11/18/13	GW					T	NH_3, S^{-2}
TM-MW4-110613	K1313877-001	11/06/13	GW					D	
LP-MW1-110613	K1313877-002	11/06/13	GW					D	
REC6-MW2-110713	K1313877-003	11/07/13	GW					D	
UST70-MW2-110713	K1313877-004	11/07/13	GW					D	
PM-MW-1-110613	K1313877-005	11/06/13	GW					D	
PM-MW-5-110613	K1313877-006	11/06/13	GW					D	
MW-1-110713	K1313877-007	11/07/13	GW					D	
PM-MW7-110713	K1313877-008	11/07/13	GW					D	
SHB-MW1-110413	K1313877-009	11/04/13	GW					D	
PM-MW6-110513	K1313877-010	11/05/13	GW					D	
BA-MW-1-110413	K1313877-011	11/04/13	GW					D	
BA-MW-7-110413	K1313877-012	11/04/13	GW					D	
TM-MW3-110513	K1313877-013	11/05/13	GW					D	
NRP-MW3-110513	K1313877-014	11/05/13	GW					D	
REC1-MW5-110613	K1313877-015	11/06/13	GW					D	
BA-MW-4-110513	K1313877-016	11/05/13	GW					D	
BA-MW-3-110513	K1313877-017	11/05/13	GW					D	
BA-MW-6-110613	K1313877-019	11/06/13	GW					D	
TM-MW3-110513	K1313915-001	11/05/13	GW					X	
TM-MW2-110513	K1313915-002	11/05/13	GW					X	
NRP-MW3-110513	K1313915-003	11/05/13	GW					X	
NRP-MW2-110613	K1313915-004	11/06/13	GW					X	
MW-5-110613	K1313915-005	11/06/13	GW					X	
REC1-MW5-110613	K1313915-006	11/06/13	GW					X	
BA-MW-4-110513	K1313915-007	11/05/13	GW					X	
BA-MW-3-110513	K1313915-008	11/05/13	GW					X	
LP-MW-2-110513	K1313915-009	11/05/13	GW					X	

Field Sample ID	Laboratory Sample ID	Sample Date	Sample Type	Analysis					
				VOCs	SVOCs	PAHs	TPH-G TPH-Dx	Metals	Miscellaneous
MW-6-110613	K1313915-010	11/06/13	GW					X	
BA-MW-6-110613	K1313915-011	11/06/13	GW					X	
CN-MW3-110413	K1313920-001	11/04/13	GW					X	
SHB-MW1-110413	K1313920-002	11/04/13	GW					X	
CN-MW1-110413	K1313920-003	11/04/13	GW					X	
REC7-MW1-110413	K1313920-004	11/04/13	GW					X	
PM-MW6-110513	K1313920-005	11/05/13	GW					X	
CN-MW2-110513	K1313920-006	11/05/13	GW					X	
BA-MW-1-110413	K1313920-007	11/04/13	GW					X	
BA-MW-7-110413	K1313920-008	11/04/13	GW					X	
PM-MW-8-110513	K1313920-009	11/05/13	GW					X	
BA-MW-5-110513	K1313920-010	11/05/13	GW					X	
REC3-MW1-111413	K1400133-001	11/14/13	GW					D	
PM-MW2-111513	K1400133-002	11/15/13	GW					D	
REC1-MW4-111813	K1400133-003	11/18/13	GW					D	
PM-MW3-111313	K1400133-004	11/13/13	GW					D	
REC5-MW1R-111313	K1400133-005	11/13/13	GW					D	

Notes:

Laboratory sample ID prefixed with "K" was a laboratory identity assigned by CAS-ALS in Kelso, Washington. Metals (except mercury) analyses performed by CAS-ALS included a reductive precipitation procedure for sample preparation.

D – Dissolved metals

Metals: Total recoverable and dissolved arsenic, copper, lead, mercury, nickel, and zinc. Not all samples were analyzed for all metals.

NH_3 – Ammonia as Nitrogen

PAHs - Polycyclic aromatic hydrocarbons

S^{-2} – Dissolved sulfide

SVOCs – Semi-volatile Organic Compounds

T – Total recoverable metals

TSS - Total suspended solids

TPH-Dx - Diesel and motor oil range total petroleum hydrocarbon

TPH-G - Gasoline range total petroleum hydrocarbon

VOCs - Volatile Organic Compounds

X - The analysis was requested and performed on the sample.

The analytical parameters requested for the samples, the respective analytical methods, and the analytical laboratories are summarized below:

Parameter	Analytical Method	Analytical Laboratory
Volatile Organic Compounds (VOCs)	SW846 Method 8260C	Friedman & Bruya, Inc. (F&BI) Seattle, WA
Semi-volatile Organic Compounds (SVOCs)	SW846 Method 8270D	
Polycyclic Aromatic Hydrocarbons (PAHs)	SW846 Method 8270D-SIM	
TPH - Gasoline Range	NWTPH-Gx	
TPH - Diesel & Motor Oil Range	NWTPH-Dx	
Mercury	EPA Method 1631E	
Total Suspended Solids (TSS)	SM Method 2540D	Columbia Analytical Services, Inc. Kelso, WA (Part of ALS Group)
Dissolved Sulfide	SM 4500-S2-D	
Total Recoverable Metals	EPA Method 200.8	
Mercury	EPA Method 1631E	
Ammonia as Nitrogen	EPA Method 350.1	

Notes:

1. SW846 - *USEPA Test Methods for Evaluating Solid Waste, Physical/Chemical Methods,* SW-846, Third Edition, December 1996.
2. EPA Methods - *USEPA Methods for Chemical Analysis of Water and Wastes,* EPA–600/4-79-020, March 1983 Revision.
3. EPA Method 1631E - *Mercury in Water by Oxidation, Purge and Trap, and Cold Vapor Atomic Fluorescence Spectrometry,* Office of Water, U.S. Environmental Protection Agency, August 2002, EPA-821-R-02-019.
4. ASTM – American Society of Testing and Materials
5. NWTPH Methods – *Washington State Department of Ecology, Analytical Methods for Petroleum Hydrocarbons*, Publication No. ECY 97-602, June 1997.
6. SM – Standard Methods for the Examination of Water and Wastewater, American Public Health Association, 20th Edition, 1995.

DATA VALIDATION FINDINGS

1. VOCs by GC/MS (EPA Method SW8260C)

1.1 Sample Management and Holding Time

Samples were received in the laboratory intact and in consistence with the accompanying chain-of-custody (COC) documentation. In case where cooler temperature was outside the 4±2°C criteria, samples were hand-delivered to the laboratory the same day of collection. The cooler temperature exceedance had no significant effects on data quality. No other anomalies were identified in relation to sample preservation, handling, and transport.

water samples should be acid-preserved at pH<2 immediately and analyzed within 14 days (seven days if not preserved) of collection. All samples were analyzed within the required holding times.

1.2 GC/MS Instrument Performance Check

The method require that (1) gas chromatograph/mass spectrometer (GC/MS) tuning analysis be performed, using bromofluorobenzene (BFB), at the beginning of each 12-hour period prior to any analysis, and (2) specific mass ions meet the criteria provided in the method. All instrument performance checks met the requirements.

1.3 Initial Calibration (ICAL)

The ICAL criteria require that (1) if linear average RFs is chosen as the quantitation option, at least five standards at different concentrations should be analyzed and the percent relative standard deviation (%RSD) of response factors (RFs) be ≤20% for the analyte, (2) if least-square linear regression is chosen for quantitation, the correlation coefficient (r) be >0.995, (3) if six-point non-linear (quadratic) curve is chosen for quantitation, the coefficient of determination (r^2) be >0.99, and (4) the RF be >0.01 for poor response compounds and >0.05 for all other compounds.. ICALs either met the requirements or the outliers had no adverse effects on data usability (*e.g.,* %RSD >15% for a compound not detected in samples).

An initial calibration verification (ICV) standard (second source standard) was analyzed to verify the calibration curve. Percent difference (%D) values were either within ±30%.

1.4 Calibration Verification (CCV)

The CCV criteria requires that (1) continuing calibrations be analyzed at the beginning of each 12-hour analysis period prior to the analysis of method blank and samples, (2) the

%D be within ±20%, and (3) the RF be >0.01 for poor response compounds and >0.05 for all other compounds.

Calibration verifications either met the requirements, or the exceedance had no adverse effects on data usability (*e.g.,* biased high CCV recovery for a compound not detected in samples).

1.5 Method Blanks

Method blanks were prepared and analyzed as required. Target compounds were not detected at or above the reporting limits (RLs).

1.6 Laboratory Control Sample (LCS) and LCS Duplicate (LCSD)

LCS and LCSD were prepared and analyzed as required by the method. Percent recovery (%R) and relative percent difference (RPD) values either met the project control limits, or the outliers had no adverse effects on data usability (*e.g.,* biased high recovery for a compound not detected in samples).

1.7 Surrogate Spikes

Surrogate spikes were added to all samples as required by the method. All surrogate spike %R values were within the project control limits.

1.8 Matrix Spike (MS)

MS analyses were performed on project and batch QC samples at the proper frequency (≥5% of the samples analyzed for VOCs). All %R values were within the project control limits.

1.9 Internal Standards

The method requires that (1) internal standard retention time be within ±30 seconds from that of the associated 12-hour calibration standard, and (2) the area counts of all internal standards be within –50% to +100% of the associated 12-hour calibration standard. All internal standards in the sample and associated QC analyses met the criteria.

1.10 Reporting Limit and Target Compound Quantitation

RLs were supported with adequate initial calibration concentrations. In cases where target compound concentrations exceeded ICAL calibration ranges, proper dilution

analyses were performed for definitive quantitation of the compounds. Only affected compounds were to be reported from dilution analyses.

1.11 Field Duplicates

Field duplicate results for detected target compounds, RPD (or concentration difference) values, and data qualification were presented in **Appendix A**.

1.12 Overall Assessment of VOCs Data Usability

VOCs data are of known quality and acceptable for use, as qualified.

2. SVOCs by GC/MS (EPA Method SW8270D)

2.1 Sample Management and Holding Times

No anomalies were identified in relation to sample preservation, handling, and transport as discussed in Section 1.1.

Water samples should be extracted within seven days of collection. Extracts should be analyzed within 40 days of extraction. All samples were extracted and analyzed within the required holding times.

2.2 GC/MS Instrument Performance Check

The method require that a GC/MS tuning analysis be performed using decafluorotriphenylphosphine (DFTPP) at the beginning of each 12-hour period prior to any analysis, and specific mass ions meet the criteria provided in the method. All instrument performance checks met the requirements.

2.3 Initial Calibration (ICAL)

The ICAL criteria require that (1) if linear average RFs is chosen as the quantitation option, at least five standards at different concentrations should be analyzed and the %RSD of RFs be ≤20% for the analyte, (2) if least-square linear regression is chosen for quantitation, the correlation coefficient (r) be >0.995, (3) if six-point non-linear (quadratic) curve is chosen for quantitation, the coefficient of determination (r^2) be >0.99, and (4) the RF be >0.01 for poor response compounds and >0.05 for all other compounds.. All ICALs met the requirements.

An ICV standard (second source standard) was analyzed to verify the calibration curve. %D values were either within ±30%, or the exceedance had no adverse effects on data usability (*e.g.,* biased high ICV recovery for a compound not detected in samples).

2.4 Calibration Verification (CCV)

The CCV criteria require that (1) continuing calibrations be analyzed at the beginning of each 12-hour analysis period prior to the analysis of method blank and samples, (2) the %D be within ±20%, and (3) the RF be >0.01 for poor response compounds and >0.05 for all other compounds.

Calibration verifications were performed at the required frequency. %D values were either within ±20%, or the exceedance had no adverse effects on data usability (*e.g.,* biased high CCV recovery for a compound not detected in samples), with the exceptions as follows:

SDG	CCV ID	Compound	%D	Bias	Affected Sample	Data Qualifier
311145	GCMS8 11/15/13, 06:46	*bis*(2-Chloro-1-methylethyl) ether *bis*(2-Chloroethyl) ether 2-Nitroaniline 4-Nitrophenol	26.4% 24.2% 21.3% 31.4%	Low	TM-MW5-110613 REC7-MW2-110613 TM-MW6-110713 REC6-MW2-110713 PM-MW-1-110613 PM-MW-5-110613 PM-MW7-110713 PM-MW500-110713	**UJ**
311105	GCMS8 11/18/13, 08:12	Benzoic Acid 2,4-Dinitrolphenol	53.0% 28.7%	Low	TM-MW2-110513 BA-MW-4-110513 BA-MW-6-110613	**UJ**
311105	GCMS8 11/14/13, 18:34	*bis*(2-Chloroethyl) ether *bis*(2-chloroisopropyl) ether 4-Niitrophenol	24.3% 24.6% 27.2%	Low	BA-MW-3-110513	**UJ**
311093	GCMS8 11/14/13, 18:34	*bis*(2-Chloroethyl) ether *bis*(2-chloroisopropyl) ether 4-Niitrophenol	24.3% 24.6% 27.2%	Low	PM-MW6-110513 BA-MW-7-110413 PM-MW-8-110513 BA-MW-5-110513	**UJ**
311093	GCMS8 11/18/13, 08:12	Benzoic Acid 2,4-Dinitrolphenol	53.0% 28.7%	Low	BA-MW-1-110413	**UJ**

2.5 Method Blanks

Method blanks were prepared and analyzed as required. Target compounds were not detected at or above the RLs in the method blanks.

2.6 Surrogate Spikes

Surrogate spikes were added to all samples as required by the method. All %R values were within the laboratory control limits.

2.7 Matrix Spike (MS) and MS Duplicate (MSD)

MS and MSD analyses were performed on project and batch QC samples at the proper frequency (≥5% of samples analyzed). All %R values met the project control criteria, except for the following:

SDG#	Parent Sample ID	Compound	MS %R	MSD %R	Control Limit	RPD	Data Qualifier
311339	BA-MW2-111513	Phenol Benzoic Acid 4-Nitrophenol	41% 40% 35%	33% 36% 30%	50-150%	11% 3% 14%	**UJ**
311322	REC1-MW10-111413	Phenol Benzoic Acid 4-Nitrophenol	35% 33% 39%	39% 34% 45%	50-150%	11% 3% 14%	**UJ**
311145	PM-MW7-110713	Phenol Benzoic Acid 4-Nitrophenol	37% 31% 31%	39% 30% 31%	50-150%	5% 3% 0%	**UJ**

Note: RPD criteria is ≤20%

2.8 Laboratory Control Sample (LCS) and LCS Duplicate (LCSD)

LCS and LCSD were prepared and analyzed as required by the method. All %R and RPD values either met the laboratory control criteria, or the outliers had no adverse effects on data usability (*e.g.,* biased high %R or RPD value for a compound that was not detected in samples), except for the following:

SDG#	Compound	LCS %R	LCSD %R	Control Limit	RPD	Affected Sample	Data Qualifier
311105	2,4-Dimethylphenol	12%	33%	45-100%	93%	TM-MW2-110513 BA-MW-4-110513 BA-MW-3-110513 BA-MW-6-110613	**UJ**
311093	2,4-Dimethylphenol	12%	33%	45-100%	93%	PM-MW6-110513 BA-MW-1-110413 BA-MW-7-110413 PM-MW-8-110513 BA-MW-5-110513	**UJ**

Note: RPD criteria is ≤20%

2.9 Laboratory Duplicate Analysis

Duplicate analyses were performed on project and batch QC samples at the proper frequency. All RPD or concentration difference values either met the laboratory control criteria or the outlier had no adverse effects on data usability (*e.g.,* high RPD value for a compound that was not detected in samples).

2.10 Internal Standards

The method requires that (1) internal standard retention time be within ±30 seconds from that of the associated 12-hour calibration standard, and (2) the area counts of all internal standards be within –50% to +100% of the associated 12-hour calibration standard. All internal standards in the sample and associated QC analyses met the criteria, except for the following:

Sample ID	Internal Standard	Sample Response Area	CCV Response Area	Affected Compound	Data Qualifier
BA-MW-5-110513	Chrysene-d_{12}	57515	1250920	Benzyl butyl phthalate *bis*(2-Ethylhexyl) phthalate	**UJ**

2.11 Reporting Limits and Compound Quantitation

Sample-specific RLs were supported with adequate initial calibration concentrations.

2.12 Field Duplicates

Field duplicate results for detected target compounds, RPD (or concentration difference) values, and data qualification were presented in **Appendix A**.

2.13 Overall Assessment of SVOCs Data Usability

SVOCs data are of known quality and acceptable for use, as qualified.

3. PAHs by GC/MS - SIM (EPA Method SW8270D-SIM)

3.1 Sample Management and Holding Times

No anomalies were identified in relation to sample preservation, handling, and transport as discussed in Section 1.1.

Water samples should be extracted within seven days of collection. Extracts should be analyzed within 40 days of extraction. All samples were extracted and analyzed within the required holding times.

3.2 GC/MS Instrument Performance Check

DFTPP tuning was performed within each 12-hour interval. All required ion abundance ratios met the method requirements.

3.3 Initial Calibration (ICAL)

The ICAL criteria require that (1) if linear average RFs is chosen as the quantitation option, at least five standards at different concentrations should be analyzed and the %RSD of RFs be ≤20% for the analyte, (2) if least-square linear regression is chosen for quantitation, the correlation coefficient (r) be >0.995, (3) if six-point non-linear (quadratic) curve is chosen for quantitation, the coefficient of determination (r^2) be >0.99, and (4) the RF be >0.01 for poor response compounds and >0.05 for all other compounds.. All ICALs met the requirements.

An ICV standard (second source standard) was analyzed to verify the calibration curve. %D values were either within ±20%, or the exceedance had no adverse effects on data usability (*e.g.,* biased high ICV recovery for a compound not detected in samples).

3.4 Calibration Verification (CCV)

The analytical method requires that (1) continuing calibration verifications be analyzed at the beginning of each 12-hour analysis period prior to the analysis of method blank and samples, (2) the %D be within ±20%, and (3) the RF be >0.05 for all compounds.

Calibration verifications were performed at the required frequency. %D values were either within ±20%, or the exceedance had no adverse effects on data usability (*e.g.,* biased high CCV recovery for a compound not detected in samples).

3.5 Method Blanks

Method blanks were prepared and analyzed as required. Target compounds were not detected at or above the RLs in the method blanks.

3.6 Surrogate Spikes

Surrogate spikes were added to all samples as required by the method. All surrogate spike %R values were either within the project control limits or at levels that had no adverse effects on data quality (*e.g.,* biased-high recovery for compounds that were not detected in samples). In some cases surrogate spike %R values were inapplicable for data evaluation because the samples contained high levels of target PAHs and requested dilution analysis; no data were qualified on this basis.

3.7 Matrix Spike (MS) and MS Duplicate (MSD)

MS and MSD analyses were performed on project and batch QC samples at the proper frequency (≥5% of samples analyzed). All %R values met the project control criteria, except for the following:

SDG#	Parent Sample ID	Compound	MS %R	MSD %R	Control Limit	RPD	Data Qualifier
311339	BA-MW2-111513	Benzo(b)fluoranthene	50%	63%	62-91%	23%	UJ
		Benzo(a)pyrene	47%	63%	60-86%	29%	
311322	REC1-MW10-111413	Benzo(b)fluoranthene	54%	50%	62-91%	8%	UJ
		Benzo(a)pyrene	53%	48%	60-86%	10%	
311145	PM-MW7-110713	Phenanthrene	60%	58%	65-100%	3%	UJ
		Fluoranthene	31%	32%	63-110%	3%	
		Pyrene	33%	31%	63-107%	6%	
		Benz(a)anthracene	10%	32%	60-93%	105%	
		Chrysene	14%	39%	60-102%	94%	
		Benzo(b)fluoranthene	5%	28%	62-91%	139%	
		Benzo(k)fluoranthene	8%	43%	51-98%	137%	
		Benzo(a)pyrene	6%	33%	60-86%	138%	

Note: RPD criteria is ≤20%

3.8 Laboratory Control Sample (LCS) and LCS Duplicate (LCSD)

LCS and LCSD analyses were performed as required by the method. All %R and RPD values were within the project control limits.

3.9 Internal Standards

The method requires that (1) internal standard retention time be within ±30 seconds from that of the associated 12-hour calibration standard, and (2) the area counts of all internal standards be within –50% to +100% of the associated 12-hour calibration standard. All internal standards in the sample and associated QC analyses met the criteria, except for the following:

SDG	Sample ID	Internal Standard	Sample Response Area	CCV Response Area	Affected Compound	Data Qualifier
311293	REC5-MW1R-111313	Phenathrene-d_{10}	487520	229728	Benzo(a)pyrene	J
		Chrysene-d_{12}	502790	233851	Benzo(b)fluoranthene	
		Pyrene-d_{12}	430713	193355	Benzo(g,h,i)perylene	
					Benzo(k)fluoranthene	
					Indeno(1,2,3-cd)pyrene	

3.10 Reporting Limits and Target Compound Quantitation

Sample-specific RLs were supported with adequate initial calibration concentrations. PAHs sample-specific RLs for samples in SDGs 311093 and 311105 were raised from the standard RLs by a factor of 2 due to insufficient sample volumes.

3.11 Field Duplicates

Field duplicate results for detected target compounds, RPD (or concentration difference) values, and data qualification were presented in **Appendix A**.

3.12 Overall Assessment of PAHs Data Usability

PAHs data are of known quality and acceptable for use, as qualified.

4. TPH-Gasoline by GC/FID (Method NWTPH-Gx)

4.1 Sample Management and Holding Times

No anomalies were identified in relation to sample preservation, handling, and transport as discussed in Section 1.1.

Water samples should be preserved to pH<2 at the time of collection, and analyzed within 14 days of collection. All samples were preserved and analyzed within the required holding times.

4.2 Initial Calibration (ICAL)

The method linearity criteria require that (1) if linear average RFs is chosen as the quantitation option, the %RSD of RFs be <20% for the analyte, (2) if least-square linear regression is chosen for quantitation, the correlation coefficient (r) be >0.995, and (3) if six-point non-linear (quadratic) curve is chosen for quantitation, the coefficient of determination (r^2) be >0.990. Initial calibration met the criteria for all target compounds.

An ICV (second source) standard was analyzed to verify the calibration curve. %D values were within ±20%.

4.3 Calibration Verification

Continuing calibration verification (CCV) analyses were performed at the required frequency for all analytical sequences as required by the method. The %D values for all CCVs met the method criterion (±20%).

4.4 Method Blanks

Method blanks were prepared and analyzed as required. No target compounds were detected at or above the RLs in the method blanks.

4.5 Surrogate Spikes

Surrogate spikes were added to all samples as required by the method. All surrogate spike %R values were within the project control limits, outside the control limits due to matrix interference, or diluted below quantitation limits due to high analyte concentrations. No data qualifying actions were taken in these cases.

4.6 Matrix Spike and Matrix Spike Duplicate

MS/MSD analyses were not performed for TPH-Gasoline analyses; instead, duplicate and LCS analyses in combination were performed.

4.7 Laboratory Control Sample (LCS)

LCS analyses were performed as required by the method. All %R values were within the laboratory control limits.

4.8 Laboratory Duplicate Analysis

Duplicate analyses were performed on project and batch QC samples at the proper frequency. All RPD and concentration difference values met the laboratory control criteria.

4.9 Reporting Limits and Target Compound Quantitation

Sample-specific RLs were supported with adequate initial calibration concentrations.

4.10 Field Duplicates

Field duplicate results, RPD (or concentration difference) values, and data qualification for detected TPH-Gasoline were presented in **Appendix A**.

4.11 Overall Assessment of TPH-Gasoline Data Usability

TPH-Gasoline data are of known quality and acceptable for use.

5. TPH-Diesel & Motor Oil by GC/FID (Method NWTPH-Dx)

5.1 Holding Time

No anomalies were identified in relation to sample preservation, handling, and transport as discussed in Section 1.1.

Water samples should be extracted within seven days of collection and extracts analyzed within 40 days of extraction. All samples were extracted and analyzed within the recommended holding times.

5.2 Initial Calibration

The method linearity criteria require that (1) if linear average RFs is chosen as the quantitation option, the %RSD of RFs be <20% for the analyte, (2) if least-square linear regression is chosen for quantitation, the correlation coefficient (r) be >0.995, and (3) if six-point non-linear (quadratic) curve is chosen for quantitation, the coefficient of determination (r^2) be >0.990. Initial calibration met the criteria for all target compounds.

An ICV (second source) standard was analyzed to verify the calibration curve. %D values were within ±20%.

5.3 Calibration Verification

The method requires that (1) a mid-range check standard be analyzed prior to and after each analytical batch, and (2) the percent drift (%D) value be within ±20% of the true value.

Calibration verification was performed at required frequency. The %D values were either within the ±20% criterion or at levels that had no adverse effects on data quality (e.g., high-bias %D value where the target compound was not detected in associated sample).

5.4 Method Blanks

Method blanks were prepared and analyzed as required. Target compounds were not detected at or above the RLs in the method blanks.

5.5 Surrogate Spikes

Surrogate spikes were added to all samples as required by the method. All surrogate spike %R values were within the project control limits, outside the control limits due to matrix interference, or diluted below quantitation limits due to high petroleum hydrocarbon concentrations. No data qualifying actions were taken in these cases.

5.6 Matrix Spike (MS) and MS Duplicate (MSD)

MS and MSD analyses were performed on project and batch QC samples at the proper frequency. The %R and RPD values met the laboratory control criteria.

5.7 Laboratory Control Sample (LCS)

LCS analyses were performed as required. All %R values met the project control limits.

5.8 Target Compound Identification

Selected sample extracts were cleaned up with acid and silica gel treatment to minimize the biogenic interference with target compound identification, as required by the project. The laboratory reported results as diesel #2 (C10 - C25) and motor oil (C25 - C36), as required by the method.

5.9 Reporting Limits and Target Compound Quantitation

The reported RLs were supported with adequate ICAL concentrations.

5.10 Field Duplicates

Field duplicate results, RPD (or concentration difference) values, and data qualification for detected TPH-Diesel or Motor Oil were presented in **Appendix A**.

5.11 Overall Assessment of TPH-Diesel and Motor Oil Data Usability

TPH-Diesel and TPH-Motor Oil data are of known quality and acceptable for use, as qualified.

6. Total Metals by ICP/MS and CVAFS (EPA Methods 200.8 and 1631E)

6.1 Sample Management and Holding Times

No anomalies were identified in relation to sample preservation, handling, and transport, except that incorrect sample containers and preservative were used for total and dissolved mercury samples in SDGs K1313915 and K1313920. Total and dissolved mercury results for all samples in these two SDGs were qualified (J) for detects and (UJ) for non-detected as estimated.

Water samples should be analyzed within 180 days for metals and 28 days for mercury. Samples were analyzed within the required holding times.

6.2 ICP/MS Tuning

Instrument tuning was performed at the required frequency. The stability check (%RSD <5%), mass calibration (mass difference <0.1 AMU), and resolution check (peak width <1.0 AMU at 5% peak height) met the NFG and method criteria.

6.3 Initial Calibration (ICAL)

The ICP/MS method requires that (1) a blank and one calibration standard be used in establishing the analytical curve, and (2) the average of replicate exposures be reported for all standards, QC, and sample analyses.

The CVAFS and GFAA methods require that (1) a blank and five calibration standards be employed to establish the analytical curve, (2) the linearity of the calibration curve should meet the criteria of correlation coefficient ≥ 0.995 for linear regression, and (3) the %RSD <21% if average response factor approach is employed.

All ICALs met the method requirements.

6.4 Calibration Verification (ICV and CCV)

Initial calibration verifications (ICVs) and continuing calibration verifications (CCVs) for ICP/MS and GFAA and ongoing precision recovery (OPR) were analyzed at the required frequency. The %R values either met the control criteria (90 – 110% for metals, 79 – 123% for mercury) or the exceedance had no adverse effects on data usability (e.g., high-bias %D value where the target compound was not detected in associated sample).

6.5 Blanks

Calibration Blanks: Initial calibration blanks (ICBs) and continuing calibration blanks (CCBs) were not analyzed after calibration verification standards. Target analytes were either not detected at or above the RLs in the ICBs and CCBs, or sample results affected by the ICB/CCB detections were qualified as results of detections in preparation blanks, except for the following:

SDG	Blank ID	Analyte	Detection In Blank	Affected Sample	Original Result	Adjusted Result	Unit
K1312150	CCB2 CCB4	Arsenic, Total	0.08 J 0.24 J	TM-MW2-110513 NRP-MW2-110613	1.35 1.44	1.35 J 1.44 J	µg/L
K1312150	CCB2	Lead, Total	0.05	NRP-MW2-110613 BA-MW-4-110513	0.025 0.066	0.025 J 0.066 J	µg/L
K1312168	CCB4 CCB5	Arsenic, Total	0.24 J 0.27 J	CN-MW3-110413 CN-MW1-110413 REC7-MW1-110413 CN-MW2-110513	0.36 0.22 J 0.56 0.30 J	0.5 U 0.5 U 0.56J 0.5 U	µg/L

SDG	Blank ID	Analyte	Detection In Blank	Affected Sample	Original Result	Adjusted Result	Unit
K1312168	CCB2	Nickel, Total	0.30 J	BA-MW-5-110513	1.30	**1.30 J**	**µg/L**
K1312256	CCB4 CCB5	Arsenic, Total	0.24 J 0.27 J	TM-MW1-110613 TM-MW5-110613 REC7-MW2-110613 TM-MW6-110713	0.59 0.56 0.69 0.46 J	**0.59 J** **0.56 J** **0.69 J** **0.50 U**	**µg/L**
K1312256	CCB4 CCB5	Zinc, Total	0.4 J 0.5 J	TM-MW1-110613 TM-MW5-110613 TM-MW4-110613 REC7-MW2-110613 TM-MW6-110713 REC6-MW2-110713	3.60 2.61 2.67 0.77 1.24 1.24	**3.60 J** **2.61 J** **2.67 J** **0.77 J** **1.24 J** **1.24 J**	**µg/L**
K1312256	CCB1 CCB2	Nickel, Total	0.55 J 0.30 J	MW-5-110613 SHB-MW2-110713 REC7-MW-3-110613 OMS-MW-1-110713	0.72 0.61 3.11 5.38	**0.72 J** **0.61 J** **3.11 J** **5.38 J**	**µg/L**

Preparation Blanks: Preparation blanks were prepared and analyzed as required. Target analytes were either not detected at or above the RLs in the preparation blanks, or sample results were greater than 10X the detection in the associated blank, except for the following:

SDG	Blank ID	Analyte	Detection In Blank	Affected Sample	Original Result	Adjusted Result	Unit
K1312168	MB	Copper, Total	0.06 J	CN-MW3-110413 CN-MW1-110413	0.53 0.48	**0.53 J** **0.48 J**	**µg/L**
K1313915	MB	Mercury, Total	0.00021 J	TM-MW2-110513 REC1-MW5-110613 BA-MW-4-110513	0.0013 0.00118 0.00092 J	**0.0013 J** **0.00118 J** **0.001 U**	**µg/L**
K1313915	MB	Mercury, Dissolved	0.00014 J	TM-MW2-110513 NRP-MW2-110613 MW-5-110613	0.00192 0.0014 0.00108	**0.00192 J** **0.0014 J** **0.00108 J**	**µg/L**
K1313920	MB	Mercury, Total	0.00021 J	CN-MW3-110413 SHB-MW1-110413 CN-MW1-110413 REC7-MW1-110413 CN-MW2-110513 BA-MW-7-110413	0.00135 0.00234 0.00103 0.00088 J 0.0008 J 0.0018	**0.00135 J** **0.00234 J** **0.00103 J** **0.001 U** **0.001 U** **0.0018 J**	**µg/L**
K1313920	MB	Mercury, Dissolved	0.00014 J	BA-MW-7-110413	0.00137	**0.00137 J**	**µg/L**

6.6 Laboratory Control Sample (LCS)

LCS analyses were performed as required by the method. All %R values were within the project control limits, or the exceedance had no adverse effects on data usability (e.g., high-bias %R value where the target compound was not detected in associated sample).

6.7 Laboratory Duplicate Analysis

Laboratory duplicate analyses were performed on project and batch QC samples at the adequate frequency (>5% of field sample). The RPD values met the laboratory control limits, except for the following:

SDG#	Parent Sample ID	Analyte	RPD	Control Limit	Affected Sample	Data Qualifier
K1312256	TM-MW1-110613	Zinc, Total	23.7%	≤20%	TM-MW1-110613 TM-MW5-110613 TM-MW4-110613 REC7-MW2-110613 TM-MW6-110713 REC6-MW2-110713 PM-MW-1-110613 PM-MW-5-110613	J

6.8 Matrix Spike (MS) and Matrix Spike Duplicate (MSD)

MS and MSD analyses were performed on project and batch QC samples at the adequate frequency (>5% of field sample). The %R and RPD values met the laboratory control limits, except for the following:

SDG#	Parent Sample ID	Analyte	MS %R	Control Limit	Affected Sample	Data Qualifier
K1313877	REC6-MW2-110713	Copper, Dissolved	40.3%	70-130%	PM-MW-5-110613 NRP-MW3-110513 REC1-MW5-110613	J

6.9 Internal Standards

At least three internal standards were added to all field and QC samples for ICP/MS analyses. All percent relative intensity values were within the method criteria (60 - 125%).

6.10 Method Reporting Limits and Analyte Quantitation

Sample-specific RLs were supported with adequate initial calibration concentrations.

6.11 Field Duplicates

Field duplicate results, RPD (or concentration difference) values, and data qualification for detected analytes were presented in **Appendix A**.

6.12 Overall Assessment of Metals Data Usability

The total mercury result in sample BA-MW-5-110513 (Laboratory ID: K1313920-010) was significantly less than its dissolved mercury result (RPD value was >10%). Total and dissolved mercury results for this sample were qualified J) as estimated.

Metal data are of known quality and acceptable for use, as qualified.

7. Conventional Parameters (TSS, Ammonia, and Dissolved Sulfide)

7.1 Sample Management and Holding Time

No anomalies were identified in relation to sample preservation, handling, and transport, as discussed in Section 1.1.

Water samples should be analyzed within 7 days of collection for dissolved sulfide and TSS, and 28 days for ammonia.

7.2 Instrument Calibration

The initial calibrations were established for ammonia and sulfide analyses using one blank and at least five levels of standards. The correlation coefficients (r) of the initial calibration curves were >0.995, and met the method criteria.

7.3 Calibration Verification

ICV and CCV analyses were performed for ammonia and sulfide as required by the methods. All ICV and CCV %R values were within the laboratory control limits (90 – 110%).

7.4 Blanks

Calibration Blanks: ICBs and CCBs were analyzed for ammonia and sulfide as required by the methods. No target analytes were positively reported in ICBs and CCBs at or above the MDLs, except for the following:

SDG	Blank ID	Analyte	Detection In Blank	Affected Sample	Original Result	Adjusted Result	Unit
K1312256	CCB3 CCB4	Ammonia	0.0028 J 0.0023 J	REC7-MW-3-110613	0.029 J	**0.05 U**	**mg/L**

Method Blanks: Method blanks were prepared and analyzed for TSS, ammonia, and sulfide as required by the methods. No target analytes were detected at or above the RLs in method blanks.

7.5 Laboratory Replicate Analyses

Laboratory duplicate analyses were formed on project samples at the adequate frequency for ammonia and sulfide. The RPD (or concentration difference) values were within the project control limits.

7.6 Matrix Spike (MS) and MS Duplicate (MSD)

MS and MSD analyses were performed on project samples at the adequate frequency for ammonia and sulfide. The %R and RPD values met the laboratory control criteria.

7.7 Laboratory Control Samples (LCS)

LCS analyses were performed as required by the methods fort ammonia and sulfide analysis. All LCS %R values were within the laboratory control limits. LCS/LCSD analyses were performed for TSS; the %R and RPD values met the laboratory control criteria.

7.8 Method Reporting Limits

The MRLs were supported with adequate initial calibration concentrations.

7.9 Field Duplicates

Field duplicate results, RPD (or concentration difference) values, and data qualification for detected analytes were presented in **Appendix A**.

7.10 Overall Assessment of Conventional Parameters Data Usability

Conventional parameters data are of known quality and acceptable for use.

SUMMARY

Table I. Data Affected by QC Anomalies:

Laboratory ID	Sample ID	Analyte	Qualifier	Qualified Reason
K1312256-015	PM-MW7-110713	Mercury, Total	J	FD difference >2xRL
K1312256-016	PM-MW500-110713	Mercury, Total	J	FD difference >2xRL
K1313915-002	TM-MW2-110513	Mercury, Total	J	preservation
K1313915-003	NRP-MW3-110513	Mercury, Total	J	preservation
K1313915-004	NRP-MW2-110613	Mercury, Total	J	preservation
K1313915-005	MW-5-110613	Mercury, Total	J	preservation
K1313915-006	REC1-MW5-110613	Mercury, Total	J	preservation
K1313915-007	BA-MW-4-110513	Mercury, Total	J	preservation
K1313915-008	BA-MW-3-110513	Mercury, Total	J	preservation
K1313915-009	LP-MW-2-110513	Mercury, Total	J	preservation
K1313915-010	MW-6-110613	Mercury, Total	J	preservation
K1313915-011	BA-MW-6-110613	Mercury, Total	J	preservation
K1313920-001	CN-MW3-110413	Mercury, Total	J	preservation
K1313920-002	SHB-MW1-110413	Mercury, Total	J	preservation
K1313920-003	CN-MW1-110413	Mercury, Total	J	preservation
K1313920-004	REC7-MW1-110413	Mercury, Total	J	preservation
K1313920-005	PM-MW6-110513	Mercury, Total	J	preservation
K1313920-006	CN-MW2-110513	Mercury, Total	J	preservation
K1313920-007	BA-MW-1-110413	Mercury, Total	J	preservation
K1313920-008	BA-MW-7-110413	Mercury, Total	J	preservation
K1313920-009	PM-MW-8-110513	Mercury, Total	J	preservation
K1313915-001	TM-MW3-110513	Mercury, Dissolved	J	preservation
K1313915-002	TM-MW2-110513	Mercury, Dissolved	J	preservation
K1313915-003	NRP-MW3-110513	Mercury, Dissolved	J	preservation
K1313915-004	NRP-MW2-110613	Mercury, Dissolved	J	preservation
K1313915-005	MW-5-110613	Mercury, Dissolved	J	preservation
K1313915-006	REC1-MW5-110613	Mercury, Dissolved	J	preservation
K1313915-007	BA-MW-4-110513	Mercury, Dissolved	J	preservation
K1313915-008	BA-MW-3-110513	Mercury, Dissolved	J	preservation
K1313915-009	LP-MW-2-110513	Mercury, Dissolved	J	preservation
K1313915-010	MW-6-110613	Mercury, Dissolved	J	preservation
K1313915-011	BA-MW-6-110613	Mercury, Dissolved	J	preservation
K1313920-001	CN-MW3-110413	Mercury, Dissolved	J	preservation
K1313920-002	SHB-MW1-110413	Mercury, Dissolved	J	preservation
K1313920-003	CN-MW1-110413	Mercury, Dissolved	J	preservation
K1313920-004	REC7-MW1-110413	Mercury, Dissolved	J	preservation

Laboratory ID	Sample ID	Analyte	Qualifier	Qualified Reason
K1313920-005	PM-MW6-110513	Mercury, Dissolved	J	preservation
K1313920-006	CN-MW2-110513	Mercury, Dissolved	J	preservation
K1313920-007	BA-MW-1-110413	Mercury, Dissolved	J	preservation
K1313920-008	BA-MW-7-110413	Mercury, Dissolved	J	preservation
K1313920-009	PM-MW-8-110513	Mercury, Dissolved	J	preservation
K1313915-001	TM-MW3-110513	Mercury, Total	J	preservation
K1313920-010	BA-MW-5-110513	Mercury, Total	J	preservation; metals T/D RPD >10%
K1313920-010	BA-MW-5-110513	Mercury, Dissolved	J	preservation; metals T/D RPD >10%
K1312665-001	BA-MW2-111513	Zinc, Total	J	FD difference >2xRL
K1312665-002	BA-MW500-111513	Zinc, Total	J	FD difference >2xRL
K1312665-001	BA-MW2-111513	Lead, Total	J	FD RPD >20%
K1312665-002	BA-MW500-111513	Lead, Total	J	FD RPD >20%
K1312256-001	TM-MW1-110613	Zinc, Total	J	Lab DUP RPD >20%
K1312256-002	TM-MW5-110613	Zinc, Total	J	Lab DUP RPD >20%
K1312256-003	TM-MW4-110613	Zinc, Total	J	Lab DUP RPD >20%
K1312256-005	REC7-MW2-110613	Zinc, Total	J	Lab DUP RPD >20%
K1312256-006	TM-MW6-110713	Zinc, Total	J	Lab DUP RPD >20%
K1312256-007	REC6-MW2-110713	Zinc, Total	J	Lab DUP RPD >20%
K1312256-010	PM-MW-1-110613	Zinc, Total	J	Lab dup RPD >20%
K1312256-011	PM-MW-5-110613	Zinc, Total	J	Lab dup RPD >20%
K1313877-006	PM-MW-5-110613	Copper, Dissolved	J	MS %R <LCL
K1313877-014	NRP-MW3-110513	Copper, Dissolved	J	MS %R <LCL
K1313877-015	REC1-MW5-110613	Copper, Dissolved	J	MS %R <LCL
311339-01	BA-MW2-111513	Total Suspended Solids	UJ	FD difference >2xRL
311339-02	BA-MW500-111513	Total Suspended Solids	J	FD difference >2xRL
311093-07	BA-MW-1-110413	2,4-Dinitrophenol	UJ	CCV %D <LCL
311105-03	TM-MW2-110513	2,4-Dinitrophenol	UJ	CCV %D <LCL
311105-08	BA-MW-4-110513	2,4-Dinitrophenol	UJ	CCV %D <LCL
311105-12	BA-MW-6-110613	2,4-Dinitrophenol	UJ	CCV %D <LCL
311145-02	TM-MW5-110613	2-Nitroaniline	UJ	CCV %D <LCL
311145-06	REC7-MW2-110613	2-Nitroaniline	UJ	CCV %D <LCL
311145-07	TM-MW6-110713	2-Nitroaniline	UJ	CCV %D <LCL
311145-08	REC6-MW2-110713	2-Nitroaniline	UJ	CCV %D <LCL
311145-11	PM-MW-1-110613	2-Nitroaniline	UJ	CCV %D <LCL
311145-12	PM-MW-5-110613	2-Nitroaniline	UJ	CCV %D <LCL
311145-16	PM-MW7-110713	2-Nitroaniline	UJ	CCV %D <LCL
311145-17	PM-MW500-110713	2-Nitroaniline	UJ	CCV %D <LCL
311093-05	PM-MW6-110513	4-Nitrophenol	UJ	CCV %D <LCL
311093-08	BA-MW-7-110413	4-Nitrophenol	UJ	CCV %D <LCL
311093-09	PM-MW-8-110513	4-Nitrophenol	UJ	CCV %D <LCL

Laboratory ID	Sample ID	Analyte	Qualifier	Qualified Reason
311093-10	BA-MW-5-110513	4-Nitrophenol	**UJ**	CCV %D <LCL
311105-09	BA-MW-3-110513	4-Nitrophenol	**UJ**	CCV %D <LCL
311145-02	TM-MW5-110613	4-Nitrophenol	**UJ**	CCV %D <LCL
311145-06	REC7-MW2-110613	4-Nitrophenol	**UJ**	CCV %D <LCL
311145-07	TM-MW6-110713	4-Nitrophenol	**UJ**	CCV %D <LCL
311145-08	REC6-MW2-110713	4-Nitrophenol	**UJ**	CCV %D <LCL
311145-11	PM-MW-1-110613	4-Nitrophenol	**UJ**	CCV %D <LCL
311145-12	PM-MW-5-110613	4-Nitrophenol	**UJ**	CCV %D <LCL
311145-17	PM-MW500-110713	4-Nitrophenol	**UJ**	CCV %D <LCL
311093-07	BA-MW-1-110413	Benzoic acid	**UJ**	CCV %D <LCL
311105-03	TM-MW2-110513	Benzoic acid	**UJ**	CCV %D <LCL
311105-08	BA-MW-4-110513	Benzoic acid	**UJ**	CCV %D <LCL
311105-12	BA-MW-6-110613	Benzoic acid	**UJ**	CCV %D <LCL
311093-05	PM-MW6-110513	*bis*(2-Chloro-1-methylethyl) ether	**UJ**	CCV %D <LCL
311093-08	BA-MW-7-110413	*bis*(2-Chloro-1-methylethyl) ether	**UJ**	CCV %D <LCL
311093-09	PM-MW-8-110513	*bis*(2-Chloro-1-methylethyl) ether	**UJ**	CCV %D <LCL
311093-10	BA-MW-5-110513	*bis*(2-Chloro-1-methylethyl) ether	**UJ**	CCV %D <LCL
311105-09	BA-MW-3-110513	*bis*(2-Chloro-1-methylethyl) ether	**UJ**	CCV %D <LCL
311145-02	TM-MW5-110613	*bis*(2-Chloro-1-methylethyl) ether	**UJ**	CCV %D <LCL
311145-06	REC7-MW2-110613	*bis*(2-Chloro-1-methylethyl) ether	**UJ**	CCV %D <LCL
311145-07	TM-MW6-110713	*bis*(2-Chloro-1-methylethyl) ether	**UJ**	CCV %D <LCL
311145-08	REC6-MW2-110713	*bis*(2-Chloro-1-methylethyl) ether	**UJ**	CCV %D <LCL
311145-11	PM-MW-1-110613	*bis*(2-Chloro-1-methylethyl) ether	**UJ**	CCV %D <LCL
311145-12	PM-MW-5-110613	*bis*(2-Chloro-1-methylethyl) ether	**UJ**	CCV %D <LCL
311145-16	PM-MW7-110713	*bis*(2-Chloro-1-methylethyl) ether	**UJ**	CCV %D <LCL
311145-17	PM-MW500-110713	*bis*(2-Chloro-1-methylethyl) ether	**UJ**	CCV %D <LCL
311093-05	PM-MW6-110513	*bis*(2-Chloroethyl) ether	**UJ**	CCV %D <LCL
311093-08	BA-MW-7-110413	*bis*(2-Chloroethyl) ether	**UJ**	CCV %D <LCL
311093-09	PM-MW-8-110513	*bis*(2-Chloroethyl) ether	**UJ**	CCV %D <LCL
311093-10	BA-MW-5-110513	*bis*(2-Chloroethyl) ether	**UJ**	CCV %D <LCL
311105-09	BA-MW-3-110513	*bis*(2-Chloroethyl) ether	**UJ**	CCV %D <LCL
311145-02	TM-MW5-110613	*bis*(2-Chloroethyl) ether	**UJ**	CCV %D <LCL
311145-06	REC7-MW2-110613	*bis*(2-Chloroethyl) ether	**UJ**	CCV %D <LCL
311145-07	TM-MW6-110713	*bis*(2-Chloroethyl) ether	**UJ**	CCV %D <LCL
311145-08	REC6-MW2-110713	*bis*(2-Chloroethyl) ether	**UJ**	CCV %D <LCL
311145-11	PM-MW-1-110613	*bis*(2-Chloroethyl) ether	**UJ**	CCV %D <LCL
311145-12	PM-MW-5-110613	*bis*(2-Chloroethyl) ether	**UJ**	CCV %D <LCL
311145-16	PM-MW7-110713	*bis*(2-Chloroethyl) ether	**UJ**	CCV %D <LCL
311145-17	PM-MW500-110713	*bis*(2-Chloroethyl) ether	**UJ**	CCV %D <LCL
311145-16	PM-MW7-110713	4-Nitrophenol	**UJ**	CCV %D <LCL; MS/MSD %R <LCL
311093-10	BA-MW-5-110513	Benzyl butyl phthalate	**UJ**	Internal standard %R <LCL
311093-10	BA-MW-5-110513	*bis*(2-Ethylhexyl) phthalate	**UJ**	Internal standard %R <LCL

Laboratory ID	Sample ID	Analyte	Qualifier	Qualified Reason
311093-05	PM-MW6-110513	2,4-Dimethylphenol	**UJ**	LCS & LCSD %R <LCL
311093-07	BA-MW-1-110413	2,4-Dimethylphenol	**UJ**	LCS & LCSD %R <LCL
311093-08	BA-MW-7-110413	2,4-Dimethylphenol	**UJ**	LCS & LCSD %R <LCL
311093-09	PM-MW-8-110513	2,4-Dimethylphenol	**UJ**	LCS & LCSD %R <LCL
311093-10	BA-MW-5-110513	2,4-Dimethylphenol	**UJ**	LCS & LCSD %R <LCL
311105-03	TM-MW2-110513	2,4-Dimethylphenol	**UJ**	LCS & LCSD %R <LCL
311105-08	BA-MW-4-110513	2,4-Dimethylphenol	**UJ**	LCS & LCSD %R <LCL
311105-09	BA-MW-3-110513	2,4-Dimethylphenol	**UJ**	LCS & LCSD %R <LCL
311105-12	BA-MW-6-110613	2,4-Dimethylphenol	**UJ**	LCS & LCSD %R <LCL
311322-09	REC1-MW10-111413	4-Nitrophenol	**UJ**	MS/MSD %R <LCL
311339-01	BA-MW2-111513	4-Nitrophenol	**UJ**	MS/MSD %R <LCL
311145-16	PM-MW7-110713	Benzoic acid	**UJ**	MS/MSD %R <LCL
311322-09	REC1-MW10-111413	Benzoic acid	**UJ**	MS/MSD %R <LCL
311339-01	BA-MW2-111513	Benzoic acid	**UJ**	MS/MSD %R <LCL
311145-16	PM-MW7-110713	Phenol	**UJ**	MS/MSD %R <LCL
311322-09	REC1-MW10-111413	Phenol	**UJ**	MS/MSD %R <LCL
311339-01	BA-MW2-111513	Phenol	**UJ**	MS/MSD %R <LCL
311293-05	REC5-MW1R-111313	Benzo(a)pyrene	**J**	Internal standard %R >UCL
311293-05	REC5-MW1R-111313	Benzo(b)fluoranthene	**J**	Internal standard %R >UCL
311293-05	REC5-MW1R-111313	Benzo(g,h,i)perylene	**J**	Internal standard %R >UCL
311293-05	REC5-MW1R-111313	Benzo(k)fluoranthene	**J**	Internal standard %R >UCL
311293-05	REC5-MW1R-111313	Indeno(1,2,3-cd)pyrene	**J**	Internal standard %R >UCL
311145-16	PM-MW7-110713	Benzo(g,h,i)perylene	**J**	MS %R <LCL; MS/MSD RPD >20%
311145-16	PM-MW7-110713	Dibenzo(a,h)anthracene	**J**	MS %R <LCL; MS/MSD RPD >20%
311145-16	PM-MW7-110713	Indeno(1,2,3-cd)pyrene	**J**	MS %R <LCL; MS/MSD RPD >20%
311145-16	PM-MW7-110713	Anthracene	**J**	MS/MSD %R <LCL
311322-09	REC1-MW10-111413	Benzo(a)pyrene	**UJ**	MS/MSD %R <LCL
311339-01	BA-MW2-111513	Benzo(a)pyrene	**UJ**	MS/MSD %R <LCL
311322-09	REC1-MW10-111413	Benzo(b)fluoranthene	**UJ**	MS/MSD %R <LCL
311339-01	BA-MW2-111513	Benzo(b)fluoranthene	**UJ**	MS/MSD %R <LCL
311145-16	PM-MW7-110713	Fluoranthene	**UJ**	MS/MSD %R <LCL
311145-16	PM-MW7-110713	Phenanthrene	**UJ**	MS/MSD %R <LCL
311145-16	PM-MW7-110713	Pyrene	**UJ**	MS/MSD %R <LCL
311145-16	PM-MW7-110713	Benz(a)anthracene	**UJ**	MS/MSD %R <LCL; RPD >20%
311145-16	PM-MW7-110713	Benzo(a)pyrene	**UJ**	MS/MSD %R <LCL; RPD >20%
311145-16	PM-MW7-110713	Benzo(b)fluoranthene	**UJ**	MS/MSD %R <LCL; RPD >20%
311145-16	PM-MW7-110713	Benzo(k)fluoranthene	**UJ**	MS/MSD %R <LCL; RPD >20%
311145-16	PM-MW7-110713	Chrysene	**UJ**	MS/MSD %R <LCL; RPD >20%

Notes:
%D – Percent difference value
%R – Percent recovery value
CCV – Continuing calibration verification
FD – Field duplicate
LCL – Lower control limit

LCS – Laboratory control sample
LCSD – Laboratory control sample duplicate
MS – Matrix spike
MSD – Matrix spike duplicate
Preservation – Incorrect sample container and preservative was used for sample collection
RPD – Relative percent difference
T/D – Total recoverable vs. dissolved metals concentration
UCL – Upper control limit

Table II. Data Affected by Detections in Laboratory Blanks

Laboratory Sample ID	Sample ID	Compound	Original Result	Adjusted Result	Unit	Report Section
K1312150-002	TM-MW2-110513	Arsenic, Total	1.35	**1.35 J**	µg/L	**6.4**
K1312150-004	NRP-MW2-110613	Arsenic, Total	1.44	**1.44 J**	µg/L	**6.4**
K1312150-004	NRP-MW2-110613	Lead, Total	0.025	**0.025 J**	µg/L	**6.4**
K1312150-007	BA-MW-4-110513	Lead, Total	0.066	**0.066 J**	µg/L	**6.4**
K1312168-010	BA-MW-5-110513	Nickel, Total	1.30	**1.30 J**	µg/L	**6.4**
K1312168-001	CN-MW3-110413	Arsenic, Total	0.36	**0.5 U**	µg/L	**6.4**
K1312168-003	CN-MW1-110413	Arsenic, Total	0.22 J	**0.5 U**	µg/L	**6.4**
K1312168-004	REC7-MW1-110413	Arsenic, Total	0.56	**0.56J**	µg/L	**6.4**
K1312168-006	CN-MW2-110513	Arsenic, Total	0.30 J	**0.5 U**	µg/L	**6.4**
K1312256-001	TM-MW1-110613	Arsenic, Total	0.59	**0.59 J**	µg/L	**6.4**
K1312256-002	TM-MW5-110613	Arsenic, Total	0.56	**0.56 J**	µg/L	**6.4**
K1312256-005	REC7-MW2-110613	Arsenic, Total	0.69	**0.69 J**	µg/L	**6.4**
K1312256-006	TM-MW6-110713	Arsenic, Total	0.46 J	**0.50 U**	µg/L	**6.4**
K1312168-001	CN-MW3-110413	Copper, Total	0.53	**0.53 J**	µg/L	**6.4**
K1312168-003	CN-MW1-110413	Copper, Total	0.48	**0.48 J**	µg/L	**6.4**
K1313915-002	TM-MW2-110513	Mercury, Dissolved	0.0013	**0.0013 J**	µg/L	**6.4**
K1313915-006	REC1-MW5-110613	Mercury, Dissolved	0.00118	**0.00118 J**	µg/L	**6.4**
K1313915-007	BA-MW-4-110513	Mercury, Dissolved	0.00092 J	**0.001 U**	µg/L	**6.4**
K1313920-008	BA-MW-7-110413	Mercury, Dissolved	0.00137	**0.00137 J**	µg/L	**6.4**
K1313915-002	TM-MW2-110513	Mercury, Total	0.00192	**0.00192 J**	µg/L	**6.4**
K1313915-004	NRP-MW2-110613	Mercury, Total	0.0014	**0.0014 J**	µg/L	**6.4**
K1313915-005	MW-5-110613	Mercury, Total	0.00108	**0.00108 J**	µg/L	**6.4**
K1313920-001	CN-MW3-110413	Mercury, Total	0.00135	**0.00135 J**	µg/L	**6.4**

Laboratory Sample ID	Sample ID	Compound	Original Result	Adjusted Result	Unit	Report Section
K1313920-002	SHB-MW1-110413	Mercury, Total	0.00234	**0.00234 J**	µg/L	**6.4**
K1313920-003	CN-MW1-110413	Mercury, Total	0.00103	**0.00103 J**	µg/L	**6.4**
K1313920-004	REC7-MW1-110413	Mercury, Total	0.00088 J	**0.001 U**	µg/L	**6.4**
K1313920-006	CN-MW2-110513	Mercury, Total	0.0008 J	**0.001 U**	µg/L	**6.4**
K1313920-008	BA-MW-7-110413	Mercury, Total	0.0018	**0.0018 J**	µg/L	**6.4**
K1312150-005	MW-5-110613	Nickel, Total	0.72	**0.72 J**	µg/L	**6.4**
K1312256-008	SHB-MW2-110713	Nickel, Total	0.61	**0.61 J**	µg/L	**6.4**
K1312256-012	REC7-MW-3-110613	Nickel, Total	3.11	**3.11 J**	µg/L	**6.4**
K1312256-013	OMS-MW-1-110713	Nickel, Total	5.38	**5.38 J**	µg/L	**6.4**
K1312256-001	TM-MW1-110613	Zinc, Total	3.60	**3.60 J**	µg/L	**6.4**
K1312256-002	TM-MW5-110613	Zinc, Total	2.61	**2.61 J**	µg/L	**6.4**
K1312256-003	TM-MW4-110613	Zinc, Total	2.67	**2.67 J**	µg/L	**6.4**
K1312256-005	REC7-MW2-110613	Zinc, Total	0.77	**0.77 J**	µg/L	**6.4**
K1312256-006	TM-MW6-110713	Zinc, Total	1.24	**1.24 J**	µg/L	**6.4**
K1312256-007	REC6-MW2-110713	Zinc, Total	1.24	**1.24 J**	µg/L	**6.4**
K1312256-012	REC7-MW-3-110613	Ammonia as Nitrogen	0.029 J	**0.05 U**	mg/L	**7.4**

Notes:
mg/L – milligram per liter
µg/L – microgram per liter

Table III. Data Qualifiers are defined as follows:

Data Qualifier	Definition
DNR	Do not report; the result should be reported from an alternative analysis.
J	The analyte was detected above the reported quantitation limit, and the reported concentration was an estimated value.
R	The sample results are unusable due to the quality of the data generated because certain criteria were not met. The analyte may or may not be present in the sample.
U	The analyte was analyzed for, but was considered not detected at the reporting limit or reported value.
UJ	The analyte was analyzed for, and the associated quantitation limit was an estimated value.

REFERENCES

USEPA *Contract Laboratory Program National Functional Guidelines for Inorganic Superfund Data Review,* Office of Superfund Remediation and Technical Innovation, U.S. Environmental Protection Agency, January 2010, USEPA 540/R-10/011

USEPA *Contract Laboratory Program National Functional Guidelines for Superfund Organic Methods Data Review,* Office of Superfund Remediation and Technical Innovation, U.S. Environmental Protection Agency, June 2008, USEPA-540-R-08-01.

USEPA *Method 1631, Revision E: Mercury in Water by Oxidation, Purge and Trap, and Cold Vapor Atomic Fluorescence Spectrometry, Office of Water, U.S. Environmental Protection Agency, August 2002, EPA-821-R-02-019.*

USEPA *Test Methods for Evaluating Solid Waste (SW-846). Third Edition and Revised Update IIIA.* Office of Solid Waste and Emergency Response, Washington, D.C. April 1998.

USEPA *Methods for Chemical Analysis of Water and Wastes,* EPA-600/4-79-020, March 1983 and updates.

Standard Methods for the Examination of Water and Wastewater, American Public Health Association, 20th Edition, 1995.

Ecology (Washington State Department of). 1997. *Analytical Methods for Petroleum Hydrocarbons.* Publication No. ECY 97-602. June 1997.

PSEP *Recommended Guidelines for Measuring Organic Compounds in Puget Sound Water, Sediment and Tissue Samples,* Puget Sound Water Quality Authority, April 1997.

Aspect Consulting, LLC. *Quality Assurance Project Plan, Port of Bellingham Former GP Mill Property RI/FS,* Seattle, Washington. September, 2009.

Appendix A

Field duplicate RPD is indicative of field and laboratory precision and sample homogeneity in combination. The CLP National Functional Guidelines or *Work Plan* do not specify criteria for field duplicate evaluation. An advisory criterion of 20% was applied to evaluating the RPD values of field duplicate results that are ≥5xRL. For results that are <5xRL, an advisory criterion of ±2RL was applied to evaluating the concentration differences. The RPD (or concentration difference as applicable) values and data qualification for detected compounds in field duplicates are presented as follows:

Analyte	Units	RL	Parent & Field Duplicate Sample Result		RPD	Delta	Data Qualifier
			BA-MW2-111513	**BA-MW500-111513**			
Total Suspended Solids	mg/L	10	ND	32		32	**UJ/J**
Mercury, Total	µg/L	0.002	0.00609	0.00635		0.00026	
Arsenic, Total	µg/L	0.5	0.6	0.5		0.1	
Copper, Total	µg/L	0.1	0.96	0.89	8%		
Lead, Total	µg/L	0.02	0.209	0.132	45%		**J/J**
Nickel, Total	µg/L	0.2	3.7	3.54	4%		
Zinc, Total	µg/L	0.5	1.6	4.3		2.7	**J/J**
TPH-Diesel	µg/L	50	ND	ND			
TPH-Oil	µg/L	250	ND	ND			
SVOCs	µg/L	-	ND	ND			
Acenaphthene	µg/L	0.012	0.062	0.056	10%		
Fluoranthene	µg/L	0.012	0.018	0.018		0	
Fluorene	µg/L	0.012	0.024	0.022		0.002	
Naphthalene	µg/L	0.012	0.017	0.017		0	
Phenanthrene	µg/L	0.012	0.032	0.027		0.005	
Pyrene	µg/L	0.012	0.02	0.019		0.001	
			GF9-MW2-110713	**GF9-MW2-110713**			
Total Suspended Solids	mg/L	10	ND	ND			
TPH-Gasoline	µg/L	100	ND	ND			
TPH-Diesel	µg/L	50	ND	ND			
TPH-Oil	µg/L	250	ND	ND			
Acenaphthylene	µg/L	0.012	ND	ND			
Anthracene	µg/L	0.012	0.16	0.16	0%	0	
Fluoranthene	µg/L	0.012	0.14	0.14	0%	0	
Fluorene	µg/L	0.012	0.39	0.38	3%	0.01	
Indeno(1,2,3-cd)pyrene	µg/L	0.012	ND	ND			
Naphthalene	µg/L	0.012	0.18	0.19	5%	0.01	

Analyte	Units	RL	Parent & Field Duplicate Sample Result		RPD	Delta	Data Qualifier
Phenanthrene	µg/L	0.012	0.57	0.57	0%	0	
Pyrene	µg/L	0.012	0.11	0.11	0%	0	
Acenaphthene	µg/L	0.12	6.9	7.8	12%	0.9	
			PM-MW7-110713	**PM-MW500-110713**			
Total Suspended Solids	mg/L	10	10	16		6	
Ammonia as Nitrogen	mg/L	0.05	ND	ND			
Sulfide	mg/L	0.05	ND	ND			
Mercury, Total	µg/L	0.001	0.00022	0.00231		0.00209	**J/J**
Arsenic, Total	µg/L	0.5	1.73	1.94		0.21	
Copper, Total	µg/L	0.1	1.06	1.07	1%		
Lead, Total	µg/L	0.02	0.054	0.056		0.002	
Nickel, Total	µg/L	0.2	10.5	10.5	0%		
Zinc, Total	µg/L	0.5	6.43	6.34	1%		
TPH-Diesel	µg/L	50	ND	ND			
TPH-Oil	µg/L	250	ND	ND			
VOCs	µg/L	-	ND	ND			
SVOCs	µg/L	-	ND	ND			
PAHs	µg/L	-	ND	ND			
			REC1-MW10-111413	**REC1-MW500-111413**			
Total Suspended Solids	mg/L	10	ND	ND			
TPH-Gasoline	µg/L	100	ND	ND			
TPH-Diesel	µg/L	50	ND	ND			
TPH-Oil	µg/L	250	ND	ND			
SVOCs	µg/L	-	ND	ND			
Acenaphthene	µg/L	0.012	0.024	0.021		0.003	

Notes:

Delta – Concentration difference between the parent sample and its field duplicate
mg/L – milligram per liter
ND – The analyte was not detected at or above the RL.
RL – Reporting limit
RPD – Relative percent difference
µg/L – microgram per liter

Data Validation Report

Former GP Mill Property RI/FS
Kimberly Clark, Washington

Round 2 Groundwater Sampling 2014

Prepared for:

Aspect Consulting LLC
401 Second Ave South, Suite 201
Seattle, WA 98014

Prepared by:

Pyron Environmental, Inc.
3530 32nd Way, NW
Olympia, WA 98502

Approved By: _____ Date: ***12/23/2012***

Mingta Lin, Senior Project Chemist

ACRONYMS

%D	percent difference
%D_f	percent drift
%R	percent recovery
%RSD	percent relative standard deviation
AMU	atomic mass unit
CCB	continuing calibration blank
CCC	calibration check compound
CCV	continuing calibration verification
CF	calibration factor
CLP	U.S. EPA Contract Laboratory Program
COC	chain-of-custody
CVAFS	cold vapor atomic fluorescent spectrometry
DFTPP	decafluorotriphenylphosphine
EPA	U.S. Environmental Protection Agency
FID	Flame ionization detector
GC/MS	gas chromatograph/mass spectrometer
ICAL	initial calibration
ICB	initial calibration blank
ICP/MS	inductively coupled plasma/ mass spectrometer
ICSA	ICP interference check sample solution A
ICV	initial calibration verification
LCS	laboratory control sample
LCSD	laboratory control sample duplicate
MDL	method detection limit
µg/L	microgram per liter
mg/L	Milligram per liter
MS	matrix spike
MSD	matrix spike duplicate
ng/L	Nanogram per liter
NFGs	CLP National Functional Guidelines for Data Review (EPA 2008 – Organics; EPA 2010 – Inorganics)
OPR	ongoing precision and recovery
QA/QC	quality assurance/quality control
QAPP	quality assurance project plan

RF	response factor
RL	reporting limit
RPD	relative percent difference
RRT	relative retention time
SDG	sample delivery group
SIM	selective ion monitoring
SVOCs	semi-volatile organic compounds
TSS	total suspended solids
VOCs	volatile organic compounds

INTRODUCTION

This report presents and discusses findings of the data validation performed on analytical data for soil samples collected during February 2014 for the referenced project. The laboratory reports validated herein were submitted by Friedman & Bruya, Inc. and Columbia Analytical Services, Inc. (CAS, part of ALS Group) in Kelso, Washington.

A level III data validation was performed on this laboratory report. The validation followed the procedures specified in USEPA CLP Functional Guidelines ([NFGs], EPA 2008 – Organics; EPA 2010 – Inorganics), with modifications to accommodate project and analytical method requirements. The numerical quality assurance/quality control (QA/QC) criteria applied to the validation were in accordance with those specified in the quality assurance project plans ([QAPPs], Aspect, 2009) and the current performance-based control limits established by the laboratory (laboratory control limits). Instrument calibration, frequency of QC analyses, and analytical sequence requirements were evaluated against the respective analytical methods.

Validation findings are discussed in each section pertinent to the QC parameter for each type of analysis. Qualified data with applied data qualifiers are summarized in the **Summary** section at the end of this report.

Samples and the associated analyses validated herein are summarized as follows:

Field Sample ID	Laboratory Sample ID	Sample Date	Sample Type	Analysis					
				VOCs	SVOCs	PAHs	TPH-G TPH-Dx	Metals	Miscellaneous
GF9-MW3-021914	402285-01	02/19/14	GW			X	X		TSS
GF9-MW2-021914	402285-02	02/19/14	GW			X	X		TSS
GF9-MW1-021914	402285-03	02/19/14	GW			X	X		TSS
GF9-MW500-021914	402285-04	02/19/14	GW			X	X		TSS
REC1-MW3-022014	402286-01	02/20/14	GW	X		X	X		
REC1-MW14-022014	402286-02	02/20/14	GW			X	X		
REC1-MW2-022014	402286-03	02/20/14	GW			X	X		
REC1-MW12-022014	402286-04	02/20/14	GW			X	X		
REC1-MW1-022014	402286-05	02/20/14	GW			X	X		
REC1-MW11-022014	402286-06	02/20/14	GW			X	X		
REC1-MW6-022014	402316-01	02/20/14	GW			X	X		TSS
REC1-MW7-022014	402316-02	02/20/14	GW			X	X		TSS
REC1-MW10-022014	402316-03	02/20/14	GW		X	X	X		TSS
REC1-MW500-022014	402316-04	02/20/14	GW		X	X	TPH-G		TSS
CMS-MW2-022014	402316-05	02/21/14	GW			X	X		TSS

Field Sample ID	Laboratory Sample ID	Sample Date	Sample Type	Analysis					
				VOCs	SVOCs	PAHs	TPH-G TPH-Dx	Metals	Miscellaneous
CMS-MW1R-022014	402316-06	02/21/14	GW			X	X		TSS
REC1-MW8-022314	402324-01	02/23/14	GW			X	X		TSS
MW-1-022314	402324-02	02/23/14	GW						TSS
MW-2-022314	402324-03	02/23/14	GW						TSS
REC7-MW4-022314	402324-04	02/23/14	GW			X	X		TSS
REC1-MW5-022314	402324-05	02/23/14	GW			X	X		TSS
AP-MW1R-022314	402324-06	02/23/14	GW				X		TSS
MW-6-022314	402324-07	02/23/14	GW						TSS
MW-500-022314	402324-08	02/23/14	GW						TSS
PM-MW6-022314	402324-09	02/23/14	GW	X	X	X	TPH-Dx		TSS
PM-MW4-022314	402324-10	02/23/14	GW		X	X	TPH-Dx		TSS
BA-MW-6-022314	402324-11	02/23/14	GW		X	X	TPH-Dx		TSS
SHB-MW2-022314	402324-12	02/23/14	GW	X		X	X		TSS
UST70-MW2-022314	402324-13	02/23/14	GW						TSS
BA-MW7-022314	402324-14	02/23/14	GW		X	X	TPH-Dx		TSS
SHB-MW1-022314	402324-15	02/23/14	GW	X		X	X		TSS
LP-MW-1-022414	402348-01	02/24/14	GW			X	TPH-Dx		TSS
LP-MW500-022414	402348-02	02/24/14	GW			X	TPH-Dx		TSS
BA-MW5-022414	402348-03	02/24/14	GW			X	TPH-Dx		TSS
LP-MW2-022414	402348-04	02/24/14	GW			X	TPH-Dx		TSS
REC6-MW2-022414	402348-05	02/24/14	GW		X	X			TSS
TM-MW6-022414	402348-06	02/24/14	GW	X	X	X	TPH-Dx		TSS
PM-MW1-022414	402348-07	02/24/14	GW		X	X	TPH-Dx		TSS
REC1-MW9-022414	402348-08	02/24/14	GW			X	X		TSS
OMS-MW1-022414	402348-09	02/24/14	GW						TSS
REC7-MW3-022414	402348-10	02/24/14	GW			X			TSS
OPS-MW-1-022414	402348-11	02/24/14	GW	X					TSS
UG-MW-2R-022414	402348-12	02/24/14	GW			X	X		TSS
REC3-MW-1R-022414	402348-13	02/24/14	GW						TSS
PM-MW-8-022414	402348-14	02/24/14	GW		X	X	X		TSS
PM-MW-7-022414	402348-15	02/24/14	GW		X	X	X		TSS
REC1-MW15-022514	402372-01	02/25/14	GW			X	X		TSS
REC1-MW4-022514	402372-02	02/25/14	GW	X		X	X		TSS
HB-MW1-022514	402372-03	02/25/14	GW			X	TPH-Dx		TSS

Field Sample ID	Laboratory Sample ID	Sample Date	Sample Type	Analysis					
				VOCs	SVOCs	PAHs	TPH-G TPH-Dx	Metals	Miscellaneous
TM-MW4-022514	402372-04	02/25/14	GW	X		X	TPH-Dx		TSS
TM-MW3-022514	402372-05	02/25/14	GW			X	TPH-Dx		TSS
UG-MW1-022514	402372-06	02/25/14	GW			X	X		TSS
CN-MW3-022514	402372-07	02/25/14	GW			X	TPH-Dx		TSS
PM-MW3-022514	402372-08	02/25/14	GW		X	X	TPH-Dx		TSS
PM-MW2-022514	402372-09	02/25/14	GW		X	X	TPH-Dx		TSS
PM-MW5-022514	402372-10	02/25/14	GW		X	X	TPH-Dx		TSS
BA-MW-4-022514	402372-11	02/25/14	GW		X	X	TPH-Dx		TSS
BA-MW-3-022514	402372-12	02/25/14	GW		X	X	TPH-Dx		TSS
BA-MW-2-022514	402372-13	02/25/14	GW		X	X	TPH-Dx		TSS
NRP-MW-3-022514	402372-14	02/25/14	GW						TSS
MW-5-022514	402372-15	02/25/14	GW						TSS
NRP-MW-2-022514	402372-16	02/25/14	GW						TSS
CN-MW-1-022514	402372-17	02/25/14	GW			X	TPH-Dx		TSS
Rec7-MW1-022514	402372-18	02/25/14	GW			X			TSS
Rec7-MW2-022514	402372-19	02/25/14	GW		X	X	X		TSS
TM-MW5-022614	402396-01	02/26/14	GW		X	X	TPH-Dx		TSS
TM-MW1-022614	402396-02	02/26/14	GW	X		X	TPH-Dx		TSS
TM-MW2-022614	402396-03	02/26/14	GW	X	X	X	TPH-Dx		TSS
TM-MW500-022614	402396-04	02/26/14	GW	X	X	X	TPH-Dx		TSS
Rec5-MW-1-022714	402409-01	02/27/14	GW		X	X	TPH-Dx		TSS
BA-MW-1-022714	402409-02	02/27/14	GW		X	X	TPH-Dx		TSS
CN-MW-2-022714	402409-03	02/27/14	GW			X	TPH-Dx		TSS
REC1-MW8-022314	K1401875-001	02/23/14	GW					T	
MW-1-022314	K1401875-002	02/23/14	GW					T	S^{-2}, NH_3
MW-2-022314	K1401875-003	02/23/14	GW					T	S^{-2}, NH_3
REC7-MW4-022314	K1401875-004	02/23/14	GW					T	S^{-2}, NH_3
REC1-MW5-022314	K1401875-005	02/23/14	GW					T	
AP-MW1R-022314	K1401875-006	02/23/14	GW					T	
MW-6-022314	K1401875-007	02/23/14	GW					T	S^{-2}, NH_3
MW-500-022314	K1401875-008	02/23/14	GW					T	S^{-2}, NH_3
PM-MW6-022314	K1401875-009	02/23/14	GW					T	
PM-MW4-022314	K1401875-010	02/23/14	GW					T	
BA-MW-6-022314	K1401875-011	02/23/14	GW					T	

Field Sample ID	Laboratory Sample ID	Sample Date	Sample Type	Analysis					
				VOCs	SVOCs	PAHs	TPH-G TPH-Dx	Metals	Miscellaneous
SHB-MW2-022314	K1401875-012	02/23/14	GW					T	S^{-2}, NH_3
UST70-MW2-022314	K1401875-013	02/23/14	GW					T	S^{-2}, NH_3
BA-MW7-022314	K1401875-014	02/23/14	GW					T	S^{-2}, NH_3
SHB-MW1-022314	K1401875-015	02/23/14	GW					T	
LP-MW-1-022414	K1401911-001	02/24/14	GW						S^{-2}
LP-MW500-022414	K1401911-002	02/24/14	GW						S^{-2}
LP-MW2-022414	K1401911-004	02/24/14	GW						S^{-2}
REC6-MW2-022414	K1401911-005	02/24/14	GW						S^{-2}
TM-MW6-022414	K1401911-006	02/24/14	GW						S^{-2}
REC1-MW9-022414	K1401911-008	02/24/14	GW						S^{-2}
OMS-MW1-022414	K1401911-009	02/24/14	GW						S^{-2}
REC7-MW3-022414	K1401911-010	02/24/14	GW						S^{-2}
REC3-MW-1R-022414	K1401911-012	02/24/14	GW						S^{-2}
PM-MW-8-022414	K1401911-013	02/24/14	GW						S^{-2}
PM-MW-7-022414	K1401911-014	02/24/14	GW						S^{-2}
NRP-MW-3-022514	K1401973-013	02/25/14	GW						S^{-2}
MW-5-022514	K1401973-014	02/25/14	GW						S^{-2}
NRP-MW-2-022514	K1401973-015	02/25/14	GW						S^{-2}
CN-MW-1-022514	K1401973-016	02/25/14	GW						S^{-2}
Rec7-MW1-022514	K1401973-017	02/25/14	GW						S^{-2}
Rec7-MW2-022514	K1401973-018	02/25/14	GW						S^{-2}
MW-1-022314	K1403953-001	02/23/14	GW					D	
UST70-MW2-022314	K1403953-002	02/23/14	GW					D	
BA-MW7-022314	K1403953-003	02/23/14	GW					D	
LP-MW-1-022414	K1403953-004	02/24/14	GW					D	
LP-MW500-022414	K1403953-005	02/24/14	GW					D	
OMS-MW1-022414	K1403953-006	02/24/14	GW					D	
REC7-MW3-022414	K1403953-007	02/24/14	GW					D	
REC3-MW-1R-022414	K1403953-008	02/24/14	GW					D	
TM-MW4-022514	K1403953-009	02/25/14	GW					D	
REC1-MW5-022314	K1403954-001	02/23/14	GW					D	
PM-MW4-022314	K1403954-002	02/23/14	GW					D	
BA-MW-6-022314	K1403954-003	02/23/14	GW					D	
SHB-MW1-022314	K1403954-004	02/23/14	GW					D	

Field Sample ID	Laboratory Sample ID	Sample Date	Sample Type	Analysis					
				VOCs	SVOCs	PAHs	TPH-G TPH-Dx	Metals	Miscellaneous
REC1-MW14-022014	K1403954-005	02/20/14	GW					D	
LP-MW2-022414	K1403954-006	02/24/14	GW					D	
PM-MW1-022414	K1403954-007	02/24/14	GW					D	
HB-MW1-022514	K1403954-008	02/25/14	GW					D	
TM-MW3-022514	K1403954-009	02/25/14	GW					D	
PM-MW3-022514	K1403954-010	02/25/14	GW					D	
PM-MW2-022514	K1403954-011	02/25/14	GW					D	
PM-MW5-022514	K1403954-012	02/25/14	GW					D	
BA-MW-4-022514	K1403954-013	02/25/14	GW					D	
BA-MW-3-022514	K1403954-014	02/25/14	GW					D	
NRP-MW-3-022514	K1403954-015	02/25/14	GW					D	
TM-MW5-022614	K1403954-016	02/26/14	GW					D	
TM-MW2-022614	K1403954-017	02/26/14	GW					D	
TM-MW500-022614	K1403954-018	02/26/14	GW					D	
Rec5-MW-1-022714	K1403954-019	02/27/14	GW					D	
BA-MW-1-022714	K1403954-020	02/27/14	GW					D	

Notes:

Laboratory sample ID prefixed with "K" was a laboratory identity assigned by CAS-ALS in Kelso, Washington. Metals (except mercury) analyses performed by CAS-ALS included a reductive precipitation procedure for sample preparation.

D – Dissolved metals

Metals: Arsenic, copper, lead, mercury, nickel, and zinc. Not all samples were analyzed for all metals.

NH_3 – Ammonia as Nitrogen

PAHs - Polycyclic aromatic hydrocarbons

S^{-2} – Dissolved sulfide

SVOCs – Semi-volatile Organic Compounds

T – Total recoverable metals

TSS - Total suspended solids

TPH-Dx - Diesel and motor oil range total petroleum hydrocarbon

TPH-G - Gasoline range total petroleum hydrocarbon

VOCs - Volatile Organic Compounds

X - The analysis was requested and performed on the sample.

The analytical parameters requested for the samples, the respective analytical methods, and the analytical laboratories are summarized below:

Parameter	Analytical Method	Analytical Laboratory
Volatile Organic Compounds (VOCs)	SW846 Method 8260C	Friedman & Bruya, Inc. (F&BI) Seattle, WA
Semi-volatile Organic Compounds (SVOCs)	SW846 Method 8270D	
Polycyclic Aromatic Hydrocarbons (PAHs)	SW846 Method 8270D-SIM	
TPH - Gasoline Range	NWTPH-Gx	
TPH - Diesel & Motor Oil Range	NWTPH-Dx	
Mercury	EPA Method 1631E	
Total Suspended Solids (TSS)	SM Method 2540D	Columbia Analytical Services, Inc. Kelso, WA (Part of ALS Group)
Dissolved Sulfide	SM 4500-S2-D	
Total Recoverable Metals	EPA Method 200.8	
Mercury	EPA Method 1631E	
Ammonia as Nitrogen	EPA Method 350.1	

Notes:

1. SW846 - *USEPA Test Methods for Evaluating Solid Waste, Physical/Chemical Methods,* SW-846, Third Edition, December 1996.
2. EPA Methods - *USEPA Methods for Chemical Analysis of Water and Wastes,* EPA–600/4-79-020, March 1983 Revision.
3. EPA Method 1631E - *Mercury in Water by Oxidation, Purge and Trap, and Cold Vapor Atomic Fluorescence Spectrometry,* Office of Water, U.S. Environmental Protection Agency, August 2002, EPA-821-R-02-019.
4. ASTM – American Society of Testing and Materials
5. NWTPH Methods – *Washington State Department of Ecology, Analytical Methods for Petroleum Hydrocarbons*, Publication No. ECY 97-602, June 1997.
6. SM – Standard Methods for the Examination of Water and Wastewater, American Public Health Association, 20th Edition, 1995.

DATA VALIDATION FINDINGS

1. VOCs by GC/MS (EPA Method SW8260C)

1.1 Sample Management and Holding Time

Samples were received in the laboratory intact and in consistence with the accompanying chain-of-custody (COC) documentation. In case where cooler temperature was outside the 4±2°C criteria, samples were hand-delivered to the laboratory the same day of collection. The cooler temperature exceedance had no significant effects on data quality. No other anomalies were identified in relation to sample preservation, handling, and transport.

water samples should be acid-preserved at pH<2 immediately and analyzed within 14 days (seven days if not preserved) of collection. All samples were analyzed within the required holding times.

1.2 GC/MS Instrument Performance Check

The method require that (1) gas chromatograph/mass spectrometer (GC/MS) tuning analysis be performed, using bromofluorobenzene (BFB), at the beginning of each 12-hour period prior to any analysis, and (2) specific mass ions meet the criteria provided in the method. All instrument performance checks met the requirements.

1.3 Initial Calibration (ICAL)

The ICAL criteria require that (1) if linear average RFs is chosen as the quantitation option, at least five standards at different concentrations should be analyzed and the percent relative standard deviation (%RSD) of response factors (RFs) be ≤20% for the analyte, (2) if least-square linear regression is chosen for quantitation, the correlation coefficient (r) be >0.995, (3) if six-point non-linear (quadratic) curve is chosen for quantitation, the coefficient of determination (r^2) be >0.99, and (4) the RF be >0.01 for poor response compounds and >0.05 for all other compounds.. ICALs either met the requirements or the outliers had no adverse effects on data usability (*e.g.,* %RSD >15% for a compound not detected in samples).

An initial calibration verification (ICV) standard (second source standard) was analyzed to verify the calibration curve. Percent difference (%D) values were either within ±30%.

1.4 Calibration Verification (CCV)

The CCV criteria requires that (1) continuing calibrations be analyzed at the beginning of each 12-hour analysis period prior to the analysis of method blank and samples, (2) the

%D be within ±20%, and (3) the RF be >0.01 for poor response compounds and >0.05 for all other compounds.

Calibration verifications either met the requirements, or the exceedance had no adverse effects on data usability (*e.g.,* biased high CCV recovery for a compound not detected in samples), except for the following:

SDG	CCV ID	Compound	%D	Bias	Affected Sample	Data Qualifier
402348	GCMS7 2/27/14, 12:45	Dichlorodifluoromethane	25.2%	Low	TM-MW6-022414 OPS-MW-1-022414	**UJ**

1.5 Method Blanks

Method blanks were prepared and analyzed as required. Target compounds were not detected at or above the reporting limits (RLs).

1.6 Laboratory Control Sample (LCS) and LCS Duplicate (LCSD)

LCS and LCSD were prepared and analyzed as required by the method. Percent recovery (%R) and relative percent difference (RPD) values either met the project control limits, or the outliers had no adverse effects on data usability (*e.g.,* biased high recovery for a compound not detected in samples).

1.7 Surrogate Spikes

Surrogate spikes were added to all samples as required by the method. All surrogate spike %R values were within the project control limits.

1.8 Matrix Spike (MS)

MS analyses were performed on project and batch QC samples at the proper frequency (≥5% of the samples analyzed for VOCs). All %R values were within the project control limits.

1.9 Internal Standards

The method requires that (1) internal standard retention time be within ±30 seconds from that of the associated 12-hour calibration standard, and (2) the area counts of all internal standards be within –50% to +100% of the associated 12-hour calibration standard. All internal standards in the sample and associated QC analyses met the criteria.

1.10 Reporting Limit and Target Compound Quantitation

RLs were supported with adequate initial calibration concentrations. In cases where target compound concentrations exceeded ICAL calibration ranges, proper dilution analyses were performed for definitive quantitation of the compounds. Only affected compounds were to be reported from dilution analyses.

1.11 Field Duplicates

Field duplicate results for detected target compounds, RPD (or concentration difference) values, and data qualification were presented in **Appendix A**.

1.12 Overall Assessment of VOCs Data Usability

VOCs data are of known quality and acceptable for use, as qualified.

2. SVOCs by GC/MS (EPA Method SW8270D)

2.1 Sample Management and Holding Times

No anomalies were identified in relation to sample preservation, handling, and transport as discussed in Section 1.1.

Water samples should be extracted within seven days of collection. Extracts should be analyzed within 40 days of extraction. All samples were extracted and analyzed within the required holding times.

2.2 GC/MS Instrument Performance Check

The method require that a GC/MS tuning analysis be performed using decafluorotriphenylphosphine (DFTPP) at the beginning of each 12-hour period prior to any analysis, and specific mass ions meet the criteria provided in the method. All instrument performance checks met the requirements.

2.3 Initial Calibration (ICAL)

The ICAL criteria require that (1) if linear average RFs is chosen as the quantitation option, at least five standards at different concentrations should be analyzed and the %RSD of RFs be ≤20% for the analyte, (2) if least-square linear regression is chosen for quantitation, the correlation coefficient (r) be >0.995, (3) if six-point non-linear (quadratic) curve is chosen for quantitation, the coefficient of determination (r^2) be >0.99, and (4) the RF be >0.01 for poor response compounds and >0.05 for all other compounds.. All ICALs met the requirements.

An ICV standard (second source standard) was analyzed to verify the calibration curve. %D values were either within ±30%, or the exceedance had no adverse effects on data usability (*e.g.,* biased high ICV recovery for a compound not detected in samples).

2.4 Calibration Verification (CCV)

The CCV criteria require that (1) continuing calibrations be analyzed at the beginning of each 12-hour analysis period prior to the analysis of method blank and samples, (2) the %D be within ±20%, and (3) the RF be >0.01 for poor response compounds and >0.05 for all other compounds.

Calibration verifications were performed at the required frequency. %D values were either within ±20%, or the exceedance had no adverse effects on data usability (*e.g.,* biased high CCV recovery for a compound not detected in samples), with the exceptions as follows:

SDG	CCV ID	Compound	%D	Bias	Affected Sample	Data Qualifier
402324	GCMS8 2/26/14, 09:51	Benzoic Acid	-99%	Low	PM-MW6-022314 PM-MW4-022314 BA-MW-6-022314 BA-MW7-022314	**R**

2.5 Method Blanks

Method blanks were prepared and analyzed as required. Target compounds were not detected at or above the RLs in the method blanks.

2.6 Surrogate Spikes

Surrogate spikes were added to all samples as required by the method. All %R values were within the laboratory control limits.

2.7 Matrix Spike (MS) and MS Duplicate (MSD)

MS and MSD analyses were performed on project and batch QC samples at the proper frequency (≥5% of samples analyzed). All %R values met the project control criteria, except for the following:

SDG#	Parent Sample ID	Compound	MS %R	MSD %R	Control Limit	RPD	Data Qualifier
302396	TM-MW2-022614	Benzoic acid 4-Chloroaniline 3-Nitroaniline 4-Nitrophenol 4-Nitroaniline	12% 31% 31% 13% 32%	-	50-150%	-	**UJ**

Note: RPD criteria is ≤20%

2.8 Laboratory Control Sample (LCS) and LCS Duplicate (LCSD)

LCS and LCSD were prepared and analyzed as required by the method. All %R and RPD values either met the laboratory control criteria, or the outliers had no adverse effects on data usability (*e.g.,* biased high %R or RPD value for a compound that was not detected in samples), except for the following:

SDG#	Compound	LCS %R	LCSD %R	Control Limit	RPD	Affected Sample	Data Qualifier
402316	2,4-Dinitrophenol	62%	40%	45-100%	43%	REC1-MW10-022014 REC1-MW500-022014	**UJ**
402324	2,4-Dinitrophenol	40%	-	45-100%	-	PM-MW6-022314 PM-MW4-022314 BA-MW-6-022314 BA-MW7-022314	**UJ**
402348	Hexachlorocyclopentadiene	16%	13%	26-94%	21%	REC6-MW2-022414 TM-MW6-022414 PM-MW1-022414 PM-MW-8-022414 PM-MW-7-022414	**UJ**
402372	Hexachlorocyclopentadiene	16%	13%	26-94%	21%	PM-MW3-022514 PM-MW2-022514 PM-MW5-022514 BA-MW-4-022514 BA-MW-3-022514 BA-MW-2-022514 Rec7-MW2-022514	**UJ**
402396	Hexachlorocyclopentadiene	16%	13%	26-94%	21%	TM-MW5-022614 TM-MW2-022614 TM-MW500-022614	**UJ**
402409	Hexachlorocyclopentadiene	16%	13%	26-94%	21%	Rec5-MW-1-022714 BA-MW-1-022714	**UJ**

Note: RPD criteria is ≤20%

2.9 Laboratory Duplicate Analysis

Duplicate analyses were performed on project and batch QC samples at the proper frequency. All RPD or concentration difference values either met the laboratory control

criteria or the outlier had no adverse effects on data usability (*e.g.,* high RPD value for a compound that was not detected in samples).

2.10 Internal Standards

The method requires that (1) internal standard retention time be within ±30 seconds from that of the associated 12-hour calibration standard, and (2) the area counts of all internal standards be within –50% to +100% of the associated 12-hour calibration standard. All internal standards in the sample and associated QC analyses met the criteria, except for the following:

Sample ID	Internal Standard	Sample Response Area	CCV Response Area	Affected Compound	Data Qualifier
BA-MW-6-022314	Perylene-d_{12}	943044	1963940	Di-n-octyl phthalate	**UJ**
TM-MW2-022614	Phenathrene-d_{10} Chrysene-d_{12} Perylene-d_{12}	1087669 943986 690617	2227870 2638990 1800650	4-Bromophenyl phenyl ether N-Nitrosodiphenylamine Di-n-octyl phthalate Hexachlorobenzene *bis*(2-Ethylhexyl) phthalate Carbazole Pentachlorophenol Di-n-butyl phthalate Benzyl butyl phthalate 4,6-Dinitro-2-methylphenol 4-Nitroaniline	**UJ**
TM-MW500-022614	Chrysene-d_{12}	1196984	2638990	Benzyl butyl phthalate *bis*(2-Ethylhexyl) phthalate	**UJ**
BA-MW-1-022714	Perylene-d_{12}	823015	1800650	Di-n-octyl phthalate	**UJ**
PM-MW2-022514	Chrysene-d_{12} Perylene-d_{12}	1237036 858375	2638990 1800650	Benzyl butyl phthalate *bis*(2-Ethylhexyl) phthalate Di-n-octyl phthalate	**UJ**
BA-MW-4-022514	Chrysene-d_{12} Perylene-d_{12}	1165595 860908	2638990 1800650	Benzyl butyl phthalate *bis*(2-Ethylhexyl) phthalate Di-n-octyl phthalate	**UJ**
BA-MW-3-022514	Perylene-d_{12}	899055	2638990	Di-n-octyl phthalate	**UJ**
BA-MW-2-022514	Chrysene-d_{12} Perylene-d_{12}	1243715 844634	2638990 1800650	Benzyl butyl phthalate *bis*(2-Ethylhexyl) phthalate Di-n-octyl phthalate	**UJ**
Rec7-MW2-022514	Chrysene-d_{12} Perylene-d_{12}	1164838 640215	2638990 1800650	Benzyl butyl phthalate *bis*(2-Ethylhexyl) phthalate Di-n-octyl phthalate	**UJ**

2.11 Reporting Limits and Compound Quantitation

Sample-specific RLs were supported with adequate initial calibration concentrations.

2.12 Field Duplicates

Field duplicate results for detected target compounds, RPD (or concentration difference) values, and data qualification were presented in **Appendix A**.

2.13 Overall Assessment of SVOCs Data Usability

SVOCs data are of known quality and acceptable for use, as qualified.

3. PAHs by GC/MS - SIM (EPA Method SW8270D-SIM)

3.1 Sample Management and Holding Times

No anomalies were identified in relation to sample preservation, handling, and transport as discussed in Section 1.1.

Water samples should be extracted within seven days of collection. Extracts should be analyzed within 40 days of extraction. All samples were extracted and analyzed within the required holding times.

3.2 GC/MS Instrument Performance Check

DFTPP tuning was performed within each 12-hour interval. All required ion abundance ratios met the method requirements.

3.3 Initial Calibration (ICAL)

The ICAL criteria require that (1) if linear average RFs is chosen as the quantitation option, at least five standards at different concentrations should be analyzed and the %RSD of RFs be ≤20% for the analyte, (2) if least-square linear regression is chosen for quantitation, the correlation coefficient (r) be >0.995, (3) if six-point non-linear (quadratic) curve is chosen for quantitation, the coefficient of determination (r^2) be >0.99, and (4) the RF be >0.01 for poor response compounds and >0.05 for all other compounds.. All ICALs met the requirements.

An ICV standard (second source standard) was analyzed to verify the calibration curve. %D values were either within ±20%, or the exceedance had no adverse effects on data usability (*e.g.,* biased high ICV recovery for a compound not detected in samples).

3.4 Calibration Verification (CCV)

The analytical method requires that (1) continuing calibration verifications be analyzed at the beginning of each 12-hour analysis period prior to the analysis of method blank and samples, (2) the %D be within ±20%, and (3) the RF be >0.05 for all compounds.

Calibration verifications were performed at the required frequency. %D values were either within ±20%, or the exceedance had no adverse effects on data usability (*e.g.,* biased high CCV recovery for a compound not detected in samples), except for the following:

SDG	CCV ID	Compound	%D	Bias	Affected Sample	Data Qualifier
402324	GCMS6 2/26/14, 07:16	Indeno(1,2,3-cd)pyrene	26.2%	High	BA-MW7-022314	**J**

3.5 Method Blanks

Method blanks were prepared and analyzed as required. Target compounds were not detected at or above the RLs in the method blanks.

3.6 Surrogate Spikes

Surrogate spikes were added to all samples as required by the method. All surrogate spike %R values were either within the project control limits or at levels that had no adverse effects on data quality (*e.g.,* biased-high recovery for compounds that were not detected in samples). In some cases surrogate spike %R values were inapplicable for data evaluation because the samples contained high levels of target PAHs and requested dilution analysis; no data were qualified on this basis.

3.7 Matrix Spike (MS) and MS Duplicate (MSD)

MS and MSD analyses were performed on project and batch QC samples at the proper frequency (≥5% of samples analyzed). All %R values met the project control criteria, except for the following:

SDG#	Parent Sample ID	Compound	MS %R	MSD %R	Control Limit	RPD	Data Qualifier
402316	REC1-MW10-022014	Benzo(b)fluoranthene	26%	28%	62-91%	7%	**UJ**
		Benzo(k)fluoranthene	30%	35%	51-98%	15%	
		Benzo(a)pyrene	26%	27%	60-86%	4%	
		Indeno(1,2,3-cd)pyrene	7%	5%	10-98%	33%	
		Dibenzo(a,h)anthracene	5%	5%	10-97%	0%	
		Benzo(g,h,i)perylene	7%	7%	10-102%	0%	

SDG#	Parent Sample ID	Compound	MS %R	MSD %R	Control Limit	RPD	Data Qualifier
402348	LP-MW-1-022414	Chrysene	119%	123%	60-102%	3%	
		Benz(a)anthracene	146%	152%	60-93%	4%	J
		Pyrene	452%	457%	63-107%	1%	
302396	TM-MW2-022614	Acenaphthene	5%	62%	59-109%	170	J
		Benzo(b)fluoranthene	51%	47%	62-91%	8	UJ
		Benzo(k)fluoranthene	49%	50%	51-98%	2	UJ
		Benzo(a)pyrene	47%	45%	60-86%	4	UJ

Note: RPD criteria is ≤20%

3.8 Laboratory Control Sample (LCS) and LCS Duplicate (LCSD)

LCS and LCSD analyses were performed as required by the method. All %R and RPD values were within the project control limits.

3.9 Internal Standards

The method requires that (1) internal standard retention time be within ±30 seconds from that of the associated 12-hour calibration standard, and (2) the area counts of all internal standards be within –50% to +100% of the associated 12-hour calibration standard. All internal standards in the sample and associated QC analyses met the criteria, except for the following:

Sample ID	Internal Standard	Sample Response Area	CCV Response Area	Affected Compound	Data Qualifier
BA-MW5-022414	Naphthalene-d_8 Phenathrene-d_{10}	1614038 630084	214838 195521`	Chrysene Benz(a)anthracene Pyrene	J
LP-MW-1-022414	Chrysene-d_{12}	398860	197104	Chrysene Benz(a)anthracene Pyrene	J

3.10 Reporting Limits and Target Compound Quantitation

Sample-specific RLs were supported with adequate initial calibration concentrations.

3.11 Field Duplicates

Field duplicate results for detected target compounds, RPD (or concentration difference) values, and data qualification were presented in **Appendix A**.

3.12 Overall Assessment of PAHs Data Usability

PAHs data are of known quality and acceptable for use, as qualified.

4. TPH-Gasoline by GC/FID (Method NWTPH-Gx)

4.1 Sample Management and Holding Times

No anomalies were identified in relation to sample preservation, handling, and transport as discussed in Section 1.1.

Water samples should be preserved to pH<2 at the time of collection, and analyzed within 14 days of collection. All samples were preserved and analyzed within the required holding times.

4.2 Initial Calibration (ICAL)

The method linearity criteria require that (1) if linear average RFs is chosen as the quantitation option, the %RSD of RFs be <20% for the analyte, (2) if least-square linear regression is chosen for quantitation, the correlation coefficient (r) be >0.995, and (3) if six-point non-linear (quadratic) curve is chosen for quantitation, the coefficient of determination (r^2) be >0.990. Initial calibration met the criteria for all target compounds.

An ICV (second source) standard was analyzed to verify the calibration curve. %D values were within ±20%.

4.3 Calibration Verification

Continuing calibration verification (CCV) analyses were performed at the required frequency for all analytical sequences as required by the method. The %D values for all CCVs met the method criterion (±20%).

4.4 Method Blanks

Method blanks were prepared and analyzed as required. No target compounds were detected at or above the RLs in the method blanks.

4.5 Surrogate Spikes

Surrogate spikes were added to all samples as required by the method. All surrogate spike %R values were within the project control limits, outside the control limits due to matrix interference, or diluted below quantitation limits due to high analyte concentrations. No data qualifying actions were taken in these cases.

4.6 Matrix Spike and Matrix Spike Duplicate

MS/MSD analyses were not performed for TPH-Gasoline analyses; instead, duplicate and LCS analyses in combination were performed.

4.7 Laboratory Control Sample (LCS)

LCS analyses were performed as required by the method. All %R values were within the laboratory control limits.

4.8 Laboratory Duplicate Analysis

Duplicate analyses were performed on project and batch QC samples at the proper frequency. All RPD and concentration difference values met the laboratory control criteria.

4.9 Reporting Limits and Target Compound Quantitation

Sample-specific RLs were supported with adequate initial calibration concentrations.

4.10 Field Duplicates

Field duplicate results, RPD (or concentration difference) values, and data qualification for detected TPH-Gasoline were presented in **Appendix A**.

4.11 Overall Assessment of TPH-Gasoline Data Usability

TPH-Gasoline data are of known quality and acceptable for use.

5. TPH-Diesel & Motor Oil by GC/FID (Method NWTPH-Dx)

5.1 Holding Time

No anomalies were identified in relation to sample preservation, handling, and transport as discussed in Section 1.1.

Water samples should be extracted within seven days of collection and extracts analyzed within 40 days of extraction. All samples were extracted and analyzed within the recommended holding times.

5.2 Initial Calibration

The method linearity criteria require that (1) if linear average RFs is chosen as the quantitation option, the %RSD of RFs be <20% for the analyte, (2) if least-square linear regression is chosen for quantitation, the correlation coefficient (r) be >0.995, and (3) if six-point non-linear (quadratic) curve is chosen for quantitation, the coefficient of determination (r^2) be >0.990. Initial calibration met the criteria for all target compounds.

An ICV (second source) standard was analyzed to verify the calibration curve. %D values were within ±20%.

5.3 Calibration Verification

The method requires that (1) a mid-range check standard be analyzed prior to and after each analytical batch, and (2) the percent drift (%D) value be within ±20% of the true value.

Calibration verification was performed at required frequency. The %D values were either within the ±20% criterion or at levels that had no adverse effects on data quality (e.g., high-bias %D value where the target compound was not detected in associated sample).

5.4 Method Blanks

Method blanks were prepared and analyzed as required. Target compounds were not detected at or above the RLs in the method blanks.

5.5 Surrogate Spikes

Surrogate spikes were added to all samples as required by the method. All surrogate spike %R values were within the project control limits, outside the control limits due to matrix interference, or diluted below quantitation limits due to high petroleum hydrocarbon concentrations. No data qualifying actions were taken in these cases.

5.6 Matrix Spike (MS) and MS Duplicate (MSD)

MS and MSD analyses were performed on project and batch QC samples at the proper frequency. The %R and RPD values met the laboratory control criteria.

5.7 Laboratory Control Sample (LCS)

LCS analyses were performed as required. All %R values met the project control limits.

5.8 Target Compound Identification

Selected sample extracts were cleaned up with acid and silica gel treatment to minimize the biogenic interference with target compound identification, as required by the project. The laboratory reported results as diesel #2 (C10 - C25) and motor oil (C25 - C36), as required by the method.

5.9 Reporting Limits and Target Compound Quantitation

The reported RLs were supported with adequate ICAL concentrations.

5.10 Field Duplicates

Field duplicate results, RPD (or concentration difference) values, and data qualification for detected TPH-Diesel or Motor Oil were presented in **Appendix A**.

5.11 Overall Assessment of TPH-Diesel and Motor Oil Data Usability

TPH-Diesel and TPH-Motor Oil data are of known quality and acceptable for use, as qualified.

6. Total Metals by ICP/MS and CVAFS (EPA Methods 200.8 and 1631E)

6.1 Sample Management and Holding Times

No anomalies were identified in relation to sample preservation, handling, and transport, as discussed in Section 1.1.

Water samples should be analyzed within 180 days for metals and 28 days for mercury. Samples were analyzed within the required holding times.

6.2 ICP/MS Tuning

Instrument tuning was performed at the required frequency. The stability check (%RSD <5%), mass calibration (mass difference <0.1 AMU), and resolution check (peak width <1.0 AMU at 5% peak height) met the NFG and method criteria.

6.3 Initial Calibration (ICAL)

The ICP/MS method requires that (1) a blank and one calibration standard be used in establishing the analytical curve, and (2) the average of replicate exposures be reported for all standards, QC, and sample analyses.

The CVAFS and GFAA methods require that (1) a blank and five calibration standards be employed to establish the analytical curve, (2) the linearity of the calibration curve should meet the criteria of correlation coefficient ≥ 0.995 for linear regression, and (3) the %RSD <21% if average response factor approach is employed.

All ICALs met the method requirements.

6.4 Calibration Verification (ICV and CCV)

Initial calibration verifications (ICVs) and continuing calibration verifications (CCVs) for ICP/MS and GFAA and ongoing precision recovery (OPR) were analyzed at the required frequency. The %R values either met the control criteria (90 – 110% for metals, 79 – 123% for mercury) or the exceedance had no adverse effects on data usability (e.g., high-bias %D value where the target compound was not detected in associated sample).

6.5 Blanks

Calibration Blanks: Initial calibration blanks (ICBs) and continuing calibration blanks (CCBs) were not analyzed after calibration verification standards. Target analytes were either not detected at or above the RLs in the ICBs and CCBs, or sample results affected by the ICB/CCB detections were qualified as results of detections in preparation blanks, except for the following:

SDG	Blank ID	Analyte	Detection In Blank	Affected Sample	Original Result	Adjusted Result	Unit
K1401973	CCB3 CCB4 CCB5 CCB6	Lead, Total	0.006 J 0.005 J 0.007 J 0.005 J	NRP-MW-2-022514 Rec7-MW1-022514 Rec7-MW2-022514	0.049 0.030 0.021	**0.049 J** **0.030 J** **0.021 J**	**µg/L**

Preparation Blanks: Preparation blanks were prepared and analyzed as required. Target analytes were either not detected at or above the RLs in the preparation blanks, or sample results were greater than 10X the detection in the associated blank, except for the following:

SDG	Blank ID	Analyte	Detection In Blank	Affected Sample	Original Result	Adjusted Result	Unit
K1401875	MB	Mercury, Total	0.27 J	REC1-MW14-022014	0.37 J	**1.0 U**	**ng/L**
K1402039	MB	Mercury, Total	0.12 J	TM-MW5-022614	0.46 J	**1.0 U**	**ng/L**
K1403954	MB	Mercury, Dissolved	0.36 J	NRP-MW-3-022514	2.53	**2.53 J**	**ng/L**

6.6 Laboratory Control Sample (LCS)

LCS analyses were performed as required by the method. All %R values were within the project control limits, or the exceedance had no adverse effects on data usability (e.g., high-bias %R value where the target compound was not detected in associated sample).

6.7 Laboratory Duplicate Analysis

Laboratory oduplicate analyses were performed on project and batch QC samples at the adequate frequency (>5% of field sample). The RPD values met the laboratory control limits, except for the following:

SDG#	Parent Sample ID	Analyte	RPD	Control Limit	Affected Sample	Data Qualifier
K1401911	LP-MW-1-022414	Copper, Total Zinc, Total	27.0% 61.2%	20%	LP-MW-1-022414	J

6.8 Matrix Spike (MS) and Matrix Spike Duplicate (MSD)

MS and MSD analyses were performed on project and batch QC samples at the adequate frequency (>5% of field sample). The %R and RPD values met the laboratory control limits, except for the following:

SDG#	Parent Sample ID	Analyte	MS %R	Control Limit	Affected Sample	Data Qualifier
K1401911	LP-MW-1-022414	Arsenic, Total	40.5%	50-147%	LP-MW-1-022414	J

6.9 Internal Standards

At least three internal standards were added to all field and QC samples for ICP/MS analyses. All percent relative intensity values were within the method criteria (60 - 125%).

6.10 Method Reporting Limits and Analyte Quantitation

Sample-specific RLs were supported with adequate initial calibration concentrations.

6.11 Field Duplicates

Field duplicate results, RPD (or concentration difference) values, and data qualification for detected analytes were presented in **Appendix A**.

6.12 Overall Assessment of Metals Data Usability

Metal data are of known quality and acceptable for use, as qualified.

7. Conventional Parameters (TSS, Ammonia, and Dissolved Sulfide)

7.1 Sample Management and Holding Time

No anomalies were identified in relation to sample preservation, handling, and transport, as discussed in Section 1.1.

Water samples should be analyzed within 7 days of collection for dissolved sulfide and TSS, and 28 days for ammonia.

7.2 Instrument Calibration

The initial calibrations were established for ammonia and sulfide analyses using one blank and at least five levels of standards. The correlation coefficients (r) of the initial calibration curves were >0.995, and met the method criteria.

7.3 Calibration Verification

ICV and CCV analyses were performed for ammonia and sulfide as required by the methods. All ICV and CCV %R values were within the laboratory control limits (90 – 110%).

7.4 Blanks

Calibration Blanks: ICBs and CCBs were analyzed for ammonia and sulfide as required by the methods. No target analytes were positively reported in ICBs and CCBs at or above the MDLs.

Method Blanks: Method blanks were prepared and analyzed for TOC, TSS, ammonia, and sulfide as required by the methods. No target analytes were detected at or above the RLs in method blanks.

7.5 Laboratory Replicate Analyses

Laboratory duplicate analyses were formed on project samples at the adequate frequency for ammonia and sulfide. The RPD (or concentration difference) values were within the project control limits.

7.6 Matrix Spike (MS) and MS Duplicate (MSD)

MS and MSD analyses were performed on project samples at the adequate frequency for ammonia and sulfide. The %R and RPD values met the laboratory control criteria.

7.7 Laboratory Control Samples (LCS)

LCS analyses were performed as required by the methods fort ammonia and sulfide analysis. All LCS %R values were within the laboratory control limits. LCS/LCSD analyses were performed for TSS; the %R and RPD values met the laboratory control criteria.

7.8 Method Reporting Limits

The MRLs were supported with adequate initial calibration concentrations.

7.9 Field Duplicates

Field duplicate results, RPD (or concentration difference) values, and data qualification for detected analytes were presented in **Appendix A**.

7.10 Overall Assessment of Conventional Parameters Data Usability

Conventional parameters data are of known quality and acceptable for use.

SUMMARY

Table I. Data Affected by QC Anomalies:

Laboratory ID	Sample ID	Analyte	Qualifier	Qualified Reason
K1401875-007 K1401875-008	MW-6-022314 MW-500-022314	Lead, Total Nickel, Total Copper, Total Zinc, Total Mercury, Total	J	FD RPD >20%
K1401911-002	LP-MW500-022414	Zinc, Total	J	FD RPD >20%
K1403953-004 K1403953-005	LP-MW-1-022414 LP-MW500-022414	Nickel, Dissolved	J	FD RPD >20%
		Nickel, Dissolved	J	FD RPD >20%
K1401911-001	LP-MW-1-022414	Arsenic, Total	J	MS %R <LCL
K1401911-001	LP-MW-1-022414	Copper, Total	J	Laboratory duplicate RPD >20%
K1401911-001	LP-MW-1-022414	Zinc, Total	J	Laboratory duplicate RPD >20%; FD RPD >20%
402348-01	LP-MW-1-022414	TPH-Diesel	**J**	FD RPD >20%
402348-02	LP-MW500-022414	TPH-Diesel	**J**	FD RPD >20%
402396-03	TM-MW2-022614	Total Suspended Solids	**J**	FD difference >2xRL
402396-04	TM-MW500-022614	Total Suspended Solids	**UJ**	FD difference >2xRL
402285-02	GF9-MW2-021914	Total Suspended Solids	**J**	FD RPD >20%
402285-04	GF9-MW500-021914	Total Suspended Solids	**J**	FD RPD >20%
402348-01	LP-MW-1-022414	Acenaphthylene	**UJ**	FD difference >2xRL
402348-02	LP-MW500-022414	Acenaphthylene	**J**	FD difference >2xRL
402348-02	LP-MW500-022414	Chrysene	**J**	FD difference >2xRL
402348-02	LP-MW500-022414	Benz(a)anthracene	**J**	FD difference >2xRL
402348-01	LP-MW-1-022414	Fluoranthene	**J**	FD RPD >20%
402348-02	LP-MW500-022414	Pyrene	**J**	FD RPD >20%
402348-02	LP-MW500-022414	Fluoranthene	**J**	FD RPD >20%
402396-04	TM-MW500-022614	Acenaphthene	**J**	FD RPD >20%
402348-06	TM-MW6-022414	Dichlorodifluoromethane	**UJ**	CCV %D <LCL
402348-11	OPS-MW-1-022414	Dichlorodifluoromethane	**UJ**	CCV %D <LCL
402324-09	PM-MW6-022314	Benzoic acid	**R**	CCV not recovered
402324-10	PM-MW4-022314	Benzoic acid	**R**	CCV not recovered
402324-11	BA-MW-6-022314	Benzoic acid	**R**	CCV not recovered
402324-14	BA-MW7-022314	Benzoic acid	**R**	CCV not recovered
402324-11	BA-MW-6-022314	Di-n-octyl phthalate	**UJ**	Internal standard %R <LCL
402372-09	PM-MW2-022514	Benzyl butyl phthalate	**UJ**	Internal standard %R <LCL
402372-09	PM-MW2-022514	*bis*(2-Ethylhexyl) phthalate	**UJ**	Internal standard %R <LCL
402372-09	PM-MW2-022514	Di-n-octyl phthalate	**UJ**	Internal standard %R <LCL
402372-11	BA-MW-4-022514	*bis*(2-Ethylhexyl) phthalate	**UJ**	Internal standard %R <LCL
402372-11	BA-MW-4-022514	Di-n-octyl phthalate	**UJ**	Internal standard %R <LCL

Laboratory ID	Sample ID	Analyte	Qualifier	Qualified Reason
402372-11	BA-MW-4-022514	Benzyl butyl phthalate	**UJ**	Internal standard %R <LCL
402372-12	BA-MW-3-022514	Di-n-octyl phthalate	**UJ**	Internal standard %R <LCL
402372-13	BA-MW-2-022514	*bis*(2-Ethylhexyl) phthalate	**UJ**	Internal standard %R <LCL
402372-13	BA-MW-2-022514	Di-n-octyl phthalate	**UJ**	Internal standard %R <LCL
402372-13	BA-MW-2-022514	Benzyl butyl phthalate	**UJ**	Internal standard %R <LCL
402372-19	Rec7-MW2-022514	*bis*(2-Ethylhexyl) phthalate	**UJ**	Internal standard %R <LCL
402372-19	Rec7-MW2-022514	Benzyl butyl phthalate	**UJ**	Internal standard %R <LCL
402372-19	Rec7-MW2-022514	Di-n-octyl phthalate	**UJ**	Internal standard %R <LCL
402396-03	TM-MW2-022614	4-Bromophenyl phenyl ether	**UJ**	Internal standard %R <LCL
402396-03	TM-MW2-022614	N-Nitrosodiphenylamine	**UJ**	Internal standard %R <LCL
402396-03	TM-MW2-022614	Di-n-octyl phthalate	**UJ**	Internal standard %R <LCL
402396-03	TM-MW2-022614	Hexachlorobenzene	**UJ**	Internal standard %R <LCL
402396-03	TM-MW2-022614	*bis*(2-Ethylhexyl) phthalate	**UJ**	Internal standard %R <LCL
402396-03	TM-MW2-022614	Carbazole	**UJ**	Internal standard %R <LCL
402396-03	TM-MW2-022614	Pentachlorophenol	**UJ**	Internal standard %R <LCL
402396-03	TM-MW2-022614	Di-n-butyl phthalate	**UJ**	Internal standard %R <LCL
402396-03	TM-MW2-022614	Benzyl butyl phthalate	**UJ**	Internal standard %R <LCL
402396-03	TM-MW2-022614	4,6-Dinitro-2-methylphenol	**UJ**	Internal standard %R <LCL
402396-04	TM-MW500-022614	Benzyl butyl phthalate	**UJ**	Internal standard %R <LCL
402396-04	TM-MW500-022614	*bis*(2-Ethylhexyl) phthalate	**UJ**	Internal standard %R <LCL
402409-02	BA-MW-1-022714	Di-n-octyl phthalate	**UJ**	Internal standard %R <LCL
402396-03	TM-MW2-022614	4-Nitroaniline	**UJ**	Internal standard %R <LCL; MS %R <LCL
402348-05	REC6-MW2-022414	Hexachlorocyclopentadiene	**UJ**	LCS/LCSD %R <LCL
402348-06	TM-MW6-022414	Hexachlorocyclopentadiene	**UJ**	LCS/LCSD %R <LCL
402348-07	PM-MW1-022414	Hexachlorocyclopentadiene	**UJ**	LCS/LCSD %R <LCL
402348-14	PM-MW-8-022414	Hexachlorocyclopentadiene	**UJ**	LCS/LCSD %R <LCL
402348-15	PM-MW-7-022414	Hexachlorocyclopentadiene	**UJ**	LCS/LCSD %R <LCL
402372-08	PM-MW3-022514	Hexachlorocyclopentadiene	**UJ**	LCS/LCSD %R <LCL
402372-09	PM-MW2-022514	Hexachlorocyclopentadiene	**UJ**	LCS/LCSD %R <LCL
402372-10	PM-MW5-022514	Hexachlorocyclopentadiene	**UJ**	LCS/LCSD %R <LCL
402372-11	BA-MW-4-022514	Hexachlorocyclopentadiene	**UJ**	LCS/LCSD %R <LCL
402372-12	BA-MW-3-022514	Hexachlorocyclopentadiene	**UJ**	LCS/LCSD %R <LCL
402372-13	BA-MW-2-022514	Hexachlorocyclopentadiene	**UJ**	LCS/LCSD %R <LCL
402372-19	Rec7-MW2-022514	Hexachlorocyclopentadiene	**UJ**	LCS/LCSD %R <LCL
402396-01	TM-MW5-022614	Hexachlorocyclopentadiene	**UJ**	LCS/LCSD %R <LCL
402396-03	TM-MW2-022614	Hexachlorocyclopentadiene	**UJ**	LCS/LCSD %R <LCL
402396-04	TM-MW500-022614	Hexachlorocyclopentadiene	**UJ**	LCS/LCSD %R <LCL
402409-01	Rec5-MW-1-022714	Hexachlorocyclopentadiene	**UJ**	LCS/LCSD %R <LCL
402409-02	BA-MW-1-022714	Hexachlorocyclopentadiene	**UJ**	LCS/LCSD %R <LCL
402316-03	REC1-MW10-022014	2,4-Dinitrophenol	**UJ**	LCSD %R <LCL

Laboratory ID	Sample ID	Analyte	Qualifier	Qualified Reason
402316-04	REC1-MW500-022014	2,4-Dinitrophenol	**UJ**	LCSD %R <LCL
402324-09	PM-MW6-022314	2,4-Dinitrophenol	**UJ**	LCSD %R <LCL
402324-10	PM-MW4-022314	2,4-Dinitrophenol	**UJ**	LCSD %R <LCL
402324-11	BA-MW-6-022314	2,4-Dinitrophenol	**UJ**	LCSD %R <LCL
402324-14	BA-MW7-022314	2,4-Dinitrophenol	**UJ**	LCSD %R <LCL
402396-03	TM-MW2-022614	4-Nitrophenol	**UJ**	MS %R <LCL
402396-03	TM-MW2-022614	Benzoic acid	**UJ**	MS %R <LCL
402396-03	TM-MW2-022614	3-Nitroaniline	**UJ**	MS %R <LCL
402396-03	TM-MW2-022614	4-Chloroaniline	**UJ**	MS %R <LCL
402324-14	BA-MW7-022314	Indeno(1,2,3-cd)pyrene	**J**	CCV %D >UCL
402348-03	BA-MW5-022414	Pyrene	**J**	Internal standard %R >UCL
402348-03	BA-MW5-022414	Chrysene	**J**	Internal standard %R >UCL
402348-03	BA-MW5-022414	Benz(a)anthracene	**J**	Internal standard %R >UCL
402348-01	LP-MW-1-022414	Chrysene	**J**	Internal standard %R >UCL; FD Difference >2xRL; MS/MSD %R >UCL
402348-01	LP-MW-1-022414	Benz(a)anthracene	**J**	Internal standard %R >UCL; FD Difference >2xRL; MS/MSD %R >UCL
402348-01	LP-MW-1-022414	Pyrene	**J**	Internal standard %R >UCL; FD RPD >20%; MS/MSD %R >UCL
402316-03	REC1-MW10-022014	Benzo(g,h,i)perylene	**UJ**	MS/MSD %R <LCL
402316-03	REC1-MW10-022014	Indeno(1,2,3-cd)pyrene	**UJ**	MS/MSD %R <LCL
402316-03	REC1-MW10-022014	Benzo(b)fluoranthene	**UJ**	MS/MSD %R <LCL
402316-03	REC1-MW10-022014	Benzo(k)fluoranthene	**UJ**	MS/MSD %R <LCL
402316-03	REC1-MW10-022014	Benzo(a)pyrene	**UJ**	MS/MSD %R <LCL
402316-03	REC1-MW10-022014	Dibenzo(a,h)anthracene	**UJ**	MS/MSD %R <LCL
402396-03	TM-MW2-022614	Benzo(b)fluoranthene	**UJ**	MS/MSD %R <LCL
402396-03	TM-MW2-022614	Benzo(k)fluoranthene	**UJ**	MS/MSD %R <LCL
402396-03	TM-MW2-022614	Benzo(a)pyrene	**UJ**	MS/MSD %R <LCL
402396-03	TM-MW2-022614	Acenaphthene	**J**	MS/MSD %R <LCL; FD RPD >20%

Notes:
%D – Percent difference value
%R – Percent recovery value
CCV – Continuing calibration verification
FD – Field duplicate
LCL – Lower control limit
LCS – Laboratory control sample
LCSD – Laboratory control sample duplicate
MS – Matrix spike
MSD – Matrix spike duplicate
RPD – Relative percent difference
UCL – Upper control limit

Table II. Data Affected by Detections in Laboratory Blanks

Laboratory Sample ID	Sample ID	Compound	Original Result	Adjusted Result	Unit	Report Section
K1401876-001	REC1-MW14-022014	Mercury, Total	037 J	**1.0 U**	ng/L	**7.4**
K1401973-015	NRP-MW-2-022514	Lead, Total	0.049	**0.049 J**	µg/L	**7.4**
K1401973-017	Rec7-MW1-022514	Lead, Total	0.030	**0.030 J**	µg/L	**7.4**
K1401973-018	Rec7-MW2-022514	Lead, Total	0.021	**0.021 J**	µg/L	**7.4**
K1402039-001	TM-MW5-022614	Mercury, Total	0.46 J	**1.0 U**	ng/L	**7.4**
K1403954-015	NRP-MW-3-022514	Mercury, Dissolved	2.53	**2.53 J**	ng/L	**7.4**

Notes:
ng/L – nanogram per liter
µg/L – microgram per liter

Table III. Data Qualifiers are defined as follows:

Data Qualifier	Definition
DNR	Do not report; the result should be reported from an alternative analysis.
J	The analyte was detected above the reported quantitation limit, and the reported concentration was an estimated value.
R	The sample results are unusable due to the quality of the data generated because certain criteria were not met. The analyte may or may not be present in the sample.
U	The analyte was analyzed for, but was considered not detected at the reporting limit or reported value.
UJ	The analyte was analyzed for, and the associated quantitation limit was an estimated value.

REFERENCES

USEPA *Contract Laboratory Program National Functional Guidelines for Inorganic Superfund Data Review,* Office of Superfund Remediation and Technical Innovation, U.S. Environmental Protection Agency, January 2010, USEPA 540/R-10/011

USEPA *Contract Laboratory Program National Functional Guidelines for Superfund Organic Methods Data Review,* Office of Superfund Remediation and Technical Innovation, U.S. Environmental Protection Agency, June 2008, USEPA-540-R-08-01.

USEPA *Method 1631, Revision E: Mercury in Water by Oxidation, Purge and Trap, and Cold Vapor Atomic Fluorescence Spectrometry, Office of Water, U.S. Environmental Protection Agency, August 2002, EPA-821-R-02-019.*

USEPA *Test Methods for Evaluating Solid Waste (SW-846). Third Edition and Revised Update IIIA.* Office of Solid Waste and Emergency Response, Washington, D.C. April 1998.

USEPA *Methods for Chemical Analysis of Water and Wastes,* EPA-600/4-79-020, March 1983 and updates.

Standard Methods for the Examination of Water and Wastewater, American Public Health Association, 20th Edition, 1995.

Ecology (Washington State Department of). 1997. *Analytical Methods for Petroleum Hydrocarbons.* Publication No. ECY 97-602. June 1997.

PSEP *Recommended Guidelines for Measuring Organic Compounds in Puget Sound Water, Sediment and Tissue Samples,* Puget Sound Water Quality Authority, April 1997.

Aspect Consulting, LLC. *Quality Assurance Project Plan, Port of Bellingham Former GP Mill Property RI/FS,* Seattle, Washington. September, 2009.

Appendix A

Field duplicate RPD is indicative of field and laboratory precision and sample homogeneity in combination. The CLP National Functional Guidelines or *Work Plan* do not specify criteria for field duplicate evaluation. An advisory criterion of 20% was applied to evaluating the RPD values of field duplicate results that are ≥5xRL. For results that are <5xRL, an advisory criterion of ±2RL was applied to evaluating the concentration differences. The RPD (or concentration difference as applicable) values and data qualification for detected compounds in field duplicates are presented as follows:

Analyte	Units	RL	Parent & Field Duplicate Sample Result		RPD	Delta	Data Qualifier
			GF9-MW2-021914	**GF9-MW500-021914**			
TPH-Diesel	µg/L	50	ND	68		68	
TPH-Oil	µg/L	250	ND	ND			
TPH-Gasoline	µg/L	100	ND	ND			
Total Suspended Solids	µg/L	10	97	42		55	**J/J**
Acenaphthene	µg/L	0.05	0.69	0.61	12%		
Anthracene	µg/L	0.05	0.096	0.089		0.007	
Benz(a)anthracene	µg/L	0.01	ND	0.01		0.01	
Fluoranthene	µg/L	0.05	0.2	0.2		0	
Fluorene	µg/L	0.05	0.14	0.13		0.01	
Naphthalene	µg/L	0.05	0.074	0.068		0.006	
Phenanthrene	µg/L	0.05	0.13	0.11		0.02	
Pyrene	µg/L	0.05	0.16	0.15		0.01	
			REC1-MW10-022014	**REC1-MW500-022014**			
TPH-Gasoline	µg/L	100	ND	ND			
Total Suspended Solids	µg/L	10	ND	ND			
SVOCs	µg/L	-	ND	ND			
PAHs	µg/L	-	ND	ND			
			HB-MW-1-1.5-2	**HB-MW-1-1.5-2-D**			
Mercury	µg/L	0.001	0.00741	0.00448		0.003	**J/J**
Arsenic	µg/L	1.1	1.1	1		0.1	
Copper	µg/L	0.222	1.97	1.48	33%		**J/J**
Lead	µg/L	0.04	2.82	1.83	54%		**J/J**
Nickel	µg/L	0.44	3.36	1.86		1.5	**J/J**
Zinc	µg/L	1.1	23.3	18.6	25%		**J/J**
Ammonia as Nitrogen	mg/L	0.5	16.2	16.9	4%		
Sulfide	mg/L	0.05	ND	ND			
Total Suspended Solids	mg/L	10	14	ND		14	

Analyte	Units	RL	Parent & Field Duplicate Sample Result		RPD	Delta	Data Qualifier
			LP-MW-1-022414	**LP-MW-500-022414**			
Mercury, Dissolved	ng/L	5	90.6	83.1	9%		
Mercury, Total	µg/L	0.005	0.0627	0.0895	35%		
Arsenic, Total	µg/L	0.5	0.68	0.38		0.3	
Copper, Dissolved	µg/L	0.513	12	13.2	10%		
Copper, Total	µg/L	0.1	34.1	30.9	10%		
Lead, Dissolved	µg/L	0.02	0.24	0.26	8%		
Lead, Total	µg/L	0.02	10.7	10.6	1%		
Nickel, Dissolved	µg/L	0.21	19.3	30.5	45%		**J/J**
Nickel, Total	µg/L	0.2	27.8	25.3	9%		
Zinc, Total	µg/L	0.5	6.4	4	46%		**J/J**
Ammonia as Nitrogen	mg/L	0.05	4.18	4.2	0%		
Total Suspended Solids	µg/L	10	ND	ND		0	
Sulfide	µg/L	0.05	1.12	1.18	5%		
TPH-Diesel	µg/L	50	640	830	26%		**J/J**
TPH-Motor Oil	µg/L	250	ND	ND		0	
Acenaphthene	µg/L	0.05	16	18	12%		
Acenaphthylene	µg/L	0.05	ND	0.14		0.14	**UJ/J**
Anthracene	µg/L	0.05	4.8	5.6	15%		
Benz(a)anthracene	µg/L	0.01	0.034	0.13		0.096	**J/J**
Benzo(a)pyrene	µg/L	0.01	0.037	0.023		0.014	
Benzo(b)fluoranthene	µg/L	0.01	0.029	0.037		0.008	
Benzo(g,h,i)perylene	µg/L	0.05	ND	ND		0	
Benzo(k)fluoranthene	µg/L	0.01	ND	0.015		0.015	
Chrysene	µg/L	0.01	0.051	0.13		0.079	**J/J**
Dibenzo(a,h)anthracene	µg/L	0.01	ND	ND		0	
Fluoranthene	µg/L	0.05	1.4	1.9	30%		**J/J**
Fluorene	µg/L	0.05	8.6	9.6	11%	1	
Indeno(1,2,3-cd)pyrene	µg/L	0.01	ND	0.01		0.01	
Naphthalene	µg/L	0.05	54	59	9%		
Phenanthrene	µg/L	0.05	16	19	17%		
Pyrene	µg/L	0.05	0.52	1.2	79%		**J/J**
			TM-MW2-022614	**TM-MW500-022614**			
TPH-Diesel	µg/L	50	ND	ND			
TPH-Motor Oil	µg/L	250	ND	ND			
Total Suspended Solids	mg/L	10	58	ND		58	**J/UJ**

Analyte	Units	RL	Parent & Field Duplicate Sample Result		RPD	Delta	Data Qualifier
Arsenic	µg/L	0.5	2.7	2.7	0%		
Copper	µg/L	0.1	3.54	3.43	3%		
Copper, Dissolved	µg/L	0.1	0.63	0.55	14%		
Lead	µg/L	0.02	0.55	0.576	5%		
Nickel	µg/L	0.2	2.97	3.17	7%		
Zinc	µg/L	0.5	1.4	1.1		0.3	
VOCs	µg/L		ND	ND			
2-Methylnaphthalene	µg/L	0.05	0.075	0.07		0.005	
Acenaphthene	µg/L	0.05	0.62	0.45	32%		**J/J**
Naphthalene	µg/L	0.05	0.085	0.094		0.009	

Notes:
Delta – Concentration difference between the parent sample and its field duplicate
mg/L – milligram per liter
ND – The analyte was not detected at or above the RL.
RL – Reporting limit
RPD – Relative percent difference
µg/L – microgram per liter

DATA VALIDATION REPORT

Kimberly Clark – Everett Mill
Supplemental Soil Analyses
September 2015
SDG 509461

Prepared by:
Aspect Consulting, LLC
401 Second Ave South, Suite 201
Seattle, WA 98104

Project No. 110207 • October 12, 2015

S:\Kimberly Clark\Everett Mill 110207\Data\Validation\Validation Reports and EDDs\RI\Validation Report 2015 supplemental data - LMB\DV Report - KC Everett Mill - Oct 2015 - Soil.docx

1 Introduction

This report summarizes the findings of the United States Environmental Protection Agency (USEPA) Stage 2A data validation performed on analytical data for soil samples collected from September 23 through September 24, 2015 for Kimberly Clark Everett Mill RI-FS sampling. This data quality review is divided into sections by sample delivery group (SDG). A complete list of samples and analyses for each SDG is provided in the Sample Index at the beginning of each section.

Samples were analyzed for mercury, metals, PAHs, PCBs and Diesel TPH by Friedman and Bruya, Inc. (F&B). The analytical methods are summarized below:

Analysis	Method	Laboratory
Mercury	EPA 1631E	F&B
Metals (As, Cu, Ni, Pb, Zn)	EPA 200.8	F&B
PAH	EPA 8270D-SIM	F&B
PCB Aroclors	EPA 8082	F&B
TPH - Diesel with Silica Gel Cleanup	NWTPH-DX	F&B

The validation followed the procedures documented in the analytical methods, the Quality Assurance Project Plan (QAPP; in Appendix A to Aspect, 2013), *National Functional Guidelines for Organic Data Review* (USEPA, 1999), and *National Functional Guidelines for Inorganic Data Review* (USEPA, 2004).

Data assigned a J qualifier (estimated) may be used for site evaluation purposes but the reasons for qualification should be taken into account when interpreting sample concentrations. Data marked as do-not-report (DNR) should not be used under any circumstances. Values without qualification meet all data measurement quality objectives and are suitable for use.

Data qualifier definitions and a summary table of the qualified data are included in the Qualified Data Summary at the end of this report. Data qualifiers have been incorporated into the project chemistry database to reflect the validation in this report.

2 Data Validation Findings for SDG 509461

Soil samples in this SDG, and the chemical analyses performed on them, are tabulated below. The sections below describe the results of the data quality review for this SDG by analyte group (analysis).

Sample Index

				Analysis				
Sample ID	**Sample Date**	**Sample Type**	**Sample Matrix**	**Hg**	**Metals**	**PAHs**	**PCBs**	**TPH-Dx**
CD-B-3-10	9/23/15	N	Soil	x	x	x	x	x
CD-B-3-3.5	9/23/15	N	Soil	x	x	x	x	x
CD-B-3-7.5	9/23/15	N	Soil	x	x	x	x	x
CD-B-4-13	9/23/15	N	Soil	x	x	x	x	x
CD-B-4-5.5	9/23/15	N	Soil	x	x	x	x	x
CD-B-4-7.5	9/23/15	N	Soil	x	x	x	x	x
GF9-MW-4-11	9/23/15	N	Soil	x	x	x	x	x
GF9-MW-4-6.5	9/23/15	N	Soil	x	x	x	x	x
GF9-MW-4-7.5	9/23/15	N	Soil	x	x	x	x	x
PM-B-11-10	9/24/15	N	Soil	x	x			
PM-B-11-11.5	9/24/15	N	Soil	x	x			
PM-B-11-7	9/24/15	N	Soil	x	x			
PM-B-12-6	9/24/15	N	Soil	x	x			
PM-B-12-7	9/24/15	N	Soil	x	x			
PM-B-13-6	9/24/15	N	Soil	x	x			
PM-B-13-7	9/24/15	N	Soil	x	x			
PM-B-13-9	9/24/15	N	Soil	x	x			
PM-B-14-6	9/24/15	N	Soil	x	x			
PM-B-14-7.5	9/24/15	N	Soil	x	x			
PM-B-15-6	9/24/15	N	Soil	x	x			
PM-B-15-7.5	9/24/15	N	Soil	x	x			
PM-B-15-9	9/24/15	N	Soil	x	x			
PM-B-16-6	9/24/15	N	Soil	x	x			
PM-B-16-7.5	9/24/15	N	Soil	x	x			
PM-B-16-9	9/24/15	N	Soil	x	x			

2.1 Mercury (EPA 1631E)

2.1.1 Sample Receipt, Preservation, and Holding Times

Sample receipt, and preservation (2-6 degrees C) were acceptable.

Samples were analyzed within the requisite 28 days of collection.

2.1.2 Method Blanks

Target analytes were not detected at or above the reporting levels in the method blanks. No qualification or action was needed.

2.1.3 Laboratory Control Samples (LCS)

All LCS %R were within the laboratory specified control limits.

2.1.4 Matrix Spike/Matrix Spike Duplicates (MS/MSD)

MS and MSD %R and RPD were within the project control limits.

2.1.5 Reported Results and Reporting Limits (RL)

The RLs outlined in the QAPP were met or were elevated accordingly due to high concentrations of target analytes. RLs were acceptable for their intended use.

2.1.6 Overall Assessment

Accuracy was acceptable based on the MS and LCS recoveries, and precision was acceptable based on the MS/MSD RPD values. The data are of known quality and are acceptable for use as qualified.

2.2 Metals (EPA 200.8)

2.2.1 Sample Receipt, Preservation, and Holding Times

Sample receipt, and preservation (2-6 degrees C) were acceptable.

Samples were analyzed within the requisite holding time limit.

2.2.2 Method Blanks

Target analytes were not detected at or above the reporting levels in the method blanks. No qualification or action was needed.

2.2.3 Laboratory Control Samples (LCS)

All LCS %R were within the laboratory specified control limits.

2.2.4 Matrix Spike/Matrix Spike Duplicates (MS/MSD)

MS and MSD %R and RPD were within the project control limits.

2.2.5 Reported Results and Reporting Limits (RL)

The RLs outlined in the QAPP were met or were elevated accordingly due to high concentrations of target analytes. RLs were acceptable for their intended use.

2.2.6 Overall Assessment

Accuracy was acceptable based on the MS and LCS recoveries, and precision was acceptable based on the MS/MSD RPD values. The data are of known quality and are acceptable for use as qualified.

2.3 PAH (EPA 8270D SIM)

2.3.1 Sample Receipt, Preservation, and Holding Times

Sample receipt, and preservation (2-6 degrees C) were acceptable.

Samples were analyzed within the requisite holding time limit.

2.3.2 Method Blanks

Target analytes were not detected at or above the reporting levels in the method blanks. No qualification or action was needed.

2.3.3 Laboratory Control Samples (LCS)

All LCS %R were within the laboratory specified control limits.

2.3.4 Matrix Spike/Matrix Spike Duplicates (MS/MSD)

MS and MSD %R were within laboratory specified control limits with the exception of recoveries for Phenanthrene, Fluoranthene, Pyrene, Benz(a)anthracene, Chrysene, Benzo(k)Fluoranthene, and Benzo(a)pyrene. For all these analytes the parent sample contained more than 4x the spiked amount, so no qualification was needed.

The MS/MSD RPD were within the project control limits.

2.3.5 Reported Results and Reporting Limits (RL)

The RLs outlined in the QAPP were met or were elevated accordingly due to high concentrations of target analytes. RLs were acceptable for their intended use.

2.3.6 Overall Assessment

Accuracy was acceptable based on the MS and LCS recoveries, and precision was acceptable based on the MS/MSD RPD values. The data are of known quality and are acceptable for use as qualified.

2.4 PCBs (EPA 8082A)

2.4.1 Sample Receipt, Preservation, and Holding Times

Sample receipt, and preservation (2-6 degrees C) were acceptable.

Samples were analyzed within the requisite holding time limit.

2.4.2 Method Blanks

Target analytes were not detected at or above the reporting levels in the method blanks. No qualification or action was needed.

2.4.3 Laboratory Control Samples/Laboratory Control Sample Duplicate (LCS/LCSD)

All LCS and LCSD %R were and within the laboratory specified control limits.

2.4.4 Matrix Spike (MS)

MS %R were within the project control limits.

2.4.5 Reported Results and Reporting Limits (RL)

The RLs outlined in the QAPP were met or were elevated accordingly due to high concentrations of target analytes. RLs were acceptable for their intended use.

2.4.6 Overall Assessment

Accuracy was acceptable based on the MS and LCS recoveries, and precision was acceptable based on the LCS/LCSD RPD values. The data are of known quality and are acceptable for use as qualified.

2.5 Diesel & Motor Oil Range Hydrocarbons (NWTPH-Dx)

2.5.1 Sample Receipt, Preservation, and Holding Times

Sample receipt, and preservation (2-6 degrees C) were acceptable.

Samples were analyzed within the requisite holding time limit.

2.5.2 Method Blanks

Target analytes were not detected at or above the reporting levels in the method blanks. No qualification or action was needed.

2.5.3 Laboratory Control Samples (LCS)

All LCS %R were within the laboratory specified control limits.

2.5.4 Matrix Spike/Matrix Spike Duplicates (MS/MSD)

MS and MSD %R and RPD were within the project control limits.

2.5.5 Reported Results and Reporting Limits (RL)

The RLs outlined in the QAPP were met or were elevated accordingly due to high concentrations of target analytes. RLs were acceptable for their intended use.

2.5.6 Overall Assessment

Accuracy was acceptable based on the MS and LCS recoveries, and precision was acceptable based on the MS/MSD RPD values. The data are of known quality and are acceptable for use as qualified.

3 Qualified Data Summary

No sample results were qualified as a result of validation, with the exception of non-detect result, which received a U qualifier.

Data Qualifier Definitions

Data Qualifier	Definition
DNR	Do not report; the result should be reported from an alternative analysis.
J	The analyte was detected above the reported quantitation limit, and the reported concentration was an estimated value.
R	The sample results are unusable due to the quality of the data generated because certain criteria were not met. The analyte may or may not be present in the sample.
U	The analyte was analyzed for, but was considered not detected at the reporting limit or reported value.
UJ	The analyte was analyzed for, and the associated quantitation limit was an estimated value.
X	The sample chromatographic pattern does not resemble the fuel standard used for quantitation.

4 References

Aspect, 2013, Work Plan for Remedial Investigation/Feasibility Study, Kimberly-Clark Worldwide Site Upland Area, Everett, Washington, November 22, 2013.

U.S. Environmental Protection Agency (USEPA), 1994, Method 200.8 Determination of Trace Elements in Waters and Wastes by Inductively Coupled Plasma – Mass Spectrometry, Revision 5.4, Environmental Monitoring Systems Laboratory Office of Research and Development.

U.S. Environmental Protection Agency (USEPA), 1997, Method 1640 Determination of Trace Elements in Waters by Preconcentration and Inductively Coupled Plasma – Mass Spectrometry, Office of Water & Office of Science and Technology Engineering and Analysis Division (4303), April.

U.S. Environmental Protection Agency (USEPA), 1999, Contract Laboratory Program National Functional Guidelines for Inorganic Data Review, Office of Emergency and Remedial Response, USEPA Publication No. 540/R-99/008, October.

U.S. Environmental Protection Agency (USEPA), 2004, Contract Laboratory Program National Functional Guidelines for Organic Methods Data Review, Office of Superfund Remediation and Technology Innovation (OSRTI), USEPA Publication No. 540-R-04-004, October.

DATA VALIDATION REPORT

Kimberly Clark – Everett Mill
Supplemental Groundwater Analyses
September-October 2015
SDG 509564, 510139

Prepared by:
Aspect Consulting, LLC
401 Second Ave South, Suite 201
Seattle, WA 98104

Project No. 110207 • October 15, 2015

S:\Kimberly Clark\Everett Mill 110207\Data\Validation\Validation Reports and EDDs\RI\Validation Report 2015 supplemental data - LMB\DV Report - KC Everett Mill - Oct 2015 - GW.docx

1 Introduction

This report summarizes the findings of the United States Environmental Protection Agency (USEPA) Stage 2A data validation performed on analytical data for groundwater samples collected from September 30 through October 8, 2015 for Kimberly Clark Everett Mill RI-FS sampling. This data quality review is divided into sections by sample delivery group (SDG). A complete list of samples and analyses for each SDG is provided in the Sample Index at the beginning of each section.

Samples were analyzed for PAHs, PCBs, TPH, SVOCs and TSS by Friedman and Bruya, Inc. (F&B). Analysis for metals, mercury and PCBs was subcontracted to ALS Environmental (ALS). The analytical methods are summarized below:

Analysis	Method	Laboratory
Mercury - Dissolved	EPA 1631E	ALS
Metals (As, Cu, Ni, Pb, Zn) - Dissolved	EPA 200.8	ALS
PAH	EPA 8270D-SIM	F&B
PCB Aroclors	EPA 8082	ALS & F&B
SVOC	EPA 8270D	F&B
TPH - Diesel with Silica Gel Cleanup	NWTPH-Dx	F&B
Total Suspended Solids (TSS)	SW 2540D	F&B

The validation followed the procedures documented in the analytical methods, the Quality Assurance Project Plan (QAPP; in Appendix A to Aspect, 2013), *National Functional Guidelines for Organic Data Review* (USEPA, 1999), and *National Functional Guidelines for Inorganic Data Review* (USEPA, 2004).

Data assigned a J qualifier (estimated) may be used for site evaluation purposes but the reasons for qualification should be taken into account when interpreting sample concentrations. Data marked as do-not-report (DNR) should not be used under any circumstances. Values without qualification meet all data measurement quality objectives and are suitable for use.

Data qualifier definitions and a summary table of the qualified data are included in the Qualified Data Summary at the end of this report. Data qualifiers have been incorporated into the project chemistry database to reflect the validation in this report.

2 Data Validation Findings for SDG 509564

Groundwater samples in this SDG, and the chemical analyses performed on them, are tabulated below. The sections below describe the results of the data quality review for this SDG by analyte group (analysis).

Sample Index

				Analysis						
Sample ID	Sample Date	Sample Type	Sample Matrix	Hg	Metals	PAHs	PCBs	SVOCs	TPH -DX	TSS
DAST-MW-101-093015	9/30/2015	N	GrWtr				x			x
GF9-MW-4-093015	9/30/2015	N	GrWtr			x			x	x
OMS-MW-2-093015	9/30/2015	N	GrWtr	x	x	x	x		x	x
PM-500-093015	9/30/2015	FD	GrWtr			x		x		x
PM-MW-5-093015	9/30/2015	N	GrWtr			x		x		x
REC1-MW-8-093015	9/30/2015	N	GrWtr			x			x	x

2.1 Mercury (EPA 1631E)

2.1.1 Sample Receipt, Preservation, and Holding Times

Sample receipt, and preservation (2-6 degrees C) were acceptable.

Samples were analyzed within the requisite 28 days of collection.

2.1.2 Method Blanks

Target analytes were not detected at or above the reporting levels in the method blanks. Mercury was detected in two method blanks at levels greater than the MDL but less than the RDL. All associated sample results were greater than 10 times the blank concentrations. No qualification or action was needed.

2.1.3 Laboratory Control Samples (LCS)

All LCS %R were within the laboratory specified control limits.

2.1.4 Matrix Spike/Matrix Spike Duplicates (MS/MSD)

MS and MSD %R and RPD were within the project control limits.

2.1.5 Reported Results and Reporting Limits (RL)

The RLs outlined in the QAPP were met or were elevated accordingly due to high concentrations of target analytes. RLs were acceptable for their intended use.

2.1.6 Overall Assessment

Accuracy was acceptable based on the MS and LCS recoveries, and precision was acceptable based on the MS/MSD RPD values. The data are of known quality and are acceptable for use as qualified.

2.2 Metals (EPA 200.8)

2.2.1 Sample Receipt, Preservation, and Holding Times

Sample receipt, and preservation (2-6 degrees C) were acceptable.

Samples were analyzed within the requisite holding time limit.

2.2.2 Method Blanks

Target analytes were not detected at or above the reporting levels in the method blanks. Copper and Zinc were detected in the method blank at levels above the MDL but below the RDL. All associated sample results were greater than 10 times the blank contamination. No qualification or action was needed.

2.2.3 Laboratory Control Samples (LCS)

All LCS %R were within the laboratory specified control limits.

2.2.4 Matrix Spike/Matrix Spike Duplicates (MS/MSD)

No Matrix Spike or Duplicate analyses were reported with these analytical results. Laboratory was consulted, and indicates that insufficient sample quantity was provided to create a matrix spike or matrix duplicate.

2.2.5 Reported Results and Reporting Limits (RL)

The RLs outlined in the QAPP were met or were elevated accordingly due to high concentrations of target analytes. RLs were acceptable for their intended use.

2.2.6 Overall Assessment

Accuracy was acceptable based on the LCS recoveries. Precision with this matrix was not explicitly demonstrated, however general precision was demonstrated with lab instrument QC. The data are of known quality and are acceptable for use as qualified.

2.3 PAH (EPA 8270D SIM)

2.3.1 Sample Receipt, Preservation, and Holding Times

Sample receipt, and preservation (2-6 degrees C) were acceptable.

Samples were analyzed within the requisite holding time limit.

2.3.2 Method Blanks

Target analytes were not detected at or above the reporting levels in the method blanks. No qualification or action was needed.

2.3.3 Laboratory Control Samples/ Laboratory Control Sample Duplicates (LCS/LCSD)

All LCS and LCSD %R and RPD were within the laboratory specified control limits.

2.3.4 Matrix Spike/Matrix Spike Duplicates (MS/MSD)

No Matrix Spike or Duplicate analyses were reported with these analytical results. Laboratory was consulted, and indicates that insufficient sample quantity was provided to create a matrix spike or matrix duplicate.

2.3.5 Field Duplicate

Sample PM-500-093015 was submitted to the laboratory as a blind field duplicate of sample PM-MW-5-093015. As no MS/MSD were run for these samples, the field duplicate was used to assess matrix-based precision for all samples.

The RPD for the field duplicate sample with its parent sample was within control limits for this method with the exception of results for Anthracene and Pyrene, which exceeded the control limit. All associated sample results for these analytes have been qualified J/UJ.

2.3.6 Surrogate Recovery

Surrogate recoveries where acceptable for all samples in this analysis with the exception of sample OMS-MW-2-093015, which had a benzo(a)anthracene-d12 recovery below lower control limits. All associated results for this sample have been qualified J/UJ.

2.3.7 Overall Assessment

Accuracy was acceptable based on the LCS recoveries, and precision was acceptable based on the LCS/LCSD and Field Duplicate RPD values. The data are of known quality and are acceptable for use as qualified.

2.4 PCBs (EPA 8082A)

2.4.1 Sample Receipt, Preservation, and Holding Times

Sample receipt, and preservation (2-6 degrees C) were acceptable.

Samples were analyzed within the requisite holding time limit.

2.4.2 Method Blanks

Target analytes were not detected at or above the reporting levels in the method blanks. No qualification or action was needed.

2.4.3 Laboratory Control Samples/Laboratory Control Sample Duplicate (LCS/LCSD)

All LCS and LCSD %R and RPD were and within the laboratory specified control limits.

2.4.4 Matrix Spike/ Matrix Spike Duplicates (MS/MSD)

No Matrix Spike or Duplicate analyses were reported with these analytical results. Laboratory was consulted, and indicates that insufficient sample quantity was provided to create a matrix spike or matrix duplicate.

2.4.5 Reported Results and Reporting Limits (RL)

The RLs outlined in the QAPP were met or were elevated accordingly due to high concentrations of target analytes. RLs were acceptable for their intended use.

2.4.6 Column RPD

The RPD between instrument columns for Aroclor 1248 results for sample DAST-MW-101-093015 exceeded control limits. The result has been qualified J and results should be considered approximate.

2.4.7 Overall Assessment

Accuracy was acceptable based on the MS and LCS recoveries, and precision was acceptable based on the LCS/LCSD RPD values. The data are of known quality and are acceptable for use as qualified.

2.5 SVOCs (EPA 8270D)

2.5.1 Sample Receipt, Preservation, and Holding Times

Sample receipt, and preservation (2-6 degrees C) were acceptable.

Samples were analyzed within the requisite holding time limit.

2.5.2 Method Blanks

Target analytes were not detected at or above the reporting levels in the method blanks. No qualification or action was needed.

2.5.3 Laboratory Control Samples/ Laboratory Control Sample Duplicates (LCS/LCSD)

All LCS and LCSD %R and RPD were within the laboratory specified control limits, with the following exceptions:

For Hexachlorocyclopentadiene the LCS/LCSD RPD exceeded control limits. Associated sample results were qualified UJ.

For Bis(2-ethylhexyl)phthalate the LCSD %R exceeded the upper control limit. The LCS %R was within control limits – no results were qualified.

2.5.4 Matrix Spike/Matrix Spike Duplicates (MS/MSD)

No Matrix Spike or Duplicate analyses were reported with these analytical results. Laboratory was consulted, and indicates that insufficient sample quantity was provided to create a matrix spike or matrix duplicate.

2.5.5 Field Duplicate

Sample PM-500-093015 was submitted to the laboratory as a blind field duplicate of sample PM-MW-5-093015. As no MS/MSD were run for these samples, the field duplicate was used to assess matrix-based precision for all samples.

The RPD for the field duplicate sample with its parent sample was within control limits for this method with the exception of results for Pentachlorophenol, which exceeded the control limit. All associated sample results for this analyte have been qualified J/UJ.

2.5.6 Internal Standard

Results for Di-n-octyl phthalate in samples PM-MW-5-093015 and PM-500-093015 were flagged by the laboratory for poor internal standard recovery. Results have been qualified J to indicate values are estimated.

2.5.7 Overall Assessment

Accuracy was acceptable based on the LCS recoveries, and precision was acceptable based on the LCS/LCSD and Field Duplicate RPD values. The data are of known quality and are acceptable for use as qualified.

2.6 Diesel & Motor Oil Range Hydrocarbons (NWTPH-Dx)

2.6.1 Sample Receipt, Preservation, and Holding Times

Sample receipt, and preservation (2-6 degrees C) were acceptable.

Samples were analyzed within the requisite holding time limit.

2.6.2 Method Blanks

Target analytes were not detected at or above the reporting levels in the method blanks. No qualification or action was needed.

2.6.3 Laboratory Control Samples/ Laboratory Control Sample Duplicates (LCS/LCSD)

All LCS/LCSD %R and RPD were within the laboratory specified control limits.

2.6.4 Matrix Spike/Matrix Spike Duplicates (MS/MSD)

No Matrix Spike or Duplicate analyses were reported with these analytical results. Laboratory was consulted, and indicates that insufficient sample quantity was provided to create a matrix spike or matrix duplicate.

2.6.5 Reported Results and Reporting Limits (RL)

The RLs outlined in the QAPP were met or were elevated accordingly due to high concentrations of target analytes. RLs were acceptable for their intended use.

2.6.6 Overall Assessment

Accuracy was acceptable based on the LCS recoveries, and precision was acceptable based on the LCS/LCSD RPD values. The data are of known quality and are acceptable for use as qualified.

2.7 Total Suspended Solids (NWTPH-Dx)

2.7.1 Sample Receipt, Preservation, and Holding Times

Sample receipt, and preservation (2-6 degrees C) were acceptable.

Samples were analyzed within the requisite holding time limit.

2.7.2 Method Blanks

Target analytes were not detected at or above the reporting levels in the method blanks. No qualification or action was needed.

2.7.3 Laboratory Control Samples/ Laboratory Control Sample Duplicates (LCS/LCSD)

All LCS/LCSD %R and RPD were within the laboratory specified control limits.

2.7.4 Matrix Spike/Matrix Spike Duplicates (MS/MSD)

No Matrix Spike or Duplicate analyses were reported with these analytical results. Laboratory was consulted, and indicates that insufficient sample quantity was provided to create a matrix spike or matrix duplicate.

2.7.5 Reported Results and Reporting Limits (RL)

The RLs outlined in the QAPP were met or were elevated accordingly due to high concentrations of target analytes. RLs were acceptable for their intended use.

2.7.6 Overall Assessment

Accuracy was acceptable based on the LCS recoveries, and precision was acceptable based on the LCS/LCSD RPD values. The data are of known quality and are acceptable for use as qualified.

3 Data Validation Findings for SDG 510139

One groundwater sample was split and sent to two labs for PCB analysis. The split sent to ALS for analysis had "ALS" appended to the sample id to help distinguish the results. The sections below describe the results of the data quality review for this SDG by laboratory.

Sample Index

			Analysis/Lab	
Sample ID	**Sample Date**	**Sample Matrix**	**PCBs / F&B**	**PCBs / ALS**
DAST-MW-101-100815	10/8/2015	GrWtr	x	
DAST-MW-101-100815 ALS	10/8/2015	GrWtr		x

3.1 PCBs (EPA 8082A) by ALS

3.1.1 Sample Receipt, Preservation, and Holding Times

Sample receipt, and preservation (2-6 degrees C) were acceptable.

Samples were analyzed within the requisite holding time limit.

3.1.2 Method Blanks

Target analytes were not detected at or above the reporting levels in the method blanks. No qualification or action was needed.

3.1.3 Laboratory Control Samples/Laboratory Control Sample Duplicate (LCS/LCSD)

All LCS %R were and within the laboratory specified control limits.

3.1.4 Matrix Spike/ Matrix Spike Duplicates (MS/MSD)

All MS and MDS %R and RPD were within laboratory specified control limits.

3.1.5 Reported Results and Reporting Limits (RL)

The RLs outlined in the QAPP were met or were elevated accordingly due to high concentrations of target analytes. RLs were acceptable for their intended use.

3.1.6 Overall Assessment

Accuracy was acceptable based on the MS and LCS recoveries, and precision was acceptable based on the MS/MSD RPD values. The data are of known quality and are acceptable for use as qualified.

3.2 PCBs (EPA 8082A) by F&B

3.2.1 Sample Receipt, Preservation, and Holding Times

Sample receipt, and preservation (2-6 degrees C) were acceptable.

Samples were analyzed within the requisite holding time limit.

3.2.2 Method Blanks

Target analytes were not detected at or above the reporting levels in the method blanks. No qualification or action was needed.

3.2.3 Laboratory Control Samples/Laboratory Control Sample Duplicate (LCS/LCSD)

All LCS and LCSD %R were and within the laboratory specified control limits. The LCS/LCSD RPD exceeded the control limit for Aroclor 1260. Associated sample result was qualified UJ.

3.2.4 Matrix Spike/ Matrix Spike Duplicates (MS/MSD)

No Matrix Spike or Duplicate analyses were reported with these analytical results. Laboratory was consulted, and indicates that insufficient sample quantity was provided to create a matrix spike or matrix duplicate.

3.2.5 Reported Results and Reporting Limits (RL)

The RLs outlined in the QAPP were met or were elevated accordingly due to high concentrations of target analytes. RLs were acceptable for their intended use.

3.2.6 Column RPD

The RPD between instrument columns for Aroclor 1248 results for sample DAST-MW-101-100815 exceeded control limits. The result has been qualified J and results should be considered approximate.

3.2.7 Overall Assessment

Accuracy was acceptable based on the MS and LCS recoveries, and precision was acceptable based on the LCS/LCSD RPD values, except as noted above. The data are of known quality and are acceptable for use as qualified.

4 Qualified Data Summary

Qualified sample results are listed below. This list does not include non-detected values simply qualified U.

Qualified Sample Results for 509564

Sample ID	Analyte	Qualifier	Qualification Reason
DAST-MW-101-093015	Aroclor 1248	J	RPD between instrument columns exceeded control limit.
GF9-MW-4-093015	Anthracene	J	Field Duplicate RPD Exceeds control limit.
	Pyrene	J	Field Duplicate RPD Exceeds control limit.
OMS-MW-2-093015	Acenaphthene	J	1 of 2 surrogate recoveries below lower control limit.
	Acenaphthylene	UJ	1 of 2 surrogate recoveries below lower control limit.
	Anthracene	UJ	1 of 2 surrogate recoveries below lower control limit. Field Duplicate RPD Exceeds control limit.
	Benz(a)anthracene	UJ	1 of 2 surrogate recoveries below lower control limit.
	Benzo(a)pyrene	UJ	1 of 2 surrogate recoveries below lower control limit.
	Benzo(b)fluoranthene	UJ	1 of 2 surrogate recoveries below lower control limit.
	Benzo(g,h,i)perylene	UJ	1 of 2 surrogate recoveries below lower control limit.
	Benzo(k)fluoranthene	UJ	1 of 2 surrogate recoveries below lower control limit.
	Chrysene	UJ	1 of 2 surrogate recoveries below lower control limit.
	Dibenz(a,h)anthracene	UJ	1 of 2 surrogate recoveries below lower control limit.
	Fluoranthene	UJ	1 of 2 surrogate recoveries below lower control limit.
	Fluorene	UJ	1 of 2 surrogate recoveries below lower control limit.
	Indeno(1,2,3-cd)pyrene	UJ	1 of 2 surrogate recoveries below lower control limit.
	Naphthalene	UJ	1 of 2 surrogate recoveries below lower control limit.
	Phenanthrene	UJ	1 of 2 surrogate recoveries below lower control limit.
	Pyrene	UJ	1 of 2 surrogate recoveries below lower control limit. Field Duplicate RPD Exceeds control limit.

Sample ID	Analyte	Qualifier	Qualification Reason
PM-500-093015	Anthracene	J	Field Duplicate RPD Exceeds control limit.
	Hexachlorocyclopentadiene	UJ	LCS/LCSD RPD exceeded control limit.
	Pentachlorophenol	J	Field Duplicate RPD Exceeds control limit.
	Pyrene	J	Field Duplicate RPD Exceeds control limit.
PM-MW-5-093015	Anthracene	J	Field Duplicate RPD Exceeds control limit.
	Hexachlorocyclopentadiene	UJ	LCS/LCSD RPD exceeded control limit.
	Pentachlorophenol	J	Field Duplicate RPD Exceeds control limit.
	Pyrene	J	Field Duplicate RPD Exceeds control limit.
REC1-MW-8-093015	Anthracene	J	Field Duplicate RPD Exceeds control limit.
	Pyrene	J	Field Duplicate RPD Exceeds control limit.

Qualified Sample Results for 510139

Sample ID	Analyte	Qualifier	Qualification Reason
DAST-MW-101-100815	Aroclor 1248	J	RPD between instrument columns exceeded control limit.
	Aroclor 1260	UJ	LCS/LCSD RPD Exceeded control limit.

Data Qualifier Definitions

Data Qualifier	Definition
J	The analyte was detected above the reported quantitation limit, and the reported concentration was an estimated value.
R	The sample results are unusable due to the quality of the data generated because certain criteria were not met. The analyte may or may not be present in the sample.
U	The analyte was analyzed for, but was considered not detected at the reporting limit or reported value.
UJ	The analyte was analyzed for, and the associated quantitation limit was an estimated value.

5 References

Aspect, 2013, Work Plan for Remedial Investigation/Feasibility Study, Kimberly-Clark Worldwide Site Upland Area, Everett, Washington, November 22, 2013.

U.S. Environmental Protection Agency (USEPA), 1994, Method 200.8 Determination of Trace Elements in Waters and Wastes by Inductively Coupled Plasma – Mass Spectrometry, Revision 5.4, Environmental Monitoring Systems Laboratory Office of Research and Development.

U.S. Environmental Protection Agency (USEPA), 1997, Method 1640 Determination of Trace Elements in Waters by Preconcentration and Inductively Coupled Plasma – Mass Spectrometry, Office of Water & Office of Science and Technology Engineering and Analysis Division (4303), April.

U.S. Environmental Protection Agency (USEPA), 1999, Contract Laboratory Program National Functional Guidelines for Inorganic Data Review, Office of Emergency and Remedial Response, USEPA Publication No. 540/R-99/008, October.

U.S. Environmental Protection Agency (USEPA), 2004, Contract Laboratory Program National Functional Guidelines for Organic Methods Data Review, Office of Superfund Remediation and Technology Innovation (OSRTI), USEPA Publication No. 540-R-04-004, October.

Data Validation Report

Kimberly-Clark Everett, Washington Site
Upland Area Interim Action Soil Sampling
Batch #1 Soil Samples

Prepared for:

Aspect Consulting LLC
401 Second Ave South, Suite 201
Seattle, WA 98014

Prepared by:

Pyron Environmental, Inc.
3530 32nd Way, NW
Olympia, WA 98502

ACRONYMS

%D	percent difference
%D_f	percent drift
%R	percent recovery
%RSD	percent relative standard deviation
AMU	atomic mass unit
CCB	continuing calibration blank
CCC	calibration check compound
CCV	continuing calibration verification
CF	calibration factor
CLP	U.S. EPA Contract Laboratory Program
COC	chain-of-custody
CVAFS	cold vapor atomic fluorescent spectrometry
DFTPP	decafluorotriphenylphosphine
ECD	electron capture detector
EPA	U.S. Environmental Protection Agency
FID	Flame ionization detector
GC/MS	gas chromatograph/mass spectrometer
ICAL	initial calibration
ICB	initial calibration blank
ICP/MS	inductively coupled plasma/ mass spectrometer
ICV	initial calibration verification
LCS	laboratory control sample
LCSD	laboratory control sample duplicate
MDL	method detection limit
µg/kg	microgram per kilogram
mg/kg	milligram per kilogram
MS	matrix spike
MSD	matrix spike duplicate
NFGs	CLP National Functional Guidelines for Data Review (EPA 2008 – Organics; EPA 2010 – Inorganics)
OPR	ongoing precision and recovery
PCBs	polychlorinated biphenyls
QA/QC	quality assurance/quality control
RF	response factor

RL	reporting limit
RPD	relative percent difference
RRT	relative retention time
SDG	sample delivery group
SIM	selective ion monitoring
SVOCs	semi-volatile organic compounds
VOCs	volatile organic compounds

INTRODUCTION

This report presents and discusses findings of the data validation performed on analytical data for soil samples collected during August and September 2013 for the referenced project. The laboratory reports validated herein were submitted by Friedman & Bruya, Inc.

A level III data validation was performed on this laboratory report. The validation followed the procedures specified in USEPA CLP Functional Guidelines ([NFGs], EPA 2008 – Organics; EPA 2010 – Inorganics), with modifications to accommodate project and analytical method requirements. The numerical quality assurance/quality control (QA/QC) criteria applied to the validation were in accordance with those specified in the quality assurance project plans ([QAPPs], Aspect, 2009) and the current performance-based control limits established by the laboratory (laboratory control limits). Instrument calibration, frequency of QC analyses, and analytical sequence requirements were evaluated against the respective analytical methods.

Validation findings are discussed in each section pertinent to the QC parameter for each type of analysis. Qualified data with applied data qualifiers are summarized in the **Summary** section at the end of this report.

Samples and the associated analyses validated herein are summarized as follows:

Field Sample ID	Laboratory Sample ID	Sampling Date	Sample Type	Analysis					
				VOC	SVOC PAHs	PCB	Metals	TPH-Gx	TPH-Dx
FARM-TP-1-10	308310-01	08/20/13	Soil	X			X	X	X
FARM-TP-1-25	308310-02	08/20/13	Soil	X			X		X
FARM-TP-2-15	308310-04	08/20/13	Soil	X				X	X
FARM-TP-3-6	308310-05	08/20/13	Soil	X			X	X	X
FARM-TP-4-12	308310-08	08/20/13	Soil	X			X	X	X
FARM-TP-5-10	308310-10	08/20/13	Soil	X			X	X	X
GF11-TP1-B-3	308371-01	08/22/13	Soil				X[(A)]		
GF11-TP1-S-0-3	308371-02	08/22/13	Soil				X[(A)]		
GF11-TP2-B-3	308371-03	08/22/13	Soil				X[(A)]		
GF11-TP2-S-0-3	308371-04	08/22/13	Soil				X[(A)]		
GF11-TP3-B-3	308371-05	08/22/13	Soil				X[(A)]		
GF11-TP3-S-0-3	308371-06	08/22/13	Soil				X[(A)]		
GF11-TP4-B-3	308371-07	08/22/13	Soil				X[(A)]		
GF11-TP4-S-0-3	308371-08	08/22/13	Soil				X[(A)]		
GF11-TP5-B-3	308371-09	08/22/13	Soil				X[(A)]		
GF11-TP5-S-0-3	308371-10	08/22/13	Soil				X[(A)]		

Field Sample ID	Laboratory Sample ID	Sampling Date	Sample Type	Analysis					
				VOC	SVOC PAHs	PCB	Metals	TPH-Gx	TPH-Dx
GF11-TP6-B-3	308371-11	08/22/13	Soil				X[(A)]		
GF11-TP6-S-0-3	308371-12	08/22/13	Soil				X[(A)]		
FARM-TP6-12	308386-01	08/23/13	Soil	X	SVOC	X	X	X	X
FARM-STOCKPILE-1	308386-02	08/23/13	Soil	X	SVOC	X	X	X	X
FARM-TP7-14	308386-03	08/23/13	Soil	X	SVOC	X	X	X	X
FARM-TP8-12	308386-04	08/23/13	Soil	X	SVOC	X	X	X	X
FARM-TP9-12	308386-05	08/23/13	Soil	X	SVOC	X	X	X	X
FARM-TP10-12	308386-06	08/23/13	Soil	X	SVOC	X	X	X	X
HA1-2	308474-01	08/29/13	Soil	X	SVOC	X	X	X	X
HA2-2	308474-02	08/29/13	Soil	X	SVOC	X	X	X	X
HA3-2	308474-03	08/29/13	Soil	X	SVOC	X	X	X	X
HA4-2	308474-04	08/29/13	Soil	X	SVOC	X	X	X	X
HA6-2	308474-06	08/29/13	Soil	X	SVOC	X	X	X	X
HA7-2	308474-07	08/29/13	Soil	X	SVOC	X	X	X	X
HA8-2	308474-08	08/29/13	Soil	X	SVOC	X	X	X	X
HA9-2	308474-09	08/29/13	Soil	X	SVOC	X	X	X	X
HDS-ESW-2	309241-01	09/12/13	Soil	X	X	X	X	X	X
HDS-NSW-2	309241-02	09/12/13	Soil	X	X	X	X	X	X
HDS-WSW-2	309241-03	09/12/13	Soil	X	X	X	X	X	X
HDS-SSW-2	309241-04	09/12/13	Soil	X	X	X	X	X	X
HDS-BTM-4	309241-05	09/12/13	Soil	X	X	X	X	X	X
HDS-SP-1	309241-06	09/12/13	Soil	X	X	X	X	X	X
DAST-B08-092713	309537-01	09/27/13	Soil		PAHs				X
DAST-B09-092713	309537-02	09/27/13	Soil		PAHs				X

Notes:

[(A)] - Arsenic, cadmium, chromium, copper, mercury, nickel, and zinc

Metals - Antimony, arsenic, beryllium, cadmium, chromium, copper, lead, mercury, nickel, selenium, silver, thallium, and zinc, unless otherwise noted.

PAHs - Polycyclic aromatic hydrocarbons

PCB - Polychlorinated biphenyl

SVOC - Semivolatile organic compound

T – Total metals

TPH-Dx - Diesel and motor oil range total petroleum hydrocarbon

TPH-G - Gasoline range total petroleum hydrocarbon

VOC - Volatile organic compound

X - The analysis was requested and performed on the sample.

The analytical parameters requested for the samples, the respective analytical methods, and the analytical laboratories are summarized below:

Parameter	Analytical Method	Analytical Laboratory
Volatile Organic Compounds (VOCs)	SW846 Method 8260C	Friedman & Bruya, Inc. (F&BI) Seattle, WA
Semi-volatile Organic Compounds (SVOCs)	SW846 Method 8270D	
Polycyclic Aromatic Hydrocarbons (PAHs)	SW846 Method 8270D-SIM	
PCB Aroclors	SW846 Method 8082A	
TPH - Gasoline Range	NWTPH-Gx	
TPH - Diesel & Motor Oil Range	NWTPH-Dx	
Total Metals	EPA Method 200.8	
Mercury	EPA Method 1631E	

Notes:

1. SW846 - *USEPA Test Methods for Evaluating Solid Waste, Physical/Chemical Methods,* SW-846, Third Edition, December 1996.
2. EPA Methods - *USEPA Methods for Chemical Analysis of Water and Wastes,* EPA–600/4-79-020, March 1983 Revision.
3. EPA Method 1631E - *Mercury in Water by Oxidation, Purge and Trap, and Cold Vapor Atomic Fluorescence Spectrometry,* Office of Water, U.S. Environmental Protection Agency, August 2002, EPA-821-R-02-019.
4. NWTPH Methods – *Washington State Department of Ecology, Analytical Methods for Petroleum Hydrocarbons*, Publication No. ECY 97-602, June 1997.

DATA VALIDATION FINDINGS

1. VOCs by GC/MS (EPA Method SW8260C)

1.1 Sample Management and Holding Time

Samples were received in the laboratory intact and in consistence with the accompanying chain-of-custody (COC) documentation. In some cases where cooler temperature was outside the 4±2°C criteria; samples were hand-delivered to the laboratory the same day of collection. The cooler temperature exceedance had no significant effects on data quality. No other anomalies were identified in relation to sample preservation, handling, and transport.

Soil samples should be preserved at the time of collection. Soil and water samples should be analyzed within 14 days of collection. All samples were analyzed within the required holding times.

Sample HDS-SP-1 was not preserved immediately upon collection as required by the method. Target compounds were not detected in this sample at or above their reporting limits. Since the analysis was performed in a relatively short holding time (4 days) of collection, rather than being rejected, VOCs results for this sample were qualified (UJ) as estimated.

1.2 GC/MS Instrument Performance Check

The method require that (1) gas chromatograph/mass spectrometer (GC/MS) tuning analysis be performed, using bromofluorobenzene (BFB), at the beginning of each 12-hour period prior to any analysis, and (2) specific mass ions meet the criteria provided in the method. All instrument performance checks met the requirements.

1.3 Initial Calibration (ICAL)

The ICAL criteria require that (1) if linear average RFs is chosen as the quantitation option, at least five standards at different concentrations should be analyzed and the percent relative standard deviation (%RSD) of response factors (RFs) be ≤20% for the analyte, (2) if least-square linear regression is chosen for quantitation, the correlation coefficient (r) be >0.995, and (3) if six-point non-linear (quadratic) curve is chosen for quantitation, the coefficient of determination (r^2) be >0.99. ICALs either met the requirements or the outliers had no adverse effects on data usability (*e.g.,* %RSD >20% for a compound not detected in samples).

An initial calibration verification (ICV) standard (second source standard) was analyzed to verify the calibration curve. Percent difference (%D) values were either within ±30%, or

the exceedance had no adverse effects on data usability (*e.g.,* biased high ICV recovery for a compound not detected in samples).

1.4 Calibration Verification (CCV)

The CCV criteria requires that (1) continuing calibrations be analyzed at the beginning of each 12-hour analysis period prior to the analysis of method blank and samples, and (2) the %D value be within ±20%.

Calibration verifications either met the requirements, or the exceedance had no adverse effects on data usability (*e.g.,* biased high CCV recovery for a compound not detected in samples).

1.5 Method Blanks

Method blanks were prepared and analyzed as required. Target compounds were not detected at or above the reporting limits (RLs). Methylene chloride was consistently present in method blanks at levels greater than the method detection limits but less than RLs. Methylene chloride results greater than RLs but less than 10x the levels found in the method blanks were qualified (U) as non-detected at the reported values.

1.6 Laboratory Control Sample (LCS) and LCS Duplicate (LCSD)

LCS and LCSD were prepared and analyzed as required by the method. Percent recovery (%R) and relative percent difference (RPD) values either met the project control limits, or the outliers had no adverse effects on data usability (*e.g.,* biased high recovery for a compound not detected in samples).

1.7 Surrogate Spikes

Surrogate spikes were added to all samples as required by the method. All surrogate spike %R values were within the project control limits.

1.8 Matrix Spike (MS)

MS analyses were performed on project and batch QC samples at the proper frequency (≥5% of the samples analyzed for VOCs). All %R values were within the project control limits, except for the following:

SDG#	Parent Sample ID	Compound	MS %R	MSD %R	Control Limit	Data Qualifier
308474	HA1-2	Dichlorodifluoromethane	8%	8%	10-142%	**R**

1.9 Internal Standards

The method requires that (1) internal standard retention time be within ±30 seconds from that of the associated 12-hour calibration standard, and (2) the area counts of all internal standards be within –50% to +100% of the associated 12-hour calibration standard. All internal standards in the sample and associated QC analyses met the criteria.

1.10 Reporting Limit and Target Compound Quantitation

RLs were supported with adequate initial calibration concentrations. In cases where target compound concentrations exceeded ICAL calibration ranges, proper dilution analyses were performed for definitive quantitation of the compounds. Only affected compounds were to be reported from dilution analyses.

Naphthalene, 1,2,4-trichlorobenzene, 1,2-dichlioriobenzene, 1,3-dichlorobenzene, and 1,4-dichliorobenzene were also reported from SVOCs analysis (Method 8270D). These compounds were to be reported from the SVOCs analysis, in favor of the lower detection limits.

1.11 Field Duplicates

Field duplicates were not submitted for VOCs analyses in these SDGs.

1.12 Overall Assessment of VOCs Data Usability

VOCs data are of known quality and acceptable for use, as qualified.

2. SVOCs by GC/MS (EPA Method SW8270D)

2.1 Sample Management and Holding Times

No anomalies were identified in relation to sample preservation, handling, and transport as discussed in Section 1.1.

Soil samples should be extracted within 14 days and water samples within seven days of collection. Extracts should be analyzed within 40 days of extraction. All samples were extracted and analyzed within the required holding times.

2.2 GC/MS Instrument Performance Check

The method require that a GC/MS tuning analysis be performed using decafluorotriphenylphosphine (DFTPP) at the beginning of each 12-hour period prior to any analysis, and specific mass ions meet the criteria provided in the method. All instrument performance checks met the requirements.

2.3 Initial Calibration (ICAL)

The ICAL criteria require that (1) if linear average RFs is chosen as the quantitation option, at least five standards at different concentrations should be analyzed and the %RSD of RFs be ≤20% for the analyte, (2) if least-square linear regression is chosen for quantitation, the correlation coefficient (r) be >0.995, (3) if six-point non-linear (quadratic) curve is chosen for quantitation, the coefficient of determination (r^2) be >0.99, and (4) the RF be >0.01 for poor response compounds and >0.05 for all other compounds.. All ICALs met the requirements.

An ICV standard (second source standard) was analyzed to verify the calibration curve. %D values were either within ±20%, or the exceedance had no adverse effects on data usability (*e.g.,* biased high ICV recovery for a compound not detected in samples).

2.4 Calibration Verification (CCV)

The CCV criteria require that (1) continuing calibrations be analyzed at the beginning of each 12-hour analysis period prior to the analysis of method blank and samples, (2) the %D be within ±20%, and (3) the RF be >0.01 for poor response compounds and >0.05 for all other compounds.

Calibration verifications were performed at the required frequency. %D values were either within ±20%, or the exceedance had no adverse effects on data usability (*e.g.,* biased high CCV recovery for a compound not detected in samples), with the exceptions as follows:

SDG	CCV ID	Compound	%D	Bias	Affected Sample	Data Qualifier
308310	GCMS8 8/22/13, 8:00	2,4-Dinitrophenol 4,6-Dinitro-2-methylphenol	25.8% 23.8%	Low	FARM-TP-1-25	**UJ**

2.5 Method Blanks

Method blanks were prepared and analyzed as required. Target compounds were not detected at or above the RLs in the method blanks.

2.6 Surrogate Spikes

Surrogate spikes were added to all samples as required by the method. All %R values were within the laboratory control limits.

2.7 Matrix Spike (MS) and MS Duplicate (MSD)

MS/MSD analyses were performed on project samples or batch QC samples at the required frequency. All %R and RPD values were within the laboratory control limits, except for the following:

SDG#	Parent Sample ID	Compound	MS %R	MSD %R	Control Limit	Data Qualifier
308474	HA1-2 HA9-2	Hexachlorocyclopentadiene	23% 14%	- 13%	50-150%	**UJ**
308474	HA9-2	2,4-Dichlorophenol	43%	35%	50-150%	**UJ**
309241	HDS-SP-1	Benzoic Acid	36%	44%	50-150%	**UJ**

2.8 Laboratory Control Sample (LCS) and LCS Duplicate (LCSD)

LCS and LCSD were prepared and analyzed as required by the method. All %R and RPD values either met the laboratory control criteria, or the outliers had no adverse effects on data usability (*e.g.,* biased high %R or RPD value for a compound that was not detected in samples), except for the following:

SDG	Compound	RPD	Control Limit	Affected Sample	Data Qualifier
308474	2,4-Dinitrophenol	24%	20%	HA1-2 HA2-2 HA3-2 HA4-2 HA5-2 HA6-2 HA7-2 HA8-2	**UJ**

2.9 Laboratory Duplicate Analysis

Duplicate analyses were performed on project and batch QC samples at the proper frequency. All RPD or concentration difference values either met the laboratory control criteria or the outlier had no adverse effects on data usability (*e.g.,* high RPD value for a compound that was not detected in samples), except for the following:

SDG	Sample	Compound	Concentration Difference	Control Limit	Data Qualifier
309241	HDS-SSW-2	Benzo(b)fluoranthene	0.0047 µg/kg	0.002 µg/kg	**UJ**

2.10 Internal Standards

The method requires that (1) internal standard retention time be within ±30 seconds from that of the associated 12-hour calibration standard, and (2) the area counts of all internal standards be within –50% to +100% of the associated 12-hour calibration standard. All internal standards in the sample and associated QC analyses met the criteria.

2.11 Reporting Limits and Compound Quantitation

Sample-specific RLs were supported with adequate initial calibration concentrations.

2.12 Field Duplicates

Field duplicates were not submitted for SVOCs analyses in these SDGs.

2.13 Overall Assessment of SVOCs Data Usability

SVOCs data are of known quality and acceptable for use, as qualified.

3. PAHs by GC/MS - SIM (EPA Method SW8270D-SIM)

3.1 Sample Management and Holding Times

No anomalies were identified in relation to sample preservation, handling, and transport as discussed in Section 1.1.

Soil samples should be extracted within 14 days and water within seven days of collection. Extracts should be analyzed within 40 days of extraction. All samples were extracted and analyzed within the required holding times.

3.2 GC/MS Instrument Performance Check

DFTPP tuning was performed within each 12-hour interval. All required ion abundance ratios met the method requirements.

3.3 Initial Calibration (ICAL)

The ICAL criteria require that (1) if linear average RFs is chosen as the quantitation option, at least five standards at different concentrations should be analyzed and the %RSD of RFs be ≤20% for the analyte, (2) if least-square linear regression is chosen for quantitation, the correlation coefficient (r) be >0.995, and (3) if six-point non-linear (quadratic) curve is chosen for quantitation, the coefficient of determination (r^2) be >0.99. All ICALs met the requirements.

An ICV standard (second source standard) was analyzed to verify the calibration curve. %D values were either within ±20%, or the exceedance had no adverse effects on data usability (*e.g.,* biased high ICV recovery for a compound not detected in samples).

3.4 Calibration Verification (CCV)

The analytical method requires that (1) continuing calibration verifications be analyzed at the beginning of each 12-hour analysis period prior to the analysis of method blank and samples, and (2) the %D be within ±20%.

3.5 Method Blanks

Method blanks were prepared and analyzed as required. Target compounds were not detected at or above the RLs in the method blanks.

3.6 Surrogate Spikes

Surrogate spikes were added to all samples as required by the method. All surrogate spike %R values were either within the project control limits or at levels that had no adverse effects on data quality (*e.g.,* biased-high recovery for compounds that were not detected in samples). In some cases surrogate spike %R values were not applicable for data evaluation because the samples contained high levels of target PAHs and required dilution analysis; no data were qualified in these cases.

3.7 Matrix Spike (MS) and MS Duplicate (MSD)

MS and MSD analyses were performed on project and batch QC samples at the proper frequency (≥5% of samples analyzed). All %R and RPD values met the project control criteria.

3.8 Laboratory Control Sample (LCS) and LCS Duplicate (LCSD)

LCS and LCSD analyses were performed as required by the method. All %R and RPD values were within the project control limits.

3.9 Internal Standards

The method requires that (1) internal standard retention time be within ±30 seconds from that of the associated 12-hour calibration standard, and (2) the area counts of all internal standards be within –50% to +100% of the associated 12-hour calibration standard. All internal standards in the sample and associated QC analyses met the criteria.

3.10 Reporting Limits and Target Compound Quantitation

Sample-specific RLs were supported with adequate initial calibration concentrations. In some cases samples required dilution for definitive quantitation of target compounds; the RLs were raised accordingly.

3.11 Field Duplicates

One set of field duplicates were submitted for PAHs analyses. Field duplicate results for detected target compounds, RPD (or concentration difference) values, and data qualification were presented in **Appendix A**.

3.12 Overall Assessment of PAHs Data Usability

PAHs data are of known quality and acceptable for use, as qualified.

4. PCB Aroclors (EPA Method SW8082A)

4.1 Sample Management and Holding Times

No anomalies were identified in relation to sample preservation, handling, and transport as discussed in Section 1.1.

Soil samples should be extracted within 14 days of collection and extracts analyzed within 40 days of extraction. All samples were extracted and analyzed within the required holding times.

4.2 Initial Calibration

The method requires that (1) a minimum of 5-point calibration be performed using the mixture of Aroclor 1016 and 1260, (2) a single-point calibration be performed for the other five Aroclors to establish calibration factors (CFs) and for Aroclor pattern recognition, (3) at least 3 peaks (preferably 5 peaks) must be chosen for each Aroclor for

characterization, (4) the %RSD values of Aroclor 1016 and 1260 CFs must be ≤20%, and (5) if dual column analysis is chosen, both columns should meet the requirements. All ICALs met the requirements.

4.3 Calibration Verification

CCV analyses should be performed for each 12-hour analysis sequence prior to sample analyses, and the %D be within ±20%.

Calibration verifications were performed at the required frequency. All %D values either met the control criteria or biased high for target compounds that were not detected in the associated samples.

4.4 Method Blanks

Method blanks were prepared and analyzed as required. PCB Aroclors were not detected at or above the MDLs in the method blanks.

4.5 Surrogate Spikes

Surrogate spikes were added to all samples as required by the method. All surrogate spike %R values were within the laboratory control limits.

4.6 Matrix Spike and Matrix Spike Duplicate (MS/MSD)

MS/MSD analyses were performed on project samples or batch QC samples at the required frequency. All %R and RPD values were within the laboratory control limits, except that the Aroclor 1260 RPD value (25%) for the MS/MSD analyses performed on sample FARM-STOCKPILE-1 (SDG: 308386) was outside the control criteria (20%). The Aroclor 1260 result for this sample was qualified (J) as estimated.

4.7 Laboratory Control Sample (LCS) and LCS Duplicate (LCSD)

LCS and LCSD analyses were performed as required by the method. All %R and RPD values were within the project control limits.

4.8 Laboratory Duplicate Analysis

Duplicate analyses were performed on project and batch QC samples at the proper frequency. All RPD or concentration difference values met the laboratory control criteria.

4.9 Method Reporting Limits and Target Compound Quantitation

Sample-specific RLs were supported with adequate initial calibration concentrations and achieved the project target quantitation limits.

4.10 Field Duplicates

Field duplicates were not submitted for PCB Aroclors analysis in these SDGs.

4.11 Overall Assessment of PCB Aroclors Data Usability

PCB Aroclor data are of known quality and acceptable for use.

5. TPH-Gasoline by GC/FID (Method NWTPH-Gx)

5.1 Sample Management and Holding Times

No anomalies were identified in relation to sample preservation, handling, and transport as discussed in Section 1.1.

Soil samples should be preserved at the time of collection. Soil and water samples should be analyzed within 14 days of collection. All samples were analyzed within the required holding times.

Sample HDS-SP-1 was not preserved immediately upon collection as required by the method. TPH-Gasoline was not detected in this sample at or above their reporting limits. Since the analysis was performed in a relatively short holding time (4 days) of collection, rather than rejected, TPH-Gasoline result for this sample was qualified (UJ) as estimated.

5.2 Initial Calibration (ICAL)

The method criteria require that (1) if linear average RFs is chosen as the quantitation option, the %RSD of RFs be ≤20% for the analyte, (2) if least-square linear regression is chosen for quantitation, the correlation coefficient (r) be ≥0.995, (3) if six-point non-linear (quadratic) curve is chosen for quantitation, the coefficient of determination (r^2) be ≥0.990, and (4) the back-calculated %D value for each calibration standard be within ±15%. Initial calibration met the criteria for all target compounds.

An ICV (second source) standard was analyzed to verify the calibration curve. %D values were within ±20%.

5.3 Calibration Verification

Continuing calibration verification (CCV) analyses were performed at the required frequency for all analytical sequences as required by the method. The %D values for all CCVs met the method criterion (±20%).

5.4 Method Blanks

Method blanks were prepared and analyzed as required. No target compounds were detected at or above the RLs in the method blanks.

5.5 Surrogate Spikes

Surrogate spikes were added to all samples as required by the method. All surrogate spike %R values were within the project control limits, outside the control limits due to matrix interference, or diluted below quantitation limits due to high analyte concentrations. No data qualifying actions were taken in these cases.

5.6 Matrix Spike and Matrix Spike Duplicate

MS/MSD analyses were not performed for TPH-Gasoline analyses; instead, duplicate and LCS analyses in combination were performed.

5.7 Laboratory Control Sample (LCS)

LCS analyses were performed as required by the method. All %R values were within the laboratory control limits.

5.8 Laboratory Duplicate Analysis

Duplicate analyses were performed on project and batch QC samples at the proper frequency. All RPD and concentration difference values met the laboratory control criteria.

5.9 Reporting Limits and Target Compound Quantitation

Sample-specific RLs were supported with adequate initial calibration concentrations.

5.10 Field Duplicates

Field duplicates were not submitted for TPH-Gasoline analyses in these SDGs.

5.11 Overall Assessment of TPH-Gasoline Data Usability

TPH-Gasoline data are of known quality and acceptable for use, as qualified.

6. TPH-Diesel & Motor Oil by GC/FID (Method NWTPH-Dx)

6.1 Holding Time

No anomalies were identified in relation to sample preservation, handling, and transport as discussed in Section 1.1.

Soil samples should be extracted within 14 days and water should be extracted within seven days of collection. Extracts should be analyzed within 40 days of extraction. All samples were extracted and analyzed within the recommended holding times.

6.2 Initial Calibration

The method criteria require that (1) if linear average RFs is chosen as the quantitation option, the %RSD of RFs be ≤20% for the analyte, (2) if least-square linear regression is chosen for quantitation, the correlation coefficient (r) be ≥0.995, (3) if six-point non-linear (quadratic) curve is chosen for quantitation, the coefficient of determination (r^2) be ≥0.990, and (4) the back-calculated %D value for each calibration standard be within ±15%. Initial calibration met the criteria for all target compounds.

An ICV (second source) standard was analyzed to verify the calibration curve. %D values were within ±20%.

6.3 Calibration Verification

The method requires that (1) a mid-range check standard be analyzed prior to and after each analytical batch, and (2) the percent drift (%D) value be within ±20% of the true value.

Calibration verification was performed at required frequency. The %D values were either within the ±20% criterion or at levels that had no adverse effects on data quality (e.g., high-bias %D value where the target compound was not detected in associated sample).

6.4 Method Blanks

Method blanks were prepared and analyzed as required. Target compounds were not detected at or above the RLs in the method blanks.

6.5 Surrogate Spikes

Surrogate spikes were added to all samples as required by the method. All surrogate spike %R values were within the project control limits, outside the control limits due to matrix interference, or diluted below quantitation limits due to high petroleum hydrocarbon concentrations. No data qualifying actions were taken in these cases.

6.6 Matrix Spike (MS) and MS Duplicate (MSD)

MS and MSD analyses were performed on project and batch QC samples at the proper frequency. The %R and RPD values met the laboratory control criteria.

6.7 Laboratory Control Sample (LCS)

LCS analyses were performed as required. All %R values met the project control limits.

6.8 Target Compound Identification

Selected sample extracts were cleaned up with acid and silica gel treatment to minimize the biogenic interference with target compound identification, as required by the project. The laboratory reported results as diesel #2 (C10 - C25) and motor oil (C25 - C36), as required by the method.

6.9 Reporting Limits and Target Compound Quantitation

The reported RLs were supported with adequate ICAL concentrations.

6.10 Field Duplicates

One set of field duplicates were submitted for TPH-Diesel and TPH-Motor Oil analyses. Field duplicate results, RPD (or concentration difference) values, and data qualification for detected TPH-Diesel or Motor Oil were presented in **Appendix A**.

6.11 Overall Assessment of TPH-Diesel and Motor Oil Data Usability

TPH-Diesel and TPH-Motor Oil data are of known quality and acceptable for use, as qualified.

7. Total Metals by ICP/MS and CVAFS (EPA Methods 200.8 and 1631E)

7.1 Sample Management and Holding Times

No anomalies were identified in relation to sample preservation, handling, and transport, as discussed in Section 1.1.

Soil and water samples should be analyzed within 180 days for metals and 28 days for mercury. Samples were analyzed within the required holding times.

7.2 ICP/MS Tuning

Instrument tuning was performed at the required frequency. The stability check (%RSD <5%), mass calibration (mass difference <0.1 AMU), and resolution check (peak width <1.0 AMU at 5% peak height) met the NFG and method criteria.

7.3 Initial Calibration (ICAL)

The ICP/MS method requires that (1) a blank and one calibration standard be used in establishing the analytical curve, and (2) the average of replicate exposures be reported for all standards, QC, and sample analyses.

The CVAFS method require that (1) a blank and five calibration standards be employed to establish the analytical curve, (2) the linearity of the calibration curve should meet the criteria of correlation coefficient ≥ 0.995 for linear regression, and (3) the %RSD <15% if average response factor approach is employed.

All ICALs met the method requirements.

7.4 Calibration Verification (ICV and CCV)

Initial calibration verifications (ICVs) and continuing calibration verifications (CCVs) for ICP/MS and GFAA and ongoing precision recovery (OPR) were analyzed at the required frequency. The %R values either met the control criteria (90 – 110% for metals, 76 – 123% for mercury) or the exceedance had no adverse effects on data usability (e.g., high-bias %D value where the target compound was not detected in associated sample).

7.5 Blanks

Calibration Blanks: Initial calibration blanks (ICBs) and continuing calibration blanks (CCBs) were not analyzed after calibration verification standards. Target analytes were either not detected at or above the RLs in the ICBs and CCBs, or sample results affected by the ICB/CCB detections were qualified as results of detections in preparation blanks.

Preparation Blanks: Preparation blanks were prepared and analyzed as required. Target analytes were either not detected at or above the RLs in the preparation blanks, or sample results were greater than 10X the detection in the associated blank.

7.6 Laboratory Control Sample (LCS)

LCS analyses were performed as required by the method. All %R values were within the project control limits, or the exceedance had no adverse effects on data usability (e.g., high-bias %R value where the target compound was not detected in associated sample).

7.7 Matrix Spike (MS) and Matrix Spike Duplicate (MSD)

MS and MSD analyses were performed on project and batch QC samples at the adequate frequency (>5% of field sample). The %R and RPD values either met the laboratory control limits or the outliers were not applicable for matrix effect evaluation (e.g. sample concentration >4x spiking level), except for the following:

SDG#	Parent Sample ID	Analyte	MS %R	MSD %R	Control Limit	Affected Sample	Data Qualifier
308474	HA1-2	Nickel	66%	66%	69-112%	HA1-2 HA2-2 HA3-2 HA4-2 HA5-2 HA6-2 HA7-2 HA8-2 HA9-2	**J**
309241	Batch QC	Nickel	128%	121%	69-112%	HDS-ESW-2 HDS-NSW-2 HDS-WSW-2 HDS-SSW-2 HDS-BTM-4 HDS-SP-1	**J**

7.8 Internal Standards

At least three internal standards were added to all field and QC samples for ICP/MS analyses. All percent relative intensity values were within the method criteria (60 - 125%).

7.9 Method Reporting Limits and Analyte Quantitation

Sample-specific RLs were supported with adequate initial calibration concentrations.

7.10 Field Duplicates

Field duplicates were not submitted for metals analyses in these SDGs.

7.11 Overall Assessment of Metals Data Usability

Metal data are of known quality and acceptable for use, as qualified.

SUMMARY

Table I. Data Affected by QC Anomalies:

Laboratory ID	Sample ID	Analyte	Qualifier	Qualified Reason
309241-01 309241-02 309241-03 309241-04 309241-05 309241-06 308474-01 308474-02 308474-03 308474-04 308474-05 308474-06 308474-07 308474-08 308474-09	HDS-ESW-2 HDS-NSW-2 HDS-WSW-2 HDS-SSW-2 HDS-BTM-4 HDS-SP-1 HA1-2 HA2-2 HA3-2 HA4-2 HA5-2 HA6-2 HA7-2 HA8-2 HA9-2	Nickel	**J**	MS/MSD %R values biased high
309241-06	HDS-SP-1	Gasoline Range TPH	**UJ**	Sample was not preserved in methanol upon collection
308386-02	FARM-STOCKPILE-1	Aroclor 1260	**UJ**	MS/MSD RPD value was >20%
308310-01 308310-04 308310-05 308310-08 308310-10 308386-04 308386-05 308386-06	FARM-TP-1-10 FARM-TP-2-15 FARM-TP-3-6 FARM-TP-4-12 FARM-TP-5-10 FARM-TP8-12 FARM-TP9-12 FARM-TP10-12	Methylene chloride	**U**	Laboratory contamination
308474-01	HA1-2	Dichlorodifluoromethane	**R**	MS/MSD %R values were <10%

Laboratory ID	Sample ID	Analyte	Qualifier	Qualified Reason
308310-01 308310-02 308310-04 308310-05 308310-08 308310-10 308386-01 308386-02 308386-03 308386-04 308386-05 308386-06 308474-01 308474-02 308474-03 308474-04 308474-05 308474-06 308474-07 308474-08 308474-09 309241-01 309241-02 309241-03 309241-04 309241-05 309241-06	FARM-TP-1-10 FARM-TP-1-25 FARM-TP-2-15 FARM-TP-3-6 FARM-TP-4-12 FARM-TP-5-10 FARM-TP6-12 FARM-STOCKPILE-1 FARM-TP7-14 FARM-TP8-12 FARM-TP9-12 FARM-TP10-12 HA1-2 HA2-2 HA3-2 HA4-2 HA5-2 HA6-2 HA7-2 HA8-2 HA9-2 HDS-ESW-2 HDS-NSW-2 HDS-WSW-2 HDS-SSW-2 HDS-BTM-4 HDS-SP-1	1,2-Dichlorobenzene 1,3-Dichlorobenzene 1,4-Dichlorobenzene 1,2,4-Trichlorobenzene Hexachlorobutadiene Naphthalene	**DNR**	Report from EPA 8270D analysis for lower detection limit
309241-06	HDS-SP-1	All VOCs	**UJ**	Sample was not preserved in MeOH upon collection
308310-02	FARM-TP-1-25	2,4-Dinitrophenol 4,6-Dinitro-2-methylphenol	**UJ**	CCV recovery biased low
308474-01 308474-02 308474-03 308474-04 308474-05 308474-06 308474-07 308474-08	HA1-2 HA2-2 HA3-2 HA4-2 HA5-2 HA6-2 HA7-2 HA8-2	2,4-Dichlorophenol	**UJ**	LCS/LCSD RPD value was >20%
308474-01	HA1-2	Hexachlorobutadiene	**UJ**	MS %R value biased low
308474-09	HA9-2	Hexachlorobutadiene	**UJ**	MS/MSD %R values biased low
309241-06	HDS-SP-1	Benzoic acid	**UJ**	MS/MSD %R values biased low
308474-09	HA9-2	2,4-Dichlorophenol	**UJ**	MS/MSD %R values biased low; LCS/LCSD RPD value was >20%

Laboratory ID	Sample ID	Analyte	Qualifier	Qualified Reason
309537-01 309537-02	DAST-B08-092713 DAST-B09-092713	Anthracene Pyrene Benzo(g,h,i)perylene Indeno(1,2,3-cd)pyrene Benzo(b)fluoranthene Fluoranthene Benzo(k)fluoranthene Chrysene Benzo(a)pyrene Dibenzo(a,h)anthracene Benz(a)anthracene Acenaphthene Phenanthrene Fluorene	**UJ/J**	Field duplicate result was outside project advisory criteria
309241-04	HDS-SSW-2	Benzo(b)fluoranthene	**J**	Laboratory duplicate analysis concentration difference was >2xRL

Table II. Data Qualifiers are defined as follows:

Data Qualifier	Definition
DNR	Do not report; the result should be reported from an alternative analysis.
J	The analyte was detected above the reported quantitation limit, and the reported concentration was an estimated value.
R	The sample results are unusable due to the quality of the data generated because certain criteria were not met. The analyte may or may not be present in the sample.
U	The analyte was analyzed for, but was considered not detected at the reporting limit or reported value.
UJ	The analyte was analyzed for, and the associated quantitation limit was an estimated value.

Approved By: _____ Date: ***6/23/2014***

Mingta Lin, Senior Project Chemist

REFERENCES

USEPA *Contract Laboratory Program National Functional Guidelines for Inorganic Superfund Data Review,* Office of Superfund Remediation and Technical Innovation, U.S. Environmental Protection Agency, January 2010, USEPA 540/R-10/011

USEPA *Contract Laboratory Program National Functional Guidelines for Superfund Organic Methods Data Review,* Office of Superfund Remediation and Technical Innovation, U.S. Environmental Protection Agency, June 2008, USEPA-540-R-08-01.

USEPA *Method 1631, Revision E: Mercury in Water by Oxidation, Purge and Trap, and Cold Vapor Atomic Fluorescence Spectrometry, Office of Water, U.S. Environmental Protection Agency, August 2002, EPA-821-R-02-019.*

USEPA *Test Methods for Evaluating Solid Waste (SW-846). Third Edition and Revised Update IIIA.* Office of Solid Waste and Emergency Response, Washington, D.C. April 1998.

USEPA *Methods for Chemical Analysis of Water and Wastes,* EPA-600/4-79-020, March 1983 and updates.

Standard Methods for the Examination of Water and Wastewater, American Public Health Association, 20th Edition, 1995.

Ecology (Washington State Department of). 1997. *Analytical Methods for Petroleum Hydrocarbons.* Publication No. ECY 97-602. June 1997.

PSEP *Recommended Guidelines for Measuring Organic Compounds in Puget Sound Water, Sediment and Tissue Samples,* Puget Sound Water Quality Authority, April 1997.

Appendix A

Field duplicate RPD is indicative of field and laboratory precision and sample homogeneity in combination. The CLP National Functional Guidelines or *Work Plan* do not specify criteria for field duplicate evaluation. An advisory criterion of 35% was applied to evaluating the RPD values of field duplicate results that are ≥5xRL. For results that are <5xRL, an advisory criterion of ±2RL was applied to evaluating the concentration differences. The RPD (or concentration difference as applicable) values and data qualification for detected compounds in field duplicates are presented as follows:

Analyte	Units	RL	Parent & Field Duplicate Sample Result		RPD	Delta	Data Qualifier
			DAST-B08-092713	DAST-B09-092713			
Diesel Range TPH	mg/kg	50	ND	ND		0	
Oil Range TPH	mg/kg	250	ND	ND		0	
Anthracene	mg/kg	0.01	ND	0.074		0.074	**UJ/J**
Pyrene	mg/kg	0.01	0.036	0.69		0.654	**J/J**
Benzo(g,h,i)perylene	mg/kg	0.01	0.031	0.19		0.159	**J/J**
Indeno(1,2,3-cd)pyrene	mg/kg	0.01	0.028	0.23		0.202	**J/J**
Benzo(b)fluoranthene	mg/kg	0.01	0.089	0.63	150%		**J/J**
Fluoranthene	mg/kg	0.01	0.037	0.76		0.723	**J/J**
Benzo(k)fluoranthene	mg/kg	0.01	0.021	0.19		0.169	**J/J**
Acenaphthylene	mg/kg	0.01	ND	0.01		0.01	
Chrysene	mg/kg	0.01	0.048	0.64		0.592	**J/J**
Benzo(a)pyrene	mg/kg	0.01	0.04	0.38		0.34	**J/J**
Dibenzo(a,h)anthracene	mg/kg	0.01	ND	0.073		0.073	**UJ/J**
Benz(a)anthracene	mg/kg	0.01	0.031	0.52		0.489	**J/J**
Acenaphthene	mg/kg	0.01	ND	0.026		0.026	**UJ/J**
Phenanthrene	mg/kg	0.01	0.019	0.32		0.301	**J/J**
Fluorene	mg/kg	0.01	ND	0.024		0.024	**UJ/J**
Naphthalene	mg/kg	0.01	0.011	0.017		0.006	

Notes:
Delta – Concentration difference between the parent sample and its field duplicate
mg/kg – milligram per kilogram
ND – The analyte was not detected at or above the RL.
RL – Reporting limit
RPD – Relative percent difference

Data Validation Report

Kimberly-Clark Everett, Washington Site
Upland Area Interim Action Soil Sampling
Batch #2 Soil Samples

Prepared for:

Aspect Consulting LLC
401 Second Ave South, Suite 201
Seattle, WA 98014

Prepared by:

Pyron Environmental, Inc.
3530 32nd Way, NW
Olympia, WA 98502

ACRONYMS

%D	percent difference
%D_f	percent drift
%R	percent recovery
%RSD	percent relative standard deviation
AMU	atomic mass unit
CCB	continuing calibration blank
CCC	calibration check compound
CCV	continuing calibration verification
CDD	chlorinated dibenzo-p-dioxin
CDF	chlorinated dibenzofuran
CF	calibration factor
CLP	U.S. EPA Contract Laboratory Program
COC	chain-of-custody
CVAFS	cold vapor atomic fluorescent spectrometry
DFTPP	decafluorotriphenylphosphine
ECD	electron capture detector
EDL	estimated detection limit
EMPC	estimated maximum possible concentration
EPA	U.S. Environmental Protection Agency
FID	Flame ionization detector
GC/MS	gas chromatograph/mass spectrometer
HRGC	high-resolution gas chromatograph
HRMS	high-resolution mass spectrometer
ICAL	initial calibration
ICB	initial calibration blank
ICP	inductively coupled plasma
ICP/MS	inductively coupled plasma/ mass spectrometer
ICSA	ICP interference check sample solution A
ICV	initial calibration verification
IPR	initial precision and recovery
ISC	isomer specificity check
LCS	laboratory control sample
LCSD	laboratory control sample duplicate
m/z	mass-to-charge ratio

MDL	method detection limit
µg/kg	microgram per kilogram
mg/kg	milligram per kilogram
MS	matrix spike
MSD	matrix spike duplicate
NFGs	CLP National Functional Guidelines for Data Review (EPA 2008 – Organics; EPA 2010 – Inorganics; EPA 2011 – Dioxins/Furans)
OPR	ongoing precision and recovery
pg/g	pictogram per gram
PCBs	polychlorinated biphenyls
PCDD	polychlorinated dibenzo-*p*-dioxin
PCDF	polychlorinated dibenzofuran
PEM	performance evaluation mixture
QA/QC	quality assurance/quality control
QAPP	quality assurance project plan
RF	response factor
RL	reporting limit
RPD	relative percent difference
RRT	relative retention time
S/N	signal-to-noise ratio
SDG	sample delivery group
SICP	selected ion current profile
SIM	selective ion monitoring
SPLP	Synthetic precipitation procedure
WDM	window defining mixture

INTRODUCTION

This report presents and discusses findings of the data validation performed on analytical data for soil samples collected during August and September 2013 for the referenced project. The laboratory reports validated herein were submitted by Friedman & Bruya, Inc and ALS Environmental Services, Inc. in Houston, Texas.

A level III data validation was performed on this laboratory report. The validation followed the procedures specified in USEPA CLP Functional Guidelines ([NFGs], EPA 2008 – Organics; EPA 2010 – Inorganics), with modifications to accommodate project and analytical method requirements. The numerical quality assurance/quality control (QA/QC) criteria applied to the validation were in accordance with those specified in the quality assurance project plans ([QAPPs], Aspect, 2009) and the current performance-based control limits established by the laboratory (laboratory control limits). Instrument calibration, frequency of QC analyses, and analytical sequence requirements were evaluated against the respective analytical methods.

Validation findings are discussed in each section pertinent to the QC parameter for each type of analysis. Qualified data with applied data qualifiers are summarized in the **Summary** section at the end of this report.

Samples and the associated analyses validated herein are summarized as follows:

				Analysis				
Field Sample ID	**Laboratory Sample ID**	**Sampling Date**	**Sample Type**	**PAHs**	**PCBs**	**Metals**	**TPH-Dx**	**Misc.**
DAST-S01-092713	309515-01	09/27/13	Soil	X	X	X	X	
DAST-S02-092713	309515-02	09/27/13	Soil	X	X	X	X	
DAST-S03-092713	309515-03	09/27/13	Soil	X	X	X	X	
DAST-S04-092713	309515-04	09/27/13	Soil	X	X	X	X	
DAST-S05-092713	309515-05	09/27/13	Soil	X	X	X	X	
DAST-S06-092713	309515-06	09/27/13	Soil	X	X	X	X	
DAST-S07-092713	309515-07	09/27/13	Soil	X	X	X	X	
DAST-S08-092713	309515-08	09/27/13	Soil	X	X	X	X	
DAST-S09-092713	309515-09	09/27/13	Soil	X	X	X	X	
DAST-S10-092713	309515-10	09/27/13	Soil	X	X	X	X	
DAST-B01-092713	309515-11	09/27/13	Soil	X	X	X	X	
DAST-B02-092713	309515-12	09/27/13	Soil	X	X	X	X	
DAST-B03-092713	309515-13	09/27/13	Soil	X	X	X	X	SPLP
DAST-B04-092713	309515-14	09/27/13	Soil	X	X	X	X	
DAST-B05-092713	309515-15	09/27/13	Soil	X	X	X	X	

Field Sample ID	Laboratory Sample ID	Sampling Date	Sample Type	Analysis				
				PAHs	PCBs	Metals	TPH-Dx	Misc.
DAST-B06-092713	309515-16	09/27/13	Soil	X	X	X	X	
DAST-B07-092713	309515-17	09/27/13	Soil	X	X	X	X	SPLP
RCD-S01-1.5-093013	309532-01	09/30/13	Soil	X	X	X	X	
RCD-S01-1.5-093013	309532-01	09/30/13	Soil	X	X	X	X	
RCD-S02-2-093013	309532-02	09/30/13	Soil	X	X	X	X	
RCD-S02-4-093013	309532-03	09/30/13	Soil	X	X	X	X	
RCD-S03-1-093013	309532-04	09/30/13	Soil	X	X	X	X	
RCD-S04-1.5-093013	309532-05	09/30/13	Soil	X	X	X	X	
RCD-S05-2-093013	309532-06	09/30/13	Soil	X	X	X	X	
RCD-S06-1-093013	309532-07	09/30/13	Soil	X	X	X	X	
RCD-B01-3-093013	309532-08	09/30/13	Soil	X	X	X	X	
RCD-B02-4-093013	309532-09	09/30/13	Soil	X	X	X	X	
RCD-B03-2-093013	309532-10	09/30/13	Soil	X	X	X	X	
DAST-B08-092713	309537-01	09/27/13	Soil		X	X		
DAST-B09-092713	309537-02	09/27/13	Soil		X	X		
RCD-B02-6-100413	310092-01	10/04/13	Soil	X	X	X	X	
RCD-S07-1.5-100413	310092-02	10/04/13	Soil	X	X	X	X	
RCD-S08-2-100413	310092-03	10/04/13	Soil	X	X	X	X	
GF11-S01-1.5	310229-01	10/11/13	Soil	X		X		
GF11-S02-1.5	310229-02	10/11/13	Soil	X		X		SPLP
GF11-S03-1.5	310229-03	10/11/13	Soil	X		X		
GF11-S04-1.5	310229-04	10/11/13	Soil	X		X		
GF11-S06-1.5	310229-06	10/11/13	Soil	X		X		
GF11-S07-1.5	310229-07	10/11/13	Soil	X		X		
GF11-B01-3	310229-08	10/11/13	Soil	X		X		
GF11-B02-3	310229-09	10/11/13	Soil	X		X		
GF11-B03-3	310229-10	10/11/13	Soil	X		X		
BBH-S01-1.5-101513	310290-01	10/15/13	Soil	X		X[(A)]		
BBH-S02-1.5-101513	310290-02	10/15/13	Soil			X[(A)]		
BBH-S03-1.5-101513	310290-03	10/15/13	Soil			X[(A)]		
BBH-S04-1.5-101513	310290-04	10/15/13	Soil			X[(A)]		
BBH-S05-1.5-101513	310290-05	10/15/13	Soil			X[(A)]		
BBH-S06-1.5-101513	310290-06	10/15/13	Soil	X		X[(A)]		
BBH-S07-1.5-101513	310290-07	10/15/13	Soil			X[(A)]		

Field Sample ID	Laboratory Sample ID	Sampling Date	Sample Type	Analysis				
				PAHs	PCBs	Metals	TPH-Dx	Misc.
BBH-S08-1.5-101513	310290-08	10/15/13	Soil			X(A)		
BBH-S09-1.5-101513	310290-09	10/15/13	Soil			X(A)		
BBH-S10-1.5-101513	310290-10	10/15/13	Soil			X(A)		
BBH-S11-1.5-101513	310290-11	10/15/13	Soil	X		X(A)		
BBH-S12-1.5-101513	310290-12	10/15/13	Soil			X(A)		
BBH-S13-1.5-101513	310290-13	10/15/13	Soil			X(A)		
BBH-S14-1.5-101513	310290-14	10/15/13	Soil			X(A)		
BBH-S15-1.5-101513	310290-15	10/15/13	Soil			X(A)		
BBH-S16-1.5-101513	310290-16	10/15/13	Soil	X		X(A)		
BBH-S17-1.5-101513	310290-17	10/15/13	Soil			X(A)		
BBH-S18-1.5-101513	310290-18	10/15/13	Soil			X(A)		
BBH-S19-1.5-101513	310290-19	10/15/13	Soil			X(A)		
BBH-S20-1.5-101513	310290-20	10/15/13	Soil			X(A)		
BBH-S21-1.5-101513	310290-21	10/15/13	Soil	X		X(A)		
BBH-S22-1.5-101513	310290-22	10/15/13	Soil			X(A)		
BBH-S23-1.5-101513	310290-23	10/15/13	Soil			X(A)		
BBH-S24-1.5-101513	310290-24	10/15/13	Soil			X(A)		
BBH-S25-1.5-101513	310290-25	10/15/13	Soil			X(A)		
BBH-S26-1.5-101513	310290-26	10/15/13	Soil	X		X(A)		
BBH-S27-1.5-101513	310290-27	10/15/13	Soil			X(A)		
BBH-S28-1.5-101513	310290-28	10/15/13	Soil			X(A)		
BBH-S30-1.5-101513	310290-29	10/15/13	Soil	X		X(A)		
BBH-S31-1.5-101513	310290-30	10/15/13	Soil			X(A)		
BBH-B01-03-101613	310291-01	10/16/13	Soil	X		X(A)		
BBH-B02-02-101613	310291-02	10/16/13	Soil			X(A)		
BBH-B03-03-101613	310291-03	10/16/13	Soil			X(A)		
BBH-B04-02-101613	310291-04	10/16/13	Soil			X(A)		
BBH-B05-02-101613	310291-05	10/16/13	Soil	X		X(A)		
BBH-B06-03-101613	310291-06	10/16/13	Soil			X(A)		
BBH-B07-03-101613	310291-07	10/16/13	Soil			X(A)		
BBH-B08-03-101613	310291-08	10/16/13	Soil	X		X(A)		
BBH-B09-03-101613	310291-09	10/16/13	Soil			X(A)		
BBH-B10-04-101613	310291-10	10/16/13	Soil			X(A)		
BBH-B11-03-101613	310291-11	10/16/13	Soil			X(A)		

Field Sample ID	Laboratory Sample ID	Sampling Date	Sample Type	Analysis				
				PAHs	PCBs	Metals	TPH-Dx	Misc.
BBH-B12-03-101613	310291-12	10/16/13	Soil	X		X[(A)]		
BBH-B01-03-101613	E1301382-001	10/16/13	Soil					Dioxins
BBH-B04-02-101613	E1301382-002	10/16/13	Soil					Dioxins
BBH-B08-03-101613	E1301382-003	10/16/13	Soil					Dioxins
BBH-B12-03-101613	E1301382-004	10/16/13	Soil					Dioxins

Notes:

Laboratory sample ID prefixed with "E" was a laboratory identity assigned by ALS in Houston, Texas

[(A)] - Antimony, arsenic, cadmium, chromium, copper, mercury, nickel, and zinc

Dioxins - Polychlorinated dioxins and furans

Metals - Arsenic, cadmium, copper, lead, mercury, nickel, and zinc, unless otherwise noted.

Misc. - Miscellaneous

PAHs - Polycyclic aromatic hydrocarbons

PCB - Polychlorinated biphenyl

SPLP - Synthetic precipitation leaching procedure; leachate analyzed for copper, lead, and/or zinc

TPH-Dx - Diesel and motor oil range total petroleum hydrocarbon

TPH-G - Gasoline range total petroleum hydrocarbon

X - The analysis was requested and performed on the sample.

The analytical parameters requested for the samples, the respective analytical methods, and the analytical laboratories are summarized below:

Parameter	Analytical Method	Analytical Laboratory
Polycyclic Aromatic Hydrocarbons (PAHs)	SW846 Method 8270D-SIM	Friedman & Bruya, Inc. (F&BI) Seattle, WA
PCB Aroclors	SW846 Method 8082A	
TPH - Gasoline Range	NWTPH-Gx	
TPH - Diesel & Motor Oil Range	NWTPH-Dx	
Total Metals	EPA Method 200.8	
Mercury	EPA Method 1631E	
Synthetic Precipitation Leaching Procedure	SW846 Method 1312	
Polychlorinated dioxins and Furans	SW846 Method 8290A	ALS Environmental Services, Inc. Houston, Texas

Notes:

1. SW846 - *USEPA Test Methods for Evaluating Solid Waste, Physical/Chemical Methods,* SW-846, Third Edition, December 1996.
2. EPA Methods - *USEPA Methods for Chemical Analysis of Water and Wastes,* EPA–600/4-79-020, March 1983 Revision.
3. EPA Method 1631E - *Mercury in Water by Oxidation, Purge and Trap, and Cold Vapor Atomic Fluorescence Spectrometry,* Office of Water, U.S. Environmental Protection Agency, August 2002, EPA-821-R-02-019.
4. NWTPH Methods – *Washington State Department of Ecology, Analytical Methods for Petroleum Hydrocarbons*, Publication No. ECY 97-602, June 1997.

DATA VALIDATION FINDINGS

1. PAHs by GC/MS - SIM (EPA Method SW8270D-SIM)

1.1 Sample Management and Holding Times

No anomalies were identified in relation to sample preservation, handling, and transport as discussed in Section 1.1.

Soil samples should be extracted within 14 days and water within seven days of collection. Extracts should be analyzed within 40 days of extraction. All samples were extracted and analyzed within the required holding times.

1.2 GC/MS Instrument Performance Check

DFTPP tuning was performed within each 12-hour interval. All required ion abundance ratios met the method requirements.

1.3 Initial Calibration (ICAL)

The ICAL criteria require that (1) if linear average RFs is chosen as the quantitation option, at least five standards at different concentrations should be analyzed and the %RSD of RFs be ≤20% for the analyte, (2) if least-square linear regression is chosen for quantitation, the correlation coefficient (r) be >0.995, and (3) if six-point non-linear (quadratic) curve is chosen for quantitation, the coefficient of determination (r^2) be >0.99. All ICALs met the requirements.

An ICV standard (second source standard) was analyzed to verify the calibration curve. %D values were either within ±20%, or the exceedance had no adverse effects on data usability (*e.g.,* biased high ICV recovery for a compound not detected in samples).

1.4 Calibration Verification (CCV)

The analytical method requires that (1) continuing calibration verifications be analyzed at the beginning of each 12-hour analysis period prior to the analysis of method blank and samples, and (2) the %D be within ±20%.

1.5 Method Blanks

Method blanks were prepared and analyzed as required. Target compounds were not detected at or above the RLs in the method blanks.

1.6 Surrogate Spikes

Surrogate spikes were added to all samples as required by the method. All surrogate spike %R values were either within the project control limits or at levels that had no adverse effects on data quality (*e.g.,* biased-high recovery for compounds that were not detected in samples). In some cases surrogate spike %R values were not applicable for data evaluation because the samples contained high levels of target PAHs and required dilution analysis; no data were qualified in these cases.

1.7 Matrix Spike (MS) and MS Duplicate (MSD)

MS and MSD analyses were performed on project and batch QC samples at the proper frequency (≥5% of samples analyzed). All %R and RPD values met the project control criteria, except for the following:

SDG#	Parent Sample ID	Analyte	MS %R	MSD %R	Control Limit	RPD	Data Qualifier
309532	RCD-S01-1.5-093013	Benzo(b)fluoranthene Fluoranthene	88% 79%	115% 102%	50-125% 31-144%	25% 27%	J

Note: RPD control criterion = ±20%

1.8 Laboratory Control Sample (LCS) and LCS Duplicate (LCSD)

LCS and LCSD analyses were performed as required by the method. All %R and RPD values were within the project control limits.

1.9 Internal Standards

The method requires that (1) internal standard retention time be within ±30 seconds from that of the associated 12-hour calibration standard, and (2) the area counts of all internal standards be within –50% to +100% of the associated 12-hour calibration standard. All internal standards in the sample and associated QC analyses met the criteria.

1.10 Reporting Limits and Target Compound Quantitation

Sample-specific RLs were supported with adequate initial calibration concentrations. In some cases samples required dilution for definitive quantitation of target compounds; the RLs were raised accordingly. Results for remaining (un-diluted) target compounds were to be reported from the initial analysis in favor of the lower detection limits.

1.11 Field Duplicates

Field duplicates were not submitted for polychlorinated dioxins and furans analyses in these SDGs.

1.12 Overall Assessment of PAHs Data Usability

PAHs data are of known quality and acceptable for use, as qualified.

2. PCB Aroclors (EPA Method SW8082A)

2.1 Sample Management and Holding Times

No anomalies were identified in relation to sample preservation, handling, and transport as discussed in Section 1.1.

Soil samples should be extracted within 14 days of collection and extracts analyzed within 40 days of extraction. All samples were extracted and analyzed within the required holding times.

2.2 Initial Calibration

The method requires that (1) a minimum of 5-point calibration be performed using the mixture of Aroclor 1016 and 1260, (2) a single-point calibration be performed for the other five Aroclors to establish calibration factors (CFs) and for Aroclor pattern recognition, (3) at least 3 peaks (preferably 5 peaks) must be chosen for each Aroclor for characterization, (4) the %RSD values of Aroclor 1016 and 1260 CFs must be ≤20%, and (5) if dual column analysis is chosen, both columns should meet the requirements. All ICALs met the requirements.

2.3 Calibration Verification

CCV analyses should be performed for each 12-hour analysis sequence prior to sample analyses, and the %D be within ±20%.

Calibration verifications were performed at the required frequency. All %D values either met the control criteria or biased high for target compounds that were not detected in the associated samples.

2.4 Method Blanks

Method blanks were prepared and analyzed as required. PCB Aroclors were not detected at or above the MDLs in the method blanks.

2.5 Surrogate Spikes

Surrogate spikes were added to all samples as required by the method. All surrogate spike %R values were within the laboratory control limits.

2.6 Matrix Spike and Matrix Spike Duplicate (MS/MSD)

MS/MSD analyses were performed on project samples or batch QC samples at the required frequency. All %R and RPD values were within the laboratory control limits.

2.7 Laboratory Control Sample (LCS) and LCS Duplicate (LCSD)

LCS and LCSD analyses were performed as required by the method. All %R and RPD values were within the project control limits.

2.8 Method Reporting Limits and Target Compound Quantitation

Sample-specific RLs were supported with adequate initial calibration concentrations and achieved the project target quantitation limits.

2.9 Field Duplicates

One set of field duplicates were submitted for PAHs analyses. Field duplicate results for detected target compounds, RPD (or concentration difference) values, and data qualification were presented in **Appendix A**.

2.10 Overall Assessment of PCB Aroclors Data Usability

PCB Aroclor data are of known quality and acceptable for use.

3. TPH-Diesel & Motor Oil by GC/FID (Method NWTPH-Dx)

3.1 Holding Time

No anomalies were identified in relation to sample preservation, handling, and transport as discussed in Section 1.1.

Soil samples should be extracted within 14 days and water should be extracted within seven days of collection. Extracts should be analyzed within 40 days of extraction. All samples were extracted and analyzed within the recommended holding times.

3.2 Initial Calibration

The method criteria require that (1) if linear average RFs is chosen as the quantitation option, the %RSD of RFs be ≤20% for the analyte, (2) if least-square linear regression is chosen for quantitation, the correlation coefficient (r) be ≥0.995, (3) if six-point non-linear (quadratic) curve is chosen for quantitation, the coefficient of determination (r^2) be ≥0.990, and (4) the back-calculated %D value for each calibration standard be within ±15%. Initial calibration met the criteria for all target compounds.

An ICV (second source) standard was analyzed to verify the calibration curve. %D values were within ±20%.

3.3 Calibration Verification

The method requires that (1) a mid-range check standard be analyzed prior to and after each analytical batch, and (2) the percent drift (%D) value be within ±20% of the true value.

Calibration verification was performed at required frequency. The %D values were either within the ±20% criterion or at levels that had no adverse effects on data quality (e.g., high-bias %D value where the target compound was not detected in associated sample).

3.4 Method Blanks

Method blanks were prepared and analyzed as required. Target compounds were not detected at or above the RLs in the method blanks.

3.5 Surrogate Spikes

Surrogate spikes were added to all samples as required by the method. All surrogate spike %R values were within the project control limits, outside the control limits due to matrix interference, or diluted below quantitation limits due to high petroleum hydrocarbon concentrations. No data qualifying actions were taken in these cases.

3.6 Matrix Spike (MS) and MS Duplicate (MSD)

MS and MSD analyses were performed on project and batch QC samples at the proper frequency. The %R and RPD values met the laboratory control criteria.

3.7 Laboratory Control Sample (LCS)

LCS analyses were performed as required. All %R values met the project control limits.

3.8 Target Compound Identification

Selected sample extracts were cleaned up with acid and silica gel treatment to minimize the biogenic interference with target compound identification, as required by the project. The laboratory reported results as diesel #2 (C10 - C25) and motor oil (C25 - C36), as required by the method.

3.9 Reporting Limits and Target Compound Quantitation

The reported RLs were supported with adequate ICAL concentrations.

3.10 Field Duplicates

Field duplicates were not submitted for polychlorinated dioxins and furans analyses in these SDGs.

3.11 Overall Assessment of TPH-Diesel and Motor Oil Data Usability

TPH-Diesel and TPH-Motor Oil data are of known quality and acceptable for use, as qualified.

4. Total & SPLP Metals by ICP/MS and CVAFS (EPA Methods 200.8 and 1631E)

4.1 Sample Management and Holding Times

No anomalies were identified in relation to sample preservation, handling, and transport, as discussed in Section 1.1.

Soil and water samples should be analyzed within 180 days for metals and 28 days for mercury. Samples were analyzed within the required holding times.

4.2 ICP/MS Tuning

Instrument tuning was performed at the required frequency. The stability check (%RSD <5%), mass calibration (mass difference <0.1 AMU), and resolution check (peak width <1.0 AMU at 5% peak height) met the NFG and method criteria.

4.3 Initial Calibration (ICAL)

The ICP/MS method requires that (1) a blank and one calibration standard be used in establishing the analytical curve, and (2) the average of replicate exposures be reported for all standards, QC, and sample analyses.

The CVAFS method require that (1) a blank and five calibration standards be employed to establish the analytical curve, (2) the linearity of the calibration curve should meet the criteria of correlation coefficient ≥ 0.995 for linear regression, and (3) the %RSD <15% if average response factor approach is employed.

All ICALs met the method requirements.

4.4 Calibration Verification (ICV and CCV)

Initial calibration verifications (ICVs) and continuing calibration verifications (CCVs) for ICP/MS and GFAA and ongoing precision recovery (OPR) were analyzed at the required frequency. The %R values either met the control criteria (90 – 110% for metals, 76 – 123% for mercury) or the exceedance had no adverse effects on data usability (e.g., high-bias %D value where the target compound was not detected in associated sample).

4.5 Blanks

Calibration Blanks: Initial calibration blanks (ICBs) and continuing calibration blanks (CCBs) were not analyzed after calibration verification standards. Target analytes were either not detected at or above the RLs in the ICBs and CCBs, or sample results affected by the ICB/CCB detections were qualified as results of detections in preparation blanks.

Preparation Blanks: Preparation blanks were prepared and analyzed as required. Target analytes were either not detected at or above the RLs in the preparation blanks, or sample results were greater than 10X the detection in the associated blank.

4.6 Laboratory Control Sample (LCS)

LCS analyses were performed as required by the method. All %R values were within the project control limits, or the exceedance had no adverse effects on data usability (e.g., high-bias %R value where the target compound was not detected in associated sample).

4.7 Matrix Spike (MS) and Matrix Spike Duplicate (MSD)

MS and MSD analyses were performed on project and batch QC samples at the adequate frequency (>5% of field sample). The %R and RPD values either met the laboratory control limits or the outliers were not applicable for matrix effect evaluation (e.g. sample concentration >4x spiking level), except for the following:

SDG#	Parent Sample ID	Analyte	MS %R	MSD %R	Control Limit	RPD	Affected Sample	Data Qualifier
309515	DAST-S01-092713	Zinc	128%	100%	55-129%	25%	All samples in this SDG	**J**
310229	GF11-S01-1.5	Copper Zinc	108% 140%	167% 269%	57-120% 59-148%	43% 63%	All samples in this SDG	**J**
310229	GF11-S02-1.5	SPLP/Lead	342%	28%	50-150%	170%	GF11-S02-1.5	**J**
310290	BBH-S01-1.5-101513 BBH-S21-1.5-101513	Zinc	135% 114%	105% 63%	55-129%	25% 58%	All samples in this SDG	**J**
310290	BBH-S01-1.5-101513	Mercury	72%	90%	62-140%	22%	BBH-S01-1.5-101513 BBH-S02-1.5-101513 BBH-S03-1.5-101513 BBH-S04-1.5-101513 BBH-S05-1.5-101513 BBH-S06-1.5-101513 BBH-S07-1.5-101513 BBH-S08-1.5-101513 BBH-S09-1.5-101513 BBH-S10-1.5-101513 BBH-S11-1.5-101513 BBH-S12-1.5-101513 BBH-S13-1.5-101513 BBH-S14-1.5-101513 BBH-S15-1.5-101513 BBH-S17-1.5-101513 BBH-S18-1.5-101513 BBH-S19-1.5-101513 BBH-S20-1.5-101513	**J**
310290	BBH-S21-1.5-101513	Antimony	88%	112%	54-116%	24%	BBH-S21-1.5-101513 BBH-S22-1.5-101513 BBH-S31-1.5-101513	**J**
310291	BBH-B12-03-101613	Mercury	95%	134%	62-140%	34%	BBH-B05-02-101613 BBH-B06-03-101613 BBH-B08-03-101613 BBH-B09-03-101613	**J**
310291	BBH-B12-03-101613	Nickel	91%	198%	69-112%	74%	BBH-B01-03-101613 BBH-B02-02-101613 BBH-B03-03-101613 BBH-B04-02-101613 BBH-B05-02-101613 BBH-B06-03-101613 BBH-B07-03-101613 BBH-B08-03-101613 BBH-B09-03-101613 BBH-B10-04-101613 BBH-B11-03-101613 BBH-B12-03-101613	**J**

Note: RPD control criterion = ±20%

4.8 Internal Standards

At least three internal standards were added to all field and QC samples for ICP/MS analyses. All percent relative intensity values were within the method criteria (60 - 125%).

4.9 Method Reporting Limits and Analyte Quantitation

Sample-specific RLs were supported with adequate initial calibration concentrations.

4.10 Field Duplicates

One set of field duplicates were submitted for PAHs analyses. Field duplicate results for detected target compounds, RPD (or concentration difference) values, and data qualification were presented in **Appendix A**.

4.11 Overall Assessment of Metals Data Usability

Metal data are of known quality and acceptable for use, as qualified.

5. Polychlorinated Dioxins/Furans by HRGC/HRMS (EPA Method SW8290)

5.1 Sample Management and Holding Times

No anomalies were identified in relation to sample preservation, handling, and transport, as discussed in Section 1.1.

EPA SW846 Method 8290 recommends a holding time of 30 days for solid samples stored in the dark at 4°C and completely analyzed within 45 days of extraction. All samples were extracted and analyzed within the recommended holding times.

5.2 HRGC/HRMS Instrument Performance Check

The method requires that (1) for mass calibration and resolution, the laboratory must provides evidence of mass spectrometer resolution > 10,000 at the beginning and end of each 12-hour analytical sequence. If mass calibration and resolution tuning are not correctly performed, interferences may degrade chlorinated dibenzo-*p*-dioxin and chlorinated dibenzofuran (CDD/CDF) identification and quantitation; (2) the mass spectrometer selected ion monitoring (SIM) scan descriptor switching times are determined by the analysis of the Window Defining Mixture (WDM) which contains the first and last eluting isomers in each homologue; and (3) chromatographic resolution is verified by analyzing one of two Isomer Specificity Check (ISC) solutions, depending on

the Gas Chromatograph (GC) column used for analysis. All HRGC/HRMS instrument performance checks met the criteria.

5.3 Initial Calibration (ICAL)

The method requires that (1) the chromatographic peak separation between the 2,3,7,8-TCDD peak and the 1,2,3,8-TCDD peak and between the 2,3,7,8-TCDF peak and the 2,3,4,7-TCDF peak and must be resolved with a valley of < 25%; (2) the ion abundance ratio be within a ± 15% window around the theoretical abundance ratio; (3) the retention times (RTs) of the isomers must fall within the appropriate RT windows established by the WDM analysis. In addition, the absolute RT of the internal standard $^{13}C_{12}$-1,2,3,4-TCDD must exceed 25 minutes on the DB-5 (or equivalent) column and 15 minutes on the DB-225 (or equivalent) column; (4) the instrument sensitivity (signal-to-noise [S/N] ratio) must be >10:1; (5) the percent relative standard deviation (%RSD) be <20% for native isomers and < 30% for labeled isomers; (6) all initial calibration standards (CSs) must be analyzed at the correct concentration levels; (7) initial calibrations must be performed when the contract is awarded, whenever significant instrument maintenance is performed (e.g., ion source cleaning, GC column replacement, etc.), or if calibration verification criteria are not met. All ICALs met the method requirements.

5.4 Calibration Verification

The method requires that (1) continuing calibrations be analyzed at the beginning of each 12-hour analysis period prior to the analysis of method blank and samples, (2) the percent difference (%D) be within ±20% for native isomers and be within ±30% for labeled isomers, and (3) the ion abundance ratio, retention times, relative retention times, instrument sensitivity meet the criteria for initial calibrations. All calibration verification analyses met the criteria.

5.5 Method Blanks

Method blanks were prepared and analyzed as required for each preparation batch. Selected target compounds were detected in method blanks. Sample results less than 5x the level found in the associated method blank were qualified (U) as non-detects at the reported values. Qualified data were summarized in **SUAMMRY** section at the end of this report.

5.6 Laboratory Control Samples (LCS)

LCS analyses were performed as required by the method. The recovery met the method control limits for all target and labeled compounds.

5.7 Matrix Spike and Matrix Spike Duplicate (MS/MSD)

MS and MSD analyses were not performed on a project sample in this SDG.

5.8 Labeled Compounds

Nine labeled internal standards and one cleanup recovery standard were added to all samples as required by the method. All %R values for internal standards and cleanup standard met the method requirement.

5.9 Target Compound Identification

All detected target congeners were properly identified. The ion ratios for a number of detection did not meet the method criteria; these results were qualified as non-detected at their reported values, as summarized in **SUMMARY, Table I.**

5.10 Reporting Limits, Estimated Detection Limits (EDLs), and Compound Quantitation

Correct internal standards, quantitation ions, and average RFs were used to quantitate target compound detections. The RLs were supported with adequate ICAL calibration concentrations. Sample-specific EDLs and RLs were adjusted with sample weights, internal standard peak height, and noise levels as required by the method.

Selected target congeners in a number of samples had chlorodiphenyl ether interference present in their retention time region. The affected results were qualified (J) as estimated.

5.11 Second Column Confirmation

All positive detection of 2,3,7,8-TCDF were re-analyzed on the DB-225 column for confirmation and results reported from the second column (DB-225) should be used for data interpretation.

5.12 Field Duplicates

Field duplicates were not submitted for polychlorinated dioxins and furans analyses in these SDGs.

5.13 Overall Assessment of Polychlorinated Dioxins/Furans Data Usability

Polychlorinated dioxins and furans data were of known quality and acceptable for use as qualified.

SUMMARY

Table I. Data Affected by QC Anomalies:

Laboratory ID	Sample ID	Analyte	Qualifier	Qualified Reason
310290-01	BBH-S01-1.5-101513	Mercury	J	MS/MSD RPD value >20%
310290-02	BBH-S02-1.5-101513			
310290-03	BBH-S03-1.5-101513			
310290-04	BBH-S04-1.5-101513			
310290-05	BBH-S05-1.5-101513			
310290-06	BBH-S06-1.5-101513			
310290-07	BBH-S07-1.5-101513			
310290-08	BBH-S08-1.5-101513			
310290-09	BBH-S09-1.5-101513			
310290-10	BBH-S10-1.5-101513			
310290-11	BBH-S11-1.5-101513			
310290-12	BBH-S12-1.5-101513			
310290-13	BBH-S13-1.5-101513			
310290-14	BBH-S14-1.5-101513			
310290-15	BBH-S15-1.5-101513			
310290-17	BBH-S17-1.5-101513			
310290-18	BBH-S18-1.5-101513			
310290-19	BBH-S19-1.5-101513			
310290-20	BBH-S20-1.5-101513			
310291-05	BBH-B05-02-101613			
310291-06	BBH-B06-03-101613			
310291-08	BBH-B08-03-101613			
310291-09	BBH-B09-03-101613			
309537-01	DAST-B08-092713	Arsenic	J	Field duplicate RPD >35%
309537-02	DAST-B09-092713			
310229-01	GF11-S01-1.5	Copper Zinc	J	MS/MSD %R and RPD value outside control criteria
310229-02	GF11-S02-1.5			
310229-03	GF11-S03-1.5			
310229-04	GF11-S04-1.5			
310229-05	GF11-S05-1.5			
310229-06	GF11-S06-1.5			
310229-07	GF11-S07-1.5			
310229-08	GF11-B01-3			
310229-09	GF11-B02-3			
310229-10	GF11-B03-3			
310290-21	BBH-S21-1.5-101513	Antimony	J	MS/MSD RPD value >20%
310290-22	BBH-S22-1.5-101513			
310290-30	BBH-S31-1.5-101513			

Laboratory ID	Sample ID	Analyte	Qualifier	Qualified Reason
310290-01	BBH-S01-1.5-101513	Zinc	J	MS and/or MSD %R and MS/MSD RPD values outside control criteria
310290-02	BBH-S02-1.5-101513			
310290-03	BBH-S03-1.5-101513			
310290-04	BBH-S04-1.5-101513			
310290-05	BBH-S05-1.5-101513			
310290-06	BBH-S06-1.5-101513			
310290-07	BBH-S07-1.5-101513			
310290-08	BBH-S08-1.5-101513			
310290-09	BBH-S09-1.5-101513			
310290-10	BBH-S10-1.5-101513			
310290-11	BBH-S11-1.5-101513			
310290-12	BBH-S12-1.5-101513			
310290-13	BBH-S13-1.5-101513			
310290-14	BBH-S14-1.5-101513			
310290-15	BBH-S15-1.5-101513			
310290-17	BBH-S17-1.5-101513			
310290-18	BBH-S18-1.5-101513			
310290-19	BBH-S19-1.5-101513			
310290-20	BBH-S20-1.5-101513			
310290-21	BBH-S21-1.5-101513			
310290-22	BBH-S22-1.5-101513			
310290-23	BBH-S23-1.5-101513			
310290-27	BBH-S27-1.5-101513			
310290-28	BBH-S28-1.5-101513			
310290-29	BBH-S30-1.5-101513			
310290-30	BBH-S31-1.5-101513			
309515-01	DAST-S01-092713	Zinc	J	MS/MSD RPD value >20%
309515-02	DAST-S02-092713			
309515-03	DAST-S03-092713			
309515-04	DAST-S04-092713			
309515-05	DAST-S05-092713			
309515-06	DAST-S06-092713			
309515-07	DAST-S07-092713			
309515-08	DAST-S08-092713			
309515-09	DAST-S09-092713			
309515-10	DAST-S10-092713			
309515-11	DAST-B01-092713			
309515-12	DAST-B02-092713			
309515-13	DAST-B03-092713			
309515-14	DAST-B04-092713			
309515-15	DAST-B05-092713			
309515-16	DAST-B06-092713			
309515-17	DAST-B07-092713			

Laboratory ID	Sample ID	Analyte	Qualifier	Qualified Reason
310291-01 310291-02 310291-03 310291-04 310291-05 310291-06 310291-07 310291-08 310291-09 310291-10 310291-11 310291-12	BBH-B01-03-101613 BBH-B02-02-101613 BBH-B03-03-101613 BBH-B04-02-101613 BBH-B05-02-101613 BBH-B06-03-101613 BBH-B07-03-101613 BBH-B08-03-101613 BBH-B09-03-101613 BBH-B10-04-101613 BBH-B11-03-101613 BBH-B12-03-101613	Nickel	**J**	MSD %R and RPD values outside control criteria
310229-02	GF11-S02-1.5	SPLP/Lead	**J**	MS/MSD %R and RPD value outside control criteria
309532-01	RCD-S01-1.5-093013	Benzo(b)fluoranthene Fluoranthene	**J**	MS/MSD RPD value >20%
E1301382-002	BBH-B04-02-101613	1,2,3,4,6,7,8-HpCDF	**U**	Concentration <5x the detection in MB
E1301382-002	BBH-B04-02-101613	Total HpCDF	**U**	Concentration <5x the detection in MB
E1301382-003	BBH-B08-03-101613	1,2,3,4,7,8-HxCDF 1,2,3,7,8-PeCDF 2,3,4,6,7,8-HxCDF	**J**	Interference of chlorobiphenyl ether was present
E1301382-001	BBH-B01-03-101613	1,2,3,4,7,8-HxCDD 1,2,3,7,8-PeCDD 2,3,4,6,7,8-HxCDF	**U**	Ion abundance ratio did not meet method requirement
E1301382-002	BBH-B04-02-101613	1,2,3,4,7,8-HxCDF 1,2,3,6,7,8-HxCDF 1,2,3,7,8-PeCDF 2,3,4,6,7,8-HxCDF	**U**	Ion abundance ratio did not meet method requirement
E1301382-003	BBH-B08-03-101613	2,3,4,6,7,8-HxCDF	**U**	Ion abundance ratio did not meet method requirement
E1301382-004	BBH-B12-03-101613	1,2,3,4,7,8-HxCDD 1,2,3,6,7,8-HxCDD 1,2,3,6,7,8-HxCDF 1,2,3,7,8-PeCDD 2,3,4,7,8-PeCDF	**U**	Ion abundance ratio did not meet method requirement

Table II. Data Qualifiers are defined as follows:

Data Qualifier	Definition
J	The analyte was detected above the reported quantitation limit, and the reported concentration was an estimated value.
U	The analyte was analyzed for, but was considered not detected at the reporting limit or reported value.
UJ	The analyte was analyzed for, and the associated quantitation limit was an estimated value.

Approved By: _____ Date: ***6/23/2014***

Mingta Lin, Senior Project Chemist

REFERENCES

USEPA *Contract Laboratory Program National Functional Guidelines for Inorganic Superfund Data Review,* Office of Superfund Remediation and Technical Innovation, U.S. Environmental Protection Agency, January 2010, USEPA 540/R-10/011

USEPA *Contract Laboratory Program National Functional Guidelines for Superfund Organic Methods Data Review,* Office of Superfund Remediation and Technical Innovation, U.S. Environmental Protection Agency, June 2008, USEPA-540-R-08-01.

USEPA *Method 1631, Revision E: Mercury in Water by Oxidation, Purge and Trap, and Cold Vapor Atomic Fluorescence Spectrometry, Office of Water, U.S. Environmental Protection Agency, August 2002, EPA-821-R-02-019.*

USEPA *Test Methods for Evaluating Solid Waste (SW-846). Third Edition and Revised Update IIIA.* Office of Solid Waste and Emergency Response, Washington, D.C. April 1998.

USEPA *Methods for Chemical Analysis of Water and Wastes,* EPA-600/4-79-020, March 1983 and updates.

Standard Methods for the Examination of Water and Wastewater, American Public Health Association, 20th Edition, 1995.

Ecology (Washington State Department of). 1997. *Analytical Methods for Petroleum Hydrocarbons.* Publication No. ECY 97-602. June 1997.

PSEP *Recommended Guidelines for Measuring Organic Compounds in Puget Sound Water, Sediment and Tissue Samples,* Puget Sound Water Quality Authority, April 1997.

Appendix A

Field duplicate RPD is indicative of field and laboratory precision and sample homogeneity in combination. The CLP National Functional Guidelines or *Work Plan* do not specify criteria for field duplicate evaluation. An advisory criterion of 35% was applied to evaluating the RPD values of field duplicate results that are ≥5xRL. For results that are <5xRL, an advisory criterion of ±2RL was applied to evaluating the concentration differences. The RPD (or concentration difference as applicable) values and data qualification for detected compounds in field duplicates are presented as follows:

Analyte	Units	RL	Parent & Field Duplicate Sample Result		RPD	Delta	Data Qualifier
			DAST-B08-092713	DAST-B09-092713			
Mercury	mg/kg	0.1	ND	0.1		0.1	
Lead	mg/kg	1	28.1	39.1	28%		
Nickel	mg/kg	1	21.4	21.5	0%		
Arsenic	mg/kg	1	8.49	13.7	38%		**J/J**
Cadmium	mg/kg	1	2.05	2.19		0.14	
Copper	mg/kg	1	55.7	64.4	14%		
Zinc	mg/kg	5	91	110	17%		
Aroclor 1260	mg/kg	0.1	0.31	0.34		0.03	
Aroclor 1254	mg/kg	0.1	0.29	0.4		0.11	
Aroclor 1221	mg/kg	0.1	ND	ND		0	
Aroclor 1232	mg/kg	0.1	ND	ND		0	
Aroclor 1248	mg/kg	0.1	ND	ND		0	
Aroclor 1016	mg/kg	0.1	ND	ND		0	
Aroclor 1242	mg/kg	0.1	ND	ND		0	

Notes:
Delta – Concentration difference between the parent sample and its field duplicate
mg/kg – milligram per kilogram
ND – The analyte was not detected at or above the RL.
RL – Reporting limit
RPD – Relative percent difference

Data Validation Report

Kimberly-Clark Everett, Washington Site
Upland Area Interim Action Soil Sampling
Batch #3 Soil Samples

Prepared for:

Aspect Consulting LLC
401 Second Ave South, Suite 201
Seattle, WA 98014

Prepared by:

Pyron Environmental, Inc.
3530 32nd Way, NW
Olympia, WA 98502

ACRONYMS

%D	percent difference
%D_f	percent drift
%R	percent recovery
%RSD	percent relative standard deviation
AMU	atomic mass unit
CCB	continuing calibration blank
CCC	calibration check compound
CCV	continuing calibration verification
CF	calibration factor
CLP	U.S. EPA Contract Laboratory Program
COC	chain-of-custody
CVAFS	cold vapor atomic fluorescent spectrometry
DFTPP	decafluorotriphenylphosphine
ECD	electron capture detector
EPA	U.S. Environmental Protection Agency
FID	Flame ionization detector
GC/MS	gas chromatograph/mass spectrometer
ICAL	initial calibration
ICB	initial calibration blank
ICP/MS	inductively coupled plasma/ mass spectrometer
ICV	initial calibration verification
LCS	laboratory control sample
LCSD	laboratory control sample duplicate
MDL	method detection limit
µg/kg	microgram per kilogram
mg/kg	milligram per kilogram
MS	matrix spike
MSD	matrix spike duplicate
NFGs	CLP National Functional Guidelines for Data Review (EPA 2008 – Organics; EPA 2010 – Inorganics)
OPR	ongoing precision and recovery
PCBs	polychlorinated biphenyls
QA/QC	quality assurance/quality control
RF	response factor

RL	reporting limit
RPD	relative percent difference
RRT	relative retention time
SDG	sample delivery group
SIM	selective ion monitoring
SVOCs	semi-volatile organic compounds
VOCs	volatile organic compounds

INTRODUCTION

This report presents and discusses findings of the data validation performed on analytical data for soil samples collected during October and November 2013 for the referenced project. The laboratory reports validated herein were submitted by Friedman & Bruya, Inc.

A level III data validation was performed on this laboratory report. The validation followed the procedures specified in USEPA CLP Functional Guidelines ([NFGs], EPA 2008 – Organics; EPA 2010 – Inorganics), with modifications to accommodate project and analytical method requirements. The numerical quality assurance/quality control (QA/QC) criteria applied to the validation were in accordance with those specified in the quality assurance project plans ([QAPPs], Aspect, 2009) and the current performance-based control limits established by the laboratory (laboratory control limits). Instrument calibration, frequency of QC analyses, and analytical sequence requirements were evaluated against the respective analytical methods.

Validation findings are discussed in each section pertinent to the QC parameter for each type of analysis. Qualified data with applied data qualifiers are summarized in the **Summary** section at the end of this report.

Samples and the associated analyses validated herein are summarized as follows:

Field Sample ID	Laboratory Sample ID	Sampling Date	Sample Type	Analysis					
				VOC	PAHs	PCBs	Metals	TPH-Gx	TPH-Dx
RCD-S09-2	310226-01	10/11/13	Soil		X	X	X		X
DAST-B10-4	310227-01	10/11/13	Soil		X	X	X		X
DAST-S11-2	310227-02	10/11/13	Soil		X	X	X		X
BAST-B01-3.5	310228-01	10/10/13	Soil		X				X
BAST-S01-2	310228-02	10/10/13	Soil		X				X
BAST-S02-2	310228-03	10/10/13	Soil		X				X
BAST-B002-04-101713	310361-01	10/17/13	Soil		X				X
BAST-B003-05-101713	310361-02	10/17/13	Soil		X				X
BAST-B004-05-101713	310361-03	10/17/13	Soil		X				X
BAST-B005-06-101713	310361-04	10/17/13	Soil		X				X
BAST-B006-06-101713	310361-05	10/17/13	Soil		X		X[(A)]		X
BAST-B011-04-101713	310361-06	10/17/13	Soil		X				X
BAST-B012-04-101713	310361-07	10/17/13	Soil		X				X
BAST-B013-04-101713	310361-08	10/17/13	Soil		X				X
BAST-B014-04-101713	310361-09	10/17/13	Soil		X				X
BAST-B031-04-101713	310361-10	10/17/13	Soil		X				X

Field Sample ID	Laboratory Sample ID	Sampling Date	Sample Type	Analysis					
				VOC	PAHs	PCBs	Metals	TPH-Gx	TPH-Dx
BAST-B021-04-101713	310361-11	10/17/13	Soil		X				X
BAST-B041-3.5-101713	310361-12	10/17/13	Soil		X				X
BAST-B007-05-101713	310361-13	10/17/13	Soil		X				X
BAST-B008-06-101713	310361-14	10/17/13	Soil		X				X
BAST-B009-05-101713	310361-15	10/17/13	Soil		X		X(A)		X
BAST-B009-05-101713	310361-15	10/17/13	Soil		X				X
BAST-B015-05-101713	310361-16	10/17/13	Soil		X				X
BAST-B016-05-101713	310361-17	10/17/13	Soil		X				X
BAST-B017-05-101713	310361-18	10/17/13	Soil		X				X
BAST-B018-05-101713	310361-19	10/17/13	Soil		X				X
BAST-B024-05-101713	310361-20	10/17/13	Soil		X		X(A)		X
BAST-B30-3.5	310361-21	10/17/13	Soil		X				X
BAST-S03-3.5	310361-22	10/17/13	Soil		X				X
BAST-S04-3.5	310361-23	10/17/13	Soil		X				X
BAST-S05-3.5	310361-24	10/17/13	Soil		X				X
BAST-S06-3.5	310361-25	10/17/13	Soil		X		X(A)		X
BAST-S07-3.5	310361-26	10/17/13	Soil		X				X
BAST-B500-3.5	310361-27	10/17/13	Soil		X				X
BAST-S08-3.5	310387-01	10/18/13	Soil		X				X
BAST-S09-3.5	310387-02	10/18/13	Soil		X				X
BAST-B042-06	310387-03	10/18/13	Soil		X				X
BAST-S25-03	310387-04	10/18/13	Soil		X				X
BAST-S16-03	310387-05	10/18/13	Soil		X		X(A)		X
BAST-B010-05	310387-06	10/18/13	Soil		X				X
BAST-B023-04	310387-07	10/18/13	Soil		X				X
BAST-B501-04	310387-08	10/18/13	Soil		X				X
BAST-B036-7.0	310406-01	10/21/13	Soil		X				X
BAST-502-3.2	310406-02	10/21/13	Soil		X				X
BAST-S010-3.5	310406-03	10/21/13	Soil		X		X		X
BAST-S011-3.0	310406-04	10/21/13	Soil		X				X
BAST-S012-3.0	310406-05	10/21/13	Soil		X				X
BAST-S013-3.0	310406-06	10/21/13	Soil		X				X
BAST-S014-3.0	310406-07	10/21/13	Soil		X				X
BAST-S015-3.0	310406-08	10/21/13	Soil		X		X		X

Field Sample ID	Laboratory Sample ID	Sampling Date	Sample Type	Analysis					
				VOC	PAHs	PCBs	Metals	TPH-Gx	TPH-Dx
BAST-B039-3.0	310406-09	10/21/13	Soil		X				X
BAST-S017-3.0	310406-10	10/21/13	Soil		X				X
BAST-S018-3.0	310406-11	10/21/13	Soil		X				X
BAST-B022-7.0	310407-01	10/22/13	Soil		X				X
BAST-B026-6.0	310407-02	10/22/13	Soil		X				X
BAST-B027-7.0	310407-03	10/22/13	Soil		X		X		X
BAST-B028-7.0	310407-04	10/22/13	Soil		X				X
BAST-B029-7.0	310407-05	10/22/13	Soil		X				X
BAST-B034-7.0	310407-06	10/22/13	Soil		X				X
BAST-B035-7.0	310407-07	10/22/13	Soil		X				X
BAST-B037-7.0	310407-08	10/22/13	Soil		X		X		X
BAST-B038-7.0	310407-09	10/22/13	Soil		X				X
BBH-B13-4	310456-01	10/23/13	Soil				X[(A)]		
BBH-B14-4	310456-02	10/23/13	Soil				X[(A)]		
BBH-B15-4	310456-03	10/23/13	Soil				X[(A)]		
BBH-B16-3	310456-04	10/23/13	Soil				X[(A)]		
BBH-S29-1.5	310456-05	10/23/13	Soil				X[(A)]		
BAST-S034-3.0	310457-01	10/23/13	Soil		X		X		X
BAST-S026-3.0	310457-02	10/23/13	Soil		X				X
BAST-S027-3.0	310457-03	10/23/13	Soil	X	X			X	X
BAST-S028-3.0	310457-04	10/23/13	Soil	X	X			X	X
BAST-S029-3.0	310457-05	10/23/13	Soil	X	X			X	X
BAST-B032-3.0	310457-06	10/23/13	Soil	X	X			X	X
BAST-B043-9.0	310486-01	10/24/13	Soil		X				X
BAST-B044-9.0	310486-02	10/24/13	Soil		X				X
BAST-B045-9.0	310486-03	10/24/13	Soil		X				X
BAST-S030-3.0	310510-01	10/25/13	Soil		X		X		X
BAST-S030-3.0	310510-01	10/25/13	Soil						X
BAST-S031-3.0	310510-02	10/25/13	Soil						X
BAST-B046-7.0	310510-03	10/25/13	Soil						X
BAST-S032-3.0	310510-04	10/25/13	Soil						X
BAST-B047-8.0	310510-05	10/25/13	Soil						X
BAST-S033-3.0	310510-06	10/25/13	Soil		X		X		X
BAST-B503-3.0	310605-01	10/30/13	Soil		X				X

Field Sample ID	Laboratory Sample ID	Sampling Date	Sample Type	Analysis					
				VOC	PAHs	PCBs	Metals	TPH-Gx	TPH-Dx
BAST-B048-3.0	310605-02	10/30/13	Soil		X				X
BAST-B049-3.0	310605-03	10/30/13	Soil		X				X
BAST-B050-3.0	310605-04	10/30/13	Soil		X				X
BBH-B19-5-103013	310606-01	10/30/13	Soil		X		X[(A)]		
BBH-B17-5-103013	310606-02	10/30/13	Soil				X[(A)]		
BBH-B18-5-103013	310606-03	10/30/13	Soil				X[(A)]		
BAST-B051-5.0	311028-01	11/01/13	Soil		X		X		X
BAST-B504-5.0	311028-02	11/01/13	Soil		X		X		X
BAST-S034B-3.0	311028-03	11/01/13	Soil		X				X
BAST-S036-3.0	311028-04	11/01/13	Soil		X				X
BAST-S035-3.0	311028-05	11/01/13	Soil		X				X
BUST-B01-8-110713	311165-01	11/07/13	Soil		X		X		X
BUST-B02-8-110713	311165-02	11/07/13	Soil		X				X
BUST-B03-16-110713	311165-03	11/07/13	Soil		X				X
BUST-B04-16-110713	311165-04	11/07/13	Soil		X				X
BUST-500-110713	311165-05	11/07/13	Soil		X		X		X
BUST-S01-6-110713	311165-06	11/07/13	Soil		X				X
BUST-S02-10-110713	311165-07	11/07/13	Soil		X				X
BUST-S03-10-110713	311165-08	11/07/13	Soil		X				X
BUST-S04-10-110713	311165-09	11/07/13	Soil		X				X
BUST-S05-7-110713	311165-10	11/07/13	Soil		X		X		X
BUST-S06-8-110713	311165-11	11/07/13	Soil		X		X		X
BUST-S07-4-110713	311165-12	11/07/13	Soil		X				X
BUST-S08-10-110713	311165-13	11/07/13	Soil		X				X
BUST-S09-5-110713	311165-14	11/07/13	Soil		X				X
BUST-S10-10-110713	311165-15	11/07/13	Soil		X				X
BUST-S11-5-110713	311165-16	11/07/13	Soil		X		X		X
BUST-S12-10-110713	311165-17	11/07/13	Soil		X				X
BUST-S13-5-110713	311165-18	11/07/13	Soil		X				X
BUST-S14-9-110713	311165-19	11/07/13	Soil		X				X
BUST-S15-5-110713	311165-20	11/07/13	Soil		X				X
BUST-B05-18-110813	311184-01	11/08/13	Soil		X				X
BUST-B06-18-110813	311184-02	11/08/13	Soil		X				X
BUST-B07-19-110813	311184-03	11/08/13	Soil		X		X		X

Field Sample ID	Laboratory Sample ID	Sampling Date	Sample Type	Analysis					
				VOC	PAHs	PCBs	Metals	TPH-Gx	TPH-Dx
BUST-B08-19-110813	311184-04	11/08/13	Soil		X				X
BUST-B09-21-110813	311184-05	11/08/13	Soil		X				X
BUST-B10-19-110813	311184-06	11/08/13	Soil		X				X
BUST-B11-19-110813	311184-07	11/08/13	Soil		X				X

Notes:
[(A)] - Antimony, arsenic, cadmium, chromium, copper, mercury, nickel, and zinc
Metals - Arsenic, cadmium, chromium, copper, mercury, nickel, and zinc, unless otherwise noted.
PAHs - Polycyclic aromatic hydrocarbons
PCBs - Polychlorinated biphenyl
TPH-Dx - Diesel and motor oil range total petroleum hydrocarbon
TPH-Gx - Gasoline range total petroleum hydrocarbon
VOC - Volatile organic compound
X - The analysis was requested and performed on the sample.

The analytical parameters requested for the samples, the respective analytical methods, and the analytical laboratories are summarized below:

Parameter	Analytical Method	Analytical Laboratory
Volatile Organic Compounds (VOCs)	SW846 Method 8260C	Friedman & Bruya, Inc. (F&BI) Seattle, WA
Polycyclic Aromatic Hydrocarbons (PAHs)	SW846 Method 8270D-SIM	
PCB Aroclors	SW846 Method 8082A	
TPH - Gasoline Range	NWTPH-Gx	
TPH - Diesel & Motor Oil Range	NWTPH-Dx	
Total Metals	EPA Method 200.8	
Mercury	EPA Method 1631E	

Notes:
1. SW846 - *USEPA Test Methods for Evaluating Solid Waste, Physical/Chemical Methods,* SW-846, Third Edition, December 1996.
2. EPA Methods - *USEPA Methods for Chemical Analysis of Water and Wastes,* EPA–600/4-79-020, March 1983 Revision.
3. EPA Method 1631E - *Mercury in Water by Oxidation, Purge and Trap, and Cold Vapor Atomic Fluorescence Spectrometry,* Office of Water, U.S. Environmental Protection Agency, August 2002, EPA-821-R-02-019.
4. NWTPH Methods – *Washington State Department of Ecology, Analytical Methods for Petroleum Hydrocarbons*, Publication No. ECY 97-602, June 1997.

DATA VALIDATION FINDINGS

1. VOCs by GC/MS (EPA Method SW8260C)

1.1 Sample Management and Holding Time

Samples were received in the laboratory intact and in consistence with the accompanying chain-of-custody (COC) documentation. In some cases where cooler temperature was outside the 4±2°C criteria; samples were hand-delivered to the laboratory the same day of collection. The cooler temperature exceedance had no significant effects on data quality. No other anomalies were identified in relation to sample preservation, handling, and transport.

Soil samples should be preserved at the time of collection. Soil and water samples should be analyzed within 14 days of collection. All samples were analyzed within the required holding times.

1.2 GC/MS Instrument Performance Check

The method require that (1) gas chromatograph/mass spectrometer (GC/MS) tuning analysis be performed, using bromofluorobenzene (BFB), at the beginning of each 12-hour period prior to any analysis, and (2) specific mass ions meet the criteria provided in the method. All instrument performance checks met the requirements.

1.3 Initial Calibration (ICAL)

The ICAL criteria require that (1) if linear average RFs is chosen as the quantitation option, at least five standards at different concentrations should be analyzed and the percent relative standard deviation (%RSD) of response factors (RFs) be ≤20% for the analyte, (2) if least-square linear regression is chosen for quantitation, the correlation coefficient (r) be >0.995, and (3) if six-point non-linear (quadratic) curve is chosen for quantitation, the coefficient of determination (r^2) be >0.99. ICALs either met the requirements or the outliers had no adverse effects on data usability (*e.g.,* %RSD >20% for a compound not detected in samples).

An initial calibration verification (ICV) standard (second source standard) was analyzed to verify the calibration curve. Percent difference (%D) values were either within ±30%, or the exceedance had no adverse effects on data usability (*e.g.,* biased high ICV recovery for a compound not detected in samples).

1.4 Calibration Verification (CCV)

The CCV criteria requires that (1) continuing calibrations be analyzed at the beginning of each 12-hour analysis period prior to the analysis of method blank and samples, and (2) the %D value be within ±20%.

Calibration verifications either met the requirements, or the exceedance had no adverse effects on data usability (*e.g.,* biased high CCV recovery for a compound not detected in samples).

1.5 Method Blanks

Method blanks were prepared and analyzed as required. Target compounds were not detected at or above the reporting limits (RLs).

1.6 Laboratory Control Sample (LCS) and LCS Duplicate (LCSD)

LCS and LCSD were prepared and analyzed as required by the method. Percent recovery (%R) and relative percent difference (RPD) values either met the project control limits, or the outliers had no adverse effects on data usability (*e.g.,* biased high recovery for a compound not detected in samples).

1.7 Surrogate Spikes

Surrogate spikes were added to all samples as required by the method. All surrogate spike %R values were within the project control limits.

1.8 Matrix Spike (MS)

MS analyses were performed on project and batch QC samples at the proper frequency (≥5% of the samples analyzed for VOCs). All %R values were within the project control limits.

1.9 Internal Standards

The method requires that (1) internal standard retention time be within ±30 seconds from that of the associated 12-hour calibration standard, and (2) the area counts of all internal standards be within –50% to +100% of the associated 12-hour calibration standard. All internal standards in the sample and associated QC analyses met the criteria.

1.10 Reporting Limit and Target Compound Quantitation

RLs were supported with adequate initial calibration concentrations. In cases where target compound concentrations exceeded ICAL calibration ranges, proper dilution analyses were performed for definitive quantitation of the compounds. Only affected compounds were to be reported from dilution analyses.

1.11 Field Duplicates

Field duplicates were not submitted for VOCs analyses in these SDGs.

1.12 Overall Assessment of VOCs Data Usability

VOCs data are of known quality and acceptable for use, as qualified.

2. PAHs by GC/MS - SIM (EPA Method SW8270D-SIM)

2.1 Sample Management and Holding Times

No anomalies were identified in relation to sample preservation, handling, and transport as discussed in Section 1.1.

Soil samples should be extracted within 14 days and water within seven days of collection. Extracts should be analyzed within 40 days of extraction. All samples were extracted and analyzed within the required holding times.

2.2 GC/MS Instrument Performance Check

DFTPP tuning was performed within each 12-hour interval. All required ion abundance ratios met the method requirements.

2.3 Initial Calibration (ICAL)

The ICAL criteria require that (1) if linear average RFs is chosen as the quantitation option, at least five standards at different concentrations should be analyzed and the %RSD of RFs be ≤20% for the analyte, (2) if least-square linear regression is chosen for quantitation, the correlation coefficient (r) be >0.995, and (3) if six-point non-linear (quadratic) curve is chosen for quantitation, the coefficient of determination (r^2) be >0.99. All ICALs met the requirements.

An ICV standard (second source standard) was analyzed to verify the calibration curve. %D values were either within ±20%, or the exceedance had no adverse effects on data usability (*e.g.,* biased high ICV recovery for a compound not detected in samples).

2.4 Calibration Verification (CCV)

The analytical method requires that (1) continuing calibration verifications be analyzed at the beginning of each 12-hour analysis period prior to the analysis of method blank and samples, and (2) the %D be within ±20%.

2.5 Method Blanks

Method blanks were prepared and analyzed as required. Target compounds were not detected at or above the RLs in the method blanks.

2.6 Surrogate Spikes

Surrogate spikes were added to all samples as required by the method. All surrogate spike %R values were either within the project control limits or at levels that had no adverse effects on data quality (*e.g.,* biased-high recovery for compounds that were not detected in samples). In some cases surrogate spike %R values were not applicable for data evaluation because the samples contained high levels of target PAHs and required dilution analysis; no data were qualified in these cases.

2.7 Matrix Spike (MS) and MS Duplicate (MSD)

MS and MSD analyses were performed on project and batch QC samples at the proper frequency (≥5% of samples analyzed). All %R and RPD values met the project control criteria.

2.8 Laboratory Control Sample (LCS) and LCS Duplicate (LCSD)

LCS and LCSD analyses were performed as required by the method. All %R and RPD values were within the project control limits.

2.9 Internal Standards

The method requires that (1) internal standard retention time be within ±30 seconds from that of the associated 12-hour calibration standard, and (2) the area counts of all internal standards be within –50% to +100% of the associated 12-hour calibration standard. All internal standards in the sample and associated QC analyses met the criteria.

2.10 Reporting Limits and Target Compound Quantitation

Sample-specific RLs were supported with adequate initial calibration concentrations. In some cases samples required dilution for definitive quantitation of target compounds; the RLs were raised accordingly, and the compounds reported from the dilution analysis. The remaining (un-diluted) target compounds were to be reported from the initial analysis for the lower detection limits.

2.11 Field Duplicates

Six sets of field duplicates were submitted for PAHs analyses. Field duplicate results for detected target compounds, RPD (or concentration difference) values, and data qualification were presented in **Appendix A**.

2.12 Overall Assessment of PAHs Data Usability

PAHs data are of known quality and acceptable for use, as qualified.

3. PCB Aroclors (EPA Method SW8082A)

3.1 Sample Management and Holding Times

No anomalies were identified in relation to sample preservation, handling, and transport as discussed in Section 1.1.

Soil samples should be extracted within 14 days of collection and extracts analyzed within 40 days of extraction. All samples were extracted and analyzed within the required holding times.

3.2 Initial Calibration

The method requires that (1) a minimum of 5-point calibration be performed using the mixture of Aroclor 1016 and 1260, (2) a single-point calibration be performed for the other five Aroclors to establish calibration factors (CFs) and for Aroclor pattern recognition, (3) at least 3 peaks (preferably 5 peaks) must be chosen for each Aroclor for characterization, (4) the %RSD values of Aroclor 1016 and 1260 CFs must be ≤20%, and (5) if dual column analysis is chosen, both columns should meet the requirements. All ICALs met the requirements.

3.3 Calibration Verification

CCV analyses should be performed for each 12-hour analysis sequence prior to sample analyses, and the %D be within ±20%.

Calibration verifications were performed at the required frequency. All %D values either met the control criteria or biased high for target compounds that were not detected in the associated samples.

3.4 Method Blanks

Method blanks were prepared and analyzed as required. PCB Aroclors were not detected at or above the MDLs in the method blanks.

3.5 Surrogate Spikes

Surrogate spikes were added to all samples as required by the method. All surrogate spike %R values were within the laboratory control limits.

3.6 Matrix Spike and Matrix Spike Duplicate (MS/MSD)

MS/MSD analyses were performed on project samples or batch QC samples at the required frequency. All %R and RPD values were within the laboratory control limits.

3.7 Laboratory Control Sample (LCS) and LCS Duplicate (LCSD)

LCS and LCSD analyses were performed as required by the method. All %R and RPD values were within the project control limits.

3.8 Method Reporting Limits and Target Compound Quantitation

Sample-specific RLs were supported with adequate initial calibration concentrations and achieved the project target quantitation limits.

3.9 Field Duplicates

Field duplicates were not submitted for PCB Aroclors analysis in these SDGs.

3.10 Overall Assessment of PCB Aroclors Data Usability

PCB Aroclor data are of known quality and acceptable for use.

4. TPH-Gasoline by GC/FID (Method NWTPH-Gx)

4.1 Sample Management and Holding Times

No anomalies were identified in relation to sample preservation, handling, and transport as discussed in Section 1.1.

Soil samples should be preserved at the time of collection. Soil and water samples should be analyzed within 14 days of collection. All samples were analyzed within the required holding times.

4.2 Initial Calibration (ICAL)

The method criteria require that (1) if linear average RFs is chosen as the quantitation option, the %RSD of RFs be ≤20% for the analyte, (2) if least-square linear regression is chosen for quantitation, the correlation coefficient (r) be ≥0.995, (3) if six-point non-linear (quadratic) curve is chosen for quantitation, the coefficient of determination (r^2) be ≥0.990, and (4) the back-calculated %D value for each calibration standard be within ±15%. Initial calibration met the criteria for all target compounds.

An ICV (second source) standard was analyzed to verify the calibration curve. %D values were within ±20%.

4.3 Calibration Verification

Continuing calibration verification (CCV) analyses were performed at the required frequency for all analytical sequences as required by the method. The %D values for all CCVs met the method criterion (±20%).

4.4 Method Blanks

Method blanks were prepared and analyzed as required. No target compounds were detected at or above the RLs in the method blanks.

4.5 Surrogate Spikes

Surrogate spikes were added to all samples as required by the method. All surrogate spike %R values were within the project control limits, outside the control limits due to matrix interference, or diluted below quantitation limits due to high analyte concentrations. No data qualifying actions were taken in these cases.

4.6 Matrix Spike and Matrix Spike Duplicate

MS/MSD analyses were not performed for TPH-Gasoline analyses; instead, duplicate and LCS analyses in combination were performed.

4.7 Laboratory Control Sample (LCS)

LCS analyses were performed as required by the method. All %R values were within the laboratory control limits.

4.8 Laboratory Duplicate Analysis

Duplicate analyses were performed on project and batch QC samples at the proper frequency. All RPD and concentration difference values met the laboratory control criteria.

4.9 Reporting Limits and Target Compound Quantitation

Sample-specific RLs were supported with adequate initial calibration concentrations.

4.10 Field Duplicates

Field duplicates were not submitted for TPH-Gasoline analyses in these SDGs.

4.11 Overall Assessment of TPH-Gasoline Data Usability

TPH-Gasoline data are of known quality and acceptable for use, as qualified.

5. TPH-Diesel & Motor Oil by GC/FID (Method NWTPH-Dx)

5.1 Holding Time

No anomalies were identified in relation to sample preservation, handling, and transport as discussed in Section 1.1.

Soil samples should be extracted within 14 days and water should be extracted within seven days of collection. Extracts should be analyzed within 40 days of extraction. All samples were extracted and analyzed within the recommended holding times.

5.2 Initial Calibration

The method criteria require that (1) if linear average RFs is chosen as the quantitation option, the %RSD of RFs be ≤20% for the analyte, (2) if least-square linear regression is chosen for quantitation, the correlation coefficient (r) be ≥0.995, (3) if six-point non-linear (quadratic) curve is chosen for quantitation, the coefficient of determination (r^2) be ≥0.990, and (4) the back-calculated %D value for each calibration standard be within ±15%. Initial calibration met the criteria for all target compounds.

An ICV (second source) standard was analyzed to verify the calibration curve. %D values were within ±20%.

5.3 Calibration Verification

The method requires that (1) a mid-range check standard be analyzed prior to and after each analytical batch, and (2) the percent drift (%D) value be within ±20% of the true value.

Calibration verification was performed at required frequency. The %D values were either within the ±20% criterion or at levels that had no adverse effects on data quality (e.g., high-bias %D value where the target compound was not detected in associated sample).

5.4 Method Blanks

Method blanks were prepared and analyzed as required. Target compounds were not detected at or above the RLs in the method blanks.

5.5 Surrogate Spikes

Surrogate spikes were added to all samples as required by the method. All surrogate spike %R values were within the project control limits, outside the control limits due to matrix interference, or diluted below quantitation limits due to high petroleum hydrocarbon concentrations. No data qualifying actions were taken in these cases.

5.6 Matrix Spike (MS) and MS Duplicate (MSD)

MS and MSD analyses were performed on project and batch QC samples at the proper frequency. The %R and RPD values met the laboratory control criteria.

5.7 Laboratory Control Sample (LCS)

LCS analyses were performed as required. All %R values met the project control limits.

5.8 Target Compound Identification

Selected sample extracts were cleaned up with acid and silica gel treatment to minimize the biogenic interference with target compound identification, as required by the project. The laboratory reported results as diesel #2 (C10 - C25) and motor oil (C25 - C36), as required by the method.

5.9 Reporting Limits and Target Compound Quantitation

The reported RLs were supported with adequate ICAL concentrations.

5.10 Field Duplicates

Four sets of field duplicates were submitted for TPH-Diesel and TPH-Motor Oil analyses. Field duplicate results, RPD (or concentration difference) values, and data qualification for detected TPH-Diesel or Motor Oil were presented in **Appendix A**.

5.11 Overall Assessment of TPH-Diesel and Motor Oil Data Usability

TPH-Diesel and TPH-Motor Oil data are of known quality and acceptable for use, as qualified.

6. Total Metals by ICP/MS and CVAFS (EPA Methods 200.8 and 1631E)

6.1 Sample Management and Holding Times

No anomalies were identified in relation to sample preservation, handling, and transport, as discussed in Section 1.1.

Soil and water samples should be analyzed within 180 days for metals and 28 days for mercury. Samples were analyzed within the required holding times.

6.2 ICP/MS Tuning

Instrument tuning was performed at the required frequency. The stability check (%RSD <5%), mass calibration (mass difference <0.1 AMU), and resolution check (peak width <1.0 AMU at 5% peak height) met the NFG and method criteria.

6.3 Initial Calibration (ICAL)

The ICP/MS method requires that (1) a blank and one calibration standard be used in establishing the analytical curve, and (2) the average of replicate exposures be reported for all standards, QC, and sample analyses.

The CVAFS method require that (1) a blank and five calibration standards be employed to establish the analytical curve, (2) the linearity of the calibration curve should meet the criteria of correlation coefficient ≥ 0.995 for linear regression, and (3) the %RSD <15% if average response factor approach is employed.

All ICALs met the method requirements.

6.4 Calibration Verification (ICV and CCV)

Initial calibration verifications (ICVs) and continuing calibration verifications (CCVs) for ICP/MS and GFAA and ongoing precision recovery (OPR) were analyzed at the required frequency. The %R values either met the control criteria (90 – 110% for metals, 76 – 123% for mercury) or the exceedance had no adverse effects on data usability (e.g., high-bias %D value where the target compound was not detected in associated sample).

6.5 Blanks

Calibration Blanks: Initial calibration blanks (ICBs) and continuing calibration blanks (CCBs) were not analyzed after calibration verification standards. Target analytes were either not detected at or above the RLs in the ICBs and CCBs, or sample results affected by the ICB/CCB detections were qualified as results of detections in preparation blanks.

Preparation Blanks: Preparation blanks were prepared and analyzed as required. Target analytes were either not detected at or above the RLs in the preparation blanks, or sample results were greater than 10X the detection in the associated blank, except for the following:

SDG	Blank ID	Analyte	Concentration in Blank (mg/kg)	Affected Sample	Sample Result (mg/kg)	Data Qualifier
311028	I3-748mb	Arsenic	0.358 J	BAST-B051-5.0 BAST-B504-5.0	1.92 1.37	**J**
310510	I3-730mb	Arsenic	0.83 J	BAST-S030-3.0 BAST-S033-3.0	7.31 1.69	**J**

6.6 Laboratory Control Sample (LCS)

LCS analyses were performed as required by the method. All %R values were within the project control limits, or the exceedance had no adverse effects on data usability (e.g., high-bias %R value where the target compound was not detected in associated sample).

6.7 Matrix Spike (MS) and Matrix Spike Duplicate (MSD)

MS and MSD analyses were performed on project and batch QC samples at the adequate frequency (>5% of field sample). The %R and RPD values either met the laboratory control limits or the outliers were not applicable for matrix effect evaluation (e.g. sample concentration >4x spiking level), except for the following:

SDG#	Parent Sample ID	Analyte	MS %R	MSD %R	Control Limit	RPD	Affected Sample	Data Qualifier
310510	Batch QC	Copper Lead	97% 59%	137% 81%	57-120% 59-148%	34% 31%	BAST-S030-3.0 BAST-S033-3.0	**J**
310406 310407	BAST-S015-3.0	Zinc	78%	61%	55-129%	24%	BAST-S010-3.5 BAST-S015-3.0 BAST-B027-7.0 BAST-B037-7.0	**J**
310226 310227	Batch QC	Copper Lead	108% 140%	167% 269%	57-120% 59-148%	43% 63%	RCD-S09-2 DAST-B10-4 DAST-S11-2	**J**

Note: RPD control criteria = ±20%

6.8 Internal Standards

At least three internal standards were added to all field and QC samples for ICP/MS analyses. All percent relative intensity values were within the method criteria (60 - 125%).

6.9 Method Reporting Limits and Analyte Quantitation

Sample-specific RLs were supported with adequate initial calibration concentrations.

6.10 Field Duplicates

Two sets of field duplicates were submitted for metals analyses. Field duplicate results, RPD (or concentration difference) values, and data qualification for detected TPH-Diesel or Motor Oil were presented in **Appendix A**.

6.11 Overall Assessment of Metals Data Usability

Metal data are of known quality and acceptable for use, as qualified.

SUMMARY

Table I. Data Affected by QC Anomalies:

Laboratory ID	Sample ID	Analyte	Qualifier	Qualified Reason
310510-01 310510-06 311028-01 311028-02	BAST-S030-3.0 BAST-S033-3.0 BAST-B051-5.0 BAST-B504-5.0	Arsenic	**J**	Analyte detected in MB and sample was <10x the MB
310226-01 310227-01 310227-02	RCD-S09-2 DAST-B10-4 DAST-S11-2	Copper	**J**	MS/MSD %R and RPD values outside control criteria
310226-01 310227-01 310227-02	RCD-S09-2 DAST-B10-4 DAST-S11-2	Lead	**J**	MS/MSD %R and RPD values outside control criteria
310406-03 310406-08 310407-03 310407-08	BAST-S010-3.5 BAST-S015-3.0 BAST-B027-7.0 BAST-B037-7.0	Zinc	**J**	MS/MSD RPD value >20%
310510-01 310510-06	BAST-S030-3.0 BAST-S033-3.0	Lead	**J**	MS/MSD RPD value outside control criteria
310510-01 310510-06	BAST-S030-3.0 BAST-S033-3.0	Copper	**J**	MSD %R and MS/MSD RPD values outside control criteria
310361-26 310361-27	BAST-S07-3.5 BAST-B500-3.5	Benz(a)anthracene	**J**	Field duplicate RPD >35%

Table II. Data Qualifiers are defined as follows:

Data Qualifier	Definition
J	The analyte was detected above the reported quantitation limit, and the reported concentration was an estimated value.
U	The analyte was analyzed for, but was considered not detected at the reporting limit or reported value.
UJ	The analyte was analyzed for, and the associated quantitation limit was an estimated value.

Approved By: _____ Date: ***6/23/2014***

Mingta Lin, Senior Project Chemist

REFERENCES

USEPA *Contract Laboratory Program National Functional Guidelines for Inorganic Superfund Data Review,* Office of Superfund Remediation and Technical Innovation, U.S. Environmental Protection Agency, January 2010, USEPA 540/R-10/011

USEPA *Contract Laboratory Program National Functional Guidelines for Superfund Organic Methods Data Review,* Office of Superfund Remediation and Technical Innovation, U.S. Environmental Protection Agency, June 2008, USEPA-540-R-08-01.

USEPA *Method 1631, Revision E: Mercury in Water by Oxidation, Purge and Trap, and Cold Vapor Atomic Fluorescence Spectrometry, Office of Water, U.S. Environmental Protection Agency, August 2002, EPA-821-R-02-019.*

USEPA *Test Methods for Evaluating Solid Waste (SW-846). Third Edition and Revised Update IIIA.* Office of Solid Waste and Emergency Response, Washington, D.C. April 1998.

USEPA *Methods for Chemical Analysis of Water and Wastes,* EPA-600/4-79-020, March 1983 and updates.

Standard Methods for the Examination of Water and Wastewater, American Public Health Association, 20th Edition, 1995.

Ecology (Washington State Department of). 1997. *Analytical Methods for Petroleum Hydrocarbons.* Publication No. ECY 97-602. June 1997.

PSEP *Recommended Guidelines for Measuring Organic Compounds in Puget Sound Water, Sediment and Tissue Samples,* Puget Sound Water Quality Authority, April 1997.

Appendix A

Field duplicate RPD is indicative of field and laboratory precision and sample homogeneity in combination. The CLP National Functional Guidelines or *Work Plan* do not specify criteria for field duplicate evaluation. An advisory criterion of 35% was applied to evaluating the RPD values of field duplicate results that are ≥5xRL. For results that are <5xRL, an advisory criterion of ±2RL was applied to evaluating the concentration differences. The RPD (or concentration difference as applicable) values and data qualification for detected compounds in field duplicates are presented as follows:

Analyte	Units	RL	Parent & Field Duplicate Sample Result		RPD	Delta	Data Qualifier
			BAST-S07-3.5	**BAST-B500-3.5**			
Bunker C	mg/kg	250	9300	9700	4%		
Acenaphthene	mg/kg	0.01	0.63	0.77	20%		
Acenaphthylene	mg/kg	0.01	ND	ND		0	
Anthracene	mg/kg	0.01	0.62	0.64	3%		
Benz(a)anthracene	mg/kg	0.01	0.58	0.85		0.27	**J/J**
Benzo(a)pyrene	mg/kg	0.01	0.35	0.36	3%		
Benzo(b)fluoranthene	mg/kg	0.01	0.17	0.21	21%		
Benzo(g,h,i)perylene	mg/kg	0.01	0.17	0.2	16%	0.03	
Benzo(k)fluoranthene	mg/kg	0.01	0.024	0.028		0.004	
Chrysene	mg/kg	0.01	0.98	1.1	12%		
Dibenzo(a,h)anthracene	mg/kg	0.01	0.061	0.07	14%		
Fluoranthene	mg/kg	0.01	0.25	0.23	8%		
Fluorene	mg/kg	0.01	1.3	1.6	21%	0.3	
Indeno(1,2,3-cd)pyrene	mg/kg	0.01	0.046	0.055		0.009	
Naphthalene	mg/kg	0.01	ND	ND		0	
Phenanthrene	mg/kg	0.01	ND	ND		0	
Pyrene	mg/kg	0.1	2	2.2	10%		
			BAST-B023-04	**BAST-B501-04**			
Bunker C	mg/kg	250	ND	ND		0	
Benzo(a)pyrene	mg/kg	0.01	ND	ND		0	
Dibenzo(a,h)anthracene	mg/kg	0.01	ND	ND		0	
Benz(a)anthracene	mg/kg	0.01	ND	ND		0	
Acenaphthene	mg/kg	0.01	ND	ND		0	
Phenanthrene	mg/kg	0.01	ND	ND		0	
Fluorene	mg/kg	0.01	ND	ND		0	
Benzo(k)fluoranthene	mg/kg	0.01	ND	ND		0	
Naphthalene	mg/kg	0.01	ND	ND		0	

Analyte	Units	RL	Parent & Field Duplicate Sample Result		RPD	Delta	Data Qualifier
Anthracene	mg/kg	0.01	ND	ND		0	
Chrysene	mg/kg	0.01	ND	ND		0	
Acenaphthylene	mg/kg	0.01	ND	ND		0	
Fluoranthene	mg/kg	0.01	ND	ND		0	
Benzo(b)fluoranthene	mg/kg	0.01	ND	ND		0	
Indeno(1,2,3-cd)pyrene	mg/kg	0.01	ND	ND		0	
Benzo(g,h,i)perylene	mg/kg	0.01	ND	ND		0	
Pyrene	mg/kg	0.01	ND	ND		0	
			BAST-S010-3.5	**BAST-502-3.2**			
Acenaphthene	mg/kg	0.01	0.039	0.037		0.002	
Acenaphthylene	mg/kg	0.01	ND	ND		0	
Anthracene	mg/kg	0.01	ND	ND		0	
Benz(a)anthracene	mg/kg	0.01	ND	ND		0	
Benzo(a)pyrene	mg/kg	0.01	ND	ND		0	
Benzo(b)fluoranthene	mg/kg	0.01	ND	ND		0	
Benzo(g,h,i)perylene	mg/kg	0.01	ND	ND		0	
Benzo(k)fluoranthene	mg/kg	0.01	ND	ND		0	
Chrysene	mg/kg	0.01	ND	ND		0	
Dibenzo(a,h)anthracene	mg/kg	0.01	ND	ND		0	
Fluoranthene	mg/kg	0.01	ND	ND		0	
Fluorene	mg/kg	0.01	0.079	0.085	7%		
Indeno(1,2,3-cd)pyrene	mg/kg	0.01	ND	ND		0	
Naphthalene	mg/kg	0.01	ND	ND		0	
Phenanthrene	mg/kg	0.01	0.071	0.077	8%		
Pyrene	mg/kg	0.01	ND	ND		0	
			BAST-B048-3.0	**BAST-B503-3.0**			
Bunker C	mg/kg	250	ND	ND		0	
Acenaphthene	mg/kg	0.01	ND	ND		0	
Acenaphthylene	mg/kg	0.01	ND	ND		0	
Anthracene	mg/kg	0.01	ND	ND		0	
Benz(a)anthracene	mg/kg	0.01	ND	ND		0	
Benzo(a)pyrene	mg/kg	0.01	ND	ND		0	
Benzo(b)fluoranthene	mg/kg	0.01	ND	ND		0	
Benzo(g,h,i)perylene	mg/kg	0.01	ND	ND		0	
Benzo(k)fluoranthene	mg/kg	0.01	ND	ND		0	
Chrysene	mg/kg	0.01	ND	ND		0	

Analyte	Units	RL	Parent & Field Duplicate Sample Result		RPD	Delta	Data Qualifier
Dibenzo(a,h)anthracene	mg/kg	0.01	ND	ND		0	
Fluoranthene	mg/kg	0.01	ND	ND		0	
Fluorene	mg/kg	0.01	ND	ND		0	
Indeno(1,2,3-cd)pyrene	mg/kg	0.01	ND	ND		0	
Naphthalene	mg/kg	0.01	0.014	0.011		0.003	
Phenanthrene	mg/kg	0.01	ND	ND		0	
Pyrene	mg/kg	0.01	ND	ND		0	
			BAST-B051-5.0	**BAST-B504-5.0**			
Mercury	mg/kg	0.1	ND	ND		0	
Nickel	mg/kg	1	9.98	10.1	1%	0.12	
Zinc	mg/kg	1	30.6	23	28%		
Copper	mg/kg	1	42.7	40.4	6%	2.3	
Arsenic	mg/kg	1	1.92	1.37		0.55	
Lead	mg/kg	1	15.8	16.3	3%		
Cadmium	mg/kg	1	ND	ND		0	
Acenaphthene	mg/kg	0.01	1.4	1.1	24%		
Acenaphthylene	mg/kg	0.01	0.01	ND		0	
Anthracene	mg/kg	0.01	0.056	0.051	9%		
Benz(a)anthracene	mg/kg	0.01	0.033	0.031		0.002	
Benzo(a)pyrene	mg/kg	0.01	0.03	0.027		0.003	
Benzo(b)fluoranthene	mg/kg	0.01	0.028	0.027		0.001	
Benzo(g,h,i)perylene	mg/kg	0.01	0.027	0.025		0.002	
Benzo(k)fluoranthene	mg/kg	0.01	ND	0.01		0.01	
Chrysene	mg/kg	0.01	0.053	0.05	6%		
Dibenzo(a,h)anthracene	mg/kg	0.01	ND	ND		0	
Fluoranthene	mg/kg	0.01	0.047	0.041		0.006	
Fluorene	mg/kg	0.1	2.3	1.7	30%		
Indeno(1,2,3-cd)pyrene	mg/kg	0.01	0.019	0.02		0.001	
Naphthalene	mg/kg	0.01	0.11	0.13	17%		
Phenanthrene	mg/kg	0.01	0.63	0.57	10%		
Pyrene	mg/kg	0.01	0.1	0.087	14%		
			BUST-S05-7-110713	**BUST-500-110713**			
Mercury	mg/kg	0.1	ND	ND		0	
Arsenic	mg/kg	1	ND	ND		0	
Cadmium	mg/kg	1	ND	ND		0	
Copper	mg/kg	1	5.23	5.09		0.14	

Analyte	Units	RL	Parent & Field Duplicate Sample Result		RPD	Delta	Data Qualifier
Lead	mg/kg	1	4.58	4.85		0.27	
Nickel	mg/kg	1	7.98	9.09	13%		
Zinc	mg/kg	1	11.3	11.4	1%		
Bunker C	mg/kg	250	ND	ND		0	
Acenaphthylene	mg/kg	0.01	ND	ND		0	
Fluorene	mg/kg	0.01	ND	ND		0	
Phenanthrene	mg/kg	0.01	ND	ND		0	
Acenaphthene	mg/kg	0.01	ND	ND		0	
Benz(a)anthracene	mg/kg	0.01	ND	ND		0	
Dibenzo(a,h)anthracene	mg/kg	0.01	ND	ND		0	
Anthracene	mg/kg	0.01	ND	ND		0	
Chrysene	mg/kg	0.01	ND	ND		0	
Benzo(k)fluoranthene	mg/kg	0.01	ND	ND		0	
Fluoranthene	mg/kg	0.01	ND	ND		0	
Benzo(b)fluoranthene	mg/kg	0.01	ND	ND		0	
Benzo(g,h,i)perylene	mg/kg	0.01	ND	ND		0	
Indeno(1,2,3-cd)pyrene	mg/kg	0.01	ND	ND		0	
Naphthalene	mg/kg	0.01	ND	ND		0	
Benzo(a)pyrene	mg/kg	0.01	ND	ND		0	
Pyrene	mg/kg	0.01	ND	ND		0	

Notes:
Delta – Concentration difference between the parent sample and its field duplicate
mg/kg – milligram per kilogram
ND – The analyte was not detected at or above the RL.
RL – Reporting limit
RPD – Relative percent difference

Data Validation Report

Kimberly-Clark Everett, Washington Site
Upland Area Interim Action Soil Sampling
Batch #4 Soil Samples

Prepared for:

Aspect Consulting LLC
401 Second Ave South, Suite 201
Seattle, WA 98014

Prepared by:

Pyron Environmental, Inc.
3530 32nd Way, NW
Olympia, WA 98502

ACRONYMS

%D	percent difference
%D_f	percent drift
%R	percent recovery
%RSD	percent relative standard deviation
AMU	atomic mass unit
BTEX	benzene, toluene, ethylbenzene, and *m-, p-, & o*-xylenes
CCB	continuing calibration blank
CCC	calibration check compound
CCV	continuing calibration verification
CF	calibration factor
CLP	U.S. EPA Contract Laboratory Program
COC	chain-of-custody
CVAFS	cold vapor atomic fluorescent spectrometry
DFTPP	decafluorotriphenylphosphine
ECD	electron capture detector
EPA	U.S. Environmental Protection Agency
EPH	extractable petroleum hydrocarbon
FID	Flame ionization detector
GC/MS	gas chromatograph/mass spectrometer
ICAL	initial calibration
ICB	initial calibration blank
ICP/MS	inductively coupled plasma/ mass spectrometer
ICV	initial calibration verification
LCS	laboratory control sample
LCSD	laboratory control sample duplicate
MDL	method detection limit
µg/kg	microgram per kilogram
mg/kg	milligram per kilogram
MS	matrix spike
MSD	matrix spike duplicate
NFGs	CLP National Functional Guidelines for Data Review (EPA 2008 – Organics; EPA 2010 – Inorganics)
OPR	ongoing precision and recovery
PCBs	polychlorinated biphenyls

PID	photo-ionization detector
QA/QC	quality assurance/quality control
RF	response factor
RL	reporting limit
RPD	relative percent difference
RRT	relative retention time
SDG	sample delivery group
SIM	selective ion monitoring
SVOCs	semi-volatile organic compounds
VOCs	volatile organic compounds
VPH	volatile petroleum hydrocarbon

INTRODUCTION

This report presents and discusses findings of the data validation performed on analytical data for soil samples collected during September 2013 to January 2014 for the referenced project. The laboratory reports validated herein were submitted by Friedman & Bruya, Inc. and Fremont Aanlytical, Inc. in Seattle, Washington and ALS Environmental Services, Inc. in Kelso, Washington.

A level III data validation was performed on this laboratory report. The validation followed the procedures specified in USEPA CLP Functional Guidelines ([NFGs], EPA 2008 – Organics; EPA 2010 – Inorganics), with modifications to accommodate project and analytical method requirements. The numerical quality assurance/quality control (QA/QC) criteria applied to the validation were in accordance with those specified in the quality assurance project plans ([QAPPs], Aspect, 2009) and the current performance-based control limits established by the laboratory (laboratory control limits). Instrument calibration, frequency of QC analyses, and analytical sequence requirements were evaluated against the respective analytical methods.

Validation findings are discussed in each section pertinent to the QC parameter for each type of analysis. Qualified data with applied data qualifiers are summarized in the **Summary** section at the end of this report.

Samples and the associated analyses validated herein are summarized as follows:

Field Sample ID	Laboratory Sample ID	Sampling Date	Sample Type	Analysis						
				VOC	PAHs	PCBs	Metals	TPH-Gx	TPH-Dx	Misc.
DAST-S01-092713	309515-01	09/27/13	Soil		X	X	X		X	
DAST-S02-092713	309515-02	09/27/13	Soil		X	X	X		X	
DAST-S03-092713	309515-03	09/27/13	Soil		X	X	X		X	
DAST-S04-092713	309515-04	09/27/13	Soil		X	X	X		X	
DAST-S05-092713	309515-05	09/27/13	Soil		X	X	X		X	
DAST-S06-092713	309515-06	09/27/13	Soil		X	X	X		X	
DAST-S07-092713	309515-07	09/27/13	Soil		X	X	X		X	
DAST-S08-092713	309515-08	09/27/13	Soil		X	X	X		X	
DAST-S09-092713	309515-09	09/27/13	Soil		X	X	X		X	
DAST-S10-092713	309515-10	09/27/13	Soil		X	X	X		X	
DAST-B01-092713	309515-11	09/27/13	Soil		X	X	X		X	
DAST-B02-092713	309515-12	09/27/13	Soil		X	X	X		X	
DAST-B03-092713	309515-13	09/27/13	Soil		X	X	X		X	
DAST-B04-092713	309515-14	09/27/13	Soil		X	X	X		X	

Field Sample ID	Laboratory Sample ID	Sampling Date	Sample Type	Analysis						
				VOC	PAHs	PCBs	Metals	TPH-Gx	TPH-Dx	Misc.
DAST-B05-092713	309515-15	09/27/13	Soil		X	X	X		X	
DAST-B06-092713	309515-16	09/27/13	Soil		X	X	X		X	
DAST-B07-092713	309515-17	09/27/13	Soil		X	X	X		X	
BAST-B040-7.0	310430-01	10/22/13	Soil		X				X	
BAST-S019-3.0	310430-02	10/22/13	Soil		X				X	
BAST-S020-3.0	310430-03	10/22/13	Soil		X				X	
BAST-S021-3.0	310430-04	10/22/13	Soil		X		X(A)		X	
BAST-S022-3.0	310430-05	10/22/13	Soil		X				X	
BAST-S023-3.0	310430-06	10/22/13	Soil		X				X	
BAST-S024-3.0	310430-07	10/22/13	Soil		X				X	
BAST-B033-7.0	310430-08	10/22/13	Soil		X				X	
BUST-S16-8-111213	311258-01	11/12/13	Soil		X		X(A)		X	EPH
BUST-S17-8-111213	311258-02	11/12/13	Soil		X				X	EPH
BUST-S18-8-111213	311258-03	11/12/13	Soil		X				X	
BUST-S19-5-111213	311258-04	11/12/13	Soil		X				X	
BUST-S20-8-111213	311258-05	11/12/13	Soil		X				X	
BUST-501-111213	311258-06	11/12/13	Soil		X		X(A)		X	
BUST-S21-10-111213	311258-07	11/12/13	Soil		X				X	
BUST-S22-10-111213	311258-08	11/12/13	Soil		X		X(A)		X	
BUST-B20-6-111213	311258-09	11/12/13	Soil		X				X	
BUST-S23-16	311289-01	11/13/13	Soil		X		X(A)		X	
BUST-B21-18	311289-02	11/13/13	Soil		X				X	
PM-B2-6.5-111313	311294-18	11/13/13	Soil							SPLP/Cu
BUST-S24-3-111513	311338-01	11/15/13	Soil		X		X		X	
BUST-S25-3-111513	311338-02	11/15/13	Soil		X		X		X	
BUST-S26-5-111513	311338-03	11/15/13	Soil		X		X		X	
BUST-S27-5-111513	311338-04	11/15/13	Soil		X		X		X	
BUST-S28-3-111513	311338-05	11/15/13	Soil		X		X		X	
BUST-S29-5-111513	311338-06	11/15/13	Soil		X		X		X	
BUST-S30-3-111513	311338-07	11/15/13	Soil		X		X		X	
BUST-S31-3-111513	311338-08	11/15/13	Soil		X		X		X	
BUST-B22-5-111513	311338-09	11/15/13	Soil		X		X		X	
BUST-B23-6-111513	311338-10	11/15/13	Soil		X		X		X	
BUST-502-111513	311338-11	11/15/13	Soil		X		X		X	

Field Sample ID	Laboratory Sample ID	Sampling Date	Sample Type	Analysis						
				VOC	PAHs	PCBs	Metals	TPH-Gx	TPH-Dx	Misc.
BUST-B24-4-111513	311338-12	11/15/13	Soil		X		X		X	
BUST-B25-4-111513	311338-13	11/15/13	Soil		X		X		X	
BUST-B26-6-111513	311338-14	11/15/13	Soil		X		X		X	
BUST-B27-6-111513	311338-15	11/15/13	Soil		X		X		X	
BBH-B20-C-111813	311390-01	11/18/13	Soil		X		X			
BUST-S48-4	311391-02	11/19/13	Soil		X		X		X	
BUST-S49-8	311391-02	11/19/13	Soil		X		X		X	
BUST-S50-12	311391-03	11/19/13	Soil		X		X		X	
BUST-S51-4	311391-04	11/19/13	Soil		X		X		X	
BUST-S52-8	311391-05	11/19/13	Soil		X		X		X	
BUST-S53-12	311391-06	11/19/13	Soil		X		X		X	
BUST-S46-4	311391-07	11/19/13	Soil		X		X		X	
BUST-S46A-8	311391-08	11/19/13	Soil		X		X		X	
BUST-S47-12	311391-09	11/19/13	Soil		X		X		X	
BUST-S43-4	311391-10	11/19/13	Soil		X		X		X	
BUST-S44-8	311391-11	11/19/13	Soil		X		X		X	
BUST-S45-12	311391-12	11/19/13	Soil		X		X		X	
BUST-S40-4	311391-13	11/19/13	Soil		X		X		X	
BUST-S40-4	311391-13	11/19/13	Soil		X		X		X	
BUST-S40-4	311391-13	11/19/13	Soil		X		X		X	
BUST-S40-4	311391-13	11/19/13	Soil		X		X		X	
BUST-S41-8	311391-14	11/19/13	Soil		X		X		X	
BUST-S42-12	311391-15	11/19/13	Soil		X		X		X	
BUST-B29-12	311391-16	11/19/13	Soil		X		X		X	
BUST-B30-12	311391-17	11/19/13	Soil		X		X		X	
BUST-B31-12	311391-18	11/19/13	Soil		X		X		X	
BUST-B32-12	311391-19	11/19/13	Soil		X		X		X	
BUST-B503-12	311391-20	11/19/13	Soil		X		X		X	
BUST-B33-12	311391-21	11/19/13	Soil		X		X		X	
BUST-S37-4	311391-22	11/19/13	Soil		X		X		X	
BUST-S38-8	311391-23	11/19/13	Soil		X		X		X	
BUST-S39-12	311391-24	11/19/13	Soil		X		X		X	
UST70-S11-4-112113	311428-01	11/21/13	Soil		X		X[(A)]		X	
UST70-S12-8-112113	311428-02	11/21/13	Soil		X				X	

Field Sample ID	Laboratory Sample ID	Sampling Date	Sample Type	Analysis						
				VOC	PAHs	PCBs	Metals	TPH-Gx	TPH-Dx	Misc.
UST70-S13-4-112113	311428-03	11/21/13	Soil		X				X	
UST70-S14-8-112113	311428-04	11/21/13	Soil		X				X	
UST70-S15-4-112113	311428-05	11/21/13	Soil		X				X	
UST70-S16-8-112113	311428-06	11/21/13	Soil		X		X(A)		X	
UST70-B01-11-112113	311428-07	11/21/13	Soil		X				X	
UST70-B02-11-112113	311428-08	11/21/13	Soil		X				X	
UST70-B03-11-112113	311428-09	11/21/13	Soil		X				X	
UST70-B04-11-112113	311428-10	11/21/13	Soil		X				X	
UST70-S01-4-112113	311428-11	11/21/13	Soil		X		X(A)		X	
UST70-S02-8-112113	311428-12	11/21/13	Soil		X				X	
UST70-S03-4-112113	311428-13	11/21/13	Soil		X				X	
UST70-S04-8-112113	311428-14	11/21/13	Soil		X				X	
UST70-S05-4-112113	311428-15	11/21/13	Soil		X				X	
UST70-S06-8-112113	311428-16	11/21/13	Soil		X		X(A)		X	
UST70-S07-4-112113	311428-17	11/21/13	Soil		X				X	
UST70-S08-8-112113	311428-18	11/21/13	Soil		X				X	
UST70-S09-4-112113	311428-19	11/21/13	Soil		X				X	
UST70-S10-8-112113	311428-20	11/21/13	Soil		X				X	
UST70-B05-11-112113	311428-21	11/21/13	Soil		X		X(A)		X	
UST70-500	311428-22	11/21/13	Soil		X				X	
UST70-501	311428-23	11/21/13	Soil		X		X(A)		X	
BUST-S54-8	311453-01	11/20/13	Soil		X		X		X	
BUST-S55-12	311453-02	11/20/13	Soil		X		X		X	
BUST-S56-8	311453-03	11/20/13	Soil		X		X		X	
BUST-S57-12	311453-04	11/20/13	Soil		X		X		X	
BUST-S34-4	311454-01	11/21/13	Soil		X		X		X	
BUST-S35-8	311454-02	11/21/13	Soil		X		X		X	
BUST-S36-12	311454-03	11/21/13	Soil		X		X		X	
BUST-S32-8	311454-04	11/21/13	Soil		X		X		X	
BUST-S33-12	311454-05	11/21/13	Soil		X		X		X	
BUST-B34-12	311454-06	11/21/13	Soil		X		X		X	
BUST-B35-12	311454-07	11/21/13	Soil		X		X		X	
BUST-B36-6	311454-08	11/21/13	Soil		X		X		X	
BUST-B37-10	311454-09	11/21/13	Soil		X		X		X	

Field Sample ID	Laboratory Sample ID	Sampling Date	Sample Type	Analysis						
				VOC	PAHs	PCBs	Metals	TPH-Gx	TPH-Dx	Misc.
BUST-B38-8	311454-10	11/21/13	Soil		X		X		X	
BUST-B39-12	312058-01	12/03/13	Soil		X		X		X	EPH
BUST-B40-12	312058-02	12/03/13	Soil		X		X		X	
BUST-B41-12	312058-03	12/03/13	Soil		X		X		X	
BUST-S58-12	312058-04	12/03/13	Soil		X		X		X	EPH
BUST-S59-12	312058-05	12/03/13	Soil		X		X		X	
BUST-S60-6	312058-06	12/03/13	Soil		X		X		X	
BUST-S61-12	312058-07	12/03/13	Soil		X		X		X	
BUST-S62-3	312200-01	12/12/13	Soil		X		X		X	
BUST-S63-3	312200-02	12/12/13	Soil		X		X		X	
BUST-S64-6	312200-03	12/12/13	Soil		X		X		X	
BUST-S65-9	312200-04	12/12/13	Soil		X		X		X	
BUST-S66-3	312200-05	12/12/13	Soil		X		X		X	
BUST-S67-3	312200-06	12/12/13	Soil		X		X		X	
BUST-504-FD	312200-07	12/12/13	Soil		X		X		X	
UST70-S17-4	312335-01	12/19/13	Soil		X				X	
UST70-S18-8	312335-02	12/19/13	Soil		X				X	
UST70-S19-8	312335-03	12/19/13	Soil		X				X	
BUST-S68-3	312336-01	12/19/13	Soil		X		X[(A)]		X	
BAST- S038-5	312362-02	12/23/13	Soil		X		X[(A)]		X	
BAST- S039-3	312362-03	12/23/13	Soil		X				X	
BAST- S040-5	312362-04	12/23/13	Soil		X				X	
BAST- S041-3	312362-05	12/23/13	Soil		X				X	
BAST- S042-5	312362-06	12/23/13	Soil		X				X	
BAST-B052-7	312362-07	12/23/13	Soil		X		X[(A)]		X	
BAST-B054-7	312362-08	12/23/13	Soil		X				X	
BAST- 505-FD	312362-09	12/23/13	Soil		X				X	
UST29-S01-3-122313	312363-01	12/23/13	Soil	X	X		X	X	X	FRM
UST29-S02-3-122313	312363-02	12/23/13	Soil	X	X			X	X	FRM
UST29-S03-3-122313	312363-03	12/23/13	Soil	X	X			X	X	FRM
UST29-S04-3-122313	312363-04	12/23/13	Soil	X	X			X	X	FRM
UST29-S05-3-122313	312363-05	12/23/13	Soil	X	X			X	X	FRM
UST29-S06-3-122313	312363-06	12/23/13	Soil	X	X		X	X	X	FRM
UST29-S07-3-122313	312363-07	12/23/13	Soil	X	X			X	X	FRM

Field Sample ID	Laboratory Sample ID	Sampling Date	Sample Type	Analysis						
				VOC	PAHs	PCBs	Metals	TPH-Gx	TPH-Dx	Misc.
UST29-500-122313	312363-08	12/23/13	Soil	X	X		X	X	X	FRM
UST29-B01-5-122313	312363-09	12/23/13	Soil	X	X			X	X	FRM
UST29-B02-5-122313	312363-10	12/23/13	Soil	X	X		X	X	X	FRM
UST29-B03-5-122313	312363-11	12/23/13	Soil	X	X			X	X	FRM
UST29-B04-5-122313	312363-12	12/23/13	Soil	X	X			X	X	FRM
UST29-B05-5-122313	312363-13	12/23/13	Soil	X	X			X	X	FRM
UST29-B06-5-122313	312363-14	12/23/13	Soil	X	X		X	X	X	FRM
UST29-501-122313	312363-15	12/23/13	Soil	X	X			X	X	FRM
UST29-S08-8-123013	312433-01	12/30/13	Soil	X	X		X	X	X	FRM
UST29-S09-8-123013	312433-02	12/30/13	Soil	X	X		X	X	X	FRM
UST29-S10-8-123013	312433-03	12/30/13	Soil	X	X		X	X	X	FRM
UST29-S11-8-123013	312433-04	12/30/13	Soil	X	X		X	X	X	FRM
UST29-B07-18-123013	312433-05	12/30/13	Soil	X	X		X	X	X	FRM
BAST-S43-3-123013	312434-01	12/30/13	Soil	X	X		X	X	X	
BAST-S44-5-123013	312434-02	12/30/13	Soil	X	X			X	X	
BAST-S45-3-123013	312434-03	12/30/13	Soil	X	X			X	X	
BAST-S47-3-123013	312434-05	12/30/13	Soil	X	X			X	X	
BAST-S48-5-123013	312434-06	12/30/13	Soil	X	X			X	X	
UST29-B08-15-010214	401024-01	01/02/14	Soil	X	X		X	X	X	FRM
UST29-S12-3-010314	401024-02	01/03/14	Soil	X	X			X	X	FRM
UST29-S13-6-010314	401024-03	01/03/14	Soil	X	X			X	X	FRM
UST29-S14-9-010314	401024-04	01/03/14	Soil	X	X			X	X	FRM
UST29-S15-3-010314	401024-05	01/03/14	Soil	X	X			X	X	FRM
UST29-S16-6-010314	401024-06	01/03/14	Soil	X	X		X	X	X	FRM
UST29-S17-9-010314	401024-07	01/03/14	Soil	X	X			X	X	FRM
UST29-S18-3-010314	401024-08	01/03/14	Soil	X	X			X	X	FRM
UST29-S19-6-010314	401024-09	01/03/14	Soil	X	X			X	X	FRM
UST29-S20-9-010314	401024-10	01/03/14	Soil	X	X		X	X	X	FRM
UST29-S21-3-010314	401024-11	01/03/14	Soil	X	X			X	X	FRM
UST29-B09-15-010314	401024-12	01/03/14	Soil	X	X			X	X	FRM
UST29-B10-15-010314	401024-13	01/03/14	Soil	X	X			X	X	FRM
UST29-B11-15-010314	401024-14	01/03/14	Soil	X	X			X	X	FRM
UST70-S20-010314	401025-01	01/03/14	Soil						X	
UST70-S21-010314	401025-02	01/03/14	Soil						X	

Field Sample ID	Laboratory Sample ID	Sampling Date	Sample Type	Analysis						
				VOC	PAHs	PCBs	Metals	TPH-Gx	TPH-Dx	Misc.
BAST-B53-10-010214	401026-01	01/02/14	Soil	X	X			X	X	
BAST-B55-10-010214	401026-02	01/02/14	Soil	X	X			X	X	
BAST-S49-8-010214	401026-03	01/02/14	Soil	X	X			X	X	
BAST-S50-8-010314	401026-04	01/03/14	Soil	X	X			X	X	
BUST-S69-3-010314	401027-01	01/03/14	Soil						X	
BAST-S51-8-010714	401054-01	01/07/14	Soil	X	X			X	X	
BAST-S52-8-010714	401054-02	01/07/14	Soil	X	X			X	X	
BAST-S53-5-010714	401054-03	01/07/14	Soil	X	X			X	X	
BAST-S54-8-010714	401054-04	01/07/14	Soil	X	X		X	X	X	
UST70-S22-8-010614	401055-01	01/06/14	Soil		X				X	
UST70-502	401055-02	01/06/14	Soil		X				X	
UST29-B12-17-010614	401057-01	01/06/14	Soil	X	X		X	X	X	FRM
UST29-S22-9-010714	401069-01	01/07/14	Soil	X	X			X	X	
UST29-B13-16-010714	401069-02	01/07/14	Soil	X	X			X	X	
UST29-S23-12-010714	401069-03	01/07/14	Soil	X	X			X	X	
UST29-S24-3-010814	401069-04	01/08/14	Soil	X	X			X	X	
UST29-S25-6-010814	401069-05	01/08/14	Soil	X	X			X	X	
UST29-S26-9-010814	401069-06	01/08/14	Soil	X	X		X	X	X	
UST29-S27-6-010814	401069-07	01/08/14	Soil	X	X			X	X	
UST29-S28-3-010814	401069-08	01/08/14	Soil	X	X			X	X	
UST29-S29-9-010814	401069-09	01/08/14	Soil	X	X			X	X	
UST29-S30-6-010814	401069-10	01/08/14	Soil	X	X			X	X	
UST29-S31-3-010814	401069-11	01/08/14	Soil	X	X		X	X	X	
UST29-S32-9-010814	401069-12	01/08/14	Soil	X	X			X	X	
UST29-S33-6-010814	401069-13	01/08/14	Soil	X	X			X	X	
UST29-S34-3-010814	401069-14	01/08/14	Soil	X	X			X	X	
UST29-B14-17-010814	401069-15	01/08/14	Soil	X	X			X	X	
UST29-S35-6-010814	401069-16	01/08/14	Soil	X	X		X	X	X	
UST29-S36-3-010814	401069-17	01/08/14	Soil	X	X			X	X	
UST29-B15-17-010814	401069-18	01/08/14	Soil	X	X			X	X	
UST29-B502	401069-19	01/08/14	Soil	X	X			X	X	
UST29-B16-17-010814	401069-20	01/08/14	Soil	X	X			X	X	
UST29-S37-6-010914	401108-01	01/09/14	Soil	X	X			X	X	FRM
UST29-S38-6-010914	401108-02	01/09/14	Soil	X	X			X	X	FRM

Field Sample ID	Laboratory Sample ID	Sampling Date	Sample Type	Analysis						
				VOC	PAHs	PCBs	Metals	TPH-Gx	TPH-Dx	Misc.
UST29-S39-9-010914	401108-03	01/09/14	Soil	X	X			X	X	FRM
UST29-S40-9-010914	401108-04	01/09/14	Soil	X	X			X	X	FRM
UST29-S41-6-011014	401108-05	01/10/14	Soil	X	X			X	X	FRM
BAST-S055-3-012014	401211-01	01/20/14	Soil		X				X	
BAST-S056-3-012014	401211-02	01/20/14	Soil		X				X	
BV-S01-6-011714	401212-01	01/17/14	Soil		X		X		X	
BV-B01-8-011714	401212-02	01/17/14	Soil		X		X		X	
BV-S02-6-011714	401212-03	01/17/14	Soil		X		X		X	
BV-S03-6-011714	401212-04	01/17/14	Soil		X		X		X	
BV-S03-6-011714	401212-04	01/17/14	Soil		X		X		X	
BV-B02-8-011714	401212-05	01/17/14	Soil		X		X		X	
BV-S04-6-011714	401212-06	01/17/14	Soil		X				X	
NRU-S03-12-012214	401247-01	01/22/14	Soil		X				X	
NRU-S09-12-012214	401247-02	01/22/14	Soil		X				X	
NRU-S12-12-012214	401247-03	01/22/14	Soil		X				X	
NRU-B01-14-012214	401247-04	01/22/14	Soil		X				X	
NRU-B02-14-012214	401247-05	01/22/14	Soil		X				X	
NRU-S06-12-012314	401292-01	01/23/14	Soil		X				X	
NRU-B03-14-012314	401292-02	01/23/14	Soil		X				X	
NRU-S07-4-012314	401292-03	01/23/14	Soil		X				X	
NRU-S08-8-012314	401292-04	01/23/14	Soil		X				X	
NRU-S01-4-012314	401292-05	01/23/14	Soil		X				X	
NRU-S02-8-012314	401292-06	01/23/14	Soil		X				X	
NRU-S13-4-012314	401292-07	01/23/14	Soil		X				X	
NRU-S14-8-012314	401292-08	01/23/14	Soil		X				X	
NRU-S15-12-012314	401292-09	01/23/14	Soil		X				X	
NRU-S21-4-012414	401292-10	01/24/14	Soil		X				X	
NRU-S22-8-012414	401292-11	01/24/14	Soil		X				X	
NRU-S23-12-012414	401292-12	01/24/14	Soil		X				X	
NRU-S20-12-012414	401292-13	01/24/14	Soil		X				X	
NRU-B04-14-012414	401292-14	01/24/14	Soil		X				X	
NRU-501-012414	401292-15	01/24/14	Soil		X				X	
NRU-S04-4-012414	401293-01	01/24/14	Soil		X				X	
NRU-S05-8-012414	401293-02	01/24/14	Soil		X				X	

Field Sample ID	Laboratory Sample ID	Sampling Date	Sample Type	Analysis						
				VOC	PAHs	PCBs	Metals	TPH-Gx	TPH-Dx	Misc.
NRU-S10-4-012414	401293-03	01/24/14	Soil		X				X	
NRU-S11-8-012414	401293-04	01/24/14	Soil		X				X	
NRU-S16-12-012414	401293-05	01/24/14	Soil		X				X	
NRU-S17-8-012414	401293-06	01/24/14	Soil		X				X	
NRU-S18-4-012414	401293-07	01/24/14	Soil		X				X	
NRU-S19-8-012414	401293-08	01/24/14	Soil		X				X	
NRU-500-012414	401293-09	01/24/14	Soil		X				X	
NRU-SP01-1-012414	401294-01	01/24/14	Soil	X	SVOC	X	pp	X	X	SPLP/As
NRU-SP01-2-012414	401294-02	01/24/14	Soil	X	SVOC	X	pp	X	X	
NRU-SP01-3-012414	401294-03	01/24/14	Soil	X	SVOC	X	pp	X	X	SPLP/As
NRU-SP02-1-012414	401294-04	01/24/14	Soil	X	SVOC	X	pp	X	X	SPLP/As
NRU-SP02-2-012414	401294-05	01/24/14	Soil	X	SVOC	X	pp	X	X	
NRU-SP02-3-012414	401294-06	01/24/14	Soil	X	SVOC	X	pp	X	X	
NRU-SP03-1-012414	401294-07	01/24/14	Soil	X	SVOC	X	pp	X	X	
NRU-SP03-2-012414	401294-08	01/24/14	Soil	X	SVOC	X	pp	X	X	
NRU-SP03-3-012414	401294-09	01/24/14	Soil	X	SVOC	X	pp	X	X	SPLP/Cu
NRU-SP04-1-012414	401294-10	01/24/14	Soil	X	SVOC	X	pp	X	X	
NRU-SP04-2-012414	401294-11	01/24/14	Soil	X	SVOC	X	pp	X	X	
NRU-SP04-3-012414	401294-12	01/24/14	Soil	X	SVOC	X	pp	X	X	
NRU-SP05-1-012414	401294-13	01/24/14	Soil	X	SVOC	X	pp	X	X	
NRU-SP05-2-012414	401294-14	01/24/14	Soil	X	SVOC	X	pp	X	X	
NRU-SP05-3-012414	401294-15	01/24/14	Soil	X	SVOC	X	pp	X	X	SPLP/Cu
NRU-SP06-1-012414	401294-16	01/24/14	Soil	X	SVOC	X	pp	X	X	
NRU-SP06-2-012414	401294-17	01/24/14	Soil	X	SVOC	X	pp	X	X	
NRU-SP06-3-012414	401294-18	01/24/14	Soil	X	SVOC	X	pp	X	X	
NRU-B5-16-012714	401318-01	01/27/14	Soil		X			X	X	BTEX/EPH /VPH
BAST-B66-7-012814	401341-01	01/28/14	Soil	X	X			X	X	
BAST-S67-4-012814	401341-02	01/28/14	Soil	X	X			X	X	
BAST-S68-4-012814	401341-03	01/28/14	Soil	X	X			X	X	
NRU-S24-4-013014	401367-01	01/30/14	Soil	X	X			X	X	
NRU-S25-8-013014	401367-02	01/30/14	Soil	X	X			X	X	
NRU-S26-12-013014	401367-03	01/30/14	Soil	X	X			X	X	
NRU-S27-4-013014	401367-04	01/30/14	Soil	X	X			X	X	
NRU-S28-8-013014	401367-05	01/30/14	Soil	X	X			X	X	

Field Sample ID	Laboratory Sample ID	Sampling Date	Sample Type	Analysis						
				VOC	PAHs	PCBs	Metals	TPH-Gx	TPH-Dx	Misc.
NRU-S29-12-013014	401367-06	01/30/14	Soil	X	X			X	X	
NRU-B06-14-013014	401367-07	01/30/14	Soil	X	X			X	X	
NRU-B07-14-013014	401367-08	01/30/14	Soil	X	X			X	X	
NRU-502-013014	401367-09	01/30/14	Soil	X				X		

Notes:

[(A)] - Arsenic, cadmium, chromium, copper, mercury, nickel, and zinc
EPH - Extractable petroleum hydrocarbon
FMR - Formaldehyde
Metals - Antimony, arsenic, cadmium, chromium, copper, mercury, nickel, and zinc, unless otherwise noted.
Misc. - Miscellaneous
PAHs - Polycyclic aromatic hydrocarbons
PCBs - Polychlorinated biphenyl
pp - Priority pollutant metals, *i.e.,* antimony, arsenic, beryllium, cadmium, chromium, copper, lead, mercury, nickel, selenium, silver, thallium, and zinc
SPLP - Synthetic precipitation leaching procedure; the leachates were analyzed for copper (SPLP/Cu) and/or arsenic (SPLP/As).
TPH-Dx - Diesel and motor oil range total petroleum hydrocarbon
TPH-Gx - Gasoline range total petroleum hydrocarbon
VOC - Volatile organic compound
VPH - Volatile petroleum hydrocarbon
X - The analysis was requested and performed on the sample.

The analytical parameters requested for the samples, the respective analytical methods, and the analytical laboratories are summarized below:

Parameter	Analytical Method	Analytical Laboratory
Volatile Organic Compounds (VOCs)	SW846 Method 8260C	Friedman & Bruya, Inc. (F&BI) Seattle, WA
Polycyclic Aromatic Hydrocarbons (PAHs)	SW846 Method 8270D-SIM	
PCB Aroclors	SW846 Method 8082A	
BTEX	SW846 Method 8021B	
TPH - Gasoline Range	NWTPH-Gx	
TPH - Diesel & Motor Oil Range	NWTPH-Dx	
Total Metals	EPA Method 200.8	
Mercury	EPA Method 1631E	
Extractable Petroleum Hydrocarbon	NWTPH-EPH	Fremont Analytical, Inc. Seattle, WA
Volatile Petroleum Hydrocarbon	NWTPH-VPH	
Formaldehyde	SW846 Method 8315A	ALS Environmental Services, Inc. Kelso, Washington

Notes:

1. SW846 - *USEPA Test Methods for Evaluating Solid Waste, Physical/Chemical Methods,* SW-846, Third Edition, December 1996.
2. EPA Methods - *USEPA Methods for Chemical Analysis of Water and Wastes,* EPA–600/4-79-020, March 1983 Revision.
3. EPA Method 1631E - *Mercury in Water by Oxidation, Purge and Trap, and Cold Vapor Atomic Fluorescence Spectrometry,* Office of Water, U.S. Environmental Protection Agency, August 2002, EPA-821-R-02-019.
4. NWTPH Methods – *Washington State Department of Ecology, Analytical Methods for Petroleum Hydrocarbons*, Publication No. ECY 97-602, June 1997.

DATA VALIDATION FINDINGS

1. VOCs by GC/MS (EPA Method SW8260C)

1.1 Sample Management and Holding Time

Samples were received in the laboratory intact and in consistence with the accompanying chain-of-custody (COC) documentation. In some cases where cooler temperature was outside the 4±2°C criteria; samples were hand-delivered to the laboratory the same day of collection. The cooler temperature exceedance had no significant effects on data quality. No other anomalies were identified in relation to sample preservation, handling, and transport.

All samples in SDG: 401294 were not preserved in methanol upon collection. The analyses were performed within a relatively short period of time (3 days) of collection. VOCs results for these samples, rather than being rejected, were qualified (UJ) for non-detects and (J) for detects as estimated.

Soil samples should be preserved at the time of collection. Soil samples should be analyzed within 14 days of collection. All samples were analyzed within the required holding times.

1.2 GC/MS Instrument Performance Check

The method require that (1) gas chromatograph/mass spectrometer (GC/MS) tuning analysis be performed, using bromofluorobenzene (BFB), at the beginning of each 12-hour period prior to any analysis, and (2) specific mass ions meet the criteria provided in the method. All instrument performance checks met the requirements.

1.3 Initial Calibration (ICAL)

The ICAL criteria require that (1) if linear average RFs is chosen as the quantitation option, at least five standards at different concentrations should be analyzed and the percent relative standard deviation (%RSD) of response factors (RFs) be ≤20% for the analyte, (2) if least-square linear regression is chosen for quantitation, the correlation coefficient (r) be >0.995, and (3) if six-point non-linear (quadratic) curve is chosen for quantitation, the coefficient of determination (r^2) be >0.99. ICALs either met the requirements or the outliers had no adverse effects on data usability (*e.g.,* %RSD >20% for a compound not detected in samples).

An initial calibration verification (ICV) standard (second source standard) was analyzed to verify the calibration curve. Percent difference (%D) values were either within ±30%, or the exceedance had no adverse effects on data usability (*e.g.,* biased high ICV recovery for a compound not detected in samples).

1.4 Calibration Verification (CCV)

The CCV criteria requires that (1) continuing calibrations be analyzed at the beginning of each 12-hour analysis period prior to the analysis of method blank and samples, and (2) the %D value be within ±20%.

Calibration verifications either met the requirements, or the exceedance had no adverse effects on data usability (*e.g.,* biased high CCV recovery for a compound not detected in samples), except for the following:

SDG	CCV ID	Compound	%D	Bias	Affected Sample	Data Qualifier
401108	GCMS9 1/10/14, 11:34	Bromomethane	40.9%	Low	UST29-S37-6-010914 UST29-S38-6-010914 UST29-S39-9-010914 UST29-S40-9-010914 UST29-S41-6-011014	**UJ**

1.5 Method Blanks

Method blanks were prepared and analyzed as required. Target compounds were not detected at or above the reporting limits (RLs). Methylene chloride was detected in selected method blanks at levels greater than their method detection limits but less than the RLs. Methylene chloride results for samples associated with these blanks were evaluated and qualified (U) as non-detected at the reported values, as summarized in **SUMMARY, Table I.**

1.6 Laboratory Control Sample (LCS) and LCS Duplicate (LCSD)

LCS and LCSD were prepared and analyzed as required by the method. Percent recovery (%R) and relative percent difference (RPD) values either met the project control limits, or the outliers had no adverse effects on data usability (*e.g.,* biased high recovery for a compound not detected in samples), except for the following:

SDG#	LCS ID	Analyte	LCS %R	LCSD %R	Control Limit	Affected Sample	Data Qualifier
401069	LCS	Methylene Chloride	56%	-	62-119%	All samples in this SDG	**UJ**

1.7 Surrogate Spikes

Surrogate spikes were added to all samples as required by the method. All surrogate spike %R values were within the project control limits.

1.8 Matrix Spike (MS)

MS analyses were performed on project and batch QC samples at the proper frequency (≥5% of the samples analyzed for VOCs). All %R values were within the project control limits.

1.9 Internal Standards

The method requires that (1) internal standard retention time be within ±30 seconds from that of the associated 12-hour calibration standard, and (2) the area counts of all internal standards be within –50% to +100% of the associated 12-hour calibration standard. All internal standards in the sample and associated QC analyses met the criteria.

1.10 Reporting Limit and Target Compound Quantitation

RLs were supported with adequate initial calibration concentrations.

1,4-dioxane and vinyl acetate were reported from the mass spectrum library search, the reported RLs were considered estimated. These compounds were not detected in any of the field samples; the results were qualified (UJ) to indicate that the RLs were estimated values.

In cases where a sample was analyzed for both VOCs (Method 8260C) and SVOCs (Method 8270D), the results for 1,2-dichlorobenzene, 1,3-dichlorobenzene, 1,4-dichlorobenzene, 1,2,4-trichlorobenzene, hexachlorobutadiene, and naphthalene were to be reported from the SVOCs analysis, in favor of the lower detection limits.

In cases where a sample was analyzed for both VOCs (Method 8260C) and PAHs (Method 8270-SIM), the result for naphthalene was to be reported from the PAHs analysis, in favor of the lower detection limit.

1.11 Field Duplicates

Three sets of field duplicates were submitted for VOCss analyses. VOCs were not detected at or above RLs in these sample; the field precision met the project advisory criteria.

1.12 Overall Assessment of VOCs Data Usability

VOCs data are of known quality and acceptable for use, as qualified.

2. SVOCs and PAHs by GC/MS and GC/MS - SIM (EPA Method SW8270D and SIM)

2.1 Sample Management and Holding Times

No anomalies were identified in relation to sample preservation, handling, and transport as discussed in Section 1.1.

Soil samples should be extracted within 14 days and water within seven days of collection. Extracts should be analyzed within 40 days of extraction. All samples were extracted and analyzed within the required holding times.

2.2 GC/MS Instrument Performance Check

DFTPP tuning was performed within each 12-hour interval. All required ion abundance ratios met the method requirements.

2.3 Initial Calibration (ICAL)

The ICAL criteria require that (1) if linear average RFs is chosen as the quantitation option, at least five standards at different concentrations should be analyzed and the %RSD of RFs be ≤20% for the analyte, (2) if least-square linear regression is chosen for quantitation, the correlation coefficient (r) be >0.995, and (3) if six-point non-linear (quadratic) curve is chosen for quantitation, the coefficient of determination (r^2) be >0.99. All ICALs met the requirements.

An ICV standard (second source standard) was analyzed to verify the calibration curve. %D values were either within ±30%, or the exceedance had no adverse effects on data usability (*e.g.,* biased high ICV recovery for a compound not detected in samples).

2.4 Calibration Verification (CCV)

The analytical method requires that (1) continuing calibration verifications be analyzed at the beginning of each 12-hour analysis period prior to the analysis of method blank and samples, and (2) the %D be within ±20%. The CCVs met the requirements, except for the following:

SDG	CCV ID	Compound	%D	Bias	Affected Sample	Data Qualifier
401108	GCMS6 1/10/14, 23:53	Indeno(1,2,3-cd)perylene	24.3%	Low	UST29-S37-6-010914	**UJ**

2.5 Method Blanks

Method blanks were prepared and analyzed as required. Target compounds were not detected at or above the RLs in the method blanks.

2.6 Surrogate Spikes

Surrogate spikes were added to all samples as required by the method. All surrogate spike %R values were either within the project control limits or at levels that had no adverse effects on data quality (*e.g.,* biased-high recovery for compounds that were not detected in samples). In some cases surrogate spike %R values were not applicable for data evaluation because the samples contained high levels of target PAHs and required dilution analysis; no data were qualified in these cases.

2.7 Matrix Spike (MS) and MS Duplicate (MSD)

MS and MSD analyses were performed on project and batch QC samples at the proper frequency (≥5% of samples analyzed). All %R and RPD values met the project control criteria, except for the following:

SDG#	Parent Sample ID	Analyte	MS %R	MSD %R	Control Limit	RPD	Data Qualifier
312363	UST29-S01-3-122313	Naphthalene	99%	78%	44-129%	24%	J
		Acenaphthene	106%	78%	51-123%	30%	
		Fluorene	109%	82%	37-137%	28%	
		Phenanthrene	150%	1%	45-124%	197%	
		Anthracene	108%	61%	32-124%	56%	
		Fluoranthene	127%	0%	50-125%	217%	
		Pyrene	133%	0%	41-135%	273%	
		Benz(a)anthracene	106%	33%	23-144%	105%	
		Chrysene	103%	21%	45-122%	132%	
		Benzo(b)fluoranthene	122%	45%	31-144%	92%	
		Benzo(k)fluoranthene	94%	64%	45-130%	38%	
		Benzo(a)pyrene	113%	47%	39-128%	82%	
		Indeno(1,2,3-cd)pyrene	111%	73%	28-146%	41%	
		Benzo(g,h,i)perylene	103%	70%	37-133%	38%	
401024	UST29-B08-15-010214	Phenanthrene	96%	153%	45-124%	46%	J
		Fluoranthene	76%	134%	50-125%	55%	
		Pyrene	73%	129%	41-135%	55%	
		Benz(a)anthracene	79%	104%	23-144%	27%	
		Chrysene	83%	121%	45-122%	37%	
401054	BAST-S53-5-010714	Benzo(k)fluoranthene	75%	60%	45-130%	22%	J
401212	BV-B01-8-011714	Phenanthrene	70%	53%	45-124%	28%	J

SDG#	Parent Sample ID	Analyte	MS %R	MSD %R	Control Limit	RPD	Data Qualifier
401292	NRU-S06-12-012314	Phenanthrene	91%	185%	45-124%	68%	J
		Anthracene	86%	112%	32-124%	26%	
		Fluoranthene	117%	302%	50-125%	88%	
		Pyrene	119%	344%	41-135%	97%	
		Benz(a)anthracene	87%	192%	23-144%	75%	
		Chrysene	89%	218%	45-122%	84%	
		Benzo(b)fluoranthene	96%	241%	31-144%	86%	
		Benzo(k)fluoranthene	87%	159%	45-130%	59%	
		Benzo(a)pyrene	95%	237%	39-128%	86%	
		Indeno(1,2,3-cd)pyrene	108%	198%	28-146%	59%	
		Benzo(g,h,i)perylene	95%	177%	37-133%	60%	
401293	NRU-S05-8-012414	Fluoranthene	-	-	-	51%	J
		Pyrene				55%	
		Benz(a)anthracene				24%	
		Chrysene				26%	
		Benzo(b)fluoranthene				73%	
		Benzo(k)fluoranthene				51%	
		Benzo(a)pyrene				69%	
		Indeno(1,2,3-cd)pyrene				45%	
		Dibenz(a,h)anthracene				36%	
		Benzo(g,h,i)perylene				54%	
401294	NRU-SP01-1-012414	2,4-Dinitrophenol	29%	37%	50-150%	24%	UJ
		4,6-Dinitro-2-methylphenol	32%	42%		27%	
		4-Nitrophenol	9%	136%		175%	
		Hexachlorocyclopentadiene	12%	21%		55%	

Note: RPD control criteria = ±20%

2.8 Laboratory Control Sample (LCS) and LCS Duplicate (LCSD)

LCS and LCSD analyses were performed as required by the method. All %R and RPD values were within the project control limits, except for the following:

SDG#	LCS ID	Analyte	LCS %R	LCSD %R	Control Limit	RPD	Affected Sample	Data Qualifier
401212	LCS/LCSD	Indeno(1,2,3-cd)pyrene	77%	60%	62-119%	25%	BV-S01-6-011714 BV-S04-6-011714	UJ

Note: RPD control criteria = ±20%

2.9 Internal Standards

The method requires that (1) internal standard retention time be within ±30 seconds from that of the associated 12-hour calibration standard, and (2) the area counts of all internal standards be within –50% to +100% of the associated 12-hour calibration standard. All internal standards in the sample and associated QC analyses met the criteria, except for the following:

Sample ID	Internal Standard	Sample Response Area	CCV Response Area	Affected Compound	Data Qualifier
UST70-S03-4-112113	Phenanthrene-d_{10} Chrysene-d_{12} Perylene-d_{12}	227614 223106 174616	460769 494494 421270	Benzo(b)fluoranthene Chrysene Fluoranthene Pyrene	**J**
BUST-504-FD	Perylene-d_{12}	279707	126697	Benzo(k)fluoranthene Dibenzo(a,h)anthracene Indeno(1,2,3-cd)pyrene	**J**
UST29-S23-12-010714 (Diluted Analysis)	Chrysene-d_{12}	202737	406511	Benz(a)anthracene Chrysene	**J**

2.10 Reporting Limits and Target Compound Quantitation

Sample-specific RLs were supported with adequate initial calibration concentrations. In some cases samples required dilution for definitive quantitation of target compounds; the RLs were raised accordingly, and the compounds reported from the dilution analysis. The remaining (un-diluted) target compounds were to be reported from the initial analysis for the lower detection limits.

2.11 Field Duplicates

Fourteen sets of field duplicates were submitted for PAHs analyses. Field duplicate results for detected target compounds, RPD (or concentration difference) values, and data qualification were presented in **Appendix A**.

2.12 Overall Assessment of PAHs Data Usability

PAHs data are of known quality and acceptable for use, as qualified.

3. PCB Aroclors (EPA Method SW8082A)

3.1 Sample Management and Holding Times

No anomalies were identified in relation to sample preservation, handling, and transport as discussed in Section 1.1.

Soil samples should be extracted within 14 days of collection and extracts analyzed within 40 days of extraction. All samples were extracted and analyzed within the required holding times.

3.2 Initial Calibration

The method requires that (1) a minimum of 5-point calibration be performed using the mixture of Aroclor 1016 and 1260, (2) a single-point calibration be performed for the other five Aroclors to establish calibration factors (CFs) and for Aroclor pattern recognition, (3) at least 3 peaks (preferably 5 peaks) must be chosen for each Aroclor for characterization, (4) the %RSD values of Aroclor 1016 and 1260 CFs must be ≤20%, and (5) if dual column analysis is chosen, both columns should meet the requirements. All ICALs met the requirements.

3.3 Calibration Verification

CCV analyses should be performed for each 12-hour analysis sequence prior to sample analyses, and the %D be within ±20%.

Calibration verifications were performed at the required frequency. All %D values either met the control criteria or biased high for target compounds that were not detected in the associated samples.

3.4 Method Blanks

Method blanks were prepared and analyzed as required. PCB Aroclors were not detected at or above the MDLs in the method blanks.

3.5 Surrogate Spikes

Surrogate spikes were added to all samples as required by the method. All surrogate spike %R values were within the laboratory control limits.

3.6 Matrix Spike and Matrix Spike Duplicate (MS/MSD)

MS/MSD analyses were performed on project samples or batch QC samples at the required frequency. All %R and RPD values were within the laboratory control limits.

3.7 Laboratory Control Sample (LCS) and LCS Duplicate (LCSD)

LCS and LCSD analyses were performed as required by the method. All %R and RPD values were within the project control limits.

3.8 Method Reporting Limits and Target Compound Quantitation

Sample-specific RLs were supported with adequate initial calibration concentrations and achieved the project target quantitation limits.

3.9 Field Duplicates

Field duplicates were not submitted for PCB Aroclors analysis in these SDGs.

3.10 Overall Assessment of PCB Aroclors Data Usability

PCB Aroclor data are of known quality and acceptable for use.

4. TPH-Gasoline by GC/FID (Method NWTPH-Gx)

4.1 Sample Management and Holding Times

No anomalies were identified in relation to sample preservation, handling, and transport as discussed in Section 1.1.

All samples in SDG: 401294 were not preserved in methanol upon collection. The analyses were performed within a relatively short period of time (3 days) of collection. TPH-Gasoline results for these samples, rather than being rejected, were qualified (UJ) for non-detects and (J) for detects as estimated.

Soil samples should be preserved in methanol at the time of collection. Soil samples should be analyzed within 14 days of collection. All samples were analyzed within the required holding times.

4.2 Initial Calibration (ICAL)

The method criteria require that (1) if linear average RFs is chosen as the quantitation option, the %RSD of RFs be ≤20% for the analyte, (2) if least-square linear regression is chosen for quantitation, the correlation coefficient (r) be ≥0.995, (3) if six-point non-linear (quadratic) curve is chosen for quantitation, the coefficient of determination (r^2) be ≥0.990, and (4) the back-calculated %D value for each calibration standard be within ±15%. Initial calibration met the criteria for all target compounds.

An ICV (second source) standard was analyzed to verify the calibration curve. %D values were within ±20%.

4.3 Calibration Verification

Continuing calibration verification (CCV) analyses were performed at the required frequency for all analytical sequences as required by the method. The %D values for all CCVs met the method criterion (±20%).

4.4 Method Blanks

Method blanks were prepared and analyzed as required. No target compounds were detected at or above the RLs in the method blanks.

4.5 Surrogate Spikes

Surrogate spikes were added to all samples as required by the method. All surrogate spike %R values were either within the project control limits, or outside the control limits due to matrix interference, or diluted below quantitation limits due to high levels of target or non-target compounds in the samples. No data qualifying actions were taken in these cases.

4.6 Matrix Spike and Matrix Spike Duplicate

MS/MSD analyses were not performed for TPH-Gasoline analyses; instead, duplicate and LCS analyses in combination were performed.

4.7 Laboratory Control Sample (LCS)

LCS analyses were performed as required by the method. All %R values were within the laboratory control limits.

4.8 Laboratory Duplicate Analysis

Duplicate analyses were performed on project and batch QC samples at the proper frequency. All RPD and concentration difference values met the laboratory control criteria.

4.9 Reporting Limits and Target Compound Quantitation

Sample-specific RLs were supported with adequate initial calibration concentrations.

4.10 Field Duplicates

Three sets of field duplicates were submitted for PAHs analyses. Field duplicate results for detected target compounds, RPD (or concentration difference) values, and data qualification were presented in **Appendix A**.

4.11 Overall Assessment of TPH-Gasoline Data Usability

TPH-Gasoline data are of known quality and acceptable for use, as qualified.

5. TPH-Diesel & Motor Oil by GC/FID (Method NWTPH-Dx)

5.1 Holding Time

No anomalies were identified in relation to sample preservation, handling, and transport as discussed in Section 1.1.

Soil samples should be extracted within 14 days of collection. Extracts should be analyzed within 40 days of extraction. All samples were extracted and analyzed within the recommended holding times.

5.2 Initial Calibration

The method criteria require that (1) if linear average RFs is chosen as the quantitation option, the %RSD of RFs be ≤20% for the analyte, (2) if least-square linear regression is chosen for quantitation, the correlation coefficient (r) be ≥0.995, (3) if six-point non-linear (quadratic) curve is chosen for quantitation, the coefficient of determination (r^2) be ≥0.990, and (4) the back-calculated %D value for each calibration standard be within ±15%. Initial calibration met the criteria for all target compounds.

An ICV (second source) standard was analyzed to verify the calibration curve. %D values were within ±20%.

5.3 Calibration Verification

The method requires that (1) a mid-range check standard be analyzed prior to and after each analytical batch, and (2) the percent drift (%D) value be within ±20% of the true value.

Calibration verification was performed at required frequency. The %D values were either within the ±20% criterion or at levels that had no adverse effects on data quality (e.g., high-bias %D value where the target compound was not detected in associated sample).

5.4 Method Blanks

Method blanks were prepared and analyzed as required. Target compounds were not detected at or above the RLs in the method blanks.

5.5 Surrogate Spikes

Surrogate spikes were added to all samples as required by the method. All surrogate spike %R values were either within the project control limits, or outside the control limits due to matrix interference, or diluted below quantitation limits due to high levels of target or non-target compounds in the samples. No data qualifying actions were taken in these cases.

5.6 Matrix Spike (MS) and MS Duplicate (MSD)

MS and MSD analyses were performed on project and batch QC samples at the proper frequency. The %R and RPD values met the laboratory control criteria.

5.7 Laboratory Control Sample (LCS)

LCS analyses were performed as required. All %R values met the project control limits.

5.8 Target Compound Identification

Selected sample extracts were cleaned up with acid and silica gel treatment to minimize the biogenic interference with target compound identification, as required by the project. The laboratory reported results as diesel #2 (C10 - C25) and motor oil (C25 - C36), as required by the method. In some cases where sample chromatographic patterns resembled Bunker C fuel, the results were quantitated and reported as Bunker C fuel accordingly. No anomalies were identified relative to target compound identification.

5.9 Reporting Limits and Target Compound Quantitation

The reported RLs were supported with adequate ICAL concentrations.

The Bunker C fuel concentration in sample BUST-S67-3 exceeded instrument calibration range; the result was qualified (J) as estimated.

5.10 Field Duplicates

Fourteen sets of field duplicates were submitted for TPH-Diesel and TPH-Motor Oil analyses. Field duplicate results, RPD (or concentration difference) values, and data qualification for detected TPH-Diesel or Motor Oil were presented in **Appendix A**.

5.11 Overall Assessment of TPH-Diesel and Motor Oil Data Usability

TPH-Diesel and TPH-Motor Oil data are of known quality and acceptable for use, as qualified.

6. Total Metals by ICP/MS and CVAFS (EPA Methods 200.8 and 1631E)

6.1 Sample Management and Holding Times

No anomalies were identified in relation to sample preservation, handling, and transport, as discussed in Section 1.1.

Soil and water samples should be analyzed within 180 days for metals and 28 days for mercury. Samples were analyzed within the required holding times.

6.2 ICP/MS Tuning

Instrument tuning was performed at the required frequency. The stability check (%RSD <5%), mass calibration (mass difference <0.1 AMU), and resolution check (peak width <1.0 AMU at 5% peak height) met the NFG and method criteria.

6.3 Initial Calibration (ICAL)

The ICP/MS method requires that (1) a blank and one calibration standard be used in establishing the analytical curve, and (2) the average of replicate exposures be reported for all standards, QC, and sample analyses.

The CVAFS method require that (1) a blank and five calibration standards be employed to establish the analytical curve, (2) the linearity of the calibration curve should meet the criteria of correlation coefficient ≥ 0.995 for linear regression, and (3) the %RSD <15% if average response factor approach is employed.

All ICALs met the method requirements.

6.4 Calibration Verification (ICV and CCV)

Initial calibration verifications (ICVs) and continuing calibration verifications (CCVs) for ICP/MS and GFAA and ongoing precision recovery (OPR) were analyzed at the required frequency. The %R values either met the control criteria (90 – 110% for metals, 76 – 123% for mercury) or the exceedance had no adverse effects on data usability (e.g., high-bias %D value where the target compound was not detected in associated sample), except for the following:

SDG	CCV ID	Analyte	%R	Affected Sample	Data Qualifier
311391	11/20/13, 15:11	Zinc	111%	BUST-S46-4 BUST-S46A-8 BUST-S47-12 BUST-S44-8	J

SDG	CCV ID	Analyte	%R	Affected Sample	Data Qualifier
				BUST-S45-12 BUST-S40-4 BUST-S41-8 BUST-S42-12 BUST-B29-12 BUST-B30-12 BUST-B31-12 BUST-B32-12	
312058	12/5/2013, 12:02	Lead	112.7%	BUST-S60-6	**J**
401212	1/20/14, 13:26 1/20/14, 13:42	Zinc	112.5% 111.3%	BV-B02-8-011714	**J**

6.5 Blanks

Calibration Blanks: Initial calibration blanks (ICBs) and continuing calibration blanks (CCBs) were not analyzed after calibration verification standards. Target analytes were either not detected at or above the RLs in the ICBs and CCBs, or sample results affected by the ICB/CCB detections were qualified as results of detections in preparation blanks.

Preparation Blanks: Preparation blanks were prepared and analyzed as required. Target analytes were either not detected at or above the RLs in the preparation blanks, or sample results were greater than 10X the detection in the associated blank.

6.6 Laboratory Control Sample (LCS)

LCS analyses were performed as required by the method. All %R values were within the project control limits, or the exceedance had no adverse effects on data usability (e.g., high-bias %R value where the target compound was not detected in associated sample).

6.7 Matrix Spike (MS) and Matrix Spike Duplicate (MSD)

MS and MSD analyses were performed on project and batch QC samples at the adequate frequency (>5% of field sample). The %R and RPD values either met the laboratory control limits or the outliers were not applicable for matrix effect evaluation (e.g. sample concentration >4x spiking level), except for the following:

SDG#	Parent Sample ID	Analyte	MS %R	MSD %R	Control Limit	RPD	Affected Sample	Data Qualifier
312336	BUST-S68-3	Copper	41%	39%	57-120%	5%	BUST-S68-3	**J**

SDG#	Parent Sample ID	Analyte	MS %R	MSD %R	Control Limit	RPD	Affected Sample	Data Qualifier
401294	NRU-SP04-2-012414	Zinc Arsenic	134% 113%	91% 90%	55-129% 70-118%	38% 23%	NRU-SP01-1-012414 NRU-SP01-2-012414 NRU-SP01-3-012414 NRU-SP02-1-012414 NRU-SP02-2-012414 NRU-SP02-3-012414 NRU-SP03-1-012414 NRU-SP03-2-012414 NRU-SP03-3-012414 NRU-SP04-1-012414 NRU-SP04-2-012414 NRU-SP04-3-012414 NRU-SP05-1-012414 NRU-SP05-2-012414 NRU-SP05-3-012414 NRU-SP06-1-012414 NRU-SP06-2-012414 NRU-SP06-3-012414	J

Note: RPD control criteria = ±20%

6.8 Internal Standards

At least three internal standards were added to all field and QC samples for ICP/MS analyses. All percent relative intensity values were within the method criteria (60 - 125%).

6.9 Method Reporting Limits and Analyte Quantitation

Sample-specific RLs were supported with adequate initial calibration concentrations.

6.10 Field Duplicates

Two sets of field duplicates were submitted for metals analyses. Field duplicate results, RPD (or concentration difference) values, and data qualification for detected TPH-Diesel or Motor Oil were presented in **Appendix A**.

6.11 Overall Assessment of Metals Data Usability

Metal data are of known quality and acceptable for use, as qualified.

7. Formaldehyde by HPLC/UV (EPA Method 8315A)

7.1 Sample Management and Holding Time

No anomalies were identified in relation to sample preservation, handling, and transport, as discussed in Section 1.1.

Soil samples should be derivatized and extracted within seven days of sample collection. All derivatized sample extracts should be analyzed within three days after preparation. The sample was prepared and analyzed within the required holding times.

7.2 Instrument Calibration

The method linearity criteria require that (1) if linear average RFs is chosen as the quantitation option, the %RSD of RFs be ≤20% for the analyte, (2) if least-square linear regression is chosen for quantitation, the correlation coefficient (r) be >0.995, and (3) if six-point non-linear (quadratic) curve is chosen for quantitation, the coefficient of determination (r^2) be >0.990. Initial calibration met the criteria for all target compounds.

An ICV (second source) standard was analyzed to verify the calibration curve. %D values were within ±20%.

7.3 Calibration Verification

CCV analyses were performed at the required frequency for all analytical sequences as required by the method. The %D values for all CCVs met the method criterion (±20%).

7.4 Method Blanks

A method blank was prepared and analyzed in each preparation batch as required. Formaldehyde was not detected at or above the RL in method blanks.

7.5 Matrix Spike (MS) and MS Duplicate (MSD)

MS and MSD analyses were performed on project and batch QC samples at the proper frequency. The %R and RPD values met the laboratory control criteria.

7.6 Laboratory Control Samples (LCS)

LCS analyses were performed as required by the methods. The %R values were within the laboratory control limits.

7.7 Field Duplicates

Field duplicates were not submitted for formaldehyde analysis in these SDGs.

7.8 Overall Assessment of Formaldehyde Data Usability

Formaldehyde data are of known quality and acceptable for use, as qualified.

8. Extractable Petroleum Hydrocarbon (EPH) by GC/FID (Method NWTPH-EPH)

8.1 Holding Time

No anomalies were identified in relation to sample preservation, handling, and transport as discussed in Section 1.1.

Soil samples should be extracted within 14 days of collection. Extracts should be analyzed within 40 days of extraction. All samples were extracted and analyzed within the recommended holding times.

8.2 Initial Calibration

The method linearity criteria require that (1) if linear average RFs is chosen as the quantitation option, the %RSD of RFs be ≤20% for the analyte, (2) if least-square linear regression is chosen for quantitation, the correlation coefficient (r) be >0.990, and (3) if six-point non-linear (quadratic) curve is chosen for quantitation, the coefficient of determination (r^2) be >0.990. Initial calibration met the criteria for all target compounds.

Initial calibration information was not submitted for review in these SDGs.

8.3 Calibration Verification

The method requires that (1) a mid-range check standard be analyzed prior to and after each analytical batch, and (2) the percent drift (%D) value be within ±20% of the true value.

Calibration verification was performed at required frequency. The %D values were either within the ±30% criterion or at levels that had no adverse effects on data quality (e.g., high-bias %D value where the target compound was not detected in associated sample).

8.4 Method Blanks

Method blanks were prepared and analyzed as required. Target compounds were not detected at or above the RLs in the method blanks, except for the following:

SDG	Method Blank ID	Compound	MB Conc.	Affected Sample	Original Result	Qualified Result	Unit
312058	6129	Aliphatic C8-C10	0.499 J	BUST-B39-12 BUST-S58-12	1.04 J 1.18 J	**5.63 U** **5.64 U**	**mg/kg**
312058	6129	Aromatic C8-C10	1.0 J	BUST-B39-12 BUST-S58-12	2.65 J 3.76 J	**5.63 U** **5.64 U**	**mg/kg**

8.5 Surrogate Spikes

Surrogate spikes were added to all samples as required by the method. All surrogate spike %R values were either within the project control limits, or outside the control limits due to matrix interference, or diluted below quantitation limits due to high levels of target or non-target compounds in the samples. No data qualifying actions were taken in these cases.

8.6 Matrix Spike (MS)

MS analyses were performed on project and batch QC samples at the proper frequency. The %R values met the laboratory control criteria.

8.7 Laboratory Control Sample (LCS) and LCS Duplicate (LCSD)

LCS and LCSD analyses were performed as required. All %R and RPD values met the project control limits, except for the following:

SDG#	LCS ID	Analyte	LCS %R	LCSD %R	Control Limit	RPD	Affected Sample	Data Qualifier
311258	5838	Aromatic C8-C10	-	67.4%	70-130%	5.25%	BUST-S16-8-111213 BUST-S17-8-111213	**J**
312058	6129	Aromatic C8-C10 Aromatic C10-C12	55.5 33.4	57.5 19.6	70-130%	-	BUST-B39-12 BUST-S58-12	**J**
401318	6467	Aliphatic C8-C10	60.5%	52.1%	70-130%	-	NRU-B5-16-012714	**J**

Note: RPD criteria = ±20%.

8.8 Reporting Limits and Target Compound Quantitation

Sample-specific RLs were adjusted with sample volumes and moisture contents.

8.9 Field Duplicates

Field duplicates were not submitted for EPH analysis in these SDGs.

8.10 Overall Assessment of EPH Data Usability

EPH data are acceptable for use as qualified, based on the information submitted by the laboratory.

9. Volatile Petroleum Hydrocarbon by GC/FID (Method NWTPH-VPH)

9.1 Sample Management and Holding Times

No anomalies were identified in relation to sample preservation, handling, and transport as discussed in Section 1.1.

Soil samples should be preserved with methanol at the time of collection, and analyzed within 14 days of collection. All samples were analyzed within the required holding times.

9.2 Initial Calibration (ICAL)

The method linearity criteria require that (1) if linear average RFs is chosen as the quantitation option, the %RSD of RFs be ≤20%, (2) if least-square linear regression is chosen for quantitation, the correlation coefficient (r) be >0.990, and (3) if six-point non-linear (quadratic) curve is chosen for quantitation, the coefficient of determination (r^2) be >0.990. Initial calibration met the criteria for all target compounds.

Initial calibration information was not submitted for review in these SDGs.

9.3 Calibration Verification

Continuing calibration verification (CCV) analyses were performed at the required frequency for all analytical sequences as required by the method. The %D values for all CCVs met the method criterion (% value within ±20% for the carbon range components and ±15% for individual target compounds).

9.4 Method Blanks

Method blanks were prepared and analyzed as required. No target compounds were detected at or above the RLs in the method blanks.

9.5 Surrogate Spikes

Surrogate spikes were added to all samples as required by the method. All surrogate spike %R values were either within the project control limits, or outside the control limits due to matrix interference, or diluted below quantitation limits due to high levels of target or non-target compounds in the samples. No data qualifying actions were taken in these cases.

9.6 Matrix Spike (MS)

MS analyses were performed on project or batch QC samples at the required frequency. The %R values were within the laboratory control limits, except for the following:

SDG#	Parent Sample ID	Compound	MS %R	Control Limit	Affected Sample	Data Qualifier
401318	NRU-B5-16-012714	Aliphatics C10-C12 Aromatics C10-C12	-18.5% 43.8%	57-120%	NRU-B5-16-012714	J

9.7 Laboratory Control Sample (LCS)

LCS analyses were performed as required by the method. All %R values were within the laboratory control limits.

9.8 Laboratory Duplicate Analysis

Duplicate analyses were performed on project and batch QC samples at the proper frequency. All RPD and concentration difference values met the laboratory control criteria.

9.9 Reporting Limits and Target Compound Quantitation

Sample-specific RLs were consistent with method-recommended practical quantitation limits, and were adjusted with sample volumes and moisture contents.

9.10 Field Duplicates

Field duplicates were not submitted for VPH analysis in these SDGs.

9.11 Overall Assessment of VPH Data Usability

VPH data are acceptable for use as qualified, based on the information submitted by the laboratory.

10. BTEX by GC/PID (EPA Method SW8021B)

10.1 Sample Management and Holding Time

No anomalies were identified in relation to sample preservation, handling, and transport as discussed in Section 1.1.

Soil samples should be preserved in methanol at the time of collection. Soil and water samples should be analyzed within 14 days of collection. All samples were analyzed within the required holding times.

10.2 Initial Calibration (ICAL)

The ICAL criteria require that (1) if linear average RFs is chosen as the quantitation option, at least five standards at different concentrations should be analyzed and the percent relative standard deviation (%RSD) of response factors (RFs) be ≤20% for the analyte, (2) if least-square linear regression is chosen for quantitation, the correlation coefficient (r) be >0.995, and (3) if six-point non-linear (quadratic) curve is chosen for quantitation, the coefficient of determination (r^2) be >0.99. The ICAL met the requirements.

An initial calibration verification (ICV) standard (second source standard) was analyzed to verify the calibration curve. Percent difference (%D) values were either within ±20%, or the exceedance had no adverse effects on data usability (*e.g.,* biased high ICV recovery for a compound not detected in samples).

10.3 Calibration Verification (CCV)

The CCV criteria requires that (1) continuing calibrations be analyzed at the beginning of each 12-hour analysis period prior to the analysis of method blank and samples, and (2) the %D be within ±20. Calibration verifications met the requirements.

10.4 Method Blanks

Method blanks were prepared and analyzed as required. Target compounds were not detected at or above the RLs.

10.5 Laboratory Control Sample (LCS) and LCS Duplicate (LCSD)

LCS and LCSD were prepared and analyzed as required by the method. The %R and RPD values met the project control limits.

10.6 Surrogate Spikes

Surrogate spikes were added to all samples as required by the method. All surrogate spike %R values were within the project control limits.

10.7 Matrix Spike (MS)

MS analyses were performed on project and batch QC samples at the proper frequency. All %R values were within the project control limits.

10.8 Reporting Limit and Target Compound Quantitation

RLs were supported with adequate initial calibration concentrations.

10.9 Field Duplicates

Field duplicates were not submitted for BTEX analysis in these SDGs.

10.10 Overall Assessment of BTEX Data Usability

BTEX data are of known quality and acceptable for use.

SUMMARY

Table I. Data Affected by QC Anomalies:

Laboratory ID	Sample ID	Analyte	Qualifier	Qualified Reason
311391-07 311391-08 311391-09 311391-11 311391-12 311391-13 311391-14 311391-15 311391-16 311391-17 311391-18 311391-19	BUST-S46-4 BUST-S46A-8 BUST-S47-12 BUST-S44-8 BUST-S45-12 BUST-S40-4 BUST-S41-8 BUST-S42-12 BUST-B29-12 BUST-B30-12 BUST-B31-12 BUST-B32-12	Zinc	**J**	CCV %R >UCL
312058-06	BUST-S60-6	Lead	**J**	CCV %R >UCL
401212-05	BV-B02-8-011714	Zinc	**J**	CCV %R >UCL
311391-10	BUST-S43-4	Zinc	**J**	CCV %R >UCL; Field duplicate RPD >50%
311391-20	BUST-B503-12	Zinc	**J**	CCV %R >UCL; Field duplicate RPD >50%
401294-01 401294-02 401294-03 401294-04 401294-05 401294-06 401294-07 401294-08 401294-09 401294-10 401294-11 401294-12 401294-13 401294-14 401294-15 401294-16 401294-17 401294-18	NRU-SP01-1-012414 NRU-SP01-2-012414 NRU-SP01-3-012414 NRU-SP02-1-012414 NRU-SP02-2-012414 NRU-SP02-3-012414 NRU-SP03-1-012414 NRU-SP03-2-012414 NRU-SP03-3-012414 NRU-SP04-1-012414 NRU-SP04-2-012414 NRU-SP04-3-012414 NRU-SP05-1-012414 NRU-SP05-2-012414 NRU-SP05-3-012414 NRU-SP06-1-012414 NRU-SP06-2-012414 NRU-SP06-3-012414	Zinc	**J**	MS %R >UCL; MS/MSD RPD >20%
312336-01	BUST-S68-3	Copper	**J**	MS/MSD %R <LCL

Laboratory ID	Sample ID	Analyte	Qualifier	Qualified Reason
401294-01 401294-02 401294-03 401294-04 401294-05 401294-06 401294-07 401294-08 401294-09 401294-10 401294-11 401294-12 401294-13 401294-14 401294-15 401294-16 401294-17 401294-18	NRU-SP01-1-012414 NRU-SP01-2-012414 NRU-SP01-3-012414 NRU-SP02-1-012414 NRU-SP02-2-012414 NRU-SP02-3-012414 NRU-SP03-1-012414 NRU-SP03-2-012414 NRU-SP03-3-012414 NRU-SP04-1-012414 NRU-SP04-2-012414 NRU-SP04-3-012414 NRU-SP05-1-012414 NRU-SP05-2-012414 NRU-SP05-3-012414 NRU-SP06-1-012414 NRU-SP06-2-012414 NRU-SP06-3-012414	Arsenic	**J**	MS/MSD RPD >20%
311391-10 311391-20	BUST-S43-4 BUST-B503-12	Arsenic Lead	**J/UJ**	Field duplicate difference >2xRL
312363-01 312363-08	UST29-S01-3-122313 UST29-500-122313	Copper Lead Zinc	**J**	Field duplicate RPD >50%
311391-10 311391-20	BUST-S43-4 BUST-B503-12	Copper Nickel	**J**	Field duplicate RPD >50%
NRU-B5-16-012714	NRU-B5-16-012714	Aliphatics C8-C10 (EPH)	**J**	LCS/LCSD %R <LCL
311258-01 311258-02	BUST-S16-8-111213 BUST-S17-8-111213	Aromatics C8-C10 (EPH)	**UJ**	LCSD %R <LCL
NRU-B5-16-012714	NRU-B5-16-012714	Aliphatics C10-C12 (VPH)	**J**	MS %R <LCL
NRU-B5-16-012714	NRU-B5-16-012714	Aromatics C10-C12 (VPH)	**J**	MS %R <LCL
312200-06	BUST-S67-3	Bunker C	**J**	Exceeded calibration range
401069-18 401069-19	UST29-B15-17-010814 UST29-B502	Gasoline Range TPH	**J/UJ**	Field duplicate difference >2xRL
401294-01 401294-02 401294-03 401294-04 401294-05 401294-06 401294-07	NRU-SP01-1-012414 NRU-SP01-2-012414 NRU-SP01-3-012414 NRU-SP02-1-012414 NRU-SP02-2-012414 NRU-SP02-3-012414 NRU-SP03-1-012414	Gasoline Range TPH	**J/UJ**	Sample was not preserved in methanol.

Laboratory ID	Sample ID	Analyte	Qualifier	Qualified Reason
401294-08	NRU-SP03-2-012414	Gasoline Range TPH	**J/UJ**	Sample was not preserved in methanol.
401294-09	NRU-SP03-3-012414			
401294-10	NRU-SP04-1-012414			
401294-11	NRU-SP04-2-012414			
401294-12	NRU-SP04-3-012414			
401294-13	NRU-SP05-1-012414			
401294-14	NRU-SP05-2-012414			
401294-15	NRU-SP05-3-012414			
401294-16	NRU-SP06-1-012414			
401294-17	NRU-SP06-2-012414			
401294-18	NRU-SP06-3-012414			
401294-01	NRU-SP01-1-012414	All VOCs	**J/UJ**	Sample not preserved in MeOH
401294-02	NRU-SP01-2-012414			
401294-03	NRU-SP01-3-012414			
401294-04	NRU-SP02-1-012414			
401294-05	NRU-SP02-2-012414			
401294-06	NRU-SP02-3-012414			
401294-07	NRU-SP03-1-012414			
401294-08	NRU-SP03-2-012414			
401294-09	NRU-SP03-3-012414			
401294-10	NRU-SP04-1-012414			
401294-11	NRU-SP04-2-012414			
401294-12	NRU-SP04-3-012414			
401294-13	NRU-SP05-1-012414			
401294-14	NRU-SP05-2-012414			
401294-15	NRU-SP05-3-012414			
401294-15	NRU-SP05-3-012414			
401294-16	NRU-SP06-1-012414			
401294-17	NRU-SP06-2-012414			
401294-18	NRU-SP06-3-012414			
401108-01	UST29-S37-6-010914	Bromomethane	**UJ**	CCV %D <LCL
401108-02	UST29-S38-6-010914			
401108-03	UST29-S39-9-010914			
401108-04	UST29-S40-9-010914			
401108-05	UST29-S41-6-011014			
312363-02	UST29-S02-3-122313	Methylene chloride	**U**	Detected in MB
312363-03	UST29-S03-3-122313			
312363-04	UST29-S04-3-122313			
312363-05	UST29-S05-3-122313			
312363-06	UST29-S06-3-122313			
312363-07	UST29-S07-3-122313			
312363-08	UST29-500-122313			
312363-01	UST29-S01-3-122313	Methylene chloride	**UJ**	Detected in MB; MS/MSD %R <LCL

Laboratory ID	Sample ID	Analyte	Qualifier	Qualified Reason
401069-01	UST29-S22-9-010714			
401069-02	UST29-B13-16-010714			
401069-03	UST29-S23-12-010714			
401069-04	UST29-S24-3-010814			
401069-06	UST29-S26-9-010814			
401069-07	UST29-S27-6-010814			
401069-08	UST29-S28-3-010814			
401069-09	UST29-S29-9-010814			
401069-10	UST29-S30-6-010814			
401069-11	UST29-S31-3-010814	Methylene chloride	**UJ**	LCS %R <LCL
401069-12	UST29-S32-9-010814			
401069-13	UST29-S33-6-010814			
401069-14	UST29-S34-3-010814			
401069-15	UST29-B14-17-010814			
401069-16	UST29-S35-6-010814			
401069-17	UST29-S36-3-010814			
401069-18	UST29-B15-17-010814			
401069-19	UST29-B502			
401069-20	UST29-B16-17-010814			
312433-01	UST29-S01-3-122313			
312433-02	UST29-S02-3-122313			
312433-03	UST29-S03-3-122313			
312433-04	UST29-S04-3-122313			
312433-05	UST29-S05-3-122313			
401024-01	UST29-S06-3-122313			
401024-02	UST29-S07-3-122313			
401024-03	UST29-500-122313			
401024-04	UST29-B01-5-122313			
401024-05	UST29-B02-5-122313			
401024-06	UST29-B03-5-122313			
401024-07	UST29-B04-5-122313			
401024-08	UST29-B05-5-122313			
401024-09	UST29-B06-5-122313			
401024-10	UST29-501-122313	1,4-Dioxane Vinyl acetate	**UJ**	Based on library search; RL estimated
401024-11	UST29-S08-8-123013			
401024-12	UST29-S09-8-123013			
401024-13	UST29-S10-8-123013			
401024-14	UST29-S11-8-123013			
312363-01	UST29-B07-18-123013			
312363-02	UST29-B08-15-010214			
312363-03	UST29-S12-3-010314			
312363-04	UST29-S13-6-010314			
312363-05	UST29-S14-9-010314			
312363-06	UST29-S15-3-010314			
312363-07	UST29-S16-6-010314			
312363-08	UST29-S17-9-010314			
312363-09	UST29-S18-3-010314			
312363-10	UST29-S19-6-010314			

Laboratory ID	Sample ID	Analyte	Qualifier	Qualified Reason
312363-11 312363-12 312363-13 312363-14 312363-15 401057-01 401069-01 401069-02 401069-03 401069-04 401069-05 401069-06 401069-07 401069-08 401069-09 401069-10 401069-11 401069-12 401069-13 401069-14 401069-15 401069-16 401069-17 401069-18 401069-19 401069-20 401108-01 401108-02 401108-03 401108-04 401108-05	UST29-S20-9-010314 UST29-S21-3-010314 UST29-B09-15-010314 UST29-S24-3-010814 UST29-S25-6-010814 UST29-S26-9-010814 UST29-S27-6-010814 UST29-S28-3-010814 UST29-S29-9-010814 UST29-S30-6-010814 UST29-B10-15-010314 UST29-B11-15-010314 UST29-B12-17-010614 UST29-S22-9-010714 UST29-B13-16-010714 UST29-S23-12-010714 UST29-S31-3-010814 UST29-S32-9-010814 UST29-S33-6-010814 UST29-S34-3-010814 UST29-B14-17-010814 UST29-S35-6-010814 UST29-S36-3-010814 UST29-B15-17-010814 UST29-B502 UST29-B16-17-010814 UST29-S37-6-010914 UST29-S38-6-010914 UST29-S39-9-010914 UST29-S40-9-010914 UST29-S41-6-011014	1,4-Dioxane Vinyl acetate	**UJ**	Based on library search; RL estimated
401294-01	NRU-SP01-1-012414	2,4-Dinitrophenol 4,6-Dinitro-2-methylphenol 4-Nitrophenol Hexachlorocyclopentadiene	**UJ**	MS/MSD %R <LCL
401108-01	UST29-S37-6-010914	Indeno(1,2,3-cd)pyrene	**UJ**	CCV %D <LCL
311258-01	BUST-S16-8-111213	Phenanthrene	**J**	Field duplicate difference >2xRL
311258-06	BUST-501-111213	Fluorene	**J**	Field duplicate difference >2xRL
311428-06 311428-23	UST70-S16-8-112113 UST70-501	Benz(a)anthracene Benzo(a)pyrene Benzo(b)fluoranthene Benzo(g,h,i)perylene Benzo(k)fluoranthene Chrysene Fluoranthene Indeno(1,2,3-cd)pyrene Pyrene	**J/UJ**	Field duplicate difference >2xRL

Laboratory ID	Sample ID	Analyte	Qualifier	Qualified Reason
311338-10 311338-11	BUST-B23-6-111513 BUST-502-111513	Acenaphthene Acenaphthylene Anthracene Benz(a)anthracene Benzo(a)pyrene Benzo(b)fluoranthene Benzo(g,h,i)perylene Benzo(k)fluoranthene Chrysene Dibenzo(a,h)anthracene Fluoranthene Fluorene Indeno(1,2,3-cd)pyrene Naphthalene Phenanthrene Pyrene	**J/UJ**	Field duplicate difference >2xRL
312200-01	BUST-S62-3	Indeno(1,2,3-cd)pyrene	**J**	Field duplicate difference >2xRL
312200-01 312200-07	BUST-S62-3 BUST-504-FD	Naphthalene	**J**	Field duplicate difference >2xRL
312363-08	UST29-500-122313	Anthracene Benzo(g,h,i)perylene Benzo(k)fluoranthene Dibenzo(a,h)anthracene Fluorene Indeno(1,2,3-cd)pyrene Naphthalene	**UJ**	Field duplicate difference >2xRL
312363-14 312363-15	UST29-B06-5-122313 UST29-501-122313	Fluoranthene Naphthalene	**J**	Field duplicate difference >2xRL
401069-18 401069-19	UST29-B15-17-010814 UST29-B502	Naphthalene Phenanthrene	**J**	Field duplicate difference >2xRL
401293-01 401293-09	NRU-S04-4-012414 NRU-500-012414	Acenaphthene Fluorene Naphthalene	**UJ**	Field duplicate difference >2xRL
312200-01	BUST-S62-3	Acenaphthene Anthracene Benz(a)anthracene Benzo(a)pyrene Benzo(b)fluoranthene Benzo(g,h,i)perylene Chrysene Fluoranthene Phenanthrene Pyrene	**J**	Field duplicate RPD >50%

Laboratory ID	Sample ID	Analyte	Qualifier	Qualified Reason
312200-07	BUST-504-FD	Acenaphthene Anthracene Benz(a)anthracene Chrysene Fluoranthene Phenanthrene Pyrene	J	Field duplicate RPD >50%
312363-01	UST29-S01-3-122313	Dibenzo(a,h)anthracene	J	Field duplicate RPD >50%
312363-08	UST29-500-122313	Benz(a)anthracene Benzo(a)pyrene Benzo(b)fluoranthene Chrysene Fluoranthene Phenanthrene Pyrene	J	Field duplicate RPD >50%
401292-13 401292-15	NRU-S20-12-012414 NRU-501-012414	Fluoranthene Pyrene	J	Field duplicate RPD >50%
401293-01 401293-09	NRU-S04-4-012414 NRU-500-012414	Anthracene Benz(a)anthracene Benzo(a)pyrene Benzo(b)fluoranthene Chrysene Fluoranthene Phenanthrene Pyrene	J	Field duplicate RPD >50%
311258-01	BUST-S16-8-111213	Chrysene Fluorene	J	Field duplicate RPD >50%
311258-06	BUST-501-111213	Chrysene Phenanthrene	J	Field duplicate RPD >50%
311428-13	UST70-S03-4-112113	Benzo(b)fluoranthene Chrysene Fluoranthene Pyrene	J	Internal standard recovery high
312200-07	BUST-504-FD	Benzo(k)fluoranthene Dibenzo(a,h)anthracene	J	Internal standard recovery high
312200-07	BUST-504-FD	Indeno(1,2,3-cd)pyrene	J	Internal standard recovery high; Field duplicate Difference >2xRL
401069-03DL	UST29-S23-12-010714	Benz(a)anthracene Chrysene	J	Internal standard recovery low
401212-01 401212-06	BV-S01-6-011714 BV-S04-6-011714	Indeno(1,2,3-cd)pyrene	J	LCS/LCSD RPD >20%
312363-01	UST29-S01-3-122313	Phenanthrene	J	MS/MSD %R & RPD outside criteria; Field duplicate RPD >50%
312363-01	UST29-S01-3-122313	Acenaphthene	J	MS/MSD RPD >20%
401024-01	UST29-B08-15-010214	Benz(a)anthracene Chrysene Pyrene	J	MS/MSD RPD >20%

Laboratory ID	Sample ID	Analyte	Qualifier	Qualified Reason
401054-03	BAST-S53-5-010714	Benzo(k)fluoranthene	**J**	MS/MSD RPD >20%
401212-02	BV-B01-8-011714	Phenanthrene	**J**	MS/MSD RPD >20%
401293-02	NRU-S05-8-012414	Benz(a)anthracene Benzo(b)fluoranthene Benzo(g,h,i)perylene Benzo(k)fluoranthene Chrysene Dibenzo(a,h)anthracene Fluoranthene Indeno(1,2,3-cd)pyrene Pyrene	**J**	MS/MSD RPD >20%
312363-01	UST29-S01-3-122313	Anthracene Benz(a)anthracene Benzo(a)pyrene Benzo(g,h,i)perylene Benzo(k)fluoranthene Fluorene Indeno(1,2,3-cd)pyrene Naphthalene	**J**	MS/MSD RPD >20%; Field duplicate RPD >50%
312363-01	UST29-S01-3-122313	Benzo(b)fluoranthene Chrysene Fluoranthene Pyrene	**J**	MSD %R & MS/MSD RPD outside criteria; Field duplicate RPD >50%
401292-01	NRU-S06-12-012314	Benz(a)anthracene Benzo(a)pyrene Benzo(b)fluoranthene Benzo(g,h,i)perylene Benzo(k)fluoranthene Chrysene Fluoranthene Indeno(1,2,3-cd)pyrene Phenanthrene Pyrene	**J**	MSD %R >UCL; MS/MSD RPD >20%
401024-01	UST29-B08-15-010214	Fluoranthene Phenanthrene	**J**	MSD %R>UCL; MS/MSD RPD >20%
401293-02	NRU-S05-8-012414	Benzo(a)pyrene	**J**	MSD %R>UCL; MS/MSD RPD >20%

Table II. Data Affected by Detections in Method Blank

SDG#	Sample ID	Compound	Original Result	Adjusted Result	Unit	Report Section
312058	BUST-B39-12 BUST-S58-12	Aliphatic C8-C10	1.04 J 1.18 J	**5.63 U** **5.64 U**	mg/kg	**8.4**
312058	BUST-B39-12 BUST-S58-12	Aromatic C8-C10	2.65 J 3.76 J	**5.63 U** **5.64 U**	mg/kg	**8.4**

Table III. Data Qualifiers are defined as follows:

Data Qualifier	Definition
J	The analyte was detected above the reported quantitation limit, and the reported concentration was an estimated value.
U	The analyte was analyzed for, but was considered not detected at the reporting limit or reported value.
UJ	The analyte was analyzed for, and the associated quantitation limit was an estimated value.

Approved By: _____ Date: ***6/23/2014***

Mingta Lin, Senior Project Chemist

REFERENCES

USEPA *Contract Laboratory Program National Functional Guidelines for Inorganic Superfund Data Review,* Office of Superfund Remediation and Technical Innovation, U.S. Environmental Protection Agency, January 2010, USEPA 540/R-10/011

USEPA *Contract Laboratory Program National Functional Guidelines for Superfund Organic Methods Data Review,* Office of Superfund Remediation and Technical Innovation, U.S. Environmental Protection Agency, June 2008, USEPA-540-R-08-01.

USEPA *Method 1631, Revision E: Mercury in Water by Oxidation, Purge and Trap, and Cold Vapor Atomic Fluorescence Spectrometry, Office of Water, U.S. Environmental Protection Agency, August 2002, EPA-821-R-02-019.*

USEPA *Test Methods for Evaluating Solid Waste (SW-846). Third Edition and Revised Update IIIA.* Office of Solid Waste and Emergency Response, Washington, D.C. April 1998.

USEPA *Methods for Chemical Analysis of Water and Wastes,* EPA-600/4-79-020, March 1983 and updates.

Standard Methods for the Examination of Water and Wastewater, American Public Health Association, 20th Edition, 1995.

Ecology (Washington State Department of). 1997. *Analytical Methods for Petroleum Hydrocarbons.* Publication No. ECY 97-602. June 1997.

PSEP *Recommended Guidelines for Measuring Organic Compounds in Puget Sound Water, Sediment and Tissue Samples,* Puget Sound Water Quality Authority, April 1997.

Appendix A

Field duplicate RPD is indicative of field and laboratory precision and sample homogeneity in combination. The CLP National Functional Guidelines or *Work Plan* do not specify criteria for field duplicate evaluation. An advisory criterion of 35% was applied to evaluating the RPD values of field duplicate results that are ≥5xRL. For results that are <5xRL, an advisory criterion of ±2RL was applied to evaluating the concentration differences. The RPD (or concentration difference as applicable) values and data qualification for detected compounds in field duplicates are presented as follows:

Analyte	Units	RL	Parent & Field Duplicate Sample Result		RPD	Delta	Data Qualifier
			BAST-B052-7	BAST- 505-FD			
Mercury	mg/kg	0.1	ND	ND			
Antimony	mg/kg	1	ND	ND			
Arsenic	mg/kg	1	2.99	3.44	0%	0.45	
Cadmium	mg/kg	1	ND	ND		0	
Copper	mg/kg	1	6.32	6.11		0.21	**J/J**
Lead	mg/kg	1	2.22	2.39		0.17	
Nickel	mg/kg	1	12	12.9	7%		
Zinc	mg/kg	1	11.2	11.8	5%		
Diesel Range TPH	mg/kg	50	ND	ND		0	
Oil Range TPH	mg/kg	250	ND	ND		0	
Acenaphthene	mg/kg	0.01	0.027	0.025		0.002	
Acenaphthylene	mg/kg	0.01	ND	ND		0	
Anthracene	mg/kg	0.01	ND	ND		0	
Benz(a)anthracene	mg/kg	0.01	ND	ND		0	
Benzo(a)pyrene	mg/kg	0.01	ND	ND		0	
Benzo(b)fluoranthene	mg/kg	0.01	ND	ND		0	
Benzo(g,h,i)perylene	mg/kg	0.01	ND	ND		0	
Benzo(k)fluoranthene	mg/kg	0.01	ND	ND		0	
Chrysene	mg/kg	0.01	ND	ND		0	
Dibenzo(a,h)anthracene	mg/kg	0.01	ND	ND		0	
Fluoranthene	mg/kg	0.01	ND	ND		0	
Fluorene	mg/kg	0.01	ND	ND		0	
Indeno(1,2,3-cd)pyrene	mg/kg	0.01	ND	ND		0	
Naphthalene	mg/kg	0.01	ND	ND		0	
Phenanthrene	mg/kg	0.01	ND	ND		0	
Pyrene	mg/kg	0.01	ND	ND		0	

Analyte	Units	RL	Parent & Field Duplicate Sample Result		RPD	Delta	Data Qualifier
			BUST-S16-8-111213	**BUST-501-111213**			
Mercury	mg/kg	0.1	ND	ND			
Antimony	mg/kg	1	ND	ND			
Arsenic	mg/kg	1	3.62	4.37		0.75	
Cadmium	mg/kg	1	ND	ND		0	
Copper	mg/kg	1	8.35	9.96	18%		
Lead	mg/kg	1	2.26	3.42		1.16	
Nickel	mg/kg	1	16.3	17.6	8%		
Zinc	mg/kg	1	18.5	22.4	19%		
Bunker C	mg/kg	50	8400	8600	2%		
Acenaphthene	mg/kg	0.1	0.76	0.59	25%		
Acenaphthylene	mg/kg	0.1	ND	ND		0	
Anthracene	mg/kg	0.1	1.2	1.1	9%		
Benz(a)anthracene	mg/kg	0.1	0.99	0.86	14%		
Benzo(a)pyrene	mg/kg	0.1	0.52	0.48		0.04	
Benzo(b)fluoranthene	mg/kg	0.1	0.17	0.16		0.01	
Benzo(g,h,i)perylene	mg/kg	0.1	0.28	0.26		0.02	
Benzo(k)fluoranthene	mg/kg	0.1	ND	ND		0	
Chrysene	mg/kg	0.1	1.7	1	52%		**J/J**
Dibenzo(a,h)anthracene	mg/kg	0.1	ND	ND		0	
Fluoranthene	mg/kg	0.1	0.36	0.35		0.01	
Fluorene	mg/kg	0.1	0.59	0.37		0.22	**J/J**
Indeno(1,2,3-cd)pyrene	mg/kg	0.1	ND	ND		0	
Naphthalene	mg/kg	0.1	0.12	ND		0	
Phenanthrene	mg/kg	0.1	1.8	1	57%		**J/J**
Pyrene	mg/kg	0.1	2.2	2.1	5%		
			BUST-B23-6-111513	**BUST-502-111513**			
Mercury	mg/kg	0.1	ND	ND			
Antimony	mg/kg	1	ND	ND			
Arsenic	mg/kg	1	3.29	3.6	9%	0.31	
Cadmium	mg/kg	1	1	ND		1	
Copper	mg/kg	1	9.71	10.4	7%		
Lead	mg/kg	1	1.79	1.91		0.12	
Nickel	mg/kg	1	14.2	16.1	13%		
Zinc	mg/kg	1	18.2	22.6	22%		
Bunker C	mg/kg	250	ND	380		380	

Analyte	Units	RL	Parent & Field Duplicate Sample Result		RPD	Delta	Data Qualifier
Acenaphthene	mg/kg	0.01	0.067	ND		0.067	**J/UJ**
Acenaphthylene	mg/kg	0.01	ND	ND		0	**J/UJ**
Anthracene	mg/kg	0.01	0.11	ND		0.11	**J/UJ**
Benz(a)anthracene	mg/kg	0.01	0.11	ND		0.11	**J/UJ**
Benzo(a)pyrene	mg/kg	0.01	0.087	ND		0.087	**J/UJ**
Benzo(b)fluoranthene	mg/kg	0.01	0.097	ND		0.097	**J/UJ**
Benzo(g,h,i)perylene	mg/kg	0.01	0.038	ND		0.038	**J/UJ**
Benzo(k)fluoranthene	mg/kg	0.01	0.043	ND		0.043	**J/UJ**
Chrysene	mg/kg	0.01	0.12	ND		0.12	**J/UJ**
Dibenzo(a,h)anthracene	mg/kg	0.01	ND	ND		0	**J/UJ**
Fluoranthene	mg/kg	0.01	0.29	ND		0.29	**J/UJ**
Fluorene	mg/kg	0.01	0.057	ND		0.057	**J/UJ**
Indeno(1,2,3-cd)pyrene	mg/kg	0.01	0.041	ND		0.041	**J/UJ**
Naphthalene	mg/kg	0.01	0.026	ND		0.026	**J/UJ**
Phenanthrene	mg/kg	0.01	0.35	ND		0.35	**J/UJ**
Pyrene	mg/kg	0.01	0.27	ND		0.27	**J/UJ**
			BUST-S62-3	**BUST-504-FD**			
Mercury	mg/kg	0.1	0	0.13		0.13	
Antimony	mg/kg	1	0	0		0	
Arsenic	mg/kg	1	2.57	3.14		0.57	
Cadmium	mg/kg	1	0	0		0	
Copper	mg/kg	1	18.6	15.7	17%		
Lead	mg/kg	1	35.5	27	27%		
Nickel	mg/kg	1	18.1	16.6	9%		
Zinc	mg/kg	1	46.5	62.4	29%		
Bunker C	mg/kg	250	3100	7100	78%		**J/J**
Acenaphthene	mg/kg	0.01	0.053	0.14	90%		**J/J**
Acenaphthylene	mg/kg	0.01	0	0		0	
Anthracene	mg/kg	0.01	0.068	0.13	63%		**J/J**
Benz(a)anthracene	mg/kg	0.01	0.11	0.26	81%		**J/J**
Benzo(a)pyrene	mg/kg	0.01	0.08	0.17	72%		**J/J**
Benzo(b)fluoranthene	mg/kg	0.01	0.083	0.16	63%		**J/J**
Benzo(g,h,i)perylene	mg/kg	0.01	0.059	0.11	60%		**J/J**
Benzo(k)fluoranthene	mg/kg	0.01	0.019	0.015		0.004	
Chrysene	mg/kg	0.01	0.21	0.43	69%		**J/J**
Dibenzo(a,h)anthracene	mg/kg	0.01	0.014	0.017		0.003	

Analyte	Units	RL	Parent & Field Duplicate Sample Result		RPD	Delta	Data Qualifier
Fluoranthene	mg/kg	0.01	0.12	0.29	83%		**J/J**
Fluorene	mg/kg	0.01	0	0		0	
Indeno(1,2,3-cd)pyrene	mg/kg	0.01	0.037	0.075		0.038	**J/J**
Naphthalene	mg/kg	0.01	0.012	0.033		0.021	**J/J**
Phenanthrene	mg/kg	0.01	0.077	0.2	89%		**J/J**
Pyrene	mg/kg	0.01	0.33	0.82	85%		**J/J**
			BUST-S43-4	**BUST-B503-12**			
Mercury	mg/kg	0.1	ND	ND		0	
Antimony	mg/kg	1	ND	ND		0	
Arsenic	mg/kg	1	ND	2.44	#VALUE!		**UJ/J**
Cadmium	mg/kg	1	ND	ND		0	
Copper	mg/kg	1	19.1	3.62	136%		**J/J**
Lead	mg/kg	1	6.16	ND		6.16	**J/UJ**
Nickel	mg/kg	1	22.3	10.4	73%		**J/J**
Zinc	mg/kg	1	25.6	6.46	119%		**J/J**
Bunker C	mg/kg	250	ND	ND		0	
Acenaphthene	mg/kg	0.01	ND	ND		0	
Acenaphthylene	mg/kg	0.01	ND	ND		0	
Anthracene	mg/kg	0.01	ND	ND		0	
Benz(a)anthracene	mg/kg	0.01	ND	ND		0	
Benzo(a)pyrene	mg/kg	0.01	ND	ND		0	
Benzo(b)fluoranthene	mg/kg	0.01	ND	ND		0	
Benzo(g,h,i)perylene	mg/kg	0.01	ND	ND		0	
Benzo(k)fluoranthene	mg/kg	0.01	ND	ND		0	
Chrysene	mg/kg	0.01	ND	ND		0	
Dibenzo(a,h)anthracene	mg/kg	0.01	ND	ND		0	
Fluoranthene	mg/kg	0.01	ND	ND		0	
Fluorene	mg/kg	0.01	ND	ND		0	
Indeno(1,2,3-cd)pyrene	mg/kg	0.01	ND	ND		0	
Naphthalene	mg/kg	0.01	ND	ND		0	
Phenanthrene	mg/kg	0.01	ND	ND		0	
Pyrene	mg/kg	0.01	ND	ND		0	
			NRU-S04-4-012414	**NRU-500-012414**			
Diesel Range TPH	mg/kg	50	ND	ND		0	
Oil Range TPH	mg/kg	250	ND	ND		0	

Analyte	Units	RL	Parent & Field Duplicate Sample Result		RPD	Delta	Data Qualifier
Acenaphthene	mg/kg	0.01	ND	0.85		0.85	**UJ/J**
Acenaphthylene	mg/kg	0.01	ND	ND		0	
Anthracene	mg/kg	0.01	0.012	0.32		0.308	**J/J**
Benz(a)anthracene	mg/kg	0.01	0.064	0.18	95%		**J/J**
Benzo(a)pyrene	mg/kg	0.01	0.062	0.12	64%		**J/J**
Benzo(b)fluoranthene	mg/kg	0.01	0.08	0.14	55%		**J/J**
Benzo(g,h,i)perylene	mg/kg	0.01	0.038	0.056		0.018	
Benzo(k)fluoranthene	mg/kg	0.01	0.03	0.037		0.007	
Chrysene	mg/kg	0.01	0.073	0.22	100%		**J/J**
Dibenzo(a,h)anthracene	mg/kg	0.01	0.011	0.015		0.004	
Fluoranthene	mg/kg	0.01	0.15	0.57	117%		**J/J**
Fluorene	mg/kg	0.01	ND	0.49		0.49	**UJ/J**
Indeno(1,2,3-cd)pyrene	mg/kg	0.01	0.038	0.038		0	
Naphthalene	mg/kg	0.01	ND	0.061		0.061	**UJ/J**
Phenanthrene	mg/kg	0.01	0.043	0.084		0.041	**J/J**
Pyrene	mg/kg	0.01	0.17	0.62	114%		**J/J**
			NRU-S20-12-012414	**NRU-501-012414**			
Diesel Range TPH	mg/kg	50	ND	65		65	
Oil Range TPH	mg/kg	250	ND	ND		0	
Acenaphthene	mg/kg	0.01	0.025	0.035		0.01	
Acenaphthylene	mg/kg	0.01	ND	ND		0	
Anthracene	mg/kg	0.01	0.02	0.035		0.015	
Benz(a)anthracene	mg/kg	0.01	0.023	0.037		0.014	
Benzo(a)pyrene	mg/kg	0.01	0.023	0.032		0.009	
Benzo(b)fluoranthene	mg/kg	0.01	0.025	0.039		0.014	
Benzo(g,h,i)perylene	mg/kg	0.01	0.018	0.02		0.002	
Benzo(k)fluoranthene	mg/kg	0.01	ND	0.012		0.012	
Chrysene	mg/kg	0.01	0.032	0.05		0.018	
Dibenzo(a,h)anthracene	mg/kg	0.01	ND	ND		0	
Fluoranthene	mg/kg	0.01	0.05	0.089	56%		**J/J**
Fluorene	mg/kg	0.01	0.019	0.032		0.013	
Indeno(1,2,3-cd)pyrene	mg/kg	0.01	0.012	0.016		0.004	
Naphthalene	mg/kg	0.01	0.012	0.024		0.012	
Phenanthrene	mg/kg	0.01	0.038	0.052		0.014	
Pyrene	mg/kg	0.01	0.07	0.12	53%		**J/J**

Analyte	Units	RL	Parent & Field Duplicate Sample Result		RPD	Delta	Data Qualifier
			UST29-S01-3-122313	**UST29-500-122313**			
Mercury	mg/kg	0.1	ND	ND		0	
Arsenic	mg/kg	1	4.84	3.74		1.1	
Cadmium	mg/kg	1	ND	ND		0	
Copper	mg/kg	1	9.87	5.59	55%		**J/J**
Lead	mg/kg	1	7.79	2.08	116%		**J/J**
Nickel	mg/kg	1	14.1	12.6	11%		
Zinc	mg/kg	1	24.9	8.57	98%		**J/J**
Diesel Range TPH	mg/kg	50	ND	91		0	
Oil Range TPH	mg/kg	250	ND	ND		0	
Gasoline Range TPH	mg/kg	2	ND	ND		0	
Methylene chloride	mg/kg	0.5	1.2	0.97	21%		
Acenaphthene	mg/kg	0.01	0.018	ND		0.018	
Acenaphthylene	mg/kg	0.01	ND	ND		0	
Anthracene	mg/kg	0.01	0.052	0		0.052	**J/UJ**
Benz(a)anthracene	mg/kg	0.01	0.14	0.018		0.122	**J/J**
Benzo(a)pyrene	mg/kg	0.01	0.1	0.011		0.089	**J/J**
Benzo(b)fluoranthene	mg/kg	0.01	0.14	0.014		0.126	**J/J**
Benzo(g,h,i)perylene	mg/kg	0.01	0.048	ND		0.048	**J/UJ**
Benzo(k)fluoranthene	mg/kg	0.01	0.044	ND		0.044	**J/UJ**
Chrysene	mg/kg	0.01	0.15	0.018		0.132	**J/J**
Dibenzo(a,h)anthracene	mg/kg	0.01	0.014	ND		0.014	**J/UJ**
Fluoranthene	mg/kg	0.01	0.24	0.031		0.209	**J/J**
Fluorene	mg/kg	0.01	0.021	ND		0.021	**J/UJ**
Indeno(1,2,3-cd)pyrene	mg/kg	0.01	0.055	ND		0.055	**J/UJ**
Naphthalene	mg/kg	0.01	0.014	ND		0.014	**J/UJ**
Phenanthrene	mg/kg	0.01	0.22	0.025		0.195	**J/J**
Pyrene	mg/kg	0.01	0.28	0.036		0.244	**J/J**
			UST29-B15-17-010814	**UST29-B502**			
Diesel Range TPH	mg/kg	50	ND	ND		0	
Oil Range TPH	mg/kg	250	ND	ND		0	
Gasoline Range TPH	mg/kg	2	7.4	ND		7.4	**J/UJ**
Acenaphthene	mg/kg	0.01	0.04	ND		0.04	
Acenaphthylene	mg/kg	0.01	ND	ND		0	
Anthracene	mg/kg	0.01	ND	ND		0	

Analyte	Units	RL	Parent & Field Duplicate Sample Result		RPD	Delta	Data Qualifier
Benz(a)anthracene	mg/kg	0.01	0.015	0.014		0.001	
Benzo(a)pyrene	mg/kg	0.01	0.01	ND		0.01	
Benzo(b)fluoranthene	mg/kg	0.01	0.014	0.014		0	
Benzo(g,h,i)perylene	mg/kg	0.01	0.011	0.01		0.001	
Benzo(k)fluoranthene	mg/kg	0.01	ND	ND		0	
Chrysene	mg/kg	0.01	0.016	0.014		0.002	
Dibenzo(a,h)anthracene	mg/kg	0.01	0	ND		0	
Fluoranthene	mg/kg	0.01	0.075	0.053	34%		
Fluorene	mg/kg	0.01	0.019	ND		0.019	
Indeno(1,2,3-cd)pyrene	mg/kg	0.01	ND	ND		0	
Naphthalene	mg/kg	0.01	0.067	0.023		0.044	**J/J**
Phenanthrene	mg/kg	0.01	0.044	0.021		0.023	**J/J**
Pyrene	mg/kg	0.01	0.078	0.055	35%		
			UST70-S13-4-112113	**UST70-500**			
Diesel Range TPH	mg/kg	50	ND	ND		0	
Oil Range TPH	mg/kg	250	ND	ND		0	
Acenaphthene	mg/kg	0.01	ND	ND		0	
Acenaphthylene	mg/kg	0.01	ND	ND		0	
Anthracene	mg/kg	0.01	ND	ND		0	
Benz(a)anthracene	mg/kg	0.01	ND	ND		0	
Benzo(a)pyrene	mg/kg	0.01	ND	0.013		0.013	
Benzo(b)fluoranthene	mg/kg	0.01	0.012	0.016		0.004	
Benzo(g,h,i)perylene	mg/kg	0.01	ND	0.011		0.011	
Benzo(k)fluoranthene	mg/kg	0.01	ND	ND		0	
Chrysene	mg/kg	0.01	ND	0.012		0.012	
Dibenzo(a,h)anthracene	mg/kg	0.01	ND	0.01		0.01	
Fluoranthene	mg/kg	0.01	ND	0.016		0.016	
Fluorene	mg/kg	0.01	ND	ND		0	
Indeno(1,2,3-cd)pyrene	mg/kg	0.01	ND	ND		0	
Naphthalene	mg/kg	0.01	ND	ND		0	
Phenanthrene	mg/kg	0.01	ND	ND		0	
Pyrene	mg/kg	0.01	0.014	0.021		0.007	
			UST70-S16-8-112113	**UST70-501**			
Mercury	mg/kg	0.1	ND	ND		0	
Arsenic	mg/kg	1	5.36	5.97	11%		

Analyte	Units	RL	Parent & Field Duplicate Sample Result		RPD	Delta	Data Qualifier
Cadmium	mg/kg	1	ND	ND		0	
Copper	mg/kg	1	11.6	11.9	3%		
Lead	mg/kg	1	10.2	9.83	4%		
Nickel	mg/kg	1	14.3	14.8	3%		
Zinc	mg/kg	1	21.6	24.4	12%		
Diesel Range TPH	mg/kg	50	ND	ND		0	
Oil Range TPH	mg/kg	250	ND	ND		0	
Acenaphthene	mg/kg	0.01	ND	ND		0	
Acenaphthylene	mg/kg	0.01	ND	ND		0	
Anthracene	mg/kg	0.01	ND	ND		0	
Benz(a)anthracene	mg/kg	0.01	ND	0.037		0.037	**UJ/J**
Benzo(a)pyrene	mg/kg	0.01	ND	0.036		0.036	**UJ/J**
Benzo(b)fluoranthene	mg/kg	0.01	ND	0.049		0.049	**UJ/J**
Benzo(g,h,i)perylene	mg/kg	0.01	ND	0.023		0.023	**UJ/J**
Benzo(k)fluoranthene	mg/kg	0.01	ND	0.019		0.019	**UJ/J**
Chrysene	mg/kg	0.01	ND	0.039		0.039	**UJ/J**
Dibenzo(a,h)anthracene	mg/kg	0.01	ND	0		0	
Fluoranthene	mg/kg	0.01	ND	0.04		0.04	**UJ/J**
Fluorene	mg/kg	0.01	ND	0		0	
Indeno(1,2,3-cd)pyrene	mg/kg	0.01	ND	0.024		0.024	**UJ/J**
Naphthalene	mg/kg	0.01	ND	0		0	
Phenanthrene	mg/kg	0.01	ND	0		0	
Pyrene	mg/kg	0.01	0.01	0.05		0.04	**UJ/J**
			UST70-S22-8-010614	**UST70-502**			
Diesel RangeTPH	mg/kg	50	ND	ND		0	
Oil Range TPH	mg/kg	250	ND	ND		0	
Acenaphthene	mg/kg	0.01	ND	ND		0	
Acenaphthylene	mg/kg	0.01	ND	ND		0	
Anthracene	mg/kg	0.01	ND	ND		0	
Benz(a)anthracene	mg/kg	0.01	ND	ND		0	
Benzo(a)pyrene	mg/kg	0.01	ND	ND		0	
Benzo(b)fluoranthene	mg/kg	0.01	ND	ND		0	
Benzo(g,h,i)perylene	mg/kg	0.01	ND	ND		0	
Benzo(k)fluoranthene	mg/kg	0.01	ND	ND		0	
Chrysene	mg/kg	0.01	ND	ND		0	

Analyte	Units	RL	Parent & Field Duplicate Sample Result		RPD	Delta	Data Qualifier
Dibenzo(a,h)anthracene	mg/kg	0.01	ND	ND		0	
Fluoranthene	mg/kg	0.01	ND	ND		0	
Fluorene	mg/kg	0.01	ND	ND		0	
Indeno(1,2,3-cd)pyrene	mg/kg	0.01	ND	ND		0	
Naphthalene	mg/kg	0.01	0.14	0.14	0%		
Phenanthrene	mg/kg	0.01	ND	ND		0	
Pyrene	mg/kg	0.01	ND	ND		0	

Notes:

Delta – Concentration difference between the parent sample and its field duplicate
mg/kg – milligram per kilogram
ND – The analyte was not detected at or above the RL.
RL – Reporting limit
RPD – Relative percent difference

Data Validation Report

Kimberly-Clark Everett, Washington Site
Upland Area Interim Action Soil Sampling
Batch #5 Soil Samples

Prepared for:

Aspect Consulting LLC
401 Second Ave South, Suite 201
Seattle, WA 98014

Prepared by:

Pyron Environmental, Inc.
3530 32nd Way, NW
Olympia, WA 98502

ACRONYMS

%D	percent difference
%D_f	percent drift
%R	percent recovery
%RSD	percent relative standard deviation
AMU	atomic mass unit
BTEX	benzene, toluene, ethylbenzene, and *m-, p-, & o*-xylenes
CCB	continuing calibration blank
CCC	calibration check compound
CCV	continuing calibration verification
CF	calibration factor
CLP	U.S. EPA Contract Laboratory Program
COC	chain-of-custody
CVAFS	cold vapor atomic fluorescent spectrometry
DFTPP	decafluorotriphenylphosphine
ECD	electron capture detector
EPA	U.S. Environmental Protection Agency
EPH	extractable petroleum hydrocarbon
FID	Flame ionization detector
GC/MS	gas chromatograph/mass spectrometer
ICAL	initial calibration
ICB	initial calibration blank
ICP/MS	inductively coupled plasma/ mass spectrometer
ICV	initial calibration verification
LCS	laboratory control sample
LCSD	laboratory control sample duplicate
MDL	method detection limit
µg/kg	microgram per kilogram
mg/kg	milligram per kilogram
MS	matrix spike
MSD	matrix spike duplicate
NFGs	CLP National Functional Guidelines for Data Review (EPA 2008 – Organics; EPA 2010 – Inorganics)
OPR	ongoing precision and recovery
PCBs	polychlorinated biphenyls

PID	photo-ionization detector
QA/QC	quality assurance/quality control
RF	response factor
RL	reporting limit
RPD	relative percent difference
RRT	relative retention time
SDG	sample delivery group
SIM	selective ion monitoring
SVOCs	semi-volatile organic compounds
VOCs	volatile organic compounds
VPH	volatile petroleum hydrocarbon

INTRODUCTION

This report presents and discusses findings of the data validation performed on analytical data for soil samples collected during October 2013 to March 2014 for the referenced project. The laboratory reports validated herein were submitted by Friedman & Bruya, Inc. and Fremont Aanlytical, Inc. in Seattle, Washington and ALS Environmental Services, Inc. in Kelso, Washington.

A level III data validation was performed on this laboratory report. The validation followed the procedures specified in USEPA CLP Functional Guidelines ([NFGs], EPA 2008 – Organics; EPA 2010 – Inorganics), with modifications to accommodate project and analytical method requirements. The numerical quality assurance/quality control (QA/QC) criteria applied to the validation were in accordance with those specified in the quality assurance project plans ([QAPPs], Aspect, 2009) and the current performance-based control limits established by the laboratory (laboratory control limits). Instrument calibration, frequency of QC analyses, and analytical sequence requirements were evaluated against the respective analytical methods.

Validation findings are discussed in each section pertinent to the QC parameter for each type of analysis. Qualified data with applied data qualifiers are summarized in the **Summary** section at the end of this report.

Samples and the associated analyses validated herein are summarized as follows:

				Analysis						
Field Sample ID	**Laboratory Sample ID**	**Sampling Date**	**Sample Type**	**VOC**	**PAHs**	**PCBs**	**Metals**	**TPH -Gx**	**TPH-Dx**	**Misc.**
BAST-EPH-01	310408-01	10/21/13	Soil		X					EPH
BAST-EPH-02	310408-02	10/21/13	Soil		X					EPH
BAST-EPH-03	310408-03	10/21/13	Soil		X					EPH
BAST-EPH-04	310408-04	10/21/13	Soil		X					EPH
CONC-SP-01-102313	310458-01	10/23/13	Soil	X	SVOC	X	pp	X	X	
CONC-SP-02-102313	310458-02	10/23/13	Soil	X	SVOC	X	pp	X	X	
CONC-SP-03-102313	310458-03	10/23/13	Soil	X	SVOC	X	pp	X	X	
CONC-SP-04-102313	310458-04	10/23/13	Soil	X	SVOC	X	pp	X	X	
CONC-SP-05-102313	310458-05	10/23/13	Soil	X	SVOC	X	pp	X	X	
CONC-SP-06-102313	310458-06	10/23/13	Soil	X	SVOC	X	pp	X	X	
CONC-SP-07-102313	310458-07	10/23/13	Soil	X	SVOC	X	pp	X	X	
CONC-SP-01-102313 Agg	310458-08	10/23/13	Soil	X	SVOC	X	pp	X	X	
CONC-SP-02-102313 Agg	310458-09	10/23/13	Soil	X	SVOC	X	pp	X	X	
CONC-SP-03-102313 Agg	310458-10	10/23/13	Soil	X	SVOC	X	pp	X	X	

Field Sample ID	Laboratory Sample ID	Sampling Date	Sample Type	Analysis						
				VOC	PAHs	PCBs	Metals	TPH -Gx	TPH-Dx	Misc.
CONC-SP-04-102313 Agg	310458-11	10/23/13	Soil	X	SVOC	X	pp	X	X	
CONC-SP-05-102313 Agg	310458-12	10/23/13	Soil	X	SVOC	X	pp	X	X	
CONC-SP-06-102313 Agg	310458-13	10/23/13	Soil	X	SVOC	X	pp	X	X	
CONC-SP-07-102313 Agg	310458-14	10/23/13	Soil	X	SVOC	X	pp	X	X	
BAST-B051-5.0	311028-01	11/01/13	Soil		X		X		X	
BAST-B504-5.0	311028-02	11/01/13	Soil		X		X		X	
BAST-S034B-3.0	311028-03	11/01/13	Soil		X				X	
BAST-S036-3.0	311028-04	11/01/13	Soil		X				X	
BAST-S035-3.0	311028-05	11/01/13	Soil		X				X	
STIL-G1-120513	312089-01	12/05/13	Soil	X	SVOC	X	pp	X	X	
STIL-G2-120513	312089-02	12/05/13	Soil	X	SVOC	X	pp	X	X	
STIL-G3-120513	312089-03	12/05/13	Soil	X	SVOC	X	pp	X	X	
STIL-G4-120513	312089-04	12/05/13	Soil	X	SVOC	X	pp	X	X	
STIL-G5-120513	312089-05	12/05/13	Soil	X	SVOC	X	pp	X	X	
STIL-G7-120513	312089-06	12/05/13	Soil	X	SVOC	X	pp	X	X	
STIL-G8-120513	312089-07	12/05/13	Soil	X	SVOC	X	pp	X	X	
STIL-G6-120513	312089-08	12/05/13	Soil	X	SVOC	X	pp	X	X	
NRA1-PC1-12-010614	401056-01	01/06/14	Soil		X	X	X	X	X	BTEX
NRA2-PC2-8-010614	401056-02	01/06/14	Soil		X	X	X	X	X	BTEX
NRA2-PC3-8-010614	401056-03	01/06/14	Soil		X	X	X	X	X	BTEX
Cemex-QS-011014	401111-01	01/10/14	Soil				pp			
STIL-G9-011414	401174-01	01/14/14	Soil	X	SVOC	X	pp	X	X	
STIL-G10-011414	401174-02	01/14/14	Soil	X	SVOC	X	pp	X	X	
STIL-G11-011414	401174-03	01/14/14	Soil	X	SVOC	X	pp	X	X	
STIL-G12-011414	401174-04	01/14/14	Soil	X	SVOC	X	pp	X	X	
BAST-S57-5-012114	401241-01	01/21/14	Soil	X	X		X	X	X	
BAST-S58-8-012114	401241-02	01/21/14	Soil	X	X			X	X	
BAST-S59-7-012114	401241-03	01/21/14	Soil	X	X			X	X	EPH/VPH
BAST-S60-8-012114	401241-04	01/21/14	Soil	X	X			X	X	
BAST-S61-5-012114	401241-05	01/21/14	Soil	X	X			X	X	
BAST-S62-8-012114	401241-06	01/21/14	Soil	X	X		X	X	X	
BAST-S63-9-012114	401241-07	01/21/14	Soil	X	X			X	X	
BAST-S64-6-012114	401241-08	01/21/14	Soil	X	X			X	X	
BAST-S65-8-012114	401241-09	01/21/14	Soil	X	X			X	X	

Field Sample ID	Laboratory Sample ID	Sampling Date	Sample Type	Analysis						
				VOC	PAHs	PCBs	Metals	TPH -Gx	TPH-Dx	Misc.
BAST-S66-3-012114	401241-10	01/21/14	Soil	X	X			X	X	
BAST-B56-4-012714	401317-01	01/27/14	Soil		X				X	
BAST-B57-7-012714	401317-02	01/27/14	Soil		X				X	
BAST-B58-4-012714	401317-03	01/27/14	Soil		X				X	
BAST-B59-4-012714	401317-04	01/27/14	Soil		X				X	
BAST-B60-4-012714	401317-05	01/27/14	Soil		X		X		X	
BAST-B61-4-012714	401317-06	01/27/14	Soil		X				X	
BAST-B62-4-012714	401317-07	01/27/14	Soil		X				X	
BAST-B63-4-012714	401317-08	01/27/14	Soil		X				X	
BAST-B64-4-012714	401317-09	01/27/14	Soil		X				X	
BAST-B65-3.5-012714	401317-10	01/27/14	Soil		X		X		X	
BAST-506-012714	401317-11	01/27/14	Soil		X		X		X	
NRS-SP01-1-021014	402099-01	02/10/14	Soil	X	SVOC	X	pp	X	X	
NRS-SP01-2-021014	402099-02	02/10/14	Soil	X	SVOC	X	pp	X	X	
NRS-SP01-3-021014	402099-03	02/10/14	Soil	X	SVOC	X	pp	X	X	
NRS-SP02-1-021014	402099-04	02/10/14	Soil	X	SVOC	X	pp	X	X	
NRS-SP02-2-021014	402099-05	02/10/14	Soil	X	SVOC	X	pp	X	X	
NRS-SP02-3-021014	402099-06	02/10/14	Soil	X	SVOC	X	pp	X	X	
NRS-SP03-1-021014	402099-07	02/10/14	Soil	X	SVOC	X	pp	X	X	
NRS-SP03-2-021014	402099-08	02/10/14	Soil	X	SVOC	X	pp	X	X	
NRS-SP03-3-021014	402099-09	02/10/14	Soil	X	SVOC	X	pp	X	X	
NRS-SP04-1-021014	402099-10	02/10/14	Soil	X	SVOC	X	pp	X	X	
NRS-SP04-2-021014	402099-11	02/10/14	Soil	X	SVOC	X	pp	X	X	
NRS-SP04-3-021014	402099-12	02/10/14	Soil	X	SVOC	X	pp	X	X	
NRS-SP05-1-021014	402099-13	02/10/14	Soil	X	SVOC	X	pp	X	X	
NRS-SP05-2-021014	402099-14	02/10/14	Soil	X	SVOC	X	pp	X	X	
NRS-SP05-3-021014	402099-15	02/10/14	Soil	X	SVOC	X	pp	X	X	
NRS-SP06-1-021014	402099-16	02/10/14	Soil	X	SVOC	X	pp	X	X	
NRS-SP06-2-021014	402099-17	02/10/14	Soil	X	SVOC	X	pp	X	X	
NRS-SP06-3-021014	402099-18	02/10/14	Soil	X	SVOC	X	pp	X	X	
NRS-SP07-1-021014	402099-19	02/10/14	Soil	X	SVOC	X	pp	X	X	
NRS-SP07-2-021014	402099-20	02/10/14	Soil	X	SVOC	X	pp	X	X	
NRS-SP07-3-021014	402099-21	02/10/14	Soil	X	SVOC	X	pp	X	X	
BAST-B067-5-021114	402128-01	02/11/14	Soil	X	X			X	X	

Field Sample ID	Laboratory Sample ID	Sampling Date	Sample Type	Analysis						
				VOC	PAHs	PCBs	Metals	TPH -Gx	TPH-Dx	Misc.
BAST-B068-5-021114	402128-02	02/11/14	Soil	X	X			X	X	
BAST-B069-5-021114	402128-03	02/11/14	Soil	X	X			X	X	
BAST-S069-3-021114	402128-04	02/11/14	Soil	X	X		X	X	X	
BAST-S070-3-021114	402128-05	02/11/14	Soil	X	X			X	X	
BAST-S071-3-021114	402128-06	02/11/14	Soil	X	X			X	X	
BAST-507	402128-07	02/11/14	Soil	X	X		X	X	X	
NRS-S01-8-021114	402129-01	02/11/14	Soil	X	X			X	X	
NRS-S02-11-021114	402129-02	02/11/14	Soil	X	X			X	X	
NRS-S03-8-021114	402129-03	02/11/14	Soil	X	X			X	X	
NRS-S04-11-021114	402129-04	02/11/14	Soil	X	X			X	X	
NRS-S05-8-021114	402129-05	02/11/14	Soil	X	X		X	X	X	
NRS-S06-11-021114	402129-06	02/11/14	Soil	X	X			X	X	
NRS-S07-8-021114	402129-07	02/11/14	Soil	X	X			X	X	
NRS-S08-11-021114	402129-08	02/11/14	Soil	X	X			X	X	
NRS-S09-8-021114	402129-09	02/11/14	Soil	X	X			X	X	
NRS-S10-11-021114	402129-10	02/11/14	Soil	X	X		X	X	X	
NRS-S11-8-021114	402129-11	02/11/14	Soil	X	X			X	X	
NRS-S12-11-021114	402129-12	02/11/14	Soil	X	X			X	X	
NRS-S13-8-021214	402161-01	02/12/14	Soil	X	X			X	X	
NRS-S14-11-021214	402161-02	02/12/14	Soil	X	X			X	X	
NRS-S15-8-021214	402161-03	02/12/14	Soil	X	X			X	X	
NRS-S16-11-021214	402161-04	02/12/14	Soil	X	X			X	X	
NRS-S17-8-021214	402161-05	02/12/14	Soil	X	X		X	X	X	
NRS-S18-11-021214	402161-06	02/12/14	Soil	X	X			X	X	
NRS-S19-8-021214	402161-07	02/12/14	Soil	X	X			X	X	
NRS-S20-11-021214	402161-08	02/12/14	Soil	X	X			X	X	
NRS-S21-8-021214	402161-09	02/12/14	Soil	X	X			X	X	
NRS-S22-11-021214	402161-10	02/12/14	Soil	X	X		X	X	X	
NRS-S23-8-021214	402161-11	02/12/14	Soil	X	X			X	X	
NRS-S24-11-021214	402161-12	02/12/14	Soil	X	X			X	X	
NRS-S25-8-021214	402161-13	02/12/14	Soil	X	X			X	X	
NRS-S26-11-021214	402161-14	02/12/14	Soil	X	X			X	X	
NRS-B01-13-021214	402161-15	02/12/14	Soil	X	X		X	X	X	
NRS-B02-13-021214	402161-16	02/12/14	Soil	X	X			X	X	

Field Sample ID	Laboratory Sample ID	Sampling Date	Sample Type	Analysis						
				VOC	PAHs	PCBs	Metals	TPH -Gx	TPH-Dx	Misc.
NRS-B03-13-021214	402161-17	02/12/14	Soil	X	X			X	X	
NRS-B04-13-021214	402161-18	02/12/14	Soil	X	X			X	X	
NRS-B05-13-021214	402161-19	02/12/14	Soil	X	X			X	X	
NRS-B06-13-021214	402161-20	02/12/14	Soil	X	X		X	X	X	
NRS-B07-13-021214	402161-21	02/12/14	Soil	X	X			X	X	
NRS-B08-13-021214	402161-22	02/12/14	Soil	X	X			X	X	
NRS-500-021214	402161-23	02/12/14	Soil	X	X			X	X	
NRS-501-021214	402161-24	02/12/14	Soil	X	X		X	X	X	
BAST-S72-3-021314	402183-01	02/13/14	Soil	X	X			X	X	
BAST-S73-3-021314	402183-02	02/13/14	Soil	X	X			X	X	
BAST-S74-3-021314	402183-03	02/13/14	Soil	X	X			X	X	
BAST-B70-4-021314	402183-04	02/13/14	Soil	X	X			X	X	
BAST-B71-4-021314	402183-05	02/13/14	Soil	X	X		X	X	X	
BAST-S075-4-021714	402219-01	02/17/14	Soil	X	X			X	X	EPH/VPH
BAST-SP01-1-021714	402220-01	02/17/14	Soil	X	SVOC	X	pp	X	X	
BAST-SP01-2-021714	402220-02	02/17/14	Soil	X	SVOC	X	pp	X	X	
BAST-SP01-3-021714	402220-03	02/17/14	Soil	X	SVOC	X	pp	X	X	
NRS-S27-8-021814	402263-01	02/18/14	Soil	X	X			X	X	
NRS-S28-8-021814	402263-02	02/18/14	Soil	X	X			X	X	
NRS-B09-10-021814	402263-03	02/18/14	Soil	X	X			X	X	
NRS-S29-8-021914	402263-04	02/19/14	Soil	X	X			X	X	
STIL-G-13-021914	402264-01	02/19/14	Soil	X	SVOC	X	pp	X	X	
STIL-G-14-021914	402264-02	02/19/14	Soil	X	SVOC	X	pp	X	X	
STIL-G-15-021914	402264-03	02/19/14	Soil	X	SVOC	X	pp	X	X	
STIL-G-16-021914	402264-04	02/19/14	Soil	X	SVOC	X	pp	X	X	
NRS-SP08-1-021914	402265-01	02/19/14	Soil	X	SVOC	X	pp	X	X	
NRS-SP08-2-021914	402265-02	02/19/14	Soil	X	SVOC	X	pp	X	X	
NRS-SP08-3-021914	402265-03	02/19/14	Soil	X	SVOC	X	pp	X	X	
NRS-SP09-1-021914	402265-04	02/19/14	Soil	X	SVOC	X	pp	X	X	
NRS-SP09-2-021914	402265-05	02/19/14	Soil	X	SVOC	X	pp	X	X	
NRS-SP09-3-021914	402265-06	02/19/14	Soil	X	SVOC	X	pp	X	X	
NRS-SP10-1-021914	402265-07	02/19/14	Soil	X	SVOC	X	pp	X	X	
NRS-SP10-2-021914	402265-08	02/19/14	Soil	X	SVOC	X	pp	X	X	
NRS-SP10-3-021914	402265-09	02/19/14	Soil	X	SVOC	X	pp	X	X	

Field Sample ID	Laboratory Sample ID	Sampling Date	Sample Type	Analysis						
				VOC	PAHs	PCBs	Metals	TPH -Gx	TPH-Dx	Misc.
BAST-B72-6-022014	402314-01	02/20/14	Soil	X	SVOC		pp	X	X	
BAST-S76-4-022014	402314-02	02/20/14	Soil	X	SVOC		pp	X	X	
BAST-S77-4-022014	402314-03	02/20/14	Soil	X	SVOC		pp	X	X	
BAST-S78-4-022014	402314-04	02/20/14	Soil	X	SVOC		pp	X	X	
BAST-B73-7-022014	402314-05	02/20/14	Soil	X	SVOC		pp	X	X	
BAST-S79-4-022114	402314-06	02/21/14	Soil	X	SVOC		pp	X	X	
BAST-S80-4-022114	402314-07	02/21/14	Soil	X	SVOC		pp	X	X	
BAST-S81-4-022114	402314-08	02/21/14	Soil	X	SVOC		pp	X	X	
BAST-B77-8-022114	402314-09	02/21/14	Soil	X	SVOC		pp	X	X	
BAST-S82-4-022114	402314-10	02/21/14	Soil	X	SVOC		pp	X	X	
BAST-S83-4-022114	402314-11	02/21/14	Soil	X	SVOC		pp	X	X	
BAST-S84-4-022114	402314-12	02/21/14	Soil	X	SVOC		pp	X	X	
BAST-S85-4-022114	402314-13	02/21/14	Soil	X	SVOC		pp	X	X	
BAST-S86-4-022114	402314-14	02/21/14	Soil	X	SVOC		pp	X	X	
BAST-B74-7-022114	402314-15	02/21/14	Soil	X	SVOC		pp	X	X	
BAST-B75-7-022114	402314-16	02/21/14	Soil	X	SVOC		pp	X	X	
BAST-B76-7-022114	402314-17	02/21/14	Soil	X	SVOC		pp	X	X	
BAST-508-022014	402314-18	02/20/14	Soil	X	SVOC		pp	X	X	
BAST-B78-4-022414	402347-01	02/24/14	Soil	X	X		X	X	X	
BAST-S87-2-022414	402347-02	02/24/14	Soil	X	X		X	X	X	
BAST-S88-4-022514	402347-03	02/25/14	Soil	X	X		X	X	X	
BAST-S89-4-022514	402347-04	02/25/14	Soil	X	X		X	X	X	
BAST-S90-4-022514	402347-05	02/25/14	Soil	X	X		X	X	X	
BAST-S91-4-022514	402347-06	02/25/14	Soil	X	X		X	X	X	
BAST-S92-4-022514	402347-07	02/25/14	Soil	X	X		X	X	X	
BAST-S93-4-022514	402347-08	02/25/14	Soil	X	X		X	X	X	
BAST-509	402347-09	02/25/14	Soil	X	X		X	X	X	
CN-S01-3-030314	403027-01	03/03/14	Soil		X				X	
CN-S02-3-030314	403027-02	03/03/14	Soil		X				X	
CN-S03-4-030314	403027-03	03/03/14	Soil		X				X	
CN-S04-3-030314	403027-04	03/03/14	Soil		X				X	
CN-S05-6-030314	403027-05	03/03/14	Soil		X		X		X	
CN-S06-3-030314	403027-06	03/03/14	Soil		X				X	
CN-S07-6-030314	403027-07	03/03/14	Soil		X				X	

Field Sample ID	Laboratory Sample ID	Sampling Date	Sample Type	Analysis						
				VOC	PAHs	PCBs	Metals	TPH -Gx	TPH-Dx	Misc.
CN-S08-3-030314	403027-08	03/03/14	Soil		X				X	
CN-S09-6-030314	403027-09	03/03/14	Soil		X				X	
CN-S10-6-030314	403027-10	03/03/14	Soil		X	X	X		X	
CN-S11-3-030314	403027-11	03/03/14	Soil		X				X	
CN-S12-3-030314	403027-12	03/03/14	Soil		X				X	
CN-B01-4-030314	403027-13	03/03/14	Soil		X				X	
CN-B02-4-030314	403027-14	03/03/14	Soil		X				X	
CN-B03-8-030314	403027-15	03/03/14	Soil		X		X		X	
CN-B04-8-030314	403027-16	03/03/14	Soil		X				X	
CN-B05-7-030314	403027-17	03/03/14	Soil		X				X	
CN-B06-7-030314	403027-18	03/03/14	Soil		X				X	
CN-B07-4-030314	403027-19	03/03/14	Soil		X				X	
CN-500-030314	403027-20	03/03/14	Soil		X		X		X	
BAST-S94-4-030414	403052-01	03/04/14	Soil		X				X	
BAST-S95-4-030414	403052-02	03/04/14	Soil				Pb		X	
BA-S01-4-030514	403053-01	03/05/14	Soil						X	
BA-S02-4-030514	403053-02	03/05/14	Soil						X	
BA-S03-4-030514	403053-03	03/05/14	Soil						X	
BA-B01-5-030514	403053-04	03/05/14	Soil						X	
BA-B02-6-030514	403053-05	03/05/14	Soil						X	
BA-500-030514	403053-06	03/05/14	Soil						X	
CN-S14-6-030714	403089-01	03/07/14	Soil		X		X		X	
CN-S15-10-030714	403089-02	03/07/14	Soil		X		X		X	
CN-S16-6-030714	403089-03	03/07/14	Soil		X		X		X	
CN-S17-10-030714	403089-04	03/07/14	Soil		X		X		X	
CN-S18-6-030714	403089-05	03/07/14	Soil		X		X		X	
CN-S19-10-030714	403089-06	03/07/14	Soil		X		X		X	
CN-S20-6-030714	403089-07	03/07/14	Soil		X		X		X	
CN-S21-10-030714	403089-08	03/07/14	Soil		X		X		X	
CN-S22-6-030714	403089-09	03/07/14	Soil		X		X		X	
CN-S23-10-030714	403089-10	03/07/14	Soil		X		X		X	
CN-S24-6-030714	403089-11	03/07/14	Soil		X		X		X	
CN-S25-10-030714	403089-12	03/07/14	Soil		X		X		X	
SHB-S01-3-030614	403091-01	03/06/14	Soil	X	X		X	X	X	

Field Sample ID	Laboratory Sample ID	Sampling Date	Sample Type	Analysis						
				VOC	PAHs	PCBs	Metals	TPH -Gx	TPH-Dx	Misc.
SHB-S02-3-030614	403091-02	03/06/14	Soil	X	X		X	X	X	
SHB-S03-3-030614	403091-03	03/06/14	Soil	X	X		X	X	X	
SHB-S04-3-030614	403091-04	03/06/14	Soil	X	X		X	X	X	
SHB-S05-3-030614	403091-05	03/06/14	Soil	X	X		X	X	X	
SHB-S06-3-030614	403091-06	03/06/14	Soil	X	X		X	X	X	
SHB-B01-5-030614	403091-07	03/06/14	Soil	X	X		X	X	X	
SHB-B02-5-030614	403091-08	03/06/14	Soil	X	X		X	X	X	
SHB-B03-5-030614	403091-09	03/06/14	Soil	X	X		X	X	X	
SHB-500	403091-10	03/06/14	Soil	X	X		X	X	X	
CN-B08-12-030714	403101-01	03/07/14	Soil		X		X		X	
CN-B09-11-030714	403101-02	03/07/14	Soil		X		X		X	
CN-B10-11-030714	403101-03	03/07/14	Soil		X		X		X	
CN-B11-11-030714	403101-04	03/07/14	Soil		X		X		X	
CN-B12-11-030714	403101-05	03/07/14	Soil		X		X		X	
CN-B13-11-030714	403101-06	03/07/14	Soil		X		X		X	
CN-501	403101-07	03/07/14	Soil		X		X		X	
SHB-S07-3-031114	403133-01	03/11/14	Soil				Cu		X	
CN-B14-15-031414	403201-01	03/14/14	Soil		X		X		X	
CN-S13-4-031514	403201-02	03/15/14	Soil		X		X		X	
CN-S26-8-031514	403201-03	03/15/14	Soil		X		X		X	
CN-S27-12-031514	403201-04	03/15/14	Soil		X		X		X	
CN-S28-4-031514	403201-05	03/15/14	Soil		X		X		X	
CN-S29-8-031514	403201-06	03/15/14	Soil		X		X		X	
CN-S30-12-031514	403201-07	03/15/14	Soil		X		X		X	
CN-S31-4-031514	403201-08	03/15/14	Soil		X		X		X	
CN-S32-8-031514	403201-09	03/15/14	Soil		X		X		X	
CN-S33-12-031514	403201-10	03/15/14	Soil		X		X		X	
CN-S34-4-031514	403201-11	03/15/14	Soil		X		X		X	
CN-B15-18-031514	403201-12	03/15/14	Soil		X		X		X	
CN-B16-18-031514	403201-13	03/15/14	Soil		X		X		X	
CN-B17-18-031514	403201-14	03/15/14	Soil		X		X		X	
CN-B18-18-031514	403201-15	03/15/14	Soil		X		X		X	
CN-B19-18-031514	403201-16	03/15/14	Soil		X		X		X	
CN-B20-16-031514	403201-17	03/15/14	Soil		X		X		X	

Field Sample ID	Laboratory Sample ID	Sampling Date	Sample Type	Analysis						
				VOC	PAHs	PCBs	Metals	TPH -Gx	TPH-Dx	Misc.
CN-B21-16-031514	403201-18	03/15/14	Soil		X		X		X	
CN-B22-14-031514	403201-19	03/15/14	Soil		X		X		X	
CN-502-031514	403201-20	03/15/14	Soil		X		X		X	
CN-S35-8-031514	403201-21	03/15/14	Soil		X		X		X	
CN-S36-12-031514	403201-22	03/15/14	Soil		X		X		X	
CN-S37-4-031514	403201-23	03/15/14	Soil		X		X		X	
CN-S38-8-031514	403201-24	03/15/14	Soil		X		X		X	
CN-S39-12-031514	403201-25	03/15/14	Soil		X		X		X	
CN-S40-4-031514	403201-26	03/15/14	Soil		X		X		X	
CN-S41-8-031514	403201-27	03/15/14	Soil		X		X		X	
CN-S42-12-031514	403201-28	03/15/14	Soil		X		X		X	
CN-S43-4-031514	403201-29	03/15/14	Soil		X		X		X	
CN-S44-8-031514	403201-30	03/15/14	Soil		X		X		X	
CN-B23-14-031514	403201-31	03/15/14	Soil		X		X		X	
CN-S45-12-031514	403201-32	03/15/14	Soil		X		X		X	
CN-S46-4-031514	403201-33	03/15/14	Soil		X		X		X	
CN-S47-8-031514	403201-34	03/15/14	Soil		X		X		X	
CN-S48-12-031514	403201-35	03/15/14	Soil		X		X		X	
CN-B25-18-031914	403267-01	03/19/14	Soil		X		X		X	
CN-B24-16-031914	403267-02	03/19/14	Soil		X		X		X	
CN-S49-12-031914	403267-03	03/19/14	Soil		X		X		X	
CN-503	403267-04	03/19/14	Soil		X		X		X	
CN-S50-3-032014	403267-05	03/20/14	Soil		X		X		X	
CN-S51-3-032014	403267-06	03/20/14	Soil		X		X		X	
CN-S52-3-032014	403267-07	03/20/14	Soil		X		X		X	
CN-S53-3-032014	403267-08	03/20/14	Soil		X		X		X	
CN-B26-4-032014	403267-09	03/20/14	Soil		X		X		X	
CN-B27-4-032014	403267-10	03/20/14	Soil		X		X		X	
CN-B28-4-032014	403267-11	03/20/14	Soil		X		X		X	
UST29-B01-5-122313	K1313944-009	12/23/13	Soil							FRM
UST29-B02-5-122313	K1313944-010	12/23/13	Soil							FRM
UST29-B03-5-122313	K1313944-011	12/23/13	Soil							FRM
UST29-B04-5-122313	K1313944-012	12/23/13	Soil							FRM
UST29-B05-5-122313	K1313944-013	12/23/13	Soil							FRM

Field Sample ID	Laboratory Sample ID	Sampling Date	Sample Type	Analysis						
				VOC	PAHs	PCBs	Metals	TPH -Gx	TPH-Dx	Misc.
UST29-B06-5-122313	K1313944-014	12/23/13	Soil							FRM
UST29-S01-3-122313	K1313944-001	12/23/13	Soil							FRM
UST29-S02-3-122313	K1313944-002	12/23/13	Soil							FRM
UST29-S03-3-122313	K1313944-003	12/23/13	Soil							FRM
UST29-S04-3-122313	K1313944-004	12/23/13	Soil							FRM
UST29-S05-3-122313	K1313944-005	12/23/13	Soil							FRM
UST29-S06-3-122313	K1313944-006	12/23/13	Soil							FRM
UST29-S07-3-122313	K1313944-007	12/23/13	Soil							FRM

Notes:

[(A)] - Arsenic, cadmium, chromium, copper, mercury, nickel, and zinc

Cu - Sample was analyzed for copper only

EPH - Extractable petroleum hydrocarbon

FMR - Formaldehyde

Metals - Antimony, arsenic, cadmium, chromium, copper, mercury, nickel, and zinc, unless otherwise noted.

Misc. - Miscellaneous

PAHs - Polycyclic aromatic hydrocarbons

Pb - Sample was analyzed for lead only

PCBs - Polychlorinated biphenyl

pp - Priority pollutant metals, *i.e.,* antimony, arsenic, beryllium, cadmium, chromium, copper, lead, mercury, nickel, selenium, silver, thallium, and zinc

SPLP - Synthetic precipitation leaching procedure; the leachates were analyzed for copper (SPLP/Cu) and/or arsenic (SPLP/As).

TPH-Dx - Diesel and motor oil range total petroleum hydrocarbon

TPH-Gx - Gasoline range total petroleum hydrocarbon

VOC - Volatile organic compound

VPH - Volatile petroleum hydrocarbon

X - The analysis was requested and performed on the sample.

The analytical parameters requested for the samples, the respective analytical methods, and the analytical laboratories are summarized below:

Parameter	Analytical Method	Analytical Laboratory
Volatile Organic Compounds (VOCs)	SW846 Method 8260C	Friedman & Bruya, Inc. (F&BI) Seattle, WA
Polycyclic Aromatic Hydrocarbons (PAHs)	SW846 Method 8270D-SIM	
PCB Aroclors	SW846 Method 8082A	
BTEX	SW846 Method 8021B	
TPH - Gasoline Range	NWTPH-Gx	
TPH - Diesel & Motor Oil Range	NWTPH-Dx	
Total Metals	EPA Method 200.8	
Mercury	EPA Method 1631E	
Extractable Petroleum Hydrocarbon	NWTPH-EPH	Fremont Analytical, Inc. Seattle, WA
Volatile Petroleum Hydrocarbon	NWTPH-VPH	
Formaldehyde	SW846 Method 8315A	ALS Environmental Services, Inc. Kelso, Washington

Notes:

1. SW846 - *USEPA Test Methods for Evaluating Solid Waste, Physical/Chemical Methods,* SW-846, Third Edition, December 1996.
2. EPA Methods - *USEPA Methods for Chemical Analysis of Water and Wastes,* EPA–600/4-79-020, March 1983 Revision.
3. EPA Method 1631E - *Mercury in Water by Oxidation, Purge and Trap, and Cold Vapor Atomic Fluorescence Spectrometry,* Office of Water, U.S. Environmental Protection Agency, August 2002, EPA-821-R-02-019.
4. NWTPH Methods – *Washington State Department of Ecology, Analytical Methods for Petroleum Hydrocarbons*, Publication No. ECY 97-602, June 1997.

DATA VALIDATION FINDINGS

1. VOCs by GC/MS (EPA Method SW8260C)

1.1 Sample Management and Holding Time

Samples were received in the laboratory intact and in consistence with the accompanying chain-of-custody (COC) documentation. In some cases where cooler temperature was outside the 4±2°C criteria; samples were hand-delivered to the laboratory the same day of collection. The cooler temperature exceedance had no significant effects on data quality. No other anomalies were identified in relation to sample preservation, handling, and transport.

All samples in SDGs: 402099, 402220, and 402265 were not preserved in methanol upon collection. The analyses were performed within a relatively short period of time (less than seven days) of collection. VOCs results for these samples, rather than being rejected, were qualified (UJ) for non-detects and (J) for detects as estimated.

Soil samples should be preserved at the time of collection. Soil samples should be analyzed within 14 days of collection. All samples were analyzed within the required holding times.

1.2 GC/MS Instrument Performance Check

The method require that (1) gas chromatograph/mass spectrometer (GC/MS) tuning analysis be performed, using bromofluorobenzene (BFB), at the beginning of each 12-hour period prior to any analysis, and (2) specific mass ions meet the criteria provided in the method. All instrument performance checks met the requirements.

1.3 Initial Calibration (ICAL)

The ICAL criteria require that (1) if linear average RFs is chosen as the quantitation option, at least five standards at different concentrations should be analyzed and the percent relative standard deviation (%RSD) of response factors (RFs) be ≤20% for the analyte, (2) if least-square linear regression is chosen for quantitation, the correlation coefficient (r) be >0.995, and (3) if six-point non-linear (quadratic) curve is chosen for quantitation, the coefficient of determination (r^2) be >0.99. ICALs either met the requirements or the outliers had no adverse effects on data usability (*e.g.,* %RSD >20% for a compound not detected in samples).

An initial calibration verification (ICV) standard (second source standard) was analyzed to verify the calibration curve. Percent difference (%D) values were either within ±30%, or the exceedance had no adverse effects on data usability (*e.g.,* biased high ICV recovery for a compound not detected in samples).

1.4 Calibration Verification (CCV)

The CCV criteria requires that (1) continuing calibrations be analyzed at the beginning of each 12-hour analysis period prior to the analysis of method blank and samples, and (2) the %D value be within ±20%.

Calibration verifications either met the requirements, or the exceedance had no adverse effects on data usability (*e.g.,* biased high CCV recovery for a compound not detected in samples), except for the following:

SDG	CCV ID	Compound	%D	Bias	Affected Sample	Data Qualifier
403091	GCMS4 3/7/14, 14:00	Bromomethane	25.6%	Low	SHB-S03-3-030614 SHB-S04-3-030614 SHB-S05-3-030614 SHB-S06-3-030614 SHB-B01-5-030614 SHB-B02-5-030614 SHB-B03-5-030614 SHB-500	**UJ**

1.5 Method Blanks

Method blanks were prepared and analyzed as required. Target compounds were not detected at or above the reporting limits (RLs).

1.6 Laboratory Control Sample (LCS) and LCS Duplicate (LCSD)

LCS and LCSD were prepared and analyzed as required by the method. Percent recovery (%R) and relative percent difference (RPD) values either met the project control limits, or the outliers had no adverse effects on data usability (*e.g.,* biased high recovery for a compound not detected in samples).

1.7 Surrogate Spikes

Surrogate spikes were added to all samples as required by the method. All surrogate spike %R values were within the project control limits.

1.8 Matrix Spike (MS)

MS analyses were performed on project and batch QC samples at the proper frequency (≥5% of the samples analyzed for VOCs). All %R values were within the project control limits, except for the following:

SDG#	Parent Sample ID	Analyte	MS %R	MSD %R	Control Limit	RPD	Data Qualifier
310458	CONC-SP-01-102313	1,1,2,2-tetrachloroethane	21%	13%	28-140%	47%	**UJ**

Note that the %R values for the lower-boiling-point VOCs in the MSD analyses performed on samples NRS-500-021214 (SDG: 402161) and NRS-SP08-1-021914 (SDG: 402265) appeared to be a result of mishandling of the MSD samples, rather than matrix effects. Data were not qualified on this basis.

1.9 Internal Standards

The method requires that (1) internal standard retention time be within ±30 seconds from that of the associated 12-hour calibration standard, and (2) the area counts of all internal standards be within –50% to +100% of the associated 12-hour calibration standard. All internal standards in the sample and associated QC analyses met the criteria.

1.10 Reporting Limit and Target Compound Quantitation

RLs were supported with adequate initial calibration concentrations.

1,4-dioxane and vinyl acetate were reported from the mass spectrum library search, the reported RLs were considered estimated. These compounds were not detected in any of the field samples; the results were qualified (UJ) to indicate that the RLs were estimated values.

In cases where a sample was analyzed for both VOCs (Method 8260C) and SVOCs (Method 8270D), the results for 1,2-dichlorobenzene, 1,3-dichlorobenzene, 1,4-dichlorobenzene, 1,2,4-trichlorobenzene, hexachlorobutadiene, and naphthalene were to be reported from the SVOCs analysis, in favor of the lower detection limits.

In cases where a sample was analyzed for both VOCs (Method 8260C) and PAHs (Method 8270-SIM), the result for naphthalene was to be reported from the PAHs analysis, in favor of the lower detection limit.

1.11 Field Duplicates

Five sets of field duplicates were submitted for VOCss analyses. VOCs were not detected at or above RLs in these sample; the field precision met the project advisory criteria.

1.12 Overall Assessment of VOCs Data Usability

VOCs data are of known quality and acceptable for use, as qualified.

2. SVOCs and PAHs by GC/MS and GC/MS - SIM (EPA Method SW8270D and SIM)

2.1 Sample Management and Holding Times

No anomalies were identified in relation to sample preservation, handling, and transport as discussed in Section 1.1.

Soil samples should be extracted within 14 days and water within seven days of collection. Extracts should be analyzed within 40 days of extraction. All samples were extracted and analyzed within the required holding times.

2.2 GC/MS Instrument Performance Check

DFTPP tuning was performed within each 12-hour interval. All required ion abundance ratios met the method requirements.

2.3 Initial Calibration (ICAL)

The ICAL criteria require that (1) if linear average RFs is chosen as the quantitation option, at least five standards at different concentrations should be analyzed and the %RSD of RFs be ≤20% for the analyte, (2) if least-square linear regression is chosen for quantitation, the correlation coefficient (r) be >0.995, and (3) if six-point non-linear (quadratic) curve is chosen for quantitation, the coefficient of determination (r^2) be >0.99. All ICALs met the requirements.

An ICV standard (second source standard) was analyzed to verify the calibration curve. %D values were either within ±30%, or the exceedance had no adverse effects on data usability (*e.g.,* biased high ICV recovery for a compound not detected in samples).

2.4 Calibration Verification (CCV)

The analytical method requires that (1) continuing calibration verifications be analyzed at the beginning of each 12-hour analysis period prior to the analysis of method blank and samples, and (2) the %D be within ±20%. The CCVs met the requirements, except for the following:

SDG	CCV ID	Compound	%D	Bias	Affected Sample	Data Qualifier
401174	GCMS8 1/21/14, 12:29	Benzoic Acid	27.8%	Low	STIL-G9-011414 STIL-G10-011414 STIL-G11-011414 STIL-G12-011414	**UJ**

SDG	CCV ID	Compound	%D	Bias	Affected Sample	Data Qualifier
401299	GCMS8 2/13/14, 7:04	Benzoic Acid	42.0%	Low	NRS-SP01-2-021014 NRS-SP01-3-021014 NRS-SP02-3-021014 NRS-SP04-1-021014	**UJ**
401299	GCMS8 2/13/14, 17:43	2,4-Dinitrophenol 4,6-Dinitro-2-methylphenol	36.7% 34.4%	Low	NRS-SP01-1-021014 NRS-SP02-1-021014 NRS-SP02-2-021014 NRS-SP03-2-021014 NRS-SP05-2-021014 NRS-SP05-3-021014 NRS-SP06-1-021014 NRS-SP06-2-021014 NRS-SP06-3-021014 NRS-SP07-1-021014	**UJ**
402220	GCMS8 2/20/14, 17:38	Benzoic Acid	38.2%	Low	BAST-SP01-2-021714	**UJ**
402263	GCMS6 2/20/14, 8:21	Indeno(1,2,3-cd)pyrene	34.2%	Low	NRS-B09-10-021814	**UJ**
402264	GCMS8 2/24/14, 7:44	1,3-Dichlorobenzene Benzoic Acid 2,4-Dinitrophenol 4,6-Dinitro-2-methylphenol	42.4% 28.9% 27.9% 23.0%	Low	NRS-SP08-2-021914 NRS-SP10-2-021914 NRS-SP10-3-021914	**UJ**
402264	GCMS8 2/22/14, 17:12	Benzoic Acid	46.3%	Low	NRS-SP08-3-021914 NRS-SP09-1-021914 NRS-SP09-2-021914 NRS-SP09-3-021914 NRS-SP10-1-021914	**UJ**
402347	GCMS6 2/27/14, 7:07 2/27/14, 17:03	Indeno(1,2,3-cd)pyrene	-27.0% -24.6%	High	BAST-B78-4-022414 BAST-S87-2-022414 BAST-S90-4-022514	**UJ**

2.5 Method Blanks

Method blanks were prepared and analyzed as required. Target compounds were not detected at or above the RLs in the method blanks. 1,4-Dichlorobenzene was detected at a level greater than the method detection limit but less than the RL in the method blank associated with samples in SDGs 402099 and 402220. 1,4-Dichlorobenzene detections in these samples were less than 10x the level found in the method blank and were qualified (U) as non-detects at the reported values, as summarized in **SUMMARY, Table I**.

2.6 Surrogate Spikes

Surrogate spikes were added to all samples as required by the method. All surrogate spike %R values were either within the project control limits or at levels that had no adverse effects on data quality (*e.g.,* biased-high recovery for compounds that were not detected in samples). In some cases surrogate spike %R values were not applicable for

data evaluation because the samples contained high levels of target PAHs and required dilution analysis; no data were qualified in these cases.

2.7 Matrix Spike (MS) and MS Duplicate (MSD)

MS and MSD analyses were performed on project and batch QC samples at the proper frequency (≥5% of samples analyzed). All %R and RPD values met the project control criteria, except for the following:

SDG#	Parent Sample ID	Analyte	MS %R	MSD %R	Control Limit	RPD	Data Qualifier
402099	NRS-SP01-1-021014	Hexachlorocyclopentadiene	29%	15%		64%	**UJ**
		2,4-Dinitrophenol	81%	47%	50-150%	53%	**UJ**
		Pyrene	114%	143%		23%	**J**
402099	NRS-SP07-3-021014	Hexachlorocyclopentadiene	16%	8%		67%	
		2,4-Dinitrophenol	30%	24%	50-150%	22%	**UJ**
		4,6-Dinitro-2-methylphenol	37%	32%		14%	
403027	CN-S01-3-030314	Benz(a)anthracene	84%	150%	23-144%	56%	
		Benzo(a)pyrene	87%	138%	39-128%	45%	**J**
		Benzo(b)fluoranthene	94%	164%	31-144%	54%	
		Chrysene	87%	186%	45-122%	73%	

Note: RPD control criteria = ±20%

2.8 Laboratory Control Sample (LCS) and LCS Duplicate (LCSD)

LCS and LCSD analyses were performed as required by the method. All %R and RPD values were within the project control limits, except for the following:

SDG#	LCS ID	Analyte	LCS %R	LCSD %R	Control Limit	RPD	Affected Sample	Data Qualifier
401212	LCS/LCSD	Indeno(1,2,3-cd)pyrene	77%	60%	62-119%	25%	BV-S01-6-011714 BV-S04-6-011714	**UJ**
402263	LCS/LCSD	*cis*-1,3-Dichloropropene	71%	-	75-136%	-	NRS-S27-8-021814 NRS-S28-8-021814 NRS-B09-10-021814 NRS-S29-8-021914	**UJ**
		Dibromochloromethane	64%		72-132%			
		trans-1,3-Dichloropropene	72%		74-125%			

Note: RPD control criteria = ±20%

2.9 Internal Standards

The method requires that (1) internal standard retention time be within ±30 seconds from that of the associated 12-hour calibration standard, and (2) the area counts of all internal standards be within –50% to +100% of the associated 12-hour calibration standard. All internal standards in the sample and associated QC analyses met the criteria, except for the following:

SDG#	Sample ID	Internal Standard	Sample Response Area	CCV Response Area	Affected Compound	Data Qualifier
310458	CONC-SP-01-102313	Chrysene-d_{12} Perylene-d_{12}	505384 371993	1522710 881878	Benz(a)anthracene Benzo(a)pyrene Benzo(b)fluoranthene Benzo(g,h,i)perylene Benzo(k)fluoranthene Benzyl butyl phthalate *bis*(2-ethylhexyl) phthalate Chrysene Dibenzo(a,h)anthracene Di-n-octyl phthalate Indeno(1,2,3-cd)pyrene Pyrene	**J** **J** **J** **J** **J** **UJ** **UJ** **J** **J** **UJ** **J** **J**
310458	CONC-SP-02-102313	Chrysene-d_{12} Perylene-d_{12}	535966 339158	1522710 881878	Benz(a)anthracene Benzo(a)pyrene Benzo(b)fluoranthene Benzo(g,h,i)perylene Benzo(k)fluoranthene Benzyl butyl phthalate *bis*(2-ethylhexyl) phthalate Chrysene Dibenzo(a,h)anthracene Di-n-octyl phthalate Indeno(1,2,3-cd)pyrene Pyrene	**J** **J** **J** **J** **J** **UJ** **UJ** **J** **J** **UJ** **J** **J**
310458	CONC-SP-05-102313	Chrysene-d_{12}	600742	1522710	Benz(a)anthracene Benzyl butyl phthalate *bis*(2-ethylhexyl) phthalate Chrysene Pyrene	**J**
310458	CONC-SP-06-102313	Chrysene-d_{12} Perylene-d_{12}	587148 403106	1522710 881878	Benz(a)anthracene Benzo(a)pyrene Benzo(b)fluoranthene Benzo(g,h,i)perylene Benzo(k)fluoranthene Benzyl butyl phthalate *bis*(2-ethylhexyl) phthalate Chrysene Dibenzo(a,h)anthracene Di-n-octyl phthalate Indeno(1,2,3-cd)pyrene Pyrene	**J** **J** **J** **J** **J** **UJ** **UJ** **J** **UJ** **UJ** **J** **J**
402099	NRS-SP02-3-021014	Chrysene-d_{12}	1064719	2390680	Benz(a)anthracene Benzyl butyl phthalate *bis*(2-ethylhexyl) phthalate Chrysene Pyrene	**J**
403089	CN-S24-6-030714	Perylene-d_{12}	272282	130766	Benzo(a)pyrene Benzo(b)fluoranthene Benzo(g,h,i)perylene Dibenzo(a,h)anthracene Indeno(1,2,3-cd)pyrene	**J**

Note that samples listed above were also analyzed at dilutions to confirm the presence and effects of sample matrices on internal standard quantitation. The initial analyses provided optimal data usability. Therefore, the PAHs/SVOCs results were to be reported from the initial analyses as qualified above, and the dilution analyses discarded.

2.10 Reporting Limits and Target Compound Quantitation

Sample-specific RLs were supported with adequate initial calibration concentrations. In some cases samples required dilution for definitive quantitation of target compounds; the RLs were raised accordingly, and the compounds reported from the dilution analysis. The remaining (un-diluted) target compounds were to be reported from the initial analysis for the lower detection limits.

2.11 Field Duplicates

Eleven sets of field duplicates were submitted for PAHs analyses. Field duplicate results for detected target compounds, RPD (or concentration difference) values, and data qualification were presented in **Appendix A**.

2.12 Overall Assessment of PAHs Data Usability

PAHs data are of known quality and acceptable for use, as qualified.

3. PCB Aroclors (EPA Method SW8082A)

3.1 Sample Management and Holding Times

No anomalies were identified in relation to sample preservation, handling, and transport as discussed in Section 1.1.

Soil samples should be extracted within 14 days of collection and extracts analyzed within 40 days of extraction. All samples were extracted and analyzed within the required holding times.

3.2 Initial Calibration

The method requires that (1) a minimum of 5-point calibration be performed using the mixture of Aroclor 1016 and 1260, (2) a single-point calibration be performed for the other five Aroclors to establish calibration factors (CFs) and for Aroclor pattern recognition, (3) at least 3 peaks (preferably 5 peaks) must be chosen for each Aroclor for characterization, (4) the %RSD values of Aroclor 1016 and 1260 CFs must be ≤20%, and

(5) if dual column analysis is chosen, both columns should meet the requirements. All ICALs met the requirements.

3.3 Calibration Verification

CCV analyses should be performed for each 12-hour analysis sequence prior to sample analyses, and the %D be within ±20%. Calibration verifications were performed at the required frequency. All %D values either met the control criteria or biased high for target compounds that were not detected in the associated samples.

3.4 Method Blanks

Method blanks were prepared and analyzed as required. PCB Aroclors were not detected at or above the MDLs in the method blanks.

3.5 Surrogate Spikes

Surrogate spikes were added to all samples as required by the method. All surrogate spike %R values were within the laboratory control limits.

3.6 Matrix Spike and Matrix Spike Duplicate (MS/MSD)

MS/MSD analyses were performed on project samples or batch QC samples at the required frequency. All %R and RPD values were within the laboratory control limits.

3.7 Laboratory Control Sample (LCS) and LCS Duplicate (LCSD)

LCS and LCSD analyses were performed as required by the method. All %R and RPD values were within the project control limits.

3.8 Method Reporting Limits and Target Compound Quantitation

Sample-specific RLs were supported with adequate initial calibration concentrations and achieved the project target quantitation limits.

3.9 Field Duplicates

Field duplicates were not submitted for PCB Aroclors analysis in these SDGs.

3.10 Overall Assessment of PCB Aroclors Data Usability

PCB Aroclor data are of known quality and acceptable for use.

4. TPH-Gasoline by GC/FID (Method NWTPH-Gx)

4.1 Sample Management and Holding Times

No anomalies were identified in relation to sample preservation, handling, and transport as discussed in Section 1.1.

All samples in SDGs: 402099, 402220, and 402265 were not preserved in methanol upon collection. The analyses were performed within a relatively short period of time (less than seven days) of collection. TPH-Gasoline results for these samples, rather than being rejected, were qualified (UJ) for non-detects and (J) for detects as estimated.

Soil samples should be preserved in methanol at the time of collection. Soil samples should be analyzed within 14 days of collection. All samples were analyzed within the required holding times.

4.2 Initial Calibration (ICAL)

The method criteria require that (1) if linear average RFs is chosen as the quantitation option, the %RSD of RFs be ≤20% for the analyte, (2) if least-square linear regression is chosen for quantitation, the correlation coefficient (r) be ≥0.995, (3) if six-point non-linear (quadratic) curve is chosen for quantitation, the coefficient of determination (r^2) be ≥0.990, and (4) the back-calculated %D value for each calibration standard be within ±15%. Initial calibration met the criteria for all target compounds.

An ICV (second source) standard was analyzed to verify the calibration curve. %D values were within ±20%.

4.3 Calibration Verification

Continuing calibration verification (CCV) analyses were performed at the required frequency for all analytical sequences as required by the method. The %D values for all CCVs met the method criterion (±20%).

4.4 Method Blanks

Method blanks were prepared and analyzed as required. No target compounds were detected at or above the RLs in the method blanks.

4.5 Surrogate Spikes

Surrogate spikes were added to all samples as required by the method. All surrogate spike %R values were either within the project control limits, or outside the control limits due to matrix interference, or diluted below quantitation limits due to high levels of target or non-target compounds in the samples. No data qualifying actions were taken in these cases.

4.6 Matrix Spike and Matrix Spike Duplicate

MS/MSD analyses were not performed for TPH-Gasoline analyses; instead, duplicate and LCS analyses in combination were performed.

4.7 Laboratory Control Sample (LCS)

LCS analyses were performed as required by the method. All %R values were within the laboratory control limits.

4.8 Laboratory Duplicate Analysis

Duplicate analyses were performed on project and batch QC samples at the proper frequency. All RPD and concentration difference values met the laboratory control criteria.

4.9 Reporting Limits and Target Compound Quantitation

Sample-specific RLs were supported with adequate initial calibration concentrations.

4.10 Field Duplicates

Five sets of field duplicates were submitted for PAHs analyses. Field duplicate results for detected target compounds, RPD (or concentration difference) values, and data qualification were presented in **Appendix A**.

4.11 Overall Assessment of TPH-Gasoline Data Usability

TPH-Gasoline data are of known quality and acceptable for use, as qualified.

5. TPH-Diesel & Motor Oil by GC/FID (Method NWTPH-Dx)

5.1 Holding Time

No anomalies were identified in relation to sample preservation, handling, and transport as discussed in Section 1.1.

Soil samples should be extracted within 14 days of collection. Extracts should be analyzed within 40 days of extraction. All samples were extracted and analyzed within the recommended holding times.

5.2 Initial Calibration

The method criteria require that (1) if linear average RFs is chosen as the quantitation option, the %RSD of RFs be ≤20% for the analyte, (2) if least-square linear regression is chosen for quantitation, the correlation coefficient (r) be ≥0.995, (3) if six-point non-linear (quadratic) curve is chosen for quantitation, the coefficient of determination (r^2) be ≥0.990, and (4) the back-calculated %D value for each calibration standard be within ±15%. Initial calibration met the criteria for all target compounds.

An ICV (second source) standard was analyzed to verify the calibration curve. %D values were within ±20%.

5.3 Calibration Verification

The method requires that (1) a mid-range check standard be analyzed prior to and after each analytical batch, and (2) the percent drift (%D) value be within ±20% of the true value.

Calibration verification was performed at required frequency. The %D values were either within the ±20% criterion or at levels that had no adverse effects on data quality (e.g., high-bias %D value where the target compound was not detected in associated sample).

5.4 Method Blanks

Method blanks were prepared and analyzed as required. Target compounds were not detected at or above the RLs in the method blanks.

5.5 Surrogate Spikes

Surrogate spikes were added to all samples as required by the method. All surrogate spike %R values were either within the project control limits, or outside the control limits due to matrix interference, or diluted below quantitation limits due to high levels of

target or non-target compounds in the samples. No data qualifying actions were taken in these cases.

5.6 Matrix Spike (MS) and MS Duplicate (MSD)

MS and MSD analyses were performed on project and batch QC samples at the proper frequency. The %R and RPD values met the laboratory control criteria.

5.7 Laboratory Control Sample (LCS)

LCS analyses were performed as required. All %R values met the project control limits.

5.8 Target Compound Identification

Selected sample extracts were cleaned up with acid and silica gel treatment to minimize the biogenic interference with target compound identification, as required by the project. The laboratory reported results as diesel #2 (C10 - C25) and motor oil (C25 - C36), as required by the method. In some cases where sample chromatographic patterns resembled Bunker C fuel, the results were quantitated and reported as Bunker C fuel accordingly. No anomalies were identified relative to target compound identification.

5.9 Reporting Limits and Target Compound Quantitation

The reported RLs were supported with adequate ICAL concentrations.

The Bunker C fuel concentration in sample BUST-S67-3 exceeded instrument calibration range; the result was qualified (J) as estimated.

5.10 Field Duplicates

Fourteen sets of field duplicates were submitted for TPH-Diesel and TPH-Motor Oil analyses. Field duplicate results, RPD (or concentration difference) values, and data qualification for detected TPH-Diesel or Motor Oil were presented in **Appendix A**.

5.11 Overall Assessment of TPH-Diesel and Motor Oil Data Usability

TPH-Diesel and TPH-Motor Oil data are of known quality and acceptable for use, as qualified.

6. Total Metals by ICP/MS and CVAFS (EPA Methods 200.8 and 1631E)

6.1 Sample Management and Holding Times

No anomalies were identified in relation to sample preservation, handling, and transport, as discussed in Section 1.1.

Soil and water samples should be analyzed within 180 days for metals and 28 days for mercury. Samples were analyzed within the required holding times.

6.2 ICP/MS Tuning

Instrument tuning was performed at the required frequency. The stability check (%RSD <5%), mass calibration (mass difference <0.1 AMU), and resolution check (peak width <1.0 AMU at 5% peak height) met the NFG and method criteria.

6.3 Initial Calibration (ICAL)

The ICP/MS method requires that (1) a blank and one calibration standard be used in establishing the analytical curve, and (2) the average of replicate exposures be reported for all standards, QC, and sample analyses.

The CVAFS method require that (1) a blank and five calibration standards be employed to establish the analytical curve, (2) the linearity of the calibration curve should meet the criteria of correlation coefficient ≥ 0.995 for linear regression, and (3) the %RSD <15% if average response factor approach is employed.

All ICALs met the method requirements.

6.4 Calibration Verification (ICV and CCV)

Initial calibration verifications (ICVs) and continuing calibration verifications (CCVs) for ICP/MS and GFAA and ongoing precision recovery (OPR) were analyzed at the required frequency. The %R values either met the control criteria (90 – 110% for metals, 76 – 123% for mercury) or the exceedance had no adverse effects on data usability (e.g., high-bias %D value where the target compound was not detected in associated sample).

6.5 Blanks

Calibration Blanks: Initial calibration blanks (ICBs) and continuing calibration blanks (CCBs) were not analyzed after calibration verification standards. Target analytes were either not detected at or above the RLs in the ICBs and CCBs, or sample results affected by the ICB/CCB detections were qualified as results of detections in preparation blanks.

Preparation Blanks: Preparation blanks were prepared and analyzed as required. Target analytes were either not detected at or above the RLs in the preparation blanks, or sample results were greater than 10X the detection in the associated blank, except for the following:

SDG	Method Blank ID	Compound	MB (µg/L)	Affected Sample	Original Result	Qualified Result	Unit
311028	I3-748	Arsenic	0.358 J	BAST-B051-5.0 BAST-B504-5.0	1.92 1.37	1.92 J 1.37 J	**mg/kg**
401056	I4-010	Zinc	-1.502	NRA2-PC2-8-010614	15.4	15.4 J	**mg/kg**
402220	I4-096	Antimony	0.105	BAST-SP01-1-021714	3.09	3.09 J	**mg/kg**
402347	I4-0121	Zinc	-1.179	BAST-S88-4-022514	8.709	8.709 J	**mg/kg**
403027	I4-139	Zinc	-1.764	CN-S05-6-030314 CN-S10-6-030314 CN-500-030314	8.137 10.89 12.29	8.137 J 10.89 J 12.29 J	**mg/kg**
403201	I4-164	Nickel	0.405	CN-502-031514 CN-S36-12-031514 CN-S42-12-031514	7.52 9.45 11.2	7.52 J 9.45 J 11.2 J	**mg/kg**
403201	I4-164	Zinc	-0.749	CN-502-031514 CN-S42-12-031514	8.48 17.0	8.48 J 17.0 J	**mg/kg**
403201	I4-164	Arsenic	-0.1556	CN-502-031514 CN-S36-12-031514	6.95 5.21	6.95 J 5.21 J	**mg/kg**
403267	I4-174	Zinc	-1.23	CN-B24-16-031914 CN-S49-12-031914 CN-S51-3-032014 CN-S53-3-032014 CN-B26-4-032014 CN-B28-4-032014	10.02 3.696 11.92 3.904 10.41 10.96	10.02 J 3.696 J 11.92 J 3.904 J 10.41 J 10.96 J	**mg/kg**

6.6 Laboratory Control Sample (LCS)

LCS analyses were performed as required by the method. All %R values were within the project control limits, or the exceedance had no adverse effects on data usability (e.g., high-bias %R value where the target compound was not detected in associated sample).

6.7 Matrix Spike (MS) and Matrix Spike Duplicate (MSD)

MS and MSD analyses were performed on project and batch QC samples at the adequate frequency (>5% of field sample). The %R and RPD values either met the laboratory control limits or the outliers were not applicable for matrix effect evaluation (e.g. sample concentration >4x spiking level), except for the following:

SDG#	Parent Sample ID	Analyte	MS %R	MSD %R	Control Limit	RPD	Affected Sample	Data Qualifier
401111	Cemex-QS-011014	Zinc	39%	45%	50-150%	14%	BUST-S68-3	**J**
402099	NRS-SP01-1-021014	Mercury	54%	64%	62-140%	17%	NRS-SP01-1-021014	**J**
402128	BAST-S069-3-021114	Mercury	56%	32%	62-140%	55%	BAST-S069-3-021114 BAST-507	**J**

Note: RPD control criteria = ±20%

6.8 Internal Standards

At least three internal standards were added to all field and QC samples for ICP/MS analyses. All percent relative intensity values were within the method criteria (60 - 125%).

6.9 Method Reporting Limits and Analyte Quantitation

Sample-specific RLs were supported with adequate initial calibration concentrations.

6.10 Field Duplicates

Seven sets of field duplicates were submitted for metals analyses. Field duplicate results, RPD (or concentration difference) values, and data qualification for detected TPH-Diesel or Motor Oil were presented in **Appendix A**.

6.11 Overall Assessment of Metals Data Usability

Metal data are of known quality and acceptable for use, as qualified.

7. Formaldehyde by HPLC/UV (EPA Method 8315A)

7.1 Sample Management and Holding Time

No anomalies were identified in relation to sample preservation, handling, and transport, as discussed in Section 1.1.

Soil samples should be derivatized and extracted within seven days of sample collection. All derivatized sample extracts should be analyzed within three days after preparation. The sample was prepared and analyzed within the required holding times.

7.2 Instrument Calibration

The method linearity criteria require that (1) if linear average RFs is chosen as the quantitation option, the %RSD of RFs be ≤20% for the analyte, (2) if least-square linear regression is chosen for quantitation, the correlation coefficient (r) be >0.995, and (3) if six-point non-linear (quadratic) curve is chosen for quantitation, the coefficient of determination (r^2) be >0.990. Initial calibration met the criteria for all target compounds.

An ICV (second source) standard was analyzed to verify the calibration curve. %D values were within ±20%.

7.3 Calibration Verification

CCV analyses were performed at the required frequency for all analytical sequences as required by the method. The %D values for all CCVs met the method criterion (±20%).

7.4 Method Blanks

A method blank was prepared and analyzed in each preparation batch as required. Formaldehyde was not detected at or above the RL in method blanks.

7.5 Matrix Spike (MS) and MS Duplicate (MSD)

MS and MSD analyses were performed on project and batch QC samples at the proper frequency. The %R and RPD values met the laboratory control criteria.

7.6 Laboratory Control Samples (LCS)

LCS analyses were performed as required by the methods. The %R values were within the laboratory control limits.

7.7 Field Duplicates

Two sets of field duplicates were submitted for metals analyses. Field duplicate results, RPD (or concentration difference) values, and data qualification for detected TPH-Diesel or Motor Oil were presented in **Appendix A**.

7.8 Overall Assessment of Formaldehyde Data Usability

Formaldehyde data are of known quality and acceptable for use, as qualified.

8. Extractable Petroleum Hydrocarbon (EPH) by GC/FID (Method NWTPH-EPH)

8.1 Holding Time

No anomalies were identified in relation to sample preservation, handling, and transport as discussed in Section 1.1.

Soil samples should be extracted within 14 days of collection. Extracts should be analyzed within 40 days of extraction. All samples were extracted and analyzed within the recommended holding times.

8.2 Initial Calibration

The method linearity criteria require that (1) if linear average RFs is chosen as the quantitation option, the %RSD of RFs be ≤20% for the analyte, (2) if least-square linear regression is chosen for quantitation, the correlation coefficient (r) be >0.990, and (3) if six-point non-linear (quadratic) curve is chosen for quantitation, the coefficient of determination (r^2) be >0.990. Initial calibration met the criteria for all target compounds.

Initial calibration information was not submitted for review in these SDGs.

8.3 Calibration Verification

The method requires that (1) a mid-range check standard be analyzed prior to and after each analytical batch, and (2) the percent drift (%D) value be within ±20% of the true value.

Calibration verification was performed at required frequency. The %D values were either within the ±30% criterion or at levels that had no adverse effects on data quality (e.g., high-bias %D value where the target compound was not detected in associated sample).

8.4 Method Blanks

Method blanks were prepared and analyzed as required. Target compounds were not detected at or above the RLs in the method blanks, except for the following:

SDG	Method Blank ID	Compound	MB Conc.	Affected Sample	Original Result	Qualified Result	Unit
401241	**6467**	Aromatic C8-C10	0.992 J	BAST-S59-7-012114	1.06	**5.19 U**	**mg/kg**
402219	**6751**	Aromatic C8-C10	1.96 J	BAST-S075-4-021714	14.0 J	**52.5 U**	**mg/kg**

8.5 Surrogate Spikes

Surrogate spikes were added to all samples as required by the method. All surrogate spike %R values were either within the project control limits, or outside the control limits due to matrix interference, or diluted below quantitation limits due to high levels of target or non-target compounds in the samples. No data qualifying actions were taken in these cases.

8.6 Matrix Spike (MS)

MS analyses were performed on project and batch QC samples at the proper frequency. The %R values met the laboratory control criteria.

8.7 Laboratory Control Sample (LCS) and LCS Duplicate (LCSD)

LCS and LCSD analyses were performed as required. All %R and RPD values met the project control limits, except for the following:

SDG#	LCS ID	Analyte	LCS %R	LCSD %R	Control Limit	RPD	Affected Sample	Data Qualifier
402219	6751	Aromatic C8-C10 Aromatic C10-C12	47.0% 28.2%	55.0% 34.8%	70-130%	-	BAST-S59-7-012114	**J**

Note: RPD criteria = ±20%.

8.8 Reporting Limits and Target Compound Quantitation

Sample-specific RLs were consistent with method-recommended pratical quantitation limits and were adjusted with sample volumes and moisture contents.

8.9 Field Duplicates

Field duplicates were not submitted for EPH analysis in these SDGs.

8.10 Overall Assessment of EPH Data Usability

EPH data are acceptable for use as qualified, based on the information submitted by the laboratory.

9. Volatile Petroleum Hydrocarbon by GC/FID (Method NWTPH-VPH)

9.1 Sample Management and Holding Times

No anomalies were identified in relation to sample preservation, handling, and transport as discussed in Section 1.1.

Soil samples should be preserved with methanol at the time of collection, and analyzed within 14 days of collection. All samples were analyzed within the required holding times.

9.2 Initial Calibration (ICAL)

The method linearity criteria require that (1) if linear average RFs is chosen as the quantitation option, the %RSD of RFs be ≤20%, (2) if least-square linear regression is chosen for quantitation, the correlation coefficient (r) be >0.990, and (3) if six-point non-linear (quadratic) curve is chosen for quantitation, the coefficient of determination (r^2) be >0.990. Initial calibration met the criteria for all target compounds.

Initial calibration information was not submitted for review in these SDGs.

9.3 Calibration Verification

Continuing calibration verification (CCV) analyses were performed at the required frequency for all analytical sequences as required by the method. The %D values for all CCVs met the method criterion (% value within ±20% for the carbon range components and ±15% for individual target compounds), except for the following:

SDG	CCV ID	Compound	%D	Bias	Affected Sample	Data Qualifier
401241	6483A	Methyl-*tert*-butyl ether	23.9%	Low	BAST-S59-7-012114	**UJ**

9.4 Method Blanks

Method blanks were prepared and analyzed as required. No target compounds were detected at or above the RLs in the method blanks.

9.5 Surrogate Spikes

Surrogate spikes were added to all samples as required by the method. All surrogate spike %R values were either within the project control limits, or outside the control limits due to matrix interference, or diluted below quantitation limits due to high levels of target or non-target compounds in the samples. No data qualifying actions were taken in these cases.

9.6 Matrix Spike (MS)

MS analyses were performed on project or batch QC samples at the required frequency. The %R values were within the laboratory control limits, except for the following:

SDG#	Parent Sample ID	Compound	MS %R	Control Limit	Affected Sample	Data Qualifier
401318	NRU-B5-16-012714	Aliphatics C10-C12 Aromatics C10-C12	-18.5% 43.8%	57-120%	NRU-B5-16-012714	**J**

9.7 Laboratory Control Sample (LCS)

LCS analyses were performed as required by the method. All %R values were within the laboratory control limits.

9.8 Laboratory Duplicate Analysis

Duplicate analyses were performed on project and batch QC samples at the proper frequency. All RPD and concentration difference values met the laboratory control criteria.

9.9 Reporting Limits and Target Compound Quantitation

Sample-specific RLs were consistent with method-recommended practical quantitation limits, and were adjusted with sample volumes and moisture contents.

9.10 Field Duplicates

Field duplicates were not submitted for VPH analysis in these SDGs.

9.11 Overall Assessment of VPH Data Usability

VPH data are acceptable for use as qualified, based on the information submitted by the laboratory.

10. BTEX by GC/PID (EPA Method SW8021B)

10.1 Sample Management and Holding Time

No anomalies were identified in relation to sample preservation, handling, and transport as discussed in Section 1.1.

Soil samples should be preserved in methanol at the time of collection. Soil and water samples should be analyzed within 14 days of collection. All samples were analyzed within the required holding times.

10.2 Initial Calibration (ICAL)

The ICAL criteria require that (1) if linear average RFs is chosen as the quantitation option, at least five standards at different concentrations should be analyzed and the percent relative standard deviation (%RSD) of response factors (RFs) be ≤20% for the analyte, (2) if least-square linear regression is chosen for quantitation, the correlation coefficient (r) be >0.995, and (3) if six-point non-linear (quadratic) curve is chosen for quantitation, the coefficient of determination (r^2) be >0.99. The ICAL met the requirements.

An initial calibration verification (ICV) standard (second source standard) was analyzed to verify the calibration curve. Percent difference (%D) values were either within ±20%, or the exceedance had no adverse effects on data usability (*e.g.,* biased high ICV recovery for a compound not detected in samples).

10.3 Calibration Verification (CCV)

The CCV criteria requires that (1) continuing calibrations be analyzed at the beginning of each 12-hour analysis period prior to the analysis of method blank and samples, and (2) the %D be within ±20. Calibration verifications met the requirements.

10.4 Method Blanks

Method blanks were prepared and analyzed as required. Target compounds were not detected at or above the RLs.

10.5 Laboratory Control Sample (LCS) and LCS Duplicate (LCSD)

LCS and LCSD were prepared and analyzed as required by the method. The %R and RPD values met the project control limits.

10.6 Surrogate Spikes

Surrogate spikes were added to all samples as required by the method. All surrogate spike %R values were within the project control limits.

10.7 Matrix Spike (MS)

MS analyses were performed on project and batch QC samples at the proper frequency. All %R values were within the project control limits.

10.8 Reporting Limit and Target Compound Quantitation

RLs were supported with adequate initial calibration concentrations.

10.9 Field Duplicates

Field duplicates were not submitted for BTEX analysis in these SDGs.

10.10 Overall Assessment of BTEX Data Usability

BTEX data are of known quality and acceptable for use.

SUMMARY

Table I. Data Affected by QC Anomalies:

Laboratory ID	Sample ID	Analyte	Qualifier	Qualified Reason
402099-01 402128-04 402128-07	NRS-SP01-1-021014 BAST-S069-3-021114 BAST-507	Mercury	**J** **J** **UJ**	MS/MSD %R values were <LCL
402220-01	BAST-SP01-1-021714	Antimony	**J**	Analyte was detected in MB
403201-22	CN-S36-12-031514	Arsenic	**J**	Analyte was detected in MB
403201-20 403201-22 403201-28	CN-502-031514 CN-S36-12-031514 CN-S42-12-031514	Nickel	**J**	Analyte was detected in MB
403201-28	CN-S42-12-031514	Zinc	**J**	Analyte was detected in MB
403201-20	CN-502-031514	Arsenic Zinc	**J**	FD RPD value was >35%; analyte was detected in MB
401056-02 402347-03 403027-05 403027-10 403027-20 403267-02 403267-03 403267-06 403267-08 403267-09 403267-11	NRA2-PC2-8-010614 BAST-S88-4-022514 CN-S05-6-030314 CN-S10-6-030314 CN-500-030314 CN-B24-16-031914 CN-S49-12-031914 CN-S51-3-032014 CN-S53-3-032014 CN-B26-4-032014 CN-B28-4-032014	Zinc	**J**	Result was affected by negative detection in MB
401111-01	Cemex-QS-011014	Zinc	**J**	MS/MSD %R values were <LCL
401241-03	BAST-S59-7-012114	Aliphatic C8-C10 (EPH)	**J**	LCS/LCSD %R values were <LCL
402219-01	BAST-S075-4-021714	Aromatics C10-C12 (EPH)	**J**	LCS/LCSD %R values were <LCL
401241-03	BAST-S59-7-012114	Methyl-tert-butyl ether	**UJ**	CCV %D value was <LCL

Laboratory ID	Sample ID	Analyte	Qualifier	Qualified Reason
402099-01	NRS-SP01-1-021014	Gasoline Range TPH VOCs	**J/UJ**	Sample was not preserved per method requirements
402099-02	NRS-SP01-2-021014			
402099-03	NRS-SP01-3-021014			
402099-04	NRS-SP02-1-021014			
402099-05	NRS-SP02-2-021014			
402099-06	NRS-SP02-3-021014			
402099-07	NRS-SP03-1-021014			
402099-08	NRS-SP03-2-021014			
402099-09	NRS-SP03-3-021014			
402099-10	NRS-SP04-1-021014			
402099-11	NRS-SP04-2-021014			
402099-12	NRS-SP04-3-021014			
402099-13	NRS-SP05-1-021014			
402099-14	NRS-SP05-2-021014			
402099-15	NRS-SP05-3-021014			
402099-16	NRS-SP06-1-021014			
402099-17	NRS-SP06-2-021014			
402099-18	NRS-SP06-3-021014			
402099-19	NRS-SP07-1-021014			
402099-20	NRS-SP07-2-021014			
402099-21	NRS-SP07-3-021014			
402220-01	BAST-SP01-1-021714			
402220-02	BAST-SP01-2-021714			
402220-03	BAST-SP01-3-021714			
402265-01	NRS-SP08-1-021914			
402265-02	NRS-SP08-2-021914			
402265-03	NRS-SP08-3-021914			
402265-04	NRS-SP09-1-021914			
402265-05	NRS-SP09-2-021914			
402265-06	NRS-SP09-3-021914			
402265-07	NRS-SP10-1-021914			
402265-08	NRS-SP10-2-021914			
402265-09	NRS-SP10-3-021914			
403091-03	SHB-S03-3-030614	Bromomethane	**UJ**	CCV %D value was <LCL
403091-04	SHB-S04-3-030614			
403091-05	SHB-S05-3-030614			
403091-06	SHB-S06-3-030614			
403091-07	SHB-B01-5-030614			
403091-08	SHB-B02-5-030614			
403091-09	SHB-B03-5-030614			
403091-10	SHB-500			
402263-01	NRS-S27-8-021814	*cis*-1,3-Dichloropropene Dibromochloromethane *trans*-1,3-Dichloropropene	**UJ**	LCS %R value was <LCL
402263-02	NRS-S28-8-021814			
402263-03	NRS-B09-10-021814			
402263-04	NRS-S29-8-021914			
310458-01	CONC-SP-01-102313	1,1,2,2-Tetrachloroethane	**UJ**	MS/MSD %R values were <LCL

Laboratory ID	Sample ID	Analyte	Qualifier	Qualified Reason
402099-01 402099-02 402099-03 402099-13 402099-18 402220-03	NRS-SP01-1-021014 NRS-SP01-2-021014 NRS-SP01-3-021014 NRS-SP05-1-021014 NRS-SP06-3-021014 BAST-SP01-3-021714	1,4-Dichlorobenzene	**U**	Analyte was detected in MB
402265-02	NRS-SP08-2-021914	1,3-Dichlorobenzene	**UJ**	CCV %D value was <LCL
401174-01 401174-02 401174-03 401174-04	STIL-G9-011414 STIL-G10-011414 STIL-G11-011414 STIL-G12-011414	Benzoic acid	**UJ**	CCV %D value was <LCL
402099-01	NRS-SP01-1-021014	4,6-Dinitro-2-methylphenol	**UJ**	CCV %D value was <LCL
402099-02 402099-03 402099-06 402099-10	NRS-SP01-2-021014 NRS-SP01-3-021014 NRS-SP02-3-021014 NRS-SP04-1-021014	Benzoic acid	**UJ**	CCV %D value was <LCL
402220-02	BAST-SP01-2-021714	Benzoic acid	**UJ**	CCV %D value was <LCL
402099-04 402099-05 402099-08 402099-14 402099-15 402099-16 402099-17 402099-18 402099-19	NRS-SP02-1-021014 NRS-SP02-2-021014 NRS-SP03-2-021014 NRS-SP05-2-021014 NRS-SP05-3-021014 NRS-SP06-1-021014 NRS-SP06-2-021014 NRS-SP06-3-021014 NRS-SP07-1-021014	2,4-Dinitrophenol 4,6-Dinitro-2-methylphenol	**UJ**	CCV %D value was <LCL
402265-02	NRS-SP08-2-021914	2,4-Dinitrophenol 4,6-Dinitro-2-methylphenol Benzoic acid	**UJ**	CCV %D value was <LCL
402265-03 402265-04 402265-05 402265-06 402265-07	NRS-SP08-3-021914 NRS-SP09-1-021914 NRS-SP09-2-021914 NRS-SP09-3-021914 NRS-SP10-1-021914	Benzoic acid	**UJ**	CCV %D value was <LCL
402265-08 402265-09	NRS-SP10-2-021914 NRS-SP10-3-021914	1,3-Dichlorobenzene 2,4-Dinitrophenol 4,6-Dinitro-2-methylphenol Benzoic acid	**UJ**	CCV %D value was <LCL
402099-01	NRS-SP01-1-021014	2,4-Dinitrophenol	**UJ**	CCV %D value was <LCL; MSD %R value was <LCL

Laboratory ID	Sample ID	Analyte	Qualifier	Qualified Reason
310458-01	CONC-SP-01-102313	Benz(a)anthracene Benzo(a)pyrene Benzo(b)fluoranthene Benzo(g,h,i)perylene Benzo(k)fluoranthene Benzyl butyl phthalate *bis*(2-ethylhexyl) phthalate Chrysene Dibenzo(a,h)anthracene Di-n-octyl phthalate Indeno(1,2,3-cd)pyrene Pyrene	**J** **J** **J** **J** **J** **UJ** **UJ** **J** **J** **UJ** **J** **J**	Internal standard recovery was <LCL
310458-02	CONC-SP-02-102313	Benz(a)anthracene Benzo(a)pyrene Benzo(b)fluoranthene Benzo(g,h,i)perylene Benzo(k)fluoranthene Benzyl butyl phthalate *bis*(2-ethylhexyl) phthalate Chrysene Dibenzo(a,h)anthracene Di-n-octyl phthalate Indeno(1,2,3-cd)pyrene Pyrene	**J** **J** **J** **J** **J** **UJ** **UJ** **J** **J** **UJ** **J** **J**	Internal standard recovery was <LCL
310458-05	CONC-SP-05-102313	Benz(a)anthracene Benzyl butyl phthalate *bis*(2-ethylhexyl) phthalate Chrysene Pyrene	**J**	Internal standard recovery was <LCL
310458-06	CONC-SP-06-102313	Benz(a)anthracene Benzo(a)pyrene Benzo(b)fluoranthene Benzo(g,h,i)perylene Benzo(k)fluoranthene Benzyl butyl phthalate *bis*(2-ethylhexyl) phthalate Chrysene Dibenzo(a,h)anthracene Di-n-octyl phthalate Indeno(1,2,3-cd)pyrene Pyrene	**J** **J** **J** **J** **J** **UJ** **UJ** **J** **UJ** **UJ** **J** **J**	Internal standard recovery was <LCL
402099-06	NRS-SP02-3-021014	Benz(a)anthracene Benzyl butyl phthalate *bis*(2-ethylhexyl) phthalate Chrysene Pyrene	**J** **UJ** **UJ** **J** **J**	Internal standard recovery was <LCL
402099-21	NRS-SP07-3-021014	2,4-Dinitrophenol 4,6-Dinitro-2-methylphenol Hexachlorocyclopentadiene	**UJ**	MS/MSD %R values were <LCL

Laboratory ID	Sample ID	Analyte	Qualifier	Qualified Reason
402099-01	NRS-SP01-1-021014	Hexachlorocyclopentadiene Pyrene	**UJ** **J**	MS/MSD %R values were <LCL
310458-01DL 310458-02DL 310458-05DL 310458-06DL 310458-09DL	CONC-SP-01-102313 CONC-SP-02-102313 CONC-SP-05-102313 CONC-SP-06-102313 CONC-SP-02-102313 Agg	SVOCs	**DNR**	Report from initial analysis
402263-03 402347-01 402347-02 402347-05	NRS-B09-10-021814 BAST-B78-4-022414 BAST-S87-2-022414 BAST-S90-4-022514	Indeno(1,2,3-cd)pyrene	**J**	CCV %D value was >UCL
403089-11	CN-S24-6-030714	Benzo(a)pyrene Benzo(b)fluoranthene Benzo(g,h,i)perylene Dibenzo(a,h)anthracene Indeno(1,2,3-cd)pyrene	**J**	Internal standard recovery was >UCL
403027-01	CN-S01-3-030314	Benz(a)anthracene Benzo(a)pyrene Benzo(b)fluoranthene Chrysene	**J**	MS/MSD RPD & MSD %R values were >UCL
311028-01 311028-02	BAST-B051-5.0 BAST-B504-5.0	Bunker C	**J** **UJ**	FD difference >2XRL
401317-10	BAST-B65-3.5-012714	Anthracene Benz(a)anthracene Chrysene Phenanthrene Pyrene	**UJ** **UJ** **UJ** **J** **UJ**	FD difference >2xRL
401317-11	BAST-506-012714	Anthracene Benz(a)anthracene Chrysene Phenanthrene Pyrene	**J**	FD difference >2xRL
403091-07 403091-10	SHB-B01-5-030614 SHB-500	Lead Fluoranthene Pyrene	**J**	FD difference >2xRL
403101-03 403101-07	CN-B10-11-030714 CN-501	Benzo(a)pyrene Benzo(b)fluoranthene Chrysene Fluoranthene Naphthalene Phenanthrene Pyrene	**J**	FD difference >2xRL
403201-17	CN-B20-16-031514	Arsenic Zinc	**J**	FD RPD value >35%

Notes:
%R - Percent recovery
CCV - Continuing calibration verification
DL - Dilution analysis
FD - Field duplicate

LCL - Lower control limit
LCS - Laboratory control sample
LCSD - Laboratory control sample duplicate
MB - Method blank
MS - Matrix spike
MSD - Matrix spike duplicate
RPD - Relative percent difference
UCL - Upper control limit

Table II. Data Affected by Detections in Method Blank

SDG#	Sample ID	Compound	Original Result	Adjusted Result	Unit	Report Section
401241	BAST-S59-7-012114	Aromatics C8-C10 (EPH)	1.06 J	**5.19 U**	mg/kg	**8.4**
402219	BAST-S075-4-021714	Aromatics C8-C10 (EPH)	14.0 J	**52.5 U**	mg/kg	**8.4**

Table III. Data Qualifiers are defined as follows:

Data Qualifier	Definition
DNR	The result should be reported from an alternative analysis.
J	The analyte was detected above the reported quantitation limit, and the reported concentration was an estimated value.
U	The analyte was analyzed for, but was considered not detected at the reporting limit or reported value.
UJ	The analyte was analyzed for, and the associated quantitation limit was an estimated value.

Approved By:  Date: ***6/23/2014***

Mingta Lin, Senior Project Chemist

REFERENCES

USEPA *Contract Laboratory Program National Functional Guidelines for Inorganic Superfund Data Review,* Office of Superfund Remediation and Technical Innovation, U.S. Environmental Protection Agency, January 2010, USEPA 540/R-10/011

USEPA *Contract Laboratory Program National Functional Guidelines for Superfund Organic Methods Data Review,* Office of Superfund Remediation and Technical Innovation, U.S. Environmental Protection Agency, June 2008, USEPA-540-R-08-01.

USEPA *Method 1631, Revision E: Mercury in Water by Oxidation, Purge and Trap, and Cold Vapor Atomic Fluorescence Spectrometry, Office of Water, U.S. Environmental Protection Agency, August 2002, EPA-821-R-02-019.*

USEPA *Test Methods for Evaluating Solid Waste (SW-846). Third Edition and Revised Update IIIA.* Office of Solid Waste and Emergency Response, Washington, D.C. April 1998.

USEPA *Methods for Chemical Analysis of Water and Wastes,* EPA-600/4-79-020, March 1983 and updates.

Standard Methods for the Examination of Water and Wastewater, American Public Health Association, 20th Edition, 1995.

Ecology (Washington State Department of). 1997. *Analytical Methods for Petroleum Hydrocarbons.* Publication No. ECY 97-602. June 1997.

PSEP *Recommended Guidelines for Measuring Organic Compounds in Puget Sound Water, Sediment and Tissue Samples,* Puget Sound Water Quality Authority, April 1997.

Appendix A

Field duplicate RPD is indicative of field and laboratory precision and sample homogeneity in combination. The CLP National Functional Guidelines or *Work Plan* do not specify criteria for field duplicate evaluation. An advisory criterion of 35% was applied to evaluating the RPD values of field duplicate results that are ≥5xRL. For results that are <5xRL, an advisory criterion of ±2RL was applied to evaluating the concentration differences. The RPD (or concentration difference as applicable) values and data qualification for detected compounds in field duplicates are presented as follows:

Analyte	Units	RL	Parent & Field Duplicate Sample Result		RPD	Delta	Data Qualifier
			BAST-S010-3.5	**BAST-502-3.2**			
Bunker C	mg/kg	0.1	ND	ND			
			BAST-B051-5.0	**BAST-B504-5.0**			
Bunker C	mg/kg	250	1000	ND		1000	**J**
			BAST-B65-3.5-012714	**BAST-506-012714**			
Arsenic	mg/kg	1	ND	ND		0	
Cadmium	mg/kg	1	ND	ND		0	
Copper	mg/kg	1	15.6	14.9	5%		
Lead	mg/kg	1	3.22	2.47	26%		
Mercury	mg/kg	0.1	ND	ND		0	
Nickel	mg/kg	1	11.5	11.3	2%		
Zinc	mg/kg	1	71.6	66.7	7%		
Bunker C	mg/kg	250	ND	ND		0	
Acenaphthene	mg/kg	0.01	ND	0.011		0.011	
Anthracene	mg/kg	0.01	ND	0.025		0.025	**UJ/J**
Benz(a)anthracene	mg/kg	0.01	ND	0.029		0.029	**UJ/J**
Benzo(a)pyrene	mg/kg	0.01	ND	0.017		0.017	
Chrysene	mg/kg	0.01	ND	0.034		0.034	**UJ/J**
Fluorene	mg/kg	0.01	ND	0.016		0.016	
Phenanthrene	mg/kg	0.01	0.018	0.084		0.066	**UJ/J**
Pyrene	mg/kg	0.01	ND	0.06		0.06	**UJ/J**
			BAST-S069-3-021114	**BAST-507**			
Mercury	mg/kg	0.1	0.11	ND		0.11	
Arsenic	mg/kg	1	2.06	10	132%	7.94	**J/J**
Cadmium	mg/kg	1	ND	ND		0	
Copper	mg/kg	1	22.3	40.1	57%		**J/J**
Lead	mg/kg	1	4.62	7.56		2.94	**J/J**

Analyte	Units	RL	Parent & Field Duplicate Sample Result		RPD	Delta	Data Qualifier
Nickel	mg/kg	1	19.4	28.7	39%		**J/J**
Zinc	mg/kg	1	86.2	45.9	61%		**J/J**
Diesel Range TPH	mg/kg	50	ND	ND		0	
Oil Range TPH	mg/kg	250	ND	ND		0	
Gasoline Range TPH	mg/kg	2	ND	ND		0	
			NRS-B01-13-021214	**NRS-500-021214**			
Diesel Range TPH	mg/kg	50	ND	ND		0	
Oil Range TPH	mg/kg	250	ND	ND		0	
Gasoline Range TPH	mg/kg	2	ND	ND		0	
Fluoranthene	mg/kg	0.01	0.024	0.035		0.011	
Naphthalene	mg/kg	0.01	0.02	0.029		0.009	
Phenanthrene	mg/kg	0.01	0.016	0.024		0.008	
Pyrene	mg/kg	0.01	0.024	0.035		0.011	
			NRS-S17-8-021214	**NRS-501-021214**			
Mercury	mg/kg	0.1	ND	ND			
Arsenic	mg/kg	1	3.92	2.79		1.13	
Cadmium	mg/kg	1	ND	ND			
Copper	mg/kg	1	7	6.32	10%		
Lead	mg/kg	1	2.45	1.86		0.59	
Nickel	mg/kg	1	11.2	10.7	5%		
Zinc	mg/kg	1	13.6	11.9	13%		
Diesel Range TPH	mg/kg	50	ND	ND		0	
Oil Range TPH	mg/kg	250	ND	ND		0	**J/J**
Gasoline Range TPH	mg/kg	2	ND	ND		0	**J/J**
			BAST-B72-6-022014	**BAST-508-022014**			
Mercury	mg/kg	0.1	ND	ND			
Arsenic	mg/kg	1	4.93	4.62		0.31	
Cadmium	mg/kg	1	ND	ND		0	**UJ/J**
Copper	mg/kg	1	6.4	5.94	7%		
Lead	mg/kg	1	1.79	1.75		0.04	**J/J**
Nickel	mg/kg	1	9.75	9.27	5%		**J/UJ**
Zinc	mg/kg	5	10.9	10.1	8%		**J/J**
Diesel Range TPH	mg/kg	50	ND	ND		0	**J/J**
Oil Range TPH	mg/kg	250	ND	ND		0	
Gasoline Range TPH	mg/kg	2	ND	ND		0	
			CN-B03-8-030314	**CN-500-030314**			

Analyte	Units	RL	Parent & Field Duplicate Sample Result		RPD	Delta	Data Qualifier
Mercury	mg/kg	0.1	ND	ND		0	
Arsenic	mg/kg	1	3.61	3.36		0.25	
Cadmium	mg/kg	1	ND	ND		0	**UJ/J**
Copper	mg/kg	1	7.57	6.83	10%		
Lead	mg/kg	1	3.57	2.12		1.45	**J/J**
Nickel	mg/kg	1	11.1	11.3	2%		**J/J**
Zinc	mg/kg	5	14.3	15.8	10%		**J/J**
Diesel Range TPH	mg/kg	50	ND	ND		0	**J/J**
Oil Range TPH	mg/kg	250	ND	ND		0	
			SHB-B01-5-030614	**SHB-500**			
Mercury	mg/kg	0.1	ND	ND		0	
Arsenic	mg/kg	1	4.37	5.6		1.23	
Cadmium	mg/kg	1	ND	ND		0	
Copper	mg/kg	1	12.7	20	45%		
Lead	mg/kg	1	3.37	5.54		2.17	**J/J**
Nickel	mg/kg	1	11.6	13.9	18%		
Zinc	mg/kg	1	77.8	85.6	10%		
Diesel Range TPH	mg/kg	50	ND	ND		0	
Oil Range TPH	mg/kg	250	ND	ND		0	
Gasoline Range TPH	mg/kg	2	ND	ND		0	
Acenaphthene	mg/kg	0.01	ND	ND		0	
Acenaphthylene	mg/kg	0.01	ND	ND		0	
Anthracene	mg/kg	0.01	ND	ND		0	
Benz(a)anthracene	mg/kg	0.01	0.011	ND		0	
Benzo(a)pyrene	mg/kg	0.01	0.016	ND		0	
Benzo(b)fluoranthene	mg/kg	0.01	0.018	0.011		0.007	
Benzo(g,h,i)perylene	mg/kg	0.01	0.014	ND		0	
Benzo(k)fluoranthene	mg/kg	0.01	ND	ND		0	
Chrysene	mg/kg	0.01	0.014	ND		0	
Dibenzo(a,h)anthracene	mg/kg	0.01	ND	ND		0	
Fluoranthene	mg/kg	0.01	0.034	0.011		0.023	J/J
Fluorene	mg/kg	0.01	ND	ND			
Indeno(1,2,3-cd)pyrene	mg/kg	0.01	0.013	ND			
Naphthalene	mg/kg	0.01	ND	ND			
Phenanthrene	mg/kg	0.01	0.019	ND			
Pyrene	mg/kg	0.01	0.04	0.011		0.029	J/J

Analyte	Units	RL	Parent & Field Duplicate Sample Result		RPD	Delta	Data Qualifier
			CN-B10-11-030714	**CN-501**			
Mercury	mg/kg	0.1	ND	ND			
Arsenic	mg/kg	1	3.94	5.04		1.1	
Cadmium	mg/kg	1	ND	ND			
Copper	mg/kg	1	16	17.2	7%		
Lead	mg/kg	1	5.19	5.68	9%		
Nickel	mg/kg	1	16.1	17.6	9%		
Zinc	mg/kg	1	27.4	28.7	5%		
Diesel Range TPH	mg/kg	50	ND	ND			
Oil Range TPH	mg/kg	250	ND	ND			
Acenaphthene	mg/kg	0.01	0.011	0.021		0.01	
Acenaphthylene	mg/kg	0.01	ND	ND		0	
Anthracene	mg/kg	0.01	0.01	0.019		0.009	
Benz(a)anthracene	mg/kg	0.01	0.026	0.045		0.019	
Benzo(a)pyrene	mg/kg	0.01	0.021	0.044		0.023	**J/J**
Benzo(b)fluoranthene	mg/kg	0.01	0.027	0.055		0.028	**J/J**
Benzo(g,h,i)perylene	mg/kg	0.01	0.012	0.03		0.018	
Benzo(k)fluoranthene	mg/kg	0.01	ND	0.02		0.02	
Chrysene	mg/kg	0.01	0.029	0.055		0.026	**J/J**
Dibenzo(a,h)anthracene	mg/kg	0.01	ND	ND		0	
Fluoranthene	mg/kg	0.01	0.052	0.086	49%		**J/J**
Fluorene	mg/kg	0.01	ND	0.017		0.017	
Indeno(1,2,3-cd)pyrene	mg/kg	0.01	0.012	0.032		0.02	
Naphthalene	mg/kg	0.01	0.019	0.049		0.03	**J/J**
Phenanthrene	mg/kg	0.01	0.038	0.085		0.047	**J/J**
Pyrene	mg/kg	0.01	0.057	0.11	63%		**J/J**
			CN-B20-16-031514	**CN-502-031514**			
Mercury	mg/kg	0.1	0.13	0.14		0.01	
Arsenic	mg/kg	1	10.5	6.95	41%		J/J
Cadmium	mg/kg	1	ND	ND		0	
Copper	mg/kg	1	123	136	10%		
Lead	mg/kg	1	156	152	3%		
Nickel	mg/kg	1	7.85	7.52	4%		
Zinc	mg/kg	1	5.4	8.48	44%		J/J
Diesel Range TPH	mg/kg	200	ND	ND		0	
Oil Range TPH	mg/kg	1000	ND	ND		0	

Analyte	Units	RL	Parent & Field Duplicate Sample Result		RPD	Delta	Data Qualifier
			CN-B24-16-031914	**CN-503**			
Mercury	mg/kg	0.1	ND	ND		0	
Arsenic	mg/kg	1	ND	ND		0	
Cadmium	mg/kg	1	ND	ND		0	
Copper	mg/kg	1	ND	ND		0	
Lead	mg/kg	1	27.6	20.6	29%		
Nickel	mg/kg	1	9.12	7.83	15%		
Zinc	mg/kg	5	40	55.8	33%		
Diesel Range TPH	mg/kg	250	ND	ND		0	
Oil Range TPH	mg/kg	1250	ND	ND		0	
			UST29-S01-3-122313	**UST29-500-122313**			
Formaldehyde	mg/kg	50	ND	ND		0	
			UST29-B06-5-122313	**UST29-501-122313**			
Formaldehyde	mg/kg	2.3	2.6	2.3		0.3	

Notes:
Delta – Concentration difference between the parent sample and its field duplicate
mg/kg – milligram per kilogram
ND – The analyte was not detected at or above the RL.
RL – Reporting limit
RPD – Relative percent difference

DATA VALIDATION REPORT

Kimberly Clark Worldwide Site Upland Area
Interim Action Confirmational Groundwater Monitoring
May 2014
SDGs 405224, 405255, 405285, 405290, 405253, 405254, K1404940, K1405926, K1409540

Prepared by:
Aspect Consulting, LLC
401 Second Ave South, Suite 201
Seattle, WA 98104

Project No. 110207 • October 7, 2014

V:\110207 KC Everett Mill\Deliverables\Confirmational GW Monitoring Report\App B\KC IA May 2014 Data Validation.docx

1 Introduction

This report summarizes the findings of the United States Environmental Protection Agency (USEPA) Stage 2A data validation performed on analytical data for groundwater samples collected during May 12 through 15, 2014 for Kimberly Clark Worldwide Upland Site Interim Action Confirmational Groundwater Monitoring. This data quality review is divided into sections by sample delivery group (SDG). A complete list of samples and analyses for each SDG is provided in the Sample Index at the beginning of each section. The metals data were sent to a separate lab for analysis, and are presented in Sections 8, 9, and 10 at the end of the report.

Samples were analyzed for non-metals analytes by Friedman & Bruya, Inc in Seattle, Washington, and for metals analytes by ALS Environmental in Kelso, Washington. The analytical methods are summarized below:

Analysis	Method	Laboratory
Polycyclic Aromatic Hydrocarbons (PAHs)	SW8270D-SIM	Friedman & Bruya, Inc
TPH - Gasoline Range and BTEX[1]	NWTPH-Gx/EPA 8021B	Friedman & Bruya, Inc
TPH - Diesel and Motor Oil Ranges	NWTPH-Dx	Friedman & Bruya, Inc
Total and Dissolved Metals	EPA 200.8	ALS
Total and Dissolved Mercury	EPA 1631E	ALS

The validation followed the procedures documented in the analytical methods, the Quality Assurance Project Plan (QAPP; in Appendix A to Aspect, 2013), *National Functional Guidelines for Organic Data Review* (USEPA, 1999), and *National Functional Guidelines for Inorganic Data Review* (USEPA, 2004).

Data assigned a J qualifier (estimated) may be used for site evaluation purposes but the reasons for qualification should be taken into account when interpreting sample concentrations. Data marked as do-not-report (DNR) should not be used under any circumstances. Values without qualification meet all data measurement quality objectives and are suitable for use.

Data qualifier definitions and a summary table of the qualified data are included in the Qualified Data Summary at the end of this report. A qualified laboratory electronic data deliverable (EDD) is also submitted with this report.

[1] BTEX = benzene, toluene, ethylbenzene, and xylenes

2 Data Validation Findings for SDG 405224

Groundwater samples in this SDG, and the chemical analyses performed on them, are tabulated below. The sections below describe the results of the data quality review for this SDG by analyte group (analysis).

Sample Index

Sample ID	Sample Date	Sample Matrix	Analyte									
			TPH-Dx	TPH-Gx	BTEX	Low Level PAHs	Mercury	Arsenic	Copper	Lead	Nickel	Zinc
BBH-MW101-051214	5/12/2014	GrWtr					x	x*	x*	x		x
BBH-MW102-051214	5/12/2014	GrWtr					x	x	x*	x		x
RCD-MW101-051214	5/12/2014	GrWtr	x			x	x	x	x*		x*	
SHB-MW101-051214	5/12/2014	GrWtr	x	x	x	x	x*		x*			
SHB-MW102-051214	5/12/2014	GrWtr	x	x	x	x	x		x			
UST70-MW101-051214	5/12/2014	GrWtr	x			x		x	x		x	x
UST70-MW102-051214	5/12/2014	GrWtr	x			x		x	x		x	x
UST70-MW2-051214	5/12/2014	GrWtr	x			x		x	x		x	x
UST71-MW101-051214	5/12/2014	GrWtr	x			x			x			x
UST71-MW102-051214	5/12/2014	GrWtr	x			x			x			x
UST71-MW104-051214	5/12/2014	GrWtr	x			x			x			x
UST71-MW500-051214	5/12/2014	GrWtr	x			x			x			x

* = Total and dissolved metals analysis, otherwise only total metals

2.1 PAHs by SW8270-SIM

2.1.1 *Sample Receipt, Preservation, and Holding Times*

Water samples should be extracted within 7 days of collection and soil within 14 days of collection. Extracted samples should be analyzed within 40 days of extraction.

Sample receipt, preservation (2-6 degrees Celsius [C]), and holding times were acceptable.

2.1.2 *Method Blanks*

Target analytes were not detected at or above the reporting levels in the method blanks.

2.1.3 *Surrogates*

All surrogate spike recoveries were within control limits or were not applicable due to sample matrix interference or sample dilution below quantitation limits because of high petroleum hydrocarbon concentrations. No data qualification was necessary.

2.1.4 *Laboratory Control Samples (LCS/LCSD)*

Laboratory control sample (LCS) and laboratory control sample duplicate (LCSD) percent recovery (%R) and relative percent difference (RPD) were within the project control limits.

2.1.5 *Matrix Spike/Matrix Spike Duplicates (MS/MSD)*

Matrix spike (MS) and matrix spike duplicate (MSD) %R and RPD were within the project control limits.

2.1.6 *Field Duplicates*

Field duplicates are an indication of both field and laboratory precision. According to the EPA National Functional Guidelines, there are no set criteria for field duplicate evaluation, but the following advisory criteria were used. For results greater than or equal to the analytical reporting limit (RL), the advisory RPD is 35%. For results <5 times the RL, the difference between the sample and the duplicate should be <RL.

One set of blind field duplicates was submitted for this analysis, UST71-MW104-051214 and UST71-MW500-051214. The RPD for the field duplicate pair was within the control limits specified above.

2.1.7 *Reported Results and Reporting Limits (RL)*

The results for acenaphthene and fluorene in sample UST70-MW102-051214 exceeded the instrument calibration range, requiring the sample to be diluted and re-analyzed. These analytes were reported from the dilution and qualified as do-not-report (DNR) in the undiluted sample. The remaining analytes were reported from the undiluted sample.

The reporting limits outlined in the Quality Assurance Project Plan (QAPP; in Appendix A to Aspect, 2013) were met or were elevated accordingly due to high concentrations of target analytes.

2.1.8 *Overall Assessment*

Accuracy was acceptable based on the MS and LCS recoveries, and precision was acceptable based on the MS/MSD, LCS/LCSD, and field duplicate RPD values. The data are of known quality and are acceptable for use as qualified.

2.2 TPH-Gasoline and BTEX by NWTPH-Gx and EPA 8021B and EPA 8021B

2.2.1 *Sample Receipt, Preservation, and Holding Times*

Soil and water samples should be analyzed within 14 days of collection.

Sample receipt, preservation (2-6 degrees C), and holding times were acceptable.

2.2.2 *Method Blanks*

Target analytes were not detected at or above the reporting levels in the method blanks.

2.2.3 *Surrogates*

All %R were within control limits.

2.2.4 *Laboratory Control Samples (LCS)*

LCS %R and RPD were within the project control limits.

2.2.5 *Laboratory Duplicates*

For laboratory duplicate results that are greater than the RL, the RPD control limit is 20%. For laboratory duplicate results less than 5 times the RL, the difference between the sample and duplicate must be less than the reporting limit.

RPD values met the control criteria for laboratory duplicates.

2.2.6 *Field Duplicates*

One set of blind field duplicates was submitted, UST71-MW104-051214 and UST71-MW500-051214. All RPD were within the control limits.

2.2.7 *Reported Results and Reporting Limits (RL)*

All reporting limits were met as outlined in the QAPP.

2.2.8 *Overall Assessment*

Accuracy was acceptable based on the LCS recoveries, and precision was acceptable based on the laboratory and field duplicate RPD values. The data are of known quality and are acceptable for use as qualified.

2.3 Diesel- and Oil-Range TPH by NWTPH-Dx

2.3.1 *Sample Receipt, Preservation, and Holding Times*

Sample receipt, preservation (2-6 degrees C), and holding times were acceptable (see Section 2.1.1).

2.3.2 *Method Blanks*

Target analytes were not detected at or above RLs in the method blanks.

2.3.3 *Surrogates*

All %R were within control limits or were not applicable due to sample matrix interference.

2.3.4 *Laboratory Control Samples (LCS/LCSD)*

LCS and LCSD %R and RPD were within the project control limits.

2.3.5 *Matrix Spike/Matrix Spike Duplicates (MS/MSD)*

MS and MSD %R and RPD were within the project control limits.

2.3.6 *Field Duplicates*

One set of blind field duplicates was submitted, UST71-MW104-051214 and UST71-MW500-051214. All RPD were within the control limits.

2.3.7 *Reported Results and Reporting Limits (RL)*

All target RLs were met as outlined in the QAPP.

2.3.8 *Overall Assessment*

Accuracy was acceptable based on the MS and LCS recoveries, and precision was acceptable based on the MS/MSD, LCS/LCSD, and field duplicate RPD values. The data are of known quality and are acceptable for use as qualified.

3 Data Validation Findings for SDG 405255

Groundwater samples in this SDG, and the chemical analyses performed on them, are tabulated below. The sections below describe the results of the data quality review for this SDG by analyte group (analysis).

Sample Index

Sample ID	Sample Date	Sample Matrix	Analyte									
			TPH-Dx	TPH-Gx	BTEX	Low Level PAHs	Mercury	Arsenic	Copper	Lead	Nickel	Zinc
BA6-MW101-051314	5/12/2014	GrWtr	x			x						
BBH-MW103-051314	5/12/2014	GrWtr					x*	x*	x*	x		x
BBH-MW104-051314	5/12/2014	GrWtr					x	x*	x*	x		x*
BCT-MW101-051314	5/12/2014	GrWtr	x	x	x	x	x		x	x		
BCT-MW104-051314	5/12/2014	GrWtr	x	x	x	x	x		x	x		
BCT-MW500-051314	5/12/2014	GrWtr	x	x	x	x	x		x	x		
UST71-MW103-051314	5/12/2014	GrWtr	x			x			x*			x*

* = Total and dissolved metals analysis, otherwise only total metals

3.1 PAHs by SW8270-SIM

3.1.1 *Sample Receipt, Preservation, and Holding Times*

Sample receipt, preservation (2-6 degrees C), and holding times were acceptable.

3.1.2 *Method Blanks*

Target analytes were not detected at or above the reporting levels in the method blanks.

3.1.3 *Surrogates*

All surrogate spike %R were within control limits or were not applicable due to sample matrix interference or sample dilution below quantitation limits because of high petroleum hydrocarbon concentrations. No qualification of the results was necessary.

3.1.4 *Laboratory Control Samples (LCS/LCSD)*

LCS and LCSD %R and RPD were within the project control limits.

3.1.5 *Matrix Spike/Matrix Spike Duplicates (MS/MSD)*

MS and MSD %R and RPD were within the project control limits.

3.1.6 *Field Duplicates*

One set of blind field duplicates was submitted, BCT-MW104-051314 and BCT-MW500-051314. All RPD were within the control limits.

3.1.7 *Reported Results and Reporting Limits (RL)*

The results for naphthalene, acenaphthene and fluorene in sample UST71-MW103-051314 exceeded the instrument calibration range, requiring the sample to be diluted and re-analyzed. These analytes were reported from the dilution and qualified as DNR in the undiluted sample. The remaining analytes were reported from the undiluted sample.

The result for acenaphthene in sample BA6-MW101-051314 also exceeded the linear range and was qualified in the same manner.

The reporting limits outlined in the QAPP were met or were elevated accordingly due to high concentrations of target analytes.

3.1.8 *Overall Assessment*

Accuracy was acceptable based on the MS and LCS recoveries and precision was acceptable based on the MS/MSD, LCS/LCSD, and field duplicate RPD values. The data are of known quality and are acceptable for use as qualified.

3.2 TPH-Gasoline and BTEX by NWTPH-Gx and EPA 8021B

3.2.1 *Sample Receipt, Preservation, and Holding Times*

Sample receipt, preservation (2-6 degrees C), and holding times were acceptable.

3.2.2 *Method Blanks*

Target analytes were not detected at or above the reporting levels in the method blanks.

3.2.3 *Surrogates*

All %R were within control limits.

3.2.4 *Laboratory Control Samples (LCS)*

LCS %R and RPD were within the project control limits.

3.2.5 *Matrix Spike/Matrix Spike Duplicates (MS/MSD)*

MS and MSD %R and RPD were within the project control limits.

3.2.6 *Field Duplicates*

One set of blind field duplicates was submitted, BCT-MW104-051314 and BCT-MW500-051314. All RPD were within the control limits.

3.2.7 *Reported Results and Reporting Limits (RL)*

All reporting limits were met as outlined in the QAPP.

3.2.8 *Overall Assessment*

Accuracy was acceptable based on the MS and LCS recoveries, and precision was acceptable based on the MS/MSD, LCS/LCSD, and field duplicate RPD values. The data are of known quality and are acceptable for use as qualified.

3.3 Diesel- and Oil-Range TPH by NWTPH-Dx

3.3.1 *Sample Receipt, Preservation, and Holding Times*

Sample receipt, preservation (2-6 degrees C), and holding times were acceptable.

3.3.2 *Method Blanks*

Target analytes were not detected at or above the reporting levels in the method blanks.

3.3.3 *Surrogates*

All %R were within control limits.

3.3.4 *Laboratory Control Samples (LCS/LCSD)*

LCS and LCSD %R and RPD were within the project control limits.

3.3.5 *Matrix Spike/Matrix Spike Duplicates (MS/MSD)*

MS and MSD %R and RPD were within the project control limits.

3.3.6 *Field Duplicates*

One set of blind field duplicates was submitted, BCT-MW104-051314 and BCT-MW500-051314. All RPD were within the control limits.

3.3.7 *Reported Results and Reporting Limits (RL)*

All target RLs were met as outlined in the QAPP.

3.3.8 *Overall Assessment*

Accuracy was acceptable based on the MS and LCS recoveries, and precision was acceptable based on the MS/MSD, LCS/LCSD, and field duplicate RPD values. The data are of known quality and are acceptable for use as qualified.

4 Data Validation Findings for SDG 405285

Groundwater samples in this SDG, and the chemical analyses performed on them, are tabulated below. The sections below describe the results of the data quality review for this SDG by analyte group (analysis).

Sample Index

Sample ID	Sample Date	Sample Matrix	Analyte							
			TPH-Dx	TPH-Gx	BTEX	Low Level PAHs	Mercury	Arsenic	Copper	Lead
BCT-MW105-051414	5/14/2014	GrWtr	x	x	x	x	x		x	x
BCT-MW106-051414	5/14/2014	GrWtr	x	x	x	x	x		x*	x
CN-MW101-051414	5/14/2014	GrWtr	x			x		x	x*	x
CN-MW102-051414	5/14/2014	GrWtr	x			x		x	x	x
CN-MW103-051414	5/14/2014	GrWtr	x			x		x	x	x
CN-MW104-051414	5/14/2014	GrWtr	x			x		x	x*	x
DAST-MW101-051414	5/14/2014	GrWtr	x			x	x		x	
GF11-MW101-051414	5/14/2014	GrWtr					x		x	x
HBV-MW101-051414	5/14/2014	GrWtr	x			x				
UST29-MW101-051414	5/14/2014	GrWtr	x	x	x	x				
UST29-MW102-051414	5/14/2014	GrWtr	x	x	x	x				
UST29-MW103-051414	5/14/2014	GrWtr	x	x	x	x				

* = Total and dissolved metals analysis, otherwise only total metals

4.1 PAHs by SW8270-SIM

4.1.1 *Sample Receipt, Preservation, and Holding Times*

Sample receipt, preservation (2-6 degrees C), and holding times were acceptable.

4.1.2 *Method Blanks*

Target analytes were not detected at or above the reporting levels in the method blanks.

4.1.3 *Surrogates*

All surrogate spike %R were within control limits or were not applicable due to sample matrix interference or sample dilution below quantitation limits because of high petroleum hydrocarbon concentrations. No qualification of the results was necessary.

4.1.4 *Laboratory Control Samples (LCS/LCSD)*

LCS and LCSD %R and RPD were within the project control limits.

4.1.5 *Matrix Spike/Matrix Spike Duplicates (MS/MSD)*

There were no MS/MSD associated with this SDG.

4.1.6 *Reported Results and Reporting Limits (RL)*

The results for acenaphthene in sample BCT-MW105-051414 exceeded the instrument calibration range, requiring the sample to be diluted and re-analyzed. These analytes were reported from the dilution and qualified as do-not-report (DNR) in the undiluted sample. The remaining analytes were reported from the undiluted sample.

The results for fluorene and acenaphthene in sample DAST-MW101-051414 also exceeded the linear range and was qualified in the same manner.

The reporting limits outlined in the QAPP were met or were elevated accordingly due to high concentrations of target analytes.

4.1.7 *Overall Assessment*

Accuracy was acceptable based on the LCS and surrogate spike recoveries, and precision was acceptable based on the LCS/LCSD RPD values. The data are of known quality and are acceptable for use as qualified.

4.2 TPH-Gasoline and BTEX by NWTPH-Gx and EPA 8021B

4.2.1 *Sample Receipt, Preservation, and Holding Times*

Sample receipt, preservation (2-6 degrees C), and holding times were acceptable.

4.2.2 *Method Blanks*

Target analytes were not detected at or above the reporting levels in the method blanks.

4.2.3 *Surrogates*

All %R were within control limits.

4.2.4 *Laboratory Control Samples (LCS)*

LCS %R and RPD were within the project control limits.

4.2.5 *Matrix Spike/Matrix Spike Duplicates (MS/MSD)*

There were no MS/MSD associated with this SDG.

4.2.6 *Laboratory Duplicates*

All RPD were within the control limits.

4.2.7 *Reported Results and Reporting Limits (RL)*

All reporting limits were met as outlined in the QAPP.

4.2.8 *Overall Assessment*

Accuracy was acceptable based on the LCS and surrogate spike recoveries, and precision was acceptable based on the laboratory duplicate RPD values. The data are of known quality and are acceptable for use as qualified.

4.3 Diesel- and Oil-Range TPH by NWTPH-Dx

4.3.1 *Sample Receipt, Preservation, and Holding Times*

Sample receipt, preservation (2-6 degrees C), and holding times were acceptable.

4.3.2 *Method Blanks*

Target analytes were not detected at or above the reporting levels in the method blanks.

4.3.3 *Surrogates*

All percent recoveries were within control limits or were at levels that had no adverse effects on data quality.

4.3.4 *Laboratory Control Samples (LCS/LCSD)*

LCS and LCSD %R and RPD were within the project control limits.

4.3.5 *Matrix Spike/Matrix Spike Duplicates (MS/MSD)*

There were no MS/MSD associated with this SDG.

4.3.6 *Reported Results and Reporting Limits (RL)*

All target RLs were met as outlined in the QAPP.

4.3.7 *Overall Assessment*

Accuracy was acceptable based on the LCS and surrogate spike recoveries, and precision was acceptable based on the LCS/LCSD RPD values. The data are of known quality and are acceptable for use as qualified.

5 Data Validation Findings for SDG 405290

Groundwater samples in this SDG, and the chemical analyses performed on them, are tabulated below. The sections below describe the results of the data quality review for this SDG by analyte group (analysis).

Sample Index

Sample ID	Sample Date	Sample Matrix	Analyte						
			TPH-Dx	TPH-Gx	BTEX	Low Level PAHs	Mercury	Copper	Lead
BCT-MW102-051514	5/15/2014	GrWtr	x	x	x	x	x	x	x
BCT-MW103-051514	5/15/2014	GrWtr	x	x	x	x	x	x	x
BCT-MW107-051514	5/15/2014	GrWtr	x	x	x	x	x	x	x
BCT-MW108-051514	5/15/2014	GrWtr	x	x	x	x	x	x*	x

* = Total and dissolved metals analysis

5.1 PAHs by SW8270-SIM

5.1.1 *Sample Receipt, Preservation, and Holding Times*

Sample receipt, preservation (2-6 degrees C), and holding times were acceptable.

5.1.2 *Method Blanks*

Target analytes were not detected at or above the reporting levels in the method blanks.

5.1.3 *Surrogates*

All surrogate spike %R were within control limits or were not applicable due to sample dilution below quantitation limits because of high petroleum hydrocarbon concentrations. No qualification of the results was necessary.

5.1.4 *Laboratory Control Samples (LCS/LCSD)*

LCS and LCSD %R and RPD were within the project control limits.

5.1.5 *Matrix Spike/Matrix Spike Duplicates (MS/MSD)*

There were no MS/MSD associated with this SDG.

5.1.6 *Reported Results and Reporting Limits (RL)*

The results for naphthalene and acenaphthene in sample BCT-MW107-051514 exceeded the instrument calibration range, requiring the sample to be diluted and re-analyzed. These analytes were reported from the dilution and qualified as do-not-report (DNR) in the undiluted sample. The remaining analytes were reported from the undiluted sample.

Naphthalene, acenaphthene, and fluorene in BCT-MW108-051514 and acenaphthene in BCT-MW103-051514 exceeded the linear range and were qualified in the same manner.

The reporting limits outlined in the QAPP were met or were elevated accordingly due to high concentrations of target analytes.

5.1.7 *Overall Assessment*

Accuracy was acceptable based on the surrogate spike and LCS recoveries, and precision was acceptable based on the LCS/LCSD RPD values. The data are of known quality and are acceptable for use as qualified.

5.2 TPH-Gasoline and BTEX by NWTPH-Gx and EPA 8021B

5.2.1 *Sample Receipt, Preservation, and Holding Times*

Sample receipt, preservation (2-6 degrees C), and holding times were acceptable.

5.2.2 *Method Blanks*

Target analytes were not detected at or above the reporting levels in the method blanks.

5.2.3 *Surrogates*

All %R were within control limits.

5.2.4 *Laboratory Control Samples (LCS)*

LCS %R and RPD were within the project control limits.

5.2.5 *Matrix Spike/Matrix Spike Duplicates (MS/MSD)*

MS and MSD %R and RPD were within the project control limits.

5.2.6 *Reported Results and Reporting Limits (RL)*

All reporting limits were met as outlined in the QAPP.

5.2.7 *Overall Assessment*

Accuracy was acceptable based on the MS and LCS recoveries, and precision was acceptable based on the MS/MSD RPD values. The data are of known quality and are acceptable for use as qualified.

5.3 Diesel- and Oil-Range TPH by NWTPH-Dx

5.3.1 *Sample Receipt, Preservation, and Holding Times*

Sample receipt, preservation (2-6 degrees C), and holding times were acceptable.

5.3.2 *Method Blanks*

Target analytes were not detected at or above the reporting levels in the method blanks.

5.3.3 *Surrogates*

All %R were within control limits.

5.3.4 *Laboratory Control Samples (LCS/LCSD)*

LCS and LCSD %R and RPD were within the project control limits.

5.3.5 *Matrix Spike/Matrix Spike Duplicates (MS/MSD)*

There were no MS/MSD associated with this SDG.

5.3.6 *Reported Results and Reporting Limits (RL)*

All target RLs were met as outlined in the QAPP.

5.3.7 *Overall Assessment*

Accuracy was acceptable based on the surrogate spike and laboratory control sample recoveries and precision was acceptable based on the LCS/LCSD RPD values. The data are of known quality and are acceptable for use as qualified.

6 Data Validation Findings for SDG 405253

Groundwater samples in this SDG, and the chemical analyses performed on them, are tabulated below. The sections below describe the results of the data quality review for this SDG by analyte group (analysis).

Sample Index

Sample ID	Sample Date	Sample Matrix	Analyte			
			TPH-Dx	TPH-Gx	BTEX	Low Level PAHs
NRP-MW2-051314	5/13/2014	GrWtr	x	x	x	x
NRU-MW101-051314	5/13/2014	GrWtr	x	x	x	x
NRU-MW102-051314	5/13/2014	GrWtr	x	x	x	x

6.1 PAHs by SW8270-SIM

6.1.1 *Sample Receipt, Preservation, and Holding Times*

Sample receipt, preservation (2-6 degrees C), and holding times were acceptable.

6.1.2 *Method Blanks*

Target analytes were not detected at or above the reporting levels in the method blanks.

6.1.3 *Surrogates*

All surrogate spike %R were within control limits or were not applicable due to sample matrix interference. No qualification of the results was necessary.

6.1.4 *Laboratory Control Samples (LCS/LCSD)*

LCS and LCSD %R and RPD were within the project control limits.

6.1.5 *Matrix Spike/Matrix Spike Duplicates (MS/MSD)*

MS and MSD %R and RPD were within the project control limits.

6.1.6 *Reported Results and Reporting Limits (RL)*

All reporting limits were met as outlined in the QAPP.

6.1.7 *Overall Assessment*

Accuracy was acceptable based on the MS and LCS recoveries, and precision was acceptable based on the MS/MSD and LCS/LCSD RPD values. The data are of known quality and are acceptable for use as qualified.

6.2 TPH-Gasoline and BTEX by NWTPH-Gx and EPA 8021B

6.2.1 *Sample Receipt, Preservation, and Holding Times*

Sample receipt, preservation (2-6 degrees C), and holding times were acceptable.

6.2.2 *Method Blanks*

Target analytes were not detected at or above the reporting levels in the method blanks.

6.2.3 *Surrogates*

All %R were within control limits or were at levels that had no adverse effects on data quality.

6.2.4 *Laboratory Control Samples (LCS)*

LCS %R and RPD were within the project control limits.

6.2.5 *Matrix Spike/Matrix Spike Duplicates (MS/MSD)*

MS and MSD %R and RPD were within the project control limits.

6.2.6 *Reported Results and Reporting Limits (RL)*

All reporting limits were met as outlined in the QAPP.

6.2.7 *Overall Assessment*

Accuracy was acceptable based on the MS and LCS recoveries, and precision was acceptable based on the MS/MSD RPD values. The data are of known quality and are acceptable for use as qualified.

6.3 Diesel- and Oil-Range TPH by NWTPH-Dx

6.3.1 *Sample Receipt, Preservation, and Holding Times*

Sample receipt, preservation (2-6 degrees C), and holding times were acceptable.

6.3.2 *Method Blanks*

Target analytes were not detected at or above the reporting levels in the method blanks.

6.3.3 *Surrogates*

All %R were within control limits or were at levels that had no adverse effects on data quality.

6.3.4 *Laboratory Control Samples (LCS/LCSD)*

LCS and LCSD %R and RPD were within the project control limits.

6.3.5 *Matrix Spike/Matrix Spike Duplicates (MS/MSD)*

MS and MSD %R and RPD were within the project control limits.

6.3.6 *Reported Results and Reporting Limits (RL)*

All target RLs were met as outlined in the QAPP.

6.3.7 *Overall Assessment*

Accuracy was acceptable based on the MS and LCS recoveries, and precision was acceptable based on the MS/MSD and LCS/LCSD RPD values. The data are of known quality and are acceptable for use as qualified.

7 Data Validation Findings for SDG 405254

Groundwater samples in this SDG, and the chemical analyses performed on them, are tabulated below. The sections below describe the results of the data quality review for this SDG by analyte group (analysis).

Sample Index

Sample ID	Sample Date	Sample Matrix	Analyte			
			TPH-Dx	TPH-Gx	BTEX	Low Level PAHs
NRS-MW101-051314	5/13/2014	GrWtr	x	x	x	x
NRS-MW102-051314	5/13/2014	GrWtr	x	x	x	x

7.1 PAHs by SW8270-SIM

7.1.1 *Sample Receipt, Preservation, and Holding Times*

Sample receipt, preservation (2-6 degrees C), and holding times were acceptable.

7.1.2 *Method Blanks*

Target analytes were not detected at or above the reporting levels in the method blanks.

7.1.3 *Surrogates*

All surrogate spike %R were within control limits or were not applicable due to sample matrix interference. No qualification of the results was necessary.

7.1.4 *Laboratory Control Samples (LCS/LCSD)*

LCS and LCSD %R and RPD were within the project control limits.

7.1.5 *Matrix Spike/Matrix Spike Duplicates (MS/MSD)*

MS and MSD %R and RPD were within the project control limits.

7.1.6 *Reported Results and Reporting Limits (RL)*

All reporting limits were met as outlined in the QAPP.

7.1.7 *Overall Assessment*

Accuracy was acceptable based on the MS and LCS recoveries, and precision was acceptable based on the MS/MSD and LCS/LCSD RPD values. The data are of known quality and are acceptable for use as qualified.

7.2 TPH-Gasoline and BTEX by NWTPH-Gx and EPA 8021B

7.2.1 *Sample Receipt, Preservation, and Holding Times*

Sample receipt, preservation (2-6 degrees C), and holding times were acceptable.

7.2.2 *Method Blanks*

Target analytes were not detected at or above the reporting levels in the method blanks.

7.2.3 *Surrogates*

All percent recoveries were within control limits or were at levels that had no adverse effects on data quality.

7.2.4 *Laboratory Control Samples (LCS)*

LCS %R and RPD were within the project control limits.

7.2.5 *Matrix Spike/Matrix Spike Duplicates (MS/MSD)*

MS and MSD %R and RPD were within the project control limits.

7.2.6 *Reported Results and Reporting Limits (RL)*

All reporting limits were met as outlined in the QAPP.

7.2.7 *Overall Assessment*

Accuracy was acceptable based on the MS and LCS recoveries, and precision was acceptable based on the MS/MSD RPD values. The data are of known quality and are acceptable for use as qualified.

7.3 Diesel- and Oil-Range TPH by NWTPH-Dx

7.3.1 *Sample Receipt, Preservation, and Holding Times*

Sample receipt, preservation (2-6 degrees C), and holding times were acceptable.

7.3.2 *Method Blanks*

Target analytes were not detected at or above the reporting levels in the method blanks.

7.3.3 *Surrogates*

All %R were within control limits.

7.3.4 *Laboratory Control Samples (LCS)*

LCS and LCSD %R and RPD were within the project control limits.

7.3.5 *Matrix Spike/Matrix Spike Duplicates (MS/MSD)*

MS and MSD %R and RPD were within the project control limits.

7.3.6 *Reported Results and Reporting Limits (RL)*

All target RLs were met as outlined in the QAPP.

7.3.7 *Overall Assessment*

Accuracy was acceptable based on the MS and LCS recoveries, and precision was acceptable based on the MS/MSD and LCS/LCSD RPD values. The data are of known quality and are acceptable for use as qualified.

8 Data Validation Findings for SDG K1404940 (Metals Analysis)

In accordance with the QAPP, the groundwater samples were submitted to ALS in Kelso, Washington, for metals analyses, as they have particular expertise performing trace metals analyses in saline water matrices. Friedman and Bruya combined groundwater samples from multiple SDGs into a single batch for transfer to ALS. The specific metals analytes for each sample in this ALS SDG are tabulated in the preceding sections. The sections below describe the results of the data quality review, separated into mercury and the other metals.

8.1 Mercury by EPA 1631E

8.1.1 *Sample Receipt, Preservation, and Holding Times*

Water samples should be analyzed within 28 days of extraction.

Sample receipt, preservation (2-6 degrees C), and holding times were acceptable.

8.1.2 *Method Blanks*

Target analytes were either not detected at or above the reporting levels in the method blanks, except for one method blank associated with sample BBH-MW103-051314. The result was greater than 10 times the blank concentration so no qualification was required.

8.1.3 *Laboratory Control Samples (LCS/LCSD)*

LCS and LCSD %R and RPD were within the project control limits.

8.1.4 *Matrix Spike/Matrix Spike Duplicates (MS/MSD)*

MS and MSD %R and RPD were within the project control limits.

8.1.5 *Field Duplicates*

One set of blind field duplicates was submitted, BCT-MW101-051314 and BCT-MW500-051314. All RPD were within the control limits specified above.

8.1.6 *Reported Results and Reporting Limits (RL)*

All target RLs were met as outlined in the QAPP.

8.1.7 *Overall Assessment*

Accuracy was acceptable based on the MS and LCS recoveries and precision was acceptable based on the LCS/LCSD, MS/MSD, and field duplicate RPD values. The data are of known quality and are acceptable for use as qualified.

8.2 Total Metals by EPA 200.8 and 6010C

Depending on the well, groundwater samples were analyzed for arsenic, copper, lead, nickel, and/or zinc.

8.2.1 *Sample Receipt, Preservation, and Holding Times*

Water samples should be analyzed within 180 days of extraction.

Sample receipt, preservation (2-6 degrees C), and holding times were acceptable, with the following exceptions. Six of the coolers were received at a temperature below 2 degrees C, but no action was taken as this did not affect the data quality. Sample bottles from BCT-MW102-051514 (1 of 2 totals) and UST71-MW103-051314 (2 of 2 totals) were received at pH >2, but had sufficient nitric acid added by the lab to achieve the pH requirements within 2 weeks of collection as outlined in the method (USEPA, 1994). Therefore, no data qualifiers are assigned.

To reduce the analytical interferences due to high concentrations of dissolved solids, samples identified as having high specific conductance in the field (UST70-MW2-051214 and RCD-MW101-051214) were prepared by the reductive precipitation method (USEPA, 1997).

8.2.2 *Method Blanks*

Target analytes were either not detected at or above the reporting levels in the method blanks, or sample results were greater than 10 times the detection in the blank.

8.2.3 *Laboratory Control Samples (LCS/LCSD)*

LCS and LCSD %R and RPD were within the project control limits.

8.2.4 *Matrix Spike/Matrix Spike Duplicates (MS/MSD)*

MS and MSD %R and RPD were within the project control limits.

8.2.5 *Laboratory Duplicates*

All RPD were either within the control limits or the control limits were not applicable.

8.2.6 *Field Duplicates*

Two sets of blind field duplicates were submitted, BCT-MW101-051314 and BCT-MW500-051314; and UST71-MW104-051214 and UST71-MW500-051214. All RPD were within the control limits specified above.

8.2.7 *Reported Results and Reporting Limits (RL)*

All target RLs were met as outlined in the QAPP.

8.2.8 *Overall Assessment*

Accuracy was acceptable based on the MS and LCS recoveries, and precision was acceptable based on the laboratory and field duplicate RPD values. The data are of known quality and are acceptable for use as qualified.

9 Data Validation Findings for SDG K1405926 (Metals Analysis)

In accordance with the QAPP, the groundwater samples were submitted to ALS in Kelso, Washington, for metals analyses, as they have particular expertise performing trace metals analyses in saline water matrices. Friedman and Bruya combined groundwater samples from multiple SDGs into a single batch for transfer to ALS. The specific metals analytes for each sample in this ALS SDG are tabulated in the preceding sections. Based on the results of the total metals analysis (reviewed in Section 8), certain samples were analyzed for dissolved metals. The sections below describe the results of the data quality review, separated into dissolved mercury and the other dissolved metals.

9.1 Dissolved Mercury by EPA 1631E

9.1.1 *Sample Receipt, Preservation, and Holding Times*

Water samples should be analyzed within 28 days of extraction.

Sample receipt, preservation (2-6 degrees C), and holding times were acceptable.

9.1.2 *Method Blanks*

Target analytes were not detected at or above the reporting levels in the method blanks.

9.1.3 *Laboratory Control Samples (LCS/LCSD)*

LCS and LCSD %R and RPD were within the project control limits.

9.1.4 *Matrix Spike/Matrix Spike Duplicates (MS/MSD)*

MS and MSD %R and RPD were within the project control limits.

9.1.5 *Reported Results and Reporting Limits (RL)*

All target RLs were met as outlined in the QAPP.

9.1.6 *Overall Assessment*

Accuracy was acceptable based on the MS and LCS recoveries, and precision was acceptable based on the LCS/LCSD, MS/MSD, and field duplicate RPD values. The data are of known quality and are acceptable for use as qualified.

9.2 Dissolved Metals by EPA 200.8 and 6010C

9.2.1 *Sample Receipt, Preservation, and Holding Times*

Water samples should be analyzed within 180 days of extraction.

Sample receipt, preservation (2-6 degrees C), and holding times were acceptable. Sample bottles from UST71-MW103-051314 (1 of 2 dissolved) were received at pH >2, but had sufficient nitric acid added by the lab to achieve the pH requirements within 2 weeks of collection as outlined in the method (USEPA, 1994). Therefore, no data qualifiers are assigned.

To reduce the analytical interferences due to high concentrations of dissolved solids, samples identified as having high specific conductance in the field (RCD-MW101-051214) were prepared by the reductive precipitation method (USEPA, 1997).

9.2.2 *Method Blanks*

Target analytes were either not detected at or above the reporting levels in the method blanks, or sample results were greater than 10 times the detection in the blank.

9.2.3 *Laboratory Control Samples (LCS/LCSD)*

LCS and LCSD %R and RPD were within the project control limits.

9.2.4 *Matrix Spike/Matrix Spike Duplicates (MS/MSD)*

MS and MSD %R and RPD were within the project control limits.

9.2.5 *Laboratory Duplicates*

All RPD were either within the control limits or the control limits were not applicable.

9.2.6 *Reported Results and Reporting Limits (RL)*

All target RLs were met as outlined in the QAPP.

9.2.7 *Overall Assessment*

Accuracy was acceptable based on the MS and LCS recoveries, and precision was acceptable based on the LCS/LCSD, MS/MSD, and field duplicate RPD values. The data are of known quality and are acceptable for use as qualified.

10 Data Validation Findings for SDG K1409540 (Metals Analysis)

In accordance with the QAPP, the groundwater samples were submitted to ALS in Kelso, Washington, for metals analyses, as they have particular expertise performing trace metals analyses in saline water matrices. Friedman and Bruya combined groundwater samples from multiple SDGs into a single batch for transfer to ALS. The specific metals analytes for each sample in this ALS SDG are tabulated in the preceding sections. Based on the results of the total metals analysis (reviewed in Section 8), certain samples were later analyzed for dissolved metals. The section below describes the results of the data quality review for supplemental dissolved metals analyses.

10.1 Dissolved Metals by EPA 200.8 and 6010C

10.1.1 *Sample Receipt, Preservation, and Holding Times*

Water samples should be analyzed within 180 days of extraction.

Sample receipt, preservation (2-6 degrees C), and holding times were acceptable. Dissolved metals analyses were not completed for samples UST71-MW101-051214 and UST71-MW102-051214 because field filtered sample bottles were not submitted.

10.1.2 *Method Blanks*

Target analytes were not detected at or above the reporting levels in the method blanks.

10.1.3 *Laboratory Control Samples (LCS/LCSD)*

LCS and LCSD %R and RPD were within the project control limits.

10.1.4 *Matrix Spike/Matrix Spike Duplicates (MS/MSD)*

MS and MSD %R and RPD were within the project control limits.

10.1.5 *Laboratory Duplicates*

All RPD were either within the control limits or the control limits were not applicable.

10.1.6 *Reported Results and Reporting Limits (RL)*

All target RLs were met as outlined in the QAPP.

10.1.7 *Overall Assessment*

Accuracy was acceptable based on the MS and LCS recoveries, and precision was acceptable based on the LCS/LCSD and laboratory duplicate RPD values. The data are of known quality and are acceptable for use as qualified.

11 Qualified Data Summary

Qualified Data Summary Table

Sample ID	Laboratory ID	Analyte	Qualifier	Qualified Reason
UST70-MW102-051214 DAST-MW101-051414	405224-01 405285-11	Acenaphthene Fluorene	DNR	Result outside of instrument calibration range. Use diluted result.
		Naphthalene Acenaphthylene Phenanthrene Anthracene Fluoranthene Pyrene Benz[a]anthracene Chrysene Benzo(a)pyrene Benzo(b)fluoranthene Benzo(k)fluoranthene Indeno(1,2,3-cd)pyrene Dibenzo(a,h)anthracene Benzo(ghi)perylene	DNR	A more appropriate result is reported. Use undiluted result.
UST71-MW103-051314 BCT-MW108-051514	405255-05 405290-02	Naphthalene Acenaphthene Fluorene	DNR	Result outside of instrument calibration range. Use diluted result.
		Acenaphthylene Phenanthrene Anthracene Fluoranthene Pyrene Benz[a]anthracene Chrysene Benzo(a)pyrene Benzo(b)fluoranthene Benzo(k)fluoranthene Indeno(1,2,3-cd)pyrene Dibenzo(a,h)anthracene Benzo(ghi)perylene	DNR	A more appropriate result is reported. Use undiluted result.
BA6-MW101-051314 BCT-MW105-051414 BCT-MW103-051514	405255-08 405285-10 405290-04	Acenaphthene	DNR	Result outside of instrument calibration range. Use diluted result.
		Naphthalene Acenaphthylene Fluorene Phenanthrene Anthracene Fluoranthene Pyrene Benz[a]anthracene Chrysene Benzo(a)pyrene Benzo(b)fluoranthene Benzo(k)fluoranthene Indeno(1,2,3-cd)pyrene Dibenzo(a,h)anthracene Benzo(ghi)perylene	DNR	A more appropriate result is reported. Use undiluted result.

Sample ID	Laboratory ID	Analyte	Qualifier	Qualified Reason
BCT-MW107-051514	405290-01	Naphthalene Acenaphthene	DNR	Result outside of instrument calibration range. Use diluted result.
		Acenaphthylene Phenanthrene Fluorene Anthracene Fluoranthene Pyrene Benz[a]anthracene Chrysene Benzo(a)pyrene Benzo(b)fluoranthene Benzo(k)fluoranthene Indeno(1,2,3-cd)pyrene Dibenzo(a,h)anthracene	DNR	A more appropriate result is reported. Use undiluted result.

Data Qualifier Definitions

Data Qualifier	Definition
DNR	Do not report; the result should be reported from an alternative analysis.
J	The analyte was detected above the reported quantitation limit, and the reported concentration was an estimated value.
R	The sample results are unusable due to the quality of the data generated because certain criteria were not met. The analyte may or may not be present in the sample.
U	The analyte was analyzed for, but was considered not detected at the reporting limit or reported value.
UJ	The analyte was analyzed for, and the associated quantitation limit was an estimated value.
X	The sample chromatographic pattern does not resemble the fuel standard used for quantitation.

12 References

U.S. Environmental Protection Agency (USEPA), 1994, Method 200.8 Determination of Trace Elements in Waters and Wastes by Inductively Coupled Plasma – Mass Spectrometry, Revision 5.4, Environmental Monitoring Systems Laboratory Office of Research and Development.

U.S. Environmental Protection Agency (USEPA), 1997, Method 1640 Determination of Trace Elements in Waters by Preconcentration and Inductively Coupled Plasma – Mass Spectrometry, Office of Water & Office of Science and Technology Engineering and Analysis Division (4303), April.

U.S. Environmental Protection Agency (USEPA), 1999, Contract Laboratory Program National Functional Guidelines for Inorganic Data Review, Office of Emergency and Remedial Response, USEPA Publication No. 540/R-99/008, October.

U.S. Environmental Protection Agency (USEPA), 2004, Contract Laboratory Program National Functional Guidelines for Organic Methods Data Review, Office of Superfund Remediation and Technology Innovation (OSRTI), USEPA Publication No. 540-R-04-004, October.

Aspect, 2013, Work Plan for Remedial Investigation/Feasibility Study, Kimberly-Clark Worldwide Site Upland Area, Everett, Washington, November 22, 2013.

DATA VALIDATION REPORT

Kimberly Clark Worldwide Site Upland Area
Interim Action Confirmational Groundwater Monitoring
August 2014
SDGs 408183, 408213, 408237, 408211, 408212, K1408718

Prepared by:
Aspect Consulting, LLC
401 Second Ave South, Suite 201
Seattle, WA 98104

Project No. 110207 • October 7, 2014

S:\Kimberly Clark\Everett Mill 110207\Data\Lab Data\Interim Action\Confirmational GW Monitoring\Data Validation\KC IA August 2014 Data Validation.docx

1 Introduction

This report summarizes the findings of the United States Environmental Protection Agency (USEPA) Stage 2A data validation performed on analytical data for groundwater samples collected during August 11 through 14, 2014 for Kimberly Clark Worldwide Upland Site Interim Action Confirmational Groundwater Monitoring. This data quality review is divided into sections by sample delivery group (SDG). A complete list of samples and analyses for each SDG is provided in the Sample Index at the beginning of each section. The metals data were sent to a separate lab for analysis, and are presented in Sections 7 at the end of the report.

Samples were analyzed for non-metals analytes by Friedman & Bruya, Inc in Seattle, Washington, and for metals analytes by ALS Environmental in Kelso, Washington. The analytical methods are summarized below:

Analysis	Method	Laboratory
Polycyclic Aromatic Hydrocarbons (PAHs)	SW8270D-SIM	Friedman & Bruya, Inc
TPH - Gasoline Range and BTEX[1]	NWTPH-Gx/EPA 8021B	Friedman & Bruya, Inc
TPH - Diesel and Motor Oil Ranges	NWTPH-Dx	Friedman & Bruya, Inc
Total and Dissolved Metals	EPA 200.8	ALS
Total and Dissolved Mercury	EPA 1631E	ALS

The validation followed the procedures documented in the analytical methods, the Quality Assurance Project Plan (QAPP; in Appendix A to Aspect, 2013), *National Functional Guidelines for Organic Data Review* (USEPA, 1999), and *National Functional Guidelines for Inorganic Data Review* (USEPA, 2004).

Data assigned a J qualifier (estimated) may be used for site evaluation purposes but the reasons for qualification should be taken into account when interpreting sample concentrations. Data marked as do-not-report (DNR) should not be used under any circumstances. Values without qualification meet all data measurement quality objectives and are suitable for use.

Data qualifier definitions and a summary table of the qualified data are included in the Qualified Data Summary at the end of this report. A qualified laboratory electronic data deliverable (EDD) is also submitted with this report.

[1] BTEX = benzene, toluene, ethylbenzene, and xylenes

2 Data Validation Findings for SDG 408183

Groundwater samples in this SDG, and the chemical analyses performed on them, are tabulated below. The sections below describe the results of the data quality review for this SDG by analyte group (analysis).

Sample Index

Sample ID	Sample Date	Sample Matrix	Analyte								
			TPH-Dx	TPH-Gx	BTEX	Low Level PAHs	Diss Arsenic	Diss Copper	Diss Nickel	Diss Mercury	Diss Zinc
UST71-MW102-081114	8/11/2014	GrWtr	x			x		x			x
UST70-MW101-081114	8/11/2014	GrWtr	x			x	x	x	x		x
UST70-MW102-081114	8/11/2014	GrWtr	x			x	x	x	x		x
BA6-MW101-081114	8/11/2014	GrWtr	x			x					
UST70-MW2-081114	8/11/2014	GrWtr	x			x	x	x	x		x
RCD-MW101-081114	8/11/2014	GrWtr	x			x	x	x	x	x	
SHB-MW101-081114	8/11/2014	GrWtr	x	x	x	x		x		x	
SHB-MW102-081114	8/11/2014	GrWtr	x	x	x	x		x		x	
UST71-MW104-081114	8/11/2014	GrWtr	x			x		x			x
UST71-MW500-081114	8/11/2014	GrWtr	x			x		x			x

2.1 PAHs by SW8270-SIM

2.1.1 Sample Receipt, Preservation, and Holding Times

Water samples should be extracted within 7 days of collection and soil within 14 days of collection. Extracted samples should be analyzed within 40 days of extraction.

Sample receipt, preservation (2-6 degrees Celsius [C]), and holding times were acceptable. Sample UST71-MW500-081114 was incorrectly labeled as UST70-MW500-081114 in the lab report, but is correctly named in the EDD.

2.1.2 Method Blanks

Target analytes were not detected at or above the reporting levels in the method blanks.

2.1.3 Surrogates

All surrogate spike recoveries were within control limits or were not applicable due to sample matrix interference or sample dilution below quantitation limits because of high petroleum hydrocarbon concentrations. No data qualification was necessary.

2.1.4 Laboratory Control Samples (LCS/LCSD)

Laboratory control sample (LCS) and laboratory control sample duplicate (LCSD) percent recovery (%R) and relative percent difference (RPD) were within the project control limits.

2.1.5 Matrix Spike/Matrix Spike Duplicates (MS/MSD)

Matrix spike (MS) and matrix spike duplicate (MSD) %R and RPD were within the project control limits, except for benzo(a)pyrene in sample UST71-MW104-081114. This sample had MS and MSD %R values of 58% and 59%, which was below the acceptance criteria of 60-86%. This result was flagged as UJ.

2.1.6 Field Duplicates

Field duplicates are an indication of both field and laboratory precision. According to the EPA National Functional Guidelines, there are no set criteria for field duplicate evaluation, but the following advisory criteria were used. For results greater than or equal to the analytical reporting limit (RL), the advisory RPD is 35%. For results <5 times the RL, the difference between the sample and the duplicate should be <RL.

One set of blind field duplicates was submitted for this analysis, UST71-MW104-081114 and UST71-MW500-081114. The RPD for the field duplicate pair was within the control limits specified above.

2.1.7 Reported Results and Reporting Limits (RL)

The results for acenaphthene and fluorene in sample BA6-MW101-081114 exceeded the instrument calibration range, requiring the sample to be diluted and re-analyzed. These analytes were reported from the dilution and qualified as do-not-report (DNR) in the undiluted sample. The remaining analytes were reported from the undiluted sample.

The results for naphthalene, acenaphthene and fluorene in sample SHB-MW101-081114 also exceeded the linear range and were qualified in the same manner.

The reporting limits outlined in the Quality Assurance Project Plan (QAPP; in Appendix A to Aspect, 2013) were met or were elevated accordingly due to high concentrations of target analytes.

2.1.8 Overall Assessment

Accuracy was acceptable based on the MS and LCS recoveries and precision was acceptable based on the MS/MSD, LCS/LCSD and field duplicate RPD values. The data are of known quality and are acceptable for use as qualified.

2.2 TPH-Gasoline and BTEX by NWTPH-Gx and EPA 8021B

2.2.1 Sample Receipt, Preservation, and Holding Times

Soil and water samples should be analyzed within 14 days of collection.

Sample receipt, preservation (2-6 degrees C), and holding times were acceptable. Sample UST71-MW500-081114 was incorrectly labeled as UST70-MW500-081114 in the lab report, but is correctly named in the EDD.

2.2.2 Method Blanks

Target analytes were not detected at or above the reporting levels in the method blanks.

2.2.3 Surrogates

All %R were within control limits.

2.2.4 Laboratory Control Samples (LCS)

LCS %R were within the project control limits.

2.2.5 Laboratory Duplicates

For laboratory duplicate results that are greater than the RL, the RPD control limit is 20%. For laboratory duplicate results less than 5 times the RL, the difference between the sample and duplicate must be less than the reporting limit.

RPD values met the control criteria for laboratory duplicates.

2.2.6 Field Duplicates

One set of blind field duplicates was submitted, UST71-MW104-081114 and UST71-MW500-081114. All RPD were within the control limits specified above.

2.2.7 Reported Results and Reporting Limits (RL)

All reporting limits were met as outlined in the QAPP (Quality Assurance Project Plan).

2.2.8 Overall Assessment

Accuracy was acceptable based on the surrogate spike and LCS recoveries, and precision was acceptable based on the lab and field duplicate RPD values. The data are of known quality and are acceptable for use as qualified.

2.3 Diesel- and Oil-Range TPH by NWTPH-Dx

2.3.1 Sample Receipt, Preservation, and Holding Times

Sample receipt, preservation (2-6 degrees C), and holding times were acceptable (see Section 2.1.1). Sample UST71-MW500-081114 was incorrectly labeled as UST70-MW500-081114 in the lab report, but is correctly named in the EDD.

2.3.2 Method Blanks

Target analytes were not detected at or above RLs in the method blanks.

2.3.3 Surrogates

All percent recoveries were within control limits or were at levels that had no adverse effects on data quality.

2.3.4 Laboratory Control Samples (LCS/LCSD)

LCS and LCSD %R and RPD were within the project control limits.

2.3.5 Matrix Spike/Matrix Spike Duplicates (MS/MSD)

MS and MSD %R and RPD were within the project control limits.

2.3.6 Field Duplicates

One set of blind field duplicates was submitted, UST71-MW104-081114 and UST71-MW500-081114. All RPD were within the control limits specified above.

2.3.7 Reported Results and Reporting Limits (RL)

All target RLs were met as outlined in the QAPP.

2.3.8 Overall Assessment

Accuracy was acceptable based on the MS and LCS recoveries, and precision was acceptable based on the MS/MSD, LCS/LCSD and field duplicate RPD values. The data are of known quality and are acceptable for use as qualified.

3 Data Validation Findings for SDG 408213

Groundwater samples in this SDG, and the chemical analyses performed on them, are tabulated below. The sections below describe the results of the data quality review for this SDG by analyte group (analysis).

Sample Index

Sample ID	Sample Date	Sample Matrix	Analyte								
			TPH-Dx	TPH-Gx	BTEX	Low Level PAHs	Diss Arsenic	Diss Copper	Diss Lead	Diss Mercury	Diss Zinc
BBH-MW102-081214	8/12/2014	GrWtr					x	x	x	x	x
BBH-MW101-081214	8/12/2014	GrWtr					x	x	x	x	x
UST71-MW-103-081214	8/12/2014	GrWtr	x			x		x			x
UST71-MW-101-081214	8/12/2014	GrWtr	x			x		x			x
BCT-MW-104-081214	8/12/2014	GrWtr	x	x	x	x		x	x	x	
CN-MW-101-081214	8/12/2014	GrWtr	x			x	x	x	x		
CN-MW-102-081214	8/12/2014	GrWtr	x			x	x	x	x		
CN-MW-103-081214	8/12/2014	GrWtr	x			x	x	x	x		
BCT-MW-103-081214	8/12/2014	GrWtr	x		x	x		x	x	x	
CN-MW-104-081214	8/12/2014	GrWtr	x			x	x	x	x		
UST29-MW-101-081314	8/13/2014	GrWtr	x	x	x	x					
UST29-MW-102-081314	8/13/2014	GrWtr	x	x	x	x					
UST29-MW-103-081314	8/13/2014	GrWtr	x	x	x	x					
BBH-MW103-081314	8/13/2014	GrWtr					x	x	x	x	x
BBH-MW104-081314	8/13/2014	GrWtr					x	x	x	x	x
GF11-MW101-081314	8/13/2014	GrWtr						x	x	x	
HBV-MW-101-081314	8/13/2014	GrWtr	x			x					
DAST-MW-101-081314	8/13/2014	GrWtr	x			x		x		x	
BCT-MW-106-081314	8/13/2014	GrWtr	x	x	x	x		x	x	x	
BCT-MW-105-081314	8/13/2014	GrWtr	x	x	x	x		x	x	x	

3.1 PAHs by SW8270-SIM

3.1.1 Sample Receipt, Preservation, and Holding Times

Sample receipt, preservation (2-6 degrees C), and holding times were acceptable.

3.1.2 Method Blanks

Target analytes were not detected at or above the reporting levels in the method blanks.

3.1.3 Surrogates

All surrogate spike %R were within control limits or were not applicable due to sample matrix interference or sample dilution below quantitation limits because of high petroleum hydrocarbon concentrations. No qualification of the results was necessary.

3.1.4 Laboratory Control Samples (LCS/LCSD)

LCS and LCSD %R and RPD were within the project control limits.

3.1.5 Matrix Spike/Matrix Spike Duplicates (MS/MSD)

There were no MS/MSD associated with this SDG.

3.1.6 Reported Results and Reporting Limits (RL)

The results for naphthalene and phenanthrene in sample UST71-MW-103-081214 exceeded the instrument calibration range, requiring the sample to be diluted and re-analyzed. These analytes were reported from the dilution and qualified as do-not-report (DNR) in the undiluted sample. The remaining analytes were reported from the undiluted sample.

The result for acenaphthene in sample BCT-MW-103-081214 also exceeded the linear range and was qualified in the same manner.

The results for acenaphthene and fluorene in sample DAST-MW-101-081314 also exceeded the linear range and were qualified in the same manner.

The reporting limits outlined in the QAPP were met or were elevated accordingly due to high concentrations of target analytes.

3.1.7 Overall Assessment

Accuracy was acceptable based on the surrogate spike and LCS recoveries, and precision was acceptable based on the LCS/LCSD RPD values. The data are of known quality and are acceptable for use as qualified.

3.2 TPH-Gasoline and BTEX by NWTPH-Gx and EPA 8021B

3.2.1 Sample Receipt, Preservation, and Holding Times

Sample receipt, preservation (2-6 degrees C), and holding times were acceptable.

3.2.2 Method Blanks

Target analytes were not detected at or above the reporting levels in the method blanks.

3.2.3 Surrogates

All %R were within control limits.

3.2.4 Laboratory Control Samples (LCS)

LCS %R were within the project control limits.

3.2.5 Laboratory Duplicates

RPD values met the control criteria for laboratory duplicates.

3.2.6 Matrix Spike/Matrix Spike Duplicates (MS/MSD)

There were no MS/MSD associated with this SDG.

3.2.7 Reported Results and Reporting Limits (RL)

All reporting limits were met as outlined in the QAPP.

3.2.8 Overall Assessment

Accuracy was acceptable based on the surrogate spike and LCS recoveries, and precision was acceptable based on the laboratory duplicate RPD values. The data are of known quality and are acceptable for use as qualified.

3.3 Diesel- and Oil-Range TPH by NWTPH-Dx

3.3.1 Sample Receipt, Preservation, and Holding Times

Sample receipt, preservation (2-6 degrees C), and holding times were acceptable.

3.3.2 Method Blanks

Target analytes were not detected at or above the reporting levels in the method blanks.

3.3.3 Surrogates

All %R were within control limits.

3.3.4 Matrix Spike/Matrix Spike Duplicates (MS/MSD)

There were no MS/MSD associated with this SDG.

3.3.5 Reported Results and Reporting Limits (RL)

All target RLs were met as outlined in the QAPP.

3.3.6 Overall Assessment

Accuracy was acceptable based on the surrogate spike and LCS recoveries, and precision was acceptable based on the LCS/LCSD RPD values. The data are of known quality and are acceptable for use as qualified.

4 Data Validation Findings for SDG 408237

Groundwater samples in this SDG, and the chemical analyses performed on them, are tabulated below. The sections below describe the results of the data quality review for this SDG by analyte group (analysis).

Sample Index

Sample ID	Sample Date	Sample Matrix	Analyte						
			TPH-Dx	TPH-Gx	BTEX	Low Level PAHs	Diss Copper	Diss Lead	Diss Mercury
BCT-MW108-081414	8/14/2014	GrWtr	x	x	x	x	x	x	x
BCT-MW107-081414	8/14/2014	GrWtr	x	x	x	x	x	x	x
BCT-MW102-081414	8/14/2014	GrWtr	x	x	x	x	x	x	x
BCT-MW101-081414	8/14/2014	GrWtr	x	x	x	x	x	x	x
BCT-MW500-081414	8/14/2014	GrWtr	x	x	x	x	x	x	x

4.1 PAHs by SW8270-SIM

4.1.1 Sample Receipt, Preservation, and Holding Times

Sample receipt, preservation (2-6 degrees C), and holding times were acceptable.

4.1.2 Method Blanks

Target analytes were not detected at or above the reporting levels in the method blanks.

4.1.3 Surrogates

All surrogate spike %R were within control limits or were not applicable due to sample matrix interference or sample dilution below quantitation limits because of high petroleum hydrocarbon concentrations. No qualification of the results was necessary.

4.1.4 Laboratory Control Samples (LCS/LCSD)

LCS and LCSD %R and RPD were within the project control limits.

4.1.5 Matrix Spike/Matrix Spike Duplicates (MS/MSD)

MS and MSD %R and RPD were within the project control limits, except for benz(a)anthracene, chrysene, benzo(b)fluoranthene, benzo(k)fluoranthene, benzo(a)pyrene, indeno(1,2,3-c,d)pyrene, dibenzo(a,h)anthracene, and benzo(g,h,i)perylene in sample BCT-MW101-081414, which exceeded the RPD control limit of 20% and had %R below the lower control limit for the MS. These results were flagged as UJ. The MS %R for phenanthrene in this sample fell below the control limit, but because the MSD %R was acceptable and the RPD, no action was taken.

4.1.6 Field Duplicates

One set of blind field duplicates was submitted, BCT-MW101-081414 and BCT-MW500-081414. All RPD were within the control limits specified above.

4.1.7 Reported Results and Reporting Limits (RL)

The results for naphthalene, acenaphthene, and phenanthrene in sample BCT-MW108-081414 exceeded the instrument calibration range, requiring the sample to be diluted and

re-analyzed. These analytes were reported from the dilution and qualified as DNR in the undiluted sample. The remaining analytes were reported from the undiluted sample.

The results for naphthalene and acenaphthene in sample BCT-MW107-081414 also exceeded the linear range and was qualified in the same manner.

The reporting limits outlined in the QAPP were met or were elevated accordingly due to high concentrations of target analytes.

4.1.8 Overall Assessment

Accuracy was acceptable based on the MS and LCS recoveries, and precision was acceptable based on the MS/MSD, LCS/LCSD and field duplicate RPD values. The data are of known quality and are acceptable for use as qualified.

4.2 TPH-Gasoline and BTEX by NWTPH-Gx and EPA 8021B

4.2.1 Sample Receipt, Preservation, and Holding Times

Sample receipt, preservation (2-6 degrees C), and holding times were acceptable.

4.2.2 Method Blanks

Target analytes were not detected at or above the reporting levels in the method blanks.

4.2.3 Surrogates

All %R were within control limits.

4.2.4 Laboratory Control Samples (LCS)

LCS %R were within the project control limits.

4.2.5 Matrix Spike/Matrix Spike Duplicates (MS/MSD)

MS and MSD %R and RPD were within the project control limits.

4.2.6 Field Duplicates

One set of blind field duplicates was submitted, BCT-MW101-081414 and BCT-MW500-081414. All RPD were within the control limits specified above.

4.2.7 Reported Results and Reporting Limits (RL)

All reporting limits were met as outlined in the QAPP.

4.2.8 Overall Assessment

Accuracy was acceptable based on the MS and LCS recoveries, and precision was acceptable based on the MS/MSD and field duplicate RPD values. The data are of known quality and are acceptable for use as qualified.

4.3 Diesel- and Oil-Range TPH by NWTPH-Dx

4.3.1 Sample Receipt, Preservation, and Holding Times

Sample receipt, preservation (2-6 degrees C), and holding times were acceptable.

4.3.2 Method Blanks

Target analytes were not detected at or above the reporting levels in the method blanks.

4.3.3 Surrogates

All %R were within control limits.

4.3.4 Laboratory Control Samples (LCS/LCSD)

LCS and LCSD %R and RPD were within the project control limits.

4.3.5 Matrix Spike/Matrix Spike Duplicates (MS/MSD)

MS and MSD %R and RPD were within the project control limits, except for the diesel range hydrocarbon results in sample BCT-MW101-081414, which exceeded the RPD control limit of 20% with a value of 22%. This result was flagged as UJ.

4.3.6 Field Duplicates

One set of blind field duplicates was submitted, BCT-MW101-081414 and BCT-MW500-081414. All RPD were within the control limits specified above.

4.3.7 Reported Results and Reporting Limits (RL)

All target RLs were met as outlined in the QAPP.

4.3.8 Overall Assessment

Accuracy was acceptable based on the MS and LCS recoveries, and precision was acceptable based on the MS/MSD, LCS/LCSD and field duplicate RPD values. The data are of known quality and are acceptable for use as qualified.

5 Data Validation Findings for SDG 408211

Groundwater samples in this SDG, and the chemical analyses performed on them, are tabulated below. The sections below describe the results of the data quality review for this SDG by analyte group (analysis).

Sample Index

Sample ID	Sample Date	Sample Matrix	Analyte			
			TPH-Dx	TPH-Gx	BTEX	Low Level PAHs
NRS-MW-102-081214	8/12/2014	GrWtr	x	x	x	x
NRS-MW-101-081214	8/12/2014	GrWtr	x	x	x	x

5.1 PAHs by SW8270-SIM

5.1.1 Sample Receipt, Preservation, and Holding Times

Sample receipt, preservation (2-6 degrees C), and holding times were acceptable.

5.1.2 Method Blanks

Target analytes were not detected at or above the reporting levels in the method blanks.

5.1.3 Surrogates

All surrogate spike %R were within control limits or were not applicable due to sample matrix interference. No qualification of the results was necessary.

5.1.4 Laboratory Control Samples (LCS/LCSD)

LCS and LCSD %R and RPD were within the project control limits.

5.1.5 Matrix Spike/Matrix Spike Duplicates (MS/MSD)

There were no MS/MSD associated with this SDG.

5.1.6 Reported Results and Reporting Limits (RL)

All reporting limits were met as outlined in the QAPP.

5.1.7 Overall Assessment

Accuracy was acceptable based on the surrogate spikes and LCS recoveries, and precision was acceptable based on the MS/MSD and LCS/LCSD RPD values. The data are of known quality and are acceptable for use as qualified.

5.2 TPH-Gasoline and BTEX by NWTPH-Gx and EPA 8021B

5.2.1 Sample Receipt, Preservation, and Holding Times

Sample receipt, preservation (2-6 degrees C), and holding times were acceptable.

5.2.2 Method Blanks

Target analytes were not detected at or above the reporting levels in the method blanks.

5.2.3 Surrogates

All %R were within control limits.

5.2.4 Laboratory Control Samples (LCS)

LCS %R were within the project control limits.

5.2.5 Laboratory Duplicates

RPD values met the control criteria for laboratory duplicates.

5.2.6 Matrix Spike/Matrix Spike Duplicates (MS/MSD)

There were no MS/MSD associated with this SDG.

5.2.7 Reported Results and Reporting Limits (RL)

All reporting limits were met as outlined in the QAPP (Quality Assurance Project Plan).

5.2.8 Overall Assessment

Accuracy was acceptable based on the surrogate spikes and LCS recoveries, and precision was acceptable based on the MS/MSD and laboratory duplicate RPD values. The data are of known quality and are acceptable for use as qualified.

5.3 Diesel- and Oil-Range TPH by NWTPH-Dx

5.3.1 Sample Receipt, Preservation, and Holding Times

Sample receipt, preservation (2-6 degrees C), and holding times were acceptable.

5.3.2 Method Blanks

Target analytes were not detected at or above the reporting levels in the method blanks.

5.3.3 Surrogates

All %R were within control limits.

5.3.4 Laboratory Control Samples (LCS/LCSD)

LCS and LCSD %R and RPD were within the project control limits.

5.3.5 Matrix Spike/Matrix Spike Duplicates (MS/MSD)

There were no MS/MSD submitted with this SDG.

5.3.6 Reported Results and Reporting Limits (RL)

All target RLs were met as outlined in the QAPP.

5.3.7 Overall Assessment

Accuracy was acceptable based on the surrogate spikes and LCS recoveries, and precision was acceptable based on the MS/MSD and LCS/LCSD RPD values. The data are of known quality and are acceptable for use as qualified.

6 Data Validation Findings for SDG 408212

Groundwater samples in this SDG, and the chemical analyses performed on them, are tabulated below. The sections below describe the results of the data quality review for this SDG by analyte group (analysis).

Sample Index

Sample ID	Sample Date	Sample Matrix	Analyte			
			TPH-Dx	TPH-Gx	BTEX	Low Level PAHs
NRU-MW-102-081214	8/12/2014	GrWtr	x	x	x	x
NRP-MW-2-081214	8/12/2014	GrWtr	x	x	x	x
NRU-MW-101-081214	8/12/2014	GrWtr	x	x	x	x

6.1 PAHs by SW8270-SIM

6.1.1 Sample Receipt, Preservation, and Holding Times

Sample receipt, preservation (2-6 degrees C), and holding times were acceptable.

6.1.2 Method Blanks

Target analytes were not detected at or above the reporting levels in the method blanks.

6.1.3 Surrogates

All surrogate spike recoveries were within control limits or were not applicable due to sample matrix interference. No qualification of the results was necessary.

6.1.4 Laboratory Control Samples (LCS/LCSD)

LCS and LCSD %R and RPD were within the project control limits.

6.1.5 Matrix Spike/Matrix Spike Duplicates (MS/MSD)

There were no MS/MSD associated with this SDG.

6.1.6 Reported Results and Reporting Limits (RL)

All reporting limits were met as outlined in the QAPP (Quality Assurance Project Plan).

6.1.7 Overall Assessment

Accuracy was acceptable based on the surrogate spikes and LCS recoveries, and precision was acceptable based on the MS/MSD and LCS/LCSD RPD values. The data are of known quality and are acceptable for use as qualified.

6.2 TPH-Gasoline and BTEX by NWTPH-Gx and EPA 8021B

6.2.1 Sample Receipt, Preservation, and Holding Times

Sample receipt, preservation (2-6 degrees C), and holding times were acceptable.

6.2.2 Method Blanks

Target analytes were not detected at or above the reporting levels in the method blanks.

6.2.3 Surrogates

All %R were within control limits.

6.2.4 Laboratory Control Samples (LCS)

LCS %R were within the project control limits.

6.2.5 Laboratory Duplicates

RPD values met the control criteria for laboratory duplicates.

6.2.6 Matrix Spike/Matrix Spike Duplicates (MS/MSD)

There were no MS/MSD associated with this SDG.

6.2.7 Reported Results and Reporting Limits (RL)

All reporting limits were met as outlined in the QAPP.

6.2.8 Overall Assessment

Accuracy was acceptable based on the surrogate spikes and LCS recoveries, and precision was acceptable based on the MS/MSD and laboratory duplicate RPD values. The data are of known quality and are acceptable for use as qualified.

6.3 Diesel- and Oil-Range TPH by NWTPH-Dx

6.3.1 Sample Receipt, Preservation, and Holding Times

Sample receipt, preservation (2-6 degrees C), and holding times were acceptable.

6.3.2 Method Blanks

Target analytes were not detected at or above the reporting levels in the method blanks.

6.3.3 Surrogates

All %R were within control limits.

6.3.4 Laboratory Control Samples (LCS/LCSD)

LCS and LCSD %R and RPD were within the project control limits.

6.3.5 Matrix Spike/Matrix Spike Duplicates (MS/MSD)

There were no MS/MSD associated with this SDG.

6.3.6 Reported Results and Reporting Limits (RL)

All target RLs were met as outlined in the QAPP.

6.3.7 Overall Assessment

Accuracy was acceptable based on the surrogate spikes and LCS recoveries, and precision was acceptable based on the MS/MSD and LCS/LCSD RPD values. The data are of known quality and are acceptable for use as qualified.

7 Data Validation Findings for SDG K1408718 (Metals Analysis)

In accordance with the QAPP, the groundwater samples were submitted to ALS in Kelso, Washington, for metals analyses, as they have particular expertise performing trace metals analyses in saline water matrices. Friedman and Bruya combined groundwater samples from multiple SDGs into a single batch for transfer to ALS. The specific metals analytes for each sample in this ALS SDG are tabulated in the preceding sections. The sections below describe the results of the data quality review, separated into mercury and the other metals. The groundwater samples for metals analysis were field-filtered, therefore the results are reported as dissolved metals.

7.1 Dissolved Mercury by EPA 1631E

7.1.1 Sample Receipt, Preservation, and Holding Times

Water samples should be analyzed within 28 days of extraction.

Sample receipt, preservation (2-6 degrees C), and holding times were acceptable.

7.1.2 Method Blanks

Target analytes were not detected at or above the reporting levels in the method blanks.

7.1.3 Laboratory Control Samples (LCS)

LCS %R were within the project control limits.

7.1.4 Matrix Spike/Matrix Spike Duplicates (MS/MSD)

MS and MSD %R and RPD were within the project control limits.

7.1.5 Field Duplicates

One set of blind field duplicates was submitted, BCT-MW101-081414 and BCT-MW500-081414. All RPD were within the control limits specified above.

7.1.6 Reported Results and Reporting Limits (RL)

All target RLs were met as outlined in the QAPP (Quality Assurance Project Plan).

7.1.7 Overall Assessment

Accuracy was acceptable based on the MS and LCS recoveries, and precision was acceptable based on the MS/MSD and field duplicates relative percent difference values. The data are of known quality and are acceptable for use as qualified.

7.2 Dissolved Metals by EPA 200.8 and 6010C

7.2.1 Sample Receipt, Preservation, and Holding Times

Water samples should be analyzed within 180 days of extraction.

Sample receipt, preservation (2-6 degrees C), and holding times were acceptable. Samples UST71-MW-102-081114 and UST71-MW-103-081214 were received at pH>2, but had sufficient nitric acid added by the lab to achieve the pH requirements within 2

weeks of collection as outlined in the method (USEPA, 1994). Therefore, no data qualifiers are assigned.

To reduce the analytical interferences due to high concentrations of dissolved solids, samples identified as having high specific conductance in the field (UST70-MW2-081114, RCD-MW101-081114, UST71-MW101-081214) were prepared by the reductive precipitation method (USEPA, 1997).

7.2.2 Method Blanks

Target analytes were not detected at or above the reporting levels in the method blanks.

7.2.3 Laboratory Control Samples (LCS)

LCS and LCSD %R and RPD were within the project control limits.

7.2.4 Matrix Spike/Matrix Spike Duplicates (MS/MSD)

MS and MSD %R and RPD were within the project control limits.

7.2.5 Laboratory Duplicates

For laboratory duplicate results that are greater than the reporting limit, the RPD control limit is 20%. For laboratory duplicate results less than five times the reporting limit, the difference between the sample and duplicate must be less than the reporting limit.

All RPD were within the control limits specified above.

7.2.6 Field Duplicates

Two sets of blind field duplicates was submitted, BCT-MW101-081414 and BCT-MW500-081414; and UST71-MW104-081114 and UST71-MW500-081114. All RPD were within the control limits specified above.

7.2.7 Reported Results and Reporting Limits (RL)

All target RLs were met as outlined in the QAPP (Quality Assurance Project Plan).

7.2.8 Overall Assessment

Accuracy was acceptable based on the MS and LCS recoveries, and precision was acceptable based on the laboratory duplicates relative percent difference values. The data are of known quality and are acceptable for use as qualified.

8 Qualified Data Summary

Qualified Data Summary Table

Sample ID	Laboratory ID	Analyte	Qualifier	Qualified Reason
UST71-MW104-081114	408183-09	Benzo(a)pyrene	UJ	MS/MSD %R below control limits.
BA6-MW101-081114 DAST-MW-101-081314	408183-04 408213-18	Acenaphthene Fluorene	DNR	Result outside of instrument calibration range. Use diluted result.
		Naphthalene Acenaphthylene Phenanthrene Anthracene Fluoranthene Pyrene Benz[a]anthracene Chrysene Benzo(a)pyrene Benzo(b)fluoranthene Benzo(k)fluoranthene Indeno(1,2,3-cd)pyrene Dibenzo(a,h)anthracene Benzo(ghi)perylene	DNR	A more appropriate result is reported. Use undiluted result.
SHB-MW101-081114 BCT-MW108-081414	408183-07 408237-01	Naphthalene Acenaphthene Fluorene	DNR	Result outside of instrument calibration range. Use diluted result.
		Acenaphthylene Phenanthrene Anthracene Fluoranthene Pyrene Benz[a]anthracene Chrysene Benzo(a)pyrene Benzo(b)fluoranthene Benzo(k)fluoranthene Indeno(1,2,3-cd)pyrene Dibenzo(a,h)anthracene Benzo(ghi)perylene	DNR	A more appropriate result is reported. Use undiluted result.
UST71-MW-103-081214	408213-03	Naphthalene Phenanthrene	DNR	Result outside of instrument calibration range. Use diluted result.
		Acenaphthylene Acenaphthene Fluorene Anthracene Fluoranthene Pyrene Benz[a]anthracene Chrysene Benzo(a)pyrene Benzo(b)fluoranthene Benzo(k)fluoranthene Indeno(1,2,3-cd)pyrene Dibenzo(a,h)anthracene Benzo(ghi)perylene	DNR	A more appropriate result is reported. Use undiluted result.

Sample ID	Laboratory ID	Analyte	Qualifier	Qualified Reason
BCT-MW-103-081214	408237-09	Acenaphthene	DNR	Result outside of instrument calibration range. Use diluted result.
		Naphthalene Acenaphthylene Fluorene Phenanthrene Anthracene Fluoranthene Pyrene Benz[a]anthracene Chrysene Benzo(a)pyrene Benzo(b)fluoranthene Benzo(k)fluoranthene Indeno(1,2,3-cd)pyrene Dibenzo(a,h)anthracene Benzo(ghi)perylene	DNR	A more appropriate result is reported. Use undiluted result.
BCT-MW107-081414	408213-09	Naphthalene Acenaphthene	DNR	Result outside of instrument calibration range. Use diluted result.
		Acenaphthylene Fluorene Phenanthrene Anthracene Fluoranthene Pyrene Benz[a]anthracene Chrysene Benzo(a)pyrene Benzo(b)fluoranthene Benzo(k)fluoranthene Indeno(1,2,3-cd)pyrene Dibenzo(a,h)anthracene Benzo(ghi)perylene	DNR	A more appropriate result is reported. Use undiluted result.
BCT-MW101-081114	408237-04	Diesel Range Hydrocarbons	UJ	MS/MSD %R below control limits.
		Benz[a]anthracene Chrysene Benzo(a)pyrene Benzo(b)fluoranthene Benzo(k)fluoranthene Indeno(1,2,3-cd)pyrene Dibenzo(a,h)anthracene Benzo(ghi)perylene	UJ	MS/MSD %RPD above control limits, MS/MSD %R below control limits.

Data Qualifier Definitions

Data Qualifier	Definition
DNR	Do not report; the result should be reported from an alternative analysis.
J	The analyte was detected above the reported quantitation limit, and the reported concentration was an estimated value.
R	The sample results are unusable due to the quality of the data generated because certain criteria were not met. The analyte may or may not be present in the sample.
U	The analyte was analyzed for, but was considered not detected at the reporting limit or reported value.
UJ	The analyte was analyzed for, and the associated quantitation limit was an estimated value.
X	The sample chromatographic pattern does not resemble the fuel standard used for quantitation.

9 References

U.S. Environmental Protection Agency (USEPA), 1994, Method 200.8 Determination of Trace Elements in Waters and Wastes by Inductively Coupled Plasma – Mass Spectrometry, Revision 5.4, Environmental Monitoring Systems Laboratory Office of Research and Development.

U.S. Environmental Protection Agency (USEPA), 1997, Method 1640 Determination of Trace Elements in Waters by Preconcentration and Inductively Coupled Plasma – Mass Spectrometry, Office of Water & Office of Science and Technology Engineering and Analysis Division (4303), April.

U.S. Environmental Protection Agency (USEPA), 1999, Contract Laboratory Program National Functional Guidelines for Inorganic Data Review, Office of Emergency and Remedial Response, USEPA Publication No. 540/R-99/008, October.

U.S. Environmental Protection Agency (USEPA), 2004, Contract Laboratory Program National Functional Guidelines for Organic Methods Data Review, Office of Superfund Remediation and Technology Innovation (OSRTI), USEPA Publication No. 540-R-04-004, October.

Aspect, 2013, Work Plan for Remedial Investigation/Feasibility Study, Kimberly-Clark Worldwide Site Upland Area, Everett, Washington, November 22, 2013.

DATA VALIDATION REPORT

Kimberly Clark Worldwide Site Upland Area
Interim Action Confirmational Groundwater Monitoring
November 2014
SDGs 411039, 411066, 411067, 411116, 411119, K1412631

Prepared by:
Aspect Consulting, LLC
401 Second Ave South, Suite 201
Seattle, WA 98104

Project No. 110207 • December 8, 2014

S:\Kimberly Clark\Everett Mill 110207\Data\Validation\Data Validation - Delia\KC IA Nov 2014 Data Validation.docx

1 Introduction

This report summarizes the findings of the United States Environmental Protection Agency (USEPA) Stage 2A data validation performed on analytical data for groundwater samples collected during November 3 through 6, 2014 for Kimberly Clark Worldwide Upland Site Interim Action Confirmational Groundwater Monitoring. This data quality review is divided into sections by sample delivery group (SDG). A complete list of samples and analyses for each SDG is provided in the Sample Index at the beginning of each section. The metals data were sent to a separate lab for analysis, and are presented in Section 7 at the end of the report.

Samples were analyzed for non-metal analytes by Friedman & Bruya, Inc in Seattle, Washington, and for metal analytes by ALS Environmental in Kelso, Washington. The analytical methods are summarized below:

Analysis	Method	Laboratory
Polycyclic Aromatic Hydrocarbons (PAHs)	SW8270D-SIM	Friedman & Bruya, Inc
TPH - Gasoline Range and BTEX[1]	NWTPH-Gx/EPA 8021B	Friedman & Bruya, Inc
TPH - Diesel and Motor Oil Ranges	NWTPH-Dx	Friedman & Bruya, Inc
Total and Dissolved Metals	EPA 200.8	ALS
Total and Dissolved Mercury	EPA 1631E	ALS

The validation followed the procedures documented in the analytical methods, the Quality Assurance Project Plan (QAPP; in Appendix A to Aspect, 2013), *National Functional Guidelines for Organic Data Review* (USEPA, 1999), and *National Functional Guidelines for Inorganic Data Review* (USEPA, 2004).

Data assigned a J qualifier (estimated) may be used for site evaluation purposes but the reasons for qualification should be taken into account when interpreting sample concentrations. Data marked as do-not-report (DNR) should not be used under any circumstances. Values without qualification meet all data measurement quality objectives and are suitable for use.

Data qualifier definitions and a summary table of the qualified data are included in the Qualified Data Summary at the end of this report. Data qualifiers have been incorporated into the project chemistry database to reflect the validation in this report.

[1] BTEX = benzene, toluene, ethylbenzene, and xylenes

2 Data Validation Findings for SDG 411039

Groundwater samples in this SDG, and the chemical analyses performed on them, are tabulated below. The sections below describe the results of the data quality review for this SDG by analyte group (analysis).

Sample Index

Sample ID	Sample Date	Sample Matrix	Analyte							
			TPH-Dx/Oil	TPH-Gx/BTEX	Low Level PAHs	Mercury	Arsenic	Copper	Lead	Zinc
BCT-MW101-110314	11/3/2014	GrWtr	x	x	x	x		x	x	x
BCT-MW500-110314	11/3/2014	GrWtr	x	x	x	x		x	x	x
BCT-MW102-110314	11/3/2014	GrWtr	x	x	x	x		x	x	x
BCT-MW103-110314	11/3/2014	GrWtr	x	x	x	x		x	x	x
BCT-MW104-110314	11/3/2014	GrWtr	x	x	x	x		x	x	x
BBH-MW104-110314	11/3/2014	GrWtr				x	x	x	x	x
BBH-MW103-110314	11/3/2014	GrWtr				x	x	x	x	x
BBH-MW102-11314	11/3/2014	GrWtr				x	x	x	x	x
BBH-MW101-110314	11/3/2014	GrWtr				x	x	x	x	x
GF11-MW101-110314	11/3/2014	GrWtr				x		x	x	

2.1 PAHs (SW8270-SIM)

2.1.1 Sample Receipt, Preservation, and Holding Times

Water samples should be extracted within 7 days of collection. Extracted samples should be analyzed within 40 days of extraction.

Sample receipt, preservation (2-6 degrees Celsius [C]), and holding times were acceptable.

2.1.2 Method Blanks

Target analytes were not detected at or above the reporting levels in the method blanks.

2.1.3 Surrogates

All surrogate spike recoveries were within control limits or were not applicable due to sample matrix interference or sample dilution below quantitation limits because of high petroleum hydrocarbon concentrations. No data qualification was necessary.

2.1.4 Laboratory Control Samples (LCS/LCSD)

Laboratory control sample (LCS) and laboratory control sample duplicate (LCSD) percent recovery (%R) and relative percent difference (RPD) were within the project control limits.

2.1.5 Matrix Spike/Matrix Spike Duplicates (MS/MSD)

Matrix spike (MS) and matrix spike duplicate (MSD) %R and RPD were within the project control limits, except for the sixteen semivolatile target compounds in sample BCT-MW101-110314. Each analyte had an RPD above the control limit of 20% and were flagged as estimated (UJ).

2.1.6 Field Duplicates

Field duplicates are an indication of both field and laboratory precision. According to the EPA National Functional Guidelines, there are no set criteria for field duplicate evaluation, but the following advisory criteria were used. For results greater than or equal to the analytical reporting limit (RL), the advisory RPD is 35%. For results <5 times the RL, the difference between the sample and the duplicate should be <RL.

One set of blind field duplicates was submitted for this analysis, BCT-MW101-110314 and BCT-MW500-110314. The RPD for the field duplicate pair was within the control limits specified above.

2.1.7 Reported Results and Reporting Limits (RL)

The reporting limits outlined in the Quality Assurance Project Plan (QAPP; in Appendix A to Aspect, 2013) were met.

2.1.8 Overall Assessment

Accuracy was acceptable based on the surrogate, MS, and LCS recoveries and precision was acceptable based on the MS/MSD, LCS/LCSD and field duplicate RPD values. The data are of known quality and are acceptable for use as qualified.

2.2 TPH-Gasoline and BTEX (NWTPH-Gx and EPA 8021B)

2.2.1 Sample Receipt, Preservation, and Holding Times

Water samples should be analyzed within 14 days of collection.

Sample receipt, preservation (2-6 degrees C), and holding times were acceptable.

2.2.2 Method Blanks

Target analytes were not detected at or above the reporting levels in the method blanks.

2.2.3 Surrogates

All %R were within control limits.

2.2.4 Laboratory Control Samples (LCS)

LCS %R were within the project control limits.

2.2.5 Matrix Spike/Matrix Spike Duplicates (MS/MSD)

MS and MSD %R and RPD were within the project control limits.

2.2.6 Field Duplicates

One set of blind field duplicates was submitted, BCT-MW101-110314 and BCT-MW500-110314. All RPD were within the control limits specified above.

2.2.7 Reported Results and Reporting Limits (RL)

All reporting limits were met as outlined in the QAPP (Quality Assurance Project Plan).

2.2.8 Overall Assessment

Accuracy was acceptable based on the surrogate spike, MS, and LCS recoveries, and precision was acceptable based on the MS/MSD and field duplicate RPD values. The data are of known quality and are acceptable for use as qualified.

2.3 Diesel- and Oil-Range TPH (NWTPH-Dx)

2.3.1 Sample Receipt, Preservation, and Holding Times

Water samples should be analyzed within 14 days of collection.

Sample receipt, preservation (2-6 degrees C), and holding times were acceptable.

2.3.2 Method Blanks

Target analytes were not detected at or above RLs in the method blanks.

2.3.3 Surrogates

All percent recoveries were within control limits or were at levels that had no adverse effects on data quality.

2.3.4 Laboratory Control Samples (LCS/LCSD)

LCS and LCSD %R and RPD were within the project control limits.

2.3.5 Matrix Spike/Matrix Spike Duplicates (MS/MSD)

MS and MSD %R and RPD were within the project control limits.

2.3.6 Field Duplicates

One set of blind field duplicates was submitted, BCT-MW101-110314 and BCT-MW500-110314. All RPD were within the control limits specified above.

2.3.7 Reported Results and Reporting Limits (RL)

All target RLs were met as outlined in the QAPP.

2.3.8 Overall Assessment

Accuracy was acceptable based on the surrogate spike, MS, and LCS recoveries, and precision was acceptable based on the MS/MSD, LCS/LCSD, and field duplicate RPD values. The data are of known quality and are acceptable for use as qualified.

3 Data Validation Findings for SDG 411066

Groundwater samples in this SDG, and the chemical analyses performed on them, are tabulated below. The sections below describe the results of the data quality review for this SDG by analyte group (analysis).

Sample Index

Sample ID	Sample Date	Sample Matrix	Analyte		
			TPH-Dx/Oil	TPH-Gx/BTEX	Low Level PAHs
NRS-MW101-110414	11/4/2014	GrWtr	x	x	x
NRS-MW102-110414	11/4/2014	GrWtr	x	x	x

3.1 PAHs (SW8270-SIM)

3.1.1 Sample Receipt, Preservation, and Holding Times

Water samples should be extracted within 7 days of collection. Extracted samples should be analyzed within 40 days of extraction.

Sample receipt, preservation (2-6 degrees C), and holding times were acceptable.

3.1.2 Method Blanks

Target analytes were not detected at or above the reporting levels in the method blanks.

3.1.3 Surrogates

All %R were within control limits.

3.1.4 Laboratory Control Samples (LCS/LCSD)

LCS and LCSD %R and RPD were within the project control limits.

3.1.5 Matrix Spike/Matrix Spike Duplicates (MS/MSD)

MS and MSD %R and RPD were within the project control limits.

3.1.6 Reported Results and Reporting Limits (RL)

The reporting limits outlined in the QAPP were met.

3.1.7 Overall Assessment

Accuracy was acceptable based on the surrogate, MS, and LCS recoveries, and precision was acceptable based on the MS/MSD and LCS/LCSD RPD values. The data are of known quality and are acceptable for use as qualified.

3.2 TPH-Gasoline and BTEX (NWTPH-Gx and EPA 8021B)

3.2.1 Sample Receipt, Preservation, and Holding Times

Water samples should be analyzed within 14 days of collection.

Sample receipt, preservation (2-6 degrees C), and holding times were acceptable.

3.2.2 Method Blanks

Target analytes were not detected at or above the reporting levels in the method blanks.

3.2.3 Surrogates

All %R were within control limits.

3.2.4 Laboratory Control Samples (LCS)

LCS %R were within the project control limits.

3.2.5 Matrix Spike/Matrix Spike Duplicates (MS/MSD)

MS and MSD %R and RPD were within the project control limits.

3.2.6 Reported Results and Reporting Limits (RL)

The reporting limits were met as outlined in the QAPP.

3.2.7 Overall Assessment

Accuracy was acceptable based on the surrogate, MS, and LCS recoveries, and precision was acceptable based on the MS/MSD RPD values. The data are of known quality and are acceptable for use as qualified.

3.3 Diesel- and Oil-Range TPH (NWTPH-Dx)

3.3.1 Sample Receipt, Preservation, and Holding Times

Water samples should be analyzed within 14 days of collection.

Sample receipt, preservation (2-6 degrees C), and holding times were acceptable.

3.3.2 Method Blanks

Target analytes were not detected at or above the reporting levels in the method blanks.

3.3.3 Surrogates

All %R were within control limits.

3.3.4 Laboratory Control Samples (LCS/LCSD)

LCS and LCSD %R and RPD were within the project control limits.

3.3.5 Matrix Spike/Matrix Spike Duplicates (MS/MSD)

MS and MSD %R and RPD were within the project control limits.

3.3.6 Reported Results and Reporting Limits (RL)

All target RLs were met as outlined in the QAPP.

3.3.7 Overall Assessment

Accuracy was acceptable based on the surrogate, MS, and LCS recoveries, and precision was acceptable based on the MS/MSD and LCS/LCSD RPD values. The data are of known quality and are acceptable for use as qualified.

4 Data Validation Findings for SDG 411067

Groundwater samples in this SDG, and the chemical analyses performed on them, are tabulated below. The sections below describe the results of the data quality review for this SDG by analyte group (analysis).

Sample Index

Sample ID	Sample Date	Sample Matrix	Analyte								
			TPH-Dx/Oil	TPH-Gx/BTEX	Low Level PAHs	Mercury	Arsenic	Copper	Lead	Nickel	Zinc
BCT-MW105-110414	11/4/2014	GrWtr	x	x	x	x		x	x		
BCT-MW106-110414	11/4/2014	GrWtr	x	x	x	x		x	x		
BCT-MW107-110414	11/4/2014	GrWtr	x	x	x	x		x	x		
BCT-MW108-110414	11/4/2014	GrWtr	x	x	x	x		x	x		
HBV-MW101-110414	11/4/2014	GrWtr	x		x						
HB-MW1R-110414	11/4/2014	GrWtr				x	x	x	x	x	x
UST71-MW102-110414	11/4/2014	GrWtr	x		x			x			x
UST70-MW102-110414	11/4/2014	GrWtr	x		x		x	x		x	x
UST70-MW2-110414	11/4/2014	GrWtr	x		x		x	x		x	x
UST70-MW101-110414	11/4/2014	GrWtr	x		x		x	x		x	x
RCD-MW101-110414	11/4/2014	GrWtr	x		x	x	x	x		x	

4.1 PAHs (SW8270-SIM)

4.1.1 Sample Receipt, Preservation, and Holding Times

Water samples should be extracted within 7 days of collection. Extracted samples should be analyzed within 40 days of extraction.

Sample receipt, preservation (2-6 degrees C), and holding times were acceptable.

4.1.2 Method Blanks

Target analytes were not detected at or above the reporting levels in the method blanks.

4.1.3 Surrogates

All surrogate spike %R were within control limits or were not applicable due to sample matrix interference or sample dilution below quantitation limits because of high petroleum hydrocarbon concentrations, with one exception. The %R for benzo(a)anthracene-d12 in HBV-MW101-110414 (194 percent) was above the control limit of 150 percent. Because the recovery was greater than the upper control limit, the detected semivolatile target compounds in this sample will be qualified as estimated (J), and the non-detected target compounds will not be qualified.

4.1.4 Laboratory Control Samples (LCS/LCSD)

LCS and LCSD %R and RPD were within the project control limits.

4.1.5 Matrix Spike/Matrix Spike Duplicates (MS/MSD)

MS and MSD %R and RPD were within the project control limits.

4.1.6 Reported Results and Reporting Limits (RL)

The results for naphthalene, acenaphthene, and phenanthrene in samples BCT-MW107-110414 and BCT-MW108-110414 exceeded the instrument calibration range, requiring the samples to be diluted and re-analyzed. These analytes were reported from the dilution and qualified as DNR in the undiluted samples. The remaining analytes were reported from the undiluted samples.

The results for acenaphthene in sample UST70-MW102-110414 also exceeded the linear range and was qualified in the same manner.

The reporting limits outlined in the QAPP were met or were elevated accordingly due to high concentrations of target analytes.

4.1.7 Overall Assessment

Accuracy was acceptable based on the surrogate, MS, and LCS recoveries, and precision was acceptable based on the MS/MSD, LCS/LCSD and field duplicate RPD values. The data are of known quality and are acceptable for use as qualified.

4.2 TPH-Gasoline and BTEX (NWTPH-Gx and EPA 8021B)

4.2.1 Sample Receipt, Preservation, and Holding Times

Water samples should be analyzed within 14 days of collection.

Sample receipt, preservation (2-6 degrees C), and holding times were acceptable.

4.2.2 Method Blanks

Target analytes were not detected at or above the reporting levels in the method blanks.

4.2.3 Surrogates

All %R were within control limits.

4.2.4 Laboratory Control Samples (LCS)

LCS %R were within the project control limits.

4.2.5 Matrix Spike/Matrix Spike Duplicates (MS/MSD)

MS and MSD %R and RPD were within the project control limits.

4.2.6 Reported Results and Reporting Limits (RL)

All reporting limits were met as outlined in the QAPP.

4.2.7 Overall Assessment

Accuracy was acceptable based on the surrogate, MS, and LCS recoveries, and precision was acceptable based on the MS/MSD and field duplicate RPD values. The data are of known quality and are acceptable for use as qualified.

4.3 Diesel- and Oil-Range TPH (NWTPH-Dx)

4.3.1 Sample Receipt, Preservation, and Holding Times

Water samples should be analyzed within 14 days of collection.

Sample receipt, preservation (2-6 degrees C), and holding times were acceptable.

4.3.2 Method Blanks

Target analytes were not detected at or above the reporting levels in the method blanks.

4.3.3 Surrogates

All %R were within control limits.

4.3.4 Laboratory Control Samples (LCS/LCSD)

LCS and LCSD %R and RPD were within the project control limits.

4.3.5 Matrix Spike/Matrix Spike Duplicates (MS/MSD)

MS and MSD %R and RPD were within the project control limits.

4.3.6 Reported Results and Reporting Limits (RL)

All target RLs were met as outlined in the QAPP.

4.3.7 Overall Assessment

Accuracy was acceptable based on the surrogate, MS, and LCS recoveries, and precision was acceptable based on the MS/MSD, LCS/LCSD and field duplicate RPD values. The data are of known quality and are acceptable for use as qualified.

5 Data Validation Findings for SDG 411116

Groundwater samples in this SDG, and the chemical analyses performed on them, are tabulated below. The sections below describe the results of the data quality review for this SDG by analyte group (analysis).

Sample Index

Sample ID	Sample Date	Sample Matrix	Analyte		
			TPH-Dx/Oil	TPH-Gx/BTEX	Low Level PAHs
NRU-MW101-110514	11/5/2014	GrWtr	x	x	x
NRU-MW102-110514	11/5/2014	GrWtr	x	x	x
NRP-MW2-110514	11/5/2014	GrWtr	x	x	x

5.1 PAHs (SW8270-SIM)

5.1.1 Sample Receipt, Preservation, and Holding Times

Water samples should be extracted within 7 days of collection. Extracted samples should be analyzed within 40 days of extraction.

Sample receipt, preservation (2-6 degrees C), and holding times were acceptable.

5.1.2 Method Blanks

Target analytes were not detected at or above the reporting levels in the method blanks.

5.1.3 Surrogates

All surrogate spike %R were within control limits or were not applicable due to sample matrix interference. No qualification of the results was necessary.

5.1.4 Laboratory Control Samples (LCS/LCSD)

LCS and LCSD %R and RPD were within the project control limits.

5.1.5 Matrix Spike/Matrix Spike Duplicates (MS/MSD)

MS and MSD %R and RPD were within the project control limits.

5.1.6 Reported Results and Reporting Limits (RL)

All reporting limits were met as outlined in the QAPP.

5.1.7 Overall Assessment

Accuracy was acceptable based on the surrogate, MS, and LCS recoveries, and precision was acceptable based on the MS/MSD and LCS/LCSD RPD values. The data are of known quality and are acceptable for use as qualified.

5.2 TPH-Gasoline and BTEX (NWTPH-Gx and EPA 8021B)

5.2.1 Sample Receipt, Preservation, and Holding Times

Water samples should be analyzed within 14 days of collection.

Sample receipt, preservation (2-6 degrees C), and holding times were acceptable.

5.2.2 Method Blanks

Target analytes were not detected at or above the reporting levels in the method blanks.

5.2.3 Surrogates

All %R were within control limits.

5.2.4 Laboratory Control Samples (LCS)

LCS and LCSD %R and RPD were within the project control limits.

5.2.5 Matrix Spike/Matrix Spike Duplicates (MS/MSD)

There were no MS/MSD associated with this SDG.

5.2.6 Reported Results and Reporting Limits (RL)

All reporting limits were met as outlined in the QAPP (Quality Assurance Project Plan).

5.2.7 Overall Assessment

Accuracy was acceptable based on the surrogate and LCS recoveries, and precision was acceptable based on the LCS/LCSD RPD values. The data are of known quality and are acceptable for use as qualified.

5.3 Diesel- and Oil-Range TPH (NWTPH-Dx)

5.3.1 Sample Receipt, Preservation, and Holding Times

Water samples should be analyzed within 14 days of collection.

Sample receipt, preservation (2-6 degrees C), and holding times were acceptable.

5.3.2 Method Blanks

Target analytes were not detected at or above the reporting levels in the method blanks.

5.3.3 Surrogates

All %R were within control limits.

5.3.4 Laboratory Control Samples (LCS/LCSD)

LCS and LCSD %R and RPD were within the project control limits.

5.3.5 Matrix Spike/Matrix Spike Duplicates (MS/MSD)

MS and MSD %R and RPD were within the project control limits.

5.3.6 Reported Results and Reporting Limits (RL)

All target RLs were met as outlined in the QAPP.

5.3.7 Overall Assessment

Accuracy was acceptable based on the surrogate, MS, and LCS recoveries, and precision was acceptable based on the MS/MSD and LCS/LCSD RPD values. The data are of known quality and are acceptable for use as qualified.

6 Data Validation Findings for SDG 411119

Groundwater samples in this SDG, and the chemical analyses performed on them, are tabulated below. The sections below describe the results of the data quality review for this SDG by analyte group (analysis).

Sample Index

Sample ID	Sample Date	Sample Matrix	Analyte							
			TPH-Dx/Oil	TPH-Gx/BTEX	Low Level PAHs	Mercury	Arsenic	Copper	Lead	Zinc
UST71-MW104-110514	11/5/2014	GrWtr	x		x			x		x
UST71-MW101-110514	11/5/2014	GrWtr	x		x			x		x
UST71-MW500-110514	11/5/2014	GrWtr	x		x			x		x
DAST-MW101-110514	11/5/2014	GrWtr	x		x	x		x		
UST29-MW101-110514	11/5/2014	GrWtr	x	x	x					
BA6-MW101-110514	11/5/2014	GrWtr	x		x					
UST71-MW103-110514	11/5/2014	GrWtr	x		x			x		
SHB-MW101-110514	11/5/2014	GrWtr	x	x	x	x		x		
SHB-MW102-110514	11/5/2014	GrWtr	x	x	x	x		x		
UST29-MW103-110614	11/6/2014	GrWtr	x	x	x					
UST29-MW102-110614	11/6/2014	GrWtr	x	x	x					
CN-MW101-110614	11/6/2014	GrWtr	x		x		x	x	x	
CN-MW102-110614	11/6/2014	GrWtr	x		x		x	x	x	
CN-MW103-110614	11/6/2014	GrWtr	x		x		x	x	x	
CN-MW104-110614	11/6/2014	GrWtr	x		x		x	x	x	

6.1 PAHs (SW8270-SIM)

6.1.1 Sample Receipt, Preservation, and Holding Times

Water samples should be extracted within 7 days of collection. Extracted samples should be analyzed within 40 days of extraction.

Sample receipt, preservation (2-6 degrees C), and holding times were acceptable.

6.1.2 Method Blanks

Target analytes were not detected at or above the reporting levels in the method blanks.

6.1.3 Surrogates

All surrogate spike %R were within control limits or were not applicable due to sample matrix interference or sample dilution below quantitation limits because of high petroleum hydrocarbon concentrations, with one exception. The %R for sample UST71-MW103-110514 were below the control limits because the surrogates were not added prior to extraction and should be considered estimates. Because the MS and LCS %R were within the limits for this sample, no qualification of the results was necessary.

6.1.4 Laboratory Control Samples (LCS/LCSD)

LCS and LCSD %R and RPD were within the project control limits.

6.1.5 Matrix Spike/Matrix Spike Duplicates (MS/MSD)

MS and MSD %R and RPD were within the project control limits, with one exception. The RPDs for indeno(1,2,3-c,d)pyrene, dibenz(a,h)anthracene, and benzo(g,h,i)perylene in UST71-MW104-110514 were above the control limit of 20%. The results for these analytes were qualified as estimated (UJ).

6.1.6 Field Duplicates

One set of blind field duplicates was submitted, UST71-MW104-110514 and UST71-MW500-110514. All RPD were within the control limits specified above.

6.1.7 Reported Results and Reporting Limits (RL)

The results for acenaphthene and fluorene in sample DAST-MW101-110514 exceeded the instrument calibration range, requiring the sample to be diluted and re-analyzed. These analytes were reported from the dilution and qualified as DNR in the undiluted sample. The remaining analytes were reported from the undiluted sample.

The results for acenaphthene, fluorene, and phenanthrene in sample UST71-MW103-110514, acenaphthene in UST29-MW102-110614, and naphthalene and acenaphthene in CN-MW101-110614 also exceeded the linear range and was qualified in the same manner.

The reporting limits outlined in the QAPP were met or were elevated accordingly due to high concentrations of target analytes.

6.1.8 Overall Assessment

Accuracy was acceptable based on the surrogate, MS, and LCS recoveries, and precision was acceptable based on the field duplicate, MS/MSD, and LCS/LCSD RPD values. The data are of known quality and are acceptable for use as qualified.

6.2 TPH-Gasoline and BTEX (NWTPH-Gx and EPA 8021B)

6.2.1 Sample Receipt, Preservation, and Holding Times

Water samples should be analyzed within 14 days of collection.

Sample receipt, preservation (2-6 degrees C), and holding times were acceptable.

6.2.2 Method Blanks

Target analytes were not detected at or above the reporting levels in the method blanks.

6.2.3 Surrogates

All %R were within control limits.

6.2.4 Laboratory Control Samples (LCS)

LCS and LCSD %R and RPD were within the project control limits.

6.2.5 Matrix Spike/Matrix Spike Duplicates (MS/MSD)

There were no MS/MSD associated with this SDG.

6.2.6 Reported Results and Reporting Limits (RL)

All reporting limits were met as outlined in the QAPP.

6.2.7 Overall Assessment

Accuracy was acceptable based on the surrogate spikes and LCS recoveries, and precision was acceptable based on the LCS/LCSD and RPD values. The data are of known quality and are acceptable for use as qualified.

6.3 Diesel- and Oil-Range TPH (NWTPH-Dx)

6.3.1 Sample Receipt, Preservation, and Holding Times

Water samples should be analyzed within 14 days of collection.

Sample receipt, preservation (2-6 degrees C), and holding times were acceptable.

6.3.2 Method Blanks

Target analytes were not detected at or above the reporting levels in the method blanks.

6.3.3 Surrogates

All %R were within control limits.

6.3.4 Laboratory Control Samples (LCS/LCSD)

LCS and LCSD %R and RPD were within the project control limits.

6.3.5 Matrix Spike/Matrix Spike Duplicates (MS/MSD)

MS and MSD %R and RPD were within the project control limits.

6.3.6 Field Duplicates

One set of blind field duplicates was submitted, UST71-MW104-110514 and UST71-MW500-110514. All RPD were within the control limits specified above.

6.3.7 Reported Results and Reporting Limits (RL)

All target RLs were met as outlined in the QAPP.

6.3.8 Overall Assessment

Accuracy was acceptable based on the surrogate, MS, and LCS recoveries, and precision was acceptable based on the field duplicate, MS/MSD, and LCS/LCSD RPD values. The data are of known quality and are acceptable for use as qualified.

7 Data Validation Findings for SDG K1412631 (Metals Analyses)

In accordance with the QAPP, the groundwater samples were submitted to ALS in Kelso, Washington, for metals analyses, as they have particular expertise performing trace metals analyses in saline water matrices. Friedman and Bruya combined groundwater samples from multiple SDGs into a single batch for transfer to ALS. The specific metals analytes for each sample in this ALS SDG are tabulated in the preceding sections. The sections below describe the results of the data quality review, separated into mercury and the other metals. The groundwater samples for metals analysis were field-filtered, therefore the results are reported as dissolved metals.

7.1 Dissolved Mercury (EPA 1631E)

7.1.1 Sample Receipt, Preservation, and Holding Times

Water samples should be analyzed within 28 days of extraction.

Sample receipt, preservation (2-6 degrees C), and holding times were acceptable.

7.1.2 Method Blanks

Target analytes were not detected at or above the reporting levels in the method blanks.

7.1.3 Laboratory Control Samples (LCS)

LCS %R were within the project control limits.

7.1.4 Matrix Spike/Matrix Spike Duplicates (MS/MSD)

MS and MSD %R and RPD were within the project control limits.

7.1.5 Field Duplicates

One set of blind field duplicates was submitted, BCT-MW101-110314 and BCT-MW500-110314. All RPD were within the control limits specified above.

7.1.6 Reported Results and Reporting Limits (RL)

All target RLs were met as outlined in the QAPP.

7.1.7 Overall Assessment

Accuracy was acceptable based on the MS and LCS recoveries, and precision was acceptable based on the MS/MSD and field duplicates relative percent difference values. The data are of known quality and are acceptable for use as qualified.

7.2 Dissolved Metals (EPA 200.8 and 6010C)

7.2.1 Sample Receipt, Preservation, and Holding Times

Water samples should be analyzed within 180 days of extraction.

Sample receipt, preservation (2-6 degrees C), and holding times were acceptable.

To reduce the analytical interferences due to high concentrations of dissolved solids, samples identified as having high specific conductance in the field (UST70-MW2-

110414, RCD-MW101-110414) were prepared by the reductive precipitation method (USEPA, 1997).

7.2.2 Method Blanks

Target analytes were not detected at or above the reporting levels in the method blanks.

7.2.3 Laboratory Control Samples (LCS)

LCS %R were within the project control limits.

7.2.4 Matrix Spike/Matrix Spike Duplicates (MS/MSD)

MS and MSD %R and RPD were within the project control limits.

7.2.5 Laboratory Duplicates

For laboratory duplicate results that are greater than the reporting limit, the RPD control limit is 20%. For laboratory duplicate results less than five times the reporting limit, the difference between the sample and duplicate must be less than the reporting limit.

All RPD were within the control limits specified above.

7.2.6 Field Duplicates

Two sets of blind field duplicates were submitted, BCT-MW101-110314 and BCT-MW500-110314; and UST71-MW104-110514 and UST71-MW500-110514. All RPD were within the control limits specified above.

7.2.7 Reported Results and Reporting Limits (RL)

All target RLs were met as outlined in the QAPP (Quality Assurance Project Plan).

7.2.8 Overall Assessment

Accuracy was acceptable based on the MS and LCS recoveries, and precision was acceptable based on the MS/MSD, laboratory and field duplicates relative percent difference values. The data are of known quality and are acceptable for use as qualified.

8 Qualified Data Summary

Qualified Data Summary Table

Sample ID	Laboratory ID	Analyte	Qualifier	Qualified Reason
BCT-MW101-110314	411039-01	Acenaphthene Fluorene Naphthalene Acenaphthylene Phenanthrene Anthracene Fluoranthene Pyrene Benz[a]anthracene Chrysene Benzo(a)pyrene Benzo(b)fluoranthene Benzo(k)fluoranthene Indeno(1,2,3-cd)pyrene Dibenzo(a,h)anthracene Benzo(ghi)perylene	UJ	MS/MSD %RPD above control limits.
HBV-MW101-110414	411067-05	Acenaphthene Fluorene Naphthalene Phenanthrene Anthracene Fluoranthene Pyrene	J	Surrogate %R above control limit.
UST71-MW104-110514	411119-01	Indeno(1,2,3-cd)pyrene Dibenzo(a,h)anthracene Benzo(ghi)perylene	UJ	MS/MSD %R below control limits.
BCT-MW107-110414 BCT-MW108-110414	411067-03 411067-04	Naphthalene Acenaphthene Fluorene	DNR	Result outside of instrument calibration range. Use diluted result.
		Acenaphthylene Phenanthrene Anthracene Fluoranthene Pyrene Benz[a]anthracene Chrysene Benzo(a)pyrene Benzo(b)fluoranthene Benzo(k)fluoranthene Indeno(1,2,3-cd)pyrene Dibenzo(a,h)anthracene Benzo(ghi)perylene	DNR	A more appropriate result is reported. Use undiluted result.

Sample ID	Laboratory ID	Analyte	Qualifier	Qualified Reason
UST70-MW102-110414 UST29-MW102-110614	411067-08 411119-11	Acenaphthene	DNR	Result outside of instrument calibration range. Use diluted result.
		Naphthalene Acenaphthylene Fluorene Phenanthrene Anthracene Fluoranthene Pyrene Benz[a]anthracene Chrysene Benzo(a)pyrene Benzo(b)fluoranthene Benzo(k)fluoranthene Indeno(1,2,3-cd)pyrene Dibenzo(a,h)anthracene Benzo(ghi)perylene	DNR	A more appropriate result is reported. Use undiluted result.
DAST-MW101-110514	411119-04	Acenaphthene Fluorene	DNR	Result outside of instrument calibration range. Use diluted result.
		Naphthalene Acenaphthylene Phenanthrene Anthracene Fluoranthene Pyrene Benz[a]anthracene Chrysene Benzo(a)pyrene Benzo(b)fluoranthene Benzo(k)fluoranthene Indeno(1,2,3-cd)pyrene Dibenzo(a,h)anthracene Benzo(ghi)perylene	DNR	A more appropriate result is reported. Use undiluted result.
UST71-MW103-110514	411119-07	Phenanthrene Acenaphthene Fluorene	DNR	Result outside of instrument calibration range. Use diluted result.
		Naphthalene Acenaphthylene Anthracene Fluoranthene Pyrene Benz[a]anthracene Chrysene Benzo(a)pyrene Benzo(b)fluoranthene Benzo(k)fluoranthene Indeno(1,2,3-cd)pyrene Dibenzo(a,h)anthracene Benzo(ghi)perylene	DNR	A more appropriate result is reported. Use undiluted result.

Sample ID	Laboratory ID	Analyte	Qualifier	Qualified Reason
CN-MW101-110614	411119-12	Naphthalene Acenaphthene	DNR	Result outside of instrument calibration range. Use diluted result.
		Acenaphthylene Fluorene Phenanthrene Anthracene Fluoranthene Pyrene Benz[a]anthracene Chrysene Benzo(a)pyrene Benzo(b)fluoranthene Benzo(k)fluoranthene Indeno(1,2,3-cd)pyrene Dibenzo(a,h)anthracene Benzo(ghi)perylene	DNR	A more appropriate result is reported. Use undiluted result.

Data Qualifier Definitions

Data Qualifier	Definition
DNR	Do not report; the result should be reported from an alternative analysis.
J	The analyte was detected above the reported quantitation limit, and the reported concentration was an estimated value.
R	The sample results are unusable due to the quality of the data generated because certain criteria were not met. The analyte may or may not be present in the sample.
U	The analyte was analyzed for, but was considered not detected at the reporting limit or reported value.
UJ	The analyte was analyzed for, and the associated quantitation limit was an estimated value.
X	The sample chromatographic pattern does not resemble the fuel standard used for quantitation.

9 References

U.S. Environmental Protection Agency (USEPA), 1994, Method 200.8 Determination of Trace Elements in Waters and Wastes by Inductively Coupled Plasma – Mass Spectrometry, Revision 5.4, Environmental Monitoring Systems Laboratory Office of Research and Development.

U.S. Environmental Protection Agency (USEPA), 1997, Method 1640 Determination of Trace Elements in Waters by Preconcentration and Inductively Coupled Plasma – Mass Spectrometry, Office of Water & Office of Science and Technology Engineering and Analysis Division (4303), April.

U.S. Environmental Protection Agency (USEPA), 1999, Contract Laboratory Program National Functional Guidelines for Inorganic Data Review, Office of Emergency and Remedial Response, USEPA Publication No. 540/R-99/008, October.

U.S. Environmental Protection Agency (USEPA), 2004, Contract Laboratory Program National Functional Guidelines for Organic Methods Data Review, Office of Superfund Remediation and Technology Innovation (OSRTI), USEPA Publication No. 540-R-04-004, October.

Aspect, 2013, Work Plan for Remedial Investigation/Feasibility Study, Kimberly-Clark Worldwide Site Upland Area, Everett, Washington, November 22, 2013.

DATA VALIDATION REPORT

Kimberly Clark Worldwide Site Upland Area
Interim Action Confirmational Groundwater Monitoring
February 2015
SDGs 502284, 502285, 502286, 502297, 502330, K1501795

Prepared by:
Aspect Consulting, LLC
401 Second Ave South, Suite 201
Seattle, WA 98104

Project No. 110207 • March 16, 2015

S:\Kimberly Clark\Everett Mill 110207\Data\Validation\Data Validation - Delia\KC IA Feb 2015 Data Validation.docx

1 Introduction

This report summarizes the findings of the United States Environmental Protection Agency (USEPA) Stage 2A data validation performed on analytical data for groundwater samples collected during February 17 through 19, 2015 for Kimberly Clark Worldwide Upland Site Interim Action Confirmational Groundwater Monitoring. This data quality review is divided into sections by sample delivery group (SDG). A complete list of samples and analyses for each SDG is provided in the Sample Index at the beginning of each section. The metals data were sent to a separate lab for analysis, and are presented in Section 7 at the end of the report.

Samples were analyzed for non-metal analytes by Friedman & Bruya, Inc in Seattle, Washington and Fremont Analytical in Seattle, Washington, and for metal analytes by ALS Environmental in Kelso, Washington. The analytical methods are summarized below:

Analysis	Method	Laboratory
Polycyclic Aromatic Hydrocarbons (PAHs)	SW8270D-SIM	Friedman & Bruya, Inc
TPH - Gasoline Range and BTEX[1]	NWTPH-Gx/EPA 8021B	Friedman & Bruya, Inc
TPH - Diesel and Motor Oil Ranges with Silica Gel	NWTPH-Dx	Friedman & Bruya, Inc
Extractable Petroleum Hydrocarbons (EPH)	NWEPH	Fremont Analytical
Total and Dissolved Metals	EPA 200.8	ALS
Total and Dissolved Mercury	EPA 1631E	ALS

The validation followed the procedures documented in the analytical methods, the Quality Assurance Project Plan (QAPP; in Appendix A to Aspect, 2013), *National Functional Guidelines for Organic Data Review* (USEPA, 1999), and *National Functional Guidelines for Inorganic Data Review* (USEPA, 2004).

Data assigned a J qualifier (estimated) may be used for site evaluation purposes but the reasons for qualification should be taken into account when interpreting sample concentrations. Data marked as do-not-report (DNR) should not be used under any circumstances. Values without qualification meet all data measurement quality objectives and are suitable for use.

Data qualifier definitions and a summary table of the qualified data are included in the Qualified Data Summary at the end of this report. Data qualifiers have been incorporated into the project chemistry database to reflect the validation in this report.

[1] BTEX = benzene, toluene, ethylbenzene, and xylenes

2 Data Validation Findings for SDG 502284

Groundwater samples in this SDG, and the chemical analyses performed on them, are tabulated below. The sections below describe the results of the data quality review for this SDG by analyte group (analysis).

Sample Index

Sample ID	Sample Date	Sample Matrix	Analyte		
			TPH-Dx/Oil w/ SG	TPH-Gx/BTEX	Low Level PAHs
NRS-MW101-021715	2/17/2015	GrWtr	x	x	x
NRS-MW102-021715	2/17/2015	GrWtr	x	x	x

2.1 PAHs (SW8270D-SIM)

2.1.1 Sample Receipt, Preservation, and Holding Times

Water samples should be extracted within 7 days of collection. Extracted samples should be analyzed within 40 days of extraction.

Sample receipt, preservation (2-6 degrees Celsius [C]), and holding times were acceptable.

2.1.2 Method Blanks

Target analytes were not detected at or above the reporting levels in the method blanks.

2.1.3 Surrogates

All percent recoveries (%R) were within control limits.

2.1.4 Laboratory Control Samples (LCS/LCSD)

Laboratory control sample (LCS) and laboratory control sample duplicate (LCSD) percent recovery (%R) and relative percent difference (RPD) were within the project control limits.

2.1.5 Matrix Spike/Matrix Spike Duplicates (MS/MSD)

Matrix spike (MS) and matrix spike duplicate (MSD) %R and RPD were within the project control limits, with the exception of eight analytes. However, because the parent sample was from a different SDG and the interference was likely due to the sample matrix, no results were qualified.

2.1.6 Reported Results and Reporting Limits (RL)

The reporting limits (RLs) outlined in the Quality Assurance Project Plan (QAPP; in Appendix A to Aspect, 2013) were met.

2.1.7 Overall Assessment

Accuracy was acceptable based on the surrogate, MS, and LCS recoveries, and precision was acceptable based on the MS/MSD and LCS/LCSD RPD values. The data are of known quality and are acceptable for use as qualified.

2.2 TPH-Gasoline and BTEX (NWTPH-Gx and EPA 8021B)

2.2.1 Sample Receipt, Preservation, and Holding Times

Water samples should be analyzed within 14 days of collection.

Sample receipt, preservation (2-6 degrees C), and holding times were acceptable.

2.2.2 Method Blanks

Target analytes were not detected at or above the reporting levels in the method blanks.

2.2.3 Surrogates

All %R were within control limits.

2.2.4 Laboratory Control Samples (LCS)

LCS %R were within the project control limits.

2.2.5 Laboratory Duplicate

For laboratory duplicate results that are greater than the reporting limit, the RPD control limit is 20%. For laboratory duplicate results less than five times the reporting limit, the difference between the sample and duplicate must be less than the reporting limit.

All RPD were within the control limits specified above.

2.2.6 Reported Results and Reporting Limits (RL)

All target RLs were met as outlined in the QAPP.

2.2.7 Overall Assessment

Accuracy was acceptable based on the surrogate and LCS recoveries, and precision was acceptable based on the laboratory duplicate RPD values. The data are of known quality and are acceptable for use as qualified.

2.3 Diesel- and Oil-Range TPH (NWTPH-Dx)

2.3.1 Sample Receipt, Preservation, and Holding Times

Water samples should be analyzed within 14 days of collection.

Sample receipt, preservation (2-6 degrees C), and holding times were acceptable.

2.3.2 Method Blanks

Target analytes were not detected at or above the reporting levels in the method blanks.

2.3.3 Surrogates

All %R were within control limits.

2.3.4 Laboratory Control Samples (LCS/LCSD)

LCS and LCSD %R and RPD were within the project control limits.

2.3.5 Reported Results and Reporting Limits (RL)

All target RLs were met as outlined in the QAPP.

2.3.6 Overall Assessment

Accuracy was acceptable based on the surrogate and LCS recoveries, and precision was acceptable based on the LCS/LCSD RPD values. The data are of known quality and are acceptable for use as qualified.

3 Data Validation Findings for SDG 502285

Groundwater samples in this SDG, and the chemical analyses performed on them, are tabulated below. The sections below describe the results of the data quality review for this SDG by analyte group (analysis).

Sample Index

Sample ID	Sample Date	Sample Matrix	Analyte		
			TPH-Dx/Oil w/ SG	TPH-Gx/BTEX	Low Level PAHs
NRU-MW101-021715	2/17/2015	GrWtr	x	x	x
NRU-MW102-021715	2/17/2015	GrWtr	x	x	x
NRP-MW2-021715	2/17/2015	GrWtr	x	x	x

3.1 PAHs (SW8270D-SIM)

3.1.1 Sample Receipt, Preservation, and Holding Times

Water samples should be extracted within 7 days of collection. Extracted samples should be analyzed within 40 days of extraction.

Sample receipt, preservation (2-6 degrees C), and holding times were acceptable.

3.1.2 Method Blanks

Target analytes were not detected at or above the reporting levels in the method blanks.

3.1.3 Surrogates

All surrogate spike %R were within control limits or were not applicable due to sample dilution below quantitation limits because of high petroleum hydrocarbon concentrations. No qualification of the results was necessary.

3.1.4 Laboratory Control Samples (LCS/LCSD)

LCS and LCSD %R and RPD were within the project control limits.

3.1.5 Matrix Spike/Matrix Spike Duplicates (MS/MSD)

MS and MSD %R and RPD were within the project control limits, with the exception of seven analytes. However, because the parent sample was from a different SDG and the interference was likely due to the sample matrix, no results were qualified.

3.1.6 Reported Results and Reporting Limits (RL)

The results for acenaphthene and fluorene in sample NRU-MW102-021715 exceeded the instrument calibration range, requiring the sample to be diluted and re-analyzed. These analytes were reported from the dilution and qualified as DNR in the undiluted sample. The remaining analytes were reported from the undiluted samples.

The RLs outlined in the QAPP were met or were elevated accordingly due to high concentrations of target analytes. RLs were acceptable for their intended use.

3.1.7 Overall Assessment

Accuracy was acceptable based on the surrogate, MS, and LCS recoveries, and precision was acceptable based on the MS/MSD and LCS/LCSD RPD values. The data are of known quality and are acceptable for use as qualified.

3.2 TPH-Gasoline and BTEX (NWTPH-Gx and EPA 8021B)

3.2.1 Sample Receipt, Preservation, and Holding Times

Water samples should be analyzed within 14 days of collection.

Sample receipt, preservation (2-6 degrees C), and holding times were acceptable.

3.2.2 Method Blanks

Target analytes were not detected at or above the reporting levels in the method blanks.

3.2.3 Surrogates

All %R were within control limits.

3.2.4 Laboratory Control Samples (LCS)

LCS %R were within the project control limits.

3.2.5 Laboratory Duplicate

For laboratory duplicate results that are greater than the reporting limit, the RPD control limit is 20%. For laboratory duplicate results less than five times the reporting limit, the difference between the sample and duplicate must be less than the reporting limit.

All RPD were within the control limits specified above.

3.2.6 Reported Results and Reporting Limits (RL)

The RLs outlined in the QAPP were met or were elevated accordingly due to high concentrations of target analytes. RLs were acceptable for their intended use.

3.2.7 Overall Assessment

Accuracy was acceptable based on the surrogate and LCS recoveries, and precision was acceptable based on the laboratory duplicate RPD values. The data are of known quality and are acceptable for use as qualified.

3.3 Diesel- and Oil-Range TPH (NWTPH-Dx)

3.3.1 Sample Receipt, Preservation, and Holding Times

Water samples should be analyzed within 14 days of collection.

Sample receipt, preservation (2-6 degrees C), and holding times were acceptable.

3.3.2 Method Blanks

Target analytes were not detected at or above the reporting levels in the method blanks.

3.3.3 Surrogates

All %R were within control limits.

3.3.4 Laboratory Control Samples (LCS/LCSD)

LCS and LCSD %R and RPD were within the project control limits.

3.3.5 Reported Results and Reporting Limits (RL)

All target RLs were met as outlined in the QAPP.

3.3.6 Overall Assessment

Accuracy was acceptable based on the surrogate and LCS recoveries, and precision was acceptable based on the LCS/LCSD RPD values. The data are of known quality and are acceptable for use as qualified.

4 Data Validation Findings for SDG 502286

Groundwater samples in this SDG, and the chemical analyses performed on them, are tabulated below. The sections below describe the results of the data quality review for this SDG by analyte group (analysis).

Sample Index

Sample ID	Sample Date	Sample Matrix	Analyte							
			TPH-Dx/Oil w/ SG	TPH-Gx/ BTEX	Low Level PAHs	Arsenic	Copper	Lead	Mercury	Zinc
BBH-MW103-021715	2/17/2015	GrWtr				x	x	x	x	x
BBH-MW102-021715	2/17/2015	GrWtr				x	x	x	x	x
BBH-MW104-021715	2/17/2015	GrWtr				x	x	x	x	x
BCT-MW104-021715	2/17/2015	GrWtr	x	x	x		x	x	x	
BCT-MW105-021715	2/17/2015	GrWtr	x	x	x		x	x	x	
UST71-MW101-021715	2/17/2015	GrWtr	x		x		x			x
UST71-MW102-021715	2/17/2015	GrWtr	x		x		x			x

4.1 PAHs (SW8270D-SIM)

4.1.1 Sample Receipt, Preservation, and Holding Times

Water samples should be extracted within 7 days of collection. Extracted samples should be analyzed within 40 days of extraction.

Sample receipt, preservation (2-6 degrees C), and holding times were acceptable.

4.1.2 Method Blanks

Target analytes were not detected at or above the reporting levels in the method blanks.

4.1.3 Surrogates

All %R were within control limits.

4.1.4 Laboratory Control Samples (LCS/LCSD)

LCS and LCSD %R and RPD were within the project control limits.

4.1.5 Matrix Spike/Matrix Spike Duplicates (MS/MSD)

MS and MSD %R and RPD were within the project control limits, with the exception of seven analytes. However, because the parent sample was from a different SDG and the interference was likely due to the sample matrix, no results were qualified.

4.1.6 Reported Results and Reporting Limits (RL)

All target RLs were met as outlined in the QAPP.

4.1.7 Overall Assessment

Accuracy was acceptable based on the surrogate, MS, and LCS recoveries and precision was acceptable based on the MS/MSD and LCS/LCSD RPD values. The data are of known quality and are acceptable for use as qualified.

4.2 TPH-Gasoline and BTEX (NWTPH-Gx and EPA 8021B)

4.2.1 Sample Receipt, Preservation, and Holding Times

Water samples should be analyzed within 14 days of collection.

Sample receipt, preservation (2-6 degrees C), and holding times were acceptable.

4.2.2 Method Blanks

Target analytes were not detected at or above the reporting levels in the method blanks.

4.2.3 Surrogates

All %R were within control limits.

4.2.4 Laboratory Control Samples (LCS)

LCS %R were within the project control limits.

4.2.5 Laboratory Duplicate

For laboratory duplicate results that are greater than the reporting limit, the RPD control limit is 20%. For laboratory duplicate results less than five times the reporting limit, the difference between the sample and duplicate must be less than the reporting limit.

All RPD were within the control limits specified above.

4.2.6 Reported Results and Reporting Limits (RL)

All target RLs were met as outlined in the QAPP.

4.2.7 Overall Assessment

Accuracy was acceptable based on the surrogate spike and LCS recoveries, and precision was acceptable based on the laboratory duplicate RPD values. The data are of known quality and are acceptable for use as qualified.

4.3 Diesel- and Oil-Range TPH (NWTPH-Dx)

4.3.1 Sample Receipt, Preservation, and Holding Times

Water samples should be analyzed within 14 days of collection.

Sample receipt, preservation (2-6 degrees C), and holding times were acceptable.

4.3.2 Method Blanks

Target analytes were not detected at or above RLs in the method blanks.

4.3.3 Surrogates

All %R were within control limits.

4.3.4 Laboratory Control Samples (LCS/LCSD)

LCS and LCSD %R and RPD were within the project control limits.

4.3.5 Reported Results and Reporting Limits (RL)

All target RLs were met as outlined in the QAPP.

4.3.6 Overall Assessment

Accuracy was acceptable based on the surrogate spike and LCS recoveries, and precision was acceptable based on the LCS/LCSD RPD values. The data are of known quality and are acceptable for use as qualified.

5 Data Validation Findings for SDG 502297

Groundwater samples in this SDG, and the chemical analyses performed on them, are tabulated below. The sections below describe the results of the data quality review for this SDG by analyte group (analysis).

Sample Index

Sample ID	Sample Date	Sample Matrix	Analyte									
			TPH-Dx/ Oil w/ SG	TPH-Gx/ BTEX	Low Level PAHs	EPH	Hg	As	Cu	Pb	Ni	Zn
GF11-MW101-021815	2/18/2015	GrWtr					x		x	x		
HBV-MW101-021815	2/18/2015	GrWtr	x		x							
BBH-MW101-021815	2/18/2015	GrWtr					x	x	x	x		x
UST71-MW104-021815	2/18/2015	GrWtr	x		x				x			x
UST71-MW500-021815	2/18/2015	GrWtr	x		x				x			x
UST29-MW101-021815	2/18/2015	GrWtr	x	x	x							
UST29-MW102-021815	2/18/2015	GrWtr	x	x	x							
UST29-MW103-021815	2/18/2015	GrWtr	x	x	x							
UST71-MW103-021815	2/18/2015	GrWtr	x		x	x			x			x
BA6-MW101-021815	2/18/2015	GrWtr	x		x							
SHB-MW101-021815	2/18/2015	GrWtr	x	x	x		x		x			
SHB-MW102-021815	2/18/2015	GrWtr	x	x	x		x		x			
RCD-MW101-021815	2/18/2015	GrWtr	x		x		x	x	x		x	
UST70-MW101-021815	2/18/2015	GrWtr	x		x			x	x		x	x
UST70-MW102-021815	2/18/2015	GrWtr	x		x			x	x		x	x
BCT-MW106-021815	2/18/2015	GrWtr	x	x	x		x		x	x		

5.1 PAHs (SW8270D-SIM)

5.1.1 Sample Receipt, Preservation, and Holding Times

Water samples should be extracted within 7 days of collection. Extracted samples should be analyzed within 40 days of extraction.

Sample receipt, preservation (2-6 degrees C), and holding times were acceptable.

5.1.2 Method Blanks

Target analytes were not detected at or above the reporting levels in the method blanks.

5.1.3 Surrogates

All surrogate spike %R were within control limits or were not applicable due to sample matrix interference or sample dilution below quantitation limits because of high petroleum hydrocarbon concentrations.

5.1.4 Laboratory Control Samples (LCS/LCSD)

LCS and LCSD %R and RPD were within the project control limits.

5.1.5 Matrix Spike/Matrix Spike Duplicates (MS/MSD)

MS and MSD %R and RPD were within the project control limits, with several exceptions. The %R and/or RPD were outside the control limits for benz(a)anthracene, chrysene, benzo(b)fluoranthene, benzo(k)fluoranthene, benzo(a)pyrene, indeno(1,2,3-

c,d)pyrene, dibenz(a,h)anthracene, and benzo(g,h,i)perylene. These analytes were qualified as estimated (J) in the parent sample, UST71-MW104-021814.

5.1.6 Field Duplicates

Field duplicates are an indication of both field and laboratory precision. According to the EPA National Functional Guidelines, there are no set criteria for field duplicate evaluation, but the following advisory criteria were used. For results greater than or equal to the analytical RL, the advisory RPD is 35%. For results <5 times the RL, the difference between the sample and the duplicate should be <RL.

One set of blind field duplicates was submitted for this analysis, UST71-MW104-021815 and UST71-MW500-021815. The RPD for the field duplicate pair was within the control limits specified above.

5.1.7 Reported Results and Reporting Limits (RL)

The results for naphthalene, acenaphthene, fluorene, and phenanthrene in sample UST71-MW103-021815 exceeded the instrument calibration range, requiring the sample to be diluted and re-analyzed. These analytes were reported from the dilution and qualified as DNR in the undiluted sample. The remaining analytes were reported from the undiluted samples.

The results for naphthalene and acenaphthene in sample SHB-MW101-021815 and acenaphthene in UST70-MW102-021815 also exceeded the linear range and were qualified in the same manner.

The reporting limits outlined in the QAPP were met or were elevated accordingly due to high concentrations of target analytes. RLs were acceptable for their intended use.

5.1.8 Overall Assessment

Accuracy was acceptable based on the surrogate, MS, and LCS recoveries, and precision was acceptable based on the MS/MSD, LCS/LCSD and field duplicate RPD values. The data are of known quality and are acceptable for use as qualified.

5.2 TPH-Gasoline and BTEX (NWTPH-Gx and EPA 8021B)

5.2.1 Sample Receipt, Preservation, and Holding Times

Water samples should be analyzed within 14 days of collection.

Sample receipt, preservation (2-6 degrees C), and holding times were acceptable.

5.2.2 Method Blanks

Target analytes were not detected at or above the reporting levels in the method blanks.

5.2.3 Surrogates

All %R were within control limits.

5.2.4 Laboratory Control Samples (LCS)

LCS %R were within the project control limits.

5.2.5 Laboratory Duplicate

For laboratory duplicate results that are greater than the reporting limit, the RPD control limit is 20%. For laboratory duplicate results less than five times the reporting limit, the difference between the sample and duplicate must be less than the reporting limit.

All RPD were within the control limits specified above.

5.2.6 Field Duplicates

One set of blind field duplicates was submitted, UST71-MW104-021815 and UST71-MW500-021815. All RPD were within the control limits specified above.

5.2.7 Reported Results and Reporting Limits (RL)

All reporting limits were met as outlined in the QAPP.

5.2.8 Overall Assessment

Accuracy was acceptable based on the surrogate and LCS recoveries, and precision was acceptable based on the laboratory and field duplicate RPD values. The data are of known quality and are acceptable for use as qualified.

5.3 Diesel- and Oil-Range TPH (NWTPH-Dx)

5.3.1 Sample Receipt, Preservation, and Holding Times

Water samples should be analyzed within 14 days of collection.

Sample receipt, preservation (2-6 degrees C), and holding times were acceptable.

5.3.2 Method Blanks

Target analytes were not detected at or above the reporting levels in the method blanks.

5.3.3 Surrogates

All %R were within control limits.

5.3.4 Laboratory Control Samples (LCS/LCSD)

LCS %R were within the project control limits, however, the LCSD %R and RPD were above the project control limits. All positive sample results were qualified as estimated (J).

5.3.5 Matrix Spike/Matrix Spike Duplicates (MS/MSD)

MS and MSD %R and RPD were within the project control limits.

5.3.6 Field Duplicates

One set of blind field duplicates was submitted, UST71-MW104-021815 and UST71-MW500-021815. All RPD were within the control limits specified above.

5.3.7 Reported Results and Reporting Limits (RL)

All target RLs were met as outlined in the QAPP.

5.3.8 Overall Assessment

Accuracy was acceptable based on the surrogate, MS, and LCS recoveries, and precision was acceptable based on the MS/MSD, LCS/LCSD and field duplicate RPD values. The data are of known quality and are acceptable for use as qualified.

5.4 Extractable Petroleum Hydrocarbons (NWEPH)

5.4.1 Sample Receipt, Preservation, and Holding Times

Water samples should be extracted within 14 days of collection. Extracted samples must be analyzed within 40 days of extraction.

Sample receipt, preservation (2-6 degrees C), and holding times were acceptable.

5.4.2 Method Blanks

Target analytes were not detected at or above the reporting levels in the method blanks.

5.4.3 Surrogates

All %R were within control limits.

5.4.4 Laboratory Control Samples (LCS/LCSD)

LCS and LCSD %R and RPD were within the project control limits.

5.4.5 Reported Results and Reporting Limits (RL)

All target RLs were met as outlined in the QAPP.

5.4.6 Overall Assessment

Accuracy was acceptable based on the surrogate and LCS recoveries, and precision was acceptable based on the LCS/LCSD RPD values. The data are of known quality and are acceptable for use as qualified.

6 Data Validation Findings for SDG 502330

Groundwater samples in this SDG, and the chemical analyses performed on them, are tabulated below. The sections below describe the results of the data quality review for this SDG by analyte group (analysis).

Sample Index

Sample ID	Sample Date	Sample Matrix	Analyte								
			TPH-Dx/Oil w/ SG	TPH-Gx/ BTEX	Low Level PAHs	Mercury	Arsenic	Copper	Lead	Nickel	Zinc
BCT-MW103-021915	2/19/2015	GrWtr	x	x	x	x		x	x		
BCT-MW102-021915	2/19/2015	GrWtr	x	x	x	x		x	x		
BCT-MW101-021915	2/19/2015	GrWtr	x	x	x	x		x	x		
BCT-MW500-021915	2/19/2015	GrWtr	x	x	x	x		x	x		
BCT-MW107-021915	2/19/2015	GrWtr	x	x	x	x		x	x		
BCT-MW108-021915	2/19/2015	GrWtr	x	x	x	x		x	x		
DAST-MW-101-021915	2/19/2015	GrWtr	x		x	x		x			
CN-MW101-021915	2/19/2015	GrWtr	x		x		x	x	x		
CN-MW102-021915	2/19/2015	GrWtr	x		x		x	x	x		
CN-MW103-021915	2/19/2015	GrWtr	x		x		x	x	x		
CN-MW104-021915	2/19/2015	GrWtr	x		x		x	x	x		
UST70-MW2-021915	2/19/2015	GrWtr	x		x		x	x		x	x

6.1 PAHs (SW8270-SIM)

6.1.1 Sample Receipt, Preservation, and Holding Times

Water samples should be extracted within 7 days of collection. Extracted samples should be analyzed within 40 days of extraction.

Sample receipt, preservation (2-6 degrees C), and holding times were acceptable.

6.1.2 Method Blanks

Target analytes were not detected at or above the reporting levels in the method blanks.

6.1.3 Surrogates

All surrogate spike %R were within control limits or were not applicable due to sample matrix interference or sample dilution below quantitation limits because of high petroleum hydrocarbon concentrations.

6.1.4 Laboratory Control Samples (LCS/LCSD)

LCS and LCSD %R and RPD were within the project control limits.

6.1.5 Matrix Spike/Matrix Spike Duplicates (MS/MSD)

MS and MSD %R and RPD were within the project control limits, with one exception. The RPDs for fluorene, phenanthrene, anthracene, benzo(k)fluoranthene, indeno(1,2,3-c,d)pyrene, dibenz(a,h)anthracene, and benzo(g,h,i)perylene in BCT-MW101-021915 were above the control limit of 20%. The results for these analytes were qualified as estimated (UJ).

6.1.6 Field Duplicates

One set of blind field duplicates was submitted, BCT-MW101-021915 and BCT-MW500-021915. All RPD were within the control limits specified above.

6.1.7 Reported Results and Reporting Limits (RL)

The results for naphthalene, acenaphthene, and fluorene in samples BCT-MW107-021915 and BCT-MW108-021915 exceeded the instrument calibration range, requiring the samples to be diluted and re-analyzed. These analytes were reported from the dilution and qualified as DNR in the undiluted samples. The remaining analytes were reported from the undiluted samples.

The results for acenaphthene and fluorene in sample DAST-MW-101-021915 also exceeded the linear range and were qualified in the same manner.

The reporting limits outlined in the QAPP were met or were elevated accordingly due to high concentrations of target analytes. RLs were acceptable for their intended use.

6.1.8 Overall Assessment

Accuracy was acceptable based on the surrogate, MS, and LCS recoveries, and precision was acceptable based on the field duplicate, MS/MSD, and LCS/LCSD RPD values. The data are of known quality and are acceptable for use as qualified.

6.2 TPH-Gasoline and BTEX (NWTPH-Gx and EPA 8021B)

6.2.1 Sample Receipt, Preservation, and Holding Times

Water samples should be analyzed within 14 days of collection.

Sample receipt, preservation (2-6 degrees C), and holding times were acceptable.

6.2.2 Method Blanks

Target analytes were not detected at or above the reporting levels in the method blanks.

6.2.3 Surrogates

All %R were within control limits.

6.2.4 Laboratory Control Samples (LCS)

LCS %R were within the project control limits.

6.2.5 Matrix Spike/Matrix Spike Duplicates (MS/MSD)

MS and MSD %R and RPD were within the project control limits.

6.2.6 Field Duplicates

One set of blind field duplicates was submitted, BCT-MW101-021915 and BCT-MW500-021915. All RPD were within the control limits specified above.

6.2.7 Reported Results and Reporting Limits (RL)

All reporting limits were met as outlined in the QAPP.

6.2.8 Overall Assessment

Accuracy was acceptable based on the surrogate spikes, MS, and LCS recoveries, and precision was acceptable based on the MS/MSD and RPD values. The data are of known quality and are acceptable for use as qualified.

6.3 Diesel- and Oil-Range TPH (NWTPH-Dx)

6.3.1 Sample Receipt, Preservation, and Holding Times

Water samples should be analyzed within 14 days of collection.

Sample receipt, preservation (2-6 degrees C), and holding times were acceptable.

6.3.2 Method Blanks

Target analytes were not detected at or above the reporting levels in the method blanks.

6.3.3 Surrogates

All %R were within control limits.

6.3.4 Laboratory Control Samples (LCS/LCSD)

LCS and LCSD %R and RPD were within the project control limits.

6.3.5 Matrix Spike/Matrix Spike Duplicates (MS/MSD)

MS and MSD %R and RPD were within the project control limits.

6.3.6 Field Duplicates

One set of blind field duplicates was submitted, BCT-MW101-021915 and BCT-MW500-021915. All RPD were within the control limits specified above.

6.3.7 Reported Results and Reporting Limits (RL)

All target RLs were met as outlined in the QAPP.

6.3.8 Overall Assessment

Accuracy was acceptable based on the surrogate, MS, and LCS recoveries, and precision was acceptable based on the field duplicate, MS/MSD, and LCS/LCSD RPD values. The data are of known quality and are acceptable for use as qualified.

7 Data Validation Findings for SDG K1501795 (Metals Analyses)

In accordance with the QAPP, the groundwater samples were submitted to ALS in Kelso, Washington, for metals analyses, as they have particular expertise performing trace metals analyses in saline water matrices. Friedman and Bruya combined groundwater samples from multiple SDGs into a single batch for transfer to ALS. The specific metal analytes for each sample in this ALS SDG are tabulated in the preceding sections. The sections below describe the results of the data quality review, separated into mercury and the other metals. The groundwater samples for metals analysis were field-filtered, therefore the results are reported as dissolved metals.

7.1 Dissolved Mercury (EPA 1631E)

7.1.1 Sample Receipt, Preservation, and Holding Times

Water samples should be analyzed within 28 days of extraction.

Sample receipt, preservation (2-6 degrees C), and holding times were acceptable, with one exception. Sample RCD-MW101-021815 was incorrectly labeled as RCD-MW102-021815, but the lab was able to determine the correct Sample ID through process of elimination. No further action was needed.

7.1.2 Method Blanks

Target analytes were not detected at or above the reporting levels in the method blanks.

7.1.3 Laboratory Control Samples (LCS)

LCS %R were within the project control limits.

7.1.4 Matrix Spike/Matrix Spike Duplicates (MS/MSD)

MS and MSD %R and RPD were within the project control limits.

7.1.5 Field Duplicates

One set of blind field duplicates was submitted, BCT-MW101-021915 and BCT-MW500-021915. All RPD were within the control limits specified above.

7.1.6 Reported Results and Reporting Limits (RL)

The RLs outlined in the QAPP were met or were elevated accordingly due to high concentrations of target analytes. RLs were acceptable for their intended use.

7.1.7 Overall Assessment

Accuracy was acceptable based on the MS and LCS recoveries, and precision was acceptable based on the MS/MSD and field duplicate RPD values. The data are of known quality and are acceptable for use as qualified.

7.2 Dissolved Metals (EPA 200.8)

7.2.1 Sample Receipt, Preservation, and Holding Times

Water samples should be analyzed within 180 days of extraction.

Sample receipt, preservation (2-6 degrees C), and holding times were acceptable.

To reduce the analytical interferences due to high concentrations of dissolved solids, samples identified as having high specific conductance in the field (UST70-MW2-021915, RCD-MW101-021915) were prepared by the reductive precipitation method (USEPA, 1997).

7.2.2 Method Blanks

Target analytes were not detected at or above the reporting levels in the method blanks.

7.2.3 Laboratory Control Samples (LCS)

LCS %R were within the project control limits.

7.2.4 Matrix Spike (MS)

MS %R were within the project control limits.

7.2.5 Laboratory Duplicates

For laboratory duplicate results that are greater than the reporting limit, the RPD control limit is 20%. For laboratory duplicate results less than five times the reporting limit, the difference between the sample and duplicate must be less than the reporting limit.

All RPD were within the control limits specified above.

7.2.6 Field Duplicates

Two sets of blind field duplicates were submitted, BCT-MW101-021915 and BCT-MW500-021915; and UST71-MW104-021815 and UST71-MW500-021815. All RPD were within the control limits specified above.

7.2.7 Reported Results and Reporting Limits (RL)

All target RLs were met as outlined in the QAPP.

7.2.8 Overall Assessment

Accuracy was acceptable based on the MS and LCS recoveries, and precision was acceptable based on the laboratory duplicate and field duplicate RPD values. The data are of known quality and are acceptable for use as qualified.

8 Qualified Data Summary Table

Sample ID	Laboratory ID	Analyte	Qualifier	Qualified Reason
UST71-MW104-021815	502297-04	Benz(a)anthracene Chrysene Benzo(b)fluoranthene Benzo(k)fluoranthene Benzo(a)pyrene Indeno(1,2,3-cd)pyrene Dibenzo(a,h)anthracene Benzo(ghi)perylene	UJ	MS/MSD %R and RPD outside control limits.
UST71-MW104-021815 UST29-MW103-021815 UST71-MW103-021815 SHB-MW101-021815	502297-04 502297-08 502297-09 502297-11	Diesel Range Hydrocarbons	J	LCS/LCSD %R and RPD above control limits.
BCT-MW101-021915	502330-03	Fluorene Phenanthrene Anthracene Benzo(k)fluoranthene Indeno(1,2,3-cd)pyrene Dibenzo(a,h)anthracene Benzo(ghi)perylene	UJ/J	MS/MSD %R and RPD outside control limits.
UST71-MW103-021815	502297-09	Naphthalene Acenaphthene Fluorene Phenanthrene	DNR	Result outside of instrument calibration range. Use diluted result.
		Acenaphthylene Anthracene Fluoranthene Pyrene Benz[a]anthracene Chrysene Benzo(a)pyrene Benzo(b)fluoranthene Benzo(k)fluoranthene Indeno(1,2,3-cd)pyrene Dibenzo(a,h)anthracene Benzo(ghi)perylene	DNR	A more appropriate result is reported. Use undiluted result.
SHB-MW101-021815	502297-11	Naphthalene Acenaphthene	DNR	Result outside of instrument calibration range. Use diluted result.
		Acenaphthylene Fluorene Phenanthrene Anthracene Fluoranthene Pyrene Benz[a]anthracene Chrysene Benzo(a)pyrene Benzo(b)fluoranthene Benzo(k)fluoranthene Indeno(1,2,3-cd)pyrene Dibenzo(a,h)anthracene Benzo(ghi)perylene	DNR	A more appropriate result is reported. Use undiluted result.

Sample ID	Laboratory ID	Analyte	Qualifier	Qualified Reason
UST70-MW102-021815	502297-15	Acenaphthene	DNR	Result outside of instrument calibration range. Use diluted result.
		Naphthalene Acenaphthylene Fluorene Phenanthrene Anthracene Fluoranthene Pyrene Benz[a]anthracene Chrysene Benzo(a)pyrene Benzo(b)fluoranthene Benzo(k)fluoranthene Indeno(1,2,3-cd)pyrene Dibenzo(a,h)anthracene Benzo(ghi)perylene	DNR	A more appropriate result is reported. Use undiluted result.
BCT-MW107-021915 BCT-MW108-021915	502330-05 502330-06	Naphthalene Acenaphthene Fluorene	DNR	Result outside of instrument calibration range. Use diluted result.
		Acenaphthylene Phenanthrene Anthracene Fluoranthene Pyrene Benz[a]anthracene Chrysene Benzo(a)pyrene Benzo(b)fluoranthene Benzo(k)fluoranthene Indeno(1,2,3-cd)pyrene Dibenzo(a,h)anthracene Benzo(ghi)perylene	DNR	A more appropriate result is reported. Use undiluted result.
NRU-MW102-021715 DAST-MW-101-021915	502285-02 502330-07	Acenaphthene Fluorene	DNR	Result outside of instrument calibration range. Use diluted result.
		Naphthalene Acenaphthylene Phenanthrene Anthracene Fluoranthene Pyrene Benz[a]anthracene Chrysene Benzo(a)pyrene Benzo(b)fluoranthene Benzo(k)fluoranthene Indeno(1,2,3-cd)pyrene Dibenzo(a,h)anthracene Benzo(ghi)perylene	DNR	A more appropriate result is reported. Use undiluted result.

Data Qualifier Definitions

Data Qualifier	Definition
DNR	Do not report; the result should be reported from an alternative analysis.
J	The analyte was detected above the reported quantitation limit, and the reported concentration was an estimated value.
R	The sample results are unusable due to the quality of the data generated because certain criteria were not met. The analyte may or may not be present in the sample.
U	The analyte was analyzed for, but was considered not detected at the reporting limit or reported value.
UJ	The analyte was analyzed for, and the associated quantitation limit was an estimated value.
X	The sample chromatographic pattern does not resemble the fuel standard used for quantitation.

9 References

Aspect, 2013, Work Plan for Remedial Investigation/Feasibility Study, Kimberly-Clark Worldwide Site Upland Area, Everett, Washington, November 22, 2013.

U.S. Environmental Protection Agency (USEPA), 1994, Method 200.8 Determination of Trace Elements in Waters and Wastes by Inductively Coupled Plasma – Mass Spectrometry, Revision 5.4, Environmental Monitoring Systems Laboratory Office of Research and Development.

U.S. Environmental Protection Agency (USEPA), 1997, Method 1640 Determination of Trace Elements in Waters by Preconcentration and Inductively Coupled Plasma – Mass Spectrometry, Office of Water & Office of Science and Technology Engineering and Analysis Division (4303), April.

U.S. Environmental Protection Agency (USEPA), 1999, Contract Laboratory Program National Functional Guidelines for Inorganic Data Review, Office of Emergency and Remedial Response, USEPA Publication No. 540/R-99/008, October.

U.S. Environmental Protection Agency (USEPA), 2004, Contract Laboratory Program National Functional Guidelines for Organic Methods Data Review, Office of Superfund Remediation and Technology Innovation (OSRTI), USEPA Publication No. 540-R-04-004, October.

DATA VALIDATION REPORT

Kimberly Clark Worldwide Site Upland Area
Interim Action Confirmational Groundwater Monitoring
April 2015
SDGs K1504093

Prepared by:
Aspect Consulting, LLC
401 Second Ave South, Suite 201
Seattle, WA 98104

Project No. 110207 • April 29, 2015

S:\Kimberly Clark\Everett Mill 110207\Data\Validation\Data Validation - Delia\KC IA Feb 2015 Data Validation.docx

1 Introduction

This report summarizes the findings of the United States Environmental Protection Agency (USEPA) Stage 2A data validation performed on analytical data for groundwater samples collected on April 20, 2015 for Kimberly Clark Worldwide Upland Site Interim Action Confirmational Groundwater Monitoring. This data quality review is divided into sections by sample delivery group (SDG). A complete list of samples and analyses for each SDG is provided in the Sample Index at the beginning of each section.

Samples were analyzed for metal analytes by ALS Environmental in Kelso, Washington. The analytical methods are summarized below:

Analysis	Method	Laboratory
Total and Dissolved Metals	EPA 200.8	ALS
Total and Dissolved Mercury	EPA 1631E	ALS

The validation followed the procedures documented in the analytical methods, the Quality Assurance Project Plan (QAPP; in Appendix A to Aspect, 2013), *National Functional Guidelines for Organic Data Review* (USEPA, 1999), and *National Functional Guidelines for Inorganic Data Review* (USEPA, 2004).

Data assigned a J qualifier (estimated) may be used for site evaluation purposes but the reasons for qualification should be taken into account when interpreting sample concentrations. Data marked as do-not-report (DNR) should not be used under any circumstances. Values without qualification meet all data measurement quality objectives and are suitable for use.

Data qualifier definitions and a summary table of the qualified data are included in the Qualified Data Summary at the end of this report. Data qualifiers have been incorporated into the project chemistry database to reflect the validation in this report.

2 Data Validation Findings for SDG K1504093

Sample ID	Sample Date	Sample Matrix	Analyte				
			Arsenic	Copper	Lead	Mercury	Zinc
BBH-MW103-021715	2/17/2015	GrWtr	x	x	x	x	x

2.1 Dissolved Mercury (EPA 1631E)

2.1.1 Sample Receipt, Preservation, and Holding Times

Water samples should be analyzed within 28 days of extraction.

Sample receipt, preservation (2-6 degrees C), and holding times were acceptable, with one exception. Sample BBH-MW103-042015 had a pH > 2 upon sample receipt, however, sufficient nitric acid was added to lower the pH more than 16 hours before analysis. No further action was needed.

2.1.2 Method Blanks

Target analytes were not detected at or above the reporting levels in the method blanks.

2.1.3 Laboratory Control Samples (LCS)

LCS %R were within the project control limits.

2.1.4 Matrix Spike/Matrix Spike Duplicates (MS/MSD)

MS and MSD %R and RPD were within the project control limits.

2.1.5 Reported Results and Reporting Limits (RL)

The RLs outlined in the QAPP were met or were elevated accordingly due to high concentrations of target analytes. RLs were acceptable for their intended use.

2.1.6 Overall Assessment

Accuracy was acceptable based on the MS and LCS recoveries, and precision was acceptable based on the MS/MSD RPD values. The data are of known quality and are acceptable for use as qualified.

2.2 Dissolved Metals (EPA 200.8)

2.2.1 Sample Receipt, Preservation, and Holding Times

Water samples should be analyzed within 180 days of extraction.

Sample receipt, preservation (2-6 degrees C), and holding times were acceptable. Sample BBH-MW103-042015 had a pH > 2 upon sample receipt, however, sufficient nitric acid was added to lower the pH more than 16 hours before analysis. No further action was needed.

2.2.2 Method Blanks

Target analytes were not detected at or above the reporting levels in the method blanks.

2.2.3 Laboratory Control Samples (LCS)

LCS %R were within the project control limits.

2.2.4 Matrix Spike (MS)

MS %R were within the project control limits.

2.2.5 Laboratory Duplicates

For laboratory duplicate results that are greater than the reporting limit, the RPD control limit is 20%. For laboratory duplicate results less than five times the reporting limit, the difference between the sample and duplicate must be less than the reporting limit.

All RPD were within the control limits specified above.

2.2.6 Reported Results and Reporting Limits (RL)

All target RLs were met as outlined in the QAPP.

2.2.7 Overall Assessment

Accuracy was acceptable based on the MS and LCS recoveries, and precision was acceptable based on the laboratory duplicate RPD values. The data are of known quality and are acceptable for use as qualified.

3 Qualified Data Summary Table

No data were qualified.

Data Qualifier Definitions

Data Qualifier	Definition
DNR	Do not report; the result should be reported from an alternative analysis.
J	The analyte was detected above the reported quantitation limit, and the reported concentration was an estimated value.
R	The sample results are unusable due to the quality of the data generated because certain criteria were not met. The analyte may or may not be present in the sample.
U	The analyte was analyzed for, but was considered not detected at the reporting limit or reported value.
UJ	The analyte was analyzed for, and the associated quantitation limit was an estimated value.
X	The sample chromatographic pattern does not resemble the fuel standard used for quantitation.

4 References

Aspect, 2013, Work Plan for Remedial Investigation/Feasibility Study, Kimberly-Clark Worldwide Site Upland Area, Everett, Washington, November 22, 2013.

U.S. Environmental Protection Agency (USEPA), 1994, Method 200.8 Determination of Trace Elements in Waters and Wastes by Inductively Coupled Plasma – Mass Spectrometry, Revision 5.4, Environmental Monitoring Systems Laboratory Office of Research and Development.

U.S. Environmental Protection Agency (USEPA), 1997, Method 1640 Determination of Trace Elements in Waters by Preconcentration and Inductively Coupled Plasma – Mass Spectrometry, Office of Water & Office of Science and Technology Engineering and Analysis Division (4303), April.

U.S. Environmental Protection Agency (USEPA), 1999, Contract Laboratory Program National Functional Guidelines for Inorganic Data Review, Office of Emergency and Remedial Response, USEPA Publication No. 540/R-99/008, October.

U.S. Environmental Protection Agency (USEPA), 2004, Contract Laboratory Program National Functional Guidelines for Organic Methods Data Review, Office of Superfund Remediation and Technology Innovation (OSRTI), USEPA Publication No. 540-R-04-004, October.

DATA VALIDATION REPORT

Kimberly Clark – Everett Mill
Groundwater Testing
November 2015
SDG 511246, K1513350

Prepared by:
Aspect Consulting, LLC
401 Second Ave South, Suite 201
Seattle, WA 98104

Project No. 110207 • February 25, 2016

1 Introduction

This report summarizes the findings of the United States Environmental Protection Agency (USEPA) Stage 2A data validation performed on analytical data for groundwater samples collected from November 16 through 18 2015 for Kimberly Clark Everett Mill RI-FS sampling. This data quality review is divided into sections by sample delivery group (SDG). A complete list of samples and analyses for each SDG is provided in the Sample Index at the beginning of each section.

Samples were analyzed for PAHs, TPH/BTEX by Friedman and Bruya, Inc. (F&B). Analysis for metals, and mercury was subcontracted to ALS Environmental (ALS). The analytical methods are summarized below:

Analysis	Method	Laboratory
Mercury - Dissolved	EPA 1631	ALS
Metals (As, Cu, Ni, Pb, Zn) - Dissolved	EPA 200.8	ALS
PAH	EPA 8270D-SIM	F&B
TPH - Diesel with Silica Gel Cleanup	NWTPH-DXSG	F&B
TPH Gasoline / BTEX	NWTPH-GBTEX	F&B

The validation followed the procedures documented in the analytical methods, the Quality Assurance Project Plan (QAPP; in Appendix A to Aspect, 2013), *National Functional Guidelines for Organic Data Review* (USEPA, 1999), and *National Functional Guidelines for Inorganic Data Review* (USEPA, 2004).

Data assigned a J qualifier (estimated) may be used for site evaluation purposes but the reasons for qualification should be taken into account when interpreting sample concentrations. Data marked as do-not-report or rejected (R) should not be used under any circumstances. Values without qualification meet all data measurement quality objectives and are suitable for use.

Data qualifier definitions and a summary table of the qualified data are included in the Qualified Data Summary at the end of this report. Data qualifiers have been incorporated into the project chemistry database to reflect the validation in this report.

2 Data Validation Findings for SDG 511246

Groundwater samples in this SDG, and the chemical analyses performed on them, are tabulated below. The sections below describe the results of the data quality review for this SDG by analyte group (analysis).

Sample Index

				Analysis		
Sample ID	**Sample Date**	**Sample Type**	**Sample Matrix**	**PAHs**	**TPH-DX**	**TPH-GBTEX**
BCT-MW103-111715	11/17/2015	N	GrWtr	x	x	x
BCT-MW104-111715	11/17/2015	N	GrWtr	x	x	x
BCT-MW105-111715	11/17/2015	N	GrWtr	x	x	x
BCT-MW106-111715	11/17/2015	N	GrWtr	x	x	x
BCT-MW107-111715	11/17/2015	N	GrWtr	x	x	x
BCT-MW108-111615	11/16/2015	N	GrWtr	x	x	x
BCT-MW500-111715	11/17/2015	FD	GrWtr	x	x	x
MW-1-111815	11/18/2015	N	GrWtr	x	x	x
MW-2-111815	11/18/2015	N	GrWtr	x	x	x
PM-MW8-111715	11/18/2015	N	GrWtr	x		
REC3-MW1R-111715	11/17/2015	N	GrWtr	x		
SHB-MW101-111815	11/18/2015	N	GrWtr	x		
UST29-MW101-111615	11/18/2015	N	GrWtr	x		
UST71-MW101-111715	11/17/2015	N	GrWtr	x	x	
UST71-MW102-111715	11/17/2015	N	GrWtr	x	x	
UST71-MW103-111815	11/18/2015	N	GrWtr	x	x	

2.1 PAH (EPA 8270D SIM)

2.1.1 Sample Receipt, Preservation, and Holding Times

Sample receipt, and preservation (2-6 degrees C) were acceptable.

Samples were analyzed within the requisite holding time limit.

2.1.2 Method Blanks

Target analytes were not detected at or above the reporting levels in the method blanks. No qualification or action was needed.

2.1.3 Surrogate Recovery

Surrogate recoveries where acceptable for all samples in this analysis with the exception of the following samples, which had a benzo(a)anthracene-d12 recovery below lower control limits:

MW-1-11815

MW-2-111815

PM-MW8-111715

All associated results for these sample have been qualified J/UJ.

2.1.4 Laboratory Control Samples/ Laboratory Control Sample Duplicates (LCS/LCSD)

All LCS and LCSD %R and RPD were within the laboratory specified control limits.

2.1.5 Matrix Spike/Matrix Spike Duplicates (MS/MSD)

MS and MSD %R and RPD were within the project control limits, except as follows:

Benz(a)anthracene %R was high in both the MS and MSD.

Benzo(a)pyrene %R was high in the MS.

Benzo(b)fluoranthene %R was high in the MS.

Detected results for these analytes in associated samples have been qualified J.

2.1.6 Field Duplicate

Field Duplicate RPD values were within specified control limits.

2.1.7 Dilutions and Range

Dilutions were run on three samples do to results exceeding the instrument calibration range. The exceedances were qualified R (rejected), and should not be used. Other analyte results in the dilutions have been rejected in favor of the original result.

2.1.8 Overall Assessment

Accuracy was acceptable based on the LCS/LCSD and MS/MSD recoveries (except as noted above), and precision was acceptable based on the LCS/LCSD, MS/MSD and Field Duplicate RPD values. The data are of known quality and are acceptable for use as qualified.

2.2 Diesel & Motor Oil Range Hydrocarbons (NWTPH-DXSG)

2.2.1 Sample Receipt, Preservation, and Holding Times

Sample receipt, and preservation (2-6 degrees C) were acceptable.

Samples were analyzed within the requisite holding time limit.

2.2.2 Method Blanks

Target analytes were not detected at or above the reporting levels in the method blanks. No qualification or action was needed.

2.2.3 Surrogates (SUR)

All surrogate recoveries where within the laboratory specified control limits.

2.2.4 Laboratory Control Samples/ Laboratory Control Sample Duplicates (LCS/LCSD)

All LCS/LCSD %R and RPD were within the laboratory specified control limits.

2.2.5 Matrix Spike/Matrix Spike Duplicates (MS/MSD)

All MS/MSD %R and RPD were within the laboratory specified control limits.

2.2.6 Field Duplicate (FD)

Field Duplicate RPD values were within specified control limits.

2.2.7 Overall Assessment

Accuracy was acceptable based on the LCS/LCSD and MS/MSD recoveries, and precision was acceptable based on the LCS/LCSD, MS/MSD and Field Duplicate RPD values. The data are of known quality and are acceptable for use as qualified.

2.3 Gasoline Range Hydrocarbons and BTEX (NWTPH-GBTEX)

2.3.1 Sample Receipt, Preservation, and Holding Times

Sample receipt, and preservation (2-6 degrees C) were acceptable.

Samples were analyzed within the requisite holding time limit.

2.3.2 Method Blanks

Target analytes were not detected at or above the reporting levels in the method blanks. No qualification or action was needed.

2.3.3 Surrogates (SUR)

All surrogate recoveries where within the laboratory specified control limits.

2.3.4 Laboratory Control Samples/ Laboratory Control Sample Duplicates (LCS/LCSD)

All LCS/LCSD %R and RPD were within the laboratory specified control limits.

2.3.5 Matrix Spike/Matrix Spike Duplicates (MS/MSD)

All MS/MSD %R and RPD were within the laboratory specified control limits.

2.3.6 Field Duplicate (FD)

Field Duplicate RPD values were within specified control limits.

2.3.7 Overall Assessment

Accuracy was acceptable based on the LCS/LCSD and MS/MSD recoveries, and precision was acceptable based on the LCS/LCSD, MS/MSD and Field Duplicate RPD values. The data are of known quality and are acceptable for use as qualified.

3 Data Validation Findings for SDG K1513350

Groundwater samples in this SDG, and the chemical analyses performed on them, are tabulated below. The sections below describe the results of the data quality review for this SDG by analyte group (analysis).

Sample Index

				Analysis	
Sample ID	**Sample Date**	**Sample Type**	**Sample Matrix**	**Hg**	**Metals**
BBH-MW101-111615	11/16/2015	N	GrWtr	x	x
BBH-MW102-111615	11/16/2015	N	GrWtr	x	x
BBH-MW103-111615	11/16/2015	N	GrWtr	x	x
BBH-MW104-111615	11/16/2015	N	GrWtr	x	x
BBH-MW500-111615	11/16/2015	FD	GrWtr	x	x
CN-MW101-111815	11/18/2015	N	GrWtr		x
GF11-MW101-111715	11/17/2015	N	GrWtr	x	x
MW-1-111815	11/18/2015	N	GrWtr		x
MW-2-111815	11/18/2015	N	GrWtr		x
PM-MW8-111715	11/18/2015	N	GrWtr	x	x
RCD-MW101-111715	11/17/2015	N	GrWtr		x
REC3-MW1R-111715	11/17/2015	N	GrWtr	x	x
SHB-MW101-111815	11/18/2015	N	GrWtr	x	x
UST70-MW101-111715	11/17/2015	N	GrWtr		x
UST70-MW102-111715	11/17/2015	N	GrWtr		x
UST70-MW2-111715	11/17/2015	N	GrWtr		x
UST71-MW101-111715	11/17/2015	N	GrWtr	x	x
UST71-MW102-111715	11/17/2015	N	GrWtr	x	x
UST71-MW103-111815	11/18/2015	N	GrWtr	x	x

3.1 Dissolved Mercury (EPA 1631)

3.1.1 Sample Receipt, Preservation, and Holding Times

Sample receipt, and preservation (2-6 degrees C) were acceptable.

Samples were analyzed within the requisite holding time limit.

3.1.2 Method Blanks

Two of the three method blanks reported contained detections of mercury above the MDL but below the RL. Only 1 associated sample had a result <10x the highest blank detection: BBH-MW104-111615. The mercury result for this sample has been qualified

J. All other results where greater than 10x the blank contamination and do not require qualification.

3.1.3 Laboratory Control Samples (LCS)

The LCS %R was within the laboratory and method specified control limits.

3.1.4 Matrix Spike/Matrix Spike Duplicates (MS/MSD)

All MS/MSD %R and RPD were within the laboratory and method specified control limits.

3.1.5 Field Duplicate (FD)

Field Duplicate RPD values were within specified control limits.

3.1.6 Overall Assessment

Accuracy was acceptable based on the LCS and MS/MSD recoveries, and precision was acceptable based on the MS/MSD and Field Duplicate RPD values. The data are of known quality and are acceptable for use as qualified.

3.2 Dissolved Metals (EPA 200.8)

3.2.1 Sample Receipt, Preservation, and Holding Times

Sample receipt, and preservation (2-6 degrees C) were acceptable.

Samples were analyzed within the requisite holding time limit.

3.2.2 Method Blanks

One of the two method blanks reported contained a detection of zinc above the MDL but below the RL. All associated results where greater than 10x the blank contamination and do not require qualification.

3.2.3 Laboratory Control Samples (LCS)

The LCS %R was within the laboratory and method specified control limits.

3.2.4 Matrix Spike/Matrix Spike Duplicates (MS/MSD)

All MS/MSD %R and RPD were within the laboratory specified control limits.

3.2.5 Lab Duplicate (LD)

All Lab Duplicate RPDs were within specified control limits.

3.2.6 Field Duplicate (FD)

Field Duplicate RPD values were within specified control limits, except for Lead and Zinc. Results in the FD and its parent for these analytes have been qualified J.

3.2.7 Laboratory Qualifications

The following results were qualified J by the laboratory:

Arsenic for BBH-MW104-111615

Lead for REC3-MW1R-111715

No reason was provided regarding the qualification by the lab, but the results appear to be detected values between the MDL and RL. The qualification of "estimated" (J) is appropriate for these results and has been maintained.

3.2.8 Overall Assessment

Accuracy was acceptable based on the LCS and MS/MSD recoveries, and precision was acceptable based on the LCS/LCSD, MS/MSD and Field Duplicate RPD values. The data are of known quality and are acceptable for use as qualified.

4 Qualified Data Summary

Qualified sample results are listed below. This list does not include non-detected values simply qualified U.

Qualified Sample Results for 511246

Sample ID	Analyte	Qualifier	Qualification Reason
BCT-MW107-111715	Acenaphthene	R	Rejected in favor of lower dilution
	Acenaphthylene	R	Rejected in favor of lower dilution
	Anthracene	R	Rejected in favor of lower dilution
	Benz(a)anthracene	R	Rejected in favor of lower dilution
	Benzo(a)pyrene	R	Rejected in favor of lower dilution
	Benzo(b)fluoranthene	R	Rejected in favor of lower dilution
	Benzo(g,h,i)perylene	R	Rejected in favor of lower dilution
	Benzo(k)fluoranthene	R	Rejected in favor of lower dilution
	Chrysene	R	Rejected in favor of lower dilution
	Dibenzo(a,h)anthracene	R	Rejected in favor of lower dilution
	Fluoranthene	R	Rejected in favor of lower dilution
	Fluorene	R	Exceeded instrument calibration range.
	Indeno(1,2,3-cd)pyrene	R	Rejected in favor of lower dilution
	Naphthalene	R	Exceeded instrument calibration range.
	Phenanthrene	R	Rejected in favor of lower dilution
	Pyrene	R	Rejected in favor of lower dilution
BCT-MW108-111615	Acenaphthene	R	Exceeded instrument calibration range.
	Acenaphthylene	R	Rejected in favor of lower dilution
	Anthracene	R	Rejected in favor of lower dilution
	Benz(a)anthracene	R	Rejected in favor of lower dilution
	Benzo(a)pyrene	R	Rejected in favor of lower dilution
	Benzo(b)fluoranthene	R	Rejected in favor of lower dilution
	Benzo(g,h,i)perylene	R	Rejected in favor of lower dilution
	Benzo(k)fluoranthene	R	Rejected in favor of lower dilution
	Chrysene	R	Rejected in favor of lower dilution
	Dibenzo(a,h)anthracene	R	Rejected in favor of lower dilution
	Fluoranthene	R	Rejected in favor of lower dilution
	Fluorene	R	Rejected in favor of lower dilution
	Indeno(1,2,3-cd)pyrene	R	Rejected in favor of lower dilution
	Naphthalene	R	Exceeded instrument calibration range.
	Phenanthrene	R	Rejected in favor of lower dilution
	Pyrene	R	Rejected in favor of lower dilution
MW-1-111815	Acenaphthene	UJ	Surrogate recovery Low
	Acenaphthylene	UJ	Surrogate recovery Low

Sample ID	Analyte	Qualifier	Qualification Reason
	Anthracene	UJ	Surrogate recovery Low
	Benz(a)anthracene	UJ	Surrogate recovery Low
	Benzo(a)pyrene	UJ	Surrogate recovery Low
	Benzo(b)fluoranthene	UJ	Surrogate recovery Low
	Benzo(g,h,i)perylene	UJ	Surrogate recovery Low
	Benzo(k)fluoranthene	UJ	Surrogate recovery Low
	Chrysene	UJ	Surrogate recovery Low
	Dibenzo(a,h)anthracene	UJ	Surrogate recovery Low
	Fluoranthene	UJ	Surrogate recovery Low
	Fluorene	UJ	Surrogate recovery Low
	Indeno(1,2,3-cd)pyrene	UJ	Surrogate recovery Low
	Naphthalene	UJ	Surrogate recovery Low
	Phenanthrene	UJ	Surrogate recovery Low
	Pyrene	UJ	Surrogate recovery Low
MW-2-111815	Acenaphthene	UJ	Surrogate recovery Low
	Acenaphthylene	UJ	Surrogate recovery Low
	Anthracene	UJ	Surrogate recovery Low
	Benz(a)anthracene	UJ	Surrogate recovery Low
	Benzo(a)pyrene	UJ	Surrogate recovery Low
	Benzo(b)fluoranthene	UJ	Surrogate recovery Low
	Benzo(g,h,i)perylene	UJ	Surrogate recovery Low
	Benzo(k)fluoranthene	UJ	Surrogate recovery Low
	Chrysene	UJ	Surrogate recovery Low
	Dibenzo(a,h)anthracene	UJ	Surrogate recovery Low
	Fluoranthene	UJ	Surrogate recovery Low
	Fluorene	UJ	Surrogate recovery Low
	Indeno(1,2,3-cd)pyrene	UJ	Surrogate recovery Low
	Naphthalene	J	Surrogate recovery Low
	Phenanthrene	UJ	Surrogate recovery Low
	Pyrene	UJ	Surrogate recovery Low
PM-MW8-111715	Acenaphthene	UJ	Surrogate recovery Low
	Acenaphthylene	UJ	Surrogate recovery Low
	Anthracene	UJ	Surrogate recovery Low
	Benz(a)anthracene	UJ	Surrogate recovery Low
	Benzo(a)pyrene	UJ	Surrogate recovery Low
	Benzo(b)fluoranthene	UJ	Surrogate recovery Low
	Benzo(g,h,i)perylene	UJ	Surrogate recovery Low
	Benzo(k)fluoranthene	UJ	Surrogate recovery Low
	Chrysene	UJ	Surrogate recovery Low
	Dibenzo(a,h)anthracene	UJ	Surrogate recovery Low

Sample ID	Analyte	Qualifier	Qualification Reason
	Fluoranthene	UJ	Surrogate recovery Low
	Fluorene	UJ	Surrogate recovery Low
	Indeno(1,2,3-cd)pyrene	UJ	Surrogate recovery Low
	Naphthalene	UJ	Surrogate recovery Low
	Phenanthrene	UJ	Surrogate recovery Low
	Pyrene	UJ	Surrogate recovery Low
UST29-MW101-111615	Benz(a)anthracene	J	MS/MSD %R High
	Benzo(a)pyrene	J	MS %R High
	Benzo(b)fluoranthene	J	MS %R High
UST71-MW103-111815	Acenaphthene	R	Exceeded instrument calibration range.
	Acenaphthylene	R	Rejected in favor of lower dilution
	Anthracene	R	Rejected in favor of lower dilution
	Benz(a)anthracene	R	Rejected in favor of lower dilution
	Benz(a)anthracene	J	MS/MSD %R High
	Benzo(a)pyrene	R	Rejected in favor of lower dilution
	Benzo(a)pyrene	J	MS %R High
	Benzo(b)fluoranthene	R	Rejected in favor of lower dilution
	Benzo(b)fluoranthene	J	MS %R High
	Benzo(g,h,i)perylene	R	Rejected in favor of lower dilution
	Benzo(k)fluoranthene	R	Rejected in favor of lower dilution
	Chrysene	R	Rejected in favor of lower dilution
	Dibenzo(a,h)anthracene	R	Rejected in favor of lower dilution
	Fluoranthene	R	Rejected in favor of lower dilution
	Fluorene	R	Rejected in favor of lower dilution
	Indeno(1,2,3-cd)pyrene	R	Rejected in favor of lower dilution
	Naphthalene	R	Exceeded instrument calibration range.
	Phenanthrene	R	Exceeded instrument calibration range.
	Pyrene	R	Rejected in favor of lower dilution

Qualified Sample Results for K1513350

Sample ID	Analyte	Qualifier	Qualification Reason
BBH-MW103-111615	Lead	J	Field Dup Delta Exceeds Control Criteria
	Zinc	J	Field Dup Delta Exceeds Control Criteria
BBH-MW104-111615	Arsenic	J	Qualified Estimated by Lab. Detect >MDL and <RL.
	Mercury	J	Result <10x Blank Contamination.
BBH-MW500-111615	Lead	J	Field Dup Delta Exceeds Control Criteria
	Zinc	J	Field Dup Delta Exceeds Control Criteria
REC3-MW1R-111715	Lead	J	Qualified Estimated by Lab. Detect >MDL and <RL.

Data Qualifier Definitions

Data Qualifier	Definition
J	The analyte was detected above the reported quantitation limit, and the reported concentration was an estimated value.
R	The sample results are unusable due to the quality of the data generated because certain criteria were not met. The analyte may or may not be present in the sample.
U	The analyte was analyzed for, but was considered not detected at the reporting limit or reported value.
UJ	The analyte was analyzed for, and the associated quantitation limit was an estimated value.

5 References

Aspect, 2013, Work Plan for Remedial Investigation/Feasibility Study, Kimberly-Clark Worldwide Site Upland Area, Everett, Washington, November 22, 2013.

U.S. Environmental Protection Agency (USEPA), 1994, Method 200.8 Determination of Trace Elements in Waters and Wastes by Inductively Coupled Plasma – Mass Spectrometry, Revision 5.4, Environmental Monitoring Systems Laboratory Office of Research and Development.

U.S. Environmental Protection Agency (USEPA), 1997, Method 1640 Determination of Trace Elements in Waters by Preconcentration and Inductively Coupled Plasma – Mass Spectrometry, Office of Water & Office of Science and Technology Engineering and Analysis Division (4303), April.

U.S. Environmental Protection Agency (USEPA), 1999, Contract Laboratory Program National Functional Guidelines for Inorganic Data Review, Office of Emergency and Remedial Response, USEPA Publication No. 540/R-99/008, October.

U.S. Environmental Protection Agency (USEPA), 2004, Contract Laboratory Program National Functional Guidelines for Organic Methods Data Review, Office of Superfund Remediation and Technology Innovation (OSRTI), USEPA Publication No. 540-R-04-004, October.

DATA VALIDATION REPORT

Kimberly Clark – Everett Mill
Groundwater Testing
February 2016
SDG 602158, K1601360

Prepared by:
Aspect Consulting, LLC
401 Second Ave South, Suite 201
Seattle, WA 98104

Project No. 110207 • February 25, 2016

1 Introduction

This report summarizes the findings of the United States Environmental Protection Agency (USEPA) Stage 2A data validation performed on analytical data for groundwater samples collected from February 8 through 10, 2016 for Kimberly Clark Everett Mill RI-FS sampling. This data quality review is divided into sections by sample delivery group (SDG). A complete list of samples and analyses for each SDG is provided in the Sample Index at the beginning of each section.

Samples were analyzed for PAHs, TPH/BTEX by Friedman and Bruya, Inc. (F&B). Analysis for metals, and mercury was subcontracted to ALS Environmental (ALS). The analytical methods are summarized below:

Analysis	Method	Laboratory
Mercury - Dissolved	EPA 1631	ALS
Metals (As, Cu, Pb, Zn) - Dissolved	EPA 200.8	ALS
PAH	EPA 8270D-SIM	F&B
TPH - Diesel with Silica Gel Cleanup	NWTPH-DXSG	F&B
TPH Gasoline / BTEX	NWTPH-GBTEX	F&B

The validation followed the procedures documented in the analytical methods, the Quality Assurance Project Plan (QAPP; in Appendix A to Aspect, 2013), *National Functional Guidelines for Organic Data Review* (USEPA, 1999), and *National Functional Guidelines for Inorganic Data Review* (USEPA, 2004).

Data assigned a J qualifier (estimated) may be used for site evaluation purposes but the reasons for qualification should be taken into account when interpreting sample concentrations. Data marked as do-not-report or rejected (R) should not be used under any circumstances. Values without qualification meet all data measurement quality objectives and are suitable for use.

Data qualifier definitions and a summary table of the qualified data are included in the Qualified Data Summary at the end of this report. Data qualifiers have been incorporated into the project chemistry database to reflect the validation in this report.

2 Data Validation Findings for SDG 602158

Groundwater samples in this SDG, and the chemical analyses performed on them, are tabulated below. The sections below describe the results of the data quality review for this SDG by analyte group (analysis).

Sample Index

				Analysis		
Sample ID	**Sample Date**	**Sample Type**	**Sample Matrix**	**PAHs**	**TPH-DX**	**TPH-GBTEX**
BCT-MW-103-020816	2/8/2016	N	GrWtr	x	x	x
BCT-MW-104-020816	2/8/2016	N	GrWtr	x	x	x
BCT-MW-105-020816	2/8/2016	N	GrWtr	x	x	x
BCT-MW-106-020916	2/9/2016	N	GrWtr	x	x	x
BCT-MW-107-020916	2/9/2016	N	GrWtr	x	x	x
BCT-MW-108-020916	2/9/2016	N	GrWtr	x	x	x
BCT-MW-500-020816	2/8/2016	FD	GrWtr	x	x	x
MW-1-020916	2/9/2016	N	GrWtr	x	x	x
MW-2-020916	2/9/2016	N	GrWtr	x	x	x
REC3-MW-1R-020916	2/9/2016	N	GrWtr	x		
SHB-MW-101-020916	2/9/2016	N	GrWtr	x		
UST29-MW-101-021016	2/10/2016	N	GrWtr	x		
UST71-MW-101-020916	2/9/2016	N	GrWtr	x	x	
UST71-MW-102-021016	2/10/2016	N	GrWtr	x	x	
UST71-MW-103-020916	2/9/2016	N	GrWtr	x	x	

2.1 PAH (EPA 8270D SIM)

2.1.1 Sample Receipt, Preservation, and Holding Times

Sample receipt, and preservation (2-6 degrees C) were acceptable.

Samples were analyzed within the requisite holding time limit.

2.1.2 Method Blanks

Target analytes were not detected at or above the reporting levels in the method blanks. No qualification or action was needed.

2.1.3 Surrogate Recovery

Surrogate recoveries where acceptable for all samples in this analysis with the exception of the following samples, which had a benzo(a)anthracene-d12 recovery below lower control limits:

MW-1-020916

MW-2-020916

All associated results for these sample have been qualified J/UJ.

2.1.4 Laboratory Control Samples (LCS)

All LCS %R were within the laboratory specified control limits.

2.1.5 Matrix Spike/Matrix Spike Duplicates (MS/MSD)

All MS/MSD %R and RPD were within the laboratory specified control limits.

2.1.6 Field Duplicate

Field Duplicate RPD values were within specified control limits.

2.1.7 Dilutions and Range

Dilutions were run on three samples do to results exceeding the instrument calibration range. The exceedances were qualified R (rejected), and should not be used. Other analyte results in the dilutions have been rejected in favor of the original result.

2.1.8 Overall Assessment

Accuracy was acceptable based on the LCS and MS/MSD, and precision was acceptable based on the MS/MSD and Field Duplicate RPD values. The data are of known quality and are acceptable for use as qualified.

2.2 Diesel & Motor Oil Range Hydrocarbons (NWTPH-DXSG)

2.2.1 Sample Receipt, Preservation, and Holding Times

Sample receipt, and preservation (2-6 degrees C) were acceptable.

Samples were analyzed within the requisite holding time limit.

2.2.2 Method Blanks

Target analytes were not detected at or above the reporting levels in the method blanks. No qualification or action was needed.

2.2.3 Surrogates (SUR)

All surrogate recoveries where within the laboratory specified control limits.

2.2.4 Laboratory Control Samples/ Laboratory Control Sample Duplicates (LCS/LCSD)

All LCS/LCSD %R and RPD were within the laboratory specified control limits.

2.2.5 Matrix Spike/Matrix Spike Duplicates (MS/MSD)

All MS/MSD %R and RPD were within the laboratory specified control limits.

2.2.6 Field Duplicate (FD)

Field Duplicate RPD values were within specified control limits.

2.2.7 Overall Assessment

Accuracy was acceptable based on the LCS and MS/MSD recoveries, and precision was acceptable based on the MS/MSD and Field Duplicate RPD values. The data are of known quality and are acceptable for use as qualified.

2.3 Gasoline Range Hydrocarbons and BTEX (NWTPH-GBTEX)

2.3.1 Sample Receipt, Preservation, and Holding Times

Sample receipt, and preservation (2-6 degrees C) were acceptable.

Samples were analyzed within the requisite holding time limit.

2.3.2 Method Blanks

Target analytes were not detected at or above the reporting levels in the method blanks. No qualification or action was needed.

2.3.3 Surrogates (SUR)

All surrogate recoveries where within the laboratory specified control limits.

2.3.4 Laboratory Control Samples/ Laboratory Control Sample Duplicates (LCS/LCSD)

All LCS/LCSD %R and RPD were within the laboratory specified control limits.

2.3.5 Matrix Spike/Matrix Spike Duplicates (MS/MSD)

All MS/MSD %R and RPD were within the laboratory specified control limits.

2.3.6 Field Duplicate (FD)

Field Duplicate RPD values were within specified control limits.

2.3.7 Overall Assessment

Accuracy was acceptable based on the LCS and MS/MSD recoveries, and precision was acceptable based on the MS/MSD and Field Duplicate RPD values. The data are of known quality and are acceptable for use as qualified.

3 Data Validation Findings for SDG K1601360

Groundwater samples in this SDG, and the chemical analyses performed on them, are tabulated below. The sections below describe the results of the data quality review for this SDG by analyte group (analysis).

Sample Index

				Analysis	
Sample ID	**Sample Date**	**Sample Type**	**Sample Matrix**	**Hg**	**Metals**
BBH-MW-101-020916	2/9/2016	N	GrWtr	x	x
BBH-MW-102-020916	2/9/2016	N	GrWtr	x	x
BBH-MW-103-020816	2/8/2016	N	GrWtr	x	x
BBH-MW-104-020816	2/8/2016	N	GrWtr	x	x
BBH-MW-600-020816	2/8/2016	FD	GrWtr	x	x
CN-MW-101-020916	2/9/2016	N	GrWtr		x
GF-MW-101-020916	2/9/2016	N	GrWtr	x	
MW-1-020916	2/9/2016	N	GrWtr		x
MW-2-020916	2/9/2016	N	GrWtr		x
PM-MW-8-021016	2/10/2016	N	GrWtr	x	x
RCD-MW-101-020816	2/8/2016	N	GrWtr		x
REC3-MW-1R-020916	2/9/2016	N	GrWtr	x	x
SHB-MW-101-020916	2/9/2016	N	GrWtr	x	x
UST70-MW-101-020816	2/8/2016	N	GrWtr		x
UST70-MW-102-020816	2/8/2016	N	GrWtr		x
UST70-MW-2-020816	2/8/2016	N	GrWtr		x
UST71-MW-101-020916	2/9/2016	N	GrWtr	x	x
UST71-MW-102-021016	2/10/2016	N	GrWtr	x	x
UST71-MW-103-020916	2/9/2016	N	GrWtr	x	x

3.1 Dissolved Mercury (EPA 1631)

3.1.1 Sample Receipt, Preservation, and Holding Times

Sample receipt, and preservation (2-6 degrees C) were acceptable.

Samples were analyzed within the requisite holding time limit.

3.1.2 Method Blanks

One of the three method blanks reported contained detections of mercury above the MDL but below the RL. All results where greater than 10x the blank contamination and do not require qualification.

3.1.3 Laboratory Control Samples (LCS)

The LCS %R was within the laboratory and method specified control limits.

3.1.4 Matrix Spike/Matrix Spike Duplicates (MS/MSD)

All MS/MSD %R and RPD were within the laboratory and method specified control limits.

3.1.5 Field Duplicate (FD)

Field Duplicate RPD values were within specified control limits.

3.1.6 Overall Assessment

Accuracy was acceptable based on the LCS and MS/MSD recoveries, and precision was acceptable based on the MS/MSD and Field Duplicate RPD values. The data are of known quality and are acceptable for use as qualified.

3.2 Dissolved Metals (EPA 200.8)

3.2.1 Sample Receipt, Preservation, and Holding Times

Sample receipt, and preservation (2-6 degrees C) were acceptable.

Samples were analyzed within the requisite holding time limit.

3.2.2 Method Blanks

One of the two method blanks reported contained a detection of copper above the MDL but below the RL. All associated results where greater than 10x the blank contamination and do not require qualification.

3.2.3 Laboratory Control Samples (LCS)

The LCS %R was within the laboratory and method specified control limits.

3.2.4 Matrix Spike/Matrix Spike Duplicates (MS/MSD)

One of Matrix Spikes had copper %R below the lower control limit, however the amount of analyte in the parent sample exceeded 4x the amount spiked so no results needed to be qualified. All other MS/MSD %R and RPD were within the laboratory specified control limits.

3.2.5 Lab Duplicate (LD)

All Lab Duplicate RPDs were within specified control limits.

3.2.6 Field Duplicate (FD)

Field Duplicate RPD values were within specified control limits, except for Lead. Results in the FD and its parent for this analyte have been qualified J.

3.2.7 Laboratory Qualifications

The following results were qualified J by the laboratory:

Lead for BBH-MW-104-020816 and REC3-MW-1R-020916

Zinc for BBH-MW-600-020816

No reason was provided regarding the qualification by the lab, but the results appear to be detected values between the MDL and RL. The qualification of "estimated" (J) is appropriate for these results and has been maintained.

3.2.8 Overall Assessment

Accuracy was acceptable based on the LCS and MS/MSD recoveries, and precision was acceptable based on the LCS/LCSD, MS/MSD and Field Duplicate RPD values. The data are of known quality and are acceptable for use as qualified.

4 Qualified Data Summary

Qualified sample results are listed below. This list does not include non-detected values simply qualified U.

Qualified Sample Results for 602158

Sample ID	Analyte	Qualifier	Qualification Reason
BCT-MW-107-020916	Acenaphthylene	R	Rejected in favor of lower dilution.
	Anthracene	R	Rejected in favor of lower dilution.
	Benz(a)anthracene	R	Rejected in favor of lower dilution.
	Benzo(a)pyrene	R	Rejected in favor of lower dilution.
	Benzo(b)fluoranthene	R	Rejected in favor of lower dilution.
	Benzo(g,h,i)perylene	R	Rejected in favor of lower dilution.
	Benzo(k)fluoranthene	R	Rejected in favor of lower dilution.
	Chrysene	R	Rejected in favor of lower dilution.
	Dibenzo(a,h)anthracene	R	Rejected in favor of lower dilution.
	Fluoranthene	R	Rejected in favor of lower dilution.
	Indeno(1,2,3-cd)pyrene	R	Rejected in favor of lower dilution.
	Pyrene	R	Rejected in favor of lower dilution.
BCT-MW-108-020916	Acenaphthylene	R	Rejected in favor of lower dilution.
	Anthracene	R	Rejected in favor of lower dilution.
	Benz(a)anthracene	R	Rejected in favor of lower dilution.
	Benzo(a)pyrene	R	Rejected in favor of lower dilution.
	Benzo(b)fluoranthene	R	Rejected in favor of lower dilution.
	Benzo(g,h,i)perylene	R	Rejected in favor of lower dilution.
	Benzo(k)fluoranthene	R	Rejected in favor of lower dilution.
	Chrysene	R	Rejected in favor of lower dilution.
	Dibenzo(a,h)anthracene	R	Rejected in favor of lower dilution.
	Fluoranthene	R	Rejected in favor of lower dilution.
	Indeno(1,2,3-cd)pyrene	R	Rejected in favor of lower dilution.
	Pyrene	R	Rejected in favor of lower dilution.
MW-1-020916	Acenaphthene	UJ	Surrogate Recovery Low
	Acenaphthylene	UJ	Surrogate Recovery Low
	Anthracene	UJ	Surrogate Recovery Low
	Benz(a)anthracene	UJ	Surrogate Recovery Low
	Benzo(a)pyrene	UJ	Surrogate Recovery Low
	Benzo(b)fluoranthene	UJ	Surrogate Recovery Low
	Benzo(g,h,i)perylene	UJ	Surrogate Recovery Low
	Benzo(k)fluoranthene	UJ	Surrogate Recovery Low
	Chrysene	UJ	Surrogate Recovery Low
	Dibenzo(a,h)anthracene	UJ	Surrogate Recovery Low

Sample ID	Analyte	Qualifier	Qualification Reason
	Fluoranthene	UJ	Surrogate Recovery Low
	Fluorene	UJ	Surrogate Recovery Low
	Indeno(1,2,3-cd)pyrene	UJ	Surrogate Recovery Low
	Naphthalene	UJ	Surrogate Recovery Low
	Phenanthrene	UJ	Surrogate Recovery Low
	Pyrene	UJ	Surrogate Recovery Low
MW-2-020916	Acenaphthene	UJ	Surrogate Recovery Low
	Acenaphthylene	UJ	Surrogate Recovery Low
	Anthracene	UJ	Surrogate Recovery Low
	Benz(a)anthracene	UJ	Surrogate Recovery Low
	Benzo(a)pyrene	UJ	Surrogate Recovery Low
	Benzo(b)fluoranthene	UJ	Surrogate Recovery Low
	Benzo(g,h,i)perylene	UJ	Surrogate Recovery Low
	Benzo(k)fluoranthene	UJ	Surrogate Recovery Low
	Chrysene	UJ	Surrogate Recovery Low
	Dibenzo(a,h)anthracene	UJ	Surrogate Recovery Low
	Fluoranthene	UJ	Surrogate Recovery Low
	Fluorene	UJ	Surrogate Recovery Low
	Indeno(1,2,3-cd)pyrene	UJ	Surrogate Recovery Low
	Naphthalene	UJ	Surrogate Recovery Low
	Phenanthrene	UJ	Surrogate Recovery Low
	Pyrene	UJ	Surrogate Recovery Low
SHB-MW-101-020916	Acenaphthylene	R	Rejected in favor of lower dilution.
	Anthracene	R	Rejected in favor of lower dilution.
	Benz(a)anthracene	R	Rejected in favor of lower dilution.
	Benzo(a)pyrene	R	Rejected in favor of lower dilution.
	Benzo(b)fluoranthene	R	Rejected in favor of lower dilution.
	Benzo(g,h,i)perylene	R	Rejected in favor of lower dilution.
	Benzo(k)fluoranthene	R	Rejected in favor of lower dilution.
	Chrysene	R	Rejected in favor of lower dilution.
	Dibenzo(a,h)anthracene	R	Rejected in favor of lower dilution.
	Indeno(1,2,3-cd)pyrene	R	Rejected in favor of lower dilution.
	Pyrene	R	Rejected in favor of lower dilution.
UST71-MW-103-020916	Acenaphthylene	R	Rejected in favor of lower dilution.
	Benz(a)anthracene	R	Rejected in favor of lower dilution.
	Benzo(a)pyrene	R	Rejected in favor of lower dilution.
	Benzo(b)fluoranthene	R	Rejected in favor of lower dilution.
	Benzo(g,h,i)perylene	R	Rejected in favor of lower dilution.
	Benzo(k)fluoranthene	R	Rejected in favor of lower dilution.
	Chrysene	R	Rejected in favor of lower dilution.

Sample ID	Analyte	Qualifier	Qualification Reason
	Dibenzo(a,h)anthracene	R	Rejected in favor of lower dilution.
	Indeno(1,2,3-cd)pyrene	R	Rejected in favor of lower dilution.

Qualified Sample Results for K1601360

Sample ID	Analyte	Qualifier	Qualification Reason
BBH-MW-103-020816	Lead	J	Field Dup RPD outside control limits.
BBH-MW-104-020816	Lead	J	Qualified estimated by Lab. Result detect between MDL and RL.
BBH-MW-600-020816	Lead	J	Field Dup RPD outside control limits.
	Zinc	J	Qualified estimated by Lab. Result detect between MDL and RL.
REC3-MW-1R-020916	Lead	J	Qualified estimated by Lab. Result detect between MDL and RL.

Data Qualifier Definitions

Data Qualifier	Definition
J	The analyte was detected above the reported quantitation limit, and the reported concentration was an estimated value.
R	The sample results are unusable due to the quality of the data generated because certain criteria were not met. The analyte may or may not be present in the sample.
U	The analyte was analyzed for, but was considered not detected at the reporting limit or reported value.
UJ	The analyte was analyzed for, and the associated quantitation limit was an estimated value.

5 References

Aspect, 2013, Work Plan for Remedial Investigation/Feasibility Study, Kimberly-Clark Worldwide Site Upland Area, Everett, Washington, November 22, 2013.

U.S. Environmental Protection Agency (USEPA), 1994, Method 200.8 Determination of Trace Elements in Waters and Wastes by Inductively Coupled Plasma – Mass Spectrometry, Revision 5.4, Environmental Monitoring Systems Laboratory Office of Research and Development.

U.S. Environmental Protection Agency (USEPA), 1997, Method 1640 Determination of Trace Elements in Waters by Preconcentration and Inductively Coupled Plasma – Mass Spectrometry, Office of Water & Office of Science and Technology Engineering and Analysis Division (4303), April.

U.S. Environmental Protection Agency (USEPA), 1999, Contract Laboratory Program National Functional Guidelines for Inorganic Data Review, Office of Emergency and Remedial Response, USEPA Publication No. 540/R-99/008, October.

U.S. Environmental Protection Agency (USEPA), 2004, Contract Laboratory Program National Functional Guidelines for Organic Methods Data Review, Office of Superfund Remediation and Technology Innovation (OSRTI), USEPA Publication No. 540-R-04-004, October.

DATA VALIDATION REPORT

Kimberly Clark – Everett Mill
Groundwater Testing
May 2016
SDG 605449, K1605616

Prepared by:
Aspect Consulting, LLC
401 Second Ave South, Suite 201
Seattle, WA 98104

Project No. 110207 • November 29, 2016

S:\Kimberly Clark\Everett Mill 110207\Data\Validation\Validation Reports and EDDs\Interim Action\Confirmation GW\DV Report - KC Everett Mill - May 2016 - GW.docx

1 Introduction

This report summarizes the findings of the United States Environmental Protection Agency (USEPA) Stage 2A data validation performed on analytical data for groundwater samples collected from May 23 through 24 2016 for Kimberly Clark Everett Mill RI-FS sampling. This data quality review is divided into sections by sample delivery group (SDG). A complete list of samples and analyses for each SDG is provided in the Sample Index at the beginning of each section.

Samples were analyzed for PAHs, TPH/BTEX by Friedman and Bruya, Inc. (F&B). Analysis for metals, and mercury was subcontracted to ALS Environmental (ALS). The analytical methods are summarized below:

Analysis	Method	Laboratory
Mercury - Dissolved	EPA 1631E	ALS
Metals (As, Cu, Ni, Pb, Zn) - Dissolved	EPA 200.8	ALS
PAH	EPA 8270D-SIM	F&B
TPH - Diesel with Silica Gel Cleanup	NWTPH-DXSG	F&B
TPH Gasoline / BTEX	NWTPH-GX/SW8021B	F&B

The validation followed the procedures documented in the analytical methods, the Quality Assurance Project Plan (QAPP; in Appendix A to Aspect, 2013), *National Functional Guidelines for Organic Data Review* (USEPA, 1999), and *National Functional Guidelines for Inorganic Data Review* (USEPA, 2004).

Data assigned a J qualifier (estimated) may be used for site evaluation purposes but the reasons for qualification should be taken into account when interpreting sample concentrations. Data marked as do-not-report or rejected (R) should not be used under any circumstances. Values without qualification meet all data measurement quality objectives and are suitable for use.

Data qualifier definitions and a summary table of the qualified data are included in the Qualified Data Summary at the end of this report. Data qualifiers have been incorporated into the project chemistry database to reflect the validation in this report.

2 Data Validation Findings for SDG 605449

Groundwater samples in this SDG, and the chemical analyses performed on them, are tabulated below. The sections below describe the results of the data quality review for this SDG by analyte group (analysis).

Sample Index

				Analysis		
Sample ID	**Sample Date**	**Type**	**Matrix**	**TPH-DXSG**	**GX / BTEX**	**PAH**
BCT-MW105-052416	5/24/2016	N	WG	X	X	X
BCT-MW108-052416	5/24/2016	N	WG	X	X	X
GF9-MW-3-052416	5/24/2016	N	WG	X		X
SHB-MW-101-052316	5/23/2016	N	WG			X
UST29-MW101-052416	5/24/2016	N	WG			X

2.1 PAH (EPA 8270D SIM)

2.1.1 Sample Receipt, Preservation, and Holding Times

Sample receipt, and preservation (2-6 degrees C) were acceptable.

Samples were analyzed within the requisite holding time limit.

2.1.2 Method Blanks

Target analytes were not detected at or above the reporting levels in the method blanks. No qualification or action was needed.

2.1.3 Surrogate Recovery

Surrogate recoveries where acceptable for all samples in this analysis. No qualification or action was needed.

2.1.4 Laboratory Control Samples/ Laboratory Control Sample Duplicates (LCS/LCSD)

All LCS and LCSD %R and RPD were within the laboratory specified control limits.

2.1.5 Matrix Spike/Matrix Spike Duplicates (MS/MSD)

MS and MSD %R and RPD were within the laboratory specified control limits.

2.1.6 Dilutions and Range

Dilutions were run on some samples due to results exceeding the instrument calibration range. The exceedances were qualified R (rejected), and should not be used. Other analyte results in the dilutions have been rejected in favor of the original result.

2.1.7 Overall Assessment

Accuracy was acceptable based on the LCS/LCSD and MS/MSD, and precision was acceptable based on the LCS/LCSD, and MS/MSD RPD values. The data are of known quality and are acceptable for use as qualified.

2.2 Diesel & Motor Oil Range Hydrocarbons (NWTPH-DXSG)

2.2.1 Sample Receipt, Preservation, and Holding Times

Sample receipt, and preservation (2-6 degrees C) were acceptable.

Samples were analyzed within the requisite holding time limit.

2.2.2 Method Blanks

Target analytes were not detected at or above the reporting levels in the method blanks. No qualification or action was needed.

2.2.3 Surrogates (SUR)

All surrogate recoveries where within the laboratory specified control limits.

2.2.4 Laboratory Control Samples/ Laboratory Control Sample Duplicates (LCS/LCSD)

All LCS/LCSD %R and RPD were within the laboratory specified control limits.

2.2.5 Matrix Spike/Matrix Spike Duplicates (MS/MSD)

All MS/MSD %R and RPD were within the laboratory specified control limits.

2.2.6 Overall Assessment

Accuracy was acceptable based on the LCS/LCSD and MS/MSD recoveries, and precision was acceptable based on the LCS/LCSD, and MS/MSD RPD values. The data are of known quality and are acceptable for use as qualified.

2.3 Gasoline Range Hydrocarbons and BTEX (NWTPH-GX / BTEX)

2.3.1 Sample Receipt, Preservation, and Holding Times

Sample receipt, and preservation (2-6 degrees C) were acceptable.

Samples were analyzed within the requisite holding time limit.

2.3.2 Method Blanks

Target analytes were not detected at or above the reporting levels in the method blanks. No qualification or action was needed.

2.3.3 Surrogates (SUR)

All surrogate recoveries where within the laboratory specified control limits.

2.3.4 Laboratory Control Samples (LCS)

All LCS %R were within the laboratory specified control limits.

2.3.5 Matrix Spike/Matrix Spike Duplicates (MS/MSD)

All MS/MSD %R and RPD were within the laboratory specified control limits.

2.3.6 Overall Assessment

Accuracy was acceptable based on the LCS and MS/MSD recoveries, and precision was acceptable based on the MS/MSD RPD values. The data are of known quality and are acceptable for use as qualified.

3 Data Validation Findings for SDG K1605616

Groundwater samples in this SDG, and the chemical analyses performed on them, are tabulated below. The sections below describe the results of the data quality review for this SDG by analyte group (analysis).

Sample Index

				Analysis	
Sample ID	Sample Date	Sample Type	Sample Matrix	Hg	Metals
BBH-MW-101-052316	5/23/2016	N	WG	X	X
BBH-MW-102-052316	5/23/2016	N	WG	X	X
BBH-MW-103-052316	5/23/2016	N	WG	X	X
BBH-MW104-052416	5/24/2016	N	WG	X	X
BBH-MW-500-052316	5/23/2016	FD	WG	X	X
CN-MW-101-052316	5/23/2016	N	WG		X
GF11-MW101-052416	5/24/2016	N	WG	X	
RCD-MW-101-052316	5/23/2016	N	WG		X
SHB-MW-101-052316	5/23/2016	N	WG	X	X
UST70-MW-101-0523116	5/23/2016	N	WG		X
UST70-MW102-052416	5/24/2016	N	WG		X
UST70-MW2-052416	5/24/2016	N	WG		X

3.1 Sample Receipt and Preservation

Sample receipt, and preservation (2-6 degrees C) were acceptable.

Sample GF11-MW101-052416 had been misnamed on the COC as GF-MW101-052416. This has been corrected in the EDD. The lab also appended addition date info to the end of each sample ID. These have been corrected back to the IDs specified on the COC.

3.2 Dissolved Mercury (EPA 1631E)

3.2.1 Holding Times

Samples were analyzed within the requisite holding time limit.

3.2.2 Method Blanks

One of the three method blanks reported contained detections of mercury above the MDL but below the RL. Two associated samples had results <10x the highest blank detection. The mercury result for these samples have been qualified J. All other results where greater than 10x the blank contamination and do not require qualification.

3.2.3 Laboratory Control Samples (LCS)

All LCS (and assorted blank spike) %R were within the laboratory and method specified control limits.

3.2.4 Matrix Spike/Matrix Spike Duplicates (MS/MSD)

All MS/MSD %R and RPD were within the laboratory and method specified control limits.

3.2.5 Field Duplicate (FD)

Field Duplicate RPD values were within specified control limits.

3.2.6 Overall Assessment

Accuracy was acceptable based on the LCS and MS/MSD recoveries, and precision was acceptable based on the MS/MSD and Field Duplicate RPD values. The data are of known quality and are acceptable for use as qualified.

3.3 Dissolved Metals (EPA 200.8)

3.3.1 Holding Times

Samples were analyzed within the requisite holding time limit.

3.3.2 Method Blanks

One of the two method blanks reported contained a detection of copper above the MDL but below the RL. All associated results where greater than 10x the blank contamination and do not require qualification.

3.3.3 Instrument Blanks

Lab report indicates detections in the instrument blanks (ICB/CCB) for Lead up to 0.011 ug/l. All associated results < 10x the blank detections have been qualified as estimated (J).

3.3.4 Laboratory Control Samples (LCS)

The LCS %R was within the laboratory and method specified control limits.

3.3.5 Matrix Spike (MS)

All MS %R were within the laboratory specified control limits, with the exception of Copper. The sample amount was >4x the spike amount, so no qualification is needed or applied.

3.3.6 Lab Duplicate (LD)

All Lab Duplicate RPDs were within specified control limits, with the exception of Zinc, which exceeded control. All associated results for Zinc have been qualified as estimated (J/UJ).

3.3.7 Field Duplicate (FD)

Field Duplicate RPD values were within specified control limits, except for Copper. Results in the FD and its parent for Copper have been qualified J.

3.3.8 Laboratory Qualifications

Detected result values between the MDL and RL were qualified as estimated (J) by the laboratory. This qualification is appropriate for these results and has been maintained.

3.3.9 Overall Assessment

Accuracy was acceptable based on the LCS and MS recoveries, and precision was acceptable based on the Lab Duplicate, and Field Duplicate RPD values, except as noted above. The data are of known quality and are acceptable for use as qualified.

4 Data Validation Findings for SDG 605456

Groundwater samples in this SDG, and the chemical analyses performed on them, are tabulated below. The sections below describe the results of the data quality review for this SDG by analyte group (analysis).

Sample Index

				Analysis		
Sample ID	**Sample Date**	**Type**	**Matrix**	**TPH-DXSG**	**GX / BTEX**	**PAH**
BCT-MW104-052416	5/24/2016	N	WG	X	X	X
UST71-MW102-052416	5/24/2016	N	WG	X		X

4.1 PAH (EPA 8270D SIM)

4.1.1 Sample Receipt, Preservation, and Holding Times

Sample receipt, and preservation (2-6 degrees C) were acceptable.

Samples were analyzed within the requisite holding time limit.

4.1.2 Method Blanks

Target analytes were not detected at or above the reporting levels in the method blanks. No qualification or action was needed.

4.1.3 Surrogate Recovery

Surrogate recoveries where acceptable for all samples in this analysis. No qualification or action was needed.

4.1.4 Laboratory Control Samples/ Laboratory Control Sample Duplicates (LCS/LCSD)

All LCS and LCSD %R and RPD were within the laboratory specified control limits.

4.1.5 Matrix Spike/Matrix Spike Duplicates (MS/MSD)

MS and MSD %R and RPD were within the laboratory specified control limits.

4.1.6 Overall Assessment

Accuracy was acceptable based on the LCS/LCSD and MS/MSD, and precision was acceptable based on the LCS/LCSD, and MS/MSD RPD values. The data are of known quality and are acceptable for use as qualified.

4.2 Diesel & Motor Oil Range Hydrocarbons (NWTPH-DXSG)

4.2.1 Sample Receipt, Preservation, and Holding Times

Sample receipt, and preservation (2-6 degrees C) were acceptable.

Samples were analyzed within the requisite holding time limit.

4.2.2 Method Blanks

Target analytes were not detected at or above the reporting levels in the method blanks. No qualification or action was needed.

4.2.3 Surrogates (SUR)

All surrogate recoveries where within the laboratory specified control limits.

4.2.4 Laboratory Control Samples/ Laboratory Control Sample Duplicates (LCS/LCSD)

All LCS/LCSD %R and RPD were within the laboratory specified control limits.

4.2.5 Matrix Spike/Matrix Spike Duplicates (MS/MSD)

No MS or MSD were reported with this dataset.

4.2.6 Laboratory Flags

The laboratory flagged one Diesel Range result "X" to indicate that the sample chromatographic pattern does not resemble the fuel standard used for quantitation. This qualifier has been retained in the validation. Result values are acceptable for use, but users should be aware that numeric result may not represent to a known petroleum fuel contaminant.

4.2.7 Overall Assessment

Accuracy was acceptable based on the LCS/LCSD recoveries, and precision was acceptable based on the LCS/LCSD RPD values. The data are of known quality and are acceptable for use as qualified.

4.3 Gasoline Range Hydrocarbons and BTEX (NWTPH-GX / BTEX)

4.3.1 Sample Receipt, Preservation, and Holding Times

Sample receipt, and preservation (2-6 degrees C) were acceptable.

Samples were analyzed within the requisite holding time limit.

4.3.2 Method Blanks

Target analytes were not detected at or above the reporting levels in the method blanks. No qualification or action was needed.

4.3.3 Surrogates (SUR)

All surrogate recoveries where within the laboratory specified control limits.

4.3.4 Laboratory Control Samples (LCS)

All LCS %R were within the laboratory specified control limits.

4.3.5 Matrix Spike/Matrix Spike Duplicates (MS/MSD)

All MS/MSD %R and RPD were within the laboratory specified control limits.

4.3.6 Overall Assessment

Accuracy was acceptable based on the LCS and MS/MSD recoveries, and precision was acceptable based on the MS/MSD RPD values. The data are of known quality and are acceptable for use as qualified.

5 Data Validation Findings for SDG K1605613

Groundwater samples in this SDG, and the chemical analyses performed on them, are tabulated below. The sections below describe the results of the data quality review for this SDG by analyte group (analysis).

Sample Index

				Analysis	
Sample ID	**Sample Date**	**Type**	**Matrix**	**Hg**	**Metals**
UST71-MW102-052316	5/23/2016	N	WG	X	
UST71-MW102-052416	5/24/2016	N	WG		X

5.1 Sample Receipt and Preservation

Sample receipt, and preservation (2-6 degrees C) were acceptable.

The lab appended addition date info to the end of each sample ID. These have been corrected back to the IDs specified on the COC.

5.2 Dissolved Mercury (EPA 1631E)

5.2.1 Holding Times

Samples were analyzed within the requisite holding time limit.

5.2.2 Method Blanks

One of the three method blanks reported contained detections of mercury above the MDL but below the RL. The associated sample results all exceeded 10x the highest blank detection, and do not require qualification.

5.2.3 Laboratory Control Samples (LCS)

All LCS (and assorted blank spike) %R were within the laboratory and method specified control limits.

5.2.4 Matrix Spike/Matrix Spike Duplicates (MS/MSD)

All MS/MSD %R and RPD were within the laboratory and method specified control limits.

5.2.5 Overall Assessment

Accuracy was acceptable based on the LCS and MS/MSD recoveries, and precision was acceptable based on the MS/MSD RPD values. The data are of known quality and are acceptable for use as qualified.

5.3 Dissolved Metals (EPA 200.8)

5.3.1 Holding Times

Samples were analyzed within the requisite holding time limit.

5.3.2 Method Blanks

The method blank reported contained a detection of copper above the MDL but below the RL. All associated results where greater than 10x the blank contamination and do not require qualification.

5.3.3 Laboratory Control Samples (LCS)

The LCS %R was within the laboratory and method specified control limits.

5.3.4 Matrix Spike (MS)

All MS %R were within the laboratory specified control limits.

5.3.5 Lab Duplicate (LD)

All Lab Duplicate RPDs were within specified control limits.

5.3.6 Overall Assessment

Accuracy was acceptable based on the LCS and MS recoveries, and precision was acceptable based on the Lab Duplicate RPD values. The data are of known quality and are acceptable for use as qualified.

6 Data Validation Findings for SDG 605444

Groundwater samples in this SDG, and the chemical analyses performed on them, are tabulated below. The sections below describe the results of the data quality review for this SDG by analyte group (analysis).

Sample Index

				Analysis		
Sample ID	**Sample Date**	**Type**	**Matrix**	**TPH-DXSG**	**GX / BTEX**	**PAH**
BCT-MW-103-052316	5/23/2016	N	WG	X	X	X
BCT-MW-106-052316	5/23/2016	N	WG	X	X	X
BCT-MW-107-052416	5/24/2016	N	WG	X	X	X
BCT-MW-621-052316	5/23/2016	N	WG	X	X	X
MW-1-052416	5/24/2016	N	WG	X	X	X
MW-2-052416	5/24/2016	N	WG	X	X	X
REC3-MW1R-052316	5/23/2016	N	WG			X
UST71-MW101-052316	5/23/2016	N	WG	X		X
UST71-MW103-052416	5/24/2016	N	WG	X		X

6.1 PAH (EPA 8270D SIM)

6.1.1 Sample Receipt, Preservation, and Holding Times

Sample receipt, and preservation (2-6 degrees C) were acceptable.

Samples were analyzed within the requisite holding time limit.

6.1.2 Method Blanks

Target analytes were not detected at or above the reporting levels in the method blanks. No qualification or action was needed.

6.1.3 Surrogate Recovery

Surrogate recoveries where acceptable for all samples in this analysis, with the following exception:

Benzo(a)anthracene-d12 %R was low for sample MW-1-052416. Lab flagging indicated potential matrix interference. Associated results for this sample have been qualified UJ (estimated).

No further qualification or action was needed.

6.1.4 Laboratory Control Samples/ Laboratory Control Sample Duplicates (LCS/LCSD)

All LCS and LCSD %R and RPD were within the laboratory specified control limits.

6.1.5 Matrix Spike/Matrix Spike Duplicates (MS/MSD)

MS and MSD %R and RPD were within the laboratory specified control limits.

6.1.6 Dilutions and Range

Dilutions were run on some samples due to results exceeding the instrument calibration range. The exceedances were qualified R (rejected), and should not be used. Other analyte results in the dilutions have been rejected in favor of the original result.

6.1.7 Laboratory Flags

Lab narrative noted an internal standard failure on the analysis of sample UST71-MW-103-052416. Lab assessment suggests matrix interference as a possible cause. Results were flagged J by the lab. These results have been qualified as estimated (J/UJ).

6.1.8 Overall Assessment

Accuracy was acceptable based on the LCS/LCSD and MS/MSD, and precision was acceptable based on the LCS/LCSD, and MS/MSD RPD values. The data are of known quality and are acceptable for use as qualified.

6.2 Diesel & Motor Oil Range Hydrocarbons (NWTPH-DXSG)

6.2.1 Sample Receipt, Preservation, and Holding Times

Sample receipt, and preservation (2-6 degrees C) were acceptable.

Samples were analyzed within the requisite holding time limit.

6.2.2 Method Blanks

Target analytes were not detected at or above the reporting levels in the method blanks. No qualification or action was needed.

6.2.3 Surrogates (SUR)

All surrogate recoveries where within the laboratory specified control limits.

6.2.4 Laboratory Control Samples/ Laboratory Control Sample Duplicates (LCS/LCSD)

All LCS/LCSD %R and RPD were within the laboratory specified control limits.

6.2.5 Matrix Spike/Matrix Spike Duplicates (MS/MSD)

All MS/MSD %R and RPD were within the laboratory specified control limits.

6.2.6 Overall Assessment

Accuracy was acceptable based on the LCS/LCSD and MS/MSD recoveries, and precision was acceptable based on the LCS/LCSD, and MS/MSD RPD values. The data are of known quality and are acceptable for use as qualified.

6.3 Gasoline Range Hydrocarbons and BTEX (NWTPH-GX / BTEX)

6.3.1 Sample Receipt, Preservation, and Holding Times

Sample receipt, and preservation (2-6 degrees C) were acceptable.

Samples were analyzed within the requisite holding time limit.

6.3.2 Method Blanks

Target analytes were not detected at or above the reporting levels in the method blanks. No qualification or action was needed.

6.3.3 Surrogates (SUR)

All surrogate recoveries where within the laboratory specified control limits.

6.3.4 Laboratory Control Samples (LCS)

All LCS %R were within the laboratory specified control limits.

6.3.5 Matrix Spike/Matrix Spike Duplicates (MS/MSD)

All MS/MSD %R and RPD were within the laboratory specified control limits.

6.3.6 Overall Assessment

Accuracy was acceptable based on the LCS and MS/MSD recoveries, and precision was acceptable based on the MS/MSD RPD values. The data are of known quality and are acceptable for use as qualified.

7 Data Validation Findings for SDG K1605614

Groundwater samples in this SDG, and the chemical analyses performed on them, are tabulated below. The sections below describe the results of the data quality review for this SDG by analyte group (analysis).

Sample Index

				Analysis	
Sample ID	**Sample Date**	**Type**	**Matrix**	**Hg**	**Metals**
MW-1-052416	5/24/2016	N	WG		X
MW-2-052416	5/24/2016	N	WG		X
PM-MW-8-052316	5/23/2016	N	WG	X	X
REC3-MW1R-052316	5/23/2016	N	WG	X	X
UST71-MW101-052316	5/23/2016	N	WG	X	X
UST71-MW103-052416	5/24/2016	N	WG	X	X

7.1 Sample Receipt and Preservation

Sample receipt, and preservation (2-6 degrees C) were acceptable.

The lab appended addition date info to the end of each sample ID. These have been corrected back to the IDs specified on the COC.

7.2 Dissolved Mercury (EPA 1631E)

7.2.1 Holding Times

Samples were analyzed within the requisite holding time limit.

7.2.2 Method Blanks

One of the three method blanks reported contained detections of mercury above the MDL but below the RL. One associated sample had results <10x the highest blank detection. The mercury result for that sample have been qualified J. All other results where greater than 10x the blank contamination and do not require qualification.

7.2.3 Laboratory Control Samples (LCS)

All LCS (and assorted blank spike) %R were within the laboratory and method specified control limits.

7.2.4 Matrix Spike/Matrix Spike Duplicates (MS/MSD)

All MS/MSD %R and RPD were within the laboratory and method specified control limits.

7.2.5 Overall Assessment

Accuracy was acceptable based on the LCS and MS/MSD recoveries, and precision was acceptable based on the MS/MSD RPD values. The data are of known quality and are acceptable for use as qualified.

7.3 Dissolved Metals (EPA 200.8)

7.3.1 Holding Times

Samples were analyzed within the requisite holding time limit.

7.3.2 Method Blanks

The method blank reported contained a detection of Copper above the MDL but below the RL. All associated results where greater than 10x the blank contamination and do not require qualification.

The method blank also contained a detection of Lead above the MDL but below the RL. Associated sample results were <10x the blank detection level, and have been qualified as estimated (J).

7.3.3 Laboratory Control Samples (LCS)

The LCS %R was within the laboratory and method specified control limits.

7.3.4 Matrix Spike (MS)

All MS %R were within the laboratory specified control limits.

7.3.5 Lab Duplicate (LD)

All Lab Duplicate RPDs were within specified control limits, with the exception of Lead, which exceeded control. All associated results for Lead have been qualified as estimated (J).

7.3.6 Laboratory Qualifications

Detected result values between the MDL and RL were qualified as estimated (J) by the laboratory. This qualification is appropriate for these results and has been maintained.

7.3.7 Overall Assessment

Accuracy was acceptable based on the LCS and MS recoveries, and precision was acceptable based on the Lab Duplicate, and Field Duplicate RPD values, except as noted above. The data are of known quality and are acceptable for use as qualified.

8 Qualified Data Summary

Qualified sample results are listed below. This list does not include non-detected values simply qualified U.

Qualified Sample Results for 605449

Sample ID	Analyte	Qualifier	Qualification Reason
BCT-MW108-052416	Acenaphthene	R	Result Exceeds Instrument Range
	Acenaphthylene	R	Rejected in favor of lower dilution
	Anthracene	R	Rejected in favor of lower dilution
	Benz(a)anthracene	R	Rejected in favor of lower dilution
	Benzo(a)pyrene	R	Rejected in favor of lower dilution
	Benzo(b)fluoranthene	R	Rejected in favor of lower dilution
	Benzo(g,h,i)perylene	R	Rejected in favor of lower dilution
	Benzo(k)fluoranthene	R	Rejected in favor of lower dilution
	Chrysene	R	Rejected in favor of lower dilution
	Dibenz(a,h)anthracene	R	Rejected in favor of lower dilution
	Fluoranthene	R	Rejected in favor of lower dilution
	Fluorene	R	Rejected in favor of lower dilution
	Indeno(1,2,3-cd)pyrene	R	Rejected in favor of lower dilution
	Naphthalene	R	Result Exceeds Instrument Range
	Phenanthrene	R	Rejected in favor of lower dilution
	Pyrene	R	Rejected in favor of lower dilution
GF9-MW-3-052416	Acenaphthene	R	Result Exceeds Instrument Range
	Acenaphthylene	R	Rejected in favor of lower dilution
	Anthracene	R	Rejected in favor of lower dilution
	Benz(a)anthracene	R	Rejected in favor of lower dilution
	Benzo(a)pyrene	R	Rejected in favor of lower dilution
	Benzo(b)fluoranthene	R	Rejected in favor of lower dilution
	Benzo(g,h,i)perylene	R	Rejected in favor of lower dilution
	Benzo(k)fluoranthene	R	Rejected in favor of lower dilution
	Chrysene	R	Rejected in favor of lower dilution
	Dibenz(a,h)anthracene	R	Rejected in favor of lower dilution
	Fluoranthene	R	Rejected in favor of lower dilution
	Fluorene	R	Result Exceeds Instrument Range
	Indeno(1,2,3-cd)pyrene	R	Rejected in favor of lower dilution
	Naphthalene	R	Result Exceeds Instrument Range
	Phenanthrene	R	Rejected in favor of lower dilution
	Pyrene	R	Rejected in favor of lower dilution
SHB-MW-101-052316	Acenaphthene	R	Result Exceeds Instrument Range
	Acenaphthylene	R	Rejected in favor of lower dilution
	Anthracene	R	Rejected in favor of lower dilution
	Benz(a)anthracene	R	Rejected in favor of lower dilution
	Benzo(a)pyrene	R	Rejected in favor of lower dilution
	Benzo(b)fluoranthene	R	Rejected in favor of lower dilution
	Benzo(g,h,i)perylene	R	Rejected in favor of lower dilution
	Benzo(k)fluoranthene	R	Rejected in favor of lower dilution
	Chrysene	R	Rejected in favor of lower dilution

Sample ID	Analyte	Qualifier	Qualification Reason
	Dibenz(a,h)anthracene	R	Rejected in favor of lower dilution
	Fluoranthene	R	Rejected in favor of lower dilution
	Fluorene	R	Rejected in favor of lower dilution
	Indeno(1,2,3-cd)pyrene	R	Rejected in favor of lower dilution
	Naphthalene	R	Rejected in favor of lower dilution
	Phenanthrene	R	Rejected in favor of lower dilution
	Pyrene	R	Rejected in favor of lower dilution

Qualified Sample Results for K1605616

Sample ID	Analyte	Qualifier	Qualification Reason
BBH-MW-101-052316	Zinc	J	Lab Dup RPD/Delta exceeds control limit.
BBH-MW-102-052316	Arsenic	J	Results between DL and RL are estimated.
	Lead	J	Detected result <10x ICB/CCB detections
	Mercury	J	Result <10x MB detection.
	Zinc	J	Lab Dup RPD/Delta exceeds control limit.
BBH-MW-103-052316	Copper	J	Field Dup RPD Exceeds Control Limit
	Zinc	J	Lab Dup RPD/Delta exceeds control limit.
BBH-MW104-052416	Arsenic	J	Results between DL and RL are estimated.
	Lead	J	Detected result <10x ICB/CCB detections. Results between DL and RL are estimated.
	Mercury	J	Result <10x MB detection.
	Zinc	J	Lab Dup RPD/Delta exceeds control limit.
BBH-MW-500-052316	Copper	J	Field Dup RPD Exceeds Control Limit
	Zinc	J	Lab Dup RPD/Delta exceeds control limit.

Qualified Sample Results for 605456

Sample ID	Analyte	Qualifier	Qualification Reason
UST71-MW102-052416	Diesel Range TPH	X	The sample chromatographic pattern does not resemble the fuel standard used for quantitation.

Qualified Sample Results for K1605613

No results have been qualified for this SDG.

Qualified Sample Results for 605444

Sample ID	Analyte	Qualifier	Qualification Reason
BCT-MW-107-052416	Acenaphthene	R	Result Exceeds Instrument Range
	Acenaphthylene	R	Rejected in favor of lower dilution
	Anthracene	R	Rejected in favor of lower dilution
	Benz(a)anthracene	R	Rejected in favor of lower dilution
	Benzo(a)pyrene	R	Rejected in favor of lower dilution
	Benzo(b)fluoranthene	R	Rejected in favor of lower dilution
	Benzo(g,h,i)perylene	R	Rejected in favor of lower dilution

Sample ID	Analyte	Qualifier	Qualification Reason
	Benzo(k)fluoranthene	R	Rejected in favor of lower dilution
	Chrysene	R	Rejected in favor of lower dilution
	Dibenz(a,h)anthracene	R	Rejected in favor of lower dilution
	Fluoranthene	R	Rejected in favor of lower dilution
	Fluorene	R	Result Exceeds Instrument Range
	Indeno(1,2,3-cd)pyrene	R	Rejected in favor of lower dilution
	Naphthalene	R	Result Exceeds Instrument Range
	Phenanthrene	R	Rejected in favor of lower dilution
	Pyrene	R	Rejected in favor of lower dilution
MW-1-052416	Acenaphthene	UJ	Surrogate %R Low.
	Acenaphthylene	UJ	Surrogate %R Low.
	Anthracene	UJ	Surrogate %R Low.
	Benz(a)anthracene	UJ	Surrogate %R Low.
	Benzo(a)pyrene	UJ	Surrogate %R Low.
	Benzo(b)fluoranthene	UJ	Surrogate %R Low.
	Benzo(g,h,i)perylene	UJ	Surrogate %R Low.
	Benzo(k)fluoranthene	UJ	Surrogate %R Low.
	Chrysene	UJ	Surrogate %R Low.
	Dibenz(a,h)anthracene	UJ	Surrogate %R Low.
	Fluoranthene	UJ	Surrogate %R Low.
	Fluorene	UJ	Surrogate %R Low.
	Indeno(1,2,3-cd)pyrene	UJ	Surrogate %R Low.
	Naphthalene	UJ	Surrogate %R Low.
	Phenanthrene	UJ	Surrogate %R Low.
	Pyrene	UJ	Surrogate %R Low.
UST71-MW103-052416	Acenaphthene	R	Result Exceeds Instrument Range
	Acenaphthylene	R	Rejected in favor of lower dilution
	Anthracene	R	Result Exceeds Instrument Range
	Benz(a)anthracene	R	Rejected in favor of lower dilution
	Benzo(a)pyrene	J	The internal standard associated with the analyte is out of control limits
	Benzo(a)pyrene	R	Rejected in favor of lower dilution.
	Benzo(b)fluoranthene	J	The internal standard associated with the analyte is out of control limits
	Benzo(b)fluoranthene	R	Rejected in favor of lower dilution
	Benzo(g,h,i)perylene	J	The internal standard associated with the analyte is out of control limits
	Benzo(g,h,i)perylene	R	Rejected in favor of lower dilution.
	Benzo(k)fluoranthene	J	The internal standard associated with the analyte is out of control limits
	Benzo(k)fluoranthene	R	Rejected in favor of lower dilution.
	Chrysene	R	Rejected in favor of lower dilution.
	Dibenz(a,h)anthracene	R	Rejected in favor of lower dilution.
	Dibenz(a,h)anthracene	UJ	The internal standard associated with the analyte is out of control limits

Sample ID	Analyte	Qualifier	Qualification Reason
	Fluoranthene	R	Result Exceeds Instrument Range
	Fluorene	R	Result Exceeds Instrument Range
	Indeno(1,2,3-cd)pyrene	J	The internal standard associated with the analyte is out of control limits
	Indeno(1,2,3-cd)pyrene	R	Rejected in favor of lower dilution.
	Naphthalene	R	Result Exceeds Instrument Range
	Phenanthrene	R	Result Exceeds Instrument Range
	Pyrene	R	Result Exceeds Instrument Range

Qualified Sample Results for K1605613

Sample ID	Analyte	Qualifier	Qualification Reason
PM-MW-8-052316	Lead	J	<10x Blank Contamination level. Lab Dup Outside Control Limit.
	Mercury	J	<10x Blank Contamination Level
REC3-MW1R-052316	Lead	J	<10x Blank Contamination Level. Result detected between MDL and RL. Lab Dup Outside Control Limit.

Data Qualifier Definitions

Data Qualifier	Definition
J	The analyte was detected above the reported quantitation limit, and the reported concentration was an estimated value.
R	The sample results are unusable due to the quality of the data generated because certain criteria were not met. The analyte may or may not be present in the sample.
U	The analyte was analyzed for, but was considered not detected at the reporting limit or reported value.
UJ	The analyte was analyzed for, and the associated quantitation limit was an estimated value.
X	According to lab, the sample chromatographic pattern does not resemble the fuel standard used for quantitation.

9 References

Aspect, 2013, Work Plan for Remedial Investigation/Feasibility Study, Kimberly-Clark Worldwide Site Upland Area, Everett, Washington, November 22, 2013.

U.S. Environmental Protection Agency (USEPA), 1994, Method 200.8 Determination of Trace Elements in Waters and Wastes by Inductively Coupled Plasma – Mass Spectrometry, Revision 5.4, Environmental Monitoring Systems Laboratory Office of Research and Development.

U.S. Environmental Protection Agency (USEPA), 1997, Method 1640 Determination of Trace Elements in Waters by Preconcentration and Inductively Coupled Plasma – Mass Spectrometry, Office of Water & Office of Science and Technology Engineering and Analysis Division (4303), April.

U.S. Environmental Protection Agency (USEPA), 1999, Contract Laboratory Program National Functional Guidelines for Inorganic Data Review, Office of Emergency and Remedial Response, USEPA Publication No. 540/R-99/008, October.

U.S. Environmental Protection Agency (USEPA), 2004, Contract Laboratory Program National Functional Guidelines for Organic Methods Data Review, Office of Superfund Remediation and Technology Innovation (OSRTI), USEPA Publication No. 540-R-04-004, October.

DATA VALIDATION REPORT

Kimberly Clark – Everett Mill
Groundwater Testing
August 2016
SDG 608337, K1609776

Prepared by:
Aspect Consulting, LLC
401 Second Ave South, Suite 201
Seattle, WA 98104

Project No. 110207 • November 29, 2016

S:\Kimberly Clark\Everett Mill 110207\Data\Validation\Validation Reports and EDDs\Interim Action\Confirmation GW\DV Report - KC Everett Mill - August 2016 - GW.docx

1 Introduction

This report summarizes the findings of the United States Environmental Protection Agency (USEPA) Stage 2A data validation performed on analytical data for groundwater samples collected from August 17 through 18 2016 for Kimberly Clark Everett Mill RI-FS sampling. This data quality review is divided into sections by sample delivery group (SDG). A complete list of samples and analyses for each SDG is provided in the Sample Index at the beginning of each section.

Samples were analyzed for PAHs, TPH/BTEX by Friedman and Bruya, Inc. (F&B). Analysis for metals, and mercury was subcontracted to ALS Environmental (ALS). The analytical methods are summarized below:

Analysis	Method	Laboratory
Mercury - Dissolved	EPA 1631E	ALS
Metals (As, Cu, Ni, Pb, Zn) - Dissolved	EPA 200.8	ALS
PAH	EPA 8270D-SIM	F&B
TPH - Diesel with Silica Gel Cleanup	NWTPH-DXSG	F&B
TPH Gasoline / BTEX	NWTPH-GX/SW8021B	F&B

The validation followed the procedures documented in the analytical methods, the Quality Assurance Project Plan (QAPP; in Appendix A to Aspect, 2013), *National Functional Guidelines for Organic Data Review* (USEPA, 1999), and *National Functional Guidelines for Inorganic Data Review* (USEPA, 2004).

Data assigned a J qualifier (estimated) may be used for site evaluation purposes but the reasons for qualification should be taken into account when interpreting sample concentrations. Data marked as do-not-report or rejected (R) should not be used under any circumstances. Values without qualification meet all data measurement quality objectives and are suitable for use.

Data qualifier definitions and a summary table of the qualified data are included in the Qualified Data Summary at the end of this report. Data qualifiers have been incorporated into the project chemistry database to reflect the validation in this report.

2 Data Validation Findings for SDG 608337

Groundwater samples in this SDG, and the chemical analyses performed on them, are tabulated below. The sections below describe the results of the data quality review for this SDG by analyte group (analysis).

Sample Index

				Analysis		
Sample ID	Sample Date	Type	Matrix	TPH-DXSG	GX / BTEX	PAH
BCT-MW103-081716	8/17/2016	N	WG	X	X	
BCT-MW104-081816	8/18/2016	N	WG	X	X	X
BCT-MW105-081816	8/18/2016	N	WG	X	X	X
BCT-MW106-081816	8/18/2016	N	WG	X	X	X
BCT-MW-107-081816	8/18/2016	N	WG	X	X	X
BCT-MW108-081816	8/18/2016	N	WG	X	X	X
BCT-MW500-081716	8/17/2016	FD	WG	X	X	
MW-1-081716	8/17/2016	N	WG	X	X	X
MW-2-081716	8/17/2016	N	WG	X	X	X
REC3-MW1R-081816	8/18/2016	N	WG			X
SHB-MW101-081716	8/17/2016	N	WG			X
UST29-MW-101-081816	8/18/2016	N	WG			X
UST71-MW101-081716	8/17/2016	N	WG	X		X
UST71-MW103-081816	8/18/2016	N	WG	X	X	X

2.1 PAH (EPA 8270D SIM)

2.1.1 Sample Receipt, Preservation, and Holding Times

Sample receipt, and preservation (2-6 degrees C) were acceptable.

Samples were analyzed within the requisite holding time limit.

2.1.2 Method Blanks

Target analytes were not detected at or above the reporting levels in the method blanks. No qualification or action was needed.

2.1.3 Surrogate Recovery

Surrogate recoveries where acceptable for all samples in this analysis with the exception of the following samples, which had a benzo(a)anthracene-d12 recovery below lower control limits:

MW-1-081716

MW-2-081716

REC3-MW1R-081816

All associated results for these sample have been qualified J/UJ.

2.1.4 Laboratory Control Samples/ Laboratory Control Sample Duplicates (LCS/LCSD)

All LCS and LCSD %R and RPD were within the laboratory specified control limits.

2.1.5 Dilutions and Range

Dilutions were run on some samples do to results exceeding the instrument calibration range. The exceedances were qualified R (rejected), and should not be used. Other analyte results in the dilutions have been rejected in favor of the original result.

2.1.6 Overall Assessment

Accuracy was acceptable based on the LCS/LCSD recoveries, and precision was acceptable based on the LCS/LCSD RPD values. The data are of known quality and are acceptable for use as qualified.

2.2 Diesel & Motor Oil Range Hydrocarbons (NWTPH-DXSG)

2.2.1 Sample Receipt, Preservation, and Holding Times

Sample receipt, and preservation (2-6 degrees C) were acceptable.

Samples were analyzed within the requisite holding time limit.

2.2.2 Method Blanks

Target analytes were not detected at or above the reporting levels in the method blanks. No qualification or action was needed.

2.2.3 Surrogates (SUR)

All surrogate recoveries where within the laboratory specified control limits.

2.2.4 Laboratory Control Samples/ Laboratory Control Sample Duplicates (LCS/LCSD)

All LCS/LCSD %R and RPD were within the laboratory specified control limits.

2.2.5 Matrix Spike/Matrix Spike Duplicates (MS/MSD)

All MS/MSD %R and RPD were within the laboratory specified control limits.

2.2.6 Field Duplicate (FD)

Field Duplicate RPD values were within specified control limits.

2.2.7 Lab Applied Qualifiers

The lab flagged all detected results for Diesel Range with an "X" indicating that the chromatographic pattern observed in the sample does not resemble the fuel standard used for quantitation. This implies that the Diesel Range results are likely not the result of diesel fuels. Results flagged as such by the lab have been qualified X to indicate this distinction.

2.2.8 Overall Assessment

Accuracy was acceptable based on the LCS/LCSD and MS/MSD recoveries, and precision was acceptable based on the LCS/LCSD, MS/MSD and Field Duplicate RPD values. The data are of known quality and are acceptable for use as qualified.

2.3 Gasoline Range Hydrocarbons and BTEX (NWTPH-GBTEX)

2.3.1 Sample Receipt, Preservation, and Holding Times

Sample receipt, and preservation (2-6 degrees C) were acceptable.

Samples were analyzed within the requisite holding time limit.

2.3.2 Method Blanks

Target analytes were not detected at or above the reporting levels in the method blanks. No qualification or action was needed.

2.3.3 Surrogates (SUR)

All surrogate recoveries where within the laboratory specified control limits.

2.3.4 Laboratory Control Samples (LCS)

All LCS %R were within the laboratory specified control limits.

2.3.5 Matrix Spike/Matrix Spike Duplicates (MS/MSD)

All MS/MSD %R and RPD were within the laboratory specified control limits.

2.3.6 Field Duplicate (FD)

Field Duplicate RPD values were within specified control limits.

2.3.7 Overall Assessment

Accuracy was acceptable based on the LCS and MS/MSD recoveries, and precision was acceptable based on the MS/MSD and Field Duplicate RPD values. The data are of known quality and are acceptable for use as qualified.

3 Data Validation Findings for SDG K1609776

Groundwater samples in this SDG, and the chemical analyses performed on them, are tabulated below. The sections below describe the results of the data quality review for this SDG by analyte group (analysis).

Sample Index

				Analysis	
Sample ID	Sample Date	Sample Type	Sample Matrix	Hg	Metals
BBH-MW101-081816	8/18/2016	N	WG	X	X
BBH-MW102-081816	8/18/2016	N	WG	X	X
BBH-MW103-081716	8/17/2016	N	WG	X	X
BBH-MW104-081816	8/18/2016	N	WG	X	X
BBH-MW500-081716	8/17/2016	FD	WG	X	X
CN-MW-101-081716	8/17/2016	N	WG		X
GF-MW-101-081716	8/17/2016	N	WG	X	
MW-1-081716	8/17/2016	N	WG		X
MW-2-081716	8/17/2016	N	WG		X
PM-MW-8-081816	8/18/2016	N	WG	X	X
RCD-MW-101-081816	8/18/2016	N	WG		X
REC3-MW1R-081816	8/18/2016	N	WG	X	X
SHB-MW101-081716	8/17/2016	N	WG	X	X
UST70-MW101-081716	8/17/2016	N	WG		X
UST70-MW102-081716	8/17/2016	N	WG		X
UST70-MW2-081816	8/18/2016	N	WG		X
UST71-MW101-081716	8/17/2016	N	WG	X	X
UST71-MW103-081816	8/18/2016	N	WG	X	X

3.1 Sample Receipt and Preservation

Sample receipt, and preservation (2-6 degrees C) were acceptable.

Sample MW-1-081716 had been misnamed on the COC as MW-101-081716. This has been corrected in the EDD. The lab also appended addition date info to the end of each sample ID. These have been corrected back to the IDs specified on the COC.

3.2 Dissolved Mercury (EPA 1631E)

3.2.1 Holding Times

Samples were analyzed within the requisite holding time limit.

3.2.2 Method Blanks

Two of the three method blanks reported contained detections of mercury above the MDL but below the RL. Mercury results <10x the blank concentration have been qualified J. All other results where greater than 10x the blank contamination and do not require qualification.

3.2.3 Laboratory Control Samples (LCS)

The LCS %R was within the laboratory and method specified control limits.

3.2.4 Matrix Spike/Matrix Spike Duplicates (MS/MSD)

All MS/MSD %R and RPD were within the laboratory and method specified control limits.

3.2.5 Field Duplicate (FD)

Field Duplicate RPD values were within specified control limits.

3.2.6 Overall Assessment

Accuracy was acceptable based on the LCS and MS/MSD recoveries, and precision was acceptable based on the MS/MSD and Field Duplicate RPD values. The data are of known quality and are acceptable for use as qualified.

3.3 Dissolved Metals (EPA 200.8)

3.3.1 Holding Times

Samples were analyzed within the requisite holding time limit.

3.3.2 Method Blanks

All method blank results were below the detection limit threshold. No qualification was needed.

3.3.3 Laboratory Control Samples (LCS)

The LCS %R was within the laboratory and method specified control limits.

3.3.4 Matrix Spike (MS)

All MS%R were within the laboratory specified control limits.

3.3.5 Lab Duplicate (LD)

All Lab Duplicate RPDs were within specified control limits, with the exception of Zinc. Zinc results in all associated samples have been qualified as estimated (J).

3.3.6 Field Duplicate (FD)

Field Duplicate RPD values were within specified control limits.

3.3.7 Overall Assessment

Accuracy was acceptable based on the LCS and MS recoveries, and precision was acceptable based on the Lab Duplicate and Field Duplicate RPD values, except as noted above. The data are of known quality and are acceptable for use as qualified.

4 Qualified Data Summary

Qualified sample results are listed below. This list does not include non-detected values simply qualified U.

Qualified Sample Results for 608337

Sample ID	Analyte	Qualifier	Qualification Reason
BCT-MW103-081716	Diesel Range TPH	X	The sample chromatographic pattern does not resemble the fuel standard used for quantitation
BCT-MW104-081816	Diesel Range TPH	X	The sample chromatographic pattern does not resemble the fuel standard used for quantitation
BCT-MW-107-081816	Acenaphthene	R	Result Exceeds Instrument Range
	Acenaphthylene	R	Rejected in favor of lower dilution
	Anthracene	R	Rejected in favor of lower dilution
	Benz(a)anthracene	R	Rejected in favor of lower dilution
	Benzo(a)pyrene	R	Rejected in favor of lower dilution
	Benzo(b)fluoranthene	R	Rejected in favor of lower dilution
	Benzo(g,h,i)perylene	R	Rejected in favor of lower dilution
	Benzo(k)fluoranthene	R	Rejected in favor of lower dilution
	Chrysene	R	Rejected in favor of lower dilution
	Dibenz(a,h)anthracene	R	Rejected in favor of lower dilution
	Diesel Range TPH	X	The sample chromatographic pattern does not resemble the fuel standard used for quantitation
	Fluoranthene	R	Rejected in favor of lower dilution
	Fluorene	R	Rejected in favor of lower dilution
	Indeno(1,2,3-cd)pyrene	R	Rejected in favor of lower dilution
	Naphthalene	R	Result Exceeds Instrument Range
	Phenanthrene	R	Rejected in favor of lower dilution
	Pyrene	R	Rejected in favor of lower dilution
BCT-MW108-081816	Acenaphthene	R	Result Exceeds Instrument Range
	Acenaphthylene	R	Rejected in favor of lower dilution
	Anthracene	R	Rejected in favor of lower dilution
	Benz(a)anthracene	R	Rejected in favor of lower dilution
	Benzo(a)pyrene	R	Rejected in favor of lower dilution
	Benzo(b)fluoranthene	R	Rejected in favor of lower dilution
	Benzo(g,h,i)perylene	R	Rejected in favor of lower dilution
	Benzo(k)fluoranthene	R	Rejected in favor of lower dilution
	Chrysene	R	Rejected in favor of lower dilution
	Dibenz(a,h)anthracene	R	Rejected in favor of lower dilution

Sample ID	Analyte	Qualifier	Qualification Reason
	Diesel Range TPH	X	The sample chromatographic pattern does not resemble the fuel standard used for quantitation
	Fluoranthene	R	Rejected in favor of lower dilution
	Fluorene	R	Result Exceeds Instrument Range
	Indeno(1,2,3-cd)pyrene	R	Rejected in favor of lower dilution
	Naphthalene	R	Result Exceeds Instrument Range
	Phenanthrene	R	Rejected in favor of lower dilution
	Pyrene	R	Rejected in favor of lower dilution
BCT-MW500-081716	Diesel Range TPH	X	The sample chromatographic pattern does not resemble the fuel standard used for quantitation
MW-1-081716	Acenaphthene	UJ	Surrogate recovery below lower control limit.
	Acenaphthylene	UJ	Surrogate recovery below lower control limit.
	Anthracene	UJ	Surrogate recovery below lower control limit.
	Benz(a)anthracene	UJ	Surrogate recovery below lower control limit.
	Benzo(a)pyrene	UJ	Surrogate recovery below lower control limit.
	Benzo(b)fluoranthene	UJ	Surrogate recovery below lower control limit.
	Benzo(g,h,i)perylene	UJ	Surrogate recovery below lower control limit.
	Benzo(k)fluoranthene	UJ	Surrogate recovery below lower control limit.
	Chrysene	UJ	Surrogate recovery below lower control limit.
	Dibenz(a,h)anthracene	UJ	Surrogate recovery below lower control limit.
	Fluoranthene	UJ	Surrogate recovery below lower control limit.
	Fluorene	UJ	Surrogate recovery below lower control limit.
	Indeno(1,2,3-cd)pyrene	UJ	Surrogate recovery below lower control limit.
	Naphthalene	UJ	Surrogate recovery below lower control limit.
	Phenanthrene	UJ	Surrogate recovery below lower control limit.
	Pyrene	UJ	Surrogate recovery below lower control limit.
MW-2-081716	Acenaphthene	UJ	Surrogate recovery below lower control limit.
	Acenaphthylene	UJ	Surrogate recovery below lower control limit.
	Anthracene	UJ	Surrogate recovery below lower control limit.
	Benz(a)anthracene	UJ	Surrogate recovery below lower control limit.
	Benzo(a)pyrene	UJ	Surrogate recovery below lower control limit.
	Benzo(b)fluoranthene	UJ	Surrogate recovery below lower control limit.
	Benzo(g,h,i)perylene	UJ	Surrogate recovery below lower control limit.
	Benzo(k)fluoranthene	UJ	Surrogate recovery below lower control limit.
	Chrysene	UJ	Surrogate recovery below lower control limit.
	Dibenz(a,h)anthracene	UJ	Surrogate recovery below lower control limit.
	Fluoranthene	UJ	Surrogate recovery below lower control limit.
	Fluorene	UJ	Surrogate recovery below lower control limit.

Sample ID	Analyte	Qualifier	Qualification Reason
	Indeno(1,2,3-cd)pyrene	UJ	Surrogate recovery below lower control limit.
	Naphthalene	UJ	Surrogate recovery below lower control limit.
	Phenanthrene	UJ	Surrogate recovery below lower control limit.
	Pyrene	UJ	Surrogate recovery below lower control limit.
REC3-MW1R-081816	Acenaphthene	UJ	Surrogate recovery below lower control limit.
	Acenaphthylene	UJ	Surrogate recovery below lower control limit.
	Anthracene	UJ	Surrogate recovery below lower control limit.
	Benz(a)anthracene	UJ	Surrogate recovery below lower control limit.
	Benzo(a)pyrene	UJ	Surrogate recovery below lower control limit.
	Benzo(b)fluoranthene	UJ	Surrogate recovery below lower control limit.
	Benzo(g,h,i)perylene	UJ	Surrogate recovery below lower control limit.
	Benzo(k)fluoranthene	UJ	Surrogate recovery below lower control limit.
	Chrysene	UJ	Surrogate recovery below lower control limit.
	Dibenz(a,h)anthracene	UJ	Surrogate recovery below lower control limit.
	Fluoranthene	UJ	Surrogate recovery below lower control limit.
	Fluorene	UJ	Surrogate recovery below lower control limit.
	Indeno(1,2,3-cd)pyrene	UJ	Surrogate recovery below lower control limit.
	Naphthalene	UJ	Surrogate recovery below lower control limit.
	Phenanthrene	UJ	Surrogate recovery below lower control limit.
	Pyrene	UJ	Surrogate recovery below lower control limit.
SHB-MW101-081716	Acenaphthene	R	Result Exceeds Instrument Range
	Acenaphthylene	R	Rejected in favor of lower dilution
	Anthracene	R	Rejected in favor of lower dilution
	Benz(a)anthracene	R	Rejected in favor of lower dilution
	Benzo(a)pyrene	R	Rejected in favor of lower dilution
	Benzo(b)fluoranthene	R	Rejected in favor of lower dilution
	Benzo(g,h,i)perylene	R	Rejected in favor of lower dilution
	Benzo(k)fluoranthene	R	Rejected in favor of lower dilution
	Chrysene	R	Rejected in favor of lower dilution
	Dibenz(a,h)anthracene	R	Rejected in favor of lower dilution
	Fluoranthene	R	Rejected in favor of lower dilution
	Fluorene	R	Rejected in favor of lower dilution
	Indeno(1,2,3-cd)pyrene	R	Rejected in favor of lower dilution
	Naphthalene	R	Rejected in favor of lower dilution
	Phenanthrene	R	Rejected in favor of lower dilution
	Pyrene	R	Rejected in favor of lower dilution
	Acenaphthene	R	Result Exceeds Instrument Range

Sample ID	Analyte	Qualifier	Qualification Reason
UST71-MW103-081816	Acenaphthylene	R	Rejected in favor of lower dilution
	Anthracene	R	Result Exceeds Instrument Range
	Benz(a)anthracene	R	Rejected in favor of lower dilution
	Benzo(a)pyrene	R	Rejected in favor of lower dilution
	Benzo(b)fluoranthene	R	Rejected in favor of lower dilution
	Benzo(g,h,i)perylene	R	Rejected in favor of lower dilution
	Benzo(k)fluoranthene	R	Rejected in favor of lower dilution
	Chrysene	R	Rejected in favor of lower dilution
	Dibenz(a,h)anthracene	R	Rejected in favor of lower dilution
	Diesel Range TPH	X	The sample chromatographic pattern does not resemble the fuel standard used for quantitation
	Fluoranthene	R	Result Exceeds Instrument Range
	Fluorene	R	Result Exceeds Instrument Range
	Indeno(1,2,3-cd)pyrene	R	Rejected in favor of lower dilution
	Naphthalene	R	Result Exceeds Instrument Range
	Phenanthrene	R	Result Exceeds Instrument Range
	Pyrene	R	Result Exceeds Instrument Range

Qualified Sample Results for K1609776

Sample ID	Analyte	Qualifier	Qualification Reason
BBH-MW101-081816	Zinc	J	Lab Dup Outside Control.
BBH-MW102-081816	Mercury	J	Result <10x MB detection.
	Zinc	J	Lab Dup Outside Control.
BBH-MW103-081716	Zinc	J	Lab Dup Outside Control.
BBH-MW104-081816	Mercury	J	Result <10x MB detection.
	Zinc	J	Lab Dup Outside Control.
BBH-MW500-081716	Zinc	J	Lab Dup Outside Control.
PM-MW-8-081816	Mercury	J	Result <10x MB detection.
	Zinc	J	Lab Dup Outside Control.
REC3-MW1R-081816	Zinc	J	Lab Dup Outside Control.
SHB-MW101-0817116	Mercury	J	Result <10x MB detection.
UST71-MW101-081716	Mercury	J	Result <10x MB detection.

Data Qualifier Definitions

Data Qualifier	Definition
J	The analyte was detected above the reported quantitation limit, and the reported concentration was an estimated value.

Data Qualifier	Definition
R	The sample results are unusable due to the quality of the data generated because certain criteria were not met. The analyte may or may not be present in the sample.
U	The analyte was analyzed for, but was considered not detected at the reporting limit or reported value.
UJ	The analyte was analyzed for, and the associated quantitation limit was an estimated value.
X	Chromatographic pattern observed does not resemble fuel standard pattern.

5 References

Aspect, 2013, Work Plan for Remedial Investigation/Feasibility Study, Kimberly-Clark Worldwide Site Upland Area, Everett, Washington, November 22, 2013.

U.S. Environmental Protection Agency (USEPA), 1994, Method 200.8 Determination of Trace Elements in Waters and Wastes by Inductively Coupled Plasma – Mass Spectrometry, Revision 5.4, Environmental Monitoring Systems Laboratory Office of Research and Development.

U.S. Environmental Protection Agency (USEPA), 1997, Method 1640 Determination of Trace Elements in Waters by Preconcentration and Inductively Coupled Plasma – Mass Spectrometry, Office of Water & Office of Science and Technology Engineering and Analysis Division (4303), April.

U.S. Environmental Protection Agency (USEPA), 1999, Contract Laboratory Program National Functional Guidelines for Inorganic Data Review, Office of Emergency and Remedial Response, USEPA Publication No. 540/R-99/008, October.

U.S. Environmental Protection Agency (USEPA), 2004, Contract Laboratory Program National Functional Guidelines for Organic Methods Data Review, Office of Superfund Remediation and Technology Innovation (OSRTI), USEPA Publication No. 540-R-04-004, October.

DATA VALIDATION REPORT

Kimberly Clark – Everett Mill

Seep Testing

October 2016

SDG 610298, K1612830

Prepared by:
Aspect Consulting, LLC
401 Second Ave South, Suite 201
Seattle, WA 98104

Project No. 110207 • December 1, 2016

S:\Kimberly Clark\Everett Mill 110207\Data\Validation\Validation Reports and EDDs\RI\DV Report - KC Everett Mill - October 2016 - Seep.docx

1 Introduction

This report summarizes the findings of the United States Environmental Protection Agency (USEPA) Stage 2A data validation performed on analytical data for seep samples collected on October 20 2016 for Kimberly Clark Everett Mill RI-FS sampling. This data quality review is divided into sections by sample delivery group (SDG). A complete list of samples and analyses for each SDG is provided in the Sample Index at the beginning of each section.

Samples were analyzed for PAHs by Friedman and Bruya, Inc. (F&B). Analysis for metals, mercury, ammonia and salinity was subcontracted to ALS Environmental (ALS). The analytical methods are summarized below:

Analysis	Method	Laboratory
Mercury - Dissolved	EPA 1631E	ALS
Metals (As, Cu, Ni, Pb, Zn) - Dissolved	EPA 200.8	ALS
Ammonia as Nitrogen	EPA 350.1	ALS
Salinity	SM 2520B	ALS
PAH	EPA 8270D-SIM	F&B

The validation followed the procedures documented in the analytical methods, the Quality Assurance Project Plan (QAPP; in Appendix A to Aspect, 2013), *National Functional Guidelines for Organic Data Review* (USEPA, 1999), and *National Functional Guidelines for Inorganic Data Review* (USEPA, 2004).

Data assigned a J qualifier (estimated) may be used for site evaluation purposes but the reasons for qualification should be taken into account when interpreting sample concentrations. Data marked as do-not-report or rejected (R) should not be used under any circumstances. Values without qualification meet all data measurement quality objectives and are suitable for use.

Data qualifier definitions and a summary table of the qualified data are included in the Qualified Data Summary at the end of this report. Data qualifiers have been incorporated into the project chemistry database to reflect the validation in this report.

2 Data Validation Findings for SDG 610298

Seep samples in this SDG, and the chemical analyses performed on them, are tabulated below. The sections below describe the results of the data quality review for this SDG by analyte group (analysis).

Sample Index

				Analysis
Sample ID	**Sample Date**	**Type**	**Matrix**	**PAH**
SEEP-3-102016	10/20/2016	N	W	
SEEP-500-102016	10/20/2016	FD	W	X

2.1 PAH (EPA 8270D SIM)

2.1.1 Sample Receipt, Preservation, and Holding Times

Sample receipt, and preservation (2-6 degrees C) were acceptable.

Samples were analyzed within the requisite holding time limit.

2.1.2 Method Blanks

Target analytes were not detected at or above the reporting levels in the method blanks. No qualification or action was needed.

2.1.3 Surrogate Recovery

Surrogate recoveries where acceptable for all samples in this analysis.

2.1.4 Laboratory Control Samples/ Laboratory Control Sample Duplicates (LCS/LCSD)

All LCS and LCSD %R and RPD were within the laboratory specified control limits.

2.1.5 Field Duplicate (FD)

All Field Duplicate RPD were within acceptance criteria.

2.1.6 Overall Assessment

Accuracy was acceptable based on the LCS/LCSD recoveries, and precision was acceptable based on the LCS/LCSD and Field Duplicate RPD values. The data are of known quality and are acceptable for use as qualified.

3 Data Validation Findings for SDG K1612830

Seep samples in this SDG, and the chemical analyses performed on them, are tabulated below. The sections below describe the results of the data quality review for this SDG by analyte group (analysis).

Sample Index

				Analysis			
Sample ID	Sample Date	Sample Type	Sample Matrix	Hg	Metals	NH3	Salinity
SEEP-10-102016	10/20/2016	N	AQ	X	X	X	X
SEEP-11-102016	10/20/2016	N	AQ	X	X	X	X
SEEP-12-102016	10/20/2016	N	AQ	X	X	X	X
SEEP-13-102016	10/20/2016	N	AQ	X	X	X	X
SEEP-3-102016	10/20/2016	N	AQ	X	X	X	X
SEEP-500-102016	10/20/2016	FD	AQ	X	X	X	X

3.1 Sample Receipt and Preservation

Sample receipt, and preservation (2-6 degrees C) were acceptable.

The lab appended additional date info to the end of each sample ID. These have been corrected back to the IDs specified on the COC.

3.2 Dissolved Mercury (EPA 1631E)

3.2.1 Holding Times/Misc.

Samples were analyzed within the requisite holding time limit.

Sample SEEP-13-102016 is reported as TOTAL mercury, rather than dissolved.

3.2.2 Method Blanks

One of the three method blanks reported contained detections of mercury above the MDL but below the RL. Mercury results <10x the blank concentration have been qualified J.

3.2.3 Laboratory Control Samples (LCS)

The LCS %R was within the laboratory and method specified control limits.

3.2.4 Matrix Spike/Matrix Spike Duplicates (MS/MSD)

All MS/MSD %R and RPD were within the laboratory and method specified control limits.

3.2.5 Field Duplicate (FD)

Field Duplicate RPD values were within specified control limits.

3.2.6 Laboratory Qualifications

Detected result values between the MDL and RL were qualified as estimated (J) by the laboratory. This qualification is appropriate for these results and has been maintained.

3.2.7 Overall Assessment

Accuracy was acceptable based on the LCS and MS/MSD recoveries, and precision was acceptable based on the MS/MSD and Field Duplicate RPD values. The data are of known quality and are acceptable for use as qualified.

3.3 Dissolved Metals (EPA 200.8)

3.3.1 Holding Times

Samples were analyzed within the requisite holding time limit.

3.3.2 Method Blanks

All method blank results were below the detection limit threshold. No qualification was needed.

3.3.3 Laboratory Control Samples (LCS)

The LCS %R was within the laboratory and method specified control limits.

3.3.4 Laboratory Qualifications

Detected result values between the MDL and RL were qualified as estimated (J) by the laboratory. This qualification is appropriate for these results and has been maintained.

3.3.5 Matrix Spike (MS)

All MS%R were within the laboratory specified control limits, with the exception of Arsenic which had a low %R. Associated Arsenic results have been qualified as estimated (J/UJ) to indicate a potential low bias.

3.3.6 Lab Duplicate (LD)

All Lab Duplicate RPDs were within specified control limits.

3.3.7 Field Duplicate (FD)

Field Duplicate RPD values were within specified control limits.

3.3.8 Overall Assessment

Accuracy was acceptable based on the LCS and MS recoveries (except as noted above), and precision was acceptable based on the Lab Duplicate and Field Duplicate RPD values. The data are of known quality and are acceptable for use as qualified.

3.4 Ammonia as Nitrogen (EPA350.1)

3.4.1 Holding Times

Samples were analyzed within the requisite holding time limit.

3.4.2 Method Blanks

The method blanks reported contained detections above the MDL but below the RL. Ammonia results <10x the blank concentration have been qualified as estimated (J).

3.4.3 Laboratory Control Samples/Laboratory Control Sample Duplicates (LCS/LCSD)

The LCS/LCSD %R and RPD were within the laboratory and method specified control limits.

3.4.4 Matrix Spike/Matrix Spike Duplicate (MS/MSD)

All MS/MSD %R and RPD were within the laboratory specified control limits.

3.4.5 Lab Duplicate (LD)

All Lab Duplicate RPDs were within specified control limits.

3.4.6 Field Duplicate (FD)

Field Duplicate RPD values were within specified control limits.

3.4.7 Overall Assessment

Accuracy was acceptable based on the LCS/LCSD and MS/MSD recoveries, and precision was acceptable based on the LCS/LCSD, MS/MSD, Lab Duplicate and Field

Duplicate RPD values. The data are of known quality and are acceptable for use as qualified.

3.5 Salinity (SM2520B)

3.5.1 Holding Times

Samples were analyzed within the requisite holding time limit.

3.5.2 Method Blanks

All method blank results were below the detection limit threshold. No qualification was needed.

3.5.3 Laboratory Control Samples (LCS)

The LCS %R was within the laboratory and method specified control limits.

3.5.4 Matrix Spike (MS)

All MS%R were within the laboratory specified control limits.

3.5.5 Lab Duplicate (LD)

All Lab Duplicate RPDs were within specified control limits.

3.5.6 Field Duplicate (FD)

Field Duplicate RPD values were within specified control limits.

3.5.7 Overall Assessment

Accuracy was acceptable based on the LCS and MS recoveries, and precision was acceptable based on the Lab Duplicate and Field Duplicate RPD values. The data are of known quality and are acceptable for use as qualified.

4 Qualified Data Summary

Qualified sample results are listed below. This list does not include non-detected values simply qualified U.

Qualified Sample Results for 610298

No results were qualified in this SDG

Qualified Sample Results for K1612830

Sample ID	Analyte	Qualifier	Qualification Reason
SEEP-10-102016	Arsenic	J	MS %R Low. Result between MDL and RL.
	Mercury	J	Result detected <10x MB.
SEEP-11-102016	Arsenic	J	MS %R Low. Result between MDL and RL
	Lead	J	Result between MDL and RL
	Mercury	J	Result detected between MDL and RL. Result detected <10x MB.
	Zinc	J	Result between MDL and RL
SEEP-12-102016	Arsenic	J	MS %R Low.
SEEP-13-102016	Arsenic	J	MS %R Low. Result between MDL and RL
SEEP-3-102016	Ammonia as Nitrogen	J	Detected result <10x MB detection
	Arsenic	J	MS %R Low.
SEEP-500-102016	Ammonia as Nitrogen	J	Detected result <10x MB detection
	Arsenic	J	MS %R Low.

Data Qualifier Definitions

Data Qualifier	Definition
J	The analyte was detected above the reported quantitation limit, and the reported concentration was an estimated value.
R	The sample results are unusable due to the quality of the data generated because certain criteria were not met. The analyte may or may not be present in the sample.
U	The analyte was analyzed for, but was considered not detected at the reporting limit or reported value.
UJ	The analyte was analyzed for, and the associated quantitation limit was an estimated value.
X	Chromatographic pattern observed does not resemble fuel standard pattern.

5 References

Aspect, 2013, Work Plan for Remedial Investigation/Feasibility Study, Kimberly-Clark Worldwide Site Upland Area, Everett, Washington, November 22, 2013.

U.S. Environmental Protection Agency (USEPA), 1994, Method 200.8 Determination of Trace Elements in Waters and Wastes by Inductively Coupled Plasma – Mass Spectrometry, Revision 5.4, Environmental Monitoring Systems Laboratory Office of Research and Development.

U.S. Environmental Protection Agency (USEPA), 1997, Method 1640 Determination of Trace Elements in Waters by Preconcentration and Inductively Coupled Plasma – Mass Spectrometry, Office of Water & Office of Science and Technology Engineering and Analysis Division (4303), April.

U.S. Environmental Protection Agency (USEPA), 1999, Contract Laboratory Program National Functional Guidelines for Inorganic Data Review, Office of Emergency and Remedial Response, USEPA Publication No. 540/R-99/008, October.

U.S. Environmental Protection Agency (USEPA), 2004, Contract Laboratory Program National Functional Guidelines for Organic Methods Data Review, Office of Superfund Remediation and Technology Innovation (OSRTI), USEPA Publication No. 540-R-04-004, October.

DRAFT

720 Olive Way, Suite 1900
Seattle, Washington 98101
206.287.9130

ANCHOR QEA

Data Validation Report – EPA Stage 2B

January 25, 2017

Project: Everett East Waterway

Project Number: 141205-01.03

This report summarizes the review of analytical results for four diffusive-gradient thin film (GST) samples collected on October 20, 2016. The samples were collected by Anchor QEA, LLC, and submitted to Analytical Resources, Inc. (ARI), in Tukwila, Washington. The samples were analyzed for sulfide by Standard Method 4500-S2D.

ARI sample data group (SDG) number 16J0346 was reviewed in this report. Sample IDs are presented in Table 1.

Table 1
Sample IDs

Sample ID	Lab Sample ID
EEW-SEEP3-DGT-161020	16J0346-01
EEW-SEEP12-DGT-161020	16J0346-02
EEW-SEEP11-DGT-161020	16J0346-03
EEW-SEEP10-DGT-161020	16J0346-04

Data Validation and Qualifications

The following comments refer to the laboratory's performance in meeting the quality assurance/quality control (QA/QC) guidelines outlined in the analytical procedures. Laboratory results were reviewed using the laboratory control limits and the following guidelines:

- USEPA Test Methods for Evaluating Solid Waste: Physical/Chemical Methods (SW-846, Third Edition; USEPA 1986)
- USEPA National Functional Guidelines for Inorganic Superfund Data Review (USEPA 2016b)

Unless noted in this report, laboratory results for the samples listed above were within QC criteria.

Field Documentation

Field documentation was checked for completeness and accuracy. The chain-of-custody form was signed by ARI at the time of sample receipt. Samples were received within the correct temperature range and in good condition.

Holding Times and Sample Preservation and Analytical Methods

Samples were appropriately preserved and analyzed within holding times.

Laboratory Method Blanks and Calibration Blanks

Laboratory method blanks and calibration blanks were analyzed at the required frequencies. All method blanks were free of target analytes at the method reporting limit.

Initial Calibrations and Calibration Verifications

Initial calibrations and calibration verifications met method criteria

Laboratory Control Sample

A laboratory control samples (LCS) was analyzed at the required frequency. The LCS recovery value was within laboratory control limits.

Matrix Spike and Matrix Spike Duplicate Samples

No matrix spike or matrix spike duplicate sample results were reported with this sample set.

Laboratory Duplicates

No laboratory duplicate sample results were reported with this sample set.

Method Reporting Limits

Reporting limits were acceptable as reported. All values were reported using the laboratory reporting limits. Values were reported as undiluted or when diluted, the reporting limit reflects the dilution factor.

Overall Assessment

As was determined by this evaluation, the laboratory followed the specified analytical method and the requested sample analyses were completed. Accuracy was acceptable as demonstrated by the calibration and LCS recovery values. Precision could not be evaluated because no duplicate analyses were conducted. Results are acceptable as reported.

References

USEPA. 1986. Test methods for Evaluating Solid Waste: Physical/Chemical Methods. U.S. Environmental Protection Agency, Office of Solid Waste and Emergency Response. EPA-530/SW-846.

USEPA 2016b. National Functional Guidelines for Inorganic Superfund Data Review. Office of Superfund Remediation and Technology Innovation. United States Environmental Protection Agency. EPA-540-R-2016-001. September 2016.

720 Olive Way, Suite 1900
Seattle, Washington 98101
206.287.9130

ANCHOR QEA

Data Validation Report – EPA Stage 2A

August 22, 2017

Project: Everett East Waterway/Kimberly Clark

Project Number: 160105-02.02

This report summarizes the review of analytical results for 13 diffusive gradient in thin film (DGT) groundwater, surface water, and porewater samples collected on July 13 and 26, 2017. The samples were collected by Aspect Consulting and Anchor QEA, LLC, and submitted to Analytical Resources, Inc. (ARI) in Tukwila, Washington. The samples were analyzed for acid volatile sulfide (AVS) by Standard Method 4500-S2D.

The DGT AVS results in ARI sample data group (SDG) numbers 17G0155 and 17G0297 (were reviewed in this report. Sample IDs and matrices are presented in Table 1.

Table 1
Sample IDs and Matrices

Sample ID	Lab Sample ID	Matrix
LP-MW-2-071317	17G0155-01	Groundwater
Rec6-MW2-071317	17G0155-02	Groundwater
LP-MW-4-071317	17G0155-03	Groundwater
LP-MW-5-071317	17G0155-04	Groundwater
LP-MW-1-071317	17G0155-05	Groundwater
LP-MW-3-071317	17G0155-06	Groundwater
LP-MW-6-071317	17G0155-07	Groundwater
LP-MW-7-071317	17G0155-08	Groundwater
LP-MW-21-071317	17G0155-09	Groundwater
LP-SW-3-072617	17G0297-01	Surface water
PW-5-072617	17G0297-02	Porewater
LP-SW-2-072617	17G0297-03	Surface water
LP-SW-1-072617	17G0297-04	Surface water

Note:
1. Blind field duplicate sample LP-MW-21-071317 for SDG 17G0155 was erroneously labeled in the field as LP-MW-20-071317, and is corrected here and in the project database.

Data Validation and Qualifications

The following comments refer to the laboratory's performance in meeting the quality assurance/quality control (QA/QC) guidelines outlined in the analytical procedures. Laboratory results were reviewed using the laboratory control limits and the following guidelines:

- USEPA 1986 (SW-846, Third Edition), Test Methods for Evaluating Solid Waste: Physical/Chemical Methods.
- USEPA National Functional Guidelines for Inorganic Superfund Data Review (USEPA 2016b)

Sample results were evaluated using laboratory quality control criteria.

Field Documentation

Field documentation was checked for completeness and accuracy. The chain-of-custody forms were signed by ARI at the time of sample receipt. Samples were received in good condition. Field duplicate sample LP-MW-21-071317 reported in SDG 17G0155 was erroneously labeled in the field as LP-MW-20-071317, and is corrected here and in the project database.

Holding Times and Sample Preservation

Samples were analyzed within holding times. Samples collected on July 13th were received within the recommended preservation temperature range (2°C – 6°C). Samples collected on July 26th were not iced and were received above the recommended temperature range at 16.4°C. Samples were received within a few hours of collection, however, so results are not expected to be impacted and no data were qualified.

Laboratory Method Blanks

Laboratory method blanks were analyzed at the required frequencies. All method blanks were free of sulfide.

Field Quality Control

One field duplicate sample was submitted with these sample sets. Results are summarized in Table 1. The relative percent difference RPD value was low and no data were qualified.

Table 2
Field Duplicate Results

Analyte	LP-MW-7-071317	LP-MW-21-071317	RPD
AVS	2.9 µmol	3.07 µmol	5.7%

Laboratory Control Samples

Laboratory control samples (LCS) were analyzed at the required frequency. All LCS recoveries were within laboratory control limits.

Matrix Spike and Matrix Spike Duplicate Samples

No matrix spike (MS)/matrix spike duplicate (MSD) samples were analyzed in association with these sample sets.

Laboratory Duplicates

No laboratory duplicates were analyzed in association with these sample sets.

Method Reporting Limits

Reporting limits were acceptable as reported. All values were reported using the laboratory reporting limits. Values were reported as undiluted or when diluted, the reporting limit reflects the dilution factor.

Result Qualification

As noted by the field sample collection crew and documented in communications with the laboratory, the DGT sampler apparatus associated with sample LP-SW-2-072617 was damaged over the course of deployment. The DGT membrane ripped which exposed the underlying silver iodide gel to ambient surface water conditions. Therefore, the associated sample result has been rejected.

Overall Assessment

As was determined by this evaluation, the laboratory followed the specified analytical method and all requested sample analyses were completed. Accuracy was acceptable as demonstrated by the LCS recovery values Precision was also acceptable as demonstrated by the field duplicate RPD value. Most data are acceptable as reported. One result has been rejected due to sampler apparatus failure. Table 2 summarizes the qualifier applied to the sample results reviewed in this report.

Table 3
Qualified Data

Sample ID	Analyte	Reported Result	Qualified Result	Reason
LP-SW-2-072617	AVS	1.49 µmol	R	Sampler apparatus failure

References

USEPA. 1986. Test methods for Evaluating Solid Waste: Physical/Chemical Methods. U.S. Environmental Protection Agency, Office of Solid Waste and Emergency Response. EPA-530/SW-846.

USEPA 2017. National Functional Guidelines for Inorganic Superfund Methods Data Review. Office of Superfund Remediation and Technology Innovation. United States Environmental Protection Agency. EPA-540-R-2017-001. January 2017.

Data Validation Report

Port of Bellingham Former GP Mill Property RI/FS
Kimberly Clark, Washington

PCB Congers Samples 2017

Laboratory SDG Numbers:

E1700233
E1700606
E1700607
E1700742

Prepared for:

Aspect Consulting LLC
401 Second Ave South, Suite 201
Seattle, WA 98014

Prepared by:

Pyron Environmental, Inc.
3530 32nd Way NW
Olympia, WA 98502

Approved By: _____ Date: *November 22, 2017*

Mingta Lin

ACRONYMS

%D	percent difference
%D_f	percent drift
%R	percent recovery
%RSD	percent relative standard deviation
CCV	continuing calibration verification
CLP	U.S. EPA Contract Laboratory Program
COC	chain-of-custody
CS1	the first calibration standard
CS3	the third calibration standard
EDL	estimated detection limit
EMPC	estimated maximum possible concentration
EPA	U.S. Environmental Protection Agency
HRGC/ HRMS	high-resolution gas chromatography/high-resolution mass spectrometry
ICAL	initial calibration
IPR	initial precision and recovery
LCL	lower control limit
LCS	laboratory control sample
LCSD	laboratory control sample duplicate
m/z	mass-to-charge ratio
MB	method blank
MDL	method detection limit
MS	matrix spike
MSD	matrix spike duplicate
NFGs	CLP National Functional Guidelines for Data Review (EPA 2016)
ng/kg	nanogram per kilogram
ng/L	nanogram per liter
OPR	ongoing precision and recovery
PCB	polychlorinated biphenyl
PFK	perfluorokarosene
QA/QC	quality assurance/quality control
QAPP	quality assurance project plan
RF	response factor
RPD	relative percent difference
RRT	relative retention time

S/N	signal-to-noise ratio
SDG	sample delivery group
SICP	selected ion current profile

INTRODUCTION

This report presents and discusses findings of the data validation performed on analytical data for samples collected from March to July 2017 for the referenced project. The laboratory reports validated herein were submitted by ALS Environmental, Inc. (ALS-Houston), assigned ALS sample delivery group (SDG) numbers: E1700233, E1700606, E1700607, and E1700742.

A Stage 4 validation (as defined by EPA 2009) was performed on all PCB congener data. The validation followed guidance specified by EPA (2016), with modifications to accommodate project and analytical method requirements. The numerical quality assurance/quality control (QA/QC) criteria applied to the validation were in accordance with method requirements and the current performance-based control limits established by the laboratory (laboratory control limits). Instrument calibration, frequency of QC analyses, and analytical sequence requirements were evaluated against the respective analytical methods.

Validation findings are discussed in each section pertinent to the QC parameter for each type of analysis. Qualified data with applied data qualifiers are summarized in the **Summary** section at the end of this report. Samples and the associated analyses validated herein are summarized as follows:

					Analysis
SDG #	**Field Sample ID**	**Laboratory ID**	**Sampling Date**	**Matrix**	**PCB Congeners**
E1700233	HB-MW-IR-030717	E1700233-001	3/7/2017	Water	X
	CMS-MW-IR-030717	E1700233-002	3/7/2017	Water	X
	BCT-MW-102-030717	E1700233-003	3/7/2017	Water	X
	BCT-MW-108-030717	E1700233-004	3/7/2017	Water	X
	CN-MW-103-030717	E1700233-005	3/7/2017	Water	X
	UST-29-MW-103-030717	E1700233-006	3/7/2017	Water	X
	DAST-MW-101-030717	E1700233-007	3/7/2017	Water	X
	UG-MW-2R-030717	E1700233-008	3/7/2017	Water	X
E1700606	LD-B-03-42	E1700606-001	5/16/2017	Soil	X
E1700607	LD-B-06-24	E1700607-001	5/15/2017	Soil	X
	LD-B-07-32	E1700607-002	5/15/2017	Soil	X
E1700742	LP-3-071017	E1700742-001	7/10/2017	Water	X
	LP-1-071017	E1700742-002	7/10/2017	Water	X
	LP-7-071017	E1700742-003	7/10/2017	Water	X
	RCC6-MW-2-071017	E1700742-004	7/10/2017	Water	X
	MW-6-071017	E1700742-005	7/10/2017	Water	X
	LP-MW-5-071017*	E1700742-006	7/10/2017	Water	X

SDG #	Field Sample ID	Laboratory ID	Sampling Date	Matrix	Analysis: PCB Congeners
E1700742	LP-MW-4-071017	E1700742-007	7/10/2017	Water	X
	LP-MW-6-071017	E1700742-008	7/10/2017	Water	X
	LP-MW-20-071017*	E1700742-009	7/10/2017	Water	X

Notes:
* - LP-MW-5-071017 and LP-MW-20-071017 is a field duplicate sample pair.
X - The analysis was requested and performed on the sample.

Analytical methods in respect to analytical parameters validated herein and the laboratory performing the analyses are summarized below:

Parameter	Analytical Method	Laboratory
PCB Congeners	USEPA Method 1668A/ALS SOP	ALS Environmental, Inc., Houston, Texas

Notes:
1. USEPA Method 1668A - *Chlorinated Biphenyl Congeners in Water, Soil, Sediment, Biosolids, and Tissue by HRGC/HRMS*. April 2010.
2. ALS SOP - *Chlorinated Biphenyl Congeners in Water, Soil, Sediment, Bio solids and Tissue by Isotope Dilution HRGC/HRMS.* ALS Environment, Inc., Houston, Texas. ALS SOP Number: HMS-1668, June 21, 2013.

DATA VALIDATION FINDINGS

1. PCB Congeners by EPA Method 1668A: High-resolution Gas Chromatography and High-resolution Mass Spectrometry (HRGC/HRMS)

1.1 Sample Management and Holding Times

Soil samples were received at 15.8°C in good condition and are consistent with the accompanying chain of custody form. All soil samples were stored in a refrigerator at 4°C upon receipt at the laboratory. PCB congeners are stable at room temperature, the higher cooler temperature had no significant impact on data quality. Data were not qualified on this basis. No other anomalies were identified in relation to sample preservation, handling, and transport.

Soil and aqueous samples should be extracted within 30 days. Extracts should be analyzed within 40 days of extraction. All samples were extracted and analyzed within the required holding times, except that aqueous sample HB-MW-IR-030717 (Laboratory ID: E1700233-001) was extracted 4 days past the required holding time; all PCB congeners results for this sample were qualified (UJ) for non-detects and (J) for detects as estimated.

1.2 HRGC/HRMS Instrument Performance Check

The EPA Method 1668A and laboratory criteria for instrument performance checks are as follows:

Mass Spectrometer Resolution: (1) The resolution check should be performed, using perfluorokerosene (PFK) or equivalent standard materials, prior to initial calibration and at the start and end of each 12-hour shift, (2) the resolution should be ≥8,000 throughout the mass range and ≥10,000 resolving power at m/z 330.9792 (or any other significant PFK fragments in the range of 300 to 350), and (3) the deviation between the exact m/z and the theoretical m/z must be less than 5 ppm for monitored isomers.

Column Performance: (1) A combined 209 congener standard should be analyzed prior to initial calibration and continuing calibration verification, (2) peak for congener 34 should be resolved from 23 and peak for congener 187 resolved from 182 peak with a valley of ≤40%, (3) congeners 156 and 157 should co-elute within 2 seconds at their peak maximum, and (4) the absolute retention time (RT) for congener 209 should be >55 minute for SPB-octyl or an alternate column.

HRGC/HRMS instrument performance checks met the criteria.

1.3 Initial Calibration

The EPA Method 1668A criteria for initial calibration are: (1) a minimum of five standards should be employed for native congeners and labeled compounds, (2) the percent relative standard deviation (%RSD) of isomer response should be ≤20%, (3) the ion abundance ratios should be within the control limits listed in EPA Method 1668A, Table 8, (4) the signal-to-noise (S/N) ratio should be >10 for all native and labeled compounds in the first calibration standard (CS1), and (5) response factor (RF) should be determined using one-point calibration for congeners quantitated with internal standard method. Initial calibrations met the criteria.

An initial calibration verification standard (second source standard) was analyzed to verify the calibration curve. The percent difference for each target compound is less than or equal to 30% and the initial calibration is assumed to be valid.

1.4 Calibration Verification

The EPA Method 1668A criteria require that: (1) continuing calibration verifications be performed at the beginning of each 12-hour shift using the mid-point calibration standard (CS3), (2) the %D value should be within the control limits listed in EPA Method 1668A, Table 6, and (3) the ion abundance ratios, retention times, relative retention times, and S/N ratios should meet the same criteria as for initial calibrations. All calibration verification analyses met the criteria.

1.5 Method Blanks

Method blank evaluation and data qualifying follows three guidance documents – the LDW Method Blank Contamination Decision Rules (USGS 2016), ESEPA NFG (EPA 2016), and EPA Region 10 Guidance (EPA 2014).

A method blank was prepared and analyzed as required for each preparation batch. A number of target compounds were detected at levels greater than their estimated detection limits (EDLs) or method reporting limits (MRLs) in method blanks. For low level PCB congener detections (*i.e.,* <10 *p*g/L for water and <10 *n*g/kg for soil) in the method blank, associated positive congener results in field samples were considered acceptable and no data qualifiers were assigned. For higher level PCB congener detections (*i.e.,* ≥10 *p*g/L for water and ≥10 *n*g/kg for soil) in the method blank, positive results greater than the MRL but less than five times the level found in the method blank were qualified (U) at the reported values. For positive field results less than five times the level found in the method bland and less than the MRL were qualified (U) at the MRL. Data affected by detections in method blanks were qualified and presented below:

Method Blank ID	Analyte	Blank Result	Affected Sample	Original Result	Qualified Result	Unit
EQ1700111-01	PCB 11	10.1	CMS-MW-1R-030717	23.9 J	101 U	pg/L
			BCT-MW-102-030717	16.9 J	101 U	
			BCT-MW-108-030717	21.1 J	125 U	
			CN-MW-103-030717	27.9 J	101 U	
			UST29-MW-103-030717	30.7 J	101 U	
			DAST-MW-101-030717	53.1 J	53.1 J	
			UG-MW-2R-030717	14.0 J	101 U	
	PCB 52	11.2	CMS-MW-1R-030717	478	> 5X MB	pg/L
			BCT-MW-102-030717	36.2 J	50.7 U	
			BCT-MW-108-030717	103	> 5X MB	
			CN-MW-103-030717	18.2 J	50.3 U	
EQ1700111-01	PCB 52	11.2	UST29-MW-103-030717	174	> 5X MB	pg/L
			DAST-MW-101-030717	14200	> 5X MB	
			UG-MW-2R-030717	8.76 J	50.4 U	
	PCBs 44 + 47 + 65	15.1	CMS-MW-1R-030717	364	> 5X MB	pg/L
			BCT-MW-102-030717	56.5 J	101 U	
			BCT-MW-108-030717	79.0	> 5X MB	
			CN-MW-103-030717	45.4 J	101 U	
			UST29-MW-103-030717	130	> 5X MB	
			DAST-MW-101-030717	26300J	> 5X MB	
			UG-MW-2R-030717	21.9	101 U	
	PCBs 90 + 101 + 113	12.0	CMS-MW-1R-030717	196 J	> 5X MB	pg/L
			BCT-MW-102-030717	58.2 J	203 U	
			BCT-MW-108-030717	68.7 J	> 5X MB	
			CN-MW-103-030717	29.6 J	201 U	
			UST29-MW-103-030717	55.2 J	201 U	
			DAST-MW-101-030717	3700	> 5X MB	
			UG-MW-2R-030717	17.9 J	202 U	
	PCBs 86/87/97/109/119/125	12.8	CMS-MW-1R-030717	138 J	> 5X MB	pg/L
			BCT-MW-102-030717	55.9J	203 U	
			BCT-MW-108-030717	46.9 J	249 U	
			CN-MW-103-030717	32.9 J	201 U	
			UST29-MW-103-030717	40.6 J	201 U	
			DAST-MW-101-030717	1740	> 5X MB	
			UG-MW-2R-030717	24.2 J	202 U	
	PCBs 129 + 138 + 163	11.6	CMS-MW-1R-030717	148 J	> 5X MB	pg/L
			BCT-MW-102-030717	113 J	> 5X MB	
			BCT-MW-108-030717	142 J	> 5X MB	
			CN-MW-103-030717	42.7 J	201 U	
			UST29-MW-103-030717	40.0 J	201 U	
			DAST-MW-101-030717	2530	> 5X MB	
			UG-MW-2R-030717	146 J	> 5X MB	
	PCBs 156 + 157	11.5	CMS-MW-1R-030717	55.8	55.8 B	pg/L
			BCT-MW-102-030717	39.5 J	40.5 U	
			BCT-MW-108-030717	31.4 J	49.9 U	
			CN-MW-103-030717	18.6 J	40.2 U	
			UST29-MW-103-030717	10.7 J	40.3 U	
			DAST-MW-101-030717	205	> 5X MB	
			UG-MW-2R-030717	36.4 J	40.3 U	
	PCBs 180 + 193	13.8	CMS-MW-1R-030717	73.6 J	> 5X MB	pg/L
			BCT-MW-102-030717	90.8 J	> 5X MB	
			BCT-MW-108-030717	120 J	> 5X MB	
			CN-MW-103-030717	53.7 J	101 U	
			UST29-MW-103-030717	35.5 J	101 U	
			DAST-MW-101-030717	1020	> 5X MB	
			UG-MW-2R-030717	269	> 5X MB	

Method Blank ID	Analyte	Blank Result	Affected Sample	Original Result	Qualified Result	Unit
	PCBs 198 + 199	19.0	CMS-MW-1R-030717 BCT-MW-102-030717 BCT-MW-108-030717 CN-MW-103-030717 UST29-MW-103-030717 DAST-MW-101-030717 UG-MW-2R-030717	76.1 J 66.7 J 59.8 J 34.9 J 17.7 J 238 88.7 J	101 U 101 U 125 U 101 U 101 U > 5X MB 101 U	pg/L
	PCB 194	22.7	CMS-MW-1R-030717 BCT-MW-102-030717 BCT-MW-108-030717	58.9 41.4 J 46.4 J	58.9 U 50.7 U 62.3 U	pg/L
EQ1700111-01	PCB 194	22.7	CN-MW-103-030717 UST29-MW-103-030717 DAST-MW-101-030717 UG-MW-2R-030717	27.0 J 11.5 J 226 92.8	50.3 U 50.4 U > 5X MB 92.8 U	pg/L
	PCB 208	10.9	CMS-MW-1R-030717 BCT-MW-102-030717 BCT-MW-108-030717 CN-MW-103-030717 UST29-MW-103-030717 DAST-MW-101-030717 UG-MW-2R-030717	38.3 31.8 15.2 J 17.8 J 5.53 J 37.0 16.3 J	38.3 U 31.8 U 24.9 U 20.1 U 201 U 37.0 U 20.2 U	pg/L
	PCB 206	53.7	CMS-MW-1R-030717 BCT-MW-102-030717 BCT-MW-108-030717 CN-MW-103-030717 UST29-MW-103-030717 DAST-MW-101-030717 UG-MW-2R-030717	48.3 40.8 34.6 24.3 14.0 J 84.5 34.4	48.3 U 40.8 U 34.6 U 24.3 U 20.1 U 84.5 U 34.4 U	pg/L
	PCB 209	18.6	CMS-MW-1R-030717 BCT-MW-102-030717 BCT-MW-108-030717 CN-MW-103-030717 UST29-MW-103-030717 DAST-MW-101-030717 UG-MW-2R-030717	60.3 25.8 22.0 J 16.5 J 6.16 J 32.1 22.2	60.3 U 25.8 U 24.9 U 20.1 U 20.1 U 32.1 U 22.2 U	pg/L
	Total DiCB	24.0	CMS-MW-1R-030717 BCT-MW-102-030717 BCT-MW-108-030717 CN-MW-103-030717 UST29-MW-103-030717 DAST-MW-101-030717 UG-MW-2R-030717	9110 89.6 810 405 2010 1130 32.6	> 5X MB 89.6 U > 5X MB > 5X MB > 5X MB > 5X MB 32.6 U	pg/L
	Total TetraCB	42.8	CMS-MW-1R-030717 BCT-MW-102-030717 BCT-MW-108-030717 CN-MW-103-030717 UST29-MW-103-030717 DAST-MW-101-030717 UG-MW-2R-030717	2220 310 406 166 J 665 133000 55.8 J	> 5X MB > 5X MB > 5X MB 201 U > 5X MB > 5X MB 202 U	pg/L
	Total PentaCB	60.4	CMS-MW-1R-030717 BCT-MW-102-030717 BCT-MW-108-030717 CN-MW-103-030717 UST29-MW-103-030717 DAST-MW-101-030717 UG-MW-2R-030717	1470 541 483 146 J 351 31600 154 J	> 5X MB > 5X MB > 5X MB 201 U > 5X MB > 5X MB 202 U	pg/L

Method Blank ID	Analyte	Blank Result	Affected Sample	Original Result	Qualified Result	Unit
	Total HexaCB	96.6	CMS-MW-1R-030717 BCT-MW-102-030717 BCT-MW-108-030717 CN-MW-103-030717 UST29-MW-103-030717 DAST-MW-101-030717 UG-MW-2R-030717	1200 832 719 342 213 13500 509	> 5X MB > 5X MB > 5X MB 342 U 213 U > 5X MB > 5X MB	*p*g/L
	Total HeptaCB	70.5	CMS-MW-1R-030717 BCT-MW-102-030717	573 555	> 5X MB > 5X MB	*p*g/L
EQ1700111-01	Total HeptaCB	70.5	BCT-MW-108-030717 CN-MW-103-030717 UST29-MW-103-030717 DAST-MW-101-030717 UG-MW-2R-030717	533 298 159 4320 903	> 5X MB 298 U 159 U > 5X MB > 5X MB	*p*g/L
	Total OctaCB	91.3	CMS-MW-1R-030717 BCT-MW-102-030717 BCT-MW-108-030717 CN-MW-103-030717 UST29-MW-103-030717 DAST-MW-101-030717 UG-MW-2R-030717	451 369 286 193 85.0 1090 415	451 U 369 U 286 U 193 U 85.0 U > 5X MB 415 U	*p*g/L
	Total NonaCB	70.6	CMS-MW-1R-030717 BCT-MW-102-030717 BCT-MW-108-030717 CN-MW-103-030717 UST29-MW-103-030717 DAST-MW-101-030717 UG-MW-2R-030717	122 103 49.8 56.0 24.7 153 67.5	122 U 103 U 49.8 U 56.0 U 24.7 U 153 U 67.5 U	*p*g/L
	Total PCBs	491	CMS-MW-1R-030717 BCT-MW-102-030717 BCT-MW-108-030717 CN-MW-103-030717 UST29-MW-103-030717 DAST-MW-101-030717 UG-MW-2R-030717	22100 3000 4260 2030 5370 216000 2240	> 5X MB > 5X MB > 5X MB > 5X MB > 5X MB > 5X MB > 5X MB	*p*g/L
EQ1700137-01	PCB 11	43.4	HB-MW-IR-030717	76.9 J	100 U	*p*g/L
	PCBs 44 + 47 + 65	14.6	HB-MW-IR-030717	738	> 5X MB	*p*g/L
	PCBs 70 + 61 + 74 + 76	10.0	HB-MW-IR-030717	410	> 5X MB	*p*g/L
	PCBs 129 + 138 + 163	16.1	HB-MW-IR-030717	39400	> 5X MB	*p*g/L
	PCBs 156 + 157	10.3	HB-MW-IR-030717	1280	> 5X MB	*p*g/L
	PCBs 180 + 193	10.8	HB-MW-IR-030717	40600	> 5X MB	*p*g/L
	PCBs 198 + 199	10.6	HB-MW-IR-030717	10100	> 5X MB	*p*g/L
	Total DiCB	59.6	HB-MW-IR-030717	10800	> 5X MB	*p*g/L
	Total TetraCB	37.3	HB-MW-IR-030717	9240	> 5X MB	*p*g/L
	Total HexaCB	55.7	HB-MW-IR-030717	170000	> 5X MB	*p*g/L
	Total HeptaCB	22.2	HB-MW-IR-030717	13800	> 5X MB	*p*g/L
	Total OctaCB	16.2	HB-MW-IR-030717	37700	> 5X MB	*p*g/L

Method Blank ID	Analyte	Blank Result	Affected Sample	Original Result	Qualified Result	Unit
	Total PCBs	198	HB-MW-IR-030717	434000	> 5X MB	*p*g/L
EQ1700260-01	Total PCBs	25.3 J	LD-B-03-42 LD-B-06-24 LD-B-07-32	145000 2070000 120	> 5X MB > 5X MB 120 U	*p*g/L
EQ1700331-01	PCB 11	15.5 J	LP-MW-3-071017 LP-MW-1-071017 LP-MW-7-071017 REC6-MW-2-071017 MW-6-071017	85.3 121 79.5 63.3 J 74.2 J	> 5X MB > 5X MB > 5X MB 101 U 104 U	*p*g/L
EQ1700331-01	PCB 11	15.5 J	LP-MW-5-071017 LP-MW-4-071017 LP-MW-6-071017 LP-MW-20-071017	63.6 J 81.5 J 44.5 J 53.9 J	104 U > 5X MB 109 U 105 U	*p*g/L
	PCB 52	18.7 J	LP-MW-3-071017 LP-MW-1-071017 LP-MW-7-071017 REC6-MW-2-071017 MW-6-071017 LP-MW-5-071017 LP-MW-4-071017 LP-MW-6-071017 LP-MW-20-071017	1890 716 200 122 39.1 J 197 465 184 236	> 5X MB > 5X MB > 5X MB > 5X MB 51.0 U > 5X MB > 5X MB > 5X MB > 5X MB	*p*g/L
	PCBs 44 + 47 + 65	20.5 J	LP-MW-3-071017 LP-MW-1-071017 LP-MW-7-071017 REC6-MW-2-071017 MW-6-071017 LP-MW-5-071017 LP-MW-4-071017 LP-MW-6-071017 LP-MW-20-071017	2660 745 526 326 346 418 823 497 466	> 5X MB	*p*g/L
	PCB 81	14 J	LP-MW-3-071017 LP-MW-1-071017 LP-MW-7-071017 REC6-MW-2-071017 MW-6-071017 LP-MW-5-071017 LP-MW-4-071017 LP-MW-6-071017 LP-MW-20-071017	25.1 U 21.3 U 29.2 U 24.1 U 20.7 U 20.8 U 22.2 U 21.7 U 21 U	ND	*p*g/L
	PCB 77	14.4 J	LP-MW-3-071017 LP-MW-1-071017 LP-MW-7-071017 REC6-MW-2-071017 MW-6-071017 LP-MW-5-071017 LP-MW-4-071017 LP-MW-6-071017 LP-MW-20-071017	42.8 21.3 U 31.6 U 24.9 U 20.7 U 20.8 U 19.4 J 8.26 J 21 U	42.8 U ND ND ND ND ND 22.2 U 21.7 U ND	*p*g/L
	PCB 118	10.7 J	LP-MW-3-071017 LP-MW-1-071017 LP-MW-7-071017 REC6-MW-2-071017 MW-6-071017 LP-MW-5-071017	1640 479 194 60.2 47.2 138	> 5X MB > 5X MB > 5X M > 5X MB 47.2 U > 5X MB	*p*g/L

Method Blank ID	Analyte	Blank Result	Affected Sample	Original Result	Qualified Result	Unit
			LP-MW-4-071017	316	> 5X MB	
			LP-MW-6-071017	288	> 5X MB	
			LP-MW-20-071017	186	> 5X MB	
	PCB 114	10.3 J	LP-MW-3-071017	35.7	35.7 U	pg/L
			LP-MW-1-071017	21.3 U	ND	
			LP-MW-7-071017	24.1 U	ND	
			REC6-MW-2-071017	20.2 U	ND	
			MW-6-071017	20.7 U	ND	
			LP-MW-5-071017	20.8 U	ND	
			LP-MW-4-071017	22.2 U	ND	
EQ1700331-01	PCB 114	10.3 J	LP-MW-6-071017	12 J	21.7 U	pg/L
			LP-MW-20-071017	21 U	ND	
	PCB 105	15.3 J	LP-MW-3-071017	485	> 5X MB	pg/L
			LP-MW-1-071017	207	> 5X MB	
			LP-MW-7-071017	68	68 U	
			REC6-MW-2-071017	24.5	24.5 U	
			MW-6-071017	29.7	29.7 U	
			LP-MW-5-071017	53.2	53.2 U	
			LP-MW-4-071017	117	> 5X MB	
			LP-MW-6-071017	119	> 5X MB	
			LP-MW-20-071017	75	75 U	
	PCB 126	20.4	LP-MW-3-071017	26.5 U	ND	pg/L
			LP-MW-1-071017	21.3 U		
			LP-MW-7-071017	27.8 U		
			REC6-MW-2-071017	20.4 U		
			MW-6-071017	20.7 U		
			LP-MW-5-071017	20.8 U		
			LP-MW-4-071017	22.2 U		
			LP-MW-6-071017	21.7 U		
			LP-MW-20-071017	21 U		
	PCBs 129 + 138 + 163	14.1 J	LP-MW-3-071017	2970	> 5X MB	pg/L
			LP-MW-1-071017	919		
			LP-MW-7-071017	337		
			REC6-MW-2-071017	174 J		
			MW-6-071017	123		
			LP-MW-5-071017	324		
			LP-MW-4-071017	922		
			LP-MW-6-071017	1400		
			LP-MW-20-071017	485		
	PCB 167	10.2 J	LP-MW-3-071017	82.7	> 5X MB	pg/L
			LP-MW-1-071017	37	37 U	
			LP-MW-7-071017	21.1 U	ND	
			REC6-MW-2-071017	11.7J	20.2 U	
			MW-6-071017	13 J	20.7 U	
			LP-MW-5-071017	10.8 J	20.8 U	
			LP-MW-4-071017	23.6	23.6 U	
			LP-MW-6-071017	29.4	29.4 U	
			LP-MW-20-071017	17.9 J	21.0 U	
	PCBs 156 + 157	23.5 J	LP-MW-3-071017	228	> 5X MB	pg/L
			LP-MW-1-071017	95.6	95.6 U	
			LP-MW-7-071017	32.5	42.2 U	
			REC6-MW-2-071017	40.5 U	ND	
			MW-6-071017	22.1 J	41.5 U	
			LP-MW-5-071017	27.9 J	41.7 U	
			LP-MW-4-071017	55.1	55.1 U	
			LP-MW-6-071017	82.8	82.8 U	

Method Blank ID	Analyte	Blank Result	Affected Sample	Original Result	Qualified Result	Unit
			LP-MW-20-071017	36.1 J	42.1 U	
	PCB 169	15.5 J	LP-MW-3-071017 LP-MW-1-071017 LP-MW-7-071017 REC6-MW-2-071017 MW-6-071017 LP-MW-5-071017 LP-MW-4-071017 LP-MW-6-071017 LP-MW-20-071017	22 U 21.3 U 21.1 U 20.2 U 8.8 J 20.8 U 22.2 U 4.54 J 21 U	ND ND ND ND 20.7 U ND ND 21.7 U ND	*p*g/L
EQ1700331-01	PCB 209	23.6	LP-MW-3-071017 LP-MW-1-071017 LP-MW-7-071017 REC6-MW-2-071017 MW-6-071017 LP-MW-5-071017 LP-MW-4-071017 LP-MW-6-071017 LP-MW-20-071017	263 454 149 97 107 66.7 117 165 74.5	> 5X MB > 5X MB > 5X MB 97 U 107 U 66.7 U 117 U ND 74.5 U	*p*g/L
	Total DiCB	29.9	LP-MW-3-071017 LP-MW-1-071017 LP-MW-7-071017 REC6-MW-2-071017 MW-6-071017 LP-MW-5-071017 LP-MW-4-071017 LP-MW-6-071017 LP-MW-20-071017	184 3080 102 191 189 191 4830 115 193	> 5X MB > 5X MB 102 U > 5X MB > 5X MB > 5X MB > 5X MB 115 U > 5X MB	*p*g/L
	Total TetraCB	67.6 J	LP-MW-3-071017 LP-MW-1-071017 LP-MW-7-071017 REC6-MW-2-071017 MW-6-071017 LP-MW-5-071017 LP-MW-4-071017 LP-MW-6-071017 LP-MW-20-071017	12900 3320 1460 667 625 1480 3460 1780 1800	> 5X MB	*p*g/L
	Total PentaCB	63.6 J	LP-MW-3-071017 LP-MW-1-071017 LP-MW-7-071017 REC6-MW-2-071017 MW-6-071017 LP-MW-5-071017 LP-MW-4-071017 LP-MW-6-071017 LP-MW-20-071017	12400 3940 1470 754 354 1250 3490 2670 1650	> 5X MB	*p*g/L
	Total HexaCB	96.4	LP-MW-3-071017 LP-MW-1-071017 LP-MW-7-071017 REC6-MW-2-071017 MW-6-071017 LP-MW-5-071017 LP-MW-4-071017 LP-MW-6-071017 LP-MW-20-071017	11300 3010 1130 1090 481 1320 4460 5440 1930	> 5X MB > 5X MB > 5X MB > 5X MB 481 U > 5X MB > 5X MB > 5X MB > 5X MB	*p*g/L

Method Blank ID	Analyte	Blank Result	Affected Sample	Original Result	Qualified Result	Unit
	Total HeptaCB	25.7	LP-MW-3-071017 LP-MW-1-071017 LP-MW-7-071017 REC6-MW-2-071017 MW-6-071017 LP-MW-5-071017 LP-MW-4-071017 LP-MW-6-071017 LP-MW-20-071017	5690 1210 457 761 248 730 3600 3250 1080	> 5X MB	*p*g/L
	Total OctaCB	25.6	LP-MW-3-071017 LP-MW-1-071017	1660 677	> 5X MB	*p*g/L
EQ1700331-01	Total OctaCB	25.6	LP-MW-7-071017 REC6-MW-2-071017 MW-6-071017 LP-MW-5-071017 LP-MW-4-071017 LP-MW-6-071017 LP-MW-20-071017	330 343 178 286 3220 974 368	> 5X MB	*p*g/L
	Total NonaCB	14.1 J	LP-MW-3-071017 LP-MW-1-071017 LP-MW-7-071017 REC6-MW-2-071017 MW-6-071017 LP-MW-5-071017 LP-MW-4-071017 LP-MW-6-071017 LP-MW-20-071017	305 871 127 87.3 87 55.9 1150 220 305	> 5X MB > 5X MB > 5X MB > 5X MB > 5X MB 55.9 U > 5X MB > 5X MB > 5X MB	*p*g/L
	Total PCBs	347	LP-MW-3-071017 LP-MW-1-071017 LP-MW-7-071017 REC6-MW-2-071017 MW-6-071017 LP-MW-5-071017 LP-MW-4-071017 LP-MW-6-071017 LP-MW-20-071017	48000 20500 5450 4090 2480 6070 29500 15300 8000	> 5X MB	*p*g/L

1.6 Initial Precision and Recovery Study (IPR) and Ongoing Precision and Recovery (OPR)

IPR study results were not included in the data package. The laboratory stated that the results were maintained at the laboratory.

The laboratory performed laboratory control sample (LCS) and LCS duplicate (LCSD) analyses in lieu of OPR. See Section 1.7.

1.7 Laboratory Control Sample (LCS) and LCS Duplicate (LCSD)

LCS and LCSD analyses were performed as required by the method. Several spike recoveries were greater than the upper control limit of 150%. The LCS and LCSD recoveries anomalies and impact on associated sample results are summarized in the followings:

LCS and LCSD Batch ID	Spiked Congener	Percent Recovery	Affected Sample ID	Sample Conc.	Data Qualification
EQ1700111-02	PCB 152	152 %	CMS-MW-1R-030717	11.4 J	J
			BCT-MW-102-030717	7.77 J	J
			BCT-MW-108-030717	2.67 J	J
			CN-MW-103-030717	50.3 U	None
			UST29-MW-103-030717	50.4 U	None
			DAST-MW-101-030717	78.8	J
			UG-MW-2R-030717	2.51 J	J
EQ1700111-02 EQ1700111-03	PCB s183 + 185	283 % 293%	CMS-MW-1R-030717	57.8 J	J
			BCT-MW-102-030717	37.0 J	
			BCT-MW-108-030717	44.0 J	
			CN-MW-103-030717	22.5 J	
			UST29-MW-103-030717	13.8 J	
			DAST-MW-101-030717	361	
			UG-MW-2R-030717	69.5 J	

All other %R and relative percent difference (RPD) values were within the laboratory control limits.

1.8 Matrix Spike and Matrix Spike Duplicate (MS/MSD)

One soil MS/MSD pair was prepared and analyzed at the required frequency. MS/MSD analyses were performed on sample LD-B-03-42 (E1700606-001). Almost all the spike recoveries were diluted out by a factor of 5. No impact on data quality was concluded.

1.9 Labeled Compound Recovery

Twenty-seven labeled internal standards and three cleanup recovery standards were added to all samples as required by the method. The labeled internal standards and cleanup standards percent recoveries met the project and method requirements. Several internal standard and cleanup standard recoveries were less than the lower control limit. Internal standard recoveries anomalies and impact on associated sample results are summarized in the followings:

Sample ID	Internal Standard	Percent Recovery	Affected Congener	Sample Conc.	Data Qualification
DAST-MW-101-030717 (E1700233-007)	PCB188L	21% (25-150%)	PCB 188	30.3	J
			PCB 179	357	
			PCB 184	15.6 J	
			PCB 176	85.4	
			PCB 186	12.0 J	
			PCB 178	203	
			PCB 175	29.7 J	
			PCB 187	684	
			PCB 182	21.3 J	
			PCBs 183 + 185	361	
			PCB 174	508	
			PCB 177	316	
			PCB 181	16.2 J	

Sample ID	Internal Standard	Percent Recovery	Affected Congener	Sample Conc.	Data Qualification
			PCBs 171 + 173	200	
			PCB 172	108	
			PCB 192	11.4 J	
			PCBs 180 + 193	1020	
DAST-MW-101-030717 (E1700233-007)	PCB188L	21% (25-150%)	PCB 191	40.6 J	J
			PCB 170	524	
			PCB 190	108	
LD-B-03-42_05/16/17	PCB 28L PCB 111L PCB 178L	19% 16% 20% (30-135%)	Cleanup Standard		None, Diluted out (5X)
LP-MW-3-071017 (E1700742-001)	PCB4L	23% (25-150%)	PCB 4	29.8 U	UJ
			PCB 10	54.9 U	UJ
			PCB 9	22.0 U	UJ
			PCB 7	22.0 U	UJ
			PCB 6	23.2	J
			PCB 5	22.0 U	UJ
			PCB 8	49.5 J	J
			PCB 14	22.0 U	UJ
			PCB 11	85.3 J	J
			PCBs 12 + 13	54.9 U	UJ
LP-MW-1-071017 (E1700742-002)	PCB4L PCB15L	19 % 20 % (25-150%)	PCB 4	1710	J
			PCB 10	76.4	J
			PCB 9	43.4	J
			PCB 7	24	J
			PCB 6	166	J
			PCB 5	15.7 J	J
			PCB 8	682	J
			PCB 14	21.3 U	UJ
			PCB 11	121	J
			PCBs 12 + 13	40.3 J	J
			PCB 15	208	J
LP-MW-1-071017 (E1700742-002)	PCB19L	23% (25-150%)	PCB 19	202	J
			PCBs 18 + 30	807	J
			PCB 17	333	J
			PCB 27	70.5	J
			PCB 24	17.8 J	J
			PCB 16	444	J
			PCB 32	209	J
			PCB 34	26.4 U	UJ
			PCB 23	22.4 U	UJ
			PCBs 26 + 29	94.8	J
			PCB 25	25.8	J
			PCB 31	473	J
			PCBs 20 + 28	428	J
			PCBs 21 + 33	302	J
			PCB 22	170	J
			PCB 36	22.4 U	UJ
			PCB 39	22.0 U	UJ
			PCB 38	25.3 U	UJ
			PCB 35	26.2 U	UJ
LP-MW-7-071017 (E1700742-003)	PCB 1L PCB 3L	13% 13% (15-150%)	All PCB Congeners		J/UJ

Sample ID	Internal Standard	Percent Recovery	Affected Congener	Sample Conc.	Data Qualification
LP-MW-7-071017 (E1700742-003)	PCB 4L PCB 15L PCB 19L PCB 37L PCB 54L PCB 81L PCB 77L PCB 104L	15 % 15 % 18 % 17 % 18 % 17 % 17 % 20 %	All PCB Congeners		J/UJ
	PCB 123L PCB 118L PCB 114L PCB 105L PCB 126L PCB 155L PCB 167L PCBs 156L + 157L PCB 169L PCB 188L PCB 189L PCB 202L	20 % 20 % 19 % 20 % 19 % 22 % 20 % 20 % 18 % 20 % 20 % 21 % (25-150%)			
	PCB 205L PCB 208L PCB 206L PCB 209L	20 % 20 % 19 % 23 % (25-150%)			
	PCB 28L (clean up standard)	27 % (30-135)			
REC6-MW-2-071017 (E1700742-004)	PCB 1L PCB 3L	14 % 14 % (15-150%)	PCB 1 PCB 2 PCB 3	18.7 U 21.3 U 24.2 U	UJ UJ UJ
	PCB 4L PCB 15L	17 % 20 % (25-150%)	PCB 4 PCB 10 PCB 9 PCB 7 PCB 6 PCB 5 PCB 8 PCB 14 PCB 11 PCBs 12 + 13 PCB 15	43.5 50.6 U 6.99 20.2 U 20.8 20.2 U 24.8 J 20.2 U 63.3 J 18.4 J 13.3 J	J UJ J UJ J UJ J UJ J J J
	PCB 19L PCB 37L	21 % 22 % (25-150%)	PCB 19 PCBs 18 + 30 PCB 17 PCB 27 PCB 24 PCB 16 PCB 32 PCB 34 PCB 23 PCBs 26 + 29 PCB 25	26.4 U 37.4 J 26.1 U 20.2 U 20.2 U 29.7 U 20.2 U 32.7 U 27.8 U 50.6 U 26.7 U	UJ J UJ UJ UJ UJ UJ UJ UJ UJ UJ
REC6-MW-2-071017 (E1700742-004)	PCB 19L PCB 37L	21 % 22 %	PCB 31 PCBs 20 + 28	50.6 U 50.6 U	UJ UJ

Sample ID	Internal Standard	Percent Recovery	Affected Congener	Sample Conc.	Data Qualification
		(25-150%)	PCBs 21 + 33	50.6 U	UJ
			PCB 22	30.6 U	UJ
			PCB 36	27.7 U	UJ
			PCB 39	27.3 U	UJ
			PCB 38	31.3 U	UJ
			PCB 35	32.4 U	UJ
			PCB 37	39.6 U	UJ
	PCB 54L PCB 81L PCB 77L	24 % 22 % 22 % (25-150%)	PCB 54	20.2 U	UJ
			PCBs 50 + 53	101 U	UJ
			PCBs 45 + 51	122	J
			PCB 46	25.7 U	UJ
			PCB 52	122	J
			PCBs 43 + 73	50.6 U	UJ
			PCBs 49 + 69	101 U	UJ
			PCB 48	50.6 U	UJ
			PCBs 44 + 47 + 65	325	J
			PCBs 59 + 62 + 75	101 U	UJ
			PCB 42	101 U	UJ
			PCBs 41 + 71 + 40	101 U	UJ
			PCB 64	50.6 U	UJ
			PCB 72	50.6 U	UJ
			PCB 68	45.4 J	J
			PCB 57	50.6 U	UJ
			PCB 58	50.6 U	UJ
			PCB 67	50.6 U	UJ
			PCB 63	50.6 U	UJ
			PCBs 70 + 61 + 74 + 76	51.3 J	J
			PCB 66	50.6 U	UJ
			PCB 55	50.6 U	UJ
			PCB 56	50.6 U	UJ
			PCB 60	50.6 U	UJ
			PCB 80	50.6 U	UJ
			PCB 79	50.6 U	UJ
			PCB 78	50.6 U	UJ
			PCB 81	24.1 U	UJ
			PCB 77	24.9 U	UJ
	PCB 126L	23 % (25-150%)	PCB126	20.4 U	UJ
	PCB 169L	24 % (25-150%)	PCB 152	7.75 J	J
			PCB 150	50.6 U	UJ
			PCB 136	105	J
			PCB 145	50.6 U	UJ
			PCB 148	50.6 U	UJ
			PCBs 135 + 151 + 154	243	J
			PCB 144	50.6 U	UJ
			PCBs 147 + 149	203	J
			PCB 134	10.6 J	J
			PCB 143	101 U	UJ
			PCBs 139 + 140	101 U	UJ
			PCB 131	50.6 U	UJ
			PCB 142	50.6 U	UJ
			PCB 132	43.2 J	J
REC6-MW-2-071017 (E1700742-004)	PCB 169L	24 % (25-150%)	PCB 133	50.6 U	UJ
			PCB 165	50.6 U	UJ
			PCB 146	40.2 J	J
			PCB 161	50.6 U	UJ

Sample ID	Internal Standard	Percent Recovery	Affected Congener	Sample Conc.	Data Qualification
			PCBs 153 + 168	140	J
			PCB 141	50.3 J	J
			PCB 130	11.2 J	J
			PCB 137	50.6 U	UJ
			PCB 164	11.1 J	J
			PCBs 129 + 138 + 163	174 J	J
			PCB 160	202 U	UJ
			PCB 158	14.5 J	J
			PCBs 128 + 166	24.8 J	J
			PCB 159	50.6 U	UJ
			PCB 162	50.6 U	UJ
MW-6-071017 (E1700742-005)	PCB4L PCB15L	20 % 23 % (25-150%)	PCB 4	74.8	J
			PCB 10	51.9 U	UJ
			PCB 9	20.7 U	UJ
			PCB 7	20.7 U	UJ
			PCB 6	12 J	J
			PCB 5	20.7 U	UJ
MW-6-071017 (E1700742-005)	PCB4L PCB15L	20 % 23 % (25-150%)	PCB 8	28 J	J
			PCB 14	20.7 U	UJ
			PCB 11	104 U	104 UJ
			PCBs 12 + 13	51.9 U	UJ
			PCB 15	20.7 U	UJ
	PCB19L	22% (25-150%)	PCB 19	23.6 U	
			PCBs 18 + 30	51.9 U	
			PCB 17	22.1 U	
			PCB 27	20.7 U	
			PCB 24	20.7 U	
			PCB 16	24.9 U	
			PCB 32	20.7 U	
			PCB 34	24.6 U	
			PCB 23	22.3 U	
			PCBs 26 + 29	51.9 U	UJ
			PCB 25	21.4 U	
			PCB 31	51.9 U	
			PCBs 20 + 28	51.9 U	
			PCBs 21 + 33	51.9 U	
			PCB 22	24.2 U	
			PCB 36	23 U	
			PCB 39	23.1 U	
			PCB 38	25.8 U	
			PCB 35	25.9 U	
MW-6-071017 (E1700742-006)	PCB4L PCB15L	19 % 20 % (25-150%)	PCB 4	45.3	J
			PCB 10	52.1 U	UJ
			PCB 9	20.8 U	UJ
			PCB 7	7.54 J	J
			PCB 6	18.9 J	J
			PCB 5	20.8 U	UJ
			PCB 8	55.3	J
			PCB 14	20.8 U	UJ
			PCB 11	104 U	UJ
			PCBs 12 + 13	52.1 U	UJ
			PCB 15	20.8 U	UJ
MW-6-071017 (E1700742-006)	PCB19L	21 % (25-150%)	PCB 19	20.8 U	UJ
			PCBs 18 + 30	129	J
			PCB 17	55.5	J
			PCB 27	20.8 U	UJ

Sample ID	Internal Standard	Percent Recovery	Affected Congener	Sample Conc.	Data Qualification
			PCB 24	20.8 U	UJ
			PCB 16	54.9	J
			PCB 32	37.1	J
			PCB 34	29.6 U	UJ
			PCB 23	26.7 U	UJ
			PCBs 26 + 29	52.1 U	UJ
			PCB 25	25.7 U	UJ
			PCB 31	94.8	J
			PCBs 20 + 28	109	J
			PCBs 21 + 33	61.5	J
			PCB 22	36.5	J
			PCB 36	27.6 U	UJ
			PCB 39	27.8 U	UJ
			PCB 38	31.0 U	UJ
			PCB 35	31.1 U	UJ

1.10 Target Compound Identification

Target compound identification was evaluated by examining if: (1) the signals for the two exact m/z's being monitored were present, and maximized within ±2 seconds of one another, (2) the S/N ratio of each of the two exact m/z's must be greater than or equal to 2.5, (3) the ion abundance ratios were within the method control limits, and (4) the relative retention time (RRT) or retention time (RT) of the peaks were within the method control limits or laboratory control limits.

All detected target congeners were properly identified with the exceptions of the following congeners, which had ion abundance ratios outside of the control limits:

Sample ID	Congener	Ion Abundance Ratio	Control Limits	Data Qualification
HB-MW-1R-030717 (E1700233-001)	PCB 25	1.31	0.88 – 1.20	J
	PCB 67	0.52	0.65 – 0.89	J
	PCB 63	1.18		
	PCB 56	0.62		
	PCBs 98 + 102	1.29	1.32 – 1.78	J
	PCBs 108 + 124	1.16		
	PCB 107	1.26		
	PCB 126	1.85		
	PCB 162	1.46	1.05 – 1.43	J
CMS-MW-1R-030717 (E1700233-002)	PCB 54	0.92	0.65 – 0.89	J
	PCB 72	1.03		
	PCB 68	0.90		
	PCB 57	0.60		
	PCB 58	0.41		
	PCB 56	0.90		
	PCB 77	0.63		

Sample ID	Congener	Ion Abundance Ratio	Control Limits	Data Qualification
	PCB 104 PCB 94 PCB 121 PCB 111 PCB 120 PCB 127	1.24 0.79 1.95 1.31 1.30 1.82	1.32 – 1.78	J
	PCB 152 PCBs 139 + 140 PCB 133 PCB 165 PCB 161 PCB 130 PCB 169	0.89 1.02 1.04 0.99 1.45 0.96 1.47	1.05 – 1.43	J
	PCB 176 PCB 182 PCB 181 PCB 191	1.24 1.47 0.78 0.82	0.89 – 1.21	J
	PCB 206	1.02	0.65 - 0.89	J
BCT-MW-102-030717 (E1700233-003)	PCB 2 PCB 3	2.46 1.80	2.66 – 3.60	J
	PCB 31 PCBs 21 + 33	0.86 0.85	0.88 – 1.20	J
	PCBs 59 + 62 + 75 PCBs 41 + 71 + 40 PCB 64 PCB 68 PCB 58 PCB 66 PCB 55 PCB 56 PCB 60 PCB 80 PCB 79	1.03 1.07 1.01 0.92 0.47 1.01 0.52 0.60 0.47 0.64 1.16	0.65 – 0.89	J
BCT-MW-102-030717 (E1700233-003)	PCB 104 PCB 103 PCB 94 PCBs 98 + 102 PCB 84 PCB 121 PCB 112 PCB 82 PCB 111 PCB 122 PCB 114 PCB 105	2.92 1.90 2.89 0.87 1.86 1.98 1.22 1.82 2.05 1.31 1.12 1.87	1.32 – 1.78	J
	PCB 152 PCB 150 PCB 134 PCB 160 PCBs 156 + 157	1.48 1.51 0.97 1.00 1.45	1.05 – 1.43	J J J J None, U for MB
	PCB 188 PCB 192	1.25 0.84	0.89 – 1.21	J

Sample ID	Congener	Ion Abundance Ratio	Control Limits	Data Qualification
BCT-MW-108-030717 (E1700233-004)	PCBs 26 + 29	0.81	0.88 – 1.20	J
	PCB 22	1.27		
	PCBs 45 + 51	0.45	0.65 – 0.89	J
	PCBs 49 + 69	0.94		
	PCBs 59 + 62 + 75	0.94		
	PCB 68	0.97		
	PCB 66	0.63		
	PCBs 88 + 91	3.66	1.32 – 1.78	J
	PCB 84	1.23		J
	PCB 92	2.12		J
	PCBs 86/87/97/109/119/125	1.83		None, U for MB
	PCB 106	0.90		J
	PCB 127	3.16		J
	PCB 152	0.69	1.05 – 1.43	J
	PCB 150	0.93		
	PCB 136	1.63		
	PCB 145	1.58		
	PCB 148	1.52		
	PCB 143	0.75		
	PCB 142	1.49		
	PCB 165	0.87		
	PCB 137	1.94		
	PCB 164	1.46		
	PCB 159	1.02		
	PCB 162	1.69		
	PCB 184	1.33	0.89 – 1.21	J
	PCB 178	1.22		
	PCB 175	0.82		
	PCB 177	1.33		
	PCB 181	1.45		
	PCBs 171 + 173	1.23		
	PCB 191	1.23		
	PCB 201	0.75	0.76 – 1.02	J
	PCB 205	0.73		
BCT-MW-108-030717 (E1700233-004)	PCB 208	0.56	0.65 – 0.89	None, U for MB
CN-MW-103-030717 (E1700233-005)	PCB 19	1.37	0.88 – 1.20	J
	PCB 16	0.79		J
	PCB 52	1.08	0.65 – 0.89	None, U for MB
	PCBs 49 + 69	1.05		J
	PCBs 59 + 62 + 75	0.54		J
	PCBs 41 + 71 + 40	0.98		J
	PCB 68	0.96		J
	PCBs 110 + 115	2.10	1.32 – 1.78	J
	PCB 126	1.13		
CN-MW-103-030717 (E1700233-005)	PCB 155	1.64	1.05 – 1.43	J
	PCB 136	1.44		J
	PCB 148	0.99		J
	PCB 131	1.52		J
	PCB 133	1.52		J
	PCB 165	0.89		J
	PCB 146	0.88		J
	PCB 130	2.46		J

Sample ID	Congener	Ion Abundance Ratio	Control Limits	Data Qualification
	PCB 158 PCBs 156 + 157 PCB 169	0.93 1.53 0.97		J None, U for MB J
	PCB 188 PCB 182 PCB 174 PCB 192 PCB 170	1.32 1.28 1.23 0.76 0.85	0.89 – 1.21	J
	PCB 204 PCB 197 PCB 195 PCB 205	1.13 0.74 0.71 1.17	0.76 – 1.02	J
	PCB 207	0.97	0.65 – 0.89	J
UST29-MW-103-030717 (E1700233-006)	PCB 46	0.91	0.65 – 0.89	J
	PCBs 88 + 91 PCB 92 PCB 82 PCBs 108 + 124 PCB 107 PCB 122 PCB 114 PCB 126	3.18 2.09 2.16 1.13 1.03 1.17 0.94 1.13	1.32 – 1.78	J
	PCB 155 PCB 150 PCB 148 PCB 146 PCB 164 PCB 162	1.44 1.01 1.45 0.93 1.49 1.61	1.05 – 1.43	J
	PCB 176 PCB 186 PCB 175 PCB 172 PCB 192 PCB 190	1.23 1.36 1.23 1.25 0.86 1.54	0.89 – 1.21	J
UST29-MW-103-030717 (E1700233-006)	PCB 189	1.22	0.89 – 1.21	J
	PCB 204 PCB 196	1.30 0.74	0.76 – 1.02	J
	PCB 208 PCB 207	1.00 0.55	0.65 – 0.89	None, U for MB J
DAST-MW-101-030717 (E1700233-007)	PCB 3	2.43	2.66 – 3.60	J
	PCB 24 PCBs 26 + 29	0.86 0.78	0.88 – 1.20	J
	PCB 77	0.58	0.65 – 0.89	J
DAST-MW-101-030717 (E1700233-007)	PCB 89 PCB 121	1.08 1.90	1.32 – 1.78	J
	PCB 155 PCB 152 PCB 142	1.60 1.45 1.63	1.05 – 1.43	J

Sample ID	Congener	Ion Abundance Ratio	Control Limits	Data Qualification
	PCB 184 PCB 175 PCB 181 PCB 192 PCB 189	1.35 1.33 1.32 1.58 1.24	0.89 – 1.21	J
	PCB 202 PCB 201 PCB 204 PCB 197	1.29 1.10 1.49 0.74	0.76 – 1.02	J
UG-MW-2R-030717 (E1700233-008)	PCB 52 PCBs 70 + 61 + 74 + 76	1.08 1.12	0.65 – 0.89	None, U for MB J
	PCBs 83 + 99 PCB 112 PCBs 86/87/97/109/119/125 PCBs 85 + 116 + 117 PCBs 108 + 124 PCB 107 PCB 127 PCB 126	1.20 0.87 1.30 2.09 2.01 1.91 1.29 1.11	1.32 – 1.78	J J None, U for MB J J J J J
	PCB 155 PCB 152 PCB 150 PCB 148 PCB 144 PCB 146 PCB 159	0.73 1.46 1.62 0.92 0.64 2.52 1.04	1.05 – 1.43	J
	PCB 188 PCB 175 PCB 181 PCB 190	1.33 1.22 1.30 1.25	0.89 – 1.21	J
	PCB 206	1.03	0.76 – 1.02	J
LD-B-03-42_05/16/17 (E1700606-001)	PCB 1	2.08	2.66 – 3.60	J
	PCB 54 PCB 68 PCB 79	0.96 0.55 0.60	0.65 – 0.89	J
LD-B-06-24_05/15/17 (E1700607-001)	PCB 162	1.48	1.05 – 1.43	J
	PCB126	1.83	1.32 – 1.78	J
	PCB169	1.68	1.05 – 1.43	J
LD-B-07-32_05/15/17 (E1700607-002)	PCBs 45 + 51 PCBs 41 + 71 + 40 PCB 64 PCB 66	0.54 0.91 0.99 1.30	0.65 – 0.89	J
	PCBs 95 + 93 + 100	1.80	1.32 – 1.78	J
	PCB 132 PCB 141 PCB 167 PCB 169	1.47 1.71 0.90 1.49	1.05 – 1.43	J
	PCB 176	1.45	0.89 – 1.21	J
	PCB 202 PCB 196	0.71 1.29	0.76 – 1.02	J

Sample ID	Congener	Ion Abundance Ratio	Control Limits	Data Qualification
	PCB 205	1.14		
	PCB208	0.34	0.65 – 0.89	J
LP-MW-3-071017 (E1700742-001)	PCB 17 PCB 27 PCB 22	1.33 1.58 0.75	0.88 – 1.20	J
	PCB 54 PCB 48 PCBs 59 + 62 + 75 PCB 58 PCB 79	0.97 1.01 1.19 1.24 0.62	0.65 – 0.89	J
	PCBs 98 + 102 PCB 120 PCBs 108 + 124 PCB 114	1.31 2.23 1.29 1.98	1.32 – 1.78	J
	PCB 134 PCB 131 PCB 133 PCB 159	0.94 0.91 1.01 1.47	1.05 – 1.43	J
	PCB 175 PCB 191	0.87 0.73	0.89 – 1.21	J
	PCB 197 PCB 205	0.65 1.03	0.76 – 1.02	J
LP-MW-1-071017 (E1700742-0020	PCB 25	1.58	0.88 – 1.20	J
	PCBs 41 + 71 + 40 PCB 58 PCB 60	0.92 0.56 0.60	0.65 – 0.89	J
	PCBs 98 + 102 PCBs 108 + 124 PCB 107	4.92 1.13 2.26	1.32 – 1.78	J
	PCB 144 PCB 134 PCB 164	1.03 1.00 0.93	1.05 – 1.43	J
LP-MW-1-071017 (E1700742-002)	PCB 186 PCB 178 PCB 174	1.30 1.57 1.23	0.89 – 1.21	J
LP-MW-1-071017 (E1700742-002)	PCB 201 PCB 197 PCB 200	1.06 1.29 1.11	0.76 – 1.02	J
LP-MW-7-071017 (E1700742-003)	PCBs 49 + 69 PCB 66	0.57 0.93	0.65 – 0.89	J
	PCB 84 PCBs 83 + 99 PCBs 85 + 116 + 117 PCB 105	1.31 1.24 1.22 1.12	1.32 – 1.78	J
	PCBs 135 + 151 + 154 PCB 144 PCB 146 PCB 141 PCB 164 PCBs 156 + 157	1.69 2.08 0.95 1.88 1.93 1.94	1.05 – 1.43	J J J J J None, U for MB
	PCB 176 PCB 177	1.45 1.56	0.89 – 1.21	J
	PCB 202	1.16	0.76 – 1.02	J

Sample ID	Congener	Ion Abundance Ratio	Control Limits	Data Qualification
	PCB 201 PCBs 198 + 199 PCB 196	1.47 1.05 1.03		
	PCB 206	1.01	0.65 – 0.89	J
	PCB 209	1.35	0.99 – 1.33	J
REC6-MW-2-071017 (E1700742-004)	PCBs 18 + 30	1.34	0.88 – 1.20	J
	PCBs 70 + 61 + 74 + 76	0.92	0.65 – 0.89	J
	PCBs 83 + 99	1.92	1.32 – 1.78	J
	PCB 134 PCB 130 PCB 158 PCBs 128 + 166 PCB 167	0.83 1.61 1.63 1.02 0.86	1.05 – 1.43	J J J J None, U for MB
	PCB 176 PCB 177 PCBs 171 + 173 PCB 170	1.26 1.23 1.88 0.78	0.89 – 1.21	J
	PCB 202 PCB 196 PCB 203	1.27 1.30 1.11	0.76 – 1.02	J
	PCB 207	0.51	0.65 – 0.89	J
MW-6-071017 (E1700742-005)	PCBs 41 + 71 + 40 PCBs 70 + 61 + 74 + 76 PCB 66	1.55 0.90 0.34	0.65 – 0.89	J
	PCB 118	1.10	1.32 – 1.78	J
	PCB 150 PCB 141 PCB 164 PCB 158	0.61 0.77 0.71 1.03	1.05 – 1.43	J
	PCB 184 PCB 186 PCBs 183 + 185 PCB 177	0.84 0.65 1.25 0.81	0.89 – 1.21	J
MW-6-071017 (E1700742-005)	PCBs 171 + 173 PCB 170 PCB 190	1.23 0.82 0.88	0.89 – 1.21	J
	PCB 200 PCB 195 PCB 194	1.25 0.47 0.71	0.76 – 1.02	J
	PCB 207	0.95	0.65 – 0.89	J
LP-MW-5-071017 (E1700742-006)	PCB 1	5.97	2.66 – 3.60	J
	PCB 17 PCB 31	1.24 0.87	0.88 – 1.20	J
	PCBs 50 + 53 PCB 48 PCBs 59 + 62 + 75 PCB 42 PCBs 41 + 71 + 40	0.62 0.56 0.52 0.56 0.96	0.65 – 0.89	J
	PCBs 88 + 91 PCB 82	2.10 0.84	1.32 – 1.78	J

Sample ID	Congener	Ion Abundance Ratio	Control Limits	Data Qualification
	PCB 148 PCB 134 PCBs 139 + 140 PCB 131 PCB 133 PCB 130 PCB 160 PCB 167	1.82 0.82 1.02 1.04 0.89 1.57 1.58 0.95	1.05 – 1.43	J J J J J J J None, U for MB
	PCB 176 PCB 177 PCB 192 PCB 189	1.23 1.26 1.30 0.78	0.89 – 1.21	J
	PCB 202 PCB 204 PCB 195 PCB 205	0.62 0.74 1.07 0.40	0.76 – 1.02	J
	PCB 207 PCB 206	1.00 1.18	0.65 – 0.89	J
LP-MW-4-071017 (E1700742-007)	PCB 2 PCB 3	1.38 2.34	2.66 – 3.60	J
	PCB 48 PCBs 41 + 71 + 40 PCB 57 PCB 58	0.62 0.61 0.96 0.96	0.65 – 0.89	J
	PCB 103 PCB 94 PCBs 98 + 102 PCB 120 PCB 107	1.18 0.88 1.96 0.87 2.03	1.32 – 1.78	J
	PCB 150 PCB 145 PCBs 139 + 140	1.00 2.89 1.45	1.05 – 1.43	J
LP-MW-4-071017 (E1700742-007)	PCB 165 PCB 130 PCB 137 PCB 160	1.49 1.56 1.65 0.91	1.05 – 1.43	J
LP-MW-4-071017 (E1700742-007)	PCB 159	0.81	1.05 – 1.43	J
	PCB 186 PCB 175 PCB 172 PCB 189	1.27 1.41 0.82 0.78	0.89 – 1.21	J
	PCB 194	1.03	0.76 – 1.02	J
	PCB 208	0.92	0.65 – 0.89	J
LP-MW-6-071017 (E1700742-008)	PCB 1 PCB 3	4.85 1.89	2.66 – 3.60	J
	PCBs 26 + 29	0.87	0.88 – 1.20	J
	PCB 54 PCB 46 PCBs 59 + 62 + 75 PCB 42 PCBs 41 + 71 + 40 PCB 67	0.64 0.63 0.58 0.59 0.91 0.55	0.65 – 0.89	J J J J J J

Sample ID	Congener	Ion Abundance Ratio	Control Limits	Data Qualification
	PCB 77	1.32		None, U for MB
	PCB 103	2.33	1.32 – 1.78	J
	PCB 82	1.82		J
	PCB 120	1.81		J
	PCB 107	1.01		J
	PCB 114	1.19		None, U for MB
	PCB 155	1.44	1.05 – 1.43	J
	PCB 152	2.08		J
	PCB 150	3.54		J
	PCB 145	0.54		J
	PCB 133	1.04		J
	PCB 130	0.87		J
	PCB 160	1.44		J
	PCB 162	1.61		J
	PCB 169	0.97		None, U for MB
	PCB 184	0.81	0.89 – 1.21	J
	PCB 182	1.29		
	PCB 191	0.88		
	PCB 189	1.39		
	PCB 201	1.07	0.76 – 1.02	J
	PCB 197	1.08		
LP-MW-20-071017 (E1700742-009)	PCB 1	3.96	2.66 – 3.60	J
	PCB 16	0.87	0.88 – 1.20	J
	PCBs 26 + 29	1.21		
	PCBs 20 + 28	0.77		
	PCB 56	0.55	0.65 – 0.89	J
	PCBs 88 + 91	2.45	1.32 – 1.78	J
	PCB 84	1.27		
	PCB 155	0.60	1.05 – 1.43	J
	PCB 150	1.54		
	PCB 145	0.56		
	PCB 148	0.96	1.05 – 1.43	J
	PCB 133	0.99		J
	PCB 130	0.94		J
	PCB 160	0.90		J
LP-MW-20-071017 (E1700742-009)	PCB 158	1.02	1.05 – 1.43	J
	PCBs 128 + 166	0.92		J
	PCBs 156 + 157	0.96		None, U for MB
	PCB 184	2.06	0.89 – 1.21	J
	PCB 186	1.27		
	PCB 172	0.83		
	PCB 191	0.66		
	PCB 189	1.64		
	PCB 201	1.14	0.76 – 1.02	J
	PCB 204	0.62		
	PCB 197	0.69		
	PCB 196	1.03		
	PCB 195	0.75		
	PCB 194	1.03		
	PCB 205	1.09		

Sample ID	Congener	Ion Abundance Ratio	Control Limits	Data Qualification
	PCB 207	0.59	0.65 – 0.89	J

1.11 Reporting Limits, Estimated Detection Limits (EDLs) and Compound Quantitation

Correct internal standards, quantitation ions, and average RFs were used to quantitate target compound detections. The MRLs were supported with adequate ICAL calibration concentrations. Sample-specific EDLs were adjusted with sample weights, internal standard peak height, and noise levels as required by the method. In general, sample-specific MRLs were significantly elevated (from the project goal for quantitation limits) due to the high PCB congener concentrations in samples. Samples required dilutions for proper instrument analyses and the MRLs were therefore elevated proportionally. The project goal for quantitation limits were attained to in these cases.

A verification calculation was performed on 10% of the reported calibration, laboratory QC analyses, and sample results. No anomalies were found. The verification calculation worksheets were maintained in project files for requests.

1.12 Field Duplicates

One field duplicate pair (LP-MW-5-071017 and LP-MW-20-071017) was submitted for PCB congeners analyses. All results met the advisory QC criteria for field duplicates. Field duplicate data are presented in Appendix A.

1.13 Overall Assessment of PCB Congener Data Usability

Some results were affected by the detections in the method blank and the biased-low labeled compound recovery (see Sections 1.5 and 1.9); the results might potentially bias high. Some results were qualified due to ion abundance ratio exceeded the control limits (see Section 1.10). Data users are advised to take this into consideration while using these data for the study.

PCB congener data were of known quality and acceptable for use, as qualified.

DTA QUALIFICATION SUMMARY

Table I. Qualified Data – Affected by QC Anomalies

Laboratory Sample ID	Field Sample ID	Analyte	Data Qualifier	Data Qualified Reason
E1700233-001	HB-MW-1R-030717	PCB 1	J	HT_P
E1700233-001	HB-MW-1R-030717	PCB 2	UJ	HT_P
E1700233-001	HB-MW-1R-030717	PCB 3	UJ	HT_P
E1700233-001	HB-MW-1R-030717	PCB 4	J	HT_P
E1700233-001	HB-MW-1R-030717	PCB 10	J	HT_P
E1700233-001	HB-MW-1R-030717	PCB 9	J	HT_P
E1700233-001	HB-MW-1R-030717	PCB 7	J	HT_P
E1700233-001	HB-MW-1R-030717	PCB 6	J	HT_P
E1700233-001	HB-MW-1R-030717	PCB 5	UJ	HT_P
E1700233-001	HB-MW-1R-030717	PCB 8	J	HT_P
E1700233-001	HB-MW-1R-030717	PCB 14	UJ	HT_P
E1700233-001	HB-MW-1R-030717	PCB 11	100 UJ	MB, HT_P
E1700233-001	HB-MW-1R-030717	PCBs 12 + 13	J	HT_P
E1700233-001	HB-MW-1R-030717	PCB 15	J	HT_P
E1700233-001	HB-MW-1R-030717	PCB 19	J	HT_P
E1700233-001	HB-MW-1R-030717	PCBs 18 + 30	J	HT_P
E1700233-001	HB-MW-1R-030717	PCB 17	J	HT_P
E1700233-001	HB-MW-1R-030717	PCB 27	J	HT_P
E1700233-001	HB-MW-1R-030717	PCB 24	J	HT_P
E1700233-001	HB-MW-1R-030717	PCB 16	J	HT_P
E1700233-001	HB-MW-1R-030717	PCB 32	J	HT_P
E1700233-001	HB-MW-1R-030717	PCB 34	UJ	HT_P
E1700233-001	HB-MW-1R-030717	PCB 23	UJ	HT_P
E1700233-001	HB-MW-1R-030717	PCBs 26 + 29	J	HT_P
E1700233-001	HB-MW-1R-030717	PCB 25	J	HT_P, ION
E1700233-001	HB-MW-1R-030717	PCB 31	J	HT_P
E1700233-001	HB-MW-1R-030717	PCBs 20 + 28	J	HT_P
E1700233-001	HB-MW-1R-030717	PCBs 21 + 33	J	HT_P
E1700233-001	HB-MW-1R-030717	PCB 22	J	HT_P
E1700233-001	HB-MW-1R-030717	PCB 36	UJ	HT_P
E1700233-001	HB-MW-1R-030717	PCB 39	UJ	HT_P
E1700233-001	HB-MW-1R-030717	PCB 38	UJ	HT_P
E1700233-001	HB-MW-1R-030717	PCB 35	UJ	HT_P
E1700233-001	HB-MW-1R-030717	PCB 37	J	HT_P
E1700233-001	HB-MW-1R-030717	PCB 54	J	HT_P
E1700233-001	HB-MW-1R-030717	PCBs 50 + 53	J	HT_P
E1700233-001	HB-MW-1R-030717	PCBs 45 + 51	J	HT_P

Laboratory Sample ID	Field Sample ID	Analyte	Data Qualifier	Data Qualified Reason
E1700233-001	HB-MW-1R-030717	PCB 46	J	HT_P
E1700233-001	HB-MW-1R-030717	PCB 52	J	HT_P
E1700233-001	HB-MW-1R-030717	PCBs 43 + 73	UJ	HT_P
E1700233-001	HB-MW-1R-030717	PCBs 49 + 69	J	HT_P
E1700233-001	HB-MW-1R-030717	PCB 48	J	HT_P
E1700233-001	HB-MW-1R-030717	PCBs 44 + 47 + 65	J	HT_P
E1700233-001	HB-MW-1R-030717	PCBs 59 + 62 + 75	J	HT_P
E1700233-001	HB-MW-1R-030717	PCB 42	J	HT_P
E1700233-001	HB-MW-1R-030717	PCBs 41 + 71 + 40	J	HT_P
E1700233-001	HB-MW-1R-030717	PCB 64	J	HT_P
E1700233-001	HB-MW-1R-030717	PCB 72	UJ	HT_P
E1700233-001	HB-MW-1R-030717	PCB 68	J	HT_P
E1700233-001	HB-MW-1R-030717	PCB 57	UJ	HT_P
E1700233-001	HB-MW-1R-030717	PCB 58	J	HT_P
E1700233-001	HB-MW-1R-030717	PCB 67	J	HT_P, ION
E1700233-001	HB-MW-1R-030717	PCB 63	J	HT_P, ION
E1700233-001	HB-MW-1R-030717	PCBs 70 + 61 + 74 + 76	J	HT_P
E1700233-001	HB-MW-1R-030717	PCB 66	J	HT_P
E1700233-001	HB-MW-1R-030717	PCB 55	UJ	HT_P
E1700233-001	HB-MW-1R-030717	PCB 56	J	HT_P, ION
E1700233-001	HB-MW-1R-030717	PCB 60	UJ	HT_P
E1700233-001	HB-MW-1R-030717	PCB 80	UJ	HT_P
E1700233-001	HB-MW-1R-030717	PCB 79	UJ	HT_P
E1700233-001	HB-MW-1R-030717	PCB 78	UJ	HT_P
E1700233-001	HB-MW-1R-030717	PCB 81	UJ	HT_P
E1700233-001	HB-MW-1R-030717	PCB 77	UJ	HT_P
E1700233-001	HB-MW-1R-030717	PCB 104	UJ	HT_P
E1700233-001	HB-MW-1R-030717	PCB 96	UJ	HT_P
E1700233-001	HB-MW-1R-030717	PCB 103	UJ	HT_P
E1700233-001	HB-MW-1R-030717	PCB 94	UJ	HT_P
E1700233-001	HB-MW-1R-030717	PCBs 95 + 93 + 100	J	HT_P
E1700233-001	HB-MW-1R-030717	PCBs 98 + 102	J	HT_P, ION
E1700233-001	HB-MW-1R-030717	PCBs 88 + 91	J	HT_P
E1700233-001	HB-MW-1R-030717	PCB 84	J	HT_P
E1700233-001	HB-MW-1R-030717	PCB 89	UJ	HT_P
E1700233-001	HB-MW-1R-030717	PCB 121	UJ	HT_P
E1700233-001	HB-MW-1R-030717	PCB 92	J	HT_P
E1700233-001	HB-MW-1R-030717	PCBs 90 + 101 + 113	J	HT_P
E1700233-001	HB-MW-1R-030717	PCBs 83 + 99	J	HT_P
E1700233-001	HB-MW-1R-030717	PCB 112	UJ	HT_P
E1700233-001	HB-MW-1R-030717	PCBs 86 /87/97/109/119/125	J	HT_P

Laboratory Sample ID	Field Sample ID	Analyte	Data Qualifier	Data Qualified Reason
E1700233-001	HB-MW-1R-030717	PCBs 85 + 116 + 117	UJ	HT_P
E1700233-001	HB-MW-1R-030717	PCBs 110 + 115	J	HT_P
E1700233-001	HB-MW-1R-030717	PCB 82	J	HT_P
E1700233-001	HB-MW-1R-030717	PCB 111	UJ	HT_P
E1700233-001	HB-MW-1R-030717	PCB 120	UJ	HT_P
E1700233-001	HB-MW-1R-030717	PCBs 108 + 124	J	HT_P, ION
E1700233-001	HB-MW-1R-030717	PCB 107	J	HT_P, ION
E1700233-001	HB-MW-1R-030717	PCB 123	UJ	HT_P
E1700233-001	HB-MW-1R-030717	PCB 106	UJ	HT_P
E1700233-001	HB-MW-1R-030717	PCB 118	J	HT_P
E1700233-001	HB-MW-1R-030717	PCB 122	UJ	HT_P
E1700233-001	HB-MW-1R-030717	PCB 114	UJ	HT_P
E1700233-001	HB-MW-1R-030717	PCB 105	J	HT_P
E1700233-001	HB-MW-1R-030717	PCB 127	UJ	HT_P
E1700233-001	HB-MW-1R-030717	PCB 126	J	HT_P, ION
E1700233-001	HB-MW-1R-030717	PCB 155	UJ	HT_P
E1700233-001	HB-MW-1R-030717	PCB 152	UJ	HT_P
E1700233-001	HB-MW-1R-030717	PCB 150	UJ	HT_P
E1700233-001	HB-MW-1R-030717	PCB 136	J	HT_P
E1700233-001	HB-MW-1R-030717	PCB 145	UJ	HT_P
E1700233-001	HB-MW-1R-030717	PCB 148	UJ	HT_P
E1700233-001	HB-MW-1R-030717	PCBs 135 + 151 + 154	J	HT_P
E1700233-001	HB-MW-1R-030717	PCB 144	J	HT_P
E1700233-001	HB-MW-1R-030717	PCBs 147 + 149	J	HT_P
E1700233-001	HB-MW-1R-030717	PCB 134	J	HT_P
E1700233-001	HB-MW-1R-030717	PCB 143	UJ	HT_P
E1700233-001	HB-MW-1R-030717	PCBs 139 + 140	UJ	HT_P
E1700233-001	HB-MW-1R-030717	PCB 131	J	HT_P
E1700233-001	HB-MW-1R-030717	PCB 142	UJ	HT_P
E1700233-001	HB-MW-1R-030717	PCB 132	J	HT_P
E1700233-001	HB-MW-1R-030717	PCB 133	J	HT_P
E1700233-001	HB-MW-1R-030717	PCB 165	J	HT_P
E1700233-001	HB-MW-1R-030717	PCB 146	J	HT_P
E1700233-001	HB-MW-1R-030717	PCB 161	UJ	HT_P
E1700233-001	HB-MW-1R-030717	PCBs 153 + 168	J	HT_P
E1700233-001	HB-MW-1R-030717	PCB 141	J	HT_P
E1700233-001	HB-MW-1R-030717	PCB 130	J	HT_P
E1700233-001	HB-MW-1R-030717	PCB 137	UJ	HT_P
E1700233-001	HB-MW-1R-030717	PCB 164	J	HT_P
E1700233-001	HB-MW-1R-030717	PCBs 129 + 138 + 163	J	HT_P
E1700233-001	HB-MW-1R-030717	PCB 160	UJ	HT_P

Laboratory Sample ID	Field Sample ID	Analyte	Data Qualifier	Data Qualified Reason
E1700233-001	HB-MW-1R-030717	PCB 158	J	HT_P
E1700233-001	HB-MW-1R-030717	PCBs 128 + 166	J	HT_P
E1700233-001	HB-MW-1R-030717	PCB 159	J	HT_P
E1700233-001	HB-MW-1R-030717	PCB 162	J	HT_P, ION
E1700233-001	HB-MW-1R-030717	PCB 167	J	HT_P
E1700233-001	HB-MW-1R-030717	PCBs 156 + 157	J	HT_P
E1700233-001	HB-MW-1R-030717	PCB 169	J	HT_P
E1700233-001	HB-MW-1R-030717	PCB 188	UJ	HT_P
E1700233-001	HB-MW-1R-030717	PCB 179	J	HT_P
E1700233-001	HB-MW-1R-030717	PCB 184	UJ	HT_P
E1700233-001	HB-MW-1R-030717	PCB 176	J	HT_P
E1700233-001	HB-MW-1R-030717	PCB 186	UJ	HT_P
E1700233-001	HB-MW-1R-030717	PCB 178	J	HT_P
E1700233-001	HB-MW-1R-030717	PCB 175	J	HT_P
E1700233-001	HB-MW-1R-030717	PCB 187	J	HT_P
E1700233-001	HB-MW-1R-030717	PCB 182	UJ	HT_P
E1700233-001	HB-MW-1R-030717	PCBs 183 + 185	J	HT_P
E1700233-001	HB-MW-1R-030717	PCB 174	J	HT_P
E1700233-001	HB-MW-1R-030717	PCB 177	J	HT_P
E1700233-001	HB-MW-1R-030717	PCB 181	UJ	HT_P
E1700233-001	HB-MW-1R-030717	PCBs 171 + 173	J	HT_P
E1700233-001	HB-MW-1R-030717	PCB 172	J	HT_P
E1700233-001	HB-MW-1R-030717	PCB 192	UJ	HT_P
E1700233-001	HB-MW-1R-030717	PCBs 180 + 193	J	HT_P
E1700233-001	HB-MW-1R-030717	PCB 191	J	HT_P
E1700233-001	HB-MW-1R-030717	PCB 170	J	HT_P
E1700233-001	HB-MW-1R-030717	PCB 190	J	HT_P
E1700233-001	HB-MW-1R-030717	PCB 189	J	HT_P
E1700233-001	HB-MW-1R-030717	PCB 202	J	HT_P
E1700233-001	HB-MW-1R-030717	PCB 201	J	HT_P
E1700233-001	HB-MW-1R-030717	PCB 204	UJ	HT_P
E1700233-001	HB-MW-1R-030717	PCB 197	J	HT_P
E1700233-001	HB-MW-1R-030717	PCB 200	J	HT_P
E1700233-001	HB-MW-1R-030717	PCBs 198 + 199	J	HT_P
E1700233-001	HB-MW-1R-030717	PCB 196	J	HT_P
E1700233-001	HB-MW-1R-030717	PCB 203	J	HT_P
E1700233-001	HB-MW-1R-030717	PCB 195	J	HT_P
E1700233-001	HB-MW-1R-030717	PCB 194	J	HT_P
E1700233-001	HB-MW-1R-030717	PCB 205	J	HT_P
E1700233-001	HB-MW-1R-030717	PCB 208	J	HT_P
E1700233-001	HB-MW-1R-030717	PCB 207	J	HT_P

Laboratory Sample ID	Field Sample ID	Analyte	Data Qualifier	Data Qualified Reason
E1700233-001	HB-MW-1R-030717	PCB 206	J	HT_P
E1700233-001	HB-MW-1R-030717	PCB 209	J	HT_P
E1700233-001	HB-MW-1R-030717	Total MonoCB	J	HT_P
E1700233-001	HB-MW-1R-030717	Total DiCB	J	HT_P
E1700233-001	HB-MW-1R-030717	Total TriCB	J	HT_P
E1700233-001	HB-MW-1R-030717	Total TetraCB	J	HT_P
E1700233-001	HB-MW-1R-030717	Total PentaCB	J	HT_P
E1700233-001	HB-MW-1R-030717	Total HexaCB	J	HT_P
E1700233-001	HB-MW-1R-030717	Total HeptaCB	J	HT_P
E1700233-001	HB-MW-1R-030717	Total OctaCB	J	HT_P
E1700233-001	HB-MW-1R-030717	Total NonaCB	J	HT_P
E1700233-001	HB-MW-1R-030717	Total PCBs	J	HT_P
E1700233-002	CMS-MW-1R-030717	PCB 11	101 U	MB
E1700233-002	CMS-MW-1R-030717	PCB 54	J	ION
E1700233-002	CMS-MW-1R-030717	PCB 72	J	ION
E1700233-002	CMS-MW-1R-030717	PCB 68	J	ION
E1700233-002	CMS-MW-1R-030717	PCB 57	J	ION
E1700233-002	CMS-MW-1R-030717	PCB 58	J	ION
E1700233-002	CMS-MW-1R-030717	PCB 56	J	ION
E1700233-002	CMS-MW-1R-030717	PCB 77	J	ION
E1700233-002	CMS-MW-1R-030717	PCB 104	J	ION
E1700233-002	CMS-MW-1R-030717	PCB 94	J	ION
E1700233-002	CMS-MW-1R-030717	PCB 121	J	ION
E1700233-002	CMS-MW-1R-030717	PCB 111	J	ION
E1700233-002	CMS-MW-1R-030717	PCB 120	J	ION
E1700233-002	CMS-MW-1R-030717	PCB 127	J	ION
E1700233-002	CMS-MW-1R-030717	PCB 152	J	LCS/LCSD_H, ION
E1700233-002	CMS-MW-1R-030717	PCBs 139 + 140	J	ION
E1700233-002	CMS-MW-1R-030717	PCB 133	J	ION
E1700233-002	CMS-MW-1R-030717	PCB 165	J	ION
E1700233-002	CMS-MW-1R-030717	PCB 161	J	ION
E1700233-002	CMS-MW-1R-030717	PCB 130	J	ION
E1700233-002	CMS-MW-1R-030717	PCBs 156 + 157	U	MB
E1700233-002	CMS-MW-1R-030717	PCB 169	J	ION
E1700233-002	CMS-MW-1R-030717	PCB 176	J	ION
E1700233-002	CMS-MW-1R-030717	PCB 182	J	ION
E1700233-002	CMS-MW-1R-030717	PCBs 183 + 185	J	LCS/LCSD_H
E1700233-002	CMS-MW-1R-030717	PCB 181	J	ION
E1700233-002	CMS-MW-1R-030717	PCB 191	J	ION
E1700233-002	CMS-MW-1R-030717	PCBs 198 + 199	101 U	MB
E1700233-002	CMS-MW-1R-030717	PCB 194	U	MB

Laboratory Sample ID	Field Sample ID	Analyte	Data Qualifier	Data Qualified Reason
E1700233-002	CMS-MW-1R-030717	PCB 208	U	MB
E1700233-002	CMS-MW-1R-030717	PCB 206	U	MB
E1700233-002	CMS-MW-1R-030717	PCB 209	U	MB
E1700233-002	CMS-MW-1R-030717	Total OctaCB	U	MB
E1700233-002	CMS-MW-1R-030717	Total NonaCB	U	MB
E1700233-003	BCT-MW-102-030717	PCB 2	J	ION
E1700233-003	BCT-MW-102-030717	PCB 3	J	ION
E1700233-003	BCT-MW-102-030717	PCB 11	101 U	MB
E1700233-003	BCT-MW-102-030717	PCB 31	J	ION
E1700233-003	BCT-MW-102-030717	PCBs 21 + 33	J	ION
E1700233-003	BCT-MW-102-030717	PCB 52	50.7 U	MB
E1700233-003	BCT-MW-102-030717	PCBs 44 + 47 + 65	101 U	MB
E1700233-003	BCT-MW-102-030717	PCBs 59 + 62 + 75	J	ION
E1700233-003	BCT-MW-102-030717	PCBs 41 + 71 + 40	J	ION
E1700233-003	BCT-MW-102-030717	PCB 64	J	ION
E1700233-003	BCT-MW-102-030717	PCB 68	J	ION
E1700233-003	BCT-MW-102-030717	PCB 58	J	ION
E1700233-003	BCT-MW-102-030717	PCB 66	J	ION
E1700233-003	BCT-MW-102-030717	PCB 55	J	ION
E1700233-003	BCT-MW-102-030717	PCB 56	J	ION
E1700233-003	BCT-MW-102-030717	PCB 60	J	ION
E1700233-003	BCT-MW-102-030717	PCB 80	J	ION
E1700233-003	BCT-MW-102-030717	PCB 79	J	ION
E1700233-003	BCT-MW-102-030717	PCB 104	J	ION
E1700233-003	BCT-MW-102-030717	PCB 103	J	ION
E1700233-003	BCT-MW-102-030717	PCB 94	J	ION
E1700233-003	BCT-MW-102-030717	PCBs 98 + 102	J	ION
E1700233-003	BCT-MW-102-030717	PCB 84	J	ION
E1700233-003	BCT-MW-102-030717	PCB 121	J	ION
E1700233-003	BCT-MW-102-030717	PCBs 90 + 101 + 113	203 U	MB
E1700233-003	BCT-MW-102-030717	PCB 112	J	ION
E1700233-003	BCT-MW-102-030717	PCBs 86 /87/97/109/119/125	203 U	MB
E1700233-003	BCT-MW-102-030717	PCBs 86 /87/97/109/119/125	J	ION
E1700233-003	BCT-MW-102-030717	PCBs 86 /87/97/109/119/125	J	ION
E1700233-003	BCT-MW-102-030717	PCBs 86 /87/97/109/119/125	J	ION
E1700233-003	BCT-MW-102-030717	PCBs 86 /87/97/109/119/125	J	ION
E1700233-003	BCT-MW-102-030717	PCBs 86 /87/97/109/119/125	J	ION
E1700233-003	BCT-MW-102-030717	PCBs 86 /87/97/109/119/125	J	LCS/LCSD_H, ION
E1700233-003	BCT-MW-102-030717	PCBs 86 /87/97/109/119/125	J	ION
E1700233-003	BCT-MW-102-030717	PCBs 86 /87/97/109/119/125	J	ION
E1700233-003	BCT-MW-102-030717	PCBs 86 /87/97/109/119/125	J	ION

Laboratory Sample ID	Field Sample ID	Analyte	Data Qualifier	Data Qualified Reason
E1700233-003	BCT-MW-102-030717	PCBs 86 /87/97/109/119/125	40.5 U	MB
E1700233-003	BCT-MW-102-030717	PCBs 86 /87/97/109/119/125	J	ION
E1700233-003	BCT-MW-102-030717	PCBs 86 /87/97/109/119/125	J	LCS/LCSD_H
E1700233-003	BCT-MW-102-030717	PCBs 86 /87/97/109/119/125	J	ION
E1700233-003	BCT-MW-102-030717	PCBs 86 /87/97/109/119/125	101 U	MB
E1700233-003	BCT-MW-102-030717	PCBs 86 /87/97/109/119/125	50.7 U	MB
E1700233-003	BCT-MW-102-030717	PCBs 86 /87/97/109/119/125	U	MB
E1700233-003	BCT-MW-102-030717	PCBs 86 /87/97/109/119/125	U	MB
E1700233-003	BCT-MW-102-030717	PCBs 86 /87/97/109/119/125	U	MB
E1700233-003	BCT-MW-102-030717	PCBs 86 /87/97/109/119/125	U	MB
E1700233-003	BCT-MW-102-030717	PCBs 86 /87/97/109/119/125	U	MB
E1700233-003	BCT-MW-102-030717	PCBs 86 /87/97/109/119/125	U	MB
E1700233-004	BCT-MW-108-030717	PCBs 86 /87/97/109/119/125	125 U	MB
E1700233-004	BCT-MW-108-030717	PCBs 86 /87/97/109/119/125	J	ION
E1700233-004	BCT-MW-108-030717	PCBs 86 /87/97/109/119/125	J	ION
E1700233-004	BCT-MW-108-030717	PCBs 86 /87/97/109/119/125	J	ION
E1700233-004	BCT-MW-108-030717	PCBs 86 /87/97/109/119/125	J	ION
E1700233-004	BCT-MW-108-030717	PCBs 86 /87/97/109/119/125	J	ION
E1700233-004	BCT-MW-108-030717	PCBs 86 /87/97/109/119/125	J	ION
E1700233-004	BCT-MW-108-030717	PCBs 86 /87/97/109/119/125	J	ION
E1700233-004	BCT-MW-108-030717	PCBs 86 /87/97/109/119/125	J	ION
E1700233-004	BCT-MW-108-030717	PCBs 86 /87/97/109/119/125	J	ION
E1700233-004	BCT-MW-108-030717	PCBs 86 /87/97/109/119/125	J	ION
E1700233-004	BCT-MW-108-030717	PCBs 86 /87/97/109/119/125	249 U	MB
E1700233-004	BCT-MW-108-030717	PCBs 86 /87/97/109/119/125	J	ION
E1700233-004	BCT-MW-108-030717	PCBs 86 /87/97/109/119/125	J	ION
E1700233-004	BCT-MW-108-030717	PCBs 86 /87/97/109/119/125	J	LCS/LCSD_H, ION
E1700233-004	BCT-MW-108-030717	PCBs 86 /87/97/109/119/125	J	ION
E1700233-004	BCT-MW-108-030717	PCBs 86 /87/97/109/119/125	J	ION
E1700233-004	BCT-MW-108-030717	PCBs 86 /87/97/109/119/125	J	ION
E1700233-004	BCT-MW-108-030717	PCBs 86 /87/97/109/119/125	J	ION
E1700233-004	BCT-MW-108-030717	PCBs 86 /87/97/109/119/125	J	ION
E1700233-004	BCT-MW-108-030717	PCBs 86 /87/97/109/119/125	J	ION
E1700233-004	BCT-MW-108-030717	PCBs 86 /87/97/109/119/125	J	ION
E1700233-004	BCT-MW-108-030717	PCBs 86 /87/97/109/119/125	J	ION
E1700233-004	BCT-MW-108-030717	PCBs 86 /87/97/109/119/125	J	ION
E1700233-004	BCT-MW-108-030717	PCBs 86 /87/97/109/119/125	J	ION
E1700233-004	BCT-MW-108-030717	PCBs 86 /87/97/109/119/125	J	ION
E1700233-004	BCT-MW-108-030717	PCBs 86 /87/97/109/119/125	49.9 U	MB
E1700233-004	BCT-MW-108-030717	PCBs 86 /87/97/109/119/125	J	ION
E1700233-004	BCT-MW-108-030717	PCBs 86 /87/97/109/119/125	J	ION

Laboratory Sample ID	Field Sample ID	Analyte	Data Qualifier	Data Qualified Reason
E1700233-004	BCT-MW-108-030717	PCBs 86 /87/97/109/119/125	J	ION
E1700233-004	BCT-MW-108-030717	PCBs 86 /87/97/109/119/125	J	LCS/LCSD_H
E1700233-004	BCT-MW-108-030717	PCBs 86 /87/97/109/119/125	J	ION
E1700233-004	BCT-MW-108-030717	PCBs 86 /87/97/109/119/125	J	ION
E1700233-004	BCT-MW-108-030717	PCBs 86 /87/97/109/119/125	J	ION
E1700233-004	BCT-MW-108-030717	PCBs 86 /87/97/109/119/125	J	ION
E1700233-004	BCT-MW-108-030717	PCBs 86 /87/97/109/119/125	J	ION
E1700233-004	BCT-MW-108-030717	PCBs 86 /87/97/109/119/125	125 U	MB
E1700233-004	BCT-MW-108-030717	PCBs 86 /87/97/109/119/125	62.3 U	MB
E1700233-004	BCT-MW-108-030717	PCBs 86 /87/97/109/119/125	J	ION
E1700233-004	BCT-MW-108-030717	PCBs 86 /87/97/109/119/125	24.9 U	MB
E1700233-004	BCT-MW-108-030717	PCBs 86 /87/97/109/119/125	U	MB
E1700233-004	BCT-MW-108-030717	PCBs 86 /87/97/109/119/125	24.9 U	MB
E1700233-004	BCT-MW-108-030717	PCBs 86 /87/97/109/119/125	U	MB
E1700233-004	BCT-MW-108-030717	PCBs 86 /87/97/109/119/125	U	MB
E1700233-005	CN-MW-103-030717	PCBs 86 /87/97/109/119/125	101 U	MB
E1700233-005	CN-MW-103-030717	PCBs 86 /87/97/109/119/125	J	ION
E1700233-005	CN-MW-103-030717	PCBs 86 /87/97/109/119/125	J	ION
E1700233-005	CN-MW-103-030717	PCBs 86 /87/97/109/119/125	50.3 U	MB
E1700233-005	CN-MW-103-030717	PCBs 86 /87/97/109/119/125	J	ION
E1700233-005	CN-MW-103-030717	PCBs 86 /87/97/109/119/125	101 U	MB
E1700233-005	CN-MW-103-030717	PCBs 86 /87/97/109/119/125	J	ION
E1700233-005	CN-MW-103-030717	PCBs 86 /87/97/109/119/125	J	ION
E1700233-005	CN-MW-103-030717	PCBs 86 /87/97/109/119/125	J	ION
E1700233-005	CN-MW-103-030717	PCBs 86 /87/97/109/119/125	201 U	MB
E1700233-005	CN-MW-103-030717	PCBs 86 /87/97/109/119/125	201 U	MB
E1700233-005	CN-MW-103-030717	PCBs 86 /87/97/109/119/125	J	ION
E1700233-005	CN-MW-103-030717	PCBs 86 /87/97/109/119/125	J	ION
E1700233-005	CN-MW-103-030717	PCBs 86 /87/97/109/119/125	J	ION
E1700233-005	CN-MW-103-030717	PCBs 86 /87/97/109/119/125	J	ION
E1700233-005	CN-MW-103-030717	PCBs 86 /87/97/109/119/125	J	ION
E1700233-005	CN-MW-103-030717	PCBs 86 /87/97/109/119/125	J	ION
E1700233-005	CN-MW-103-030717	PCBs 86 /87/97/109/119/125	J	ION
E1700233-005	CN-MW-103-030717	PCBs 86 /87/97/109/119/125	J	ION
E1700233-005	CN-MW-103-030717	PCBs 86 /87/97/109/119/125	J	ION
E1700233-005	CN-MW-103-030717	PCBs 86 /87/97/109/119/125	J	ION
E1700233-005	CN-MW-103-030717	PCBs 86 /87/97/109/119/125	201 U	MB
E1700233-005	CN-MW-103-030717	PCBs 86 /87/97/109/119/125	J	ION
E1700233-005	CN-MW-103-030717	PCBs 86 /87/97/109/119/125	40.2 U	MB
E1700233-005	CN-MW-103-030717	PCBs 86 /87/97/109/119/125	J	ION
E1700233-005	CN-MW-103-030717	PCBs 86 /87/97/109/119/125	J	ION

Laboratory Sample ID	Field Sample ID	Analyte	Data Qualifier	Data Qualified Reason
E1700233-005	CN-MW-103-030717	PCBs 86 /87/97/109/119/125	J	ION
E1700233-005	CN-MW-103-030717	PCBs 86 /87/97/109/119/125	J	LCS/LCSD_H
E1700233-005	CN-MW-103-030717	PCBs 86 /87/97/109/119/125	J	ION
E1700233-005	CN-MW-103-030717	PCBs 86 /87/97/109/119/125	J	ION
E1700233-005	CN-MW-103-030717	PCBs 86 /87/97/109/119/125	101 U	MB
E1700233-005	CN-MW-103-030717	PCBs 86 /87/97/109/119/125	J	ION
E1700233-005	CN-MW-103-030717	PCBs 86 /87/97/109/119/125	J	ION
E1700233-005	CN-MW-103-030717	PCBs 86 /87/97/109/119/125	J	ION
E1700233-005	CN-MW-103-030717	PCBs 86 /87/97/109/119/125	101 U	MB
E1700233-005	CN-MW-103-030717	PCBs 86 /87/97/109/119/125	J	ION
E1700233-005	CN-MW-103-030717	PCBs 86 /87/97/109/119/125	50.3 U	MB
E1700233-005	CN-MW-103-030717	PCBs 86 /87/97/109/119/125	J	ION
E1700233-005	CN-MW-103-030717	PCBs 86 /87/97/109/119/125	20.1 U	MB
E1700233-005	CN-MW-103-030717	PCBs 86 /87/97/109/119/125	J	ION
E1700233-005	CN-MW-103-030717	PCBs 86 /87/97/109/119/125	B	MB
E1700233-005	CN-MW-103-030717	PCBs 86 /87/97/109/119/125	201 U	MB
E1700233-005	CN-MW-103-030717	PCBs 86 /87/97/109/119/125	201 U	MB
E1700233-005	CN-MW-103-030717	PCBs 86 /87/97/109/119/125	201 U	MB
E1700233-005	CN-MW-103-030717	PCBs 86 /87/97/109/119/125	U	MB
E1700233-005	CN-MW-103-030717	PCBs 86 /87/97/109/119/125	U	MB
E1700233-005	CN-MW-103-030717	PCBs 86 /87/97/109/119/125	U	MB
E1700233-005	CN-MW-103-030717	PCBs 86 /87/97/109/119/125	U	MB
E1700233-005	CN-MW-103-030717	PCBs 86 /87/97/109/119/125	U	MB
E1700233-006	UST29-MW-103-030717	PCBs 86 /87/97/109/119/125	101 U	MB
E1700233-006	UST29-MW-103-030717	PCBs 86 /87/97/109/119/125	J	ION
E1700233-006	UST29-MW-103-030717	PCBs 86 /87/97/109/119/125	J	ION
E1700233-006	UST29-MW-103-030717	PCBs 86 /87/97/109/119/125	J	ION
E1700233-006	UST29-MW-103-030717	PCBs 86 /87/97/109/119/125	201 U	MB
E1700233-006	UST29-MW-103-030717	PCBs 86 /87/97/109/119/125	201 U	MB
E1700233-006	UST29-MW-103-030717	PCBs 86 /87/97/109/119/125	J	ION
E1700233-006	UST29-MW-103-030717	PCBs 86 /87/97/109/119/125	J	ION
E1700233-006	UST29-MW-103-030717	PCBs 86 /87/97/109/119/125	J	ION
E1700233-006	UST29-MW-103-030717	PCBs 86 /87/97/109/119/125	J	ION
E1700233-006	UST29-MW-103-030717	PCBs 86 /87/97/109/119/125	J	ION
E1700233-006	UST29-MW-103-030717	PCBs 86 /87/97/109/119/125	J	ION
E1700233-006	UST29-MW-103-030717	PCBs 86 /87/97/109/119/125	J	ION
E1700233-006	UST29-MW-103-030717	PCBs 86 /87/97/109/119/125	J	ION
E1700233-006	UST29-MW-103-030717	PCBs 86 /87/97/109/119/125	J	ION
E1700233-006	UST29-MW-103-030717	PCBs 86 /87/97/109/119/125	J	ION
E1700233-006	UST29-MW-103-030717	PCBs 86 /87/97/109/119/125	J	ION
E1700233-006	UST29-MW-103-030717	PCBs 86 /87/97/109/119/125	201 U	MB

Laboratory Sample ID	Field Sample ID	Analyte	Data Qualifier	Data Qualified Reason
E1700233-006	UST29-MW-103-030717	PCBs 86 /87/97/109/119/125	J	ION
E1700233-006	UST29-MW-103-030717	PCBs 86 /87/97/109/119/125	40.3 U	MB
E1700233-006	UST29-MW-103-030717	PCBs 86 /87/97/109/119/125	J	ION
E1700233-006	UST29-MW-103-030717	PCBs 86 /87/97/109/119/125	J	ION
E1700233-006	UST29-MW-103-030717	PCBs 86 /87/97/109/119/125	J	ION
E1700233-006	UST29-MW-103-030717	PCBs 86 /87/97/109/119/125	J	LCS/LCSD_H
E1700233-006	UST29-MW-103-030717	PCBs 86 /87/97/109/119/125	J	ION
E1700233-006	UST29-MW-103-030717	PCBs 86 /87/97/109/119/125	J	ION
E1700233-006	UST29-MW-103-030717	PCBs 86 /87/97/109/119/125	101 U	MB
E1700233-006	UST29-MW-103-030717	PCBs 86 /87/97/109/119/125	J	ION
E1700233-006	UST29-MW-103-030717	PCBs 86 /87/97/109/119/125	J	ION
E1700233-006	UST29-MW-103-030717	PCBs 86 /87/97/109/119/125	J	ION
E1700233-006	UST29-MW-103-030717	PCBs 86 /87/97/109/119/125	101 U	MB
E1700233-006	UST29-MW-103-030717	PCBs 86 /87/97/109/119/125	J	ION
E1700233-006	UST29-MW-103-030717	PCBs 86 /87/97/109/119/125	50.4 U	MB
E1700233-006	UST29-MW-103-030717	PCBs 86 /87/97/109/119/125	20.1 U	MB
E1700233-006	UST29-MW-103-030717	PCBs 86 /87/97/109/119/125	J	ION
E1700233-006	UST29-MW-103-030717	PCBs 86 /87/97/109/119/125	20.1 U	MB
E1700233-006	UST29-MW-103-030717	PCBs 86 /87/97/109/119/125	20.1 U	MB
E1700233-006	UST29-MW-103-030717	PCBs 86 /87/97/109/119/125	U	MB
E1700233-006	UST29-MW-103-030717	PCBs 86 /87/97/109/119/125	U	MB
E1700233-006	UST29-MW-103-030717	PCBs 86 /87/97/109/119/125	U	MB
E1700233-006	UST29-MW-103-030717	PCBs 86 /87/97/109/119/125	U	MB
E1700233-007	DAST-MW-101-030717	PCBs 86 /87/97/109/119/125	J	ION
E1700233-007	DAST-MW-101-030717	PCBs 86 /87/97/109/119/125	J	ION
E1700233-007	DAST-MW-101-030717	PCBs 86 /87/97/109/119/125	J	ION
E1700233-007	DAST-MW-101-030717	PCBs 86 /87/97/109/119/125	J	ION
E1700233-007	DAST-MW-101-030717	PCBs 86 /87/97/109/119/125	J	ION
E1700233-007	DAST-MW-101-030717	PCBs 86 /87/97/109/119/125	J	ION
E1700233-007	DAST-MW-101-030717	PCBs 86 /87/97/109/119/125	J	ION
E1700233-007	DAST-MW-101-030717	PCBs 86 /87/97/109/119/125	J	LCS/LCSD_H, ION
E1700233-007	DAST-MW-101-030717	PCBs 86 /87/97/109/119/125	J	ION
E1700233-007	DAST-MW-101-030717	PCBs 86 /87/97/109/119/125	J	LSR_L
E1700233-007	DAST-MW-101-030717	PCBs 86 /87/97/109/119/125	J	LSR_L
E1700233-007	DAST-MW-101-030717	PCBs 86 /87/97/109/119/125	J	LSR_L, ION
E1700233-007	DAST-MW-101-030717	PCBs 86 /87/97/109/119/125	J	LSR_L
E1700233-007	DAST-MW-101-030717	PCBs 86 /87/97/109/119/125	J	LSR_L
E1700233-007	DAST-MW-101-030717	PCBs 86 /87/97/109/119/125	J	LSR_L
E1700233-007	DAST-MW-101-030717	PCBs 86 /87/97/109/119/125	J	LSR_L, ION
E1700233-007	DAST-MW-101-030717	PCBs 86 /87/97/109/119/125	J	LSR_L
E1700233-007	DAST-MW-101-030717	PCBs 86 /87/97/109/119/125	J	LSR_L

Laboratory Sample ID	Field Sample ID	Analyte	Data Qualifier	Data Qualified Reason
E1700233-007	DAST-MW-101-030717	PCBs 86 /87/97/109/119/125	J	LCS/LCSD_H, LSR_L
E1700233-007	DAST-MW-101-030717	PCBs 86 /87/97/109/119/125	J	LSR_L
E1700233-007	DAST-MW-101-030717	PCBs 86 /87/97/109/119/125	J	LSR_L
E1700233-007	DAST-MW-101-030717	PCBs 86 /87/97/109/119/125	J	LSR_L, ION
E1700233-007	DAST-MW-101-030717	PCBs 86 /87/97/109/119/125	J	LSR_L
E1700233-007	DAST-MW-101-030717	PCBs 86 /87/97/109/119/125	J	LSR_L
E1700233-007	DAST-MW-101-030717	PCBs 86 /87/97/109/119/125	J	LSR_L, ION
E1700233-007	DAST-MW-101-030717	PCBs 86 /87/97/109/119/125	J	LSR_L
E1700233-007	DAST-MW-101-030717	PCBs 86 /87/97/109/119/125	J	LSR_L
E1700233-007	DAST-MW-101-030717	PCBs 86 /87/97/109/119/125	J	LSR_L
E1700233-007	DAST-MW-101-030717	PCBs 86 /87/97/109/119/125	J	LSR_L
E1700233-007	DAST-MW-101-030717	PCBs 86 /87/97/109/119/125	J	ION
E1700233-007	DAST-MW-101-030717	PCBs 86 /87/97/109/119/125	J	ION
E1700233-007	DAST-MW-101-030717	PCBs 86 /87/97/109/119/125	J	ION
E1700233-007	DAST-MW-101-030717	PCBs 86 /87/97/109/119/125	J	ION
E1700233-007	DAST-MW-101-030717	PCBs 86 /87/97/109/119/125	J	ION
E1700233-007	DAST-MW-101-030717	PCBs 86 /87/97/109/119/125	U	MB
E1700233-007	DAST-MW-101-030717	PCBs 86 /87/97/109/119/125	U	MB
E1700233-007	DAST-MW-101-030717	PCBs 86 /87/97/109/119/125	U	MB
E1700233-007	DAST-MW-101-030717	PCBs 86 /87/97/109/119/125	U	MB
E1700233-008	UG-MW-2R-030717	PCBs 86 /87/97/109/119/125	101 U	MB
E1700233-008	UG-MW-2R-030717	PCBs 86 /87/97/109/119/125	50.4 U	MB
E1700233-008	UG-MW-2R-030717	PCBs 86 /87/97/109/119/125	101 U	MB
E1700233-008	UG-MW-2R-030717	PCBs 86 /87/97/109/119/125	J	ION
E1700233-008	UG-MW-2R-030717	PCBs 86 /87/97/109/119/125	202 U	MB
E1700233-008	UG-MW-2R-030717	PCBs 86 /87/97/109/119/125	J	ION
E1700233-008	UG-MW-2R-030717	PCBs 86 /87/97/109/119/125	J	ION
E1700233-008	UG-MW-2R-030717	PCBs 86 /87/97/109/119/125	202 U	MB
E1700233-008	UG-MW-2R-030717	PCBs 85 + 116 + 117	J	ION
E1700233-008	UG-MW-2R-030717	PCBs 108 + 124	J	ION
E1700233-008	UG-MW-2R-030717	PCB 107	J	ION
E1700233-008	UG-MW-2R-030717	PCB 127	J	ION
E1700233-008	UG-MW-2R-030717	PCB 126	J	ION
E1700233-008	UG-MW-2R-030717	PCB 155	J	ION
E1700233-008	UG-MW-2R-030717	PCB 152	J	LCS/LCSD_H, ION
E1700233-008	UG-MW-2R-030717	PCB 150	J	ION
E1700233-008	UG-MW-2R-030717	PCB 148	J	ION
E1700233-008	UG-MW-2R-030717	PCB 144	J	ION
E1700233-008	UG-MW-2R-030717	PCB 146	J	ION
E1700233-008	UG-MW-2R-030717	PCB 159	J	ION
E1700233-008	UG-MW-2R-030717	PCBs 156 + 157	40.3 U	MB

Laboratory Sample ID	Field Sample ID	Analyte	Data Qualifier	Data Qualified Reason
E1700233-008	UG-MW-2R-030717	PCB 188	J	ION
E1700233-008	UG-MW-2R-030717	PCB 175	J	ION
E1700233-008	UG-MW-2R-030717	PCBs 183 + 185	J	LCS/LCSD_H
E1700233-008	UG-MW-2R-030717	PCB 181	J	ION
E1700233-008	UG-MW-2R-030717	PCB 190	J	ION
E1700233-008	UG-MW-2R-030717	PCBs 198 + 199	101 U	MB
E1700233-008	UG-MW-2R-030717	PCB 194	U	MB
E1700233-008	UG-MW-2R-030717	PCB 208	20.2 U	MB
E1700233-008	UG-MW-2R-030717	PCB 206	B	MB
E1700233-008	UG-MW-2R-030717	PCB 209	B	MB
E1700233-008	UG-MW-2R-030717	Total DiCB	B	MB
E1700233-008	UG-MW-2R-030717	Total TetraCB	202 U	MB
E1700233-008	UG-MW-2R-030717	Total PentaCB	202 U	MB
E1700233-008	UG-MW-2R-030717	Total OctaCB	B	MB
E1700233-008	UG-MW-2R-030717	Total NonaCB	B	MB
E1700233-008	UG-MW-2R-030717	Total PCBs	B	MB
E1700606-001	LD-B-03-42_05/16/17	PCB 1	J	ION
E1700606-001	LD-B-03-42_05/16/17	PCB 54	J	ION
E1700606-001	LD-B-03-42_05/16/17	PCB 68	J	ION
E1700606-001	LD-B-03-42_05/16/17	PCB 79	J	ION
E1700606-001	LD-B-03-42_05/16/17	PCB 162	J	ION
E1700607-001	LD-B-06-24_05/15/17	PCB 126	J	ION
E1700607-001	LD-B-06-24_05/15/17	PCB 169	J	ION
E1700607-002	LD-B-07-32_05/15/17	PCBs 45 + 51	J	ION
E1700607-002	LD-B-07-32_05/15/17	PCBs 41 + 71 + 40	J	ION
E1700607-002	LD-B-07-32_05/15/17	PCB 64	J	ION
E1700607-002	LD-B-07-32_05/15/17	PCB 66	J	ION
E1700607-002	LD-B-07-32_05/15/17	PCBs 95 + 93 + 100	J	ION
E1700607-002	LD-B-07-32_05/15/17	PCB 132	J	ION
E1700607-002	LD-B-07-32_05/15/17	PCB 141	J	ION
E1700607-002	LD-B-07-32_05/15/17	PCB 167	J	ION
E1700607-002	LD-B-07-32_05/15/17	PCB 169	J	ION
E1700607-002	LD-B-07-32_05/15/17	PCB 176	J	ION
E1700607-002	LD-B-07-32_05/15/17	PCB 202	J	ION
E1700607-002	LD-B-07-32_05/15/17	PCB 196	J	ION
E1700607-002	LD-B-07-32_05/15/17	PCB 205	J	ION
E1700607-002	LD-B-07-32_05/15/17	PCB 208	J	ION
E1700742-001	LP-MW-3-071017	PCB 4	UJ	LSR_L
E1700742-001	LP-MW-3-071017	PCB 10	UJ	LSR_L
E1700742-001	LP-MW-3-071017	PCB 9	UJ	LSR_L
E1700742-001	LP-MW-3-071017	PCB 7	UJ	LSR_L

Laboratory Sample ID	Field Sample ID	Analyte	Data Qualifier	Data Qualified Reason
E1700742-001	LP-MW-3-071017	PCB 6	J	LSR_L
E1700742-001	LP-MW-3-071017	PCB 5	UJ	LSR_L
E1700742-001	LP-MW-3-071017	PCB 8	J	LSR_L
E1700742-001	LP-MW-3-071017	PCB 14	UJ	LSR_L
E1700742-001	LP-MW-3-071017	PCB 11	J	LSR_L
E1700742-001	LP-MW-3-071017	PCBs 12 + 13	UJ	LSR_L
E1700742-001	LP-MW-3-071017	PCB 17	J	ION
E1700742-001	LP-MW-3-071017	PCB 27	J	ION
E1700742-001	LP-MW-3-071017	PCB 22	J	ION
E1700742-001	LP-MW-3-071017	PCB 54	J	ION
E1700742-001	LP-MW-3-071017	PCB 48	J	ION
E1700742-001	LP-MW-3-071017	PCBs 59 + 62 + 75	J	ION
E1700742-001	LP-MW-3-071017	PCB 58	J	ION
E1700742-001	LP-MW-3-071017	PCB 79	J	ION
E1700742-001	LP-MW-3-071017	PCB 77	B	MB
E1700742-001	LP-MW-3-071017	PCBs 98 + 102	J	ION
E1700742-001	LP-MW-3-071017	PCB 120	J	ION
E1700742-001	LP-MW-3-071017	PCBs 108 + 124	J	ION
E1700742-001	LP-MW-3-071017	PCB 114	BJ	MB, ION
E1700742-001	LP-MW-3-071017	PCB 134	J	ION
E1700742-001	LP-MW-3-071017	PCB 131	J	ION
E1700742-001	LP-MW-3-071017	PCB 133	J	ION
E1700742-001	LP-MW-3-071017	PCB 159	J	ION
E1700742-001	LP-MW-3-071017	PCB 175	J	ION
E1700742-001	LP-MW-3-071017	PCB 191	J	ION
E1700742-001	LP-MW-3-071017	PCB 197	J	ION
E1700742-001	LP-MW-3-071017	PCB 205	J	ION
E1700742-001	LP-MW-3-071017	Total DiCB	J	LSR_L
E1700742-002	LP-MW-1-071017	PCB 4	J	LSR_L
E1700742-002	LP-MW-1-071017	PCB 10	J	LSR_L
E1700742-002	LP-MW-1-071017	PCB 9	J	LSR_L
E1700742-002	LP-MW-1-071017	PCB 7	J	LSR_L
E1700742-002	LP-MW-1-071017	PCB 6	J	LSR_L
E1700742-002	LP-MW-1-071017	PCB 5	J	LSR_L
E1700742-002	LP-MW-1-071017	PCB 8	J	LSR_L
E1700742-002	LP-MW-1-071017	PCB 14	UJ	LSR_L
E1700742-002	LP-MW-1-071017	PCB 11	J	LSR_L
E1700742-002	LP-MW-1-071017	PCBs 12 + 13	J	LSR_L
E1700742-002	LP-MW-1-071017	PCB 15	J	LSR_L
E1700742-002	LP-MW-1-071017	PCB 19	J	LSR_L
E1700742-002	LP-MW-1-071017	PCBs 18 + 30	J	LSR_L

Laboratory Sample ID	Field Sample ID	Analyte	Data Qualifier	Data Qualified Reason
E1700742-002	LP-MW-1-071017	PCB 17	J	LSR_L
E1700742-002	LP-MW-1-071017	PCB 27	J	LSR_L
E1700742-002	LP-MW-1-071017	PCB 24	J	LSR_L
E1700742-002	LP-MW-1-071017	PCB 16	J	LSR_L
E1700742-002	LP-MW-1-071017	PCB 32	J	LSR_L
E1700742-002	LP-MW-1-071017	PCB 34	UJ	LSR_L
E1700742-002	LP-MW-1-071017	PCB 23	UJ	LSR_L
E1700742-002	LP-MW-1-071017	PCBs 26 + 29	J	LSR_L
E1700742-002	LP-MW-1-071017	PCB 25	J	LSR_L, ION
E1700742-002	LP-MW-1-071017	PCB 31	J	LSR_L
E1700742-002	LP-MW-1-071017	PCBs 20 + 28	J	LSR_L
E1700742-002	LP-MW-1-071017	PCBs 21 + 33	J	LSR_L
E1700742-002	LP-MW-1-071017	PCB 22	J	LSR_L
E1700742-002	LP-MW-1-071017	PCB 36	UJ	LSR_L
E1700742-002	LP-MW-1-071017	PCB 39	UJ	LSR_L
E1700742-002	LP-MW-1-071017	PCB 38	UJ	LSR_L
E1700742-002	LP-MW-1-071017	PCB 35	UJ	LSR_L
E1700742-002	LP-MW-1-071017	PCBs 41 + 71 + 40	J	ION
E1700742-002	LP-MW-1-071017	PCB 58	J	ION
E1700742-002	LP-MW-1-071017	PCB 60	J	ION
E1700742-002	LP-MW-1-071017	PCBs 98 + 102	J	ION
E1700742-002	LP-MW-1-071017	PCBs 108 + 124	J	ION
E1700742-002	LP-MW-1-071017	PCB 107	J	ION
E1700742-002	LP-MW-1-071017	PCB 144	J	ION
E1700742-002	LP-MW-1-071017	PCB 134	J	ION
E1700742-002	LP-MW-1-071017	PCB 164	J	ION
E1700742-002	LP-MW-1-071017	PCB 167	U	MB
E1700742-002	LP-MW-1-071017	PCBs 156 + 157	U	MB
E1700742-002	LP-MW-1-071017	PCB 186	J	ION
E1700742-002	LP-MW-1-071017	PCB 178	J	ION
E1700742-002	LP-MW-1-071017	PCB 174	J	ION
E1700742-002	LP-MW-1-071017	PCB 201	J	ION
E1700742-002	LP-MW-1-071017	PCB 197	J	ION
E1700742-002	LP-MW-1-071017	PCB 200	J	ION
E1700742-003	LP-MW-7-071017	PCB 1	UJ	LSR_L
E1700742-003	LP-MW-7-071017	PCB 2	UJ	LSR_L
E1700742-003	LP-MW-7-071017	PCB 3	UJ	LSR_L
E1700742-003	LP-MW-7-071017	PCB 4	UJ	LSR_L
E1700742-003	LP-MW-7-071017	PCB 10	UJ	LSR_L
E1700742-003	LP-MW-7-071017	PCB 9	UJ	LSR_L
E1700742-003	LP-MW-7-071017	PCB 7	UJ	LSR_L

Laboratory Sample ID	Field Sample ID	Analyte	Data Qualifier	Data Qualified Reason
E1700742-003	LP-MW-7-071017	PCB 6	UJ	LSR_L
E1700742-003	LP-MW-7-071017	PCB 5	UJ	LSR_L
E1700742-003	LP-MW-7-071017	PCB 8	J	LSR_L
E1700742-003	LP-MW-7-071017	PCB 14	UJ	LSR_L
E1700742-003	LP-MW-7-071017	PCB 11	J	LSR_L
E1700742-003	LP-MW-7-071017	PCBs 12 + 13	UJ	LSR_L
E1700742-003	LP-MW-7-071017	PCB 15	UJ	LSR_L
E1700742-003	LP-MW-7-071017	PCB 19	UJ	LSR_L
E1700742-003	LP-MW-7-071017	PCBs 18 + 30	J	LSR_L
E1700742-003	LP-MW-7-071017	PCB 17	UJ	LSR_L
E1700742-003	LP-MW-7-071017	PCB 27	UJ	LSR_L
E1700742-003	LP-MW-7-071017	PCB 24	UJ	LSR_L
E1700742-003	LP-MW-7-071017	PCB 16	UJ	LSR_L
E1700742-003	LP-MW-7-071017	PCB 32	UJ	LSR_L
E1700742-003	LP-MW-7-071017	PCB 34	UJ	LSR_L
E1700742-003	LP-MW-7-071017	PCB 23	UJ	LSR_L
E1700742-003	LP-MW-7-071017	PCBs 26 + 29	UJ	LSR_L
E1700742-003	LP-MW-7-071017	PCB 25	UJ	LSR_L
E1700742-003	LP-MW-7-071017	PCB 31	J	LSR_L
E1700742-003	LP-MW-7-071017	PCBs 20 + 28	J	LSR_L
E1700742-003	LP-MW-7-071017	PCBs 21 + 33	UJ	LSR_L
E1700742-003	LP-MW-7-071017	PCB 22	UJ	LSR_L
E1700742-003	LP-MW-7-071017	PCB 36	UJ	LSR_L
E1700742-003	LP-MW-7-071017	PCB 39	UJ	LSR_L
E1700742-003	LP-MW-7-071017	PCB 38	UJ	LSR_L
E1700742-003	LP-MW-7-071017	PCB 35	UJ	LSR_L
E1700742-003	LP-MW-7-071017	PCB 37	UJ	LSR_L
E1700742-003	LP-MW-7-071017	PCB 54	UJ	LSR_L
E1700742-003	LP-MW-7-071017	PCBs 50 + 53	UJ	LSR_L
E1700742-003	LP-MW-7-071017	PCBs 45 + 51	J	LSR_L
E1700742-003	LP-MW-7-071017	PCB 46	UJ	LSR_L
E1700742-003	LP-MW-7-071017	PCB 52	J	LSR_L
E1700742-003	LP-MW-7-071017	PCBs 43 + 73	UJ	LSR_L
E1700742-003	LP-MW-7-071017	PCBs 49 + 69	J	LSR_L, ION
E1700742-003	LP-MW-7-071017	PCB 48	J	LSR_L
E1700742-003	LP-MW-7-071017	PCBs 44 + 47 + 65	J	LSR_L
E1700742-003	LP-MW-7-071017	PCBs 59 + 62 + 75	UJ	LSR_L
E1700742-003	LP-MW-7-071017	PCB 42	J	LSR_L
E1700742-003	LP-MW-7-071017	PCBs 41 + 71 + 40	UJ	LSR_L
E1700742-003	LP-MW-7-071017	PCB 64	J	LSR_L
E1700742-003	LP-MW-7-071017	PCB 72	UJ	LSR_L

Laboratory Sample ID	Field Sample ID	Analyte	Data Qualifier	Data Qualified Reason
E1700742-003	LP-MW-7-071017	PCB 68	J	LSR_L
E1700742-003	LP-MW-7-071017	PCB 57	UJ	LSR_L
E1700742-003	LP-MW-7-071017	PCB 58	UJ	LSR_L
E1700742-003	LP-MW-7-071017	PCB 67	UJ	LSR_L
E1700742-003	LP-MW-7-071017	PCB 63	UJ	LSR_L
E1700742-003	LP-MW-7-071017	PCBs 70 + 61 + 74 + 76	J	LSR_L
E1700742-003	LP-MW-7-071017	PCB 66	J	LSR_L, ION
E1700742-003	LP-MW-7-071017	PCB 55	UJ	LSR_L
E1700742-003	LP-MW-7-071017	PCB 56	J	LSR_L
E1700742-003	LP-MW-7-071017	PCB 60	UJ	LSR_L
E1700742-003	LP-MW-7-071017	PCB 80	UJ	LSR_L
E1700742-003	LP-MW-7-071017	PCB 79	UJ	LSR_L
E1700742-003	LP-MW-7-071017	PCB 78	UJ	LSR_L
E1700742-003	LP-MW-7-071017	PCB 81	UJ	LSR_L
E1700742-003	LP-MW-7-071017	PCB 77	UJ	LSR_L
E1700742-003	LP-MW-7-071017	PCB 104	UJ	LSR_L
E1700742-003	LP-MW-7-071017	PCB 96	UJ	LSR_L
E1700742-003	LP-MW-7-071017	PCB 103	UJ	LSR_L
E1700742-003	LP-MW-7-071017	PCB 94	UJ	LSR_L
E1700742-003	LP-MW-7-071017	PCBs 95 + 93 + 100	J	LSR_L
E1700742-003	LP-MW-7-071017	PCBs 98 + 102	UJ	LSR_L
E1700742-003	LP-MW-7-071017	PCBs 88 + 91	UJ	LSR_L
E1700742-003	LP-MW-7-071017	PCB 84	J	LSR_L, ION
E1700742-003	LP-MW-7-071017	PCB 89	UJ	LSR_L
E1700742-003	LP-MW-7-071017	PCB 121	UJ	LSR_L
E1700742-003	LP-MW-7-071017	PCB 92	J	LSR_L
E1700742-003	LP-MW-7-071017	PCBs 90 + 101 + 113	J	LSR_L
E1700742-003	LP-MW-7-071017	PCBs 83 + 99	J	LSR_L, ION
E1700742-003	LP-MW-7-071017	PCB 112	UJ	LSR_L
E1700742-003	LP-MW-7-071017	PCBs 86/87/97/109/119/125	J	LSR_L
E1700742-003	LP-MW-7-071017	PCBs 85 + 116 + 117	J	LSR_L, ION
E1700742-003	LP-MW-7-071017	PCBs 110 + 115	J	LSR_L
E1700742-003	LP-MW-7-071017	PCB 82	J	LSR_L
E1700742-003	LP-MW-7-071017	PCB 111	UJ	LSR_L
E1700742-003	LP-MW-7-071017	PCB 120	UJ	LSR_L
E1700742-003	LP-MW-7-071017	PCBs 108 + 124	UJ	LSR_L
E1700742-003	LP-MW-7-071017	PCB 107	UJ	LSR_L
E1700742-003	LP-MW-7-071017	PCB 123	UJ	LSR_L
E1700742-003	LP-MW-7-071017	PCB 106	UJ	LSR_L
E1700742-003	LP-MW-7-071017	PCB 118	J	LSR_L
E1700742-003	LP-MW-7-071017	PCB 122	UJ	LSR_L

Laboratory Sample ID	Field Sample ID	Analyte	Data Qualifier	Data Qualified Reason
E1700742-003	LP-MW-7-071017	PCB 114	UJ	LSR_L
E1700742-003	LP-MW-7-071017	PCB 105	BJ	MB, ION
E1700742-003	LP-MW-7-071017	PCB 127	UJ	LSR_L
E1700742-003	LP-MW-7-071017	PCB 126	UJ	LSR_L
E1700742-003	LP-MW-7-071017	PCB 155	UJ	LSR_L
E1700742-003	LP-MW-7-071017	PCB 152	UJ	LSR_L
E1700742-003	LP-MW-7-071017	PCB 150	UJ	LSR_L
E1700742-003	LP-MW-7-071017	PCB 136	J	LSR_L
E1700742-003	LP-MW-7-071017	PCB 145	UJ	LSR_L
E1700742-003	LP-MW-7-071017	PCB 148	UJ	LSR_L
E1700742-003	LP-MW-7-071017	PCBs 135 + 151 + 154	J	LSR_L, ION
E1700742-003	LP-MW-7-071017	PCB 144	J	LSR_L, ION
E1700742-003	LP-MW-7-071017	PCBs 147 + 149	J	LSR_L
E1700742-003	LP-MW-7-071017	PCB 134	UJ	LSR_L
E1700742-003	LP-MW-7-071017	PCB 143	UJ	LSR_L
E1700742-003	LP-MW-7-071017	PCBs 139 + 140	UJ	LSR_L
E1700742-003	LP-MW-7-071017	PCB 131	UJ	LSR_L
E1700742-003	LP-MW-7-071017	PCB 142	UJ	LSR_L
E1700742-003	LP-MW-7-071017	PCB 132	J	LSR_L
E1700742-003	LP-MW-7-071017	PCB 133	UJ	LSR_L
E1700742-003	LP-MW-7-071017	PCB 165	UJ	LSR_L
E1700742-003	LP-MW-7-071017	PCB 146	J	LSR_L, ION
E1700742-003	LP-MW-7-071017	PCB 161	UJ	LSR_L
E1700742-003	LP-MW-7-071017	PCBs 153 + 168	J	LSR_L
E1700742-003	LP-MW-7-071017	PCB 141	J	LSR_L, ION
E1700742-003	LP-MW-7-071017	PCB 130	UJ	LSR_L
E1700742-003	LP-MW-7-071017	PCB 137	J	LSR_L
E1700742-003	LP-MW-7-071017	PCB 164	J	LSR_L, ION
E1700742-003	LP-MW-7-071017	PCBs 129 + 138 + 163	J	LSR_L
E1700742-003	LP-MW-7-071017	PCB 160	UJ	LSR_L
E1700742-003	LP-MW-7-071017	PCB 158	J	LSR_L
E1700742-003	LP-MW-7-071017	PCBs 128 + 166	J	LSR_L
E1700742-003	LP-MW-7-071017	PCB 159	UJ	LSR_L
E1700742-003	LP-MW-7-071017	PCB 162	UJ	LSR_L
E1700742-003	LP-MW-7-071017	PCB 167	UJ	LSR_L
E1700742-003	LP-MW-7-071017	PCBs 156 + 157	42.2 UJ	MB, LSR_L
E1700742-003	LP-MW-7-071017	PCB 169	UJ	LSR_L
E1700742-003	LP-MW-7-071017	PCB 188	UJ	LSR_L
E1700742-003	LP-MW-7-071017	PCB 179	J	LSR_L
E1700742-003	LP-MW-7-071017	PCB 184	UJ	LSR_L
E1700742-003	LP-MW-7-071017	PCB 176	J	LSR_L, ION

Laboratory Sample ID	Field Sample ID	Analyte	Data Qualifier	Data Qualified Reason
E1700742-003	LP-MW-7-071017	PCB 186	UJ	LSR_L
E1700742-003	LP-MW-7-071017	PCB 178	UJ	LSR_L
E1700742-003	LP-MW-7-071017	PCB 175	UJ	LSR_L
E1700742-003	LP-MW-7-071017	PCB 187	J	LSR_L
E1700742-003	LP-MW-7-071017	PCB 182	UJ	LSR_L
E1700742-003	LP-MW-7-071017	PCBs 183 + 185	J	LSR_L
E1700742-003	LP-MW-7-071017	PCB 174	J	LSR_L
E1700742-003	LP-MW-7-071017	PCB 177	J	LSR_L, ION
E1700742-003	LP-MW-7-071017	PCB 181	UJ	LSR_L
E1700742-003	LP-MW-7-071017	PCBs 171 + 173	UJ	LSR_L
E1700742-003	LP-MW-7-071017	PCB 172	UJ	LSR_L
E1700742-003	LP-MW-7-071017	PCB 192	UJ	LSR_L
E1700742-003	LP-MW-7-071017	PCBs 180 + 193	J	LSR_L
E1700742-003	LP-MW-7-071017	PCB 191	UJ	LSR_L
E1700742-003	LP-MW-7-071017	PCB 170	J	LSR_L
E1700742-003	LP-MW-7-071017	PCB 190	UJ	LSR_L
E1700742-003	LP-MW-7-071017	PCB 189	UJ	LSR_L
E1700742-003	LP-MW-7-071017	PCB 202	J	LSR_L, ION
E1700742-003	LP-MW-7-071017	PCB 201	J	LSR_L, ION
E1700742-003	LP-MW-7-071017	PCB 204	UJ	LSR_L
E1700742-003	LP-MW-7-071017	PCB 197	UJ	LSR_L
E1700742-003	LP-MW-7-071017	PCB 200	J	LSR_L
E1700742-003	LP-MW-7-071017	PCBs 198 + 199	J	LSR_L, ION
E1700742-003	LP-MW-7-071017	PCB 196	J	LSR_L, ION
E1700742-003	LP-MW-7-071017	PCB 203	J	LSR_L
E1700742-003	LP-MW-7-071017	PCB 195	J	LSR_L
E1700742-003	LP-MW-7-071017	PCB 194	J	LSR_L
E1700742-003	LP-MW-7-071017	PCB 205	UJ	LSR_L
E1700742-003	LP-MW-7-071017	PCB 208	J	LSR_L
E1700742-003	LP-MW-7-071017	PCB 207	J	LSR_L
E1700742-003	LP-MW-7-071017	PCB 206	J	LSR_L, ION
E1700742-003	LP-MW-7-071017	PCB 209	J	LSR_L, ION
E1700742-003	LP-MW-7-071017	Total MonoCB	UJ	LSR_L
E1700742-003	LP-MW-7-071017	Total DiCB	U	MB, LSR_L
E1700742-003	LP-MW-7-071017	Total TriCB	J	LSR_L
E1700742-003	LP-MW-7-071017	Total TetraCB	J	LSR_L
E1700742-003	LP-MW-7-071017	Total PentaCB	J	LSR_L
E1700742-003	LP-MW-7-071017	Total HexaCB	J	LSR_L
E1700742-003	LP-MW-7-071017	Total HeptaCB	J	LSR_L
E1700742-003	LP-MW-7-071017	Total OctaCB	J	LSR_L
E1700742-003	LP-MW-7-071017	Total NonaCB	J	LSR_L

Laboratory Sample ID	Field Sample ID	Analyte	Data Qualifier	Data Qualified Reason
E1700742-003	LP-MW-7-071017	Total PCBs	J	LSR_L
E1700742-004	REC6-MW-2-071017	PCB 1	UJ	LSR_L
E1700742-004	REC6-MW-2-071017	PCB 2	UJ	LSR_L
E1700742-004	REC6-MW-2-071017	PCB 3	UJ	LSR_L
E1700742-004	REC6-MW-2-071017	PCB 4	J	LSR_L
E1700742-004	REC6-MW-2-071017	PCB 10	UJ	LSR_L
E1700742-004	REC6-MW-2-071017	PCB 9	J	LSR_L
E1700742-004	REC6-MW-2-071017	PCB 7	UJ	LSR_L
E1700742-004	REC6-MW-2-071017	PCB 6	J	LSR_L
E1700742-004	REC6-MW-2-071017	PCB 5	UJ	LSR_L
E1700742-004	REC6-MW-2-071017	PCB 8	J	LSR_L
E1700742-004	REC6-MW-2-071017	PCB 14	UJ	LSR_L
E1700742-004	REC6-MW-2-071017	PCB 11	101 UJ	MB, LSR_L
E1700742-004	REC6-MW-2-071017	PCBs 12 + 13	J	LSR_L
E1700742-004	REC6-MW-2-071017	PCB 15	J	LSR_L
E1700742-004	REC6-MW-2-071017	PCB 19	UJ	LSR_L
E1700742-004	REC6-MW-2-071017	PCBs 18 + 30	J	LSR_L, ION
E1700742-004	REC6-MW-2-071017	PCB 17	UJ	LSR_L
E1700742-004	REC6-MW-2-071017	PCB 27	UJ	LSR_L
E1700742-004	REC6-MW-2-071017	PCB 24	UJ	LSR_L
E1700742-004	REC6-MW-2-071017	PCB 16	UJ	LSR_L
E1700742-004	REC6-MW-2-071017	PCB 32	UJ	LSR_L
E1700742-004	REC6-MW-2-071017	PCB 34	UJ	LSR_L
E1700742-004	REC6-MW-2-071017	PCB 23	UJ	LSR_L
E1700742-004	REC6-MW-2-071017	PCBs 26 + 29	UJ	LSR_L
E1700742-004	REC6-MW-2-071017	PCB 25	UJ	LSR_L
E1700742-004	REC6-MW-2-071017	PCB 31	UJ	LSR_L
E1700742-004	REC6-MW-2-071017	PCBs 20 + 28	UJ	LSR_L
E1700742-004	REC6-MW-2-071017	PCBs 21 + 33	UJ	LSR_L
E1700742-004	REC6-MW-2-071017	PCB 22	UJ	LSR_L
E1700742-004	REC6-MW-2-071017	PCB 36	UJ	LSR_L
E1700742-004	REC6-MW-2-071017	PCB 39	UJ	LSR_L
E1700742-004	REC6-MW-2-071017	PCB 38	UJ	LSR_L
E1700742-004	REC6-MW-2-071017	PCB 35	UJ	LSR_L
E1700742-004	REC6-MW-2-071017	PCB 37	UJ	LSR_L
E1700742-004	REC6-MW-2-071017	PCB 54	UJ	LSR_L
E1700742-004	REC6-MW-2-071017	PCBs 50 + 53	UJ	LSR_L
E1700742-004	REC6-MW-2-071017	PCBs 45 + 51	J	LSR_L
E1700742-004	REC6-MW-2-071017	PCB 46	UJ	LSR_L
E1700742-004	REC6-MW-2-071017	PCB 52	J	LSR_L
E1700742-004	REC6-MW-2-071017	PCBs 43 + 73	UJ	LSR_L

Laboratory Sample ID	Field Sample ID	Analyte	Data Qualifier	Data Qualified Reason
E1700742-004	REC6-MW-2-071017	PCBs 49 + 69	UJ	LSR_L
E1700742-004	REC6-MW-2-071017	PCB 48	UJ	LSR_L
E1700742-004	REC6-MW-2-071017	PCBs 44 + 47 + 65	J	LSR_L
E1700742-004	REC6-MW-2-071017	PCBs 59 + 62 + 75	UJ	LSR_L
E1700742-004	REC6-MW-2-071017	PCB 42	UJ	LSR_L
E1700742-004	REC6-MW-2-071017	PCBs 41 + 71 + 40	UJ	LSR_L
E1700742-004	REC6-MW-2-071017	PCB 64	UJ	LSR_L
E1700742-004	REC6-MW-2-071017	PCB 72	UJ	LSR_L
E1700742-004	REC6-MW-2-071017	PCB 68	J	LSR_L
E1700742-004	REC6-MW-2-071017	PCB 57	UJ	LSR_L
E1700742-004	REC6-MW-2-071017	PCB 58	UJ	LSR_L
E1700742-004	REC6-MW-2-071017	PCB 67	UJ	LSR_L
E1700742-004	REC6-MW-2-071017	PCB 63	UJ	LSR_L
E1700742-004	REC6-MW-2-071017	PCBs 70 + 61 + 74 + 76	J	LSR_L, ION
E1700742-004	REC6-MW-2-071017	PCB 66	UJ	LSR_L
E1700742-004	REC6-MW-2-071017	PCB 55	UJ	LSR_L
E1700742-004	REC6-MW-2-071017	PCB 56	UJ	LSR_L
E1700742-004	REC6-MW-2-071017	PCB 60	UJ	LSR_L
E1700742-004	REC6-MW-2-071017	PCB 80	UJ	LSR_L
E1700742-004	REC6-MW-2-071017	PCB 79	UJ	LSR_L
E1700742-004	REC6-MW-2-071017	PCB 78	UJ	LSR_L
E1700742-004	REC6-MW-2-071017	PCB 81	UJ	LSR_L
E1700742-004	REC6-MW-2-071017	PCB 77	UJ	LSR_L
E1700742-004	REC6-MW-2-071017	PCBs 83 + 99	J	ION
E1700742-004	REC6-MW-2-071017	PCB 105	U	MB
E1700742-004	REC6-MW-2-071017	PCB 126	UJ	LSR_L
E1700742-004	REC6-MW-2-071017	PCB 152	J	LSR_L
E1700742-004	REC6-MW-2-071017	PCB 150	UJ	LSR_L
E1700742-004	REC6-MW-2-071017	PCB 136	J	LSR_L
E1700742-004	REC6-MW-2-071017	PCB 145	UJ	LSR_L
E1700742-004	REC6-MW-2-071017	PCB 148	UJ	LSR_L
E1700742-004	REC6-MW-2-071017	PCBs 135 + 151 + 154	J	LSR_L
E1700742-004	REC6-MW-2-071017	PCB 144	UJ	LSR_L
E1700742-004	REC6-MW-2-071017	PCBs 147 + 149	J	LSR_L
E1700742-004	REC6-MW-2-071017	PCB 134	J	LSR_L, ION
E1700742-004	REC6-MW-2-071017	PCB 143	UJ	LSR_L
E1700742-004	REC6-MW-2-071017	PCBs 139 + 140	UJ	LSR_L
E1700742-004	REC6-MW-2-071017	PCB 131	UJ	LSR_L
E1700742-004	REC6-MW-2-071017	PCB 142	UJ	LSR_L
E1700742-004	REC6-MW-2-071017	PCB 132	J	LSR_L
E1700742-004	REC6-MW-2-071017	PCB 133	UJ	LSR_L

Laboratory Sample ID	Field Sample ID	Analyte	Data Qualifier	Data Qualified Reason
E1700742-004	REC6-MW-2-071017	PCB 165	UJ	LSR_L
E1700742-004	REC6-MW-2-071017	PCB 146	J	LSR_L
E1700742-004	REC6-MW-2-071017	PCB 161	UJ	LSR_L
E1700742-004	REC6-MW-2-071017	PCBs 153 + 168	J	LSR_L
E1700742-004	REC6-MW-2-071017	PCB 141	J	LSR_L
E1700742-004	REC6-MW-2-071017	PCB 130	J	LSR_L, ION
E1700742-004	REC6-MW-2-071017	PCB 137	UJ	LSR_L
E1700742-004	REC6-MW-2-071017	PCB 164	J	LSR_L
E1700742-004	REC6-MW-2-071017	PCBs 129 + 138 + 163	J	LSR_L
E1700742-004	REC6-MW-2-071017	PCB 160	UJ	LSR_L
E1700742-004	REC6-MW-2-071017	PCB 158	J	LSR_L, ION
E1700742-004	REC6-MW-2-071017	PCBs 128 + 166	J	LSR_L, ION
E1700742-004	REC6-MW-2-071017	PCB 159	UJ	LSR_L
E1700742-004	REC6-MW-2-071017	PCB 162	UJ	LSR_L
E1700742-004	REC6-MW-2-071017	PCB 167	20.2 U	MB
E1700742-004	REC6-MW-2-071017	PCBs 156 + 157		LSR_L
E1700742-004	REC6-MW-2-071017	PCB 169	UJ	LSR_L
E1700742-004	REC6-MW-2-071017	PCB 176	J	ION
E1700742-004	REC6-MW-2-071017	PCB 177	J	ION
E1700742-004	REC6-MW-2-071017	PCBs 171 + 173	J	ION
E1700742-004	REC6-MW-2-071017	PCB 170	J	ION
E1700742-004	REC6-MW-2-071017	PCB 202	J	ION
E1700742-004	REC6-MW-2-071017	PCB 196	J	ION
E1700742-004	REC6-MW-2-071017	PCB 203	J	ION
E1700742-004	REC6-MW-2-071017	PCB 207	J	ION
E1700742-004	REC6-MW-2-071017	PCB 209	U	MB
E1700742-004	REC6-MW-2-071017	Total MonoCB	UJ	LSR_L
E1700742-004	REC6-MW-2-071017	Total DiCB	J	LSR_L
E1700742-004	REC6-MW-2-071017	Total TriCB	J	LSR_L
E1700742-004	REC6-MW-2-071017	Total TetraCB	J	LSR_L
E1700742-004	REC6-MW-2-071017	Total HexaCB	J	LSR_L
E1700742-005	MW-6-071017	PCB 4	J	LSR_L
E1700742-005	MW-6-071017	PCB 10	UJ	LSR_L
E1700742-005	MW-6-071017	PCB 9	UJ	LSR_L
E1700742-005	MW-6-071017	PCB 7	UJ	LSR_L
E1700742-005	MW-6-071017	PCB 6	J	LSR_L
E1700742-005	MW-6-071017	PCB 5	UJ	LSR_L
E1700742-005	MW-6-071017	PCB 8	J	LSR_L
E1700742-005	MW-6-071017	PCB 14	UJ	LSR_L
E1700742-005	MW-6-071017	PCB 11	104 UJ	MB, LSR_L
E1700742-005	MW-6-071017	PCBs 12 + 13	UJ	LSR_L

Laboratory Sample ID	Field Sample ID	Analyte	Data Qualifier	Data Qualified Reason
E1700742-005	MW-6-071017	PCB 15	UJ	LSR_L
E1700742-005	MW-6-071017	PCB 19	UJ	LSR_L
E1700742-005	MW-6-071017	PCBs 18 + 30	UJ	LSR_L
E1700742-005	MW-6-071017	PCB 17	UJ	LSR_L
E1700742-005	MW-6-071017	PCB 27	UJ	LSR_L
E1700742-005	MW-6-071017	PCB 24	UJ	LSR_L
E1700742-005	MW-6-071017	PCB 16	UJ	LSR_L
E1700742-005	MW-6-071017	PCB 32	UJ	LSR_L
E1700742-005	MW-6-071017	PCB 34	UJ	LSR_L
E1700742-005	MW-6-071017	PCB 23	UJ	LSR_L
E1700742-005	MW-6-071017	PCBs 26 + 29	UJ	LSR_L
E1700742-005	MW-6-071017	PCB 25	UJ	LSR_L
E1700742-005	MW-6-071017	PCB 31	UJ	LSR_L
E1700742-005	MW-6-071017	PCBs 20 + 28	UJ	LSR_L
E1700742-005	MW-6-071017	PCBs 21 + 33	UJ	LSR_L
E1700742-005	MW-6-071017	PCB 22	UJ	LSR_L
E1700742-005	MW-6-071017	PCB 36	UJ	LSR_L
E1700742-005	MW-6-071017	PCB 39	UJ	LSR_L
E1700742-005	MW-6-071017	PCB 38	UJ	LSR_L
E1700742-005	MW-6-071017	PCB 35	UJ	LSR_L
E1700742-005	MW-6-071017	PCB 52	51.9 U	MB
E1700742-005	MW-6-071017	PCBs 41 + 71 + 40	J	ION
E1700742-005	MW-6-071017	PCBs 70 + 61 + 74 + 76	J	ION
E1700742-005	MW-6-071017	PCB 66	J	ION
E1700742-005	MW-6-071017	PCB 118	U	MB, ION
E1700742-005	MW-6-071017	PCB 105	U	MB
E1700742-005	MW-6-071017	PCB 150	J	ION
E1700742-005	MW-6-071017	PCB 141	J	ION
E1700742-005	MW-6-071017	PCB 164	J	ION
E1700742-005	MW-6-071017	PCB 158	J	ION
E1700742-005	MW-6-071017	PCB 167	20.7 U	MB
E1700742-005	MW-6-071017	PCBs 156 + 157	41.5 U	MB
E1700742-005	MW-6-071017	PCB 169	20.7 U	MB
E1700742-005	MW-6-071017	PCB 184	J	ION
E1700742-005	MW-6-071017	PCB 186	J	ION
E1700742-005	MW-6-071017	PCBs 183 + 185	J	ION
E1700742-005	MW-6-071017	PCB 177	J	ION
E1700742-005	MW-6-071017	PCBs 171 + 173	J	ION
E1700742-005	MW-6-071017	PCB 170	J	ION
E1700742-005	MW-6-071017	PCB 190	J	ION
E1700742-005	MW-6-071017	PCB 200	J	ION

Laboratory Sample ID	Field Sample ID	Analyte	Data Qualifier	Data Qualified Reason
E1700742-005	MW-6-071017	PCB 195	J	ION
E1700742-005	MW-6-071017	PCB 194	J	ION
E1700742-005	MW-6-071017	PCB 207	J	ION
E1700742-005	MW-6-071017	PCB 209	U	MB
E1700742-005	MW-6-071017	Total HexaCB	U	MB
E1700742-006	LP-MW-5-071017	PCB 1	J	ION
E1700742-006	LP-MW-5-071017	PCB 4	J	LSR_L
E1700742-006	LP-MW-5-071017	PCB 10	UJ	LSR_L
E1700742-006	LP-MW-5-071017	PCB 9	UJ	LSR_L
E1700742-006	LP-MW-5-071017	PCB 7	J	LSR_L
E1700742-006	LP-MW-5-071017	PCB 6	J	LSR_L
E1700742-006	LP-MW-5-071017	PCB 5	UJ	LSR_L
E1700742-006	LP-MW-5-071017	PCB 8	J	LSR_L
E1700742-006	LP-MW-5-071017	PCB 14	UJ	LSR_L
E1700742-006	LP-MW-5-071017	PCB 11	104 UJ	MB, LSR_L
E1700742-006	LP-MW-5-071017	PCBs 12 + 13	UJ	LSR_L
E1700742-006	LP-MW-5-071017	PCB 15	UJ	LSR_L
E1700742-006	LP-MW-5-071017	PCB 19	UJ	LSR_L
E1700742-006	LP-MW-5-071017	PCBs 18 + 30	J	LSR_L
E1700742-006	LP-MW-5-071017	PCB 17	J	LSR_L
E1700742-006	LP-MW-5-071017	PCB 27	UJ	LSR_L
E1700742-006	LP-MW-5-071017	PCB 24	UJ	LSR_L
E1700742-006	LP-MW-5-071017	PCB 16	J	LSR_L
E1700742-006	LP-MW-5-071017	PCB 32	J	LSR_L
E1700742-006	LP-MW-5-071017	PCB 34	UJ	LSR_L
E1700742-006	LP-MW-5-071017	PCB 23	UJ	LSR_L
E1700742-006	LP-MW-5-071017	PCBs 26 + 29	UJ	LSR_L
E1700742-006	LP-MW-5-071017	PCB 25	UJ	LSR_L
E1700742-006	LP-MW-5-071017	PCB 31	J	LSR_L
E1700742-006	LP-MW-5-071017	PCBs 20 + 28	J	LSR_L
E1700742-006	LP-MW-5-071017	PCBs 21 + 33	J	LSR_L
E1700742-006	LP-MW-5-071017	PCB 22	J	LSR_L
E1700742-006	LP-MW-5-071017	PCB 36	UJ	LSR_L
E1700742-006	LP-MW-5-071017	PCB 39	UJ	LSR_L
E1700742-006	LP-MW-5-071017	PCB 38	UJ	LSR_L
E1700742-006	LP-MW-5-071017	PCB 35	UJ	LSR_L
E1700742-006	LP-MW-5-071017	PCBs 50 + 53	J	ION
E1700742-006	LP-MW-5-071017	PCB 48	J	ION
E1700742-006	LP-MW-5-071017	PCBs 59 + 62 + 75	J	ION
E1700742-006	LP-MW-5-071017	PCB 42	J	ION
E1700742-006	LP-MW-5-071017	PCBs 41 + 71 + 40	J	ION

Laboratory Sample ID	Field Sample ID	Analyte	Data Qualifier	Data Qualified Reason
E1700742-006	LP-MW-5-071017	PCBs 88 + 91	J	ION
E1700742-006	LP-MW-5-071017	PCB 82	J	ION
E1700742-006	LP-MW-5-071017	PCB 105	U	MB
E1700742-006	LP-MW-5-071017	PCB 148	J	ION
E1700742-006	LP-MW-5-071017	PCB 134	J	ION
E1700742-006	LP-MW-5-071017	PCBs 139 + 140	J	ION
E1700742-006	LP-MW-5-071017	PCB 131	J	ION
E1700742-006	LP-MW-5-071017	PCB 133	J	ION
E1700742-006	LP-MW-5-071017	PCB 130	J	ION
E1700742-006	LP-MW-5-071017	PCB 160	J	ION
E1700742-006	LP-MW-5-071017	PCB 167	20.8 U	MB
E1700742-006	LP-MW-5-071017	PCBs 156 + 157	41.7 U	MB
E1700742-006	LP-MW-5-071017	PCB 176	J	ION
E1700742-006	LP-MW-5-071017	PCB 177	J	ION
E1700742-006	LP-MW-5-071017	PCB 192	J	ION
E1700742-006	LP-MW-5-071017	PCB 189	J	ION
E1700742-006	LP-MW-5-071017	PCB 202	J	ION
E1700742-006	LP-MW-5-071017	PCB 204	J	ION
E1700742-006	LP-MW-5-071017	PCB 195	J	ION
E1700742-006	LP-MW-5-071017	PCB 205	J	ION
E1700742-006	LP-MW-5-071017	PCB 207	J	ION
E1700742-006	LP-MW-5-071017	PCB 206	J	ION
E1700742-006	LP-MW-5-071017	PCB 209	U	MB
E1700742-006	LP-MW-5-071017	Total NonaCB	U	MB
E1700742-007	LP-MW-4-071017	PCB 2	J	ION
E1700742-007	LP-MW-4-071017	PCB 3	J	ION
E1700742-007	LP-MW-4-071017	PCB 48	J	ION
E1700742-007	LP-MW-4-071017	PCBs 41 + 71 + 40	J	ION
E1700742-007	LP-MW-4-071017	PCB 57	J	ION
E1700742-007	LP-MW-4-071017	PCB 58	J	ION
E1700742-007	LP-MW-4-071017	PCB 77	22.2 U	MB
E1700742-007	LP-MW-4-071017	PCB 103	J	ION
E1700742-007	LP-MW-4-071017	PCB 94	J	ION
E1700742-007	LP-MW-4-071017	PCBs 98 + 102	J	ION
E1700742-007	LP-MW-4-071017	PCB 120	J	ION
E1700742-007	LP-MW-4-071017	PCB 107	J	ION
E1700742-007	LP-MW-4-071017	PCB 150	J	ION
E1700742-007	LP-MW-4-071017	PCB 145	J	ION
E1700742-007	LP-MW-4-071017	PCBs 139 + 140	J	ION
E1700742-007	LP-MW-4-071017	PCB 165	J	ION
E1700742-007	LP-MW-4-071017	PCB 130	J	ION

Laboratory Sample ID	Field Sample ID	Analyte	Data Qualifier	Data Qualified Reason
E1700742-007	LP-MW-4-071017	PCB 137	J	ION
E1700742-007	LP-MW-4-071017	PCB 160	J	ION
E1700742-007	LP-MW-4-071017	PCB 159	J	ION
E1700742-007	LP-MW-4-071017	PCB 167	U	MB
E1700742-007	LP-MW-4-071017	PCBs 156 + 157	U	MB
E1700742-007	LP-MW-4-071017	PCB 186	J	ION
E1700742-007	LP-MW-4-071017	PCB 175	J	ION
E1700742-007	LP-MW-4-071017	PCB 172	J	ION
E1700742-007	LP-MW-4-071017	PCB 189	J	ION
E1700742-007	LP-MW-4-071017	PCB 194	J	ION
E1700742-007	LP-MW-4-071017	PCB 208	J	ION
E1700742-007	LP-MW-4-071017	PCB 209	U	MB
E1700742-008	LP-MW-6-071017	PCB 1	J	ION
E1700742-008	LP-MW-6-071017	PCB 3	J	ION
E1700742-008	LP-MW-6-071017	PCB 11	109 U	MB
E1700742-008	LP-MW-6-071017	PCBs 26 + 29	J	ION
E1700742-008	LP-MW-6-071017	PCB 54	J	ION
E1700742-008	LP-MW-6-071017	PCB 46	J	ION
E1700742-008	LP-MW-6-071017	PCBs 59 + 62 + 75	J	ION
E1700742-008	LP-MW-6-071017	PCB 42	J	ION
E1700742-008	LP-MW-6-071017	PCBs 41 + 71 + 40	J	ION
E1700742-008	LP-MW-6-071017	PCB 67	J	ION
E1700742-008	LP-MW-6-071017	PCB 77	21.7 U	MB
E1700742-008	LP-MW-6-071017	PCB 103	J	ION
E1700742-008	LP-MW-6-071017	PCB 82	J	ION
E1700742-008	LP-MW-6-071017	PCB 120	J	ION
E1700742-008	LP-MW-6-071017	PCB 107	J	ION
E1700742-008	LP-MW-6-071017	PCB 114	21.7 U	MB
E1700742-008	LP-MW-6-071017	PCB 155	J	ION
E1700742-008	LP-MW-6-071017	PCB 152	J	ION
E1700742-008	LP-MW-6-071017	PCB 150	J	ION
E1700742-008	LP-MW-6-071017	PCB 145	J	ION
E1700742-008	LP-MW-6-071017	PCB 133	J	ION
E1700742-008	LP-MW-6-071017	PCB 130	J	ION
E1700742-008	LP-MW-6-071017	PCB 160	J	ION
E1700742-008	LP-MW-6-071017	PCB 162	J	ION
E1700742-008	LP-MW-6-071017	PCB 167	U	MB
E1700742-008	LP-MW-6-071017	PCBs 156 + 157	U	MB
E1700742-008	LP-MW-6-071017	PCB 169	21.7 U	MB
E1700742-008	LP-MW-6-071017	PCB 184	J	ION
E1700742-008	LP-MW-6-071017	PCB 182	J	ION

Laboratory Sample ID	Field Sample ID	Analyte	Data Qualifier	Data Qualified Reason
E1700742-008	LP-MW-6-071017	PCB 191	J	ION
E1700742-008	LP-MW-6-071017	PCB 189	J	ION
E1700742-008	LP-MW-6-071017	PCB 201	J	ION
E1700742-008	LP-MW-6-071017	PCB 197	J	ION
E1700742-008	LP-MW-6-071017	Total DiCB	U	MB
E1700742-009	LP-MW-20-071017	PCB 1	J	ION
E1700742-009	LP-MW-20-071017	PCB 11	105 U	MB
E1700742-009	LP-MW-20-071017	PCB 16	J	ION
E1700742-009	LP-MW-20-071017	PCBs 26 + 29	J	ION
E1700742-009	LP-MW-20-071017	PCBs 20 + 28	J	ION
E1700742-009	LP-MW-20-071017	PCB 56	J	ION
E1700742-009	LP-MW-20-071017	PCBs 88 + 91	J	ION
E1700742-009	LP-MW-20-071017	PCB 84	J	ION
E1700742-009	LP-MW-20-071017	PCB 105	U	MB
E1700742-009	LP-MW-20-071017	PCB 155	J	ION
E1700742-009	LP-MW-20-071017	PCB 150	J	ION
E1700742-009	LP-MW-20-071017	PCB 145	J	ION
E1700742-009	LP-MW-20-071017	PCB 148	J	ION
E1700742-009	LP-MW-20-071017	PCB 133	J	ION
E1700742-009	LP-MW-20-071017	PCB 130	J	ION
E1700742-009	LP-MW-20-071017	PCB 160	J	ION
E1700742-009	LP-MW-20-071017	PCB 158	J	ION
E1700742-009	LP-MW-20-071017	PCBs 128 + 166	J	ION
E1700742-009	LP-MW-20-071017	PCB 167	21.0 U	MB
E1700742-009	LP-MW-20-071017	PCBs 156 + 157	42.1 U	MB
E1700742-009	LP-MW-20-071017	PCB 184	J	ION
E1700742-009	LP-MW-20-071017	PCB 186	J	ION
E1700742-009	LP-MW-20-071017	PCB 172	J	ION
E1700742-009	LP-MW-20-071017	PCB 191	J	ION
E1700742-009	LP-MW-20-071017	PCB 189	J	ION
E1700742-009	LP-MW-20-071017	PCB 201	J	ION
E1700742-009	LP-MW-20-071017	PCB 204	J	ION
E1700742-009	LP-MW-20-071017	PCB 197	J	ION
E1700742-009	LP-MW-20-071017	PCB 196	J	ION
E1700742-009	LP-MW-20-071017	PCB 195	J	ION
E1700742-009	LP-MW-20-071017	PCB 194	J	ION
E1700742-009	LP-MW-20-071017	PCB 205	J	ION
E1700742-009	LP-MW-20-071017	PCB 207	J	ION
E1700742-009	LP-MW-20-071017	PCB 209	U	MB

Notes:
HT_P: The preparation of the sample was performed past the required holding time.

ION: The ion abundance ratio did not meet the method requirement.
MB: The result was affected by the detection of this compound in the associated method blank.
LSR-L: Labeled standard recovery value was less than lower control limit.
LCS/LCSD_H: The percent recovery value of laboratory control sample (LCS) and/or LCS duplicate (LCSD) was greater than the upper control limit.

Table II. Data Qualifier Definition

Data Qualifier	Definition
J	The analyte was detected above the reported quantitation limit, and the reported concentration was an estimated value.
U	The analyte was analyzed for, but was considered not detected at the reporting limit or reported value.
UJ	The analyte was analyzed for, and the associated quantitation limit was an estimated value.

REFERENCES

USEPA. 2016. *Contract Laboratory Program National Functional Guidelines for High Resolution Methods Data Review,* Office of Superfund Remediation and Technical Innovation, U.S. Environmental Protection Agency. April 2016. USEPA 542-B-16-001.

USEPA. 2014. *R10 Data Validation and Review Guidelines for Polychlorinated Dibenzo-p-Dioxin and Polychlorinated Dibenzofuran Data (PCDD/PCDF) Using Method 1613B and SW846 Method 8290A.* USEPA Region 10, Office of Environmental Assessment. Seattle, Washington. May 2014. EPA-910-R-14-003.

USEPA. 2010. *Method 1668A: Chlorinated Biphenyl Congeners in Water, Soil, Sediment, Biosolids, and Tissue by HRGC/HRMS.* April 2010. USEPA-820-R-10-005.

USEPA. 2009. *Guidance for Labeling Externally Validated Laboratory Analytical Data for Superfund Use.* January 13, 2009. EPA 540-R-08-005.

USGS. 2016. *Assessing Sediment and Toxic Chemical Loads from the Green River, WA. to the Lower Duwamish Waterway, Quality Assurance Project Plan, Appendix C: Polychlorinated biphenyl (PCB) Method Blank Contamination Decision Rules.* U.S. Geological Survey (USGS), Washington Water Science Center. Prepared for Washington State Department of Ecology, Northwest Regional Office, Toxics Cleanup Program. August 10, 2016.

ALS Environmental, Inc. (ALS). 2013. *Standard Operating Procedure for Chlorinated Biphenyl Congeners in Water, Soil, Sediment, Bio solids and Tissue by Isotope Dilution HRGC/HRMS.* ALS Environment, Inc., Houston, Texas. ALS SOP Number: HMS-1668. June 21, 2013.

Appendix A

Field Duplicate Summary

Field Duplicate Summary

Sample ID: LP-MW-5-071017 (E1700742-006)
Duplicate ID: LP-MW-20-071017 (E1700742-009)
Matrix: Groundwater
Unit: *p*g/L

Compounds	MRL	5X MRL	LP-MW-5-071017		LP-MW-20-071017		RPD	Delta	RPD	2X MRL	Pass/No
PCB 1	20.8	104	44	K	39.2	K		4.8	<50%	41.6	Pass
PCB 2	20.8	104	20.8	U	21	U			<50%	41.6	Pass
PCB 3	20.8	104	20.8	U	21	U			<50%	41.6	Pass
PCB 4	20.8	104	45.3		46.3			1.0	<50%	41.6	Pass
PCB 10	52.1	260.5	52.1	U	52.6	U			<50%	104.2	Pass
PCB 9	20.8	104	20.8	U	12.3	J		8.5	<50%	41.6	Pass
PCB 7	20.8	104	7.54	J	10.2	J		2.7	<50%	41.6	Pass
PCB 6	20.8	104	18.9	J	15.8	J		3.1	<50%	41.6	Pass
PCB 5	20.8	104	20.8	U	21	U			<50%	41.6	Pass
PCB 8	52.1	260.5	55.3		54.8			0.5	<50%	104.2	Pass
PCB 14	20.8	104	20.8	U	21	U			<50%	41.6	Pass
PCB 11	104	520	63.6	BJ	53.9	BJ		9.7	<50%	208	Pass
PCBs 12 + 13	52.1	260.5	52.1	U	52.6	U			<50%	104.2	Pass
PCB 15	20.8	104	20.8	U	21	U			<50%	41.6	Pass
PCB 19	20.8	104	20.8	U	21	U			<50%	41.6	Pass
PCB 18 + 30	52.1	260.5	129		132			3.0	<50%	104.2	Pass
PCB 17	20.8	104	55.5	K	69.4			13.9	<50%	41.6	Pass
PCB 27	20.8	104	20.8	U	21	U			<50%	41.6	Pass
PCB 24	20.8	104	20.8	U	21	U			<50%	41.6	Pass
PCB 16	20.8	104	54.9		64.6	K		9.7	<50%	41.6	Pass
PCB 32	20.8	104	37.1		40.5			3.4	<50%	41.6	Pass
PCB 34	29.6	148	29.6	U	24.8	U			<50%	59.2	Pass
PCB 23	26.7	133.5	26.7	U	22.4	U			<50%	53.4	Pass
PCBs 26 + 29	52.1	260.5	52.1	U	24	JK		28.1	<50%	104.2	Pass
PCB 25	25.7	128.5	25.7	U	21.5	U			<50%	51.4	Pass
PCB 31	52.1	260.5	94.8	K	134			39.2	<50%	104.2	Pass
PCBs 20 + 28	52.1	260.5	109		107	K		2.0	<50%	104.2	Pass
PCBs 21 + 33	52.1	260.5	61.5		70			8.5	<50%	104.2	Pass
PCB 22	29.1	145.5	36.5		44.9			8.4	<50%	58.2	Pass
PCB 36	27.6	138	27.6	U	23.1	U			<50%	55.2	Pass
PCB 39	27.8	139	27.8	U	23.2	U			<50%	55.6	Pass
PCB 38	31	155	31	U	25.9	U			<50%	62	Pass
PCB 35	31.1	155.5	31.1	U	26	U			<50%	62.2	Pass
PCB 37	37.7	188.5	37.7	U	33.8	U			<50%	75.4	Pass

Compounds	MRL	5X MRL	LP-MW-5-071017		LP-MW-20-071017		RPD	Delta	RPD	2X MRL	Pass/No
PCB 54	20.8	104	20.8	U	21	U			<50%	41.6	Pass
PCBs 50 + 53	104	520	21.8	JK	31.5	J		9.7	<50%	208	Pass
PCBs 45 + 51	52.1	260.5	123		139			16.0	<50%	104.2	Pass
PCB 46	20.8	104	12.4	J	12.5	J		0.1	<50%	41.6	Pass
PCB 52	52.1	260.5	197		236			39.0	<50%	104.2	Pass
PCBs 43 + 73	52.1	260.5	52.1	U	52.6	U			<50%	104.2	Pass
PCB 49 + 69	104	520	83.1	J	108			24.9	<50%	208	Pass
PCB 48	52.1	260.5	21.6	JK	31.8	J		10.2	<50%	104.2	Pass
PCBs 44 + 47 + 65	104	520	418		466			48.0	<50%	208	Pass
PCBs 59 + 62 + 75	104	520	7.44	JK	105	U		97.6	<50%	208	Pass
PCB 42	104	520	30.1	JK	47	J		16.9	<50%	208	Pass
PCBs 41 + 40 + 71	104	520	71.2	JK	90	J		18.8	<50%	208	Pass
PCB 64	52.1	260.5	58		77.1			19.1	<50%	104.2	Pass
PCB 72	52.1	260.5	52.1	U	8.32	J		43.8	<50%	104.2	Pass
PCB 68	52.1	260.5	45.1	J	45.1	J		0.0	<50%	104.2	Pass
PCB 57	52.1	260.5	52.1	U	52.6	U			<50%	104.2	Pass
PCB 58	52.1	260.5	52.1	U	52.6	U			<50%	104.2	Pass
PCB 67	52.1	260.5	52.1	U	10.2	J		41.9	<50%	104.2	Pass
PCB 63	52.1	260.5	52.1	U	11.9	J		40.2	<50%	104.2	Pass
PCBs 61 + 70 + 74 + 76	208	1040	213		271			58.0	<50%	416	Pass
PCB 66	52.1	260.5	109		149			40.0	<50%	104.2	Pass
PCB 55	52.1	260.5	52.1	U	52.6	U			<50%	104.2	Pass
PCB 56	52.1	260.5	44.6	J	40.6	JK		4.0	<50%	104.2	Pass
PCB 60	52.1	260.5	24.4	J	26.2	J		1.8	<50%	104.2	Pass
PCB 80	52.1	260.5	52.1	U	52.6	U			<50%	104.2	Pass
PCB 79	52.1	260.5	52.1	U	52.6	U			<50%	104.2	Pass
PCB 78	52.1	260.5	52.1	U	52.6	U			<50%	104.2	Pass
PCB 81	20.8	104	20.8	U	21	U			<50%	41.6	Pass
PCB 77	20.8	104	20.8	U	21	U			<50%	41.6	Pass
PCB 104	20.8	104	20.8	U	21	U			<50%	41.6	Pass
PCB 96	52.1	260.5	52.1	U	52.6	U			<50%	104.2	Pass
PCB 103	52.1	260.5	52.1	U	52.6	U			<50%	104.2	Pass
PCB 94	52.1	260.5	52.1	U	52.6	U			<50%	104.2	Pass
PCBs 95 + 93 + 100	208	1040	181	J	234			53.0	<50%	416	Pass
PCBs 98 + 102	208	1040	208	U	210	U			<50%	416	Pass
PCB 88 + 91	52.1	260.5	20.2	JK	20.4	JK		0.2	<50%	104.2	Pass
PCB 84	20.8	104	58.8		65.3	K		6.5	<50%	41.6	Pass
PCB 89	52.1	260.5	52.1	U	52.6	U			<50%	104.2	Pass
PCB 121	52.1	260.5	52.1	U	52.6	U			<50%	104.2	Pass
PCB 92	52.1	260.5	41.7	J	67.2			25.5	<50%	104.2	Pass
PCBs 90 + 101 + 113	208	1040	223		300			77.0	<50%	416	Pass

Compounds	MRL	5X MRL	LP-MW-5-071017		LP-MW-20-071017		RPD	Delta	RPD	2X MRL	Pass/No
PCBs 83 + 99	104	520	115		161			46.0	<50%	208	Pass
PCB 112	52.1	260.5	7.33	J	52.6	U		45.3	<50%	104.2	Pass
PCBs 86/87/97/109/119/125	208	1040	141	J	188	J		47.0	<50%	416	Pass
PCBs 85 + 117 + 116	104	520	39.4	J	48.1	J		8.7	<50%	208	Pass
PCBs 110 + 115	104	520	201		267			66.0	<50%	208	Pass
PCB 82	52.1	260.5	26.9	JK	33.9	J		7.0	<50%	104.2	Pass
PCB 111	52.1	260.5	52.1	U	52.6	U			<50%	104.2	Pass
PCB 120	52.1	260.5	52.1	U	52.6	U			<50%	104.2	Pass
PCBs 108 + 124	104	520	104	U	105	U			<50%	208	Pass
PCB 107	52.1	260.5	52.1	U	52.6	U			<50%	104.2	Pass
PCB 123	20.8	104	20.8	U	21	U			<50%	41.6	Pass
PCB 106	52.1	260.5	52.1	U	52.6	U			<50%	104.2	Pass
PCB 118	20.8	104	138		186		30%		<50%	41.6	Pass
PCB 122	52.1	260.5	52.1	U	52.6	U			<50%	104.2	Pass
PCB 114	20.8	104	20.8	U	21	U			<50%	41.6	Pass
PCB 105	20.8	104	53.2	B	75	B		21.8	<50%	41.6	Pass
PCB 127	52.1	260.5	52.1	U	52.6	U			<50%	104.2	Pass
PCB 126	20.8	104	20.8	U	21	U			<50%	41.6	Pass
PCB 155	20.8	104	20.8	U	4.12	JK		16.7	<50%	41.6	Pass
PCB 152	52.1	260.5	52.1	U	3.25	J		48.9	<50%	104.2	Pass
PCB 150	52.1	260.5	52.1	U	3.62	JK		48.5	<50%	104.2	Pass
PCB 136	52.1	260.5	45.4	J	61.8			16.4	<50%	104.2	Pass
PCB 145	52.1	260.5	52.1	U	2.79	JK		49.3	<50%	104.2	Pass
PCB 148	52.1	260.5	4.34	JK	5.57	JK		1.2	<50%	104.2	Pass
PCBs 135 + 151 + 154	104	520	123		173			50.0	<50%	208	Pass
PCB 144	52.1	260.5	19.7	J	25	J		5.3	<50%	104.2	Pass
PCBs 147 + 149	104	520	209		311			102.0	<50%	208	Pass
PCB 134	104	520	13.3	JK	29.3	J		16.0	<50%	208	Pass
PCB 143	104	520	104	U	105	U			<50%	208	Pass
PCBs 139 + 140	104	520	10.6	JK	105	U		94.4	<50%	208	Pass
PCB 131	52.1	260.5	6.13	JK	52.6	U		46.5	<50%	104.2	Pass
PCB 142	52.1	260.5	52.1	U	52.6	U			<50%	104.2	Pass
PCB 132	52.1	260.5	75.8		107			31.2	<50%	104.2	Pass
PCB 133	52.1	260.5	7.39	JK	11.9	JK		4.5	<50%	104.2	Pass
PCB 165	52.1	260.5	52.1	U	52.6	U			<50%	104.2	Pass
PCB 146	52.1	260.5	54.1		72.3			18.2	<50%	104.2	Pass
PCB 161	52.1	260.5	52.1	U	52.6	U			<50%	104.2	Pass
PCBs 153 + 168	104	520	224		347			123.0	<50%	208	Pass
PCB 141	52.1	260.5	54.4		86.9			32.5	<50%	104.2	Pass
PCB 130	52.1	260.5	15.1	JK	20.1	JK		5.0	<50%	104.2	Pass
PCB 137	52.1	260.5	7.3	J	10.9	J		3.6	<50%	104.2	Pass

Compounds	MRL	5X MRL	LP-MW-5-071017		LP-MW-20-071017		RPD	Delta	RPD	2X MRL	Pass/No
PCB 164	52.1	260.5	21.6	J	27.2	J		5.6	<50%	104.2	Pass
PCBs 129 + 138 + 163	208	1040	324		485			161.0	<50%	416	Pass
PCB 160	208	1040	7.19	BJK	6.91	BJK		0.3	<50%	416	Pass
PCB 158	52.1	260.5	23.6	J	32.3	JK		8.7	<50%	104.2	Pass
PCB 128 + 166	104	520	35.1	J	44.8	JK		9.7	<50%	208	Pass
PCB 159	52.1	260.5	52.1	U	52.6	U			<50%	104.2	Pass
PCB 162	52.1	260.5	52.1	U	52.6	U			<50%	104.2	Pass
PCB 167	20.8	104	10.8	BJK	17.9	BJ		7.1	<50%	41.6	Pass
PCBs 156 + 157	41.7	208.5	27.9	BJ	36.1	BJK		8.2	<50%	83.4	Pass
PCB 169	20.8	104	20.8	U	21	U			<50%	41.6	Pass
PCB 188	20.8	104	20.8	U	6.02	BJ		14.8	<50%	41.6	Pass
PCB 179	52.1	260.5	46.2	J	68.8			22.6	<50%	104.2	Pass
PCB 184	52.1	260.5	52.1	U	4.4	JK		47.7	<50%	104.2	Pass
PCB 176	52.1	260.5	14.3	JK	26.2	J		11.9	<50%	104.2	Pass
PCB 186	52.1	260.5	52.1	U	5.01	BJK		47.1	<50%	104.2	Pass
PCB 178	52.1	260.5	26.6	J	37.7	J		11.1	<50%	104.2	Pass
PCB 175	52.1	260.5	52.1	U	13.1	J		39.0	<50%	104.2	Pass
PCB 187	52.1	260.5	119		179			60.0	<50%	104.2	Pass
PCB 182	52.1	260.5	52.1	U	7.8	J		44.3	<50%	104.2	Pass
PCB 183 + 185	104	520	69	J	102	J		33.0	<50%	208	Pass
PCB 174	52.1	260.5	97.9		143			45.1	<50%	104.2	Pass
PCB 177	52.1	260.5	51.6	JK	87.5			35.9	<50%	104.2	Pass
PCB 181	52.1	260.5	52.1	U	52.6	U			<50%	104.2	Pass
PCBs 171 + 173	104	520	39.3	J	42.2	J		2.9	<50%	208	Pass
PCB 172	52.1	260.5	20.8	J	22.8	JK		2.0	<50%	104.2	Pass
PCB 192	52.1	260.5	5.85	JK	52.6	U		46.8	<50%	104.2	Pass
PCBs 180 + 193	104	520	183		273			90.0	<50%	208	Pass
PCB 191	52.1	260.5	10.6	J	8.75	JK		1.9	<50%	104.2	Pass
PCB 170	52.1	260.5	81.6		117			35.4	<50%	104.2	Pass
PCB 190	52.1	260.5	25	J	27.5	J		2.5	<50%	104.2	Pass
PCB 189	20.8	104	8.56	BJK	6	BJK		2.6	<50%	41.6	Pass
PCB 202	20.8	104	15.9	BJK	24.1	B		8.2	<50%	41.6	Pass
PCB 201	52.1	260.5	15.3	J	13.9	JK		1.4	<50%	104.2	Pass
PCB 204	52.1	260.5	6.46	JK	4.98	JK		1.5	<50%	104.2	Pass
PCB 197	104	520	10.5	J	6.99	JK		3.5	<50%	208	Pass
PCB 200	104	520	11.1	BJ	19.3	BJ		8.2	<50%	208	Pass
PCBs 198 + 199	104	520	69.4	BJ	97.8	J		28.4	<50%	208	Pass
PCB 196	52.1	260.5	30.6	J	36.2	JK		5.6	<50%	104.2	Pass
PCB 203	52.1	260.5	35.3	J	54.2			18.9	<50%	104.2	Pass
PCB 195	52.1	260.5	27	JK	25.5	JK		1.5	<50%	104.2	Pass
PCB 194	52.1	260.5	56		74.1	K		18.1	<50%	104.2	Pass

Compounds	MRL	5X MRL	LP-MW-5-071017		LP-MW-20-071017		RPD	Delta	RPD	2X MRL	Pass/No
PCB 205	20.8	104	8.22	BJK	11.5	BJK		3.3	<50%	41.6	Pass
PCB 208	20.8	104	16.1	BJ	20.7	BJ		4.6	<50%	41.6	Pass
PCB 207	52.1	260.5	8.15	BJK	12.8	BJK		4.7	<50%	104.2	Pass
PCB 206	20.8	104	31.6	K	54.9			23.3	<50%	41.6	Pass
PCB 209	20.8	104	66.7	B	74.5	B		7.8	<50%	41.6	Pass

Notes:
Delta: Concentration difference
MRL: Method reporting limit
RPD: Relative percent difference

APPENDIX D

City Utility Property Cleanup Action Plan Memorandum

FLOYD | SNIDER
strategy ▪ science ▪ engineering

Two Union Square
601 Union Street, Suite 600
Seattle, WA 98101
tel: 206.292.2078 fax: 206.682.7867

Memorandum

To: Mark Sadler and Hanna Lintukorpi, City of Everett
Erik Gerking, Port of Everett
Mike Brose, Kimberly-Clark
Steve Germiat, Aspect Consulting
Andy Kallus and Sandra Caldwell, Washington State Department of Ecology

From: Kate Snider and Erin Murray, Floyd|Snider

Date: February 5, 2021

Project No: COEv-Env1

Re: **Utility Property Cleanup Action Plan Memorandum**

INTRODUCTION

This technical memorandum was prepared on behalf of the City of Everett (City) to present the proposed remedial approach for the Utility Property located at 2600 Federal Avenue, in Everett, Washington (Figure 1).

The Utility Property is "Unit E" of the Kimberly-Clark Worldwide, Inc. (K-C) Site (K-C Site). It is the City's desire that this technical memorandum be used by the Port to develop the Cleanup Action Plan (CAP) for the overall K-C Site, because the City, the Port, and the Washington State Department of Ecology (Ecology) have agreed on the remedial approach for the Utility Property presented in this memorandum. Andy Kallus, Site Manager at Ecology, provided approval of this memorandum on February 2, 2021. In his approval, Mr. Kallus stated, "We agree with the information and conclusions provided in the subject memo. The memorandum can be used by the Port and K-C to develop the CAP for the overall site which includes Unit E."

The City purchased the Utility Property to repurpose the wastewater treatment plant facility for operation by the City's Public Works Department as an element of the City's combined sewer overflow (CSO) control program.

Soil and groundwater have been characterized throughout the Utility Property in multiple investigations conducted by K-C (as documented in the 2016 Draft Remedial Investigation and Feasibility Study [RI/FS]) and locally by the City in the vicinity of a swale adjacent to the southern property boundary of the Utility Property. In May 2020, the available data from the Utility Property were reviewed with Ecology and it was determined that remediation would not be

Certified B Corporation

required on the Utility Property. With the exception of one slight exceedance of diesel- and oil-range total petroleum hydrocarbons (TPH) in one location sampled by K-C, there were no exceedances of industrial cleanup levels (CULs). It was agreed that the remedial approach for the property would include institutional controls, pipe and swale decommissioning, and installation and maintenance of pavement and clean surface material throughout the property.

This memorandum provides the remedial approach that was developed in coordination with Ecology to ensure that the conditions at the Utility Property are protective of human health and the environment. In addition, this memorandum provides a summary of the investigations that have been conducted on the Utility Property, including a summary of the results of the swale sampling activities conducted in October 2019 by the City.

SITE DESCRIPTION, LOCATION, AND BACKGROUND

The Utility Property was historically used for timber storage by the Clark-Nickerson Lumber Company mill (late 1800s through early 1930s). Later, the parcel was developed as a part of the K-C pulp/paper mill's wastewater treatment plant (Aspect 2014). The treatment plant is still in place but is not currently in use. The remaining portion of the property has been used as a parking lot. The Utility Property is the northernmost unit in the K-C cleanup site (Unit E). In 2012, Ecology and K-C entered an Agreed Order for the upland K-C cleanup site. The main contaminants of concern (COCs) for the Utility Property and adjacent property to the south are select metals, carcinogenic polycyclic aromatic hydrocarbons (cPAHs), and TPH, as described in the RI Data Report by Aspect Consulting (Aspect 2014).

SUMMARY OF SUBSURFACE INVESTIGATIONS

The following subsection provides a summary of the soil investigations that have been completed at the Utility Property. Table 1 provides a summary of all samples compared to Model Toxics Control Act (MTCA) Method C/A industrial soil CULs, the preliminary cleanup levels (PCLs) for the K-C Site, and the Floyd|Snider Sampling and Analysis Plan (SAP) PCLs (Floyd|Snider 2019). Figure 1 provides a summary of exceedances of these criteria.

Aspect 2012/2013 Remedial Investigation

As part of the RI investigation for the K-C Site, soil and groundwater sampling was conducted to determine nature and extent of contamination. Throughout the Utility Property, eight borings were advanced and four monitoring wells were installed. The Aspect RI Data Report provides details on the results of the investigation. In summary, there were detections of polycyclic aromatic hydrocarbons, metals, and TPH in soil (Aspect 2014). Copper and zinc exceeded their respective PCLs in a few locations and cPAHs exceeded the saturated zone PCL in some locations. However, at locations with corresponding groundwater samples, groundwater data are in compliance for cPAHs, which empirically demonstrates that these low-level exceedances of cPAHs are not causing leaching at levels of concern. The only location with cPAHs exceeding in soil that had corresponding groundwater samples is shown in Figure 1. No samples exceeded the

MTCA Method C/A industrial soil CULs in soil except for one sample that exceeded the oil-range organics (ORO) PCL of 2,000 milligrams per kilogram (mg/kg) with a concentration of 2,300 mg/kg.

With the exception of two slight exceedances of copper and sulfides at two of the monitoring wells during one event, there were no exceedances of the PCLs in groundwater.

Floyd|Snider 2019 Swale Investigation

On October 3, 2019, Floyd|Snider conducted a subsurface investigation in order to characterize the soil beneath the swale along the southern property line of the K-C Site property. Refer to Attachment 1 for details on the geology and field observations. Test pit samples were analyzed for the applicable K-C COCs (i.e., metals, cPAHs, and TPH).

At TP-2, the excavator bucket broke an 8-inch-diameter concrete pipe at approximately 3 feet below ground surface. The pipe, which ran from east to west, appeared to contain a small amount of water. This pipe will be plugged and abandoned, as described below.

The Floyd|Snider *Utility Property Swale Test Pit Sampling Results Memorandum* provides details on the results of the investigation (Attachment 1). In summary, although there were some detections for TPH and cPAHs, there were no exceedances of the PCLs for TPH or cPAHs at any of the sample locations. Metals were detected in every sample, with elevations of the PCLs for select metals at each sample location. Metals with PCL exceedances include arsenic, copper, nickel, and zinc, as shown in Figure 1. There were no exceedances of the MTCA Method C/A industrial CULs at any location in the swale.

All data were successfully uploaded to submitted to Ecology's Environmental Information Management system in coordination with the Ecology Project Manager for the K-C Site, Andy Kallus. These data have been provided to K-C for their inclusion in the RI/FS for the Site.

REMEDIAL APPROACH FOR THE UTILITY PROPERTY

The following actions have been developed in coordination with Ecology to ensure that the conditions at the Utility Property are protective of human health and the environment and to be included in the K-C Site CAP as the only remedial requirements applicable to the Utility Property.

Institutional Controls

A restrictive Environmental Covenant will be required on the Utility Property to ensure that the land use remains industrial. The Environmental Covenant will also require maintenance of pavement and clean surface materials in landscaped areas.

Decommissioning of Pipe and Swale

In December 2020, the abandoned stormwater pipe identified near TP-2 in the 2019 investigation was abandoned according to the methods for drainage pipe abandonment described in Appendix C of the K-C Work Plan for Second Interim Action (Aspect 2019a). Refer to Photograph 1 in Attachment 2.

The swale area was first grubbed to remove vegetation and then backfilled with the clean, Ecology-approved Parcel O Dredge Sand (Aspect 2019b; Photograph 2 in Attachment 2). A temporary earthen berm was constructed to separate drainage on the two properties (Photograph 3 in Attachment 2) and the area will eventually be paved as described below.

Pavement, Drainage, and Clean Landscaped Areas

The City plans to repurpose the existing water treatment industrial tanks and selected buildings at the Utility Property as a component of future CSO control facilities.

As part of the City's redevelopment of the Utility Property, all surface areas of the property will be paved, except for areas of landscaping or open space and the stormwater and combined sewer treatment and storage structures. Any areas that are not contained under paving must have data showing that surface materials (within the top 3 feet) meet MTCA Method A cleanup standards.

As described above, the swale adjacent to the southern boundary of the Utility Property has been backfilled and paved and a drainage barrier will be constructed so all stormwater from the Utility Property will be managed on City property and runoff from Port property will be managed by the Port on their property. As part of the Port's and City's redevelopment, each entity will install measures to contain and manage drainage on their own property. The four existing monitoring wells will be kept in place until the final CAP is in place and Ecology allows their decommissioning.

CONCLUSION

Because there are no exceedances of industrial CULs in soil or groundwater at the Utility Property, no active remediation is required. The remedial approach for the Utility Property described above will ensure protection of human health and the environment.

It is anticipated that at the time the CAP for the K-C Site is developed by the Port, these remedial elements will be the only requirements defined for the Utility Property.

Any concerns or questions regarding these requirements should be directed to Tim Benedict, Deputy City Attorney, tbenedict@everettwa.gov, (425) 257-8669. Mr. Benedict should also be included in CAP development when that moves forward.

REFERENCES

Aspect Consulting (Aspect). 2014. *Remedial Investigation Data Report, Kimberly-Clark Worldwide Site Upland Area, Everett, Washington.* 29 September.

_____. 2019a. *Work Plan for Second Interim Action, Kimberly-Clark Worldwide Site Upland Area, Everett, Washington.* 30 January.

_____. 2019b. *Analytical Data for Parcel O Dredge Sand as Backfill for Interim Action, Kimberly-Clark Worldwide Site Upland Area, Everett, Washington, Project No. 110207-009-04.* Letter from Steve Germiat, Aspect Consulting, to Andy Kallus, Washington State Department of Ecology. 15 January.

Floyd|Snider. 2019. *Swale Sampling and Analysis Plan Memorandum.* Memorandum from Kate Snider and Erin Murray, Floyd|Snider, to Mark Sadler, City of Everett. 12 September.

_____. 2020. *Utility Property Swale Test Pit Sampling Results Memorandum.* Memorandum from Erin Murray and Adia Jumper, Floyd|Snider, to Mark Sadler and Hanna Lintukorpi, City of Everett. 11 March.

LIST OF ATTACHMENTS

Table 1	Utility Property (K-C Mill Unit E) Soil Characterization Results
Figure 1	Utility Property (K-C Mill Unit E) Soil Characterization Exceedances
Attachment 1	Utility Property Swale Test Pit Sampling Results Memorandum
Attachment 2	Photographs of Decommissioned Pipe and Backfilled Swale

Utility Property Cleanup
Action Plan Memorandum

Table

Table 1
Utility Property (K-C Mill Unit E) Soil Characterization Results

					Location	CN-B-3			CN-B-8			
					Sample ID	CN-B3-3-120413	CN-B3-5.5-120413	CN-B3-6-120413	CN-B8-2-120413	CN-B8-5-120413	CN-B8-14-120413	
					Media	Soil	Soil	Soil	Soil	Soil	Soil	
					Sample Date	12/4/13	12/4/13	12/4/13	12/4/13	12/4/13	12/4/13	
					Sample Depth (feet)	3–3	5.5–5.5	6–6	2–2	5–5	14–14	
Analyte	Units	MTCA Method C/A Industrial Soil Cleanup Levels [1]	Preliminary Cleanup Levels Unsaturated	Preliminary Cleanup Levels Saturated	Floyd|Snider 2019 SAP Preliminary Cleanup Levels [2]							
Metals												
Antimony	mg/kg	1,400	1,400	1,400	1,400	--	--	--	--	--	--	
Arsenic	mg/kg	88	20	20	20	1.8	7.5	1.3	2.1	3.8	8.8	
Copper	mg/kg	140,000	36	36	36	14	34	12	33	14	19	
Lead	mg/kg	1,000	1,000	81	1,000	5.7	8.6	1.9	13	3.8	3.1	
Mercury	mg/kg	2	0.1	0.1	0.1	0.10 U	0.10 U	0.10 U	0.10 U	0.10 U	0.10 U	
Nickel	mg/kg	70,000	48	48	48	27	46	24	25	16	20	
Zinc	mg/kg	1,100,000	100	85	85	20	52	14	**91**	24	28	
Carcinogenic Polycyclic Aromatic Hydrocarbons (cPAHs)												
cPAHs (MTCA TEQ-HalfND)	mg/kg	130	3.2	0.16	3.2	0.035 U	0.047	0.035 U	0.72	0.047	0.035 U	
Petroleum Hydrocarbons												
Diesel-range organics	mg/kg	2,000	2,000	2,000	2,000	50 U	50 U	50 U	50 U	50 U	50 U	
Oil-range organics	mg/kg	2,000	2,000	2,000	2,000	250 U	250 U	250 U	250 U	250 U	250 U	
Total petroleum hydrocarbons	mg/kg	NA	2,000	2,000	2,000	ND	ND	ND	ND	ND	ND	

Notes:

BOLD Exceeds Floyd|Snider 2019 SAP preliminary cleanup level.

BOLD/RED Exceeds MTCA Method C/A industrial soil cleanup level.

Sample is assumed saturated based on recorded site groundwater levels.

95 Exceeds preliminary cleanup level for saturated soils.

-- Data not reported.

1 The criteria in this column are the MTCA human health industrial direct contact cleanup levels (i.e., values are MTCA Method C, unless no criterion was available, and then MTCA A industrial soil CUL was used). The TPH cleanup level of 2,000 mg/kg is based on protection of groundwater.

2 The Floyd|Snider SAP preliminary cleanup levels used were MTCA Method A Industrial soil cleanup levels, unless no criterion was available, and then screening levels presented in Aspect Consulting's Remedial Investigation Data Report were used. For metals, these values were often the background numbers from Washingon State Department of Ecology's 1994 *Natural Background Soil Metals Concentrations in Washington State,* with the exception of arsenic; for arsenic, MTCA established 20 mg/kg as background (WAC 173-340-900 Table 740-1).

Abbreviations:

mg/kg Milligrams per kilogram
MTCA Model Toxics Control Act
NA Not applicable
ND Not detected, no detection limit listed
SAP Sampling and Analysis Plan
TPH Total petroleum hydrocarbons

Qualifiers:

J Analyte was detected, concentration is considered to be an estimate.
U Analyte was not detected at the given reporting limit.

Table 1
Utility Property (K-C Mill Unit E) Soil Characterization Results

					Location	CN-B-10			CN-B-11			
					Sample ID	CN-B10-2-120513	CN-B10-5-120513	CN-B10-10-120513	CN-B11-2-120413	CN-B11-3.5-120413	CN-B11-6-120413
					Media	Soil	Soil	Soil	Soil	Soil	Soil
					Sample Date	12/5/13	12/5/13	12/5/13	12/4/13	12/4/13	12/4/13
					Sample Depth (feet)	2–2	5–5	10–10	2–2	3.5–3.5	6–6
Analyte	Units	MTCA Method C/A Industrial Soil Cleanup Levels [1]	Preliminary Cleanup Levels Unsaturated	Preliminary Cleanup Levels Saturated	Floyd|Snider 2019 SAP Preliminary Cleanup Levels [2]						
Metals											
Antimony	mg/kg	1,400	1,400	1,400	1,400	--	--	--	--	--	--
Arsenic	mg/kg	88	20	20	20	2.1	1.6	3.7	11	17	3.7
Copper	mg/kg	140,000	36	36	36	12	11	15	28	26	17
Lead	mg/kg	1,000	1,000	81	1,000	3.0	2.2	6.2	20	79	13
Mercury	mg/kg	2	0.1	0.1	0.1	0.10 U	0.10 U	0.10 U	0.10 U	0.10 U	0.10 U
Nickel	mg/kg	70,000	48	48	48	21	22	16	23	19	21
Zinc	mg/kg	1,100,000	100	85	85	19	15	30	66	**800**	39
Carcinogenic Polycyclic Aromatic Hydrocarbons (cPAHs)											
cPAHs (MTCA TEQ-HalfND)	mg/kg	130	3.2	0.16	3.2	0.035 U	0.043	**0.54**	0.44	2.6	**0.59**
Petroleum Hydrocarbons											
Diesel-range organics	mg/kg	2,000	2,000	2,000	2,000	50 U	50 U	50 U	50 U	50 U	50 U
Oil-range organics	mg/kg	2,000	2,000	2,000	2,000	250 U	250 U	250 U	250 U	250 U	**2,300**
Total petroleum hydrocarbons	mg/kg	NA	2,000	2,000	2,000	ND	ND	ND	ND	ND	**2,300**

Notes:

BOLD Exceeds Floyd|Snider 2019 SAP preliminary cleanup level.

BOLD/RED Exceeds MTCA Method C/A industrial soil cleanup level.

Sample is assumed saturated based on recorded site groundwater levels.

95 Exceeds preliminary cleanup level for saturated soils.

-- Data not reported.

1 The criteria in this column are the MTCA human health industrial direct contact cleanup levels (i.e., values are MTCA Method C, unless no criterion was available, and then MTCA A industrial soil CUL was used). The TPH cleanup level of 2,000 mg/kg is based on protection of groundwater.

2 The Floyd|Snider SAP preliminary cleanup levels used were MTCA Method A Industrial soil cleanup levels, unless no criterion was available, and then screening levels presented in Aspect Consulting's Remedial Investigation Data Report were used. For metals, these values were often the background numbers from Washingon State Department of Ecology's 1994 *Natural Background Soil Metals Concentrations in Washington State,* with the exception of arsenic; for arsenic, MTCA established 20 mg/kg as background (WAC 173-340-900 Table 740-1).

Abbreviations:

mg/kg Milligrams per kilogram

MTCA Model Toxics Control Act

NA Not applicable

ND Not detected, no detection limit listed

SAP Sampling and Analysis Plan

TPH Total petroleum hydrocarbons

Qualifiers:

J Analyte was detected, concentration is considered to be an estimate.

U Analyte was not detected at the given reporting limit.

Table 1
Utility Property (K-C Mill Unit E) Soil Characterization Results

					Location	CN-B-12			CN-B-13			
					Sample ID	CN-B12-2-120413	CN-B12-5-120413	CN-B12-9.5-120413	CN-B13-1.5-120413	CN-B13-3-120413	CN-B13-11.5-120413	
					Media	Soil	Soil	Soil	Soil	Soil	Soil	
					Sample Date	12/4/13	12/4/13	12/4/13	12/4/13	12/4/13	12/4/13	
					Sample Depth (feet)	2–2	5–5	9.5–9.5	1.5–1.5	3–3	11.5–11.5	
Analyte	Units	MTCA Method C/A Industrial Soil Cleanup Levels [1]	Preliminary Cleanup Levels Unsaturated	Preliminary Cleanup Levels Saturated	Floyd|Snider 2019 SAP Preliminary Cleanup Levels [2]							
Metals												
Antimony	mg/kg	1,400	1,400	1,400	1,400	--	--	--	--	--	--	
Arsenic	mg/kg	88	20	20	20	4.3	6.4	5.1	8.6	12	5.1	
Copper	mg/kg	140,000	36	36	36	13	11	27	32	**57**	7.8	
Lead	mg/kg	1,000	1,000	81	1,000	3.1	2.7	4.9	7.8	12	1.6	
Mercury	mg/kg	2	0.1	0.1	0.1	0.10 U	0.10 U	0.10 U	0.10 U	0.10 U	0.10 U	
Nickel	mg/kg	70,000	48	48	48	15	13	23	27	43	17	
Zinc	mg/kg	1,100,000	100	85	85	24	20	38	60	70	16	
Carcinogenic Polycyclic Aromatic Hydrocarbons (cPAHs)												
cPAHs (MTCA TEQ-HalfND)	mg/kg	130	3.2	0.16	3.2	0.035 U	0.035 U	0.035 U	0.043	0.042	0.035 U	
Petroleum Hydrocarbons												
Diesel-range organics	mg/kg	2,000	2,000	2,000	2,000	50 U	50 U	50 U	50 U	50 U	50 U	
Oil-range organics	mg/kg	2,000	2,000	2,000	2,000	250 U	250 U	250 U	250 U	250 U	250 U	
Total petroleum hydrocarbons	mg/kg	NA	2,000	2,000	2,000	ND	ND	ND	ND	ND	ND	

Notes:

BOLD Exceeds Floyd|Snider 2019 SAP preliminary cleanup level.

BOLD/RED Exceeds MTCA Method C/A industrial soil cleanup level.

Sample is assumed saturated based on recorded site groundwater levels.

95 Exceeds preliminary cleanup level for saturated soils.

-- Data not reported.

1 The criteria in this column are the MTCA human health industrial direct contact cleanup levels (i.e., values are MTCA Method C, unless no criterion was available, and then MTCA A industrial soil CUL was used). The TPH cleanup level of 2,000 mg/kg is based on protection of groundwater.

2 The Floyd|Snider SAP preliminary cleanup levels used were MTCA Method A Industrial soil cleanup levels, unless no criterion was available, and then screening levels presented in Aspect Consulting's Remedial Investigation Data Report were used. For metals, these values were often the background numbers from Washingon State Department of Ecology's 1994 *Natural Background Soil Metals Concentrations in Washington State,* with the exception of arsenic; for arsenic, MTCA established 20 mg/kg as background (WAC 173-340-900 Table 740-1).

Abbreviations:

mg/kg Milligrams per kilogram

MTCA Model Toxics Control Act

NA Not applicable

ND Not detected, no detection limit listed

SAP Sampling and Analysis Plan

TPH Total petroleum hydrocarbons

Qualifiers:

J Analyte was detected, concentration is considered to be an estimate.

U Analyte was not detected at the given reporting limit.

Table 1
Utility Property (K-C Mill Unit E) Soil Characterization Results

					Location	CN-MW-1				CN-MW-2		
					Sample ID	CN-MW-1-4.5-102213	CN-MW-1-4.5-102213-D	CN-MW-1-9.5-102213	CN-MW-1-13-102213	CN-MW-2-4-102213	CN-MW-2-8-102213	CN-MW-2-9.5-102213
					Media	Soil	Soil	Soil	Soil	Soil	Soil	Soil
					Sample Date	10/22/13	10/22/13	10/22/13	10/22/13	10/22/13	10/22/13	10/22/13
					Sample Depth (feet)	4.5–4.5	4.5–4.5	9.5–9.5	13–13	4–4	8–8	9.5–9.5
Analyte	Units	MTCA Method C/A Industrial Soil Cleanup Levels [1]	Preliminary Cleanup Levels Unsaturated	Preliminary Cleanup Levels Saturated	Floyd|Snider 2019 SAP Preliminary Cleanup Levels [2]							
Metals												
Antimony	mg/kg	1,400	1,400	1,400	1,400	--	--	--	--	--	--	--
Arsenic	mg/kg	88	20	20	20	6.5	8.2	4.3	3.8	4.3	2.5	1.5
Copper	mg/kg	140,000	36	36	36	26	30	15	8.8	15	6.2	14
Lead	mg/kg	1,000	1,000	81	1,000	7.2	6.7	2.6	4.4	2.6	1.0 U	2.2
Mercury	mg/kg	2	0.1	0.1	0.1	0.10 U	0.10 U	0.10 U	0.10 U	0.10 U	0.10 U	0.10 U
Nickel	mg/kg	70,000	48	48	48	19	22	16	13	16	9.7	14
Zinc	mg/kg	1,100,000	100	85	85	33	39	21	19	25	9.6	25
Carcinogenic Polycyclic Aromatic Hydrocarbons (cPAHs)												
cPAHs (MTCA TEQ-HalfND)	mg/kg	130	3.2	0.16	3.2	0.095	0.13	0.035 U	0.035 U	0.035 U	0.035 U	0.035 U
Petroleum Hydrocarbons												
Diesel-range organics	mg/kg	2,000	2,000	2,000	2,000	50 U	50 U	50 U	50 U	50 U	50 U	50 U
Oil-range organics	mg/kg	2,000	2,000	2,000	2,000	250 U	250 U	250 U	250 U	250 U	250 U	250 U
Total petroleum hydrocarbons	mg/kg	NA	2,000	2,000	2,000	ND	ND	ND	ND	ND	ND	ND

Notes:

BOLD Exceeds Floyd|Snider 2019 SAP preliminary cleanup level.

BOLD/RED Exceeds MTCA Method C/A industrial soil cleanup level.

Sample is assumed saturated based on recorded site groundwater levels.

95 Exceeds preliminary cleanup level for saturated soils.

-- Data not reported.

1 The criteria in this column are the MTCA human health industrial direct contact cleanup levels (i.e., values are MTCA Method C, unless no criterion was available, and then MTCA A industrial soil CUL was used). The TPH cleanup level of 2,000 mg/kg is based on protection of groundwater.

2 The Floyd|Snider SAP preliminary cleanup levels used were MTCA Method A Industrial soil cleanup levels, unless no criterion was available, and then screening levels presented in Aspect Consulting's Remedial Investigation Data Report were used. For metals, these values were often the background numbers from Washingon State Department of Ecology's 1994 *Natural Background Soil Metals Concentrations in Washington State,* with the exception of arsenic; for arsenic, MTCA established 20 mg/kg as background (WAC 173-340-900 Table 740-1).

Abbreviations:

mg/kg Milligrams per kilogram

MTCA Model Toxics Control Act

NA Not applicable

ND Not detected, no detection limit listed

SAP Sampling and Analysis Plan

TPH Total petroleum hydrocarbons

Qualifiers:

J Analyte was detected, concentration is considered to be an estimate.

U Analyte was not detected at the given reporting limit.

Table 1
Utility Property (K-C Mill Unit E) Soil Characterization Results

					Location	CN-MW-3			GF-B-1	GF-B-2	TP-1	TP-2		
					Sample ID	CN-MW-3-4-102213	CN-MW-3-4.5-102213	CN-MW-3-6-102213	GF-B-1-1-2.5	GF-B-2-2.5-4	TP-1-0-2FT	TP-2-0-2FT	TP-2-2-4FT	TP-2-4-6FT
					Media	Soil	Soil	Soil	Soil	Soil	Soil	Soil	Soil	Soil
					Sample Date	10/22/13	10/22/13	10/22/13	5/25/12	5/25/12	10/3/19	10/3/19	10/3/19	10/3/19
					Sample Depth (feet)	4–4	4.5–4.5	6–6	1–2.5	2.5–4	0–2	0–2	2–4	4–6
Analyte	Units	MTCA Method C/A Industrial Soil Cleanup Levels [1]	Preliminary Cleanup Levels Unsaturated	Preliminary Cleanup Levels Saturated	Floyd|Snider 2019 SAP Preliminary Cleanup Levels [2]									
Metals														
Antimony	mg/kg	1,400	1,400	1,400	1,400	--	--	--	1.0 U	3.0	0.25 U	1.3	0.78 JQ	0.25 U
Arsenic	mg/kg	88	20	20	20	2.0	2.7	1.5	6.1	13	3.6	**27**	8.3	5.8
Copper	mg/kg	140,000	36	36	36	20	20	12	16	23	24	**51**	**44**	27
Lead	mg/kg	1,000	1,000	81	1,000	4.7	34	19	4.7	32	6.1	50	130	7.2
Mercury	mg/kg	2	0.1	0.1	0.1	0.10 U	0.10 U	0.10 U	0.10 U	0.10 U	0.046	0.071	0.043	0.056
Nickel	mg/kg	70,000	48	48	48	10	12	8.6	29	21	**49**	47	**55**	44
Zinc	mg/kg	1,100,000	100	85	85	19	65	20	22	**140**	50	**300**	**630**	59
Carcinogenic Polycyclic Aromatic Hydrocarbons (cPAHs)														
cPAHs (MTCA TEQ-HalfND)	mg/kg	130	3.2	0.16	3.2	**2.7**	**1.3**	**1.1**	0.11 U	0.11 U	0.047 J	0.041 J	0.085 J	0.10
Petroleum Hydrocarbons														
Diesel-range organics	mg/kg	2,000	2,000	2,000	2,000	50 U	50 U	50 U	50 U	50 U	--	--	--	--
Oil-range organics	mg/kg	2,000	2,000	2,000	2,000	250 U	250 U	250 U	250 U	250 U	--	--	--	--
Total petroleum hydrocarbons	mg/kg	NA	2,000	2,000	2,000	ND	ND	ND	ND	ND	110 U	130 U	240	130 U

Notes:

BOLD Exceeds Floyd|Snider 2019 SAP preliminary cleanup level.

BOLD/RED Exceeds MTCA Method C/A industrial soil cleanup level.

Sample is assumed saturated based on recorded site groundwater levels.

95 Exceeds preliminary cleanup level for saturated soils.

-- Data not reported.

1 The criteria in this column are the MTCA human health industrial direct contact cleanup levels (i.e., values are MTCA Method C, unless no criterion was available, and then MTCA A industrial soil CUL was used). The TPH cleanup level of 2,000 mg/kg is based on protection of groundwater.

2 The Floyd|Snider SAP preliminary cleanup levels used were MTCA Method A Industrial soil cleanup levels, unless no criterion was available, and then screening levels presented in Aspect Consulting's Remedial Investigation Data Report were used. For metals, these values were often the background numbers from Washingon State Department of Ecology's 1994 *Natural Background Soil Metals Concentrations in Washington State,* with the exception of arsenic; for arsenic, MTCA established 20 mg/kg as background (WAC 173-340-900 Table 740-1).

Abbreviations:

mg/kg Milligrams per kilogram

MTCA Model Toxics Control Act

NA Not applicable

ND Not detected, no detection limit listed

SAP Sampling and Analysis Plan

TPH Total petroleum hydrocarbons

Qualifiers:

J Analyte was detected, concentration is considered to be an estimate.

U Analyte was not detected at the given reporting limit.

Table 1
Utility Property (K-C Mill Unit E) Soil Characterization Results

					Location	TP-3				TP-4		
					Sample ID	TP-3-0-2FT	TP-3-2-4FT	TP-3-4-6FT	TP-3X-4-6FT	TP-4-0-2FT	TP-4-2-4FT	TP-4-4-6FT
					Media	Soil	Soil	Soil	Soil	Soil	Soil	Soil
					Sample Date	10/3/19	10/3/19	10/3/19	10/3/19	10/3/19	10/3/19	10/3/19
					Sample Depth (feet)	0–2	2–4	4–6	4–6	0–2	2–4	4–6
Analyte	Units	MTCA Method C/A Industrial Soil Cleanup Levels [1]	Preliminary Cleanup Levels		Floyd|Snider 2019 SAP Preliminary Cleanup Levels [2]							
			Unsaturated	Saturated								
Metals												
Antimony	mg/kg	1,400	1,400	1,400	1,400	0.99 JQ	0.25 U	0.25 U	0.25 U	0.47 JQ	0.25 U	0.25 U
Arsenic	mg/kg	88	20	20	20	20	6.1	10	11	12	6.8	7.1
Copper	mg/kg	140,000	36	36	36	**38**	26	**55**	**58**	**50**	29	29
Lead	mg/kg	1,000	1,000	81	1,000	32	4.2	8.4	10	40	5.7	10
Mercury	mg/kg	2	0.1	0.1	0.1	0.060	0.035	0.081	0.082	0.071	0.043	0.044
Nickel	mg/kg	70,000	48	48	48	36	41	**58**	**60**	44	36	38
Zinc	mg/kg	1,100,000	100	85	85	**150**	64	81	85	**160**	54	67
Carcinogenic Polycyclic Aromatic Hydrocarbons (cPAHs)												
cPAHs (MTCA TEQ-HalfND)	mg/kg	130	3.2	0.16	3.2	0.039 J	0.047 U	0.047 U	0.047 U	0.13 J	0.047 U	0.078 J
Petroleum Hydrocarbons												
Diesel-range organics	mg/kg	2,000	2,000	2,000	2,000	--	--	--	--	--	--	--
Oil-range organics	mg/kg	2,000	2,000	2,000	2,000	--	--	--	--	--	--	--
Total petroleum hydrocarbons	mg/kg	NA	2,000	2,000	2,000	130 U	130 U	150 U	150 U	280	130 U	140 U

Notes:

BOLD Exceeds Floyd|Snider 2019 SAP preliminary cleanup level.

BOLD/RED Exceeds MTCA Method C/A industrial soil cleanup level.

Sample is assumed saturated based on recorded site groundwater levels.

95 Exceeds preliminary cleanup level for saturated soils.

-- Data not reported.

1 The criteria in this column are the MTCA human health industrial direct contact cleanup levels (i.e., values are MTCA Method C, unless no criterion was available, and then MTCA A industrial soil CUL was used). The TPH cleanup level of 2,000 mg/kg is based on protection of groundwater.

2 The Floyd|Snider SAP preliminary cleanup levels used were MTCA Method A Industrial soil cleanup levels, unless no criterion was available, and then screening levels presented in Aspect Consulting's Remedial Investigation Data Report were used. For metals, these values were often the background numbers from Washingon State Department of Ecology's 1994 *Natural Background Soil Metals Concentrations in Washington State,* with the exception of arsenic; for arsenic, MTCA established 20 mg/kg as background (WAC 173-340-900 Table 740-1).

Abbreviations:

mg/kg Milligrams per kilogram

MTCA Model Toxics Control Act

NA Not applicable

ND Not detected, no detection limit listed

SAP Sampling and Analysis Plan

TPH Total petroleum hydrocarbons

Qualifiers:

J Analyte was detected, concentration is considered to be an estimate.

U Analyte was not detected at the given reporting limit.

Utility Property Cleanup
Action Plan Memorandum

Figure

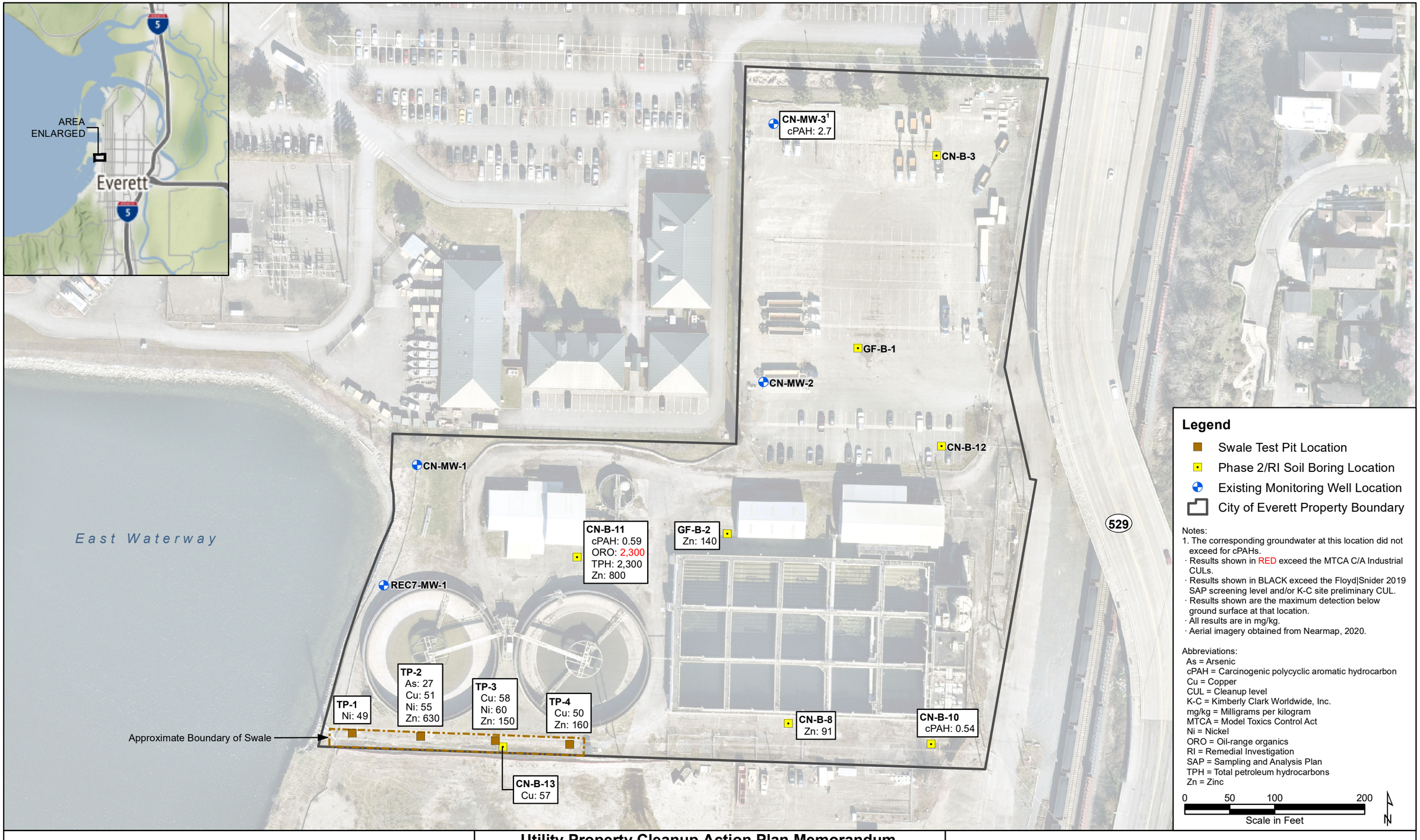

FLOYD | SNIDER
strategy ▪ science ▪ engineering

Utility Property Cleanup Action Plan Memorandum
Kimberly-Clark Worldwide, Inc. Site
City of Everett
Everett, WA

Figure 1
Utility Property (K-C Mill Unit E)
Soil Characterization Exceedances

I:\GIS\Projects\COEv_ENV1\MXD\Utility Property Cleanup Action Plan Memorandum\Figure 1 Utility Property (K-C Mill Unit E) Soil Characterization Exceedances.mxd
10/6/2020

Utility Property Cleanup
Action Plan Memorandum

Attachment 1
Utility Property Swale Test Pit
Sampling Results Memorandum

FLOYD | SNIDER
strategy ▪ science ▪ engineering

Two Union Square
601 Union Street, Suite 600
Seattle, WA 98101
tel: 206.292.2078 fax: 206.682.7867

Memorandum

To: Mark Sadler and Hanna Lintukorpi, City of Everett

From: Erin Murray and Adia Jumper, Floyd|Snider

Date: March 11, 2020

Project No: COEv-Env1

Re: **Utility Property Swale Test Pit Sampling Results Memorandum**

INTRODUCTION

This technical memorandum was prepared on behalf of the City of Everett (City) to present the results of the swale sampling activities conducted in October 2019 on the Utility Property, located at 2600 Federal Avenue, in Everett, Washington. The objective of the October 2019 sampling was to inform whether there is contaminated soil that requires excavation and offsite disposal prior to filling and abandonment of the swale. The sampling was also conducted to ensure that the data are appropriate for both an evaluation against applicable industrial criteria and for profiling for waste characterization if offsite disposal is necessary.

The soil sampling was conducted in October 2019 in accordance with the 2019 Swale Sampling and Analysis Plan (SAP) memorandum (Floyd|Snider 2019). A summary of the investigation objectives, the sampling scheme, field sampling methods and protocols, and analytical results are summarized in this soil sampling results memorandum.

SUMMARY OF FIELD ACTIVITIES

Sampling was conducted on October 3, 2019. In order to characterize the swale soil, four test pit locations were selected along the swale (Figure 1). Test pits were dug via backhoe by City staff, just north of the standing water on the side slope of the swale. Three of the test pits (TP-2 through TP-4) extended down to approximately 6 feet below ground surface (bgs). At location TP-1, only the top 0- to 2-foot sample was collected because groundwater was encountered at 2 feet bgs. This was the only location where groundwater was encountered; all samples collected in this event represent unsaturated conditions.

At each test pit location, the soil removed by the backhoe was screened for signs of contamination in accordance with the SAP. Field screening was completed through the use of a photoionization detector and observations of the presence of staining and odor. Field screening indications at all locations and depths were negative, so sampling proceeded as follows.

Certified B Corporation

At each location, samples were collected at 2-foot intervals from the soil surface down to the final excavation surface. Each sample was homogenized and submitted for analysis of the following applicable Kimberly-Clark contaminants of concern, as shown in Table 1:

- Diesel- and heavy oil-range total petroleum hydrocarbons (TPH) by NWTPH-Dx
- Metals (antimony, arsenic, copper, lead, nickel, and zinc) by U.S. Environmental Protection Agency (USEPA) Method 6020B and USEPA 7471 for mercury
- Carcinogenic polycyclic aromatic hydrocarbons (cPAHs) by USEPA Method 8270D

At TP-2, the top 0- to 2-foot sample was collected and analyzed for the following additional analytes for potential waste characterization purposes:

- Semivolatile organic compounds (SVOCs) by USEPA Method 8270D
- Volatile organic compounds (VOCs) by USEPA Method 8260C
- Resource Conservation and Recovery Act 8 metals (arsenic, barium, cadmium, chromium [total], lead, mercury, selenium, silver) by Method 6020B and USEPA 7471 for mercury.

Samples were collected in accordance to Floyd|Snider's standard guidelines for shallow soil sampling (Attachment 2 of the SAP) and placed into appropriate containers for lab analysis by Analytical Resources, Inc., and the Everett Environmental Laboratory (laboratory at the Waste Water Treatment Plant) for metals. All excavated test pit soil was backfilled into the test pit locations after sample collection.

Decontamination Procedures

Following procedures in the SAP, all field equipment that contacted any sample material was decontaminated prior to collection of the next sample.

Field Quality Assurance and Quality Control

In accordance with the SAP, one field duplicate was collected and submitted for analysis. Additionally, one rinsate blank quality control sample was collected upon the completion of sample processing. The results of the data quality review are summarized in the Data Assurance/Quality Review section of this memorandum.

RESULTS

This section summarizes field observations, analytical data, and comparison to screening levels.

Field Observations

Upon arrival at the site, approximately 1 foot of standing water was observed at the bottom of the swale. Due to the standing water, sample locations were shifted just north of the bottom of the swale, on the side slope of the swale in order to avoid flooding of the test pits.

TP-3 was dug right at the edge of the standing water and became flooded soon after collection of the 0- to 2-foot interval sample. To avoid water from pouring into the test pits, the remaining locations were placed slightly northward on the slope of the swale.

The soil samples consisted primarily of silty sand with trace gravel and organic matter in the top 4 feet. At about 4 feet bgs, sand in the swale became siltier and denser as locations became closer to the East Waterway.

While digging TP-2, the excavator bucket broke an 8-inch concrete pipe at approximately 3 feet bgs. The pipe, which ran from east to west, appeared to contain a small amount of water. City personnel were notified and came to the site to inspect the broken pipe in order to provide further direction. It was determined that the pipe was abandoned and the water likely came from groundwater, indicating that the pipe did not need to be repaired at that time. Excavation continued once City approval was received. When the removal action is being completed, the inactive pipe will be plugged and abandoned according to the methods described in Appendix C of the Kimberly-Clark Work Plan for the second interim action (Aspect 2019) and in coordination with Kimberly-Clark, who is implementing the Interim Action.

Large chunks of concrete were present from 1.5 to 2 feet bgs at locations TP-2 and TP-4, and shell fragments and wood debris were noted in the 4- to 6-foot intervals at these locations. The concrete fragments in the swale are construction debris, and their origin is unknown to the City.

At all locations, a geotextile fabric was present approximately 6 inches beneath a layer of quarry spalls.

No evidence of chemical impacts (e.g., odor, sheen) were observed in any of the soil samples.

Photographs of the test pit excavations are presented in Attachment 1.

Analytical Results

The soil data were compared to the screening levels included in Table 1 of the SAP. The screening levels consist of Model Toxic Control Act (MTCA) Method A Industrial cleanup levels or the unsaturated industrial land use screening level presented in Aspect Consulting's Remedial Investigation Data Report for the Kimberly-Clark Mill Site (Aspect 2014).

Although there were some detections for TPH and cPAH, there were no exceedances at any of the sample locations. Metals were detected in every sample, with elevations of the screening levels for select metals at each sample location. The metal exceedances at each sample location are shown in Figure 1.

Metals with screening level exceedances include arsenic, copper, nickel, and zinc. Each of these metals have screening levels that are based on background concentrations. The background values are specific to Puget Sound and are from the Washington State Department of Ecology's (Ecology's) 1994 *Natural Background Soil Metals Concentrations in Washington State,* with the

exception of arsenic; for arsenic, MTCA established 20 milligrams per kilogram (mg/kg) as background (Washington Administrative Code 173-340-900 Table 740-1). In summary, results at each location are as follows:

- At TP-1, the nickel concentration was only 49 mg/kg in the 0- to 2-foot interval, slightly greater than the screening level of 48 mg/kg.
- TP-2 exceedances include arsenic, copper, nickel, and zinc in the top 4 feet. The 4- to 6-foot interval at TP-2 bounded the impacted soil with no metal exceedances.
- TP-3 exceedances include copper and zinc in the 0- to 2-foot interval and copper, nickel, and zinc in the 4- to 6-foot interval. The 2- to 4-foot interval of TP-3 had no exceedances.
- At TP-4, copper and zinc exceedances were only within the top 2 feet. The impacted soil at TP-4 is bounded by the 2- to 6-foot interval, which had no exceedances.

DATA ASSURANCE/QUALITY REVIEW AND ENVIRONMENTAL INFORMATION MANAGEMENT SYSTEM SUBMITTAL

A Compliance Screening (Stages 1 & 2A) data quality review was performed on TPH, VOCs, SVOCs, and metals data resulting from laboratory analysis. The analytical data were validated in accordance with USEPA's *National Functional Guidelines for Inorganic Superfund Methods Data Review* (USEPA 2017a) and/or *National Functional Guidelines for Organic Superfund Data Review* (USEPA 2017b). A total of 11 soil and 2 quality control water samples were submitted in two sample delivery groups (SDGs). SDG 19J0091 was submitted to Analytical Resources, Inc., in Tukwila, Washington, for chemical analysis by NWTPH-Dx, USEPA 8260C, and USEPA 8270D. SDG 54676 was submitted to City of Everett Environmental Laboratory, in Everett, Washington, for chemical analysis by USEPA 6020B and USEPA 7471. For all SDGs, the analytical holding times were met, and the method blanks had no detections greater than the reporting limits. The matrix spike (MS), MS duplicate (MSD), laboratory control sample (LCS), LCS duplicates (LCSD), and surrogate recoveries, MS/MSD, and LCS/LCSD relative percent differences all met USEPA requirements. Data are determined to be of acceptable quality for use as reported by the laboratory, with some laboratory qualifiers being updated to conform to the final qualifiers used for data table reporting and database storage.

All data will be submitted to Ecology's Environmental Information Management (EIM) system in coordination with the Ecology Project Manager for the Kimberly-Clark Site, Andy Kallus.

This information has been provided to Kimberly-Clark for their inclusion in the Remedial Investigation/Feasibility Study.

REFERENCES

Aspect Consulting (Aspect). 2014. *Remedial Investigation Data Report, Kimberly-Clark Worldwide Site Upland Area.* 29 September.

_____. 2019. *Work Plan for Second Interim Action, Kimberly-Clark Worldwide Site Upland Area, Everett, Washington.* 30 January.

Floyd|Snider. 2019. *Swale Sampling and Analysis Plan Memorandum.* To Mark Sadler, City of Everett, from Kate Snider and Erin Murray, Floyd|Snider. 12 September.

U.S. Environmental Protection Agency (USEPA). 2017a. *National Functional Guidelines for Inorganic Superfund Methods Data Review.* Prepared by the Office of Superfund Remediation and Technology Innovation. EPA-540-R-2017-001/OLEM 9355.0-135. January.

_____. 2017b. *National Functional Guidelines for Organic Superfund Methods Data Review.* Prepared by the Office of Superfund Remediation and Technology Innovation. EPA-540-R-2017-002/OLEM 9355.0-136. January.

LIST OF ATTACHMENTS

Table 1	Soil Analytical Results for Swale Samples on Utility Property
Figure 1	Swale Test Pit Exceedances
Attachment 1	Photograph Log

Table

Table 1
Soil Analytical Results for Swale Samples on Utility Property

Location				TP-1	TP-2			TP-3				TP-4		
Sample ID				TP-1-0-2FT	TP-2-0-2FT	TP-2-2-4FT	TP-2-4-6FT	TP-3-0-2FT	TP-3-2-4FT	TP-3-4-6FT	TP-3X-4-6FT	TP-4-0-2FT	TP-4-2-4FT	TP-4-4-6FT
Depth (feet bgs)				0–2	0–2	2–4	4–6	0–2	2–4	4–6	4–6	0–2	2–4	4–6
Sample Date				10/03/2019	10/03/2019	10/03/2019	10/03/2019	10/03/2019	10/03/2019	10/03/2019	10/03/2019	10/03/2019	10/03/2019	10/03/2019
Analytes	CAS No.	Units	Applicable Industrial Soil Screening Level [1]											
Metals														
Antimony	7440-36-0	mg/kg	1,400	0.25 U	1.3	0.78 JQ	0.25 U	0.99 JQ	0.25 U	0.25 U	0.25 U	0.47 JQ	0.25 U	0.25 U
Arsenic	7440-38-2	mg/kg	20 [2]	3.6	**27**	8.3	5.8	20	6.1	10	11	12	6.8	7.1
Copper	7440-50-8	mg/kg	36 [2]	24	**51**	**44**	27	**38**	26	**55**	**58**	**50**	29	29
Lead	7439-92-1	mg/kg	1,000	6.1	50	130	7.2	32	4.2	8.4	10	40	5.7	10
Mercury	7439-97-6	mg/kg	0.1 [3]	0.046	0.071	0.043	0.056	0.06	0.035	0.081	0.082	0.071	0.043	0.044
Nickel	7440-02-0	mg/kg	48 [2]	**49**	47	**55**	44	36	41	**58**	**60**	44	36	38
Zinc	7440-66-6	mg/kg	85 [2]	50	**300**	**630**	59	**150**	64	81	85	**160**	54	67
Carcinogenic Polycyclic Aromatic Hydrocarbons (cPAHs)														
Benzo(a)anthracene	56-55-3	mg/kg	--	0.067 U	0.02 JQ	0.067	0.067 U	0.023 JQ	0.067 U	0.067 U	0.067 U	0.068	0.067 U	0.05 JQ
Chrysene	218-01-9	mg/kg	--	0.067 U	0.041 JQ	0.078	0.067 U	0.041 JQ	0.067 U	0.067 U	0.067 U	0.09	0.067 U	0.06 JQ
Total benzofluoranthenes	56832-73-6	mg/kg	--	0.036 JQ	0.078	0.11	0.067 U	0.061 JQ	0.067 U	0.067 U	0.067 U	0.2	0.067 U	0.093
Benzo(a)pyrene	50-32-8	mg/kg	--	0.067 U	0.024 JQ	0.06 JQ	0.089	0.023 JQ	0.067 U	0.067 U	0.067 U	0.093	0.067 U	0.056 JQ
Indeno(1,2,3-c,d)pyrene	193-39-5	mg/kg	--	0.067 U	0.067 U	0.034 JQ	0.067 U	0.067 U	0.067 U	0.067 U	0.067 U	0.042 JQ	0.067 U	0.067 U
Dibenzo(a,h)anthracene	53-70-3	mg/kg	--	0.067 U	0.067 U	0.067 U	0.067 U	0.067 U	0.067 U	0.067 U	0.067 U	0.028 JQ	0.067 U	0.067 U
cPAH TEQ [4]	--	mg/kg	3.2 [3]	0.047 J	0.041 J	0.085 J	0.1	0.039 J	0.047 U	0.047 U	0.047 U	0.13 J	0.047 U	0.078 J
Total Petroleum Hydrocarbons (TPH)														
Diesel- and oil-range TPH	--	mg/kg	2,000	110 U	130 U	240	130 U	130 U	130 U	150 U	150 U	280	130 U	140 U

Notes:

-- Not applicable.

BOLD/RED Detected concentration exceeds the applicable screening level.

1 Values are MTCA Method A Industrial cleanup levels unless otherwise noted.

2 Values are specific to Puget Sound and are from Ecology's 1994 *Natural Background Soil Metals Concentrations in Washington State,* with the exception of arsenic; for arsenic, MTCA established 20 mg/kg as background (WAC 173-340-900 Table 740-1).

3 Value is the industrial screening level based on protection of groundwater to surface water.

4 Calculation of Total cPAH TEQ concentration is performed using the California Environmental Protection Agency 2005 toxic equivalent factors as presented in Table 708-2 of WAC 173-340-900. Calculation is performed using detected cPAH concentrations plus one-half the detection limit for cPAHs that were not detected.

Abbreviations:

bgs Below ground surface

CAS Chemical Abstracts Service

mg/kg Milligrams per kilogram

MTCA Model Toxics Control Act

TEQ Toxic equivalent

Qualifiers:

J Analyte was detected, concentration is considered to be an estimate.

JQ Analyte was detected between the method detection limit and reporting limit, concentration is considered to be an estimate.

U Analyte was not detected at the given reporting limit.

Figure

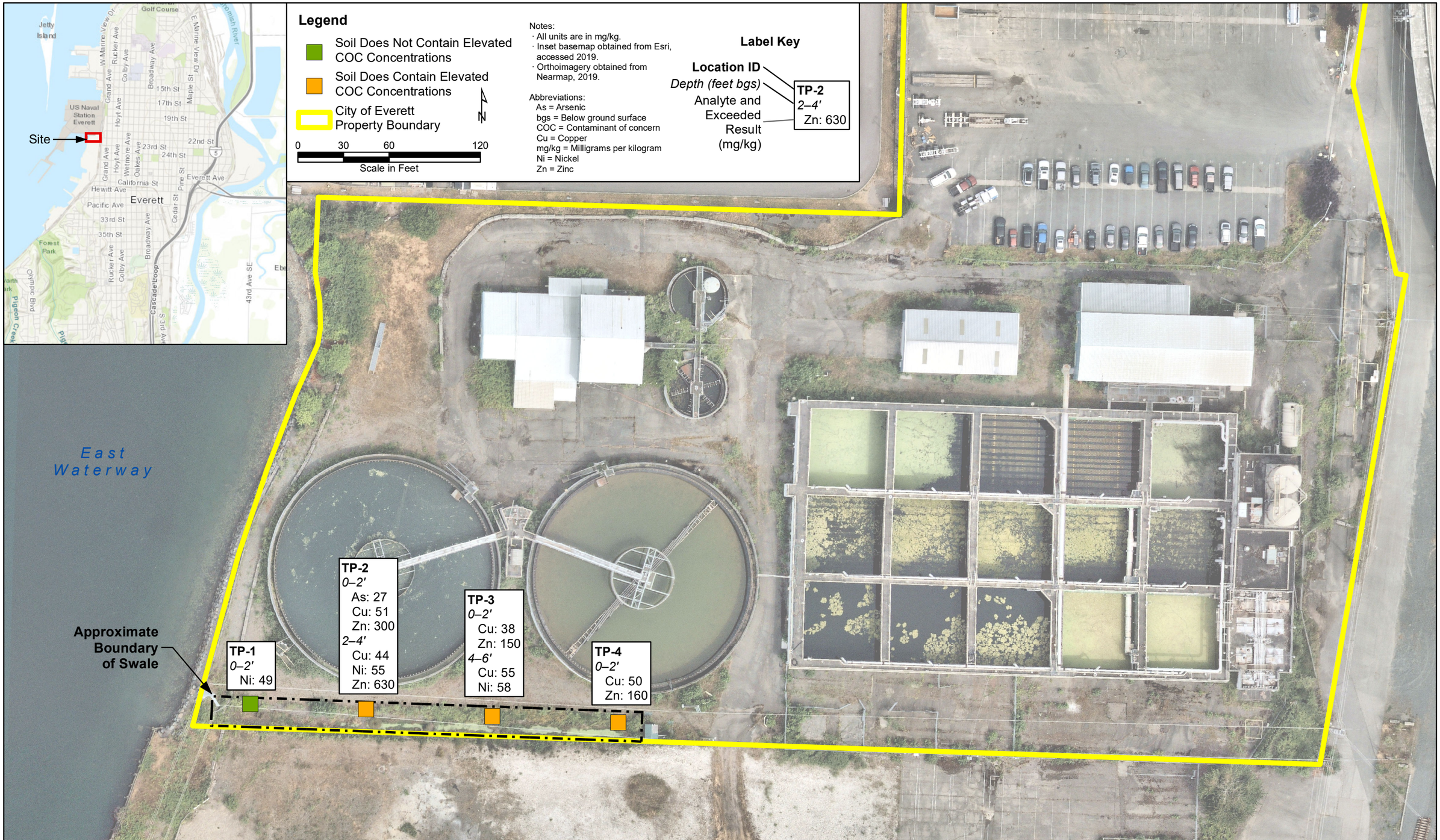

FLOYD | SNIDER
strategy ▪ science ▪ engineering

Utility Property Swale Test Pit Sampling Results Memorandum
City of Everett
Everett, Washington

Figure 1
Swale Test Pit Exceedances

I:\GIS\Projects\COEv_ENV1\MXD\Utility Property Swale Test Pit Sampling Results Memorandum\Figure 1 Swale Test Pit Exceedances.mxd
12/9/2019

Attachment 1
Photograph Log



Photograph 1. TP-1 following 0- to 2-foot interval sample; the 2- to 4-foot interval flooded as soon as it was excavated. Note quarry spalls on surface.



Photograph 2. TP-2 at total depth of 6 feet. Remains of broken east to west pipe visible at 3 feet bgs.



Photograph 3. Piece of pipe removed during excavation of TP-2.



Photograph 4. TP-3 at total depth of 6 feet.

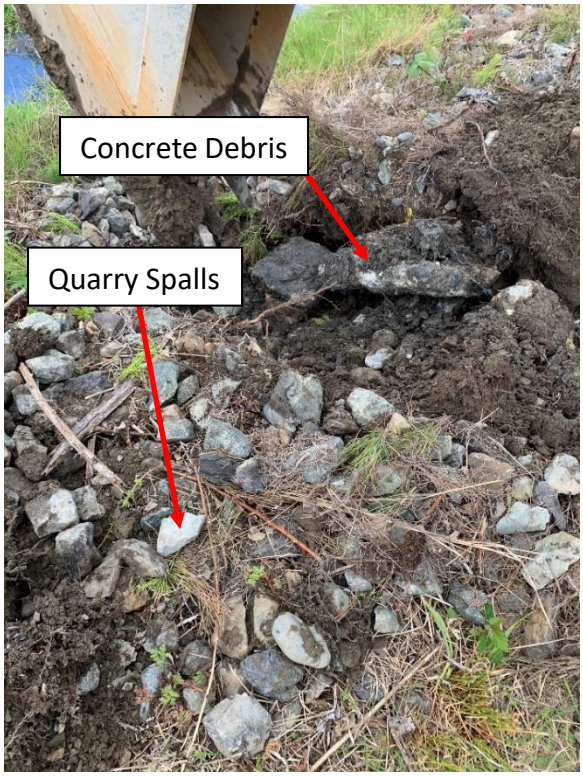

Photograph 5. Concrete debris and quarry spalls visible at 2 feet bgs at TP-4.

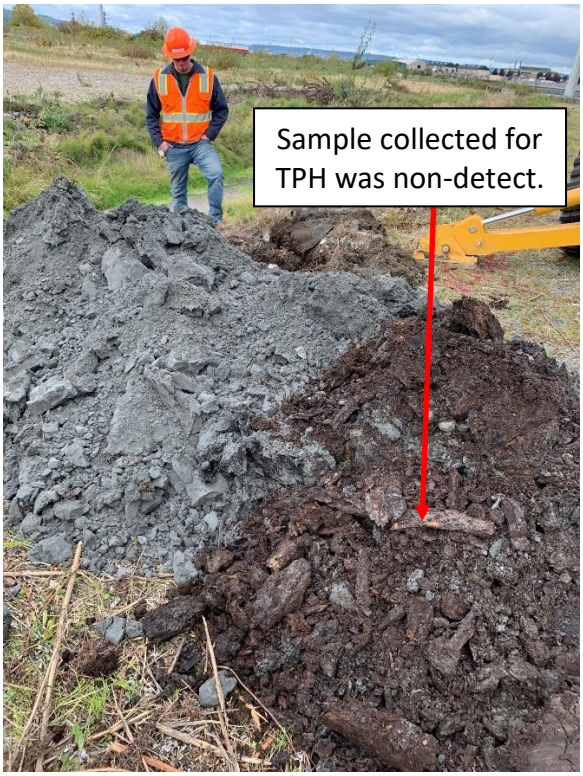

Photograph 6. Silty sand (2 to 4 feet bgs) and wood debris (4 to 6 feet bgs) removed during TP-4 excavation.

Utility Property Cleanup
Action Plan Memorandum

Attachment 2
Photographs of Decommissioned Pipe and Backfilled Swale



Photograph 1. Drainage pipe removed during swale backfilling in December 2020.



Photograph 2. Swale backfilled with clean imported material in December 2020, looking west.



Photograph 3. Temporary earthen berm constructed in December 2020 to separate drainage between the Utility Property and the Kimberly-Clark Worldwide, Inc., Site, looking east.

REMEDIAL INVESTIGATION AND FEASIBILITY STUDY

Kimberly-Clark Worldwide Site Upland Area, Everett, Washington

Appendices E through J

Prepared for: Port of Everett

Project No. AS190583A-08 • May 21, 2025 • Final

Aspect
A Geosyntec Company

earth + water

APPENDIX E

Background Arsenic in Groundwater

MEMORANDUM

Project No. 190583-B

August 23, 2021

To: Andy Kallus, Washington State Department of Ecology

cc: Erik Gerking, Port of Everett and Mike Brose, Kimberly-Clark

From:

Carla E. Brock, LHG
Sr. Associate Geologist
cbrock@aspectconsulting.com

Steve Germiat, LHG
Principal Hydrogeologist
sgermiat@aspectconsulting.com

Re: **Background Arsenic in Groundwater – K-C Worldwide Site Upland Area**

This memorandum documents our determination of a natural background concentration of arsenic in groundwater at the Kimberly-Clark (K-C) Worldwide Site Upland Area (Site). The Model Toxics Control Act cleanup regulation (MTCA; Chapter 173-340 of the Washington Administrative Code [WAC 173-340]) requires that cleanup levels not be set at levels below natural background concentrations (WAC 173-340-720[7][c]). The evaluation was completed to define a natural background concentration of arsenic to select an appropriate cleanup level for arsenic in groundwater at the Site.

We calculated a background groundwater concentration for arsenic at the Site using data and procedures utilized by the Washington State Department of Ecology (Ecology) for the statewide arsenic background study (Ecology, 2021[1]) in accordance with the MTCA methods for defining background concentrations (WAC 173-340-709). The data was provided by Ecology, who also identified a subset of the data that can be considered representative of regional groundwater quality for the Everett waterfront area and is appropriate for use in evaluating Site background groundwater quality. Ecology obtained the data from the Washington Department of Health Drinking Water Division Sentry database for public water supply wells reported between 2003 and 2010. The data consists of an average arsenic concentration for each location with non-detect results included in the point averaging at a value of one-half (1/2) the reported detection limit. Attachment A includes a map showing the locations of wells included in this evaluation (displayed in yellow) (Figure A1), along with a raw summary of the data from those wells (Attachment A2).

[1] Washington State Department of Ecology, 2021, Draft Natural Background Groundwater Arsenic Concentrations in Washington State, Results of a Study, Toxics Cleanup Program, Ecology Publication No. 14-09-044, July 2021 Draft.

A total of 39 data points were identified in the Everett waterfront area for evaluation of background groundwater arsenic concentrations. The data was assigned a code of either "0", if the point-averaged data was comprised of all non-detect values, or "1", if the point-averaged data was a mix of non-detect and detected values or all detected values, consistent with Ecology's methodology for evaluating statewide arsenic in groundwater (Ecology, 2021).

The dataset was evaluated for potential outliers using ProUCL and two potential outliers were removed from the dataset. There are no potential outliers for the 1% significance level in the remaining dataset of 37 data points. The statistics on the uncensored (detect results only) log-transformed dataset indicates a mild skewness of 0.226 (kurtosis = -0.902) (Attachment B).

Since the dataset is partially censored (containing non-detect values), only the distribution of the detected portion of the dataset was used in the data distribution evaluation. The ProUCL Goodness of Fit Test Statistics indicate that the data appear lognormal at the 5% significance level (Attachment B).

The background threshold value (BTV) was calculated in ProUCL for a lognormal distribution, using the censored (non-detect) data at ½ the detection limit and a 90/90 upper tolerance level (UTL). ProUCL uses bootstrap methods and lognormal distribution-based equations on Kaplan Meier (KM) or regression on order statistics (ROS) methods to compute UTLs. Based on the mild skewness of the dataset, the ProUCL technical guidance recommends the use of KM estimates and bootstrap methods, which yield 90/90 UTL values of 9.07 and 8.8, respectively (Attachment A). Based on this, we propose that the background arsenic concentration for groundwater at the Site be established at 9 micrograms per liter (ug/l).

Limitations

Work for this project was performed for the Port of Everett (Client), and this memorandum was prepared in accordance with generally accepted professional practices for the nature and conditions of work completed in the same or similar localities, at the time the work was performed. This memorandum does not represent a legal opinion. No other warranty, expressed or implied, is made.

All reports prepared by Aspect Consulting for the Client apply only to the services described in the Agreement(s) with the Client. Any use or reuse by any party other than the Client is at the sole risk of that party, and without liability to Aspect Consulting. Aspect Consulting's original files/reports shall govern in the event of any dispute regarding the content of electronic documents furnished to others.

Attachments: Attachment A – Background Dataset
Figure A1 – Map Showing Well Locations
Attachment A2 – Raw Data
Attachment B – Statistics Backup

ATTACHMENT A

Background Dataset

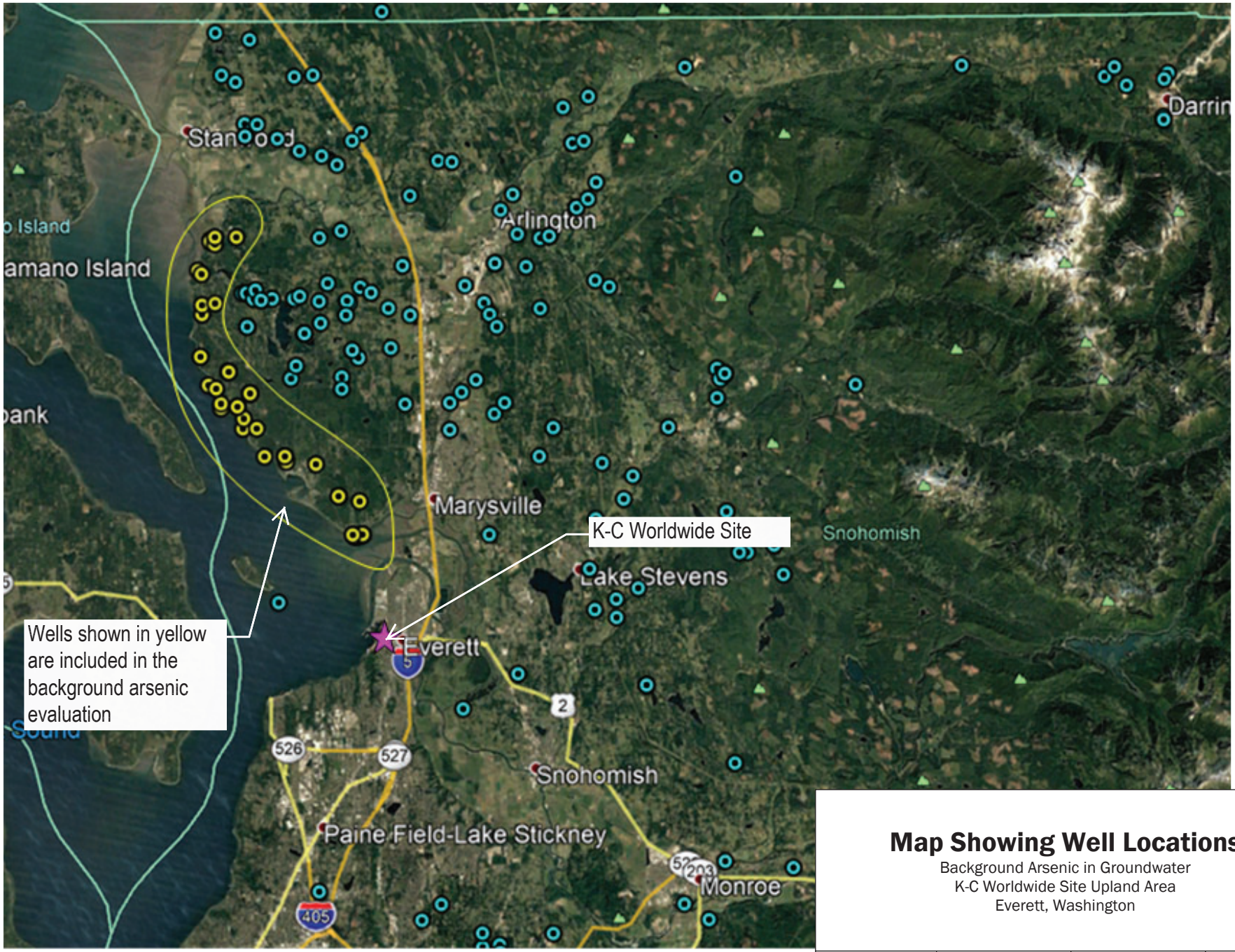

Map Showing Well Locations

Background Arsenic in Groundwater
K-C Worldwide Site Upland Area
Everett, Washington

Aspect Consulting	JUNE-2021	BY: CEB	FIGURE NO. A1
	PROJECT NO. 190583-B-03	REVISED BY: ---	

Attachment A2. Raw Data
Project No. 190583, K-C Worldwide Site Upland Area, Everett, Washington

Count	X_LON	Y_LAT	Water_System	Source	Date	Analyte	Well_Depth	WS_ID	SrcNum	Status	Source_Type	Well_Depth	Ecology_Region
1	-122.236710	48.032570	CHEALCO WATER SUPPLY	AGB905 WELL 1	26-May-09	ARSENIC	170	12270	1	Active	Ground Water - Well	170	Northwest
2	-122.238930	48.032902	GAYS WATER DISTRICT ASSOCIATION	AGB584 WELL 1	16-Jun-03	ARSENIC	172	27270	1	Active	Ground Water - Well	172	Northwest
3	-122.240000	48.033749	DORA WYAKES WATER (AKA ALGO W.S.)	WELL	13-Oct-06	ARSENIC	138	42990	1	Active	Ground Water - Well	138	Northwest
4	-122.233920	48.033749	MERIDIAN WATER SYSTEM	AAB196 WELL	14-Jun-04	ARSENIC	160	53820	1	Active	Ground Water - Well	160	Northwest
5	-122.232260	48.033749	PRIEST POINT BEACH WATER INC	AGB779 NORTH WELL 3	8-Sep-03	ARSENIC	146	69450	3	Active	Ground Water - Well Field Well	146	Northwest
6	-122.232260	48.033890	PRIEST POINT BEACH WATER INC	AGB780 SOUTH WELL 1	8-Sep-03	ARSENIC	146	69450	1	Active	Ground Water - Well Field Well	146	Northwest
7	-122.250470	48.053600	MARYSVILLE ESTATES-AQUA HILLS WS	WELL # 1 AGB793	18-Mar-03	ARSENIC	73	9404	1	Active	Ground Water - Well	73	Northwest
8	-122.251110	48.053600	MARYSVILLE ESTATES-AQUA HILLS WS	WELL #3 AGB799	3-Aug-06	ARSENIC	75	9404	5	Active	Ground Water - Well	75	Northwest
9	-122.268680	48.070061	TURK ROAD WATER ASSOCIATION	WELL	15-Aug-06	ARSENIC	100	65961	1	Active	Ground Water - Well	100	Northwest
10	-122.291940	48.071419	TULALIP WOOD WATER SYSTEM	AGB952 WELL 1	18-Jun-07	ARSENIC	241	89620	1	Active	Ground Water - Well	241	Northwest
11	-122.309000	48.074009	ARCADIA WATER SUPPLY	WELL #1	27-Aug-07	ARSENIC	274	2858	1	Active	Ground Water - Well	274	Northwest
12	-122.293000	48.074089	STOUT WATER SYSTEM	WELL #1	25-Oct-04	ARSENIC	55	5889	1	Active	Ground Water - Well	55	Northwest
13	-122.293000	48.074089	UPPER TULALIP HEIGHTS SYSTEM	WELL #1	12-Dec-05	ARSENIC	380	89530	1	Active	Ground Water - Well	380	Northwest
14	-122.326000	48.088322	TULALIP SHORES WATER SYSTEM	WELLFIELD 2 & 3	17-May-07	ARSENIC	137	89550	4	Active	Ground Water - Well Field	137	Northwest
15	-122.315000	48.088402	MILLER - GARITEE WATER SYSTEM	WELL #1	23-May-05	ARSENIC	228	19514	1	Active	Ground Water - Well	228	Northwest
16	-122.325180	48.093479	SPEE-BI-DAH	AGB546 WELL 1	20-Jul-04	ARSENIC	370	82950	1	Active	Ground Water - Well	370	Northwest
17	-122.343190	48.098839	TULARE BEACH ASSOCIATION	AGB954 WELL 1	24-Nov-03	ARSENIC	51	89650	1	Active	Ground Water - Well	51	Northwest
18	-122.330140	48.099628	VISTA GLEN WATER SYSTEM	AGB928 WELL 1	3-Jun-09	ARSENIC	378	64340	1	Active	Ground Water - Well	378	Northwest
19	-122.330200	48.099628	VISTA GLEN WATER SYSTEM	AGB929 WELL 2	26-May-04	ARSENIC	199	64340	2	Active	Ground Water - Well	199	Northwest
20	-122.343170	48.101219	TULARE BEACH ASSOCIATION	AGB955 WELL 2	24-Nov-03	ARSENIC	53	89650	2	Active	Ground Water - Well	53	Northwest
21	-122.320000	48.106461	PORT SUSAN CAMPING CLUB	WELL #1	31-Mar-03	ARSENIC	400	55349	1	Inactive	Ground Water - Well	400	Northwest
22	-122.320000	48.106461	PORT SUSAN CAMPING CLUB	WELL #2	3-Dec-03	ARSENIC	380	55349	2	Inactive	Ground Water - Well	380	Northwest
23	-122.320000	48.106461	PORT SUSAN CAMPING CLUB	WELL #3	3-Dec-03	ARSENIC	400	55349	3	Inactive	Ground Water - Well	400	Northwest
24	-122.346840	48.108929	SUNNY SHORES COMMUNITY CLUB	AGB960 WELL 1	21-May-07	ARSENIC	195	85330	1	Active	Ground Water - Well	195	Northwest
25	-122.353000	48.110748	C & B DEVELOPMENT	WELL #1	30-Oct-08	ARSENIC	480	32325	1	Active	Ground Water - Well	480	Northwest
26	-122.336670	48.117481	KYAK RIDGE WATER SYSTEM	WELL #1	16-Apr-04	ARSENIC	460	44381	1	Active	Ground Water - Well	460	Northwest
27	-122.337000	48.117790	SUNNY SHORES BLUFF COMM. WATER SYS	WELL #1	26-Mar-06	ARSENIC	480	46967	1	Active	Ground Water - Well	480	Northwest
28	-122.359000	48.125351	MCKEES EVERGREEN BEACH ASSOCIATION	WELLS #1 & 2	22-Dec-03	ARSENIC	64	24190	3	Active	Ground Water - Well Field	64	Northwest
29	-122.234540	48.050968	BATTLE CREEK GOLF COURSE	AGB932 WELL 1	2-Dec-04	ARSENIC	137	971	1	Active	Ground Water - Well	137	Northwest
30	-122.358000	48.147129	STRIEBY WATER SYSTEM	WELL # 1 AFB326	7-Feb-05	ARSENIC	204	AA474	1	Active	Ground Water - Well	204	Northwest
31	-122.357930	48.151951	KAYAK WELLS WATER SYSTEM	WELL #1	15-Jun-05	ARSENIC	608	4339	1	Active	Ground Water - Well	608	Northwest
32	-122.347630	48.152802	WARM BEACH WATER ASSOCIATION	WELL #4	22-Dec-03	ARSENIC	534	93000	4	Active	Ground Water - Well	534	Northwest
33	-122.358460	48.167950	WARM BEACH WATER ASSOCIATION	WELL #2 GROUND	22-Dec-03	ARSENIC	180	93000	1	Active	Ground Water - Well	180	Northwest
34	-122.361340	48.169731	WARM BEACH WATER ASSOCIATION	WELL #3R	28-Dec-04	ARSENIC	210	93000	6	Active	Ground Water - Well	210	Northwest
35	-122.348000	48.183281	WARM BEACH CONFERENCE GROUNDS	ABO921 Well #7	12-Dec-07	ARSENIC	335	92950	8	Active	Ground Water - Well Field Well	335	Northwest
36	-122.351760	48.184792	WARM BEACH CONFERENCE GROUNDS	AGB565 WELL 6	12-Dec-07	ARSENIC	337	92950	6	Active	Ground Water - Well Field Well	337	Northwest
37	-122.351580	48.185490	WARM BEACH CONFERENCE GROUNDS	AGB560 WELL 4	12-Dec-07	ARSENIC	349	92950	4	Active	Ground Water - Well Field Well	349	Northwest
38	-122.331000	48.186909	SHORT PLAT 80 WATER SYSTEM	WELL	15-Jan-04	ARSENIC	200	42921	1	Active	Ground Water - Well	200	Northwest
39	-122.348000	48.186951	WARM BEACH CONFERENCE GROUNDS	WELLS #4, #6 & #7	11-Oct-06	ARSENIC	335	92950	7	Active	Ground Water - Well Field	335	Northwest

Attachment A2. Raw Data

Project No. 190583, K-C Worldwide Site Upland Area, Everett, Washington

Count	County	Group	Qtr_Qtr	Township	Section	Range	Lat_Long_Method	Unique SystemSource	Average_As_ppb	Lab_Code	Number_of_NDs	Sample_Size
1	SNOHOMISH	A	SESE	30	36	04E	GPS	CHEALCO WATER SUPPLYAGB905 WELL 1	4.0		0	2
2	SNOHOMISH	A	NENW	29	1	04E	GPS	GAYS WATER DISTRICT ASSOCIATIONAGB584 WELL 1	3.3		0	3
3	SNOHOMISH	B	NWNE	29	1	04E	QtrQtrSe	DORA WYAKES WATER (AKA ALGO W.S.)WELL	5.1		0	1
4	SNOHOMISH	A	NWNE	29	1	04E	GPS	MERIDIAN WATER SYSTEMAAB196 WELL	7.0		0	2
5	SNOHOMISH	A	NENE	29	1	04E	GPS	PRIEST POINT BEACH WATER INCAGB779 NORTH WELL 3	6.0		0	1
6	SNOHOMISH	A	NENE	29	1	04E	GPS	PRIEST POINT BEACH WATER INCAGB780 SOUTH WELL 1	6.0		0	1
7	SNOHOMISH	A	SESE	30	26	04E	GPS	MARYSVILLE ESTATES-AQUA HILLS WSWELL # 1 AGB793	1.6		2	3
8	SNOHOMISH	A	SESE	30	26	04E	GPS	MARYSVILLE ESTATES-AQUA HILLS WSWELL #3 AGB799	3.0	U	1	1
9	SNOHOMISH	B	NESW	30	23	04E	GPS	TURK ROAD WATER ASSOCIATIONWELL	3.0	U	1	1
10	SNOHOMISH	A	NESE	30	21	04E	GPS	TULALIP WOOD WATER SYSTEMAGB952 WELL 1	20.8		0	8
11	SNOHOMISH	B	NWSE	30	21	04E	QtrQtrSe	ARCADIA WATER SUPPLYWELL #1	3.0	U	1	1
12	SNOHOMISH	B	NESE	30	21	04E	QtrQtrSe	STOUT WATER SYSTEMWELL #1	2.0	U	1	1
13	SNOHOMISH	B	NESW	30	21	04E	QtrQtrSe	UPPER TULALIP HEIGHTS SYSTEMWELL #1	2.0	U	1	1
14	SNOHOMISH	A	NWSE	30	17	04E	QTRQTRSE	TULALIP SHORES WATER SYSTEMWELLFIELD 2 & 3	1.2		2	3
15	SNOHOMISH	B	NESW	30	17	04E	QtrQtrSe	MILLER - GARITEE WATER SYSTEMWELL #1	2.0		0	1
16	SNOHOMISH	A	NENW	30	17	04E	GPS	SPEE-BI-DAHAGB546 WELL 1	1.8		1	2
17	SNOHOMISH	A	NWSE	30	7	04E	GPS	TULARE BEACH ASSOCIATIONAGB954 WELL 1	5.5		0	2
18	SNOHOMISH	A	NWSW	30	8	04E	GPS	VISTA GLEN WATER SYSTEMAGB928 WELL 1	4.1		1	3
19	SNOHOMISH	A	NWSW	30	8	04E	GPS	VISTA GLEN WATER SYSTEMAGB929 WELL 2	2.0	U	1	1
20	SNOHOMISH	A	NWSE	30	7	04E	GPS	TULARE BEACH ASSOCIATIONAGB955 WELL 2	22.0		0	2
21	SNOHOMISH	A	NENW	30	8	04E	QtrQtrSe	PORT SUSAN CAMPING CLUBWELL #1	6.0		0	3
22	SNOHOMISH	A	NENW	30	8	04E	QtrQtrSe	PORT SUSAN CAMPING CLUBWELL #2	5.9		0	4
23	SNOHOMISH	A	NENW	30	8	04E	QtrQtrSe	PORT SUSAN CAMPING CLUBWELL #3	4.9		0	4
24	SNOHOMISH	A	SESW	30	6	04E	GPS	SUNNY SHORES COMMUNITY CLUBAGB960 WELL 1	8.0		0	1
25	SNOHOMISH	B	SESE	30	6	04E	QtrQtrSe	C & B DEVELOPMENTWELL #1	11.5		0	2
26	SNOHOMISH	A	SENE	30	6	04E	GPS	KYAK RIDGE WATER SYSTEMWELL #1	6.5		0	2
27	SNOHOMISH	B	NESW	30	6	04E	QtrQtrSe	SUNNY SHORES BLUFF COMM. WATER SYSWELL #1	4.0		0	1
28	SNOHOMISH	A	SESE	31	36	03E	QTRQTRSE	MCKEES EVERGREEN BEACH ASSOCIATIONWELLS #1 & 2	10.0		0	2
29	SNOHOMISH	A	SESE	30	25	04E	GPS	BATTLE CREEK GOLF COURSEAGB932 WELL 1	6.0		0	1
30	SNOHOMISH	B	NESW	31	25	03E	QtrQtrSe	STRIEBY WATER SYSTEMWELL # 1 AFB326	5.0		0	1
31	SNOHOMISH	B	NENE	31	25	03E	GPS	KAYAK WELLS WATER SYSTEMWELL #1	2.0	U	1	1
32	SNOHOMISH	A	SESW	31	19	04E	GPS	WARM BEACH WATER ASSOCIATIONWELL #4	2.7	U	3	3
33	SNOHOMISH	A	SESE	31	13	03E	GPS	WARM BEACH WATER ASSOCIATIONWELL #2 GROUND	2.5	U	2	2
34	SNOHOMISH	A	SESE	31	13	03E	GPS	WARM BEACH WATER ASSOCIATIONWELL #3R	2.7	U	3	3
35	SNOHOMISH	A	SESW	31	7	04E	QtrQtrSe	WARM BEACH CONFERENCE GROUNDSABO921 Well #7	2.0	U	1	1
36	SNOHOMISH	A	SWSW	31	7	04E	GPS	WARM BEACH CONFERENCE GROUNDSAGB565 WELL 6	2.0	U	1	1
37	SNOHOMISH	A	NESW	31	7	04E	GPS	WARM BEACH CONFERENCE GROUNDSAGB560 WELL 4	2.0	U	1	1
38	SNOHOMISH	B	SWNW	31	8	04E	QtrQtrSe	SHORT PLAT 80 WATER SYSTEMWELL	3.0		0	1
39	SNOHOMISH	A	SWNE	31	7	04E	QTRQTRSE	WARM BEACH CONFERENCE GROUNDSWELLS #4, #6 & #7	2.0	U	1	1

ATTACHMENT B

Statistics Backup

	Goodness-of-Fit Test Statistics for Uncensored Full Data Sets without Non-Detects	
User Selected Options	**K-C Worldwide Upland Area Background GW Arsenic Evaluation**	
Date/Time of Computation	ProUCL 5.16/21/2021 1:51:30 PM	
From File	WorkSheet.xls	
Full Precision	OFF	
Confidence Coefficient	0.95	

Arsenic

Raw Statistics

Number of Valid Observations	37
Number of Missing Observations	2
Number of Distinct Observations	21
Minimum	1.2
Maximum	11.5
Mean of Raw Data	4.089
Standard Deviation of Raw Data	2.43
Khat	3.326
Theta hat	1.23
Kstar	3.074
Theta star	1.33
Mean of Log Transformed Data	1.251
Standard Deviation of Log Transformed Data	0.565

Normal GOF Test Results

Correlation Coefficient R	0.932
Shapiro Wilk Test Statistic	0.868
Shapiro Wilk Critical (0.05) Value	0.936
Approximate Shapiro Wilk P Value	2.6348E-4
Lilliefors Test Statistic	0.186
Lilliefors Critical (0.05) Value	0.144

Data not Normal at (0.05) Significance Level

Gamma GOF Test Results

Correlation Coefficient R	0.984
A-D Test Statistic	0.961
A-D Critical (0.05) Value	0.754
K-S Test Statistic	0.159
K-S Critical(0.05) Value	0.146

Data not Gamma Distributed at (0.05) Significance Level

Lognormal GOF Test Results

Correlation Coefficient R	0.977
Shapiro Wilk Test Statistic	0.945
Shapiro Wilk Critical (0.05) Value	0.936
Approximate Shapiro Wilk P Value	0.0886
Lilliefors Test Statistic	0.162
Lilliefors Critical (0.05) Value	0.144

Data appear Approximate_Lognormal at (0.05) Significance Level

1				Lognormal Background Statistics for Data Sets with Non-Detects								
2			User Selected Options	K-C Worldwide Upland Area Background GW Arsenic Evaluation								
3			Date/Time of Computation	ProUCL 5.16/21/2021 3:08:45 PM								
4			From File	WorkSheet.xls								
5			Full Precision	OFF								
6			Confidence Coefficient	90%								
7			Coverage	90%								
8			Different or Future K Observations	1								
9			Number of Bootstrap Operations	2000								
10												
11	Arsenic											
12												
13						General Statistics						
14					Total Number of Observations	37			Number of Distinct Observations	21		
15					Number of Missing Observations	2						
16					Number of Detects	23			Number of Non-Detects	14		
17					Number of Distinct Detects	19			Number of Distinct Non-Detects	4		
18					Minimum Detect	1.2			Minimum Non-Detect	2		
19					Maximum Detect	11.5			Maximum Non-Detect	3		
20					Variance Detected	6.455			Percent Non-Detects	37.84%		
21					Mean Detected	5.148			SD Detected	2.541		
22					Mean of Detected Logged Data	1.501			SD of Detected Logged Data	0.575		
23												
24						Critical Values for Background Threshold Values (BTVs)							
25					Tolerance Factor K (For UTL)	1.602			d2max (for USL)	2.652		
26												
27						Lognormal GOF Test on Detected Observations Only							
28					Shapiro Wilk Test Statistic	0.93			Shapiro Wilk GOF Test			
29					5% Shapiro Wilk Critical Value	0.914			Detected Data appear Lognormal at 5% Significance Level			
30					Lilliefors Test Statistic	0.17			Lilliefors GOF Test			
31					5% Lilliefors Critical Value	0.18			Detected Data appear Lognormal at 5% Significance Level			
32						Detected Data appear Lognormal at 5% Significance Level						
33												
34						Kaplan Meier (KM) Background Statistics Assuming Normal Distribution						
35					Mean	3.786			SD	2.628		
36					90% UTL90% Coverage	7.998			90% KM UPL (t)	7.264		
37					90% KM Chebyshev UPL	11.78			90% KM Percentile (z)	7.155		
38					95% KM Percentile (z)	8.11			99% KM Percentile (z)	9.901		
39					90% KM USL	10.76						
40												
41						Background Lognormal ROS Statistics Assuming Lognormal Distribution Using Imputed Non-Detects						
42					Mean in Original Scale	3.869			Mean in Log Scale	1.134		
43					SD in Original Scale	2.606			SD in Log Scale	0.679		
44					90% UTL90% Coverage	9.231			90% BCA UTL90% Coverage	8.2		
45					90% Bootstrap (%) UTL90% Coverage	8.8			90% UPL (t)	7.636		
46					90% Percentile (z)	7.423			95% Percentile (z)	9.501		
47					99% Percentile (z)	15.09			90% USL	18.83		
48												
49						Statistics using KM estimates on Logged Data and Assuming Lognormal Distribution						
50					KM Mean of Logged Data	1.093			90% KM UTL (Lognormal)90% Coverage	9.07		
51					KM SD of Logged Data	0.694			90% KM UPL (Lognormal)	7.472		
52					90% KM Percentile Lognormal (z)	7.26			90% KM USL (Lognormal)	18.79		
53												

	A	B	C	D	E	F	G	H	I	J	K	L
54	**Background DL/2 Statistics Assuming Lognormal Distribution**											
55					Mean in Original Scale	3.645				Mean in Log Scale		0.988
56					SD in Original Scale	2.789				SD in Log Scale		0.811
57					90% UTL90% Coverage	9.855				90% UPL (t)		7.857
58					90% Percentile (z)	7.597				95% Percentile (z)		10.2
59					99% Percentile (z)	17.73				90% USL		23.1
60	**DL/2 is not a Recommended Method. DL/2 provided for comparisons and historical reasons.**											
61												
62	Note: The use of USL tends to yield a conservative estimate of BTV, especially when the sample size starts exceeding 20.											
63	Therefore, one may use USL to estimate a BTV only when the data set represents a background data set free of outliers											
64	and consists of observations collected from clean unimpacted locations.											
65	The use of USL tends to provide a balance between false positives and false negatives provided the data											
66	represents a background data set and when many onsite observations need to be compared with the BTV.											
67												

APPENDIX F

Derivation of Area-Specific Risk-Based TPH Soil Preliminary Cleanup Levels for Industrial Use Area

F. Derivation of Area-Specific Risk-Based TPH Soil Preliminary Cleanup Levels for Industrial Use Area

The Washington State Model Toxics Control Act (MTCA; Chapter 173-340 WAC) allows for establishing a standard Method B (unrestricted use) or standard Method C (industrial use) soil cleanup level for total petroleum hydrocarbons (TPH)—protective of human direct contact and groundwater—using analytical data from the Volatile Petroleum Hydrocarbon (VPH) and/or Extractable Petroleum Hydrocarbon (EPH) analysis conducted on site-specific soil samples [WAC 173-340-740(3)(b)(iii)(B)(III); WAC 173-340-745(5)(b)(iii)(B)(III)]. The EPH analysis quantifies concentrations of aromatic and aliphatic hydrocarbons typically in five carbon ranges covering the diesel and oil ranges (typically C8–C10, C10–C12, C12–C16, C16–C21, C21–C34). The VPH analysis quantifies concentrations of aromatic and/or aliphatic hydrocarbons typically in five carbon ranges covering the gasoline range (C5–C6, C6–C8, C8–C10) and light end of the diesel range (C10–C12, C12–C13). MTCA dictates that the VPH analysis be used for gasoline-range petroleum, and the EPH analysis be used for diesel-range and oil-range petroleum (WAC 173-340-900 Table 830-1). Because some carbon ranges overlap and are reported from both the VPH and EPH analyses, the higher detected concentration for each range reported from either analysis is used in this analysis (refer to tables in this appendix, where the lower-concentration values are shaded gray to denote not being used in the analysis). This includes using the higher values from the aromatic C12-13 range by the VPH method or the aromatic C12-16 range by the EPH method, in accordance with Ecology (2016). Other adjustments made to equivalent carbon fraction concentrations to avoid concentration double counting, in accordance with Ecology (2016), included subtracting xylenes concentration from the aromatic C8-10 concentration, subtracting naphthalene concentration from the aromatic C10-12 concentration, and subtracting total carcinogenic polycyclic aromatic hydrocarbons (cPAH) concentration from the aromatic C21-34 concentration.

As discussed in the main body of the RI/FS, the portion of the Upland Area, potentially excluding the Warehouse Subunit of Unit A, will remain in traditional industrial use (as a marine terminal); therefore, industrial soil cleanup levels apply and are calculated in this appendix. For TPH within the Warehouse Subunit of Unit A, where releases of multiple petroleum product types apparently occurred, Method A soil cleanup levels for unrestricted land use are applied, and that TPH is not addressed in this appendix.

To calculate risk-based soil TPH preliminary cleanup levels (PCLs) for industrial use, detected concentrations of the TPH fractions from the VPH/EPH analysis and associated detected volatile organic compounds (VOCs) and PAHs, including both cPAHs and naphthalene, are input into Ecology's MTCAtph workbook (http://www.ecy.wa.gov/programs/tcp/tools/toolmain.html). The MTCAtph software uses conservative default toxicity values for hydrocarbons in each carbon range to calculate acceptable TPH soil concentrations based on direct contact with the soil for industrial

exposure (adult worker lifetime occupational exposure; MTCA Method C). In accordance with MTCA (WAC 173-340-745(4)(b)(iii)(B)(III)), the MTCAtph calculations of acceptable direct-contact TPH concentrations account for dermal contact exposure in addition to soil ingestion, which is not considered for other chemicals. In accordance with Ecology policy, the TPH PCLs for soil direct contact are based on noncarcinogenic toxic effects. The direct-contact carcinogenic effects are addressed by compliance with soil PCLs for the individual carcinogens in the TPH mixture (e.g., benzene, cPAHs).

A different module of the MTCAtph workbook predicts dissolved-phase groundwater hydrocarbon concentrations from soil leaching to evaluate the soil-leaching-to-groundwater pathway. However, the soil-to-groundwater worksheet evaluates risks for drinking water exposure, which is not an exposure pathway considered for Upland Area groundwater. Therefore, the worksheet's predicted leachable concentrations of TPH were compared against the 500 micrograms per liter (µg/L) TPH groundwater screening level for marine protection (based on human health); the predicted leachable concentrations of naphthalene were compared against the 89 µg/L groundwater screening level for vapor intrusion (industrial use), which is also protective of the marine environment[1]; and the predicted leachable concentrations of total cPAHs, converted to the toxic equivalent concentration of benzo(a)pyrene (TEQ), per MTCA, were compared against the 0.015 µg/L groundwater screening level for marine protection. The average measured site-specific aquifer fractional organic carbon content (f_{oc}) of 0.0079 (0.79 percent) was used in the MTCAtph workbook, along with MTCA-default values for the rest of the hydrogeologic parameters.

Note that the MTCAtph workbook can assess direct-contact and groundwater-protection risks at higher or lower TPH concentrations than measured in the sample, assuming the same relative proportion of petroleum fractions (i.e., proportionally increasing or decreasing their concentrations for the calculations). The MTCAtph output sheets for the analysis of direct-contact and groundwater-protection scenarios for each sample are included as Attachment E-1 to this appendix.

In accordance with MTCA, soil PCLs for TPH also must not result in an accumulation of non-aqueous phase liquid (NAPL, aka "free product") on or in groundwater – i.e., the PCL must be at or below the residual saturation concentration for the specific petroleum product in its specific subsurface conditions. For all areas of residual TPH considered in this appendix, the soil contamination is below the water table (saturated conditions).

Note that, during the interim action, Bunker C oil NAPL was observed in the Bunker C above ground storage tank (AST) excavation area north of the Warehouse (see photographs 5 and 6 in the Interim Action Report; Aspect [2015a]). That soil was not sampled to quantify the TPH concentration prior to its removal, but that concentration would very likely have exceeded the maximum detected residual soil TPH concentrations in areas evaluated in this appendix. For example, at another Bunker C oil site (Georgia-Pacific West site in Bellingham), Aspect collected a pair of soil samples containing visible Bunker C oil free product and detected TPH concentrations of 88,000 and 97,000 milligrams per kilogram (mg/kg; Aspect, 2013d) – more than three times higher than the maximum detected residual TPH concentrations in areas evaluated in this appendix.

[1] Naphthalene groundwater screening level based on marine protection is 4,900 µg/L (Table 5-1).

Given the many decades since the petroleum releases occurred at the Site, the lack of free product accumulation on or in groundwater, and the lack of dissolved-phase hydrocarbons in groundwater[2] following completion of the interim actions, it is probable that the residual soil TPH concentrations remaining in each area are below residual saturation concentrations in accordance with WAC 173-340-747(10)(c)).

However, considering the different type/age/mixtures of petroleum releases and heterogeneous soil types within the Upland Area, Ecology estimated a single TPH soil concentration that represents a reasonably conservative residual saturation limit throughout the Upland Area. Based on literature values (API, 2000; USEPA, 1995), Ecology conservatively estimated a site-specific residual saturation limit as the soil TPH concentration equal to 10 percent of the air-filled soil porosity based on NAPL density values derived from the MTCAtph workbook for each of the 13 Upland Area soil samples with VPH/EPH data.[3] By this methodology, the median soil TPH concentration calculated for 10 percent of air-filled porosity for the 13 samples was 7,700 mg/kg, which is applied as the residual saturation concentration for all residual soil TPH within the Upland Area for purposes of this evaluation.

For each sample, the most stringent calculated value from the direct-contact (land-use-dependent) and leaching-to-groundwater pathways is determined. For areas with more than one soil sample with VPH/EPH analysis, the similarity of petroleum product between samples is evaluated based on histograms of the relative proportion of hydrocarbon fractions comprising the TPH concentration (from VPH/EPH data). Finally, for each area evaluated, the median of the most stringent values from samples representing the same petroleum product is calculated for that area, in accordance with Ecology (2016) guidance. The proposed soil TPH PCL for each area is then taken as the most stringent of the site-wide residual saturation limit and the area-specific concentrations protective of direct contact and leaching to groundwater.

Most but not all soil samples analyzed using EPH and/or VPH analytical methods were also analyzed for TPH using the NWTPH analytical methods. Notable differences occur in the TPH concentration as measured by the NWTPH methods versus by the VPH/EPH methods for each sample, largely because the NWTPH methods, even with use of silica gel cleanup, quantify polar non-hydrocarbon compounds. Figure E-1 illustrates the differences between concentrations of TPH (gasoline + diesel + oil ranges combined) measured by VPH/EPH methods vs by NWTPH methods for Upland Area soil samples evaluated in this appendix plus five samples collected within the Warehouse Subunit of Unit A[4]. As noted on the lower plot of that figure, the median TPH concentration reported from VPH/EPH methods was 57 percent of that reported from NWTPH methods for the eleven samples. Because of the substantial differences in TPH concentrations quantified by the two different analytical methods, this appendix presents the proposed soil TPH PCLs relative to the VPH/EPH analytical results (input data to the MTCAtph

[2] Lack of elevated dissolved-phase hydrocarbon concentrations is a very strong indicator that free product is not present.

[3] This included samples collected from beneath the warehouse that are no longer included in this evaluation.

[4] The five samples with varying product types collected from the Warehouse Subunit were not used for derivation of area-specific PCLs but are useful for this comparative assessment.

software), and relative to the NWTPH analytical results by incorporating the ratios of TPH measured by VPH/EPH methods to TPH measured by NWTPH methods for each sample. The calculated soil TPH PCL and analytical method therefore need to be matched for compliance monitoring.

For purposes of this appendix, the term "TPH" refers to the complete petroleum mixture including gasoline, diesel, and oil ranges, unless otherwise specifically qualified to be a specific range.

The following sections present the derivation of Method C soil PCLs for residual petroleum products in two specific areas of the Upland Area where residual TPH remains in place following the interim actions: the Bunker C Underground Storage Tanks (USTs) area of Unit B and the Hydraulic Barker area of Unit C. For each area, tables are included that present the soil sample data used in the evaluation along with a plot of the relative percentages of hydrocarbon fractions comprising the petroleum product. The tables also include, for each sample analyzed, the TPH concentrations calculated by the MTCAtph workbook to be protective for industrial soil direct contact and leaching to groundwater. Empirical groundwater data are incorporated with respect to determining soil concentrations protective of leaching dissolved-phase hydrocarbons to groundwater for each product type/area. The proposed soil TPH PCL for the petroleum product/area is then determined as the most stringent value protective of all exposure pathways, including the residual saturation (free product accumulation). At the end of this appendix, Table E-3 summarizes the calculated soil TPH PCLs for residual petroleum products in both areas evaluated.

F.1. Calculated Soil TPH PCLs for Unit B

F.1.1. Bunker C USTs 71, 72, 73 Interim Action Area

As described in the Interim Action Report (Aspect, 2015), the first interim action did not remove Bunker C fuel oil-contaminated soil located beneath monolithic concrete foundation elements on the north and south sides of the USTs 71, 72, 73 Area. Four samples of the residual impacted soils—BUST-B39 and BUST-S58 on the north wall and BUST-S16 and BUST-S17 on the south wall (see Figure 6-B2 in main body of this report)—were run for EPH analyses in addition to analyses for NWTPH-Dx (quantified as Bunker C) and PAHs. Table E-1 presents the NWTPH-Dx, EPH, and PAH data for the samples.

As illustrated by the histograms on Table E-1, the relative proportion of hydrocarbon fractions comprising the detected TPH are very similar in the four samples, indicating they are the same heavy oil product. The TPH concentrations measured by the EPH analysis range from 13 to 88 percent (median 21 percent) of the TPH concentrations measured by the NWTPH analysis. Detected total cPAH (TEQ) concentrations range from approximately 0.6 to 1.3 mg/kg in the four samples (Table E-1).

There are no other locations in this area with TPH concentrations greater than RI screening levels beyond the four samples analyzed for VPH/EPH.

The Bunker C USTs 71, 72, and 73 were removed from beneath the water table in this area in 1989, so petroleum releases (directly into groundwater) were at least 25 years old

and likely considerably older. No separate-phase NAPL was observed during drilling or in the completed monitoring wells within this area, and no mobile NAPL was observed at the open excavation cuts where the residual Bunker C-contaminated soil (up to 28,000 mg/kg TPH) was left in place beneath foundation elements. During the interim action, heavy petroleum sheen was observed when excavating in the area of the former UST saddles (see photographs 29 and 30 in Aspect [2015a]), but that water/sheen and the contaminated soil around it was subsequently removed.

F.1.1.1. Soil-to-Groundwater (Leachability) Pathway

The MTCAtph leaching analysis indicates that the Bunker C contamination in this area, even at its maximum theoretical concentration (100% NAPL; greater than 77,000 mg/kg), will not leach hydrocarbons to groundwater at concentrations of concern (Table E-1). Confirmational groundwater monitoring well UST71-MW-103 is positioned immediately downgradient (west) of the residual soil on the south edge of the interim action excavation, and well UST71-MW-104 is positioned immediately downgradient of the residual soil on the excavation's north edge. Wells UST71-MW-101 and UST71-MW-102 are positioned along the downgradient edge of the main excavation, with UST71-MW-101 being downgradient of UST71-MW-104 (well locations are depicted on Figure 6-B1 in main body of this report). More than sufficient time has elapsed for soil contamination in this area to migrate to groundwater, particularly since the UST releases occurred below the water table.

Results from the eight quarterly confirmational groundwater monitoring rounds conducted following interim action excavation are as follows:

- On the north end of the excavation, no groundwater TPH or PAH exceedances were detected in four rounds of monitoring[5] at well UST71-MW-104 positioned immediately downgradient of the residual soil containing highest TPH and cPAH concentrations in this area (up to 28,000 mg/kg TPH measured by NWTPH, and up to 1.3 mg/kg total cPAH (TEQ)).
- Downgradient of UST71-MW-104, no TPH or PAH exceedances were detected at well UST71-MW-101 in eight rounds of monitoring.
- At well UST71-MW-102, not directly downgradient from either of the areas of residual soil contamination, oil-range TPH exceedances (up to 2,200 µg/L) were detected in four of seven samples collected (inadequate water was available in this well to collect a sample during the August 2016 event). As discussed in the RI, this is the one well on Site where oil-range TPH is detected in groundwater. Total cPAH (TEQ) exceedances were detected in the first two samples collected (0.04 and 0.14 µg/L), but not in the last five samples collected from this well. No naphthalene exceedances were detected during the seven monitoring events.
- On the south end of the excavation, no groundwater TPH exceedances were detected at well UST71-MW-103 positioned immediately downgradient of the residual soil containing TPH concentrations up to 8,400 mg/kg. However, in each

[5] Ecology agreed that well UST71-MW-104 did not require sampling during confirmation monitoring rounds 5 through 8.

of the eight monitoring rounds, well UST71-MW-103 had detected exceedances for total cPAH (TEQ) (0.04 to 0.23 µg/L). A naphthalene exceedance (110 µg/L) was also detected in this well during the last of the eight sampling events (August 2016). The detected PAH concentrations show no clear trends over the eight quarters.

- Note that the two wells with detected TPH and/or PAH exceedances in groundwater, UST71-MW-102 and -103, hit refusal on buried structure during drilling, so the well screens could not be placed to the depth planned and they thus intercept a limited saturated thickness. The wells recovered slowly and could not be developed to the degree desired, and consequently their groundwater samples have been more turbid than observed in the other wells in this area. Over the complete period of monitoring, wells UST71-MW-102 and -103 had the average turbidities of 47 and 95 NTU, respectively, compared to 8 and 7 NTU in wells UST71-MW-101 and -104, respectively, suggesting turbidity bias as a cause for the detected groundwater exceedances in wells UST71-MW-102 and -103. In accordance with the *Confirmational Groundwater Monitoring Plan* (Aspect, 2014), groundwater samples with field-measured turbidity greater than 25 NTU were centrifuged by the laboratory prior to PAH analysis.

There is poor correlation between locations with groundwater TPH/PAH exceedances and locations of the highest residual petroleum concentrations in soil beneath foundation elements. The combined MTCAtph modeling and empirical groundwater data indicate that residual soil petroleum concentrations left in place on the north side of the excavation are protective of leachability to groundwater. In contrast, the empirical groundwater data indicate consistent PAH exceedances and inconsistent TPH exceedances along the southern portion of the excavation, despite MTCAtph modeling indicating the residual soil concentrations there (lower than occur on north side of excavation) are protective of leachability. That discrepancy, and the fact that the two wells with groundwater exceedances in this area could not be properly developed and have turbid groundwater samples, suggests that the groundwater exceedances are attributable to non-representative samples rather than leaching from the residual soils.

The combined weight of evidence from monitoring of the four wells and the MTCAtph leaching predictions suggests that maximum existing TPH soil concentrations in this area are protective of groundwater.

Most importantly, downgradient shoreline wells (UST 70 wells and REC3-MW-1R) have had no groundwater TPH or PAH exceedances, indicating there has not been groundwater transport of hydrocarbons from the UST 71 excavation area to the shoreline during the minimum 25 years since the petroleum releases occurred.

F.1.1.2. Soil Direct-Contact Exposure Pathway

For an industrial land use, the MTCAtph analysis calculates soil concentrations ranging from 50,000 to 57,000 mg/kg for the four samples, with a median of 55,000 mg/kg as measured by VPH/EPH (270,000 mg/kg measured by NWTPH) to be protective for soil direct contact (Table E-1). All existing soil TPH concentrations in this area are less than

that concentration and are therefore protective of direct contact under a continued industrial use.

F.1.1.3. Proposed Soil TPH PCLs for USTs 71, 72, 73 Area

Incorporating the collective area-specific data outlined above, the residual soil TPH concentrations throughout the area are protective of direct contact. The weight of evidence—considering MTCAtph leaching predictions, lack of groundwater exceedances adjacent to the highest residual soil TPH concentrations, and groundwater exceedances limited to turbid groundwater samples collected adjacent to lower-concentration residual soils—indicates that residual soils throughout the area are protective of leaching to groundwater. However, the site-wide residual saturation limit is more stringent than concentrations protective of direct contact and leaching. Therefore, the soil TPH PCL for the Bunker C UST Area is set equal to 7,700 mg/kg measured by NWTPH methods (Tables E-1 and E-3).

F.2. Calculated Soil TPH PCLs for Unit C

F.2.1. Hydraulic Barker Building Interim Action Area

Prior to the second interim action in 2020, the soil sample from the Hydraulic Barker Building area with the highest detected TPH concentration (7,710 mg/kg in the 12-foot soil sample from HB-MW-1R) was run for EPH analysis. The TPH concentration measured by the EPH analysis (4,201 mg/kg) was 54 percent of the TPH concentration measured by the NWTPH-Dx analysis, and the detected total cPAH (TEQ) concentration was 0.42 mg/kg in the sample. The predominance of diesel-range hydrocarbons (more than 60 percent aliphatic hydrocarbons in the C16-C21 range) and relatively low cPAH concentrations indicate a diesel-range petroleum product in this area. Table E-2 presents the NWTPH-Dx, EPH, and PAH data for the sample.

During the second interim action, soils represented by the HB-MW-1R sample were excavated and landfilled to address elevated PCB concentrations in groundwater from HB-MW-1R. In accordance with the Work Plan for Second Interim Action (Aspect, 2019), final excavation verification samples were analyzed to document residual concentrations of TPH and metals for purposes of this RI/FS, but the interim action excavation was not expanded based on the record sample results. As described in the Completion Report for the Second Interim Action (Aspect, 2021), 17 out of 18 record samples had TPH (D+O) concentrations below 2,000 mg/kg; however, one sample collected from the excavation bottom (HBX-B-02) contained a TPH (D+O) concentration of 19,100 mg/kg using the NWTPH-Dx analysis. The HBX-B-02 sample was collected within approximately 2 feet of the HB-MW-1R location. Mild petroleum sheen was observed on water in the Hydraulic Barker excavation while it was being advanced and dewatered, but no sheen was observed in the HBX-B-02 sample location, and no free product accumulation was observed anywhere in the excavation. No cPAHs and no PCBs were detected in the HBX-B-02 soil sample (Aspect, 2021).

Operations of the Hydraulic Barker Building ceased by 1982, when the Log Pond was filled and the mill transitioned from importing and de-barking/chipping logs to importing wood chips from K-C's Riverside facility on the east side of Everett. Therefore,

petroleum release(s) in this area occurred more than 35 years ago. Based on the age of petroleum release(s), there is a high level of confidence that NAPL in this area has migrated in the subsurface as far as it is going to as a separate mobile phase. Consistent with that, no accumulation of free product was observed prior to the second interim action during drilling of the six soil borings and two monitoring well borings in this area, nor in the completed monitoring well HB-MW-1R in this area (even with soil within the well's screened interval depth containing 7,710 mg/kg TPH), nor in the 2020 interim excavation.

F.2.1.1. Soil-to-Groundwater (Leachability) Pathway

The MTCAtph leaching model indicates that the TPH contamination in this area, even at its maximum theoretical concentration (100% NAPL; greater than 72,000 mg/kg), will not leach hydrocarbons to groundwater at concentrations of concern (Table E-2). Consistent with the MTCAtph model predictions, groundwater samples collected prior to the second interim action from the HB-MW-1R well demonstrate no exceedances of TPH or PAHs in groundwater with the highest-concentration soil, despite the fact that the highest-TPH-concentration soil is located within the depth interval of the monitoring well screen. Likewise, TPH was not detected in the groundwater sample collected from adjacent original well HB-MW-1, which had 1,440 mg/kg soil TPH within its screened interval. As stated above, more than sufficient time has elapsed for soil contamination in this area to migrate to groundwater, particularly since the soil contamination is beneath groundwater.

The combined weight of evidence from the empirical groundwater data and the MTCAtph leaching predictions suggests that maximum existing TPH soil concentrations in this area are protective of groundwater.

F.2.1.2. Soil Direct-Contact Exposure Pathway

For an industrial land use, the MTCAtph analysis calculates soil concentrations of 170,000 mg/kg as measured by EPH, and 310,000 mg/kg as measured by NWTPH-Dx, to be protective for soil direct contact (Table E-2). All remaining soil TPH concentrations in this area are less than that concentration and are therefore protective of direct contact under a continued industrial use.

F.2.1.3. Proposed Soil TPH PCLs for Hydraulic Barker Building Area

Incorporating the collective area-specific data outlined above, the residual soil TPH concentrations throughout the area are protective of direct contact and leaching to groundwater. However, the site-wide residual saturation limit is more stringent than concentrations protective of direct contact and leaching. Therefore, the soil TPH PCL for the Hydraulic Barker Building Area is set equal to 7,700 mg/kg measured by NWTPH methods (Tables E-1 and E-3).

V:\190583 Upland Cleanup Support_K-C Wrldwd Site\Deliverables\RIFS\Final RIFS Report\To Print\for CD\App F - MTCA TPH_rev2024\App F Soil TPH CULs_2024_09.docx

APPENDIX F
TABLES

Table F-1. Derivation of Risk-Based TPH Soil PCLs for Bunker C UST Area (Unit B)

Project No. AS190583, K-C Worldwide Site Upland Area, Everett, Washington

Chemical Name	BUST-S16 (8 ft)	BUST-S17 (8 ft)	BUST-B39 (12 ft)	BUST-S58 (12 ft)
Total Petroleum Hydrocarbons (TPH)				
Bunker C in mg/kg (NWTPH)	8,400	6,400	17,000	28,000
Extractable Petroleum Hydrocarbons				
Aliphatics C8-C10 (EPH) in mg/kg	6.34 U	6.92	1.04 J	1.18 J
Aliphatics C10-C12 (EPH) in mg/kg	32.2	73.4	14.6	19.9
Aliphatics C12-C16 (EPH) in mg/kg	256	756	385	507
Aliphatics C16-C21 (EPH) in mg/kg	352	1,050	666	892
Aliphatics C21-C34 (EPH) in mg/kg	514	1,450	753	1,050
Aromatics C8-C10 (EPH) in mg/kg	6.34 U	5.53 U	2.85 J	3.76 J
Aromatics C10-C12 (EPH) in mg/kg	6.34 U	5.53 U	5.63 U	5.64 U
Aromatics C12-C16 (EPH) in mg/kg	73.9	161	10.4	24.4
Aromatics C16-C21 (EPH) in mg/kg	388	870	422	583
Aromatics C21-C34 (EPH) in mg/kg	573	1,250	543	662
Total Volatile and Extractable Petroleum Hydrocarbons				
Total EPHs and VPHs in mg/kg	2,208	5,628	2,804	3,749
TPH by VPH+EPH as % of TPH by NWTPH	26%	88%	16%	13%
Polycyclic Aromatic Hydrocarbons (PAHs)				
Acenaphthene in mg/kg	0.76	0.77	0.2 U	0.5 U
Acenaphthylene in mg/kg	0.1 U	0.1 U	0.2 U	0.5 U
Anthracene in mg/kg	1.2	1.2	0.2 U	1.8
Benzo(g,h,i)perylene in mg/kg	0.28	0.25	0.28	0.52
Fluoranthene in mg/kg	0.36	0.38	0.24	0.86
Fluorene in mg/kg	0.59	0.54	0.2 U	0.5 U
Phenanthrene in mg/kg	1.8	1.9	0.2 U	3
Pyrene in mg/kg	2.2	2.1	1.7	5.9
Naphthalene in mg/kg	0.12	0.1 U	0.2 U	0.5 U
Benz(a)anthracene in mg/kg	0.99	0.84	1.1	2.1
Benzo(a)pyrene in mg/kg	0.52	0.47	0.51	0.86
Benzo(b)fluoranthene in mg/kg	0.17	0.17	0.4	0.7
Benzo(k)fluoranthene in mg/kg	0.1 U	0.1 U	0.2 U	0.5 U
Chrysene in mg/kg	1.7	1	1.9	4.5
Dibenzo(a,h)anthracene in mg/kg	0.1 U	0.1 U	0.2 U	0.5 U
Indeno(1,2,3-cd)pyrene in mg/kg	0.1 U	0.1 U	0.2 U	0.5 U
Total cPAHs TEQ in mg/kg	0.668	0.596	0.709	1.26

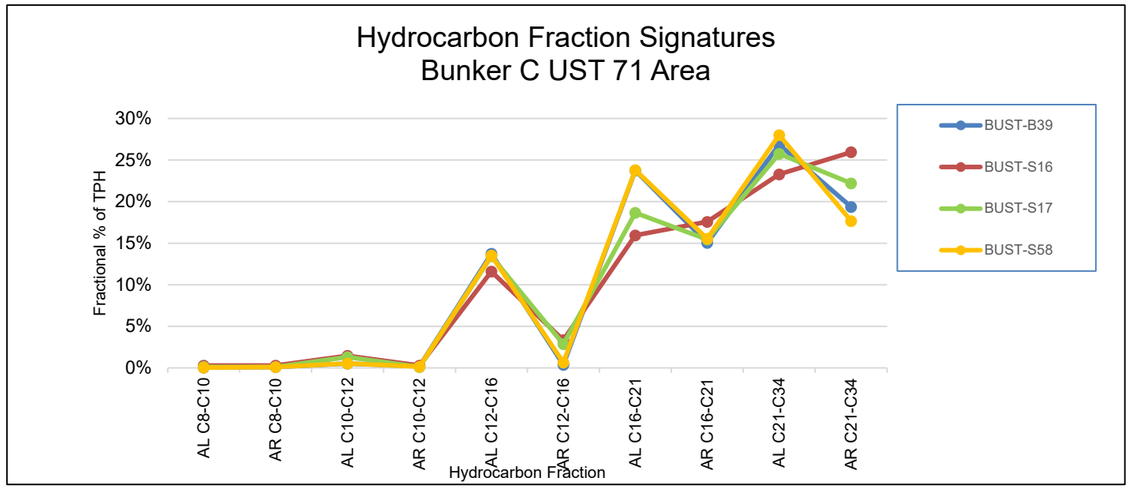

Soil TPH Concentrations Protective of Leaching to Groundwater

The soil concentrations protective of leaching to groundwater calculated by MTCAtph are 100% NAPL (78,000 to 83,000 mg/kg). The calculations are consistent with empirical data indicating that existing TPH soil concentrations on the north and south sides of the BUST excavation area do not result in accumulation of petroleum free product on or in groundwater, and indicate that the soils on the north side do not produce groundwater dissolved-phase exceedances. Groundwater samples from wells on the south side of the excavation area had oil-range TPH exceedances, but those samples may not be representative of groundwater quality as an artifact of well construction/development. The weight of evidence indicates that maximum existing TPH soil concentrations in this area are protective of groundwater (refer to text):

6,000 mg/kg TPH measured by VPH/EPH methods
28,000 mg/kg TPH measured by NWTPH methods

Calculated Method C Soil TPH Concentrations Protective of Direct Contact (Non-cancer Hazard Index = 1) (mg/kg)

	South Edge of Excavation		North Edge of Excavation		
	BUST-S16 (8 ft)	BUST-S17 (8 ft)	BUST-B39 (12 ft)	BUST-S58 (12 ft)	**Median**
Measured by VPH/EPH methods	50,000	54,000	56,000	57,000	**55,000**
Measured by NWTPH methods	190,000	61,000	340,000	430,000	**270,000**

For these calculations, “TPH” refers to the complete petroleum mixture including gasoline, diesel, and oil ranges.

Table F-2. Derivation of Risk-Based TPH Soil PCLs for Hydraulic Barker Building Area (Unit C)

Project No. AS190583, K-C Worldwide Site Upland Area, Everett, Washington

Chemical Name	HB-MW-1R (12 ft)	
Total Petroleum Hydrocarbons (TPH)		
Diesel Range Hydrocarbons in mg/kg	6,900	
Oil Range Hydrocarbons in mg/kg	810	x
Total TPHs in mg/kg (NWTPH)	7,710	
Extractable Petroleum Hydrocarbons		
Aliphatics C8-C10 (EPH) in mg/kg	1.03	J
Aliphatics C10-C12 (EPH) in mg/kg	1.96	J
Aliphatics C12-C16 (EPH) in mg/kg	NR	
Aliphatics C16-C21 (EPH) in mg/kg	2,610	
Aliphatics C21-C34 (EPH) in mg/kg	811	
Aromatics C8-C10 (EPH) in mg/kg	1.78	J
Aromatics C10-C12 (EPH) in mg/kg	5.52	U
Aromatics C12-C16 (EPH) in mg/kg	6.11	
Aromatics C16-C21 (EPH) in mg/kg	421	
Aromatics C21-C34 (EPH) in mg/kg	343	
Total Volatile and Extractable Petroleum Hydrocarbons		
Total EPHs and VPHs in mg/kg	4,201	
TPH by VPH+EPH as % of TPH by NWTPH	54%	
Polycyclic Aromatic Hydrocarbons (PAHs)		
Acenaphthene in mg/kg	0.1	U
Acenaphthylene in mg/kg	0.1	U
Anthracene in mg/kg	0.15	
Benzo(g,h,i)perylene in mg/kg	0.18	
Fluoranthene in mg/kg	0.66	
Fluorene in mg/kg	0.1	U
Phenanthrene in mg/kg	0.85	
Pyrene in mg/kg	0.86	
Naphthalene in mg/kg	0.1	U
Benz(a)anthracene in mg/kg	0.37	
Benzo(a)pyrene in mg/kg	0.32	
Benzo(b)fluoranthene in mg/kg	0.29	
Benzo(k)fluoranthene in mg/kg	0.13	
Chrysene in mg/kg	0.42	
Dibenzo(a,h)anthracene in mg/kg	0.1	U
Indeno(1,2,3-cd)pyrene in mg/kg	0.16	
Total cPAHs TEQ in mg/kg	0.424	

Notes

NR: Lab did not report a value for this fraction.

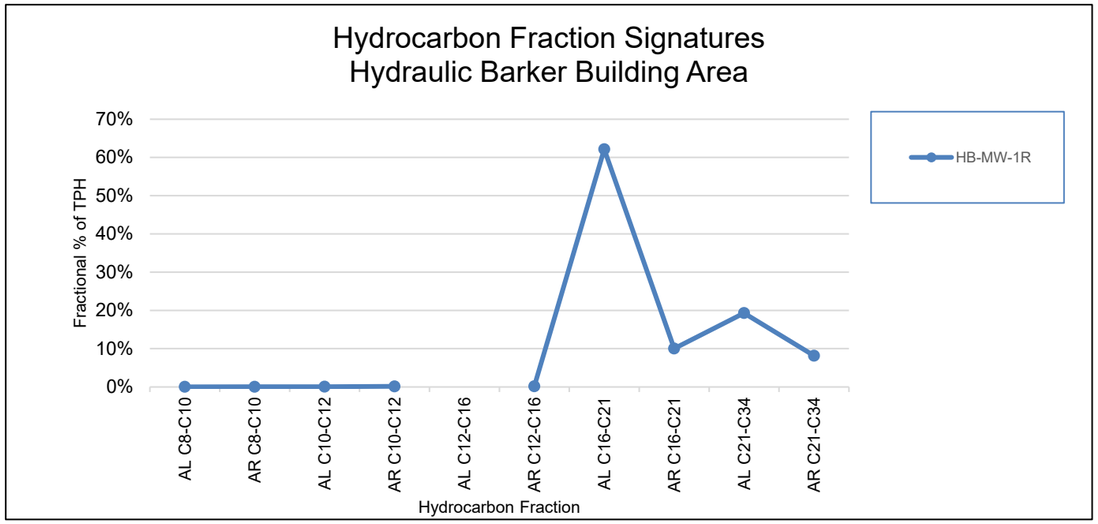

Soil TPH Concentrations Protective of Groundwater

The MTCAtph workbook calculates that soil containing 100% NAPL (73,000 mg/kg) is protective of groundwater. Empirical data indicate that the TPH soil concentrations present prior to the 2nd Interim Action excavation did not result in accumulation of petroleum free product on groundwater, and did not produce groundwater dissolved-phase exceedances. Therefore, as per MTCA, the maximum TPH soil concentrations in this area are protective of groundwater: The maximum TPH concentration (19,100 mg/kg by NWTPH) was detected in a record soil sample collected during the 2nd Interim Action. That sample was not analyzed by the EPH method but it was located within 2 feet of well HB-MW01R, where EPH analysis was conducted, and is thus considered to be the same product type with same relative percentages of petroleum fractions as detected in HB-MW-1R location (refer to text).

10,000 mg/kg TPH measured by VPH/EPH methods
19,000 mg/kg TPH measured by NWTPH methods

Calculated Method C Soil TPH Concentrations Protective of Direct Contact

	HB-MW-1R (12 ft)	
Measured by VPH/EPH methods	170,000	
Measured by NWTPH methods	310,000	

Note: For these calculations, “TPH” refers to the complete petroleum mixture including gasoline, diesel, and oil ranges.

Table F-3. Summary of Proposed Area-Specific Method C Soil Cleanup Levels for TPH

Project No.AS190583, K-C Worldwide Site Upland Area, Everett, Washington

Unit	Area	Inferred Petroleum Product	Samples with VPH/EPH Data	Residual Saturation Concentration (mg/kg)[(a)]	Soil Concentration Protective of Leaching of Dissolved-Phase Hydrocarbons (mg/kg)[(b)]	Soil Concentration Protective of Industrial Direct Contact (mg/kg)[(c)]	Proposed Method C Soil Preliminary Cleanup Level (mg/kg)
B	Bunker C UST Area	Bunker C oil	BUST-S16 BUST-S17 BUST-B39 BUST-S58	7,700	28,000[(d)]	270,000	7,700
C	Hydraulic Barker Building Area	Diesel-range fuel oil	HB-MW-1R	7,700	19,000	310,000	7,700

Notes:

(a) Value established by Ecology.

(b) Values based on empirical demonstration.

(c) Values determined from Ecology's MTCAtph Workbook calculations.

(d) Indicated by weight of evidence, despite one well with poor water level recovery and resulting apparent turbidity bias in groundwater sample results.

(e) All values are concentrations as measured by NWTPH methods. Refer to Tables B-1 and B-2 for area-specific comparison of concentrations measured by NWTPH vs EPH/VPH methods.

APPENDIX F
FIGURES

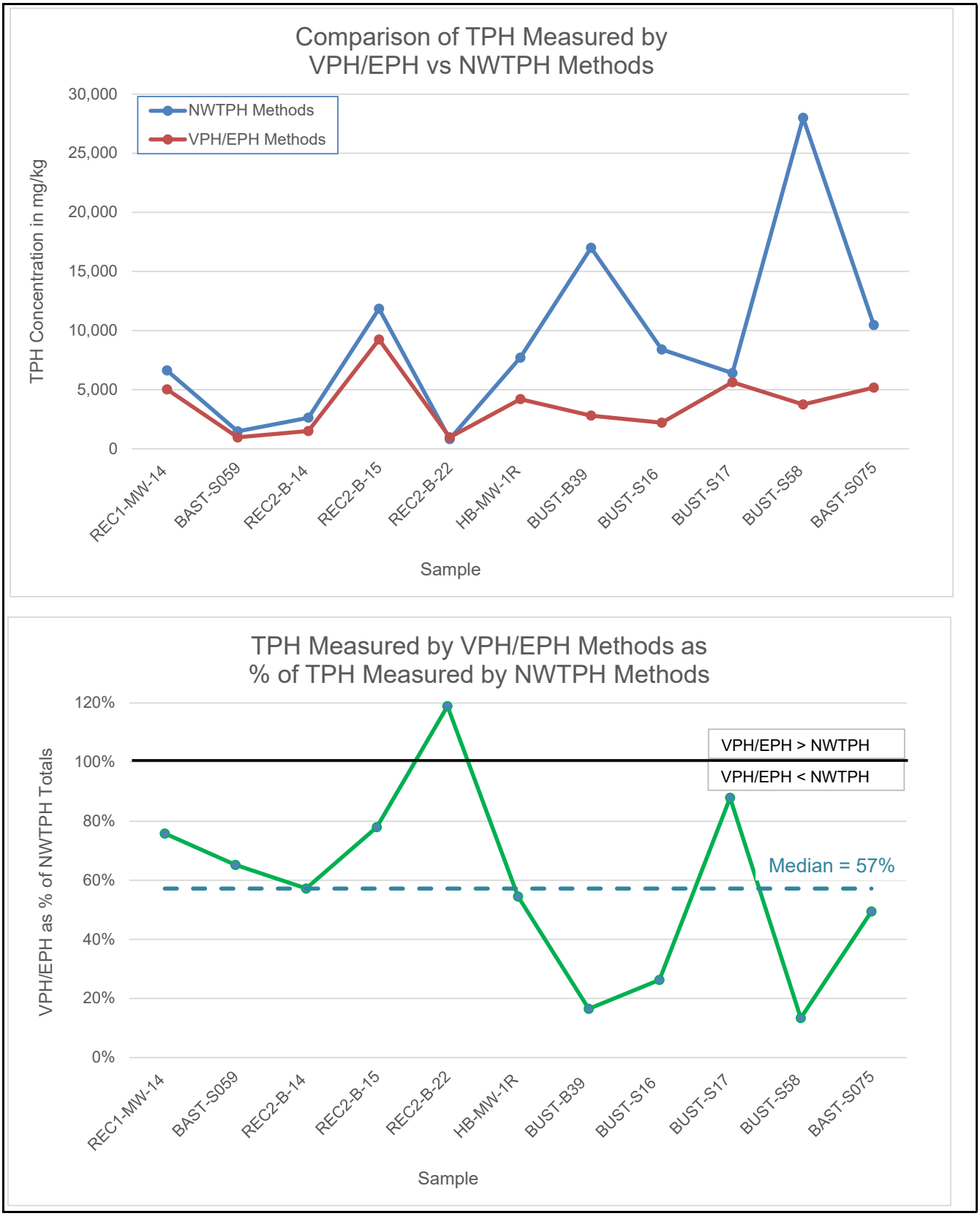

Note: Includes data from five samples with varying product types collected from the Warehouse Subunit of Unit A that was ultimately not used for derivation of area-specific PCLs for TPH but is useful for this comparative assessment.

Figure F-1
Illustration of Differences in TPH Measurements by VPH/EPH vs NWTPH Methods

Aspect Consulting
9/3/2024
S:\Port of Everett 190583\Report Drafts\Public-Review RI Report_2024\Appendices\App F - MTCA TPH_rev2024\App F Tables + Fig B1-2024

ATTACHMENT F-1

MTCAtph Output for Each Area

Bunker C USTs Area
(Samples BUST-B39, BUST-S16, BUST-S17, BUST-S58)

A3.1A Worksheet for Calculating TPH Soil Cleanup Levels for Protection of Human Health: (Soil Direct Contact Pathway - Exposure via Combined Incidental Soil Ingestion and Dermal Contact)

Method C: Industrial Land Use (WAC 173-340-745)

Date: 10/28/21
Site Name: K-C Upland Area
Sample Name: BUST-B39

Chemical of Concern or EC group	Current Condition				Test Adjusted Condition		
		Noncancer Hazards			Noncancer Hazards		
	Measured Soil Conc @dry basis	Noncancer HQ MTCA Eq. 745-4 (1)	Percent Contribution to the Total HI	Noncancer Exceedances (2)	Soil Conc being tested	Noncancer HQ MTCA Eq. 745-4 (1)	Noncancer Exceedances (1)
	mg/kg	unitless	percent		mg/kg	unitless	
Petroleum EC Fraction							
AL_EC >5-6	0						
AL_EC >6-8	0						
AL_EC >8-10	1.04	5.20E-05	0.1%				
AL_EC >10-12	14.5	7.25E-04	1.5%				
AL_EC >12-16	385	1.93E-02	38.6%				
AL_EC >16-21	666	1.11E-04	0.2%				
AL_EC >21-34	753	1.26E-04	0.3%				
AR_EC >8-10	2.85	1.43E-05	0.0%				
AR_EC >10-12	2.715	6.79E-05	0.1%				
AR_EC >12-16	10.4	2.08E-05	0.0%				
AR_EC >16-21	422	1.41E-02	28.2%				
AR_EC >21-34	538.79	1.35E-02	27.0%				
Benzene	0						
Toluene	0						
Ethylbenzene	0						
Total Xylenes	0						
Naphthalene	0.1	5.75E-06	0.0%				
1-Methyl Naphthalene	0						
2-Methyl Naphthalene	0						
n-Hexane	0						
MTBE	0						
Ethylene Dibromide (EDB)	0						
1,2 Dichloroethane (EDC)	0						
Benzo(a)anthracene	1.1						
Benzo(b)fluoranthene	0.4						
Benzo(k)fluoranthene	0.1						
Benzo(a)pyrene	0.51	1.96E-03	3.9%				
Chrysene	1.9						
Dibenz(a,h)anthracene	0.1						
Indeno(1,2,3-cd)pyrene	0.1						
Sum	**2800.605**	4.99E-02	100%	HI ≤ 1			

DIRECT CONTACT - CURRENT CONDITION

Measured TPH Soil Conc, mg/kg = 2800.61

HI = 5.0E-02 **Pass**

MTCA Eq. 745-3 (1)

TPH Cleanup Level (mg/kg) (HI = 1) = 56165.33

2 Significant Figures = 56000

Check Residual Saturation (WAC 340-747(10))

The overall TPH Method C direct contact protective cleanup level is based on a noncancer HI of 1. *See* WAC 173-340-745(5)(b)(iii)(B)(III). The TPH Cleanup Level at 2 significant figures is considered to be sufficiently protective even though in some cases it may slightly exceed an HI of 1.0.

Adjustments: The overal TPH soil direct contact protective cleanup level may need to be adjusted downward to account for exposure to other noncarcinogens within the petroleum mixture (*see* WAC 173-340-740(5)(a)). MTCA Equation 745-4 is used to evaluate noncancer effects from other noncarcinogens (i.e., not listed herein) within the petroleum mixture.

To assess the Vapor pathway for petroleum mixtures, see Ecology's Guidance for Evaluating Soil VI in WA State.

TEST ADJUSTED CONDITION

Input TPH Soil Conc, mg/kg =

HI =

The Test Adjusted Condition tool allows the user to test whether a particular TPH soil concentration is protective of human health direct contact noncancer effects. *The Workbook uses the same composition ratio as for the measured data (note: the A1 Soil Data Entry must be populated to perform this calculation).*

The tool may be useful for making any necessary downward adjustments to the TPH protective cleanup level. **For example**, downward adjusting to account for HI contributions from other noncarcinogens within the petroleum mixture that are not reflected in this spreadsheet.

Use the "Soil Calculator" to calculate noncancer HQs for other noncarcinogens within the petroleum mixture (i.e., not included in this spreadsheet), and evaluate their contribution to the total HI. The cumulative noncancer effects threshold is an HI of 1.

Soil Calculator

Notes:

(1) Default exposure assumptions provided in the MTCA Rule for these equations were used with the exception of the following dermal exposure parameters: GI and ABS. Updates for these parameters were made consistent with EPA's *Risk Assessment Guidance for Superfund, Vol. I: Human Health Evaluation Manual (Part E, Supplemental Guidance for Dermal Risk Assessment)* . Final. July 2004. EPA/540/R/99/005. The updated values are provided in the Chemical Database worksheet. For more information, see Ecology's July 2021 CLARC Guidance titled: *Toxicity Data and Physical/Chemical Properties for Petroleum Mixtures.*

(2) Noncancer results for the petroleum mixture that exceed a hazard index (HI) of 1 "Fail" compliance with Method C cleanup requirements and are not sufficiently protective. Note that the TPH Cleanup Level at 2 significant figures is considered to be sufficiently protective even though in some cases it may slightly exceed an HI of 1.0.

A2.2 Worksheet for Calculating Soil Cleanup Level for the Protection of Groundwater Quality: (Leaching Pathway)
WAC 173-340-740 and 747

Date: 10/28/21
Site Name: K-C Upland Area
Sample Name: BUST-B39

Chemical of Concern or EC Group	Measured Soil Conc @dry basis	Test Current or Adjusted Condition: Soil Conc being tested	Predicted Conc @Well	Noncancer HQ @ Well (Potable Ingestion) Eq. 720-1 (1)	Noncancer Exceedances (2)
	mg/kg	mg/kg	ug/L	unitless	
Petroleum EC Fraction					
AL_EC >5-6	0	0.00E+00	0.00E+00	0.00E+00	
AL_EC >6-8	0	0.00E+00	0.00E+00	0.00E+00	
AL_EC >8-10	1.04	2.88E+01	3.13E-01	3.91E-03	
AL_EC >10-12	14.5	4.02E+02	2.81E-01	3.51E-03	
AL_EC >12-16	385	1.07E+04	1.33E-01	1.67E-03	
AL_EC >16-21	666	1.85E+04	2.92E-04	1.22E-08	
AL_EC >21-34	753	2.09E+04	2.58E-09	1.07E-13	
AR_EC >8-10	2.85	7.90E+01	1.38E+02	1.72E-01	
AR_EC >10-12	2.715	7.53E+01	4.71E+01	2.94E-01	
AR_EC >12-16	10.4	2.88E+02	3.65E+01	9.13E-03	
AR_EC >16-21	422	1.17E+04	1.03E+02	4.30E-01	
AR_EC >21-34	538.79	1.49E+04	1.35E+00	2.11E-03	
Benzene	0	0.00E+00	0.00E+00	0.00E+00	
Toluene	0	0.00E+00	0.00E+00	0.00E+00	
Ethylbenzene	0	0.00E+00	0.00E+00	0.00E+00	
Total Xylenes	0	0.00E+00	0.00E+00	0.00E+00	
Naphthalene	0.1	2.77E+00	2.19E+00	1.37E-02	
1-Methyl Naphthalene	0	0.00E+00	0.00E+00	0.00E+00	
2-Methyl Naphthalene	0	0.00E+00	0.00E+00	0.00E+00	
n-Hexane	0	0.00E+00	0.00E+00	0.00E+00	
MTBE	0	0.00E+00	0.00E+00	0.00E+00	
Ethylene Dibromide (EDB)	0	0.00E+00	0.00E+00	0.00E+00	
1,2 Dichloroethane (EDC)	0	0.00E+00	0.00E+00	0.00E+00	
Benzo(a)anthracene	1.1	3.05E+01	4.13E-03	0.00E+00	
Benzo(b)fluoranthene	0.4	1.11E+01	2.17E-04	0.00E+00	
Benzo(k)fluoranthene	0.1	2.77E+00	2.89E-05	0.00E+00	
Benzo(a)pyrene	0.51	1.41E+01	2.99E-04	6.22E-05	
Chrysene	1.9	5.27E+01	1.52E-03	0.00E+00	
Dibenz(a,h)anthracene	0.1	2.77E+00	8.16E-05	0.00E+00	
Indeno(1,2,3-cd)pyrene	0.1	2.77E+00	6.27E-06	0.00E+00	
Sum	2800.605	7.76E+04	3.29E+02	9.31E-01	HI ≤ 1

Site-Specific Hydrogeological Properties previously entered:

Item	Symbol	Value	Units
Total soil porosity:	*n*	0.43	unitless
Volumetric water content:	*Qw*	0.3	unitless
Volumetric air content:	*Qa*	0.13	unitless
Soil bulk density measured:	*rb*	1.5	kg/L
Fraction Organic Carbon:	*foc*	0.0079	unitless
Dilution Factor:	*DF*	1	unitless

Target Groundwater TPH concentration adjusted previously if any:

Target Groundwater TPH Conc, ug/L: 500

CALCULATE PROTECTIVE CONDITION OR TEST SOIL CONDITION

Calculate Protective TPH Soil Condition for Potable Groundwater Quality @ HI = 1 — @ HI = 1

Test Current or Adjusted TPH Soil Condition — Enter TPH Soil Conc (mg/kg)

Enter a TPH soil concentration greater than "0" before testing soil conditions. Errors will occur if the Test TPH scenarios are run at a TPH Soil Conc of "0", or when left blank.

1. Using Solver Function — Test TPH Soil Conc

2. Alternative: If button above does not work — Test TPH (Alternative)

Calculate Protective Soil Condition for a Target TPH Groundwater Cleanup Level — Protection of Target TPH GW Conc

MODEL RESULTS

Selected Soil Leaching Criterion: Protection of Target TPH Groundwater Concentration

Protective TPH Soil Concentration, mg/kg = 100% NAPL

Protective TPH GW Concentration, ug/L = 3.29E+02 *@ 2 sig figures* **330**

HI @ Well = NA

DETAILED MODEL RESULTS

Type of model used for computation:	4-Phase Model
Computation completed?	Yes!
Initial Weighted Average MW of NAPL, g/mol:	255.3
Equilibrated Weighted Average MW of NAPL, g/mol:	255.4
Initial Weighted Average Density of NAPL, kg/L:	0.896
Volumetric NAPL Content, QNAPL :	1.3E-01
NAPL Saturation (%), QNAPL/n:	30.21%
100% NAPL, mg/kg	77643.7

Mass Distribution Pattern @ 4-phase in soil pore system:

Total Mass distributed in Water Phase: 0.00% in Solid: 0.06%

Total Mass distributed in Air Phase: 0.00% in NAPL: 99.94%

Please Check Soil Residual Saturation TPH Levels: Refer to Table 747-5!

Notes:

(1) Default exposure assumptions provided in the MTCA Rule for these equations were used. All of the aliphatic fractions, including aromatic fractions up to EC21, are sufficiently volatile based on their Henry's law, and have been assigned an INH value 2. Aromatic fractions greater than EC21 to EC34 are dominated by high molecular weight PAHs) and are not considered to be sufficiently volatile. These are evaluated using an INH of 1. The updated values are provided in the Chemical Database worksheet. For more information, see Ecology's July 2021 CLARC Guidance titled: *Toxicity Data and Physical/Chemical Properties for Petroleum Mixtures.*

(2) Noncancer results for the petroleum mixture that exceed a hazard index (HI) of 1 "Fail" compliance with Method B cleanup requirements and are not sufficiently protective.

A3.1A Worksheet for Calculating TPH Soil Cleanup Levels for Protection of Human Health: (Soil Direct Contact Pathway - Exposure via Combined Incidental Soil Ingestion and Dermal Contact)

Method C: Industrial Land Use (WAC 173-340-745)

Date: 10/28/21
Site Name: K-C Upland Area
Sample Name: BUST-S16

Chemical of Concern or EC group	Current Condition				Test Adjusted Condition		
		Noncancer Hazards			Noncancer Hazards		
	Measured Soil Conc @dry basis	Noncancer HQ MTCA Eq. 745-4 (1)	Percent Contribution to the Total HI	Noncancer Exceedances (2)	Soil Conc being tested	Noncancer HQ MTCA Eq. 745-4 (1)	Noncancer Exceedances (1)
	mg/kg	unitless	percent		mg/kg	unitless	
Petroleum EC Fraction							
AL_EC >5-6	0						
AL_EC >6-8	0						
AL_EC >8-10	3.17	1.59E-04	0.4%				
AL_EC >10-12	32.08	1.60E-03	3.6%				
AL_EC >12-16	256	1.28E-02	29.0%				
AL_EC >16-21	352	5.87E-05	0.1%				
AL_EC >21-34	514	8.57E-05	0.2%				
AR_EC >8-10	3.17	1.59E-05	0.0%				
AR_EC >10-12	3.17	7.93E-05	0.2%				
AR_EC >12-16	73.9	1.48E-04	0.3%				
AR_EC >16-21	388	1.29E-02	29.3%				
AR_EC >21-34	569.47	1.42E-02	32.3%				
Benzene	0						
Toluene	0						
Ethylbenzene	0						
Total Xylenes	0						
Naphthalene	0.12	6.90E-06	0.0%				
1-Methyl Naphthalene	0						
2-Methyl Naphthalene	0						
n-Hexane	0						
MTBE	0						
Ethylene Dibromide (EDB)	0						
1,2 Dichloroethane (EDC)	0						
Benzo(a)anthracene	0.99						
Benzo(b)fluoranthene	0.17						
Benzo(k)fluoranthene	0.05						
Benzo(a)pyrene	0.52	1.99E-03	4.5%				
Chrysene	1.7						
Dibenz(a,h)anthracene	0.05						
Indeno(1,2,3-cd)pyrene	0.05						
Sum	**2198.61**	4.41E-02	100%	HI ≤ 1			

DIRECT CONTACT - CURRENT CONDITION

Measured TPH Soil Conc, mg/kg = 2198.61

HI = 4.4E-02 **Pass**

MTCA Eq. 745-3 (1)

TPH Cleanup Level (mg/kg) (HI = 1) = 49832.45

2 Significant Figures = 50000

Check Residual Saturation (WAC 340-747(10))

The overall TPH Method C direct contact protective cleanup level is based on a noncancer HI of 1. *See* WAC 173-340-745(5)(b)(iii)(B)(III). The TPH Cleanup Level at 2 significant figures is considered to be sufficiently protective even though in some cases it may slightly exceed an HI of 1.0.

Adjustments: The overal TPH soil direct contact protective cleanup level may need to be adjusted downward to account for exposure to other noncarcinogens within the petroleum mixture (*see* WAC 173-340-740(5)(a)). MTCA Equation 745-4 is used to evaluate noncancer effects from other noncarcinogens (i.e., not listed herein) within the petroleum mixture.

To assess the Vapor pathway for petroleum mixtures, see Ecology's Guidance for Evaluating Soil VI in WA State.

TEST ADJUSTED CONDITION

Input TPH Soil Conc, mg/kg =

HI =

The Test Adjusted Condition tool allows the user to test whether a particular TPH soil concentration is protective of human health direct contact noncancer effects. *The Workbook uses the same composition ratio as for the measured data (note: the A1 Soil Data Entry must be populated to perform this calculation).*

The tool may be useful for making any necessary downward adjustments to the TPH protective cleanup level. **For example**, downward adjusting to account for HI contributions from other noncarcinogens within the petroleum mixture that are not reflected in this spreadsheet.

Use the "Soil Calculator" to calculate noncancer HQs for other noncarcinogens within the petroleum mixture (i.e., not included in this spreadsheet), and evaluate their contribution to the total HI. The cumulative noncancer effects threshold is an HI of 1.

Soil Calculator

Notes:

(1) Default exposure assumptions provided in the MTCA Rule for these equations were used with the exception of the following dermal exposure parameters: GI and ABS. Updates for these parameters were made consistent with EPA's *Risk Assessment Guidance for Superfund, Vol. I: Human Health Evaluation Manual (Part E, Supplemental Guidance for Dermal Risk Assessment)* . Final. July 2004. EPA/540/R/99/005. The updated values are provided in the Chemical Database worksheet. For more information, see Ecology's July 2021 CLARC Guidance titled: *Toxicity Data and Physical/Chemical Properties for Petroleum Mixtures.*

(2) Noncancer results for the petroleum mixture that exceed a hazard index (HI) of 1 "Fail" compliance with Method C cleanup requirements and are not sufficiently protective. Note that the TPH Cleanup Level at 2 significant figures is considered to be sufficiently protective even though in some cases it may slightly exceed an HI of 1.0.

A2.2 Worksheet for Calculating Soil Cleanup Level for the Protection of Groundwater Quality: (Leaching Pathway)
WAC 173-340-740 and 747

Date: 10/28/21
Site Name: K-C Upland Area
Sample Name: BUST-S16

Chemical of Concern or EC Group	Measured Soil Conc @dry basis	Test Current or Adjusted Condition: Soil Conc being tested	Predicted Conc @Well	Noncancer HQ @ Well (Potable Ingestion) Eq. 720-1 (1)	Noncancer Exceedances (2)
	mg/kg	mg/kg	ug/L	unitless	
Petroleum EC Fraction					
AL_EC >5-6	0	0.00E+00	0.00E+00	0.00E+00	
AL_EC >6-8	0	0.00E+00	0.00E+00	0.00E+00	
AL_EC >8-10	3.17	1.18E+02	5.77E-02	7.22E-04	
AL_EC >10-12	32.08	1.19E+03	3.76E-02	4.70E-04	
AL_EC >12-16	256	9.49E+03	5.37E-03	6.71E-05	
AL_EC >16-21	352	1.30E+04	9.34E-06	3.89E-10	
AL_EC >21-34	514	1.91E+04	1.06E-10	4.43E-15	
AR_EC >8-10	3.17	1.18E+02	9.29E+00	1.16E-02	
AR_EC >10-12	3.17	1.18E+02	3.33E+00	2.08E-02	
AR_EC >12-16	73.9	2.74E+03	1.57E+01	3.92E-03	
AR_EC >16-21	388	1.44E+04	5.74E+00	2.39E-02	
AR_EC >21-34	569.47	2.11E+04	8.64E-02	1.35E-04	
Benzene	0	0.00E+00	0.00E+00	0.00E+00	
Toluene	0	0.00E+00	0.00E+00	0.00E+00	
Ethylbenzene	0	0.00E+00	0.00E+00	0.00E+00	
Total Xylenes	0	0.00E+00	0.00E+00	0.00E+00	
Naphthalene	0.12	4.45E+00	1.59E-01	9.96E-04	
1-Methyl Naphthalene	0	0.00E+00	0.00E+00	0.00E+00	
2-Methyl Naphthalene	0	0.00E+00	0.00E+00	0.00E+00	
n-Hexane	0	0.00E+00	0.00E+00	0.00E+00	
MTBE	0	0.00E+00	0.00E+00	0.00E+00	
Ethylene Dibromide (EDB)	0	0.00E+00	0.00E+00	0.00E+00	
1,2 Dichloroethane (EDC)	0	0.00E+00	0.00E+00	0.00E+00	
Benzo(a)anthracene	0.99	3.67E+01	2.25E-04	0.00E+00	
Benzo(b)fluoranthene	0.17	6.30E+00	5.58E-06	0.00E+00	
Benzo(k)fluoranthene	0.05	1.85E+00	8.75E-07	0.00E+00	
Benzo(a)pyrene	0.52	1.93E+01	1.84E-05	3.84E-06	
Chrysene	1.7	6.30E+01	8.22E-05	0.00E+00	
Dibenz(a,h)anthracene	0.05	1.85E+00	2.47E-06	0.00E+00	
Indeno(1,2,3-cd)pyrene	0.05	1.85E+00	1.90E-07	0.00E+00	
Sum	2198.61	8.15E+04	3.44E+01	6.26E-02	HI ≤ 1

Site-Specific Hydrogeological Properties previously entered:

Item	Symbol	Value	Units
Total soil porosity:	*n*	0.43	unitless
Volumetric water content:	*Qw*	0.3	unitless
Volumetric air content:	*Qa*	0.13	unitless
Soil bulk density measured:	*rb*	1.5	kg/L
Fraction Organic Carbon:	*foc*	0.0079	unitless
Dilution Factor:	*DF*	20	unitless

Target Groundwater TPH concentration adjusted previously if any:

Target Groundwater TPH Conc, ug/L: 500

CALCULATE PROTECTIVE CONDITION OR TEST SOIL CONDITION

Calculate Protective TPH Soil Condition for Potable Groundwater Quality @ HI = 1 — @ HI = 1

Test Current or Adjusted TPH Soil Condition — Enter TPH Soil Conc (mg/kg)

Enter a TPH soil concentration greater than "0" before testing soil conditions. Errors will occur if the Test TPH scenarios are run at a TPH Soil Conc of "0", or when left blank.

1. Using Solver Function — Test TPH Soil Conc

2. Alternative: If button above does not work — Test TPH (Alternative)

Calculate Protective Soil Condition for a Target TPH Groundwater Cleanup Level — Protection of Target TPH GW Conc

MODEL RESULTS

Selected Soil Leaching Criterion: Protection of Target TPH Groundwater Concentration

Protective TPH Soil Concentration, mg/kg = 100% NAPL

Protective TPH GW Concentration, ug/L = 3.44E+01 *@ 2 sig figures* **34**

HI @ Well = NA

DETAILED MODEL RESULTS

Type of model used for computation:	4-Phase Model
Computation completed?	Yes!
Initial Weighted Average MW of NAPL, g/mol:	242.5
Equilibrated Weighted Average MW of NAPL, g/mol:	242.5
Initial Weighted Average Density of NAPL, kg/L:	0.940
Volumetric NAPL Content, QNAPL :	1.3E-01
NAPL Saturation (%), QNAPL/n:	30.21%
100% NAPL, mg/kg	81501.5

Mass Distribution Pattern @ 4-phase in soil pore system:

Total Mass distributed in Water Phase: 0.00% in Solid: 0.06%

Total Mass distributed in Air Phase: 0.00% in NAPL: 99.94%

Please Check Soil Residual Saturation TPH Levels: Refer to Table 747-5!

Notes:

(1) Default exposure assumptions provided in the MTCA Rule for these equations were used. All of the aliphatic fractions, including aromatic fractions up to EC21, are sufficiently volatile based on their Henry's law, and have been assigned an INH value 2. Aromatic fractions greater than EC21 to EC34 are dominated by high molecular weight PAHs) and are not considered to be sufficiently volatile. These are evaluated using an INH of 1. The updated values are provided in the Chemical Database worksheet. For more information, see Ecology's July 2021 CLARC Guidance titled: *Toxicity Data and Physical/Chemical Properties for Petroleum Mixtures.*

(2) Noncancer results for the petroleum mixture that exceed a hazard index (HI) of 1 "Fail" compliance with Method B cleanup requirements and are not sufficiently protective.

A3.1A Worksheet for Calculating TPH Soil Cleanup Levels for Protection of Human Health: (Soil Direct Contact Pathway - Exposure via Combined Incidental Soil Ingestion and Dermal Contact)

Method C: Industrial Land Use (WAC 173-340-745)

Date: 10/28/21
Site Name: K-C Upland Area
Sample Name: BUST-S17

Chemical of Concern or EC group	Current Condition				Test Adjusted Condition		
		Noncancer Hazards			Noncancer Hazards		
	Measured Soil Conc @dry basis	Noncancer HQ MTCA Eq. 745-4 (1)	Percent Contribution to the Total HI	Noncancer Exceedances (2)	Soil Conc being tested	Noncancer HQ MTCA Eq. 745-4 (1)	Noncancer Exceedances (1)
	mg/kg	unitless	percent		mg/kg	unitless	
Petroleum EC Fraction							
AL_EC >5-6	0						
AL_EC >6-8	0						
AL_EC >8-10	6.92	3.46E-04	0.3%				
AL_EC >10-12	73.4	3.67E-03	3.5%				
AL_EC >12-16	756	3.78E-02	36.1%				
AL_EC >16-21	1050	1.75E-04	0.2%				
AL_EC >21-34	1450	2.42E-04	0.2%				
AR_EC >8-10	2.765	1.38E-05	0.0%				
AR_EC >10-12	2.715	6.79E-05	0.1%				
AR_EC >12-16	161	3.22E-04	0.3%				
AR_EC >16-21	870	2.90E-02	27.7%				
AR_EC >21-34	1247.37	3.12E-02	29.8%				
Benzene	0						
Toluene	0						
Ethylbenzene	0						
Total Xylenes	0						
Naphthalene	0.05	2.88E-06	0.0%				
1-Methyl Naphthalene	0						
2-Methyl Naphthalene	0						
n-Hexane	0						
MTBE	0						
Ethylene Dibromide (EDB)	0						
1,2 Dichloroethane (EDC)	0						
Benzo(a)anthracene	0.84						
Benzo(b)fluoranthene	0.17						
Benzo(k)fluoranthene	0.05						
Benzo(a)pyrene	0.47	1.80E-03	1.7%				
Chrysene	1						
Dibenz(a,h)anthracene	0.05						
Indeno(1,2,3-cd)pyrene	0.05						
Sum	**5622.85**	1.05E-01	100%	HI ≤ 1			

DIRECT CONTACT - CURRENT CONDITION

Measured TPH Soil Conc, mg/kg = 5622.85

HI = 1.0E-01 **Pass**

MTCA Eq. 745-3 (1)

TPH Cleanup Level (mg/kg) (HI = 1) = 53742.81

2 Significant Figures = 54000

Check Residual Saturation (WAC 340-747(10))

The overall TPH Method C direct contact protective cleanup level is based on a noncancer HI of 1. *See* WAC 173-340-745(5)(b)(iii)(B)(III). The TPH Cleanup Level at 2 significant figures is considered to be sufficiently protective even though in some cases it may slightly exceed an HI of 1.0.

Adjustments: The overal TPH soil direct contact protective cleanup level may need to be adjusted downward to account for exposure to other noncarcinogens within the petroleum mixture (*see* WAC 173-340-740(5)(a)). MTCA Equation 745-4 is used to evaluate noncancer effects from other noncarcinogens (i.e., not listed herein) within the petroleum mixture.

To assess the Vapor pathway for petroleum mixtures, see Ecology's Guidance for Evaluating Soil VI in WA State.

TEST ADJUSTED CONDITION

Input TPH Soil Conc, mg/kg =

HI =

The Test Adjusted Condition tool allows the user to test whether a particular TPH soil concentration is protective of human health direct contact noncancer effects. *The Workbook uses the same composition ratio as for the measured data (note: the A1 Soil Data Entry must be populated to perform this calculation).*

The tool may be useful for making any necessary downward adjustments to the TPH protective cleanup level. **For example**, downward adjusting to account for HI contributions from other noncarcinogens within the petroleum mixture that are not reflected in this spreadsheet.

Use the "Soil Calculator" to calculate noncancer HQs for other noncarcinogens within the petroleum mixture (i.e., not included in this spreadsheet), and evaluate their contribution to the total HI. The cumulative noncancer effects threshold is an HI of 1.

Soil Calculator

Notes:

(1) Default exposure assumptions provided in the MTCA Rule for these equations were used with the exception of the following dermal exposure parameters: GI and ABS. Updates for these parameters were made consistent with EPA's *Risk Assessment Guidance for Superfund, Vol. I: Human Health Evaluation Manual (Part E, Supplemental Guidance for Dermal Risk Assessment)* . Final. July 2004. EPA/540/R/99/005. The updated values are provided in the Chemical Database worksheet. For more information, see Ecology's July 2021 CLARC Guidance titled: *Toxicity Data and Physical/Chemical Properties for Petroleum Mixtures.*

(2) Noncancer results for the petroleum mixture that exceed a hazard index (HI) of 1 "Fail" compliance with Method C cleanup requirements and are not sufficiently protective. Note that the TPH Cleanup Level at 2 significant figures is considered to be sufficiently protective even though in some cases it may slightly exceed an HI of 1.0.

A2.2 Worksheet for Calculating Soil Cleanup Level for the Protection of Groundwater Quality: (Leaching Pathway)
WAC 173-340-740 and 747

Date: 10/28/21
Site Name: K-C Upland Area
Sample Name: BUST-S17

Chemical of Concern or EC Group	Measured Soil Conc @dry basis	Test Current or Adjusted Condition: Soil Conc being tested	Predicted Conc @Well	Noncancer HQ @ Well (Potable Ingestion) Eq. 720-1 (1)	Noncancer Exceedances (2)
	mg/kg	mg/kg	ug/L	unitless	
Petroleum EC Fraction					
AL_EC >5-6	0	0.00E+00	0.00E+00	0.00E+00	
AL_EC >6-8	0	0.00E+00	0.00E+00	0.00E+00	
AL_EC >8-10	6.92	9.75E+01	5.03E-02	6.29E-04	
AL_EC >10-12	73.4	1.03E+03	3.44E-02	4.29E-04	
AL_EC >12-16	756	1.07E+04	6.33E-03	7.91E-05	
AL_EC >16-21	1050	1.48E+04	1.11E-05	4.64E-10	
AL_EC >21-34	1450	2.04E+04	1.20E-10	5.00E-15	
AR_EC >8-10	2.765	3.90E+01	3.23E+00	4.04E-03	
AR_EC >10-12	2.715	3.83E+01	1.14E+00	7.11E-03	
AR_EC >12-16	161	2.27E+03	1.37E+01	3.42E-03	
AR_EC >16-21	870	1.23E+04	5.14E+00	2.14E-02	
AR_EC >21-34	1247.37	1.76E+04	7.56E-02	1.18E-04	
Benzene	0	0.00E+00	0.00E+00	0.00E+00	
Toluene	0	0.00E+00	0.00E+00	0.00E+00	
Ethylbenzene	0	0.00E+00	0.00E+00	0.00E+00	
Total Xylenes	0	0.00E+00	0.00E+00	0.00E+00	
Naphthalene	0.05	7.05E-01	2.65E-02	1.66E-04	
1-Methyl Naphthalene	0	0.00E+00	0.00E+00	0.00E+00	
2-Methyl Naphthalene	0	0.00E+00	0.00E+00	0.00E+00	
n-Hexane	0	0.00E+00	0.00E+00	0.00E+00	
MTBE	0	0.00E+00	0.00E+00	0.00E+00	
Ethylene Dibromide (EDB)	0	0.00E+00	0.00E+00	0.00E+00	
1,2 Dichloroethane (EDC)	0	0.00E+00	0.00E+00	0.00E+00	
Benzo(a)anthracene	0.84	1.18E+01	7.62E-05	0.00E+00	
Benzo(b)fluoranthene	0.17	2.40E+00	2.23E-06	0.00E+00	
Benzo(k)fluoranthene	0.05	7.05E-01	3.50E-07	0.00E+00	
Benzo(a)pyrene	0.47	6.62E+00	6.65E-06	1.39E-06	
Chrysene	1	1.41E+01	1.93E-05	0.00E+00	
Dibenz(a,h)anthracene	0.05	7.05E-01	9.86E-07	0.00E+00	
Indeno(1,2,3-cd)pyrene	0.05	7.05E-01	7.58E-08	0.00E+00	
Sum	5622.85	7.92E+04	2.34E+01	3.74E-02	HI ≤ 1

Site-Specific Hydrogeological Properties previously entered:

Item	Symbol	Value	Units
Total soil porosity:	*n*	0.43	unitless
Volumetric water content:	*Qw*	0.3	unitless
Volumetric air content:	*Qa*	0.13	unitless
Soil bulk density measured:	*rb*	1.5	kg/L
Fraction Organic Carbon:	*foc*	0.0079	unitless
Dilution Factor:	*DF*	20	unitless

Target Groundwater TPH concentration adjusted previously if any:

Target Groundwater TPH Conc, ug/L: 500

CALCULATE PROTECTIVE CONDITION OR TEST SOIL CONDITION

Calculate Protective TPH Soil Condition for Potable Groundwater Quality @ HI = 1 — @ HI = 1

Test Current or Adjusted TPH Soil Condition — Enter TPH Soil Conc (mg/kg)

Enter a TPH soil concentration greater than "0" before testing soil conditions. Errors will occur if the Test TPH scenarios are run at a TPH Soil Conc of "0", or when left blank.

1. Using Solver Function — Test TPH Soil Conc

2. Alternative: If button above does not work — Test TPH (Alternative)

Calculate Protective Soil Condition for a Target TPH Groundwater Cleanup Level — Protection of Target TPH GW Conc

MODEL RESULTS

Selected Soil Leaching Criterion: Protection of Target TPH Groundwater Concentration

Protective TPH Soil Concentration, mg/kg = 100% NAPL

Protective TPH GW Concentration, ug/L = 2.34E+01 *@ 2 sig figures* **23**

HI @ Well = NA

DETAILED MODEL RESULTS

Type of model used for computation:	4-Phase Model
Computation completed?	Yes!
Initial Weighted Average MW of NAPL, g/mol:	247.6
Equilibrated Weighted Average MW of NAPL, g/mol:	247.8
Initial Weighted Average Density of NAPL, kg/L:	0.914
Volumetric NAPL Content, QNAPL :	1.3E-01
NAPL Saturation (%), QNAPL/n:	30.21%
100% NAPL, mg/kg	79243.8

Mass Distribution Pattern @ 4-phase in soil pore system:

Total Mass distributed in Water Phase: 0.00% in Solid: 0.06%

Total Mass distributed in Air Phase: 0.00% in NAPL: 99.94%

Please Check Soil Residual Saturation TPH Levels: Refer to Table 747-5!

Notes:

(1) Default exposure assumptions provided in the MTCA Rule for these equations were used. All of the aliphatic fractions, including aromatic fractions up to EC21, are sufficiently volatile based on their Henry's law, and have been assigned an INH value 2. Aromatic fractions greater than EC21 to EC34 are dominated by high molecular weight PAHs) and are not considered to be sufficiently volatile. These are evaluated using an INH of 1. The updated values are provided in the Chemical Database worksheet. For more information, see Ecology's July 2021 CLARC Guidance titled: *Toxicity Data and Physical/Chemical Properties for Petroleum Mixtures.*

(2) Noncancer results for the petroleum mixture that exceed a hazard index (HI) of 1 "Fail" compliance with Method B cleanup requirements and are not sufficiently protective.

A3.1A Worksheet for Calculating TPH Soil Cleanup Levels for Protection of Human Health: (Soil Direct Contact Pathway - Exposure via Combined Incidental Soil Ingestion and Dermal Contact)

Method C: Industrial Land Use (WAC 173-340-745)

Date: 10/28/21
Site Name: K-C Upland Area
Sample Name: BUST-S58

Chemical of Concern or EC group	Current Condition				Test Adjusted Condition		
		Noncancer Hazards			Noncancer Hazards		
	Measured Soil Conc @dry basis	Noncancer HQ MTCA Eq. 745-4 (1)	Percent Contribution to the Total HI	Noncancer Exceedances (2)	Soil Conc being tested	Noncancer HQ MTCA Eq. 745-4 (1)	Noncancer Exceedances (1)
	mg/kg	unitless	percent		mg/kg	unitless	
Petroleum EC Fraction							
AL_EC >5-6	0						
AL_EC >6-8	0						
AL_EC >8-10	1.18	5.90E-05	0.1%				
AL_EC >10-12	19.65	9.83E-04	1.5%				
AL_EC >12-16	507	2.54E-02	38.3%				
AL_EC >16-21	892	1.49E-04	0.2%				
AL_EC >21-34	1050	1.75E-04	0.3%				
AR_EC >8-10	3.76	1.88E-05	0.0%				
AR_EC >10-12	2.82	7.05E-05	0.1%				
AR_EC >12-16	24.4	4.88E-05	0.1%				
AR_EC >16-21	583	1.94E-02	29.4%				
AR_EC >21-34	662	1.66E-02	25.0%				
Benzene	0						
Toluene	0						
Ethylbenzene	0						
Total Xylenes	0						
Naphthalene	0.25	1.44E-05	0.0%				
1-Methyl Naphthalene	0						
2-Methyl Naphthalene	0						
n-Hexane	0						
MTBE	0						
Ethylene Dibromide (EDB)	0						
1,2 Dichloroethane (EDC)	0						
Benzo(a)anthracene	2.1						
Benzo(b)fluoranthene	0.7						
Benzo(k)fluoranthene	0.25						
Benzo(a)pyrene	0.86	3.30E-03	5.0%				
Chrysene	4.5						
Dibenz(a,h)anthracene	0.25						
Indeno(1,2,3-cd)pyrene	0.25						
Sum	**3754.97**	6.61E-02	100%	HI ≤ 1			

DIRECT CONTACT - CURRENT CONDITION

Measured TPH Soil Conc, mg/kg = 3754.97

HI = 6.6E-02 **Pass**

MTCA Eq. 745-3 (1)

TPH Cleanup Level (mg/kg) (HI = 1) = 56766.50

2 Significant Figures = 57000

Check Residual Saturation (WAC 340-747(10))

The overall TPH Method C direct contact protective cleanup level is based on a noncancer HI of 1. *See* WAC 173-340-745(5)(b)(iii)(B)(III). The TPH Cleanup Level at 2 significant figures is considered to be sufficiently protective even though in some cases it may slightly exceed an HI of 1.0.

Adjustments: The overal TPH soil direct contact protective cleanup level may need to be adjusted downward to account for exposure to other noncarcinogens within the petroleum mixture (*see* WAC 173-340-740(5)(a)). MTCA Equation 745-4 is used to evaluate noncancer effects from other noncarcinogens (i.e., not listed herein) within the petroleum mixture.

To assess the Vapor pathway for petroleum mixtures, see Ecology's Guidance for Evaluating Soil VI in WA State.

TEST ADJUSTED CONDITION

Input TPH Soil Conc, mg/kg =

HI =

The Test Adjusted Condition tool allows the user to test whether a particular TPH soil concentration is protective of human health direct contact noncancer effects. *The Workbook uses the same composition ratio as for the measured data (note: the A1 Soil Data Entry must be populated to perform this calculation).*

The tool may be useful for making any necessary downward adjustments to the TPH protective cleanup level. **For example**, downward adjusting to account for HI contributions from other noncarcinogens within the petroleum mixture that are not reflected in this spreadsheet.

Use the "Soil Calculator" to calculate noncancer HQs for other noncarcinogens within the petroleum mixture (i.e., not included in this spreadsheet), and evaluate their contribution to the total HI. The cumulative noncancer effects threshold is an HI of 1.

Soil Calculator

Notes:

(1) Default exposure assumptions provided in the MTCA Rule for these equations were used with the exception of the following dermal exposure parameters: GI and ABS. Updates for these parameters were made consistent with EPA's *Risk Assessment Guidance for Superfund, Vol. I: Human Health Evaluation Manual (Part E, Supplemental Guidance for Dermal Risk Assessment)* . Final. July 2004. EPA/540/R/99/005. The updated values are provided in the Chemical Database worksheet. For more information, see Ecology's July 2021 CLARC Guidance titled: *Toxicity Data and Physical/Chemical Properties for Petroleum Mixtures.*

(2) Noncancer results for the petroleum mixture that exceed a hazard index (HI) of 1 "Fail" compliance with Method C cleanup requirements and are not sufficiently protective. Note that the TPH Cleanup Level at 2 significant figures is considered to be sufficiently protective even though in some cases it may slightly exceed an HI of 1.0.

A2.2 Worksheet for Calculating Soil Cleanup Level for the Protection of Groundwater Quality: (Leaching Pathway)
WAC 173-340-740 and 747

Date: 10/28/21
Site Name: K-C Upland Area
Sample Name: BUST-S58

Chemical of Concern or EC Group	Measured Soil Conc @dry basis	Test Current or Adjusted Condition: Soil Conc being tested	Predicted Conc @Well	Noncancer HQ @ Well (Potable Ingestion) Eq. 720-1 (1)	Noncancer Exceedances (2)
	mg/kg	mg/kg	ug/L	unitless	
Petroleum EC Fraction					
AL_EC >5-6	0	0.00E+00	0.00E+00	0.00E+00	
AL_EC >6-8	0	0.00E+00	0.00E+00	0.00E+00	
AL_EC >8-10	1.18	2.43E+01	2.66E-01	3.32E-03	
AL_EC >10-12	19.65	4.05E+02	2.84E-01	3.56E-03	
AL_EC >12-16	507	1.04E+04	1.31E-01	1.64E-03	
AL_EC >16-21	892	1.84E+04	2.93E-04	1.22E-08	
AL_EC >21-34	1050	2.16E+04	2.69E-09	1.12E-13	
AR_EC >8-10	3.76	7.74E+01	1.36E+02	1.70E-01	
AR_EC >10-12	2.82	5.81E+01	3.65E+01	2.28E-01	
AR_EC >12-16	24.4	5.02E+02	6.40E+01	1.60E-02	
AR_EC >16-21	583	1.20E+04	1.07E+02	4.44E-01	
AR_EC >21-34	662	1.36E+04	1.24E+00	1.94E-03	
Benzene	0	0.00E+00	0.00E+00	0.00E+00	
Toluene	0	0.00E+00	0.00E+00	0.00E+00	
Ethylbenzene	0	0.00E+00	0.00E+00	0.00E+00	
Total Xylenes	0	0.00E+00	0.00E+00	0.00E+00	
Naphthalene	0.25	5.15E+00	4.10E+00	2.56E-02	
1-Methyl Naphthalene	0	0.00E+00	0.00E+00	0.00E+00	
2-Methyl Naphthalene	0	0.00E+00	0.00E+00	0.00E+00	
n-Hexane	0	0.00E+00	0.00E+00	0.00E+00	
MTBE	0	0.00E+00	0.00E+00	0.00E+00	
Ethylene Dibromide (EDB)	0	0.00E+00	0.00E+00	0.00E+00	
1,2 Dichloroethane (EDC)	0	0.00E+00	0.00E+00	0.00E+00	
Benzo(a)anthracene	2.1	4.32E+01	5.90E-03	0.00E+00	
Benzo(b)fluoranthene	0.7	1.44E+01	2.84E-04	0.00E+00	
Benzo(k)fluoranthene	0.25	5.15E+00	5.41E-05	0.00E+00	
Benzo(a)pyrene	0.86	1.77E+01	3.77E-04	7.85E-05	
Chrysene	4.5	9.26E+01	2.69E-03	0.00E+00	
Dibenz(a,h)anthracene	0.25	5.15E+00	1.52E-04	0.00E+00	
Indeno(1,2,3-cd)pyrene	0.25	5.15E+00	1.17E-05	0.00E+00	
Sum	3754.97	7.73E+01	3.49E+02	8.95E-01	HI ≤ 1

Site-Specific Hydrogeological Properties previously entered:

Item	Symbol	Value	Units
Total soil porosity:	*n*	0.43	unitless
Volumetric water content:	*Qw*	0.3	unitless
Volumetric air content:	*Qa*	0.13	unitless
Soil bulk density measured:	*rb*	1.5	kg/L
Fraction Organic Carbon:	*foc*	0.0079	unitless
Dilution Factor:	*DF*	1	unitless

Target Groundwater TPH concentration adjusted previously if any:

Target Groundwater TPH Conc, ug/L: 500

CALCULATE PROTECTIVE CONDITION OR TEST SOIL CONDITION

Calculate Protective TPH Soil Condition for Potable Groundwater Quality @ HI = 1 — @ HI = 1

Test Current or Adjusted TPH Soil Condition — Enter TPH Soil Conc (mg/kg)

Enter a TPH soil concentration greater than "0" before testing soil conditions. Errors will occur if the Test TPH scenarios are run at a TPH Soil Conc of "0", or when left blank.

1. Using Solver Function — Test TPH Soil Conc

2. Alternative: If button above does not work — Test TPH (Alternative)

Calculate Protective Soil Condition for a Target TPH Groundwater Cleanup Level — Protection of Target TPH GW Conc

MODEL RESULTS

Selected Soil Leaching Criterion: Protection of Target TPH Groundwater Concentration

Protective TPH Soil Concentration, mg/kg = 100% NAPL

Protective TPH GW Concentration, ug/L = 3.49E+02 *@ 2 sig figures* **350**

HI @ Well = NA

DETAILED MODEL RESULTS

Type of model used for computation:	4-Phase Model
Computation completed?	Yes!
Initial Weighted Average MW of NAPL, g/mol:	255.8
Equilibrated Weighted Average MW of NAPL, g/mol:	256.0
Initial Weighted Average Density of NAPL, kg/L:	0.892
Volumetric NAPL Content, QNAPL :	1.3E-01
NAPL Saturation (%), QNAPL/n:	30.21%
100% NAPL, mg/kg	77303.6

Mass Distribution Pattern @ 4-phase in soil pore system:

Total Mass distributed in Water Phase: 0.00% in Solid: 0.06%

Total Mass distributed in Air Phase: 0.00% in NAPL: 99.94%

Please Check Soil Residual Saturation TPH Levels: Refer to Table 747-5!

Notes:

(1) Default exposure assumptions provided in the MTCA Rule for these equations were used. All of the aliphatic fractions, including aromatic fractions up to EC21, are sufficiently volatile based on their Henry's law, and have been assigned an INH value 2. Aromatic fractions greater than EC21 to EC34 are dominated by high molecular weight PAHs) and are not considered to be sufficiently volatile. These are evaluated using an INH of 1. The updated values are provided in the Chemical Database worksheet. For more information, see Ecology's July 2021 CLARC Guidance titled: *Toxicity Data and Physical/Chemical Properties for Petroleum Mixtures.*

(2) Noncancer results for the petroleum mixture that exceed a hazard index (HI) of 1 "Fail" compliance with Method B cleanup requirements and are not sufficiently protective.

Hydraulic Barker Building Area (Sample HB-MW-1R)

A3.1A Worksheet for Calculating TPH Soil Cleanup Levels for Protection of Human Health: (Soil Direct Contact Pathway - Exposure via Combined Incidental Soil Ingestion and Dermal Contact)

Method C: Industrial Land Use (WAC 173-340-745)

Date: 10/28/21
Site Name: K-C Upland Area
Sample Name: HB-MW01R

Chemical of Concern or EC group	Current Condition				Test Adjusted Condition		
		Noncancer Hazards			Noncancer Hazards		
	Measured Soil Conc @dry basis	Noncancer HQ MTCA Eq. 745-4 (1)	Percent Contribution to the Total HI	Noncancer Exceedances (2)	Soil Conc being tested	Noncancer HQ MTCA Eq. 745-4 (1)	Noncancer Exceedances (1)
	mg/kg	unitless	percent		mg/kg	unitless	
Petroleum EC Fraction							
AL_EC >5-6	0						
AL_EC >6-8	0						
AL_EC >8-10	1.03	5.15E-05	0.2%				
AL_EC >10-12	1.91	9.55E-05	0.4%				
AL_EC >12-16	0						
AL_EC >16-21	2610	4.35E-04	1.8%				
AL_EC >21-34	811	1.35E-04	0.5%				
AR_EC >8-10	1.76	8.80E-06	0.0%				
AR_EC >10-12	2.76	6.90E-05	0.3%				
AR_EC >12-16	6.11	1.22E-05	0.0%				
AR_EC >16-21	421	1.40E-02	56.9%				
AR_EC >21-34	343	8.58E-03	34.8%				
Benzene	0						
Toluene	0						
Ethylbenzene	0						
Total Xylenes	0						
Naphthalene	0.05	2.88E-06	0.0%				
1-Methyl Naphthalene	0						
2-Methyl Naphthalene	0						
n-Hexane	0						
MTBE	0						
Ethylene Dibromide (EDB)	0						
1,2 Dichloroethane (EDC)	0						
Benzo(a)anthracene	0.37						
Benzo(b)fluoranthene	0.29						
Benzo(k)fluoranthene	0.13						
Benzo(a)pyrene	0.32	1.23E-03	5.0%				
Chrysene	0.42						
Dibenz(a,h)anthracene	0.05						
Indeno(1,2,3-cd)pyrene	0.16						
Sum	**4200.36**	2.46E-02	100%	HI ≤ 1			

DIRECT CONTACT - CURRENT CONDITION

Measured TPH Soil Conc, mg/kg = 4200.36

HI = 2.5E-02 **Pass**

MTCA Eq. 745-3 (1)

TPH Cleanup Level (mg/kg) (HI = 1) = 170434.14

2 Significant Figures = 170000

Check Residual Saturation (WAC 340-747(10))

The overall TPH Method C direct contact protective cleanup level is based on a noncancer HI of 1. *See* WAC 173-340-745(5)(b)(iii)(B)(III). The TPH Cleanup Level at 2 significant figures is considered to be sufficiently protective even though in some cases it may slightly exceed an HI of 1.0.

Adjustments: The overal TPH soil direct contact protective cleanup level may need to be adjusted downward to account for exposure to other noncarcinogens within the petroleum mixture (*see* WAC 173-340-740(5)(a)). MTCA Equation 745-4 is used to evaluate noncancer effects from other noncarcinogens (i.e., not listed herein) within the petroleum mixture.

To assess the Vapor pathway for petroleum mixtures, see Ecology's Guidance for Evaluating Soil VI in WA State.

TEST ADJUSTED CONDITION

Input TPH Soil Conc, mg/kg =

HI =

The Test Adjusted Condition tool allows the user to test whether a particular TPH soil concentration is protective of human health direct contact noncancer effects. *The Workbook uses the same composition ratio as for the measured data (note: the A1 Soil Data Entry must be populated to perform this calculation).*

The tool may be useful for making any necessary downward adjustments to the TPH protective cleanup level. **For example**, downward adjusting to account for HI contributions from other noncarcinogens within the petroleum mixture that are not reflected in this spreadsheet.

Use the "Soil Calculator" to calculate noncancer HQs for other noncarcinogens within the petroleum mixture (i.e., not included in this spreadsheet), and evaluate their contribution to the total HI. The cumulative noncancer effects threshold is an HI of 1.

Soil Calculator

Notes:

(1) Default exposure assumptions provided in the MTCA Rule for these equations were used with the exception of the following dermal exposure parameters: GI and ABS. Updates for these parameters were made consistent with EPA's *Risk Assessment Guidance for Superfund, Vol. I: Human Health Evaluation Manual (Part E, Supplemental Guidance for Dermal Risk Assessment)* . Final. July 2004. EPA/540/R/99/005. The updated values are provided in the Chemical Database worksheet. For more information, see Ecology's July 2021 CLARC Guidance titled: *Toxicity Data and Physical/Chemical Properties for Petroleum Mixtures.*

(2) Noncancer results for the petroleum mixture that exceed a hazard index (HI) of 1 "Fail" compliance with Method C cleanup requirements and are not sufficiently protective. Note that the TPH Cleanup Level at 2 significant figures is considered to be sufficiently protective even though in some cases it may slightly exceed an HI of 1.0.

A2.2 Worksheet for Calculating Soil Cleanup Level for the Protection of Groundwater Quality: (Leaching Pathway)
WAC 173-340-740 and 747

Date: 10/28/21
Site Name: K-C Upland Area
Sample Name: HB-MW01R

Chemical of Concern or EC Group	Measured Soil Conc @dry basis	Test Current or Adjusted Condition: Soil Conc being tested	Predicted Conc @Well	Noncancer HQ @ Well (Potable Ingestion) Eq. 720-1 (1)	Noncancer Exceedances (2)
	mg/kg	mg/kg	ug/L	unitless	
Petroleum EC Fraction					
AL_EC >5-6	0	0.00E+00	0.00E+00	0.00E+00	
AL_EC >6-8	0	0.00E+00	0.00E+00	0.00E+00	
AL_EC >8-10	1.03	1.78E+01	2.20E-01	2.75E-03	
AL_EC >10-12	1.91	3.30E+01	2.63E-02	3.28E-04	
AL_EC >12-16	0	0.00E+00	0.00E+00	0.00E+00	
AL_EC >16-21	2610	4.51E+04	8.14E-04	3.39E-08	
AL_EC >21-34	811	1.40E+04	1.97E-09	8.22E-14	
AR_EC >8-10	1.76	3.04E+01	6.02E+01	7.53E-02	
AR_EC >10-12	2.76	4.77E+01	3.39E+01	2.12E-01	
AR_EC >12-16	6.11	1.06E+02	1.52E+01	3.81E-03	
AR_EC >16-21	421	7.27E+03	7.32E+01	3.05E-01	
AR_EC >21-34	343	5.93E+03	6.11E-01	9.55E-04	
Benzene	0	0.00E+00	0.00E+00	0.00E+00	
Toluene	0	0.00E+00	0.00E+00	0.00E+00	
Ethylbenzene	0	0.00E+00	0.00E+00	0.00E+00	
Total Xylenes	0	0.00E+00	0.00E+00	0.00E+00	
Naphthalene	0.05	8.64E-01	7.78E-01	4.86E-03	
1-Methyl Naphthalene	0	0.00E+00	0.00E+00	0.00E+00	
2-Methyl Naphthalene	0	0.00E+00	0.00E+00	0.00E+00	
n-Hexane	0	0.00E+00	0.00E+00	0.00E+00	
MTBE	0	0.00E+00	0.00E+00	0.00E+00	
Ethylene Dibromide (EDB)	0	0.00E+00	0.00E+00	0.00E+00	
1,2 Dichloroethane (EDC)	0	0.00E+00	0.00E+00	0.00E+00	
Benzo(a)anthracene	0.37	6.39E+00	9.87E-04	0.00E+00	
Benzo(b)fluoranthene	0.29	5.01E+00	1.12E-04	0.00E+00	
Benzo(k)fluoranthene	0.13	2.25E+00	2.67E-05	0.00E+00	
Benzo(a)pyrene	0.32	5.53E+00	1.33E-04	2.77E-05	
Chrysene	0.42	7.26E+00	2.39E-04	0.00E+00	
Dibenz(a,h)anthracene	0.05	8.64E-01	2.90E-05	0.00E+00	
Indeno(1,2,3-cd)pyrene	0.16	2.76E+00	7.13E-06	0.00E+00	
Sum	4200.36	7.26E+04	1.84E+02	6.05E-01	HI ≤ 1

Site-Specific Hydrogeological Properties previously entered:

Item	Symbol	Value	Units
Total soil porosity:	*n*	0.43	unitless
Volumetric water content:	*Qw*	0.3	unitless
Volumetric air content:	*Qa*	0.13	unitless
Soil bulk density measured:	*rb*	1.5	kg/L
Fraction Organic Carbon:	*foc*	0.0079	unitless
Dilution Factor:	*DF*	1	unitless

Target Groundwater TPH concentration adjusted previously if any:

Target Groundwater TPH Conc, ug/L: 500

CALCULATE PROTECTIVE CONDITION OR TEST SOIL CONDITION

Calculate Protective TPH Soil Condition for Potable Groundwater Quality @ HI = 1 — @ HI = 1

Test Current or Adjusted TPH Soil Condition — Enter TPH Soil Conc (mg/kg)

Enter a TPH soil concentration greater than "0" before testing soil conditions. Errors will occur if the Test TPH scenarios are run at a TPH Soil Conc of "0", or when left blank.

1. Using Solver Function — Test TPH Soil Conc

2. Alternative: If button above does not work — Test TPH (Alternative)

Calculate Protective Soil Condition for a Target TPH Groundwater Cleanup Level — Protection of Target TPH GW Conc

MODEL RESULTS

Selected Soil Leaching Criterion: Protection of Target TPH Groundwater Concentration

Protective TPH Soil Concentration, mg/kg = 100% NAPL

Protective TPH GW Concentration, ug/L = 1.84E+02 *@ 2 sig figures* **180**

HI @ Well = NA

DETAILED MODEL RESULTS

Type of model used for computation:	4-Phase Model
Computation completed?	Yes!
Initial Weighted Average MW of NAPL, g/mol:	272.0
Equilibrated Weighted Average MW of NAPL, g/mol:	272.0
Initial Weighted Average Density of NAPL, kg/L:	0.837
Volumetric NAPL Content, QNAPL :	1.3E-01
NAPL Saturation (%), QNAPL/n:	30.20%
100% NAPL, mg/kg	72573.3

Mass Distribution Pattern @ 4-phase in soil pore system:

Total Mass distributed in Water Phase: 0.00% in Solid: 0.10%

Total Mass distributed in Air Phase: 0.00% in NAPL: 99.90%

Please Check Soil Residual Saturation TPH Levels: Refer to Table 747-5!

Notes:

(1) Default exposure assumptions provided in the MTCA Rule for these equations were used. All of the aliphatic fractions, including aromatic fractions up to EC21, are sufficiently volatile based on their Henry's law, and have been assigned an INH value 2. Aromatic fractions greater than EC21 to EC34 are dominated by high molecular weight PAHs) and are not considered to be sufficiently volatile. These are evaluated using an INH of 1. The updated values are provided in the Chemical Database worksheet. For more information, see Ecology's July 2021 CLARC Guidance titled: *Toxicity Data and Physical/Chemical Properties for Petroleum Mixtures.*

(2) Noncancer results for the petroleum mixture that exceed a hazard index (HI) of 1 "Fail" compliance with Method B cleanup requirements and are not sufficiently protective.

APPENDIX G

Groundwater pH Data Collected During CM Removal Project, 2020

Table G-1. Groundwater pH Data Collected During CM Removal Project, 2020

Project No. AS190583, K-C Worldwide Site Upland Area, Everett, Washington

Date	AP-MW-1R	BA-MW-1	BA-MW-2	BA-MW-3	BA-MW-5	BA6-MW101	BCT-MW-104	BCT-MW-106	BCT-MW-108	CN-MW-101	CN-MW-103	GF9-MW-2	GF9-MW-3	LP-MW-1	LP-MW-2	LP-MW-4	MW-1	MW-2	MW-6	NRS-MW-102	NRU-MW-102	PM-MW-2	PM-MW-3	PM-MW-4	PM-MW-5	PM-MW-6
6/3/2020							7.25	7.08	11.02													7.65		10.11	10.74	
6/4/2020							7.34	7.18	11.06													7.63		10.15	10.72	
6/5/2020							7.33	7.18	11.04													7.63		10.16	10.72	
6/10/2020	10.63		9.30	7.28			7.24	7.12																		6.86
6/11/2020	10.44		9.32	7.34																			9.52			7.05
6/12/2020	10.40		9.29	7.31																			9.58			7.15
6/15/2020																							9.46			
6/19/2020																							9.20			
6/30/2020							7.06	7.19	10.82																10.80	
7/1/2020							7.21	7.12	10.90																10.85	
7/6/2020							7.35	7.19	11.14																10.76	
7/7/2020							7.37	7.17	11.22																10.73	
7/8/2020							7.35	7.17	11.20																10.69	
7/9/2020	10.37						7.44	7.12	11.22														8.98		10.73	
7/10/2020	10.41								11.13														9.22		10.67	
7/13/2020	10.35						7.40	7.18	11.19				6.90			6.92							8.91		10.66	
7/14/2020	10.27								11.14				6.91			6.92							8.59		10.68	
7/16/2020									11.20		6.51	11.70	6.88			6.91									10.68	
7/17/2020									11.11		6.48	11.75	6.93			6.90									10.58	
7/20/2020									11.04		6.50	11.83	6.91			6.89									10.57	
7/21/2020	10.34						7.52	7.16					6.92										8.07			
7/22/2020									11.11																10.54	
7/23/2020									11.08																10.48	
7/27/2020	10.30						7.43	7.14	11.09														8.62		10.55	
7/29/2020									11.03																10.53	
7/30/2020									11.06																10.54	
8/3/2020	10.23						7.38	7.10	11.05				6.84			6.89							7.78		10.41	
8/5/2020																										
8/10/2020	10.20								11.01				6.88			6.91	7.41	7.82					7.85	10.14	10.40	
8/12/2020																	7.43	7.88						10.18		
8/13/2020																	7.45	7.89						10.17		
8/17/2020													6.88			6.98		7.72						9.86		
8/24/2020													6.92			6.95										
8/26/2020		7.50	9.03	7.41																						7.12
8/27/2020		7.49	9.05	7.44																						7.11
8/28/2020		7.52	9.03	7.40																						7.09
8/31/2020													6.88	7.04	6.52	6.90		7.77								
9/2/2020														7.07	6.50											
9/3/2020													6.92	7.24	6.54	6.90										
9/8/2020			8.88	7.25						6.52			6.92	7.18		6.99		7.68	7.13	6.56	7.12			9.79		
9/9/2020										6.59				7.27					7.14	6.67	6.89					
9/10/2020										6.56				7.26					7.19	6.54	6.91					
9/14/2020			8.79	7.50										7.52				7.77						9.77		
9/21/2020					6.62												7.40									
9/22/2020			8.90	7.27	6.62									7.20			7.43	7.60						9.75		
9/23/2020					6.64												7.49									
9/28/2020			9.15	7.58						6.57				9.72										9.60		
9/29/2020														10.52												
10/1/2020														10.84	6.71				7.20							
10/2/2020						7.20				6.57				10.85			6.84									
10/5/2020						7.22				6.56				11.34	6.95		6.88		7.29							
10/6/2020						7.19									6.92											
10/7/2020														11.30	6.97				7.34							
10/8/2020																				7.05	6.96					
10/9/2020						7.26								11.38	7.02				7.32	7.09	6.99					
10/12/2020						7.07				6.50				11.60	6.57		7.50		7.17	6.91	7.04					
10/19/2020						7.05				6.56					6.55		6.79		7.20	7.03	7.00					
10/28/2020						6.61									6.65		7.26		7.22	7.05	7.02					
11/2/2020															6.60				7.10	6.92	6.96					
11/12/2020																			7.06	6.94	7.00					

Table G-1. Groundwater pH Data Collected During CM Removal Project, 2020

Project No. AS190583, K-C Worldwide Site Upland Area, Everett, Washington

Date	PM-MW-7	PM-MW-8	RCD-MW-101	REC3-MW-1R	REC6-MW-2	REC7-MW-2	REC7-MW-3	REC7-MW-4	SHB-MW-2	SHB-MW101	SHB-MW-102	TM-MW-1	TM-MW-2	TM-MW-5	TM-MW-6	UST29-MW101	UST29-MW102	UST29-MW-103	UST68-MW-5	UST70-MW-2	UST71-MW-101	UST71-MW-102	UST71-MW-103	UST71-MW-104
6/3/2020								7.81											7.88					
6/4/2020								7.95											7.93					
6/5/2020								7.94											7.96					
6/10/2020							7.53	7.77																
6/11/2020							7.67																	
6/12/2020							7.84																	
6/15/2020																								
6/19/2020																								
6/30/2020																								
7/1/2020																								
7/6/2020																								
7/7/2020																								
7/8/2020																								
7/9/2020																								
7/10/2020																								
7/13/2020																		9.21						
7/14/2020													8.61					9.22						
7/16/2020												6.57	8.64	7.78		9.97	7.91	9.19						
7/17/2020												6.58	8.66	7.79		10.01	7.91	9.21						
7/20/2020												6.56	7.37	7.83		10.07	8.68	8.82						
7/21/2020																								
7/22/2020																								
7/23/2020																								
7/27/2020																								
7/29/2020																								
7/30/2020																								
8/3/2020																		8.68						
8/5/2020												6.63	7.29											
8/10/2020	7.17						7.17	7.95					7.32					8.66	8.05					
8/12/2020	7.15						7.60	7.96											8.08					
8/13/2020	7.09						7.62	7.93											8.04					
8/17/2020								7.85					7.26					8.29	7.99					
8/24/2020													7.22					8.33						
8/26/2020																							6.43	7.56
8/27/2020																							6.46	7.58
8/28/2020																							6.47	7.57
8/31/2020								7.87	6.69	6.84	7.28		7.24					8.43	7.92					
9/2/2020									6.63	6.83	7.30													
9/3/2020									6.61	6.82	7.31		7.06					8.68						
9/8/2020					7.00	6.85		7.77					7.06	7.68	7.37			8.06	8.18					
9/9/2020					7.02	6.86								7.49	7.34									
9/10/2020					7.01	6.89								7.56	7.31									
9/14/2020								7.90		7.52	7.35		7.20						8.27					
9/21/2020	7.17	7.05	6.66	7.26			7.57												8.12	7.08	7.12		6.21	
9/22/2020	7.16	7.07	6.68	7.24			7.60	7.82			7.30		7.01	7.60					8.13	7.12	7.14		6.24	
9/23/2020	7.17	7.10	6.64	7.30			7.57												8.15	7.11	7.17		6.26	
9/28/2020											7.20			7.50										
9/29/2020										6.85														
10/1/2020					6.96				6.60	6.85				8.05	7.35									
10/2/2020														7.45								6.30		
10/5/2020					7.22				7.13	6.87				7.43	7.52							6.33		
10/6/2020									7.14													6.35		
10/7/2020					7.20				7.06	6.98				7.50	7.57									
10/8/2020						6.99									7.54									
10/9/2020					7.18	6.93			7.13	6.99				7.41	7.55							6.36		
10/12/2020					6.99	6.64			6.66	7.07				7.67	7.21									
10/19/2020					6.67	6.65			6.87					7.38	7.22							6.33		
10/28/2020					6.66	6.68			6.89						7.18							6.26		
11/2/2020					6.67	6.66			6.87						7.15									
11/12/2020					6.75	7.33									7.18									

APPENDIX H

Background Information Regarding Ammonia and Sulfide

H. Background Information Regarding Ammonia and Sulfide

This appendix presents background information regarding ammonia and sulfide that is pertinent to measuring concentrations of the toxic forms of each compound and thereby assessing their environmental risks. The following sections provide a brief overview of the environmental geochemistry of ammonia and sulfide, and then describe the methods used to calculate, from analytical results, the concentrations of the toxic forms of ammonia and sulfide.

H.1. Overview of Ammonia and Sulfide Geochemistry

H.1.1. Ammonia

In the environment, ammonia is natural part of the nitrogen cycle and is produced from anaerobic bacterial processes such as the decomposition of organic matter. Ammonia is a primary form of nitrogen in waters containing low dissolved oxygen levels, and is typically present at higher concentrations in marine sediment porewater compared to overlying surface waters.

'Total free ammonia' is the sum of unionized ammonia (NH_3) and ammonium ion (NH_4^+) concentrations. Since NH_3 is more toxic to benthic and aquatic organisms, federal/state water quality and risk-based porewater benchmarks are based on the NH_3 concentration.

In aqueous solutions, an equilibrium exists between the NH_3 and NH_4^+ species, and their relative proportion is affected by pH, temperature, and salinity as follows:

- **pH.** The proportion of total free ammonia present as NH_3 increases with higher pH; at pH levels less than 8, less than 10 percent of total free ammonia is present as NH_3.
- **Temperature.** The proportion of total free ammonia present as NH_3 increases with higher temperature.
- **Salinity.** The proportion of total free ammonia present as NH_3 decreases with higher salinity.

Both NH_3 and NH_4^+ are soluble in water. However, NH_3 is volatile, particularly at higher temperatures. In addition, NH_3 and NH_4^+ are readily aerobically biologically transformed to nitrite and nitrate in waters containing dissolved oxygen.

H.1.2. Sulfide

Sulfide is also ubiquitous in natural marine sediments, as large quantities of hydrogen sulfide are produced by sulfate-reducing microorganisms utilizing the relatively high concentrations of sulfate present in marine waters to anaerobically degrade organic matter.

Natural marine sediments, as well as dredged marine sediments that were used historically to create most of the upland soil at the Site, typically contain from 0.01 percent to 1 percent bulk sulfide, largely in the form of stable insoluble iron and manganese sulfide minerals. Like ammonia, dissolved sulfide is typically present at higher concentrations in marine sediment porewater compared to overlying surface waters.

'Total free sulfide' is the sum of hydrogen sulfide (H_2S), hydrosulfide ion (HS^-), and disulfide ion (S^{2-}) concentrations. Since H_2S is more toxic to benthic and aquatic organisms, federal/state water quality and risk-based porewater benchmarks are based on the H_2S concentration.

In aqueous solutions, an equilibrium exists between the H_2S, HS^-, and S^{2-} species, and, like ammonia, their relative proportion is affected by pH, temperature, and salinity as follows:

- **pH.** The proportion of total free sulfide present as H_2S decreases with higher pH (opposite that of NH_3), as illustrated on Figure G-1; at pH levels less than 8, more than 10 percent of total free sulfide is present as H_2S.
- **Temperature.** The proportion of total free sulfide present as H_2S decreases with higher temperature.
- **Salinity.** The proportion of total free sulfide present as H_2S decreases with higher salinity.

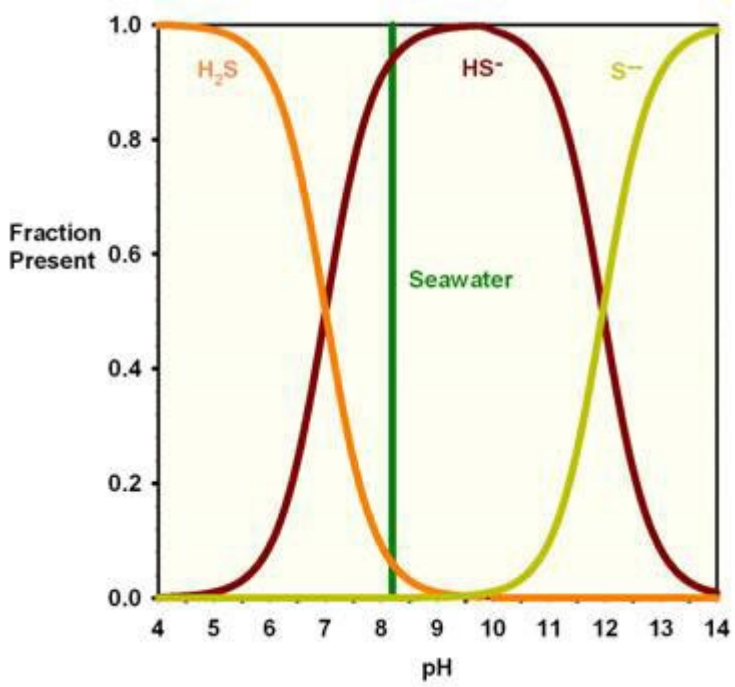

Figure H-1. Distribution of Sulfide Species H_2S, HS^-, and S^{-2} as a Function of Water pH (from http://reefkeeping.com/issues/2005-12/rhf/)

H_2S is highly volatile and when exposed to oxygen is rapidly oxidized (chemically) into sulfate or other nontoxic sulfur species, often within minutes (Ostlund and Alexander,

1963). Until the recent development of more reliable passive sampling methods (see Attachment G1), the volatility and rapid chemical oxidation of H_2S posed difficulties in accurately measuring groundwater and porewater H_2S concentrations in the environment.

H.1.3. Groundwater-Surface Water Interactions

As shallow groundwaters at the Site approach the point of discharge into surface sediments and embankment slopes of the adjacent East Waterway, the higher dissolved oxygen and sulfate concentrations present in marine waters (relative to Site groundwater) disperse into nearshore groundwater. Conceptual groundwater-surface water interactions are depicted on Figure G-2.

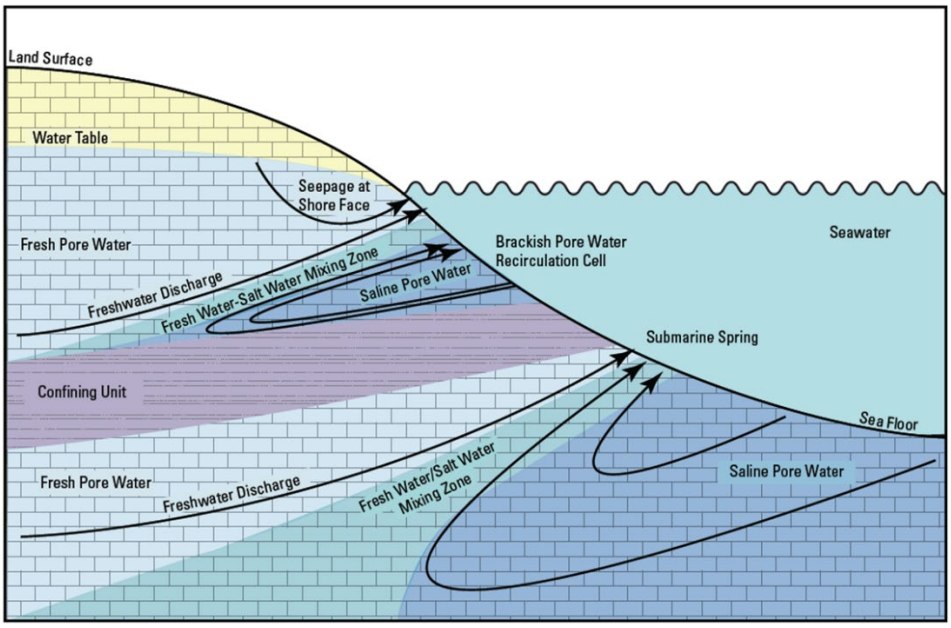

Figure H-2. Groundwater – Surface Water Interactions (from Swarzenski et al. 2004)

As outlined above, sulfate dispersing into near-surface marine sediments with relatively high organic matter concentrations (e.g., sediments and shoreline soils containing wood debris) can increase H_2S production by sulfate-reducing microorganisms. However, concurrent increased dissolved oxygen concentrations in this groundwater transitional zone raises the oxidation-reduction potential, which can retard anaerobic microbial production of NH_3 and H_2S as aerobic processes predominate (Figure G-3). Moreover, increasing dissolved oxygen concentrations in this transition zone stimulate rapid biological transformation of NH_3 to nitrite and nitrate, and even more rapid chemical oxidation of H_2S to sulfate, thus reducing their toxicity.

Because of the complex geochemistry of the transition zone, direct measurement of NH_3 and H_2S is necessary to accurately characterize concentrations within this zone. Moreover, because of chemical and aerobic transformations of NH_3 and H_2S to less-toxic forms in this transition zone, the primary environmental risks posed by elevated NH_3 and

H_2S concentrations are to benthic invertebrates residing at the point of discharge within surface sediments, not to overlying surface waters.

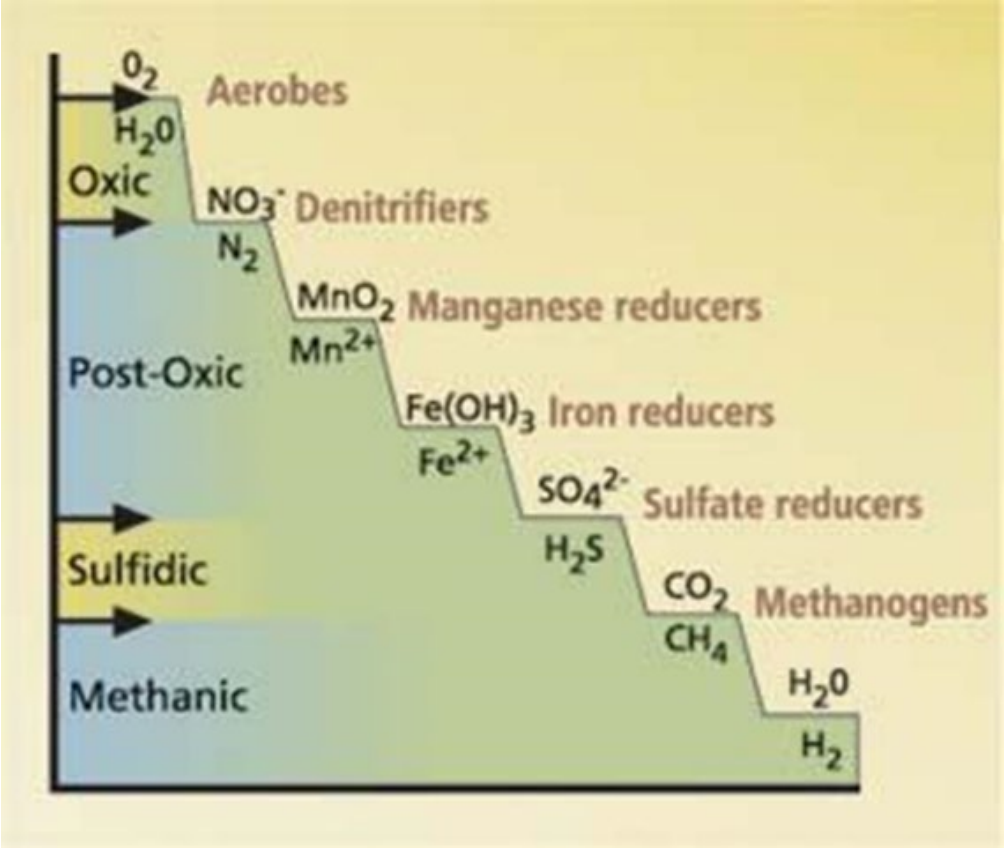

Figure H-3. Microbial Thermodynamic Controls Along the Oxidation-Reduction Scale

H.2. Determination of NH_3 and H_2S Concentrations

H.2.1. Un-ionized Ammonia (NH_3)

The analytical method used to quantify total ammonia concentrations in water samples was EPA Method 350.1. The NH_3 concentrations were calculated using the laboratory-reported total ammonia concentration, field-measured temperature, field-measured pH, and (calculated) salinity for each water sample, applying the algorithm included in Ecology's online PWSPREAD.xls workbook[1]. The sample salinity was calculated from field-measured specific electrical conductance (EC) and temperature using the algorithm in the PWSPREAD workbook.

H.2.2. Hydrogen Sulfide (H_2S)

The analytical method used to quantify total dissolved sulfide concentrations in water samples collected between 2012-2014 was Standard Method 4500-S2-D. However, the

[1] http://www.ecy.wa.gov/programs/eap/pwspread/pwspread.html.

detected concentrations of total dissolved sulfide in field-filtered water samples may include significant amounts of colloidal sulfide minerals that can pass through a 0.45-micron filter, and therefore overstate the concentration of free H_2S that is the measure of sulfide toxicity. Based on paired sample comparisons, as summarized in the main body of the RI/FS report, the total dissolved sulfide method commonly overstates estimated free H_2S concentrations by approximately 100- to 1,000-fold, and thus is of limited value for comparison with cleanup levels that are based on H_2S. However, there is a high degree of confidence that total dissolved sulfide concentrations below cleanup levels would not pose a toxicity risk.

In contrast to Standard Method 4500-S2-D, the *in situ* diffusive-gradients-in-thin-films (DGT) passive sampling protocol is designed specifically to quantify free H_2S concentrations in water for direct comparison with regulatory criteria based on H_2S. The DGT methodology is described in Aspect and Anchor QEA (2015) and Anchor QEA (2015). Attachment G1 presents verification data for the DGT analytical method, confirming its accuracy as a reproducible method for quantifying free H_2S concentrations.

The DGT measurements of free sulfide include both H_2S and HS^- because both species will diffuse into the gel and react with the silver iodide. Because much of the free sulfide will be in the HS^- form at pH greater than 7 (see Figure G-1 above), and since toxicity has been related specifically to H_2S, it is necessary to calculate the H_2S concentration from the free sulfide concentrations measured by DGT. Table G-1 presents the H_2S calculations for Site water samples based on sample-specific measured pH, temperature, and salinity, including equations used to calculate sample-specific dissociation constants (from Millero et al, 1988; Phillips et al, 1997).

Attachments

Table H-1—Calculation of H2S Concentrations from DGT Free Sulfide Concentrations

Attachment H-1—Method Development and Verification Study for Sulfide Measurement in Porewater Using Diffusive-Gradients-in-Thin-Films (DGT)

References for Appendix H

Anchor QEA, 2015, Supplemental Porewater Sulfide Sampling and Analysis, K-C Worldwide Upland Area in Everett, Washington, April 1, 2015.

Aspect Consulting, LLC (Aspect) and Anchor QEA, 2015, Plan for Supplemental Sampling and Analysis of Sulfide in Intertidal Porewater, Kimberly-Clark Worldwide Site, Everett, Washington, February 13, 2015

Millero, F.J., T. Plese, and M. Fernandez, 1988, The Dissociation of Hydrogen Sulfide in Seawater, Limnology and Oceanography, v. 33, pp. 269-274, March 1988.

Ostlund, H.G. and J. Alexander, 1963, Oxidation Rate of Sulfide in Sea Water: A Preliminary Study, Journal of Geophysical Research, v. 68, pp. 3995-3997.

Phillips, B.M., B. Anderson, and J. Hunt, 1997, Measurement and Distribution of Interstitial and Overlying Water Ammonia and Hydrogen Sulfide in Sediment Toxcitiy Tests, Marine Environmental Research, v. 44, pp. 117-126.

Swarzenski, P.W., Charette, M. and Langevin, C., 2004, An Autonomous, Electromagnetic Seepage Meter to Study Coastal Groundwater/Surface Water Exchange, U.S. Geological Survey, Open File Report 2004-1369.

Table H-1. Calculation of H_2S Concentrations from DGT Free Sulfide Concentrations

Project No. 190583, K-C Worldwide Site Upland Area, Everett, Washington

Station	Sample Date	Type	Total Free Sulfide Concentration by DGT (AVS)	H_2S Concentration (Phillips, 1997, w/ sample-specific pKa)	Result Qualifier	Units	Dissociation (pK_1*) Calculation	pK_1 Calculation (Millero, 1988)	Ave Temp (°C)	Ave Temp (°K)	Ave pH (Std Units)	Ave EC (uS/cm)	Ave Salinity (ppt)
LP-MW-1	07/10/17	N	0.0094	**0.00000007**		mg/L	6.96326	7.10272	17.1	290.25	12.09	1880	0.94
LP-MW-2	07/10/17	N	0.0094	**0.00667**		mg/L	7.02781	7.11778	16.2	289.35	6.64	761	0.37
LP-MW-3	07/10/17	N	0.0012	**0.00055**		mg/L	7.02624	7.11610	16.3	289.45	7.10	759	0.36
LP-MW-4	07/10/17	N	0.001	**0.00027**		mg/L	6.87563	7.11274	16.5	289.65	7.31	5955	3.18
LP-MW-5	07/10/17	N	0.028	**0.01025**		mg/L	7.02176	7.12116	16.0	289.15	7.26	933	0.45
LP-MW-5	07/10/17	FD	0.12	**0.04394**		mg/L	7.02176	7.12116	16.0	289.15	7.26	933	0.45
LP-MW-6	07/10/17	N	0.087	**0.05188**		mg/L	6.95954	7.11778	16.2	289.35	6.79	2454	1.24
LP-MW-7	07/10/17	N	0.11	**0.04069**		mg/L	6.79870	7.03709	21.2	294.35	7.03	6029	3.22
REC6-MW-2	07/10/17	N	0.97	**0.08687**		mg/L	6.95287	7.09941	17.3	290.45	7.96	2086	1.05
PW-3	02/09/15	N	0.06	**0.005**	UJ	mg/L	6.85859	7.17686	12.8	285.95	7.90	12155	6.84
PW-3	02/09/15	FD	0.06	**0.005**	UJ	mg/L	6.85859	7.17686	12.8	285.95	7.90	12155	6.84
PW-4	02/09/15	N	0.06	**0.014**	UJ	mg/L	6.86379	7.25864	8.4	281.55	7.40	22780	13.53
PW-5	02/09/15	N	0.06	**0.001**	UJ	mg/L	6.92140	7.17507	12.9	286.05	8.60	6953	3.76
PW-5	07/10/17	N	0.308	**0.005**		mg/L	6.80296	7.10939	16.7	289.85	8.56	11019	6.16
PW-7	02/09/15	N	0.47	**0.114**	J	mg/L	6.90444	7.27418	7.6	280.75	7.40	18466	10.76
SEEP-10	10/20/16	N	0.44	**0.24064**		mg/L	6.84173	7.15736	13.9	287.05	6.76	11890	6.68
SEEP-11	10/20/16	N	0.14	**0.06233**		mg/L	6.83443	7.14862	14.4	287.55	6.93	11750	6.60
SEEP-12	10/20/16	N	0.001	**0.0004**	U	mg/L	6.80508	7.17329	13.0	286.15	6.98	18230	10.61
SEEP-13	10/20/16	N	1.3	**0.76112**		mg/L	6.85996	7.15912	13.8	286.95	6.71	10370	5.77
LP-SW-1	07/26/17	N	0.001	**0.00002**		mg/L	6.61268	7.06054	19.7	292.85	8.27	40043	25.17
LP-SW-3	07/26/17	N	0.002	**0.00006**		mg/L	6.62734	7.07492	18.8	291.95	8.17	39859	25.04

Notes:

Salinity values are calculated from field-measured electrical conductance (EC).

U: Not detected at associated analytical reporting limit. J: Estimated concentration. ppt: Part per thousand.

Sample types: N = normal, FD = Field duplicate.

Values in yellow-shaded columns are the calculated H2S dissociation constants pK1* and pK1 calculated from Millero (1988).

Values in blue-shaded columns are the H2S concentrations calculated using the equilibrium equation from Phillips et al (1997),

References for calculations

Dissociation constant calculations from Millero (1988)

Abstract

The pK_1* for the dissociation of H_2S

has been measured in artificial seawater as a function of salinity (S = 5–40) and temperature (5°– 25°C). Results have been fitted to an equation of the form

$$pK_1^* = pK_1 + AS^{1/2} + BS$$

where pK_1 is the value at infinite dilution given by

$$pK_1 = -98.080 + 5{,}765.4/T + 15.0455 \ln T$$
$$A = -0.1570$$
$$B = 0.0135$$

(σ = 0.033 in pK*, mol kg^{-1} seawater). The results at S = 35 show a 0.08 shift in pK* from the results in the literature, as was also found in 0.7 m NaCl solutions. The results are in good agreement with the apparent pK_1' results when adjusted to the same pH scale. Using values for the apparent activity coefficient of the proton, we combined our results with those results to derive the consensus values of

$$A = -0.1498$$
$$B = 0.0119$$

(σ = 0.028 in pK_1*).

Equilibrium equation for H2S calculation from Phillips et al (1997)

$$[H_2S] = [\text{total } S^{2-}] \times (1-(1/(1 + 10^{(pK_a - pH)})))$$

ATTACHMENT H-1

Method Development and Verification Study for Sulfide Measurement in Porewater Using Diffusive-Gradients-in-Thin-Films (DGT)

DRAFT

421 SW 6th Avenue, Suite 750
Portland, Oregon 97204
503.688.5057

ANCHOR QEA

Memorandum

November 10, 2017

To: Clay Patmont

From: Masa Kanematsu, PhD; Dimitri Vlassopoulos, PhD

Re: Method Development and Verification Study for Sulfide Measurement in Porewater Using Diffusive-Gradients-in-Thin-Films (DGT)

This document presents the results of a laboratory verification study of a passive porewater sampling technique for dissolved sulfide using Diffusive Gradients in Thin-films (DGT). The method, developed over the last two decades (Teasdale et al. 1999; Rearick et al. 2005), is finding increasing use as a reliable in situ technique for quantifying sulfide levels in sediment porewater. The method is based on the reaction of sulfide with silver iodide (AgI), a white powder impregnated in a gel to produce silver sulfide (Ag_2S), a black solid. The intensity of the color developed is proportional to the amount of sulfide accumulated in the gel.

For this study, we developed a calibration curve using optical densitometry (OD) to quantify the amount of sulfide accumulated in the DGT device over a dissolved sulfide concentration range of 0 to 6 mg/L sulfide. To verify the DGT technique, sulfide was extracted from exposed DGTs and quantified using two different extraction and analysis methods:

- Extraction of chromium reducible sulfur (CRS) from the DGT gel and analysis by sulfide ion-specific electrode
- Extraction of the DGT gel by nitric acid/hydrogen peroxide (commonly used in selective sequential extraction schemes to quantify metals associated with sulfides) and analysis of total sulfur released by ICP-MS

Results from both methods were in excellent agreement and quantitative recovery of sulfide from the DGT gels was confirmed by comparison with the theoretical mass of accumulated sulfide calculated using a mass-transfer model. Sulfide recoveries from the DGT gels averaged 101.0% and 96.9% for the CRS and nitric acid/peroxide extraction methods, respectively.

Materials and Methods

DGT Samplers

DGT piston devices for deployment in soil were obtained from DGT® Research (http://www.dgtresearch.com). The DGT samplers were preloaded for sulfide measurement and

consist of a standard DGT holder containing a 0.6 mm thick silver iodide (AgI) impregnated binding gel layer, overlain by a 0.78 mm thick polyacrylamide diffusive gel, and held in place by a 0.45 µm cellulose nitrate membrane filter (Figure 1). The window size of the DGT sampler is 2.54 cm^2. Prior to use, the DGT assemblies were deoxygenated by immersion in 0.01 M sodium nitrate purged with high-purity nitrogen gas for at least 2 days to remove any residual oxygen.

Figure 1
DGT piston assembly (a) and cross-section view (b)

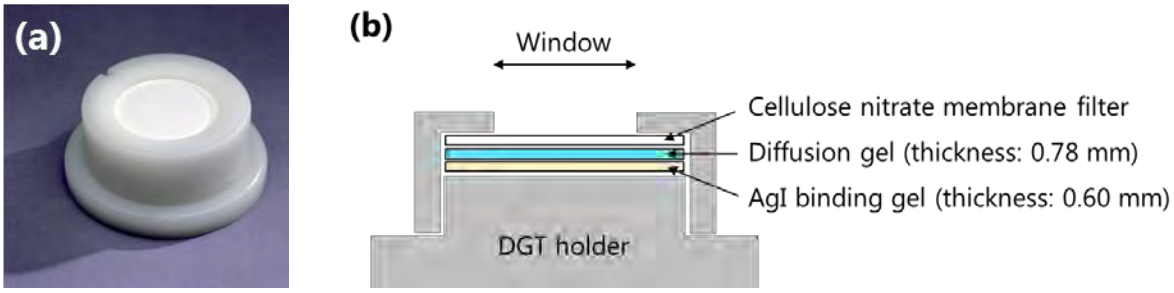

* DGT® Research: http://www.dgtresearch.com/

Preparation of Stock Sulfide Solutions

All sulfide solutions were prepared from a stock solution of approximately 1,000 mg/L as S (1,063 mg/L as H_2S). The stock solution was prepared by first washing a crystal of sodium sulfide nonahydrate ($Na_2S{\cdot}9H_2O$) with deionized (DI) water to remove oxidation products, blotting it dry on tissue paper, accurately weighing it, and dissolving it in deoxygenated DI water. Between uses, the stock solution was stored under nitrogen sealed in a Mylar bag with oxygen absorber packets to minimize exposure to oxygen. The sulfide stock solution was standardized daily by iodometric titration (Standard Method 4500-S2-F; APHA 2005).

Sulfide Measurement by Ion Selective Electrode

Dissolved sulfide concentrations were measured by Standard Method 4500-S2-G (APHA 2005) using a Thermo Scientific silver sulfide solid-state ion selective electrode (ISE) connected to a Thermo Scientific Orion Star A211 potentiometer. Alkaline anti-oxidant buffer (Thermo Scientific Orion 941609) was added to samples and standards to inhibit oxidation of sulfide by oxygen and to provide a constant ionic strength and pH during analysis. A five-point calibration curve was developed daily (Figure 2).

Figure 2
Example calibration curve for sulfide ISE

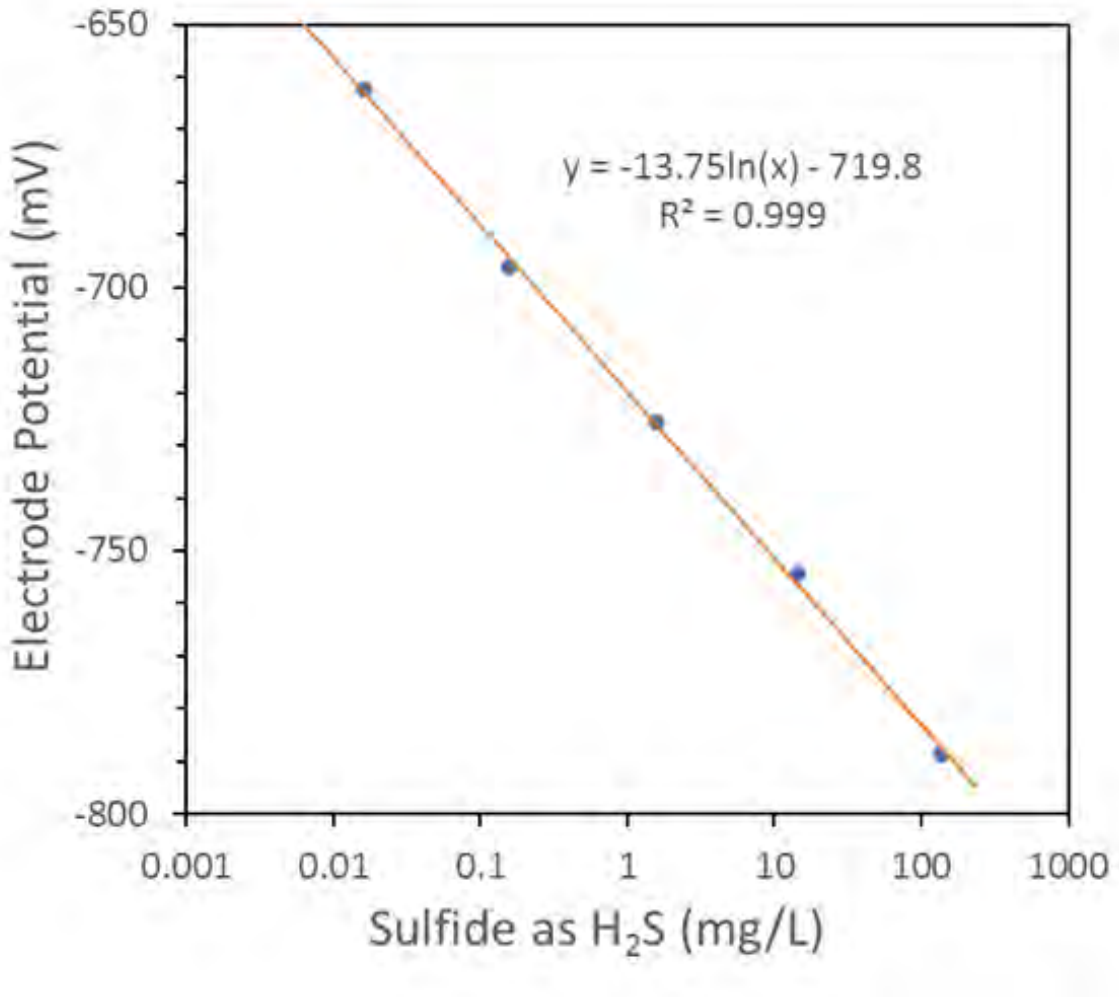

Calibration Curve for the Densitometric Determination of Sulfide

DGT sampler assemblies were exposed in duplicate to test solutions prepared at 8 different sulfide concentrations (0 to 6 mg/L as H_2S) for 24 hours. The solutions were prepared in 0.7 M sodium chloride to simulate seawater ionic strength. To minimize sulfide loss, tests were prepared in glass jars with cone seal caps, all solutions were purged with N_2 gas before addition of the sulfide stock solution, and headspace in the glass containers was minimized. Sulfide concentrations in the standard solutions were monitored by ISE before and after deploying the DGT assemblies.

Following the 24-hour exposure period, the DGT assemblies were retrieved and rinsed with DI water. The binding gel layers were removed and placed on blotting paper. The binding gels were then laid on a thin cellophane sheet (Bio-Rad), and covered with a second cellophane sheet. The sheet assembly was then placed in a vacuum gel dryer (Bio-Rad, Model 583) and dried for 2 hours at 60°C. The dried sheet was digitally scanned (Konica Minolta BizHub-C364) and saved as a gray-scale image. Gel analysis software (UN-SCAN-IT Gel Version 7.1) was used to measure and record the gray-scale intensity of each binding gel on the scanned image.

Extraction and Quantification of Sulfide in DGT Binding Gels

Sulfide was extracted from the exposed DGT binding gels by a modified CRS method (Burton et al., 2008) as well as a nitric acid/peroxide extraction method. Six replicate sulfide-exposed DGT samplers were prepared by exposing the devices to a 3.00 mg/L H_2S solution for 24 hours. Three DGTs were extracted by each method to quantitatively assess sulfide recovery and method reproducibility.

The modified CRS method developed by Burton et al. (2008) was adopted to this study. Briefly, an acidic chromium(II) solution was added to a gas-tight reaction vessel containing the sulfide-reacted binding gel to convert sulfide to hydrogen sulfide gas, which was trapped in an alkaline zinc acetate solution contained in a small centrifuge tube placed inside the reaction vessel. On completion of the extraction, dissolved sulfide concentrations in the trapping solutions were immediately measured by ISE.

A nitric acid/peroxide extraction is one of the steps employed in some selective sequential extraction procedures to quantify metals associated with organic matter and/or sulfides in soil and sediment (Tessier et al. 1979, Zimmerman and Weindorf 2010) and was used to extract sulfur from the DGT. In brief, the sulfide-reacted binding gel is extracted in acidic hydrogen peroxide followed by nitric acid. A detailed description of the procedure is provided in Appendix A. Sulfide released form the gel to the extraction fluid is oxidized to sulfate which is analyzed as total sulfur by Inductively Coupled Plasma Optical Emission Spectrometry (ICP-OES). ICP-OES analysis of the extracts was performed in the analytical geochemistry laboratory of the Geology Department at Portland State University. A procedural blank was also prepared and analyzed and sample results were blank corrected.

Results

Determination of Sulfide in DGT Samplers by Optical Densitometry

Dissolved sulfide concentrations in test solutions were measured before and after deployment of the DGT assemblies (Table 1). Sulfide losses from the solutions over the 24-hour exposure period ranged from 13 to 26 % and averaged 20 %. This is comparable to losses reported by Rearick et al. (2005)

due to oxidation, volatilization, or adsorption. The digital images of the sulfide-accumulated binding gels are shown in Figure 3 and the measured gray-scale intensities of the gels are given in Table 1.

Figure 3
Gray-scale images of DGT binding gels exposed to sulfide standard solutions for 24 hours

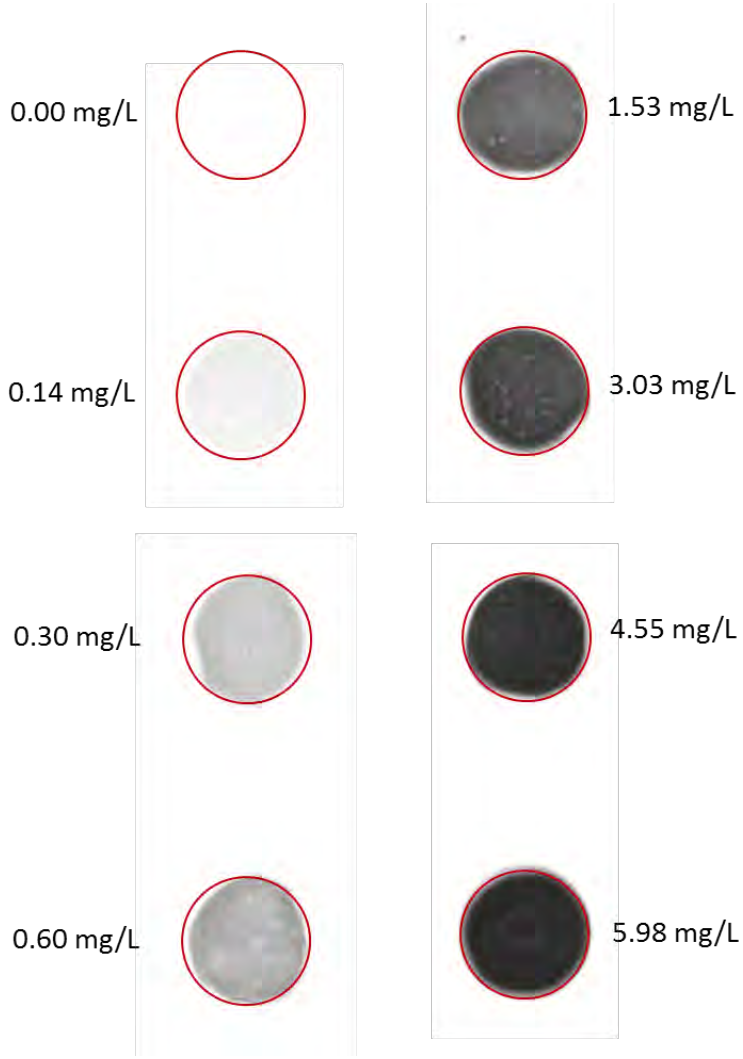

Table 1
Sulfide Mass Balance and Optical Densitometry Results

Solution	Target Concentration (mg/L as H_2S)	Measured Sulfide Concentration (mg/L as H_2S)[1]			Sulfide Loss[2] (%)	Gray-Scale Intensity[3]		
		Initial	Final	Average		1	2	Average
1	0.00	0.00	0.00	0.00	-	0	0	0 (0)
2	0.17	0.16	0.12	0.14	26%	6	14	10 (4)
3	0.34	0.33	0.26	0.30	23%	33	52	43 (10)
4	0.68	0.67	0.52	0.60	23%	100	77	89 (12)
5	1.70	1.70	1.35	1.53	21%	147	138	142 (5)
6	3.40	3.28	2.77	3.03	15%	171	155	163 (8)
7	5.10	4.86	4.24	4.55	13%	183	195	189 (6)
8	6.80	6.64	5.31	5.98	20%	194	193	194 (1)

Notes:

1. Measured by ISE.
2. Sulfide loss (%) during the experiments may be attributed to oxidation, volatilization, or adsorption.
3. Two DGTs were exposed at each sulfide concentration.

A calibration curve was developed by plotting the gray-scale intensity dissolved sulfide exposure concentrations and fitting the data to a function relating intensity to exposure sulfide concentration. As shown in Figure 4, the data were well fit by an exponential function (Equation 1) over the entire range of sulfide concentrations tested (0 – 6 mg/L as H_2S).

Equation 1 is useful for gray-scale intensities greater than about 10 (corresponding to sulfide concentrations greater than 0.15 mg/L). For lower concentrations, a three-point calibration curve was developed using the lowest concentration gel data. For the low range calibration, a power function was found to fit the data best (Equation 2).

Equation 1 is recommended for estimating porewater sulfide concentrations from DGT gels for gray-scale intensity greater than 10 and Equation 2 is appropriate for gray-scale intensity less than or equal to 10.

Equation 1. DGT calibration curve for sulfide concentration using optical densitometry (24-hour exposure)

$$S = 0.1156 \times \exp\{0.0196 \times I\}$$

$$R^2 = 0.992$$

where:

S = sulfide concentration (mg/L as H_2S)

I = gray-scale intensity of binding gel image (10-256)

Figure 4
DGT calibration curve for a 24-hour exposure period

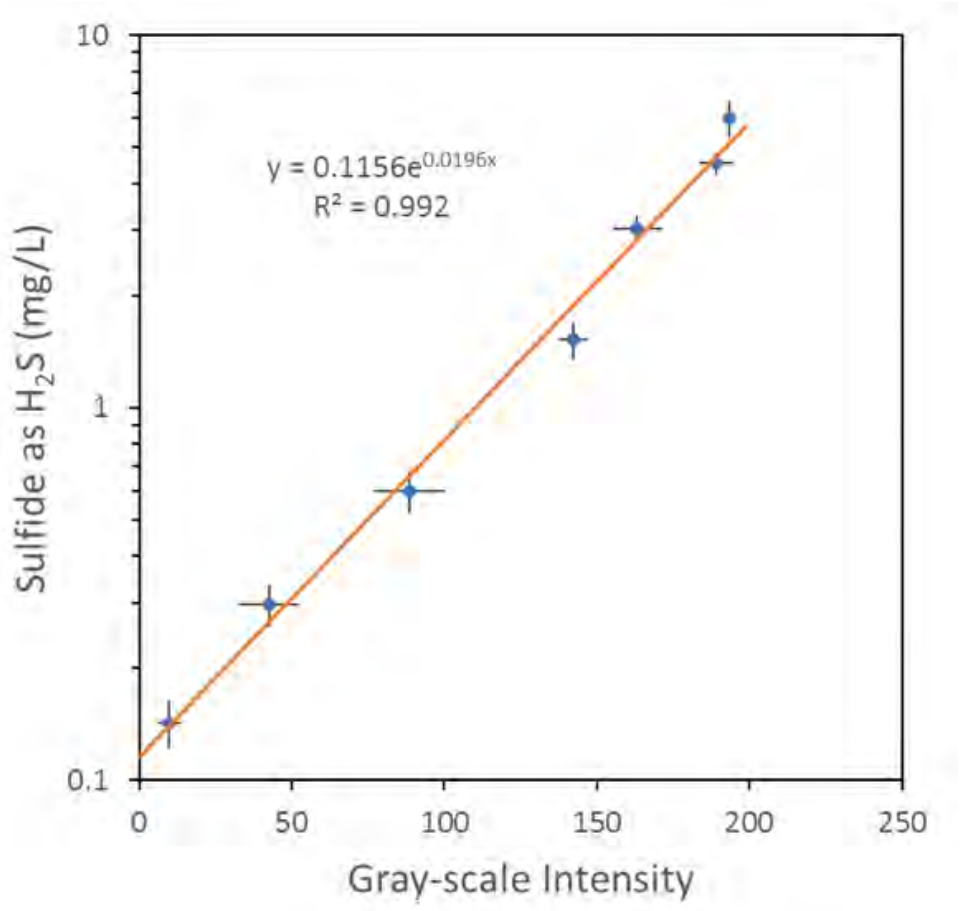

Equation 2. Low-range DGT calibration curve for sulfide concentration using optical densitometry (24-hour exposure)

$$S = 0.0304 \times I^{0.6298}$$

$$R^2 = 0.999$$

where:

S = sulfide concentration (mg/L as H_2S)

I = gray-scale intensity of binding gel image (0-10)

Figure 5
Low-range DGT calibration curve for a 24-hour exposure period

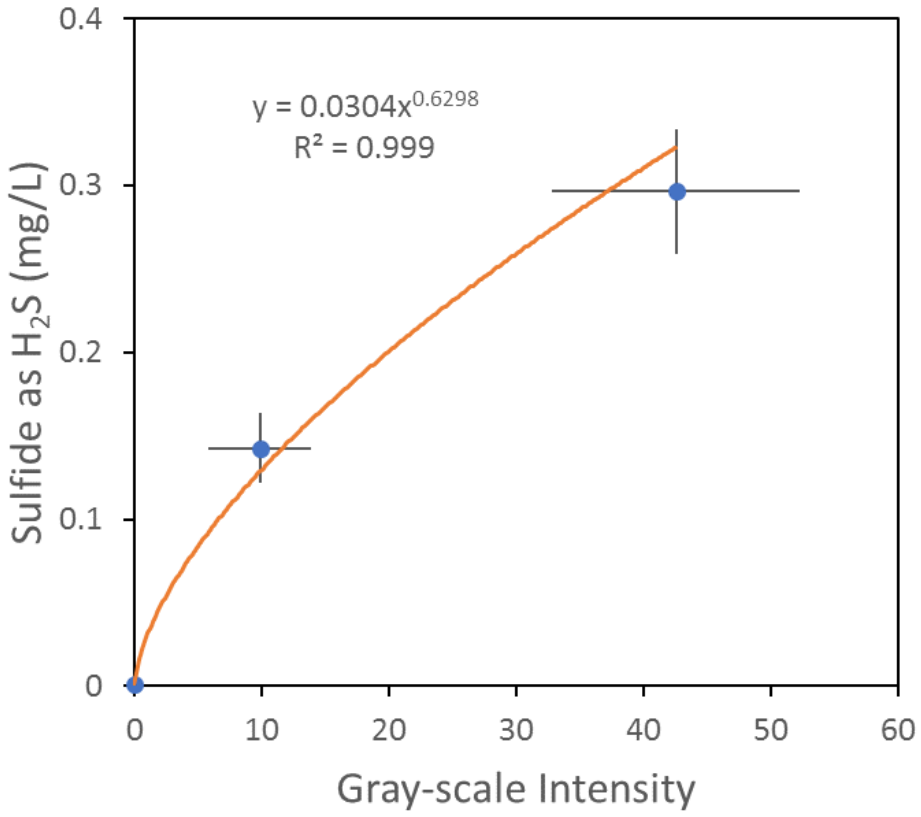

Verification of Sulfide Accumulation in DGT Samplers

Sulfide recovered from DGT binding gels after exposure to 3.00 mg/L H_2S solution for 24 hours by the CRS and nitric acid/peroxide extraction methods are summarized in Table 2. The sulfide mass extracted by the two methods is in very good agreement and excellent sulfide mass recoveries were obtained.

Table 2
Verification of Sulfide Accumulation in DGT

Extraction Method	Measured Sulfide Concentration (mg/L as H_2S)[1]			Mass of Sulfide Extracted from DGT (µg as H_2S)		Theoretical Mass of Sulfide Accumulated in DGT (µg as H_2S)[2]	Recovery (%)[3]
	Initial	Final	Average				
Chromium Reducible Sulfur	3.65 ±0.11	2.34 ±0.04	2.99	1	13.5	13.9	97
				2	13.6		98
				3	15.2		109
				Average	14.1		101
Nitric acid /Peroxide	3.65 ±0.11	2.36 ±0.01	3.00	1	12.9	13.9	92
				2	14.5		104
				3	13.4		96
				Average	13.6		98

Notes:

1. Measured by iodometric titration.
2. Calculated with Equation 2 using the average sulfide concentration, $D=1.65\times10^{-6}$ cm^2/s (derived from data in Teasdale et al. 1999), t=86,400 s, A=2.54 cm^2, and Δg=0.078 cm.
3. Recovery=100×(mass of sulfide extracted)/(theoretical mass of sulfide accumulated)

The extracted sulfide masses were compared to the theoretical amount accumulated calculated using the mass-transfer equation for sulfide accumulation in the DGT assembly (Equation 3) and used to calculate percent recoveries (Table 2).

Equation 3. Model equation for calculating sulfide mass accumulation in DGT binding gel (Teasdale et al. 1999)

$$M = \frac{CDtA}{\Delta g}$$

where:

M	=	mass of sulfide accumulated in binding gel (mg as H_2S)
C	=	sulfide concentration in solution (mg/cm^3 as H_2S)
D	=	effective diffusion coefficient of sulfide in DGT (cm^2/s)
t	=	exposure time (s)
A	=	cross-sectional area of DGT window (cm^2)
Δg	=	thickness of diffusion layer (cm)

The sulfide mass recoveries were in excellent agreement with the theoretical sulfide mass accumulated calculated by equation 3 and averaged 101 % of theoretical for the CRS method and 98 % for the nitric acid/peroxide extraction (Table 2).

Summary

The present study verified the DGT method for passive sampling of dissolved sulfide by establishing a quantitative relationship between dissolved sulfide concentrations in the range of 0 to 6 mg/L and the gray-scale intensity developed by the DGT binding gel after a 24-hour exposure period, and confirmed that the sulfide accumulated in the DGT gel agreed with the amount expected from theory. The results of this study show that the DGT method with quantification by optical densitometry gives accurate and reproducible results for dissolved sulfide concentrations and calibration curves were developed for field application of the DGT devices.

References

American Public Health Association (APHA), 2005. Standard Methods for the Examination of Water and Wastewater, 21st ed. http://standardmethods.org

Burton, E.D., Sullivan, L.A., Bush, R.T., Johnston, S.G., and A.F. Keene, 2008. A simple and inexpensive chromium-reducible sulfur method for acid-sulfate soils. *Applied Geochemistry* 23:2759-2766.

Rearick, M.S., Gilmour, C.C., Heyes, A., R.P. Mason, 2005. Measuring sulfide accumulation in diffusive gradients in thin films by means of purge and trap followed by ion-selective electrode. *Environmental Chemistry & Toxicology* 24:3043-3047.

Teasdale, P.R., Hayward, S., and W. Davison, 1999. In situ, high-resolution measurement of dissolved sulfide using diffusive gradients in thin films with computer-imaging densitometry. *Analytical Chemistry* 71:2186-2191.

Tessier, A, PGC Campbell and M. Bisson, 1979. Sequential extraction procedure for the speciation of particulate trace metals. *Analytical Chemistry* 51:844-851.

Zimmerman, A.J., and D.C. Weindorf, 2010. Heavy metal and trace metal analysis in soil by sequential extraction: a review of procedures. *International Journal of Analytical Chemistry* (dx.doi.org/10.1155/2010/387803).

Appendix A

Nitric acid/peroxide extraction procedure

Fluid 1: 0.02 M nitric acid
Fluid 2: 30% hydrogen peroxide adjusted to pH 2 with nitric acid
Fluid 3: 3.2 M ammonium acetate in 20% v/v nitric acid

1. Place a sulfide exposed DGT binding gel in a 50 mL centrifuge tube
2. Add 3 mL of fluid 1 and 5 mL of fluid 2 and heat in shaker-water bath at 85 ± 2 °C for 2 hours
3. 3. Add 3 mL of fluid 2 and heat for an additional 3 hours
4. After cooling, add 5 mL of fluid 3, dilute to 20 mL and agitate for 30 minutes at room temperature
5. Centrifuge at 10,000 rpm for 25 minutes (if solid is present)
6. Decant fluid
7. Repeat steps 3-6 with DI water (if solid is present)
8. Combine all decanted fluid, acidify with nitric acid to pH <2
9. Dilute with DI water to a final volume of 50 mL and submit for analysis

APPENDIX I

Statistical Analysis Output for Soil Metals Data (ProUCL Software)

#VALUE!	General Statistics on Uncensored Data	
Date/Time of Computation	ProUCL 5.19/22/2021 11:38:20	
User Selected Options		
From File	WorkSheet_y.xls	
Full Precision	OFF	

#VALUE!

From File: WorkSheet_y.xls

General Statistics for Censored Datasets (with NDs) using Kaplan Meier Method

Variable	NumObs	# Missing	Num Ds	NumNDs	% NDs	Min ND	Max ND	KM Mean	KM Var	KM SD	KM CV
copper Unit A	78	0	72	6	7.69%	2.5	2.5	15.86	239.9	15.49	0.977

#VALUE!

General Statistics for Raw Dataset using Detected Data Only

Variable	NumObs	# Missing	Minimum	Maximum	Mean	Median	Var	SD	MAD/0.675	Skewness	CV
copper Unit A	72	0	2.81	87.4	16.97	11.2	247.2	15.72	8.999	2.072	0.926

Percentiles using all Detects (Ds) and Non-Detects (NDs)

Variable	NumObs	# Missing	10%ile	20%ile	25%ile(Q1)	50%ile(Q2)	75%ile(Q3)	80%ile	90%ile	95%ile	99%ile
copper Unit A	78	0	3.948	4.808	5.858	8.99	20.63	27.26	33.58	44.18	68.61

1				**Nonparametric Background Statistics for Data Sets with Non-Detects**								
2			**User Selected Options**									
3			Date/Time of Computation	ProUCL 5.19/22/2021 11:37:35								
4			From File	WorkSheet_y.xls								
5			Full Precision	OFF								
6			Confidence Coefficient	95%								
7			Coverage	95%								
8			Different or Future K Observations	1								
9												
10	**copper Unit A**											
11												
12						**General Statistics**							
13						Total Number of Observations	78			Number of Distinct Observations	70		
14						Number of Detects	72			Number of Non-Detects	6		
15						Number of Distinct Detects	69			Number of Distinct Non-Detects	1		
16						Minimum Detect	2.81			Minimum Non-Detect	2.5		
17						Maximum Detect	87.4			Maximum Non-Detect	2.5		
18						Variance Detected	247.2			Percent Non-Detects	7.692%		
19						Mean Detected	16.97			SD Detected	15.72		
20						Mean of Detected Logged Data	2.492			SD of Detected Logged Data	0.811		
21													
22						**Critical Values for Background Threshold Values (BTVs)**							
23						Tolerance Factor K (For UTL)	1.965			d2max (for USL)	3.123		
24													
25						**Nonparametric Distribution Free Background Statistics**							
26						Data do not follow a Discernible Distribution (0.05)							
27													
28						**Kaplan Meier (KM) Background Statistics Assuming Normal Distribution**							
29						Mean	15.86			SD	15.49		
30						95% UTL95% Coverage	46.29			95% KM UPL (t)	41.81		
31						95% KM Chebyshev UPL	83.8			90% KM Percentile (z)	35.71		
32						95% KM Percentile (z)	41.33			99% KM Percentile (z)	51.89		
33						95% KM USL	64.23						
34													
35						**Nonparametric Upper Limits for BTVs(no distinction made between detects and nondetects)**							
36						Order of Statistic, r	77			95% UTL with95% Coverage	63		
37						Approx, f used to compute achieved CC	2.026			Approximate Actual Confidence Coefficient achieved by UTL	0.907		
38						Approximate Sample Size needed to achieve specified CC	93			95% UPL	52.62		
39						95% USL	87.4			95% KM Chebyshev UPL	83.8		
40													
41						Note: The use of USL tends to yield a conservative estimate of BTV, especially when the sample size starts exceeding 20.							
42						Therefore, one may use USL to estimate a BTV only when the data set represents a background data set free of outliers							
43						and consists of observations collected from clean unimpacted locations.							
44						The use of USL tends to provide a balance between false positives and false negatives provided the data							
45						represents a background data set and when many onsite observations need to be compared with the BTV.							
46													

Nonparametric UCL Statistics for Data Sets with Non-Detects

User Selected Options	
Date/Time of Computation	ProUCL 5.19/22/2021 11:37:47
From File	WorkSheet_y.xls
Full Precision	OFF
Confidence Coefficient	95%
Number of Bootstrap Operations	2000

copper Unit A

General Statistics

Total Number of Observations	78	Number of Distinct Observations	70
Number of Detects	72	Number of Non-Detects	6
Number of Distinct Detects	69	Number of Distinct Non-Detects	1
Minimum Detect	2.81	Minimum Non-Detect	2.5
Maximum Detect	87.4	Maximum Non-Detect	2.5
Variance Detects	247.2	Percent Non-Detects	7.692%
Mean Detects	16.97	SD Detects	15.72
Median Detects	11.2	CV Detects	0.926
Skewness Detects	2.072	Kurtosis Detects	5.449
Mean of Logged Detects	2.492	SD of Logged Detects	0.811

Nonparametric Distribution Free UCL Statistics

Data do not follow a Discernible Distribution at 5% Significance Level

Kaplan-Meier (KM) Statistics using Normal Critical Values and other Nonparametric UCLs

Mean	15.86	Standard Error of Mean	1.766
SD	15.49	95% KM (BCA) UCL	18.91
95% KM (t) UCL	18.8	95% KM (Percentile Bootstrap) UCL	18.74
95% KM (z) UCL	18.76	95% KM Bootstrap t UCL	19.39
90% KM Chebyshev UCL	21.16	95% KM Chebyshev UCL	23.56
97.5% KM Chebyshev UCL	26.89	99% KM Chebyshev UCL	33.43

Statistics using KM estimates on Logged Data and Assuming Lognormal Distribution

KM SD (logged)	0.88	95% Critical H Value (KM-Log)	2.151
KM Mean (logged)	2.371	KM Geo Mean	10.71
KM Standard Error of Mean (logged)	0.1	95% H-UCL (KM -Log)	19.58

Suggested UCL to Use

95% KM (Chebyshev) UCL	23.56

Note: Suggestions regarding the selection of a 95% UCL are provided to help the user to select the most appropriate 95% UCL.

Recommendations are based upon data size, data distribution, and skewness.

These recommendations are based upon the results of the simulation studies summarized in Singh, Maichle, and Lee (2006).

However, simulations results will not cover all Real World data sets; for additional insight the user may want to consult a statistician.

	A	B	C	D	E	F	G	H	I	J	K	L	M
1				**General Statistics on Uncensored Data**									
2			Date/Time of Computation	ProUCL 5.18/24/2021 18:43:04									
3			**User Selected Options**										
4			From File	WorkSheet.xls									
5			Full Precision	OFF									
6													
7	**From File: WorkSheet.xls**												
8													
9						**General Statistics for Censored Datasets (with NDs) using Kaplan Meier Method**								
10													
11	**Variable**		**NumObs**	**# Missing**	**Num Ds**	**NumNDs**	**% NDs**	**Min ND**	**Max ND**	**KM Mean**	**KM Var**	**KM SD**	**KM CV**
12	Lead Sat A		31	0	30	1	3.23%	0.5	0.5	10.15	610.5	24.71	2.434
13													
14						**General Statistics for Raw Dataset using Detected Data Only**								
15													
16	**Variable**		**NumObs**	**# Missing**	**Minimum**	**Maximum**	**Mean**	**Median**	**Var**	**SD**	**MAD/0.675**	**Skewness**	**CV**
17	Lead Sat A		30	0	1.33	119	10.47	2.575	649.3	25.48	1.623	3.745	2.433
18													
19						**Percentiles using all Detects (Ds) and Non-Detects (NDs)**								
20													
21	**Variable**		**NumObs**	**# Missing**	**10%ile**	**20%ile**	**25%ile(Q1)**	**50%ile(Q2)**	**75%ile(Q3)**	**80%ile**	**90%ile**	**95%ile**	**99%ile**
22	Lead Sat A		31	0	1.37	1.51	1.68	2.55	5.41	5.79	11.7	50.3	108.7

A B C D E F G H I J K L

Nonparametric UCL Statistics for Data Sets with Non-Detects

User Selected Options	
Date/Time of Computation	ProUCL 5.19/22/2021 09:15:17
From File	WorkSheet_u.xls
Full Precision	OFF
Confidence Coefficient	95%
Number of Bootstrap Operations	2000

Unit A Lead - Saturated

General Statistics

Total Number of Observations	31	Number of Distinct Observations	29
Number of Detects	30	Number of Non-Detects	1
Number of Distinct Detects	28	Number of Distinct Non-Detects	1
Minimum Detect	1.33	Minimum Non-Detect	0.5
Maximum Detect	119	Maximum Non-Detect	0.5
Variance Detects	649.3	Percent Non-Detects	3.226%
Mean Detects	10.47	SD Detects	25.48
Median Detects	2.575	CV Detects	2.433
Skewness Detects	3.745	Kurtosis Detects	13.7
Mean of Logged Detects	1.334	SD of Logged Detects	1.119

Nonparametric Distribution Free UCL Statistics

Data do not follow a Discernible Distribution at 5% Significance Level

Kaplan-Meier (KM) Statistics using Normal Critical Values and other Nonparametric UCLs

Mean	10.15	Standard Error of Mean	4.514
SD	24.71	95% KM (BCA) UCL	19.06
95% KM (t) UCL	17.81	95% KM (Percentile Bootstrap) UCL	18.65
95% KM (z) UCL	17.57	95% KM Bootstrap t UCL	62.82
90% KM Chebyshev UCL	23.69	95% KM Chebyshev UCL	29.82
97.5% KM Chebyshev UCL	38.34	99% KM Chebyshev UCL	55.06

Statistics using KM estimates on Logged Data and Assuming Lognormal Distribution

KM SD (logged)	1.14	95% Critical H Value (KM-Log)	2.594
KM Mean (logged)	1.268	KM Geo Mean	3.555
KM Standard Error of Mean (logged)	0.208	95% H-UCL (KM -Log)	11.69

Suggested UCL to Use

95% KM (Chebyshev) UCL	29.82

Note: Suggestions regarding the selection of a 95% UCL are provided to help the user to select the most appropriate 95% UCL.

Recommendations are based upon data size, data distribution, and skewness.

These recommendations are based upon the results of the simulation studies summarized in Singh, Maichle, and Lee (2006).

However, simulations results will not cover all Real World data sets; for additional insight the user may want to consult a statistician.

	Nonparametric Background Statistics for Data Sets with Non-Detects	
User Selected Options		
Date/Time of Computation	ProUCL 5.19/22/2021 09:11:44	
From File	WorkSheet_u.xls	
Full Precision	OFF	
Confidence Coefficient	95%	
Coverage	95%	
Different or Future K Observations	1	

Unit A - Lead Saturated

General Statistics

Total Number of Observations	31	Number of Distinct Observations	29
Number of Detects	30	Number of Non-Detects	1
Number of Distinct Detects	28	Number of Distinct Non-Detects	1
Minimum Detect	1.33	Minimum Non-Detect	0.5
Maximum Detect	119	Maximum Non-Detect	0.5
Variance Detected	649.3	Percent Non-Detects	3.226%
Mean Detected	10.47	SD Detected	25.48
Mean of Detected Logged Data	1.334	SD of Detected Logged Data	1.119

Critical Values for Background Threshold Values (BTVs)

Tolerance Factor K (For UTL)	2.197	d2max (for USL)	2.76

Nonparametric Distribution Free Background Statistics

Data do not follow a Discernible Distribution (0.05)

Kaplan Meier (KM) Background Statistics Assuming Normal Distribution

Mean	10.15	SD	24.71
95% UTL95% Coverage	64.44	95% KM UPL (t)	52.76
95% KM Chebyshev UPL	119.6	90% KM Percentile (z)	41.82
95% KM Percentile (z)	50.79	99% KM Percentile (z)	67.63
95% KM USL	78.33		

Nonparametric Upper Limits for BTVs(no distinction made between detects and nondetects)

Order of Statistic, r	31	95% UTL with95% Coverage	119
Approx, f used to compute achieved CC	1.632	Approximate Actual Confidence Coefficient achieved by UTL	0.796
Approximate Sample Size needed to achieve specified CC	59	95% UPL	98.48
95% USL	119	95% KM Chebyshev UPL	119.6

Note: The use of USL tends to yield a conservative estimate of BTV, especially when the sample size starts exceeding 20.
Therefore, one may use USL to estimate a BTV only when the data set represents a background data set free of outliers
and consists of observations collected from clean unimpacted locations.
The use of USL tends to provide a balance between false positives and false negatives provided the data
represents a background data set and when many onsite observations need to be compared with the BTV.

	General Statistics on Uncensored Data	
Date/Time of Computation	ProUCL 5.19/22/2021 09:28:07	
User Selected Options		
From File	WorkSheet_v.xls	
Full Precision	OFF	

From File: WorkSheet_v.xls

General Statistics for Censored Datasets (with NDs) using Kaplan Meier Method

Variable	NumObs	# Missing	Num Ds	NumNDs	% NDs	Min ND	Max ND	KM Mean	KM Var	KM SD	KM CV
lead unsat unit a	27	0	27	0	0.00%	N/A	N/A	53.58	31858	178.5	3.331

General Statistics for Raw Dataset using Detected Data Only

Variable	NumObs	# Missing	Minimum	Maximum	Mean	Median	Var	SD	MAD/0.675	Skewness	CV
lead unsat unit a	27	0	1.45	924	53.58	4.31	31858	178.5	3.351	4.814	3.331

Percentiles using all Detects (Ds) and Non-Detects (NDs)

Variable	NumObs	# Missing	10%ile	20%ile	25%ile(Q1)	50%ile(Q2)	75%ile(Q3)	80%ile	90%ile	95%ile	99%ile
lead unsat unit a	27	0	2.012	2.988	3.22	4.31	10.95	23.96	92.68	154.6	730.3

Nonparametric UCL Statistics for Data Sets with Non-Detects

User Selected Options	
Date/Time of Computation	ProUCL 5.19/22/2021 09:29:37
From File	WorkSheet_v.xls
Full Precision	OFF
Confidence Coefficient	95%
Number of Bootstrap Operations	2000

Unit A Lead - Unsaturated

General Statistics

Total Number of Observations	27	Number of Distinct Observations	25
		Number of Missing Observations	0
Minimum	1.45	Mean	53.58
Maximum	924	Median	4.31
SD	178.5	Std. Error of Mean	34.35
Coefficient of Variation	3.331	Skewness	4.814
Mean of logged Data	2.091	SD of logged Data	1.583

Nonparametric Distribution Free UCL Statistics

Data do not follow a Discernible Distribution (0.05)

Assuming Normal Distribution

95% Normal UCL		95% UCLs (Adjusted for Skewness)	
95% Student's-t UCL	112.2	95% Adjusted-CLT UCL (Chen-1995)	144.1
		95% Modified-t UCL (Johnson-1978)	117.5

Nonparametric Distribution Free UCLs

95% CLT UCL	110.1	95% Jackknife UCL	112.2
95% Standard Bootstrap UCL	109.4	95% Bootstrap-t UCL	367
95% Hall's Bootstrap UCL	299.1	95% Percentile Bootstrap UCL	119.3
95% BCA Bootstrap UCL	169.9		
90% Chebyshev(Mean, Sd) UCL	156.6	95% Chebyshev(Mean, Sd) UCL	203.3
97.5% Chebyshev(Mean, Sd) UCL	268.1	99% Chebyshev(Mean, Sd) UCL	395.4

Suggested UCL to Use

95% Chebyshev (Mean, Sd) UCL	203.3

Note: Suggestions regarding the selection of a 95% UCL are provided to help the user to select the most appropriate 95% UCL.

Recommendations are based upon data size, data distribution, and skewness.

These recommendations are based upon the results of the simulation studies summarized in Singh, Maichle, and Lee (2006).

However, simulations results will not cover all Real World data sets; for additional insight the user may want to consult a statistician.

1				**Nonparametric Background Statistics for Data Sets with Non-Detects**								
2			**User Selected Options**									
3			Date/Time of Computation	ProUCL 5.19/22/2021 09:27:07								
4			From File	WorkSheet_v.xls								
5			Full Precision	OFF								
6			Confidence Coefficient	95%								
7			Coverage	95%								
8			Different or Future K Observations	1								
9												
10	**lead unsat unit a**											
11												
12	**General Statistics**											
13						Total Number of Observations	27			Number of Distinct Observations	25		
14						Minimum	1.45			First Quartile	3.22	
15						Second Largest	179			Median	4.31	
16						Maximum	924			Third Quartile	10.95	
17						Mean	53.58			SD	178.5	
18						Coefficient of Variation	3.331			Skewness	4.814	
19						Mean of logged Data	2.091			SD of logged Data	1.583	
20												
21						**Critical Values for Background Threshold Values (BTVs)**							
22						Tolerance Factor K (For UTL)	2.26			d2max (for USL)	2.698	
23												
24						**Nonparametric Distribution Free Background Statistics**							
25						Data do not follow a Discernible Distribution (0.05)							
26												
27						**Nonparametric Upper Limits for Background Threshold Values**							
28						Order of Statistic, r	27			95% UTL with 95% Coverage	924	
29						Approx, f used to compute achieved CC	1.421			Approximate Actual Confidence Coefficient achieved by UTL	0.75	
30										Approximate Sample Size needed to achieve specified CC	59	
31						95% Percentile Bootstrap UTL with 95% Coverage	924			95% BCA Bootstrap UTL with 95% Coverage	924	
32						95% UPL	626			90% Percentile	92.68	
33						90% Chebyshev UPL	598.9			95% Percentile	154.6	
34						95% Chebyshev UPL	845.9			99% Percentile	730.3	
35						95% USL	924					
36												
37						Note: The use of USL tends to yield a conservative estimate of BTV, especially when the sample size starts exceeding 20.							
38						Therefore, one may use USL to estimate a BTV only when the data set represents a background data set free of outliers							
39						and consists of observations collected from clean unimpacted locations.							
40						The use of USL tends to provide a balance between false positives and false negatives provided the data							
41						represents a background data set and when many onsite observations need to be compared with the BTV.							
42												

	A	B	C	D	E	F	G	H	I	J	K	L	M
1				**General Statistics on Uncensored Full Data**									
2			Date/Time of Computation	ProUCL 5.18/24/2021 19:59:41									
3			**User Selected Options**										
4			From File	WorkSheet.xls									
5			Full Precision	OFF									
6													
7	**From File: WorkSheet.xls**												
8													
9						**General Statistics for Uncensored Dataset**								
10													
11	**Variable**		**NumObs**	**# Missing**	**Minimum**	**Maximum**	**Mean**	**Geo-Mean**	**SD**	**SEM**	**MAD/0.675**	**Skewness**	**CV**
12	Mercury A		78	0	0.05	0.4	0.0641	0.0568	0.0501	0.00567	0	4.768	0.781
13													
14						**Percentiles for Uncensored Dataset**								
15													
16	**Variable**		**NumObs**	**# Missing**	**10%ile**	**20%ile**	**25%ile(Q1)**	**50%ile(Q2)**	**75%ile(Q3)**	**80%ile**	**90%ile**	**95%ile**	**99%ile**
17	Mercury A		78	0	0.05	0.05	0.05	0.05	0.05	0.05	0.068	0.162	0.246

1	**Lognormal UCL Statistics for Data Sets with Non-Detects**	
2		
3	User Selected Options	
4	Date/Time of Computation	ProUCL 5.18/24/2021 20:15:36
5	From File	WorkSheet.xls
6	Full Precision	OFF
7	Confidence Coefficient	95%
8	Number of Bootstrap Operations	2000
9		
10	**Mercury A**	
11		

12	**General Statistics**			
13	Total Number of Observations	78	Number of Distinct Observations	9
14	Number of Detects	8	Number of Non-Detects	70
15	Number of Distinct Detects	8	Number of Distinct Non-Detects	1
16	Minimum Detect	0.11	Minimum Non-Detect	0.05
17	Maximum Detect	0.4	Maximum Non-Detect	0.05
18	Variance Detects	0.00816	Percent Non-Detects	89.74%
19	Mean Detects	0.188	SD Detects	0.0904
20	Median Detects	0.165	CV Detects	0.482
21	Skewness Detects	2.288	Kurtosis Detects	5.844
22	Mean of Logged Detects	-1.749	SD of Logged Detects	0.385
23				
24	**Lognormal GOF Test on Detected Observations Only**			
25	Shapiro Wilk Test Statistic	0.874	**Shapiro Wilk GOF Test**	
26	5% Shapiro Wilk Critical Value	0.818	Detected Data appear Lognormal at 5% Significance Level	
27	Lilliefors Test Statistic	0.234	**Lilliefors GOF Test**	
28	5% Lilliefors Critical Value	0.283	Detected Data appear Lognormal at 5% Significance Level	
29	Detected Data appear Lognormal at 5% Significance Level			
30				
31	**Lognormal ROS Statistics Using Imputed Non-Detects**			
32	Mean in Original Scale	0.0452	Mean in Log Scale	-3.692
33	SD in Original Scale	0.0599	SD in Log Scale	1.108
34	Geometric d_mean	0.0249	95% Percentile Bootstrap UCL	0.0575
35	95% t UCL (assumes normality of ROS data)	0.0565	95% BCA Bootstrap UCL	0.06
36	95% Bootstrap t UCL	0.0608	95% H-UCL (Log ROS)	0.0622
37				
38	**Statistics using KM estimates on Logged Data and Assuming Lognormal Distribution**			
39	KM Mean (logged)	-2.868	KM Geo Mean	0.0568
40	KM SD (logged)	0.396	95% Critical H Value (KM-Log)	1.796
41	KM Standard Error of Mean (logged)	0.0479	95% H-UCL (KM -Log)	0.0666
42				
43	**DL/2 Statistics**			
44	**DL/2 Normal**		**DL/2 Log-Transformed**	
45	Mean in Original Scale	0.0417	Mean in Log Scale	-3.49
46	SD in Original Scale	0.0566	SD in Log Scale	0.604
47	95% t UCL (Assumes normality)	0.0523	95% H-Stat UCL	0.0418
48	DL/2 is not a recommended method, provided for comparisons and historical reasons			
49				
50	**Suggested UCL to Use**			
51	Data appear Gamma, May want to try Gamma Distribution			
52	Note: Suggestions regarding the selection of a 95% UCL are provided to help the user to select the most appropriate 95% UCL.			

	A	B	C	D	E	F	G	H	I	J	K	L
53	Recommendations are based upon data size, data distribution, and skewness.											
54	These recommendations are based upon the results of the simulation studies summarized in Singh, Maichle, and Lee (2006).											
55	However, simulations results will not cover all Real World data sets; for additional insight the user may want to consult a statistician.											
56												

1			#VALUE!	Lognormal Background Statistics for Data Sets with Non-Detects								
2			User Selected Options	#VALUE!								
3			Date/Time of Computation	ProUCL 5.18/24/2021 20:13:57								
4			From File	WorkSheet.xls								
5			Full Precision	OFF								
6			Confidence Coefficient	95%								
7			Coverage	95%								
8			Different or Future K Observations	1								
9			Number of Bootstrap Operations	2000								
10	#VALUE!											
11	Mercury A											
12						#VALUE!						
13						General Statistics						
14					Total Number of Observations	78			Number of Distinct Observations	9		
15					Number of Detects	8			Number of Non-Detects	70		
16					Number of Distinct Detects	8			Number of Distinct Non-Detects	1		
17					Minimum Detect	0.11			Minimum Non-Detect	0.05		
18					Maximum Detect	0.4			Maximum Non-Detect	0.05		
19					Variance Detected	0.00816			Percent Non-Detects	89.74%		
20					Mean Detected	0.188			SD Detected	0.0904		
21					Mean of Detected Logged Data	-1.749			SD of Detected Logged Data	0.385		
22						#VALUE!						
23						Critical Values for Background Threshold Values (BTVs)						
24					Tolerance Factor K (For UTL)	1.965			d2max (for USL)	3.123		
25						#VALUE!						
26						Lognormal GOF Test on Detected Observations Only						
27					Shapiro Wilk Test Statistic	0.874			Shapiro Wilk GOF Test			
28					5% Shapiro Wilk Critical Value	0.818			Detected Data appear Lognormal at 5% Significance Level			
29					Lilliefors Test Statistic	0.234			Lilliefors GOF Test			
30					5% Lilliefors Critical Value	0.283			Detected Data appear Lognormal at 5% Significance Level			
31						Detected Data appear Lognormal at 5% Significance Level						
32						#VALUE!						
33						Kaplan Meier (KM) Background Statistics Assuming Normal Distribution						
34					Mean	0.0641			SD	0.0497		
35					95% UTL95% Coverage	0.162			95% KM UPL (t)	0.147		
36					95% KM Chebyshev UPL	0.282			90% KM Percentile (z)	0.128		
37					95% KM Percentile (z)	0.146			99% KM Percentile (z)	0.18		
38					95% KM USL	0.219						
39						#VALUE!						
40						Background Lognormal ROS Statistics Assuming Lognormal Distribution Using Imputed Non-Detects						
41					Mean in Original Scale	0.0452			Mean in Log Scale	-3.692		
42					SD in Original Scale	0.0599			SD in Log Scale	1.108		
43					95% UTL95% Coverage	0.22			95% BCA UTL95% Coverage	0.2		
44					95% Bootstrap (%) UTL95% Coverage	0.183			95% UPL (t)	0.16		
45					90% Percentile (z)	0.103			95% Percentile (z)	0.154		
46					99% Percentile (z)	0.328			95% USL	0.793		
47						#VALUE!						
48						Statistics using KM estimates on Logged Data and Assuming Lognormal Distribution						
49					KM Mean of Logged Data	-2.868			95% KM UTL (Lognormal)95% Coverage	0.124		
50					KM SD of Logged Data	0.396			95% KM UPL (Lognormal)	0.11		
51					95% KM Percentile Lognormal (z)	0.109			95% KM USL (Lognormal)	0.195		
52						#VALUE!						

	A	B	C	D	E	F	G	H	I	J	K	L
53	**Background DL/2 Statistics Assuming Lognormal Distribution**											
54					Mean in Original Scale	0.0417				Mean in Log Scale		-3.49
55					SD in Original Scale	0.0566				SD in Log Scale		0.604
56					95% UTL95% Coverage	0.0999				95% UPL (t)		0.0839
57					90% Percentile (z)	0.0661				95% Percentile (z)		0.0823
58					99% Percentile (z)	0.124				95% USL		0.201
59	**DL/2 is not a Recommended Method. DL/2 provided for comparisons and historical reasons.**											
60												
61	Note: The use of USL tends to yield a conservative estimate of BTV, especially when the sample size starts exceeding 20.											
62	Therefore, one may use USL to estimate a BTV only when the data set represents a background data set free of outliers											
63	and consists of observations collected from clean unimpacted locations.											
64	The use of USL tends to provide a balance between false positives and false negatives provided the data											
65	represents a background data set and when many onsite observations need to be compared with the BTV.											
66	**#VALUE!**											

	Lognormal UCL Statistics for Data Sets with Non-Detects	
User Selected Options		
Date/Time of Computation	ProUCL 5.18/25/2021 16:08:42	
From File	WorkSheet_a.xls	
Full Precision	OFF	
Confidence Coefficient	95%	
Number of Bootstrap Operations	2000	

Zinc A sat

General Statistics

Total Number of Observations	29	Number of Distinct Observations	28
#VALUE!	#VALUE!	Number of Missing Observations	0
Minimum	7.17	Mean	16.73
Maximum	39.2	Median	13.6
SD	8.823	Std. Error of Mean	1.638
Coefficient of Variation	0.528	Skewness	1.025

Lognormal GOF Test

Shapiro Wilk Test Statistic	0.935	**Shapiro Wilk Lognormal GOF Test**	
5% Shapiro Wilk Critical Value	0.926	Data appear Lognormal at 5% Significance Level	
Lilliefors Test Statistic	0.142	**Lilliefors Lognormal GOF Test**	
5% Lilliefors Critical Value	0.161	Data appear Lognormal at 5% Significance Level	

Data appear Lognormal at 5% Significance Level

Logged Statistics

Minimum of Logged Data	1.97	Mean of logged Data	2.694
Maximum of Logged Data	3.669	SD of logged Data	0.496

Lognormal Maximum likelihood Estimates (MLEs)

MLE Mean	16.73	MLE Standard Deviation	8.838
MLE Median	14.79	MLE Skewness	1.733
MLE Coefficient of Variation	0.528	80% MLE Quantile	22.46
90% MLE Quantile	27.93	95% MLE Quantile	33.45
99% MLE Quantile	46.91		

Lognormal Minimum Variance Unbiased Estimates (MVUEs)

MVUE Mean	16.65	MVUE SD	8.645
MVUE Median	14.73	MVUE SEM	1.6

Assuming Lognormal Distribution

95% H-UCL	20.07	90% Chebyshev (MVUE) UCL	21.45
95% Chebyshev (MVUE) UCL	23.62	97.5% Chebyshev (MVUE) UCL	26.64
99% Chebyshev (MVUE) UCL	32.57		

Nonparametric Distribution Free UCLs

95% CLT UCL	19.42	95% Jackknife UCL	19.51
95% Standard Bootstrap UCL	19.33	95% Bootstrap-t UCL	19.85
95% Hall's Bootstrap UCL	19.75	95% Percentile Bootstrap UCL	19.4
95% BCA Bootstrap UCL	19.61		

	A	B	C	D	E	F	G	H	I	J	K	L
53				90% Chebyshev(Mean, Sd) UCL		21.64				95% Chebyshev(Mean, Sd) UCL		23.87
54				97.5% Chebyshev(Mean, Sd) UCL		26.96				99% Chebyshev(Mean, Sd) UCL		33.03
55												
56						**Suggested UCL to Use**						
57						**Data appear Gamma, May want to try Gamma Distribution**						
58												
59						Note: Suggestions regarding the selection of a 95% UCL are provided to help the user to select the most appropriate 95% UCL.						
60						Recommendations are based upon data size, data distribution, and skewness.						
61						These recommendations are based upon the results of the simulation studies summarized in Singh, Maichle, and Lee (2006).						
62						However, simulations results will not cover all Real World data sets; for additional insight the user may want to consult a statistician.						
63												

	Lognormal Background Statistics for Data Sets with Non-Detects	
	User Selected Options	
Date/Time of Computation	ProUCL 5.18/25/2021 16:07:56	
From File	WorkSheet_a.xls	
Full Precision	OFF	
Confidence Coefficient	95%	
Coverage	95%	
Different or Future K Observations	1	
Number of Bootstrap Operations	2000	

Zinc A sat

General Statistics

Total Number of Observations	29	Number of Distinct Observations	28
Minimum	7.17	First Quartile	9.18
Second Largest	34.2	Median	13.6
Maximum	39.2	Third Quartile	21.8
Mean	16.73	SD	8.823
Coefficient of Variation	0.528	Skewness	1.025
Mean of logged Data	2.694	SD of logged Data	0.496

Critical Values for Background Threshold Values (BTVs)

Tolerance Factor K (For UTL)	2.232	d2max (for USL)	2.73

Lognormal GOF Test

Shapiro Wilk Test Statistic	0.935	**Shapiro Wilk Lognormal GOF Test**	
5% Shapiro Wilk Critical Value	0.926	Data appear Lognormal at 5% Significance Level	
Lilliefors Test Statistic	0.142	**Lilliefors Lognormal GOF Test**	
5% Lilliefors Critical Value	0.161	Data appear Lognormal at 5% Significance Level	

Data appear Lognormal at 5% Significance Level

Background Statistics assuming Lognormal Distribution

95% UTL with 95% Coverage	44.77	90% Percentile (z)	27.93
95% UPL (t)	34.9	95% Percentile (z)	33.45
95% USL	57.32	99% Percentile (z)	46.91

Note: The use of USL tends to yield a conservative estimate of BTV, especially when the sample size starts exceeding 20.
Therefore, one may use USL to estimate a BTV only when the data set represents a background data set free of outliers and consists of observations collected from clean unimpacted locations.
The use of USL tends to provide a balance between false positives and false negatives provided the data represents a background data set and when many onsite observations need to be compared with the BTV.

Lognormal UCL Statistics for Data Sets with Non-Detects		
User Selected Options		
Date/Time of Computation	ProUCL 5.18/25/2021 15:51:23	
From File	WorkSheet.xls	
Full Precision	OFF	
Confidence Coefficient	95%	
Number of Bootstrap Operations	2000	

Zinc A UnSat

General Statistics

Total Number of Observations	25	Number of Distinct Observations	25
		Number of Missing Observations	0
Minimum	8.64	Mean	49.04
Maximum	163	Median	37.6
SD	38.84	Std. Error of Mean	7.767
Coefficient of Variation	0.792	Skewness	1.559

Lognormal GOF Test

Shapiro Wilk Test Statistic	0.979	**Shapiro Wilk Lognormal GOF Test**	
5% Shapiro Wilk Critical Value	0.918	Data appear Lognormal at 5% Significance Level	
Lilliefors Test Statistic	0.0772	**Lilliefors Lognormal GOF Test**	
5% Lilliefors Critical Value	0.173	Data appear Lognormal at 5% Significance Level	

Data appear Lognormal at 5% Significance Level

Logged Statistics

Minimum of Logged Data	2.156	Mean of logged Data	3.616
Maximum of Logged Data	5.094	SD of logged Data	0.773

Lognormal Maximum likelihood Estimates (MLEs)

MLE Mean	50.16	MLE Standard Deviation	45.36
MLE Median	37.2	MLE Skewness	3.452
MLE Coefficient of Variation	0.904	80% MLE Quantile	71.31
90% MLE Quantile	100.2	95% MLE Quantile	132.7
99% MLE Quantile	224.7		

Lognormal Minimum Variance Unbiased Estimates (MVUEs)

MVUE Mean	49.41	MVUE SD	42.34
MVUE Median	36.76	MVUE SEM	8.325

Assuming Lognormal Distribution

95% H-UCL	71.24	90% Chebyshev (MVUE) UCL	74.38
95% Chebyshev (MVUE) UCL	85.69	97.5% Chebyshev (MVUE) UCL	101.4
99% Chebyshev (MVUE) UCL	132.2		

Nonparametric Distribution Free UCLs

95% CLT UCL	61.82	95% Jackknife UCL	62.33
95% Standard Bootstrap UCL	61.45	95% Bootstrap-t UCL	67.15
95% Hall's Bootstrap UCL	65.62	95% Percentile Bootstrap UCL	62.18
95% BCA Bootstrap UCL	64.22		

	A	B	C	D	E	F	G	H	I	J	K	L
53	90% Chebyshev(Mean, Sd) UCL					72.35	95% Chebyshev(Mean, Sd) UCL					82.9
54	97.5% Chebyshev(Mean, Sd) UCL					97.55	99% Chebyshev(Mean, Sd) UCL					126.3
55												
56	**Suggested UCL to Use**											
57	**Data appear Gamma, May want to try Gamma Distribution**											
58												
59	Note: Suggestions regarding the selection of a 95% UCL are provided to help the user to select the most appropriate 95% UCL.											
60	Recommendations are based upon data size, data distribution, and skewness.											
61	These recommendations are based upon the results of the simulation studies summarized in Singh, Maichle, and Lee (2006).											
62	However, simulations results will not cover all Real World data sets; for additional insight the user may want to consult a statistician.											
63												

1			#VALUE!	Lognormal Background Statistics for Data Sets with Non-Detects								
2			User Selected Options									
3			Date/Time of Computation	ProUCL 5.18/25/2021 15:49:45								
4			From File	WorkSheet.xls								
5			Full Precision	OFF								
6			Confidence Coefficient	95%								
7			Coverage	95%								
8			Different or Future K Observations	1								
9			Number of Bootstrap Operations	2000								
10												
11	Zinc A UnSat											
12												
13	General Statistics											
14						Total Number of Observations	25			Number of Distinct Observations	25		
15						Minimum	8.64			First Quartile	22.4		
16						Second Largest	128			Median	37.6		
17						Maximum	163			Third Quartile	58.3		
18						Mean	49.04			SD	38.84		
19						Coefficient of Variation	0.792			Skewness	1.559		
20						Mean of logged Data	3.616			SD of logged Data	0.773		
21													
22						Critical Values for Background Threshold Values (BTVs)							
23						Tolerance Factor K (For UTL)	2.292			d2max (for USL)	2.663		
24													
25						Lognormal GOF Test							
26						Shapiro Wilk Test Statistic	0.979			Shapiro Wilk Lognormal GOF Test			
27						5% Shapiro Wilk Critical Value	0.918			Data appear Lognormal at 5% Significance Level			
28						Lilliefors Test Statistic	0.0772			Lilliefors Lognormal GOF Test			
29						5% Lilliefors Critical Value	0.173			Data appear Lognormal at 5% Significance Level			
30						Data appear Lognormal at 5% Significance Level							
31													
32						Background Statistics assuming Lognormal Distribution							
33						95% UTL with 95% Coverage	218.8			90% Percentile (z)	100.2		
34						95% UPL (t)	143.3			95% Percentile (z)	132.7		
35						95% USL	291.4			99% Percentile (z)	224.7		
36													
37						Note: The use of USL tends to yield a conservative estimate of BTV, especially when the sample size starts exceeding 20.							
38						Therefore, one may use USL to estimate a BTV only when the data set represents a background data set free of outliers							
39						and consists of observations collected from clean unimpacted locations.							
40						The use of USL tends to provide a balance between false positives and false negatives provided the data							
41						represents a background data set and when many onsite observations need to be compared with the BTV.							
42													

Nonparametric UCL Statistics for Data Sets with Non-Detects

User Selected Options	
Date/Time of Computation	ProUCL 5.18/25/2021 18:19:55
From File	WorkSheet_a.xls
Full Precision	OFF
Confidence Coefficient	95%
Number of Bootstrap Operations	2000

Unit B Copper

General Statistics

Total Number of Observations	328	Number of Distinct Observations	247
Number of Detects	321	Number of Non-Detects	7
Number of Distinct Detects	246	Number of Distinct Non-Detects	2
Minimum Detect	2.44	Minimum Non-Detect	2.5
Maximum Detect	99.2	Maximum Non-Detect	12.5
Variance Detects	197.3	Percent Non-Detects	2.134%
Mean Detects	19.12	SD Detects	14.05
Median Detects	15.6	CV Detects	0.735
Skewness Detects	1.869	Kurtosis Detects	4.975
Mean of Logged Detects	2.713	SD of Logged Detects	0.702

Nonparametric Distribution Free UCL Statistics

Data do not follow a Discernible Distribution at 5% Significance Level

Kaplan-Meier (KM) Statistics using Normal Critical Values and other Nonparametric UCLs

Mean	18.83	Standard Error of Mean	0.776
SD	14.02	95% KM (BCA) UCL	20.12
95% KM (t) UCL	20.11	95% KM (Percentile Bootstrap) UCL	20.18
95% KM (z) UCL	20.11	95% KM Bootstrap t UCL	20.25
90% KM Chebyshev UCL	21.16	95% KM Chebyshev UCL	22.21
97.5% KM Chebyshev UCL	23.68	99% KM Chebyshev UCL	26.55

Statistics using KM estimates on Logged Data and Assuming Lognormal Distribution

KM SD (logged)	0.721	95% Critical H Value (KM-Log)	1.918
KM Mean (logged)	2.688	KM Geo Mean	14.7
KM Standard Error of Mean (logged)	0.04	95% H-UCL (KM -Log)	20.57

Suggested UCL to Use

Note: Suggestions regarding the selection of a 95% UCL are provided to help the user to select the most appropriate 95% UCL.

Recommendations are based upon data size, data distribution, and skewness.

These recommendations are based upon the results of the simulation studies summarized in Singh, Maichle, and Lee (2006).

However, simulations results will not cover all Real World data sets; for additional insight the user may want to consult a statistician.

	Nonparametric Background Statistics for Data Sets with Non-Detects	
User Selected Options		
Date/Time of Computation	ProUCL 5.18/25/2021 18:12:17	
From File	WorkSheet_a.xls	
Full Precision	OFF	
Confidence Coefficient	95%	
Coverage	95%	
Different or Future K Observations	1	

Unit B Copper

General Statistics

Total Number of Observations	328	Number of Distinct Observations	247
Number of Detects	321	Number of Non-Detects	7
Number of Distinct Detects	246	Number of Distinct Non-Detects	2
Minimum Detect	2.44	Minimum Non-Detect	2.5
Maximum Detect	99.2	Maximum Non-Detect	12.5
Variance Detected	197.3	Percent Non-Detects	2.134%
Mean Detected	19.12	SD Detected	14.05
Mean of Detected Logged Data	2.713	SD of Detected Logged Data	0.702

Critical Values for Background Threshold Values (BTVs)

Tolerance Factor K (For UTL)	1.792	d2max (for USL)	3.578

Nonparametric Distribution Free Background Statistics

Data appear to follow a Discernible Distribution at 5% Significance Level

Kaplan Meier (KM) Background Statistics Assuming Normal Distribution

Mean	18.83	SD	14.02
95% UTL95% Coverage	43.95	95% KM UPL (t)	42
95% KM Chebyshev UPL	80.04	90% KM Percentile (z)	36.8
95% KM Percentile (z)	41.9	99% KM Percentile (z)	51.45
95% KM USL	69		

Nonparametric Upper Limits for BTVs(no distinction made between detects and nondetects)

Order of Statistic, r	317	95% UTL with95% Coverage	51.3
Approx, f used to compute achieved CC	1.39	Approximate Actual Confidence Coefficient achieved by UTL	0.898
Approximate Sample Size needed to achieve specified CC	361	95% UPL	46.76
95% USL	99.2	95% KM Chebyshev UPL	80.04

Note: The use of USL tends to yield a conservative estimate of BTV, especially when the sample size starts exceeding 20.
Therefore, one may use USL to estimate a BTV only when the data set represents a background data set free of outliers
and consists of observations collected from clean unimpacted locations.
The use of USL tends to provide a balance between false positives and false negatives provided the data
represents a background data set and when many onsite observations need to be compared with the BTV.

Nonparametric UCL Statistics for Data Sets with Non-Detects

User Selected Options	
Date/Time of Computation	ProUCL 5.18/25/2021 19:01:05
From File	WorkSheet_a.xls
Full Precision	OFF
Confidence Coefficient	95%
Number of Bootstrap Operations	2000

Unit b lead sat

General Statistics

Total Number of Observations	106	Number of Distinct Observations	90
Number of Detects	98	Number of Non-Detects	8
Number of Distinct Detects	89	Number of Distinct Non-Detects	1
Minimum Detect	1.15	Minimum Non-Detect	0.5
Maximum Detect	115	Maximum Non-Detect	0.5
Variance Detects	272.8	Percent Non-Detects	7.547%
Mean Detects	10.48	SD Detects	16.52
Median Detects	3.455	CV Detects	1.576
Skewness Detects	3.468	Kurtosis Detects	16.55
Mean of Logged Detects	1.603	SD of Logged Detects	1.133

Nonparametric Distribution Free UCL Statistics

Data do not follow a Discernible Distribution at 5% Significance Level

Kaplan-Meier (KM) Statistics using Normal Critical Values and other Nonparametric UCLs

Mean	9.725	Standard Error of Mean	1.564
SD	16.02	95% KM (BCA) UCL	12.47
95% KM (t) UCL	12.32	95% KM (Percentile Bootstrap) UCL	12.45
95% KM (z) UCL	12.3	95% KM Bootstrap t UCL	13.36
90% KM Chebyshev UCL	14.42	95% KM Chebyshev UCL	16.54
97.5% KM Chebyshev UCL	19.49	99% KM Chebyshev UCL	25.29

Statistics using KM estimates on Logged Data and Assuming Lognormal Distribution

KM SD (logged)	1.242	95% Critical H Value (KM-Log)	2.445
KM Mean (logged)	1.429	KM Geo Mean	4.176
KM Standard Error of Mean (logged)	0.121	95% H-UCL (KM -Log)	12.15

Suggested UCL to Use

95% KM (Chebyshev) UCL 16.54

Note: Suggestions regarding the selection of a 95% UCL are provided to help the user to select the most appropriate 95% UCL.

Recommendations are based upon data size, data distribution, and skewness.

These recommendations are based upon the results of the simulation studies summarized in Singh, Maichle, and Lee (2006).

However, simulations results will not cover all Real World data sets; for additional insight the user may want to consult a statistician.

1				**Nonparametric Background Statistics for Data Sets with Non-Detects**								
2		**User Selected Options**										
3		Date/Time of Computation		ProUCL 5.18/25/2021 18:59:36								
4		From File		WorkSheet_a.xls								
5		Full Precision		OFF								
6		Confidence Coefficient		95%								
7		Coverage		95%								
8		Different or Future K Observations		1								
9												
10	**Unit b lead sat**											
11												
12						**General Statistics**							
13				Total Number of Observations		106				Number of Distinct Observations		90
14				Number of Detects		98				Number of Non-Detects		8
15				Number of Distinct Detects		89				Number of Distinct Non-Detects		1
16				Minimum Detect		1.15				Minimum Non-Detect		0.5
17				Maximum Detect		115				Maximum Non-Detect		0.5
18				Variance Detected		272.8				Percent Non-Detects		7.547%
19				Mean Detected		10.48				SD Detected		16.52
20				Mean of Detected Logged Data		1.603				SD of Detected Logged Data		1.133
21												
22						**Critical Values for Background Threshold Values (BTVs)**							
23				Tolerance Factor K (For UTL)		1.915				d2max (for USL)		3.229
24												
25						**Nonparametric Distribution Free Background Statistics**							
26						Data do not follow a Discernible Distribution (0.05)							
27												
28						**Kaplan Meier (KM) Background Statistics Assuming Normal Distribution**							
29				Mean		9.725				SD		16.02
30				95% UTL95% Coverage		40.4				95% KM UPL (t)		36.43
31				95% KM Chebyshev UPL		79.88				90% KM Percentile (z)		30.25
32				95% KM Percentile (z)		36.07				99% KM Percentile (z)		46.99
33				95% KM USL		61.46						
34												
35						**Nonparametric Upper Limits for BTVs(no distinction made between detects and nondetects)**							
36				Order of Statistic, r		104				95% UTL with95% Coverage		47.4
37				Approx, f used to compute achieved CC		1.825				Approximate Actual Confidence Coefficient achieved by UTL		0.904
38				Approximate Sample Size needed to achieve specified CC		124				95% UPL		42.74
39				95% USL		115				95% KM Chebyshev UPL		79.88
40												
41						Note: The use of USL tends to yield a conservative estimate of BTV, especially when the sample size starts exceeding 20.							
42						Therefore, one may use USL to estimate a BTV only when the data set represents a background data set free of outliers							
43						and consists of observations collected from clean unimpacted locations.							
44						The use of USL tends to provide a balance between false positives and false negatives provided the data							
45						represents a background data set and when many onsite observations need to be compared with the BTV.							
46												

	General Statistics on Uncensored Data	
Date/Time of Computation	ProUCL 5.19/22/2021 09:37:43	
User Selected Options		
From File	WorkSheet_w.xls	
Full Precision	OFF	

From File: WorkSheet_w.xls

General Statistics for Censored Datasets (with NDs) using Kaplan Meier Method

Variable	NumObs	# Missing	Num Ds	NumNDs	% NDs	Min ND	Max ND	KM Mean	KM Var	KM SD	KM CV
lead saturated unit b	106	0	98	8	7.55%	0.5	0.5	9.725	256.6	16.02	1.647

General Statistics for Raw Dataset using Detected Data Only

Variable	NumObs	# Missing	Minimum	Maximum	Mean	Median	Var	SD	MAD/0.675	Skewness	CV
lead saturated unit b	98	0	1.15	115	10.48	3.455	272.8	16.52	2.669	3.468	1.576

Percentiles using all Detects (Ds) and Non-Detects (NDs)

Variable	NumObs	# Missing	10%ile	20%ile	25%ile(Q1)	50%ile(Q2)	75%ile(Q3)	80%ile	90%ile	95%ile	99%ile
lead saturated unit b	106	0	1.235	1.68	1.805	3.195	10.26	12.7	31.55	41.05	59.18

Nonparametric UCL Statistics for Data Sets with Non-Detects

User Selected Options	
Date/Time of Computation	ProUCL 5.18/25/2021 18:53:25
From File	WorkSheet.xls
Full Precision	OFF
Confidence Coefficient	95%
Number of Bootstrap Operations	2000

lead unsat B

General Statistics

Total Number of Observations	141	Number of Distinct Observations	133
Number of Detects	140	Number of Non-Detects	1
Number of Distinct Detects	132	Number of Distinct Non-Detects	1
Minimum Detect	1.11	Minimum Non-Detect	0.5
Maximum Detect	595	Maximum Non-Detect	0.5
Variance Detects	4628	Percent Non-Detects	0.709%
Mean Detects	26.36	SD Detects	68.03
Median Detects	7.45	CV Detects	2.581
Skewness Detects	6.273	Kurtosis Detects	45.37
Mean of Logged Detects	2.18	SD of Logged Detects	1.338

Nonparametric Distribution Free UCL Statistics

Data do not follow a Discernible Distribution at 5% Significance Level

Kaplan-Meier (KM) Statistics using Normal Critical Values and other Nonparametric UCLs

Mean	26.17	Standard Error of Mean	5.712
SD	67.58	95% KM (BCA) UCL	37.1
95% KM (t) UCL	35.63	95% KM (Percentile Bootstrap) UCL	36.29
95% KM (z) UCL	35.57	95% KM Bootstrap t UCL	43.44
90% KM Chebyshev UCL	43.31	95% KM Chebyshev UCL	51.07
97.5% KM Chebyshev UCL	61.85	99% KM Chebyshev UCL	83.01

Statistics using KM estimates on Logged Data and Assuming Lognormal Distribution

KM SD (logged)	1.35	95% Critical H Value (KM-Log)	2.541
KM Mean (logged)	2.16	KM Geo Mean	8.67
KM Standard Error of Mean (logged)	0.114	95% H-UCL (KM -Log)	28.83

Suggested UCL to Use

95% KM (Chebyshev) UCL 51.07

Note: Suggestions regarding the selection of a 95% UCL are provided to help the user to select the most appropriate 95% UCL.

Recommendations are based upon data size, data distribution, and skewness.

These recommendations are based upon the results of the simulation studies summarized in Singh, Maichle, and Lee (2006).

However, simulations results will not cover all Real World data sets; for additional insight the user may want to consult a statistician.

1				**Nonparametric Background Statistics for Data Sets with Non-Detects**								
2		**User Selected Options**										
3		Date/Time of Computation		ProUCL 5.18/25/2021 18:51:48								
4		From File		WorkSheet.xls								
5		Full Precision		OFF								
6		Confidence Coefficient		95%								
7		Coverage		95%								
8	Different or Future K Observations			1								
9												
10	**lead unsat B**											
11												
12						**General Statistics**							
13				Total Number of Observations		141			Number of Distinct Observations		133	
14				Number of Detects		140			Number of Non-Detects		1	
15				Number of Distinct Detects		132			Number of Distinct Non-Detects		1	
16				Minimum Detect		1.11			Minimum Non-Detect		0.5	
17				Maximum Detect		595			Maximum Non-Detect		0.5	
18				Variance Detected		4628			Percent Non-Detects		0.709%	
19				Mean Detected		26.36			SD Detected		68.03	
20				Mean of Detected Logged Data		2.18			SD of Detected Logged Data		1.338	
21												
22						**Critical Values for Background Threshold Values (BTVs)**							
23				Tolerance Factor K (For UTL)		1.875			d2max (for USL)		3.323	
24												
25						**Nonparametric Distribution Free Background Statistics**							
26						Data do not follow a Discernible Distribution (0.05)							
27												
28						**Kaplan Meier (KM) Background Statistics Assuming Normal Distribution**							
29				Mean		26.17			SD		67.58	
30				95% UTL95% Coverage		152.9			95% KM UPL (t)		138.5	
31				95% KM Chebyshev UPL		321.8			90% KM Percentile (z)		112.8	
32				95% KM Percentile (z)		137.3			99% KM Percentile (z)		183.4	
33				95% KM USL		250.8						
34												
35						**Nonparametric Upper Limits for BTVs(no distinction made between detects and nondetects)**							
36				Order of Statistic, r		137			95% UTL with95% Coverage		132	
37				Approx, f used to compute achieved CC		1.442			Approximate Actual Confidence Coefficient achieved by UTL		0.838	
38				Approximate Sample Size needed to achieve specified CC		181			95% UPL		113.9	
39				95% USL		595			95% KM Chebyshev UPL		321.8	
40												
41						Note: The use of USL tends to yield a conservative estimate of BTV, especially when the sample size starts exceeding 20.							
42						Therefore, one may use USL to estimate a BTV only when the data set represents a background data set free of outliers							
43						and consists of observations collected from clean unimpacted locations.							
44						The use of USL tends to provide a balance between false positives and false negatives provided the data							
45						represents a background data set and when many onsite observations need to be compared with the BTV.							
46												

Nonparametric UCL Statistics for Data Sets with Non-Detects

User Selected Options	
Date/Time of Computation	ProUCL 5.18/25/2021 19:13:54
From File	WorkSheet_b.xls
Full Precision	OFF
Confidence Coefficient	95%
Number of Bootstrap Operations	2000

unit b mercury

General Statistics

Total Number of Observations	341	Number of Distinct Observations	30
Number of Detects	73	Number of Non-Detects	268
Number of Distinct Detects	29	Number of Distinct Non-Detects	1
Minimum Detect	0.1	Minimum Non-Detect	0.05
Maximum Detect	0.78	Maximum Non-Detect	0.05
Variance Detects	0.0249	Percent Non-Detects	78.59%
Mean Detects	0.232	SD Detects	0.158
Median Detects	0.17	CV Detects	0.679
Skewness Detects	2.039	Kurtosis Detects	3.892
Mean of Logged Detects	-1.618	SD of Logged Detects	0.525

Nonparametric Distribution Free UCL Statistics

Data do not follow a Discernible Distribution at 5% Significance Level

Kaplan-Meier (KM) Statistics using Normal Critical Values and other Nonparametric UCLs

Mean	0.0891	Standard Error of Mean	0.00568
SD	0.104	95% KM (BCA) UCL	0.0987
95% KM (t) UCL	0.0984	95% KM (Percentile Bootstrap) UCL	0.0988
95% KM (z) UCL	0.0984	95% KM Bootstrap t UCL	0.1
90% KM Chebyshev UCL	0.106	95% KM Chebyshev UCL	0.114
97.5% KM Chebyshev UCL	0.125	99% KM Chebyshev UCL	0.146

Statistics using KM estimates on Logged Data and Assuming Lognormal Distribution

KM SD (logged)	0.615	95% Critical H Value (KM-Log)	1.855
KM Mean (logged)	-2.701	KM Geo Mean	0.0672
KM Standard Error of Mean (logged)	0.0335	95% H-UCL (KM -Log)	0.0863

Suggested UCL to Use

95% KM (Chebyshev) UCL 0.114

Note: Suggestions regarding the selection of a 95% UCL are provided to help the user to select the most appropriate 95% UCL.

Recommendations are based upon data size, data distribution, and skewness.

These recommendations are based upon the results of the simulation studies summarized in Singh, Maichle, and Lee (2006).

However, simulations results will not cover all Real World data sets; for additional insight the user may want to consult a statistician.

1				**Nonparametric Background Statistics for Data Sets with Non-Detects**								
2			**User Selected Options**									
3			Date/Time of Computation	ProUCL 5.18/25/2021 19:09:15								
4			From File	WorkSheet_b.xls								
5			Full Precision	OFF								
6			Confidence Coefficient	95%								
7			Coverage	95%								
8			Different or Future K Observations	1								
9												
10	**unit b mercury**											
11												
12						**General Statistics**							
13						Total Number of Observations	341			Number of Distinct Observations	30		
14						Number of Detects	73			Number of Non-Detects	268		
15						Number of Distinct Detects	29			Number of Distinct Non-Detects	1		
16						Minimum Detect	0.1			Minimum Non-Detect	0.05		
17						Maximum Detect	0.78			Maximum Non-Detect	0.05		
18						Variance Detected	0.0249			Percent Non-Detects	78.59%		
19						Mean Detected	0.232			SD Detected	0.158		
20						Mean of Detected Logged Data	-1.618			SD of Detected Logged Data	0.525		
21													
22						**Critical Values for Background Threshold Values (BTVs)**							
23						Tolerance Factor K (For UTL)	1.789			d2max (for USL)	3.589		
24													
25						**Nonparametric Distribution Free Background Statistics**							
26						Data do not follow a Discernible Distribution (0.05)							
27													
28						**Kaplan Meier (KM) Background Statistics Assuming Normal Distribution**							
29						Mean	0.0891			SD	0.104		
30						95% UTL95% Coverage	0.275			95% KM UPL (t)	0.261		
31						95% KM Chebyshev UPL	0.544			90% KM Percentile (z)	0.223		
32						95% KM Percentile (z)	0.26			99% KM Percentile (z)	0.331		
33						95% KM USL	0.463						
34													
35						**Nonparametric Upper Limits for BTVs(no distinction made between detects and nondetects)**							
36						Order of Statistic, r	330			95% UTL with95% Coverage	0.33		
37						Approx, f used to compute achieved CC	1.447			Approximate Actual Confidence Coefficient achieved by UTL	0.922		
38						Approximate Sample Size needed to achieve specified CC	361			95% UPL	0.3		
39						95% USL	0.78			95% KM Chebyshev UPL	0.544		
40													
41						Note: The use of USL tends to yield a conservative estimate of BTV, especially when the sample size starts exceeding 20.							
42						Therefore, one may use USL to estimate a BTV only when the data set represents a background data set free of outliers							
43						and consists of observations collected from clean unimpacted locations.							
44						The use of USL tends to provide a balance between false positives and false negatives provided the data							
45						represents a background data set and when many onsite observations need to be compared with the BTV.							
46													

	Lognormal Background Statistics for Data Sets with Non-Detects	
	User Selected Options	
Date/Time of Computation	ProUCL 5.18/25/2021 19:49:46	
From File	WorkSheet_c.xls	
Full Precision	OFF	
Confidence Coefficient	95%	
Coverage	95%	
Different or Future K Observations	1	
Number of Bootstrap Operations	2000	

Nickel unit b

General Statistics

Total Number of Observations	207	Number of Distinct Observations	147
Minimum	4.62	First Quartile	12.3
Second Largest	68	Median	15.9
Maximum	78.7	Third Quartile	20.35
Mean	17.67	SD	9.231
Coefficient of Variation	0.522	Skewness	2.726
Mean of logged Data	2.768	SD of logged Data	0.446

Critical Values for Background Threshold Values (BTVs)

Tolerance Factor K (For UTL)	1.832	d2max (for USL)	3.443

Lognormal GOF Test

Shapiro Wilk Test Statistic	0.986	**Shapiro Wilk Lognormal GOF Test**	
5% Shapiro Wilk P Value	0.741	Data appear Lognormal at 5% Significance Level	
Lilliefors Test Statistic	0.0491	**Lilliefors Lognormal GOF Test**	
5% Lilliefors Critical Value	0.062	Data appear Lognormal at 5% Significance Level	

Data appear Lognormal at 5% Significance Level

Background Statistics assuming Lognormal Distribution

95% UTL with 95% Coverage	36.09	90% Percentile (z)	28.22
95% UPL (t)	33.36	95% Percentile (z)	33.19
95% USL	74.07	99% Percentile (z)	44.99

Note: The use of USL tends to yield a conservative estimate of BTV, especially when the sample size starts exceeding 20.
Therefore, one may use USL to estimate a BTV only when the data set represents a background data set free of outliers and consists of observations collected from clean unimpacted locations.
The use of USL tends to provide a balance between false positives and false negatives provided the data represents a background data set and when many onsite observations need to be compared with the BTV.

1	**Lognormal UCL Statistics for Data Sets with Non-Detects**											
2												
3	User Selected Options											
4	Date/Time of Computation	ProUCL 5.18/25/2021 19:50:54										
5	From File	WorkSheet_c.xls										
6	Full Precision	OFF										
7	Confidence Coefficient	95%										
8	Number of Bootstrap Operations	2000										
9												
10												
11	**Nickel unit b**											
12												
13	**General Statistics**											
14	Total Number of Observations	207					Number of Distinct Observations	147				
15							Number of Missing Observations	0				
16	Minimum	4.62					Mean	17.67				
17	Maximum	78.7					Median	15.9				
18	SD	9.231					Std. Error of Mean	0.642				
19	Coefficient of Variation	0.522					Skewness	2.726				
20												
21	**Lognormal GOF Test**											
22	Shapiro Wilk Test Statistic	0.986					**Shapiro Wilk Lognormal GOF Test**					
23	5% Shapiro Wilk P Value	0.741					Data appear Lognormal at 5% Significance Level					
24	Lilliefors Test Statistic	0.0491					**Lilliefors Lognormal GOF Test**					
25	5% Lilliefors Critical Value	0.062					Data appear Lognormal at 5% Significance Level					
26	Data appear Lognormal at 5% Significance Level											
27												
28	**Logged Statistics**											
29	Minimum of Logged Data	1.53					Mean of logged Data	2.768				
30	Maximum of Logged Data	4.366					SD of logged Data	0.446				
31												
32	**Lognormal Maximum likelihood Estimates (MLEs)**											
33	MLE Mean	17.59					MLE Standard Deviation	8.263				
34	MLE Median	15.93					MLE Skewness	1.513				
35	MLE Coefficient of Variation	0.47					80% MLE Quantile	23.19				
36	90% MLE Quantile	28.22					95% MLE Quantile	33.19				
37	99% MLE Quantile	44.99										
38												
39	**Lognormal Minimum Variance Unbiased Estimates (MVUEs)**											
40	MVUE Mean	17.59					MVUE SD	8.242				
41	MVUE Median	15.92					MVUE SEM	0.571				
42												
43	**Assuming Lognormal Distribution**											
44	95% H-UCL	18.59					90% Chebyshev (MVUE) UCL	19.3				
45	95% Chebyshev (MVUE) UCL	20.07					97.5% Chebyshev (MVUE) UCL	21.15				
46	99% Chebyshev (MVUE) UCL	23.27										
47												
48	**Nonparametric Distribution Free UCLs**											
49	95% CLT UCL	18.73					95% Jackknife UCL	18.73				
50	95% Standard Bootstrap UCL	18.72					95% Bootstrap-t UCL	18.88				
51	95% Hall's Bootstrap UCL	19.03					95% Percentile Bootstrap UCL	18.73				
52	95% BCA Bootstrap UCL	18.81										

	A	B	C	D	E	F	G	H	I	J	K	L
53				90% Chebyshev(Mean, Sd) UCL		19.59				95% Chebyshev(Mean, Sd) UCL		20.47
54				97.5% Chebyshev(Mean, Sd) UCL		21.68				99% Chebyshev(Mean, Sd) UCL		24.05
55												
56						**Suggested UCL to Use**						
57					95% Student's-t UCL	18.73				or 95% Modified-t UCL		18.75
58					or 95% H-UCL	18.59						
59												
60						Note: Suggestions regarding the selection of a 95% UCL are provided to help the user to select the most appropriate 95% UCL.						
61						Recommendations are based upon data size, data distribution, and skewness.						
62						These recommendations are based upon the results of the simulation studies summarized in Singh, Maichle, and Lee (2006).						
63						However, simulations results will not cover all Real World data sets; for additional insight the user may want to consult a statistician.						
64												
65						**ProUCL computes and outputs H-statistic based UCLs for historical reasons only.**						
66						**H-statistic often results in unstable (both high and low) values of UCL95 as shown in examples in the Technical Guide.**						
67						**It is therefore recommended to avoid the use of H-statistic based 95% UCLs.**						
68						**Use of nonparametric methods are preferred to compute UCL95 for skewed data sets which do not follow a gamma distribution.**						
69												

Nonparametric UCL Statistics for Uncensored Full Data Sets

User Selected Options	
Date/Time of Computation	ProUCL 5.110/1/2021 09:44:38
From File	WorkSheet.xls
Full Precision	OFF
Confidence Coefficient	95%
Number of Bootstrap Operations	2000

zinc unit b sat

General Statistics

Total Number of Observations	142	Number of Distinct Observations	129
#VALUE!	#VALUE!	Number of Missing Observations	0
Minimum	3.92	Mean	32.06
Maximum	110	Median	29.35
SD	20.73	Std. Error of Mean	1.74
Coefficient of Variation	0.647	Skewness	1.214
Mean of logged Data	3.242	SD of logged Data	0.719

Nonparametric Distribution Free UCL Statistics

Data appear Gamma Distributed at 5% Significance Level

Assuming Normal Distribution

95% Normal UCL		95% UCLs (Adjusted for Skewness)	
95% Student's-t UCL	34.94	95% Adjusted-CLT UCL (Chen-1995)	35.11
		95% Modified-t UCL (Johnson-1978)	34.97

#VALUE!

Nonparametric Distribution Free UCLs

95% CLT UCL	34.92	95% Jackknife UCL	34.94
95% Standard Bootstrap UCL	34.92	95% Bootstrap-t UCL	35.03
95% Hall's Bootstrap UCL	35.12	95% Percentile Bootstrap UCL	34.8
95% BCA Bootstrap UCL	35.01		
90% Chebyshev(Mean, Sd) UCL	37.28	95% Chebyshev(Mean, Sd) UCL	39.64
97.5% Chebyshev(Mean, Sd) UCL	42.92	99% Chebyshev(Mean, Sd) UCL	49.37

Suggested UCL to Use

Data appear Gamma, May want to try Gamma Distribution

Note: Suggestions regarding the selection of a 95% UCL are provided to help the user to select the most appropriate 95% UCL.

Recommendations are based upon data size, data distribution, and skewness.

These recommendations are based upon the results of the simulation studies summarized in Singh, Maichle, and Lee (2006).

However, simulations results will not cover all Real World data sets; for additional insight the user may want to consult a statistician.

	Nonparametric Background Statistics for Data Sets with Non-Detects	
User Selected Options		
Date/Time of Computation	ProUCL 5.19/21/2021 15:55:07	
From File	WorkSheet_t.xls	
Full Precision	OFF	
Confidence Coefficient	95%	
Coverage	95%	
Different or Future K Observations	1	

unit b zinc sat

General Statistics

Total Number of Observations	142	Number of Distinct Observations	129
Minimum	3.92	First Quartile	16.33
Second Largest	103	Median	29.35
Maximum	110	Third Quartile	43.2
Mean	32.06	SD	20.73
Coefficient of Variation	0.647	Skewness	1.214
Mean of logged Data	3.242	SD of logged Data	0.719

Critical Values for Background Threshold Values (BTVs)

Tolerance Factor K (For UTL)	1.875	d2max (for USL)	3.325

Nonparametric Distribution Free Background Statistics

Data appear Gamma Distributed at 5% Significance Level

Nonparametric Upper Limits for Background Threshold Values

Order of Statistic, r	138	95% UTL with 95% Coverage	74.5
Approx, f used to compute achieved CC	1.453	Approximate Actual Confidence Coefficient achieved by UTL	0.843
		Approximate Sample Size needed to achieve specified CC	181
95% Percentile Bootstrap UTL with 95% Coverage	74.5	95% BCA Bootstrap UTL with 95% Coverage	74.5
95% UPL	71.24	90% Percentile	59.73
90% Chebyshev UPL	94.48	95% Percentile	70.88
95% Chebyshev UPL	122.8	99% Percentile	101.4
95% USL	110		

Note: The use of USL tends to yield a conservative estimate of BTV, especially when the sample size starts exceeding 20.

Therefore, one may use USL to estimate a BTV only when the data set represents a background data set free of outliers and consists of observations collected from clean unimpacted locations.

The use of USL tends to provide a balance between false positives and false negatives provided the data represents a background data set and when many onsite observations need to be compared with the BTV.

Nonparametric UCL Statistics for Data Sets with Non-Detects

User Selected Options	
Date/Time of Computation	ProUCL 5.18/25/2021 20:02:06
From File	WorkSheet_d.xls
Full Precision	OFF
Confidence Coefficient	95%
Number of Bootstrap Operations	2000

Unit b zinc unsaturated

General Statistics

Total Number of Observations	146	Number of Distinct Observations	127
Number of Detects	145	Number of Non-Detects	1
Number of Distinct Detects	126	Number of Distinct Non-Detects	1
Minimum Detect	1.33	Minimum Non-Detect	12.5
Maximum Detect	456	Maximum Non-Detect	12.5
Variance Detects	3847	Percent Non-Detects	0.685%
Mean Detects	41.85	SD Detects	62.02
Median Detects	25.6	CV Detects	1.482
Skewness Detects	4.99	Kurtosis Detects	28.47
Mean of Logged Detects	3.315	SD of Logged Detects	0.833

Nonparametric Distribution Free UCL Statistics

Data do not follow a Discernible Distribution at 5% Significance Level

Kaplan-Meier (KM) Statistics using Normal Critical Values and other Nonparametric UCLs

Mean	41.61	Standard Error of Mean	5.121
SD	61.66	95% KM (BCA) UCL	50.93
95% KM (t) UCL	50.09	95% KM (Percentile Bootstrap) UCL	50.34
95% KM (z) UCL	50.04	95% KM Bootstrap t UCL	54.75
90% KM Chebyshev UCL	56.98	95% KM Chebyshev UCL	63.94
97.5% KM Chebyshev UCL	73.6	99% KM Chebyshev UCL	92.57

Statistics using KM estimates on Logged Data and Assuming Lognormal Distribution

KM SD (logged)	0.837	95% Critical H Value (KM-Log)	2.061
KM Mean (logged)	3.305	KM Geo Mean	27.26
KM Standard Error of Mean (logged)	0.0696	95% H-UCL (KM -Log)	44.66

Suggested UCL to Use

95% KM (Chebyshev) UCL	63.94

Note: Suggestions regarding the selection of a 95% UCL are provided to help the user to select the most appropriate 95% UCL.

Recommendations are based upon data size, data distribution, and skewness.

These recommendations are based upon the results of the simulation studies summarized in Singh, Maichle, and Lee (2006).

However, simulations results will not cover all Real World data sets; for additional insight the user may want to consult a statistician.

	A	B	C	D	E	F	G	H	I	J	K	L	M
1				**General Statistics on Uncensored Data**									
2			Date/Time of Computation	ProUCL 5.19/19/2021 10:47:12									
3			**User Selected Options**										
4			From File	WorkSheet_b.xls									
5			Full Precision	OFF									
6													
7	**From File: WorkSheet_b.xls**												
8													
9						**General Statistics for Censored Datasets (with NDs) using Kaplan Meier Method**								
10													
11	**Variable**		**NumObs**	**# Missing**	**Num Ds**	**NumNDs**	**% NDs**	**Min ND**	**Max ND**	**KM Mean**	**KM Var**	**KM SD**	**KM CV**
12	arsenic unit b		229	0	205	24	10.48%	0.5	0.5	4.345	15.61	3.951	0.909
13													
14						**General Statistics for Raw Dataset using Detected Data Only**								
15													
16	**Variable**		**NumObs**	**# Missing**	**Minimum**	**Maximum**	**Mean**	**Median**	**Var**	**SD**	**MAD/0.675**	**Skewness**	**CV**
17	arsenic unit b		205	0	1.05	33.6	4.796	3.81	15.58	3.947	2.298	3.848	0.823
18													
19						**Percentiles using all Detects (Ds) and Non-Detects (NDs)**								
20													
21	**Variable**		**NumObs**	**# Missing**	**10%ile**	**20%ile**	**25%ile(Q1)**	**50%ile(Q2)**	**75%ile(Q3)**	**80%ile**	**90%ile**	**95%ile**	**99%ile**
22	arsenic unit b		229	0	0.5	1.73	2.07	3.6	5.36	6.114	8.08	9.742	18.12

Lognormal UCL Statistics for Data Sets with Non-Detects

User Selected Options	
Date/Time of Computation	ProUCL 5.18/25/2021 17:56:23
From File	WorkSheet.xls
Full Precision	OFF
Confidence Coefficient	95%
Number of Bootstrap Operations	2000

Unit B Arsenic

General Statistics

Total Number of Observations	229	Number of Distinct Observations	179
Number of Detects	205	Number of Non-Detects	24
Number of Distinct Detects	178	Number of Distinct Non-Detects	1
Minimum Detect	1.05	Minimum Non-Detect	0.5
Maximum Detect	33.6	Maximum Non-Detect	0.5
Variance Detects	15.58	Percent Non-Detects	10.48%
Mean Detects	4.796	SD Detects	3.947
Median Detects	3.81	CV Detects	0.823
Skewness Detects	3.848	Kurtosis Detects	22.24
Mean of Logged Detects	1.356	SD of Logged Detects	0.624

Lognormal GOF Test on Detected Observations Only

Shapiro Wilk Approximate Test Statistic	0.975	**Shapiro Wilk GOF Test**
5% Shapiro Wilk P Value	0.091	Detected Data appear Lognormal at 5% Significance Level
Lilliefors Test Statistic	0.0363	**Lilliefors GOF Test**
5% Lilliefors Critical Value	0.0623	Detected Data appear Lognormal at 5% Significance Level

Detected Data appear Lognormal at 5% Significance Level

Lognormal ROS Statistics Using Imputed Non-Detects

Mean in Original Scale	4.393	Mean in Log Scale	1.206
SD in Original Scale	3.916	SD in Log Scale	0.741
Geometric d_mean	3.341	95% Percentile Bootstrap UCL	4.832
95% t UCL (assumes normality of ROS data)	4.821	95% BCA Bootstrap UCL	4.868
95% Bootstrap t UCL	4.912	95% H-UCL (Log ROS)	4.839

Statistics using KM estimates on Logged Data and Assuming Lognormal Distribution

KM Mean (logged)	1.142	KM Geo Mean	3.132
KM SD (logged)	0.861	95% Critical H Value (KM-Log)	2.039
KM Standard Error of Mean (logged)	0.057	95% H-UCL (KM -Log)	5.095

DL/2 Statistics

DL/2 Normal		DL/2 Log-Transformed	
Mean in Original Scale	4.319	Mean in Log Scale	1.069
SD in Original Scale	3.986	SD in Log Scale	1.028
95% t UCL (Assumes normality)	4.754	95% H-Stat UCL	5.729

DL/2 is not a recommended method, provided for comparisons and historical reasons

Suggested UCL to Use

KM H-UCL 5.095

Note: Suggestions regarding the selection of a 95% UCL are provided to help the user to select the most appropriate 95% UCL.

	A	B	C	D	E	F	G	H	I	J	K	L
53	Recommendations are based upon data size, data distribution, and skewness.											
54	These recommendations are based upon the results of the simulation studies summarized in Singh, Maichle, and Lee (2006).											
55	However, simulations results will not cover all Real World data sets; for additional insight the user may want to consult a statistician.											
56												

1				**Lognormal Background Statistics for Data Sets with Non-Detects**								
2			**User Selected Options**									
3			Date/Time of Computation	ProUCL 5.18/25/2021 17:54:39								
4			From File	WorkSheet.xls								
5			Full Precision	OFF								
6			Confidence Coefficient	95%								
7			Coverage	95%								
8			Different or Future K Observations	1								
9			Number of Bootstrap Operations	2000								
10												
11	**Unit B Arsenic**											
12												
13						**General Statistics**						
14					Total Number of Observations	229			Number of Distinct Observations	179		
15					Number of Detects	205			Number of Non-Detects	24		
16					Number of Distinct Detects	178			Number of Distinct Non-Detects	1		
17					Minimum Detect	1.05			Minimum Non-Detect	0.5		
18					Maximum Detect	33.6			Maximum Non-Detect	0.5		
19					Variance Detected	15.58			Percent Non-Detects	10.48%		
20					Mean Detected	4.796			SD Detected	3.947		
21					Mean of Detected Logged Data	1.356			SD of Detected Logged Data	0.624		
22												
23						**Critical Values for Background Threshold Values (BTVs)**							
24					Tolerance Factor K (For UTL)	1.822			d2max (for USL)	3.473		
25												
26						**Lognormal GOF Test on Detected Observations Only**							
27					Shapiro Wilk Approximate Test Statistic	0.975			**Shapiro Wilk GOF Test**			
28					5% Shapiro Wilk P Value	0.091			Detected Data appear Lognormal at 5% Significance Level			
29					Lilliefors Test Statistic	0.0363			**Lilliefors GOF Test**			
30					5% Lilliefors Critical Value	0.0623			Detected Data appear Lognormal at 5% Significance Level			
31						**Detected Data appear Lognormal at 5% Significance Level**						
32												
33						**Kaplan Meier (KM) Background Statistics Assuming Normal Distribution**						
34					Mean	4.345			SD	3.951		
35					95% UTL95% Coverage	11.55			95% KM UPL (t)	10.88		
36					95% KM Chebyshev UPL	21.6			90% KM Percentile (z)	9.408		
37					95% KM Percentile (z)	10.84			99% KM Percentile (z)	13.54		
38					95% KM USL	18.07						
39												
40						**Background Lognormal ROS Statistics Assuming Lognormal Distribution Using Imputed Non-Detects**						
41					Mean in Original Scale	4.393			Mean in Log Scale	1.206		
42					SD in Original Scale	3.916			SD in Log Scale	0.741		
43					95% UTL95% Coverage	12.89			95% BCA UTL95% Coverage	11.76		
44					95% Bootstrap (%) UTL95% Coverage	11.8			95% UPL (t)	11.39		
45					90% Percentile (z)	8.636			95% Percentile (z)	11.3		
46					99% Percentile (z)	18.73			95% USL	43.82		
47												
48						**Statistics using KM estimates on Logged Data and Assuming Lognormal Distribution**						
49					KM Mean of Logged Data	1.142			95% KM UTL (Lognormal)95% Coverage	15.03		
50					KM SD of Logged Data	0.861			95% KM UPL (Lognormal)	13.02		
51					95% KM Percentile Lognormal (z)	12.9			95% KM USL (Lognormal)	62.24		
52												

	A	B	C	D	E	F	G	H	I	J	K	L
53	**Background DL/2 Statistics Assuming Lognormal Distribution**											
54					Mean in Original Scale	4.319				Mean in Log Scale		1.069
55					SD in Original Scale	3.986				SD in Log Scale		1.028
56					95% UTL95% Coverage	18.96				95% UPL (t)		15.97
57					90% Percentile (z)	10.88				95% Percentile (z)		15.8
58					99% Percentile (z)	31.84				95% USL		103.5
59	**DL/2 is not a Recommended Method. DL/2 provided for comparisons and historical reasons.**											
60												
61	Note: The use of USL tends to yield a conservative estimate of BTV, especially when the sample size starts exceeding 20.											
62	Therefore, one may use USL to estimate a BTV only when the data set represents a background data set free of outliers											
63	and consists of observations collected from clean unimpacted locations.											
64	The use of USL tends to provide a balance between false positives and false negatives provided the data											
65	represents a background data set and when many onsite observations need to be compared with the BTV.											
66												

#VALUE!	General Statistics on Uncensored Data	
Date/Time of Computation	ProUCL 5.18/25/2021 19:51:23	
User Selected Options		
From File	WorkSheet_c.xls	
Full Precision	OFF	

From File: WorkSheet_c.xls

General Statistics for Censored Datasets (with NDs) using Kaplan Meier Method

Variable	NumObs	# Missing	Num Ds	NumNDs	% NDs	Min ND	Max ND	KM Mean	KM Var	KM SD	KM CV
Nickel unit b	207	0	207	0	0.00%	N/A	N/A	17.67	85.21	9.231	0.522

#VALUE!

General Statistics for Raw Dataset using Detected Data Only

Variable	NumObs	# Missing	Minimum	Maximum	Mean	Median	Var	SD	MAD/0.675	Skewness	CV
Nickel unit b	207	0	4.62	78.7	17.67	15.9	85.21	9.231	6.227	2.726	0.522

Percentiles using all Detects (Ds) and Non-Detects (NDs)

Variable	NumObs	# Missing	10%ile	20%ile	25%ile(Q1)	50%ile(Q2)	75%ile(Q3)	80%ile	90%ile	95%ile	99%ile
Nickel unit b	207	0	9.05	11.32	12.3	15.9	20.35	22.4	27.02	32	45.94

	A	B	C	D	E	F	G	H	I	J	K	L	M
1				**General Statistics on Uncensored Data**									
2			Date/Time of Computation	ProUCL 5.19/21/2021 15:55:59									
3			**User Selected Options**										
4			From File	WorkSheet_t.xls									
5			Full Precision	OFF									
6													
7	**From File: WorkSheet_t.xls**												
8													
9						**General Statistics for Censored Datasets (with NDs) using Kaplan Meier Method**								
10													
11	**Variable**		**NumObs**	**# Missing**	**Num Ds**	**NumNDs**	**% NDs**	**Min ND**	**Max ND**	**KM Mean**	**KM Var**	**KM SD**	**KM CV**
12	unit b zinc sat		142	0	142	0	0.00%	N/A	N/A	32.06	429.9	20.73	0.647
13													
14						**General Statistics for Raw Dataset using Detected Data Only**								
15													
16	**Variable**		**NumObs**	**# Missing**	**Minimum**	**Maximum**	**Mean**	**Median**	**Var**	**SD**	**MAD/0.675**	**Skewness**	**CV**
17	unit b zinc sat		142	0	3.92	110	32.06	29.35	429.9	20.73	20.09	1.214	0.647
18													
19						**Percentiles using all Detects (Ds) and Non-Detects (NDs)**								
20													
21	**Variable**		**NumObs**	**# Missing**	**10%ile**	**20%ile**	**25%ile(Q1)**	**50%ile(Q2)**	**75%ile(Q3)**	**80%ile**	**90%ile**	**95%ile**	**99%ile**
22	unit b zinc sat		142	0	9.082	13.94	16.33	29.35	43.2	45.16	59.73	70.88	101.4

1				**Nonparametric Background Statistics for Data Sets with Non-Detects**								
2			**User Selected Options**									
3			Date/Time of Computation	ProUCL 5.18/25/2021 19:58:57								
4			From File	WorkSheet_d.xls								
5			Full Precision	OFF								
6			Confidence Coefficient	95%								
7			Coverage	95%								
8			Different or Future K Observations	1								
9												
10	**Unit b zinc unsaturated**											
11												
12						**General Statistics**						
13						Total Number of Observations	146			Number of Distinct Observations	127	
14						Number of Detects	145			Number of Non-Detects	1	
15						Number of Distinct Detects	126			Number of Distinct Non-Detects	1	
16						Minimum Detect	1.33			Minimum Non-Detect	12.5	
17						Maximum Detect	456			Maximum Non-Detect	12.5	
18						Variance Detected	3847			Percent Non-Detects	0.685%	
19						Mean Detected	41.85			SD Detected	62.02	
20						Mean of Detected Logged Data	3.315			SD of Detected Logged Data	0.833	
21												
22						**Critical Values for Background Threshold Values (BTVs)**						
23						Tolerance Factor K (For UTL)	1.871			d2max (for USL)	3.334	
24												
25						**Nonparametric Distribution Free Background Statistics**						
26						Data do not follow a Discernible Distribution (0.05)						
27												
28						**Kaplan Meier (KM) Background Statistics Assuming Normal Distribution**						
29						Mean	41.61			SD	61.66	
30						95% UTL95% Coverage	157			95% KM UPL (t)	144	
31						95% KM Chebyshev UPL	311.3			90% KM Percentile (z)	120.6	
32						95% KM Percentile (z)	143			99% KM Percentile (z)	185.1	
33						95% KM USL	247.2					
34												
35						**Nonparametric Upper Limits for BTVs(no distinction made between detects and nondetects)**						
36						Order of Statistic, r	142			95% UTL with95% Coverage	220	
37						Approx, f used to compute achieved CC	1.495			Approximate Actual Confidence Coefficient achieved by UTL	0.859	
38						Approximate Sample Size needed to achieve specified CC	181			95% UPL	110.5	
39						95% USL	456			95% KM Chebyshev UPL	311.3	
40												
41						Note: The use of USL tends to yield a conservative estimate of BTV, especially when the sample size starts exceeding 20.						
42						Therefore, one may use USL to estimate a BTV only when the data set represents a background data set free of outliers						
43						and consists of observations collected from clean unimpacted locations.						
44						The use of USL tends to provide a balance between false positives and false negatives provided the data						
45						represents a background data set and when many onsite observations need to be compared with the BTV.						
46												

1				**Lognormal Background Statistics for Data Sets with Non-Detects**								
2			**User Selected Options**									
3			Date/Time of Computation	ProUCL 5.19/15/2021 13:20:57								
4			From File	WorkSheet.xls								
5			Full Precision	OFF								
6			Confidence Coefficient	95%								
7			Coverage	95%								
8			Different or Future K Observations	1								
9			Number of Bootstrap Operations	2000								
10												
11	**Arsenic Unit C**											
12												
13						**General Statistics**						
14					Total Number of Observations	106			Number of Distinct Observations	93		
15					Number of Detects	99			Number of Non-Detects	7		
16					Number of Distinct Detects	92			Number of Distinct Non-Detects	1		
17					Minimum Detect	1.12			Minimum Non-Detect	0.5		
18					Maximum Detect	26			Maximum Non-Detect	0.5		
19					Variance Detected	20.22			Percent Non-Detects	6.604%		
20					Mean Detected	6.005			SD Detected	4.497		
21					Mean of Detected Logged Data	1.542			SD of Detected Logged Data	0.725		
22												
23						**Critical Values for Background Threshold Values (BTVs)**							
24					Tolerance Factor K (For UTL)	1.915			d2max (for USL)	3.229		
25												
26						**Lognormal GOF Test on Detected Observations Only**							
27					Shapiro Wilk Approximate Test Statistic	0.971			**Shapiro Wilk GOF Test**			
28					5% Shapiro Wilk P Value	0.168			Detected Data appear Lognormal at 5% Significance Level			
29					Lilliefors Test Statistic	0.0497			**Lilliefors GOF Test**			
30					5% Lilliefors Critical Value	0.0893			Detected Data appear Lognormal at 5% Significance Level			
31						**Detected Data appear Lognormal at 5% Significance Level**						
32												
33						**Kaplan Meier (KM) Background Statistics Assuming Normal Distribution**						
34					Mean	5.641			SD	4.535		
35					95% UTL95% Coverage	14.32			95% KM UPL (t)	13.2		
36					95% KM Chebyshev UPL	25.5			90% KM Percentile (z)	11.45		
37					95% KM Percentile (z)	13.1			99% KM Percentile (z)	16.19		
38					95% KM USL	20.29						
39												
40						**Background Lognormal ROS Statistics Assuming Lognormal Distribution Using Imputed Non-Detects**						
41					Mean in Original Scale	5.666			Mean in Log Scale	1.43		
42					SD in Original Scale	4.529			SD in Log Scale	0.821		
43					95% UTL95% Coverage	20.13			95% BCA UTL95% Coverage	17.7		
44					95% Bootstrap (%) UTL95% Coverage	18.3			95% UPL (t)	16.43		
45					90% Percentile (z)	11.97			95% Percentile (z)	16.13		
46					99% Percentile (z)	28.23			95% USL	59.26		
47												
48						**Statistics using KM estimates on Logged Data and Assuming Lognormal Distribution**						
49					KM Mean of Logged Data	1.395			95% KM UTL (Lognormal)95% Coverage	22.21		
50					KM SD of Logged Data	0.891			95% KM UPL (Lognormal)	17.82		
51					95% KM Percentile Lognormal (z)	17.47			95% KM USL (Lognormal)	71.68		
52												

	A	B	C	D	E	F	G	H	I	J	K	L
53	**Background DL/2 Statistics Assuming Lognormal Distribution**											
54					Mean in Original Scale	5.625				Mean in Log Scale		1.349
55					SD in Original Scale	4.575				SD in Log Scale		1.012
56					95% UTL95% Coverage	26.75				95% UPL (t)		20.83
57					90% Percentile (z)	14.1				95% Percentile (z)		20.36
58					99% Percentile (z)	40.59				95% USL		101.2
59	**DL/2 is not a Recommended Method. DL/2 provided for comparisons and historical reasons.**											
60												
61	Note: The use of USL tends to yield a conservative estimate of BTV, especially when the sample size starts exceeding 20.											
62	Therefore, one may use USL to estimate a BTV only when the data set represents a background data set free of outliers											
63	and consists of observations collected from clean unimpacted locations.											
64	The use of USL tends to provide a balance between false positives and false negatives provided the data											
65	represents a background data set and when many onsite observations need to be compared with the BTV.											
66												

1	**Lognormal UCL Statistics for Data Sets with Non-Detects**											
2												
3	User Selected Options											
4	Date/Time of Computation	ProUCL 5.19/15/2021 13:30:31										
5	From File	WorkSheet.xls										
6	Full Precision	OFF										
7	Confidence Coefficient	95%										
8	Number of Bootstrap Operations	2000										
9												
10	**Arsenic Unit C**											
11												
12	**General Statistics**											
13	Total Number of Observations	106					Number of Distinct Observations	93				
14	Number of Detects	99					Number of Non-Detects	7				
15	Number of Distinct Detects	92					Number of Distinct Non-Detects	1				
16	Minimum Detect	1.12					Minimum Non-Detect	0.5				
17	Maximum Detect	26					Maximum Non-Detect	0.5				
18	Variance Detects	20.22					Percent Non-Detects	6.604%				
19	Mean Detects	6.005					SD Detects	4.497				
20	Median Detects	4.81					CV Detects	0.749				
21	Skewness Detects	1.804					Kurtosis Detects	4.378				
22	Mean of Logged Detects	1.542					SD of Logged Detects	0.725				
23												
24	**Lognormal GOF Test on Detected Observations Only**											
25	Shapiro Wilk Approximate Test Statistic	0.971					**Shapiro Wilk GOF Test**					
26	5% Shapiro Wilk P Value	0.168					Detected Data appear Lognormal at 5% Significance Level					
27	Lilliefors Test Statistic	0.0497					**Lilliefors GOF Test**					
28	5% Lilliefors Critical Value	0.0893					Detected Data appear Lognormal at 5% Significance Level					
29	Detected Data appear Lognormal at 5% Significance Level											
30												
31	**Lognormal ROS Statistics Using Imputed Non-Detects**											
32	Mean in Original Scale	5.666					Mean in Log Scale	1.43				
33	SD in Original Scale	4.529					SD in Log Scale	0.821				
34	Geometric d_mean	4.177					95% Percentile Bootstrap UCL	6.415				
35	95% t UCL (assumes normality of ROS data)	6.396					95% BCA Bootstrap UCL	6.462				
36	95% Bootstrap t UCL	6.485					95% H-UCL (Log ROS)	6.902				
37												
38	**Statistics using KM estimates on Logged Data and Assuming Lognormal Distribution**											
39	KM Mean (logged)	1.395					KM Geo Mean	4.033				
40	KM SD (logged)	0.891					95% Critical H Value (KM-Log)	2.114				
41	KM Standard Error of Mean (logged)	0.087					95% H-UCL (KM -Log)	7.21				
42												
43	**DL/2 Statistics**											
44	**DL/2 Normal**						**DL/2 Log-Transformed**					
45	Mean in Original Scale	5.625					Mean in Log Scale	1.349				
46	SD in Original Scale	4.575					SD in Log Scale	1.012				
47	95% t UCL (Assumes normality)	6.362					95% H-Stat UCL	8.008				
48	DL/2 is not a recommended method, provided for comparisons and historical reasons											
49												
50	**Suggested UCL to Use**											
51	Data appear Gamma, May want to try Gamma Distribution											
52	Note: Suggestions regarding the selection of a 95% UCL are provided to help the user to select the most appropriate 95% UCL.											

	A	B	C	D	E	F	G	H	I	J	K	L
53	Recommendations are based upon data size, data distribution, and skewness.											
54	These recommendations are based upon the results of the simulation studies summarized in Singh, Maichle, and Lee (2006).											
55	However, simulations results will not cover all Real World data sets; for additional insight the user may want to consult a statistician.											
56												

1	**Lognormal UCL Statistics for Data Sets with Non-Detects**											
2												
3	User Selected Options											
4	Date/Time of Computation	ProUCL 5.19/15/2021 14:23:01										
5	From File	WorkSheet_a.xls										
6	Full Precision	OFF										
7	Confidence Coefficient	95%										
8	Number of Bootstrap Operations	2000										
9												
10	**Copper Unit C**											
11												
12	**General Statistics**											
13	Total Number of Observations	114					Number of Distinct Observations	108				
14	Number of Detects	113					Number of Non-Detects	1				
15	Number of Distinct Detects	107					Number of Distinct Non-Detects	1				
16	Minimum Detect	4.36					Minimum Non-Detect	2.5				
17	Maximum Detect	173					Maximum Non-Detect	2.5				
18	Variance Detects	976.8					Percent Non-Detects	0.877%				
19	Mean Detects	32.85					SD Detects	31.25				
20	Median Detects	23.2					CV Detects	0.952				
21	Skewness Detects	2.108					Kurtosis Detects	5.11				
22	Mean of Logged Detects	3.127					SD of Logged Detects	0.857				
23												
24	**Lognormal GOF Test on Detected Observations Only**											
25	Shapiro Wilk Approximate Test Statistic	0.968					**Shapiro Wilk GOF Test**					
26	5% Shapiro Wilk P Value	0.0688					Detected Data appear Lognormal at 5% Significance Level					
27	Lilliefors Test Statistic	0.0627					**Lilliefors GOF Test**					
28	5% Lilliefors Critical Value	0.0837					Detected Data appear Lognormal at 5% Significance Level					
29	Detected Data appear Lognormal at 5% Significance Level											
30												
31	**Lognormal ROS Statistics Using Imputed Non-Detects**											
32	Mean in Original Scale	32.58					Mean in Log Scale	3.106				
33	SD in Original Scale	31.25					SD in Log Scale	0.882				
34	Geometric d_mean	22.32					95% Percentile Bootstrap UCL	37.67				
35	95% t UCL (assumes normality of ROS data)	37.43					95% BCA Bootstrap UCL	37.64				
36	95% Bootstrap t UCL	38.5					95% H-UCL (Log ROS)	39.23				
37												
38	**Statistics using KM estimates on Logged Data and Assuming Lognormal Distribution**											
39	KM Mean (logged)	3.107					KM Geo Mean	22.36				
40	KM SD (logged)	0.874					95% Critical H Value (KM-Log)	2.106				
41	KM Standard Error of Mean (logged)	0.0822					95% H-UCL (KM -Log)	38.94				
42												
43	**DL/2 Statistics**											
44	**DL/2 Normal**						**DL/2 Log-Transformed**					
45	Mean in Original Scale	32.57					Mean in Log Scale	3.101				
46	SD in Original Scale	31.26					SD in Log Scale	0.895				
47	95% t UCL (Assumes normality)	37.42					95% H-Stat UCL	39.68				
48	DL/2 is not a recommended method, provided for comparisons and historical reasons											
49												
50	**Suggested UCL to Use**											
51	KM H-UCL	38.94										
52	Note: Suggestions regarding the selection of a 95% UCL are provided to help the user to select the most appropriate 95% UCL.											

	A	B	C	D	E	F	G	H	I	J	K	L
53	Recommendations are based upon data size, data distribution, and skewness.											
54	These recommendations are based upon the results of the simulation studies summarized in Singh, Maichle, and Lee (2006).											
55	However, simulations results will not cover all Real World data sets; for additional insight the user may want to consult a statistician.											
56												

1				**Lognormal Background Statistics for Data Sets with Non-Detects**								
2			**User Selected Options**									
3			Date/Time of Computation	ProUCL 5.19/15/2021 14:21:27								
4			From File	WorkSheet_a.xls								
5			Full Precision	OFF								
6			Confidence Coefficient	95%								
7			Coverage	95%								
8			Different or Future K Observations	1								
9			Number of Bootstrap Operations	2000								
10												
11	**Copper Unit C**											
12												
13						**General Statistics**						
14					Total Number of Observations	114			Number of Distinct Observations	108		
15					Number of Detects	113			Number of Non-Detects	1		
16					Number of Distinct Detects	107			Number of Distinct Non-Detects	1		
17					Minimum Detect	4.36			Minimum Non-Detect	2.5		
18					Maximum Detect	173			Maximum Non-Detect	2.5		
19					Variance Detected	976.8			Percent Non-Detects	0.877%		
20					Mean Detected	32.85			SD Detected	31.25		
21					Mean of Detected Logged Data	3.127			SD of Detected Logged Data	0.857		
22												
23						**Critical Values for Background Threshold Values (BTVs)**							
24					Tolerance Factor K (For UTL)	1.904			d2max (for USL)	3.254		
25												
26						**Lognormal GOF Test on Detected Observations Only**							
27					Shapiro Wilk Approximate Test Statistic	0.968			**Shapiro Wilk GOF Test**			
28					5% Shapiro Wilk P Value	0.0688			Detected Data appear Lognormal at 5% Significance Level			
29					Lilliefors Test Statistic	0.0627			**Lilliefors GOF Test**			
30					5% Lilliefors Critical Value	0.0837			Detected Data appear Lognormal at 5% Significance Level			
31						**Detected Data appear Lognormal at 5% Significance Level**						
32												
33						**Kaplan Meier (KM) Background Statistics Assuming Normal Distribution**						
34					Mean	32.58			SD	31.11		
35					95% UTL95% Coverage	91.81			95% KM UPL (t)	84.4		
36					95% KM Chebyshev UPL	168.8			90% KM Percentile (z)	72.45		
37					95% KM Percentile (z)	83.75			99% KM Percentile (z)	104.9		
38					95% KM USL	133.8						
39												
40						**Background Lognormal ROS Statistics Assuming Lognormal Distribution Using Imputed Non-Detects**						
41					Mean in Original Scale	32.58			Mean in Log Scale	3.106		
42					SD in Original Scale	31.25			SD in Log Scale	0.882		
43					95% UTL95% Coverage	119.6			95% BCA UTL95% Coverage	125.5		
44					95% Bootstrap (%) UTL95% Coverage	125.5			95% UPL (t)	96.96		
45					90% Percentile (z)	69.1			95% Percentile (z)	95.2		
46					99% Percentile (z)	173.6			95% USL	393.2		
47												
48						**Statistics using KM estimates on Logged Data and Assuming Lognormal Distribution**						
49					KM Mean of Logged Data	3.107			95% KM UTL (Lognormal)95% Coverage	118		
50					KM SD of Logged Data	0.874			95% KM UPL (Lognormal)	95.85		
51					95% KM Percentile Lognormal (z)	94.12			95% KM USL (Lognormal)	383.9		
52												

	A	B	C	D	E	F	G	H	I	J	K	L
53	**Background DL/2 Statistics Assuming Lognormal Distribution**											
54					Mean in Original Scale	32.57				Mean in Log Scale		3.101
55					SD in Original Scale	31.26				SD in Log Scale		0.895
56					95% UTL95% Coverage	122.2				95% UPL (t)		98.73
57					90% Percentile (z)	70				95% Percentile (z)		96.9
58					99% Percentile (z)	178.4				95% USL		409.1
59	**DL/2 is not a Recommended Method. DL/2 provided for comparisons and historical reasons.**											
60												
61	Note: The use of USL tends to yield a conservative estimate of BTV, especially when the sample size starts exceeding 20.											
62	Therefore, one may use USL to estimate a BTV only when the data set represents a background data set free of outliers											
63	and consists of observations collected from clean unimpacted locations.											
64	The use of USL tends to provide a balance between false positives and false negatives provided the data											
65	represents a background data set and when many onsite observations need to be compared with the BTV.											
66												

Nonparametric UCL Statistics for Data Sets with Non-Detects

User Selected Options	
Date/Time of Computation	ProUCL 5.19/19/2021 11:03:31
From File	WorkSheet_d.xls
Full Precision	OFF
Confidence Coefficient	95%
Number of Bootstrap Operations	2000

lead saturated unit c

General Statistics

Total Number of Observations	63	Number of Distinct Observations	61
		Number of Missing Observations	0
Minimum	1.14	Mean	40.7
Maximum	303	Median	23.4
SD	56.76	Std. Error of Mean	7.151
Coefficient of Variation	1.394	Skewness	2.769
Mean of logged Data	2.723	SD of logged Data	1.597

Nonparametric Distribution Free UCL Statistics

Data do not follow a Discernible Distribution (0.05)

Assuming Normal Distribution

95% Normal UCL		95% UCLs (Adjusted for Skewness)	
95% Student's-t UCL	52.64	95% Adjusted-CLT UCL (Chen-1995)	55.13
		95% Modified-t UCL (Johnson-1978)	53.06

Nonparametric Distribution Free UCLs

95% CLT UCL	52.46	95% Jackknife UCL	52.64
95% Standard Bootstrap UCL	52.24	95% Bootstrap-t UCL	56.41
95% Hall's Bootstrap UCL	60.44	95% Percentile Bootstrap UCL	53.12
95% BCA Bootstrap UCL	54.7		
90% Chebyshev(Mean, Sd) UCL	62.16	95% Chebyshev(Mean, Sd) UCL	71.87
97.5% Chebyshev(Mean, Sd) UCL	85.36	99% Chebyshev(Mean, Sd) UCL	111.9

Suggested UCL to Use

95% Chebyshev (Mean, Sd) UCL	71.87

Note: Suggestions regarding the selection of a 95% UCL are provided to help the user to select the most appropriate 95% UCL.

Recommendations are based upon data size, data distribution, and skewness.

These recommendations are based upon the results of the simulation studies summarized in Singh, Maichle, and Lee (2006).

However, simulations results will not cover all Real World data sets; for additional insight the user may want to consult a statistician.

1				**Nonparametric Background Statistics for Data Sets with Non-Detects**								
2			**User Selected Options**									
3			Date/Time of Computation	ProUCL 5.19/19/2021 11:02:08								
4			From File	WorkSheet_d.xls								
5			Full Precision	OFF								
6			Confidence Coefficient	95%								
7			Coverage	95%								
8			Different or Future K Observations	1								
9												
10	**lead saturated unit c**											
11												
12	**General Statistics**											
13						Total Number of Observations	63			Number of Distinct Observations	61		
14						Minimum	1.14			First Quartile	2.96	
15						Second Largest	254			Median	23.4	
16						Maximum	303			Third Quartile	52.7	
17						Mean	40.7			SD	56.76	
18						Coefficient of Variation	1.394			Skewness	2.769	
19						Mean of logged Data	2.723			SD of logged Data	1.597	
20												
21						**Critical Values for Background Threshold Values (BTVs)**							
22						Tolerance Factor K (For UTL)	2.007			d2max (for USL)	3.045	
23												
24						**Nonparametric Distribution Free Background Statistics**							
25						Data do not follow a Discernible Distribution (0.05)							
26												
27						**Nonparametric Upper Limits for Background Threshold Values**							
28						Order of Statistic, r	62			95% UTL with 95% Coverage	254	
29						Approx, f used to compute achieved CC	1.632			Approximate Actual Confidence Coefficient achieved by UTL	0.83	
30										Approximate Sample Size needed to achieve specified CC	93	
31						95% Percentile Bootstrap UTL with 95% Coverage	254			95% BCA Bootstrap UTL with 95% Coverage	245.9	
32						95% UPL	162.8			90% Percentile	93.14	
33						90% Chebyshev UPL	212.3			95% Percentile	121.3	
34						95% Chebyshev UPL	290.1			99% Percentile	272.6	
35						95% USL	303					
36												
37						Note: The use of USL tends to yield a conservative estimate of BTV, especially when the sample size starts exceeding 20.							
38						Therefore, one may use USL to estimate a BTV only when the data set represents a background data set free of outliers							
39						and consists of observations collected from clean unimpacted locations.							
40						The use of USL tends to provide a balance between false positives and false negatives provided the data							
41						represents a background data set and when many onsite observations need to be compared with the BTV.							
42												

	Nonparametric Background Statistics for Data Sets with Non-Detects	
User Selected Options		
Date/Time of Computation	ProUCL 5.19/19/2021 11:24:34	
From File	WorkSheet_e.xls	
Full Precision	OFF	
Confidence Coefficient	95%	
Coverage	95%	
Different or Future K Observations	1	

lead unit c unsat

General Statistics

Total Number of Observations	44	Number of Distinct Observations	43
Minimum	1.27	First Quartile	2.673
Second Largest	132	Median	6.17
Maximum	198	Third Quartile	28.2
Mean	29.11	SD	45.76
Coefficient of Variation	1.572	Skewness	2.075
Mean of logged Data	2.258	SD of logged Data	1.504

Critical Values for Background Threshold Values (BTVs)

Tolerance Factor K (For UTL)	2.091	d2max (for USL)	2.906

Nonparametric Distribution Free Background Statistics

Data do not follow a Discernible Distribution (0.05)

Nonparametric Upper Limits for Background Threshold Values

Order of Statistic, r	44	95% UTL with 95% Coverage	198
Approx, f used to compute achieved CC	2.316	Approximate Actual Confidence Coefficient achieved by UTL	0.895
		Approximate Sample Size needed to achieve specified CC	59
95% Percentile Bootstrap UTL with 95% Coverage	188.1	95% BCA Bootstrap UTL with 95% Coverage	187.5
95% UPL	131	90% Percentile	103.3
90% Chebyshev UPL	167.9	95% Percentile	126.7
95% Chebyshev UPL	230.8	99% Percentile	169.6
95% USL	198		

Note: The use of USL tends to yield a conservative estimate of BTV, especially when the sample size starts exceeding 20.
Therefore, one may use USL to estimate a BTV only when the data set represents a background data set free of outliers
and consists of observations collected from clean unimpacted locations.
The use of USL tends to provide a balance between false positives and false negatives provided the data
represents a background data set and when many onsite observations need to be compared with the BTV.

Nonparametric UCL Statistics for Data Sets with Non-Detects

User Selected Options	
Date/Time of Computation	ProUCL 5.19/19/2021 11:25:15
From File	WorkSheet_e.xls
Full Precision	OFF
Confidence Coefficient	95%
Number of Bootstrap Operations	2000

lead unit c unsat

General Statistics

Total Number of Observations	44	Number of Distinct Observations	43
		Number of Missing Observations	0
Minimum	1.27	Mean	29.11
Maximum	198	Median	6.17
SD	45.76	Std. Error of Mean	6.899
Coefficient of Variation	1.572	Skewness	2.075
Mean of logged Data	2.258	SD of logged Data	1.504

Nonparametric Distribution Free UCL Statistics

Data do not follow a Discernible Distribution (0.05)

Assuming Normal Distribution

95% Normal UCL		95% UCLs (Adjusted for Skewness)	
95% Student's-t UCL	40.71	95% Adjusted-CLT UCL (Chen-1995)	42.76
		95% Modified-t UCL (Johnson-1978)	41.07

Nonparametric Distribution Free UCLs

95% CLT UCL	40.46	95% Jackknife UCL	40.71
95% Standard Bootstrap UCL	40.46	95% Bootstrap-t UCL	44.52
95% Hall's Bootstrap UCL	42.87	95% Percentile Bootstrap UCL	41.38
95% BCA Bootstrap UCL	43.51		
90% Chebyshev(Mean, Sd) UCL	49.8	95% Chebyshev(Mean, Sd) UCL	59.18
97.5% Chebyshev(Mean, Sd) UCL	72.19	99% Chebyshev(Mean, Sd) UCL	97.75

Suggested UCL to Use

95% Chebyshev (Mean, Sd) UCL	59.18

Note: Suggestions regarding the selection of a 95% UCL are provided to help the user to select the most appropriate 95% UCL.

Recommendations are based upon data size, data distribution, and skewness.

These recommendations are based upon the results of the simulation studies summarized in Singh, Maichle, and Lee (2006).

However, simulations results will not cover all Real World data sets; for additional insight the user may want to consult a statistician.

Nonparametric UCL Statistics for Data Sets with Non-Detects

User Selected Options	
Date/Time of Computation	ProUCL 5.19/19/2021 11:37:49
From File	WorkSheet_f.xls
Full Precision	OFF
Confidence Coefficient	95%
Number of Bootstrap Operations	2000

mercury unit c

General Statistics

Total Number of Observations	131	Number of Distinct Observations	25
Number of Detects	38	Number of Non-Detects	93
Number of Distinct Detects	23	Number of Distinct Non-Detects	2
Minimum Detect	0.076	Minimum Non-Detect	0.035
Maximum Detect	3.8	Maximum Non-Detect	0.05
Variance Detects	0.406	Percent Non-Detects	70.99%
Mean Detects	0.336	SD Detects	0.638
Median Detects	0.15	CV Detects	1.9
Skewness Detects	4.761	Kurtosis Detects	24.86
Mean of Logged Detects	-1.625	SD of Logged Detects	0.808

Nonparametric Distribution Free UCL Statistics

Data do not follow a Discernible Distribution at 5% Significance Level

Kaplan-Meier (KM) Statistics using Normal Critical Values and other Nonparametric UCLs

Mean	0.122	Standard Error of Mean	0.0323
SD	0.365	95% KM (BCA) UCL	0.187
95% KM (t) UCL	0.176	95% KM (Percentile Bootstrap) UCL	0.182
95% KM (z) UCL	0.175	95% KM Bootstrap t UCL	0.275
90% KM Chebyshev UCL	0.219	95% KM Chebyshev UCL	0.263
97.5% KM Chebyshev UCL	0.324	99% KM Chebyshev UCL	0.444

Statistics using KM estimates on Logged Data and Assuming Lognormal Distribution

KM SD (logged)	0.894	95% Critical H Value (KM-Log)	2.101
KM Mean (logged)	-2.851	KM Geo Mean	0.0578
KM Standard Error of Mean (logged)	0.0791	95% H-UCL (KM -Log)	0.102

Suggested UCL to Use

95% KM (Chebyshev) UCL 0.263

Note: Suggestions regarding the selection of a 95% UCL are provided to help the user to select the most appropriate 95% UCL.

Recommendations are based upon data size, data distribution, and skewness.

These recommendations are based upon the results of the simulation studies summarized in Singh, Maichle, and Lee (2006).

However, simulations results will not cover all Real World data sets; for additional insight the user may want to consult a statistician.

1				**Nonparametric Background Statistics for Data Sets with Non-Detects**								
2		**User Selected Options**										
3		Date/Time of Computation		ProUCL 5.19/19/2021 11:35:48								
4		From File		WorkSheet_f.xls								
5		Full Precision		OFF								
6		Confidence Coefficient		95%								
7		Coverage		95%								
8		Different or Future K Observations		1								
9												
10	**mercury unit c**											
11												
12						**General Statistics**							
13				Total Number of Observations		131			Number of Distinct Observations		25	
14				Number of Detects		38			Number of Non-Detects		93	
15				Number of Distinct Detects		23			Number of Distinct Non-Detects		2	
16				Minimum Detect		0.076			Minimum Non-Detect		0.035	
17				Maximum Detect		3.8			Maximum Non-Detect		0.05	
18				Variance Detected		0.406			Percent Non-Detects		70.99%	
19				Mean Detected		0.336			SD Detected		0.638	
20				Mean of Detected Logged Data		-1.625			SD of Detected Logged Data		0.808	
21												
22						**Critical Values for Background Threshold Values (BTVs)**							
23				Tolerance Factor K (For UTL)		1.885			d2max (for USL)		3.299	
24												
25						**Nonparametric Distribution Free Background Statistics**							
26						Data do not follow a Discernible Distribution (0.05)							
27												
28						**Kaplan Meier (KM) Background Statistics Assuming Normal Distribution**							
29				Mean		0.122			SD		0.365	
30				95% UTL95% Coverage		0.811			95% KM UPL (t)		0.73	
31				95% KM Chebyshev UPL		1.72			90% KM Percentile (z)		0.59	
32				95% KM Percentile (z)		0.723			99% KM Percentile (z)		0.972	
33				95% KM USL		1.327						
34												
35						**Nonparametric Upper Limits for BTVs(no distinction made between detects and nondetects)**							
36				Order of Statistic, r		128			95% UTL with95% Coverage		0.76	
37				Approx, f used to compute achieved CC		1.684			Approximate Actual Confidence Coefficient achieved by UTL		0.898	
38				Approximate Sample Size needed to achieve specified CC		153			95% UPL		0.322	
39				95% USL		3.8			95% KM Chebyshev UPL		1.72	
40												
41						Note: The use of USL tends to yield a conservative estimate of BTV, especially when the sample size starts exceeding 20.							
42						Therefore, one may use USL to estimate a BTV only when the data set represents a background data set free of outliers							
43						and consists of observations collected from clean unimpacted locations.							
44						The use of USL tends to provide a balance between false positives and false negatives provided the data							
45						represents a background data set and when many onsite observations need to be compared with the BTV.							
46												

Normal UCL Statistics for Data Sets with Non-Detects

User Selected Options	
Date/Time of Computation	ProUCL 5.19/19/2021 12:08:30
From File	WorkSheet_g.xls
Full Precision	OFF
Confidence Coefficient	95%
Number of Bootstrap Operations	2000

nickel unit c

General Statistics

Total Number of Observations	93	Number of Distinct Observations	79
Number of Detects	92	Number of Non-Detects	1
Number of Distinct Detects	78	Number of Distinct Non-Detects	1
Minimum Detect	7.32	Minimum Non-Detect	0.5
Maximum Detect	48.5	Maximum Non-Detect	0.5
Variance Detects	93.16	Percent Non-Detects	1.075%
Mean Detects	25.47	SD Detects	9.652
Median Detects	25.45	CV Detects	0.379
Skewness Detects	0.245	Kurtosis Detects	-0.466
Mean of Logged Detects	3.156	SD of Logged Detects	0.425

Normal GOF Test on Detects Only

Shapiro Wilk Test Statistic	0.969	**Normal GOF Test on Detected Observations Only**
5% Shapiro Wilk P Value	0.13	Detected Data appear Normal at 5% Significance Level
Lilliefors Test Statistic	0.0699	**Lilliefors GOF Test**
5% Lilliefors Critical Value	0.0926	Detected Data appear Normal at 5% Significance Level

Detected Data appear Normal at 5% Significance Level

Kaplan-Meier (KM) Statistics using Normal Critical Values and other Nonparametric UCLs

KM Mean	25.2	KM Variance	1.031
KM SD	9.889	KM Standard Error of Mean	97.79
95% KM (BCA) UCL	26.93	97.5% KM (BCA) UCL	27.27
95% KM (t) UCL	26.92	95% KM (Percentile Bootstrap) UCL	26.81
95% KM (z) UCL	26.9	95% KM Bootstrap t UCL	26.91
90% KM Chebyshev UCL	28.3	95% KM Chebyshev UCL	29.7
97.5% KM Chebyshev UCL	31.64	99% KM Chebyshev UCL	35.46

DL/2 Statistics

DL/2 Normal		DL/2 Log-Transformed	
Mean in Original Scale	25.2	Mean in Log Scale	3.108
SD in Original Scale	9.949	SD in Log Scale	0.633
95% t UCL (Assumes normality)	26.91	95% H-Stat UCL	31.07

DL/2 is not a recommended method, provided for comparisons and historical reasons

Suggested UCL to Use

95% KM (t) UCL 26.92

Note: Suggestions regarding the selection of a 95% UCL are provided to help the user to select the most appropriate 95% UCL.

Recommendations are based upon data size, data distribution, and skewness.

These recommendations are based upon the results of the simulation studies summarized in Singh, Maichle, and Lee (2006).

	A	B	C	D	E	F	G	H	I	J	K	L
53	However, simulations results will not cover all Real World data sets; for additional insight the user may want to consult a statistician.											
54												

	Normal Background Statistics for Data Sets with Non-Detects	
User Selected Options		
Date/Time of Computation	ProUCL 5.19/19/2021 12:07:07	
From File	WorkSheet_g.xls	
Full Precision	OFF	
Confidence Coefficient	95%	
Coverage	95%	
Different or Future K Observations	1	

nickel unit c

General Statistics

Total Number of Observations	93	Number of Distinct Observations	79
Number of Detects	92	Number of Non-Detects	1
Number of Distinct Detects	78	Number of Distinct Non-Detects	1
Minimum Detect	7.32	Minimum Non-Detect	0.5
Maximum Detect	48.5	Maximum Non-Detect	0.5
Variance Detected	93.16	Percent Non-Detects	1.075%
Mean Detected	25.47	SD Detected	9.652
Mean of Detected Logged Data	3.156	SD of Detected Logged Data	0.425

Critical Values for Background Threshold Values (BTVs)

Tolerance Factor K (For UTL)	1.935	d2max (for USL)	3.185

Normal GOF Test on Detects Only

Shapiro Wilk Test Statistic	0.969	**Normal GOF Test on Detected Observations Only**
5% Shapiro Wilk P Value	0.13	Detected Data appear Normal at 5% Significance Level
Lilliefors Test Statistic	0.0699	**Lilliefors GOF Test**
5% Lilliefors Critical Value	0.0926	Detected Data appear Normal at 5% Significance Level

Detected Data appear Normal at 5% Significance Level

Kaplan Meier (KM) Background Statistics Assuming Normal Distribution

Mean	25.2	SD	9.889
95% UTL95% Coverage	44.34	95% KM UPL (t)	41.72
95% KM Chebyshev UPL	68.54	90% KM Percentile (z)	37.88
95% KM Percentile (z)	41.47	99% KM Percentile (z)	48.21
95% KM USL	56.69		

DL/2 Substitution Background Statistics Assuming Normal Distribution

Mean	25.2	SD	9.949
95% UTL95% Coverage	44.45	95% UPL (t)	41.82
90% Percentile (z)	37.95	95% Percentile (z)	41.56
99% Percentile (z)	48.35	95% USL	56.88

DL/2 is not a recommended method. DL/2 provided for comparisons and historical reasons

Note: The use of USL tends to yield a conservative estimate of BTV, especially when the sample size starts exceeding 20.
Therefore, one may use USL to estimate a BTV only when the data set represents a background data set free of outliers
and consists of observations collected from clean unimpacted locations.
The use of USL tends to provide a balance between false positives and false negatives provided the data
represents a background data set and when many onsite observations need to be compared with the BTV.

	Lognormal Background Statistics for Data Sets with Non-Detects	
User Selected Options		
Date/Time of Computation	ProUCL 5.19/21/2021 10:07:13	
From File	WorkSheet_m.xls	
Full Precision	OFF	
Confidence Coefficient	95%	
Coverage	95%	
Different or Future K Observations	1	
Number of Bootstrap Operations	2000	

zinc unit c unsat

General Statistics

Total Number of Observations	34	Number of Distinct Observations	34
Minimum	9.32	First Quartile	21.03
Second Largest	191	Median	37.2
Maximum	229	Third Quartile	95.23
Mean	69.02	SD	61.9
Coefficient of Variation	0.897	Skewness	1.188
Mean of logged Data	3.847	SD of logged Data	0.901

Critical Values for Background Threshold Values (BTVs)

Tolerance Factor K (For UTL)	2.166	d2max (for USL)	2.799

Lognormal GOF Test

Shapiro Wilk Test Statistic	0.933	**Shapiro Wilk Lognormal GOF Test**	
5% Shapiro Wilk Critical Value	0.933	Data Not Lognormal at 5% Significance Level	
Lilliefors Test Statistic	0.143	**Lilliefors Lognormal GOF Test**	
5% Lilliefors Critical Value	0.15	Data appear Lognormal at 5% Significance Level	

Data appear Approximate Lognormal at 5% Significance Level

Background Statistics assuming Lognormal Distribution

95% UTL with 95% Coverage	330.4	90% Percentile (z)	148.8
95% UPL (t)	220.4	95% Percentile (z)	206.5
95% USL	584.6	99% Percentile (z)	381.6

Note: The use of USL tends to yield a conservative estimate of BTV, especially when the sample size starts exceeding 20.
Therefore, one may use USL to estimate a BTV only when the data set represents a background data set free of outliers and consists of observations collected from clean unimpacted locations.
The use of USL tends to provide a balance between false positives and false negatives provided the data represents a background data set and when many onsite observations need to be compared with the BTV.

Lognormal UCL Statistics for Data Sets with Non-Detects		
User Selected Options		
Date/Time of Computation	ProUCL 5.19/21/2021 10:22:02	
From File	WorkSheet_n.xls	
Full Precision	OFF	
Confidence Coefficient	95%	
Number of Bootstrap Operations	2000	
zinc unit c sat		
General Statistics		
Total Number of Observations	76	Number of Distinct Observations 75
		Number of Missing Observations 0
Minimum	9.76	Mean 105.6
Maximum	973	Median 65.55
SD	144.3	Std. Error of Mean 16.55
Coefficient of Variation	1.367	Skewness 3.847
Lognormal GOF Test		
Shapiro Wilk Test Statistic	0.962	**Shapiro Wilk Lognormal GOF Test**
5% Shapiro Wilk P Value	0.0721	Data appear Lognormal at 5% Significance Level
Lilliefors Test Statistic	0.0954	**Lilliefors Lognormal GOF Test**
5% Lilliefors Critical Value	0.102	Data appear Lognormal at 5% Significance Level
Data appear Lognormal at 5% Significance Level		
Logged Statistics		
Minimum of Logged Data	2.278	Mean of logged Data 4.12
Maximum of Logged Data	6.88	SD of logged Data 1.019
Lognormal Maximum likelihood Estimates (MLEs)		
MLE Mean	103.5	MLE Standard Deviation 139.9
MLE Median	61.58	MLE Skewness 6.524
MLE Coefficient of Variation	1.352	80% MLE Quantile 145.2
90% MLE Quantile	227.4	95% MLE Quantile 329.3
99% MLE Quantile	659.7	
Lognormal Minimum Variance Unbiased Estimates (MVUEs)		
MVUE Mean	102.5	MVUE SD 133.1
MVUE Median	61.16	MVUE SEM 14.36
Assuming Lognormal Distribution		
95% H-UCL	135.4	90% Chebyshev (MVUE) UCL 145.6
95% Chebyshev (MVUE) UCL	165.1	97.5% Chebyshev (MVUE) UCL 192.1
99% Chebyshev (MVUE) UCL	245.3	
Nonparametric Distribution Free UCLs		
95% CLT UCL	132.8	95% Jackknife UCL 133.1
95% Standard Bootstrap UCL	133.3	95% Bootstrap-t UCL 148.2
95% Hall's Bootstrap UCL	161.7	95% Percentile Bootstrap UCL 135.7
95% BCA Bootstrap UCL	141.1	

	A	B	C	D	E	F	G	H	I	J	K	L
53					90% Chebyshev(Mean, Sd) UCL	155.2				95% Chebyshev(Mean, Sd) UCL		177.7
54					97.5% Chebyshev(Mean, Sd) UCL	208.9				99% Chebyshev(Mean, Sd) UCL		270.2
55												
56					**Suggested UCL to Use**							
57					95% H-UCL	135.4						
58												
59	Note: Suggestions regarding the selection of a 95% UCL are provided to help the user to select the most appropriate 95% UCL.											
60	Recommendations are based upon data size, data distribution, and skewness.											
61	These recommendations are based upon the results of the simulation studies summarized in Singh, Maichle, and Lee (2006).											
62	However, simulations results will not cover all Real World data sets; for additional insight the user may want to consult a statistician.											
63												
64	**ProUCL computes and outputs H-statistic based UCLs for historical reasons only.**											
65	**H-statistic often results in unstable (both high and low) values of UCL95 as shown in examples in the Technical Guide.**											
66	**It is therefore recommended to avoid the use of H-statistic based 95% UCLs.**											
67	**Use of nonparametric methods are preferred to compute UCL95 for skewed data sets which do not follow a gamma distribution.**											
68												

	Lognormal Background Statistics for Data Sets with Non-Detects	
User Selected Options		
Date/Time of Computation	ProUCL 5.19/21/2021 10:20:40	
From File	WorkSheet_n.xls	
Full Precision	OFF	
Confidence Coefficient	95%	
Coverage	95%	
Different or Future K Observations	1	
Number of Bootstrap Operations	2000	

zinc unit c sat

General Statistics

Total Number of Observations	76	Number of Distinct Observations	75
Minimum	9.76	First Quartile	23.65
Second Largest	613	Median	65.55
Maximum	973	Third Quartile	116.5
Mean	105.6	SD	144.3
Coefficient of Variation	1.367	Skewness	3.847
Mean of logged Data	4.12	SD of logged Data	1.019

Critical Values for Background Threshold Values (BTVs)

Tolerance Factor K (For UTL)	1.97	d2max (for USL)	3.114

Lognormal GOF Test

Shapiro Wilk Test Statistic	0.962	**Shapiro Wilk Lognormal GOF Test**	
5% Shapiro Wilk P Value	0.0721	Data appear Lognormal at 5% Significance Level	
Lilliefors Test Statistic	0.0954	**Lilliefors Lognormal GOF Test**	
5% Lilliefors Critical Value	0.102	Data appear Lognormal at 5% Significance Level	

Data appear Lognormal at 5% Significance Level

Background Statistics assuming Lognormal Distribution

95% UTL with 95% Coverage	458.7	90% Percentile (z)	227.4
95% UPL (t)	340.1	95% Percentile (z)	329.3
95% USL	1472	99% Percentile (z)	659.7

Note: The use of USL tends to yield a conservative estimate of BTV, especially when the sample size starts exceeding 20.
Therefore, one may use USL to estimate a BTV only when the data set represents a background data set free of outliers and consists of observations collected from clean unimpacted locations.
The use of USL tends to provide a balance between false positives and false negatives provided the data represents a background data set and when many onsite observations need to be compared with the BTV.

1	**Lognormal UCL Statistics for Data Sets with Non-Detects**											
2												
3	User Selected Options											
4	Date/Time of Computation	ProUCL 5.19/21/2021 10:08:50										
5	From File	WorkSheet_m.xls										
6	Full Precision	OFF										
7	Confidence Coefficient	95%										
8	Number of Bootstrap Operations	2000										
9												
10												
11	**zinc unit c unsat**											
12												
13	**General Statistics**											
14	Total Number of Observations	34					Number of Distinct Observations	34				
15							Number of Missing Observations	0				
16	Minimum	9.32					Mean	69.02				
17	Maximum	229					Median	37.2				
18	SD	61.9					Std. Error of Mean	10.62				
19	Coefficient of Variation	0.897					Skewness	1.188				
20												
21	**Lognormal GOF Test**											
22	Shapiro Wilk Test Statistic	0.933					**Shapiro Wilk Lognormal GOF Test**					
23	5% Shapiro Wilk Critical Value	0.933					Data Not Lognormal at 5% Significance Level					
24	Lilliefors Test Statistic	0.143					**Lilliefors Lognormal GOF Test**					
25	5% Lilliefors Critical Value	0.15					Data appear Lognormal at 5% Significance Level					
26	Data appear Approximate Lognormal at 5% Significance Level											
27												
28	**Logged Statistics**											
29	Minimum of Logged Data	2.232					Mean of logged Data	3.847				
30	Maximum of Logged Data	5.434					SD of logged Data	0.901				
31												
32	**Lognormal Maximum likelihood Estimates (MLEs)**											
33	MLE Mean	70.36					MLE Standard Deviation	78.79				
34	MLE Median	46.87					MLE Skewness	4.763				
35	MLE Coefficient of Variation	1.12					80% MLE Quantile	100.1				
36	90% MLE Quantile	148.8					95% MLE Quantile	206.5				
37	99% MLE Quantile	381.6										
38												
39	**Lognormal Minimum Variance Unbiased Estimates (MVUEs)**											
40	MVUE Mean	69.23					MVUE SD	73.02				
41	MVUE Median	46.31					MVUE SEM	12.12				
42												
43	**Assuming Lognormal Distribution**											
44	95% H-UCL	101.5					90% Chebyshev (MVUE) UCL	105.6				
45	95% Chebyshev (MVUE) UCL	122					97.5% Chebyshev (MVUE) UCL	144.9				
46	99% Chebyshev (MVUE) UCL	189.8										
47												
48	**Nonparametric Distribution Free UCLs**											
49	95% CLT UCL	86.48					95% Jackknife UCL	86.98				
50	95% Standard Bootstrap UCL	86.48					95% Bootstrap-t UCL	91.31				
51	95% Hall's Bootstrap UCL	88.96					95% Percentile Bootstrap UCL	86.69				
52	95% BCA Bootstrap UCL	88.27										

	A	B	C	D	E	F	G	H	I	J	K	L
53				90% Chebyshev(Mean, Sd) UCL		100.9				95% Chebyshev(Mean, Sd) UCL		115.3
54				97.5% Chebyshev(Mean, Sd) UCL		135.3				99% Chebyshev(Mean, Sd) UCL		174.6
55												
56						**Suggested UCL to Use**						
57					95% H-UCL	101.5						
58												
59												
60												
61												
62												
63												
64												
65												
66												
67												
68												

Note: Suggestions regarding the selection of a 95% UCL are provided to help the user to select the most appropriate 95% UCL.

Recommendations are based upon data size, data distribution, and skewness.

These recommendations are based upon the results of the simulation studies summarized in Singh, Maichle, and Lee (2006).

However, simulations results will not cover all Real World data sets; for additional insight the user may want to consult a statistician.

ProUCL computes and outputs H-statistic based UCLs for historical reasons only.

H-statistic often results in unstable (both high and low) values of UCL95 as shown in examples in the Technical Guide.

It is therefore recommended to avoid the use of H-statistic based 95% UCLs.

Use of nonparametric methods are preferred to compute UCL95 for skewed data sets which do not follow a gamma distribution.

Lognormal UCL Statistics for Data Sets with Non-Detects

User Selected Options	
Date/Time of Computation	ProUCL 5.19/19/2021 10:27:11
From File	WorkSheet_a.xls
Full Precision	OFF
Confidence Coefficient	95%
Number of Bootstrap Operations	2000

arsenic Unit D

General Statistics

Total Number of Observations	147	Number of Distinct Observations	128
Number of Detects	140	Number of Non-Detects	7
Number of Distinct Detects	127	Number of Distinct Non-Detects	1
Minimum Detect	1.33	Minimum Non-Detect	0.5
Maximum Detect	43	Maximum Non-Detect	0.5
Variance Detects	33.81	Percent Non-Detects	4.762%
Mean Detects	6.347	SD Detects	5.815
Median Detects	4.66	CV Detects	0.916
Skewness Detects	3.307	Kurtosis Detects	15.21
Mean of Logged Detects	1.585	SD of Logged Detects	0.692

Lognormal GOF Test on Detected Observations Only

Shapiro Wilk Approximate Test Statistic	0.967	**Shapiro Wilk GOF Test**
5% Shapiro Wilk P Value	0.0323	Detected Data Not Lognormal at 5% Significance Level
Lilliefors Test Statistic	0.0619	**Lilliefors GOF Test**
5% Lilliefors Critical Value	0.0753	Detected Data appear Lognormal at 5% Significance Level

Detected Data appear Approximate Lognormal at 5% Significance Level

Lognormal ROS Statistics Using Imputed Non-Detects

Mean in Original Scale	6.089	Mean in Log Scale	1.506
SD in Original Scale	5.79	SD in Log Scale	0.764
Geometric d_mean	4.507	95% Percentile Bootstrap UCL	6.948
95% t UCL (assumes normality of ROS data)	6.88	95% BCA Bootstrap UCL	7.092
95% Bootstrap t UCL	7.08	95% H-UCL (Log ROS)	6.85

Statistics using KM estimates on Logged Data and Assuming Lognormal Distribution

KM Mean (logged)	1.476	KM Geo Mean	4.377
KM SD (logged)	0.829	95% Critical H Value (KM-Log)	2.056
KM Standard Error of Mean (logged)	0.0686	95% H-UCL (KM -Log)	7.109

DL/2 Statistics

DL/2 Normal		DL/2 Log-Transformed	
Mean in Original Scale	6.056	Mean in Log Scale	1.443
SD in Original Scale	5.821	SD in Log Scale	0.927
95% t UCL (Assumes normality)	6.851	95% H-Stat UCL	7.665

DL/2 is not a recommended method, provided for comparisons and historical reasons

Suggested UCL to Use

KM H-UCL	7.109

Note: Suggestions regarding the selection of a 95% UCL are provided to help the user to select the most appropriate 95% UCL.

	A	B	C	D	E	F	G	H	I	J	K	L
53	Recommendations are based upon data size, data distribution, and skewness.											
54	These recommendations are based upon the results of the simulation studies summarized in Singh, Maichle, and Lee (2006).											
55	However, simulations results will not cover all Real World data sets; for additional insight the user may want to consult a statistician.											
56												

1				**Lognormal Background Statistics for Data Sets with Non-Detects**								
2			**User Selected Options**									
3			Date/Time of Computation	ProUCL 5.19/19/2021 10:26:11								
4			From File	WorkSheet_a.xls								
5			Full Precision	OFF								
6			Confidence Coefficient	95%								
7			Coverage	95%								
8			Different or Future K Observations	1								
9			Number of Bootstrap Operations	2000								
10												
11	**arsenic Unit D**											
12												
13						**General Statistics**							
14					Total Number of Observations	147				Number of Distinct Observations	128	
15					Number of Detects	140				Number of Non-Detects	7	
16					Number of Distinct Detects	127				Number of Distinct Non-Detects	1	
17					Minimum Detect	1.33				Minimum Non-Detect	0.5	
18					Maximum Detect	43				Maximum Non-Detect	0.5	
19					Variance Detected	33.81				Percent Non-Detects	4.762%	
20					Mean Detected	6.347				SD Detected	5.815	
21					Mean of Detected Logged Data	1.585				SD of Detected Logged Data	0.692	
22												
23						**Critical Values for Background Threshold Values (BTVs)**							
24					Tolerance Factor K (For UTL)	1.87				d2max (for USL)	3.336	
25												
26						**Lognormal GOF Test on Detected Observations Only**							
27					Shapiro Wilk Approximate Test Statistic	0.967				**Shapiro Wilk GOF Test**		
28					5% Shapiro Wilk P Value	0.0323				Data Not Lognormal at 5% Significance Level		
29					Lilliefors Test Statistic	0.0619				**Lilliefors GOF Test**		
30					5% Lilliefors Critical Value	0.0753				Detected Data appear Lognormal at 5% Significance Level		
31						Detected Data appear Approximate Lognormal at 5% Significance Level						
32												
33						**Kaplan Meier (KM) Background Statistics Assuming Normal Distribution**							
34					Mean	6.068				SD	5.79	
35					95% UTL95% Coverage	16.9				95% KM UPL (t)	15.68	
36					95% KM Chebyshev UPL	31.39				90% KM Percentile (z)	13.49	
37					95% KM Percentile (z)	15.59				99% KM Percentile (z)	19.54	
38					95% KM USL	25.38						
39												
40						**Background Lognormal ROS Statistics Assuming Lognormal Distribution Using Imputed Non-Detects**							
41					Mean in Original Scale	6.089				Mean in Log Scale	1.506	
42					SD in Original Scale	5.79				SD in Log Scale	0.764	
43					95% UTL95% Coverage	18.81				95% BCA UTL95% Coverage	18	
44					95% Bootstrap (%) UTL95% Coverage	18				95% UPL (t)	16.03	
45					90% Percentile (z)	12				95% Percentile (z)	15.83	
46					99% Percentile (z)	26.65				95% USL	57.64	
47												
48						**Statistics using KM estimates on Logged Data and Assuming Lognormal Distribution**							
49					KM Mean of Logged Data	1.476				95% KM UTL (Lognormal)95% Coverage	20.64	
50					KM SD of Logged Data	0.829				95% KM UPL (Lognormal)	17.35	
51					95% KM Percentile Lognormal (z)	17.12				95% KM USL (Lognormal)	69.64	
52												

	A	B	C	D	E	F	G	H	I	J	K	L
53	**Background DL/2 Statistics Assuming Lognormal Distribution**											
54					Mean in Original Scale	6.056				Mean in Log Scale		1.443
55					SD in Original Scale	5.821				SD in Log Scale		0.927
56					95% UTL95% Coverage	23.96				95% UPL (t)		19.74
57					90% Percentile (z)	13.89				95% Percentile (z)		19.44
58					99% Percentile (z)	36.56				95% USL		93.22
59	**DL/2 is not a Recommended Method. DL/2 provided for comparisons and historical reasons.**											
60												
61	Note: The use of USL tends to yield a conservative estimate of BTV, especially when the sample size starts exceeding 20.											
62	Therefore, one may use USL to estimate a BTV only when the data set represents a background data set free of outliers											
63	and consists of observations collected from clean unimpacted locations.											
64	The use of USL tends to provide a balance between false positives and false negatives provided the data											
65	represents a background data set and when many onsite observations need to be compared with the BTV.											
66												

1	**Lognormal UCL Statistics for Data Sets with Non-Detects**											
2												
3	User Selected Options											
4	Date/Time of Computation	ProUCL 5.19/19/2021 09:40:08										
5	From File	WorkSheet.xls										
6	Full Precision	OFF										
7	Confidence Coefficient	95%										
8	Number of Bootstrap Operations	2000										
9												
10	**copper Unit D**											
11												
12	**General Statistics**											
13	Total Number of Observations	147					Number of Distinct Observations	136				
14	Number of Detects	144					Number of Non-Detects	3				
15	Number of Distinct Detects	134					Number of Distinct Non-Detects	2				
16	Minimum Detect	4.47					Minimum Non-Detect	0.5				
17	Maximum Detect	166					Maximum Non-Detect	2.5				
18	Variance Detects	323					Percent Non-Detects	2.041%				
19	Mean Detects	19.99					SD Detects	17.97				
20	Median Detects	15.5					CV Detects	0.899				
21	Skewness Detects	4.344					Kurtosis Detects	30.39				
22	Mean of Logged Detects	2.744					SD of Logged Detects	0.689				
23												
24	**Lognormal GOF Test on Detected Observations Only**											
25	Shapiro Wilk Approximate Test Statistic	0.972					**Shapiro Wilk GOF Test**					
26	5% Shapiro Wilk P Value	0.0922					Detected Data appear Lognormal at 5% Significance Level					
27	Lilliefors Test Statistic	0.0589					**Lilliefors GOF Test**					
28	5% Lilliefors Critical Value	0.0742					Detected Data appear Lognormal at 5% Significance Level					
29	Detected Data appear Lognormal at 5% Significance Level											
30												
31	**Lognormal ROS Statistics Using Imputed Non-Detects**											
32	Mean in Original Scale	19.64					Mean in Log Scale	2.709				
33	SD in Original Scale	17.96					SD in Log Scale	0.726				
34	Geometric d_mean	15.01					95% Percentile Bootstrap UCL	22.3				
35	95% t UCL (assumes normality of ROS data)	22.09					95% BCA Bootstrap UCL	22.89				
36	95% Bootstrap t UCL	22.8					95% H-UCL (Log ROS)	21.99				
37												
38	**Statistics using KM estimates on Logged Data and Assuming Lognormal Distribution**											
39	KM Mean (logged)	2.674					KM Geo Mean	14.5				
40	KM SD (logged)	0.835					95% Critical H Value (KM-Log)	2.06				
41	KM Standard Error of Mean (logged)	0.0691					95% H-UCL (KM -Log)	23.7				
42												
43	**DL/2 Statistics**											
44	**DL/2 Normal**						**DL/2 Log-Transformed**					
45	Mean in Original Scale	19.6					Mean in Log Scale	2.671				
46	SD in Original Scale	18					SD in Log Scale	0.858				
47	95% t UCL (Assumes normality)	22.06					95% H-Stat UCL	24.21				
48	DL/2 is not a recommended method, provided for comparisons and historical reasons											
49												
50	**Suggested UCL to Use**											
51	Data appear Gamma, May want to try Gamma Distribution											
52	Note: Suggestions regarding the selection of a 95% UCL are provided to help the user to select the most appropriate 95% UCL.											

	A	B	C	D	E	F	G	H	I	J	K	L
53	Recommendations are based upon data size, data distribution, and skewness.											
54	These recommendations are based upon the results of the simulation studies summarized in Singh, Maichle, and Lee (2006).											
55	However, simulations results will not cover all Real World data sets; for additional insight the user may want to consult a statistician.											
56												

1				**Lognormal Background Statistics for Data Sets with Non-Detects**								
2			**User Selected Options**									
3			Date/Time of Computation	ProUCL 5.19/19/2021 09:38:02								
4			From File	WorkSheet.xls								
5			Full Precision	OFF								
6			Confidence Coefficient	95%								
7			Coverage	95%								
8			Different or Future K Observations	1								
9			Number of Bootstrap Operations	2000								
10												
11	**copper Unit D**											
12												
13						**General Statistics**							
14					Total Number of Observations	147				Number of Distinct Observations	136	
15					Number of Detects	144				Number of Non-Detects	3	
16					Number of Distinct Detects	134				Number of Distinct Non-Detects	2	
17					Minimum Detect	4.47				Minimum Non-Detect	0.5	
18					Maximum Detect	166				Maximum Non-Detect	2.5	
19					Variance Detected	323				Percent Non-Detects	2.041%	
20					Mean Detected	19.99				SD Detected	17.97	
21					Mean of Detected Logged Data	2.744				SD of Detected Logged Data	0.689	
22												
23						**Critical Values for Background Threshold Values (BTVs)**							
24					Tolerance Factor K (For UTL)	1.87				d2max (for USL)	3.336	
25												
26						**Lognormal GOF Test on Detected Observations Only**							
27					Shapiro Wilk Approximate Test Statistic	0.972				**Shapiro Wilk GOF Test**		
28					5% Shapiro Wilk P Value	0.0922				Detected Data appear Lognormal at 5% Significance Level		
29					Lilliefors Test Statistic	0.0589				**Lilliefors GOF Test**		
30					5% Lilliefors Critical Value	0.0742				Detected Data appear Lognormal at 5% Significance Level		
31						**Detected Data appear Lognormal at 5% Significance Level**						
32												
33						**Kaplan Meier (KM) Background Statistics Assuming Normal Distribution**						
34					Mean	19.6				SD	17.94	
35					95% UTL95% Coverage	53.15				95% KM UPL (t)	49.39	
36					95% KM Chebyshev UPL	98.06				90% KM Percentile (z)	42.59	
37					95% KM Percentile (z)	49.1				99% KM Percentile (z)	61.33	
38					95% KM USL	79.45						
39												
40						**Background Lognormal ROS Statistics Assuming Lognormal Distribution Using Imputed Non-Detects**						
41					Mean in Original Scale	19.64				Mean in Log Scale	2.709	
42					SD in Original Scale	17.96				SD in Log Scale	0.726	
43					95% UTL95% Coverage	58.31				95% BCA UTL95% Coverage	57.3	
44					95% Bootstrap (%) UTL95% Coverage	57.3				95% UPL (t)	50.1	
45					90% Percentile (z)	38.04				95% Percentile (z)	49.51	
46					99% Percentile (z)	81.19				95% USL	169	
47												
48						**Statistics using KM estimates on Logged Data and Assuming Lognormal Distribution**						
49					KM Mean of Logged Data	2.674				95% KM UTL (Lognormal)95% Coverage	69.15	
50					KM SD of Logged Data	0.835				95% KM UPL (Lognormal)	58.06	
51					95% KM Percentile Lognormal (z)	57.28				95% KM USL (Lognormal)	235.3	
52												

	A	B	C	D	E	F	G	H	I	J	K	L
53	**Background DL/2 Statistics Assuming Lognormal Distribution**											
54					Mean in Original Scale	19.6				Mean in Log Scale		2.671
55					SD in Original Scale	18				SD in Log Scale		0.858
56					95% UTL95% Coverage	71.95				95% UPL (t)		60.12
57					90% Percentile (z)	43.41				95% Percentile (z)		59.29
58					99% Percentile (z)	106.4				95% USL		253.2
59	**DL/2 is not a Recommended Method. DL/2 provided for comparisons and historical reasons.**											
60												
61	Note: The use of USL tends to yield a conservative estimate of BTV, especially when the sample size starts exceeding 20.											
62	Therefore, one may use USL to estimate a BTV only when the data set represents a background data set free of outliers											
63	and consists of observations collected from clean unimpacted locations.											
64	The use of USL tends to provide a balance between false positives and false negatives provided the data											
65	represents a background data set and when many onsite observations need to be compared with the BTV.											
66												

Nonparametric UCL Statistics for Data Sets with Non-Detects

User Selected Options	
Date/Time of Computation	ProUCL 5.19/20/2021 14:17:47
From File	WorkSheet_i.xls
Full Precision	OFF
Confidence Coefficient	95%
Number of Bootstrap Operations	2000

lead unit d saturated

General Statistics

Total Number of Observations	112	Number of Distinct Observations	108
		Number of Missing Observations	0
Minimum	1.24	Mean	14.6
Maximum	363	Median	4.065
SD	38.54	Std. Error of Mean	3.641
Coefficient of Variation	2.639	Skewness	7.195
Mean of logged Data	1.727	SD of logged Data	1.175

Nonparametric Distribution Free UCL Statistics

Data do not follow a Discernible Distribution (0.05)

Assuming Normal Distribution

95% Normal UCL		95% UCLs (Adjusted for Skewness)	
95% Student's-t UCL	20.64	95% Adjusted-CLT UCL (Chen-1995)	23.24
		95% Modified-t UCL (Johnson-1978)	21.05

Nonparametric Distribution Free UCLs

95% CLT UCL	20.59	95% Jackknife UCL	20.64
95% Standard Bootstrap UCL	20.55	95% Bootstrap-t UCL	28.09
95% Hall's Bootstrap UCL	43.46	95% Percentile Bootstrap UCL	21.32
95% BCA Bootstrap UCL	24.69		
90% Chebyshev(Mean, Sd) UCL	25.52	95% Chebyshev(Mean, Sd) UCL	30.47
97.5% Chebyshev(Mean, Sd) UCL	37.34	99% Chebyshev(Mean, Sd) UCL	50.83

Suggested UCL to Use

95% Chebyshev (Mean, Sd) UCL	30.47

Note: Suggestions regarding the selection of a 95% UCL are provided to help the user to select the most appropriate 95% UCL.

Recommendations are based upon data size, data distribution, and skewness.

These recommendations are based upon the results of the simulation studies summarized in Singh, Maichle, and Lee (2006).

However, simulations results will not cover all Real World data sets; for additional insight the user may want to consult a statistician.

	Nonparametric Background Statistics for Uncensored Full Data Sets	
User Selected Options		
Date/Time of Computation	ProUCL 5.19/20/2021 14:15:17	
From File	WorkSheet_i.xls	
Full Precision	OFF	
Confidence Coefficient	95%	
Coverage	95%	
Number of Bootstrap Operations	2000	

lead unit d saturated

General Statistics

Total Number of Observations	112	Number of Distinct Observations	108
Minimum	1.24	First Quartile	2.298
Second Largest	121	Median	4.065
Maximum	363	Third Quartile	12.6
Mean	14.6	SD	38.54
Coefficient of Variation	2.639	Skewness	7.195
Mean of logged Data	1.727	SD of logged Data	1.175

Critical Values for Background Threshold Values (BTVs)

Tolerance Factor K (For UTL)	1.906	d2max (for USL)	3.248

Nonparametric Distribution Free Background Statistics

Data do not follow a Discernible Distribution (0.05)

Nonparametric Upper Limits for Background Threshold Values

Order of Statistic, r	109	95% UTL with 95% Coverage	71.1
Approx, f used to compute achieved CC	1.434	Approximate Actual Confidence Coefficient achieved by UTL	0.817
		Approximate Sample Size needed to achieve specified CC	153
95% Percentile Bootstrap UTL with 95% Coverage	90.4	95% BCA Bootstrap UTL with 95% Coverage	90.4
95% UPL	65.15	90% Percentile	27.5
90% Chebyshev UPL	130.7	95% Percentile	58.75
95% Chebyshev UPL	183.3	99% Percentile	120.2
95% USL	363		

Note: The use of USL tends to yield a conservative estimate of BTV, especially when the sample size starts exceeding 20.
Therefore, one may use USL to estimate a BTV only when the data set represents a background data set free of outliers
and consists of observations collected from clean unimpacted locations.
The use of USL tends to provide a balance between false positives and false negatives provided the data
represents a background data set and when many onsite observations need to be compared with the BTV.

	Lognormal UCL Statistics for Data Sets with Non-Detects	
User Selected Options		
Date/Time of Computation	ProUCL 5.19/20/2021 14:38:02	
From File	WorkSheet_j.xls	
Full Precision	OFF	
Confidence Coefficient	95%	
Number of Bootstrap Operations	2000	
lead unsat unit d		

General Statistics			
Total Number of Observations	35	Number of Distinct Observations	35
		Number of Missing Observations	0
Minimum	1.47	Mean	13.43
Maximum	74.1	Median	6.65
SD	17.49	Std. Error of Mean	2.956
Coefficient of Variation	1.303	Skewness	2.316
Lognormal GOF Test			
Shapiro Wilk Test Statistic	0.949	**Shapiro Wilk Lognormal GOF Test**	
5% Shapiro Wilk Critical Value	0.934	Data appear Lognormal at 5% Significance Level	
Lilliefors Test Statistic	0.0989	**Lilliefors Lognormal GOF Test**	
5% Lilliefors Critical Value	0.148	Data appear Lognormal at 5% Significance Level	
Data appear Lognormal at 5% Significance Level			
Logged Statistics			
Minimum of Logged Data	0.385	Mean of logged Data	2.032
Maximum of Logged Data	4.305	SD of logged Data	1.021
Lognormal Maximum likelihood Estimates (MLEs)			
MLE Mean	12.85	MLE Standard Deviation	17.42
MLE Median	7.626	MLE Skewness	6.562
MLE Coefficient of Variation	1.356	80% MLE Quantile	18.02
90% MLE Quantile	28.24	95% MLE Quantile	40.93
99% MLE Quantile	82.09		
Lognormal Minimum Variance Unbiased Estimates (MVUEs)			
MVUE Mean	12.57	MVUE SD	15.74
MVUE Median	7.513	MVUE SEM	2.526
Assuming Lognormal Distribution			
95% H-UCL	19.84	90% Chebyshev (MVUE) UCL	20.15
95% Chebyshev (MVUE) UCL	23.58	97.5% Chebyshev (MVUE) UCL	28.35
99% Chebyshev (MVUE) UCL	37.71		
Nonparametric Distribution Free UCLs			
95% CLT UCL	18.29	95% Jackknife UCL	18.43
95% Standard Bootstrap UCL	18.1	95% Bootstrap-t UCL	21.08
95% Hall's Bootstrap UCL	19.35	95% Percentile Bootstrap UCL	18.5
95% BCA Bootstrap UCL	19.71		

	A	B	C	D	E	F	G	H	I	J	K	L
53				90% Chebyshev(Mean, Sd) UCL		22.3				95% Chebyshev(Mean, Sd) UCL		26.31
54				97.5% Chebyshev(Mean, Sd) UCL		31.89				99% Chebyshev(Mean, Sd) UCL		42.84
55												
56					Suggested UCL to Use							
57					95% H-UCL	19.84						
58												
59					Note: Suggestions regarding the selection of a 95% UCL are provided to help the user to select the most appropriate 95% UCL.							
60					Recommendations are based upon data size, data distribution, and skewness.							
61					These recommendations are based upon the results of the simulation studies summarized in Singh, Maichle, and Lee (2006).							
62					However, simulations results will not cover all Real World data sets; for additional insight the user may want to consult a statistician.							
63												
64					ProUCL computes and outputs H-statistic based UCLs for historical reasons only.							
65					H-statistic often results in unstable (both high and low) values of UCL95 as shown in examples in the Technical Guide.							
66					It is therefore recommended to avoid the use of H-statistic based 95% UCLs.							
67					Use of nonparametric methods are preferred to compute UCL95 for skewed data sets which do not follow a gamma distribution.							
68												

1				**Lognormal Background Statistics for Data Sets with Non-Detects**								
2			**User Selected Options**									
3			Date/Time of Computation	ProUCL 5.19/20/2021 14:36:11								
4			From File	WorkSheet_j.xls								
5			Full Precision	OFF								
6			Confidence Coefficient	95%								
7			Coverage	95%								
8			Different or Future K Observations	1								
9			Number of Bootstrap Operations	2000								
10												
11	**lead unsat unit d**											
12												
13	**General Statistics**											
14						Total Number of Observations	35			Number of Distinct Observations	35	
15						Minimum	1.47			First Quartile	3.61	
16						Second Largest	59.5			Median	6.65	
17						Maximum	74.1			Third Quartile	14.1	
18						Mean	13.43			SD	17.49	
19						Coefficient of Variation	1.303			Skewness	2.316	
20						Mean of logged Data	2.032			SD of logged Data	1.021	
21												
22						**Critical Values for Background Threshold Values (BTVs)**							
23						Tolerance Factor K (For UTL)	2.157			d2max (for USL)	2.812	
24												
25						**Lognormal GOF Test**						
26						Shapiro Wilk Test Statistic	0.949			**Shapiro Wilk Lognormal GOF Test**		
27						5% Shapiro Wilk Critical Value	0.934			Data appear Lognormal at 5% Significance Level		
28						Lilliefors Test Statistic	0.0989			**Lilliefors Lognormal GOF Test**		
29						5% Lilliefors Critical Value	0.148			Data appear Lognormal at 5% Significance Level		
30						**Data appear Lognormal at 5% Significance Level**						
31												
32						**Background Statistics assuming Lognormal Distribution**						
33						95% UTL with 95% Coverage	69.06			90% Percentile (z)	28.24	
34						95% UPL (t)	43.96			95% Percentile (z)	40.93	
35						95% USL	134.8			99% Percentile (z)	82.09	
36												
37						Note: The use of USL tends to yield a conservative estimate of BTV, especially when the sample size starts exceeding 20.						
38						Therefore, one may use USL to estimate a BTV only when the data set represents a background data set free of outliers						
39						and consists of observations collected from clean unimpacted locations.						
40						The use of USL tends to provide a balance between false positives and false negatives provided the data						
41						represents a background data set and when many onsite observations need to be compared with the BTV.						
42												

1	**Lognormal UCL Statistics for Data Sets with Non-Detects**											
2												
3	User Selected Options											
4	Date/Time of Computation	ProUCL 5.19/19/2021 12:23:19										
5	From File	WorkSheet_h.xls										
6	Full Precision	OFF										
7	Confidence Coefficient	95%										
8	Number of Bootstrap Operations	2000										
9												
10	**mercury unit d**											
11												
12	**General Statistics**											
13	Total Number of Observations	147					Number of Distinct Observations	8				
14	Number of Detects	7					Number of Non-Detects	140				
15	Number of Distinct Detects	7					Number of Distinct Non-Detects	1				
16	Minimum Detect	0.1					Minimum Non-Detect	0.05				
17	Maximum Detect	0.61					Maximum Non-Detect	0.05				
18	Variance Detects	0.0324					Percent Non-Detects	95.24%				
19	Mean Detects	0.231					SD Detects	0.18				
20	Median Detects	0.15					CV Detects	0.778				
21	Skewness Detects	1.996					Kurtosis Detects	3.954				
22	Mean of Logged Detects	-1.655					SD of Logged Detects	0.62				
23												
24	**Lognormal GOF Test on Detected Observations Only**											
25	Shapiro Wilk Test Statistic	0.881					**Shapiro Wilk GOF Test**					
26	5% Shapiro Wilk Critical Value	0.803					Detected Data appear Lognormal at 5% Significance Level					
27	Lilliefors Test Statistic	0.253					**Lilliefors GOF Test**					
28	5% Lilliefors Critical Value	0.304					Detected Data appear Lognormal at 5% Significance Level					
29	Detected Data appear Lognormal at 5% Significance Level											
30												
31	**Lognormal ROS Statistics Using Imputed Non-Detects**											
32	Mean in Original Scale	0.0179					Mean in Log Scale	-6.151				
33	SD in Original Scale	0.0616					SD in Log Scale	2.161				
34	Geometric d_mean	0.00213					95% Percentile Bootstrap UCL	0.0273				
35	95% t UCL (assumes normality of ROS data)	0.0263					95% BCA Bootstrap UCL	0.0315				
36	95% Bootstrap t UCL	0.0339					95% H-UCL (Log ROS)	0.0411				
37												
38	**Statistics using KM estimates on Logged Data and Assuming Lognormal Distribution**											
39	KM Mean (logged)	-2.932					KM Geo Mean	0.0533				
40	KM SD (logged)	0.312					95% Critical H Value (KM-Log)	1.736				
41	KM Standard Error of Mean (logged)	0.0278					95% H-UCL (KM -Log)	0.0585				
42												
43	**DL/2 Statistics**											
44	**DL/2 Normal**						**DL/2 Log-Transformed**					
45	Mean in Original Scale	0.0348					Mean in Log Scale	-3.592				
46	SD in Original Scale	0.0573					SD in Log Scale	0.452				
47	95% t UCL (Assumes normality)	0.0426					95% H-Stat UCL	0.0326				
48	DL/2 is not a recommended method, provided for comparisons and historical reasons											
49												
50	**Suggested UCL to Use**											
51	Data appear Gamma, May want to try Gamma Distribution											
52	Note: Suggestions regarding the selection of a 95% UCL are provided to help the user to select the most appropriate 95% UCL.											

	A	B	C	D	E	F	G	H	I	J	K	L
53	Recommendations are based upon data size, data distribution, and skewness.											
54	These recommendations are based upon the results of the simulation studies summarized in Singh, Maichle, and Lee (2006).											
55	However, simulations results will not cover all Real World data sets; for additional insight the user may want to consult a statistician.											
56												

1				**Lognormal Background Statistics for Data Sets with Non-Detects**								
2			**User Selected Options**									
3			Date/Time of Computation	ProUCL 5.19/19/2021 12:21:57								
4			From File	WorkSheet_h.xls								
5			Full Precision	OFF								
6			Confidence Coefficient	95%								
7			Coverage	95%								
8			Different or Future K Observations	1								
9			Number of Bootstrap Operations	2000								
10												
11	**mercury unit d**											
12												
13						**General Statistics**							
14					Total Number of Observations	147				Number of Distinct Observations	8	
15					Number of Detects	7				Number of Non-Detects	140	
16					Number of Distinct Detects	7				Number of Distinct Non-Detects	1	
17					Minimum Detect	0.1				Minimum Non-Detect	0.05	
18					Maximum Detect	0.61				Maximum Non-Detect	0.05	
19					Variance Detected	0.0324				Percent Non-Detects	95.24%	
20					Mean Detected	0.231				SD Detected	0.18	
21					Mean of Detected Logged Data	-1.655				SD of Detected Logged Data	0.62	
22												
23						**Critical Values for Background Threshold Values (BTVs)**							
24					Tolerance Factor K (For UTL)	1.87				d2max (for USL)	3.336	
25												
26						**Lognormal GOF Test on Detected Observations Only**							
27					Shapiro Wilk Test Statistic	0.881				**Shapiro Wilk GOF Test**		
28					5% Shapiro Wilk Critical Value	0.803				Detected Data appear Lognormal at 5% Significance Level		
29					Lilliefors Test Statistic	0.253				**Lilliefors GOF Test**		
30					5% Lilliefors Critical Value	0.304				Detected Data appear Lognormal at 5% Significance Level		
31						Detected Data appear Lognormal at 5% Significance Level						
32												
33						**Kaplan Meier (KM) Background Statistics Assuming Normal Distribution**							
34					Mean	0.0586				SD	0.0531	
35					95% UTL95% Coverage	0.158				95% KM UPL (t)	0.147	
36					95% KM Chebyshev UPL	0.291				90% KM Percentile (z)	0.127	
37					95% KM Percentile (z)	0.146				99% KM Percentile (z)	0.182	
38					95% KM USL	0.236						
39												
40						**Background Lognormal ROS Statistics Assuming Lognormal Distribution Using Imputed Non-Detects**							
41					Mean in Original Scale	0.0179				Mean in Log Scale	-6.151	
42					SD in Original Scale	0.0616				SD in Log Scale	2.161	
43					95% UTL95% Coverage	0.121				95% BCA UTL95% Coverage	0.14	
44					95% Bootstrap (%) UTL95% Coverage	0.14				95% UPL (t)	0.0772	
45					90% Percentile (z)	0.034				95% Percentile (z)	0.0745	
46					99% Percentile (z)	0.325				95% USL	2.884	
47												
48						**Statistics using KM estimates on Logged Data and Assuming Lognormal Distribution**							
49					KM Mean of Logged Data	-2.932				95% KM UTL (Lognormal)95% Coverage	0.0955	
50					KM SD of Logged Data	0.312				95% KM UPL (Lognormal)	0.0895	
51					95% KM Percentile Lognormal (z)	0.089				95% KM USL (Lognormal)	0.151	
52												

	A	B	C	D	E	F	G	H	I	J	K	L
53	**Background DL/2 Statistics Assuming Lognormal Distribution**											
54					Mean in Original Scale	0.0348				Mean in Log Scale		-3.592
55					SD in Original Scale	0.0573				SD in Log Scale		0.452
56					95% UTL95% Coverage	0.0642				95% UPL (t)		0.0584
57					90% Percentile (z)	0.0492				95% Percentile (z)		0.058
58					99% Percentile (z)	0.0789				95% USL		0.125
59	**DL/2 is not a Recommended Method. DL/2 provided for comparisons and historical reasons.**											
60												
61	Note: The use of USL tends to yield a conservative estimate of BTV, especially when the sample size starts exceeding 20.											
62	Therefore, one may use USL to estimate a BTV only when the data set represents a background data set free of outliers											
63	and consists of observations collected from clean unimpacted locations.											
64	The use of USL tends to provide a balance between false positives and false negatives provided the data											
65	represents a background data set and when many onsite observations need to be compared with the BTV.											
66												

	Lognormal UCL Statistics for Data Sets with Non-Detects	
	User Selected Options	
	Date/Time of Computation	ProUCL 5.19/21/2021 12:21:03
	From File	WorkSheet_q.xls
	Full Precision	OFF
	Confidence Coefficient	95%
	Number of Bootstrap Operations	2000
	nickel unit d	

	General Statistics			
	Total Number of Observations	147	Number of Distinct Observations	114
	Number of Detects	143	Number of Non-Detects	4
	Number of Distinct Detects	113	Number of Distinct Non-Detects	1
	Minimum Detect	6	Minimum Non-Detect	0.5
	Maximum Detect	135	Maximum Non-Detect	0.5
	Variance Detects	157.1	Percent Non-Detects	2.721%
	Mean Detects	19.43	SD Detects	12.53
	Median Detects	17.2	CV Detects	0.645
	Skewness Detects	5.744	Kurtosis Detects	50.57
	Mean of Logged Detects	2.851	SD of Logged Detects	0.457
	Lognormal GOF Test on Detected Observations Only			
	Shapiro Wilk Approximate Test Statistic	0.98	**Shapiro Wilk GOF Test**	
	5% Shapiro Wilk P Value	0.408	Detected Data appear Lognormal at 5% Significance Level	
	Lilliefors Test Statistic	0.0475	**Lilliefors GOF Test**	
	5% Lilliefors Critical Value	0.0745	Detected Data appear Lognormal at 5% Significance Level	
	Detected Data appear Lognormal at 5% Significance Level			
	Lognormal ROS Statistics Using Imputed Non-Detects			
	Mean in Original Scale	19.06	Mean in Log Scale	2.82
	SD in Original Scale	12.57	SD in Log Scale	0.487
	Geometric d_mean	16.78	95% Percentile Bootstrap UCL	20.89
	95% t UCL (assumes normality of ROS data)	20.77	95% BCA Bootstrap UCL	21.33
	95% Bootstrap t UCL	21.65	95% H-UCL (Log ROS)	20.33
	Statistics using KM estimates on Logged Data and Assuming Lognormal Distribution			
	KM Mean (logged)	2.754	KM Geo Mean	15.71
	KM SD (logged)	0.731	95% Critical H Value (KM-Log)	1.98
	KM Standard Error of Mean (logged)	0.0605	95% H-UCL (KM -Log)	23.13
	DL/2 Statistics			
	DL/2 Normal		**DL/2 Log-Transformed**	
	Mean in Original Scale	18.91	Mean in Log Scale	2.735
	SD in Original Scale	12.75	SD in Log Scale	0.825
	95% t UCL (Assumes normality)	20.65	95% H-Stat UCL	24.94
	DL/2 is not a recommended method, provided for comparisons and historical reasons			
	Suggested UCL to Use			
	Data appear Gamma, May want to try Gamma Distribution			
	Note: Suggestions regarding the selection of a 95% UCL are provided to help the user to select the most appropriate 95% UCL.			

	A	B	C	D	E	F	G	H	I	J	K	L
53	Recommendations are based upon data size, data distribution, and skewness.											
54	These recommendations are based upon the results of the simulation studies summarized in Singh, Maichle, and Lee (2006).											
55	However, simulations results will not cover all Real World data sets; for additional insight the user may want to consult a statistician.											
56	#VALUE!											

	Lognormal Background Statistics for Data Sets with Non-Detects	
User Selected Options		
Date/Time of Computation	ProUCL 5.19/21/2021 12:10:08	
From File	WorkSheet_q.xls	
Full Precision	OFF	
Confidence Coefficient	95%	
Coverage	95%	
Different or Future K Observations	1	
Number of Bootstrap Operations	2000	

nickel unit d

General Statistics

Total Number of Observations	147	Number of Distinct Observations	114
Number of Detects	143	Number of Non-Detects	4
Number of Distinct Detects	113	Number of Distinct Non-Detects	1
Minimum Detect	6	Minimum Non-Detect	0.5
Maximum Detect	135	Maximum Non-Detect	0.5
Variance Detected	157.1	Percent Non-Detects	2.721%
Mean Detected	19.43	SD Detected	12.53
Mean of Detected Logged Data	2.851	SD of Detected Logged Data	0.457

Critical Values for Background Threshold Values (BTVs)

Tolerance Factor K (For UTL)	1.87	d2max (for USL)	3.336

Lognormal GOF Test on Detected Observations Only

Shapiro Wilk Approximate Test Statistic	0.98	**Shapiro Wilk GOF Test**
5% Shapiro Wilk P Value	0.408	Detected Data appear Lognormal at 5% Significance Level
Lilliefors Test Statistic	0.0475	**Lilliefors GOF Test**
5% Lilliefors Critical Value	0.0745	Detected Data appear Lognormal at 5% Significance Level

Detected Data appear Lognormal at 5% Significance Level

Kaplan Meier (KM) Background Statistics Assuming Normal Distribution

Mean	18.92	SD	12.7
95% UTL95% Coverage	42.67	95% KM UPL (t)	40.01
95% KM Chebyshev UPL	74.46	90% KM Percentile (z)	35.19
95% KM Percentile (z)	39.8	99% KM Percentile (z)	48.46
95% KM USL	61.28		

Background Lognormal ROS Statistics Assuming Lognormal Distribution Using Imputed Non-Detects

Mean in Original Scale	19.06	Mean in Log Scale	2.82
SD in Original Scale	12.57	SD in Log Scale	0.487
95% UTL95% Coverage	41.73	95% BCA UTL95% Coverage	36.9
95% Bootstrap (%) UTL95% Coverage	37.07	95% UPL (t)	37.69
90% Percentile (z)	31.32	95% Percentile (z)	37.39
99% Percentile (z)	52.12	95% USL	85.25

Statistics using KM estimates on Logged Data and Assuming Lognormal Distribution

KM Mean of Logged Data	2.754	95% KM UTL (Lognormal)95% Coverage	61.62
KM SD of Logged Data	0.731	95% KM UPL (Lognormal)	52.89
95% KM Percentile Lognormal (z)	52.27	95% KM USL (Lognormal)	179.9

	A	B	C	D	E	F	G	H	I	J	K	L
53	**Background DL/2 Statistics Assuming Lognormal Distribution**											
54					Mean in Original Scale	18.91				Mean in Log Scale		2.735
55					SD in Original Scale	12.75				SD in Log Scale		0.825
56					95% UTL95% Coverage	72.19				95% UPL (t)		60.74
57					90% Percentile (z)	44.41				95% Percentile (z)		59.94
58					99% Percentile (z)	105.2				95% USL		242.2
59	**DL/2 is not a Recommended Method. DL/2 provided for comparisons and historical reasons.**											
60												
61	Note: The use of USL tends to yield a conservative estimate of BTV, especially when the sample size starts exceeding 20.											
62	Therefore, one may use USL to estimate a BTV only when the data set represents a background data set free of outliers											
63	and consists of observations collected from clean unimpacted locations.											
64	The use of USL tends to provide a balance between false positives and false negatives provided the data											
65	represents a background data set and when many onsite observations need to be compared with the BTV.											
66												

Nonparametric UCL Statistics for Data Sets with Non-Detects

User Selected Options	
Date/Time of Computation	ProUCL 5.19/21/2021 10:43:19
From File	WorkSheet_p.xls
Full Precision	OFF
Confidence Coefficient	95%
Number of Bootstrap Operations	2000

sat zinc unit d

General Statistics

Total Number of Observations	112	Number of Distinct Observations	102
Number of Detects	111	Number of Non-Detects	1
Number of Distinct Detects	101	Number of Distinct Non-Detects	1
Minimum Detect	6.37	Minimum Non-Detect	0.5
Maximum Detect	135	Maximum Non-Detect	0.5
Variance Detects	712.8	Percent Non-Detects	0.893%
Mean Detects	33.47	SD Detects	26.7
Median Detects	24.5	CV Detects	0.798
Skewness Detects	1.779	Kurtosis Detects	3.106
Mean of Logged Detects	3.255	SD of Logged Detects	0.7

Nonparametric Distribution Free UCL Statistics

Data do not follow a Discernible Distribution at 5% Significance Level

Kaplan-Meier (KM) Statistics using Normal Critical Values and other Nonparametric UCLs

Mean	33.17	Standard Error of Mean	2.529
SD	26.64	95% KM (BCA) UCL	37.49
95% KM (t) UCL	37.37	95% KM (Percentile Bootstrap) UCL	37.61
95% KM (z) UCL	37.33	95% KM Bootstrap t UCL	37.81
90% KM Chebyshev UCL	40.76	95% KM Chebyshev UCL	44.19
97.5% KM Chebyshev UCL	48.96	99% KM Chebyshev UCL	58.33

Statistics using KM estimates on Logged Data and Assuming Lognormal Distribution

KM SD (logged)	0.787	95% Critical H Value (KM-Log)	2.033
KM Mean (logged)	3.22	KM Geo Mean	25.02
KM Standard Error of Mean (logged)	0.0747	95% H-UCL (KM -Log)	39.7

Suggested UCL to Use

95% KM (Chebyshev) UCL 44.19

Note: Suggestions regarding the selection of a 95% UCL are provided to help the user to select the most appropriate 95% UCL.

Recommendations are based upon data size, data distribution, and skewness.

These recommendations are based upon the results of the simulation studies summarized in Singh, Maichle, and Lee (2006).

However, simulations results will not cover all Real World data sets; for additional insight the user may want to consult a statistician.

	Nonparametric Background Statistics for Data Sets with Non-Detects	
User Selected Options		
Date/Time of Computation	ProUCL 5.19/21/2021 10:41:46	
From File	WorkSheet_p.xls	
Full Precision	OFF	
Confidence Coefficient	95%	
Coverage	95%	
Different or Future K Observations	1	

sat zinc unit d

General Statistics

Total Number of Observations	112	Number of Distinct Observations	102
Number of Detects	111	Number of Non-Detects	1
Number of Distinct Detects	101	Number of Distinct Non-Detects	1
Minimum Detect	6.37	Minimum Non-Detect	0.5
Maximum Detect	135	Maximum Non-Detect	0.5
Variance Detected	712.8	Percent Non-Detects	0.893%
Mean Detected	33.47	SD Detected	26.7
Mean of Detected Logged Data	3.255	SD of Detected Logged Data	0.7

Critical Values for Background Threshold Values (BTVs)

Tolerance Factor K (For UTL)	1.906	d2max (for USL)	3.248

Nonparametric Distribution Free Background Statistics

Data do not follow a Discernible Distribution (0.05)

Kaplan Meier (KM) Background Statistics Assuming Normal Distribution

Mean	33.17	SD	26.64
95% UTL95% Coverage	83.96	95% KM UPL (t)	77.56
95% KM Chebyshev UPL	149.8	90% KM Percentile (z)	67.31
95% KM Percentile (z)	76.99	99% KM Percentile (z)	95.15
95% KM USL	119.7		

Nonparametric Upper Limits for BTVs(no distinction made between detects and nondetects)

Order of Statistic, r	109	95% UTL with95% Coverage	103
Approx, f used to compute achieved CC	1.434	Approximate Actual Confidence Coefficient achieved by UTL	0.817
Approximate Sample Size needed to achieve specified CC	153	95% UPL	99.14
95% USL	135	95% KM Chebyshev UPL	149.8

Note: The use of USL tends to yield a conservative estimate of BTV, especially when the sample size starts exceeding 20.
Therefore, one may use USL to estimate a BTV only when the data set represents a background data set free of outliers
and consists of observations collected from clean unimpacted locations.
The use of USL tends to provide a balance between false positives and false negatives provided the data
represents a background data set and when many onsite observations need to be compared with the BTV.

1	**Lognormal UCL Statistics for Data Sets with Non-Detects**	
2		
3	User Selected Options	
4	Date/Time of Computation	ProUCL 5.19/21/2021 10:36:58
5	From File	WorkSheet_o.xls
6	Full Precision	OFF
7	Confidence Coefficient	95%
8	Number of Bootstrap Operations	2000
9		
10		
11	**unit d zinc unsat**	
12		
13	**General Statistics**	
14	Total Number of Observations: 35	Number of Distinct Observations: 34
15		Number of Missing Observations: 0
16	Minimum: 5.2	Mean: 63.56
17	Maximum: 345	Median: 40.8
18	SD: 70.83	Std. Error of Mean: 11.97
19	Coefficient of Variation: 1.114	Skewness: 2.563
20		
21	**Lognormal GOF Test**	
22	Shapiro Wilk Test Statistic: 0.981	**Shapiro Wilk Lognormal GOF Test**
23	5% Shapiro Wilk Critical Value: 0.934	Data appear Lognormal at 5% Significance Level
24	Lilliefors Test Statistic: 0.0956	**Lilliefors Lognormal GOF Test**
25	5% Lilliefors Critical Value: 0.148	Data appear Lognormal at 5% Significance Level
26	Data appear Lognormal at 5% Significance Level	
27		
28	**Logged Statistics**	
29	Minimum of Logged Data: 1.649	Mean of logged Data: 3.739
30	Maximum of Logged Data: 5.844	SD of logged Data: 0.892
31		
32	**Lognormal Maximum likelihood Estimates (MLEs)**	
33	MLE Mean: 62.63	MLE Standard Deviation: 69.06
34	MLE Median: 42.07	MLE Skewness: 4.649
35	MLE Coefficient of Variation: 1.103	80% MLE Quantile: 89.14
36	90% MLE Quantile: 132	95% MLE Quantile: 182.5
37	99% MLE Quantile: 335.1	
38		
39	**Lognormal Minimum Variance Unbiased Estimates (MVUEs)**	
40	MVUE Mean: 61.67	MVUE SD: 64.25
41	MVUE Median: 41.6	MVUE SEM: 10.52
42		
43	**Assuming Lognormal Distribution**	
44	95% H-UCL: 89.45	90% Chebyshev (MVUE) UCL: 93.23
45	95% Chebyshev (MVUE) UCL: 107.5	97.5% Chebyshev (MVUE) UCL: 127.4
46	99% Chebyshev (MVUE) UCL: 166.3	
47		
48	**Nonparametric Distribution Free UCLs**	
49	95% CLT UCL: 83.25	95% Jackknife UCL: 83.81
50	95% Standard Bootstrap UCL: 82.67	95% Bootstrap-t UCL: 96.87
51	95% Hall's Bootstrap UCL: 93.69	95% Percentile Bootstrap UCL: 84.07
52	95% BCA Bootstrap UCL: 90.47	

	A	B	C	D	E	F	G	H	I	J	K	L
53				90% Chebyshev(Mean, Sd) UCL		99.48				95% Chebyshev(Mean, Sd) UCL		115.7
54				97.5% Chebyshev(Mean, Sd) UCL		138.3				99% Chebyshev(Mean, Sd) UCL		182.7
55												
56						**Suggested UCL to Use**						
57					95% H-UCL	89.45						
58												
59												
60												
61												
62												
63												
64												
65												
66												
67												
68												

Note: Suggestions regarding the selection of a 95% UCL are provided to help the user to select the most appropriate 95% UCL.

Recommendations are based upon data size, data distribution, and skewness.

These recommendations are based upon the results of the simulation studies summarized in Singh, Maichle, and Lee (2006).

However, simulations results will not cover all Real World data sets; for additional insight the user may want to consult a statistician.

ProUCL computes and outputs H-statistic based UCLs for historical reasons only.

H-statistic often results in unstable (both high and low) values of UCL95 as shown in examples in the Technical Guide.

It is therefore recommended to avoid the use of H-statistic based 95% UCLs.

Use of nonparametric methods are preferred to compute UCL95 for skewed data sets which do not follow a gamma distribution.

	Lognormal Background Statistics for Data Sets with Non-Detects	
	User Selected Options	
Date/Time of Computation	ProUCL 5.19/21/2021 10:35:42	
From File	WorkSheet_o.xls	
Full Precision	OFF	
Confidence Coefficient	95%	
Coverage	95%	
Different or Future K Observations	1	
Number of Bootstrap Operations	2000	

unit d zinc unsat

General Statistics

Total Number of Observations	35	Number of Distinct Observations	34
Minimum	5.2	First Quartile	23.8
Second Largest	224	Median	40.8
Maximum	345	Third Quartile	62.6
Mean	63.56	SD	70.83
Coefficient of Variation	1.114	Skewness	2.563
Mean of logged Data	3.739	SD of logged Data	0.892

Critical Values for Background Threshold Values (BTVs)

Tolerance Factor K (For UTL)	2.157	d2max (for USL)	2.812

Lognormal GOF Test

Shapiro Wilk Test Statistic	0.981	**Shapiro Wilk Lognormal GOF Test**	
5% Shapiro Wilk Critical Value	0.934	Data appear Lognormal at 5% Significance Level	
Lilliefors Test Statistic	0.0956	**Lilliefors Lognormal GOF Test**	
5% Lilliefors Critical Value	0.148	Data appear Lognormal at 5% Significance Level	

Data appear Lognormal at 5% Significance Level

Background Statistics assuming Lognormal Distribution

95% UTL with 95% Coverage	288.2	90% Percentile (z)	132
95% UPL (t)	194.2	95% Percentile (z)	182.5
95% USL	516.7	99% Percentile (z)	335.1

Note: The use of USL tends to yield a conservative estimate of BTV, especially when the sample size starts exceeding 20.
Therefore, one may use USL to estimate a BTV only when the data set represents a background data set free of outliers and consists of observations collected from clean unimpacted locations.
The use of USL tends to provide a balance between false positives and false negatives provided the data represents a background data set and when many onsite observations need to be compared with the BTV.

1				**Lognormal Background Statistics for Data Sets with Non-Detects**								
2			**User Selected Options**									
3			Date/Time of Computation	ProUCL 5.111/3/2021 09:20:26								
4			From File	WorkSheet.xls								
5			Full Precision	OFF								
6			Confidence Coefficient	95%								
7			Coverage	95%								
8			Different or Future K Observations	1								
9			Number of Bootstrap Operations	2000								
10												
11	**Unit E nickel**											
12												
13	**General Statistics**											
14						Total Number of Observations	39			Number of Distinct Observations	37		
15						Minimum	8.59			First Quartile	16.25	
16						Second Largest	55.1			Median	21.9	
17						Maximum	58.2			Third Quartile	37.4	
18						Mean	26.5			SD	13.63	
19						Coefficient of Variation	0.514			Skewness	0.754	
20						Mean of logged Data	3.149			SD of logged Data	0.516	
21												
22						**Critical Values for Background Threshold Values (BTVs)**							
23						Tolerance Factor K (For UTL)	2.124			d2max (for USL)	2.857	
24												
25						**Lognormal GOF Test**						
26						Shapiro Wilk Test Statistic	0.959			**Shapiro Wilk Lognormal GOF Test**		
27						5% Shapiro Wilk Critical Value	0.939			Data appear Lognormal at 5% Significance Level		
28						Lilliefors Test Statistic	0.106			**Lilliefors Lognormal GOF Test**		
29						5% Lilliefors Critical Value	0.14			Data appear Lognormal at 5% Significance Level		
30						**Data appear Lognormal at 5% Significance Level**						
31												
32						**Background Statistics assuming Lognormal Distribution**						
33						95% UTL with 95% Coverage	69.77			90% Percentile (z)	45.16	
34						95% UPL (t)	56.26			95% Percentile (z)	54.48	
35						95% USL	101.8			99% Percentile (z)	77.43	
36												
37						Note: The use of USL tends to yield a conservative estimate of BTV, especially when the sample size starts exceeding 20.						
38						Therefore, one may use USL to estimate a BTV only when the data set represents a background data set free of outliers						
39						and consists of observations collected from clean unimpacted locations.						
40						The use of USL tends to provide a balance between false positives and false negatives provided the data						
41						represents a background data set and when many onsite observations need to be compared with the BTV.						
42												

1	**Lognormal UCL Statistics for Data Sets with Non-Detects**											
2												
3	User Selected Options											
4	Date/Time of Computation	ProUCL 5.111/3/2021 09:21:17										
5	From File	WorkSheet.xls										
6	Full Precision	OFF										
7	Confidence Coefficient	95%										
8	Number of Bootstrap Operations	2000										
9												
10												
11	**Unit E nickel**											
12												
13	**General Statistics**											
14	Total Number of Observations	39					Number of Distinct Observations	37				
15							Number of Missing Observations	0				
16	Minimum	8.59					Mean	26.5				
17	Maximum	58.2					Median	21.9				
18	SD	13.63					Std. Error of Mean	2.182				
19	Coefficient of Variation	0.514					Skewness	0.754				
20												
21	**Lognormal GOF Test**											
22	Shapiro Wilk Test Statistic	0.959					**Shapiro Wilk Lognormal GOF Test**					
23	5% Shapiro Wilk Critical Value	0.939					Data appear Lognormal at 5% Significance Level					
24	Lilliefors Test Statistic	0.106					**Lilliefors Lognormal GOF Test**					
25	5% Lilliefors Critical Value	0.14					Data appear Lognormal at 5% Significance Level					
26	Data appear Lognormal at 5% Significance Level											
27												
28	**Logged Statistics**											
29	Minimum of Logged Data	2.151					Mean of logged Data	3.149				
30	Maximum of Logged Data	4.064					SD of logged Data	0.516				
31												
32	**Lognormal Maximum likelihood Estimates (MLEs)**											
33	MLE Mean	26.63					MLE Standard Deviation	14.71				
34	MLE Median	23.32					MLE Skewness	1.825				
35	MLE Coefficient of Variation	0.552					80% MLE Quantile	35.99				
36	90% MLE Quantile	45.16					95% MLE Quantile	54.48				
37	99% MLE Quantile	77.43										
38												
39	**Lognormal Minimum Variance Unbiased Estimates (MVUEs)**											
40	MVUE Mean	26.53					MVUE SD	14.44				
41	MVUE Median	23.24					MVUE SEM	2.303				
42												
43	**Assuming Lognormal Distribution**											
44	95% H-UCL	31.31					90% Chebyshev (MVUE) UCL	33.44				
45	95% Chebyshev (MVUE) UCL	36.57					97.5% Chebyshev (MVUE) UCL	40.91				
46	99% Chebyshev (MVUE) UCL	49.44										
47												
48	**Nonparametric Distribution Free UCLs**											
49	95% CLT UCL	30.08					95% Jackknife UCL	30.17				
50	95% Standard Bootstrap UCL	30.09					95% Bootstrap-t UCL	30.37				
51	95% Hall's Bootstrap UCL	30.24					95% Percentile Bootstrap UCL	30.11				
52	95% BCA Bootstrap UCL	30.28										

	A	B	C	D	E	F	G	H	I	J	K	L
53				90% Chebyshev(Mean, Sd) UCL		33.04				95% Chebyshev(Mean, Sd) UCL		36.01
54				97.5% Chebyshev(Mean, Sd) UCL		40.12				99% Chebyshev(Mean, Sd) UCL		48.21
55												
56						**Suggested UCL to Use**						
57						**Data appear Gamma, May want to try Gamma Distribution**						
58												
59						Note: Suggestions regarding the selection of a 95% UCL are provided to help the user to select the most appropriate 95% UCL.						
60						Recommendations are based upon data size, data distribution, and skewness.						
61						These recommendations are based upon the results of the simulation studies summarized in Singh, Maichle, and Lee (2006).						
62						However, simulations results will not cover all Real World data sets; for additional insight the user may want to consult a statistician.						
63												

	A	B	C	D	E	F	G	H	I	J	K	L	M
1				**General Statistics on Uncensored Data**									
2			Date/Time of Computation	ProUCL 5.111/2/2021 15:04:34									
3			**User Selected Options**										
4			From File	WorkSheet.xls									
5			Full Precision	OFF									
6													
7	**From File: WorkSheet.xls**												
8													
9						**General Statistics for Censored Datasets (with NDs) using Kaplan Meier Method**								
10													
11	**Variable**		**NumObs**	**# Missing**	**Num Ds**	**NumNDs**	**% NDs**	**Min ND**	**Max ND**	**KM Mean**	**KM Var**	**KM SD**	**KM CV**
12	Unit E Arsenic		39	0	39	0	0.00%	N/A	N/A	6.981	27.92	5.284	0.757
13													
14						**General Statistics for Raw Dataset using Detected Data Only**								
15													
16	**Variable**		**NumObs**	**# Missing**	**Minimum**	**Maximum**	**Mean**	**Median**	**Var**	**SD**	**MAD/0.675**	**Skewness**	**CV**
17	Unit E Arsenic		39	0	1.3	26.9	6.981	6.05	27.92	5.284	3.706	1.911	0.757
18													
19						**Percentiles using all Detects (Ds) and Non-Detects (NDs)**								
20													
21	**Variable**		**NumObs**	**# Missing**	**10%ile**	**20%ile**	**25%ile(Q1)**	**50%ile(Q2)**	**75%ile(Q3)**	**80%ile**	**90%ile**	**95%ile**	**99%ile**
22	Unit E Arsenic		39	0	1.98	3.194	3.72	6.05	8.71	9.808	11.88	17.02	24.24

1	**Lognormal UCL Statistics for Data Sets with Non-Detects**											
2												
3	User Selected Options											
4	Date/Time of Computation	ProUCL 5.111/2/2021 15:07:11										
5	From File	WorkSheet.xls										
6	Full Precision	OFF										
7	Confidence Coefficient	95%										
8	Number of Bootstrap Operations	2000										
9												
10												
11	**Unit E Arsenic**											
12												
13	**General Statistics**											
14	Total Number of Observations	39					Number of Distinct Observations	38				
15							Number of Missing Observations	0				
16	Minimum	1.3					Mean	6.981				
17	Maximum	26.9					Median	6.05				
18	SD	5.284					Std. Error of Mean	0.846				
19	Coefficient of Variation	0.757					Skewness	1.911				
20												
21	**Lognormal GOF Test**											
22	Shapiro Wilk Test Statistic	0.978					**Shapiro Wilk Lognormal GOF Test**					
23	5% Shapiro Wilk Critical Value	0.939					Data appear Lognormal at 5% Significance Level					
24	Lilliefors Test Statistic	0.0968					**Lilliefors Lognormal GOF Test**					
25	5% Lilliefors Critical Value	0.14					Data appear Lognormal at 5% Significance Level					
26	Data appear Lognormal at 5% Significance Level											
27												
28	**Logged Statistics**											
29	Minimum of Logged Data	0.262					Mean of logged Data	1.697				
30	Maximum of Logged Data	3.292					SD of logged Data	0.725				
31												
32	**Lognormal Maximum likelihood Estimates (MLEs)**											
33	MLE Mean	7.093					MLE Standard Deviation	5.893				
34	MLE Median	5.456					MLE Skewness	3.066				
35	MLE Coefficient of Variation	0.831					80% MLE Quantile	10.04				
36	90% MLE Quantile	13.81					95% MLE Quantile	17.96				
37	99% MLE Quantile	29.43										
38												
39	**Lognormal Minimum Variance Unbiased Estimates (MVUEs)**											
40	MVUE Mean	7.034					MVUE SD	5.665				
41	MVUE Median	5.419					MVUE SEM	0.893				
42												
43	**Assuming Lognormal Distribution**											
44	95% H-UCL	9.09					90% Chebyshev (MVUE) UCL	9.714				
45	95% Chebyshev (MVUE) UCL	10.93					97.5% Chebyshev (MVUE) UCL	12.61				
46	99% Chebyshev (MVUE) UCL	15.92										
47												
48	**Nonparametric Distribution Free UCLs**											
49	95% CLT UCL	8.373					95% Jackknife UCL	8.408				
50	95% Standard Bootstrap UCL	8.37					95% Bootstrap-t UCL	8.823				
51	95% Hall's Bootstrap UCL	8.988					95% Percentile Bootstrap UCL	8.344				
52	95% BCA Bootstrap UCL	8.691										

	A	B	C	D	E	F	G	H	I	J	K	L
53				90% Chebyshev(Mean, Sd) UCL		9.519				95% Chebyshev(Mean, Sd) UCL		10.67
54				97.5% Chebyshev(Mean, Sd) UCL		12.26				99% Chebyshev(Mean, Sd) UCL		15.4
55												
56						**Suggested UCL to Use**						
57						**Data appear Gamma, May want to try Gamma Distribution**						
58												
59						Note: Suggestions regarding the selection of a 95% UCL are provided to help the user to select the most appropriate 95% UCL.						
60						Recommendations are based upon data size, data distribution, and skewness.						
61						These recommendations are based upon the results of the simulation studies summarized in Singh, Maichle, and Lee (2006).						
62						However, simulations results will not cover all Real World data sets; for additional insight the user may want to consult a statistician.						
63												

	Lognormal Background Statistics for Data Sets with Non-Detects	
User Selected Options		
Date/Time of Computation	ProUCL 5.111/2/2021 15:05:27	
From File	WorkSheet.xls	
Full Precision	OFF	
Confidence Coefficient	95%	
Coverage	95%	
Different or Future K Observations	1	
Number of Bootstrap Operations	2000	

Unit E Arsenic

General Statistics

Total Number of Observations	39	Number of Distinct Observations	38
Minimum	1.3	First Quartile	3.72
Second Largest	19.9	Median	6.05
Maximum	26.9	Third Quartile	8.71
Mean	6.981	SD	5.284
Coefficient of Variation	0.757	Skewness	1.911
Mean of logged Data	1.697	SD of logged Data	0.725

Critical Values for Background Threshold Values (BTVs)

Tolerance Factor K (For UTL)	2.124	d2max (for USL)	2.857

Lognormal GOF Test

Shapiro Wilk Test Statistic	0.978	**Shapiro Wilk Lognormal GOF Test**	
5% Shapiro Wilk Critical Value	0.939	Data appear Lognormal at 5% Significance Level	
Lilliefors Test Statistic	0.0968	**Lilliefors Lognormal GOF Test**	
5% Lilliefors Critical Value	0.14	Data appear Lognormal at 5% Significance Level	

Data appear Lognormal at 5% Significance Level

Background Statistics assuming Lognormal Distribution

95% UTL with 95% Coverage	25.43	90% Percentile (z)	13.81
95% UPL (t)	18.8	95% Percentile (z)	17.96
95% USL	43.24	99% Percentile (z)	29.43

Note: The use of USL tends to yield a conservative estimate of BTV, especially when the sample size starts exceeding 20.
Therefore, one may use USL to estimate a BTV only when the data set represents a background data set free of outliers and consists of observations collected from clean unimpacted locations.
The use of USL tends to provide a balance between false positives and false negatives provided the data represents a background data set and when many onsite observations need to be compared with the BTV.

	A	B	C	D	E	F	G	H	I	J	K	L	M
1				**General Statistics on Uncensored Data**									
2			Date/Time of Computation	ProUCL 5.111/2/2021 15:14:40									
3			**User Selected Options**										
4			From File	WorkSheet_a.xls									
5			Full Precision	OFF									
6													
7	**From File: WorkSheet_a.xls**												
8													
9						**General Statistics for Censored Datasets (with NDs) using Kaplan Meier Method**								
10													
11	**Variable**		**NumObs**	**# Missing**	**Num Ds**	**NumNDs**	**% NDs**	**Min ND**	**Max ND**	**KM Mean**	**KM Var**	**KM SD**	**KM CV**
12	Unit E Copper		39	0	39	0	0.00%	N/A	N/A	23.86	180.2	13.42	0.563
13													
14						**General Statistics for Raw Dataset using Detected Data Only**								
15													
16	**Variable**		**NumObs**	**# Missing**	**Minimum**	**Maximum**	**Mean**	**Median**	**Var**	**SD**	**MAD/0.675**	**Skewness**	**CV**
17	Unit E Copper		39	0	6.2	57.2	23.86	20.1	180.2	13.42	11.56	1.009	0.563
18													
19						**Percentiles using all Detects (Ds) and Non-Detects (NDs)**								
20													
21	**Variable**		**NumObs**	**# Missing**	**10%ile**	**20%ile**	**25%ile(Q1)**	**50%ile(Q2)**	**75%ile(Q3)**	**80%ile**	**90%ile**	**95%ile**	**99%ile**
22	Unit E Copper		39	0	11.28	12.42	13.7	20.1	28.95	32.22	45.3	50.94	56.33

1	**Lognormal UCL Statistics for Data Sets with Non-Detects**											
2												
3	User Selected Options											
4	Date/Time of Computation	ProUCL 5.111/3/2021 16:27:49										
5	From File	WorkSheet_c.xls										
6	Full Precision	OFF										
7	Confidence Coefficient	95%										
8	Number of Bootstrap Operations	2000										
9												
10												
11	**Unit E Copper**											
12												
13	**General Statistics**											
14	Total Number of Observations	39					Number of Distinct Observations	37				
15							Number of Missing Observations	0				
16	Minimum	6.2					Mean	23.86				
17	Maximum	57.2					Median	20.1				
18	SD	13.42					Std. Error of Mean	2.15				
19	Coefficient of Variation	0.563					Skewness	1.009				
20												
21	**Lognormal GOF Test**											
22	Shapiro Wilk Test Statistic	0.971					**Shapiro Wilk Lognormal GOF Test**					
23	5% Shapiro Wilk Critical Value	0.939					Data appear Lognormal at 5% Significance Level					
24	Lilliefors Test Statistic	0.0941					**Lilliefors Lognormal GOF Test**					
25	5% Lilliefors Critical Value	0.14					Data appear Lognormal at 5% Significance Level					
26	Data appear Lognormal at 5% Significance Level											
27												
28	**Logged Statistics**											
29	Minimum of Logged Data	1.825					Mean of logged Data	3.023				
30	Maximum of Logged Data	4.047					SD of logged Data	0.559				
31												
32	**Lognormal Maximum likelihood Estimates (MLEs)**											
33	MLE Mean	24.02					MLE Standard Deviation	14.53				
34	MLE Median	20.55					MLE Skewness	2.037				
35	MLE Coefficient of Variation	0.605					80% MLE Quantile	32.88				
36	90% MLE Quantile	42.04					95% MLE Quantile	51.5				
37	99% MLE Quantile	75.36										
38												
39	**Lognormal Minimum Variance Unbiased Estimates (MVUEs)**											
40	MVUE Mean	23.91					MVUE SD	14.22				
41	MVUE Median	20.47					MVUE SEM	2.264				
42												
43	**Assuming Lognormal Distribution**											
44	95% H-UCL	28.7					90% Chebyshev (MVUE) UCL	30.7				
45	95% Chebyshev (MVUE) UCL	33.78					97.5% Chebyshev (MVUE) UCL	38.05				
46	99% Chebyshev (MVUE) UCL	46.43										
47												
48	**Nonparametric Distribution Free UCLs**											
49	95% CLT UCL	27.39					95% Jackknife UCL	27.48				
50	95% Standard Bootstrap UCL	27.38					95% Bootstrap-t UCL	27.87				
51	95% Hall's Bootstrap UCL	27.95					95% Percentile Bootstrap UCL	27.5				
52	95% BCA Bootstrap UCL	27.75										

	A	B	C	D	E	F	G	H	I	J	K	L
53				90% Chebyshev(Mean, Sd) UCL		30.31				95% Chebyshev(Mean, Sd) UCL		33.23
54				97.5% Chebyshev(Mean, Sd) UCL		37.28				99% Chebyshev(Mean, Sd) UCL		45.25
55												
56						**Suggested UCL to Use**						
57						**Data appear Gamma, May want to try Gamma Distribution**						
58												
59						Note: Suggestions regarding the selection of a 95% UCL are provided to help the user to select the most appropriate 95% UCL.						
60						Recommendations are based upon data size, data distribution, and skewness.						
61						These recommendations are based upon the results of the simulation studies summarized in Singh, Maichle, and Lee (2006).						
62						However, simulations results will not cover all Real World data sets; for additional insight the user may want to consult a statistician.						
63												

Lognormal Background Statistics for Data Sets with Non-Detects

User Selected Options	
Date/Time of Computation	ProUCL 5.111/2/2021 15:13:57
From File	WorkSheet_a.xls
Full Precision	OFF
Confidence Coefficient	95%
Coverage	95%
Different or Future K Observations	1
Number of Bootstrap Operations	2000

Unit E Copper

General Statistics

Total Number of Observations	39	Number of Distinct Observations	37
Minimum	6.2	First Quartile	13.7
Second Largest	54.9	Median	20.1
Maximum	57.2	Third Quartile	28.95
Mean	23.86	SD	13.42
Coefficient of Variation	0.563	Skewness	1.009
Mean of logged Data	3.023	SD of logged Data	0.559

Critical Values for Background Threshold Values (BTVs)

Tolerance Factor K (For UTL)	2.124	d2max (for USL)	2.857

Lognormal GOF Test

Shapiro Wilk Test Statistic	0.971	**Shapiro Wilk Lognormal GOF Test**	
5% Shapiro Wilk Critical Value	0.939	Data appear Lognormal at 5% Significance Level	
Lilliefors Test Statistic	0.0941	**Lilliefors Lognormal GOF Test**	
5% Lilliefors Critical Value	0.14	Data appear Lognormal at 5% Significance Level	

Data appear Lognormal at 5% Significance Level

Background Statistics assuming Lognormal Distribution

95% UTL with 95% Coverage	67.32	90% Percentile (z)	42.04
95% UPL (t)	53.33	95% Percentile (z)	51.5
95% USL	101.4	99% Percentile (z)	75.36

Note: The use of USL tends to yield a conservative estimate of BTV, especially when the sample size starts exceeding 20.
Therefore, one may use USL to estimate a BTV only when the data set represents a background data set free of outliers and consists of observations collected from clean unimpacted locations.
The use of USL tends to provide a balance between false positives and false negatives provided the data represents a background data set and when many onsite observations need to be compared with the BTV.

1	**Lognormal UCL Statistics for Data Sets with Non-Detects**											
2												
3	User Selected Options											
4	Date/Time of Computation	ProUCL 5.110/1/2021 13:01:48										
5	From File	WorkSheet.xls										
6	Full Precision	OFF										
7	Confidence Coefficient	95%										
8	Number of Bootstrap Operations	2000										
9												
10	**Unit E Lead Sat**											
11												
12	**General Statistics**											
13	Total Number of Observations	24					Number of Distinct Observations	24				
14	Number of Detects	23					Number of Non-Detects	1				
15	Number of Distinct Detects	23					Number of Distinct Non-Detects	1				
16	Minimum Detect	1.61					Minimum Non-Detect	0.5				
17	Maximum Detect	78.9					Maximum Non-Detect	0.5				
18	Variance Detects	299.4					Percent Non-Detects	4.167%				
19	Mean Detects	11.03					SD Detects	17.3				
20	Median Detects	4.66					CV Detects	1.569				
21	Skewness Detects	3.145					Kurtosis Detects	11.04				
22	Mean of Logged Detects	1.757					SD of Logged Detects	1.03				
23												
24	**Lognormal GOF Test on Detected Observations Only**											
25	Shapiro Wilk Test Statistic	0.899					**Shapiro Wilk GOF Test**					
26	5% Shapiro Wilk Critical Value	0.914					Detected Data Not Lognormal at 5% Significance Level					
27	Lilliefors Test Statistic	0.175					**Lilliefors GOF Test**					
28	5% Lilliefors Critical Value	0.18					Detected Data appear Lognormal at 5% Significance Level					
29	Detected Data appear Approximate Lognormal at 5% Significance Level											
30												
31	**Lognormal ROS Statistics Using Imputed Non-Detects**											
32	Mean in Original Scale	10.59					Mean in Log Scale	1.653				
33	SD in Original Scale	17.06					SD in Log Scale	1.128				
34	Geometric d_mean	5.223					95% Percentile Bootstrap UCL	16.75				
35	95% t UCL (assumes normality of ROS data)	16.56					95% BCA Bootstrap UCL	18.62				
36	95% Bootstrap t UCL	24.15					95% H-UCL (Log ROS)	18.71				
37												
38	**Statistics using KM estimates on Logged Data and Assuming Lognormal Distribution**											
39	KM Mean (logged)	1.655					KM Geo Mean	5.232				
40	KM SD (logged)	1.101					95% Critical H Value (KM-Log)	2.678				
41	KM Standard Error of Mean (logged)	0.23					95% H-UCL (KM -Log)	17.74				
42												
43	**DL/2 Statistics**											
44	**DL/2 Normal**						**DL/2 Log-Transformed**					
45	Mean in Original Scale	10.58					Mean in Log Scale	1.626				
46	SD in Original Scale	17.07					SD in Log Scale	1.194				
47	95% t UCL (Assumes normality)	16.55					95% H-Stat UCL	20.89				
48	DL/2 is not a recommended method, provided for comparisons and historical reasons											
49												
50	**Suggested UCL to Use**											
51	95% KM (Chebyshev) UCL	25.78										
52	Note: Suggestions regarding the selection of a 95% UCL are provided to help the user to select the most appropriate 95% UCL.											

	A	B	C	D	E	F	G	H	I	J	K	L
53	Recommendations are based upon data size, data distribution, and skewness.											
54	These recommendations are based upon the results of the simulation studies summarized in Singh, Maichle, and Lee (2006).											
55	However, simulations results will not cover all Real World data sets; for additional insight the user may want to consult a statistician.											
56												

1				**Lognormal Background Statistics for Data Sets with Non-Detects**								
2			**User Selected Options**									
3			Date/Time of Computation	ProUCL 5.19/21/2021 09:12:02								
4			From File	WorkSheet_I.xls								
5			Full Precision	OFF								
6			Confidence Coefficient	95%								
7			Coverage	95%								
8			Different or Future K Observations	1								
9			Number of Bootstrap Operations	2000								
10												
11	**lead unit e sat**											
12												
13						**General Statistics**							
14					Total Number of Observations	24			Number of Distinct Observations	24		
15					Number of Detects	23			Number of Non-Detects	1		
16					Number of Distinct Detects	23			Number of Distinct Non-Detects	1		
17					Minimum Detect	1.61			Minimum Non-Detect	0.5		
18					Maximum Detect	78.9			Maximum Non-Detect	0.5		
19					Variance Detected	299.4			Percent Non-Detects	4.167%		
20					Mean Detected	11.03			SD Detected	17.3		
21					Mean of Detected Logged Data	1.757			SD of Detected Logged Data	1.03		
22												
23						**Critical Values for Background Threshold Values (BTVs)**							
24					Tolerance Factor K (For UTL)	2.309			d2max (for USL)	2.644		
25												
26						**Lognormal GOF Test on Detected Observations Only**							
27					Shapiro Wilk Test Statistic	0.899			**Shapiro Wilk GOF Test**			
28					5% Shapiro Wilk Critical Value	0.914			Data Not Lognormal at 5% Significance Level			
29					Lilliefors Test Statistic	0.175			**Lilliefors GOF Test**			
30					5% Lilliefors Critical Value	0.18			Detected Data appear Lognormal at 5% Significance Level			
31						Detected Data appear Approximate Lognormal at 5% Significance Level						
32												
33						**Kaplan Meier (KM) Background Statistics Assuming Normal Distribution**							
34					Mean	10.59			SD	16.7		
35					95% UTL95% Coverage	49.15			95% KM UPL (t)	39.8		
36					95% KM Chebyshev UPL	84.88			90% KM Percentile (z)	31.99		
37					95% KM Percentile (z)	38.06			99% KM Percentile (z)	49.44		
38					95% KM USL	54.74						
39												
40						**Background Lognormal ROS Statistics Assuming Lognormal Distribution Using Imputed Non-Detects**							
41					Mean in Original Scale	10.59			Mean in Log Scale	1.653		
42					SD in Original Scale	17.06			SD in Log Scale	1.128		
43					95% UTL95% Coverage	70.7			95% BCA UTL95% Coverage	78.9		
44					95% Bootstrap (%) UTL95% Coverage	78.9			95% UPL (t)	37.59		
45					90% Percentile (z)	22.18			95% Percentile (z)	33.42		
46					99% Percentile (z)	72.1			95% USL	103.2		
47												
48						**Statistics using KM estimates on Logged Data and Assuming Lognormal Distribution**							
49					KM Mean of Logged Data	1.655			95% KM UTL (Lognormal)95% Coverage	66.47		
50					KM SD of Logged Data	1.101			95% KM UPL (Lognormal)	35.89		
51					95% KM Percentile Lognormal (z)	31.99			95% KM USL (Lognormal)	96.1		
52												

	A	B	C	D	E	F	G	H	I	J	K	L
53	**Background DL/2 Statistics Assuming Lognormal Distribution**											
54					Mean in Original Scale	10.58				Mean in Log Scale		1.626
55					SD in Original Scale	17.07				SD in Log Scale		1.194
56					95% UTL95% Coverage	80.11				95% UPL (t)		41.05
57					90% Percentile (z)	23.48				95% Percentile (z)		36.24
58					99% Percentile (z)	81.78				95% USL		119.5
59	**DL/2 is not a Recommended Method. DL/2 provided for comparisons and historical reasons.**											
60												
61	Note: The use of USL tends to yield a conservative estimate of BTV, especially when the sample size starts exceeding 20.											
62	Therefore, one may use USL to estimate a BTV only when the data set represents a background data set free of outliers											
63	and consists of observations collected from clean unimpacted locations.											
64	The use of USL tends to provide a balance between false positives and false negatives provided the data											
65	represents a background data set and when many onsite observations need to be compared with the BTV.											
66												

	A	B	C	D	E	F	G	H	I	J	K	L	M
1				**General Statistics on Uncensored Data**									
2			Date/Time of Computation	ProUCL 5.111/3/2021 09:22:39									
3			**User Selected Options**										
4			From File	WorkSheet.xls									
5			Full Precision	OFF									
6													
7	**From File: WorkSheet.xls**												
8													
9						**General Statistics for Censored Datasets (with NDs) using Kaplan Meier Method**								
10													
11	**Variable**		**NumObs**	**# Missing**	**Num Ds**	**NumNDs**	**% NDs**	**Min ND**	**Max ND**	**KM Mean**	**KM Var**	**KM SD**	**KM CV**
12	Unit E nickel		39	0	39	0	0.00%	N/A	N/A	26.5	185.7	13.63	0.514
13													
14						**General Statistics for Raw Dataset using Detected Data Only**								
15													
16	**Variable**		**NumObs**	**# Missing**	**Minimum**	**Maximum**	**Mean**	**Median**	**Var**	**SD**	**MAD/0.675**	**Skewness**	**CV**
17	Unit E nickel		39	0	8.59	58.2	26.5	21.9	185.7	13.63	10.38	0.754	0.514
18													
19						**Percentiles using all Detects (Ds) and Non-Detects (NDs)**								
20													
21	**Variable**		**NumObs**	**# Missing**	**10%ile**	**20%ile**	**25%ile(Q1)**	**50%ile(Q2)**	**75%ile(Q3)**	**80%ile**	**90%ile**	**95%ile**	**99%ile**
22	Unit E nickel		39	0	12.6	15.38	16.25	21.9	37.4	41.42	45.92	49.34	57.02

	A	B	C	D	E	F	G	H	I	J	K	L	M
1				**General Statistics on Uncensored Data**									
2			Date/Time of Computation	ProUCL 5.111/3/2021 09:04:40									
3			**User Selected Options**										
4			From File	WorkSheet.xls									
5			Full Precision	OFF									
6													
7	**From File: WorkSheet.xls**												
8													
9						**General Statistics for Censored Datasets (with NDs) using Kaplan Meier Method**								
10													
11	**Variable**		**NumObs**	**# Missing**	**Num Ds**	**NumNDs**	**% NDs**	**Min ND**	**Max ND**	**KM Mean**	**KM Var**	**KM SD**	**KM CV**
12	Unit E_unsaturated lead		15	0	15	0	0.00%	N/A	N/A	22.9	1049	32.39	1.414
13													
14						**General Statistics for Raw Dataset using Detected Data Only**								
15													
16	**Variable**		**NumObs**	**# Missing**	**Minimum**	**Maximum**	**Mean**	**Median**	**Var**	**SD**	**MAD/0.675**	**Skewness**	**CV**
17	Unit E_unsaturated lead		15	0	3.11	128	22.9	8.41	1049	32.39	6.316	2.78	1.414
18													
19						**Percentiles using all Detects (Ds) and Non-Detects (NDs)**								
20													
21	**Variable**		**NumObs**	**# Missing**	**10%ile**	**20%ile**	**25%ile(Q1)**	**50%ile(Q2)**	**75%ile(Q3)**	**80%ile**	**90%ile**	**95%ile**	**99%ile**
22	Unit E_unsaturated lead		15	0	4.766	5.978	6.605	8.41	26.1	33.66	46.14	73.61	117.1

1	**Lognormal UCL Statistics for Data Sets with Non-Detects**											
2												
3	User Selected Options											
4	Date/Time of Computation	ProUCL 5.111/3/2021 09:04:58										
5	From File	WorkSheet.xls										
6	Full Precision	OFF										
7	Confidence Coefficient	95%										
8	Number of Bootstrap Operations	2000										
9												
10												
11	**Unit E_unsaturated lead**											
12												
13	**General Statistics**											
14	Total Number of Observations	15					Number of Distinct Observations	15				
15							Number of Missing Observations	0				
16	Minimum	3.11					Mean	22.9				
17	Maximum	128					Median	8.41				
18	SD	32.39					Std. Error of Mean	8.362				
19	Coefficient of Variation	1.414					Skewness	2.78				
20												
21	**Lognormal GOF Test**											
22	Shapiro Wilk Test Statistic	0.926					**Shapiro Wilk Lognormal GOF Test**					
23	5% Shapiro Wilk Critical Value	0.881					Data appear Lognormal at 5% Significance Level					
24	Lilliefors Test Statistic	0.186					**Lilliefors Lognormal GOF Test**					
25	5% Lilliefors Critical Value	0.22					Data appear Lognormal at 5% Significance Level					
26	Data appear Lognormal at 5% Significance Level											
27												
28	**Logged Statistics**											
29	Minimum of Logged Data	1.135					Mean of logged Data	2.538				
30	Maximum of Logged Data	4.852					SD of logged Data	1.04				
31												
32	**Lognormal Maximum likelihood Estimates (MLEs)**											
33	MLE Mean	21.73					MLE Standard Deviation	30.32				
34	MLE Median	12.65					MLE Skewness	6.906				
35	MLE Coefficient of Variation	1.396					80% MLE Quantile	30.36				
36	90% MLE Quantile	47.97					95% MLE Quantile	69.98				
37	99% MLE Quantile	142.1										
38												
39	**Lognormal Minimum Variance Unbiased Estimates (MVUEs)**											
40	MVUE Mean	20.65					MVUE SD	24.45				
41	MVUE Median	12.2					MVUE SEM	6.084				
42												
43	**Assuming Lognormal Distribution**											
44	95% H-UCL	47.41					90% Chebyshev (MVUE) UCL	38.9				
45	95% Chebyshev (MVUE) UCL	47.17					97.5% Chebyshev (MVUE) UCL	58.64				
46	99% Chebyshev (MVUE) UCL	81.19										
47												
48	**Nonparametric Distribution Free UCLs**											
49	95% CLT UCL	36.66					95% Jackknife UCL	37.63				
50	95% Standard Bootstrap UCL	36.17					95% Bootstrap-t UCL	58.89				
51	95% Hall's Bootstrap UCL	85.19					95% Percentile Bootstrap UCL	36.83				
52	95% BCA Bootstrap UCL	43.85										

	A	B	C	D	E	F	G	H	I	J	K	L
53				90% Chebyshev(Mean, Sd) UCL		47.99				95% Chebyshev(Mean, Sd) UCL		59.35
54				97.5% Chebyshev(Mean, Sd) UCL		75.13				99% Chebyshev(Mean, Sd) UCL		106.1
55												
56						**Suggested UCL to Use**						
57					95% Chebyshev (Mean, Sd) UCL	59.35						
58												
59												
60												
61												
62												
63												

Note: Suggestions regarding the selection of a 95% UCL are provided to help the user to select the most appropriate 95% UCL.

Recommendations are based upon data size, data distribution, and skewness.

These recommendations are based upon the results of the simulation studies summarized in Singh, Maichle, and Lee (2006).

However, simulations results will not cover all Real World data sets; for additional insight the user may want to consult a statistician.

Lognormal Background Statistics for Data Sets with Non-Detects

User Selected Options	
Date/Time of Computation	ProUCL 5.111/3/2021 09:03:46
From File	WorkSheet.xls
Full Precision	OFF
Confidence Coefficient	95%
Coverage	95%
Different or Future K Observations	1
Number of Bootstrap Operations	2000

Unit E_unsaturated lead

General Statistics

Total Number of Observations	15	Number of Distinct Observations	15
Minimum	3.11	First Quartile	6.605
Second Largest	50.3	Median	8.41
Maximum	128	Third Quartile	26.1
Mean	22.9	SD	32.39
Coefficient of Variation	1.414	Skewness	2.78
Mean of logged Data	2.538	SD of logged Data	1.04

Critical Values for Background Threshold Values (BTVs)

Tolerance Factor K (For UTL)	2.566	d2max (for USL)	2.409

Lognormal GOF Test

Shapiro Wilk Test Statistic	0.926	**Shapiro Wilk Lognormal GOF Test**	
5% Shapiro Wilk Critical Value	0.881	Data appear Lognormal at 5% Significance Level	
Lilliefors Test Statistic	0.186	**Lilliefors Lognormal GOF Test**	
5% Lilliefors Critical Value	0.22	Data appear Lognormal at 5% Significance Level	

Data appear Lognormal at 5% Significance Level

Background Statistics assuming Lognormal Distribution

95% UTL with 95% Coverage	182.4	90% Percentile (z)	47.97
95% UPL (t)	83.88	95% Percentile (z)	69.98
95% USL	154.9	99% Percentile (z)	142.1

Note: The use of USL tends to yield a conservative estimate of BTV, especially when the sample size starts exceeding 20.
Therefore, one may use USL to estimate a BTV only when the data set represents a background data set free of outliers and consists of observations collected from clean unimpacted locations.
The use of USL tends to provide a balance between false positives and false negatives provided the data represents a background data set and when many onsite observations need to be compared with the BTV.

1	**Lognormal UCL Statistics for Data Sets with Non-Detects**											
2												
3	User Selected Options											
4	Date/Time of Computation	ProUCL 5.111/3/2021 09:46:28										
5	From File	WorkSheet_a.xls										
6	Full Precision	OFF										
7	Confidence Coefficient	95%										
8	Number of Bootstrap Operations	2000										
9												
10												
11	**Unit E Zinc**											
12												
13	**General Statistics**											
14	Total Number of Observations	15					Number of Distinct Observations	15				
15							Number of Missing Observations	0				
16	Minimum	24					Mean	125.8				
17	Maximum	631					Median	65.6				
18	SD	155.9					Std. Error of Mean	40.26				
19	Coefficient of Variation	1.24					Skewness	2.833				
20												
21	**Lognormal GOF Test**											
22	Shapiro Wilk Test Statistic	0.91					**Shapiro Wilk Lognormal GOF Test**					
23	5% Shapiro Wilk Critical Value	0.881					Data appear Lognormal at 5% Significance Level					
24	Lilliefors Test Statistic	0.206					**Lilliefors Lognormal GOF Test**					
25	5% Lilliefors Critical Value	0.22					Data appear Lognormal at 5% Significance Level					
26	**Data appear Lognormal at 5% Significance Level**											
27												
28	**Logged Statistics**											
29	Minimum of Logged Data	3.178					Mean of logged Data	4.427				
30	Maximum of Logged Data	6.447					SD of logged Data	0.835				
31												
32	**Lognormal Maximum likelihood Estimates (MLEs)**											
33	MLE Mean	118.6					MLE Standard Deviation	119.2				
34	MLE Median	83.7					MLE Skewness	4.027				
35	MLE Coefficient of Variation	1.005					80% MLE Quantile	169.1				
36	90% MLE Quantile	244.1					95% MLE Quantile	330.7				
37	99% MLE Quantile	584.3										
38												
39	**Lognormal Minimum Variance Unbiased Estimates (MVUEs)**											
40	MVUE Mean	115.2					MVUE SD	104.9				
41	MVUE Median	81.78					MVUE SEM	26.62				
42												
43	**Assuming Lognormal Distribution**											
44	95% H-UCL	207					90% Chebyshev (MVUE) UCL	195				
45	95% Chebyshev (MVUE) UCL	231.2					97.5% Chebyshev (MVUE) UCL	281.4				
46	99% Chebyshev (MVUE) UCL	380										
47												
48	**Nonparametric Distribution Free UCLs**											
49	95% CLT UCL	192					95% Jackknife UCL	196.7				
50	95% Standard Bootstrap UCL	191.8					95% Bootstrap-t UCL	357.6				
51	95% Hall's Bootstrap UCL	457.4					95% Percentile Bootstrap UCL	201.8				
52	95% BCA Bootstrap UCL	226										

53					90% Chebyshev(Mean, Sd) UCL	246.6					95% Chebyshev(Mean, Sd) UCL	301.3
54					97.5% Chebyshev(Mean, Sd) UCL	377.2					99% Chebyshev(Mean, Sd) UCL	526.4
55												
56					**Suggested UCL to Use**							
57					95% H-UCL	207						
58												
59	Note: Suggestions regarding the selection of a 95% UCL are provided to help the user to select the most appropriate 95% UCL.											
60	Recommendations are based upon data size, data distribution, and skewness.											
61	These recommendations are based upon the results of the simulation studies summarized in Singh, Maichle, and Lee (2006).											
62	However, simulations results will not cover all Real World data sets; for additional insight the user may want to consult a statistician.											
63												
64	**ProUCL computes and outputs H-statistic based UCLs for historical reasons only.**											
65	**H-statistic often results in unstable (both high and low) values of UCL95 as shown in examples in the Technical Guide.**											
66	**It is therefore recommended to avoid the use of H-statistic based 95% UCLs.**											
67	**Use of nonparametric methods are preferred to compute UCL95 for skewed data sets which do not follow a gamma distribution.**											
68												

Lognormal Background Statistics for Data Sets with Non-Detects

User Selected Options	
Date/Time of Computation	ProUCL 5.111/3/2021 09:45:00
From File	WorkSheet_a.xls
Full Precision	OFF
Confidence Coefficient	95%
Coverage	95%
Different or Future K Observations	1
Number of Bootstrap Operations	2000

Unit E Zinc

General Statistics

Total Number of Observations	15	Number of Distinct Observations	15
Minimum	24	First Quartile	56.1
Second Largest	301	Median	65.6
Maximum	631	Third Quartile	118.5
Mean	125.8	SD	155.9
Coefficient of Variation	1.24	Skewness	2.833
Mean of logged Data	4.427	SD of logged Data	0.835

Critical Values for Background Threshold Values (BTVs)

Tolerance Factor K (For UTL)	2.566	d2max (for USL)	2.409

Lognormal GOF Test

Shapiro Wilk Test Statistic	0.91	**Shapiro Wilk Lognormal GOF Test**	
5% Shapiro Wilk Critical Value	0.881	Data appear Lognormal at 5% Significance Level	
Lilliefors Test Statistic	0.206	**Lilliefors Lognormal GOF Test**	
5% Lilliefors Critical Value	0.22	Data appear Lognormal at 5% Significance Level	

Data appear Lognormal at 5% Significance Level

Background Statistics assuming Lognormal Distribution

95% UTL with 95% Coverage	713.8	90% Percentile (z)	244.1
95% UPL (t)	382.5	95% Percentile (z)	330.7
95% USL	626.1	99% Percentile (z)	584.3

Note: The use of USL tends to yield a conservative estimate of BTV, especially when the sample size starts exceeding 20.
Therefore, one may use USL to estimate a BTV only when the data set represents a background data set free of outliers and consists of observations collected from clean unimpacted locations.
The use of USL tends to provide a balance between false positives and false negatives provided the data represents a background data set and when many onsite observations need to be compared with the BTV.

Nonparametric UCL Statistics for Data Sets with Non-Detects

User Selected Options	
Date/Time of Computation	ProUCL 5.19/21/2021 15:37:47
From File	WorkSheet_s.xls
Full Precision	OFF
Confidence Coefficient	95%
Number of Bootstrap Operations	2000

zinc unit e sat

General Statistics

Total Number of Observations	29	Number of Distinct Observations	27
		Number of Missing Observations	0
Minimum	9.58	Mean	62.76
Maximum	795	Median	25
SD	143.6	Std. Error of Mean	26.67
Coefficient of Variation	2.288	Skewness	5.07
Mean of logged Data	3.498	SD of logged Data	0.871

Nonparametric Distribution Free UCL Statistics

Data do not follow a Discernible Distribution (0.05)

Assuming Normal Distribution

95% Normal UCL		95% UCLs (Adjusted for Skewness)	
95% Student's-t UCL	108.1	95% Adjusted-CLT UCL (Chen-1995)	133.5
		95% Modified-t UCL (Johnson-1978)	112.3

Nonparametric Distribution Free UCLs

95% CLT UCL	106.6	95% Jackknife UCL	108.1
95% Standard Bootstrap UCL	104.9	95% Bootstrap-t UCL	280.2
95% Hall's Bootstrap UCL	267.9	95% Percentile Bootstrap UCL	113.3
95% BCA Bootstrap UCL	164.5		
90% Chebyshev(Mean, Sd) UCL	142.8	95% Chebyshev(Mean, Sd) UCL	179
97.5% Chebyshev(Mean, Sd) UCL	229.3	99% Chebyshev(Mean, Sd) UCL	328.1

Suggested UCL to Use

95% Chebyshev (Mean, Sd) UCL	179

Note: Suggestions regarding the selection of a 95% UCL are provided to help the user to select the most appropriate 95% UCL.

Recommendations are based upon data size, data distribution, and skewness.

These recommendations are based upon the results of the simulation studies summarized in Singh, Maichle, and Lee (2006).

However, simulations results will not cover all Real World data sets; for additional insight the user may want to consult a statistician.

1				**Nonparametric Background Statistics for Data Sets with Non-Detects**								
2			**User Selected Options**									
3			Date/Time of Computation	ProUCL 5.19/21/2021 15:34:33								
4			From File	WorkSheet_s.xls								
5			Full Precision	OFF								
6			Confidence Coefficient	95%								
7			Coverage	95%								
8			Different or Future K Observations	1								
9												
10	**zinc unit e sat**											
11												
12	**General Statistics**											
13						Total Number of Observations	29			Number of Distinct Observations	27		
14						Minimum	9.58			First Quartile	19.5	
15						Second Largest	140			Median	25	
16						Maximum	795			Third Quartile	52.2	
17						Mean	62.76			SD	143.6	
18						Coefficient of Variation	2.288			Skewness	5.07	
19						Mean of logged Data	3.498			SD of logged Data	0.871	
20												
21						**Critical Values for Background Threshold Values (BTVs)**							
22						Tolerance Factor K (For UTL)	2.232			d2max (for USL)	2.73	
23												
24						**Nonparametric Distribution Free Background Statistics**							
25						Data do not follow a Discernible Distribution (0.05)							
26												
27						**Nonparametric Upper Limits for Background Threshold Values**							
28						Order of Statistic, r	29			95% UTL with 95% Coverage	795	
29						Approx, f used to compute achieved CC	1.526			Approximate Actual Confidence Coefficient achieved by UTL	0.774	
30										Approximate Sample Size needed to achieve specified CC	59	
31						95% Percentile Bootstrap UTL with 95% Coverage	795			95% BCA Bootstrap UTL with 95% Coverage	533	
32						95% UPL	467.5			90% Percentile	74.2	
33						90% Chebyshev UPL	501			95% Percentile	120.4	
34						95% Chebyshev UPL	699.5			99% Percentile	611.6	
35						95% USL	795					
36												
37						Note: The use of USL tends to yield a conservative estimate of BTV, especially when the sample size starts exceeding 20.							
38						Therefore, one may use USL to estimate a BTV only when the data set represents a background data set free of outliers							
39						and consists of observations collected from clean unimpacted locations.							
40						The use of USL tends to provide a balance between false positives and false negatives provided the data							
41						represents a background data set and when many onsite observations need to be compared with the BTV.							
42												

One Sample Wilcoxon Signed Rank Test for Data Sets with Non-Detects

User Selected Options	
Date/Time of Computation	ProUCL 5.111/3/2021 09:49:52
From File	WorkSheet_a.xls
Full Precision	OFF
Confidence Coefficient	95%
Action Level	0.000
Selected Null Hypothesis	Mean/Median <= Action Level (Form 1)
Alternative Hypothesis	Mean/Median > the Action Level

Unit E Zinc

One Sample Wilcoxon Signed Rank Test

Raw Statistics

Number of Valid Data	15
Number of Distinct Data	15
Number of Non-Detects	0
Number of Detects	15
Percent Non-Detects	0.00%
Minimum Non-detect	N/A
Maximum Non-detect	N/A
Minimum Detect	24
Maximum Detect	631
Mean of Detects	125.8
Median of Detects	65.6
SD of Detects	155.9
Median of Processed Data used in WSR	65.6
Number Above Action Level	15
Number Equal Action Level	0
Number Below Action Level	0
T-plus	120
T-minus	0

H0: Sample Median <= 0 (Form 1)

Exact Test Statistic	120
Critical Value (0.05)	90
P-Value	0

Conclusion with Alpha = 0.05

Reject H0, Conclude Mean/Median > 0

P-Value < Alpha (0.05)

All NDs are replaced by their respective DL/2

APPENDIX J

PCB Congener Histograms for Common PCB Aroclors

Plots of Aroclor Composition

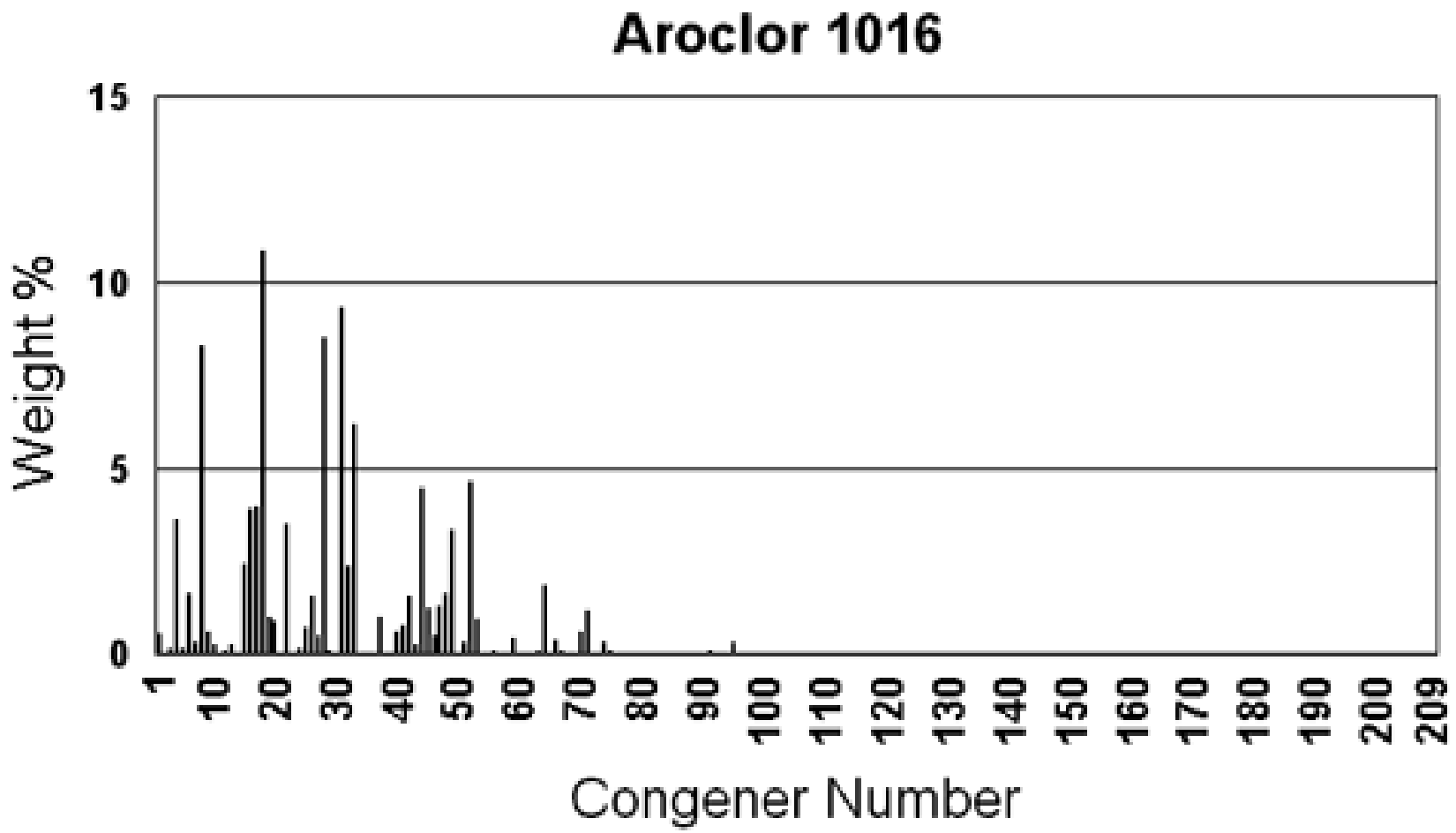

Plots from http://www.epa.gov/epawaste/hazard/tsd/pcbs/pdf/arolorplots.pdf

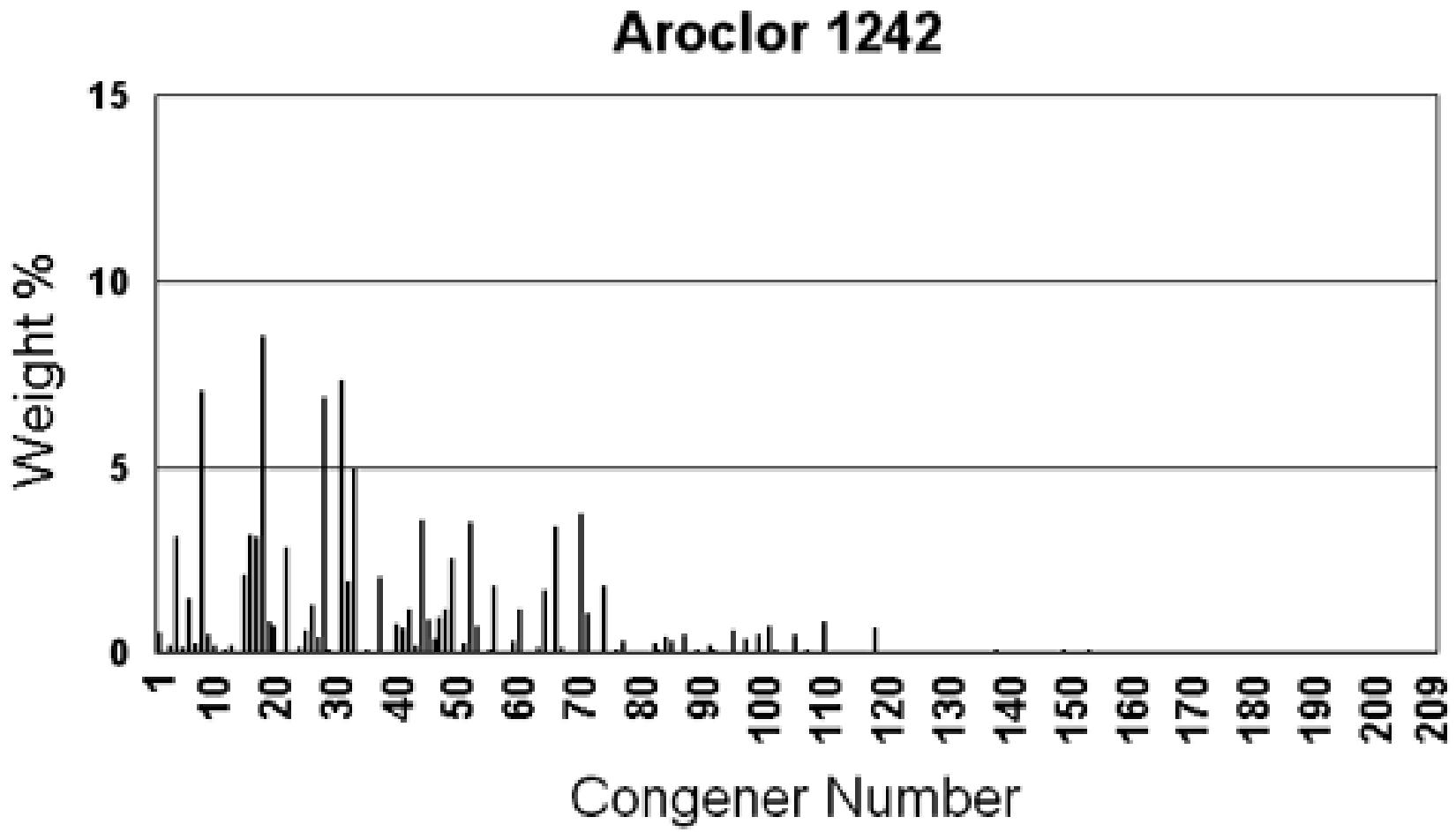
Aroclor 1242
Weight %
15
10
5
0
1
10
20
30
40
50
60
70
80
90
100
110
120
130
140
150
160
170
180
190
200
209
Congener Number

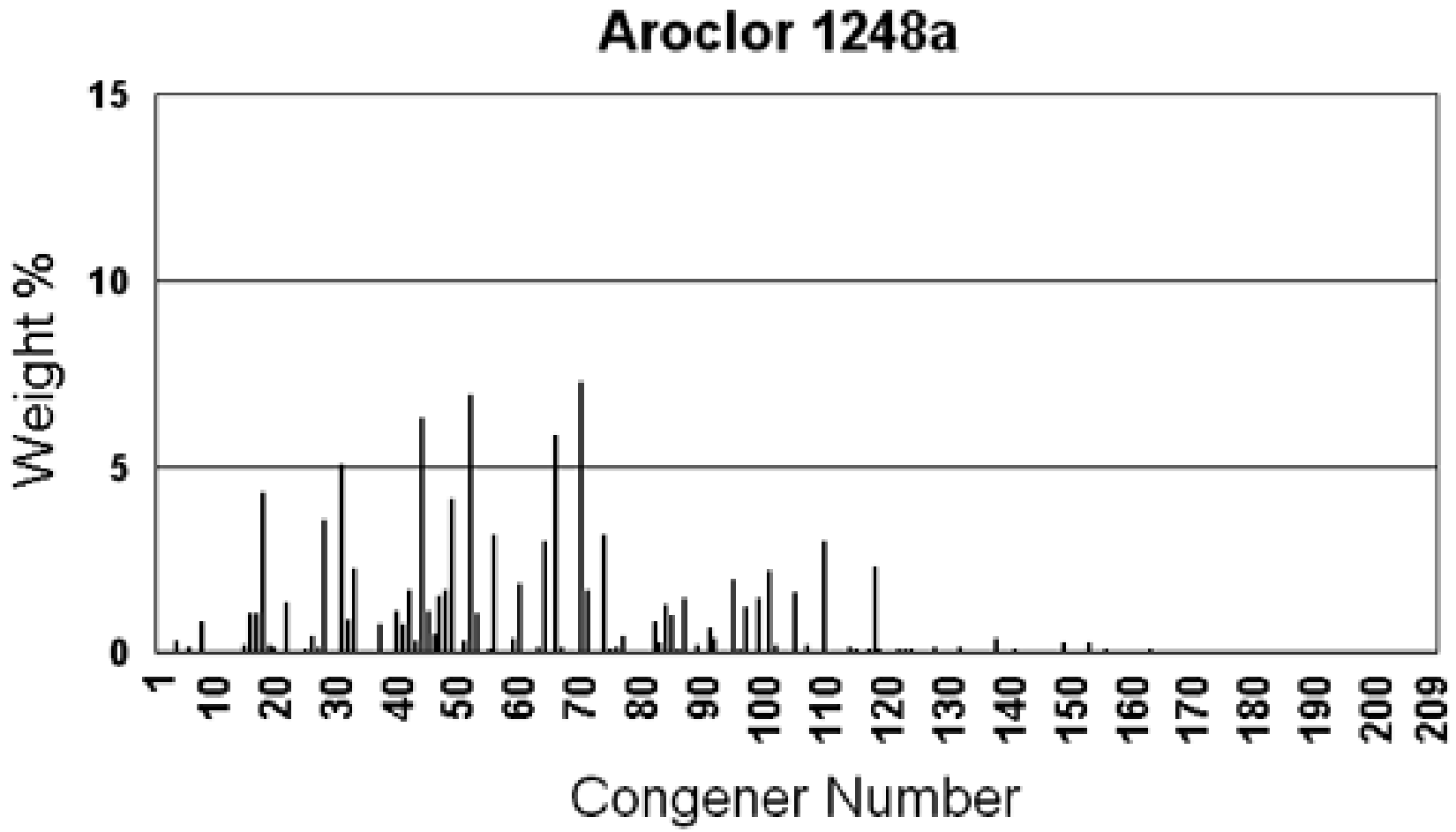
Aroclor 1248a
Weight %
15
10
5
0
1
10
20
30
40
50
60
70
80
90
100
110
120
130
140
150
160
170
180
190
200
209
Congener Number

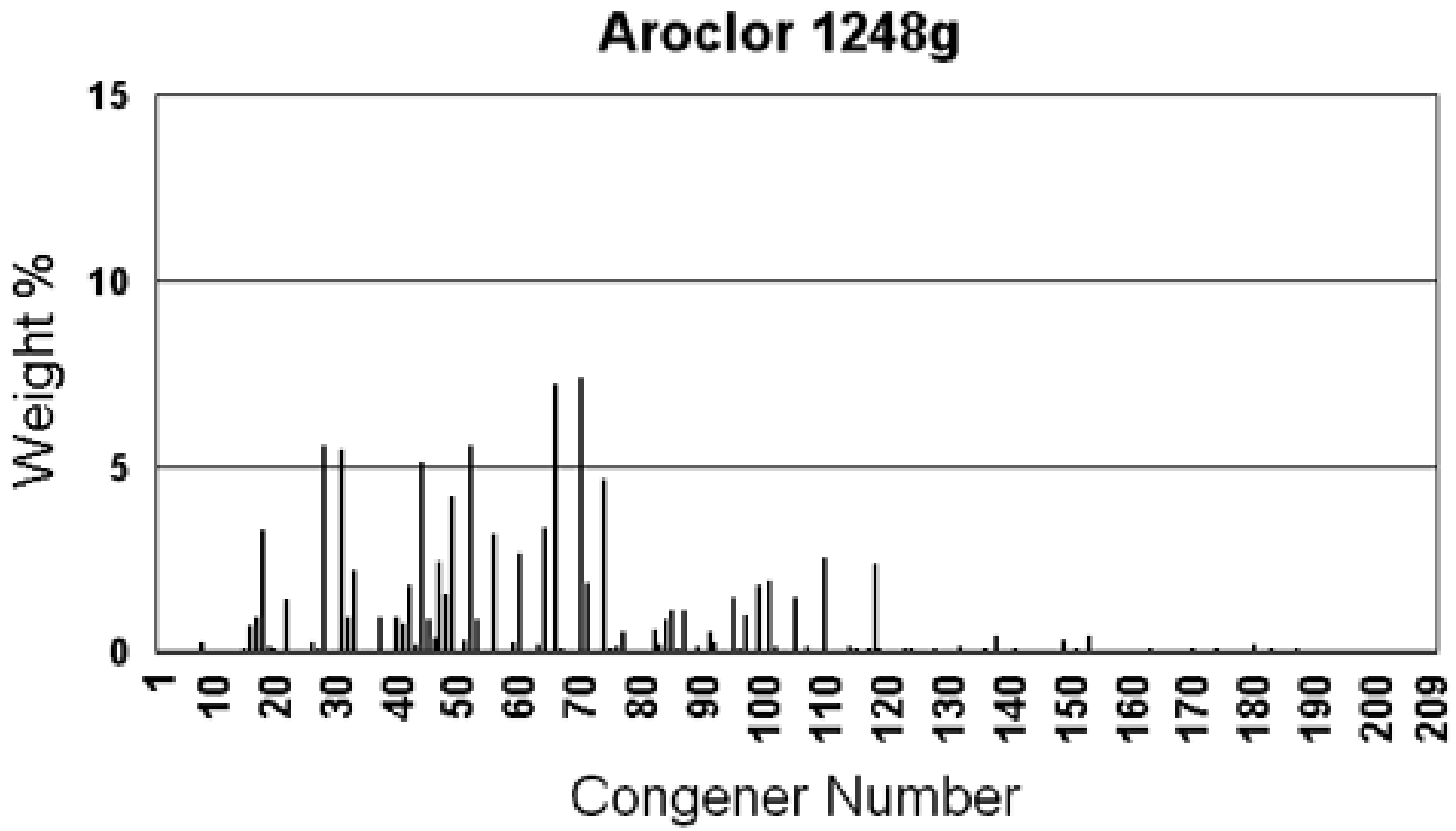
Aroclor 1248g
Weight %
15
10
5
0
1
10
20
30
40
50
60
70
80
90
100
110
120
130
140
150
160
170
180
190
200
209
Congener Number

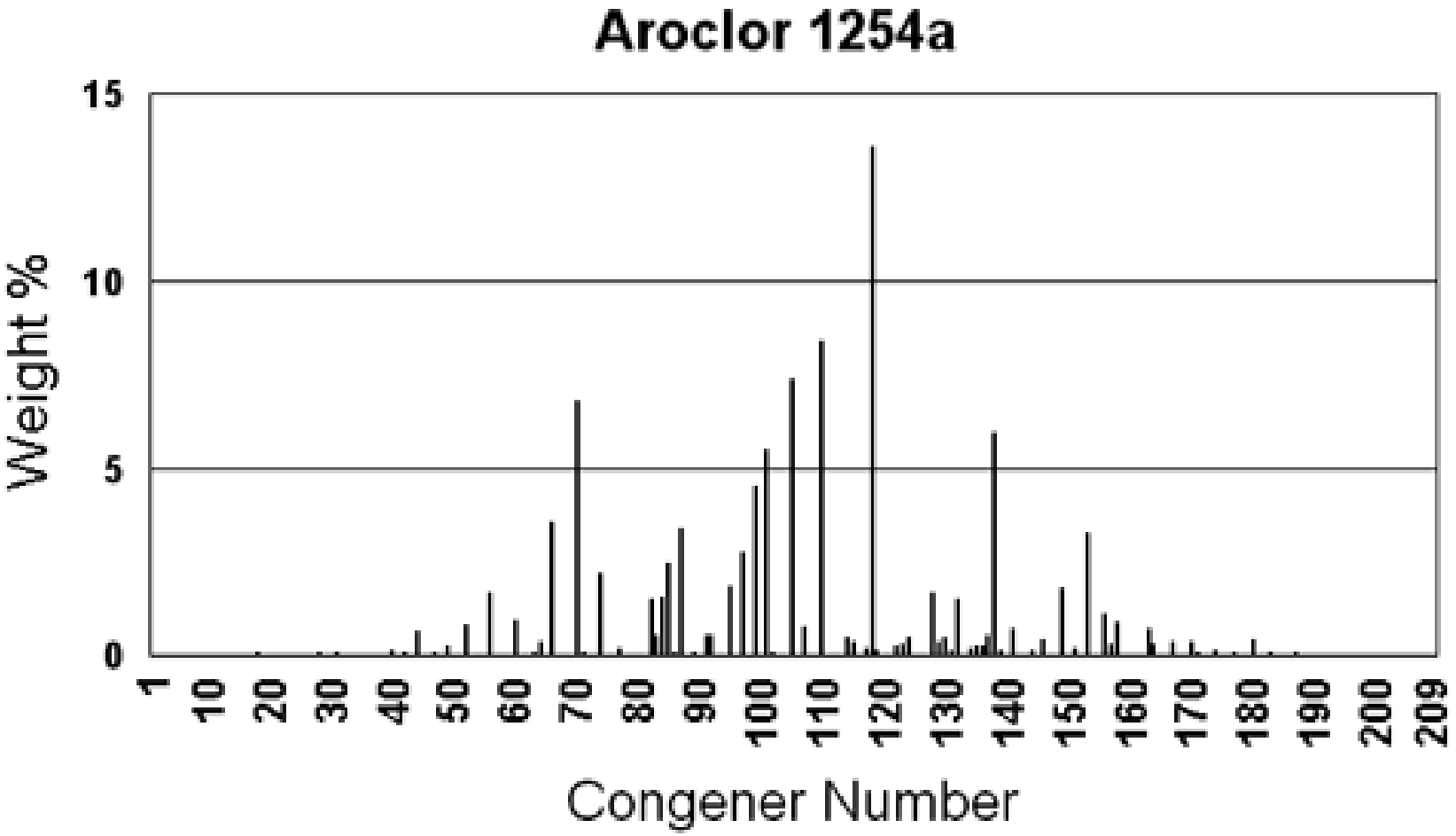
Aroclor 1254a
Weight %
15
10
5
0
1
10
20
30
40
50
60
70
80
90
100
110
120
130
140
150
160
170
180
190
200
209
Congener Number

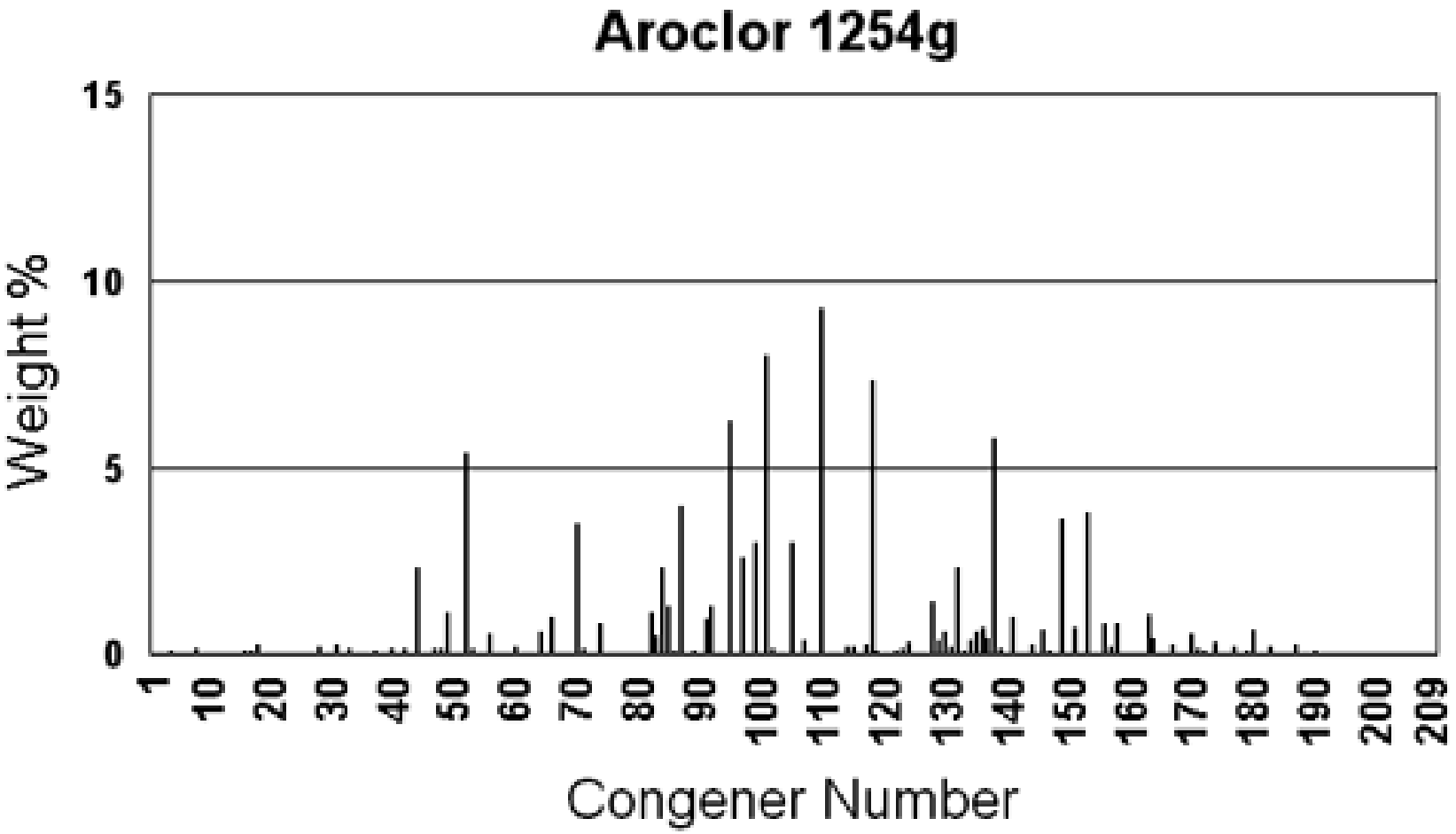
Aroclor 1254g
Weight %
15
10
5
0
1
10
20
30
40
50
60
70
80
90
100
110
120
130
140
150
160
170
180
190
200
209
Congener Number

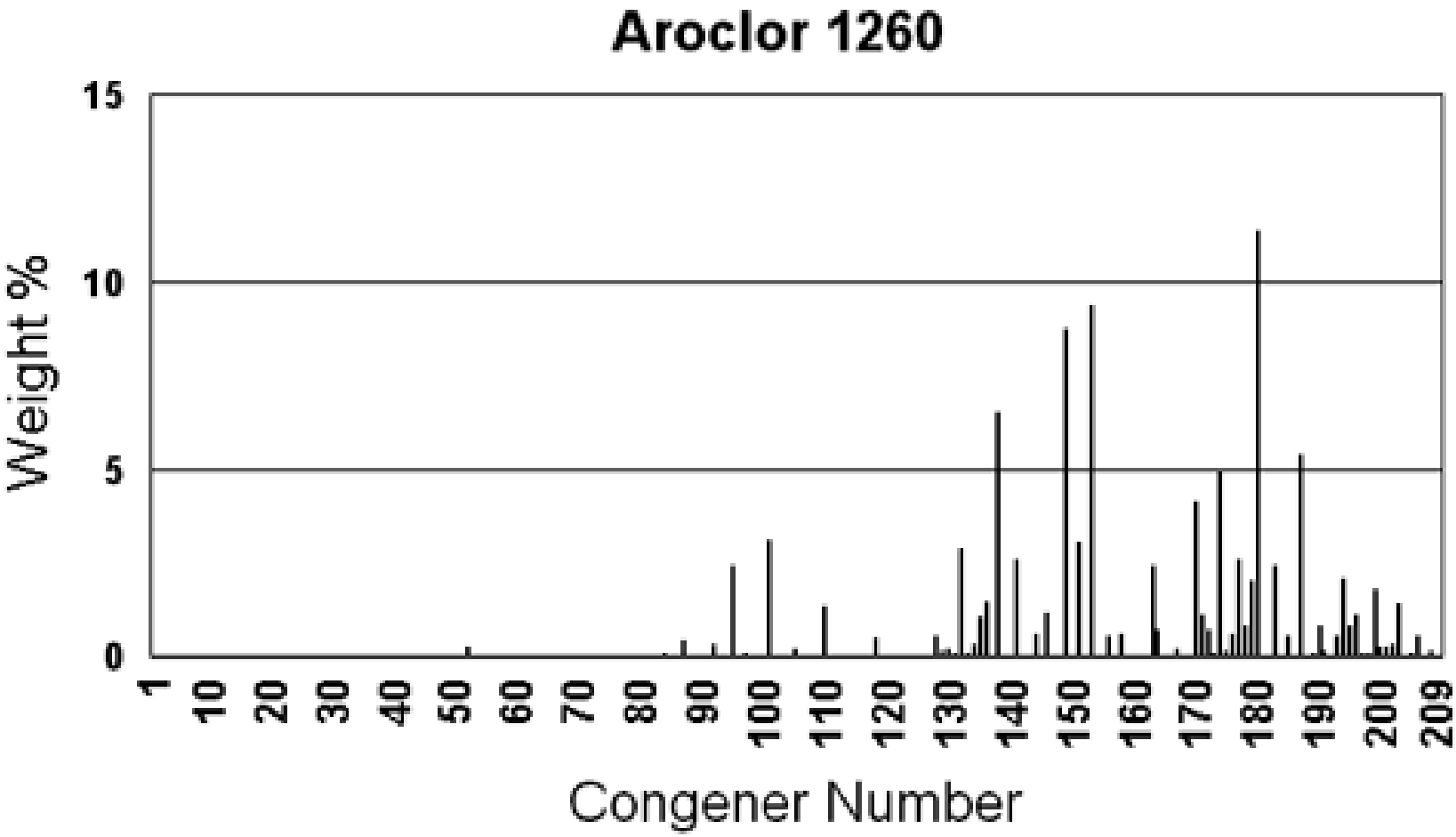
Aroclor 1260
Weight %
15
10
5
0
1
10
20
30
40
50
60
70
80
90
100
110
120
130
140
150
160
170
180
190
200
209
Congener Number

REMEDIAL INVESTIGATION AND FEASIBILITY STUDY

Kimberly-Clark Worldwide Site Upland Area, Everett, Washington

Appendices K through N

Prepared for: Port of Everett

Project No. AS190583A-08 • May 21, 2025 • Final

Aspect
A Geosyntec Company

earth + water

APPENDIX K

Log Pond Investigation Results

RPT-2017-016, Rev. 0

Geophysical Site Clearance Investigation – Kimberly-Clark Worldwide Site Upland Area, Everett WA

N. Crook, Ph.D.
M. McNeill

2302 N. Forbes Blvd, Tucson, AZ 85745 USA

Date Published
April 2017

Prepared for:

Aspect Consulting, LLC

TABLE OF CONTENTS

1.0 INTRODUCTION 1
1.1 PROJECT OBJECTIVE 1
1.2 PROJECT DESCRIPTION 1
1.3 SITE LOCATION AND HISTORY 1
2.0 METHODOLOGY 4
2.1 SURVEY AREA 4
2.2 SURVEYING LIMITATIONS 4
2.3 EQUIPMENT 4
2.3.1 Magnetic 4
2.3.2 Electromagnetic Induction 5
3.0 QUALITY ASSURANCE 5
3.1 Magnetic Storm Assessment 5
3.2 PRE-JOB INSTRUMENT INSPECTION 6
3.3 DAILY INSTRUMENT CHECKS 6
3.4 SURVEY GRID NOrmalization 9
4.0 DATA ANALYSIS 9
4.1 DOWNLOADING, PARSING & FIELD QUALITY CONTROL 9
4.2 GENERALIZED PROCESSING STEPS 9
4.2.1 Magnetics Processing and Plotting 9
4.2.2 Electromagnetics Processing and Plotting 10
4.3 DETAILED PROCESSING STEPS 10
4.3.1 Parameter Conversion (EM) 10
4.3.2 Coordinate Conversion 10
4.3.3 Data Normalization 11
4.3.4 Assembling Master Table 11
4.3.5 Spike Removal 11
4.3.6 Data Plotting 11
5.0 RESULTS & INTERPRETATION 12
5.1 CONTOURED RESULT MAPS 12
5.1.1 Potential Responses to Former Buildings and Structures 17
5.1.2 Utilities Responses 17
5.1.3 Unknown Below-Ground Responses 17
6.0 REFERENCES 23
7.0 APPENDIX A: THEORY 24
7.1 MAGNETOMETRY 25
7.2 ELECTROMAGNETIC INDUCTION 27
7.3 EXAMPLE EM AND MAG RESPONSES 29

1.0 INTRODUCTION

1.1 PROJECT OBJECTIVE

This report documents results from a combined electromagnetic induction (EM) and magnetic (Mag) survey at the Kimberly-Clark Worldwide Site Upland Area in Everett, WA. The geophysical survey effort was completed to evaluate the infilled former log pond area, focused on evaluating the presence or absence of reportedly buried drums, pipes, or other preferential pathway voids. The ground conductivity portion of the EM measurement provides a good indication of the changes in soil conductivity that are caused by changes in soil moisture, disruption, or physical property contrasts. In addition, it also provides the ability to detect metallic objects (both ferrous and non-ferrous) through the in-phase portion of the EM measurement. The magnetic measurements are highly sensitive to ferrous metals. Each method has the ability to provide a high-resolution plan view map of the distribution of metallic objects or other subsurface obstructions within the survey area.

1.2 PROJECT DESCRIPTION

hydroGEOPHYSICS, Inc. (HGI) performed a dual-method geophysical survey at the Kimberly-Clark Worldwide Site Upland Area, as requested by Aspect Consulting, LLC, between April 3 – 5, 2017. The geophysical surveying used a combination of an operator carried broad field EM conductivity instrument and a backpack mounted Mag instrument which were used to survey the approximately 800 by 300 foot area. The field crew consisted of Mr. Michael McNeill.

1.3 SITE LOCATION AND HISTORY

The Kimberly-Clarke Worldwide Site Upland Area is located near the city of Everett, WA. Figure 1 shows the general location of the Kimberly-Clark Worldwide Site Upland Area. Figure 2 shows the geophysical survey coverage area in more detail. The focus of the current study is an approximate 800 by 300 foot area that was occupied by the infilled former log pond. The majority of former mill buildings and structures have been demolished and cleared, with the current site consisting predominantly of a flat gravel surface.

Figure 1. General Survey Location

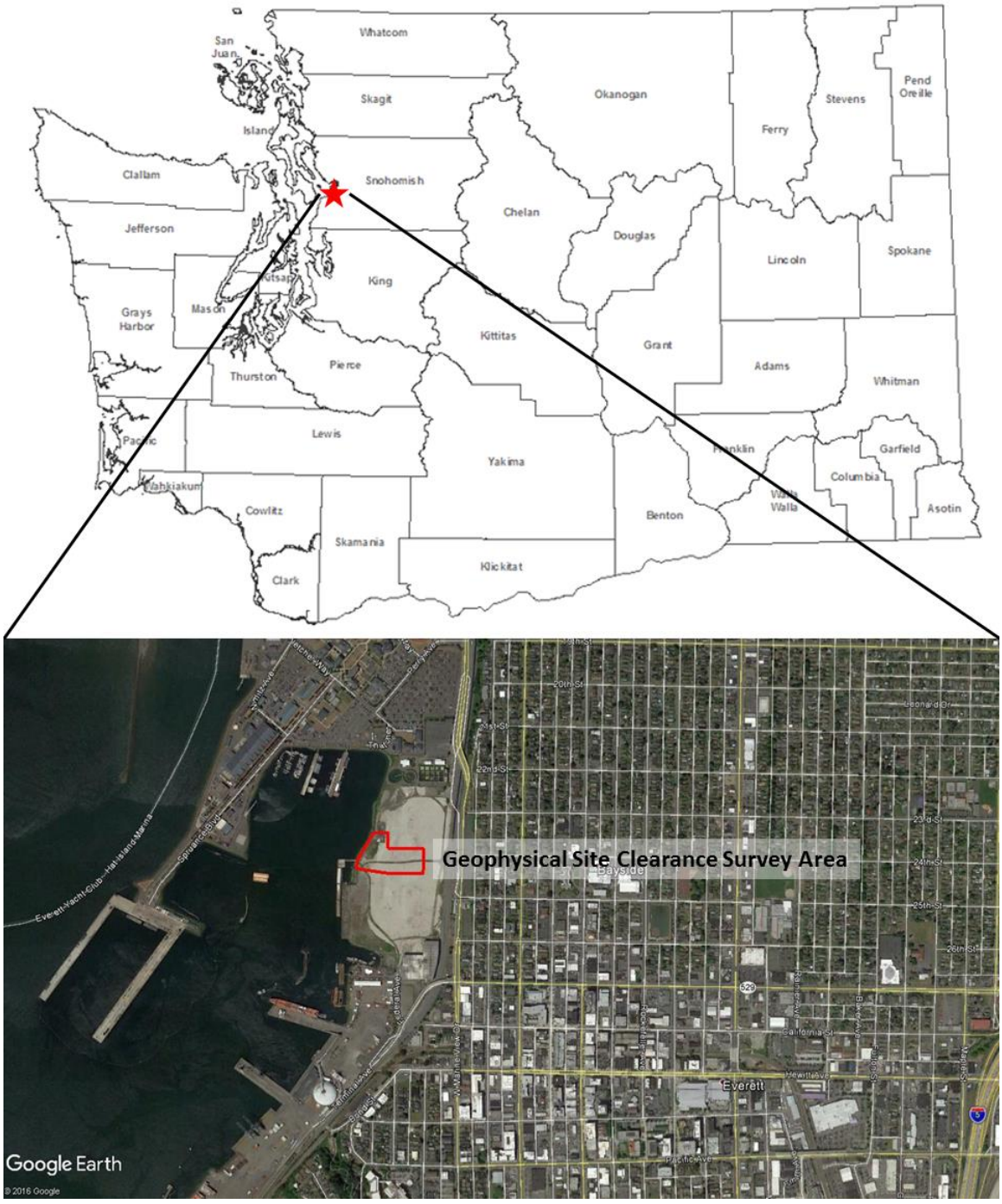

Aerial imagery © Google Earth 2017

Figure 2. Detailed Coverage for the Electromagnetic Induction and Magnetic Surveys.

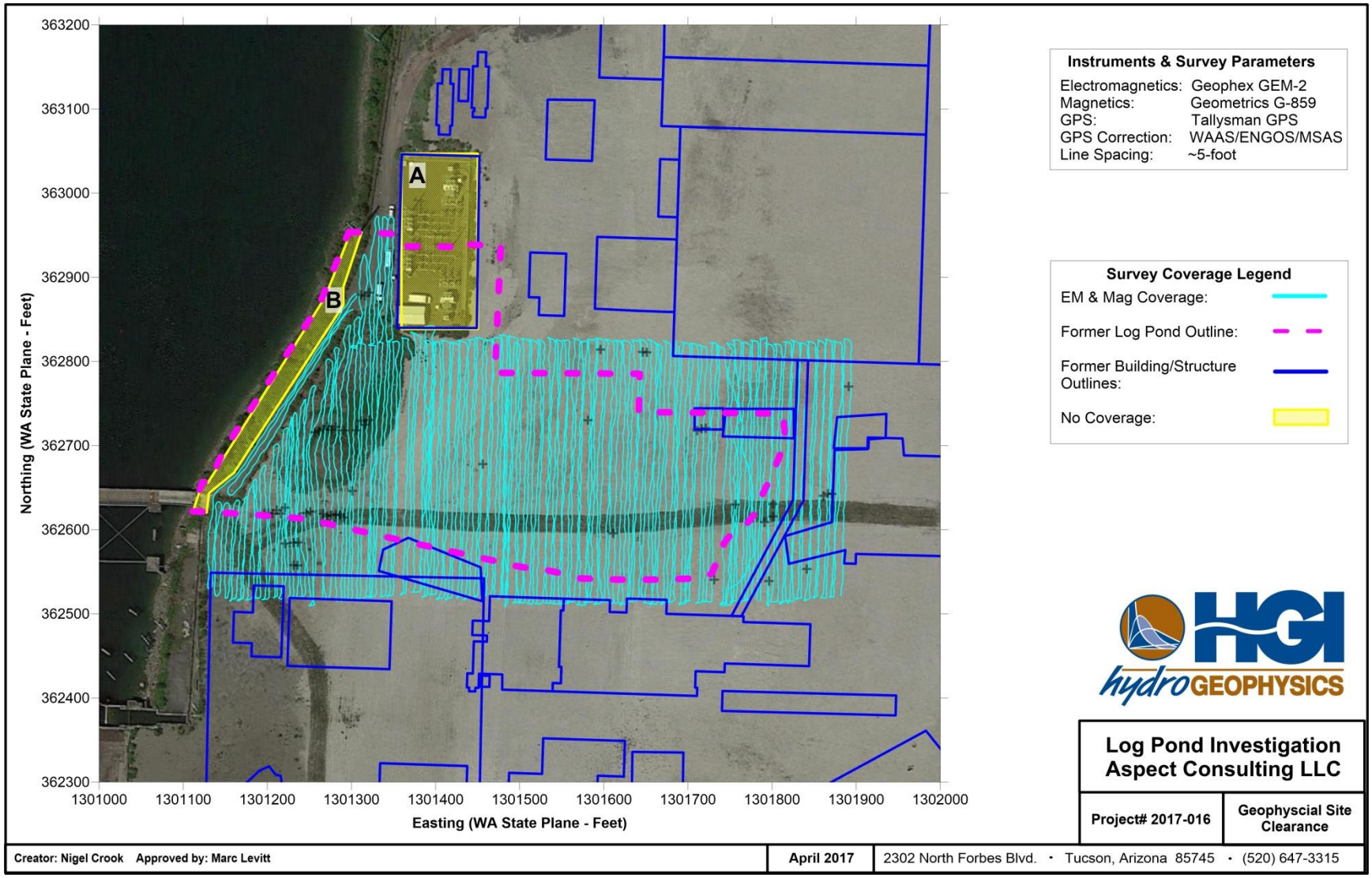

2.0 METHODOLOGY

2.1 SURVEY AREA

EM & Mag data were acquired between April 3 and 5, 2017. Data were recorded continuously along an approximate 5 feet survey line spacing to produce the coverage shown in Figure 2.

2.2 SURVEYING LIMITATIONS

The survey coverage is continuous across the majority of the proposed survey area of the former infilled log pond, as detailed in Figure 2. However, there were several areas where it was not possible to collect geophysical data as indicated by the yellow cross-hatch pattern in Figure 2. These correspond to the electrical substation in the northwest corner of the survey area, denoted by (A), and the western edge of the survey area that contained a barricaded road and heavily vegetated region which it was not possible to cover, denoted by (B).

2.3 EQUIPMENT

2.3.1 Magnetic

A Geometrics, Inc. G-859 cesium vapor magnetometer with integrated WAAS/EGNOS enabled Tallysman™ GPS was used to provide magnetic data for the project. The magnetometer and GPS system were mounted on a non-magnetic backpack, with a waist mounted console used to control data collection parameters and record the total magnetic field data. The instrument is commercially available and was designed to provide detection of subsurface ferrous metals by mapping distortions to the measured localized magnetic field. The magnetometer console contains a serial input and necessary firmware that is used to interface with and store GPS data. Interchangeable low voltage 12V dc gel cell batteries are used to power the magnetometer console. A daily inspection is completed by the qualified operator to ensure all components are in satisfactory working condition. Quality assurance tests, including a visual inspection and an instrument check survey line were performed at the beginning and end of each day and each time the instrument power was cycled.

To perform the diurnal correction, a Geometrics, Inc. G-857 proton precession magnetometer was used as a base station to provide a continuous record of changes in the Earth's magnetic to correct the collected total magnetic field survey data.

2.3.2 Electromagnetic Induction

The Geophex Gem-2® electromagnetic instrument was used to provide electromagnetic data. The electromagnetic system is used to detect variations in subsurface soil moisture, soil conductivity, and the presence of subsurface infrastructure (utilities, pipes, tanks, etc.). The GEM-2 consists of a sensor housing (the "ski"), and the electronics console. The console includes the data acquisition, rechargeable battery, and data storage hardware. The console contains one DB9 serial connector for downloading data to a PC using the manufacturer-supplied WinGEM software. The GPS time and location were appended to each electromagnetic data point based on the grid for the magnetic survey. The instrument is commercially available and is widely used within the geophysical arena.

A daily inspection is completed by the qualified operator to ensure all components are in satisfactory working condition. Quality assurance tests, including a visual inspection and an instrument check survey line were performed at the beginning and end of each day and each time the instrument power was cycled.

3.0 QUALITY ASSURANCE

This section describes the methods used to ensure suitable data quality through testing of equipment and documentation of field activities. Instruments were inspected and tested prior to mobilization to the project site, and additional instrument tests were completed just prior to surveying at the project site. All data were run through a preliminary assessment for quality control (QC) in the field to assure quality of data before advancing the survey. Following onsite QC, all data were transferred to the HGI server for storage and detailed data processing and analysis. Each survey grid was recorded with a separate file name that corresponded with a specific functional check file. Data quality was inspected and data files were saved to designated folders on the server. Raw data files were retained in an unaltered format as data editing and processing was initiated. Daily notes on survey configuration, location, equipment used, environmental conditions, proximal infrastructure or other obstacles, and any other useful information were recorded during data acquisition and were saved to the HGI Tucson server.

3.1 MAGNETIC STORM ASSESSMENT

Magnetic storms are produced by sunspot and solar flare activity and can produce significant interference to a magnetic survey. There is usually a sudden onset, during which the field may change by hundreds of nanoTesla (nT) in a few minutes, followed by a slower, erratic return to

® GEM-2 is a registered trademark of Geophex, Ltd.

normality. Time scales vary widely but the effects can persist for hours and sometime days, during which it is sometimes impossible to collect magnetic survey data.

The solar activity was monitored in the lead up and during the survey period using the resources on the National Oceanic and Atmospheric Administration (NOAA) Space Weather Prediction Center website (http://www.swpc.noaa.gov/) as assess the potential for magnetic storms occurring during the survey. The April 3 – 5, 2017 period was characterized as minor geomagnetic storm impacts. In addition, the ground based continuous magnetometer monitoring station at Boulder, CO, indicated small fluctuations in the total magnetic field readings byover the week of the survey (Figure 3)

Figure 3. Total Magnetic Field Measurements from the Ground Based Monitoring Station in Boulder, CO, for the Week of the Everett Magnetic Survey (indicating on average <50nT daily fluctuations in magnetic field).

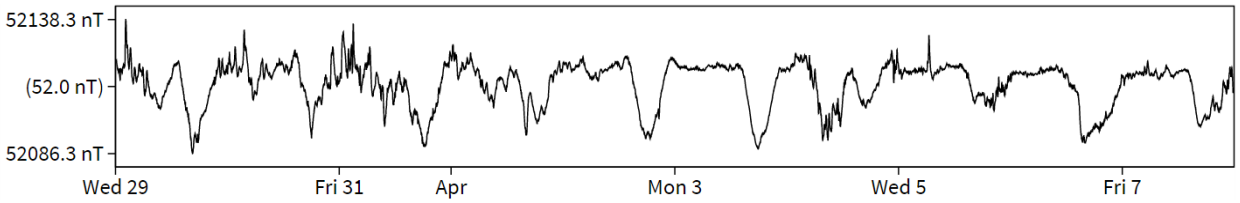

3.2 PRE-JOB INSTRUMENT INSPECTION

HGI completed a visual inspection of all instrumentation to ensure that damage had not occurred in transport to the project site.

3.3 DAILY INSTRUMENT CHECKS

Daily instrument testing was completed at the start and end of each day, prior to surveying of each grid, and anytime the instrument power was cycled. An instrument check survey line was laid out within the project site at a location outside the former infilled log pond area, and was marked for use on all subsequent instrument checks. Instruments were warmed up for 15 minutes prior to all testing.

Upon completion of the instrument warm up, the EM and Mag instruments were carried over the length of the instrument check survey line, approximately 100 feet in length, and back again. The goal of the instrument check is to ensure that instrumentation are in working condition and are producing repeatable data over a known response, with minimal variation between tests. A metallic object was placed at approximately 80 feet along the survey in order to evaluate response repeatability. The instrument check data was also used to calculate correction factors that were then used to normalize individual data sets from successive survey grids.

Acceptance criteria for this test was to demonstrate that all instrument check runs successfully detected the response feature located at approximately 80 feet along the survey line and that the shape, character and magnitude of the responses were consistent. All instrument check results were analyzed and all were deemed satisfactory. The instrument check results for the electromagnetic in-phase data can be viewed in Figure 4; the electromagnetic conductivity data is shown in Figure 5 and the magnetic total field is summarized in Figure 6.

Figure 4. Instrument Check Results for Electromagnetic In-Phase Data over the Survey Period.

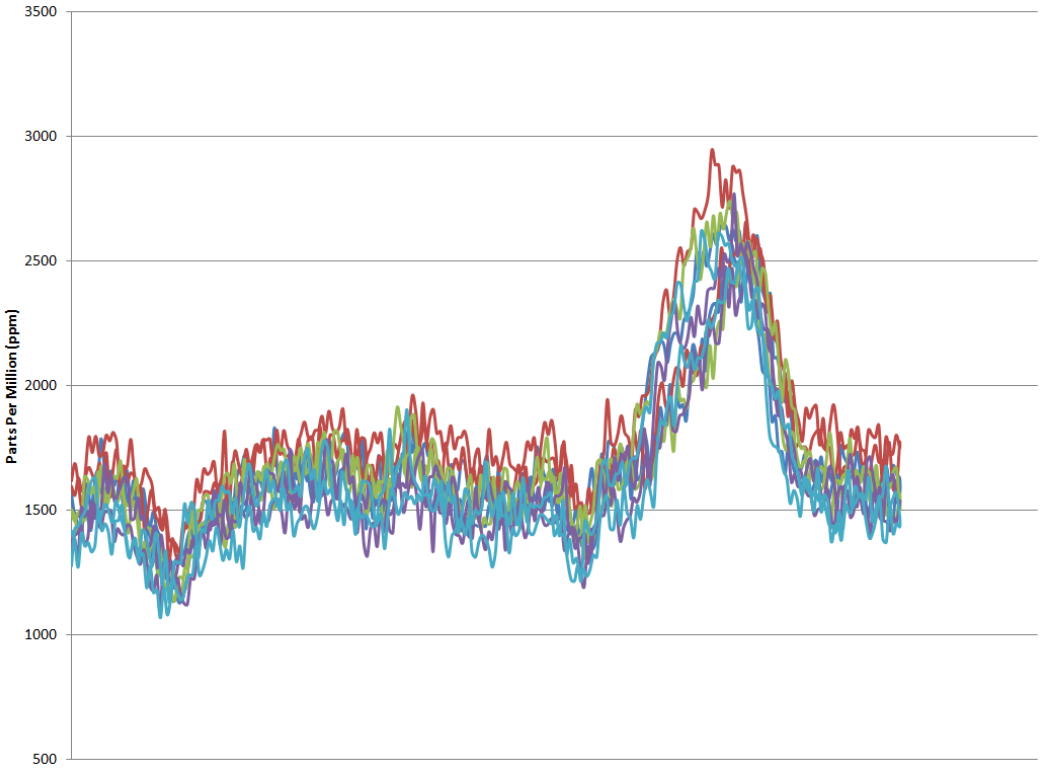

Figure 5. Instrument Check Results for Electromagnetic Conductivity Data over the Survey Period.

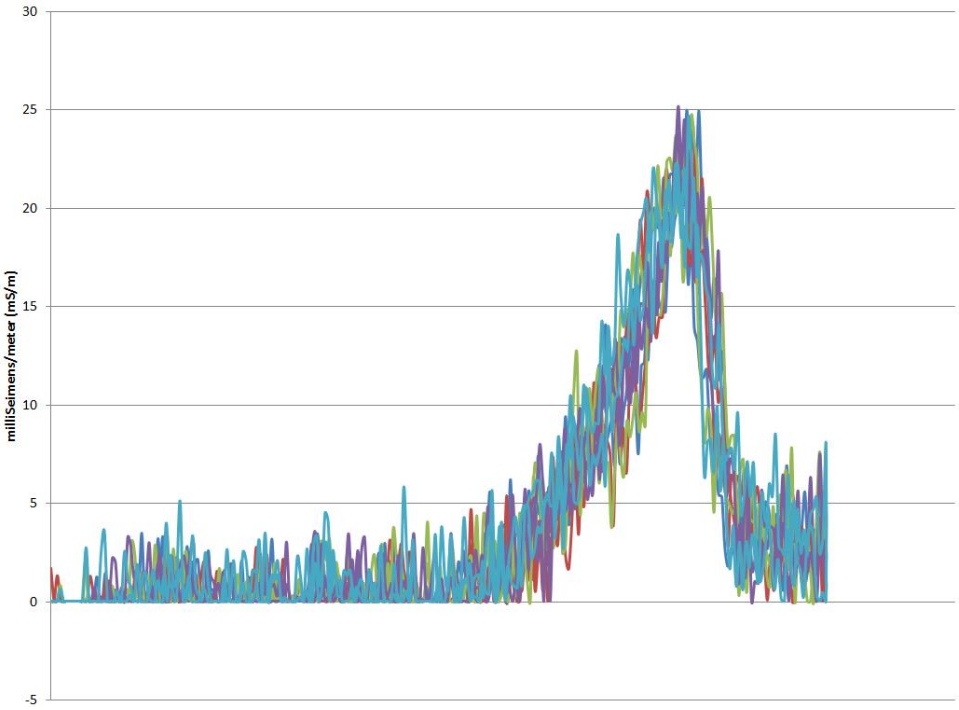

Figure 6. Instrument Check Results for Magnetic Data over the Survey Period (the plot below contains the out and back portions of the instrument check survey line as a continuous profile).

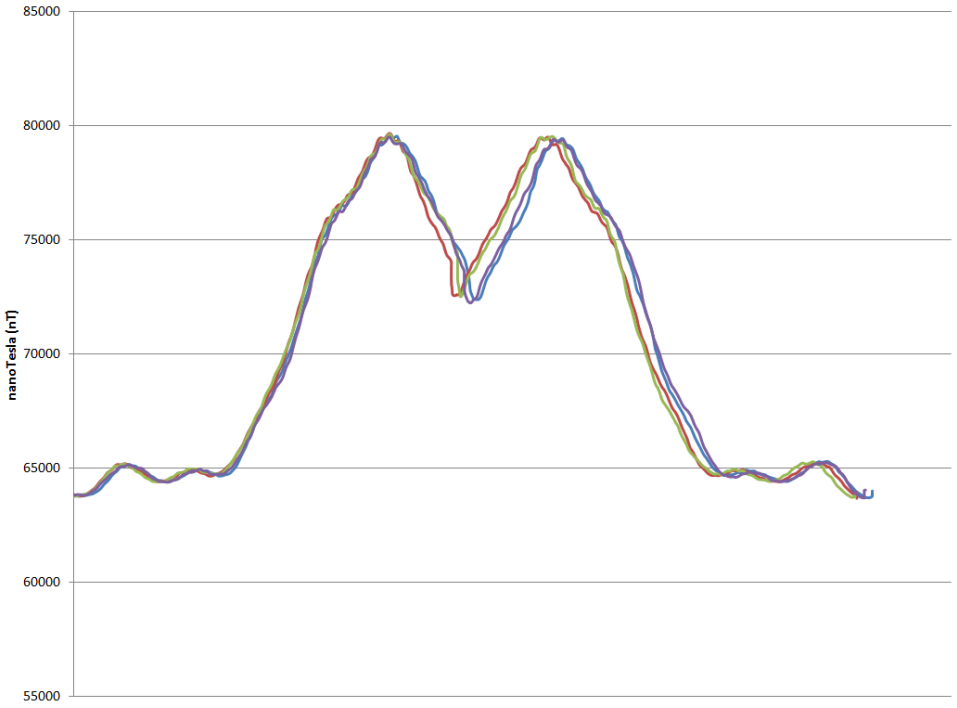

3.4 SURVEY GRID NORMALIZATION

All geophysical instruments exhibit some amount of data drift, with variation occurring in drift magnitude and time. Electromagnetic instruments, like the GEM-2, exhibit significant drift in comparison to magnetic instruments, like the G-859 used for this project.

The process for normalization was as follows:

1. Calculate the mean parameter value for the relative flat response portion of the instrument check survey line, corresponding to the first 60 feet of the line outside the sensitivity to the metal object, for each measurement parameter.
2. Calculate the Normalization Factor by computing the difference between each data set and the baseline calibration recorded on the first day for each instrument.
3. The individual normalization factors for each calibration file were applied to the corresponding field survey data files by adding the dynamic correction factor to the respective measured data.

4.0 DATA ANALYSIS

4.1 DOWNLOADING, PARSING & FIELD QUALITY CONTROL

The magnetic data were downloaded to a field laptop computer using MagMap2000 software. The data were saved in binary format, with the date stamp and location as part of the naming structure. The EM data were downloaded to a field laptop using WinGEM2 software. The data were saved in binary format, with the date stamp and location as part of the naming structure.

4.2 GENERALIZED PROCESSING STEPS

4.2.1 Magnetics Processing and Plotting

The process included the following steps:

1. Removal of diurnal fluctuations was completed using the manufacturer supplied MagMap2000 software (Geometrics, Inc.).
2. Coordinate conversion from UTM to WA State Plane (feet) using Corpscon Software (US Army Corps of Engineers).
3. Assembling the master database table from the individual data files, using Microsoft Excel.

4. Removing data spikes from the individual data files, using Microsoft Excel.
5. Visualization of results using Surfer mapping software (Golden Software, Inc.)

4.2.2 Electromagnetics Processing and Plotting

Electromagnetic data processing was similar to magnetic data processing. The process included the following steps:

1. Running the raw data files though WinGem2 to add electrical conductivity to the files.
2. Coordinate conversion from UTM to WA State Plane (feet) using Corpscon Software (US Army Corps of Engineers).
3. Normalization of data for each individual data collection file, performed to correct for instrument drift that occurs each time the data acquisition system is restarted.
4. Assembling the master database table from the individual data files, using Microsoft Excel.
5. Removing data spikes from the individual data files, using Microsoft Excel.
6. Visualization of results using Surfer mapping software (Golden Software, Inc.)

4.3 DETAILED PROCESSING STEPS

4.3.1 Parameter Conversion (EM)

The raw EM data was run through Geophex's WinGEM2 program to calculate the electrical conductivity. The settings used in WinGEM2 were that the instrument was in a horizontal coplanar orientation, the sensors were separated by 5.45 feet (1.66 meters), and the data was collected 3.3 feet (1 meter) from the ground. This step was applied to both the calibration and data files.

4.3.2 Coordinate Conversion

After diurnal corrections to the data, the GPS data were converted from Universal Transverse Mercator (UTM) to WA State Plane using Corpscon Version 6 Software (Army Corps of Engineers). GPS data were recorded at an interval of one data point per second and magnetic data were recorded five times per second; the resulting GPS location for each magnetic reading was linearly interpolated within the magnetometer's data acquisition system.

4.3.3 Data Normalization

After inversion, the data were shifted for the day-to-day changes called drift. The day-to-day changes were calculated from a coincident data collection run at the beginning of each collection day that was performed at a calibration site. Slight differences in the daily data records occurred due to environmental or instrument setup changes. Calibration data were acquired along the same survey line, after an instrument warm up period of no less than 15 minutes. The calibration data record was compared to the mean data value for each data file and an offset value, from the previous data file, was calculated.

4.3.4 Assembling Master Table

After coordinate conversion, the data from the individual survey files were combined within a single Microsoft Excel file.

4.3.5 Spike Removal

After assembling the master sheet, large magnitude data spikes were smoothed. This was done to both EM and Mag data to help with the plotting of the data. The features remain unchanged while the magnitudes of the data spikes are reduced.

4.3.6 Data Plotting

The files were gridded in Surfer Version 11 Software (Golden Software, Inc.) using a spatial interpolation algorithm (kriging). The gridding and interpolation allowed a contour plot of data to be placed over a survey area base map for interpretation of linear or discrete objects. In addition, the location of field-observed, above-ground infrastructure were recorded using a GPS and were added to the base map.

5.0 RESULTS & INTERPRETATION

This section contains figures created from the magnetic (Mag) and electromagnetic surveying (EM) effort. These figures and the results within are discussed in the subsequent sections. The objective of the geophysical survey was to evaluate the infilled former log pond area, focused on evaluating the presence or absence of reportedly buried drums, pipes, or other preferential pathway voids.

Electrical conductivity and in-phase measurements from electromagnetic induction were acquired for the frequencies of 1,530 Hz, 5,310 HZ, 9,810 Hz, and 18,330 Hz. The 9,810 Hz frequency is representative of all five frequencies and is selected for presentation in this report. With respect to the geophysical survey objective, contrasts in electrical conductivity of the subsurface could highlight regions containing building foundations, non-metallic wastes, or variations in fill material and moisture content. In addition, the electrical conductivity measurements will be sensitive to the presence of ferrous and non-ferrous metals. The in-phase component is generally not as sensitive to changes in soil conductivities when compared to the electrical conductivity component; the in-phase component tends to respond to the presence of ferrous and non-ferrous metal. The EM data were contoured to show the spatial representation of detected features.

The corrected total magnetic field provides a tool for mapping near-surface ferrous objects. The Mag data were also contoured to show the spatial representation of detected features. The combination of EM and Mag data sets allow some amount of discrimination between ferrous and non-ferrous objects.

5.1 CONTOURED RESULT MAPS

EM conductivity data respond with positive magnitudes, where larger readings can indicate either a larger response, close proximity to a target, or a combination of the two. Therefore, the contoured results are presented with background areas highlighted in pink tones (indicating low magnitude responses), areas with potential variations in fill material or moisture content in green tones, and high magnitude features (for example foundation responses) in yellow to red tones. Based on the large amplitude responses typical of industrial sites it should be noted that the color scale is not linear, for example the variation in conductivity value between the pink and green tones is much smaller (indicating subtle variations in material properties for example) than between the green and red tones.

In contrast, EM in-phase data produce both positive and negative numerical responses to various features depending on the physical location and orientation of instrument to target, the physical

arrangement of the target, the target's physical composition, or some combination of these properties. To highlight these features, the in-phase color scale uses light blue tones to indicate background areas of low magnitude readings, and both red/magenta (positive) and dark blue (negative) tones to indicate high magnitude readings that may indicate above- and below-ground objects.

The Mag total field data is similar to EM in-phase data in that responses can be positive or negative depending on the position and orientation of the sensor to the mapped target, once the regional magnetic field has been removed. It is difficult to calculate the regional magnetic field based on the scale of the current survey area, but we have assumed the regional value is around the average of the total field data. The color scale is therefore similar to the EM in-phase color scale, with yellow tones indicating background low magnitude response and red/magenta (positive) / blue (negative) tones indicating high magnitude responses likely caused by detected objects.

The color-contoured results for the three geophysical measurement data sets are shown in Figures 7 thorough 9. Each plot (geophysical parameter) presents a unique color scale that is designed to highlight detected features. The maps also contain a posting of mapped above-ground surface objects and a base aerial photo for the project site.

Section 7.3 in Appendix A (EXAMPLE EM AND MAG RESPONSES) shows an example of typical EM and Mag responses to subsurface objects, taken from a previous survey at a test facility which contained a number of known subsurface targets. The results highlight the typical dipolar responses observed for an underground metallic pipeline and steel underground storage tank.

Figure 7. Contoured Results for Electromagnetic Conductivity Data (Gray Crosses Denote Locations of Metal Surface Debris and Well Locations).

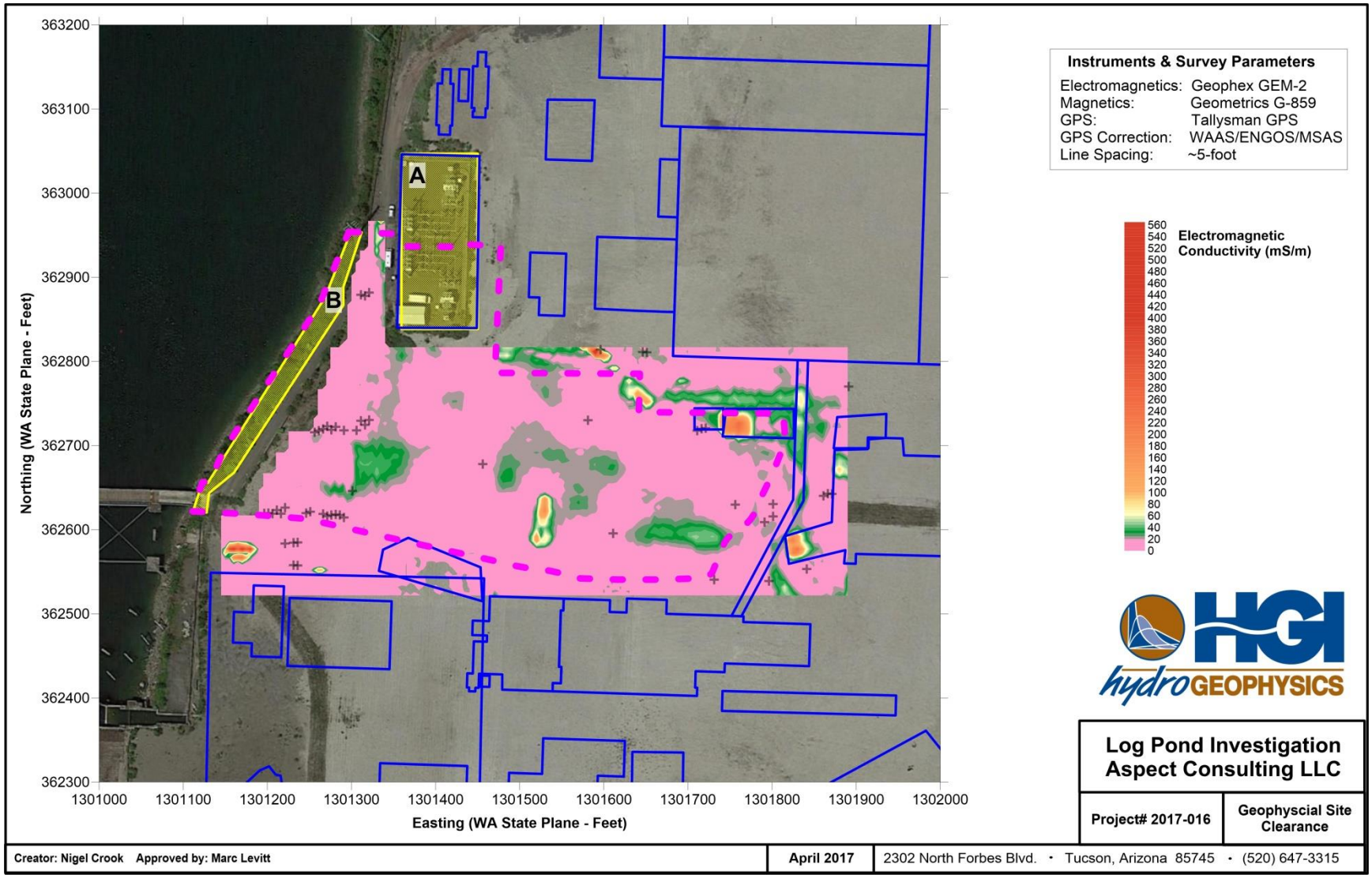

Figure 8. Contoured Results for Electromagnetic In-Phase Data(Gray Crosses Denote Locations of Metal Surface Debris and Well Locations).

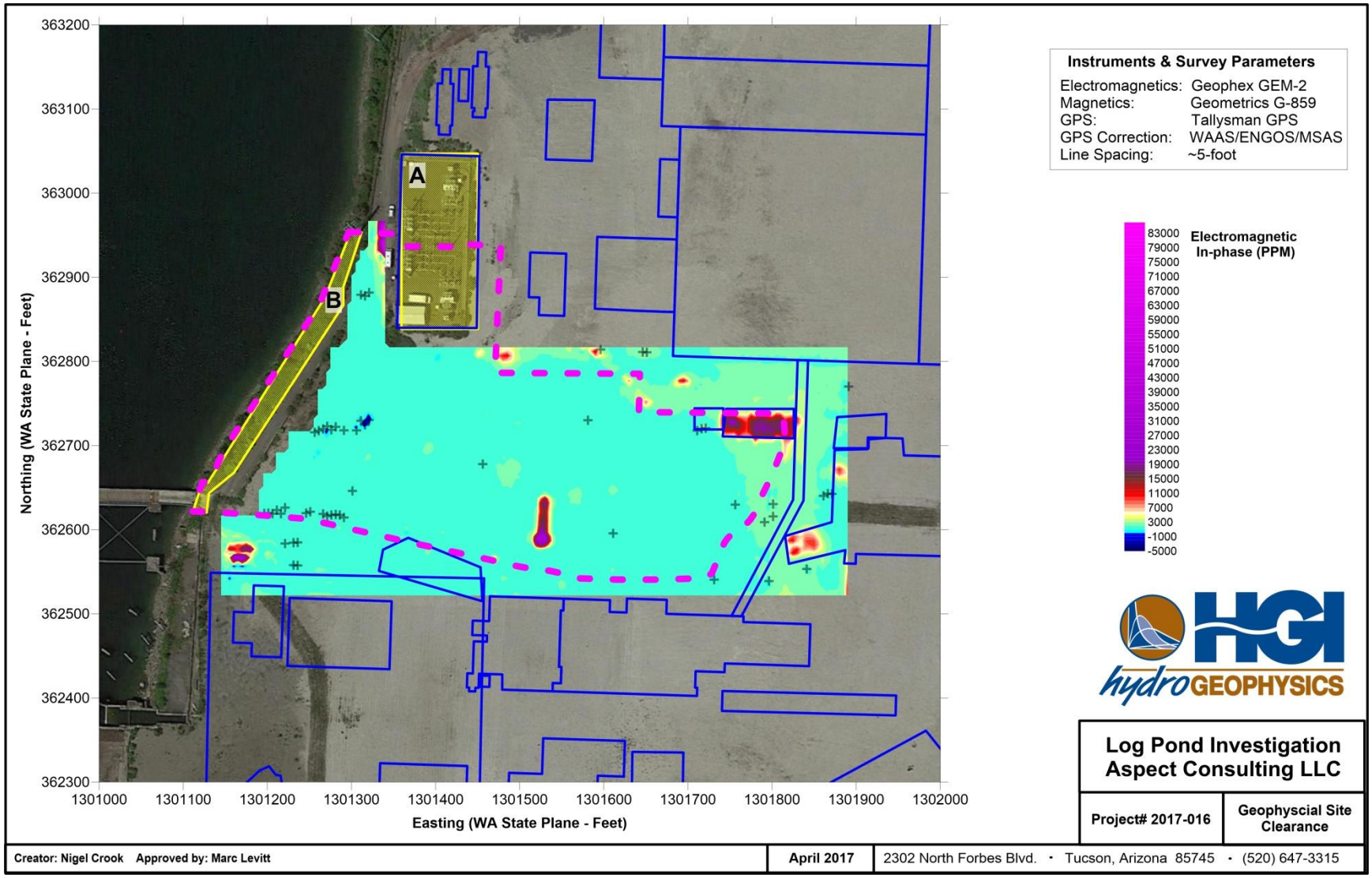

Figure 9. Contoured Results for Magnetic Total Field Data (Gray Crosses Denote Locations of Metal Surface Debris and Well Locations).

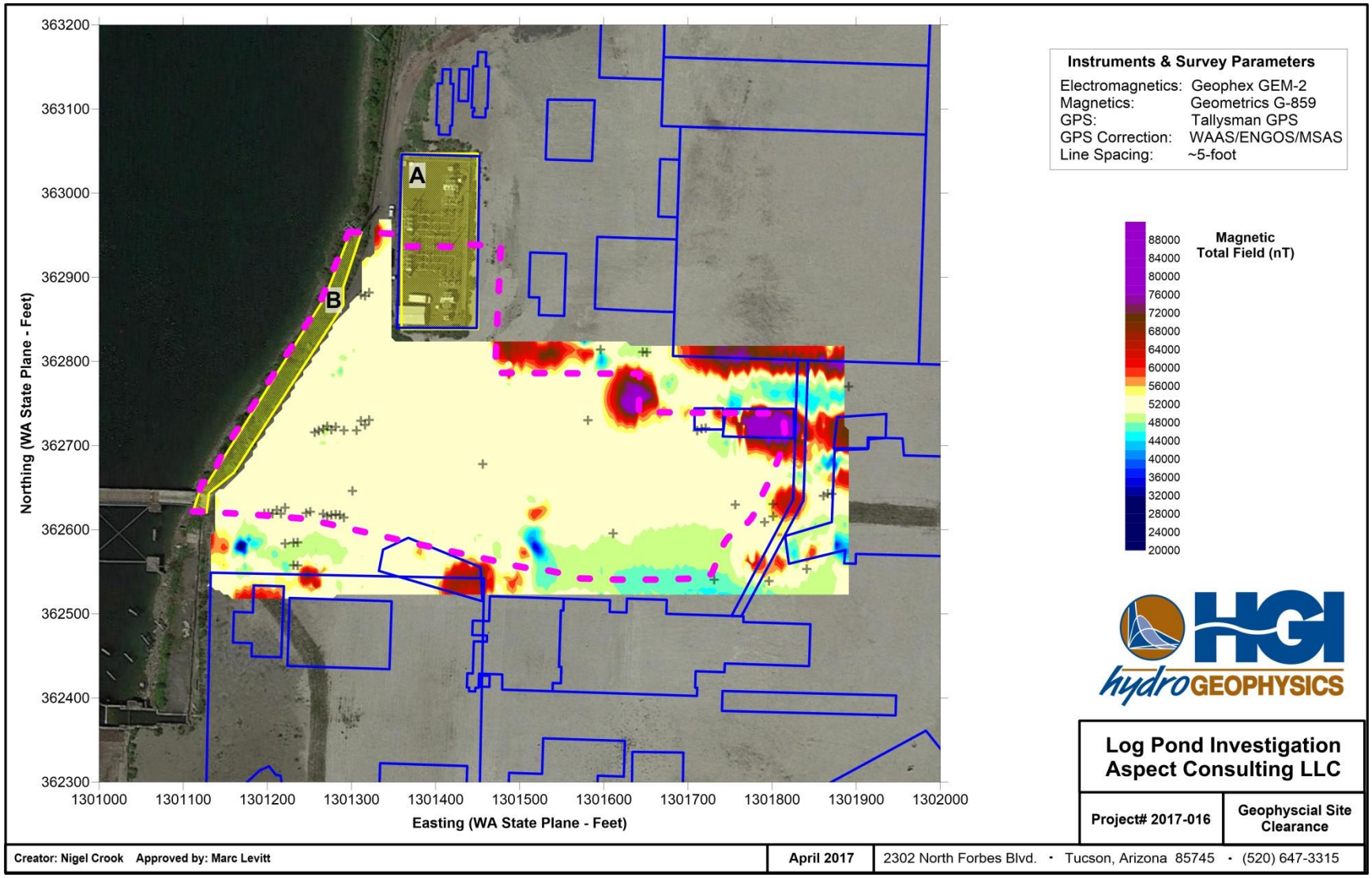

5.1.1 Potential Responses to Former Buildings and Structures

All three geophysical parameters show evidence of high magnitude response coincident with the outlines of former buildings and structures across the site, located along the edges or outside of the former infilled log pond area, (indicated by **(Build)** in Figures 10 through 12). These responses tend to be broad in nature that correspond to a significant portion or particular sections of a number of the building or structure outlines. These responses span both the EM and Mag results, suggesting that these are related to metallic responses in the subsurface. This could indicate that all or sections of the foundations of these structure remain in the subsurface, with the responses related to the rebar reinforcement within the foundations. Alternatively, these could be responses to metal subsurface structures associated with these buildings that remain in place, such as vaults, drainage infrastructure, etc. It is also possible that the debris from the demolition of the previous buildings and structures was simply left in place, which could lead to these former building outlines containing a higher percentage of metal from these structures. The Mag results display a number of additional responses, notably to the building outline along the northeast edge of the survey area, which do not appear in the EM results. This could indicate that these responses are from deeper features below the imaging sensitivity of the EM instrument.

5.1.2 Utilities Responses

There appears to be a number of linear, high magnitude features that run across the northern section of the survey area, located just to the north of the former infilled log pond boundary (indicated by the **dashed dark blue** line in Figures 10 through 12). On industrial sites, linear subsurface responses such as this tend to be associated with utilities or their associated structures, such as concrete vaults or conduits. This appears to run from the building/structure outline in the northeast corner of the former infilled log pond area to the west, before trending northwest, and running along the northern boundary of the survey area towards the current electrical substation area. This response appears more significant in the EM conductivity results, appearing as a high amplitude continuous response, with a much more discontinuous response, subtle responses for the majority of the EM in-phase and Mag results. This could indicate an intermittent metallic content associated with these utilities or structures, or that the utilities were removed and the trenches backfilled with variable demolition debris.

5.1.3 Unknown Below-Ground Responses

There are several features of interest that do not correlate with any known above-ground objects and also do not coincide with the former building and structures outlines.

Feature (C) (Figure 10 through 12), located to the southwest of the infilled log pond area, displays a high amplitude response in both the EM conductivity and in-phase and Mag results.

This would suggest this is a response to a ferrous metal subsurface feature, potentially in the near-surface (upper 10-15 feet) based on the limit of the EM instrument sensitivity. This corresponds to the location of former above ground infrastructure, and based on historic aerial photographs of the site this could be a response to the footings of a supporting tower for this structure, which was likely reinforced with rebar (highlighted by the orange outline in the historic aerial photograph in Figure 13).

The main feature of interest relating to this survey is labelled as feature (D), which is located within the outline of the former infilled log pond. This feature displays a significant high amplitude response in both the EM conductivity and in-phase results. The response in the Mag results again displays a significant response from the average background, although the dipole nature of the structure of this response makes it appear a less significant compared to the EM results. The presence of a response in all three results would suggest this is a response to a ferrous metal subsurface feature, again potentially in the near-surface (upper 10-15 feet) based on the limit of the EM instrument sensitivity. The difference in the nature of the structure of the response would likely reflect the difference in resolution and sensitivity of the two techniques and respective instruments. The EM instrument tends to produce a broad response to features due to the transmitter inducing a signal over the entirety of any metallic object in the subsurface. The magnetometer is a passive instrument and measures the variations in the Earth's magnetic field produce by subsurface features, such as ferrous metal objects. Since the Earth's magnetic field is inclined to the ground surface at these latitudes features such as ferrous metal objects will typically produce dipolar anomalies, similar to the structure observed in the feature (D) results. The multiple high and low amplitudes observed could indicate a number of overlapping signals from multiple ferrous metal targets in the location of feature (D).

We feel the features described in this section may be potential targets of interest for this project, and, while we have used our best judgment from previous experience on similar sites, they should be confirmed via physical investigation.

There are a number of additional areas that show elevated amplitude responses in the EM conductivity survey results, labelled as features (E). These features are not as high amplitude as the previously described features and responses and are only present in the EM conductivity results, suggesting a non-metallic response. Therefore, these could indicate either an increase in the soil moisture in these areas, potential for different backfill/materials in subsurface, or non-metallic debris.

Figure 10. Interpreted Contoured Results for Electromagnetic Conductivity Data (Gray Crosses Denote Locations of Metal Surface Debris and Well Locations).

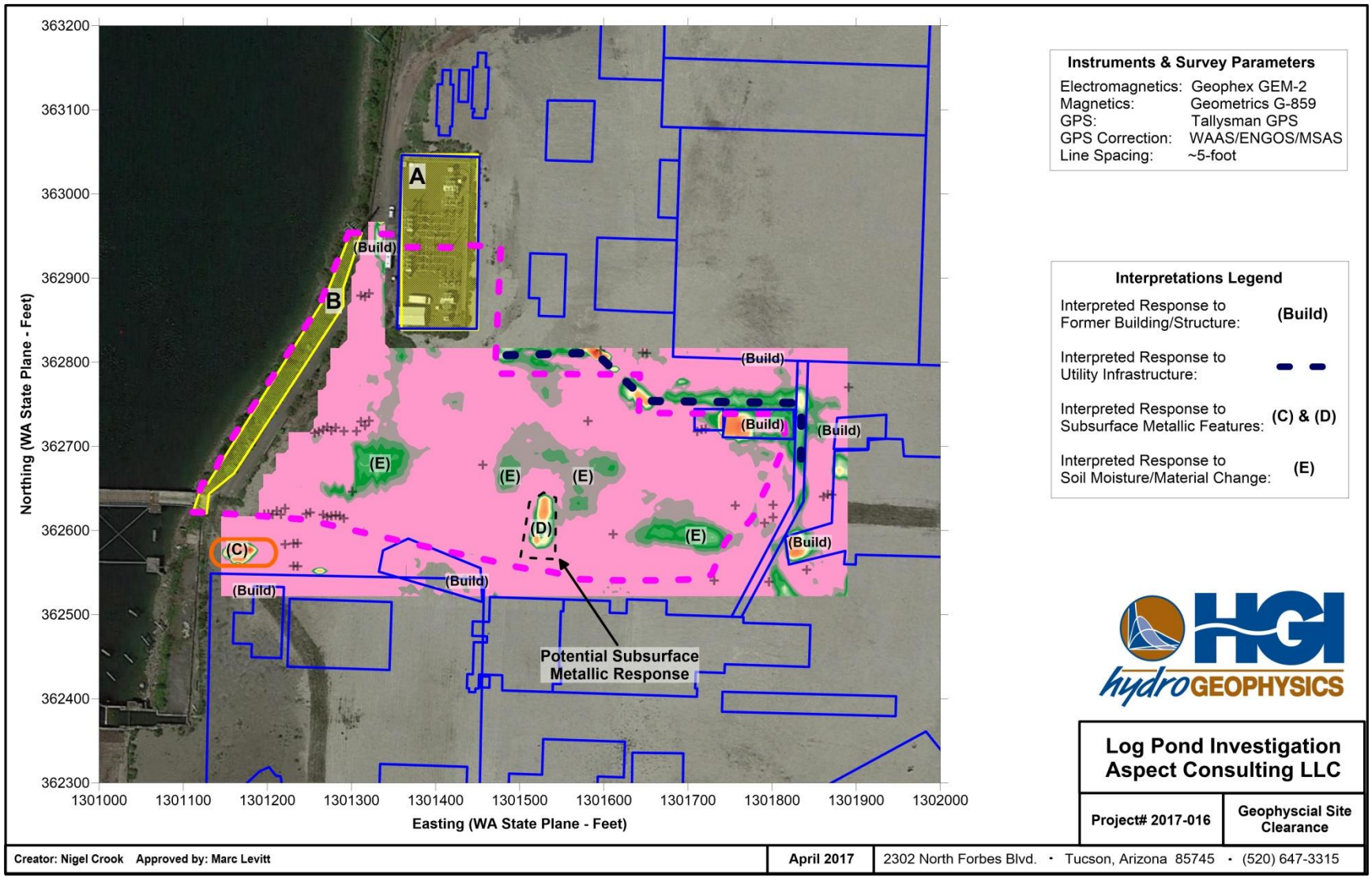

Figure 11. Interpreted Contoured Results for Electromagnetic In-Phase Data(Gray Crosses Denote Locations of Metal Surface Debris and Well Locations).

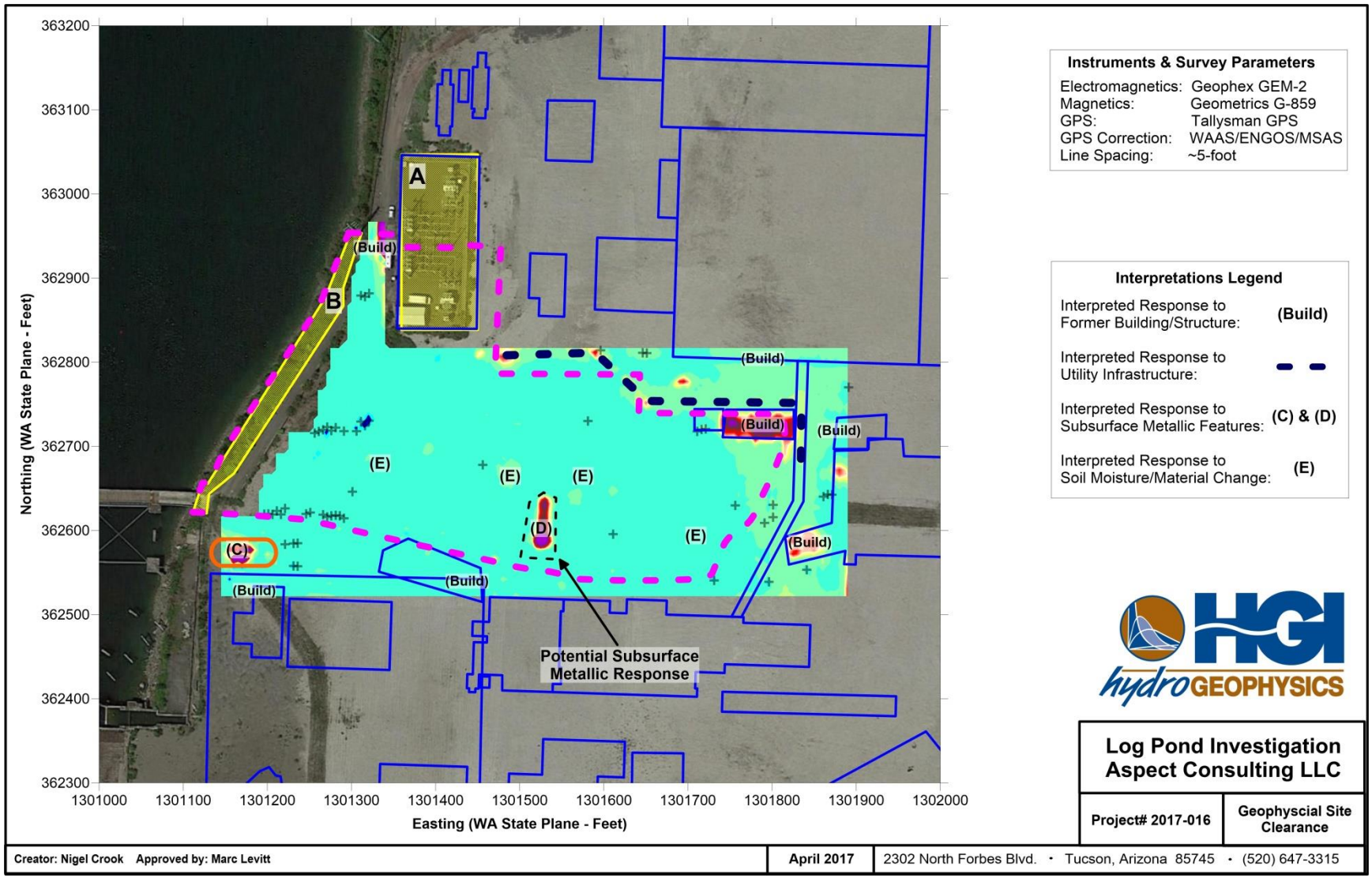

Figure 12. Interpreted Contoured Results for Magnetic Total Field Data (Gray Crosses Denote Locations of Metal Surface Debris and Well Locations).

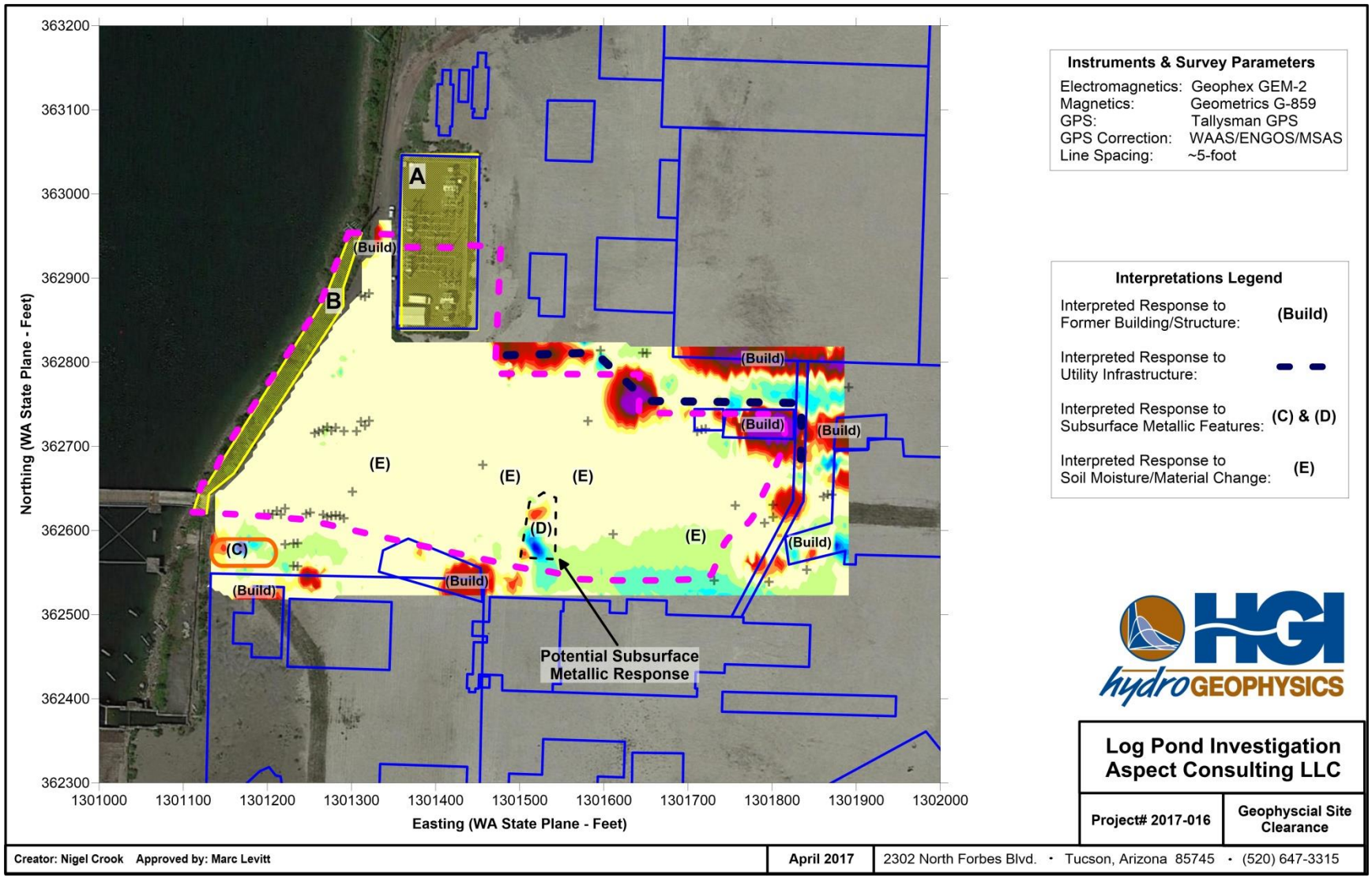

Figure 13. Historic Aerial Photograph of the Project Site (before demolition and clearance of the buildings and structures) Highlighting the Above Ground Conveyor System and Footings (orange outline) Associated with Feature (C).

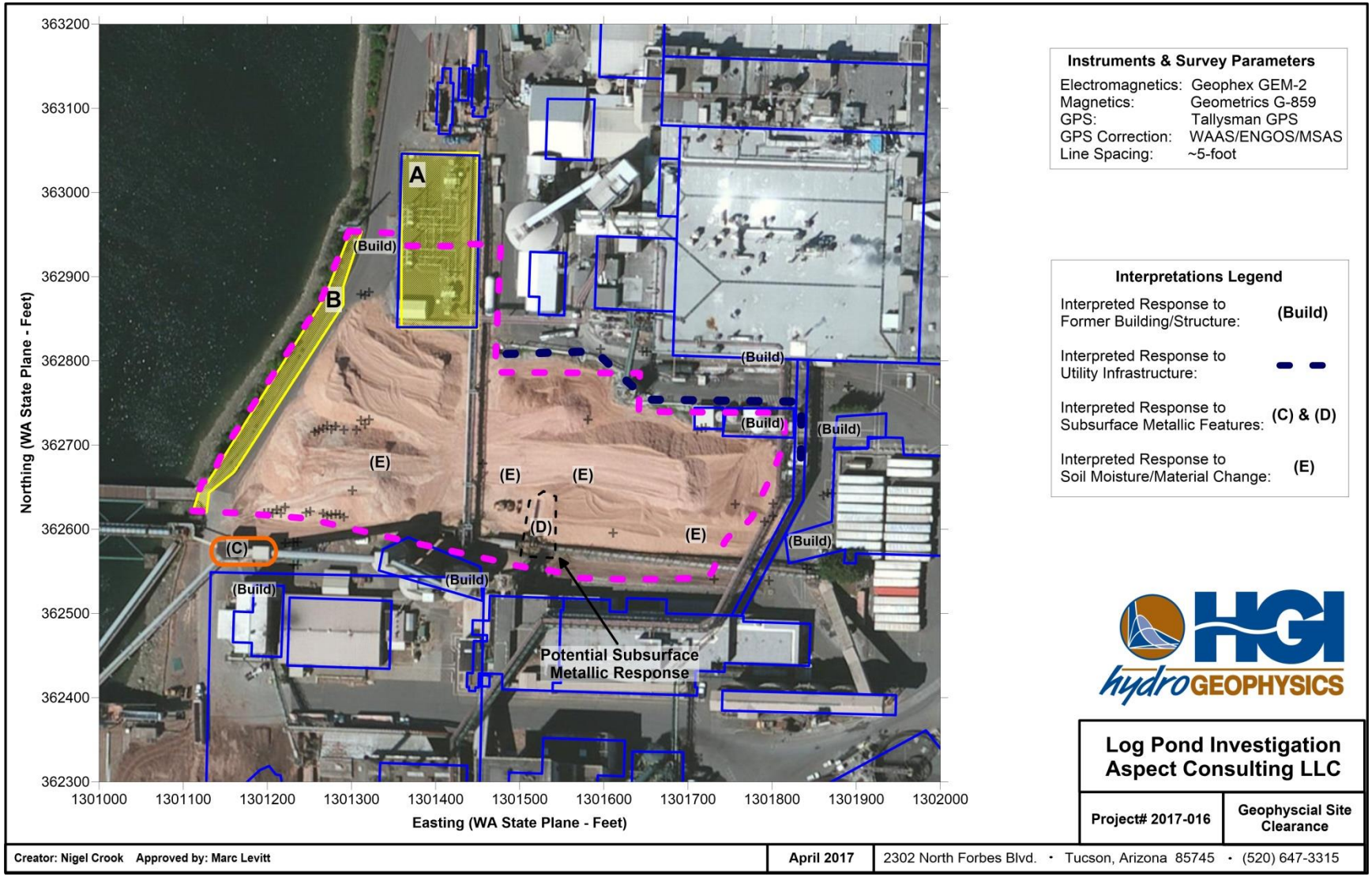

6.0 REFERENCES

Grant F.S. and G.F. West, 1965. Interpretation Theory in Applied Geophysics, McGraw-Hill Book Co. New York.

Schlinger, C.M., 1990, Magnetometer and Gradiometer Surveys for Detection of Underground Storage Tanks. Bulletin of the Association of Engineering Geologists Vol. XXVII:37-50.

Telford, W.M., L.P. Geldart, and R.E. Sherriff, 1990, *Applied Geophysics*, Cambridge University Press, Cambridge, United Kingdom.

7.0 APPENDIX A: THEORY

This section provides summary level descriptions for the theory behind the different geophysical tools and methods used in the DGM.

7.1 MAGNETOMETRY

Magnetometry is the study of the Earth's magnetic field and is the oldest branch of geophysics. The Earth's field is composed of three main parts:

1. Main field – This field is internal (i.e., from a source within the Earth that varies slowly in time and space).
2. Secondary field – This field is external to the Earth and varies rapidly in time.
3. Small internal fields – These are constant in time and space and are caused by local magnetic anomalies in the near-surface crust.

Of interest to the geophysical survey are the localized anomalies or responses in the magnetic field. These anomalies are either caused by magnetic minerals, mainly magnetite or pyrrhotite, or buried steel, and are the result of contrasts in the magnetic susceptibility (k) with respect to the background sediments. The average values for k are typically less than 1 for sedimentary formations and upwards to 20,000 for magnetite minerals.

The magnetic field is measured with a magnetometer. Magnetometers permit rapid, non-contact surveys to locate buried metallic objects and features. A one person portable field unit can be used virtually anywhere a person can walk; although, they may be sensitive to local interferences, such as fences and overhead wires. Field-portable magnetometers may be single- or dual-sensor. Single-sensor magnetometers measure total field. Dual-sensor magnetometers are called gradiometers and measure gradient of the magnetic field.

Common magnetic survey configurations include total field surveys and gradient surveys. The total field survey use two magnetometers; the first magnetometer is used as a base station to record the Earth's primary field and the diurnally changing secondary field. The second magnetometer is used as a rover to measure the spatial variation of the Earth's field and may include various components (e.g., inclination, declination, and total intensity). By removing the temporal variation and perhaps the static value of the base station from that of the rover, one is left with a residual magnetic field that is the result of local spatial variations only. The rover magnetometer is moved along a predetermined linear grid laid out at the site. Readings are virtually continuous and results can be monitored in the field as the survey proceeds. Gradient surveys use dual-sensor magnetometers, called gradiometers, and measure gradient of the magnetic field. Since both sensors record the same diurnal variation, subtracting one sensor reading from the other for the gradient calculation cancels this out and so a base station is not required.

The shortcoming with most magnetometers is that they only record the total magnetic field (**F**) and not the separate components of the vector field. This shortcoming can make the interpretation of magnetic anomalies difficult, especially since the strength of the field between the magnetometer and target is reduced as a function of the inverse of distance between the magnetometer and target, cubed. Additional complications can include the inclination and declination of the Earth's field, the presence of any remnant magnetization associated with the target, and the shape of the target.

From basic magnetic field theory (Grant and West, 1965), the magnetic field, due either to a point (dipole) source or a three-dimensional finite volume of magnetized material, decays in proportion to r^3 as the distance from the source increases, where r is the separation between the source and the magnetometer. The gradient of the field, on the other hand, decays in proportion to r^4. By means of Fourier transform, it is possible to show that a signal proportional to r^4 has more power at higher spatial frequencies relative to a signal proportional to r^3 (the field itself). Consequently, the magnetic gradient signal due to a given three-dimensional source is more limited in spatial extent, making discrete near-surface bodies appear more pronounced compared to background readings.

Schlinger (1990) showed the effects of a dipole source (i.e., a uniformly magnetized buried sphere on the geomagnetic field at several latitudes). Figure 14 shows where the anomaly is positioned at 0 meters at a depth of 2 meters below ground surface with the measurement at 2 meters above the ground surface. The figure shows the response of both total magnetic field and vertical magnetic gradient. Both plotting methods are sufficient at discriminating bodies in the near surface, but the total field is only useful for determining deeply buried bodies.

The presentation of magnetic data is accomplished with a contour map, where the magnitude of the magnetic field or vertical magnetic gradient data is represented by isopleths. In general, the buried objects will appear as either a mono-polar or dipolar anomalous response. For near-surface infrastructure mapping of steel objects, the values of the magnetic field can be several hundred to several thousand times higher than the background field. Linearly continuous anomalies observed along adjacently acquired data are interpreted as buried pipelines and singular anomalies that are not continuous are interpreted as discrete buried objects (tanks, drums, wells).

Figure 14. Magnetic Anomalies for a Sphere at (A) mid latitude, (B) Equator, (C) near the north pole.

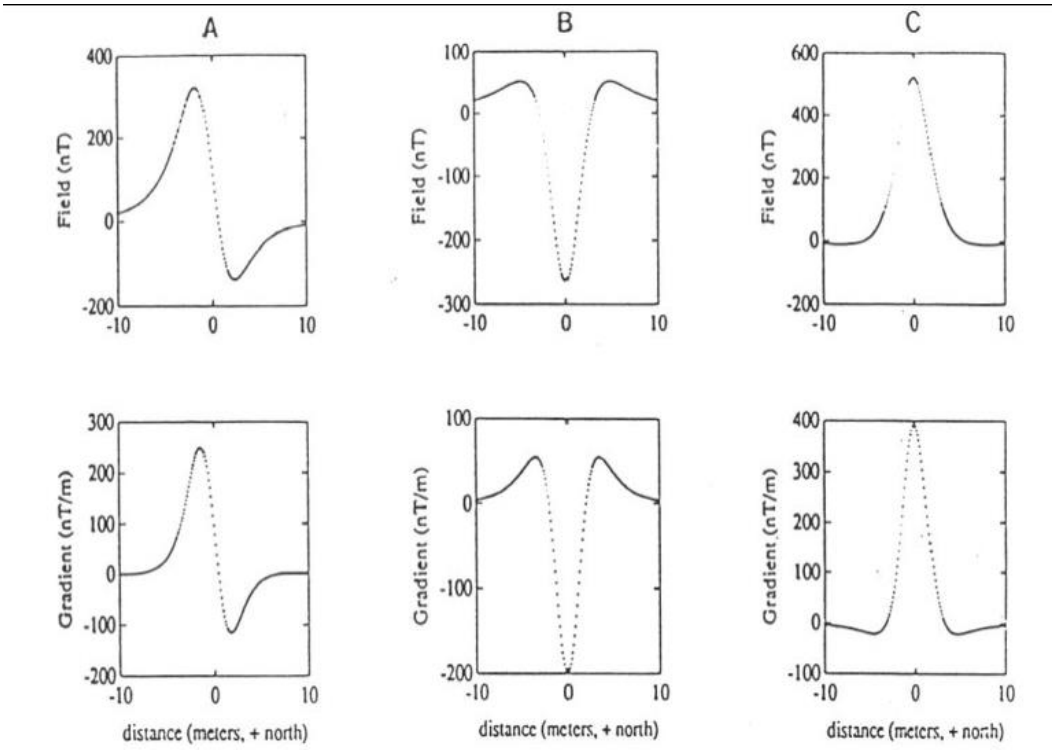

Source: Schlinger, C.M., 1990. Magnetometer and Gradiometer Surveys for Detection of Underground Storage Tanks. Bulletin of the Association of Engineering Geologists Vol. XXVII:37-50.

7.2 ELECTROMAGNETIC INDUCTION

EM data is typically collected using portable ground conductivity instrumentation. Basically, a transmitting coil induces an electromagnetic field and a receiving coil, at a fixed separation, measures the amplitudes of the in-phase and quadrature components of the resulting magnetic field. Various instruments have different coil spacings and operating frequencies. Spacing and frequency affect depth of signal penetration. Both single-frequency and multi-frequency instruments have been developed for commercial use.

Earth materials have the capacity to transmit electrical currents over a wide range. Earth conductivity is a function of soil type, porosity, permeability, and dissolved salts. Terrain conductivity methods seek to identify various Earth materials by measuring their electrical characteristics and interpreting results in terms of those characteristics. EM techniques are used to measure Earth conductivities of various soil, rock, and water components at individual survey areas. These techniques employ portable, rapid, non-invasive equipment operated at various frequencies depending on range and depth desired.

The recorded electromagnetic field is separated into two sub-components: in-phase and conductivity (also referred to as quadrature). The in-phase component is the most sensitive to metallic objects and is measured in parts per million (ppm). The conductivity component is sensitive to soil condition variations and is measured in log Siemens per meter (log S/m) using the GEM-2 instrument.

The EM method was chosen due to its capability for mapping changes in soil conductivity that are caused by soil moisture variations, disruption, or other physical property contrasts, and also for its ability to detect metallic objects (i.e., ferrous and non-ferrous) and its relatively rapid rate of data acquisition.

Electromagnetic induction methods use a transmitting coil and a receiving coil. The transmitting coil induces eddy currents in the Earth, which then generate magnetic fields that are affected by the earth materials within the excited zone. The receiving coil intercepts the field, resulting in an output voltage that is proportional to the conductivity within the area. Moving these coils results in variations in conductivity that can be interpreted to find buried features or objects.

The transmitting coil frequency and electrical conductivity of the host material primarily determine the depth of investigation for EM techniques. Referred to as skin depth in the literature (Telford et al., 1990), it generally describes the decay of the EM field through a conductive medium. Formally, the skin depth (δ) is defined as the distance through which the field decays to e-1 (~37%) of its original amplitude:

Skin Depth: $$\delta = \sqrt{\frac{2}{(\pi f)\mu\sigma}}$$

Where:

σ = electrical conductivity of the host material

μ = magnetic permeability

f = operating frequency of the instrument

There are several advantages of using a broadband, multi-frequency EM sensor. Since conductivity and permeability of the host material cannot be manipulated, the skin depth can be changed by changing frequencies. In theory, scanning through a frequency window is equivalent to depth soundings, where the results from multiple frequencies can be presented to understand the layering of earth materials. However, in practice HGI has observed that a fixed object of

high conductivity (such as a metal pipe) will appear in all frequencies, eliminating the possibility of depth-specific estimations for individual targets.

7.3 EXAMPLE EM AND MAG RESPONSES

Figure 15 shows an example of typical EM and Mag responses to subsurface objects, taken from a previous survey at a test facility which contained a number of known subsurface targets. The results highlight the typical dipolar responses observed for an underground metallic pipeline and steel underground storage tank. Responses will vary depending on the depth and orientation of the target to the geophysical sensor, as well as the target material of construction and the background geology. However, this does provide a general depiction of the types of responses we can expect from targets in an industrial complex.

Figure 15. Example of Mag (upper four panels) and EM (lower four panels) Responses for Underground Objects from a Test Facility Survey.

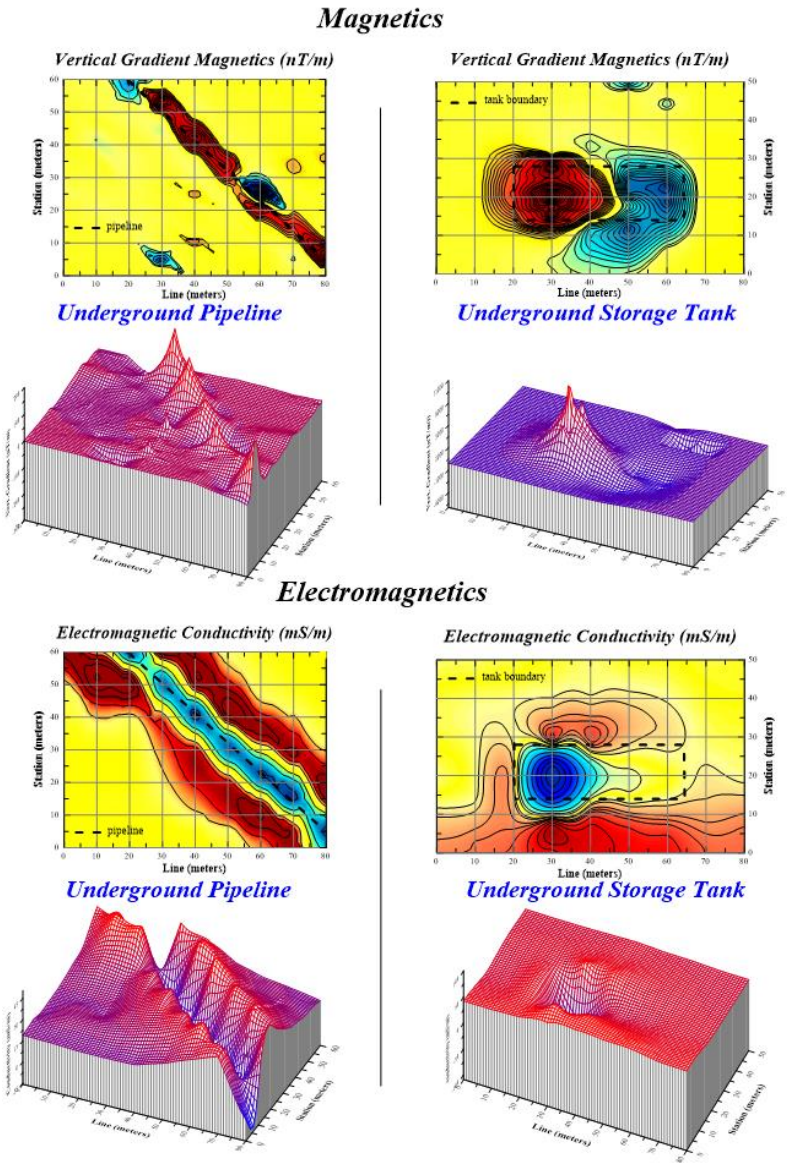

May 2017 Log Pond Boring and Trench Photo Log

The core photos from the soil boring activities in the former Log Pond are shown below, in consecutive order based on the boring identification number. Each core photo includes a card identifying the boring number and the depth of the pictured interval in feet below ground surface. Where more than one photo exists for a labeled interval, the core was collected and photographed in more than one continuous run and is depicted from shallow to deep. The photos of the two trenches completed at the former Chip Conveyor foundation follow photos of the soil borings.

LP-B-01[1]





[1]The photos for boring LP-B-01 are oriented with the identification card, the shallowest portion of the core is to the right of each photo.


LP-B-01
10-14


LP-B-01
DEPTH 14-16


LP-B-01
DEPTH 20-24


LP-B-01
DEPTH 20-24


LP-B-01
DEPTH 24-29


LP-B-01
DEPTH 30-34


LP-B-01
depth 34-35


LP-B-01
40-44



LP-B-02[2]



[2] The photos for boring LP-B-02 are oriented with the identification card, the shallowest portion of the core is on the right side of each photo.


LP-B-07
05-3


LP-B-02
0-1'


LP-B-02
DEPTH 10-15


LP-B-02
DEPTH 5-7'


LP-B-02
30-35


LP-B-02
DEPTH 35-38.5


LP-B-02
DEPTH 44-48'

LP-B-03[3]



[3] The photos for boring LP-B-03 are oriented with the identification card, the shallowest portion of the core is on the right side of each photo.


LP-B-01


LP-B-03


LP-B-03
10-15


LP-B-03
15-17


LP-B-03
DEPTH


LP-B-03
DEPTH


LP-B-03


LP-B-03
DEPTH 4.5-4.7


LP-B-03
DEPTH 45-49


LP-B-03
DEPTH 50-54


LP-B-03
DEPTH 54-59


DEPTH

LP-B-04[4]





[4] The photos for boring LP-B-04 are oriented with the shallowest portion of the core on the left side of each photo.


LP-B-04
DEPTH 10-15


LP-B-04
DEPTH 15-20


LP-B-04
DEPTH 28-30


LP-B-04
DEPTH 30-35


LP-B-04
DEPTH 35-40


LP-B-04
DEPTH 40-45


LP-B-04
DEPTH 45-50

LP-B-05[5]





[5] The photos for boring LP-B-05 are oriented with the shallowest portion of the core on the left side of each photo.


LP-B-05
DEPTH 10 - 20


LP-B-05
DEPTH 10 - 20


LP-B-05
DEPTH 20-30


LP-B-05
DEPTH 20-30


LP-B-05
DEPTH 30-40


LP-B-05
DEPTH 30-40


LP-B-05
DEPTH 40 – 50


LP-B-05
DEPTH 40 – 50


LP-B-05
DEPTH 50-60


LP-B-05
DEPTH 50-60

LP-B-06[6]



[6] The photos for boring LP-B-06 are oriented with the shallowest portion of the core on the left side of each photo.


LP-B-06
DEPTH 20-30'


LP-B-06
DEPTH 30-40


LP-B-06
DEPTH 30 -40

LP-B-07[7]





[7] The photos for boring LP-B-07 are oriented with the shallowest portion of the core on the left side of each photo.


LP-B-07
DEPTH 10-15


LP-B-07
DEPTH 15-20


LP-B-07
DEPTH 20-25


LP-B-07
DEPTH 25-30


LP-B-07
DEPTH 30-35


LP-B-07
DEPTH 35-40


LP-B-07
DEPTH 40-45


LP-B-07
DEPTH 45-50

LP-B-08[8]



[8] The photos for boring LP-B-08 are oriented with the identification card, the shallowest portion of the core is to the right of each photo.


LP-B-08
0-5


LP-B-08
DEPTH 10-20
N.R.


LP-B-08
DEPTH 20-24


LP-B-08


LP-B-08
DEPTH 30-34


LP-B-08
49-95


LP-B-08
49-95




LP-B-08
DEPTH 5.5-5.0


LP-B-08
DEPTH 95-50


LP-B-08
DEPTH 95-50


LP-B-08
DEPTH 59-54


LP-B-08


LP-B-08


LP-B-08


LP-H-08

Photographs from Test Trenches LP-T-1 and LP-T-2 at Former Chip Conveyor Foundation



East End of LP-T-1 (north trench)



West End of LP-T-1 (north trench)



East End of LP-T-2 (south trench)



West End of LP-T-2 (south trench)

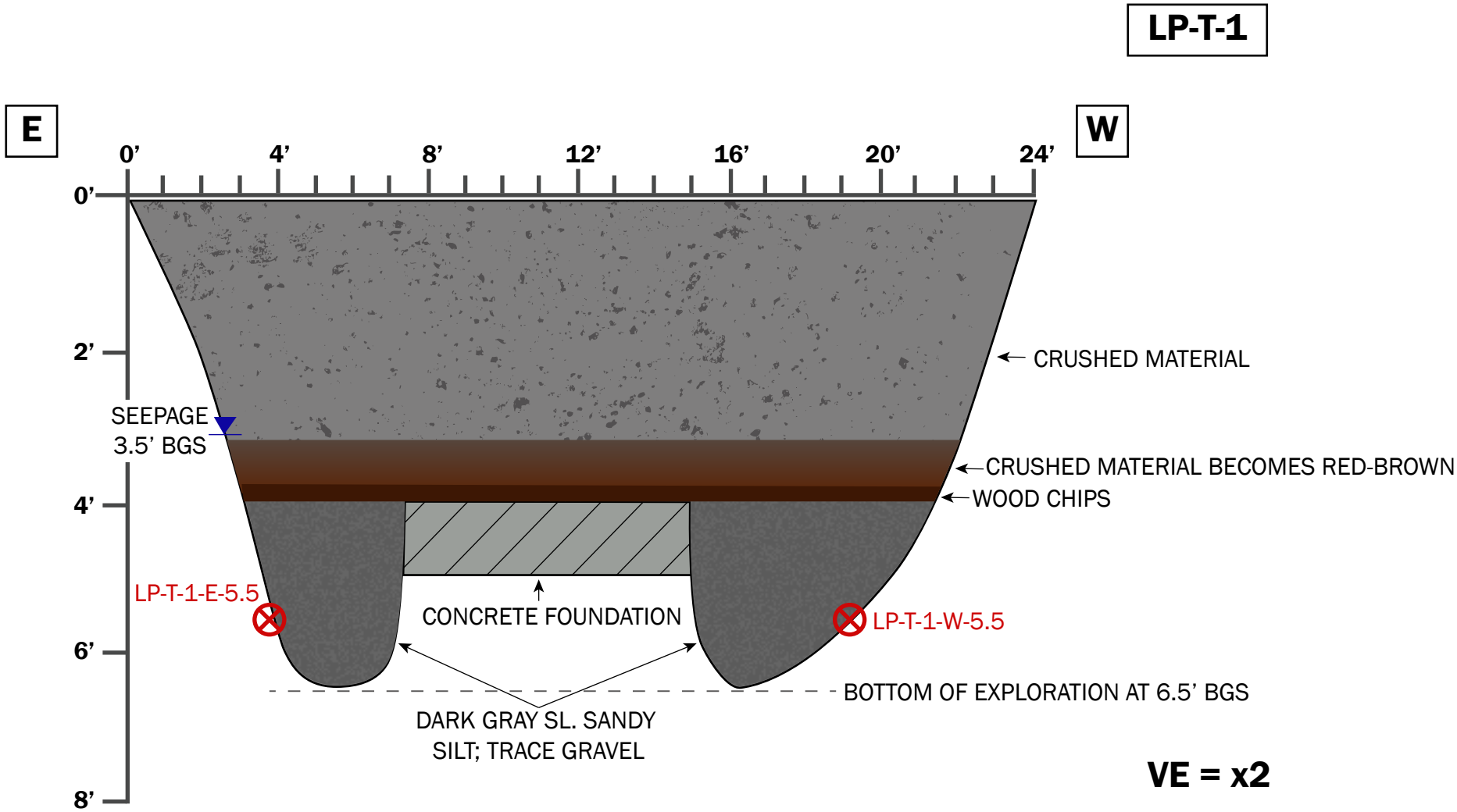
LP-T-1
E
W
0’
4’
8’
12’
16’
20’
24’
0’
2’
4’
6’
8’
SEEPAGE
3.5’ BGS
CRUSHED MATERIAL
CRUSHED MATERIAL BECOMES RED-BROWN
WOOD CHIPS
LP-T-1-E-5.5
CONCRETE FOUNDATION
LP-T-1-W-5.5
BOTTOM OF EXPLORATION AT 6.5’ BGS
DARK GRAY SL. SANDY
SILT; TRACE GRAVEL
VE = x2

LP-T-2

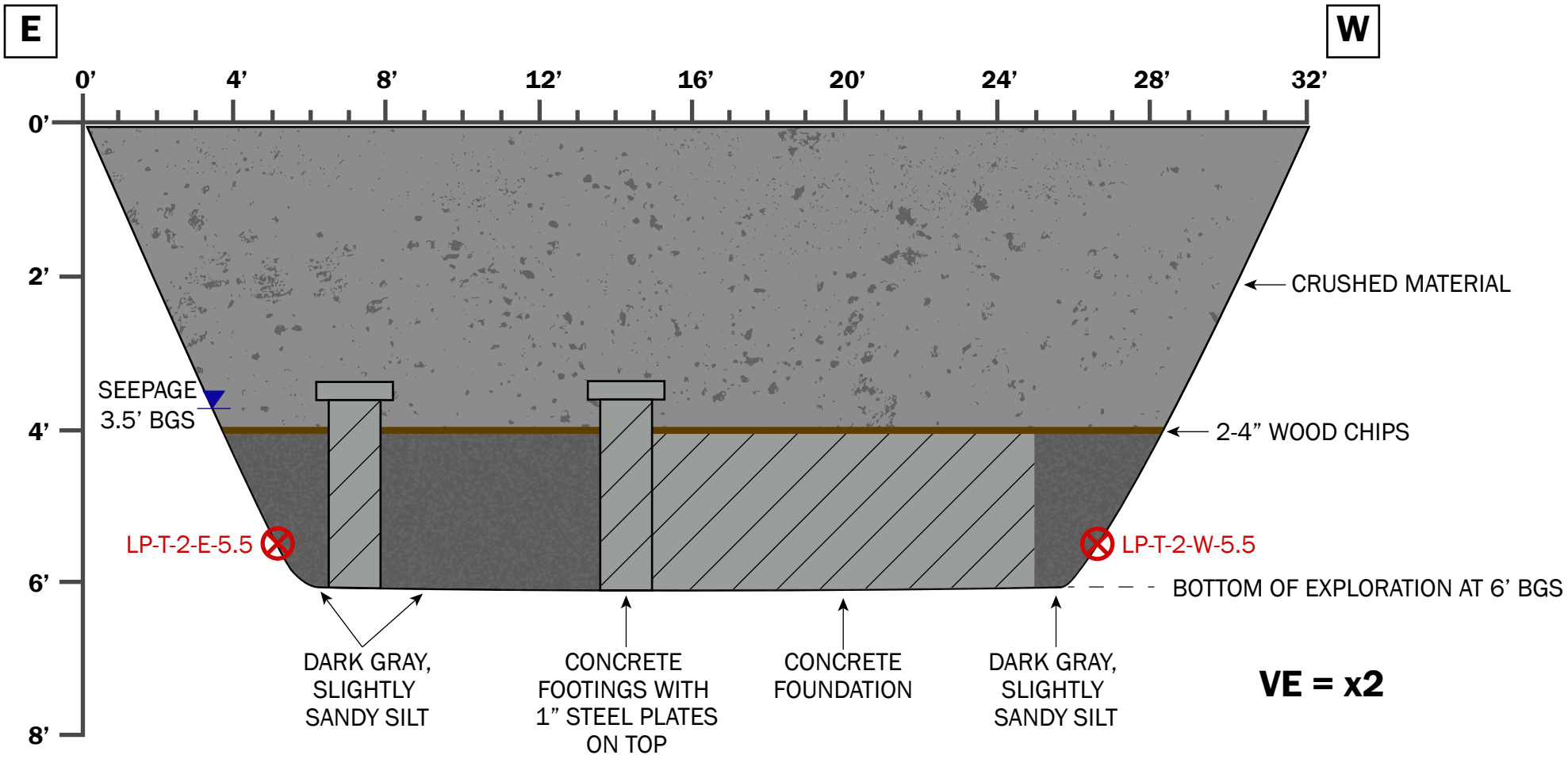
E
W
0’
4’
8’
12’
16’
20’
24’
28’
32’
0’
2’
4’
6’
8’
CRUSHED MATERIAL
SEEPAGE
3.5’ BGS
2-4” WOOD CHIPS
LP-T-2-E-5.5
LP-T-2-W-5.5
BOTTOM OF EXPLORATION AT 6’ BGS
DARK GRAY, SLIGHTLY SANDY SILT
CONCRETE FOOTINGS WITH 1” STEEL PLATES ON TOP
CONCRETE FOUNDATION
DARK GRAY, SLIGHTLY SANDY SILT
VE = x2

APPENDIX L

Selected Photographs



Photograph 1. Core from Direct Push Drilling (May 2012)

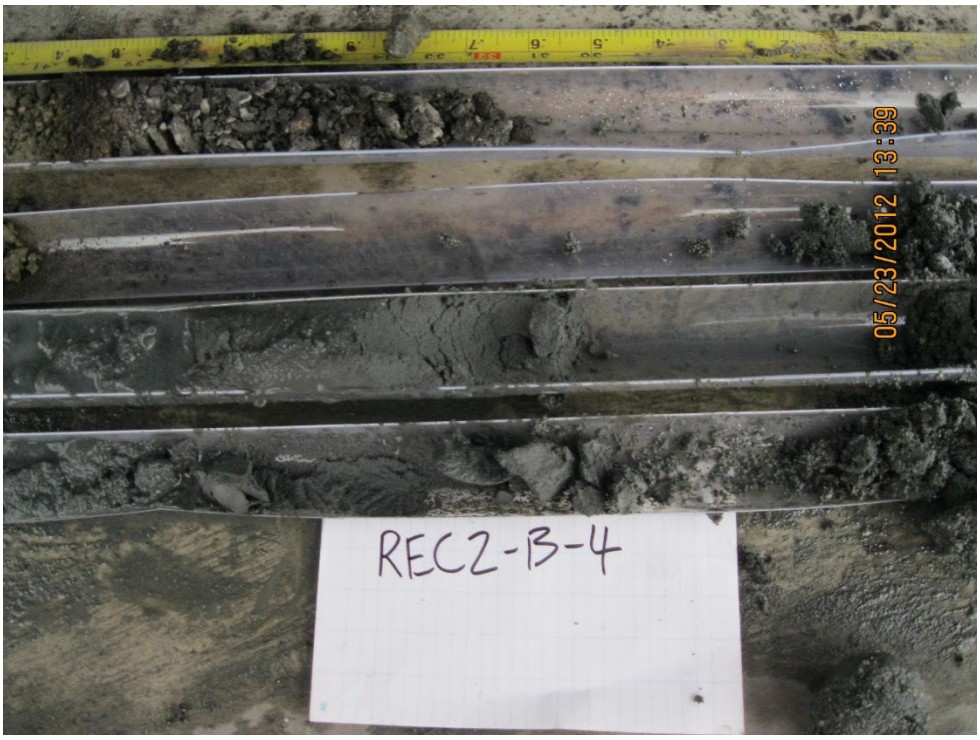

Photograph 2. Core from Direct Push Drilling, REC2-B-4 location (May 2012).



Photograph 3. Crushed Material Prior to Placement during Demolition (April 2013)



Photograph 4. Sub-Slab Air Sampling inside Warehouse (Round 1, February 2014)



Photograph 5. (From interim action) USTs 71, 72, 73 excavation: thin layer of bunker oil-contaminated soil left in place under concrete monolith on south edge of excavation



Photograph 6. (From interim action) USTs 71, 72, 73 excavation: bunker-contaminated soil left in place beneath one concrete monolith on northeast edge of excavation



Photograph 7. Sampling Intertidal Seep-3 (Oct 2016)



Photograph 8. Measuring Field Parameters at Intertidal Seep-6 (Oct 2016)



Photograph 9. Sampling Intertidal Seep-10 (Oct 2016)



Photograph 10. Deploying DGT Sampler (free sulfide) at Intertidal Seep-10 (Oct 2016)



Photograph 11. Rotosonic Drill Rig used for Log Pond Investigation Soil Borings



Photograph 12. Soil Core from Soil Boring LP-B-07 (includes sawdust with petroleum contamination)



Photograph 13. Deployed DGT Sampler for Log Pond Surface Water Location LP-SW-1 (July 2017)



Photograph 14. Damaged DGT Sampler from LP-SW-2 Location Along Log Pond (July 2017)

APPENDIX M

Detailed Cost Estimate for the Cleanup Alternative

Table M-1. Summary of Cost Estimates for the Cleanup Alternative and Contingent Actions

Project No. AS190583, K-C Worldwide Site Upland Area, Everett, Washington

Cleanup Actions for K-C Worldwide Site Upland Area, Everett, WA	Total Estimated Cost
Baseline Cleanup Action: Completed Actions, Capping of City Utility Property, Groundwater Compliance Monitoring, Cap Inspection and Maintenance, Institutional Controls	$ 29,800,000
Contingent Warehouse Vapor Barrier for Commercial Use	$ 2,000,000
Contingent Warehouse TPH Soil Removal and Capping	$ 3,200,000

Notes:

1) Cost are in 2023 dollars. Costs were estimated using Net Present Value (NPV) analysis, assuming a discount rate of 2.0 percent. for costing purposes, long-term operation and maintenance ("O&M") costs assume a 12-year groundwater compliance monitoring program, and cap inspection/maintenance for a 30-year period consistent with EPA guidance. The estimates have an intended accuracy in the range of -30 to +50 percent.

2) Estimates are rounded to the nearest $100,000.

Table M-2. Cost Estimate for the Cleanup Alternative (Without Contingent Actions)

Project No. AS190583, K-C Worldwide Site Upland Area, Everett, Washington

Site:	K-C Worldwide Site Upland Area, Everett, WA
Remedial Action Description:	**Completed actions; Capping of City Utility Property; Groundwater compliance monitoring; Long-term cap inspection and maintenance; Institutional controls.**
Cost Estimate Accuracy:	FS Screening Level (+50/-30 percent)

CONSTRUCTION COSTS

Item	Quantity	Unit	Unit Cost	Total Cost	Notes
Completed Cleanup Actions					
First Interim Action	1	LS	$ 4,160,000	$ 4,160,000	
Second Interim Action	1	LS	$ 2,250,000	$ 2,250,000	
Third Interim Action	1	LS	$ 22,700,000	$ 22,700,000	
Subtotal - Completed Cleanup Actions				***$ 29,110,000***	
Institutional Controls					
Legal fees	1	LS	$ 20,000	$ 20,000	
Technical and administrative support	1	LS	$ 10,000	$ 10,000	
Soil and Groundwater Management Plan	1	LS	$ 15,000	$ 15,000	
			Subtotal	$ 45,000	
Contingency	10%			$ 4,500	
				$ 49,500	
Groundwater Compliance Monitoring					
Groundwater Compliance Monitoring Plan	1	LS	$ 25,000	$ 25,000	
Install and develop new monitoring wells	12	each	$ 3,000	$ 36,000	
			Subtotal	$ 61,000	
Tax	9.9%			$ 3,564	
Contingency	10%			$ 6,456	
Subtotal - Groundwater Compliance Monitoring				***$ 71,020***	
Cap Inspection and Maintenance					
Cap Inspection and Maintenance Plan	1	LS	$ 15,000	$ 15,000	
			Subtotal	$ 15,000	
Tax	9.9%			$ 1,485	
Contingency	5%			$ 824	
Subtotal - Cap Inspection and Maintenance				***$ 17,309***	
Professional Services (as percent of future capital costs)					
Project administration	3%		$ 137,830	$ 4,135	
Total Estimated Capital Costs				**$ 29,251,965**	

O&M COSTS - Net Present Value

Item	Annual Freq.	Unit Cost	Annual Cost	NPV Cost	Notes
Groundwater Compliance Monitoring					
Quarterly monitoring events, Years 1 and 2	4	$ 20,000	$ 80,000	$ 155,325	
Semiannual monitoring event, Years 3 through 12	2	$ 15,000	$ 30,000	$ 211,231	Assume reduced analyte list relative to Years 1-2.
Annual Reporting, Years 1 and 2	1	$ 25,000	$ 25,000	$ 48,539	
Annual Reporting, Years 3 through 12	1	$ 18,000	$ 18,000	$ 126,738	
Subtotal - Groundwater Compliance Monitoring				***$ 541,833***	
Cap Inspection and Maintenance					
Annual cap inspection	1	$ 8,000	$ 8,000	$ 179,172	Assumes 30 years for NPV, per EPA guidance
Report for annual cap inspection	1	$ 4,000	$ 4,000	$ 89,586	
Subtotal - Cap Inspection and Maintenance				***$ 268,757***	
Professional Services (as percent of Periodic O&M costs)					
Project administration		3%		$ 24,318	
Total, O&M Net Present Value				**$ 566,151**	
TOTAL ESTIMATED COST				**$ 29,800,000**	rounded to nearest $100,000
				$ 690,000	Excluding completed cleanup actions

Notes:

2.0% discount rate applied for NPV analysis based on real interest rates on 30-year Treasury notes and bonds (OMB Circular No. A-94, revised 12/12/2022)
Assumes the warehouse remains in place serving as an environmental cap, no capital costs.
Contingency costs include miscellaneous costs not currently itemized due to the current (preliminary) stage of design development, as well as costs to address unanticipated conditions encountered.
Taxes are not applied to project administration, design, management, monitoring, or reporting costs.

Table M-3. Cost Estimate for Contingent Vapor Barrier within Warehouse

Project No. AS190583, K-C Worldwide Site Upland Area, Everett, Washington

Site:	K-C Worldwide Site Upland Area, Everett, WA		
Remedial Action Description:	**Contingent Vapor Barrier Across Floor of Warehouse Building (for commercial use)**		
Cost Estimate Accuracy:	FS Screening Level (+50/-30 percent)		
Key Assumptions and Quantities:	3.2	acre	Warehouse floor area requiring vapor barrier

CONSTRUCTION COSTS

Item	Quantity	Unit	Unit Cost	Total Cost	Notes
Installation of Impervious Epoxy Vapor Barrier					
Building preparation	1.0	LS	$ 100,000	$ 100,000	Decommission wells, remove interior building features, rehab floo
Installation	139,000	SF	$ 10	$ 1,390,000	Post-applied epoxy-based chemical vapor barrier
			Subtotal	$ 1,490,000	
Tax	9.9%			$ 147,510	
Contingency	20%			$ 298,000	
Subtotal - Vapor Barrier in Warehouse				***$ 1,935,510***	
Professional Services (as percent of capital costs)					
Project administration	3%		$ 1,935,510	$ 58,065	
Total Estimated Capital Costs				**$ 1,993,575**	

O&M COSTS - Net Present Value

Item	Annual Freq.	Unit Cost	Annual Cost	NPV Cost	Notes
Total O&M Costs - Net Present Value				**$ -**	This contingent action has no incremental O&M costs beyond those of the Cleanup Alternative
TOTAL ESTIMATED COST				**$ 2,000,000**	rounded to nearest $100,000

Notes:

encountered.

Taxes are not applied to project administration, design, management, monitoring, or reporting costs.

Table M-4. Cost Estimate for Contingent TPH Soil Removal and Capping, Warehouse Subarea

Project No. AS190583, K-C Worldwide Site Upland Area, Everett, Washington

Site:	K-C Worldwide Site Upland Area, Everett, WA		
Remedial Action Description:	**Contingent Removal of TPH-Contaminated Soils and then Capping in Warehouse Footprint**		
Cost Estimate Accuracy:	FS Screening Level (+50/-30 percent)		
Key Assumptions and Quantities:	2300	tons	Estimated mass of contaminated soil for Subtitle D landfill disposal
	3.2	acre	Warehouse footprint requiring capping after soil removal

CONSTRUCTION COSTS

Item	Quantity	Unit	Unit Cost	Total Cost	Notes
Removal of TPH-Contaminated Soils, then Capping of Warehouse Footprint					
Mobilization/demobilization	1	LS	$ 240,000	$ 240,000	
Soil excavation, transport, Subtitle D disposal	2600	ton	$ 180	$ 468,000	
Excavation dewatering	1	LS	$ 75,000	$ 75,000	discharge to City sanitary sewer
Import, place, and compact gravel borrow	2600	ton	$ 30	$ 78,000	assume quantity equal to removal to restore grade
Construct asphalt cap w/ stormwater infrastructure	3.2	acre	$ 420,000	$ 1,344,000	compacted subgrade, 12" crushed base course, 9" asphalt
Pre-design testing & engineering design	1	LS	$ 100,000	$ 100,000	includes add'l characterization, EDR. bid package and process
Construction management and reporting	1	LS	$ 50,000	$ 50,000	
			Subtotal	$ 2,355,000	
Tax	9.9%			$ 233,145	
Contingency	20%			$ 471,000	
Subtotal - Removal of TPH-Contaminated Soils				***$ 3,059,145***	
Professional Services (as percent of capital costs)					
Project administration	3%		$ 3,059,145	$ 91,774	
Total Estimated Capital Costs				**$ 3,150,919**	

O&M COSTS - Net Present Value

Item	Annual Freq.	Unit Cost	Annual Cost	NPV Cost	Notes
Total O&M Costs - Net Present Value				**$ -**	Inspection/maintenance for the new warehouse area cap is assumed included in that element of the Cleanup Alternative, thus zero additional cost here.
TOTAL ESTIMATED COST				**$ 3,200,000**	rounded to nearest $100,000

Notes:

Costs assume that the Warehouse was previously demolished.

Mobilization/Demobilization costs are assumed to include equipment transport and setup, temporary erosion and sedimentation control (TESC) measures, bonds, and insurance.

Contingency costs include miscellaneous costs not currently itemized due to the current (preliminary) stage of design development, as well as costs to address unanticipated conditions encountered.

Taxes are not applied to project administration, design, management, monitoring, or reporting costs.

APPENDIX N

Environmental Health Disparity and Demographic Index

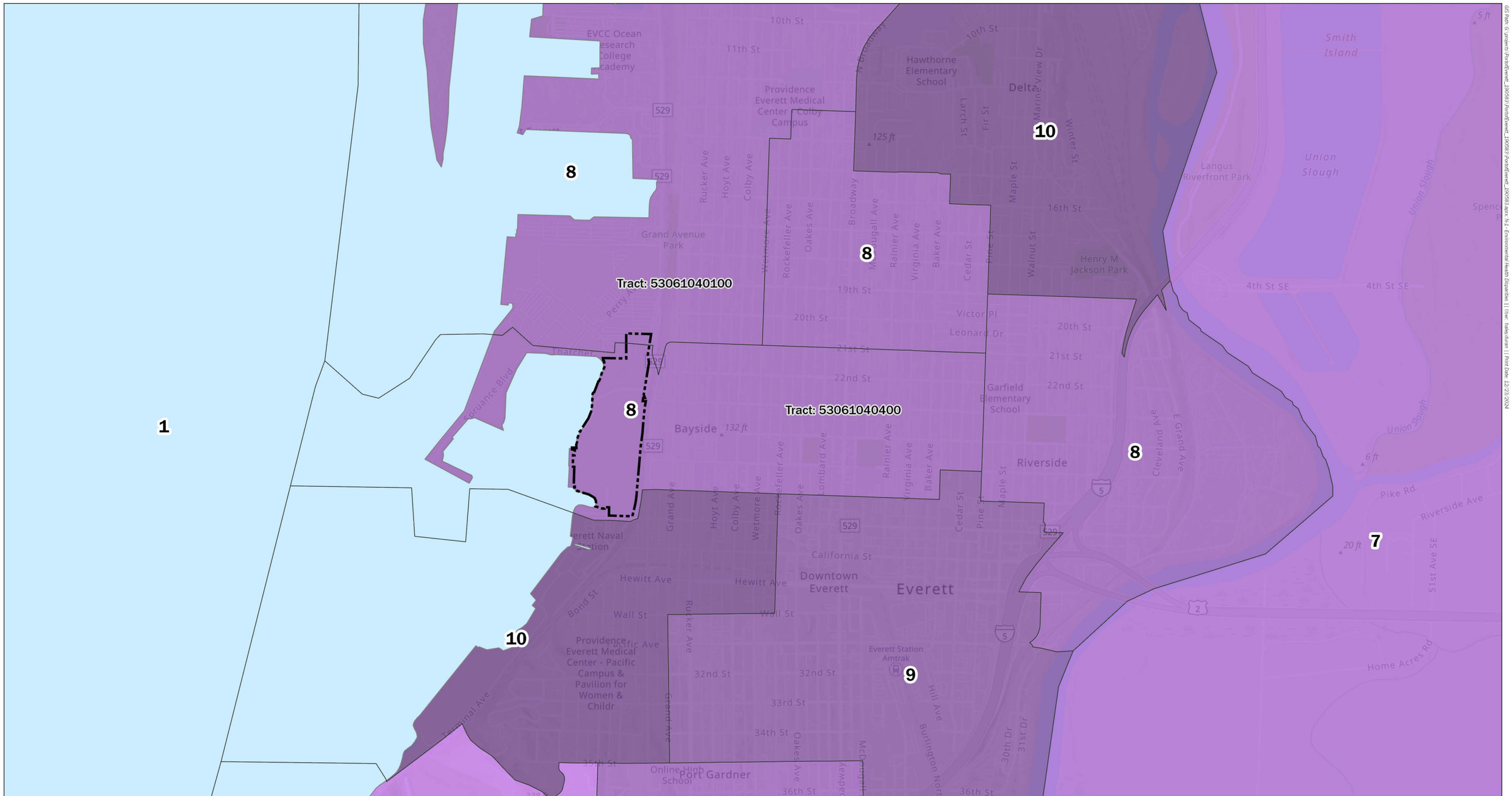

Upland Area Site Boundary

Census Tract Boundaries

Water Body

Environmental Health Disparities Ranking

1
2
3
4
5
6
7
8
9
10

N

0 750 1,500 Feet

Note:
Data depicted on this map are from the Washington Department of Health Environmental Health Disparities (EHD) Mapping Tool

Environmental Health Disparities

K-C Worldwide Site Upland Area
Everett, Washington

Aspect Consulting			
	NOV-2024	BY: CEB / HMD	FIGURE NO. N-1
	PROJECT NO. 190583	REVISED BY: ---/---	

Data source credits: None || Basemap Service Layer Credits: Esri, NASA, NGA, USGS, FEMA, Esri Community Maps Contributors, Everett Community College, WA State Parks GIS, Esri, TomTom, Garmin, SafeGraph, GeoTechnologies, Inc, METI/NASA, USGS, Bureau of Land Management, EPA, NPS, US Census Bureau, USDA, USFWS

GIS Path: G:\projects\Pure\Everett_190583\Pure\Everett_190583\Pure\Everett_190583.aprx; N:\- Environmental\Health Disparities || User: hdeloduran || Print Date: 12/27/2024

Demographic Index

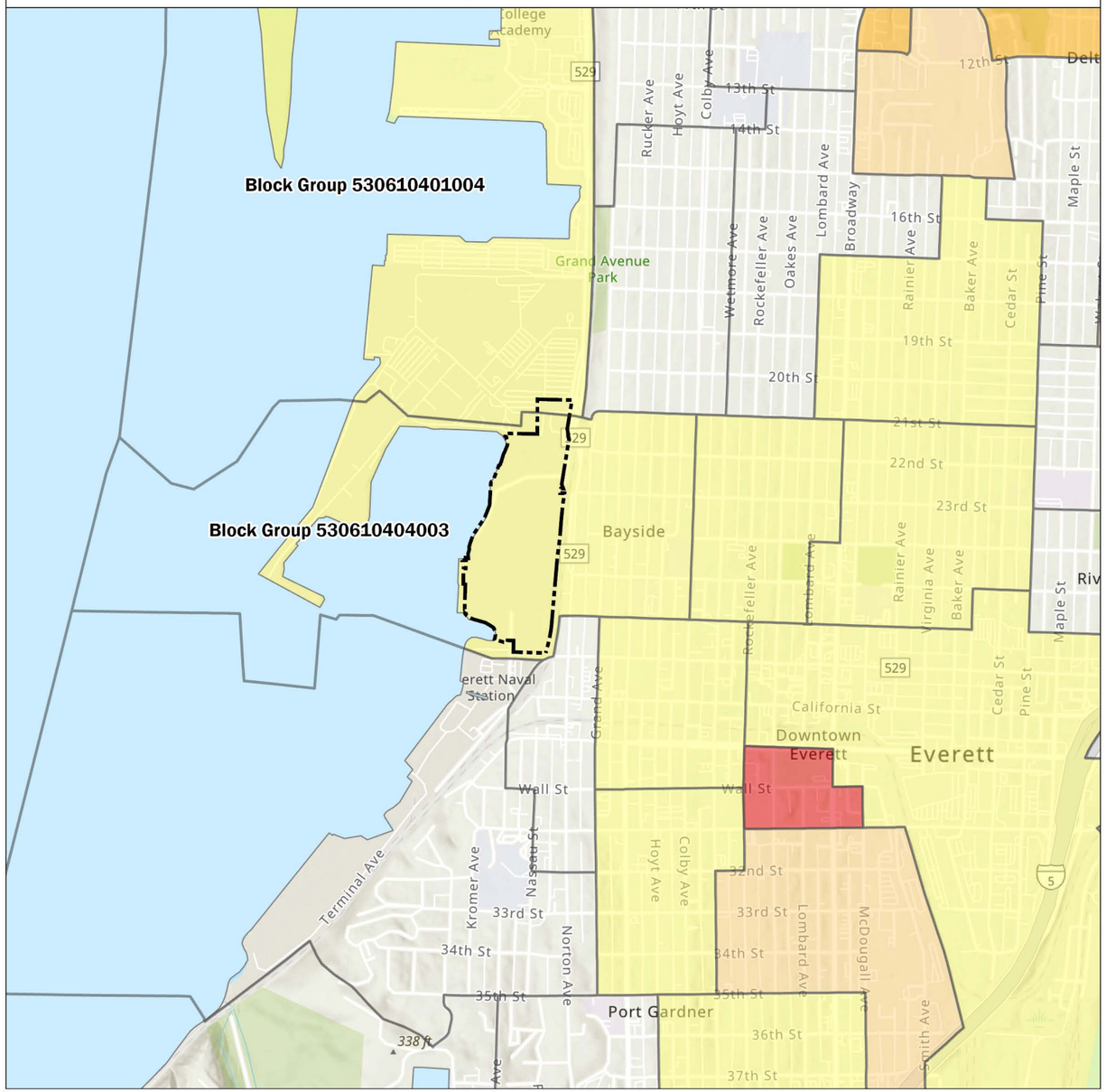

Supplemental Demographic Index

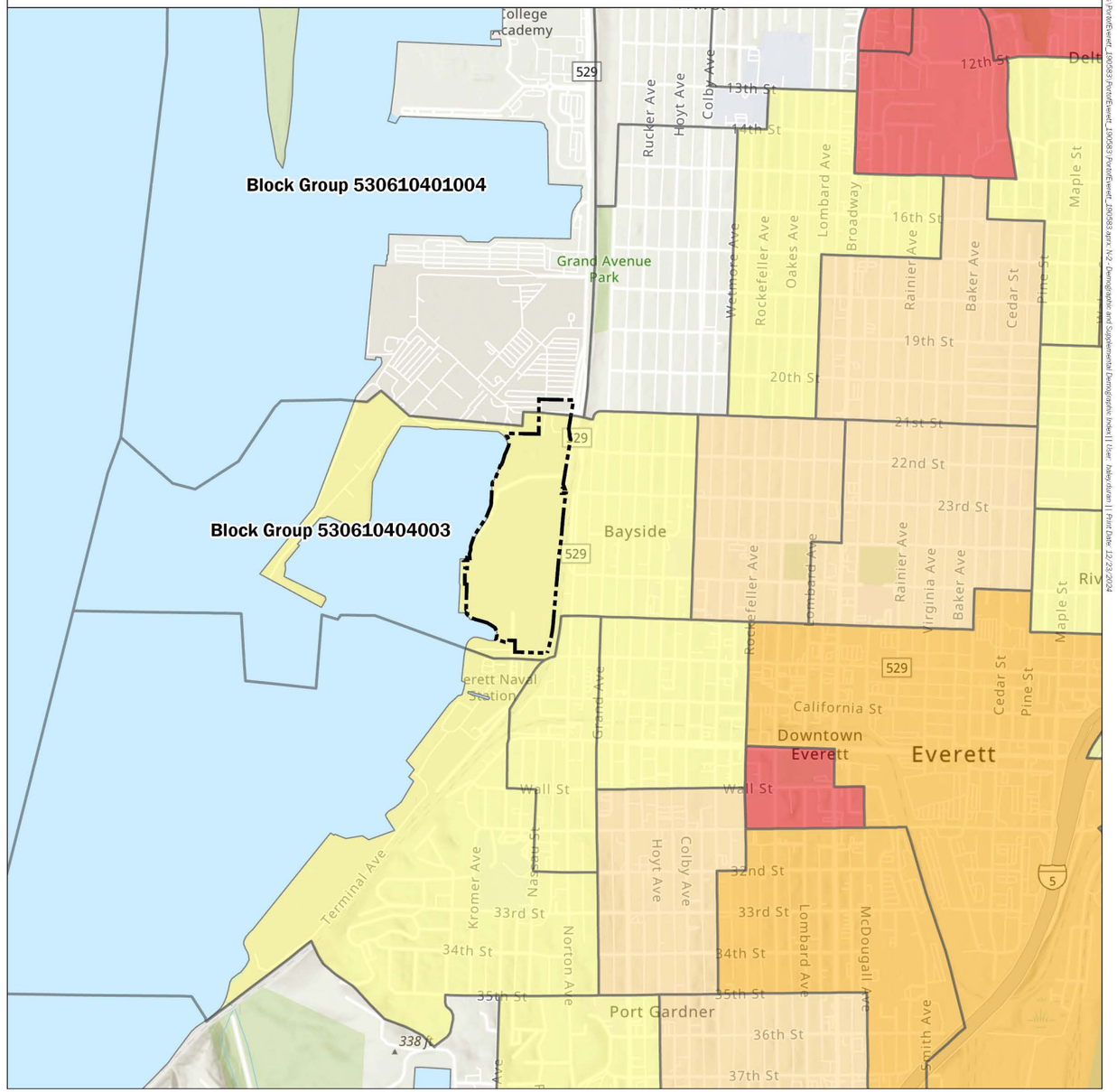

State Percentiles

- 95 - 100 Percentile
- 90 - 95 Percentile
- 80 - 90 Percentile
- 50 - 80 Percentile
- less than 50 Percentile

- Upland Area Boundary
- Census Block Groups
- Water Body

Note:
Data depicted on this map are from the US Environmental Protection Agency (EPA) EJ Screen Mapping Tool

N

0 800 1,600 Feet

Demographic and Supplemental Demographic Index

K-C Worldwide Site Upland Area
Everett, Washington

Aspect Consulting	NOV-2024	BY: CEB / HMD	FIGURE NO. N-2
	PROJECT NO. 190583	REVISED BY: ---/---	

Data source credits: None || Basemap Service Layer Credits: Everett Community College, WA State Parks GIS, Esri, TomTom, Garmin, SafeGraph, GeoTechnologies, Inc, METI/NASA, USGS, Bureau of Land Management, EPA, NPS, US Census Bureau, USDA, USFWS, Esri, NASA, NGA, USGS, FEMA

GIS Path: G:\projects\PrintEverett_190583\PrintEverett_190583.aprx\N2- Demographic and Supplemental Demographic Index\ || User: haley.sturm || Print Date: 12/23/2024