Whitehead Tyee Site

Interim Action Completion Report



Prepared for

730 Myrtle, LLC
and
Seattle Iron & Metals Corp.
601 S. Myrtle St.
Seattle, Washington

August 2018

Certified B Corporation

100% Recycled Paper

FLOYD | SNIDER
strategy ▪ science ▪ engineering
Union Square • 601 Union Street •
Seattle, Washington 98101 •

LIMITATIONS

This report has been prepared for the exclusive use of Seattle Iron & Metals Corporation, their authorized agents, and regulatory agencies. It has been prepared following the described methods and information available at the time of the work. No other party should use this report for any purpose other than that originally intended, unless Floyd|Snider agrees in advance to such reliance in writing. The information contained herein should not be utilized for any purpose or project except the one originally intended. Under no circumstances shall this document be altered, updated, or revised without written authorization of Floyd|Snider.

Table of Contents

1.0 Introduction 1-1
1.1 INTERIM ACTION DESCRIPTION 1-1
1.2 SITE DESCRIPTION 1-2
1.3 INTERIM ACTION CONTAMINANTS OF CONCERN 1-2
1.4 INTERIM ACTION REMEDIATION LEVELS 1-2
2.0 Pre-Construction Planning, Permitting, and Work Area Preparation 2-1
2.1 PROJECT PLANS 2-1
2.2 PERMITS AND APPROVALS FOR THE INTERIM ACTION 2-1
2.3 UTILITY LOCATES 2-3
2.4 WELL ABANDONMENT AND WELL PROTECTION 2-3
2.5 INTERIM ACTION SITE CONTROLS 2-4
2.6 BACKFILL TESTING CONFIRMATION 2-4
2.7 PRE-CONSTRUCTION MEETINGS 2-5
3.0 Interim Action Construction 3-1
3.1 INTERIM ACTION: FOCUSED HEAVY OIL-RANGE ORGANICS EXCAVATION 3-1
3.1.1 Excavation Summary 3-2
3.1.2 Confirmation Sampling Summary 3-2
3.2 INTERIM ACTION: STODDARD SOLVENT EXCAVATION 3-3
3.2.1 Excavation Summary 3-3
3.2.2 Confirmation Sampling Summary 3-4
3.3 INTERIM ACTION: STORMWATER SYSTEM CONSTRUCTION 3-5
3.3.1 Grading and Excavation Summary 3-5
3.3.2 Trench Sampling 3-6
3.4 CONSTRUCTION BEST MANAGEMENT PRACTICES 3-7
3.5 EXCAVATED MATERIAL MANAGEMENT 3-8
3.5.1 Non-Contaminated Material Transport and Disposal 3-8
3.5.2 Contaminated Soil Transport and Disposal 3-8
3.5.3 Onsite Reuse 3-9
3.6 GROUNDWATER MANAGEMENT 3-10
3.7 SITE MONITORING 3-11

3.8 HEALTH AND SAFETY 3-12
3.9 DECONTAMINATION 3-12
3.10 CULTURAL RESOURCE MONITORING 3-13
3.11 SITE RESTORATION 3-13
3.12 WELL RESTORATION 3-14
3.13 PERMIT CLOSEOUT 3-14
4.0 Future Site Activities and Schedule 4-1
5.0 References 5-1

List of Tables

Table 3.1 Excavation Confirmation Sample Results
Table 3.2 Heavy Oil-Range Organics Petroleum Constituent Analysis Results
Table 3.3 Stormwater System Excavation Sample Results
Table 3.4 Disposed Soil Sample Results
Table 3.5 Stockpile Sample Results
Table 3.6 Monitoring Well Survey

List of Figures

Figure 1.1 Vicinity Map
Figure 1.2 Site Vicinity Map
Figure 1.3 Pre-Construction Site Features
Figure 2.1 Existing and Decommissioned Monitoring Well Locations on or Adjacent to 730 S. Myrtle Street Property
Figure 3.1 Interim Action Excavation Areas
Figure 3.1a Interim Action: Focused Heavy Oil-Range Organics Excavation
Figure 3.1b Interim Action: Stoddard Solvent Excavation
Figure 3.2 Stormwater System Excavation
Figure 3.3 Cultural Resources Monitoring
Figure 3.4 Site Restoration and Current Property Features

List of Appendices

Appendix A Interim Action Work Plan Ecology Approval Letter
Appendix B Record Drawings
Appendix C Key Photographs
Appendix D Laboratory Reports
Appendix E Disposal Documentation
Appendix F Cultural Resources Monitoring

List of Acronyms and Abbreviations

Acronym/ Abbreviation	Definition
AO	Agreed Order
APS	Applied Professional Services, Inc.
bgs	Below ground surface
BMP	Best management practice
BTEX	Benzene, toluene, ethylbenzene, and xylenes
Cardno	Cardno, Inc.
City	City of Seattle
COC	Contaminant of concern
CSGP	Construction Stormwater General Permit
CUL	Cleanup level
CVOC	Chlorinated volatile organic compound
CY	Cubic yards
DAHP	Washington State Department of Archaeology and Historic Preservation
DNS	Determination of Nonsignificance
Ecology	Washington State Department of Ecology
ER	Engineering Report
FS	Feasibility Study
GAC	Granular activated carbon
Glacier	Glacier Environmental Services, Inc.
gpm	Gallons per minute

Acronym/ Abbreviation	Definition
HASP	Health and Safety Plan
IACR	Interim Action Completion Report
IAWP	Interim Action Work Plan
Iron Mountain	Iron Mountain Quarry, LLC
ISGP	Industrial Stormwater General Permit
KCIW	King County Industrial Waste
KPFF	KPFF Consulting Engineers
Mar-Vac	Marine Vacuum Services, Inc.
mg/kg	Milligrams per kilogram
MIDP	Monitoring and Inadvertent Discovery Plan
MOA	Memorandum of Agreement
MTCA	Model Toxics Control Act
MUP	Master Use Permit
MWS	Modular wetland system
NOT	Notice of Termination
NRHP	National Register of Historic Places
PCB	Polychlorinated biphenyl
PCE	Tetrachloroethylene
penta	Pentachlorophenol
pg/g	Picograms per gram
PID	Photoionization detector
PPE	Personal protective equipment
ppmv	Parts per million by volume
Property	730 S. Myrtle Street property
QA	Quality assurance
QAPP	Quality Assurance Project Plan
RI	Remedial Investigation
RL	Remediation level
ROW	Right-of-way

Acronym/ Abbreviation	Definition
SAP	Sampling and Analysis Plan
SDCI	Seattle Department of Construction and Inspections
SEPA	State Environmental Policy Act
SIM	Seattle Iron & Metals
Site	Whitehead Tyee Site
SPCC	Spill Prevention, Containment and Countermeasures Plan
SPU	Seattle Public Utilities
SWPPP	Stormwater Pollution Prevention Plan
TEQ	Toxic equivalent
TESC	Temporary erosion and sediment control
TPH	Total petroleum hydrocarbons
Tyee Lumber	Tyee Lumber and Manufacturing Company
UPRR	Union Pacific Railroad Company
UST	Underground storage tank
VOC	Volatile organic compound
WAC	Washington Administrative Code

1.0 Introduction

This Interim Action Completion Report (IACR) was prepared by Floyd|Snider at the request of Seattle Iron & Metals (SIM), pursuant to Agreed Order (AO) No. DE 13458. The IACR provides details regarding the completion of an interim action at the former Tyee Lumber and Manufacturing Company (Tyee Lumber) facility located at 730 S. Myrtle Street in Seattle, Washington, and referred to as the Whitehead Tyee Site (the Site). The Washington Model Toxics Control Act (MTCA; Washington Administrative Code [WAC] 173-340) defines a "Site" as where hazardous substances have come to be located (WAC 173-340-100). The Site boundary will be more specifically determined as part of the future Remedial Investigation (RI)/Feasibility Study (FS). Figure 1.1 presents the geographic location of the Site, and Figure 1.2 shows the 730 S. Myrtle Street property (Property) and adjacent properties. For clarity in this report, "Site" will be used when referring to the area of known contamination (i.e., includes off-property impacts) and "Property" will be used when referring to the 730 S. Myrtle Street parcel only.

This IACR documents the work completed under the Interim Action Work Plan (IAWP; Floyd|Snider 2017), which describes the scope of the proposed soil excavations for the Property. The IAWP was submitted to the Washington State Department of Ecology (Ecology) on April 6, 2017, and was approved by Ecology in a letter dated April 26, 2017. A copy of the Ecology approval letter for the interim action is included in Appendix A.

The on-property portions of the interim action were completed between July 2017 and December 2017. Issues regarding Seattle Public Utilities (SPU) approval of the proposed construction in S. Myrtle Street delayed completion of the off-property portions of the interim action to March through May of 2018.

1.1 INTERIM ACTION DESCRIPTION

The interim action was implemented in accordance with WAC 173-340-430 and the AO, and it was designed in a manner that will not preclude reasonable remediation alternatives for any final cleanup action that may be required. A full evaluation of cleanup options for contaminated soil and groundwater will be conducted as part of the future RI/FS.

The IA was designed to address known soil contamination under the Toxics Cleanup Program and simultaneously address compliance with SIM's Industrial Stormwater General Permit (ISGP; Permit No. WAR-125002). The construction of the stormwater system included trenching for conveyance piping and excavation for manholes and other subsurface treatment structures in areas of elevated contaminant concentrations on the Property. Overall, the stormwater system was designed to avoid installation of significant structures in contaminated areas to the extent possible; therefore, only isolated areas of contamination were expected to be encountered during stormwater system construction. The interim action included removal of contaminated soil necessary for the installation of the proposed stormwater conveyance system. These removal actions included a focused soil excavation in the east-central portion of the Property to remove an area of shallow and localized soil contaminated with heavy oil-range organics in the vicinity of a run of conveyance piping, as well as removal of soil in an area that had known Stoddard solvent

soil contamination associated with a former dip tank and pentachlorophenol (penta) underground storage tank (UST) immediately adjacent to the excavation of the stormwater detention structure. The locations of the focused soil excavations and the former dip tank and UST are shown on Figure 1.3. The interim action was implemented to remediate these portions of the Site within the Property boundary prior to final grading and paving of the Property. Cleanup levels (CULs) have not yet been established for the Site; therefore, the MTCA CULs for residential and/or industrial properties were used as remediation levels (RLs), as appropriate per MTCA, described further in Section 1.4.

1.2 SITE DESCRIPTION

The Property is a 3.22-acre lot used for container and truck storage by SIM. Prior to construction, the lot was unimproved, with no utility services and a ground covering consisting of crushed gravel. A small open-air metal shed is located on the east/central portion of the Property and is the only structure present. This shed is used for light maintenance activities on containers, such as spot welding. The Site's geographic, geologic, and hydrogeologic settings, as well as current and former Site uses, are described in further detail in the IAWP. Pertinent pre-construction Property features are shown on Figure 1.3.

1.3 INTERIM ACTION CONTAMINANTS OF CONCERN

Interim action contaminants of concern (COCs) were defined as those contaminants that resulted from prior Site operations and were present on-property at concentrations greater than their respective MTCA CULs. Based on the analytical data collected to date, the interim action COCs present on-property included penta, Stoddard solvent, and heavy oil-range organics. A summary of the known nature and extent of these COCs in soil is included in Section 3.3 of the IAWP. RLs for the interim action include the MTCA CULs for residential and/or industrial use properties, including site-specific CULs as appropriate per MTCA.

Other contaminants that have been detected at the Site at concentrations greater than the MTCA CULs, as described in Section 3.1 of the IAWP, include gasoline-range organics, chlorinated volatile organic compounds (CVOCs), benzene, and dioxins/furans. These contaminants will be evaluated further as part of the future RI and were not addressed by the interim action.

1.4 INTERIM ACTION REMEDIATION LEVELS

Based on the information presented in IAWP, Stoddard solvent, penta, and heavy oil-range organics were the primary COCs that were expected to be encountered during implementation of the interim action. The interim action addressed limited areas of contaminated soil only; groundwater cleanup was not part of the interim action. Therefore, groundwater RLs or CULs are not presented or applicable for the purposes of the interim action and will be addressed in the site-wide RI/FS.

Soil CULs have not yet been established for the Site; therefore, relevant MTCA CULs for residential and/or industrial properties in addition to site-specific CULs as appropriate per MTCA were used as RLs for the interim action as approved by Ecology, as follows.

Analyte	Remediation Level Concentration	Remediation Level Basis
Stoddard solvent	1,000 mg/kg	Residual saturation screening level for weathered gasoline
Penta	2.5 mg/kg	MTCA Method B Direct Contact (cancer)
Heavy oil-range organics	2,000 mg/kg	MTCA Method A Unrestricted and Industrial

Final CULs for the Site will be evaluated as part of the future RI/FS and established as part of the Cleanup Action Plan for the Site.

2.0 Pre-Construction Planning, Permitting, and Work Area Preparation

The interim action was completed in accordance with the Ecology-approved IAWP, which included the necessary details of how the interim action was to be performed. There were no significant deviations from the IAWP. Prior to implementation of the interim action excavations, several preparatory activities were completed. These activities are described in the following subsections and included preparation of project plans, City of Seattle (City) permitting, utility locates, monitoring well decommissioning, and setup of site controls.

2.1 PROJECT PLANS

Prior to implementing the interim action activities, detailed project plans were prepared by KPFF Consulting Engineers (KPFF), the project engineer; Floyd|Snider, the environmental consultant; and Glacier Environmental Services, Inc. (Glacier), the project contractor. These project plans were followed during construction and included the following:

- The IAWP, including the Sampling and Analysis Plan (SAP) and Quality Assurance Project Plan (QAPP)
- The Engineering Report (ER; KPFF 2013) and ER Addendum (KPFF 2016) for stormwater system construction and associated construction plans
- Floyd|Snider's and Glacier's site-specific Health and Safety Plans (HASPs)
- Glacier's Spill Prevention, Containment and Countermeasures Plan (SPCC)
- Glacier's Stormwater Pollution Prevention Plan (SWPPP)
- Glacier's Excavation, Shoring, and Dewatering Plan
- The Inadvertent Discovery Plan (to be followed in the event that an unanticipated discovery of human remains or historic and/or pre-contact archaeological materials were encountered during excavation activities)

Record drawings produced by KPFF are presented in Appendix B. Additional project plans are not included herein but are available upon request.

2.2 PERMITS AND APPROVALS FOR THE INTERIM ACTION

State and City permits were required both for the construction of the stormwater system and implementation of the interim action as described below.

- **State Environmental Policy Act (SEPA) Checklist and Determination of Nonsignificance (DNS):** Two separate SEPA checklists were prepared for construction in order to determine that the project would not have a significant adverse environmental impact.

  - For the stormwater system construction, the City was the lead agency for environmental review of the planned construction. The SEPA checklist for stormwater system construction was submitted to the City in February 2016, and the City issued a DNS. The end of the public comment period, which is the last step for finalization of the SEPA DNS, was on September 15, 2017.
  - For the contaminated soil removal interim action, specific to the AO, Ecology was the lead agency for environmental review. The SEPA checklist for the contaminated soil removal was submitted to Ecology concurrently with the public review draft of the IAWP in December 2016, and Ecology issued a DNS on February 3, 2017. The closure of the comment period and finalization of the contaminated soil removal SEPA DNS was March 5, 2017.

- **City Master Use Permit:** In order to construct a stormwater system, the permitted Property use was changed from "vacant" to "outdoor storage" by the City. The Master Use Permit (MUP) application was submitted to the City by KPFF in March 2016 and was approved on August 18, 2017.
- **Seattle Department of Construction and Inspections (SDCI) Grading Permit:** Grading permits are required for ground-disturbing activities in the City with a cumulative volume greater than 50 cubic yards (CY). The grading permit was submitted by KPFF concurrently with the MUP and was approved by SDCI on August 28, 2017.
- **Construction Stormwater General Permit (CSGP):** The CSGP is issued by Ecology for construction on sites that disturb an area greater than 1 acre. Conditions of the CSGP included development of a SWPPP (refer to Section 2.1), implementation of temporary erosion and sediment control (TESC) measures, and weekly Site inspection by a certified erosion and sediment control lead. Although the project was designed such that all stormwater would remain on site, resulting in zero discharge during construction, a CSGP and associated Administrative Order were issued by Ecology on July 27, 2017.
- **Waste Disposal Authorizations:** The interim action generated waste soil and water, which were disposed of at permitted facilities. Authorization for disposal of waste soil, including Subtitle D landfill disposal and Class 2 landfill disposal, as well as excess dewatering water that was not treated on site, was obtained by Glacier and granted by the respective disposal facilities. Authorization for Subtitle D disposal of contaminated soil was granted by Waste Management and authorization for disposal of Class 2 non-contaminated soil was granted by Iron Mountain Quarry, LLC (Iron Mountain), a permitted inert waste landfill in Granite Mountain, Washington. Solids that were generated by dewatering were transported off-site by Bravo Environmental, Inc., and Northwest Water Wizards, LLC, and disposed at Subtitle D disposal facilities under authorization obtained by the vendors. Authorization for discharge of treated dewatering water to the sanitary sewer system was granted by King County Industrial Waste (KCIW) on July 18, 2017 (Authorization 11780-01). A related Side Sewer Permit to allow discharge of the treated water to a City-owned side sewer manhole was granted to the Contractor by SPU on July 26, 2017.

Dewatering water that was not treated on site was removed via a vactor truck operated by Marine Vacuum Services, Inc. (Mar-Vac) and disposed of in accordance with Mar-Vac's King County industrial wastewater permits.

- **Seattle Public Utilities Memorandum of Agreement (MOA):** A MOA was required for work performed by SPU in areas of potentially contaminated soil during installation of utilities. Conditions of the MOA included environmental monitoring during ground-disturbing work in the potentially affected areas and offsite disposal of soils removed from the S. Myrtle Street right-of-way (ROW). The MOA for ROW work, including installation of a water service line and relocation of a water main above the final sewer connection line, was executed by SPU on December 14, 2017.
- **Union Pacific Railroad Company (UPRR) Pipeline Crossing Agreement:** An agreement with UPRR was required for installation of the sewer connection below the UPRR-owned rail line in the S. Myrtle Street ROW. Conditions of the agreement included construction of the pipeline in accordance with UPRR standards and maintenance of insurance for the pipeline crossing. The UPRR Pipeline Crossing Agreement became effective on January 18, 2018.

2.3 UTILITY LOCATES

Utilities within or immediately adjacent to the excavation areas were identified as part of the project planning. The call-before-you-dig one-call underground utility locate center was notified in advance of all ground-disturbing activities.

In addition, private utility locates were completed by Applied Professional Services, Inc. (APS) prior to ground-disturbing activity to verify the locations of the utilities in the excavation areas. Other than the known water line, no other active utilities were identified in the work area.

APS was periodically called to the Site throughout construction to verify water line locations and depths, both on-property and in the S. Myrtle Street ROW.

2.4 WELL ABANDONMENT AND WELL PROTECTION

On July 21, 2017, two Site wells were decommissioned by ESN Northwest, Inc., a drilling firm licensed in the state of Washington. Well WT-MW-110, which was located within the focused heavy oil-range organics excavation area, was decommissioned prior to excavation. Well WT-MW-04, located adjacent to the planned excavation for installation of the stormwater detention structure, was found to have preexisting damage and was therefore also decommissioned prior to construction in that area. Both Site wells will be reinstalled during future phases of RI field work.

Five additional on-property wells owned by the adjacent Fox Avenue Site to the north were also determined by the Fox Avenue Site Project Manager to be unnecessary for future remediation or monitoring and were also decommissioned as part of construction. Fox Avenue Site wells PTM-1U, PTM-1L, PTM-2U, PTM-2L, and B-51 were decommissioned by ESN Northwest on

August 10 and August 15, 2017. Additionally, Fox Avenue Site well B-21 located in the Fox Avenue S. ROW to the west of the Property sustained damage during construction. This well was not in an area that was re-graded or used as a temporary construction entrance, so it is assumed that the damage was caused by increased truck traffic or changes to truck traffic patterns during construction. B-21 was also determined by Fox Avenue Site representatives to be unnecessary for future remediation or monitoring and was decommissioned by ESN Northwest on May 30, 2018.

The remaining on-property wells were surrounded with timber boxes for protection during surface grading, compaction, and paving. Existing and abandoned wells on and adjacent to the Site are shown on Figure 2.1.

2.5 INTERIM ACTION SITE CONTROLS

A perimeter security fence was established per the construction plans to limit Property access to unauthorized persons during construction. The existing permanent fencing along the north, east, and south Property boundaries was supplemented with temporary fencing to completely enclose the Property and the existing locking gate was maintained as the only point of entry and exit.

TESC measures were established by Glacier around the construction perimeter to achieve sedimentation control per the construction plans and the SWPPP. All storm drain inlets surrounding the Property were fitted with geotextile fabric inserts to prevent soil from entering the storm drain system. A silt fence was installed in a trench surrounding the Property perimeter, and the toe of the silt fence was keyed in to the base of the trench to ensure stability. The construction driveway was stabilized with quarry spalls to remove soil from the tires of vehicles leaving the Property.

Surveying to delineate the extents of the interim action excavation areas was performed by Pacific Surveying and Engineering, Inc., prior to excavation. Exclusion zones surrounding the areas of contaminated soil excavation were established using temporary fencing and/or traffic delineators and tape. The exclusion zones were initially laid out per Glacier's Excavation, Shoring, and Dewatering Plan and subsequently shifted to encompass the areas of contaminated soil handling during each phase of the interim action. A lined, bermed contaminated soil stockpile area was constructed in accordance with the construction plans prior to excavation of saturated soils. Two existing 20,000-gallon baffled tanks that were previously used for collection of stormwater on the Property were maintained, and a third storage tank of the same size was brought on site during excavation for additional capacity for collection and storage of dewatering water. Additional details regarding dewatering and treatment are included in Section 3.6. Site controls are shown in detail on the Erosion and Sediment Control Plan (Plan C2.0 through C2.2), which is included in the project record drawings presented in Appendix B.

2.6 BACKFILL TESTING CONFIRMATION

The specifications for the interim action required importing backfill from a naturally occurring soil or rock source (i.e., virgin material) from an established quarry with analytical data less than

2 years old demonstrating that the backfill material was free from chemical contamination. The selected sand and gravel backfill source was Iron Mountain. Laboratory data were provided by Iron Mountain prior to construction, and the material met the backfill criteria for data recency and chemical quality per the IAWP.

2.7 PRE-CONSTRUCTION MEETINGS

Pre-construction meetings were held to fulfill the requirements of City-issued permits and the IAWP. Key personnel from KPFF, Floyd|Snider, and Glacier attended these pre-construction meetings as necessary.

A pre-construction meeting with City agencies was held on August 29, 2017, per the City permitting requirements. To fulfill the requirements of the grading permit, a pre-construction inspection was conducted by SDCI. In addition, because the Stoddard solvent excavation necessitated the use of shoring adjacent to the S. Myrtle Street ROW, the Seattle Department of Transportation also attended the pre-construction meeting to outline shoring requirements.

A briefing with key construction personnel to review protocols for the inadvertent discovery of cultural resources was also performed on August 29, 2017, by a representative from Cardno, Inc. (Cardno), the designated project cultural resources monitor.

An additional pre-construction meeting with SPU was held on March 15, 2018, prior to installation of the final sewer connection in the S. Myrtle Street ROW.

3.0 Interim Action Construction

The interim action was completed between August 2017 and May 2018 in accordance with the Ecology-approved IAWP, which included the necessary details on how the interim measure was to be performed. The purpose of the interim action was to remove known or encountered contaminated soil in accordance with WAC 173-340-430, concurrently with construction of the stormwater conveyance system. The soil RLs for the interim action and extents of soil removal were set to substantially reduce or in some cases eliminate exposure pathways at the portion of the Site within the Property boundary.

The interim action contractor was Glacier. Glacier performed the contaminated soil removal using standard excavators. Excavations were open-cut with vertical sidewalls, and shoring was installed as necessary while deepening the excavation.

During construction, compliance monitoring was conducted by Floyd|Snider to ensure that the interim action objectives were met. Specifically, field monitoring and soil sample collection, as described in the IAWP, were used to determine whether additional actions were necessary during interim action construction to ensure that the IAWP goals were met. The interim action consisted of three separate actions, completed sequentially as described below.

- **Focused Heavy Oil-Range Organics Excavation:** A known area of relatively shallow soil contaminated with heavy oil-range organics, encompassing approximately 300 CY, existed in the east-central portion of the Property. A focused excavation was completed to remove this known area of petroleum-contaminated soil, prior to installation of stormwater conveyance pipe and paving.
- **Stoddard Solvent Excavation:** Soil located immediately adjacent to the stormwater detention area, encompassing approximately 900 CY, was excavated to remove contaminated soil (Stoddard solvent and penta) present at concentrations greater than their RLs in this area.
- **Stormwater System Construction:** Soils excavated for installation of the stormwater conveyance and treatment components of the stormwater system were field screened for evidence of contamination and segregated as appropriate for onsite reuse or disposal.

The implementation of these actions is described in greater detail in the following sections. The interim action excavations for heavy oil-range organics and Stoddard solvent are shown on Figure 3.1. Key construction photographs documenting interim action activities are presented in Appendix C.

3.1 INTERIM ACTION: FOCUSED HEAVY OIL-RANGE ORGANICS EXCAVATION

A shallow area of known heavy oil-range organics-contaminated soil in the vicinity of a former auto repair shop in the east-central part of the Property was identified during previous soil investigations. This area of contamination was collocated with a planned stormwater conveyance

pipe segment and was therefore removed in order to prevent disturbance to the pipe during potential future remediation activities.

3.1.1 Excavation Summary

The focused heavy oil-range organics excavation was completed between August 30 and August 31, 2017. Contaminated soil in this focused area, as shown on Figure 3.1a, was excavated to a uniform depth of 6 feet below ground surface (bgs). The fill soils encountered during the excavation consisted of silty sand with silt lenses, which were able to maintain vertical sidewalls to a depth of 6 feet bgs without the use of shoring. Several concrete remnants of former building structures and pipes were also encountered in the fill soil in this area. Field indications of contamination including petroleum odor and light staining were observed in soils removed from the central portion of the heavy oil-range organics excavation but were not present in the sidewalls or base at the final extents of the excavation.

A total of 441 tons of soil was removed from the heavy oil-range organics excavation. The dry to moist excavated soils were direct-loaded to trucks for landfill disposal (refer to Section 3.5 for a detailed discussion of excavated soil management). The minimal amount of overburden in this area, consisting of the top 2 to 3 feet of surface soil, was disposed of with the contaminated soil.

After receipt of the confirmation sample result (described in Section 3.1.2) indicating that the RL was met at the extents of the heavy oil-range organics excavation, the excavation was backfilled with gravel borrow from the approved quarry source.

3.1.2 Confirmation Sampling Summary

The final bottom depth of 6 feet bgs in the focused heavy oil-range organics excavation area was defined by pre-excavation borings WT-MW-110 and WT-SB-20. At these locations, heavy oil-range organics were detected at concentrations exceeding the RL of 2,000 milligrams per kilogram (mg/kg) at depths of approximately 3 to 5 feet bgs, and samples collected below 6 feet bgs all had concentrations less than the RL. The lateral extents of the excavation were defined by non-detect results in the 3 to 5 feet bgs interval at pre-excavation borings WT-SB-15 to the southwest, WT-SB-14 to the northwest, and WT-SB-18 to the southeast. An additional post-excavation sidewall sample, HO-S1E-4', was collected from the northeast sidewall of the excavation at 4 feet bgs with the excavator bucket after confirming that the planned excavation extent had been reached. This post-excavation sidewall sample also did not have detectable heavy oil-range organics, demonstrating that the RL was met at the extents of the excavation. This sample was also analyzed for potential constituents present in unknown waste or unknown oils according to MTCA Table 830-1 including volatile organic compounds (VOCs), semivolatile organic compounds, polychlorinated biphenyls (PCBs), metals, and petroleum additives. Metals were not detected or detected at low-level concentrations consistent with background soil conditions, and the other analytes were not detected. Soil confirmation sample results for the focused heavy oil-range organics excavation area are presented in Table 3.1 and on Figure 3.1a. Additional analytical results are presented in Table 3.2. Copies of laboratory analytical reports are provided in Appendix D.

A Level 1 Compliance Screening data validation was performed on post-excavation samples, as specified in the IAWP, and all data were determined to be acceptable for use.

3.2 INTERIM ACTION: STODDARD SOLVENT EXCAVATION

An area of known Stoddard solvent and penta contamination originating from a penta dip tank and UST formerly located in the S. Myrtle Street ROW was identified during previous soil and groundwater investigations. These investigations identified Stoddard solvent (a carrier solvent for penta) and penta migrating onto the Property to the north in the interval extending from the water table to a depth of approximately 16 feet bgs. In order to allow for potential future remediation of Stoddard solvent and penta to be conducted in soil and groundwater without disturbing or compromising the stormwater system, the IAWP included an additional buffer excavation beyond the limits necessary for installation of the stormwater detention structure in the southwest portion of the Property. The buffer required for potential future remediation was determined to be 7 lateral feet from detention structure, based on the distance from the toe of the slope beneath the structure to a depth of 16 feet bgs with an additional allowance for potential recontamination of placed backfill material. The excavation buffer is shown in further detail in the interim action Remediation Plan Sections (Plan C3.0 through C3.3), which is included in the project record drawings presented in Appendix B.

3.2.1 Excavation Summary

The Stoddard solvent excavation was completed between September 5 and September 15, 2017. The excavation area is shown on Figure 3.1b. Because the mechanism of contaminant migration was known to be via groundwater in this area, and several previous samples without detectable Stoddard solvent or penta had been collected from the unsaturated zone in this area, it was presumed that 8 feet of clean overburden was present in the Stoddard solvent excavation area. Approximately 400 CY of presumed clean overburden was removed prior to excavating contaminated soil and stockpiled for potential onsite reuse above the water table pending characterization (refer to Section 3.5.3 for details regarding onsite soil reuse). This overburden was composed of fill soil including silty sand and silt lenses similar to the fill encountered in the heavy oil-range organics excavation area and was similarly able to maintain stable vertical sidewalls. Field screening of the overburden did not encounter evidence of contamination such as odors, staining, or elevated VOC concentrations measured with a photoionization detector (PID). Remnants of several previous structures, including a partial building foundation wall, catch basin, and abandoned cast iron water pipes, were encountered during excavation of the overburden fill soil.

Soils excavated from below 8 feet bgs were presumed to be contaminated and segregated in the designated lined stockpile area for subsequent landfill disposal. The fill/native soil contact was also observed at approximately 8 feet bgs, where the silty sand and silt fill soils transitioned to a uniform clean sand with few silty pockets. Excavation below 8 feet bgs was advanced in a phased approach using a 20-foot by 20-foot by 8-foot-tall trench box and steel plate shoring to maintain vertical sidewalls to the target excavation depth of 16 feet bgs.

Field indications of contamination, including a moderate to strong solvent odor, petroleum staining, and elevated PID readings, were encountered in soil beginning at approximately 9 feet bgs and were strongest at the water table interval from approximately 11 to 13 feet bgs. The excavation was advanced until field indications of contamination were no longer present, corresponding to a depth of 16 feet bgs in the western and eastern/northeastern portions of the excavation and 17 feet bgs in the central portion of the excavation closest to the former dip tank and UST. Field indications of contamination were not observed in the excavation sidewalls at the final planned lateral extents. Groundwater intrusion was encountered at approximately 11.5 feet bgs, and limited dewatering was performed using a sump and vacuum pump. This dewatering methodology was not able to fully remove standing water within the excavation, but it minimized the amount of standing water to allow accurate measurement of the excavation depth and visual confirmation that a uniform excavation bottom had been achieved. Management of dewatering water is further described in Section 3.6.

A total of 923 tons of contaminated soil was removed from the Stoddard solvent excavation. Excavated soils were placed in a lined stockpile area for dewatering prior to transportation and landfill disposal. The stockpile area was constructed in general accordance with the approved construction plans.

After receipt of the confirmation sample results (described in Section 3.2.2) indicating that the RL for the interim action COCs was met at the extents of the Stoddard solvent excavation, the excavation was backfilled to a depth of 8 feet bgs with gravel borrow from the approved quarry source to allow for installation of the adjacent stormwater detention structure.

3.2.2 Confirmation Sampling Summary

The vertical extent of the excavation was determined by the results of field screening as described above, and verified by four excavation bottom samples collected from the western (sample S-B1-16'), central (SS-B2-17'), north-central (SS-B3-17'), and eastern (SS-B4-16') portions of the excavation as shown on Figure 3.1b. Bottom samples were collected by scooping soil with the excavator bucket after confirming that a uniform final bottom depth had been reached in each portion of the excavation. These bottom samples, which were collected between 16 and 17 feet bgs, were all analyzed for Stoddard solvent, and the samples from the north-central and eastern areas were additionally analyzed for penta. Stoddard solvent and penta were not detected in any bottom samples, demonstrating that the RLs were met at the base of the excavation.

The lateral extents of the excavation to the west, north, and east were determined by existing pre-excavation samples, as well as sidewall samples collected from the accessible sidewalls via excavator bucket. Sidewall samples to delineate the Stoddard solvent excavation and demonstrate that the RLs were met included the following:

- The pre-excavation sample from 12 to 13 feet bgs at WT-GP-3 served as the confirmation sample for Stoddard solvent in the western sidewall of the excavation. This sample had a Stoddard solvent concentration of 110 mg/kg, less than the RL, and

was collected from the depth interval that had the greatest field indications of contamination at this location. An additional post-excavation sidewall sample, SS-S1W-10.5', was collected above the water table near the WT-GP-3 location to confirm that penta was not present in the western sidewall. This sample did not have detectable penta.

- The northern sidewall of the excavation was not accessible for sampling due to the presence of shoring; however, both the base sample collected from the north-central portion of the excavation and pre-construction sample WT-SB-06 within the adjacent detention structure excavation to the north did not have detectable Stoddard solvent.
- The eastern and northeastern limits of the excavation were delineated, respectively, by post-excavation sidewall samples SS-S2E-12' and SS-S3N-12', which were collected at the interval just below the water table where the greatest field indications of contamination were observed during excavation. These samples did not have detectable Stoddard solvent.

In addition to analysis for the interim action COCs, dioxin/furan analysis for informational purposes for future RI planning was performed on base sample SS-B4-16'. A low-level dioxin/furan toxic equivalent (TEQ) concentration of 1.19 picograms per gram (pg/g) was detected in this sample. Soil confirmation sample results for the Stoddard solvent excavation area are presented in Table 3.1 and on Figure 3.1b. Copies of laboratory analytical reports are provided in Appendix D.

A Level 1 Compliance Screening data validation was performed on post-excavation samples, as specified in the IAWP, and all data were determined to be acceptable for use.

3.3 INTERIM ACTION: STORMWATER SYSTEM CONSTRUCTION

Trenching and excavation for the stormwater conveyance piping, manholes, and other structures on-property was completed between September 20 and November 17, 2017, using an excavator to obtain the elevations determined in the final design drawings. Due to construction delays associated with SPU approval for installation of conveyance piping off-property in the S. Myrtle Street ROW and connection to the storm sewer, this work was completed between March 29 and May 3, 2018. Installation of the final connection of the stormwater conveyance system to the City storm drain was completed using jack-and-bore methodology to tunnel beneath the existing UPRR rail line in accordance with the railroad owner requirements. As-built engineer's record drawings of the stormwater system are presented in Appendix B.

3.3.1 Grading and Excavation Summary

Surface grading was performed to slope the Property inward toward the central stormwater collection and detention system prior to trenching for system installation. This grading typically removed a minimum of 2 feet of surface soil. During grading, extensive asphalt and concrete pavement was encountered several inches to 1 foot beneath the gravel surface material across the majority of the Property, indicating that the majority of the Property was covered in

pavement or buildings prior to demolition of the former Tyee Lumber facility. Several concrete building foundations and footings associated with the former Tyee Lumber operations were also encountered in the shallow subsurface. Due to the presence of asphalt, concrete and other debris, the removed surface material was determined to be geotechnically unsuitable and was hauled off site for disposal. Disposal of geotechnically unsuitable soil is documented in Section 3.5.1.

The depth of the subsurface conveyance piping on the Property ranged from approximately 3 to 6 feet bgs. Deeper excavations up to 11.5 feet bgs were necessary for the catch basins, manholes, treatment vaults, and stormwater detention structures. Previous sampling in the vicinity of these stormwater system components indicated that subsurface soils were free of contamination, with the exception of the areas where interim action excavation was completed to remove contamination in advance of stormwater system installation.

During trenching and excavation for installation of the stormwater system, soils were field screened for indications of contamination including odor, staining, or elevated PID readings. Consistent with the results of previous investigations, these excavated soils were found to be free of field indications of contamination and were stockpiled as needed for potential reuse. Evaluation of soil reuse is described in Section 3.5.3.

3.3.2 Trench Sampling

Bottom samples were collected approximately every 20 feet along the base of each trench in accordance with the IAWP, as shown on Figure 3.2. The sample locations shown on the figure reflect the final trench alignment and structure placement, which in several cases was adjusted somewhat from the proposed alignment presented in the IAWP. In general, samples were collected directly from the bottom of the trench using a clean hand trowel or shovel. However, in some cases, the trench bottom samples were collected via potholing to the final excavation depth prior to pipe installation in order to minimize the amount of open trenches present on the Property. Composite bottom samples were prepared for each trench segment, with multiple composites prepared for the longest trenches (designated trench A and trench E on Figure 3.2). A previous sample collected from WT-GP-8 with a non-detect Stoddard solvent result at 5 feet bgs was also used to supplement the data for trench segment A2.

Composite samples were also collected from the deeper subsurface structure excavation areas, including one three-point composite sample from beneath the stormwater detention structure (designated trench segment A3) and one three-point composite sample from the pre-treatment/pump station area west of the Stoddard solvent excavation (designated trench segment A4). Previous samples collected from the detention structure area (WT-SB-06) and pre-treatment/pump station area (WT-SB-01 and WT-MW-108), which had non-detect results for penta and Stoddard solvent at 10 feet bgs, were used to supplement the data from trench segments A3 and A4, respectively.

Due to sewer system connection requirements by SPU and railroad track crossing requirements by the owner of the rail line in the S. Myrtle Street ROW, the portion of the conveyance piping in

the ROW was installed using jack-and-bore methodology rather than by trenching. Samples from this alignment (designated trench segment A5) could only be collected at the receiving pit for the boring machine that was excavated adjacent to the connection to the storm sewer and from a pit excavated to expose and re-route a water main running perpendicular to the conveyance pipe alignment. Base samples from these two pits comprised the trench segment A5 composite sample.

All composite samples were analyzed for the interim action COCs including Stoddard solvent, penta, and heavy oil-range organics. The composite sample from trench segment A2 was additionally analyzed for dioxins/furans. Sufficient volume of the discrete subsamples from each composite was also held for potential future analysis, if required per the IAWP; however, the interim action COCs were not detected in any trench or structure excavation area composite samples, and discrete sample analysis was not necessary. A low-level dioxin/furan TEQ concentration of 0.834 pg/g was detected in the trench A2 sample. Sample locations are shown on Figure 3.2, and soil confirmation sample results for trench samples are presented in Table 3.3. Copies of laboratory analytical reports are provided in Appendix D.

A Level 1 Compliance Screening data validation was performed on trench samples as specified in the IAWP, and all data were determined to be acceptable for use. The subsurface stormwater system components were installed per design after receipt of the sample results demonstrating that the interim action COCs were not present in these areas.

3.4 CONSTRUCTION BEST MANAGEMENT PRACTICES

Best management practices (BMPs) were implemented during construction according to the appropriate project plans and permits identified in Section 2.2 to ensure that environmental quality of the Property and surrounding area were maintained during construction. TESC measures are described in Section 2.5, and other construction BMPs implemented during the interim action are described in this section.

During excavation of known or suspected contaminated soil, the surrounding ground surface beneath the excavator swing was protected with sheeting, which was removed or secured daily after finishing excavation activities. All temporary stockpiles of materials awaiting characterization were placed upon sheeting with an ecology block berm secured beneath the sheet to prevent erosion. Contaminated soil stockpiles were covered at the end of each work day, and other stockpiles were covered when they were to remain unworked for more than 24 hours.

Contaminated soil loading was performed in a designated loading area. When loading confirmed or potentially contaminated soil for disposal, the ground surface of the loading area was covered with sheeting, and any spilled soil was picked up and placed into the truck bed to prevent the spread of contamination. Loads were securely covered prior to transport.

In order to minimize track-out of soil during construction, the unpaved portion of the construction access driveway was stabilized with quarry spalls to remove excess soil from vehicle

tires prior to leaving the Property. A dry wheel decontamination area consisting of steel plates placed on a plastic liner was added in line with the stabilized construction access driveway during active soil loading activities and was used on an as-needed basis to sweep off excess material from the trucks. S. Myrtle Street was swept daily as part of SIM's operations, and the paved portion of the construction access driveway was additionally swept by the Glacier during periods of heavy truck traffic.

Construction equipment was kept in good working condition and inspected regularly for hydraulic oil or fuel leaks. During equipment fueling, absorbent cloths were deployed as necessary to prevent the release of dripping or spilled fuel to the ground surface.

Access to the Property by the public was prevented by the existing perimeter fence and by temporary fencing in areas where the perimeter fence was removed for construction. All Property entrances were secured at the end of each work day.

3.5 EXCAVATED MATERIAL MANAGEMENT

Excavated soil associated with the interim action was managed in accordance with the IAWP as described in the following sections. A summary of disposed soils is presented in Table 3.4.

3.5.1 Non-Contaminated Material Transport and Disposal

The shallow surface soils comprising approximately the top 2 feet of soil Property-wide were removed in order to prepare the subgrade for paving. Pre-construction shallow soil sampling, as described in the IAWP, demonstrated that these soils were free of chemical contamination; however, they were determined to be unsuitable for onsite reuse due to the presence of concrete, asphalt, and metal debris and were disposed of as Class 2 soil. The surface soil samples representing the material disposed as Class 2 are summarized in Table 3.4. Minor amounts of soil removed during excavation for the stormwater system which did not have indications of contamination but were determined to be either too difficult to compact or in excess of the volume of material needed for backfill were also hauled off site as Class 2 soil. A total of 13,459 tons of Class 2 soil was hauled under an appropriate bill of lading for disposed at Iron Mountain. Class 2 soil disposal documentation is included in Appendix E.

Several partial building foundations and other concrete debris were encountered during excavation for the interim action. A total of 1,176 CY of concrete was transported to Renton Concrete Recyclers to be crushed and recycled. Concrete recycling documentation is included in Appendix E.

3.5.2 Contaminated Soil Transport and Disposal

Soil with known contamination from Site COCs based on previous sample results or presenting obvious signs of contamination in the field was segregated and transported off site for disposal. The pre-construction soil samples representing the material excavated for Subtitle D disposal are summarized in Table 3.4. Contaminated soils were transported under an appropriate bill of lading

to the Waste Management's Alaska Street Reload and Recycle and the 8th Avenue S. Reload Facilities for transfer and disposal at the Columbia Ridge Landfill, a permitted Subtitle D landfill, in Arlington, Oregon. Transporters of contaminated soil followed the collection and transportation standards included in WAC 173-350-300.

Contaminated soils from the focused heavy oil-range organics excavation were moist to dry and were able to be direct loaded for disposal. Saturated soils from the Stoddard solvent excavation were stockpiled and allowed to drain, and free water was pumped from the stockpile area prior to loading to ensure that free liquid would not be present upon arrival at the receiving landfill. Due to the sandy nature of excavated soils in the saturated zone, these contaminated soils drained fully and drying agents were not necessary to absorb free liquid.

In addition, a localized area in the vicinity of the pump station (location WT-SB-01) contained total petroleum hydrocarbons (TPH) at concentrations greater than the acceptance criteria for the Class 2 landfill; therefore, 321 tons of excess soil from this area was disposed of at the Subtitle D landfill. These soils were also primarily unsaturated and able to be direct loaded.

Documentation of Subtitle D soil disposal is included in Appendix E.

3.5.3 Onsite Reuse

Overburden soil from the Stoddard solvent excavation and soils excavated for installation of stormwater system components were field screened and observed to be free of field indications of contamination such as staining, odors, or elevated PID readings. In accordance with the IAWP, if they were geotechnically suitable for reuse as backfill, these soils were stockpiled for analysis to determine their suitability for onsite reuse as practicable during construction. Any additional soils that appeared to be suitable for reuse but could not be reused due to construction staging constraints were disposed of as Class 2.

A total of four stockpiles, designated Stockpile 1 through Stockpile 4, were set aside for potential reuse. Stockpiled soil samples were analyzed to determine their suitability for reuse as onsite backfill. Each stockpile was separated into equal segments based on its estimated volume in accordance the sample frequency presented in Table 6.9 of Ecology's Guidance for Remediation of Petroleum Contaminated Sites (Ecology 2016), and three-point composite samples were collected from each segment. Per the IAWP, stockpiled soils were tested for common contaminants with MTCA Method A CULs for unrestricted use properties (refer to Table 745-1 of MTCA), including the following:

- Metals: arsenic, lead, cadmium, chromium (total), and mercury (inorganic)
- Benzene, toluene, ethylbenzene, and xylenes (BTEX) and naphthalene
- CVOCs including tetrachloroethylene (PCE), trichloroethylene, 1,1,1-trichloroethane
- TPH including gasoline-range, diesel-range and heavy oil-range organics
- PCBs

All stockpile samples had metals concentrations less than their MTCA Method A CULs and did not have detectable BTEX, naphthalene, or PCBs. Samples collected from Stockpile 1 had a single low-level detection of gasoline-range organics and two low-level detections of the CVOC PCE less than their applicable MTCA Method A CULs, and this material was determined to be suitable for onsite reuse. Samples collected from Stockpile 2 did not have detectable TPH; however, PCE was detected at low levels in four of five samples, including one detection of 0.054 mg/kg, which slightly exceeded the MTCA Method A CUL of 0.05 mg/kg; this segment of Stockpile 2 consisting of approximately 90 CY was segregated for landfill disposal and the remaining material was determined to be suitable for reuse. Samples collected from both Stockpile 3 and Stockpile 4 did not have detectable TPH or CVOCs, and the material from both stockpiles was determined to be suitable for reuse.

Soil stockpiles determined to be suitable for onsite reuse were placed as backfill material above 8 feet bgs in accordance with the IAWP. Stockpiled soils were reused as follows:

- Stockpile 1, approximately 400 CY total volume consisting of overburden soil from the Stoddard solvent excavation, was reused as backfill surrounding the stormwater detention structure above 8 feet bgs.
- Stockpile 2, approximately 360 CY total volume consisting of soil from the stormwater detention structure and trench A2 excavations, was reused as backfill and surface grading material in the detention structure excavation and trenches A2, D, E1, and E2 above approximately 5 feet bgs.
- Stockpile 3, approximately 100 CY total volume consisting of soil excavated for stormwater conveyance pipe and catch basin/manhole installation including trench segments A1, B, and C, was reused in these trenches above approximately 5 feet bgs.
- Stockpile 4, approximately 100 CY total volume consisting of soil excavated from the launch pit (approximately 8 feet bgs) for placement of the soil boring machine during jack-and-bore installation of stormwater conveyance pipe in the S. Myrtle Street ROW, was used to backfill the launch pit after completion of the pipe installation.

A Level 1 Compliance Screening data validation was performed on stockpile sample results, as specified in the IAWP, and all data were determined to be acceptable for use. Stockpile sample results are presented in Table 3.5. Copies of laboratory analytical reports are provided in Appendix D.

3.6 GROUNDWATER MANAGEMENT

Groundwater infiltration was encountered at approximately 11 and 11.5 feet bgs during excavation of the Stoddard solvent area and during installation of the subsurface structures in the pump station/pretreatment area.

Dewatering was performed according to the Glacier's Excavation, Shoring, and Dewatering Plan, which called for installation of a sump and use of a submersible or vacuum pump capable of maintaining a pumping rate of approximately 30 gallons per minute (gpm). Limited dewatering

was performed to facilitate excavation to the target depth during the Stoddard solvent excavation, and additional dewatering was performed in order to install structures in the pump station/pretreatment area. Water generated from dewatering wet soils within the contaminated soil stockpile area was pumped from the stockpile and commingled with the excavation dewatering water.

Dewatering water was presumed to be contaminated by Site COCs and/or CVOCs originating on the adjacent Fox Avenue Site. Dewatering water was pumped to two 22,000-gallon holding tanks for treatment. The water treatment system consisted of two parallel bag filters to remove sediment followed by a series of two granular activated carbon (GAC) vessels capable of maintaining a treatment rate of 25 gpm. Flow through the treatment system was controlled at a rate less than 20 gpm.

Water generated during the Stoddard solvent excavation was treated to meet the requirements for sanitary sewer disposal. Per the KCIW discharge authorization, samples for penta and non-polar fats, oils, and grease analysis were collected from the post-treatment effluent water prior to discharge. The treated water was discharged to a third holding tank pending the results of laboratory analysis. After results were received confirming that the water had been effectively treated for the specified COCs, the dewatering water was discharged to the King County sanitary sewer with additional monitoring for settleable solids and pH performed during discharge per the discharge authorization. A total of 30,017 gallons of treated water was discharged to the sanitary sewer between October 7 and October 17, 2017. A copy of the self-monitoring reporting form for KCIW sewer discharge is provided in Appendix E.

Water generated during installation of structures in the pump station/pretreatment area was excessively silty and caused blinding of the GAC in the treatment vessel. Due to construction schedule constraints, this water was removed via vactor truck for offsite treatment and disposal. A total of 15,000 gallons of water was collected via vactor truck by Mar-Vac on November 21, 2017, for offsite treatment and disposal. Tank decontamination is discussed in further detail in Section 3.9. The spent carbon from the GAC vessels and residual contaminated groundwater resulting from prior investigations that had been stored in drums on site were removed by Mar-Vac on December 15, 2017. Waste disposal records are presented in Appendix E.

3.7 SITE MONITORING

Site monitoring to ensure environmental quality and worker health and safety was performed throughout the implementation of the interim action in accordance with Floyd|Snider's HASP.

During excavation and loading of contaminated soil, ambient air monitoring with a PID was performed to ensure that air quality was acceptable at the Site in accordance with the HASP. Air monitoring during the Stoddard solvent excavation detected temporarily elevated VOC concentrations ranging from 20 to 40 parts per million by volume (ppmv) in air during contaminated soil disturbance, which dissipated quickly to less than 1 ppmv after cessation of soil disturbing activities. The permissible exposure limit of 100 ppmv for Stoddard solvent in air was not exceeded at any point during excavation or loading.

Per the CSGP and Glacier's SWPPP, weekly inspections of the stormwater management BMPs were performed by Glacier's designated Certified Erosion and Sediment Control Lead in order to ensure that stormwater did not flow off site. TESC measures were also inspected regularly per the City building permit to ensure that potentially contaminated materials were not transported off site.

3.8 HEALTH AND SAFETY

Construction activities were conducted in accordance with the IAWP and Floyd|Snider's and Glacier's HASPs, and tailgate safety meetings were performed daily prior to beginning work. To prevent injury and unnecessary contact with contaminated materials, all personnel were required to wear appropriate personal protective equipment (PPE) inside the interim action excavation work areas. When handling Subtitle D materials, the required PPE consisted of Level D, including at minimum steel-toed boots, hard hat, safety vest or other suitable high visibility clothing, sturdy outer work clothing, and work gloves.

3.9 DECONTAMINATION

The excavation and water storage equipment used during construction (bucket, tools, holding tanks, etc.) was decontaminated after handling contaminated material in order to prevent the spread of contamination. Equipment was cleaned to meet a visually clean debris-free surface standard. Equipment was decontaminated over the contaminated soil stockpile such that solids removed from equipment during decontamination were commingled with soil for Subtitle D disposal.

Truck surfaces and hand tools were able to be dry decontaminated (using a broom, brush, etc.) throughout the course of contaminated soil excavation, and the excavations were staged such that the excavator tracks did not contact contaminated soils. It was generally necessary to use pressurized water to clean debris from the excavator bucket, and the bucket was washed over the lined contaminated stockpile area. This rinse water was handled along with dewatering water generated by the placement of wet soil in this area.

The temporary lined stockpile area constructed for contaminated soil excavation was dismantled on August 27, 2017. The stockpile liners and any residual soil were disposed at the Subtitle D landfill along with the last load of contaminated soil from the stockpile area.

Decontamination of the holding tank used to store untreated dewatering water generated during the Stoddard solvent excavation was performed by Bravo Environmental, Inc., using a vactor truck on October 11, 2017. Decontamination of the holding tank used to store untreated water during installation of the structures in the pump station/pretreatment area was completed by Northwest Water Wizards, LLC, on February 14, 2018. Decontamination of the remaining onsite holding tank, which held treated water, was completed by MarVac on May 14, 2018. The wash water and sediment generated from decontamination of the holding tanks was disposed by the respective vendors at licensed solid waste disposal facilities. Tank decontamination records are presented in Appendix E.

3.10 CULTURAL RESOURCE MONITORING

The SIM Property is located on the Lower Duwamish Waterway, which is considered to be located within a high-probability area for encountering historic and pre-contact archaeological sites by the Washington State Department of Archaeology and Historic Preservation (DAHP). A Monitoring and Inadvertent Discovery Plan (MIDP) was completed by Historical Research Associates, Inc., and approved by the DAHP in June 2016 (refer to Appendix F for the DAHP MIDP approval letter). In accordance with the MIDP, all excavations in either fill and/or native sediment were monitored by either a Cultural Resource Specialist and/or a Professional Archaeologist. The fill depths across the Property are shown on Figure 3.3.

Lisa Meoli, a Cultural Resource Specialist at Floyd|Snider, completed daily site inspections to document excavations within fill and inspect open excavations and stockpiles of excavated soil for the presence of native soil and/or cultural artifacts. Excavations that extended below fill into native soil were monitored by Emily Scott, a Professional Archaeologist at Cardno. Monitoring activities occurred from August 29, 2017, until May 22, 2018. In general, typical modern and historical cultural features and materials were observed in historical fill, including brick and concrete fragments; concrete foundations; and various metal, glass, and plastic debris. No intact archaeological deposits or human remains were discovered during any excavation activity. All field observations were recorded either on a monitoring form or in an email.

During surface grading activities in September 2017, two inadvertent discoveries of historical structures were made. On September 8, 2017, an intact linear segment of a concrete foundation was uncovered, which was determined to be a 90 foot intact segment of poured concrete with metal rebar likely associated with the former dry kilns used historically by the Williams Fir Finish Company during the 1920s. Cardno submitted a recommendation to DAHP that the foundation be determined not eligible for listing in the National Register of Historic Places (NRHP). On September 12, 2017, DAHP concurred with Cardno's recommendation that the foundation was not eligible (refer to Appendix F for daily monitoring forms regarding inadvertent discoveries and DAHP Determination of Eligibility letters).

On September 20, 2017, a rectangular segment of a partially intact poured concrete foundation was exposed during grading activities. The segment was determined to be a thick slab composed of poured concrete with rounded pebbles likely associated with the former shop and storage or automotive repair facility historically used by Williams Fir Finish Company during the 1920s. Cardno recommended that the foundation segment be determined not eligible for listing in the NRHP. On September 21, 2017, DAHP concurred with Cardno's recommendation that the foundation was not eligible (refer to Appendix F for monitoring forms and DAHP Determination of Eligibility letters). The inadvertent discoveries areas (ID-1 and ID-2) are shown on Figure 3.3.

3.11 SITE RESTORATION

Site restoration was completed as part of the interim action to return the Property to appropriate condition for continued SIM operations. Site restoration included pavement of the entire

Property, restoration of perimeter and interior fencing, and restoration of water and electric service; details are shown on Figure 3.4.

Property pavement per the construction plans was completed between October 2017 and May 2018 by Salinas Construction, Inc., and Lakeridge Paving Co. The northern two-thirds of the Property were paved with concrete to facilitate container storage, and the southern third of the Property consisting of a drive aisle and car parking was paved with asphalt. The majority of concrete pavement and the first lift of asphalt pavement was completed between October and early December 2017. The remaining paving, including concrete in the disturbed area for construction of the final storm drain connection and the second lift of asphalt, was completed in May 2018. Refer to Figure 3.4 for the limits of the concrete and asphalt.

A new perimeter security fence was installed in place of the temporary fencing. In addition, interior operations fencing and security gates were also installed. Additional improvements to facilitate future operations at the Property, including hydrant water service and yard lighting, were constructed concurrently with grading and pavement.

An above-grade stormwater treatment system, consisting of two modular wetland system (MWS) units, was installed in January 2018 and was made operational in July 2018 after electrical improvements were made and power was restored to the Property. A security fence was installed around the perimeter of the MWS units. Refer to Figure 3.4 for the location of the MWS units.

3.12 WELL RESTORATION

After the completion of paving, the monitoring wells on the Property for the Site and the Fox Avenue Site were modified or restored as needed to match the post-construction surface grade, and all wells were completed with heavy-duty cast iron locking monuments. Well restoration was completed by ESN Northwest on December 11, 2017, and May 30, 2018. Monitoring well top of casing elevations were subsequently surveyed on June 13, 2018, by True North Land Surveying, Inc. A summary of monitoring well location and elevation data is included in Table 3.6.

3.13 PERMIT CLOSEOUT

Inspections were conducted on an as-needed basis to close out City-issued permits and obtain authorization for SIM to reoccupy the Property.

Closeout of the KCIW discharge permit was completed upon submittal of a self-monitoring report detailing the total volume of water discharged and associated monitoring results. The self-monitoring report was submitted on February 15, 2018.

The Project Manager for Ecology's Water Quality division performed a final CSGP inspection in order to complete a Notice of Termination (NOT) for the CSGP on July 3, 2018. The CSGP NOT inspection included verification that the pavement and stormwater system were constructed as specified in the ER and ER Addendum and that all TESC measures installed during construction had been removed; Ecology subsequently issued the CSGP NOT. There was no stormwater discharge during construction under the CSGP.

4.0 Future Site Activities and Schedule

It is expected that future soil cleanup (likely source soil removal by excavation) will be necessary off-property and immediately south of the Stoddard solvent interim action excavation as part of a future Cleanup Action Plan. As described in Section 3.2, an additional excavation buffer was incorporated into the design of the interim action to allow future excavation to overlap with the interim action excavation, without compromising the subsurface detention structure associated with the stormwater system. In addition, it is expected that remedial action(s) will also be implemented for groundwater in the future, and the completion of the interim action will not prevent the completion of groundwater cleanup actions in the future.

The schedule presented below provides anticipated submittal dates for major deliverables after the interim action. In addition to the milestones in the schedule, all analytical data and well survey data will be submitted to Ecology in both printed and electronic formats (i.e., submitted to the Environmental Information Management database) in accordance with Section VII of the AO (Work to be Performed), Ecology's Toxics Cleanup Program Policy 840 (Data Submittal Requirements), and any subsequent procedures specified by Ecology for data submittal.

Deliverable/Milestone	Date
Progress Reports	Monthly on the 15th of the month after the reporting period
Agency Review Draft Remedial Investigation Work Plan	Submitted February 1, 2018
Final Remedial Investigation Work Plan	30 calendar days after receipt of Ecology's comments on Agency Review Draft Remedial Investigation Work Plan
Implement Remedial Investigation Work Plan	30 calendar days after Ecology's written approval of the Final Remedial Investigation Work Plan
Agency Review Draft RI/FS	120 calendar days after the receipt of validated RI data
Public Review Draft RI/FS	30 calendar days after receipt of Ecology comments on Agency Review Draft RI/FS
Agency Review Draft Cleanup Action Plan	90 days after Ecology approval of the Public Review Draft RI/FS
Public Review Draft Cleanup Action Plan	Ecology-produced document, after Ecology approval of Agency Review Draft Cleanup Action Plan

5.0 References

Floyd|Snider. 2017. *Whitehead Tyee Site Interim Action Work Plan* Prepared for Seattle Iron & Metals Corporation. April.

KPFF Consulting Engineers. 2013. *Seattle Iron & Metals Corporation Engineering Report, 730 S. Myrtle Street, Seattle Washington*. Prepared for Seattle Iron & Metals Corporation. 29 April; Revised 1 October.

____. 2016. *Engineering Report Addendum for 730 S. Myrtle Street*. Letter report from William Armour, KPFF, to Robert Wright, Washington State Department of Ecology. 30 September.

Van den Berg, M., L. S. Birnbaum, M. Denison, M. De Vito, W. Farland, M. Feeley, H. Fiedler, H. Hakansson, A. Hanberg, L. Haws, M. Rose, S. Safe, D. Schrenk, C. Tohyama, A. Tritscher, J. Tuomisto, M. Tysklind, N. Walker, and R. E. Peterson. 2006. "The 2005 World Health Organization re-evaluation of human and mammalian toxic equivalency factors for dioxins and dioxin-like compounds." *Toxicological Sciences* 93(2): 223–241.

Washington State Department of Ecology (Ecology). 2016. *Guidance for Remediation of Petroleum Contaminated Sites*. Prepared by the Toxics Cleanup Program. Publication No. 10-09-057. Revised June.

Whitehead Tyee Site

Interim Action Completion Report

Tables

Table 3.1
Excavation Confirmation Sample Results

			Focused Heavy Oil-Range Organics Excavation							Stoddard Solvent Excavation					
Location			**WT-MW-110**	**WT-SB-14**	**WT-SB-15**		**WT-SB-18**	**WT-SB-20**	**HO-SE1**	**WT-GP-3**	**WT-GP-4**	**WT-SB-06**	**SS-B1**		**SS-B2**
Sample ID			**SB-11-6-7**	**SB-14-4-5**	**SB-15-4-5**	**SB-15-4-5-D**	**SB-18-4-5**	**SB-20-5-6**	**HO-SE1-4'**	**GP-3 (12-13)**	**GP-4 (12-13)**	**SB-06-10-11**	**SS-B1-16'**	**SS-B1-16'-D**	**SS-B2-17'**
Sample Date			**12/07/2015**	**03/29/2016**	**03/29/2016**	**03/29/2016**	**03/29/2016**	**03/29/2016**	**08/30/2017**	**03/26/2013**	**03/26/2013**	**12/07/2015**	**09/07/2017**	**09/07/2017**	**09/11/2017**
Sample Depth			**6–7 feet bgs**	**4–5 feet bgs**	**4–5 feet bgs**	**4–5 feet bgs**	**4–5 feet bgs**	**5–6 feet bgs**	**4 feet bgs**	**12–13 feet bgs**	**12–13 feet bgs**	**10–11 feet bgs**	**16 feet bgs**	**16 feet bgs**	**17 feet bgs**
Analyte	**Units**	**RL**													
Total Petroleum Hydrocarbons by NWTPH-Dx															
Diesel-range organics	mg/kg	--	21 UJ	24 U	26 U	24 U	27 U	22 U	50 U	NA	NA	22 U	NA	NA	NA
Heavy oil-range organics	mg/kg	--	80 J	60 U	66 U	60 U	67 U	540 J	250 U	NA	NA	56 U	NA	NA	NA
Stoddard solvent	mg/kg	1,000	21 UJ	NA	NA	NA	NA	NA	NA	110	**4,000**	22 UJ	50 U	50 U	50 U
Semivolatile Organic Compounds by USEPA 8270D															
Pentachlorophenol	mg/kg	2.5	NA	NA	NA	NA	NA	NA	NA	NA	NA	0.023 U	NA	NA	0.10 U
Dioxins/Furans by USEPA 1613															
Dioxins/furans (TEQ-HalfND)[1,2]	pg/g	--	NA	NA	NA	NA	NA	NA	NA	NA	NA	NA	NA	NA	NA

Notes:

-- Not established or not applicable.

RED/BOLD Indicates a concentration that exceeds the reporting limit.

1 World Health Organization 2005 Toxic Equivalency Factors were used for calculation of dioxin/furan TEQ (Van den Berg et al. 2006).

2 Calculated using detected dioxin/furan concentrations plus one-half the detection limit for dioxins/furans that were not detected.

Abbreviations:

mg/kg Milligrams per kilogram
ND Not detected
NA Not analyzed
NWTPH Northwest Total Petroleum Hydrocarbon
pg/g Picograms per gram
USEPA U.S. Environmental Protection Agency
TEQ Toxic equivalent

Qualifiers:

J Analyte was detected; concentration is considered to be an estimate.
U Analyte was not detected at the given reporting limit.
UJ Analyte was not detected at the given reporting limit, which is considered to be an estimate.

Table 3.1
Excavation Confirmation Sample Results

			Stoddard Solvent Excavation (cont.)				
Location			**SS-B3**	**SS-B4**	**SS-S1W**	**SS-S2E**	**SS-S3N**
Sample ID			**SS-B3-17'**	**SS-B4-16'**	**SS-S1W-10.5'**	**SS-S2E-12'**	**SS-S3N-12'**
Sample Date			**09/11/2017**	**09/14/2017**	**09/06/2017**	**09/14/2017**	**09/14/2017**
Sample Depth			**17 feet bgs**	**16 feet bgs**	**10.5 feet bgs**	**12 feet bgs**	**12 feet bgs**
Analyte	**Units**	**RL**					
Total Petroleum Hydrocarbons (TPH) by NWTPH-Dx							
Diesel-range organics	mg/kg	--	NA	NA	NA	NA	NA
Heavy oil-range organics	mg/kg	--	NA	NA	NA	NA	NA
Stoddard solvent	mg/kg	1,000	50 U	50 U	NA	50 U	50 U
Semivolatile Organic Compounds by USEPA 8270D							
Pentachlorophenol	mg/kg	2.5	NA	0.10 U	0.10 U	NA	NA
Dioxins/Furans by USEPA 1613							
Dioxins/furans (TEQ-HalfND)[1,2]	pg/g	--	NA	1.19 J	NA	NA	NA

Notes:

-- Not established or not applicable.

RED/BOLD Indicates a concentration that exceeds the reporting limit.

1 World Health Organization 2005 Toxic Equivalency Factors were used for calculation of dioxin/furan TEQ (Van den Berg et al. 2006).

2 Calculated using detected dioxin/furan concentrations plus one-half the detection limit for dioxins/furans that were not detected.

Abbreviations:

mg/kg Milligrams per kilogram
ND Not detected
NA Not analyzed
NWTPH Northwest Total Petroleum Hydrocarbon
pg/g Picograms per gram
USEPA United States Environmental Protection Agency
TEQ Toxic equivalent

Qualifiers:

J Analyte was detected; concentration is considered to be an estimate.
U Analyte was not detected at the given reporting limit.
UJ Analyte was not detected at the given reporting limit, which is considered to be an estimate.

Table 3.2
Heavy Oil-Range Organics Petroleum Constituent Analysis Results

		Focused Heavy Oil-Range Organics Excavation
	Location	**HO-SE1**
	Sample ID	**HO-SE1-4'**
	Sample Date	**08/30/2017**
	Sample Depth	**4 feet bgs**
Analyte	**Units**	
Metals by USEPA 6020A and 7471B		
Arsenic	mg/kg	4.2
Barium	mg/kg	31
Cadmium	mg/kg	1.0 U
Chromium	mg/kg	9.3
Lead	mg/kg	3.1
Mercury	mg/kg	1.0 U
Selenium	mg/kg	1.0 U
Silver	mg/kg	1.0 U
Total Petroleum Hydrocarbons by NWTPH-Dx		
Diesel-range organics	mg/kg	50 U
Heavy oil-range organics	mg/kg	250 U
Polychlorinated Biphenyls (PCBs) by USEPA 8082A		
PCB Aroclor 1016	mg/kg	0.020 U
PCB Aroclor 1221	mg/kg	0.020 U
PCB Aroclor 1232	mg/kg	0.020 U
PCB Aroclor 1242	mg/kg	0.020 U
PCB Aroclor 1248	mg/kg	0.020 U
PCB Aroclor 1254	mg/kg	0.020 U
PCB Aroclor 1260	mg/kg	0.020 U
PCB Aroclor 1262	mg/kg	0.020 U
PCB Aroclor 1268	mg/kg	0.020 U
PCBs (Total, Aroclor)	mg/kg	0.010 U
Carcinogenic Polycyclic Aromatic Hydrocarbons by USEPA 8270D-SIM		
Benzo(a)anthracene	mg/kg	0.01 U
Chrysene	mg/kg	0.01 U
Benzo(b)fluoranthene	mg/kg	0.01 U
Benzo(k)fluoranthene	mg/kg	0.01 U
Benzo(a)pyrene	mg/kg	0.01 U
Indeno(1,2,3-c,d)pyrene	mg/kg	0.01 U
Dibenzo(a,h)anthracene	mg/kg	0.01 U
Volatile Organic Compounds by USEPA 8260C		
1,1,1,2-Tetrachloroethane	mg/kg	0.050 U
1,1,1-Trichloroethane	mg/kg	0.050 U
1,1,2,2-Tetrachloroethane	mg/kg	0.050 U

Table 3.2
Heavy Oil-Range Organics Petroleum Constituent Analysis Results

		Focused Heavy Oil-Range Organics Excavation
	Location	**HO-SE1**
	Sample ID	**HO-SE1-4'**
	Sample Date	**08/30/2017**
	Sample Depth	**4 feet bgs**
Analyte	**Units**	
Volatile Organic Compounds by USEPA 8260C (cont.)		
1,1,2-Trichloroethane	mg/kg	0.050 U
1,1-Dichloroethane	mg/kg	0.050 U
1,1-Dichloroethene	mg/kg	0.050 U
1,1-Dichloropropene	mg/kg	0.050 U
1,2,3-Trichlorobenzene	mg/kg	0.25 U
1,2,3-Trichloropropane	mg/kg	0.050 U
1,2,4-Trichlorobenzene	mg/kg	0.25 U
1,2,4-Trimethylbenzene	mg/kg	0.050 U
1,2-Dibromo-3-chloropropane	mg/kg	0.50 U
1,2-Dibromoethane	mg/kg	0.050 U
1,2-Dichlorobenzene	mg/kg	0.050 U
1,2-Dichloroethane	mg/kg	0.050 U
1,2-Dichloropropane	mg/kg	0.050 U
1,3,5-Trimethylbenzene	mg/kg	0.050 U
1,3-Dichlorobenzene	mg/kg	0.050 U
1,3-Dichloropropane	mg/kg	0.050 U
1,4-Dichlorobenzene	mg/kg	0.050 U
2,2-Dichloropropane	mg/kg	0.050 U
2-Chlorotoluene	mg/kg	0.050 U
2-Hexanone	mg/kg	0.50 U
4-Chlorotoluene	mg/kg	0.050 U
Acetone	mg/kg	0.50 U
Benzene	mg/kg	0.030 U
Bromobenzene	mg/kg	0.050 U
Bromodichloromethane	mg/kg	0.050 U
Bromoform	mg/kg	0.050 U
Bromomethane	mg/kg	0.50 U
Carbon tetrachloride	mg/kg	0.050 U
Chlorobenzene	mg/kg	0.050 U
Chloroethane	mg/kg	0.50 UJ
Chloroform	mg/kg	0.050 U
Chloromethane	mg/kg	0.50 U
cis-1,2-Dichloroethene	mg/kg	0.050 U
cis-1,3-Dichloropropene	mg/kg	0.050 U

Table 3.2
Heavy Oil-Range Organics Petroleum Constituent Analysis Results

		Focused Heavy Oil-Range Organics Excavation
	Location	**HO-SE1**
	Sample ID	**HO-SE1-4'**
	Sample Date	**08/30/2017**
	Sample Depth	**4 feet bgs**
Analyte	**Units**	
Volatile Organic Compounds by USEPA 8260C (cont.)		
Cymene	mg/kg	0.050 U
Dibromochloromethane	mg/kg	0.050 U
Dibromomethane	mg/kg	0.050 U
Dichlorodifluoromethane	mg/kg	0.50 U
Ethylbenzene	mg/kg	0.050 U
Hexachlorobutadiene	mg/kg	0.25 U
iso-Propylbenzene	mg/kg	0.050 U
Methyl ethyl ketone	mg/kg	0.50 U
Methyl iso butyl ketone	mg/kg	0.50 U
Methylene chloride	mg/kg	0.50 U
Methyl-Tert-Butyl Ether	mg/kg	0.050 U
Naphthalene	mg/kg	0.050 U
n-Hexane	mg/kg	0.25 U
n-Propylbenzene	mg/kg	0.050 U
sec-Butylbenzene	mg/kg	0.050 U
Styrene	mg/kg	0.050 U
tert-Butylbenzene	mg/kg	0.050 U
Tetrachloroethene	mg/kg	0.026
Toluene	mg/kg	0.050 U
trans-1,2-Dichloroethene	mg/kg	0.050 U
trans-1,3-Dichloropropene	mg/kg	0.050 U
Trichloroethene	mg/kg	0.020 U
Trichlorofluoromethane	mg/kg	0.50 U
Vinyl chloride	mg/kg	0.050 U
Xylene (meta & para)	mg/kg	0.10 U
Xylene (ortho)	mg/kg	0.050 U

Abbreviations:

mg/kg Milligrams per kilogram
NWTPH Northwest Total Petroleum Hydrocarbon
USEPA U.S. Environmental Protection Agency

Qualifiers:

U Analyte was not detected at the given reporting limit.
UJ Analyte was not detected at the given reporting limit, which is considered to be an estimate.

Table 3.3
Stormwater System Excavation Sample Results

Location		WT-A1	WT-A2	WT-A3		WT-A4	WT-A5	WT-B	WT-C	WT-D	WT-E1	WT-E2
Sample ID		WT-A1	WT-A2	WT-A3	WT-A3-D	WT-A4	WT-A5	WT-B	WT-C	WT-D	WT-E1	WT-E2
Sample Date		09/28/2017	09/28/2017	09/20/2017	09/20/2017	10/26/2017	4/1/2018	09/28/2017	09/19/2017	09/19/2017	09/19/2017	09/19/2017
Sample Depth		4 feet bgs	5 feet bgs	9–9.5 feet bgs	9–9.5 feet bgs	10 feet bgs	7–8 feet bgs	3–5 feet bgs	4 feet bgs	4 feet bgs	4 feet bgs	4 feet bgs
Analyte	**Unit**											
Total Petroleum Hydrocarbons by NWTPH-Dx												
Heavy oil-range organics	mg/kg	250 U	250 U	250 U	250 U	250 U	250 U	250 U	250 U	250 U	250 U	250 U
Stoddard solvent	mg/kg	50 U	50 U	50 U	50 U	50 U	50 U	50 U	50 U	50 U	50 U	50 U
Semivolatile Organic Compounds by USEPA 8270D												
Pentachlorophenol	mg/kg	0.10 U	0.10 U	0.50 U	0.50 U	0.10 U	0.050 U	0.10 U	0.10 U	0.10 U	0.10 U	0.10 U
Dioxins/Furans by USEPA 1613												
Dioxins/furans (TEQ-HalfND)[1,2]	pg/g	NA	0.834 J	NA	NA	NA	NA	NA	NA	NA	NA	NA

Notes:

1 World Health Organization 2005 Toxic Equivalency Factors were used for calculation of dioxin/furan TEQ (Van den Berg et al. 2006).

2 Calculated using detected dioxin/furan concentrations plus one-half the detection limit for dioxins/furans that were not detected.

Abbreviations:

mg/kg Milligrams per kilogram

ND Not detected

NA Not analyzed

NWTPH Northwest Total Petroleum Hydrocarbon

pg/g Picograms per gram

USEPA U.S. Environmental Protection Agency

TEQ Toxic equivalent

Qualifier:

U Analyte was not detected at the given reporting limit.

Table 3.4
Disposed Soil Sample Results

Area		Focused Heavy Oil-Range Organics Excavation						Stoddard Solvent Excavation				
Location		WT-GP-10		WT-MW-110		WT-SB-20		WT-GP-2				WT-SB-09
Sample ID		GP-10 (0-5)	GP-10 (4-5)	SB-11-0-2	SB-11-4-5	SB-20-4-5	SB-20-5-6	GP-2 (0-10)	GP-2 (7-8)	GP-2 (10-13)	GP-2 (12-13)	SB-09-13-14
Sample Date		03/26/2013	03/26/2013	12/07/2015	12/07/2015	03/29/2016	03/29/2016	03/26/2013	03/26/2013	03/26/2013	03/26/2013	12/07/2015
Analyte	**Units**											
Total Petroleum Hydrocarbons by NWTPH-Gx and NWTPH-Dx												
Gasoline-range organics	mg/kg	NA	6.3 U	NA	NA	NA	NA	NA	7.0 U	NA	6.3 U	NA
Stoddard solvent	mg/kg	NA	200	22 UJ	24 UJ	NA	NA	NA	NA	NA	5,300	3,000 J
Diesel-range organics	mg/kg	22 U	NA	22 UJ	24 U	23 U	22 UJ	23 U	NA	300 JM	NA	24 U
Heavy oil-range organics	mg/kg	7,900	NA	300 J	23,000	3,000	540 J	150	NA	88	NA	60 U
Metals by USEPA 6020A and 7471B												
Arsenic	mg/kg	3.3	NA	8.1	NA	NA	NA	3.1	NA	1.5	NA	NA
Barium	mg/kg	34	NA	56	NA	NA	NA	26	NA	12	NA	NA
Cadmium	mg/kg	0.18	NA	0.39	NA	NA	NA	0.20 U	NA	0.20 U	NA	NA
Chromium	mg/kg	11	NA	24	NA	NA	NA	12	NA	11	NA	NA
Lead	mg/kg	5.6	NA	36	NA	NA	NA	6.1	NA	1.1	NA	NA
Mercury	mg/kg	0.26 U	NA	0.26 U	NA	NA	NA	0.31 U	NA	0.27 U	NA	NA
Selenium	mg/kg	0.90	NA	0.84	NA	NA	NA	1.1	NA	0.92	NA	NA
Silver	mg/kg	0.084 U	NA	0.085 U	NA	NA	NA	0.13	NA	0.10 U	NA	NA
Polychlorinated Biphenyls (PCBs) by USEPA 8082A												
PCB Aroclor 1016	mg/kg	NA	NA	0.10 U	NA	NA	NA	NA	NA	NA	NA	NA
PCB Aroclor 1221	mg/kg	NA	NA	0.10 U	NA	NA	NA	NA	NA	NA	NA	NA
PCB Aroclor 1232	mg/kg	NA	NA	0.10 U	NA	NA	NA	NA	NA	NA	NA	NA
PCB Aroclor 1242	mg/kg	NA	NA	0.10 U	NA	NA	NA	NA	NA	NA	NA	NA
PCB Aroclor 1248	mg/kg	NA	NA	0.10 U	NA	NA	NA	NA	NA	NA	NA	NA
PCB Aroclor 1254	mg/kg	NA	NA	0.10 U	NA	NA	NA	NA	NA	NA	NA	NA
PCB Aroclor 1260	mg/kg	NA	NA	0.10 U	NA	NA	NA	NA	NA	NA	NA	NA
PCB Aroclor 1262	mg/kg	NA	NA	0.10 U	NA	NA	NA	NA	NA	NA	NA	NA
PCB Aroclor 1268	mg/kg	NA	NA	0.10 U	NA	NA	NA	NA	NA	NA	NA	NA
PCBs (Total, Aroclors)	mg/kg	NA	NA	0.10 U	NA	NA	NA	NA	NA	NA	NA	NA
Semivolatile Organic Compounds by USEPA Method 8270												
1,2,4-Trichlorobenzene	µg/kg	NA	NA	110 U	NA	NA	NA	NA	NA	NA	NA	NA
1,2-Dichlorobenzene	µg/kg	NA	NA	110 U	NA	NA	NA	NA	NA	NA	NA	NA
1,3-Dichlorobenzene	µg/kg	NA	NA	110 U	NA	NA	NA	NA	NA	NA	NA	NA
1,4-Dichlorobenzene	µg/kg	100 U	NA	110 U	NA	NA	NA	110 U	NA	110 U	NA	NA
1-Methylnaphthalene	µg/kg	NA	NA	90 U	NA	NA	NA	NA	NA	NA	NA	NA
2,4,5-Trichlorophenol	µg/kg	200 U	NA	230 U	NA	NA	NA	220 U	NA	230 U	NA	NA
2,4,6-Trichlorophenol	µg/kg	200 U	NA	230 U	NA	NA	NA	220 U	NA	230 U	NA	NA
2,4-Dichlorophenol	µg/kg	NA	NA	230 U	NA	NA	NA	NA	NA	NA	NA	NA
2,4-Dimethylphenol	µg/kg	NA	NA	110 U	NA	NA	NA	NA	NA	NA	NA	NA
2,4-Dinitrophenol	µg/kg	NA	NA	230 U	NA	NA	NA	NA	NA	NA	NA	NA
2,4-Dinitrotoluene	µg/kg	100 U	NA	110 U	NA	NA	NA	110 U	NA	110 U	NA	NA
2,6-Dinitrotoluene	µg/kg	NA	NA	110 U	NA	NA	NA	NA	NA	NA	NA	NA
2-Chloronaphthalene	µg/kg	NA	NA	110 U	NA	NA	NA	NA	NA	NA	NA	NA
2-Chlorophenol	µg/kg	NA	NA	110 U	NA	NA	NA	NA	NA	NA	NA	NA

Table 3.4
Disposed Soil Sample Results

Area		Focused Heavy Oil-Range Organics Excavation						Stoddard Solvent Excavation				
Location		WT-GP-10		WT-MW-110		WT-SB-20		WT-GP-2				WT-SB-09
Sample ID		GP-10 (0-5)	GP-10 (4-5)	SB-11-0-2	SB-11-4-5	SB-20-4-5	SB-20-5-6	GP-2 (0-10)	GP-2 (7-8)	GP-2 (10-13)	GP-2 (12-13)	SB-09-13-14
Sample Date		03/26/2013	03/26/2013	12/07/2015	12/07/2015	03/29/2016	03/29/2016	03/26/2013	03/26/2013	03/26/2013	03/26/2013	12/07/2015
Analyte	**Units**											
Semivolatile Organic Compounds by USEPA Method 8270 (cont.)												
2-Methylnaphthalene	µg/kg	NA	NA	90 U	NA	NA	NA	NA	NA	NA	NA	NA
2-Methylphenol	µg/kg	100 U	NA	110 U	NA	NA	NA	110 U	NA	110 U	NA	NA
2-Nitroaniline	µg/kg	NA	NA	560 U	NA	NA	NA	NA	NA	NA	NA	NA
2-Nitrophenol	µg/kg	NA	NA	230 U	NA	NA	NA	NA	NA	NA	NA	NA
4,6-Dinitro-o-cresol	µg/kg	NA	NA	230 U	NA	NA	NA	NA	NA	NA	NA	NA
4-Bromophenyl phenyl ether	µg/kg	NA	NA	110 U	NA	NA	NA	NA	NA	NA	NA	NA
4-Chloro-3-methylphenol	µg/kg	NA	NA	560 U	NA	NA	NA	NA	NA	NA	NA	NA
4-Chloroaniline	µg/kg	NA	NA	560 U	NA	NA	NA	NA	NA	NA	NA	NA
4-Chlorophenyl phenyl ether	µg/kg	NA	NA	110 U	NA	NA	NA	NA	NA	NA	NA	NA
4-Methylphenol	µg/kg	100 U	NA	110 U	NA	NA	NA	110 U	NA	110 U	NA	NA
4-Nitrophenol	µg/kg	NA	NA	560 U	NA	NA	NA	NA	NA	NA	NA	NA
Acenaphthene	µg/kg	NA	NA	90 U	NA	NA	NA	NA	NA	NA	NA	NA
Acenaphthylene	µg/kg	NA	NA	90 U	NA	NA	NA	NA	NA	NA	NA	NA
Anthracene	µg/kg	NA	NA	90 U	NA	NA	NA	NA	NA	NA	NA	NA
Benzo(a)anthracene	µg/kg	NA	NA	460	NA	NA	NA	NA	NA	NA	NA	NA
Benzo(a)pyrene	µg/kg	NA	NA	640	NA	NA	NA	NA	NA	NA	NA	NA
Benzo(b)fluoranthene	µg/kg	NA	NA	820	NA	NA	NA	NA	NA	NA	NA	NA
Benzo(g,h,i)perylene	µg/kg	NA	NA	300	NA	NA	NA	NA	NA	NA	NA	NA
Benzo(k)fluoranthene	µg/kg	NA	NA	300	NA	NA	NA	NA	NA	NA	NA	NA
Benzyl alcohol	µg/kg	NA	NA	110 U	NA	NA	NA	NA	NA	NA	NA	NA
bis(2-chloroethoxy)methane	µg/kg	NA	NA	110 U	NA	NA	NA	NA	NA	NA	NA	NA
bis(2-chloroethyl)ether	µg/kg	NA	NA	230 U	NA	NA	NA	NA	NA	NA	NA	NA
bis(2-ethylhexyl)phthalate	µg/kg	NA	NA	2,600	NA	NA	NA	NA	NA	NA	NA	NA
Butyl benzyl phthalate	µg/kg	NA	NA	860	NA	NA	NA	NA	NA	NA	NA	NA
Carbazole	µg/kg	NA	NA	560 U	NA	NA	NA	NA	NA	NA	NA	NA
Chrysene	µg/kg	NA	NA	420	NA	NA	NA	NA	NA	NA	NA	NA
Di(2-ethylhexyl)adipate	µg/kg	NA	NA	110 U	NA	NA	NA	NA	NA	NA	NA	NA
Dibenzo(a,h)anthracene	µg/kg	NA	NA	90 U	NA	NA	NA	NA	NA	NA	NA	NA
Dibenzofuran	µg/kg	NA	NA	110 U	NA	NA	NA	NA	NA	NA	NA	NA
Diethylphthalate	µg/kg	NA	NA	110 U	NA	NA	NA	NA	NA	NA	NA	NA
Dimethyl phthalate	µg/kg	NA	NA	110 U	NA	NA	NA	NA	NA	NA	NA	NA
Di-n-butyl phthalate	µg/kg	NA	NA	110 U	NA	NA	NA	NA	NA	NA	NA	NA
Di-n-octyl phthalate	µg/kg	NA	NA	110 U	NA	NA	NA	NA	NA	NA	NA	NA
Fluoranthene	µg/kg	NA	NA	970	NA	NA	NA	NA	NA	NA	NA	NA
Fluorene	µg/kg	NA	NA	90 U	NA	NA	NA	NA	NA	NA	NA	NA
Hexachlorobenzene	µg/kg	100 U	NA	110 U	NA	NA	NA	110 U	NA	110 U	NA	NA
Hexachlorobutadiene	µg/kg	100 U	NA	110 U	NA	NA	NA	110 U	NA	110 U	NA	NA
Hexachlorocyclopentadiene	µg/kg	NA	NA	110 U	NA	NA	NA	NA	NA	NA	NA	NA
Hexachloroethane	µg/kg	100 U	NA	110 U	NA	NA	NA	110 U	NA	110 U	NA	NA

Table 3.4
Disposed Soil Sample Results

Area		Focused Heavy Oil-Range Organics Excavation						Stoddard Solvent Excavation				
Location		WT-GP-10		WT-MW-110		WT-SB-20		WT-GP-2				WT-SB-09
Sample ID		GP-10 (0-5)	GP-10 (4-5)	SB-11-0-2	SB-11-4-5	SB-20-4-5	SB-20-5-6	GP-2 (0-10)	GP-2 (7-8)	GP-2 (10-13)	GP-2 (12-13)	SB-09-13-14
Sample Date		03/26/2013	03/26/2013	12/07/2015	12/07/2015	03/29/2016	03/29/2016	03/26/2013	03/26/2013	03/26/2013	03/26/2013	12/07/2015
Analyte	**Units**											
Semivolatile Organic Compounds by USEPA Method 8270 (cont.)												
Indeno(1,2,3-c,d)pyrene	µg/kg	NA	NA	430	NA	NA	NA	NA	NA	NA	NA	NA
Isophorone	µg/kg	NA	NA	110 U	NA	NA	NA	NA	NA	NA	NA	NA
m-cresol	µg/kg	100 U	NA	NA	NA	NA	NA	110 U	NA	110 U	NA	NA
Naphthalene	µg/kg	NA	NA	90 U	NA	NA	NA	NA	NA	NA	NA	NA
Nitrobenzene	µg/kg	200 U	NA	230 U	NA	NA	NA	220 U	NA	230 U	NA	NA
N-Nitroso-di-n-propylamine	µg/kg	NA	NA	110 U	NA	NA	NA	NA	NA	NA	NA	NA
Pentachlorophenol	µg/kg	190	NA	110 U	NA	NA	NA	110 U	NA	9,000	NA	2,500
Phenanthrene	µg/kg	NA	NA	380	NA	NA	NA	NA	NA	NA	NA	NA
Phenol	µg/kg	NA	NA	230 U	NA	NA	NA	NA	NA	NA	NA	NA
Pyrene	µg/kg	NA	NA	830	NA	NA	NA	NA	NA	NA	NA	NA
Pyridine	µg/kg	200 U	NA	NA	NA	NA	NA	220 U	NA	230 U	NA	NA
Volatile Organic Compounds by USEPA 8260C												
1,1,1-Trichloroethane	mg/kg	NA	NA	NA	NA	NA	NA	NA	NA	NA	NA	NA
1,1-Dichloroethene	mg/kg	NA	0.063 U	NA	NA	NA	NA	NA	0.070 U	NA	0.063 U	NA
1,2-Dichloroethane	mg/kg	NA	0.038 U	NA	NA	NA	NA	NA	0.042 U	NA	0.038 U	NA
Benzene	mg/kg	NA	0.025 U	NA	NA	NA	NA	NA	0.028 U	NA	0.025 U	NA
Carbon tetrachloride	mg/kg	NA	0.025 U	NA	NA	NA	NA	NA	0.028 U	NA	0.025 U	NA
Chlorobenzene	mg/kg	NA	0.025 U	NA	NA	NA	NA	NA	0.028 U	NA	0.025 U	NA
Chloroform	mg/kg	NA	0.025 U	NA	NA	NA	NA	NA	0.028 U	NA	0.025 U	NA
Ethylbenzene	mg/kg	NA	NA	NA	NA	NA	NA	NA	NA	NA	NA	NA
Methyl ethyl ketone	mg/kg	NA	0.079 U	NA	NA	NA	NA	NA	0.088 U	NA	0.079 U	NA
Naphthalene	mg/kg	NA	NA	NA	NA	NA	NA	NA	NA	NA	NA	NA
Tetrachloroethene	mg/kg	NA	0.025 U	NA	NA	NA	NA	NA	0.028 U	NA	0.025 U	NA
Toluene	mg/kg	NA	NA	NA	NA	NA	NA	NA	NA	NA	NA	NA
Trichloroethene	mg/kg	NA	0.038 U	NA	NA	NA	NA	NA	0.042 U	NA	0.038 U	NA
Vinyl chloride	mg/kg	NA	0.0025 U	NA	NA	NA	NA	NA	0.0028 U	NA	0.0025 U	NA
Xylene (meta & para)	mg/kg	NA	NA	NA	NA	NA	NA	NA	NA	NA	NA	NA
Xylene (ortho)	mg/kg	NA	NA	NA	NA	NA	NA	NA	NA	NA	NA	NA

Abbreviations:

µg/kg Micrograms per kilogram
mg/kg Milligrams per kilogram
NA Not analyzed
NWTPH Northwest Total Petroleum Hydrocarbon
USEPA U.S. Environmental Protection Agency

Qualifiers:

J Analyte was detected; concentration is considered to be an estimate.
JM Analyte was detected; concentration is considered to be an estimate due to poor chromatographic match to the standard used for quantitation.
U Analyte was not detected at the given reporting limit.
UJ Analyte was not detected at the given reporting limit, which is considered to be an estimate.

Table 3.4
Disposed Soil Sample Results

Area		Surface Soil											Trench A4	
Location		SS-01	SS-02	SS-03	SS-04	SS-05	SS-06	SS-07	SS-08	WT-SB-01	WT-SB-02	WT-SB-08	WT-GP-5	
Sample ID		WT-SS-01-0-6"	WT-SS-02-0-6"	WT-SS-03-0-3"	WT-SS-04-0-6"	WT-SS-05-0-6"	WT-SS-06-0-6"	WT-SS-07-0-6"	WT-SS-08-0-6"	SB-01-0-2	SB-02-0-2	SB-08-0-2	GP-5 (0-5)	GP-5 (2)
Sample Date		04/11/2017	04/11/2017	04/11/2017	04/11/2017	04/11/2017	04/11/2017	04/11/2017	04/11/2017	12/07/2015	12/07/2015	12/07/2015	03/26/2013	03/26/2013
Analyte	**Units**													
Total Petroleum Hydrocarbons by NWTPH-Gx and NWTPH-Dx														
Gasoline-range organics	mg/kg	NA	NA	NA	NA	NA	NA	NA	NA	NA	NA	NA	NA	6.6 U
Stoddard solvent	mg/kg	NA	NA	NA	NA	NA	NA	NA	NA	23 UJ	21 UJ	NA	NA	NA
Diesel-range organics	mg/kg	NA	NA	NA	NA	NA	NA	NA	NA	23 U	21 U	NA	23 U	NA
Heavy oil-range organics	mg/kg	NA	NA	NA	NA	NA	NA	NA	NA	1,100	450	NA	56 U	NA
Metals by USEPA 6020A and 7471B														
Arsenic	mg/kg	8.9	NA	NA	4.4	NA	10	NA	6.2	5.0	NA	2.9	3.2	NA
Barium	mg/kg	53	NA	NA	140	NA	46	NA	30	42	NA	20	23	NA
Cadmium	mg/kg	1.6	NA	NA	1.2	NA	0.36	NA	0.80	0.29	NA	0.16 U	0.18 U	NA
Chromium	mg/kg	140	NA	NA	260	NA	240	NA	150	20	NA	11	13	NA
Lead	mg/kg	110	NA	NA	41	NA	43	NA	42	30 J	NA	12	4.0	NA
Mercury	mg/kg	4.0 U	NA	NA	0.40 U	NA	0.40 U	NA	0.40 U	0.26 U	NA	0.25 U	0.31 U	NA
Selenium	mg/kg	0.20 U	NA	NA	0.20 U	NA	0.20 U	NA	0.21	1.4	NA	0.86	0.85	NA
Silver	mg/kg	0.47	NA	NA	0.32	NA	0.28	NA	0.37	0.095 U	NA	0.080 U	0.088 U	NA
Polychlorinated Biphenyls (PCBs) by USEPA 8082A														
PCB Aroclor 1016	mg/kg	0.020 U	0.020 U	0.020 U	0.020 U	0.020 U	0.020 U	0.020 U	0.020 U	0.12 U	NA	0.11 U	NA	NA
PCB Aroclor 1221	mg/kg	0.020 U	0.020 U	0.020 U	0.020 U	0.020 U	0.020 U	0.020 U	0.020 U	0.12 U	NA	0.11 U	NA	NA
PCB Aroclor 1232	mg/kg	0.020 U	0.020 U	0.020 U	0.020 U	0.020 U	0.020 U	0.020 U	0.020 U	0.12 U	NA	0.11 U	NA	NA
PCB Aroclor 1242	mg/kg	0.020 U	0.020 U	0.055	0.020 U	0.025	0.039	0.079	0.062	0.12 U	NA	0.11 U	NA	NA
PCB Aroclor 1248	mg/kg	0.020 U	0.020 U	0.020 U	0.027	0.020 U	0.020 U	0.020 U	0.020 U	0.12 U	NA	0.11 U	NA	NA
PCB Aroclor 1254	mg/kg	0.25	0.16	0.059	0.042	0.026	0.020 U	0.052	0.070	0.12 U	NA	0.11 U	NA	NA
PCB Aroclor 1260	mg/kg	0.020 U	0.020 U	0.020 U	0.020 U	0.020 U	0.044	0.020 U	0.020 U	0.12 U	NA	0.11 U	NA	NA
PCB Aroclor 1262	mg/kg	0.020 U	0.020 U	0.020 U	0.020 U	0.020 U	0.020 U	0.020 U	0.020 U	0.12 U	NA	0.11 U	NA	NA
PCB Aroclor 1268	mg/kg	0.020 U	0.020 U	0.020 U	0.020 U	0.020 U	0.020 U	0.020 U	0.020 U	0.12 U	NA	0.11 U	NA	NA
PCBs (Total, Aroclors)	mg/kg	0.25	0.16	0.11	0.069	0.051	0.083	0.13	0.13	0.12 U	NA	0.11 U	NA	NA
Semivolatile Organic Compounds by USEPA Method 8270														
1,2,4-Trichlorobenzene	µg/kg	NA	NA	NA	NA	NA	NA	NA	NA	120 U	NA	100 U	NA	NA
1,2-Dichlorobenzene	µg/kg	NA	NA	NA	NA	NA	NA	NA	NA	120 U	NA	100 U	NA	NA
1,3-Dichlorobenzene	µg/kg	NA	NA	NA	NA	NA	NA	NA	NA	120 U	NA	100 U	NA	NA
1,4-Dichlorobenzene	µg/kg	NA	NA	NA	NA	NA	NA	NA	NA	120 U	NA	100 U	110 U	NA
1-Methylnaphthalene	µg/kg	NA	NA	NA	NA	NA	NA	NA	NA	95 U	NA	81 U	NA	NA
2,4,5-Trichlorophenol	µg/kg	NA	NA	NA	NA	NA	NA	NA	NA	240 U	NA	200 U	220 U	NA
2,4,6-Trichlorophenol	µg/kg	NA	NA	NA	NA	NA	NA	NA	NA	240 U	NA	200 U	220 U	NA
2,4-Dichlorophenol	µg/kg	NA	NA	NA	NA	NA	NA	NA	NA	240 U	NA	200 U	NA	NA
2,4-Dimethylphenol	µg/kg	NA	NA	NA	NA	NA	NA	NA	NA	120 U	NA	100 U	NA	NA
2,4-Dinitrophenol	µg/kg	NA	NA	NA	NA	NA	NA	NA	NA	240 U	NA	200 U	NA	NA
2,4-Dinitrotoluene	µg/kg	NA	NA	NA	NA	NA	NA	NA	NA	120 U	NA	100 U	110 U	NA
2,6-Dinitrotoluene	µg/kg	NA	NA	NA	NA	NA	NA	NA	NA	120 U	NA	100 U	NA	NA
2-Chloronaphthalene	µg/kg	NA	NA	NA	NA	NA	NA	NA	NA	120 U	NA	100 U	NA	NA
2-Chlorophenol	µg/kg	NA	NA	NA	NA	NA	NA	NA	NA	120 U	NA	100 U	NA	NA

Table 3.4
Disposed Soil Sample Results

	Area	Surface Soil											Trench A4	
	Location	SS-01	SS-02	SS-03	SS-04	SS-05	SS-06	SS-07	SS-08	WT-SB-01	WT-SB-02	WT-SB-08	WT-GP-5	
	Sample ID	WT-SS-01-0-6"	WT-SS-02-0-6"	WT-SS-03-0-3"	WT-SS-04-0-6"	WT-SS-05-0-6"	WT-SS-06-0-6"	WT-SS-07-0-6"	WT-SS-08-0-6"	SB-01-0-2	SB-02-0-2	SB-08-0-2	GP-5 (0-5)	GP-5 (2)
	Sample Date	04/11/2017	04/11/2017	04/11/2017	04/11/2017	04/11/2017	04/11/2017	04/11/2017	04/11/2017	12/07/2015	12/07/2015	12/07/2015	03/26/2013	03/26/2013
Analyte	**Units**													
Semivolatile Organic Compounds by USEPA Method 8270 (cont.)														
2-Methylnaphthalene	µg/kg	NA	NA	NA	NA	NA	NA	NA	NA	95 U	NA	81 U	NA	NA
2-Methylphenol	µg/kg	NA	NA	NA	NA	NA	NA	NA	NA	120 U	NA	100 U	110 U	NA
2-Nitroaniline	µg/kg	NA	NA	NA	NA	NA	NA	NA	NA	590 U	NA	510 U	NA	NA
2-Nitrophenol	µg/kg	NA	NA	NA	NA	NA	NA	NA	NA	240 U	NA	200 U	NA	NA
4,6-Dinitro-o-cresol	µg/kg	NA	NA	NA	NA	NA	NA	NA	NA	240 U	NA	200 U	NA	NA
4-Bromophenyl phenyl ether	µg/kg	NA	NA	NA	NA	NA	NA	NA	NA	120 U	NA	100 U	NA	NA
4-Chloro-3-methylphenol	µg/kg	NA	NA	NA	NA	NA	NA	NA	NA	590 U	NA	510 U	NA	NA
4-Chloroaniline	µg/kg	NA	NA	NA	NA	NA	NA	NA	NA	590 U	NA	510 U	NA	NA
4-Chlorophenyl phenyl ether	µg/kg	NA	NA	NA	NA	NA	NA	NA	NA	120 U	NA	100 U	NA	NA
4-Methylphenol	µg/kg	NA	NA	NA	NA	NA	NA	NA	NA	120 U	NA	100 U	110 U	NA
4-Nitrophenol	µg/kg	NA	NA	NA	NA	NA	NA	NA	NA	590 U	NA	510 U	NA	NA
Acenaphthene	µg/kg	NA	NA	NA	NA	NA	NA	NA	NA	95 U	NA	81 U	NA	NA
Acenaphthylene	µg/kg	NA	NA	NA	NA	NA	NA	NA	NA	95 U	NA	81 U	NA	NA
Anthracene	µg/kg	NA	NA	NA	NA	NA	NA	NA	NA	95 U	NA	81 U	NA	NA
Benzo(a)anthracene	µg/kg	NA	NA	NA	NA	NA	NA	NA	NA	95 U	NA	81 U	NA	NA
Benzo(a)pyrene	µg/kg	NA	NA	NA	NA	NA	NA	NA	NA	95 U	NA	81 U	NA	NA
Benzo(b)fluoranthene	µg/kg	NA	NA	NA	NA	NA	NA	NA	NA	95 U	NA	81 U	NA	NA
Benzo(g,h,i)perylene	µg/kg	NA	NA	NA	NA	NA	NA	NA	NA	95 U	NA	81 U	NA	NA
Benzo(k)fluoranthene	µg/kg	NA	NA	NA	NA	NA	NA	NA	NA	95 U	NA	81 U	NA	NA
Benzyl alcohol	µg/kg	NA	NA	NA	NA	NA	NA	NA	NA	120 U	NA	100 U	NA	NA
bis(2-chloroethoxy)methane	µg/kg	NA	NA	NA	NA	NA	NA	NA	NA	120 U	NA	100 U	NA	NA
bis(2-chloroethyl)ether	µg/kg	NA	NA	NA	NA	NA	NA	NA	NA	240 U	NA	200 U	NA	NA
bis(2-ethylhexyl)phthalate	µg/kg	NA	NA	NA	NA	NA	NA	NA	NA	140	NA	100 U	NA	NA
Butyl benzyl phthalate	µg/kg	NA	NA	NA	NA	NA	NA	NA	NA	120 U	NA	100 U	NA	NA
Carbazole	µg/kg	NA	NA	NA	NA	NA	NA	NA	NA	590 U	NA	510 U	NA	NA
Chrysene	µg/kg	NA	NA	NA	NA	NA	NA	NA	NA	95 U	NA	81 U	NA	NA
Di(2-ethylhexyl)adipate	µg/kg	NA	NA	NA	NA	NA	NA	NA	NA	120 U	NA	100 U	NA	NA
Dibenzo(a,h)anthracene	µg/kg	NA	NA	NA	NA	NA	NA	NA	NA	95 U	NA	81 U	NA	NA
Dibenzofuran	µg/kg	NA	NA	NA	NA	NA	NA	NA	NA	120 U	NA	100 U	NA	NA
Diethylphthalate	µg/kg	NA	NA	NA	NA	NA	NA	NA	NA	120 U	NA	100 U	NA	NA
Dimethyl phthalate	µg/kg	NA	NA	NA	NA	NA	NA	NA	NA	120 U	NA	100 U	NA	NA
Di-n-butyl phthalate	µg/kg	NA	NA	NA	NA	NA	NA	NA	NA	120 U	NA	100 U	NA	NA
Di-n-octyl phthalate	µg/kg	NA	NA	NA	NA	NA	NA	NA	NA	120 U	NA	100 U	NA	NA
Fluoranthene	µg/kg	NA	NA	NA	NA	NA	NA	NA	NA	95 U	NA	81 U	NA	NA
Fluorene	µg/kg	NA	NA	NA	NA	NA	NA	NA	NA	95 U	NA	81 U	NA	NA
Hexachlorobenzene	µg/kg	NA	NA	NA	NA	NA	NA	NA	NA	120 U	NA	100 U	110 U	NA
Hexachlorobutadiene	µg/kg	NA	NA	NA	NA	NA	NA	NA	NA	120 U	NA	100 U	110 U	NA
Hexachlorocyclopentadiene	µg/kg	NA	NA	NA	NA	NA	NA	NA	NA	120 U	NA	100 U	NA	NA
Hexachloroethane	µg/kg	NA	NA	NA	NA	NA	NA	NA	NA	120 U	NA	100 U	110 U	NA

Table 3.4
Disposed Soil Sample Results

Area		Surface Soil										Trench A4	
Location		SS-01	SS-02	SS-03	SS-04	SS-05	SS-06	SS-07	SS-08	WT-SB-01	WT-SB-02	WT-SB-08	WT-GP-5	
Sample ID		WT-SS-01-0-6"	WT-SS-02-0-6"	WT-SS-03-0-3"	WT-SS-04-0-6"	WT-SS-05-0-6"	WT-SS-06-0-6"	WT-SS-07-0-6"	WT-SS-08-0-6"	SB-01-0-2	SB-02-0-2	SB-08-0-2	GP-5 (0-5)	GP-5 (2)
Sample Date		04/11/2017	04/11/2017	04/11/2017	04/11/2017	04/11/2017	04/11/2017	04/11/2017	04/11/2017	12/07/2015	12/07/2015	12/07/2015	03/26/2013	03/26/2013
Analyte	**Units**													
Semivolatile Organic Compounds by USEPA Method 8270 (cont.)														
Indeno(1,2,3-c,d)pyrene	µg/kg	NA	NA	NA	NA	NA	NA	NA	NA	95 U	NA	81 U	NA	NA
Isophorone	µg/kg	NA	NA	NA	NA	NA	NA	NA	NA	120 U	NA	100 U	NA	NA
m-cresol	µg/kg	NA	NA	NA	NA	NA	NA	NA	NA	NA	NA	NA	110 U	NA
Naphthalene	µg/kg	NA	NA	NA	NA	NA	NA	NA	NA	95 U	NA	81 U	NA	NA
Nitrobenzene	µg/kg	NA	NA	NA	NA	NA	NA	NA	NA	240 U	NA	200 U	220 U	NA
N-Nitroso-di-n-propylamine	µg/kg	NA	NA	NA	NA	NA	NA	NA	NA	120 U	NA	100 U	NA	NA
Pentachlorophenol	µg/kg	NA	NA	NA	NA	NA	NA	NA	NA	130	22 U	100 U	110 U	NA
Phenanthrene	µg/kg	NA	NA	NA	NA	NA	NA	NA	NA	95 U	NA	81 U	NA	NA
Phenol	µg/kg	NA	NA	NA	NA	NA	NA	NA	NA	240 U	NA	200 U	NA	NA
Pyrene	µg/kg	NA	NA	NA	NA	NA	NA	NA	NA	95 U	NA	81 U	NA	NA
Pyridine	µg/kg	NA	NA	NA	NA	NA	NA	NA	NA	NA	NA	NA	220 U	NA
Volatile Organic Compounds by USEPA 8260C														
1,1,1-Trichloroethane	mg/kg	NA	NA	NA	NA	NA	NA	NA	NA	NA	NA	NA	NA	NA
1,1-Dichloroethene	mg/kg	NA	NA	NA	NA	NA	NA	NA	NA	NA	NA	NA	NA	0.066 U
1,2-Dichloroethane	mg/kg	NA	NA	NA	NA	NA	NA	NA	NA	NA	NA	NA	NA	0.040 U
Benzene	mg/kg	NA	NA	NA	NA	NA	NA	NA	NA	NA	NA	NA	NA	0.027 U
Carbon tetrachloride	mg/kg	NA	NA	NA	NA	NA	NA	NA	NA	NA	NA	NA	NA	0.027 U
Chlorobenzene	mg/kg	NA	NA	NA	NA	NA	NA	NA	NA	NA	NA	NA	NA	0.027 U
Chloroform	mg/kg	NA	NA	NA	NA	NA	NA	NA	NA	NA	NA	NA	NA	0.027 U
Ethylbenzene	mg/kg	NA	NA	NA	NA	NA	NA	NA	NA	NA	NA	NA	NA	NA
Methyl ethyl ketone	mg/kg	NA	NA	NA	NA	NA	NA	NA	NA	NA	NA	NA	NA	0.083 U
Naphthalene	mg/kg	NA	NA	NA	NA	NA	NA	NA	NA	NA	NA	NA	NA	NA
Tetrachloroethene	mg/kg	NA	NA	NA	NA	NA	NA	NA	NA	NA	NA	NA	NA	0.14
Toluene	mg/kg	NA	NA	NA	NA	NA	NA	NA	NA	NA	NA	NA	NA	NA
Trichloroethene	mg/kg	NA	NA	NA	NA	NA	NA	NA	NA	NA	NA	NA	NA	0.040 U
Vinyl chloride	mg/kg	NA	NA	NA	NA	NA	NA	NA	NA	NA	NA	NA	NA	0.0027 U
Xylene (meta & para)	mg/kg	NA	NA	NA	NA	NA	NA	NA	NA	NA	NA	NA	NA	NA
Xylene (ortho)	mg/kg	NA	NA	NA	NA	NA	NA	NA	NA	NA	NA	NA	NA	NA

Abbreviations:

µg/kg Micrograms per kilogram
mg/kg Milligrams per kilogram
NA Not analyzed
NWTPH Northwest Total Petroleum Hydrocarbon
USEPA U.S. Environmental Protection Agency

Qualifiers:

J Analyte was detected; concentration is considered to be an estimate.
JM Analyte was detected; concentration is considered to be an estimate due to poor chromatographic match to the standard used for quantitation.
U Analyte was not detected at the given reporting limit.
UJ Analyte was not detected at the given reporting limit, which is considered to be an estimate.

Table 3.5
Stockpile Sample Results

Location		WT-SP1					WT-SP2				
Sample ID		WT-SP1-01	WT-SP1-02	WT-SP1-03	WT-SP1-04	WT-SP1-05	WT-SP2-01	WT-SP2-02	WT-SP2-03	WT-SP2-04	WT-SP2-05
Sample Date		09/06/2017	09/06/2017	09/06/2017	09/06/2017	09/06/2017	09/22/2017	09/22/2017	09/22/2017	09/22/2017	09/22/2017
Status		Reused on site	Reused on site	Reused on site	Reused on site	Reused on site	Reused on site	Reused on site	Disposed	Reused on site	Reused on site
Analyte	**Units**										
Metals by USEPA 6020A and 7471B											
Arsenic	mg/kg	3.31	1.61	2.31	1.92	2.46	2.27	2.75	2.65	3.14	2.18
Cadmium	mg/kg	1 U	1 U	1 U	1 U	1 U	0.177 U	0.163 U	0.178 U	0.163 U	0.178 U
Chromium	mg/kg	7.91	6.26	6.44	5.57	7.91	12.5	15.5	14.6	23	12.9
Lead	mg/kg	18.4	1.43	4.17	4.56	5.42	3.51	6.06	4.3	3.64	4.92
Mercury	mg/kg	1 U	1 U	1 U	1 U	1 U	0.276 U	0.253 U	0.274 U	0.265 U	0.267 U
Total Petroleum Hydrocarbons by NWTPH-Gx/Dx											
Gasoline-range organics	mg/kg	4.2	2 U	2 U	2 U	2 U	5 U	5 U	5 U	5 U	5 U
Diesel-range organics	mg/kg	50 U	50 U	50 U	50 U	50 U	50 U	50 U	50 U	50 U	50 U
Heavy oil-range organics	mg/kg	250 U	250 U	250 U	250 U	250 U	250 U	250 U	250 U	250 U	250 U
Polychlorinated Biphenyls (PCBs) by USEPA 8082A											
PCB Aroclor 1016	mg/kg	0.02 U	0.02 U	0.02 U	0.02 U	0.02 U	0.02 U	0.02 U	0.02 U	0.02 U	0.02 U
PCB Aroclor 1221	mg/kg	0.02 U	0.02 U	0.02 U	0.02 U	0.02 U	0.02 U	0.02 U	0.02 U	0.02 U	0.02 U
PCB Aroclor 1232	mg/kg	0.02 U	0.02 U	0.02 U	0.02 U	0.02 U	0.02 U	0.02 U	0.02 U	0.02 U	0.02 U
PCB Aroclor 1242	mg/kg	0.02 U	0.02 U	0.02 U	0.02 U	0.02 U	0.02 U	0.02 U	0.02 U	0.02 U	0.02 U
PCB Aroclor 1248	mg/kg	0.02 U	0.02 U	0.02 U	0.02 U	0.02 U	0.02 U	0.02 U	0.02 U	0.02 U	0.02 U
PCB Aroclor 1254	mg/kg	0.02 U	0.02 U	0.02 U	0.02 U	0.02 U	0.02 U	0.02 U	0.02 U	0.02 U	0.02 U
PCB Aroclor 1260	mg/kg	0.02 U	0.02 U	0.02 U	0.02 U	0.02 U	0.02 U	0.02 U	0.02 U	0.02 U	0.02 U
PCB Aroclor 1262	mg/kg	0.02 U	0.02 U	0.02 U	0.02 U	0.02 U	0.02 U	0.02 U	0.02 U	0.02 U	0.02 U
PCB Aroclor 1268	mg/kg	0.02 U	0.02 U	0.02 U	0.02 U	0.02 U	0.02 U	0.02 U	0.02 U	0.02 U	0.02 U
PCBs (Total, Aroclors)	mg/kg	0.02 U	0.02 U	0.02 U	0.02 U	0.02 U	0.02 U	0.02 U	0.02 U	0.02 U	0.02 U
Volatile Organic Compounds by USEPA 8260C											
1,1,1-Trichloroethane	mg/kg	0.05 U	0.05 U	0.05 U	0.05 U	0.05 U	0.05 U	0.05 U	0.05 U	0.05 U	0.05 U
Benzene	mg/kg	0.03 U	0.03 U	0.03 U	0.03 U	0.03 U	0.03 U	0.03 U	0.03 U	0.03 U	0.03 U
Ethylbenzene	mg/kg	0.05 U	0.05 U	0.05 U	0.05 U	0.05 U	0.05 U	0.05 U	0.05 U	0.05 U	0.05 U
Naphthalene	mg/kg	0.05 U	0.05 U	0.05 U	0.05 U	0.05 U	0.05 U	0.05 U	0.05 U	0.05 U	0.05 U
Tetrachloroethene	mg/kg	0.033	0.025 U	0.025 U	0.042	0.025 U	0.029	0.037	0.054	0.025 U	0.037
Toluene	mg/kg	0.05 U	0.05 U	0.05 U	0.05 U	0.05 U	0.05 U	0.05 U	0.05 U	0.05 U	0.05 U
Trichloroethene	mg/kg	0.02 U	0.02 U	0.02 U	0.02 U	0.02 U	0.02 U	0.02 U	0.02 U	0.02 U	0.02 U
Xylene (meta & para)	mg/kg	0.1 U	0.1 U	0.1 U	0.1 U	0.1 U	0.1 U	0.1 U	0.1 U	0.1 U	0.1 U
Xylene (ortho)	mg/kg	0.05 U	0.05 U	0.05 U	0.05 U	0.05 U	0.05 U	0.05 U	0.05 U	0.05 U	0.05 U

Abbreviations:

mg/kg Milligrams per kilogram
NA Not analyzed
ND Not detected
NWTPH Northwest Total Petroleum Hydrocarbon
USEPA U.S. Environmental Protection Agency

Qualifier:

U Analyte was not detected at the given reporting limit.

Table 3.5
Stockpile Sample Results

Location		WT-SP3			WT-SP04		
Sample ID		WT-SP3-01	WT-SP3-02	WT-SP3-03	WT-SP04-1	WT-SP04-2	WT-SP04-3
Sample Date		10/05/2017	10/05/2017	10/05/2017	4/19/2018	4/19/2018	4/19/2018
Status		Reused onsite	Reused onsite	Reused onsite	Reused onsite	Reused onsite	Reused onsite
Analyte	**Units**						
Metals by USEPA 6020A and 7471B							
Arsenic	mg/kg	2.11	3.34	1.39	3.75	1.75	1.59
Cadmium	mg/kg	1 U	1 U	1 U	1 U	1 U	1 U
Chromium	mg/kg	9.27 U	7.2 U	5.14 U	10.6	6.48	5.81
Lead	mg/kg	3.08 U	4.41 U	1.29 U	3.38	1.55	1.2
Mercury	mg/kg	1 U	1 U	1 U	1 U	1 U	1 U
Total Petroleum Hydrocarbons (TPH) by NWTPH-Gx/Dx							
Gasoline-range organics	mg/kg	5 U	5 U	5 U	5 U	5 U	5 U
Diesel-range organics	mg/kg	50 U	50 U	50 U	50 U	50 U	50 U
Heavy oil-range organics	mg/kg	250 U	250 U	250 U	250 U	250 U	250 U
Polychlorinated Biphenyls (PCBs) by USEPA 8082A							
PCB Aroclor 1016	mg/kg	0.02 U	0.02 U	0.02 U	0.02 U	0.02 U	0.02 U
PCB Aroclor 1221	mg/kg	0.02 U	0.02 U	0.02 U	0.02 U	0.02 U	0.02 U
PCB Aroclor 1232	mg/kg	0.02 U	0.02 U	0.02 U	0.02 U	0.02 U	0.02 U
PCB Aroclor 1242	mg/kg	0.02 U	0.02 U	0.02 U	0.02 U	0.02 U	0.02 U
PCB Aroclor 1248	mg/kg	0.02 U	0.02 U	0.02 U	0.02 U	0.02 U	0.02 U
PCB Aroclor 1254	mg/kg	0.02 U	0.02 U	0.02 U	0.02 U	0.02 U	0.02 U
PCB Aroclor 1260	mg/kg	0.02 U	0.02 U	0.02 U	0.02 U	0.02 U	0.02 U
PCB Aroclor 1262	mg/kg	0.02 U	0.02 U	0.02 U	0.02 U	0.02 U	0.02 U
PCB Aroclor 1268	mg/kg	0.02 U	0.02 U	0.02 U	0.02 U	0.02 U	0.02 U
PCBs (Total, Aroclors)	mg/kg	0.02 U	0.02 U	0.02 U	0.02 U	0.02 U	0.02 U
Volatile Organic Compounds by USEPA 8260C							
1,1,1-Trichloroethane	mg/kg	0.05 U	0.05 U	0.05 U	0.05 U	0.05 U	0.05 U
Benzene	mg/kg	0.03 U	0.03 U	0.03 U	0.03 U	0.03 U	0.03 U
Ethylbenzene	mg/kg	0.05 U	0.05 U	0.05 U	0.05 U	0.05 U	0.05 U
Naphthalene	mg/kg	0.05 U	0.05 U	0.05 U	0.1 U	0.1 U	0.1 U
Tetrachloroethene	mg/kg	0.025 U	0.025 U	0.025 U	0.05 U	0.05 U	0.05 U
Toluene	mg/kg	0.05 U	0.05 U	0.05 U	0.05 U	0.05 U	0.05 U
Trichloroethene	mg/kg	0.02 U	0.02 U	0.02 U	0.025 U	0.025 U	0.025 U
Xylene (meta & para)	mg/kg	0.1 U	0.1 U	0.1 U	0.05 U	0.05 U	0.05 U
Xylene (ortho)	mg/kg	0.05 U	0.05 U	0.05 U	0.02 U	0.02 U	0.02 U

Abbreviations:

mg/kg Milligrams per kilogram
NA Not analyzed
ND Non-detect
NWTPH Northwest Total Petroleum Hydrocarbon
USEPA United States Environmental Protection Agency

Qualifier:

U Analyte was not detected at the given reporting limit.

Table 3.6
Monitoring Well Survey

Well ID	Northing (feet NAD 83, WA SP S)	Easting (feet NAD 83, WA SP S)	Ground Surface Elevation (feet NAVD 88)	Top of Casing Elevation (feet NAVD 88)
WT-MW-01	200380.93	1271908.33	17.103	16.807
WT-MW-02	200380.05	1271977.31	16.696	16.449
WT-MW-03	200384.63	1272040.82	17.723	17.305
WT-MW-05	200318.86	1271994.67	15.329	14.925
WT-MW-06	200322.88	1271803.15	14.955	14.627
WT-MW-07	200321.03	1271901.48	15.721	15.323
WT-MW-108	200426.1	1271846.54	17.564	17.178
WT-MW-109	200539.78	1271944.52	18.087	17.547

Abbreviations:

NAD 83 North American Datum of 1983
NAVD 88 North American Vertical Datum of 1988
WA SP S Washington State Plane South

Whitehead Tyee Site

Interim Action Completion Report

Figures



FLOYD | SNIDER
strategy • science • engineering

Interim Action Completion Report
Whitehead Tyee Site
Seattle, Washington

Figure 1.1
Vicinity Map

I:\GIS\Projects\SIM-730EDR\MXD\Interim Action\IA Completion Report\Figure 1.1 Vicinity Map.mxd
8/15/2018

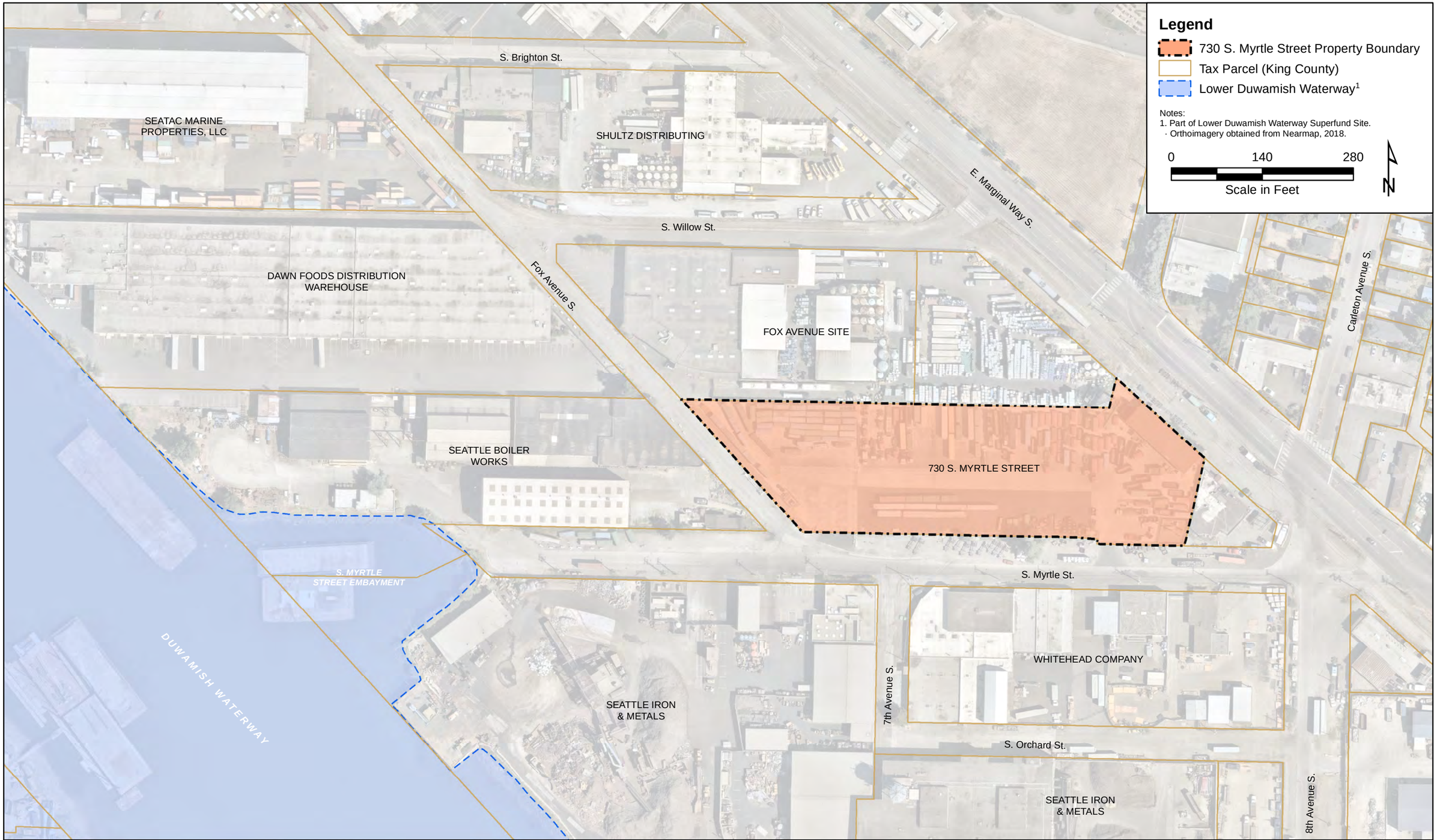

FLOYD | SNIDER
strategy • science • engineering

Interim Action Completion Report
Whitehead Tyee Site
Seattle, Washington

Figure 1.2
Site Vicinity Map

I:\GIS\Projects\SIM-730EDR\MXD\Interim Action\IA Completion Report\Figure 1.2 Site Vicinity Map.mxd
8/15/2018

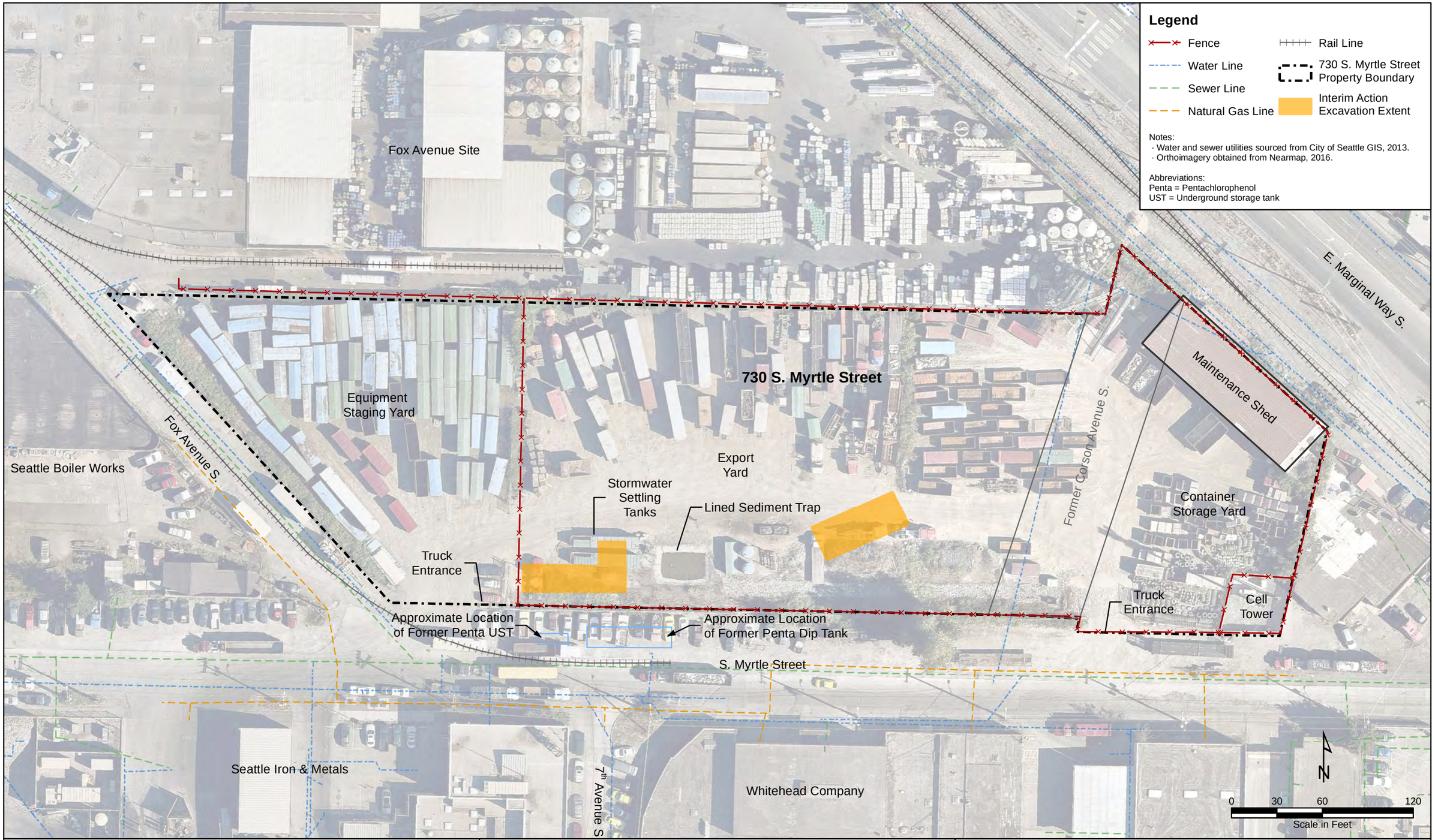

FLOYD | SNIDER
strategy • science • engineering

Interim Action Completion Report
Whitehead Tyee Site
Seattle, Washington

Figure 1.3
Pre-Construction Site Features

I:\GIS\Projects\SIM-730EDR\MXD\Interim Action\IA Completion Report\Figure 1.3 Pre-Construction Site Features.mxd
8/15/2018

Legend

- Fox Well, 1st Water-Bearing Zone
- Fox Well, 2nd Water-Bearing Zone
- Injection Well
- Whitehead Tyee Site Monitoring Well
- Decommissioned Monitoring Well
- 730 S. Myrtle Street Property Boundary
- Rail Line
- Interim Action Excavation Extent
- Excavation Area Requiring Dewatering
- Former Penta Dip Tank and Penta UST Source Area
- Stormwater Conveyance and Treatment System

Notes:
· Refer to Table 3.6 for a summary of monitoring well details.
· All coordinates provided in Washington State Plane North (North American Datum 83) in feet.
· Orthoimagery obtained from Nearmap, 2017.

Abbreviations:
Fox = Fox Avenue Site
Penta = Pentachlorophenol
UST = Underground storage tank

Fox Avenue Site
730 S. Myrtle Street
E. Marginal Way S.
Fox Avenue S.
S. Myrtle Street
7th Avenue S.
Seattle Boiler Works
Seattle Iron & Metals
Whitehead Company

R1-IW4A, R1-IW4B, B-59, B-58, B-45, B-49, B-51, PTM-1L, PTM-1U, R1-IW5, MW-10, MW-09, PTM-2U, PTM-2L, R1-IW6, B-60, B-61, B-21, B-20A, R1-IW7, R1-IW17, B-63, B-62, R1-IW18, R1-IW19, B-19, B-18, R1-IW20, R2-IW7, B-36, B-35, WT-MW-109, MW-07, MW-08, WT-MW-04, WT-MW-108, WT-MW-110, WT-MW-02, WT-MW-03, WT-MW-01, B-37, B-38, WT-MW-06, WT-MW-07, WT-MW-05

0 30 60 120
Scale in Feet

N

FLOYD | SNIDER
strategy • science • engineering

Interim Action Completion Report
Whitehead Tyee Site
Seattle, Washington

Figure 2.1
Existing and Decommissioned Monitoring Well Locations on or Adjacent to 730 S. Myrtle Street Property

I:\GIS\Projects\SIM-730EDR\MXD\Interim Action\IA Completion Report\Figure 2.1 Existing and Decommissioned Monitoring Well Locations on or Adjacent to 730 S.mxd
8/15/2018

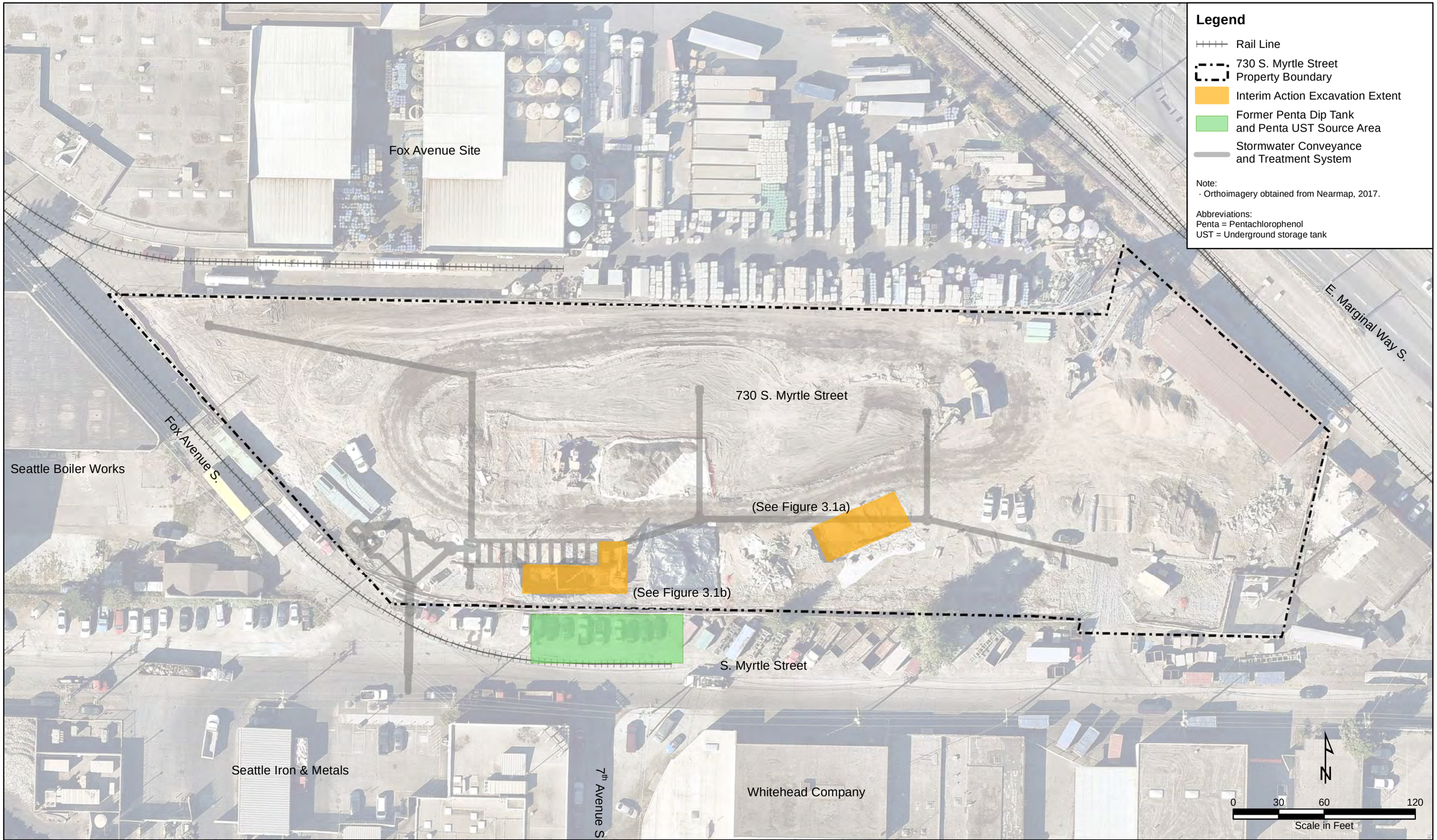

FLOYD | SNIDER
strategy ▪ science ▪ engineering

Interim Action Completion Report
Whitehead Tyee Site
Seattle, Washington

Figure 3.1
Interim Action Excavation Areas

I:\GIS\Projects\SIM-730EDR\MXD\Interim Action\IA Completion Report\Figure 3.1 Interim Action Excavation Areas.mxd
8/15/2018

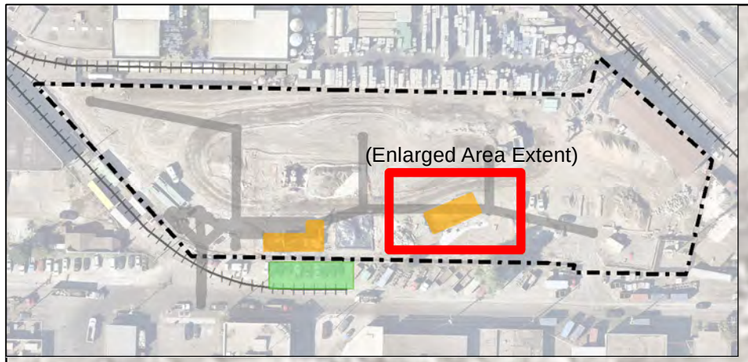

WT-SB-14
Heavy ORO
4–5: 60 U

WT-SB-20
Heavy ORO
5–6: 540 J

HO-SE1
Heavy ORO
4: 250 U

WT-SB-15
Heavy ORO
4–5: 60 U

WT-MW-110
Heavy ORO
6–7: 80 J

WT-SB-18
Heavy ORO
4–5: 67 U

Legend

- Excavation Confirmation Sample Location
- Pre-Construction Sample Location Used as a Confirmation Sample
- Stormwater Conveyance and Treatment System
- Rail Line
- 730 S. Myrtle Street Property Boundary
- Interim Action Excavation Extent
- Former Penta Dip Tank and Penta UST Source Area

Notes:
· Heavy oil-range organics results are presented in units of milligrams per kilogram (mg/kg).
· Locations shown are all locations where samples were analyzed.
· Excavation extended to 6 ft bgs.
· Orthoimagery obtained from Nearmap, 2017.

Abbreviations:
ft bgs = Feet below ground surface
ORO = Oil-range organics
Penta = Pentachlorophenol
UST = Underground storage tank

Qualifiers:
J = Analyte was detected; concentration is considered to be an estimate.
U = The result was not detected at the reporting limit.

Label Key

Location
Analyte
Depth (ft bgs): Concentration

0 5 10 20
Scale in Feet

N

FLOYD | SNIDER
strategy • science • engineering

Interim Action Completion Report
Whitehead Tyee Site
Seattle, Washington

Figure 3.1a
Interim Action: Focused Heavy Oil-Range Organics Excavation

I:\GIS\Projects\SIM-730EDR\MXD\Interim Action\IA Completion Report\Figure 3.1a Interim Action Heavy Oil-Range Organics Excavation.mxd
8/15/2018

WT-SB-06
Pentachlorophenol
10–11: 0.020 U
Stoddard Solvent
10–11: 22 UJ

SS-B3
Stoddard Solvent
17: 50 U

SS-S3N
Stoddard Solvent
12: 50 U

SS-B1
Stoddard Solvent
16: 50 U

SS-B4
Pentachlorophenol
16: 0.10 U
Stoddard Solvent
16: 50 U

SS-S1W
Pentachlorophenol
10.5: 0.10 U

SS-S2E
Stoddard Solvent
12: 50 U

WT-GP-3
Stoddard Solvent
12–13: 110

WT-GP-4
Stoddard Solvent
12–13: 4,000

SS-B2
Pentachlorophenol
17: 0.10 U
Stoddard Solvent
17: 50 U

Legend

- Excavation Confirmation Sample Location
- Pre-Construction Sample Location Used as a Confirmation Sample
- Stormwater Conveyance and Treatment System
- Rail Line
- 730 S. Myrtle Street Property Boundary
- Interim Action Excavation Extent
- Former Penta Dip Tank and Penta UST Source Area

Notes:
- Stoddard solvent and penta results are presented in units of milligrams per kilogram (mg/kg).
- Locations shown are all locations where samples were analyzed.
- Results displayed in RED text indicate an exceedance of the Remediation Level for Stoddard solvent (1,000 mg/kg).
- Excavation extended from 8 to 15 ft bgs, with 0 to 8 ft bgs reused as backfill above the water table per the Interim Action Work Plan.
- Orthoimagery obtained from Nearmap, 2017.

Abbreviations:
ft bgs = Feet below ground surface
Penta = Pentachlorophenol
UST = Underground storage tank

Qualifiers:
U = The result was not detected at the reporting limit.
UJ = The result was not detected at the reporting limit, which is considered to be an estimate.

(Enlarged Area Extent)

Label Key

Location
Analyte
Depth (ft bgs): Concentration

0 5 10 20
Scale in Feet

N

FLOYD | SNIDER
strategy • science • engineering

Interim Action Completion Report
Whitehead Tyee Site
Seattle, Washington

Figure 3.1b
Interim Action: Stoddard Solvent Excavation

I:\GIS\Projects\SIM-730EDR\MXD\Interim Action\IA Completion Report\Figure 3.1b Interim Action Stoddard Solvent Excavation.mxd
8/15/2018

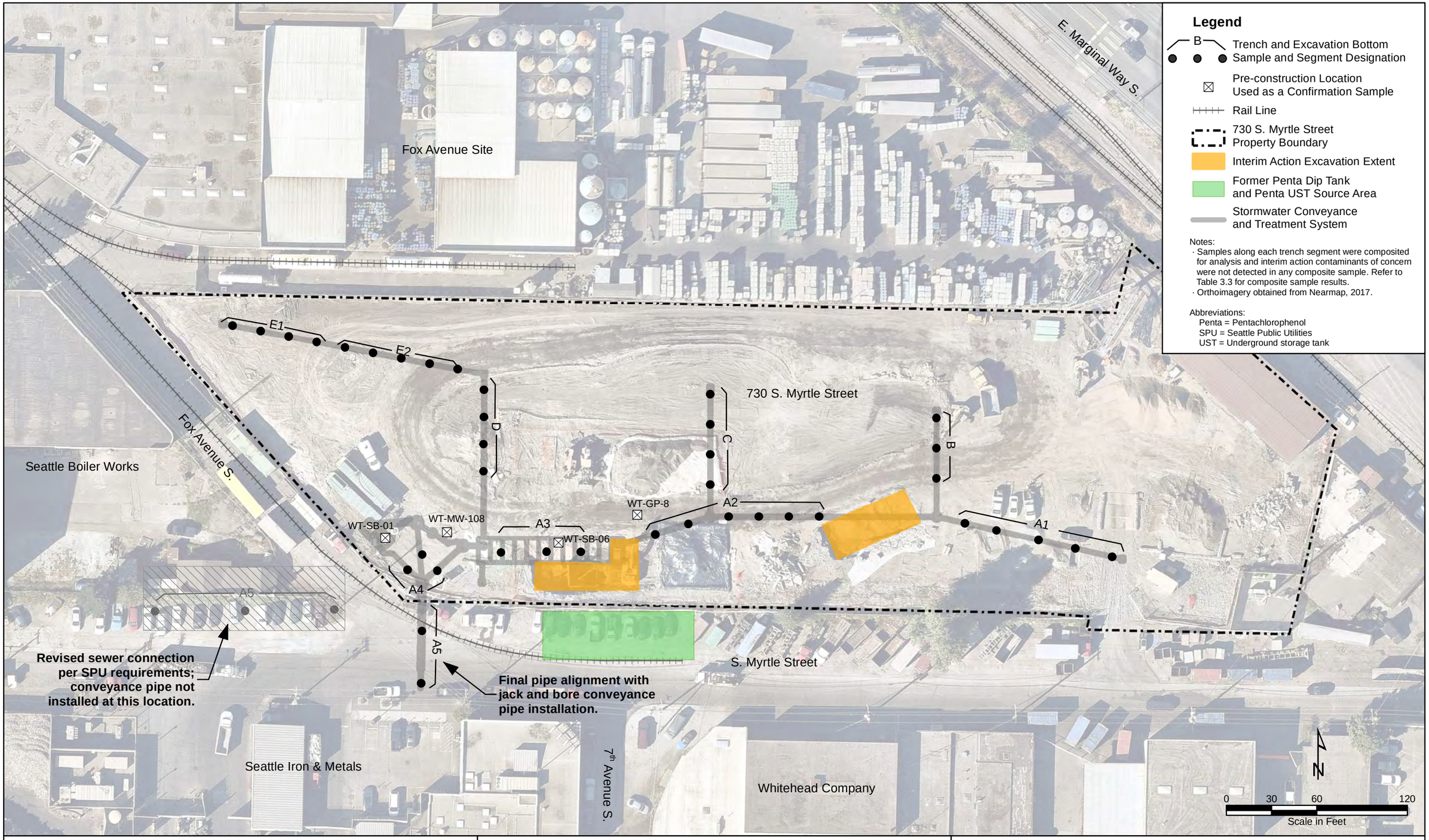

FLOYD | SNIDER
strategy • science • engineering

Interim Action Completion Report
Whitehead Tyee Site
Seattle, Washington

Figure 3.2
Stormwater System Excavation

I:\GIS\Projects\SIM-730EDR\MXD\Interim Action\IA Completion Report\Figure 3.2 Stormwater System Excavation.mxd
8/15/2018

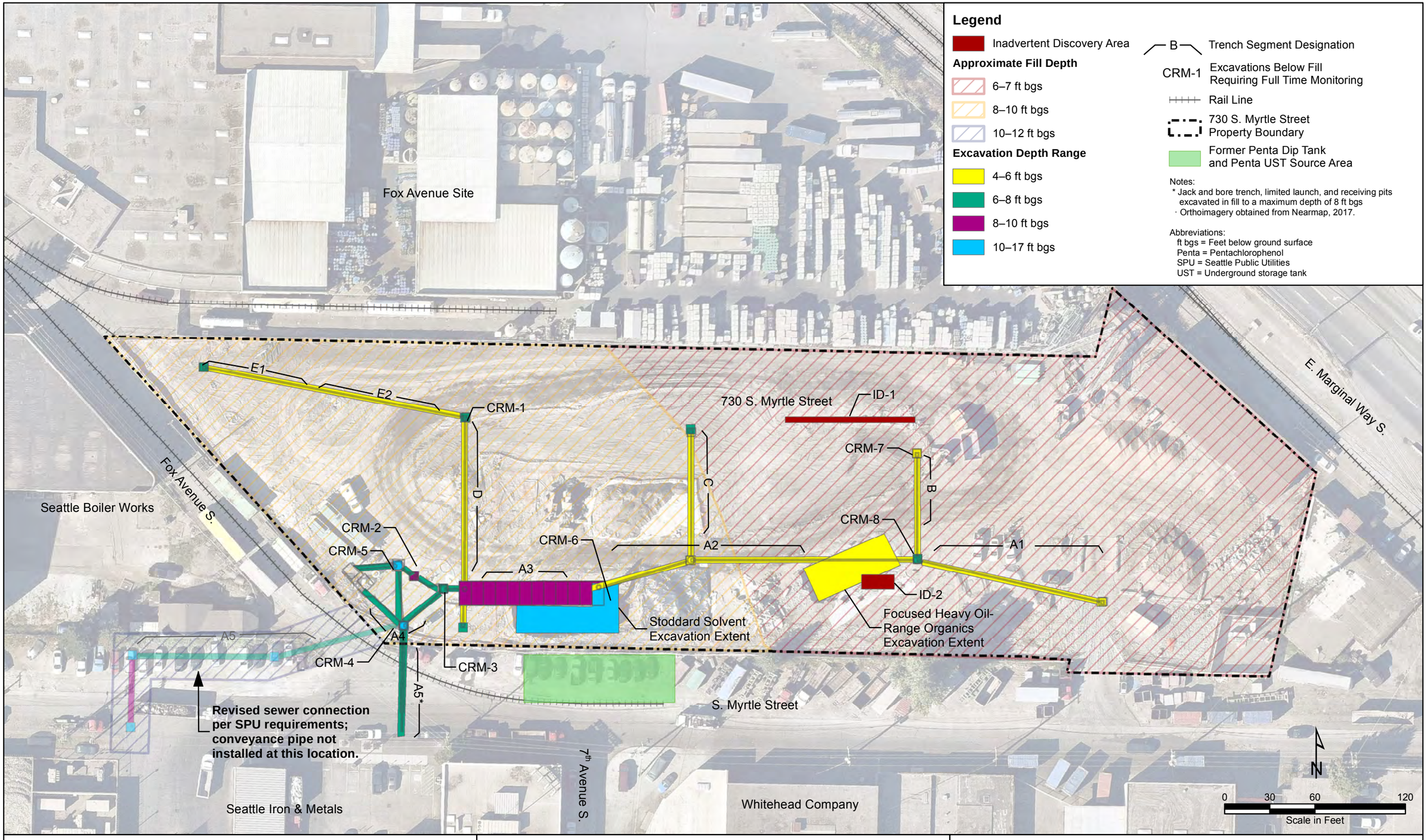

FLOYD | SNIDER
strategy • science • engineering

Interim Action Completion Report
Whitehead Tyee Site
Seattle, Washington

Figure 3.3
Cultural Resources Monitoring

I:\GIS\Projects\SIM-730EDR\MXD\Interim Action\IA Completion Report\Figure 3.3 Cultural Resources Monitoring.mxd
8/15/2018

Legend

- Asphalt Paving
- Concrete Paving with Seams
- Gravel
- Fence
- Yard Hydrant
- Light Pole
- Stormwater Conveyance and Treatment System
- Catch Basin
- Storm Drain Manhole
- Treatment Feature
- Electrical Line
- Water Line
- Sewer Line
- Natural Gas Line
- Rail Line

Notes:
· Water and sewer utilities sourced from City of Seattle GIS, 2013.
· Orthoimagery obtained from Nearmap, 2018.

Abbreviations:
Penta = Pentachlorophenol
UST = Underground storage tank

Fox Avenue Site
730 S. Myrtle Street
Billboard Sign
E. Marginal Way S.
Maintenance Shed
Equipment Staging Yard
Fox Avenue S.
Seattle Boiler Works
Stormceptor
Pump Station
Flow Splitter
Gate
StormCapture Units
Export Yard
Former Corson Avenue S.
Container Storage Yard
Modular Wetland Systems (above ground)
Hot Box
Truck Entrance
Approximate Location of Former Penta Dip Tank
Approximate Location of Former Penta UST
Truck Entrance
Gate
Cell Tower
S. Myrtle Street
7th Avenue S.
Seattle Iron & Metals
Whitehead Company
N
0 30 60 120
Scale in Feet

FLOYD | SNIDER
strategy • science • engineering

Interim Action Completion Report
Whitehead Tyee Site
Seattle, Washington

Figure 3.4
Site Restoration and Current Property Features

I:\GIS\Projects\SIM-730EDR\MXD\Interim Action\IA Completion Report\Figure 3.4 Site Restoration and Current Property Features.mxd
8/15/2018

Whitehead Tyee Site

Interim Action Completion Report

Appendix A
Interim Action Work Plan
Ecology Approval Letter

STATE OF WASHINGTON
DEPARTMENT OF ECOLOGY
Northwest Regional Office • 3190 160th Ave SE • Bellevue, WA 98008-5452 • 425-649-7000
711 for Washington Relay Service • Persons with a speech disability can call 877-833-6341

April 26, 2017

Allison Geiselbrecht, Ph.D.
Whitehead Tyee Site Project Coordinator
Floyd Snider
Two Union Square
601 Union Street, Suite 600
Seattle, Washington 98101

Re: Ecology Approval of Final Interim Action Work Plan for Whitehead Tyee Site, 730 S. Myrtle St., Seattle, WA, Agreed Order No. DE 13458

Dear Dr. Geiselbrecht:

The Agreed Order No. DE 13458 (AO) between Seattle Iron and Metals Corp. (SIM), 730 Myrtle LLC, and Washington State Department of Ecology (Ecology) became effective on August 25, 2016. Per AO Exhibit C – Schedule of Deliverables, the Potentially Liable Persons (PLP) provided an Interim Action (IA) Work Plan (IAWP), Draft for Public Comment for Ecology and public review in December 2016.

Having completed a public comment period for the IAWP from February 3 – March 5, 2017 with minimal comments from the public, Ecology hereby approves the IAWP. Ecology requests that Floyd Snider and SIM implement the remaining comments outlined in this letter to avoid additional work during the Remedial Investigation (RI) that could more easily be conducted during the IA.

Ecology previously commented on the IAWP on November 22, 2016, and Floyd Snider responded to those comments on December 22, 2016. Floyd Snider's December 22 memo is attached to this letter for reference. Many of Ecology's comments on the IAWP were deferred to the RI Work Plan, as appropriate. In addition, Ecology e-mailed the following concerns to you on January 17, 2017.

- Because the source of the heavy oil in the heavy oil excavation area is not known and because benzo(a)pyrene was detected in the source area, the one proposed confirmation sample should be additionally analyzed for cPAHs (due to the detection) and for metals, VOCs, and PCBs to comply with MTCA Table 830-1.
- The monitoring well replacements discussed in Section 4.9.1 have to be placed and screened so that they intercept the water table, but are not screened in the newly placed

- clean backfill. If the locations of the wells have to be moved, Ecology should have an opportunity to comment on the proposed replacement locations prior to installation.
- Sections 4.3.2 and 7.2.3 reference a segregation screening PID value of 10 ppmv, but Sections 4.4.2 and 4.6.1 reference a PID screening value of 20 ppmv. At a minimum, Ecology suggests use of 10 ppmv throughout the document and during the IA for consistency and to reduce potential recontamination due to re-use of Site soil. However, as previously stated, we believe it is advisable to not re-use soil at the Site to completely prevent potential re-contamination.
- The action level for analyzing discrete samples within composites is noted in Section 4.6.2 as the RL. As verbally noted previously, Ecology recommends the use of discrete samples instead of composites. To minimize the need for future collection of fully representative discrete data, Ecology recommends that the action level should be the RL divided by the number of discrete samples within each composite if composites are collected.
- Also, because of the interest the tribes have already shown regarding this Site, another reminder; Ecology will require a written response from the Department of Archaeology and Historic Preservation (DAHP) regarding their review the Inadvertent Discovery Plan (IDP) prior to commencement of construction.

Ecology has the remaining requests and concerns regarding the IAWP based on your response to comments dated December 22, 2016:

- Field screening is not acceptable to demonstrate compliance. Where there is previous data or field indication of contamination, discrete samples should be collected, as appropriate, to demonstrate compliance.
- All available data collected at the Site should be uploaded to Ecology's Environmental Information Management (EIM) system. This includes all previously collected data and data collected during the IA. All available data for the Site, regardless of age, should be presented and discussed in the future RI.
- For the IA, Ecology understands that NWTPH-Dx analysis will be used for Stoddard Solvent samples. However, we re-iterate our request that the samples not be homogenized to prevent loss of volatiles that may be present in the samples. If the samples are homogenized, it will be difficult for Ecology to accept that there is no volatile fraction in the samples. This is because it won't be clear if volatiles were never present, or if they were lost during the homogenization process.
- Sole use of NWTPH-Dx for confirmation sampling for Stoddard Solvent for the IA does not preclude Ecology from requesting analysis by NWTPH-G during the RI.

Ecology appreciates the diligence of SIM and 730 Myrtle LLC to fulfill the requirements of the AO. If you have any other questions regarding the requirements for the work plan, please contact me at (425) 649-7254 or by e-mail at maureen.sanchez@ecy.wa.gov.

Sincerely,

Maureen Sanchez
Site Manager and Project Coordinator, L.Hg., M.S.

Enclosure: Memorandum Re: Response to Ecology's Comments on the Agency Review Draft Interim Action work Plan for the Whitehead Tyee Site, Seattle, Washington, December 22, 2016.

cc: Ivy Anderson, Assistant Attorney General

20 YEARS FLOYD | SNIDER
strategy • science • engineering

Two Union Square
601 Union Street, Suite 600
Seattle, WA 98101
tel: 206.292.2078 fax: 206.682.7867

Memorandum

To: Ron Timm, Washington State Department of Ecology

Copies: Alan Sidell, Seattle Iron & Metals Corporation

From: Allison Geiselbrecht, PhD, and Lynn Grochala, Floyd|Snider

Date: December 22, 2016

Project No: SIM-730EDR

Re: **Response to Ecology's Comments on the Agency Review Draft Interim Action Work Plan for the Whitehead Tyee Site, Seattle, Washington**

Floyd|Snider, on behalf of Seattle Iron & Metals Corporation (SIM), submitted the Agency Review Draft interim action Work Plan (IAWP) for the Whitehead Tyee Site to the Washington State Department of Ecology (Ecology) in October 2016. This memorandum presents Floyd|Snider's responses to Ecology's comments regarding the Agency Review Draft IAWP. It incorporates comments received in a letter dated November 22, 2016, as well as further discussions with Mr. Ron Timm, Toxics Cleanup Program Project Coordinator for the Whitehead Tyee Site. This memorandum is presented concurrently with the Public Comment Review Draft IAWP. The comments are addressed in the order in which they were received in the November 22, 2016, letter.

Ecology's comments are reproduced below in numbered, **bold** type with Floyd|Snider's responses following in *indented and italicized* type.

GENERAL COMMENT

1. **To determine the appropriate cleanup levels for this Site, a Conceptual Site Model (CSM) and evaluation of all migration pathways and potential receptors is needed. The Lower Duwamish Waterway (LDW) is located in close proximity to the Site; therefore, groundwater and soil cleanup levels based on protection of surface water, in addition to direct contact, must be established. All migration pathways and potential receptors identified in the CSM are to be taken into consideration with regard to Cleanup Levels (CULs), site-specific remediation levels (Sections 3.2.2 and 3.3.1), contaminated soil segregation (section 4.3.2), backfill testing (Section 7.1.4) and data quality (Section 7.4.1). It has not been demonstrated that industrial cleanup levels can be established for this Site.**

   A preliminary Conceptual Site Model (CSM) was developed and presented in the Data Summary Report submitted in August 2016. The CSM will be refined during the Remedial

Investigation (RI). All migration pathways will be evaluated as part of the RI including an evaluation of the soil to groundwater to surface water pathway, resulting in the development of Site cleanup levels.

Both groundwater between the Site and the Lower Duwamish Waterway (LDW), and potentially seeps discharging to the Myrtle Street Embayment, will be evaluated to determine empirically if contaminants are reaching the LDW at levels that impact surface water. This evaluation will not be completed as part of the interim action.

The IAWP has been revised to include the preliminary CSM. The discussion of preliminary cleanup levels has been removed from the IAWP, as cleanup levels will be determined during the RI. Applicable remediation levels have been determined for the contaminants of concern (COCs) to be addressed by the interim action and are discussed in the IAWP.

COMMENTS FROM ECOLOGY'S OPINION LETTER OF MARCH 6, 2014

1. **Tetrachloroethylene (PCE) analysis should be added to sample location in the vicinity of WT-GP-5, WT-GP-7, and WT-GP-8. Additional sampling locations may be necessary to adequately delineate the horizontal and vertical extent of PCE in soil.**

   Tetrachloroethylene (PCE) is being addressed as part of the Fox Avenue Cleanup Site, with ongoing monitoring required for the Fox Avenue Site. Though PCE is not a COC associated with the Whitehead Tyee Site, additional characterization of chlorinated solvents on the Site will be conducted as part of the RI.

2. **Investigation of soil and groundwater in the vicinity of former steam dry kilns should be completed.**

   Further Site soil and groundwater investigation will be conducted as part of the RI. Investigation or cleanup of groundwater is not a component of the interim action.

3. **Investigation of the area in the vicinity of B06, B07, and B08 should be completed.**

   Further Site investigation will be conducted as part of the RI.

4. **A table presenting the intended analyses for each soil/groundwater sample by location and depth should be added to the work plan.**

   The additional investigation data will be collected as part of the RI. A table that depicts additional soil and groundwater characterization data by location will be prepared and included in the RI Work Plan. This additional characterization will not be completed prior to the interim action.

5. **Characterization of surface soil samples should be completed before construction and paving to include analysis of metals, SVOCs, PCBs and TPH as well as a representative percentage of dioxins/furans. Surface soil samples were collected in 2013 and 2015 at depths ranging between 0 and 10 feet bgs. Pentachlorophenol (Penta) was detected in**

one of the samples in 2013 and one of the samples in 20.15; no dioxin/furan analyses were completed.

Surface soil samples have been collected throughout the Site to date. These data suggest that surface soil is not contaminated at the Site. Further surface soil investigation will be conducted as part of the future RI. Sufficient data are present to complete the interim action. Additional discussion of surface soil quality has been added to Section 3.3 of the IAWP.

6. **In addition, Ecology recommended development of a CSM.**

   See response to General Comment above.

COMMENTS FROM ECOLOGY'S EMAIL OF DECEMBER 3, 2015

1. **Use of Method C (Industrial) cleanup levels have not been appropriately established for soil at this site.**

   See response to General Comment above. The appropriate cleanup levels for the Site will be established as part of the RI. For the purpose of the interim action, reasonable and appropriate cleanup levels and/or remediation levels for soil (the only media being addressed as part of the interim action) have been recommended. Per the Agreed Order, data presented in the Data Summary Report were compared to the Model Toxics Control Act (MTCA) industrial and residential cleanup levels. Additional clarifying text has been added to Section 5.0 of the IAWP to describe how cleanup levels will be proposed in the RI once all pathways and receptors are evaluated.

2. **Additional delineation is needed for dioxins/furans in groundwater and additional soil sample analyses is needed for dioxins/furans where Penta has been found.**

   Dioxins/furans in soil and groundwater will be better delineated as part of the RI. A composite sample from Trench Segment A2 will be analyzed for dioxins/furans. Trench Segment A2 has been selected because this segment is the closest to the former pentachlorophenol (penta) dip tank and penta underground storage tank (UST) source area. A discussion of this sampling has been included in Section 7.2 of the IAWP. The sample will be analyzed for dioxins/furans for informational purposes only to understand the quality of soil left in place below the structures. The results will not be used to trigger additional excavation.

ADDITIONAL SPECIFIC COMMENTS

1. **Per the AO, the following are missing from the Agency Review interim action Work Plan:**
   - **Alternative interim actions considered;**
   - **Personnel roles and responsibilities;**
   - **Compliance monitoring plan**

The interim action is being completed in conjunction with the stormwater conveyance system installation, to address soil contamination observed within the conveyance footprint. As such, the only two remedial alternatives available are no action and the proposed excavation associated with the conveyance installation. As no action is not appropriate, evaluation was not included originally in the IAWP. A short discussion of the no action alternative has been added to Section 1.1 of the IAWP. Any future remedial alternative evaluation for the Site will be included as part of the Feasibility Study.

A section of personnel roles and responsibilities has been added to the IAWP.

The sampling plan described in Section 7.2 of the IAWP serves as the compliance monitoring plan and is intended to cover this content. The section has been re-named to clarify this content.

2. **The following Acronyms/Abbreviations should be added to the list; EDR, HASP, DAHP, IDP, PCE, TCE, DCE, SWPPP, OSHA, DOSH, TESC, WISAARD, and HAZWOPER.**

   All acronyms and abbreviations that appear in the text have been added to the List of Acronyms and Abbreviations.

3. **Section 3.0: The first paragraph states that all available data are presented in the DSR, dated August 2016. Historical results provided in data tables in the DSR and in this IAWP suggest that some available data (both on-property and off-Site) are missing from the DSR. All soil and groundwater results collected to date should be summarized in comprehensive tables.**

   The IAWP does not present a comprehensive dataset as described in the third paragraph of Section 3.0; the Data Summary Report (DSR) is an accompanying document. We confirmed that all recent available data collected by SoundEarth Strategies and Floyd|Snider for the Whitehead Tyee Site have been presented in the DSR.

4. **Sections 3.1, 3.1.2, and 3.4: Dioxins/furans have been detected in groundwater above levels protective of surface water at other sites with Penta contamination within the LDW basin. Dioxins/furans have not been analyzed for in most of the wells on the Site and need to be assessed and delineated.**

   Further analysis for dioxins/furans in groundwater will be conducted in the RI.

5. **Sections 3.1, 3.1.2, and 3.4: The potential for impacted groundwater at the Site to be comingled with impacted groundwater from the Fox Avenue Site should be investigated. Penta, VOCs and/or Stoddard solvent are present in monitoring wells associated with the Whitehead Tyee Site. The wells associated with the Fox Avenue Site that are located on the Whitehead Tyee property should be tested for the contaminants listed above to inform the nature and extent of the contaminant plume.**

   Further delineation of the groundwater contaminant plumes associated with the Whitehead Tyee Site, including any overlap with the Fox Avenue Site groundwater plume, will be conducted in the RI.

6. **Section 3.1.1: Proposed homogenization of soil samples in a bowl before placement in the sample containers would allow vapors to be released, which will result in inaccurate concentrations of Stoddard solvent reported through analytical testing.**

   Stoddard solvent is analyzed by analytical method NWTPH-Dx. This analysis does not call for samples to be collected from soil prior to homogenization. Furthermore, due to the age of the release (greater than 30 years), the potential for loss is not a concern. See below for further discussion of methodology.

7. **Section 3.1.1: The hydrocarbon range for Stoddard solvent is C7 to C12. NWTPH-Dx analysis may not adequately measure Stoddard solvent concentrations, as the lower end of the hydrocarbon range would not be analyzed.**

   Due to the age of the release (greater than 30 years) and a review of the chromatograms from prior samples, most of the lighter end components have already degraded. The NWTPH-Dx Method was determined to be the more appropriate method, and was used for the 2015 investigation. Both our analytical laboratory and our chemist recommend the use of NWTPH-Dx to best quantify the Stoddard at this Site. As such, Stoddard solvent will continue to be analyzed using the NWTPH-Dx method. Additional explanatory text has been added to Section 3.1.1 of the IAWP.

8. **Section 3.1.1: USEPA Method SW-846 8015B or NWTPH-Gx should be used for quantitation of Stoddard solvent. USEPA Method SW-846 8015B provides measurement of organics in the C6 to C1O and C1O to C28 ranges. NWTPH-Gx is the required testing method for petroleum releases, including Stoddard solvents, per Model Toxics Control Act (see Table 830-1 and footnotes) and Ecology's preferred method for Stoddard solvent testing. This method provides measurement of organics at the lower end of the hydrocarbon range.**

   See response to above comment.

9. **Table 3.2: Based on this table, soil data presented in the DSR are incomplete.**

   The soil data presented in the DSR have been confirmed to be complete and consistent with Table 3.2.

10. Table 3.2: Ecology has developed appropriate preliminary cleanup levels (PCULs) per Model Toxics Control Act (MTCA) for Sites located along the LDW and these need to be incorporated as the relevant CULs into the IAWP:

Preliminary Cleanup Levels (PCUL)*

Chemical	Soil PCUL		Ground Water PCUL	
	(mg/kg)	Basis	(ug/L)	Basis
Stoddard solvent	100	Method A GRO without benzene	1,000	Method A GRO without benzene
Pentachlorophenol	0.00063	Protect surface water via GW	0.04	Protect surface water (NRWQC)
Heavy oil-range organics	2,000	Method A	500	Method A
Total PCBs	0.0004	Protect surface water via GW	6.40E-05	Protect surface water (NRWQC)
Dioxin/furan TEQ	5.20E-06	Natural background Contact: 1.3E-05 Bank erosion to ROD CUL: 2.0E-06 Bank erosion to lower tier: 2.5E-05	5.10E-09	Protect surface water (NRWQC)

* Not adjusted for PQLs or Natural Background

See response to General Comment on page 1.

11. Table 3.3: Based on this table, groundwater data presented in the DSR are incomplete.

Table 3.3 presents surface soil data, not groundwater data.

12. Table 3.4: Minimum and maximum detected values for dioxin/furans are incorrect. Refer to comment response #40 in the Response to Comments on the DSR, Whitehead Tyee Site. Summed dioxin/furan TEQs in groundwater should be re-calculated (not in soil). Table 3.3 in the DSR presents groundwater results not soil.

The summed dioxin/furan toxicity equivalents (TEQs) calculated assuming non-detect values as 0 picograms per liter (pg/L) were mistakenly presented, rather than the TEQs calculated assuming one-half of the detection limit for non-detect values. The results in Table 3.4 have been updated.

The comment related to Table 3.3 in the DSR is unclear. We agree that Table 3.3 in the DSR presents groundwater results.

13. Table 3.4: Based on this table, groundwater monitoring data for 2014-2016 sampling events are missing from tables in the DSR. Data provided for VOCs in this table could not be located in the DSR.

Data from one Fox Avenue Site well, MW-09, which was more recently sampled in 2016 as part of routine monitoring at the Fox Avenue Site, was mistakenly included in Table 3.4 of the IAWP. Table 3.4 of the IAWP has been corrected to exclude the 2016 MW-09 chlorinated solvent results from Fox Avenue; these data are provided to Ecology as part of the Fox Avenue annual monitoring report.

14. **Section 4.3: Last paragraph: explain why no bottom confirmation samples will be collected from the off-property trenching.**

    Trench bottom samples were not planned to be collected from the off-property trenching because this area is not affected by a release from the Whitehead Tyee Site—there is available data between the former penta dip tank and penta UST source area and the off-site trench indicating contaminants were not detected. Additionally, this area is located in the area of active Fox Avenue Site injections/remediation, and under the railroad track.

    The IAWP sample collection has been revised to include collection of a composite sample from the bottom of the off-property trench for long-term documentation, but the data from this sample will not be used for any construction decision making.

15. **Section 4.3.1: Second paragraph: heavy oil-range organics exceeding the CUL were detected from approximately 0 to 5 feet bgs (not 3 to 5 feet bgs). Same statement in Section 4.5.1.**

    The soil sample in GP-10 was a composite collected from 0 to 5 feet below ground surface (bgs). As a result of this exceedance, more discrete intervals were collected from the recent soil boring MW-110 to provide a better vertical profile. The 0- to 2-foot interval has concentrations significantly less than the cleanup level; therefore, it does not require remediation. However, to simplify construction, the entire 0 to 6 feet will be excavated as described in the IAWP. Additional language describing available soil data in the vicinity of the interim action excavation areas has been added to the text.

16. **Section 4.3.2: First sentence: "Based on existing data described above, contaminated soil is not expected to be encountered during trenching and excavation." Provide clarification/justification for this statement.**

    As described in Section 4.3.1, the majority of the trenches will only be excavated to depths of approximately 5 to 7 feet bgs, above the water table (where the majority of contamination is present). These shallow areas have no evidence of contamination based on existing data, with the exception of the heavy oil area to be excavated.

17. **Table 4.1 is missing relevant information that would correspond with Section 4.3.1 and Figures 4.1a, 4.1b, and 7.1.**

    Table 4.1 presents existing data located within the stormwater conveyance system footprint that will be used to supplement additional compliance data to be collected as part of the interim action. The table has been confirmed to contain all relevant information. These locations are presented on Figure 7.1. Location WT-SB-06 is also presented on Figure 4.1a because it is adjacent to the Stoddard solvent excavation area.

18. **Table 4.2: WT-SB-07 is not included on Figure 4.1a and is considered an off-property location.**

    Location WT-SB-07 should not have been included in the table, as the intent was to only provide on-property data associated with the interim action. This location has been removed from the table.

19. **Table 4.2: Analytical data for locations SB-01, MW-108, SB-6, MW-02, and MW-03 should be added to the table.**

    Location WT-SB-06 and WT-MW-02 have been added to the table. The other locations are well outside the proposed excavation area and have been removed from Figure 4.1a for clarity. Data locations presented in Table 4.2 now correspond with those presented on Figure 4.1a.

20. **Table 4.3: Analytical data for locations SB-13, SB-16, and BO5 should be added to the table to correspond with Figure 4.1b.**

    These locations are all outside the excavation area and were not used to delineate the excavation area. They have been removed from the figure for clarity.

21. **Section 4.4.1: It is stated that Stoddard solvent is likely present from about 10 to 15 feet bgs. This statement is not necessarily true since no soil samples were collected below 15 feet bgs in this area.**

    Field observations were collected in this area (photoionization detector [PID], visual, and olfactory). The boring depth of location WT-SB-09 was 20 feet bgs. Other borings in the source area were advanced to 16.5 feet or 20 feet bgs. Field observations indicate that contamination appears to be more prevalent between 10 and 16 feet bgs. We have modified and qualified this statement to say that Stoddard solvent is most likely to be detected between 10 and 16 feet bgs, but may extend deeper. Field evidence shows a decreasing trend or no evidence of contamination by 20 feet bgs.

22. **Section 4.4.1: It is stated that the northern limit of the excavation is delineated by WT-GP-08. Based on provided soil analytical data, that location has not been analyzed for Stoddard solvent.**

    Location WT-GP-08 has been analyzed for both gasoline- and diesel-range organics, both of which were not detected. Because Stoddard solvent falls into the carbon range between gasoline and diesel, it is also not detected. Additionally, field observations did not indicate the presence of Stoddard solvent. Text in Section 4.4.1 has been added to describe the WT-GP-08 organics results.

23. **Section 4.4.1: It is stated that boring WT-GP-06 did not contain Stoddard solvent at concentrations greater than the laboratory detection limit. This soil sample was collected at depths between 10 and 11 feet bgs. The excavation for detention pipes will be approximately 8 feet bgs. Stoddard solvent has been detected in the proposed**

Stoddard solvent excavation at depths below 12 feet bgs. As stated in the second paragraph, the Stoddard solvent contamination extends deeper than the planned stormwater detention pipes - how will that contamination be assessed and addressed, if necessary. See also, cross-section A-A' on Figure 4.2.

Note: This comment was intended to refer to location WT-SB-06, not WT-GP-06.

The planned excavation depth in the area of known contamination extends to as deep as 15 feet bgs. In these contaminated areas, field observations of Stoddard solvent including odor have previously been noted both shallower and deeper than 10 to 11 feet bgs (e.g., a strong solvent odor was noted in WT-SB-10 at 6.5 feet bgs). Therefore, we would expect to start observing field indications of contamination in the detention pipe excavation area by a depth of 8 feet bgs. If Stoddard solvent is observed (PID reading, visually, olfactory) during excavation we will excavate deeper in those areas until Stoddard solvent is no longer apparent based on field observations.

24. **Figure 4.1a: This figure is somewhat misleading because it suggests that Stoddard solvent has not been detected at all locations in the vicinity of the proposed excavation. No soil samples were collected from locations WT-GP-1 and WT-GP-6. Also, Stoddard solvent was not analyzed at locations WT-GP-5 and WT-GP-8.**

    Locations WT-GP-05 and WT-GP-08 have been analyzed for both gasoline- and diesel-range organics, both of which were not detected. Because Stoddard solvent falls into the carbon range between gasoline and diesel, it is also not detected. Additionally, field observations did not indicate the presence of Stoddard solvent. However, because WT-GP-05 is not located in the vicinity of the excavation, the location has been removed from Figure 4.1a. Soil borings GP-1 and GP-6 do not have soil data, and are not in the area of the proposed Stoddard solvent excavation and have been removed from Figure 4.1a. For clarity, all locations that are not relevant for discussion have been removed from the figures. They were shown for reference only.

25. **Figure 4.1a: Add "Enlarged Area Extent" to the figure.**

    The enlarged area extent is already presented on Figure 4.1a, with no revision made.

26. **Figure 4.1a: Show that Penta is also being excavated per use of appropriate Site cleanup levels; this may include dioxins/furans as well.**

    A final cleanup level for penta has not been proposed in the IAWP. The remedial excavation extent is based on the remediation level for Stoddard solvent of 1,000 milligrams per kilogram (mg/kg). The IAWP now also selects a remediation level for penta of 2.5 mg/kg based on the MTCA Method B cleanup level for direct contact. Important to note, however, is that penta is not driving this interim action excavation. Penta and dioxin/furan contamination in the former penta dip tank and penta UST area off-property will be further evaluated in the RI.

27. **Figure 4.2: Cross-section B-B': concentration of Stoddard solvent marked in red is not consistent with the legend.**

    The cross-sections have been revised to be consistent with Figures 4.1a; red text indicates Stoddard solvent or penta concentrations exceeding their remediation levels established in the IAWP.

28. **Figure 4.2: In the legend, explanation of "RED" should be corrected or Stoddard solvent extent should be compared to MTCA.**

    See comment above regarding the legend in Figure 4.2.

29. **Figure 4.2: Location WT-GP-3 could be added to the cross section A-A' and location WT-MW-2 could be added to the cross section B-B'.**

    Location WT-GP-3 is located on the cross section B-B' based on its proximity to that section versus A-A'. Location WT-MW-2 is not close enough to cross section B-B' to be applicable.

30. **Figure 4.2: Based on cross-section A-A', Stoddard solvent contamination may extend beyond WT-GP-2 and under the planned detention pipes. How will that contamination be assessed and addressed, if necessary.**

    At location WT-GP-2, contamination is known to be present as deep as 13 feet bgs based on sample results. Contamination is assumed to extend beyond 13 feet bgs; therefore, the excavation depth of 16 feet bgs has been selected. Field screening will be performed continuously during the excavation to ensure that contaminant removal is complete.

31. **Section 4.5.2: Based on results for WT-GP-10, it should not be assumed that the first 2 vertical feet of soil in the excavation area will not be impacted.**

    WT-GP-10 was a composite collected from 0 to 5 feet bgs, which did indicate heavy oil contamination. However, WT-MW-110, located directly adjacent to WT-GP-10, which collected more discrete samples from 0 to 2 feet bgs and 4 to 5 feet bgs, indicated that the contamination was located at 4 to 5 feet bgs, and the heavy oil concentration from 0 to 2 feet bgs was much less than the MTCA cleanup level. Therefore, it can be presumed that this area does not have surface contamination, and the contamination is present slightly deeper at 4 feet bgs and below. Regardless, we proposed to excavate from 0 to 6 feet bgs in the excavation area to facilitate construction.

32. **Section 4.7: When completed, a plan for shoring, dewatering and water treatment should be provided to Ecology.**

    Comment noted, a plan will be provided when complete.

33. **Section 4.8.3: Has the swirl concentrator been installed?**

    The swirl concentration has been installed, per Water Quality Order 13739 issued to SIM on September 20, 2016.

34. Section 7.1.1 and Figure 7.1: Will each trench sample be analyzed for Stoddard solvent, Penta and heavy-oil organics?

As described in Section 7.1.1 (now updated to Section 7.2.1), composite trench samples will all be analyzed for Stoddard solvent, penta, and heavy oil-range organics. If concentrations are found to be greater than the remediation levels, individual samples from the composites will be analyzed for the analyte that exceeds its respective remediation level.

35. Section 7.1.1 and Figure 7.1: Location WT-GP-11 should not be used as a confirmation trench bottom sample. It is located approximately 10 feet south of the proposed trench. Also, TPH-D and TPH-0 (both ND) were analyzed for at this location at depths between 0 and 5 feet bgs. There was another sample collected from this location at depths between 4 and 5 feet which was only analyzed for TPH-G. The trench is planned to extend to 7 feet bgs.

The IAWP has been updated to reflect that location WT-GP-11 will not be used as a confirmation trench bottom sample. Confirmation samples will be collected along the entire length of Trench Segment A1. Additionally, field observations will be collected during trench excavation. If field screening indicates contamination, soil will be excavated and additional sample(s) collected.

36. Section 7.1.1 and Figure 7.1: Location WT-GP-08 should not be used as a confirmation trench bottom sample. TPH-D and TPH-0 (ND and detected below MTCA Method A CUL, respectively) were analyzed for at this location at depths between 0 and 5 feet bgs. There was another sample collected from this location at depths between 4 and 5 feet which was only analyzed for TPH-G. Stoddard solvent was not analyzed for in this location. The trench is planned to extend to 7 feet bgs.

Location WT-GP-08 will be used as a confirmation trench bottom sample as it is in the area of the trench excavation. During the excavation in this area, as with the entire excavation, field observations will be collected. If field screening indicates contamination, soil will be excavated and additional sample(s) collected.

37. Section 7.1.1 and Figure 7.1: Additional soil confirmation samples should be collected in the vicinity of the future pump to treatment system, pump station, and flow splitter. The excavations for these components will extend to depths between 12 and 16 feet bgs and the deepest soil samples in this area were collected at approximately 10 feet bgs (WT-SB-01 and WT-MW-108). Also, Penta has been detected in shallow samples at WT-SB-01 and in groundwater at WT-MW-108.

One three-point composite sample will be collected at the base of the excavation within the vicinity of the future pump to treatment system, pump station, and flow splitter. The text and figure have been revised to reflect this.

38. **Section 7.1.1 and Figure 7.1: Additional soil confirmation soil samples should be collected in the vicinity of detention pipes. Existing data for WT-SB-06 will not adequately characterize this area.**

    One additional three-point composite sample will be collected at the base of the excavation within the vicinity of the detention pipes. The text and figure have been revised to reflect this.

39. **Section 7.1.1 and Figure 7.1: Penta and Stoddard solvent have been detected in the NW portion of the site in the past. This should be taken into consideration when deciding on analyses to be completed for trench samples in segments E1, E2, and D.**

    Penta and Stoddard solvent are intended to be analyzed in the trench samples for these segments.

40. **Section 7.1.1 and Figure 7.1: A table including all proposed sample locations, depths, analyses and analytical methods should be completed and submitted to Ecology for review. The table should also include stockpile sampling, backfill testing, and QC samples.**

    Table 7.1 detailing composite soil sample collection, soil confirmation sample collection, and QC sample collection has been added to the IAWP based on discussions with Ecology after receipt of comments. Required analyses for stockpile samples are listed in Tables 7.2 through 7.4; if this sampling becomes necessary, the sample collection frequency and quality control (QC) sampling are outlined in the IAWP text. These samples are not included in Table 7.1 because the total number of stockpile and/or backfill samples is not known at this time.

41. **Section 7.1.2 and Figure 7.1: Additional soil confirmation samples should be collected in the Northern portion of the Stoddard solvent excavation, adjacent to the detention pipes area. Soil confirmation samples should also be analyzed for Penta, since penta was detected in soil samples at WT-GP-3 WT-GP-2 WT-SB-09 WT-GP-4 WT-MW-01 WT-GP-8 and WT-SB-01 in the past as well as groundwater samples in WT-MW-01, WT-MW-02 and WT-MW-04. The confirmation samples should also be sampled for dioxins/furans since Penta was detected in the past.**

    One additional three-point composite sample will be collected from beneath the detention pipe area and will be analyzed for Stoddard solvent, penta, and heavy oil-range organics. One additional discrete bottom sample will be collected from the north portion of the Stoddard solvent excavation. Penta has been detected at low concentrations (significantly less than industrial cleanup levels) in saturated soil in the vicinity and is indicative of groundwater plume, not soil contamination (shallower soil samples were non-detect). Two of the six discrete confirmation samples will be analyzed for penta and one of these samples will also be analyzed for dioxins/furans. The text and figure have been revised to reflect this additional sampling and analysis.

42. Section 7.1.2 and Figure 7.1: In the heavy-oil excavation area, confirmation soil samples should be collected from all excavation walls and the bottom. Locations WT-SB-14, WT-SB-15 and WT-SB-18 have not been analyzed for Stoddard solvent or Penta. Stoddard solvent and Penta have been detected in the past at location WT-GP-10, also Penta has been detected in groundwater at WT-MW-110. In addition to the heavy-oil analysis, confirmation soil samples soil samples should be analyzed for Penta, Stoddard solvent and dioxins/furans (since Penta was detected).

The objective of the interim action in this area is to remove heavy oil-contaminated soil. There are sufficient sidewall and bottom data as proposed. Prior soil detections for penta and Stoddard solvent were low level: in WT-GP-10, penta at 0.189 mg/kg in the 0 to 5 feet bgs interval was detected (less than the remediation level), and Stoddard solvent at 196 mg/kg in the 4 to 5 feet bgs interval was detected (less than the remediation level). Groundwater is not a component of the interim action, and additional Stoddard solvent and penta distribution in soil and groundwater will be further evaluated as part of the RI. Dioxins/furans are not mobile and are not expected to be present much beyond the source area, and are correlated with higher levels of penta.

43. Table 7.2: Are MDLs for naphthalene and metals in mg/kg?

Yes, method detection limits (MDLs) are in mg/kg. The table has been updated to reflect this information

44. Section 10: Add Ecology 2007 to the references.

Ecology 2007 has been added to the reference list.

45. Appendices: Note that an approval of the IA WP would not constitute Ecology's approval of all documents in the appendices:

Comment noted.

46. Appendix A contains draft construction drawings that have provided useful insights for the investigation work to be conducted under 'the MTCA. However, Ecology's Toxic Cleanup Program's comments on the MTCA requirements do not constitute review, comment or approval on the construction of the storm water control system required under separate Order from the agency.

Comment noted. The draft construction drawings have previously been submitted to Ecology Water Quality in the Seattle Iron & Metals Corporation Engineering Report, 730 South Myrtle Street. The Engineering Report was submitted in April 2013 and approved by Water Quality in November 2013. Final construction drawings will be submitted to Water Quality for approval prior to construction.

47. It's unclear if Appendix B should remain inside the IAWP, as a separate SEPA public comment period and review is required.

The State Environmental Policy Act (SEPA) checklist has been removed from the IAWP and will be submitted separately.

48. The Inadvertent Discovery Plan (IDP) in Appendix E will not be approved by Ecology without written acceptance by the appropriate state and local agencies. Specifically, Washington State Department of Archeology and Historic Preservation, King County Historic Preservation Program (Department of Natural Resources and Parks) and the City of Seattle Historic Preservation must provide their acknowledgement and comments on the IDP. Input also needs to be sought out from the authorized Tribal representatives from the Duwamish, Muckleshoot, and Suquamish Tribes before the IDP is finalized.

The Inadvertent Discovery Plan (IDP) review requirements would be evaluated as part of the SEPA Checklist review and determination. It is not a requirement of the IAWP, so it has been removed from the appendices.

We agree that consultation with Agencies and Tribes may be necessary. Once the SEPA determination has been made, we would decide what type of outreach to the stakeholders is the best approach for this project.

Whitehead Tyee Site

Interim Action Completion Report

Appendix B
Record Drawings

SEATTLE IRON & METALS

730 SOUTH MYRTLE STREET IMPROVEMENTS

NE SECTION 29, TOWNSHIP 24 NORTH, RANGE 4 EAST, W.M.

OWNER

730 MYRTLE LLC
SEATTLE IRON & METALS
CORP. 601 S. MYRTLE STREET
SEATTLE, WA 98108
(206) 682-0040
CONTACT: ALAN SIDELL

CONSULTANTS

CIVIL ENGINEER:
KPFF CONSULTING ENGINEERS
2407 NORTH 31ST STREET, SUITE 100
TACOMA, WA. 98407
(253) 396-0150
CONTACT: BILL ARMOUR

ENVIRONMENTAL CONSULTANT:
FLOYD | SNIDER
601 UNION STREET, SUITE 600
SEATTLE, WA 98101
(206) 292-2078
CONTACT: ALLISON GEISELBRECHT

GEOTECHNICAL CONSULTANT:
PANGEO INC.
3213 EASTLAKE AVE E, SUITE B
SEATTLE, WA 98102
(206) 262-0370
CONTACT: PAUL GRANT

SEATTLE IRON & METALS CORP.

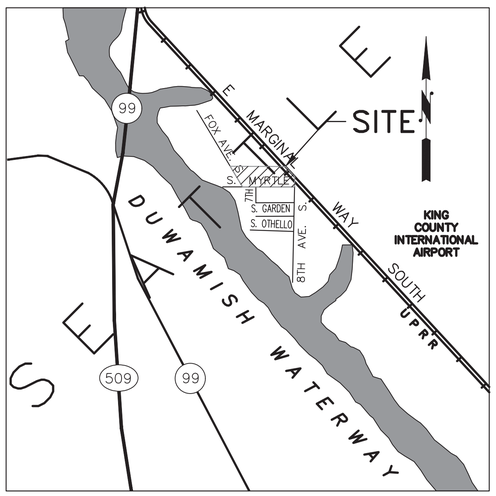

VICINITY MAP
NTS

DRAWING INDEX

SHEET NO.	DRAWING TITLE
G1.0	COVER SHEET
G1.1	LEGEND, NOTES AND ABBREVIATIONS
G1.2	CONSTRUCTION PHASING & SEQUENCING NOTES
G2.0	EXISTING CONDITIONS PLAN
G2.1	EXISTING CONDITIONS PLAN
C1.0	SITE PLAN
C1.1	SITE PLAN
C1.2	TREE DETAIL
C2.0	DEMOLITION & TEMPORARY EROSION AND SEDIMENT CONTROL PLAN
C2.1	DEMOLITION & TEMPORARY EROSION AND SEDIMENT CONTROL PLAN
C2.2	DEMOLITION & TEMPORARY EROSION AND SEDIMENT CONTROL DETAILS
C3.0	INTERIM ACTION REMEDIATION PLAN
C3.1	INTERIM ACTION REMEDIATION PLAN
C3.2	INTERIM ACTION REMEDIATION SECTIONS
C3.3	INTERIM ACTION REMEDIATION SECTIONS & DETAILS
C4.0	GRADING AND DRAINAGE PLAN
C4.1	GRADING AND DRAINAGE PLAN
C4.2	DRAINAGE AND EXISTING WATERLINE PROFILES
C4.3	DRAINAGE PROFILES
C4.4	GRADING AND DRAINAGE DETAILS
C4.5	GRADING AND DRAINAGE DETAILS
C4.6	GRADING AND DRAINAGE DETAILS
C4.7	BID ALTERNATE – ONSITE CONCRETE PAVING
C4.8	GRADING AND DRAINAGE DETAILS
C4.9	GRADING AND DRAINAGE DETAILS
C5.0	LOCATION AND HORIZONTAL CONTROL DATA
C5.1	PROJECT INFORMATION
C6.0	ON-SITE WATER PLAN
C6.1	ON-SITE WATER DETAILS
C6.2	ON-SITE WATER DETAILS

PROJECT DATA

BENCHMARKS	HORIZONTAL DATUM: NAD 83/91 VERTICAL DATUM: NAVD 88 (ADD 2.99 TO ELEVATIONS TO OBTAIN MLLW) BENCHMARK: CITY OF SEATTLE BRASS CAP STAMPED "C OF S 5410" SET IN SW CORNER OF 4.6' TALL PLANTER BOX ATTACHED TO THE SW CORNER OF US WEST BUILDING AT THE NE CORNER OF THE INTERSECTION OF E MARGINAL WAY S AND CORSON AVE. S. ELEVATION = 22.333
SITE ADDRESS	730 S. MYRTLE STREET
ZONING	IG1, U85, UI

LEGAL DESCRIPTION

PARCEL NO. 2:

THAT PORTION OF TRACTS 14 AND 15, BLOCK "B", TRACTS OF JULIUS HORTON, ACCORDING TO THE PLAT THEREOF, RECORDED IN VOLUME 3 OF PLATS, PAGE(S) 171, IN KING COUNTY,WASHINGTON, LYING SOUTHWESTERLY OF EAST MARGINAL WAY, AS ESTABLISHED BY ORDINANCE NO. 32881 OF THE CITY OF SEATTLE.

PARCEL NO. 3:

THAT PORTION OF THE L.M. COLLINS DONATION CLAIM NO. 46 IN SECTION 29, TOWNSHIP 24 NORTH, RANGE 4 EAST, W. M., IN KING COUNTY, WASHINGTON, DESCRIBED AS FOLLOWS: BEGINNING AT THE INTERSECTION OF THE CENTERLINES OF CORSON AVENUE AND EAST MARGINAL WAY IN THE CITY OF SEATTLE; THENCE SOUTH 12 DEGREES 15'54" WEST ALONG THE CENTERLINE OF CORSON AVENUE 325.70 FEET; THENCE NORTH 89 DEGREES 58' 06" WEST30.70 FEET TO THE TRUE POINT OF BEGINNING OF THE TRACT HEREIN DESCRIBED; THENCE CONTINUING NORTH 89 DEGREES 58'06" WEST 393.89 FEET; THENCE NORTH 43 DEGREES 32' WEST 276.02 FEET; THENCE SOUTH 89 DEGREES 58'06" EAST 627.47 FEET; THENCE SOUTH 12 DEGREES 15'54" WEST 204.65 FEET TO THE TRUE POINT OF BEGINNING; (BEING KNOWN AS TRACTS 21, 22 AND 23 OF KING COUNTY INDUSTRIAL TRACTS, ACCORDING TO THE UNRECORDED PLAT THEREOF).

PARCEL NO. 4:

THAT PORTION OF CORSON AVENUE SOUTH IN LUTHER M. COLLINS DONATION CLAIM NO. 46, SECTION 29, TOWNSHIP 24 NORTH, RANGE 4 EAST, W.M., IN KING COUNTY, WASHINGTON, DESCRIBED AS FOLLOWS:
BEGINNING AT A POINT ON THE WESTERLY LINE OF CORSON AVENUE SOUTH AS ESTABLISHED BY ORDINANCE NO. 78819 OF THE CITY OF SEATTLE, 69.79 FEET SOUTHERLY (MEASURED ALONG SAID WESTERLY LINE) OF ITS INTERSECTION WITH THE SOUTHWESTERLY LINE OF EAST MARGINAL WAY SOUTH AS ESTABLISHED BY ORDINANCE NO. 32881 OF THE CITY OF SEATTLE; THENCE SOUTH 12 DEGREES 15'54"WEST ALONG SAID WESTERLY LINE 204.65 FEET TO THE NORTH LINE OF SOUTH MYRTLE STREET; THENCE SOUTH 89 DEGREES 58'06"EAST ALONG SAID NORTH LINE 61.40 FEET TO THE EASTERLY LINE OF CORSON AVENUE SOUTH; THENCE NORTH 12 DEGREES 15'54"EAST ALONG SAID EASTERLY LINE TO THE SOUTHWESTERLY LINE OF EAST MARGINAL WAY SOUTH; THENCE NORTH 49 DEGREES 00'00"WEST ALONG SAID SOUTHWESTERLY LINE TO THE CENTERLINE OF CORSON AVENUE SOUTH; THENCE SOUTH 12 DEGREES 15'54"WEST ALONG THE SAID CENTERLINE TO A LINE BEARING SOUTH 89 DEGREES 58'06"EAST FROM THE POINT OF BEGINNING; THENCE NORTH 89 DEGREES 58'06"WEST TO THE POINT OF BEGINNING.

RECORD DRAWINGS

NO.	DATE	BY	CHD.	APPR.	REVISION

DATE 08/22/2018 | SCALE AS NOTED
DESIGNED WMA | CHECKED WMA
DRAWN NLM | PROJECT NAME
JOB NO. 112143

kpff
2407 North 31st Street, Suite 100
Tacoma, Washington 98407
(253) 396-0150 Fax (253) 396-0162

CALL 48 HOURS BEFORE YOU DIG 1-800-424-5555

SEATTLE IRON & METALS CORP.

RECORD DRAWINGS:
THESE RECORD DRAWINGS HAVE BEEN PREPARED FROM INFORMATION PROVIDED BY OTHERS. KPFF HAS NOT VERIFIED THE ACCURACY AND/OR COMPLETENESS OF THIS INFORMATION.

SEATTLE IRON & METALS
730 SOUTH MYRTLE STREET, SEATTLE, WA
COVER SHEET

SHEET G1.0
SHEET 1 OF 30

PLOTTED BY: nmedley DATE & TIME: Aug 22, 2018 - 10:27am FILE: K:\Civil\112-\112143 Seattle Iron and Metals\730 S Myrtle\5.04 Construction Support\8- Drawings\730 S MYRTLE SDCI (Current)\1 G1.0 COVER SHEET.dwg

GENERAL NOTES:

1. ALL WORK SHALL CONFORM TO: THE CURRENT EDITION OF CITY OF SEATTLE STANDARD SPECIFICATIONS; THE CURRENT EDITION OF THE CITY OF SEATTLE STANDARD PLANS; AND SEATTLE DEPARTMENT OF TRANSPORTATION; DIRECTOR'S RULE FOR STREET AND SIDEWALK PAVEMENT OPENING AND RESTORATION. A COPY OF THESE DOCUMENTS SHALL BE ON SITE DURING CONSTRUCTION.
2. A COPY OF THE APPROVED PLAN MUST BE ON SITE WHENEVER CONSTRUCTION IS IN PROGRESS.
3. THE CONTRACTOR SHALL OBTAIN ALL PERMITS REQUIRED FOR WORK WITHIN THE PUBLIC RIGHT OF WAY.
4. PRIOR TO ANY CONSTRUCTION ACTIVITY, THE CONTRACTOR SHALL SCHEDULE AND ATTEND A PRE-CONSTRUCTION CONFERENCE WITH THE CITY OF SEATTLE. THE CONTRACTOR SHALL NOTIFY THE OWNER'S PROFESSIONAL ENGINEERING CONSULTANT OF THE PRECONSTRUCTION MEETING TIME AND LOCATION.
5. PAVED SURFACES INCLUDING ROADWAYS, SIDEWALKS, AND CURBS THAT ARE DAMAGED BY NEW CONSTRUCTION SHALL BE REPAIRED AS REQUIRED BY THE SEATTLE DEPARTMENT OF TRANSPORTATION, STREET USE INSPECTOR.
6. DATUM: NAVD88 AND NAD83 (1991). REFER TO THE CITY OF SEATTLE SURVEY WEBSITE FOR DETAILS.
7. ALL SURVEYING AND STAKING OF IMPROVEMENTS IN THE PUBLIC RIGHT OF WAY IS TO BE PROVIDED BY THE CITY OF SEATTLE AT OWNER'S EXPENSE.
8. THE CONTRACTOR SHALL NOTIFY THE SEATTLE FIRE DEPARTMENT DISPATCHER (206-386-1495) TWENTY-FOUR (24) HOURS IN ADVANCE OF ALL WATER SERVICE INTERRUPTIONS, HYDRANT SHUTOFFS, AND STREET CLOSURES OR OTHER ACCESS BLOCKAGE. THE CONTRACTOR SHALL ALSO NOTIFY THE DISPATCHER OF ALL NEW, RELOCATED, OR ELIMINATED HYDRANTS RESULTING FROM THIS WORK.
9. ALL LOCATIONS OF EXISTING UTILITIES SHOWN HEREON HAVE BEEN ESTABLISHED BY FIELD SURVEY OR OBTAINED FROM AVAILABLE RECORDS AND SHOULD THEREFORE BE CONSIDERED APPROXIMATE ONLY AND NOT NECESSARILY COMPLETE. IT IS THE SOLE RESPONSIBILITY OF THE CONTRACTOR TO INDEPENDENTLY VERIFY THE ACCURACY OF ALL UTILITY LOCATIONS SHOWN AND TO FURTHER DISCOVER AND AVOID ANY OTHER UTILITIES NOT SHOWN HEREON WHICH MAY BE AFFECTED BY THE IMPLEMENTATION OF THIS PLAN.
10. THE CONTRACTOR SHALL LOCATE AND PROTECT ALL CASTINGS AND UTILITIES DURING CONSTRUCTION AND SHALL CONTACT THE UNDERGROUND UTILITIES LOCATOR SERVICE (1-800-424-5555) AT LEAST 48 HOURS PRIOR TO CONSTRUCTION.
11. THE CONTRACTOR SHALL ADJUST ALL EXISTING MANHOLE RIMS, DRAINAGE STRUCTURE LIDS, VALVE BOXES, AND UTILITY ACCESS STRUCTURES TO FINISH GRADE WITHIN AREAS AFFECTED BY THE PROPOSED IMPROVEMENTS.
12. UTILITY SERVICE CONNECTIONS SHOWN ON THIS PLAN ARE TO BE MAINTAINED PRIVATELY AND NOT BY THE CITY OF SEATTLE.
13. THE CONTRACTOR SHALL PROVIDE FOR ALL COMPACTION TEST REQUIRED BY THE STREET USE INSPECTOR.
14. BACKFILL MATERIAL USED IN PUBLIC RIGHT-OF-WAY SHALL MEET STANDARD SPECIFICATIONS AND SHALL BE APPROVED BY SEATTLE DEPARTMENT OF TRANSPORTATION.
15. INSPECTION AND ACCEPTANCE OF ALL WORK IN STREET RIGHTS-OF-WAY WILL BE ACCOMPLISHED BY REPRESENTATIVES OF THE CITY OF SEATTLE. IT SHALL BE THE CONTRACTOR'S RESPONSIBILITY TO COORDINATE AND SCHEDULE APPROPRIATE INSPECTIONS, ALLOWING PROPER ADVANCE NOTICE. THE INSPECTOR MAY REQUIRE RECONSTRUCTION OF ITEMS THAT DO NOT MEET CITY STANDARDS OR THAT WERE CONSTRUCTED WITHOUT INSPECTION.
16. THE CONTRACTOR SHALL PROVIDE AND MAINTAIN TEMPORARY SEDIMENTATION COLLECTION FACILITIES TO INSURE THAT SEDIMENT-LADEN WATER DOES NOT ENTER THE NATURAL OR PUBLIC DRAINAGE SYSTEM.
17. AS CONSTRUCTION PROGRESSES AND UNEXPECTED (SEASONAL) CONDITIONS DICTATE, MORE SILTATION CONTROL FACILITIES MAY BE REQUIRED TO INSURE COMPLETE SILTATION CONTROL OF THE PROJECT. THEREFORE, DURING THE COURSE OF CONSTRUCTION IT SHALL BE THE OBLIGATION AND RESPONSIBILITY OF THE CONTRACTOR TO ADDRESS ANY NEW CONDITIONS THAT MAY BE CREATED BY HIS ACTIVITIES AND TO PROVIDE ADDITIONAL FACILITIES THAT MAY BE NEEDED TO PROTECT ADJACENT PROPERTIES.
18. THE CONTRACTOR SHALL KEEP OFF-SITE STREETS CLEAN AT ALL TIMES BY SWEEPING. WASHING OF THESE STREETS WILL NOT BE ALLOWED WITHOUT PRIOR SEATTLE DEPARTMENT OF TRANSPORTATION APPROVAL.
19. ALL TRAFFIC CONTROL SHALL BE IN ACCORDANCE WITH THE CITY OF SEATTLE TRAFFIC CONTROL MANUAL. A TRAFFIC CONTROL PLAN WILL BE REQUIRED PRIOR TO ISSUANCE OF PERMIT.
20. COORDINATE SIGN AND METER HEAD REMOVAL AND INSTALLATION WITH SEATTLE DEPARTMENT OF TRANSPORTATION AT (206)-684-5370. SIGNPOSTS ARE TO BE INSTALLED IN ACCORDANCE WITH STANDARD PLANS.
21. ALL WORK PERFORMED BY SEATTLE CITY LIGHT, SEATTLE PUBLIC UTILITIES, AND OTHER PUBLIC UTILITIES TO REMOVE OR RELOCATE EXISTING UTILITIES SHALL BE DONE AT THE PERMITTEE'S EXPENSE.
22. CARE SHALL BE EXERCISED WHEN EXCAVATING NEAR EXISTING CHARGED WATER MAINS. CONTRACTOR SHALL NOTIFY KING COUNTY METRO AT (206)-684-2732 SEVEN DAYS IN ADVANCE OF ANY IMPACT TO TRANSIT OPERATIONS.

EROSION AND SEDIMENTATION CONTROL NOTES:

1. THE IMPLEMENTATION OF THESE ESC PLANS AND THE CONSTRUCTION, MAINTENANCE, REPLACEMENT AND UPGRADING OF THESE ESC FACILITIES IS THE RESPONSIBILITY OF THE APPLICANT/CONTRACTOR UNTIL ALL CONSTRUCTION IS COMPLETED AND ACCEPTED.
2. THE ESC FACILITIES SHOWN ON THIS PLAN MUST BE CONSTRUCTED IN CONJUNCTION WITH ALL CONSTRUCTION ACTIVITIES AND IN SUCH A MANNER AS TO ENSURE THAT SEDIMENT-LADEN WATER DOES NOT ENTER THE DRAINAGE SYSTEM OR VIOLATE APPLICABLE STANDARDS.
3. THE ESC FACILITIES SHOWN ARE THE MINIMUM REQUIRED FOR ANTICIPATED SITE CONDITIONS. DURING THE CONSTRUCTION PERIOD, THESE ESC FACILITIES SHALL BE UPGRADED (E.G. ADDITIONAL SUMPS, RELOCATION OF DITCHES AND SILT FENCES, ETC.) AS NEEDED FOR TYPICAL WEATHER CONDITIONS.
4. THE ESC FACILITIES SHALL BE INSPECTED DAILY BY THE APPLICANT AND MAINTAINED AS NECESSARY OR AS DIRECTED BY THE CITY OF SEATTLE TO ENSURE THEIR CONTINUED FUNCTIONING.
5. ANY AREA STRIPPED OF VEGETATION, INCLUDING EMBANKMENTS, WHERE NO FURTHER WORK IS ANTICIPATED FOR A PERIOD OF 15 DAYS, SHALL BE IMMEDIATELY STABILIZED WITH THE APPROVED ESC METHODS (E.G. SEEDING, MULCHING, NETTING, EROSION BLANKETS, CLEAR PLASTIC COVERING, ETC.). DURING PERIODS OF HEAVY RAINFALL, THE CONTRACTOR SHALL COVER ANY STRIPPED SLOPES STEEPER THAN 4H:1V WITH 6 MIL PLASTIC SHEETING.
6. THE ESC FACILITIES ON-SITE SHALL BE INSPECTED AND MAINTAINED DURING AND AFTER EACH RAIN EVENT, OR A MINIMUM OF ONCE A MONTH.
7. STABILIZED CONSTRUCTION ENTRANCES AND WASH PADS SHALL BE DESIGNED BY THE CONTRACTOR AND INSTALLED AT THE BEGINNING OF CONSTRUCTION, AND MAINTAINED TO MEET ALL APPLICABLE STANDARDS FOR THE DURATION OF THE PROJECT. CONTRACTOR SHALL ENSURE THAT ALL PAVED AREAS ARE KEPT CLEAN FOR THE DURATION OF THE PROJECT.
8. APPROVAL OF THE EROSION/SEDIMENTATION CONTROL PLAN DOES NOT CONSTITUTE AN APPROVAL OF PERMANENT ROAD OR DRAINAGE DESIGN (E.G. SIZE AND LOCATION OF ROADS, PIPES, RESTRICTORS, CHANNELS, RETENTION FACILITIES, UTILITIES, ETC.)
9. ALL EROSION AND SEDIMENT CONTROL BEST MANAGEMENT PRACTICES (BMPS) SHALL BE MAINTAINED AND REPAIRED AS NEEDED TO ASSURE PERFORMANCE OF THEIR INTENDED FUNCTION CONTINUES. ALL MAINTENANCE AND REPAIR SHALL BE CONDUCTED IN ACCORDANCE WITH THE CITY OF SEATTLE'S CONSTRUCTION BEST MANAGEMENT PRACTICES MANUAL AND ALL OTHER APPLICABLE STANDARDS AND REGULATIONS.
10. THE BOUNDARIES OF THE LIMITS OF GRADING SHOWN ON THE GRADING PLANS SHALL BE SET BY SURVEY AND CLEARLY FLAGGED IN THE FIELD PRIOR TO CONSTRUCTION. DURING THE CONSTRUCTION PERIOD, NO DISTURBANCE BEYOND THE FLAGGED CLEARING LIMITS SHALL BE PERMITTED. THE FLAGGING SHALL BE MAINTAINED BY THE CONTRACTOR FOR THE DURATION OF CONSTRUCTION.
11. ANY AREA NEEDING ESC MEASURE, BUT NOT REQUIRING IMMEDIATE ATTENTION, SHALL BE ADDRESSED WITHIN 15 DAYS.
12. CONTRACTOR SHALL VERIFY EXTENT OF SILTATION WITHIN CONVEYANCE SYSTEM PRIOR TO START OF CONSTRUCTION. AT NO TIME SHALL MORE THAN 1 FOOT OF SEDIMENT BE ALLOWED TO ACCUMULATE WITHIN A CATCH BASIN. ALL CATCH BASINS AND CONVEYANCE LINES SHALL BE CLEANED PRIOR TO PAVING. THE CLEANING OPERATION SHALL NOT FLUSH SEDIMENT-LADEN WATER INTO THE DOWNSTREAM SYSTEM.
13. IF SEDIMENT IS TRANSPORTED ONTO A ROAD SURFACE, THE ROADS SHALL BE CLEANED THOROUGHLY AT THE END OF EACH DAY. SEDIMENT SHALL BE REMOVED FROM ROADS BY A METHOD AS APPROVED BY THE ENGINEER AND BE TRANSPORTED TO A CONTROLLED SEDIMENT DISPOSAL AREA.
14. WHERE SEEDING FOR TEMPORARY EROSION CONTROL IS REQUIRED, FAST GERMINATING GRASSES SHALL BE APPLIED AT AN APPROPRIATE RATE (E.G. ANNUAL OR PERENNIAL RYE APPLIED AT APPROXIMATELY 80 POUNDS PER ACRE).
15. WHERE STRAW MULCH FOR TEMPORARY EROSION CONTROL IS REQUIRED, IT SHALL BE APPLIED AT A MINIMUM THICKNESS OF 2 INCHES.
16. THE CONTRACTOR SHALL PROTECT STOCKPILE AREAS FROM RELEASE OF SEDIMENT. STOCKPILES SHALL BE COVERED AT ALL TIMES WHILE NOT IN USE TO KEEP THE STORED MATERIAL DRY.
17. REFER TO THE CITY OF SEATTLE DIRECTOR'S RULE 6-93, CONSTRUCTION BEST MANAGEMENT PRACTICES MANUAL PART II, AND ALL OTHER APPLICABLE REGULATIONS TO ACCOMPLISH CONTROL OF POTENTIALLY HAZARDOUS POLLUTANTS AND SEDIMENTS.
18. THE CONTRACTOR SHALL NOT FLUSH CONCRETE BYPRODUCTS FROM CONCRETE TRUCKS NEAR OR INTO THE STORM DRAINAGE SYSTEM. CONCRETE TRUCK WASH AREA SHALL BE APPROVED BY THE ENGINEER. THE CONTRACTOR SHALL BE RESPONSIBLE FOR CLEANING OR RELAYING THE ENTIRE DOWNSTREAM STORM SEWER SYSTEM IF REQUIRED, AS DETERMINED BY THE ENGINEER.
19. THE DEWATERING SHALL NOT EXCEED 60 GPM WITH A DAILY MAXIMUM VOLUME OF 30,000 GALLONS AND A DURATION OF NO MORE THAN 5 DAYS.
20. IF POLLUTANT LEVELS AS DESCRIBED BY THE KING COUNTY AUTHORIZATION TO DISCHARGE LETTER ARE EXCEEDED, THE DISCHARGE MUST BE TRUCKED OFFSITE.
21. DISCHARGE PIPE TO THE MAINTENANCE HOLE (DESIGNATED AS MH 071-187 ON THE COS GIS SYSTEM AND MARKED "SEWER" LOCATED NEAR THE NW CORNER OF THE SITE ADJACENT TO THE RR TRACKS) MUST BE HARD-PLUMBED AND FITTED WITH A 90-DEGREE PIPE AND MUST EXTEND AT LEAST THREE FEET INTO THE STRUCTURE.
22. TEMPORARY COVER MUST BE PLACED OVER THE LID OF THE STRUCTURE
23. TEMPORARY FENCING MUST BE PLACED AROUND THE STRUCTURE TO RESTRICT ACCESSIBILITY.
24. THE STRUCTURE SHALL BE LEFT IN AS GOOD OR BETTER CONDITION AS IT WAS PRIOR TO THE PROJECT'S CONNECTION. IF THE STRUCTURE IS DAMAGED DURING WORK ASSOCIATED WITH THE TEMPORARY CONNECTION, CONTRACTOR SHALL BE RESPONSIBLE FOR REPAIRING OR REPLACING THE STRUCTURE AS SPECIFIED BY THE SPU/SDCI INSPECTOR.
25. DURING PERIODS WHERE SPU REQUIRES ACCESS TO THE STRUCTURE, SPU REPRESENTATIVES RESERVE THE AUTHORITY TO REQUEST THAT DISCHARGE THROUGH THE TEMPORARY CONNECTION BE STOPPED.
26. CONTRACTOR TO COORDINATE WITH SDOT TO DETERMINE ANY STREET USE OR TRAFFIC CONTROL REQUIREMENTS.

DEMOLITION NOTES:

1. A COPY OF THE PERMIT PLANS SHALL BE ON-SITE WHENEVER CONSTRUCTION IS IN PROGRESS.
2. THE CONTRACTOR SHALL VERIFY THE LOCATION OF ALL UTILITIES AND SHALL PROVIDE SUFFICIENT NOTIFICATION TO THE APPROPRIATE UTILITY PRIOR TO WORK.
3. NOT ALL PIPING AND CONDUITS ARE SHOWN ON THE DEMOLITION DRAWINGS. THE CONTRACTOR IS RESPONSIBLE FOR DETERMINING THE LOCATION, SIZE, QUANTITY, AND CONTENTS OF ALL ABOVE AND BELOW GROUND PIPING AND CONDUITS.
4. DEMOLITION SHALL INCLUDE REMOVAL OF CONCRETE CURBS, STORAGE TANKS, FENCES, BOLLARDS, SIGN BASES, AND ALL OTHER OBSTRUCTIONS, UNLESS OTHERWISE NOTED.
5. MAINTAIN AND PROTECT ALL MANHOLES, CATCH BASINS, FIRE HYDRANTS, MONITORING WELLS, WATER VALVES, PIPING, SURVEY MONUMENTS, AND WATER METERS, UNLESS OTHERWISE NOTED OR DIRECTED BY THE ENGINEER. CONTRACTOR SHALL REPAIR OR REPLACE ALL ITEMS DAMAGED BY HIS OPERATIONS.
6. REMOVE ALL TREES AND VEGETATION WITHIN THE DEMOLITION/CLEARING AND GRUBBING LIMITS.
7. REMOVE ALL DEBRIS FROM WITHIN THE DEMOLITION/CLEARING AND GRUBBING LIMITS. DEBRIS INCLUDES, BUT IS NOT LIMITED TO: TIMBERS, TIRES, PILING, ASPHALT, VEGETATION, PALLETS, REFUSE AND OTHER MISCELLANEOUS ITEMS.
8. REMOVE ALL CONCRETE PADS, CONCRETE PAVEMENT AND STRUCTURES WITHIN THE DEMOLITION/CLEARING AND GRUBBING LIMITS AND THE DESIGNATED HAUL ROUTES.
9. REMOVAL OF CHAIN LINK FENCE SHALL INCLUDE REMOVAL OF GATES, POSTS, FABRIC, FOUNDATIONS, BRACKETS, BARBED WIRE AND ALL APPURTENANCES.
10. BACKFILL ALL BUILDING AND STRUCTURE EXCAVATIONS TO FINAL SUBGRADE ELEVATION PER APPLICABLE SPECIFICATION SECTION, UNLESS NOTED OTHERWISE.
11. EXCAVATIONS REMAINING AFTER DEMOLITION SHALL BE FILLED WITH SELECT FILL AND COMPACTED PER SPECIFICATIONS.
12. THE DEMOLITION DRAWINGS SHOW ANTICIPATED SITE AREA CONDITIONS AND INTEND TO INDICATE THE GENERAL SITE CONDITIONS AT THE TIME OF CONSTRUCTION AND ARE NOT INTENDED TO BE COMPLETE. THE CONTRACTOR SHALL EXPECT VARIATIONS FROM THE CONDITIONS SHOWN AND SHOULD ACCOUNT FOR THAT IN THEIR BID. THE CONTRACTOR SHALL INSPECT THE SITE TO DETERMINE SPECIFIC EXISTING CONDITIONS.
13. THE PROJECT AREA IS AN INDUSTRIAL ZONE. THERE IS A POTENTIAL FOR BURIED OBJECTS TO BE ENCOUNTERED DURING CONSTRUCTION. THESE OBJECTS MAY NOT BE REPRESENTED IN THE SURVEY. THE ENGINEER SHALL BE NOTIFIED IMMEDIATELY IF ANY UNIDENTIFIED OBJECTS AFFECTING CONSTRUCTION PROGRESS ARE ENCOUNTERED.
14. THE CONTRACTOR SHALL KEEP ALL STREETS CLEAN AS NOTED.
15. CONTRACTOR IS RESPONSIBLE FOR ANY TRAFFIC CONTROLS REQUIRED DURING THE DURATION OF THIS PROJECT, PER CONTRACTOR'S OPERATION. ALL TRAFFIC CONTROL SHALL BE IN ACCORDANCE WITH THE CITY OF SEATTLE TRAFFIC CONTROL MANUAL.

ABBREVIATIONS:

ABAND	ABANDON
APN	ASSESSOR'S PARCEL NUMBER
APPR	APPROVED
APPROX	APPROXIMATE
ASPH	ASPHALT
AVE	AVENUE
B/C	BACK OF CURB
BGS	BELOW GROUND SURFACE
BTM	BOTTOM
CB	CATCH BASIN
CC	CONCRETE CURB
CHAN	CHANNEL
CI	CAST IRON PIPE
℄,CL	CENTER LINE
CL FNC, CLF	CHAIN LINK FENCE
CO	CLEANOUT
COMM	COMMUNICATION
CONC	CONCRETE
COS	CITY OF SEATTLE
CP	CONCRETE PIPE
CS	CONCRETE SLAB
CTR CHNL	CONTROL CHANNEL
CW	CONCRETE WALK
DEG,°	DEGREES
DI	DUCTILE IRON PIPE
DL	DRIP LINE
E	EAST, EASTING
EL	ELEVATION
E/P	EDGE OF PAVEMENT
ENT	ENTRANCE
EX	EXISTING
E-VAULT	ELECTRICAL VAULT
FAB	FABRICATION
FE	FENCE
FH	FIRE HYDRANT
FL	FLANGED
FS	FLOW SPLITTER
G	GAS
GA	GAUGE
GEO	GEOTEXTILE
G/M	GAS METER
GP	GROUND PENETRATION
GASV	GAS VALVE
GPM	GALLONS PER MINUTE
GVL	GRAVEL
IE	INVERT ELEVATION
MAX	MAXIMUM
MH	MANHOLE
MIN	MINIMUM
MJ	MECHANICAL JOINT
MTR	METER
MW	MONITORING WELL
N	NORTH, NORTHING
NO.	NUMBER
NTS	NOT TO SCALE
O/H	OVERHEAD
O/L	OVERHEAD LINE
PIV	POST INDICATOR VALVE
PL	PLANTER
PP	POWER POLE
PS	PARKING STALL
PSD	STORM DRAIN
P&T	POWER AND TELEPHONE
PROP	PROPOSED
PT	PRETREATMENT
PVC	POLYVINYL CHLORIDE
R	RADIUS
RCP	REINFORCED CONCRETE PIPE
RDWY	ROADWAY
RR	RAILROAD
S	SOUTH
SB	SOIL BORING
SD	STORM DRAIN
SDMH	STORM DRAIN MAN HOLE
SDOT	SEATTLE DEPARTMENT OF TRANSPORTATION
SEC	SECTION
SPEC	SPECIFICATION
SPU	SEATTLE PUBLIC UTILITIES
SS	SANITARY SEWER
ST	STREET
STM	STORM DRAIN
WV	WATER VALVE
TELE	TELEPHONE
TESC	TEMPORARY EROSION AND SEDIMENT CONTROL
TOP	TOP OF PIPE
TRANS	TRANSFORMER
TYP	TYPICAL
UNO	UNLESS NOTED OTHERWISE
VLT	VAULT
W	WATER, WEST
W/	WITH
W/M	WATER METER
WV	WATER VALVE

LEGEND:

	EX CATCH BASIN
	EX TREE (SIZE NOTED)
EC	ELECTRICAL CONDUIT
	ELECTRICAL MANHOLE
EM	ELECTRICAL METER
	EXISTING SURVEY MONUMENT
	FENCE LINE
	NEW FENCE LINE
	EXISTING FIRE HYDRANT
G	GAS MAIN
GM	GAS METER
	GAS VALVE
	GUY ANCHOR
IE	INVERT ELEVATION
MW	MONITOR WELL
PL	PLANTER
PIV	POST INDICATOR VALVE
OP OP	OVERHEAD POWER
C C	COMMUNICATION LINE (SURFACE PAINT MARKING)
P P	OVERHEAD POWER (SURFACE PAINT MARKING)
PSS	SANITARY SEWER
	SANITARY MANHOLE
WT-SB	SOIL BORING
PSD	EX STORM DRAIN
	NEW STORM DRAIN
D	EX STORM DRAIN MANHOLE
D	NEW STORM DRAIN MANHOLE TYPE PER PLAN
	NEW STORM DRAIN CATCH BASIN TYPE PER PLAN
	STREET LIGHT
T	TELEPHONE WIRE (OVERHEAD)
W TRANSF.	TRANSFORMER
T/W	TOP OF WALL ELEVATION
T/C	TOP OF CURB ELEVATION
T	TELEPHONE CONDUIT
WHM	WATER MANHOLE
W	EX WATER LINE
	UTILITY POLE
x	WATER METER
	WATER VALVE
	YARD LIGHT
46	NEW CONTOURS
46	EXISTING CONTOURS
17.3	EXISTING SPOT ELEVATION
18.0	NEW SPOT ELEVATION
	RAILROAD TRACKS

NOTE:
SCREENED SYMBOLS REPRESENT EXISTING FEATURES
BOLD SYMBOLS REPRESENT PROPOSED FEATURES

RECORD DRAWINGS

NO.	DATE	BY	CHD.	APPR.	REVISION

DATE 08/22/2018 | SCALE AS NOTED
DESIGNED WMA | CHECKED WMA
DRAWN NLM | PROJECT NAME
JOB NO. 112143

kpff
2407 North 31st Street, Suite 100
Tacoma, Washington 98407
(253) 396-0150 Fax (253) 396-0162

CALL 48 HOURS BEFORE YOU DIG 1-800-424-5555

SEATTLE IRON & METALS CORP.

RECORD DRAWINGS:
THESE RECORD DRAWINGS HAVE BEEN PREPARED FROM INFORMATION PROVIDED BY OTHERS. KPFF HAS NOT VERIFIED THE ACCURACY AND/OR COMPLETENESS OF THIS INFORMATION.

SEATTLE IRON & METALS
730 SOUTH MYRTLE STREET, SEATTLE, WA

LEGEND, NOTES, & ABBREVIATIONS

SHEET G1.1

SHEET 2 OF 30

PLOTTED BY: nmedley DATE & TIME: Aug. 22, 2018 - 10:28am FILE: N:\Civil\112-\112143 Seattle Iron and Metals\730 S Myrtle\5.04 Construction Support\8- Drawings\730 S MYRTLE SDCI\SDCI (Current)\2 G1.1 LEGENDS, NOTES AND ABBREVIATIONS.dwg

GENERAL NOTES:

1. THE CONTRACTOR SHALL:
   a. ATTEND A PRECONSTRUCTION CONFERENCE INCLUDING THE OWNER, OWNER'S CONSULTANTS, AND CITY OF SEATTLE REPRESENTATIVES PRIOR TO NOTICE TO PROCEED.
   b. SUBMIT A CONSTRUCTION SCHEDULE FOR APPROVAL.
   c. SUBMIT CONTRACTOR MATERIAL SUBMITTALS AND SHOP DRAWINGS AS REQUIRED ALLOWING NO LESS THAN 5 WORKING DAYS FOR SUBMITTAL REVIEW.
   d. LEGIBLY MARK IN INK ON A SEPARATE SET OF DRAWINGS AND PROJECT DOCUMENTS ALL ACTUAL CONSTRUCTION INCLUDING DEPTHS OF FOUNDATIONS, HORIZONTAL AND VERTICAL LOCATIONS OF INTERNAL AND UNDERGROUND UTILITIES AND APPURTENANCES REFERENCED TO PERMANENT VISIBLE AND ACCESSIBLE IMPROVEMENTS, FIELD CHANGES OF DIMENSION AND DETAILS, ACTUAL SUPPLIERS, MANUFACTURERS AND TRADE NAMES, MODELS OF EQUIPMENT INSTALLED , AND CHANGE ORDER PROPOSALS. THIS SEPARATE SET OF DRAWINGS AND PROJECT DOCUMENTS SHALL BE THE "PROJECT RECORD" AND SHALL BE MAINTAINED ON THE PROJECT SITE THROUGHOUT CONSTRUCTION AND SHALL BE CLEARLY LABELED "PROJECT RECORD" AND AVAILABLE TO THE OWNER OR THEIR REPRESENTATIVES AT ALL TIMES.
   e. PROVIDE THE PROJECT RECORD TO THE OWNER PRIOR TO FINAL ACCEPTANCE.
2. ALL CONTRACT WORK SHALL BE COMPLETED NO LATER THAN SEPTEMBER 30, 2017.
3. THE CONTRACTOR SHALL PAY FOR AND OBTAIN ALL PERMITS, LICENSES, BONDS, AND INSPECTIONS NECESSARY FOR PROPER EXECUTION AND COMPLETION OF THE WORK. PRIOR TO FINAL ACCEPTANCE THE APPROVED, SIGNED PERMITS SHALL BE DELIVERED TO THE OWNER.
4. THE CONTRACTOR SHALL COMPLY WITH AND GIVE NOTICES REQUIRED BY ALL FEDERAL, STATE, AND LOCAL LAWS, ORDINANCES, RULES, REGULATIONS, AND LAWFUL ORDERS OF PUBLIC AUTHORITIES APPLICABLE TO THE PERFORMANCE OF THE WORK.
5. THE CONTRACTOR SHALL SUPERVISE AND DIRECT THE WORK, USING ITS BEST SKILL AND ATTENTION, AND SHALL PERFORM THE WORK IN A SKILLFUL MANNER. CONTRACTOR SHALL BE SOLELY RESPONSIBLE FOR AND HAVE CONTROL OVER CONSTRUCTION MEANS, METHODS, TECHNIQUES, SEQUENCES, AND PROCEDURES AND FOR COORDINATING ALL PORTIONS OF THE WORK, UNLESS THE CONTRACT DOCUMENTS GIVE OTHER SPECIFIC INSTRUCTIONS CONCERNING THESE MATTERS. CONTRACTOR SHALL DISCLOSE ITS MEANS AND METHODS OF CONSTRUCTION WHEN REQUESTED BY THE OWNER.
6. PERFORMANCE OF THE WORK SHALL BE DIRECTLY SUPERVISED BY A COMPETENT SUPERINTENDENT WHO IS SATISFACTORY TO THE OWNER, AND HAS AUTHORITY TO ACT FOR THE CONTRACTOR. THE SUPERINTENDENT SHALL NOT BE CHANGED WITHOUT PRIOR WRITTEN CONSENT OF THE OWNER.
7. THE CONTRACTOR SHALL CONFINE ALL OPERATIONS, INCLUDING STORAGE OF MATERIALS WITHIN THE LIMITS OF THE PROJECT SITE.
8. TEMPORARY BUILDINGS AND UTILITIES MAY BE PROVIDED BY THE CONTRACTOR ONLY WITH THE CONSENT OF THE OWNER AND WITHOUT EXPENSE TO THE OWNER. TEMPORARY BUILDINGS AND UTILITIES SHALL REMAIN THE PROPERTY OF THE CONTRACTOR AND SHALL BE REMOVED BY THE CONTRACTOR AT ITS EXPENSE UPON COMPLETION OF THE WORK.
9. THE CONTRACTOR SHALL PROVIDE ADEQUATE TEMPORARY TOILET FACILITIES WHEN WORK IS STARTED FOR ALL THOSE CONNECTED WITH THE WORK. THE CONTRACTOR SHALL KEEP THE TOILET FACILITIES IN A SANITARY CONDITION AND REMOVE THE TOILET FACILITIES AT THE END OF THE PROJECT AND DISINFECT THE PREMISES.
10. DRINKING WATER IS NOT AVAILABLE AT THE SITE. PROVIDE SINGLE-SERVICE CONTAINERS OR A SANITARY DRINKING DEVICE FROM A PROVEN SAFE SOURCE FOR ALL THOSE CONNECTED WITH THE WORK.
11. WATER FOR CONSTRUCTION PURPOSES IS NOT AVAILABLE ON THE PROJECT SITE.
12. OWNERSHIP AND CONTROL OF ALL MATERIALS OR FACILITY COMPONENTS TO BE DEMOLISHED OR REMOVED FROM THE PROJECT SITE BY CONTRACTOR SHALL BECOME THE PROPERTY OF THE CONTRACTOR. CONTRACTOR SHALL BE RESPONSIBLE FOR COMPLIANCE WITH ALL LAWS GOVERNING THE STORAGE AND ULTIMATE DISPOSAL OF ALL DEMOLISHED OR REMOVED MATERIALS OR FACILITY COMPONENTS. CONTRACTOR SHALL PROVIDE THE OWNER WITH A COPY OF ALL MANIFESTS AND RECEIPTS EVIDENCING PROPER DISPOSAL WHEN REQUIRED BY OWNER OR APPLICABLE LAW.
13. CONTRACTOR SHALL BE SOLELY RESPONSIBLE FOR THE PROPER CARE AND PROTECTION OF ITS MATERIALS AND EQUIPMENT DELIVERED TO THE PROJECT SITE.
14. IF THE CONTRACTOR ENCOUNTERS CONDITIONS AT THE SITE WHICH ARE SUBSURFACE OR OTHERWISE CONCEALED PHYSICAL CONDITIONS WHICH DIFFER MATERIALLY FROM THOSE INDICATED IN DRAWINGS AND PROJECT DOCUMENTS, THE CONTRACTOR SHALL NOTIFY THE OWNER PROMPTLY BEFORE CONDITIONS ARE DISTURBED AND IN NO EVENT MORE THAN 24 HOURS AFTER FIRST OBSERVANCE OF THE CONDITIONS.
15. THE CONTRACTOR SHALL MAINTAIN AN ADEQUATE TESTING AND INSPECTION PROGRAM AND PERFORM SUCH TEST AND INSPECTIONS AS ARE NECESSARY OR REQUIRED TO ENSURE THAT THE WORK CONFORMS TO THE REQUIREMENTS OF THE CONTRACT DOCUMENTS. UNLESS OTHERWISE PROVIDED, THE CONTRACTOR SHALL MAKE ARRANGEMENTS FOR SUCH TESTS, INSPECTIONS, AND APPROVALS WITH AN INDEPENDENT TESTING LABORATORY OR ENTITY ACCEPTABLE TO THE OWNER, OR WITH THE APPROPRIATE PUBLIC AUTHORITY, AND SHALL BEAR ALL RELATED COSTS OF TESTS, INSPECTIONS, AND APPROVALS. CONTRACTOR SHALL GIVE OWNER TIMELY NOTICE OF WHEN AND WHERE TESTS AND INSPECTIONS ARE TO BE MADE. CONTRACTOR SHALL MAINTAIN COMPLETE INSPECTION RECORDS AND MAKE THEM AVAILABLE TO THE OWNER.
16. CONTRACTOR SHALL PROMPTLY CORRECT WORK FOUND BY THE OWNER NOT TO CONFORM TO THE REQUIREMENTS OF THE CONTRACT DOCUMENTS AND SHALL BEAR ALL COSTS OF CORRECTING SUCH NONCONFORMING WORK, INCLUDING ADDITIONAL TESTING AND INSPECTIONS.
17. CONTRACTOR SHALL AT ALL TIMES KEEP THE PROJECT SITE, INCLUDING HAULING ROUTES, UTILITIES, AND STORAGE AREAS FREE FROM ACCUMULATION OF WASTE MATERIALS. BEFORE COMPLETING THE WORK, THE CONTRACTOR SHALL REMOVE FROM THE PROJECT SITE ITS RUBBISH, TOOLS, EQUIPMENT, AND MATERIALS. UPON COMPLETING THE WORK THE CONTRACTOR SHALL LEAVE THE PROJECT SITE IN A CLEAN, NEAT, AND ORDERLY CONDITION SATISFACTORY TO THE OWNER.
18. THE CONTRACTOR SHALL SCHEDULE AND CONDUCT ALL MEETINGS WITH THE OWNER AND ITS REPRESENTATIVES AT THE PROJECT SITE, CONTRACTOR FIELD OFFICE, UNLESS OTHERWISE INDICATED BY THE OWNER.
19. PRE-CONSTRUCTION MEETINGS WILL BE ATTENDED BY THE CONTRACTOR, OWNER, AND THE OWNERS REPRESENTATIVES ON A WEEKLY BASIS FROM THE TIME OF NOTICE TO PROCEED UNTIL THE CONTRACTOR'S FIELD OFFICE IS INSTALLED. PRE-CONSTRUCTION MEETINGS WILL BE HELD AT THE OWNERS OFFICE LOCATED AT 701 S ORCHARD STREET.
20. WEEKLY PROGRESS MEETINGS SHALL BE ATTENDED BY THE CONTRACTOR WITH THE OWNER AND THE OWNERS REPRESENTATIVES, AND KEY FIELD REPRESENTATIVES IN THE CONTRACTORS FIELD OFFICE. THE OWNER OR OWNERS REPRESENTATIVE WILL PROVIDE AN AGENDA FOR THE MEETING AND WILL TAKE MEETING MINUTES. MEETING MINUTES WILL BE ISSUED SOON AFTER THE WEEKLY MEETINGS FOR REVIEW, WITH COMMENTS DUE WITHIN 48 HOURS FROM ISSUANCE.
21. THE CONTRACTOR SHALL SCHEDULE PERIODIC PRE-ACTIVITY MEETINGS TO COORDINATE THE START OF CONSTRUCTION FOR MAJOR PROJECT ACTIVITIES. PRE-ACTIVITY MEETINGS SHALL BE SCHEDULED 14 CALENDAR DAYS PRIOR TO THE START OF MAJOR CONSTRUCTION ACTIVITIES AND MAY BE COMBINED WITH OTHER REGULARLY SCHEDULED PROJECT MEETINGS. MAJOR ACTIVITIES INCLUDE, AT A MINIMUM:
   a. PROJECT KICKOFF
   b. SITE TESC INSTALLATION
   c. CONTAMINATED SOIL EXCAVATION
   d. DEWATERING INSTALLATION AND DISPOSAL
   e. ONSITE STORM DRAINAGE INSTALLATION
   f. OFFSITE STORM DRAINAGE INSTALLATION
   g. SITE GRADING
   h. SITE PAVING
   i. OTHERS AS REQUIRED
22. WORK SHALL OCCUR DURING BUSINESS DAYS AND BUSINESS TIMES. BUSINESS DAYS ARE DEFINED AS ANY DAY, OTHER THAN SATURDAY OR SUNDAY ON WHICH BANKS ARE GENERALLY OPEN FOR BUSINESS IN SEATTLE, WASHINGTON.
23. WORK ON THE SITE SHALL BE LIMITED TO THE HOURS OF 7:00 A.M. TO 7:00 P.M.
24. WEEKEND OR OFF-HOUR WORK MAY BE REQUESTED IN WRITING FOR APPROVAL BY THE OWNER.
25. THE CONTRACTOR SHALL PROVIDE THE OWNER A CONSTRUCTION SCHEDULE TO:
   a. ASSURE PLANNING TO EXECUTE THE WORK IN THE REQUIRED CONTRACT TIME AND TO AVOID CONFLICT WITH OTHER CONCURRENT CONSTRUCTION.
   b. ASSIST THE OWNER AND THE OWNERS REPRESENTATIVES IN DETERMINING PROGRESS AND THE COMPLETED WORK FOR ESTIMATING EACH APPLICATION FOR PAYMENT.
26. WITHIN 14 DAYS AFTER THE DATE OF NOTICE TO PROCEED THE CONTRACTOR SHALL SUBMIT A LIST AND SCHEDULE OF SUBMITTALS BASED ON THE CONTRACTOR'S PRIORITY, PLANNED CONSTRUCTION SEQUENCE AND SCHEDULE, LONG LEAD ITEMS, AND SIZE OF SUBMITTAL PACKAGE. ALLOW TIME FOR RESUBMITTALS.
27. CONTRACTOR SHALL SUBMIT SHOP DRAWINGS INCLUDING DETAIL DESIGN CALCULATIONS, SHOP-PREPARED DRAWINGS, FABRICATION AND INSTALLATION DRAWINGS, ERECTION DRAWINGS, LISTS, GRAPHS, CATALOG CUT SHEETS, DATA SHEET AND SIMILAR ITEMS.
28. THE CONTRACTOR SHALL PROVIDE DUST CONTROL TO MINIMIZE WIND TRANSFER OF DUST TO WATER BODIES OR OFF THE CONSTRUCTION SITE. DUST CONTROL MEASURES MAY INCLUDE WATER OR OTHER MEASURES APPROVED BY THE CITY OF SEATTLE OR THE WASHINGTON STATE DEPARTMENT OF ECOLOGY.
29. THE CONTRACTOR SHALL BE RESPONSIBLE FOR THE INSTALLATION AND MAINTENANCE OF STORM WATER MANAGEMENT MEASURES PRIOR TO FINAL STABILIZATION OF THE SITE, AND WILL NOT BE RESPONSIBLE FOR MAINTENANCE AFTER STORM WATER DISCHARGES ASSOCIATED WITH CONSTRUCTION ACTIVITY HAVE BEEN ELIMINATED FROM THE SITE.
30. THE CONTRACTOR SHALL MAINTAIN THE FOLLOWING RECORDS ONSITE AT ALL TIMES THROUGHOUT CONSTRUCTION:
   a. RECORDS OF CONSTRUCTION ACTIVITIES
   b. MAINTENANCE AND INSPECTION REPORTS FOR MAINTENANCE PERFORMED TO REPAIR OR CORRECT ANY IMPLEMENTED STORM WATER OR EROSION CONTROL BMPS, FOR STORM WATER DISCHARGES ASSOCIATED WITH CONSTRUCTION ACTIVITIES REQUIRED BY THE CONSTRUCTION STORMWATER GENERAL PERMIT, AND WHEN AN ONSITE INSPECTION OCCURS BY A REGULATORY AGENCY, THE CONTRACTOR SHALL RECORD THE FOLLOWING: NAME OF INSPECTOR, QUALIFICATIONS OF INSPECTOR, MEASURES/AREAS INSPECTED, OBSERVED CONDITIONS, AND CHANGES NECESSARY TO THE SWPPP.
   c. RELEASES IN EXCESS OF REPORTABLE QUANTITIES OF OIL OR HAZARDOUS MATERIALS
   d. MODIFICATIONS TO THE SWPPP
   e. WASTE DISPOSAL RECORDS
   f. OTHER RECORDS REQUIRED BY PROJECT PERMITS OR REGULATORY AGENCIES

CONSTRUCTION PHASING AND SEQUENCING NOTES:

1. ALL WORK SHALL BE PERFORMED IN ACCORDANCE WITH THE CONTRACT AND:
   a. THE INTERIM ACTION WORK PLAN (IAWP) PREPARED BY FLOYD|SNIDER TITLED "WHITEHEAD TYEE SITE – INTERIM ACTION WORK PLAN DATED DECEMBER, 2016 AND SEPA DNS DATED DECEMBER 2016
   b. ADMINISTRATIVE ORDER FOR DISCHARGE OF DEWATERING WATER DATED PENDING
   c. CONSTRUCTION STORMWATER GENERAL PERMIT ISSUED BY THE WASHINGTON STATE DEPARTMENT OF ECOLOGY PENDING
   d. CITY OF SEATTLE MASTER USE PERMIT (MUP) PENDING
   e. MASTER USE PERMIT STATE ENVIRONMENTAL POLICY ACT (SEPA) DETERMINATION OF NON-SIGNIFICANCE PENDING
   f. CITY OF SEATTLE GRADING AND DRAINAGE PERMIT PENDING
   g. GEOTECHNICAL REPORT PREPARED BY PANGEO, INC. TITLED "GEOTECHNICAL REPORT – 730 S MYRTLE STREET, SEATTLE WASHINGTON" DATED 03/27/2017
   h. ADMINISTRATIVE ORDER NO 13739 RELATED TO STORMWATER QUALITY DATED 09/20/2016.
   i. WASTE DISPOSAL AUTHORIZATIONS BY DISPOSAL FACILITIES – ON AN AS NEEDED BASIS (BY CONTRACTOR)
   j. THE 2016 WASHINGTON STATE DEPARTMENT OF TRANSPORTATION STANDARD SPECIFICATIONS FOR ROAD, BRIDGE, AND MUNICIPAL CONSTRUCTION (M41-10)
   k. INADVERTENT DISCOVERY PLAN PENDING
   l. AGREED ORDER (AO) NO. DE 13458 RELATED TO SOIL CONTAMINATION ON THE PROJECT SITE, DATED AUGUST 2016
2. ALL CONTRACTOR WORK AND STAGING SHALL OCCUR WITHIN THE LIMITS OF THE PROPERTY EXCEPT AS OTHERWISE NOTED.
3. 6 WEEKS PRIOR TO COMMENCEMENT OF CONSTRUCTION CONTRACTOR SHALL SUBMIT THE FOLLOWING FOR REVIEW AND/OR APPROVAL BY THE OWNER:
   a. CONSTRUCTION SEQUENCING PLAN AND SCHEDULE
   b. CONSTRUCTION PHASE STORMWATER POLLUTION PREVENTION PLAN (SWPPP)
   c. SPILL PREVENTION AND EMERGENCY CLEANUP PLAN (SPECP)
   d. CONTAMINATED SOIL SEGREGATION AND MANAGEMENT PLAN
   e. SOIL TRANSPORT AND DISPOSAL PLAN
   f. GROUNDWATER MANAGEMENT AND DEWATERING PLAN
   g. HEALTH AND SAFETY PLAN
   h. DECONTAMINATION PLAN
   i. SHORING PLAN
4. WORK IS ANTICIPATED TO BE ACCOMPLISHED IN THE FOLLOWING GENERAL SEQUENCE AS DETERMINED BY THE CONTRACTOR AND APPROVED BY THE OWNER OR OWNERS REPRESENTATIVE:
   a. MOBILIZATION
   b. INSTALLATION OF MONITORING WELL PROTECTION MEASURES
   c. INSTALLATION OF TEMPORARY EROSION AND SEDIMENT CONTROL (TESC) MEASURES
   d. INSTALLATION OF ENVIRONMENTAL CONTROL MEASURES
   e. DEMOLITION
   f. FOCUSED HEAVY OIL-RANGE ORGANICS EXCAVATION
   g. TRENCHING AND EXCAVATION FOR INSTALLATION OF STORM DRAINAGE SYSTEM
   h. SUPPLEMENTAL EXCAVATION OF STODDARD SOLVENT-CONTAMINATED SOIL
   i. RESTORATION OF ALL AREAS WITHIN CITY RIGHT-OF-WAY AFFECTED BY THE CONSTRUCTION
   j. SITE GRADING
   k. SITE PAVING
   l. MONITORING WELL ADJUSTMENT (BY OTHERS)
   m. DEMOBILIZATION
5. SAFETY IS THE SOLE RESPONSIBILITY OF THE CONTRACTOR. COMPLIANCE WITH OSHA, 29 CFR PART 1926, SUBPART P AND WAC 296-155 IS MANDATORY.
6. TEMPORARY SHORING DESIGN SHALL BE COMPLETED BY A STRUCTURAL ENGINEER LICENSED IN THE STATE OF WASHINGTON. TEMPORARY SHORING DESIGN SHALL BE PROVIDED TO THE OWNER OR OWNERS REPRESENTATIVE FOR REVIEW PRIOR TO IMPLEMENTATION AND SHALL BE DESIGNED UTILIZING THE SOIL INFORMATION PRESENTED IN THE PROJECT GEOTECHNICAL REPORT.

   A PRE-CONSTRUCTION MEETING SHALL BE SCHEDULED WITH SDOT SHORING REVIEW AND INSPECTION PRIOR TO THE START OF EXCAVATIONS ADJACENT TO THE PUBLIC ROW. ATTENDEES SHALL INCLUDE REPRESENTATIVES OF THE OWNER, GENERAL CONTRACTOR, EXCAVATION AND SHORING SUBCONTRACTORS, THE PROJECT GEOTECHNICAL ENGINEER, PROJECT SURVEYORS, AND SDOT SHORING REVIEW AND INSPECTION REPRESENTATIVE.
7. THE GROUNDWATER TABLE IS LOCATED APPROXIMATELY 9 TO 11 FEET BELOW EXISTING GROUND SURFACE.
8. WHEN EXCAVATION BELOW THE WATER TABLE IS REQUIRED THE CONTRACTOR SHALL DESIGN, FURNISH, INSTALL, OPERATE, AND MAINTAIN ALL PUMPS, PIPING, DRAINS, WELL POINTS, WELLS, AND OTHER FACILITIES FOR THE CONTROL, COLLECTION, TEMPORARY STORAGE, TREATMENT AND DISPOSAL OF GROUNDWATER OR SURFACE WATER FOR THE PROPER CONSTRUCTION OF ALL PROJECT WORK.
9. THE CONTRACTOR SHALL COORDINATE WITH THE OWNERS REPRESENTATIVE TO ALLOW COLLECTION OF ACCUMULATED GROUNDWATER SAMPLES TO EVALUATE FOR POTENTIAL CONTAMINATES AND TO SELECT NECESSARY TREATMENT TO COMPLY WITH DISCHARGE PERMIT REQUIREMENTS FOR THE INTENDED METHOD OF DISCHARGE OR DISPOSAL.
10. DEWATERING SHALL BE ACCOMPLISHED IN ACCORDANCE WITH THE IAWP, SECTION 4.8, AND TREATMENT, SAMPLING AND DISCHARGE SHALL BE CONDUCTED IN ACCORDANCE W/ ADMINISTRATIVE ORDER PENDING.
11. ALL DEWATERING ACTIVITIES SHALL COMPLY WITH ALL LOCAL, STATE, AND FEDERAL REGULATIONS INCLUDING THE REQUIREMENTS OF THE WASHINGTON STATE DEPARTMENT OF ECOLOGY (WDOE).
12. THE DEWATERING SYSTEM SHALL PREVENT LOSS OF FINES, BOILING, QUICK CONDITIONS, AND SOFTENING OF FOUNDATION STRATA AND SHALL MAINTAIN STABILITY OF EXCAVATION BOTTOMS.
13. THE CONTRACTOR SHALL PROVIDE CONTINUOUS SUPERINTENDENCE DURING ALL PERIODS OF DEWATERING.
14. DO NOT COMMENCE WITH THE WORK UNTIL THE NECESSARY TESC, ENVIRONMENTAL, AND DEWATERING CONTROL MEASURES HAVE BEEN IMPLEMENTED.
15. PRIOR TO COMMENCEMENT OF CONSTRUCTION THE CONTRACTOR SHALL INSTALL MONITORING WELL PROTECTION AS DESCRIBED IN IAWP SECTION 4.9.1.
16. CONTRACTOR SHALL NOT PAVE IN THE IMMEDIATE AREA OF THE MONITORING WELLS AS SHOWN ON THE PLANS. PAVING AROUND MONITORING WELLS WILL BE BY OTHERS.
17. FIELD SCREENING OF ON-SITE EXCAVATED SOILS FOR CONTAMINATES OF CONCERN (COCS) WILL BE PROVIDED BY THE OWNERS REPRESENTATIVE.
18. BASED ON FIELD SCREENING SOILS WILL BE SEGREGATED IN THE FOLLOWING THREE STOCKPILES:
   a. SOILS THAT ARE POTENTIALLY OR LIKELY CONTAMINATED BASED ON EXISTING ANALYTICAL DATA, THE PRESENCE OF STRONG ODORS, SHEENS, OR PHOTOIONIZATION DETECTOR (PID) READINGS GREATER THAT 10 PPMV FOR OFF-SITE DISPOSAL.
   b. SOILS THAT ARE VISIBLY UNSUITABLE FOR BACKFILL DUE TO DEBRIS, CLAY, OR JAGGED OR LARGE PARTICLES GREATER THAN 3 INCHES IN DIAMETER, BUT PRESUMED OR UNLIKELY TO BE CHEMICALLY IMPACTED, FOR OFF-SITE DISPOSAL.
   c. SOILS PRESUMED OR UNLIKELY TO BE CONTAMINATED (I.E. HAVE LOW-LEVEL PID READINGS LESS THAN 10 MMPV AND NO OTHER FIELD INDICATIONS OF CONTAMINATION) TO BE TESTED FOR CHEMICAL SUITABILITY FOR REUSE AS BACKFILL.
20. THE CONTRACTOR SHALL PROVIDE STOCKPILES AND/OR SOIL HANDLING AS DESCRIBED IN THE IAWP SECTION 4.7 AND AS GENERALLY DESCRIBED BELOW:
   a. ALL STOCKPILES SHALL BE PLACED AT A DESIGNATED LOCATION(S) WITHIN THE LIMITS OF CONSTRUCTION
   b. TEMPORARY STOCKPILES SHALL BE PLACED ON EITHER 10-MILLIMETER THICK POLYETHYLENE SHEETING OR WOVEN WATERPROOF TARPS WITH A STRAW BALE, ECOLOGY BOLCK, OR OTHER APPROVED CONTAINMENT BERM SECURED BENEATH THE SHEET OR TARP TO PREVENT EROSION.
   c. IF THE VOLUME OF CONTAMINATED SOILS IS EXPECTED TO BE SMALL, A WATER-TIGHT ROLL-OFF CONTAINER MAY BE USED TO STORE EXCESS SOIL.
   d. ALL SOIL STOCKPILES SHALL BE COVERED WITH SHEETING OR TARPS WHEN NOT IN USE UNTIL LOADED FOR DISPOSAL OR REUSE.
   e. SOILS WITHIN THE HEAVY OIL-RANGE ORGANICS EXCAVATION AND THE STODDARD SOLVENTS EXCAVATION MAY BE DIRECT LOADED INTO LINED TRUCKS FOR DISPOSAL.
21. EXCAVATION COMPLETED OFF PROPERTY IN S MYRTLE STREET WILL BE FIELD SCREENED BY THE OWNERS REPRESENTATIVE FOR POTENTIAL CONTAMINATION AND WILL MANAGED ACCORDING TO THE PROTOCOLS FOR ON-PROPERTY EXCAVATION.
22. THE CONTRACTOR IS RESPONSIBLE FOR OBTAINING ALL REQUIRED PERMITS ASSOCIATED WITH TRUCKING AND CONTAMINATED SOIL TRANSPORT PRIOR TO THE COMMENCEMENT OF CONSTRUCTION.
23. THE CONTRACTOR SHALL PROVIDE TEMPORARY FENCING AND BARRICADES FOR WORK STAGING AREAS, STOCKPILE SETUP, DECOMMISSIONING, AND DECONTAMINATION.
24. THE CONTRACTOR AND ALL EMPLOYEES WITHIN AN ACTIVE WORK ZONE HANDLING SUBTITLE D MATERIALS SHALL HAVE HAZWOPER (HAZARDOUS WASTE OPERATIONS AND EMERGENCY RESPONSE) TRAINING AND CURRENT 8-HOUR REFRESHER COURSE. EMPLOYEES SHALL WEAR LEVEL D PERSONAL PROTECTIVE EQUIPMENT (PPE) CONSISTING OF, AT A MINIMUM, STEEL TOED BOOTS, HARD HAT, SAFETY VEST OR OTHER SUITABLE HIGH VISIBILITY CLOTHING, AND STURDY OUTER WORK CLOTHING. WHEN WORKING IN THE AREA OF DISCOVERY, PPE MUST ADDITIONALLY INCLUDE TYVEK COVERALLS.

RECORD DRAWINGS

NO.	DATE	BY	CHD.	APPR.	REVISION

DATE 08/22/2018 | SCALE AS NOTED
DESIGNED WMA | CHECKED WMA
DRAWN NLM | PROJECT NAME
JOB NO. 112143

kpff
2407 North 31st Street, Suite 100
Tacoma, Washington 98407
(253) 396-0150 Fax (253) 396-0162

CALL 48 HOURS BEFORE YOU DIG 1-800-424-5555

SEATTLE IRON & METALS CORP.

RECORD DRAWINGS:
THESE RECORD DRAWINGS HAVE BEEN PREPARED FROM INFORMATION PROVIDED BY OTHERS. KPFF HAS NOT VERIFIED THE ACCURACY AND/OR COMPLETENESS OF THIS INFORMATION.

SEATTLE IRON & METALS
730 SOUTH MYRTLE STREET, SEATTLE, WA

CONSTRUCTION PHASING & SEQUENCING NOTES

SHEET G1.2

SHEET 3 OF 30

PLOTTED BY: nmedley DATE & TIME: Aug. 22, 2018 - 10:28am FILE: N:\Civil\112-\112143 Seattle Iron and Metals\730 S Myrtle\5.04 Construction Support\8- Drawings\730 S MYRTLE SDCI\SDCI (Current)\3 G1.2 CONSTRUCTION PHASING & SEQUENCING NOTES.dwg

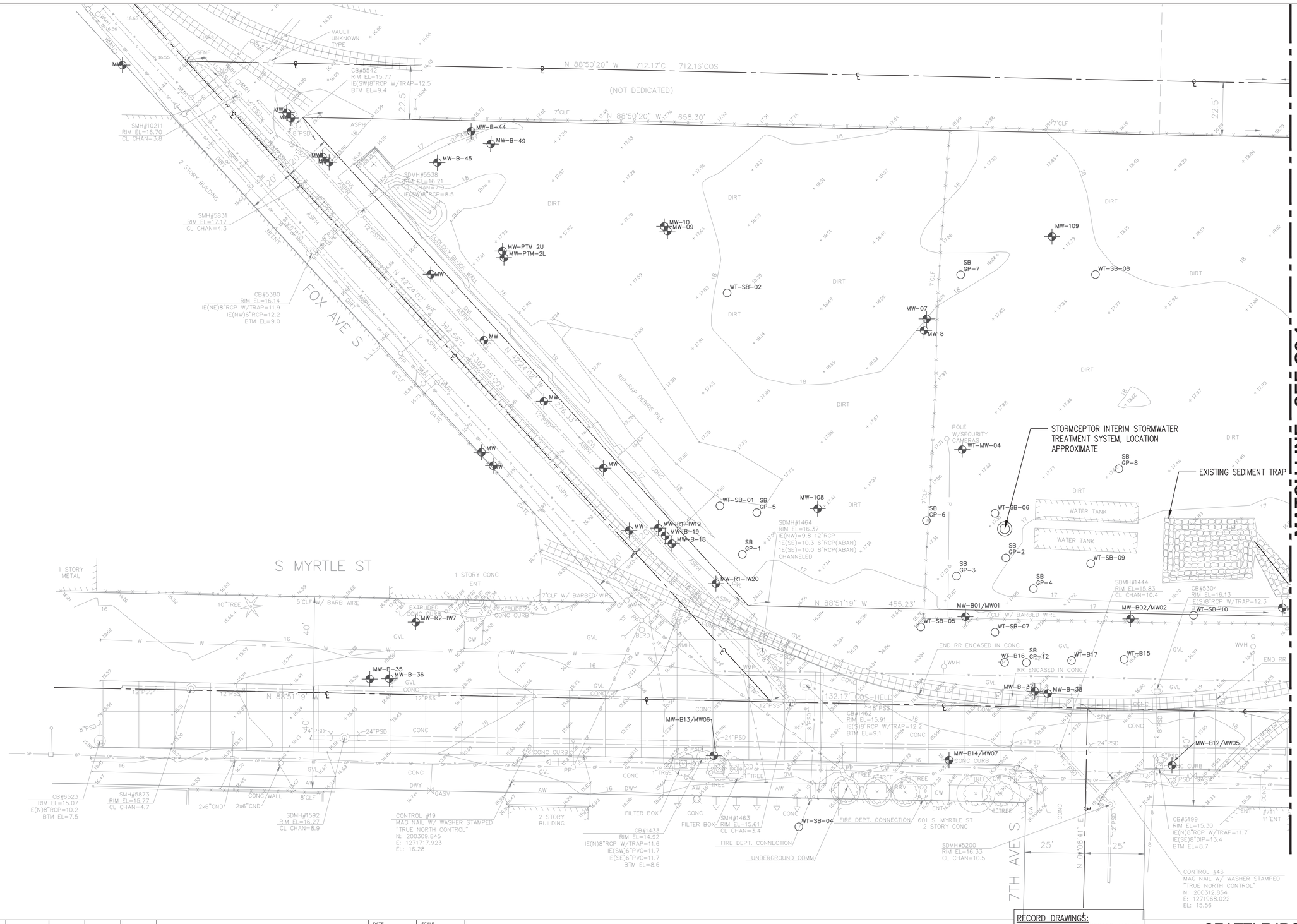

LEGAL DESCRIPTION:

HORIZONTAL DATUM: NAD 83/91
VERTICAL DATUM: NAVD 88 (ADD 2.41 TO ELEVATIONS TO OBTAIN MLLW)
BENCHMARK: CITY OF SEATTLE BRASS CAP STAMPED "C OF S 5410" SET IN SW CORNER OF 4.6' TALL PLANTER BOX ATTACHED TO THE SW CORNER OF US WEST BUILDING AT THE NE CORNER OF THE INTERSECTION OF E MARGINAL WAY S AND CORSON AVE. S.
ELEVATION = 22.333

NOTES:

1. EX MONITORING WELL AND UTILITY LOCATIONS SUPPLEMENTED BY AVAILABLE RECORD DOCUMENTS. LOCATION TO BE VERIFIED IN FIELD PRIOR TO CONSTRUCTION.
2. BOUNDARY AND TOPOGRAPHIC INFORMATION TAKEN FROM A FIELD SURVEY BY TRUE NORTH LAND SURVEYING TITLED 730 S. MYRTLE ST. BOUNDARY AND TOPOGRAPHIC SURVEY, DATED 06/01/2016 AND FROM AVAILABLE RECORD DOCUMENTS

RECORD DRAWINGS

NO.	DATE	BY	CHD.	APPR.	REVISION

DATE 08/22/2018 | SCALE AS NOTED
DESIGNED WMA | CHECKED WMA
DRAWN NLM | PROJECT NAME
JOB NO. 112143

kpff
2407 North 31st Street, Suite 100
Tacoma, Washington 98407
(253) 396-0150 Fax (253) 396-0162

CALL 48 HOURS BEFORE YOU DIG 1-800-424-5555

SEATTLE IRON & METALS CORP.

RECORD DRAWINGS:
THESE RECORD DRAWINGS HAVE BEEN PREPARED FROM INFORMATION PROVIDED BY OTHERS. KPFF HAS NOT VERIFIED THE ACCURACY AND/OR COMPLETENESS OF THIS INFORMATION.

SEATTLE IRON & METALS
730 SOUTH MYRTLE STREET, SEATTLE, WA
EXISTING CONDITIONS PLAN

SHEET G2.0
SHEET 4 OF 30

PLOTTED BY: nmedley DATE & TIME: Aug. 22, 2018 - 10:29am FILE: N:\Civil\112-\112143 Seattle Iron and Metals\730 S Myrtle\5.04 Construction Support\8- Drawings\730 S MYRTLE SDCI (Current)\5 G2.1 EXISTING CONDITIONS PLAN.dwg

MATCH LINE - SEE G2.0

LEGAL DESCRIPTION:

HORIZONTAL DATUM: NAD 83/91
VERTICAL DATUM: NAVD 88 (ADD 2.41 TO ELEVATIONS TO OBTAIN MLLW)
BENCHMARK: CITY OF SEATTLE BRASS CAP STAMPED "C OF S 5410" SET IN SW CORNER OF 4.6' TALL PLANTER BOX ATTACHED TO THE SW CORNER OF US WEST BUILDING AT THE NE CORNER OF THE INTERSECTION OF E MARGINAL WAY S AND CORSON AVE. S.
ELEVATION = 22.333

NOTES:

1. EX MONITORING WELL AND UTILITY LOCATIONS SUPPLEMENTED BY AVAILABLE RECORD DOCUMENTS. LOCATION TO BE VERIFIED IN FIELD PRIOR TO CONSTRUCTION.
2. BOUNDARY AND TOPOGRAPHIC INFORMATION TAKEN FROM A FIELD SURVEY BY TRUE NORTH LAND SURVEYING TITLED 730 S. MYRTLE ST. BOUNDARY AND TOPOGRAPHIC SURVEY, DATED 06/01/2016 AND FROM AVAILABLE RECORD DOCUMENTS
3. LOCATION OF WATER VAULT APPROXIMATED FROM FIELD MEASUREMENTS. CONTRACTOR TO VERIFY LOCATION IN FIELD.

GRAPHIC SCALE
20 0 10 20 40
(IN FEET)

RECORD DRAWINGS

NO.	DATE	BY	CHD.	APPR.	REVISION

DATE 08/22/2018 | SCALE AS NOTED
DESIGNED WMA | CHECKED WMA
DRAWN NLM | PROJECT NAME
JOB NO. 112143

kpff
2407 North 31st Street, Suite 100
Tacoma, Washington 98407
(253) 396-0150 Fax (253) 396-0162

CALL 48 HOURS BEFORE YOU DIG 1-800-424-5555

SEATTLE IRON&METALS CORP.

RECORD DRAWINGS:
THESE RECORD DRAWINGS HAVE BEEN PREPARED FROM INFORMATION PROVIDED BY OTHERS. KPFF HAS NOT VERIFIED THE ACCURACY AND/OR COMPLETENESS OF THIS INFORMATION.

SEATTLE IRON & METALS
730 SOUTH MYRTLE STREET, SEATTLE, WA
EXISTING CONDITIONS PLAN

SHEET G2.1
SHEET 5 OF 30

PLOTTED BY: rsmedley DATE & TIME: Aug 22, 2018 - 10:29am FILE: N:\Civil\112-\112143 Seattle Iron and Metals\730 S Myrtle\5.04 Construction Support\8-- Drawings\730 S MYRTLE SDCI (Current)\5 G2.1 EXISTING CONDITIONS PLAN.dwg

PARCEL: 0001800087
ADDRESS: 6900 FOX AVE S 98108

PARCEL: 0001800113
ADDRESS: 6901 FOX AVE S 98108

PARCEL: 0001800091
ADDRESS: 500 S MYRTLE ST 98108

PARCEL: 2734100270
ADDRESS: 730 S MYRTLE ST 98108

PARCEL: 2136200706
ADDRESS: 601 S MYRTLE ST 98108

N 88°50'20" W 712.17'C 712.16'COS

(NOT DEDICATED)

N 88°50'20" W 658.30'

N 88°51'19" W

N 42°24'02" W 362.58'C 362.55'COS

132.17' COS-HELD

PROPOSED 6" EXTRUDED CURB

5 SMALL PARKING STALLS

19 SMALL PARKING STALLS
SEE C1.1 FOR CONTINUATION

17 SMALL PARKING SPACES

PROPOSED CONCRETE PAVEMENT

NEW FENCE

8"ø BOLLARD WITH 24"ø FND, TYP

ROLLING GATE

PROPOSED ASPHALT PAVEMENT

NO CURB OR SIDEWALK

LIMITS OF WORK

8' MIN SETBACK PER PAR

20 PARKING SPACES FOR FLEET VEHICLES @ 10'x40'
SEE C1.1 FOR CONTINUATION

MATCH LINE - SEE C1.1

FOX AVE S

S MYRTLE STREET

NOTES:

1. SEE SHEETS C5.0 FOR LOCATION AND HORIZONTAL CONTROL DATA.
2. EX MONITORING WELL AND UTILITY LOCATIONS SUPPLEMENTED BY AVAILABLE RECORD DOCUMENTS. LOCATION TO BE VERIFIED IN FIELD.
3. FOR GRADING AND DRAINAGE PLANS, SEE C4.0–C4.1.
4. ALL SOIL AREAS DISTURBED DURING CONSTRUCTION AND NOT PAVED SHALL HAVE PERMANENT SEEDING PER COS STANDARD PLAN NO 142.

LEGEND:

- ASPHALT PAVEMENT
- CONCRETE PAVEMENT
- EXTRUDED CURB
- FENCE
- LIMITS OF WORK
- PROPERTY LINE
- SD PIPE, SEE C4.0–C4.1

CITY OF SEATTLE DATUM

GRAPHIC SCALE
20 0 10 20 40
(IN FEET)

RECORD DRAWINGS

NO.	DATE	BY	CHD.	APPR.	REVISION

DATE 08/22/2018 | SCALE AS NOTED
DESIGNED WMA | CHECKED WMA
DRAWN NLM | PROJECT NAME
JOB NO. 112143

kpff
2407 North 31st Street, Suite 100
Tacoma, Washington 98407
(253) 396-0150 Fax (253) 396-0162

CALL 48 HOURS BEFORE YOU DIG
1-800-424-5555

SEATTLE IRON & METALS CORP.

RECORD DRAWINGS:
THESE RECORD DRAWINGS HAVE BEEN PREPARED FROM INFORMATION PROVIDED BY OTHERS. KPFF HAS NOT VERIFIED THE ACCURACY AND/OR COMPLETENESS OF THIS INFORMATION.

SEATTLE IRON & METALS
730 SOUTH MYRTLE STREET, SEATTLE, WA
SITE PLAN

SHEET C1.0

SHEET 6 OF 30

PLOTTED BY: nmedley DATE & TIME: Aug. 22, 2018 – 10:30am FILE: K:\Civil\112-\112143 Seattle Iron and Metals\730 S Myrtle\5.04 Construction Support\8– Drawings\730 S MYRTLE SDCI (Current)\9 C1.1 SITE PLAN.dwg

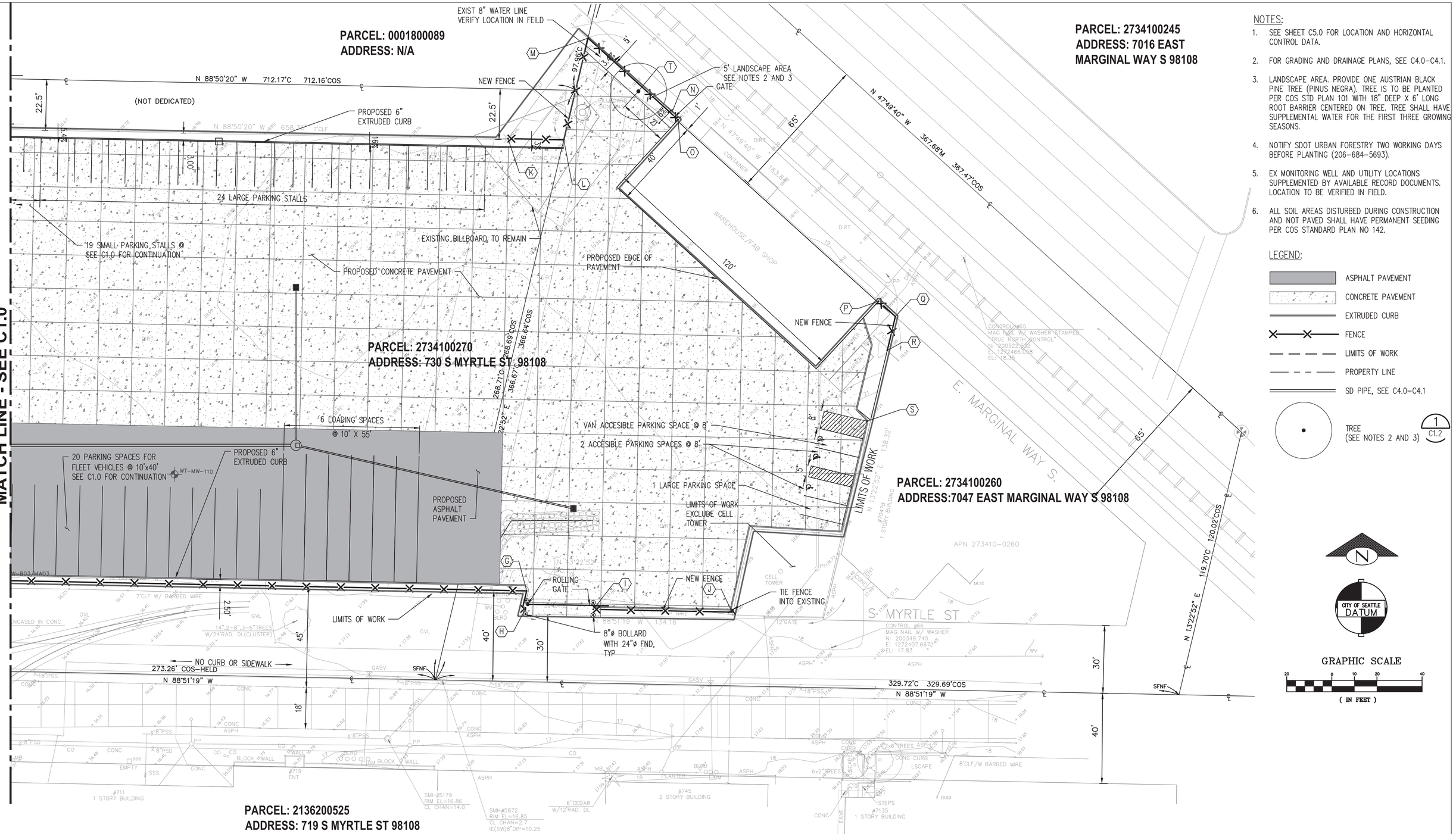

RECORD DRAWINGS

NO.	DATE	BY	CHD.	APPR.	REVISION

DATE 08/22/2018 | SCALE AS NOTED
DESIGNED WMA | CHECKED WMA
DRAWN NLM | PROJECT NAME
JOB NO. 112143

kpff
2407 North 31st Street, Suite 100
Tacoma, Washington 98407
(253) 396-0150 Fax (253) 396-0162

CALL 48 HOURS BEFORE YOU DIG 1-800-424-5555

SEATTLE IRON&METALS CORP.

RECORD DRAWINGS:
THESE RECORD DRAWINGS HAVE BEEN PREPARED FROM INFORMATION PROVIDED BY OTHERS. KPFF HAS NOT VERIFIED THE ACCURACY AND/OR COMPLETENESS OF THIS INFORMATION.

SEATTLE IRON & METALS
730 SOUTH MYRTLE STREET, SEATTLE, WA
SITE PLAN

SHEET C1.1
SHEET 7 OF 30

PLOTTED BY: nmedley DATE & TIME: Aug 22, 2018 - 10:30am FILE: N:\Civil\112-\112143 Seattle Iron and Metals\730 S Myrtle\5.04 Construction Support\8- Drawings\730 S MYRTLE SDCI (Current)\9 C1.1 SITE PLAN.dwg

100 LANDSCAPE PLANTING

STANDARD PLAN NO101

REV DATE: MAR 2013

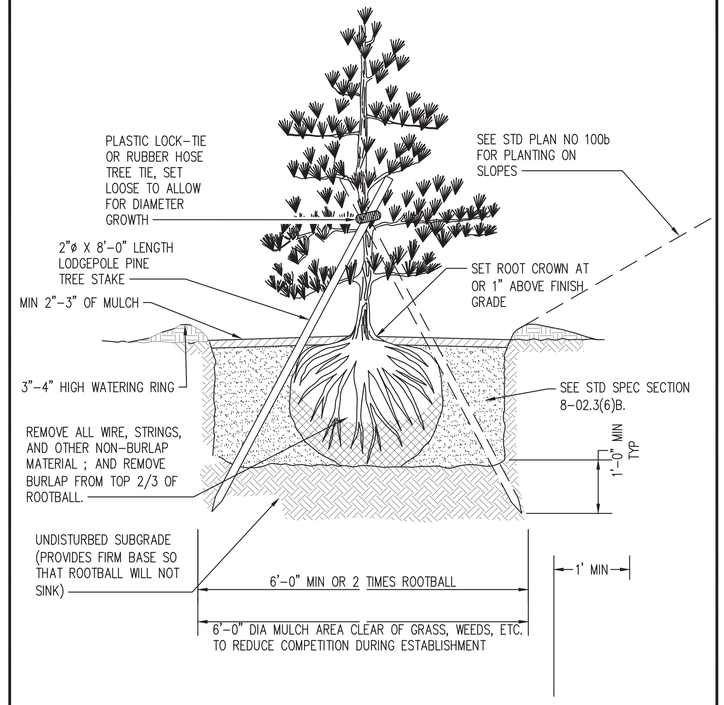

REF STD SPEC SEC 8-02

City of Seattle	NOT TO SCALE	CONIFEROUS TREE PLANTING

2014 Edition City of Seattle Standard Plans for Municipal Construction

TREE PLANTING DETAIL — NTS — 1 / C1.1

RECORD DRAWINGS

NO.	DATE	BY	CHD.	APPR.	REVISION

DATE 08/22/2018 | SCALE AS NOTED
DESIGNED WMA | CHECKED WMA
DRAWN NLM | PROJECT NAME
JOB NO. 112143

kpff
2407 North 31st Street, Suite 100
Tacoma, Washington 98407
(253) 396-0150 Fax (253) 396-0162

CALL 48 HOURS BEFORE YOU DIG 1-800-424-5555

SEATTLE IRON&METALS CORP.

RECORD DRAWINGS:
THESE RECORD DRAWINGS HAVE BEEN PREPARED FROM INFORMATION PROVIDED BY OTHERS. KPFF HAS NOT VERIFIED THE ACCURACY AND/OR COMPLETENESS OF THIS INFORMATION.

SEATTLE IRON & METALS
730 SOUTH MYRTLE STREET, SEATTLE, WA
TREE DETAIL

SHEET C1.2

SHEET 8 OF 30

PLOTTED BY: nmedley DATE & TIME: Aug 22, 2018 - 10:30am FILE: N:\Civil\112-\112142 Seattle Iron and Metals\730 S Myrtle\5.04 Construction Support\8- Drawings\730 S MYRTLE SDCI\SDCI (Current)\8 C1.2 TREE DETAIL.dwg

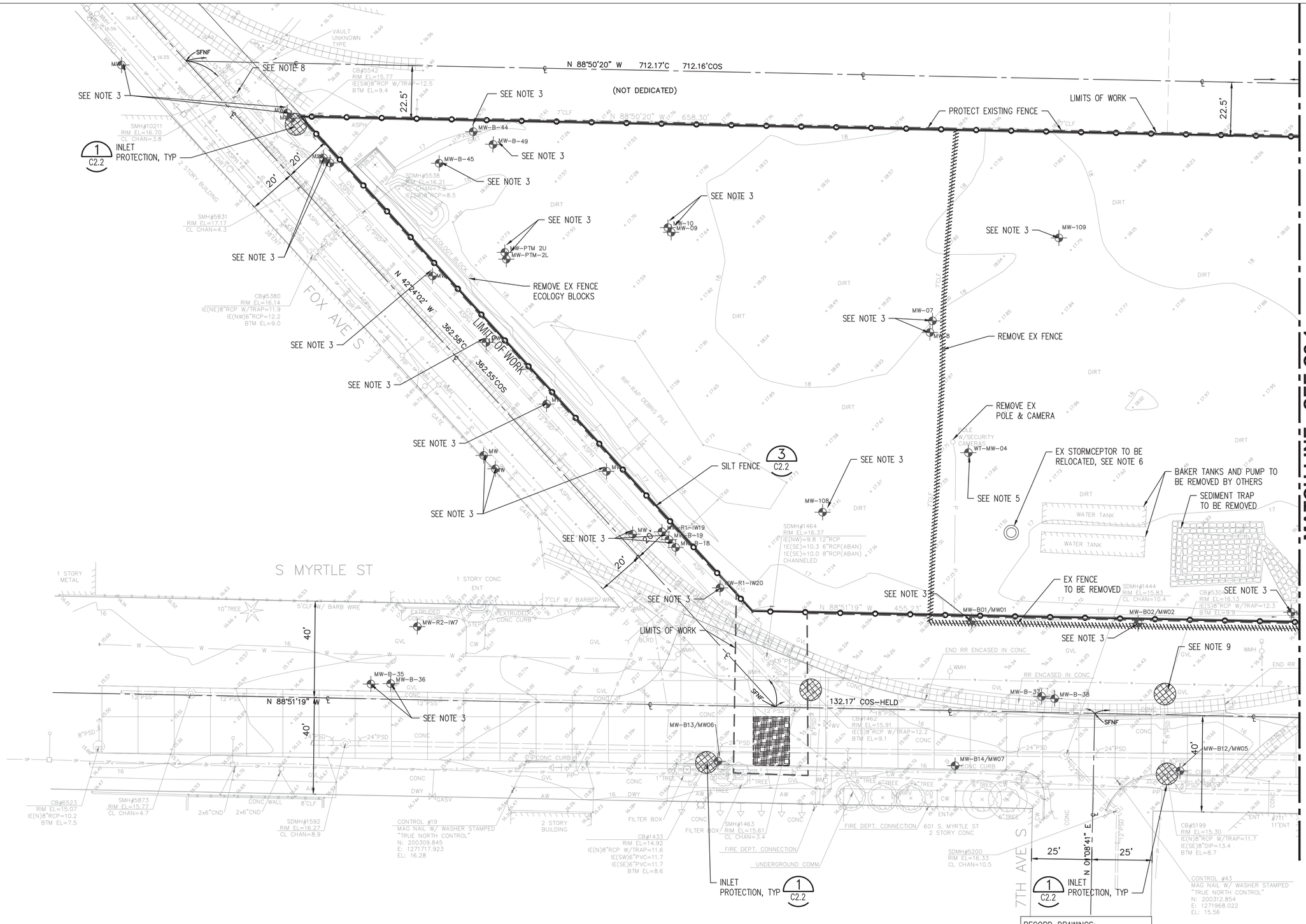

LEGEND:

- INLET PROTECTION — 1 C2.2
- LIMITS OF WORK
- CONSTRUCTION ENTRANCE — 2 C2.2
- SILT FENCE — 3 C2.2
- DEMOLISH FENCE
- MW — MONITORING WELL, TO BE PROTECTED
- LIMITS OF UTILITY TRENCHING IN RIGHT-OF-WAY
- CONCRETE PANEL DEMOLITION

NOTES:

1. FOR DEMOLITION AND TEMPORARY EROSION AND SEDIMENT CONTROL NOTES, SEE SHEET G1.1.
2. REMOVE MISCELLANEOUS CONCRETE PADS (NOT SHOWN).
3. PROTECT IN PLACE EXISTING MONITORING WELLS.
4. EXISTING MONITORING WELL AND UTILITY LOCATIONS SUPPLEMENTED BY AVAILABLE RECORD DOCUMENTS. LOCATION TO BE VERIFIED IN FIELD
5. STATUS OF MONITORING WELL WT-MW-04 UNKNOWN. IF LOCATED, PROTECT-IN-PLACE.
6. STORMCEPTOR UNIT SHALL BE REMOVED AND RELOCATED TO FINAL TREATMENT LOCATION PER C4.0. IT SHALL BE THE RESPONSIBILITY OF THE CONTRACTOR TO PROTECT THE UNIT THROUGHOUT CONSTRUCTION AND TO REPLACE ANY DAMAGED COMPONENTS AT NO COST TO THE OWNER.
7. PAVEMENT DEMOLITION SHALL BE OFFSET MINIMUM 8.5' FROM EXISTING TRACK ℄.
8. LOCATION FOR TEMPORARY DEWATERING DISCHARGE (IF REQUIRED).
9. LOCATION FOR CONSTRUCTION STORMWATER DISCHARGE.

MATCH LINE - SEE C2.1

N

CITY OF SEATTLE DATUM

GRAPHIC SCALE

20 0 10 20 40

(IN FEET)

RECORD DRAWINGS

NO.	DATE	BY	CHD.	APPR.	REVISION

DATE	08/22/2018
SCALE	AS NOTED
DESIGNED	WMA
CHECKED	WMA
DRAWN	NLM
PROJECT NAME	
JOB NO.	112143

kpff
2407 North 31st Street, Suite 100
Tacoma, Washington 98407
(253) 396-0150 Fax (253) 396-0162

CALL 48 HOURS BEFORE YOU DIG 1-800-424-5555

SEATTLE IRON&METALS CORP.

RECORD DRAWINGS:
THESE RECORD DRAWINGS HAVE BEEN PREPARED FROM INFORMATION PROVIDED BY OTHERS. KPFF HAS NOT VERIFIED THE ACCURACY AND/OR COMPLETENESS OF THIS INFORMATION.

SEATTLE IRON & METALS
730 SOUTH MYRTLE STREET, SEATTLE, WA

DEMOLITION & TEMPORARY EROSION & SEDIMENT CONTROL PLAN

SHEET C2.0

SHEET 9 OF 30

PLOTTED BY: nmedley, DATE & TIME: Aug 22, 2018 – 10:31am FILE: N:\Civil\112-\112143 Seattle Iron and Metals\730 S Myrtle\5.04 Construction Support\8- Drawings\730 S MYRTLE SDCI (Current)\11 C2.2 DEMOLITION & TEMPORARY EROSION AND SEDIMENT CONTORL DETAILS.dwg

PLOTTED BY: nmedley DATE & TIME: Aug 22, 2018 – 10:31am FILE: N:\Civil\112-\112143 Seattle Iron and Metals\730 S Myrtle\5.04 Construction Support\8- Drawings\730 S MYRTLE SDCI (Current)\11 C2.2 DEMOLITION & TEMPORARY EROSION AND SEDIMENT CONTORL DETAILS.dwg

MATCH LINE - SEE C2.0

N 88°50'20" W 712.17'C 712.16'COS

(NOT DEDICATED)

22.5'

N 88°50'20" W 658.30' 7'CLF

DEMOLISH EX FENCE

SEE NOTE 3

22.5'

97.98'

BILLBOARD SIGN BASE

BILLBOARD OUTLINE

PROTECT-IN-PLACE EXISTING BILLBOARD SIGN

DEMOLISH EX CONCRETE PAD

N 47°49'40" W 367.68'M 367.47'COS

65'

REMOVE EX CONTAINER

WAREHOUSE/FAB SHOP

EXISTING SHED TO REMAIN

DEMOLISH EX FENCE

PROTECT-IN-PLACE EXISTING WATER LINE

268.71'C 268.69'COS

366.67'C 366.64'COS

N 13°22'52" E

DECONTAMINATION PAD 5 C2.2

REMOVE EX CONTAINERS

UNDERGROUND UTILITY PAVEMENT MARKINGS, VERIFY UTILITY LOCATION IN-FIELD AND PROTECT-IN-PLACE

LIMITS OF WORK

N 13°22'52" E 138.32'

E. MARGINAL WAY S.

CONTROL #65
MAG NAIL W/ WASHER STAMPED "TRUE NORTH CONTROL"
N: 200522.532
E: 1272466.058
EL: 18.35

65'

SEE NOTE 5

WT-MW-110

2 C2.2 STABILIZED CONSTRUCTION ENTRANCE

DEMOLISH EX FENCE

FILTER BERM TO BE REMOVED

PROTECT-IN-PLACE EX FENCE SURROUNDING CELL TOWER

PROTECT-IN-PLACE EXISTING CELL TOWER

APN 273410-0260

#7047R
1 STORY BUILDING

W-B03/MW03

N 88°51'19" W 455.23'

SILT FENCE

S. MYRTLE ST

CONTROL #66
MAG NAIL W/ WASHER
N: 200349.740
E: 1272407.667
EL: 17.83

N 88°51'19" W 134.16'

12"GATE

DEMOLISH EX FENCE

PROTECT-IN-PLACE EXISTING FH

PROTECT-IN-PLACE EXISTING TREE

40'

273.26' COS-HELD
N 88°51'19" W

329.72'C 329.69'COS
N 88°51'19" W

PROTECT-IN-PLACE EXISTING OVERHEAD POWER LINES

30'

40'

N 13°22'52" E 119.70'C 120.02'COS

#711
1 STORY BUILDING

SMH#5179
RIM EL=16.86
CL CHAN=14.0

SMH#5872
RIM EL=16.85
CL CHAN=2.7
IE(SW)8"DIP=10.25

6"CEDAR W/12'RAD. DL

#745
2 STORY BUILDING

#7135
1 STORY BUILDING

LEGEND:

- INLET PROTECTION — 1 C2.2
- LIMITS OF WORK
- CONSTRUCTION ENTRANCE — 2 C2.2
- SILT FENCE — 3 C2.2
- DECONTAMINATION PAD — 5 C2.2
- DEMOLISH FENCE
- MW MONITORING WELL, TO BE PROTECTED

NOTES:

1. FOR DEMOLITION AND TEMPORARY EROSION AND SEDIMENT CONTROL NOTES, SEE SHEET G1.1.
2. REMOVE MISCELLANEOUS CONCRETE PADS (NOT SHOWN).
3. COORDINATE WORK IN THIS AREA WITH ADJACENT PROPERTY OWNER.
4. EXISTING MONITORING WELL AND UTILITY LOCATIONS SUPPLEMENTED BY AVAILABLE RECORD DOCUMENTS. LOCATION TO BE VERIFIED IN FIELD.
5. MONITORING WELL WT-MW-110 TO BE DECOMMISSIONED BY OTHERS PRIOR TO CONSTRUCTION.

N

CITY OF SEATTLE DATUM

GRAPHIC SCALE

20 0 10 20 40

(IN FEET)

RECORD DRAWINGS

NO.	DATE	BY	CHD.	APPR.	REVISION

DATE 08/22/2018 | SCALE AS NOTED
DESIGNED WMA | CHECKED WMA
DRAWN NLM | PROJECT NAME
JOB NO. 112143

kpff 2407 North 31st Street, Suite 100 Tacoma, Washington 98407 (253) 396-0150 Fax (253) 396-0162

CALL 48 HOURS BEFORE YOU DIG 1-800-424-5555

SEATTLE IRON&METALS CORP.

RECORD DRAWINGS:
THESE RECORD DRAWINGS HAVE BEEN PREPARED FROM INFORMATION PROVIDED BY OTHERS. KPFF HAS NOT VERIFIED THE ACCURACY AND/OR COMPLETENESS OF THIS INFORMATION.

SEATTLE IRON & METALS
730 SOUTH MYRTLE STREET, SEATTLE, WA

DEMOLITION & TEMPORARY EROSION & SEDIMENT CONTROL PLAN

SHEET C2.1

SHEET 10 OF 30

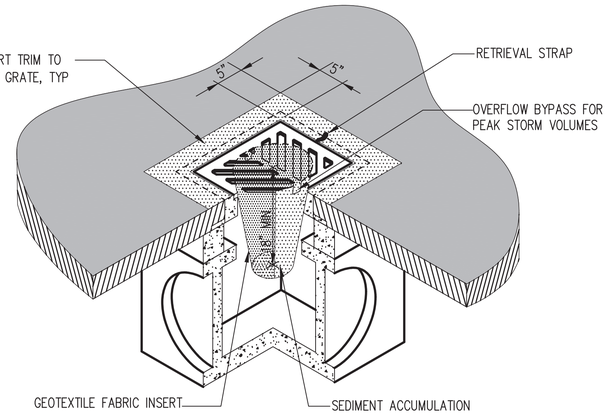

NOTES:

1. INSERT SHALL BE INSTALLED IN ALL OPERATIONAL CATCH BASINS PRIOR TO CLEARING AND GRADING ACTIVITY, OR UPON PLACEMENT OF A NEW CATCH BASIN.
2. SEDIMENT SHALL BE REMOVED FROM THE UNIT WHEN IT BECOMES HALF FULL.
3. SEDIMENT REMOVAL SHALL BE ACCOMPLISHED BY REMOVING THE INSERT, EMPTYING INTO APPROPRIATE DISPOSAL LOCATION, AND REINSERTING IT INTO THE CATCH BASIN.

INLET PROTECTION DETAIL 1
NTS C2.0–C2.1

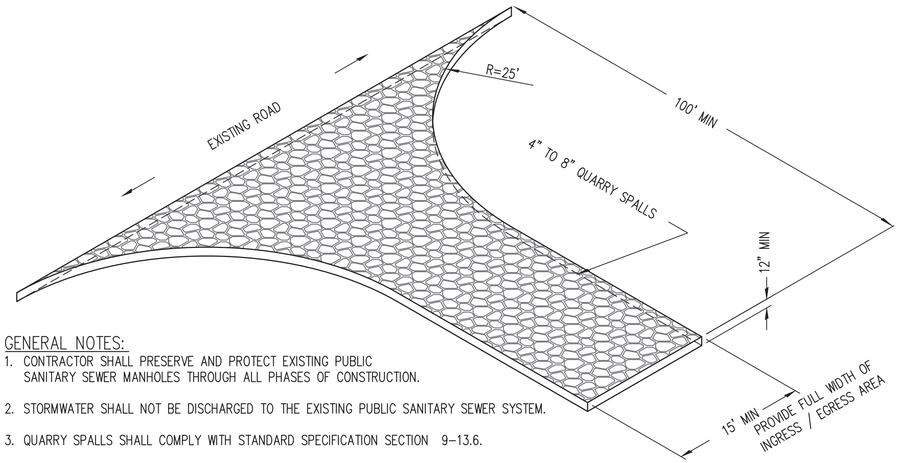

GENERAL NOTES:

1. CONTRACTOR SHALL PRESERVE AND PROTECT EXISTING PUBLIC SANITARY SEWER MANHOLES THROUGH ALL PHASES OF CONSTRUCTION.
2. STORMWATER SHALL NOT BE DISCHARGED TO THE EXISTING PUBLIC SANITARY SEWER SYSTEM.
3. QUARRY SPALLS SHALL COMPLY WITH STANDARD SPECIFICATION SECTION 9–13.6.
4. IF THE ENTRANCE IS NOT PREVENTING SEDIMENT FROM BEING TRACKED ONTO PAVEMENT, THEN ALTERNATIVE MEASURES TO KEEP THE STREETS FREE OF SEDIMENT SHALL BE USED. THIS MAY INCLUDE STREET SWEEPING, AN INCREASE IN THE DIMENSIONS OF THE ENTRANCE OR THE INSTALLATION OF A WHEEL WASH. IF WASHING IS USED, IT SHALL BE DONE ON AN AREA COVERED WITH CRUSHED ROCK AND WASH WATER SHALL DRAIN TO A SEDIMENT TRAP OR POND.
5. ANY SEDIMENT THAT IS TRACKED ONTO PAVEMENT SHALL BE REMOVED IMMEDIATELY BY SWEEPING. THE SEDIMENT COLLECTED BY SWEEPING SHALL BE REMOVED OR STABILIZED ON–SITE. THE PAVEMENT SHALL NOT BE CLEANED BY WASHING DOWN THE STREET, EXCEPT WHEN SWEEPING IS INEFFECTIVE AND THERE IS A THREAT TO PUBLIC SAFETY. IF IT IS NECESSARY TO WASH THE STREETS, THE CONSTRUCTION OF A SMALL SUMP SHALL BE CONSIDERED. THE SEDIMENT WOULD THEN BE WASHED IN THE SUMP.
6. ANY QUARRY SPALLS THAT ARE LOOSENED FROM THE PAD AND END UP ON THE ROADWAY SHALL BE REMOVED IMMEDIATELY.
7. IF VEHICLES ARE ENTERING OR EXITING THE SITE AT POINTS OTHER THAN THE CONSTRUCTION ENTRANCE(S), FENCING SHALL BE INSTALLED TO CONTROL TRAFFIC.

STABILIZED CONSTRUCTION ENTRANCE DETAIL 2
NTS C2.1

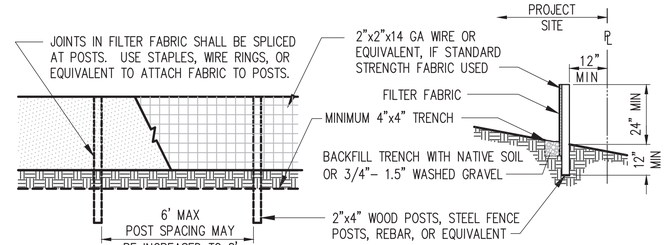

NOTE: FILTER FABRIC FENCES SHALL BE INSTALLED ALONG CONTOUR WHENEVER POSSIBLE.

MAINTENANCE STANDARDS:

1. ANY DAMAGE SHALL BE REPAIRED IMMEDIATELY.
2. IF CONCENTRATED FLOWS ARE EVIDENT UPHILL OF THE FENCE, THEY MUST BE INTERCEPTED AND CONVEYED TO A SEDIMENT TRAP OR POND.
3. IT IS IMPORTANT TO CHECK THE UPHILL SIDE OF THE FENCE FOR SIGNS OF THE FENCE CLOGGING AND ACTING AS A BARRIER TO FLOW AND THEN CAUSING CHANNELIZATION OF FLOWS PARALLEL TO THE FENCE. IF THIS OCCURS, REPLACE THE FENCE OR REMOVE THE TRAPPED SEDIMENT.
4. SEDIMENT MUST BE REMOVED WHEN THE SEDIMENT IS 6" HIGH.
5. IF THE FILTER FABRIC HAS DETERIORATED DUE TO ULTRAVIOLET BREAKDOWN, IT SHALL BE REPLACED.

SILT FENCE DETAIL 3
NTS C2.0–C2.1

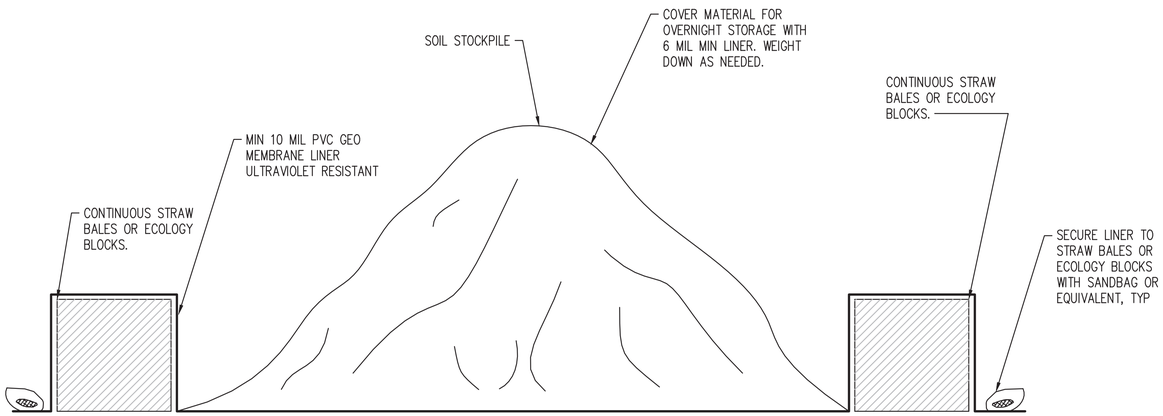

NOTES:

1. RIPS AND TEARS IN THE PLASTIC SHALL BE REPAIRED IN A TIMELY MANNER.

STOCKPILE WITH CONTAINMENT DETAIL 4
NTS C2.0

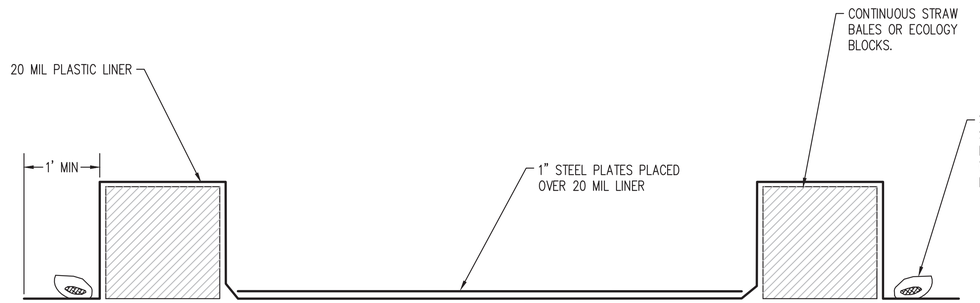

NOTES:

1. RIPS AND TEARS IN THE PLASTIC SHALL BE REPAIRED IN A TIMELY MANNER.
2. THE PAD SHALL HAVE A MINIMUM AREA OF 20' X 20'.

DECONTAMINATION PAD DETAIL 5
NTS C2.1

RECORD DRAWINGS

NO.	DATE	BY	CHD.	APPR.	REVISION

DATE 08/22/2018 | SCALE AS NOTED
DESIGNED WMA | CHECKED WMA
DRAWN NLM | PROJECT NAME
JOB NO. 112143

kpff
2407 North 31st Street, Suite 100
Tacoma, Washington 98407
(253) 396-0150 Fax (253) 396-0162

CALL 48 HOURS BEFORE YOU DIG 1-800-424-5555

SEATTLE IRON&METALS CORP.

RECORD DRAWINGS:
THESE RECORD DRAWINGS HAVE BEEN PREPARED FROM INFORMATION PROVIDED BY OTHERS. KPFF HAS NOT VERIFIED THE ACCURACY AND/OR COMPLETENESS OF THIS INFORMATION.

SEATTLE IRON & METALS
730 SOUTH MYRTLE STREET, SEATTLE, WA

DEMOLITION & TEMPORARY EROSION & SEDIMENT CONTROL DETAILS

SHEET C2.2

PLOTTED BY: nmedley DATE & TIME: Aug 22, 2018 – 10:31am FILE: N:\Civil\112-\112143 Seattle Iron and Metals\730 S Myrtle\5.04 Construction Support\B- Drawings\730 S MYRTLE SDCI\SDCI (Current)\11 C2.2 DEMOLITION & TEMPORARY EROSION AND SEDIMENT CONTROL DETAILS.dwg

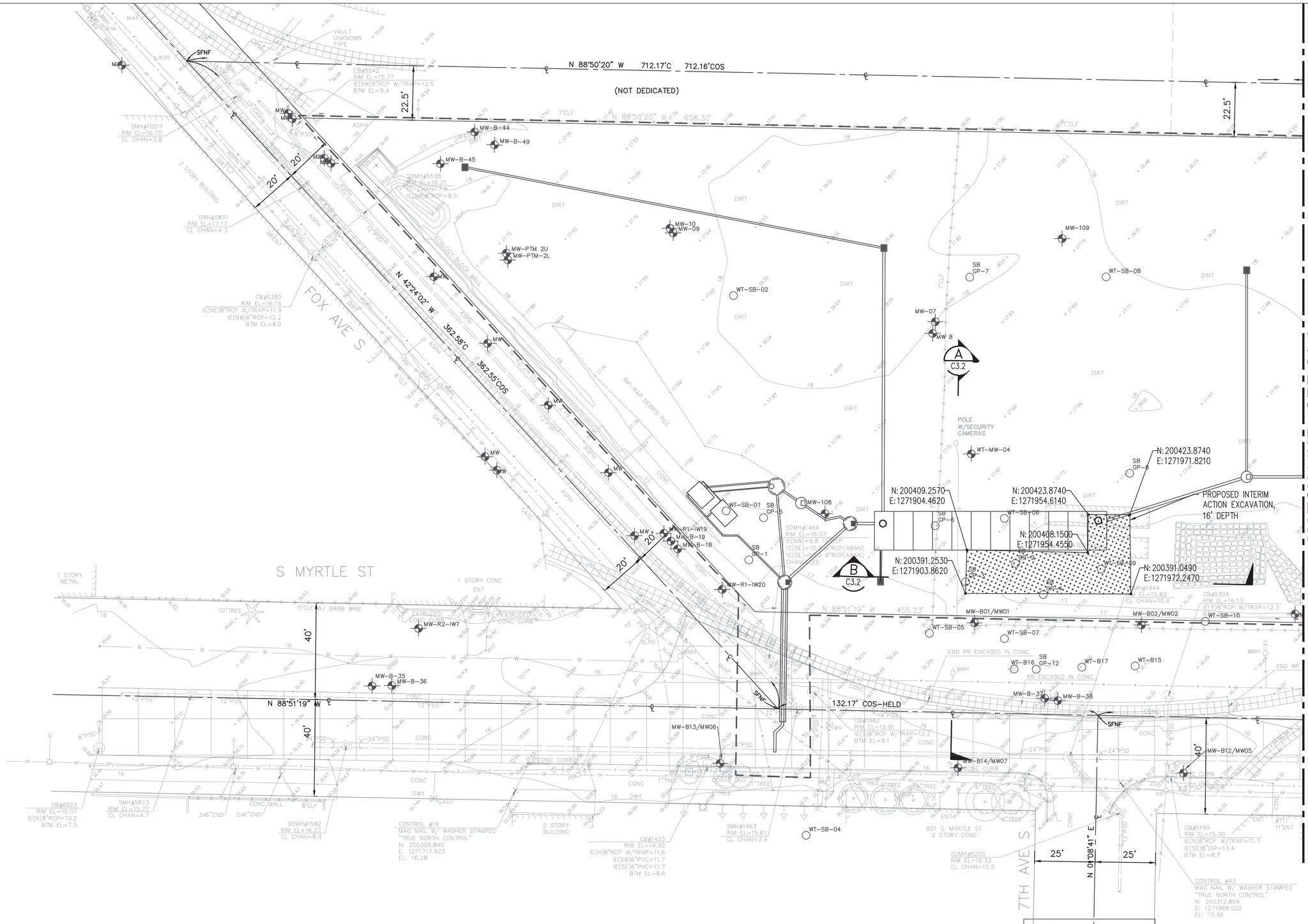

LEGEND:

- MW — MONITORING WELL
- WT-SB — SOIL BORING
- STODDARD SOLVENT EXCAVATION FOOTPRINT

NOTES:

1. STATUS OF MONITORING WELL WT-MW-04 IS UNKNOWN; IF LOCATED PROTECT DURING EXCAVATION.
2. SOIL IN PROPOSED EXCAVATION AREA IS CONTAMINATED BY STODDARD SOLVENT. CONTRACTOR WILL BE REQUIRED TO SUBMIT HEALTH AND SAFETY PLAN FOR EXCAVATION AND HANDLING OF CONTAMINATED SOILS.
3. SOIL WILL BE EXCAVATED TO 16 FEET BELOW GROUND SURFACE AND BELOW ANTICIPATED WATER TABLE. TRENCH BOX OR ENGINEERED STRUCTURE SHALL BE USED TO STABILZE EXCAVATION DEEPER THAN 10 FEET OR WATER TABLE. NO SLOPE CUTS ARE ALLOWED FOR SUCH EXCAVATIONS.
4. CONTRACTOR WILL CONTROL RUN-ON AND RUN-OFF OF STORMWATER INTO EXCAVATION AND CONTAMINATED SOIL STOCKPILES, IF USED.
5. IF CONTRACTOR CHOOSES TO DEWATER, A TEMPORARY HOLDING TANK AND TREATMENT WILL BE NECESSARY TO MEET CONDITIONS OF THE CONSTRUCTION STORMWATER GENERAL PERMIT AND ASSOCIATED ADMINISTRATIVE ORDER. DEWATERING WATER IS EXPECTED TO BE CONTAMINATED, WITH ANTICIPATED MAXIMUM CONCENTRATIONS OF:
   - 5.1. STODDARD SOLVENT: 3,000 PARTS PER BILLION (PPB)
   - 5.2. PENTACHLOROPHENOL: 730 PPB
   - 5.3. BENZENE: 5 PPB
   - 5.4. CIS-1,2-DICHLOROETHENE: 460 PPB
   - 5.5. TETRACHLOROETHENE: 110 PPB
   - 5.6. TRICHLOROETHENE: 47 PPB
   - 5.7. VINYL CHLORIDE: 38 PPB

   CONTRACTOR TO SPECIFY MEANS AND METHODS FOR DEWATERING, WATER MANAGEMENT, AND TREATMENT. SEE DETAIL 1 ON C3.3.
6. TOTAL CONTAMINATED SOIL VOLUME IS APPROXIMATELY 1050 CUBIC YARDS. DRYING AGENTS MAY BE PROPOSED TO STABILIZE WET SOILS EXCAVATED FROM BELOW THE WATER TABLE PRIOR TO TRANSPORT. SOIL TRANSPORT AND DISPOSAL TO BE DETERMINED BY CONTRACTOR.
7. CONTRACTOR WILL PROVIDE FOR COLLECTION OF EXCAVATION CONFIRMATION SAMPLES BY THE ENVIRONMENTAL CONSULTANT TO VERIFY THAT REMEDIATION GOALS HAVE BEEN MET.
8. CONTRACTOR WILL PLACE, GRADE AND COMPACT BACKFILL TO PROJECT SPECIFICATIONS AFTER VERIFICATION THAT REMEDIATION GOALS HAVE BEEN MET.
9. EQUIPMENT USED FOR HANDLING CONTAMINATED SOIL WILL BE CLEANED OF VISUAL DEBRIS BEFORE HANDLING UNCONTAMINATED SOIL OUTSIDE THE PROPOSED EXCAVATION AREA.
10. A PRE-CONSTRUCTION MEETING SHALL BE SCHEDULED WITH SDOT SHORING REVIEW AND INSPECTION PRIOR TO THE START OF EXCAVATION ADJACENT TO THE PUBLIC ROW. ATTENDEES SHALL INCLUDE REPRESENTATIVES OF THE OWNER, GENERAL CONTRACTOR, EXCAVATION AND SHORING SUBCONTRACTORS, THE PROJECT GEOTECHNICAL ENGINEER, PROJECT SURVEYORS, AND SDOT SHORING REVIEW AND INSPECTION REPRESENTATIVE.

MATCH LINE - SEE C3.1

N

CITY OF SEATTLE DATUM

GRAPHIC SCALE
20 0 10 20 40
(IN FEET)

RECORD DRAWINGS

NO.	DATE	BY	CHD.	APPR.	REVISION

DATE 08/22/2018 | SCALE AS NOTED
DESIGNED WMA | CHECKED WMA
DRAWN NLM | PROJECT NAME
JOB NO. 112143

kpff
2407 North 31st Street, Suite 100
Tacoma, Washington 98407
(253) 396-0150 Fax (253) 396-0162

CALL 48 HOURS BEFORE YOU DIG 1-800-424-5555

SEATTLE IRON & METALS CORP.

RECORD DRAWINGS:
THESE RECORD DRAWINGS HAVE BEEN PREPARED FROM INFORMATION PROVIDED BY OTHERS. KPFF HAS NOT VERIFIED THE ACCURACY AND/OR COMPLETENESS OF THIS INFORMATION.

SEATTLE IRON & METALS
730 SOUTH MYRTLE STREET, SEATTLE, WA

INTERIM ACTION REMEDIATION PLAN

SHEET C3.0

SHEET 12 OF 30

PLOTTED BY: nmedley DATE & TIME: Aug. 22, 2018 - 10:32am FILE: N:\Civil\112-\112143 Seattle Iron and Metals\730 S Myrtle\5.04 Construction Support\8- Drawings\730 S MYRTLE SDCI (Current)\13 C3.1 INTERIM ACTION REMEDIATION PLAN.dwg

MATCH LINE - SEE C3.0

N 88°50'20" W 712.17'C 712.16'COS

22.5'

(NOT DEDICATED)

N 88°50'20" W 658.30' 7'CLF

22.5'

97.96'C

N 47°49'40" W 367.68'M 367.47'COS

65'

BILLBOARD SIGN BASE

BILLBOARD OUTLINE

CONC PAD

DIRT

WAREHOUSE/FAB SHOP

EXIST SHED TO REMAIN

CONTAINER

WT-B10

WT-B11

WT-SB-12

WT-B09

WT-B08

WT-B07

WT-B06

WT-B05

WT-SB-13

WT-SB-14

WT-SB-15

WT-SB-16

WT-SB-17

WT-SB-18

WT-SB-19

WT-SB-20

WT-MW-110

SB GP-9

SB GP-10

SB GP-11

C3.3

D C3.3

N: 200457.0700
E: 1272148.2580

N: 200433.8500
E: 1272094.6810

N: 200435.9230
E: 1272159.0150

N: 200411.9450
E: 1272104.8030

PROPOSED HEAVY OIL EXCAVATION 6 FT BGS

SEE NOTE 1

268.71'C 268.69'COS

366.67'C 366.64'COS

N 13°22'52" E

CONTROL #65
MAG NAIL W/ WASHER STAMPED "TRUE NORTH CONTROL"
N: 200522.532
E: 1272466.058
EL: 18.35

E. MARGINAL WAY S.

65'

N 13°22'52" E 138.32'

#10478
1 STORY BUILDING

APN 273410-0260

CELL TOWER

N 13°22'52" E 10.23'

N 13°22'52" E 119.70'C 120.02'COS

S. MYRTLE ST

CONTROL #66
MAG NAIL W/ WASHER
N: 200349.740
E: 1272407.667
EL: 17.83

12' GATE

39' GATE

7'CLF W/ BARBED WIRE

W-B03/MW03

N 88°51'19" W 17 455.23'

N 88°51'19" W 134.16'

40'

30'

273.26' COS-HELD
N 88°51'19" W

329.72'C 329.69'COS
N 88°51'19" W

SFNF

14",2-8",3-6" TREES W/24'RAD. DL(CLUSTER)

UNCASED IN CONC

GVL

GASV

CONC

ASPH

8"PSS

8"PSD

SMH#5179
RIM EL=16.86
CL CHAN=14.0

SMH#5872
RIM EL=16.85
CL CHAN=2.7
IE(SW)8"DIP=10.25

6"CEDAR W/12'RAD. DL

#711
1 STORY BUILDING

#745
2 STORY BUILDING

#7135
1 STORY BUILDING

6x2" TREES

8'CLF/W BARBED WIRE

LSCAPE

CONC CURB

STEPS

LEGEND:

- MW — MONITORING WELL
- WT-SB — SOIL BORING
- HEAVY OIL EXCAVATION FOOTPRINT

NOTES:

1. MONITORING WELL WT-MW-110 TO BE DECOMMISSIONED BY OTHERS PRIOR TO CONSTRUCTION.
2. SOIL IN PROPOSED EXCAVATION AREA IS CONTAMINATED BY HEAVY OIL-RANGE TOTAL PETROLEUM HYDROCARBONS. CONTRACTOR WILL BE REQUIRED TO SUBMIT HEALTH AND SAFETY PLAN FOR EXCAVATION AND HANDLING OF CONTAMINATED SOILS.
3. SOIL WILL BE EXCAVATED TO 6 FEET BELOW GROUND SURFACE. DEWATERING IS NOT ANTICIPATED IN PROPOSED EXCAVATION AREA.
4. CONTRACTOR WILL CONTROL RUN-ON AND RUN-OFF OF STORMWATER INTO EXCAVATION AND CONTAMINATED SOIL STOCKPILES, IF USED.
5. TOTAL CONTAMINATED SOIL VOLUME IS APPROXIMATELY 325 CUBIC YARDS. SOIL TRANSPORT AND DISPOSAL TO BE DETERMINED BY CONTRACTOR.
6. CONTRACTOR WILL PROVIDE FOR COLLECTION OF EXCAVATION CONFIRMATION SAMPLES BY THE ENVIRONMENTAL CONSULTANT TO VERIFY THAT REMEDIATION GOALS HAVE BEEN MET.
7. CONTRACTOR WILL PLACE, GRADE AND COMPACT BACKFILL TO PROJECT SPECIFICATIONS AFTER VERIFICATION THAT REMEDIATION GOALS HAVE BEEN MET.
8. EQUIPMENT USED FOR HANDLING CONTAMINATED SOIL WILL BE CLEANED OF VISUAL DEBRIS BEFORE HANDLING UNCONTAMINATED SOIL OUTSIDE THE PROPOSED EXCAVATION AREA.

N

CITY OF SEATTLE DATUM

GRAPHIC SCALE

20 0 10 20 40

(IN FEET)

RECORD DRAWINGS

NO.	DATE	BY	CHD.	APPR.	REVISION

DATE 08/22/2018 | SCALE AS NOTED
DESIGNED WMA | CHECKED WMA
DRAWN NLM | PROJECT NAME
JOB NO. 112143

kpff
2407 North 31st Street, Suite 100
Tacoma, Washington 98407
(253) 396-0150 Fax (253) 396-0162

CALL 48 HOURS BEFORE YOU DIG 1-800-424-5555

SEATTLE IRON&METALS CORP.

RECORD DRAWINGS:
THESE RECORD DRAWINGS HAVE BEEN PREPARED FROM INFORMATION PROVIDED BY OTHERS. KPFF HAS NOT VERIFIED THE ACCURACY AND/OR COMPLETENESS OF THIS INFORMATION.

SEATTLE IRON & METALS
730 SOUTH MYRTLE STREET, SEATTLE, WA

INTERIM ACTION REMEDIATION PLAN

SHEET C3.1

SHEET 13 OF 30

PLOTTED BY: rsmedley DATE & TIME: Aug 22, 2018 - 10:32am FILE: N:\Civil\112-\112143 Seattle Iron and Metals\730 S Myrtle\5.04 Construction Support\8- Drawings\730 S MYRTLE SDCI (Current)\13 C3.1 INTERIM ACTION REMEDIATION PLAN.dwg

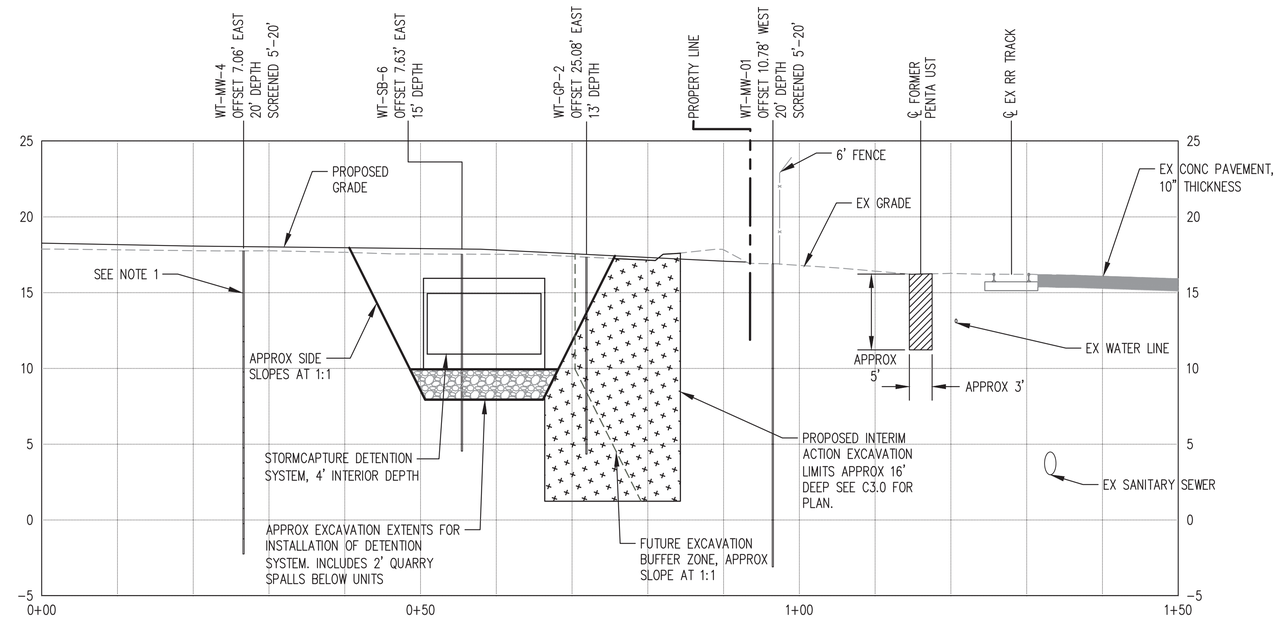

STORM DRAIN EXCAVATION SECTION A

HORIZ: 1"=5' VERT: 1"=10'

C3.0

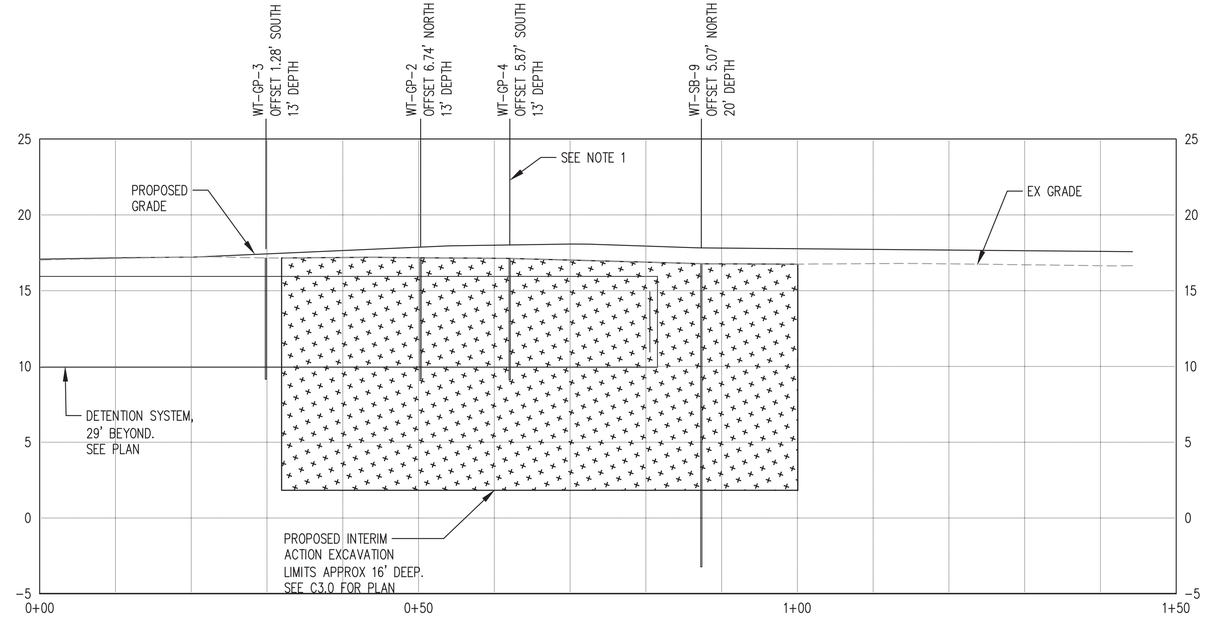

STORM DRAIN EXCAVATION SECTION B

HORIZ: 1"=5' VERT: 1"=10'

C3.0

NOTES:

1. STATUS OF MONITORING WELL WT-MW-04 IS UNKNOWN; IF LOCATED PROTECT DURING EXCAVATION.
2. SOIL IN PROPOSED EXCAVATION AREA IS CONTAMINATED BY STODDARD SOLVENT. CONTRACTOR WILL BE REQUIRED TO SUBMIT HEALTH AND SAFETY PLAN FOR EXCAVATION AND HANDLING OF CONTAMINATED SOILS.
3. SOIL WILL BE EXCAVATED TO 16 FEET BELOW GROUND SURFACE AND BELOW ANTICIPATED WATER TABLE. MEANS TO STABILIZE EXCAVATION TO BE DETERMINED BY CONTRACTOR.
4. CONTRACTOR WILL CONTROL RUN-ON AND RUN-OFF OF STORMWATER INTO EXCAVATION AND CONTAMINATED SOIL STOCKPILES, IF USED.
5. IF CONTRACTOR CHOOSES TO DEWATER, A TEMPORARY HOLDING TANK AND TREATMENT WILL BE NECESSARY TO MEET CONDITIONS OF THE CONSTRUCTION STORMWATER GENEAL PERMIT AND ASSOCIATED ADMINISTRATIVE ORDER. DEWATERING WATER IS EXPECTED TO BE CONTAMINATED, WITH ANTICIPATED MAXIMUM CONCENTRATIONS OF:

   5.1. STODDARD SOLVENT: 3,000 PARTS PER BILLION (PPB)
   5.2. PENTACHLOROPHENOL: 730 PPB
   5.3. BENZENE: 5 PPB
   5.4. CIS-1,2-DICHLOROETHENE: 460 PPB
   5.5. TETRACHLOROETHENE: 110 PPB
   5.6. TRICHLOROETHENE: 47 PPB
   5.7. VINYL CHLORIDE: 38 PPB

   CONTRACTOR TO SPECIFY MEANS AND METHODS FOR DEWATERING, WATER MANAGEMENT, AND TREATMENT.
6. TOTAL CONTAMINATED SOIL VOLUME IS APPROXIMATELY 850 CUBIC YARDS. DRYING AGENTS MAY BE PROPOSED TO STABILIZE WET SOILS EXCAVATED FROM BELOW THE WATER TABLE PRIOR TO TRANSPORT. SOIL TRANSPORT AND DISPOSAL TO BE DETERMINED BY CONTRACTOR.
7. CONTRACTOR WILL PROVIDE FOR COLLECTION OF EXCAVATION CONFIRMATION SAMPLES BY THE ENVIRONMENTAL CONSULTANT TO VERIFY THAT REMEDIATION GOALS HAVE BEEN MET.
8. CONTRACTOR WILL PLACE, GRADE AND COMPACT BACKFILL TO PROJECT SPECIFICATIONS AFTER VERIFICATION THAT REMEDIATION GOALS HAVE BEEN MET.
9. EQUIPMENT USED FOR HANDLING CONTAMINATED SOIL WILL BE CLEANED OF VISUAL DEBRIS BEFORE HANDLING UNCONTAMINATED SOIL OUTSIDE THE PROPOSED EXCAVATION AREA.

CITY OF SEATTLE DATUM

GRAPHIC SCALE

10 0 5 10 20

(IN FEET)

HORIZONTAL

GRAPHIC SCALE

5 0 2.5 5 10

(IN FEET)

VERTICAL

RECORD DRAWINGS

NO.	DATE	BY	CHD.	APPR.	REVISION

DATE 08/22/2018 | SCALE AS NOTED
DESIGNED WMA | CHECKED WMA
DRAWN NLM | PROJECT NAME
JOB NO. 112143

kpff
2407 North 31st Street, Suite 100
Tacoma, Washington 98407
(253) 396-0150 Fax (253) 396-0162

CALL 48 HOURS BEFORE YOU DIG 1-800-424-5555

SEATTLE IRON & METALS CORP.

RECORD DRAWINGS:
THESE RECORD DRAWINGS HAVE BEEN PREPARED FROM INFORMATION PROVIDED BY OTHERS. KPFF HAS NOT VERIFIED THE ACCURACY AND/OR COMPLETENESS OF THIS INFORMATION.

SEATTLE IRON & METALS
730 SOUTH MYRTLE STREET, SEATTLE, WA

INTERIM ACTION
REMEDIATION SECTIONS

SHEET C3.2

SHEET 14 OF 30

PLOTTED BY: nmedley DATE & TIME: Aug 22, 2018 - 10:33am FILE: N:\Civil\112-\112143 Seattle Iron and Metals\730 S Myrtle\5.04 Construction Support\8- Drawings\730 S MYRTLE SDCI\SDCI (Current)\15 C3.3 INTERIM ACTION REMEDIATION SECTIONS & DETAILS.dwg

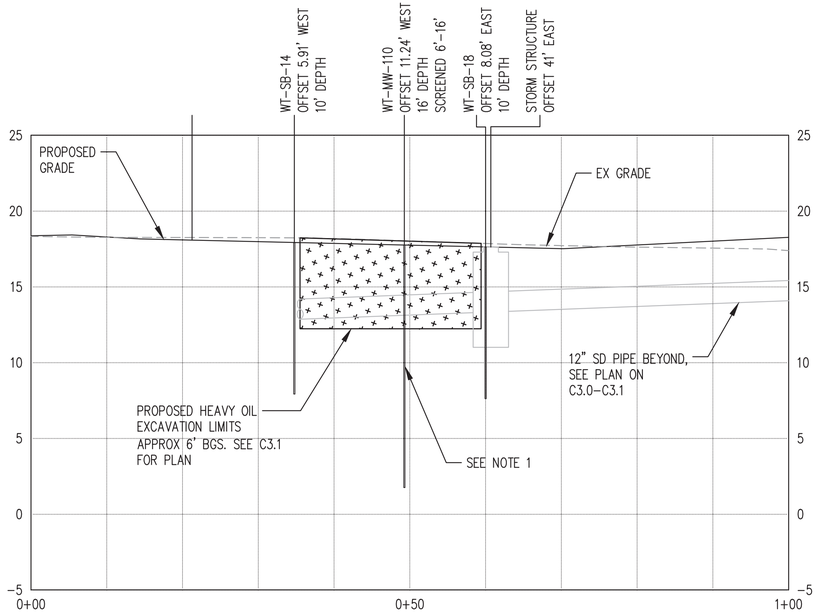

HEAVY OIL EXCAVATION SECTION C C3.1

HORIZ: 1"=5' VERT: 1"=10'

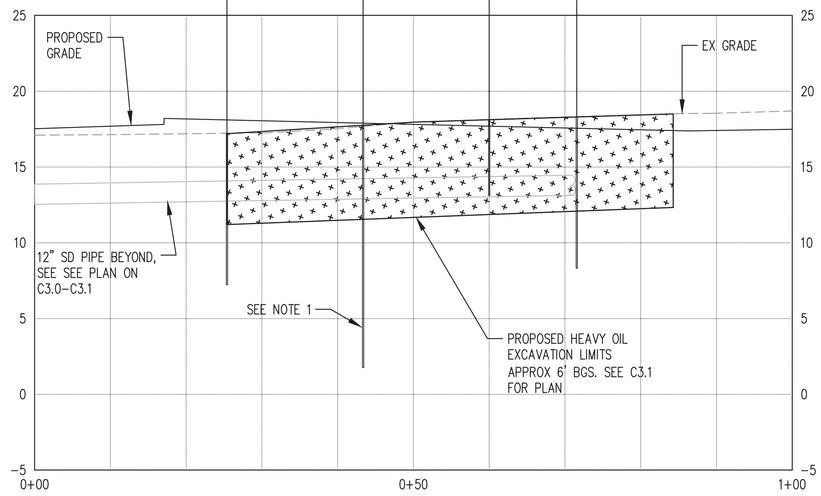

HEAVY OIL EXCAVATION SECTION D C3.1

HORIZ: 1"=5' VERT: 1"=10'

NOTES:

1. MONITORING WELL WT-MW-110 TO BE DECOMMISSIONED BY OTHERS PRIOR TO CONSTRUCTION.
2. SOIL IN PROPOSED EXCAVATION AREA IS CONTAMINATED BY HEAVY OIL-RANGE TOTAL PETROLEUM HYDROCARBONS. CONTRACTOR WILL BE REQUIRED TO SUBMIT HEALTH AND SAFETY PLAN FOR EXCAVATION AND HANDLING OF CONTAMINATED SOILS.
3. SOIL WILL BE EXCAVATED TO 6 FEET BELOW GROUND SURFACE. DEWATERING IS NOT ANTICIPATED IN PROPOSED EXCAVATION AREA.
4. CONTRACTOR WILL CONTROL RUN-ON AND RUN-OFF OF STORMWATER INTO EXCAVATION AND CONTAMINATED SOIL STOCKPILES, IF USED.
5. TOTAL CONTAMINATED SOIL VOLUME IS APPROXIMATELY 300 CUBIC YARDS. SOIL TRANSPORT AND DISPOSAL TO BE DETERMINED BY CONTRACTOR.
6. CONTRACTOR WILL PROVIDE FOR COLLECTION OF EXCAVATION CONFIRMATION SAMPLES BY THE ENVIRONMENTAL CONSULTANT TO VERIFY THAT REMEDIATION GOALS HAVE BEEN MET.
7. CONTRACTOR WILL PLACE, GRADE AND COMPACT BACKFILL TO PROJECT SPECIFICATIONS AFTER VERIFICATION THAT REMEDIATION GOALS HAVE BEEN MET.
8. EQUIPMENT USED FOR HANDLING CONTAMINATED SOIL WILL BE CLEANED OF VISUAL DEBRIS BEFORE HANDLING UNCONTAMINATED SOIL OUTSIDE THE PROPOSED EXCAVATION AREA.

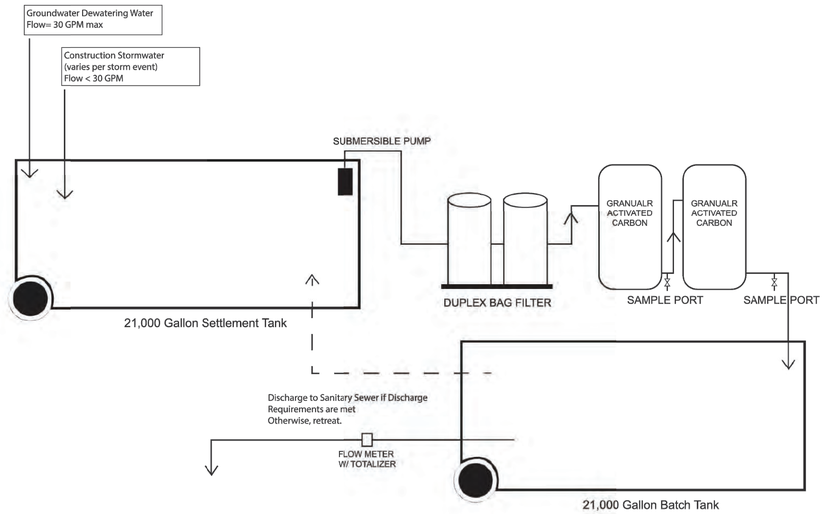

730 SOUTH MYRTLE STREET IMPROVEMENT PROJECT

Prepared By: Glacier Environmental Services, Inc. 6/22/2017

Max Flow Rate: 30 GPM

DEWATERING TREATMENT SYSTEM DETAIL 1 C3.0-C3.1

NTS

CITY OF SEATTLE DATUM

GRAPHIC SCALE

10 0 5 10 20

(IN FEET)

HORIZONTAL

GRAPHIC SCALE

5 0 2.5 5 10

(IN FEET)

VERTICAL

RECORD DRAWINGS

NO.	DATE	BY	CHD.	APPR.	REVISION

DATE 08/22/2018 | SCALE AS NOTED
DESIGNED WMA | CHECKED WMA
DRAWN NLM | PROJECT NAME
JOB NO. 112143

kpff
2407 North 31st Street, Suite 100
Tacoma, Washington 98407
(253) 396-0150 Fax (253) 396-0162

CALL 48 HOURS BEFORE YOU DIG 1-800-424-5555

SEATTLE IRON & METALS CORP.

RECORD DRAWINGS:
THESE RECORD DRAWINGS HAVE BEEN PREPARED FROM INFORMATION PROVIDED BY OTHERS. KPFF HAS NOT VERIFIED THE ACCURACY AND/OR COMPLETENESS OF THIS INFORMATION.

SEATTLE IRON & METALS
730 SOUTH MYRTLE STREET, SEATTLE, WA

INTERIM ACTION
REMEDIATION SECTIONS & DETAILS

SHEET C3.3

SHEET 15 OF 30

PLOTTED BY: nmedley DATE & TIME: Aug 22, 2018 - 10:33am FILE: N:\Civil\112-\112143 Seattle Iron and Metals\730 S Myrtle\5.04 Construction Support\8- Drawings\730 S MYRTLE SDCI\SDCI (Current)\15 C3.3 INTERIM ACTION REMEDIATION SECTIONS & DETAILS.dwg

PLOTTED BY: nmedley DATE & TIME: Aug. 22, 2018 - 10:34am FILE: N:\Civil\112-\112143 Seattle Iron and Metals\730 S Myrtle\5.04 Construction Support\8- Drawings\730 S MYRTLE SDCI (Current)\17 C4.1 GRADING & DRAINAGE PLAN.dwg

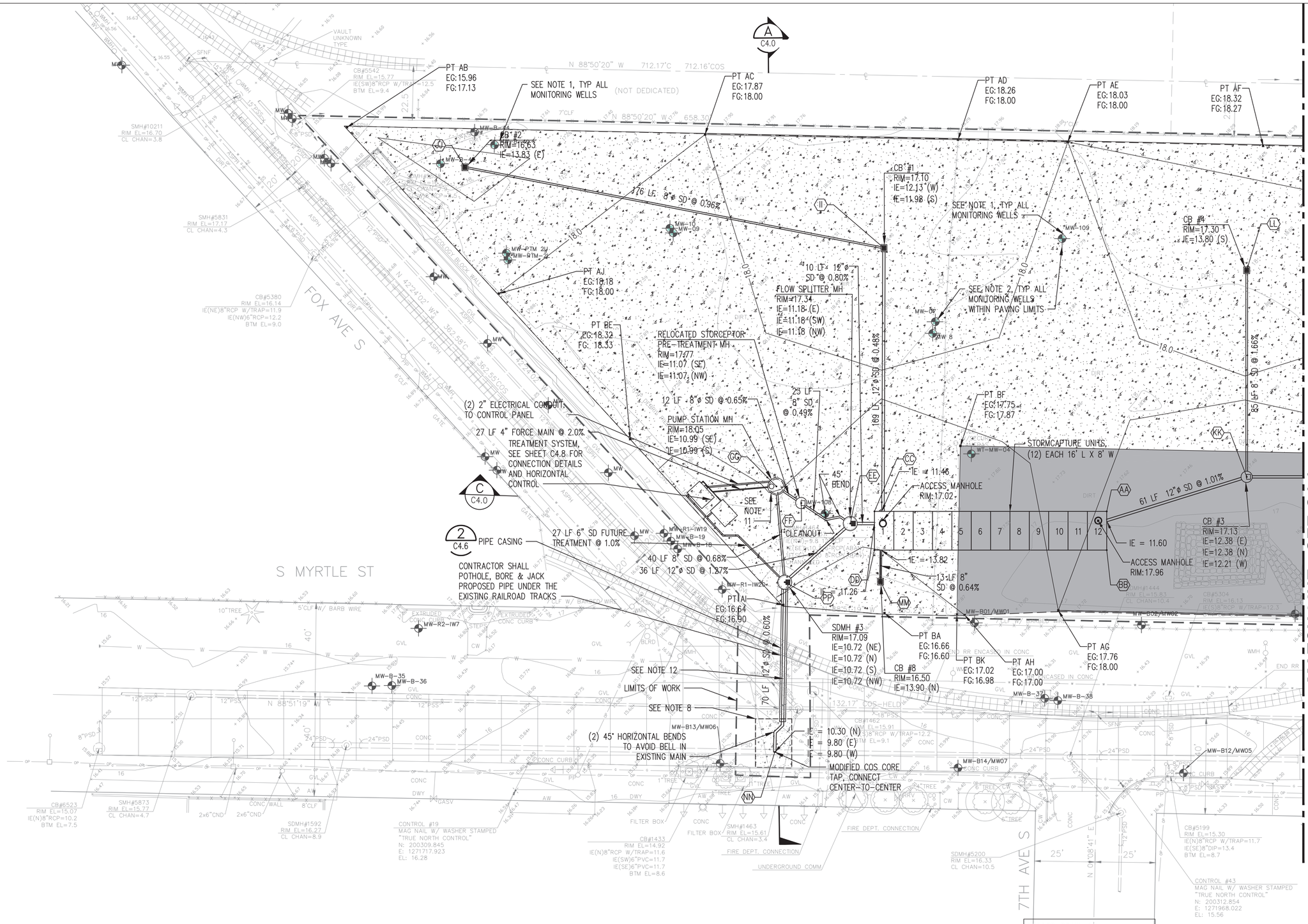

NOTES:

1. PROTECT ALL MONITORING WELLS IN PLACE DURING CONSTRUCTION.
2. CONTRACTOR SHALL LEAVE A 2'X2' AREA SURROUNDING WELLS TO BE ADJUSTED AT EXISTING GROUND SURFACE CONDITIONS FREE OF BACKFILL AND ASPHALT PAVING PER DETAIL 2 ON C4.4. MONUMENT REMOVAL AND REPLACEMENT AND FINAL PAVING TO MATCH FINISHED GRADE TO BE COMPLETED BY OTHERS.
3. SEE C4.2 AND C4.3 FOR DRAINAGE PROFILES.
4. CB TYPE 2 SHALL BE 48" ø UNLESS NOTED OTHERWISE.
5. STORM DRAIN PIPE SHALL BE PVC SDR 35 UNLESS OTHERWISE NOTED.
6. CONTAMINATED SOIL NOT SHOWN FOR CLARITY. SEE SHEET C3.0 FOR LIMITS OF EXCAVATION
7. HORIZONTAL CONTROL POINTS TO CENTER OF STRUCTURE. SEE SHEET C5.0 FOR LOCATION AND HORIZONTAL CONTROL DATA.
8. CONCRETE PANEL REPLACEMENT IN RIGHT-OF-WAY SHALL BE TO NEAREST JOINT PER COS STANDARD PLAN NO. 405a.
9. FOR ON-SITE CONCRETE PAVEMENT DETAILS, SEE SHEET C4.7
10. ALL SOIL AREAS DISTURBED DURING CONSTRUCTION AND NOT PAVED SHALL HAVE PERMANENT SEEDING PER COS STANDARD PLAN NO 142.
11. FOR PUMP STATION DETAILS SEE DETAIL SHEET C4.4-C4.5.
12. CONTRACTOR SHALL FIELD VERIFY WATER LINE. CONTRACTOR SHALL ADJUST WATER LINE PRIOR TO INSTALLATION OF SIDE SEWER PER SPU REQUIREMENTS.

LEGEND:

- ASPHALT PAVEMENT
- CONCRETE PAVEMENT, SEE NOTE 8 & 9
- CB TYPE 1
- CB TYPE 2
- MW — EXISTING MONITORING WELL
- XX — STORM DRAIN HORIZONTAL CONTROL POINT, SEE SHEET C5.0.
- PT XX — PAVING HORIZONTAL CONTROL POINT, SEE SHEET C5.0.

CITY OF SEATTLE DATUM

GRAPHIC SCALE

20 0 10 20 40

(IN FEET)

RECORD DRAWINGS

NO.	DATE	BY	CHD.	APPR.	REVISION

DATE 08/22/2018 | SCALE AS NOTED
DESIGNED WMA | CHECKED WMA
DRAWN NLM | PROJECT NAME
JOB NO. 112143

kpff
2407 North 31st Street, Suite 100
Tacoma, Washington 98407
(253) 396-0150 Fax (253) 396-0162

CALL 48 HOURS BEFORE YOU DIG 1-800-424-5555

SEATTLE IRON & METALS CORP.

RECORD DRAWINGS:
THESE RECORD DRAWINGS HAVE BEEN PREPARED FROM INFORMATION PROVIDED BY OTHERS. KPFF HAS NOT VERIFIED THE ACCURACY AND/OR COMPLETENESS OF THIS INFORMATION.

SEATTLE IRON & METALS
730 SOUTH MYRTLE STREET, SEATTLE, WA

GRADING & DRAINAGE PLAN

SHEET C4.0

SHEET 16 OF 30

MATCH LINE - SEE C4.0

PT AN
EG: 18.60
FG: 20.00

LEAVE 2' RADIUS AROUND
BILLBOARD FND FREE OF PAVEMENT

B
C4.0

N 88°50'20" W 712.17'C 712.16'COS

(NOT DEDICATED)

22.5'

PT AK
EG: 18.92
FG: 18.73

PT AL
EG: 19.07
FG: 19.00

N 88°50'20" W 658.30'

7'CLF

PT AO
EG: 18.09
FG: 20.00

N 47°49'40" W 367.68'M 367.47'COS

PT AM
EG: 20.27
FG: 19.45

PT AP
EG: 19.95
FG: 19.90

EXIST SHED TO REMAIN

SEE NOTE 7

10'

19.0

WATERLINE BUFFER,
SEE WATERLINE NOTES
ON SHEET C4.2

PT AR
EG: 19.33
FG: 20.00

CB #6
RIM=17.60
IE=14.10 (S)

18.0

8"ø SD @ 0.86%

70'LF

PT BJ
EG: 18.36
FG: 18.00

PT AS
EG: 19.09
FG: 20.00

PT AQ
EG: 20.00
FG: 19.99

PT BC
EG: 21.08
FG: 20.00

PT BD
EG: 21.48
FG: 20.00

150 LF 12"ø SD @ 0.75%

CONTRACTOR SHALL FIELD VERIFY WATER
LINE, SEE WATERLINE NOTES ON SHEET C4.2

CB #5
RIM=17.12
IE=14.45 (E)
IE=13.50 (N)
IE=13.50 (W)

126 LF 6"ø SD @ 1.25%

CB #7
RIM=17.18
IE=16.03 (W)

PT AU
EG: 18.81
FG: 18.56

WT-MW-110

SEE NOTE 1

6" SD SHALL BE
DUCTILE IRON

PT AX
EG: 17.81
FG: 17.65

APN 273410-0260

PT AT
EG: 19.04
FG: 19.00

PT AY
EG: 19.13
FG: 18.00

PT AZ
EG: 17.34
FG: 18.00

PT BI
EG: 18.08
FG: 17.79

PT AW
EG: 17.60
FG: 17.80

PT BH
EG: 17.76
FG: 17.86

PT AV
EG: 18.06
FG: 18.08

PT BG
EG: 17.76
FG: 17.90

14"_2-8"_3-6"TREES
W/24'RAD. DL(CLUSTER)

273.26' COS-HELD

N 88°51'19" W

N 88°51'19" W 134.16

329.72'C 329.69'COS

N 88°51'19" W

S. MYRTLE ST

E. MARGINAL WAY S.

N 13°22'52" E 719.70'M 719.00'COS

CONTROL #55
MAG NAIL W/ WASHER STAMPED
"TRUE NORTH CONTROL"
N: 200522.622
E: 1272466.058
ELEV: 18.32

CONTROL #66
MAG NAIL W/ WASHER
N: 200349.740
E: 1272407.667
ELEV: 17.83

SMH#5179
RIM EL=16.86
CL CHAN=14.0

SMH#5872
RIM EL=16.85
CL CHAN=2.7
IE(SW)8"DIP=10.25

6"CEDAR
W/12'RAD. DL

#711
1 STORY BUILDING

#719

#745
2 STORY BUILDING

#7135
1 STORY BUILDING

#7047
1 STORY BUILDING

NOTES:

1. MONITORING WELL WT-MW-110 WILL BE DECOMMISSIONED BY LICENSED DRILLER PRIOR TO CONSTRUCTION.
2. SEE C4.2 AND C4.3 FOR DRAINAGE PROFILES.
3. CB TYPE 2 SHALL BE 48" ø UNLESS NOTED OTHERWISE.
4. STORM DRAIN PIPE SHALL BE PVC SDR 35 UNLESS NOTED OTHERWISE.
5. CONTAMINATED SOIL NOT SHOWN FOR CLARITY. SEE SHEET C3.0 FOR LIMITS OF EXCAVATION
6. STORM DRAINAGE HORIZONTAL CONTROL POINTS TO CENTER OF STRUCTURE. SEE SHEET C5.0 FOR LOCATION AND HORIZONTAL CONTROL DATA.
7. EXISTING SHED GUTTERS TO BE REPLACED, ALL ROOF DRAINAGE SHALL DRAIN INTERIOR TO THE SITE.
8. SEE SHEET C5.0 FOR PAVING LOCATION AND HORIZONTAL CONTROL DATA.
9. ALL SOIL AREAS DISTURBED DURING CONSTRUCTION AND NOT PAVED SHALL HAVE PERMANENT SEEDING PER COS STANDARD PLAN NO 142.
10. FOR ON-SITE CONCRETE PAVING DETAILS, SEE SHEET C4.7

LEGEND:

- ASPHALT PAVEMENT (1 / C4.4)
- CONCRETE PAVEMENT, SEE NOTE 10
- CB TYPE 1
- CB TYPE 2
- MW EXISTING MONITORING WELL
- XX STORM DRAIN HORIZONTAL CONTROL POINT, SEE SHEET C5.0
- PT XX PAVING HORIZONTAL CONTROL POINT, SEE SHEET C5.0
- #1 WATERLINE POTHOLE LOCATIONS
- 10' WATERLINE BUFFER

N

CITY OF SEATTLE DATUM

GRAPHIC SCALE

20 0 10 20 40

(IN FEET)

RECORD DRAWINGS

NO.	DATE	BY	CHD.	APPR.	REVISION

DATE 08/22/2018 | SCALE AS NOTED
DESIGNED WMA | CHECKED WMA
DRAWN NLM | PROJECT NAME
JOB NO. 112143

kpff
2407 North 31st Street, Suite 100
Tacoma, Washington 98407
(253) 396-0150 Fax (253) 396-0162

CALL 48 HOURS BEFORE YOU DIG 1-800-424-5555

SEATTLE IRON & METALS CORP.

RECORD DRAWINGS:
THESE RECORD DRAWINGS HAVE BEEN PREPARED FROM INFORMATION PROVIDED BY OTHERS. KPFF HAS NOT VERIFIED THE ACCURACY AND/OR COMPLETENESS OF THIS INFORMATION.

SEATTLE IRON & METALS
730 SOUTH MYRTLE STREET, SEATTLE, WA

GRADING & DRAINAGE PLAN

SHEET C4.1

SHEET 17 OF 30

PLOTTED BY: nmedley DATE & TIME: Aug. 22, 2018 - 10:34am FILE: W:\Civil\112-\112143 Seattle Iron and Metals\730 S Myrtle\5.04 Construction Support\8- Drawings\730 S MYRTLE SDCI (Current)\17 C4.1 GRADING & DRAINAGE PLAN.dwg

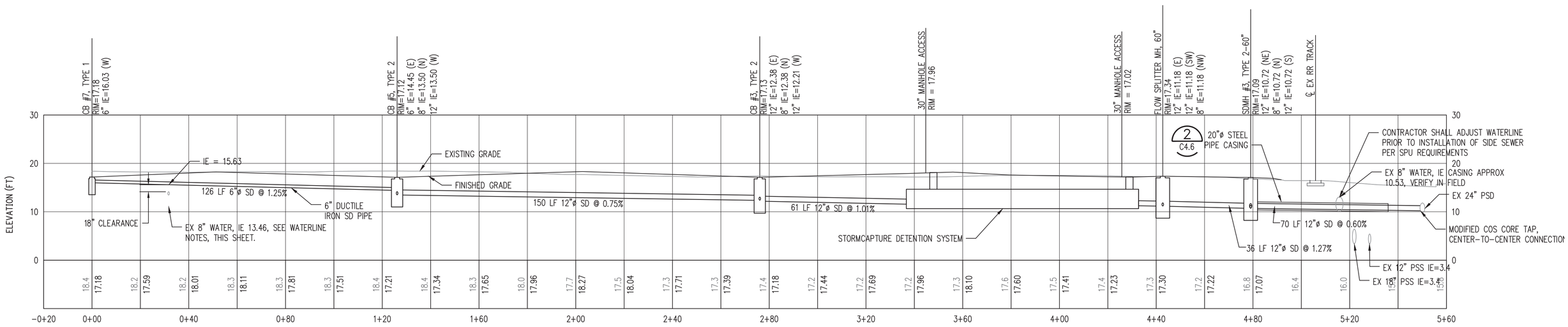

WATERLINE NOTES:

1. WATERLINE INFORMATION TAKEN FROM AVAILABLE RECORDS AND FIELD INVESTIGATIONS COMPLETED BY GLACIER ENVIRONMENTAL INC DATED AUGUST 23, 2017. SEE EXISTING WATERLINE PROFILE, THIS SHEET, FOR POTHOLE LOCATIONS.
2. PRIOR TO LAYING PIPE THE CONTRACTOR SHALL:
   A. IN THE PRESENCE OF THE SPU RESIDENT ENGINEER, EXPOSE THE EXISTING WATER MAIN TO DETERMINE ITS ELEVATION AND ALIGNMENT. (SPU TO OBTAIN OUTSIDE DIAMETER AT THE SAME TIME.)
   B. PROVIDE ALL CONTROL SURVEYS REQUIRED TO DEFINE THE ALIGNMENT AND ELEVATIONS OF THE WATER MAIN IN CONFORMANCE WITH THE APPROVED PLAN. THE SURVEYS SHALL BE PERFORMED BY A SURVEYOR LICENSED BY THE STATE OF WASHINGTON. ALL REFERENCE MARKS SHALL BE PRESERVED DURING CONSTRUCTION. A GRADE SHEET, IN ACCEPTABLE FORMAT, SHALL BE PROVIDED PRIOR TO BEGINNING WORK.
3. CONTRACTOR SHALL PROVIDE SETTLEMENT MONITORING ALONG THE LENGTH OF THE EXISTING WATERLINE.
4. WHEN CROSSING UNDERNEATH WATER MAIN, IT SHALL MAINTAIN A MINIMUM 18" VERTICAL CLEARANCE, AND THE CONTRACTOR SHALL:
   A. PROVIDE WATER MAIN SUPPORT AND PROTECTION PLAN FOR REVIEW BY SPU. AFTER APPROVAL BY SPU, THE PLAN SHALL BE USED AT ALL LOCATIONS WHERE EXCAVATION IS OCCURRING UNDER SPU UTILITIES. SPU WOULD LIKE TO TAKE THIS OPPORTUNITY TO INSPECT THE PIPE MORTAR COATING, WHILE THE TRENCH IS OPEN. CONTRACT JERRY GO @ 206-615-0633 AT LEAST 48 HOURS BEFORE THE START DATE.
   B. IF WATER MAIN JOINTS ARE EXPOSED, NOTIFY SPU ASSET PROTECTION ENGINEER (STEVE FRIEND). THE ENGINEER WILL COORDINATE WITH SPU CREW TO INSPECT THE JOINTS FOR LEAKS AND RECAULKING.
5. LEAK TEST SHALL BE PREFORMED BEFORE AND AFTER CONSTRUCTION.
6. NO HEAVY EQUIPMENT OR STATING OVER 10' BUFFER (5' OFFSET FROM EACH SIDE OF THE WATERMAIN) ALONG THE LENGTH OF THE MAIN. TRUCKING ARE NOT ALLOWED OVER THE 10' BUFFER AREA WHEN THE SITE IS EXPOSED TO ITS SUBGRADE.
7. USE NON-VIBRATORY COMPACTION METHOD WHEN WORKING WITHIN THE 10' BUFFER AREA.
8. DURING CONSTRUCTION, IF EXCESSIVE SETTLEMENT IS OBSERVED, IMMEDIATELY CONTACT SPU FOR FURTHER GUIDANCE. IF THE PIPE IS CONSIDERED COMPROMISED, PROJECT IS RESPONSIBLE TO REPLACE WATERMAINN.

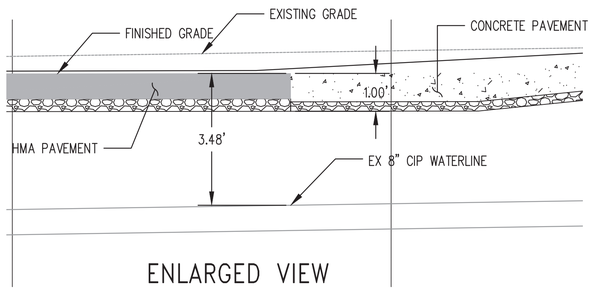

ENLARGED VIEW

SCALE: NTS

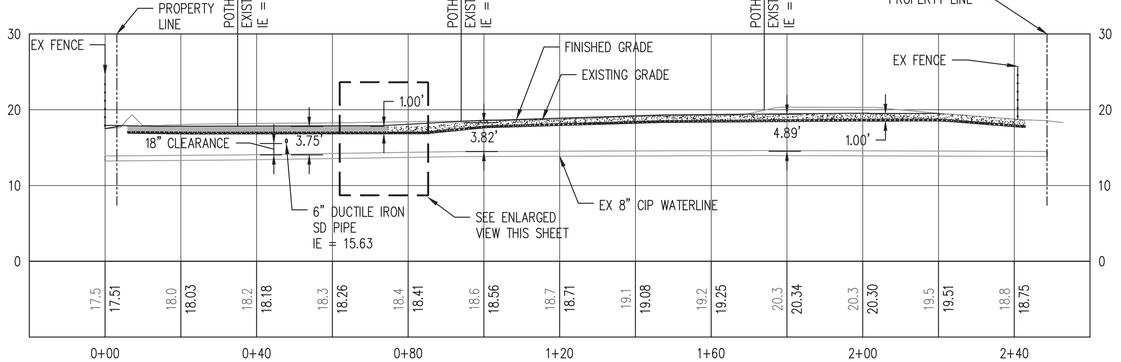

EXISTING 8" CIP WATERLINE PROFILE

SCALE: V: 1" = 10' H: 1" = 20'

CITY OF SEATTLE DATUM

GRAPHIC SCALE
20 0 10 20 40
(IN FEET)
HORIZONTAL

GRAPHIC SCALE
10 0 5 10 20
(IN FEET)
VERTICAL

NOTES:

1. DIMENSIONS AT POTHOLE LOCATIONS MEASURE FROM PROPOSED GRADE TO TOP OF EXISTING WATERLINE PIPE.
2. PROPOSED HMA AND CONCRETE PAVEMENT SECTIONS ARE 1 FOOT IN DEPTH. SEE DETAIL 1 ON SHEET C4.4 FOR HMA SECTION AND DETAIL 1 ON SHEET C4.7 FOR CONCRETE SECTION.

RECORD DRAWINGS

NO.	DATE	BY	CHD.	APPR.	REVISION

DATE 08/22/2018 | SCALE AS NOTED
DESIGNED WMA | CHECKED WMA
DRAWN NLM | PROJECT NAME
JOB NO. 112143

kpff
2407 North 31st Street, Suite 100
Tacoma, Washington 98407
(253) 396-0150 Fax (253) 396-0162

CALL 48 HOURS BEFORE YOU DIG 1-800-424-5555

SEATTLE IRON&METALS CORP.

RECORD DRAWINGS:
THESE RECORD DRAWINGS HAVE BEEN PREPARED FROM INFORMATION PROVIDED BY OTHERS. KPFF HAS NOT VERIFIED THE ACCURACY AND/OR COMPLETENESS OF THIS INFORMATION.

SEATTLE IRON & METALS
730 SOUTH MYRTLE STREET, SEATTLE, WA

DRAINAGE AND EXISTING WATERLINE PROFILES

SHEET C4.2
SHEET 18 OF 30

PLOTTED BY: nmedley DATE & TIME: Aug 22, 2018 - 10:35am FILE: N:\Civil\112-\112143 Seattle Iron and Metals\730 S Myrtle\5.04 Construction Support\8- Drawings\730 S MYRTLE SDCI (Current)\19 C4.3 DRAINAGE PROFILES.dwg

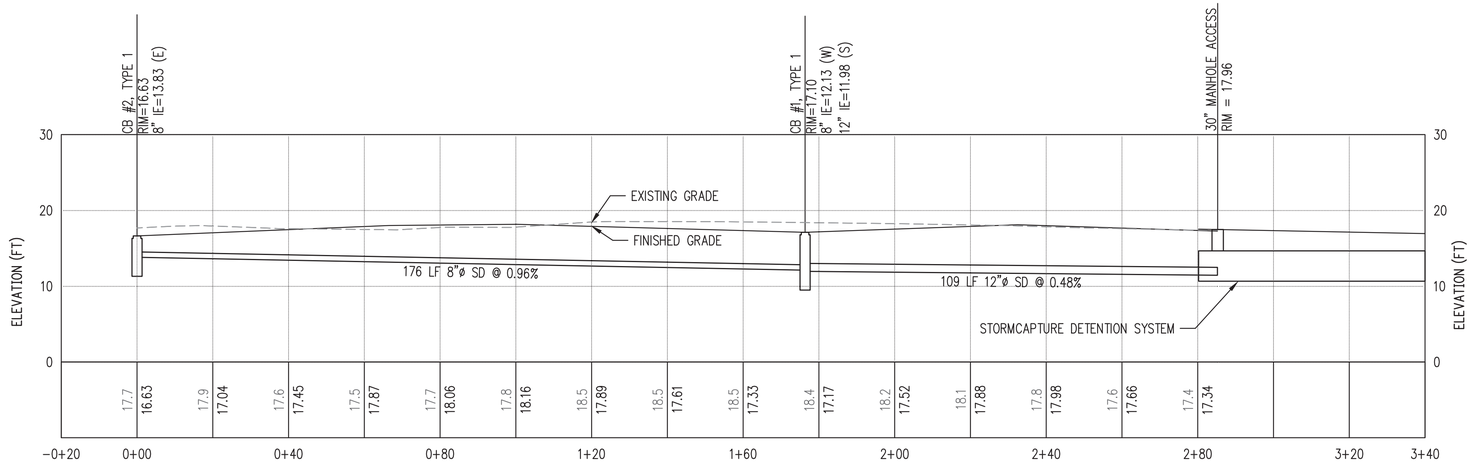

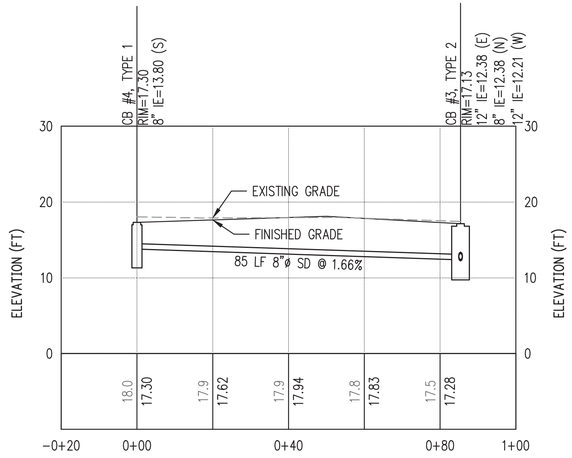

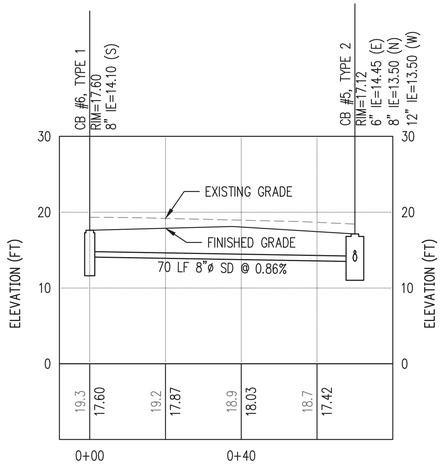

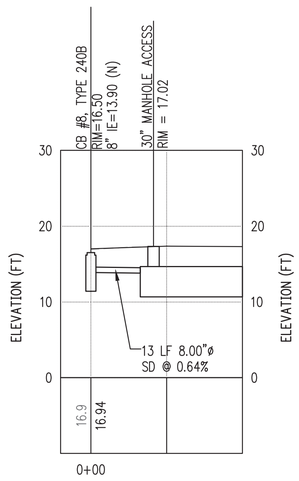

CITY OF SEATTLE DATUM

GRAPHIC SCALE

20 0 10 20 40

(IN FEET)

HORIZONTAL

GRAPHIC SCALE

10 0 5 10 20

(IN FEET)

VERTICAL

RECORD DRAWINGS

NO.	DATE	BY	CHD.	APPR.	REVISION

DATE 08/22/2018 | SCALE AS NOTED
DESIGNED WMA | CHECKED WMA
DRAWN NLM | PROJECT NAME
JOB NO. 112143

kpff
2407 North 31st Street, Suite 100
Tacoma, Washington 98407
(253) 396-0150 Fax (253) 396-0162

CALL 48 HOURS BEFORE YOU DIG 1-800-424-5555

SEATTLE IRON & METALS CORP.

RECORD DRAWINGS:
THESE RECORD DRAWINGS HAVE BEEN PREPARED FROM INFORMATION PROVIDED BY OTHERS. KPFF HAS NOT VERIFIED THE ACCURACY AND/OR COMPLETENESS OF THIS INFORMATION.

SEATTLE IRON & METALS
730 SOUTH MYRTLE STREET, SEATTLE, WA

DRAINAGE PROFILES

SHEET C4.3

SHEET 19 OF 30

PLOTTED BY: nmedley DATE & TIME: Aug. 22, 2018 - 10:35am FILE: K:\Civil\112-\112143 Seattle Iron and Metals\730 S Myrtle\5.04 Construction Support\8- Drawings\730 S MYRTLE SDCI\SDCI (Current)\19 C4.3 DRAINAGE PROFILES.dwg

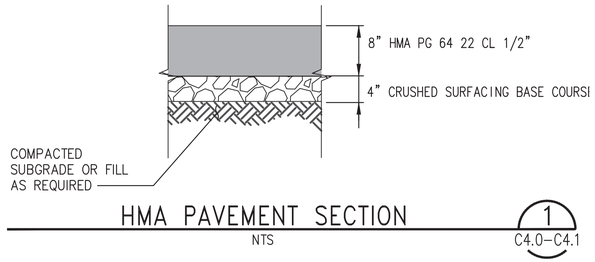

HMA PAVEMENT SECTION

NTS — 1 — C4.0–C4.1

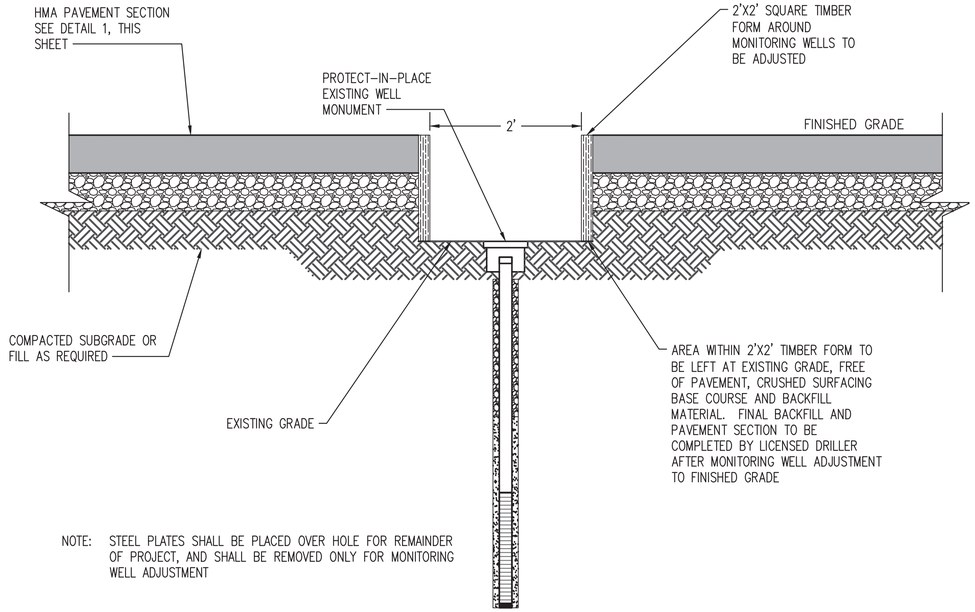

NOTE: STEEL PLATES SHALL BE PLACED OVER HOLE FOR REMAINDER OF PROJECT, AND SHALL BE REMOVED ONLY FOR MONITORING WELL ADJUSTMENT

MONITORING WELL PAVING DETAIL

NTS — 2 — C4.0–C4.1

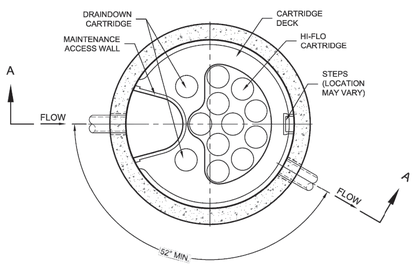

PLAN VIEW

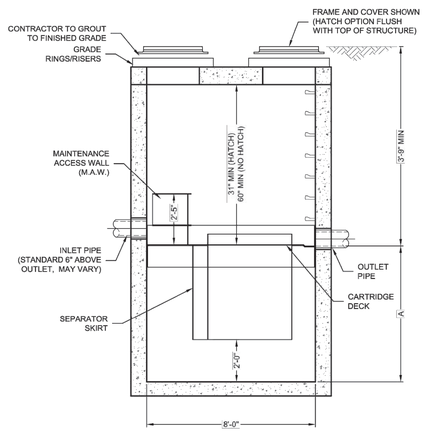

SECTION A-A

Jellyfish® Filter

THIS PRODUCT MAY BE PROTECTED BY ONE OR MORE OF THE FOLLOWING: U.S. PATENT NO. 9,287,735, 9,221,618 &, US & *23,955; OTHER INTERNATIONAL PATENTS PENDING

JELLYFISH DESIGN NOTES

JELLYFISH TREATMENT CAPACITY IS A FUNCTION OF THE CARTRIDGE SELECTION AND THE NUMBER OF CARTRIDGES. THE STANDARD MANHOLE STYLE IS SHOWN. Ø96" MANHOLE JELLYFISH PEAK TREATMENT CAPACITY IS 1.96 CFS. IF THE SITE CONDITIONS EXCEED 1.96 CFS AN UPSTREAM BYPASS STRUCTURE IS REQUIRED.

CARTRIDGE SELECTION

CARTRIDGE DEPTH	54"	40"	27"	15"
OUTLET INVERT TO STRUCTURE INVERT (A)	6'-5"	5'-3"	4'-2"	3'-2"
FLOW RATE HIGH-FLO / DRAINDOWN (cfs) (per cart)	0.18 / 0.09	0.13 / 0.065	0.09 / 0.045	0.05 / 0.025
MAX. CARTS HIGH-FLO / DRAINDOWN	10 / 2			

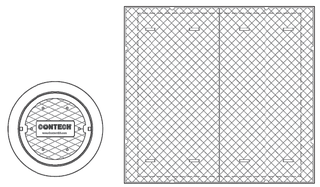

FRAME AND COVER
(DIAMETER VARIES)
N.T.S.

HATCH
(72" x 72" CAST INTO SLAB)
N.T.S.

SITE SPECIFIC DATA REQUIREMENTS

STRUCTURE ID			*
WATER QUALITY FLOW RATE (cfs)			*
PEAK FLOW RATE (cfs)			*
RETURN PERIOD OF PEAK FLOW (yrs)			*
# OF CARTRIDGES REQUIRED (HF / DD)			* / *
CARTRIDGE SIZE			*
PIPE DATA:	I.E.	MATERIAL	DIAMETER
INLET PIPE #1	*	*	*
INLET PIPE #2	*	*	*
OUTLET PIPE	*	*	*
RIM ELEVATION			*
ANTI-FLOTATION BALLAST		WIDTH	HEIGHT
		*	*

NOTES/SPECIAL REQUIREMENTS:

* PER ENGINEER OF RECORD

GENERAL NOTES:
1. CONTECH TO PROVIDE ALL MATERIALS UNLESS NOTED OTHERWISE.
2. FOR SITE SPECIFIC DRAWINGS WITH DETAILED STRUCTURE DIMENSIONS AND WEIGHT, PLEASE CONTACT YOUR CONTECH ENGINEERED SOLUTIONS REPRESENTATIVE. www.ContechES.com
3. JELLYFISH WATER QUALITY STRUCTURE SHALL BE IN ACCORDANCE WITH ALL DESIGN DATA AND INFORMATION CONTAINED IN THIS DRAWING. CONTRACTOR TO CONFIRM STRUCTURE MEETS REQUIREMENTS OF PROJECT.
4. STRUCTURE SHALL MEET AASHTO HS-20 OR PER APPROVING JURISDICTION REQUIREMENTS, WHICHEVER IS MORE STRINGENT, ASSUMING EARTH COVER OF 0' - 3', AND GROUNDWATER ELEVATION AT, OR BELOW, THE OUTLET PIPE INVERT ELEVATION. ENGINEER OF RECORD TO CONFIRM ACTUAL GROUNDWATER ELEVATION. CASTINGS SHALL MEET AASHTO M306 LOAD RATING AND BE CAST WITH THE CONTECH LOGO.
5. STRUCTURE SHALL BE PRECAST CONCRETE CONFORMING TO ASTM C-478 AND AASHTO LOAD FACTOR DESIGN METHOD.
6. NO PRODUCT SUBSTITUTIONS SHALL BE ACCEPTED UNLESS SUBMITTED 10 DAYS PRIOR TO PROJECT BID DATE, OR AS DIRECTED BY THE ENGINEER OF RECORD.

INSTALLATION NOTES
A. ANY SUB-BASE, BACKFILL DEPTH, AND/OR ANTI-FLOTATION PROVISIONS ARE SITE-SPECIFIC DESIGN CONSIDERATIONS AND SHALL BE SPECIFIED BY ENGINEER OF RECORD.
B. CONTRACTOR TO PROVIDE EQUIPMENT WITH SUFFICIENT LIFTING AND REACH CAPACITY TO LIFT AND SET THE STRUCTURE (LIFTING CLUTCHES PROVIDED)
C. CONTRACTOR WILL INSTALL AND LEVEL THE STRUCTURE, SEALING THE JOINTS, LINE ENTRY AND EXIT POINTS (NON-SHRINK GROUT WITH APPROVED WATERSTOP OR FLEXIBLE BOOT)
D. CONTRACTOR TO TAKE APPROPRIATE MEASURES TO PROTECT CARTRIDGES FROM CONSTRUCTION-RELATED EROSION RUNOFF.
E. CARTRIDGE INSTALLATION, BY CONTECH, SHALL OCCUR ONLY AFTER SITE HAS BEEN STABILIZED AND THE JELLYFISH UNIT IS CLEAN AND FREE OF DEBRIS. CONTACT CONTECH TO COORDINATE CARTRIDGE INSTALLATION WITH SITE STABILIZATION AT (866) 740-3318.

CONTECH® ENGINEERED SOLUTIONS LLC
www.ContechES.com
9025 Centre Pointe Dr., Suite 400, West Chester, OH 45069
800-338-1122 513-645-7000 513-645-7993 FAX

JELLYFISH JF8
STANDARD DETAIL
OFFLINE CONFIGURATION

FOR REFERENCE ONLY

JELLYFISH FILTER DETAIL

NTS — 3 — C4.0

PUMP STATION DATA TABLE:

PUMP STYLE = DUPLEX

RATED FLOW = 118–GPM EA PUMP

TDH = 19.37–FT (AT 1–PUMP ON)

PUMP MODEL No. = LITTLE GIANT WS102M–32

MANHOLE = 72–IN DIAMETER WSDOT TY–3 (MODIFIED)

MOTOR = 1–HP, 3–PHASE, 230/460–V, SUBMERSIBLE, EXPLOSION–PROOF

CONTROLS = LITTLE GIANT OUTDOOR DUPLEX, THREE PHASE MODEL 3221W201H17A OR APPROVED EQUAL, INTRINSICALLY SAFE FIBERGLASS ENCLOSURE (WASHDOWN DUTY)

PUMP STATION LEVEL CONTROLS = EXPLOSION–PROOF, INTRINSICALLY SAFE

NOTES:
1. SEE SHEET C4.5 FOR PUMP STATION DETAIL.
2. PUMP STATION CONTROL SHALL BE CONFIGURED SO PUMPS WILL AUTOMATICALLY ALTERNATE PER RUN CYCLE, WITH (1) PUMP ON AND (1) PUMP OFF DURING ANY GIVEN RUN CYCLE.

PUMP STATION AND CONTROL DATA

4 — C4.4

RECORD DRAWINGS

NO.	DATE	BY	CHD.	APPR.	REVISION

DATE 08/22/2018 | SCALE AS NOTED
DESIGNED WMA | CHECKED WMA
DRAWN NLM | PROJECT NAME
JOB NO. 112143

kpff
2407 North 31st Street, Suite 100
Tacoma, Washington 98407
(253) 396-0150 Fax (253) 396-0162

CALL 48 HOURS BEFORE YOU DIG 1-800-424-5555

SEATTLE IRON & METALS CORP.

RECORD DRAWINGS:
THESE RECORD DRAWINGS HAVE BEEN PREPARED FROM INFORMATION PROVIDED BY OTHERS. KPFF HAS NOT VERIFIED THE ACCURACY AND/OR COMPLETENESS OF THIS INFORMATION.

SEATTLE IRON & METALS
730 SOUTH MYRTLE STREET, SEATTLE, WA
GRADING & DRAINAGE DETAILS

SHEET C4.4

SHEET 20 OF 30

PLOTTED BY: nmedley DATE & TIME: Aug 22, 2018 – 10:35am FILE: N:\Civil\112–\112143 Seattle Iron and Metals\730 S Myrtle\5.04 Construction Support\8– Drawings\730 S MYRTLE SOD\SOCI (Current)\20 C4.4 GRADING & DRAINAGE DETAILS.dwg

I:\COMMON\CAD\TREATMENT\13 JELLYFISH FILTER\40 STANDARD DRAWINGS\SOFFLINE\SHOU-JF8-STL.DWG 6/30/2015 4:58 PM

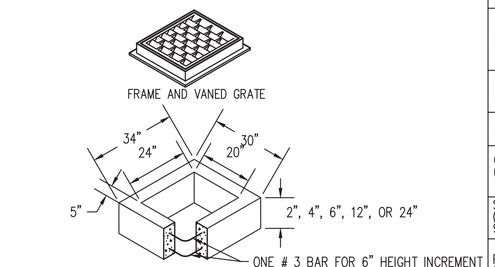

RECTANGULAR ADJUSTMENT SECTION

PIPE ALLOWANCES	
PIPE MATERIAL	MAXIMUM INSIDE DIAMETER
REINFORCED OR PLAIN CONCRETE	12"
ALL METAL PIPE	15"
CPSSP (STD SPEC 9-05.20)	12"
SOLID WALL PVC (STD SPEC 9-05.12(1))	15"
PROFILE WALL PVC (STD SPEC 9-05.12(2))	15"

* CORRUGATED POLYETHYLENE STORM SEWER PIPE

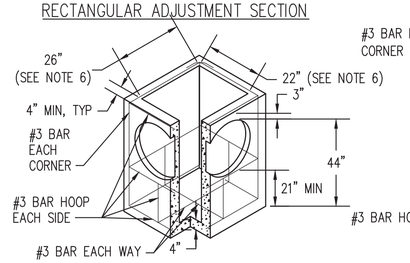

PRECAST BASE SECTION

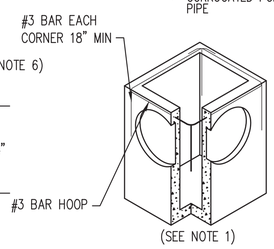

ALTERNATIVE PRECAST BASE SECTION

NOTES:

1. AS ACCEPTABLE ALTERNATIVES TO THE REBAR SHOWN IN THE PRECAST BASE SECTION, FIBERS (PLACED ACCORDING TO THE STANDARD SPECIFICATIONS), OR WIRE MESH HAVING A MINIMUM AREA OF 0.12 SQUARE INCHES PER FOOT SHALL BE USED WITH THE MINIMUM REQUIRED REBAR SHOWN IN THE ALTERNATIVE PRECAST BASE SECTION. WIRE MESH SHALL NOT BE PLACED IN THE KNOCKOUTS.
2. THE KNOCKOUT DIAMETER SHALL NOT BE GREATER THAN 20". KNOCKOUTS SHALL HAVE A WALL THICKNESS OF 2" MINIMUM TO 2.5" MAXIMUM. PROVIDE A 1.5" MINIMUM GAP BETWEEN THE KNOCKOUT WALL AND THE OUTSIDE OF THE PIPE. KNOCKOUTS SHALL HAVE FLEXIBLE GASKET IN ACCORDANCE WITH STANDARD SPECIFICATION 9-04.5.
3. THE MAXIMUM DEPTH FROM THE FINISHED GRADE TO THE LOWEST PIPE INVERT SHALL BE 5'.
4. THE FRAME AND GRATE MAY BE INSTALLED WITH THE FLANGE DOWN, OR INTEGRALLY CAST INTO THE ADJUSTMENT SECTION WITH FLANGE UP.
5. THE PRECAST BASE SECTION MAY HAVE A ROUNDED FLOOR, AND THE WALLS MAY BE SLOPED AT A RATE OF 1:24 OR STEEPER.
6. THE OPENING SHALL BE MEASURED AT THE TOP OF THE PRECAST BASE SECTION.
7. ALL PICKUP HOLES SHALL BE GROUTED FULL AFTER THE BASIN HAS BEEN PLACED.
8. ALL CATCH BASINS SHALL BE DESIGNED TO HANDLE LOADS DEPICTED ON SHEET C5.0.

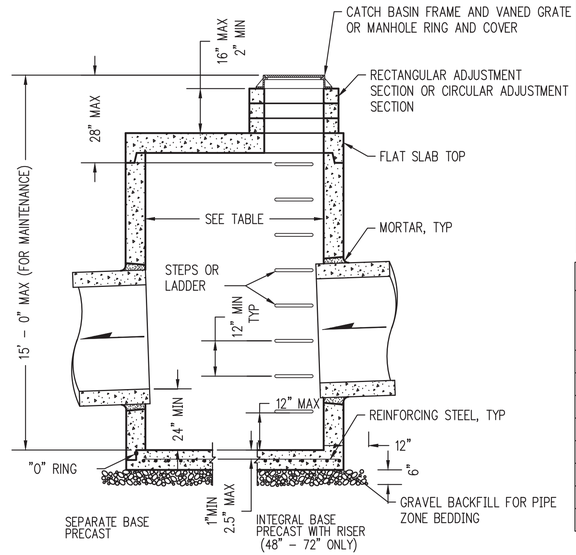

CATCH BASIN DIMENSIONS				
CATCH BASIN DIAMETER	MIN. WALL THICKNESS	MIN. BASE THICKNESS	MAXIMUM KNOCKOUT SIZE	MINIMUM DISTANCE BETWEEN KNOCKOUTS
48"	4"	6"	36"	8"
54"	4.5"	8"	42"	8"
60"	5"	8"	48"	8"
72"	6"	8"	60"	12"
84"	8"	12"	72"	12"
96"	8"	12"	84"	12"
120"	10"	12"	96"	12"
144"	12"	12"	108"	12"

PIPE ALLOWANCES					
CATCH BASIN DIAMETER	PIPE MATERIAL WITH MAXIMUM INSIDE DIAMETER				
	CONCRETE	ALL METAL	CPSSP ①	SOLID WALL PVC ②	PROFILE WALL PVC ③
48"	24"	30"	24"	30"	30"
54"	30"	36"	30"	36"	36"
60"	36"	42"	36"	42"	42"
72"	42"	54"	42"	48"	48"
84"	54"	60"	54"	48"	48"
96"	60"	72"	60"	48"	48"
120"	66"	84"	60"	48"	48"
144"	78"	96"	60"	48"	48"

① CORRUGATED POLYETHYLENE STORM SEWER PIPE (STANDARD SPECIFICATION 9-05.20
② (STANDARD SPECIFICATION 9-05.12(1))
③ (STANDARD SPECIFICATION 9-05.12(2))

NOTES:

1. NO STEPS ARE REQUIRED WHEN HEIGHT IS 4' OR LESS.
2. THE BOTTOM OF THE PRECAST CATCH BASIN MAYBE SLOPED TO FACILITATE CLEANING.
3. THE RECTANGULAR FRAME AND GRATE MAY BE INSTALLED WITH THE FLANGE UP OR DOWN. THE FRAME MAY BE CAST INTO THE ADJUSTMENT SECTION.
4. KNOCKOUTS SHALL HAVE A WALLTHICKNESS OF 2" MINIMUM TO 2.5" MAXIMUM. PROVIDE A 1.5" MINIMUM GAP BETWEEN THE KNOCKOUT WALL AND THE OUTSIDE OF THE PIPE. KNOCKOUTS SHALL HAVE FLEXIBLE GASKET IN ACCORDANCE WITH STANDARD SPECIFICATION 9-04.5.
5. ALL CATCH BASINS SHALL BE DESIGNED TO HANDLE LOADS DEPICTED ON SHEET C5.0.

WSDOT CATCH BASIN TYPE 1 DETAIL (1) C4.0
NTS

WSDOT CATCH BASIN TYPE 2 DETAIL (2) C4.0
NTS

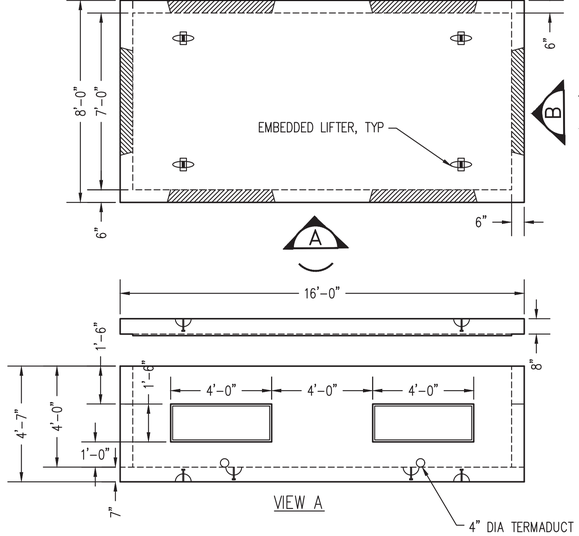

NOTES:

1. STORMCAPTURE SHALL BE DESIGNED TO HANDLE LOADS DEPICTED ON SHEET C5.0.
2. DETAIL PROVIDED FOR REFERENCE ONLY. CONTRACTOR SHALL SUBMIT SHOP DRAWINGS AND CALCULATIONS FOR APPROVAL.
3. FOR ACCESS POINTS SEE SHEETS C4.0, C4.2, AND C4.3.

STORMCAPTURE DETAIL (3) C4.0
NTS

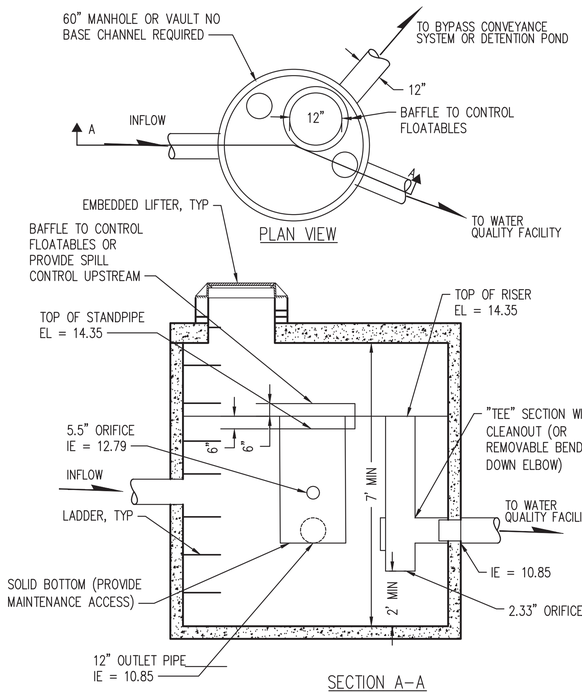

FLOW SPLITTER (4) C4.0
NTS

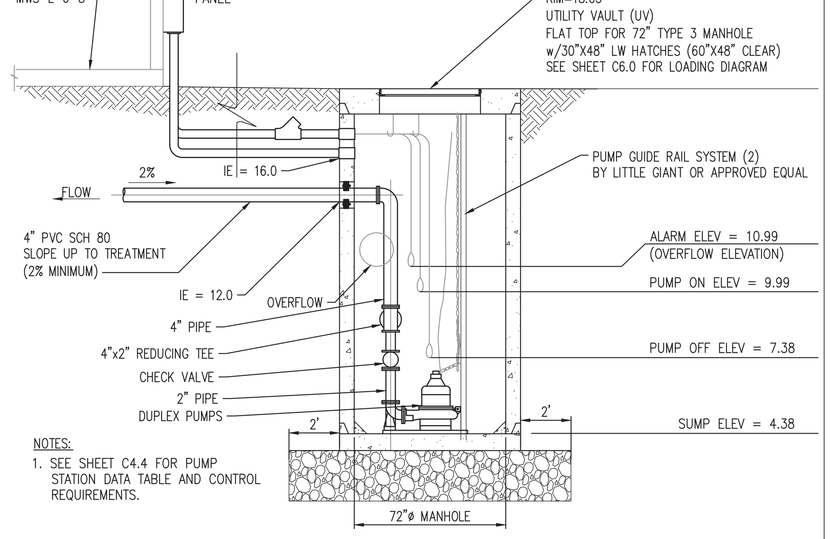

NOTES:

1. SEE SHEET C4.4 FOR PUMP STATION DATA TABLE AND CONTROL REQUIREMENTS.

PUMP STATION DETAIL (5) C4.0
NTS

RECORD DRAWINGS

RECORD DRAWINGS:
THESE RECORD DRAWINGS HAVE BEEN PREPARED FROM INFORMATION PROVIDED BY OTHERS. KPFF HAS NOT VERIFIED THE ACCURACY AND/OR COMPLETENESS OF THIS INFORMATION.

NO.	DATE	BY	CHD.	APPR.	REVISION

DATE 08/22/2018 | SCALE AS NOTED
DESIGNED WMA | CHECKED WMA
DRAWN NLM | PROJECT NAME
JOB NO. 112143

kpff
2407 North 31st Street, Suite 100
Tacoma, Washington 98407
(253) 396-0150 Fax (253) 396-0162

CALL 48 HOURS BEFORE YOU DIG 1-800-424-5555

SEATTLE IRON&METALS CORP.

SEATTLE IRON & METALS
730 SOUTH MYRTLE STREET, SEATTLE, WA
GRADING & DRAINAGE DETAILS

SHEET C4.5
SHEET 21 OF 30

PLOTTED BY: nmedley DATE & TIME: Aug 22, 2018 - 10:36am FILE: N:\Civil\112-\112143 Seattle Iron and Metals\730 S Myrtle\5.04 Construction Support\8- Drawings\730 S MYRTLE SDCI (Current)\21 C4.5 GRADING & DRAINAGE DETAILS.dwg

"H"	REINFORCING STEEL "A" MIN. SQ IN/FT, TOP FACE, IN EACH DIRECTION	
	PRECAST BASE	CAST-IN-PLACE BASE
20' MAX	0.25	0.17
30' MAX	0.31	0.22
40' MAX	0.36	0.25

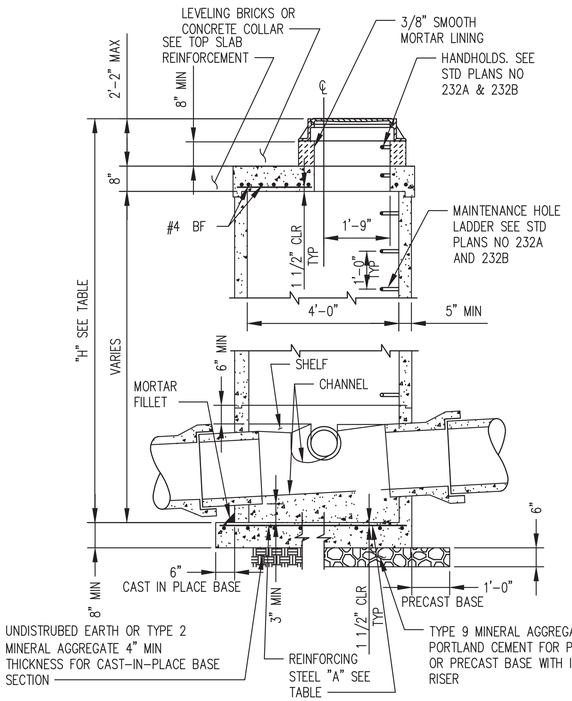

SECTION A-A

NOTES:

1. MATERIALS: CONCRETE-CLASS 4000; REINFORCING STEEL-ASTM A615 GRADE 60 MIN; CHANNEL AND SHELF MATERIAL - CONCRETE CLASS 3000.
2. PRECAST MAINTENANCE HOLE COMPONENTS MUST CONFORM TO ASTM C 478. JOINTS BETWEEN PRECAST COMPONENTS MUST BE RUBBER GASKETED CONFORMING TO ASTM C 443.
3. MINIMUM REQUIRED SOIL BEARING = 3,000 LBS/SQ FT
4. MAX HOLE SIZE MUST BE OD OF PIPE PLUS 5 IN. MIN HOLE SIZE MUST BE OD OF PIPE PLUS 3 IN. MIN CLEAR DISTANCE BETWEEN HOLES IS 8 IN.

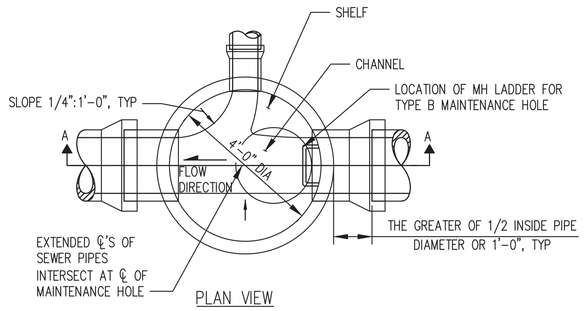

PLAN VIEW

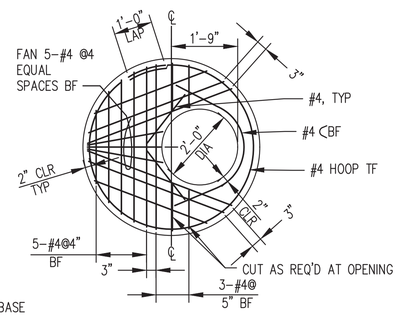

CITY OF SEATTLE TYP 204B MAINTENANCE HOLE

1 — NTS

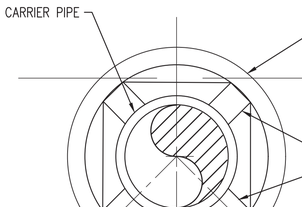

SECTION A-A
SD PIPE

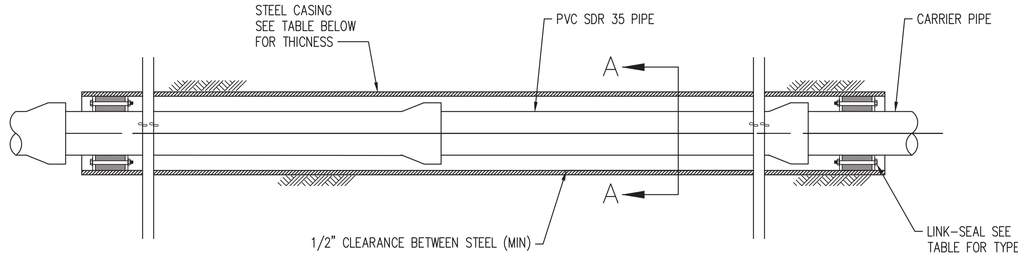

MINIMUM THICKNESS FOR CASING PIPE	DIAMETER OF CASING PIPE
1/4" (0.25")	12" OR LESS
5/16" (0.3125")	OVER 12"-18"
15/32" (0.469")	20" & 22"

CARRIER PIPE SIZE (NOMINAL)	CASING SIZE (NOMINAL)	LINK-SEAL SIZE NO.
6"	10"	LS-475-C
8"	16"	LS-475-C
10"	18"	LS-400-C
12"	20"	LS-400-C
18"	30"	LS-500-C

NOTES:

1. THIS SECTION SHOWS PIPE CASING AS REQUIRED BY AREMA STANDARDS FOR E80 LOADING.
2. CASING MUST EXTEND 25' BEYOND THE CENTERLINE OF THE TRACKS PER AREMA SECTION 5.3.4.3.

CASING:
SIZE AND MINIMUM THICKENESS OF CASING SHALL BE AS SHOWN ON THE CONTRACT DRAWINGS. HOWEVER, THE CONTRACTOR SHALL BE RESPONSIBLE FOR SELECTING THE THICKNESS CONSISTENT WITH HIS OPERATION.

CASING SEAL:
MINIMUM 3/16" THICK, SHEET TYPE SYNTHETIC RUBBER WITH STAINLESS STEEL BANDS.

CASING DETAIL

NTS — 2 — C4.0

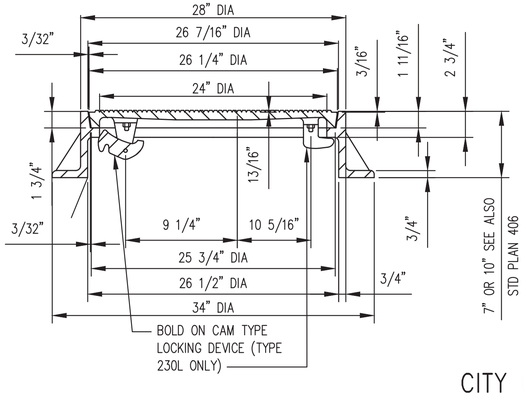

SECTION A-A

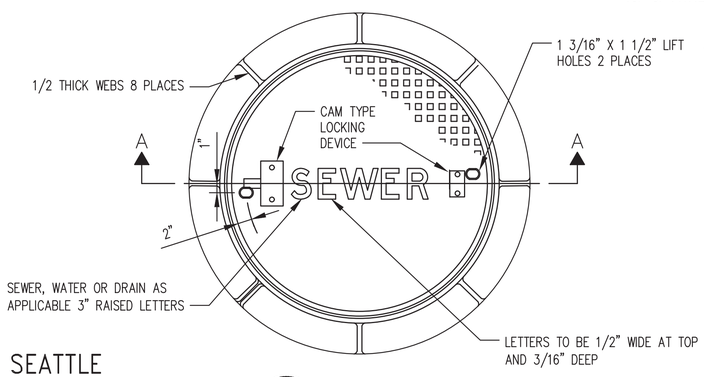

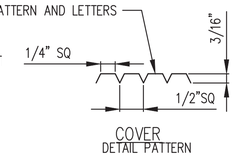

NOTES

1. DESIGNATE LOCKING COVER AS TYPE 230L FOR USE IN NON-VEHICULAR TRAFFIC AREAS.
2. COVER THICKNESS IS MEASURED FROM THE BOTTOM OF THE PATTERN
3. COVERS MUST BE MANUFACTURED FROM DUCTILE IRON.

CITY OF SEATTLE FRAME 3 COVER

NTS — 3 — -

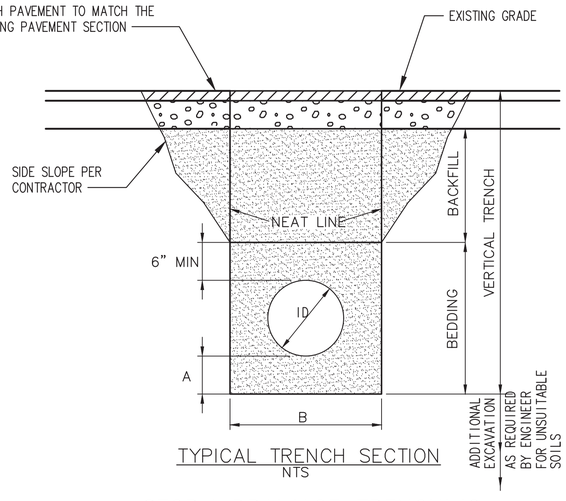

TYPICAL TRENCH SECTION
NTS

NOTES:

1. PLACE THE APPROPRIATE UTILITY MARKING TAPE, WITH METAL FIBERS, 1' ABOVE THE PIPE CONTINUOUSLY ALONG THE PIPE LENGTH.
2. EXCAVATIONS GREATER THAN 4' DEEP SHALL BE SHORED OR SLOPED BACK AS DESCRIBED IN THE SPECIFICATIONS.
3. DEWATER EXCAVATIONS WHEN REQUIRED.
4. PIPE BEDDING SPECIFICATIONS AS FOLLOWS:

   A = 4" WHEN ID IS LESS THAN 30"
   A = 6" WHEN ID IS 30" OR MORE
   B = 40" WHEN ID IS LESS THAN 18"
   B = 1.5 ID + 18" WHEN ID IS 18" OR LARGER

   BEDDING MATERIAL SHALL BE MINERAL AGGREGATE FOR RIGID PIPE BEDDING

   MATERIAL SHALL BE GRAVEL BACKFILL FOR PIPE BEDDING FOR FLEXIBLE PIPE

STORM DRAINAGE TRENCHING AND BEDDING DETAIL

NTS — 4 — -

RECORD DRAWINGS

NO.	DATE	BY	CHD.	APPR.	REVISION

DATE 08/22/2018 | SCALE AS NOTED
DESIGNED WMA | CHECKED WMA
DRAWN NLM | PROJECT NAME
JOB NO. 112143

kpff
2407 North 31st Street, Suite 100
Tacoma, Washington 98407
(253) 396-0150 Fax (253) 396-0162

CALL 48 HOURS BEFORE YOU DIG 1-800-424-5555

SEATTLE IRON&METALS CORP.

RECORD DRAWINGS:
THESE RECORD DRAWINGS HAVE BEEN PREPARED FROM INFORMATION PROVIDED BY OTHERS. KPFF HAS NOT VERIFIED THE ACCURACY AND/OR COMPLETENESS OF THIS INFORMATION.

SEATTLE IRON & METALS
730 SOUTH MYRTLE STREET, SEATTLE, WA
GRADING & DRAINAGE DETAILS

SHEET C4.6
SHEET 22 OF 30

PLOTTED BY: rimedley DATE & TIME: Aug 22, 2018 - 10:36am FILE: N:\Civil\112-\112143 Seattle Iron and Metals\730 S Myrtle\5.04 Construction Support\8-Drawings\730 S MYRTLE SDCI (Current)\22 C4.6 GRADING & DRAINAGE DETAILS.dwg

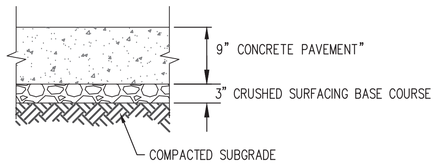

PAVEMENT SECTION 1 C4.7
NTS

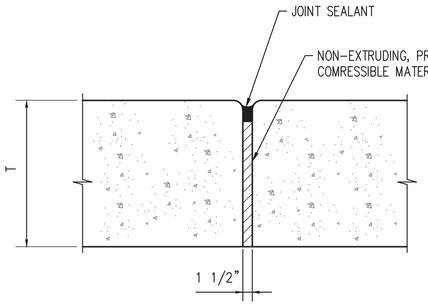

ISOLATION JOINT DETAIL 2 C4.7
NTS

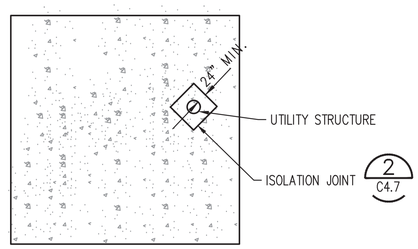

TYPICAL JOINT LAYOUT DETAIL 3 C4.7
NTS

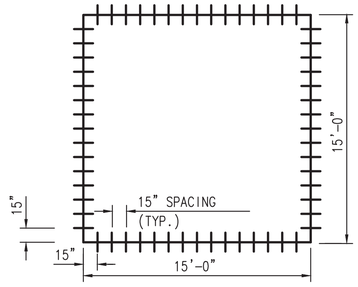

NOTE: TYPICAL DOWEL SPACING FOR 15'-0" X 15'-0" SLAB SHOWN. SEE DOWEL NOTES FOR SLABS DIFFERING FROM THESE DIMENSIONS.

TYPICAL DOWEL SPACING DETAIL 4 C4.7
NTS

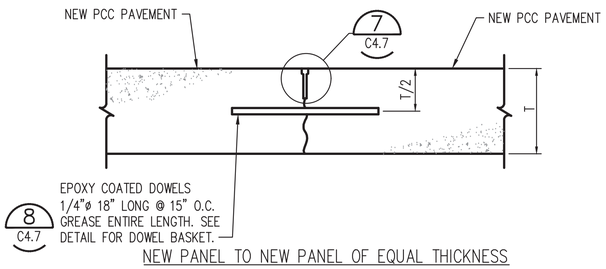

NEW PANEL TO NEW PANEL OF EQUAL THICKNESS
CONTRACTION JOINT (DOWELED)

JOINT TYPE 1 DETAIL 5 C4.7
NTS

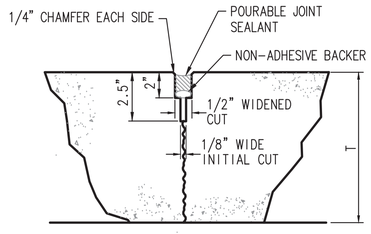

JOINT DETAIL 6 C4.7
NTS

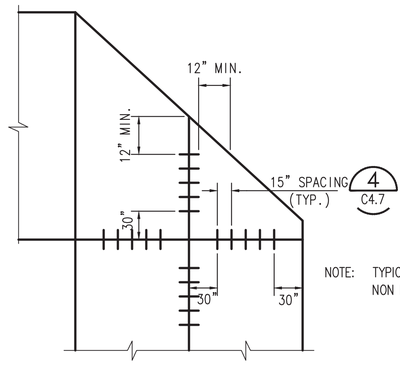

NOTE: TYPICAL LIMITING DIMENSIONS FOR NON RECTANGULAR/PARTIAL SLAB.

DOWEL DIMENSION DETAIL 7 C4.7
NTS

DOWEL NOTES:
1. FOR SLAB SIZES NOT CONFORMING TO THE DETAIL OR DIMENSIONS SHOWN, DOWEL BARS SHALL BE SPACED 12" ON CENTER, DOWEL BARS SHALL BE SPACED AT LEAST 15" FROM ANY SLAB CORNER AND THE SPACING FROM THE LAST DOWEL BARS ON A SIDE TO THE ADJACENT CORNERS SHALL BE THE SAME AT BOTH ENDS OF THE SLAB.

GENERAL NOTES:
1. PCC = PORTLAND CEMENT CONCRETE (P-501), ACP = ASPHALT CONCRETE
2. T = 9" AS NOTED FOR ALL PCC PAVEMENT.
3. EXCEPT AS NOTED IN DETAIL ON THE GRADING/PAVING PLAN SHEETS, ALL NEW JOINTS IN NEW PCC PAVEMENT SHALL BE TYPE 1 OR TYPE 2.
4. EXCAVATE AND COMPACT AS REQUIRED TO INSTALL PCC PAVEMENT. MAKE EVERY EFFORT NOT TO DISTURB EXISTING SOIL COMPACTION/DENSITY.
5. DETAILS SHOWN ON THIS DRAWING ARE REFERENCED AND APPLICABLE TO ALL PORTIONS OF WORK INCLUDED IN THIS CONTRACT.

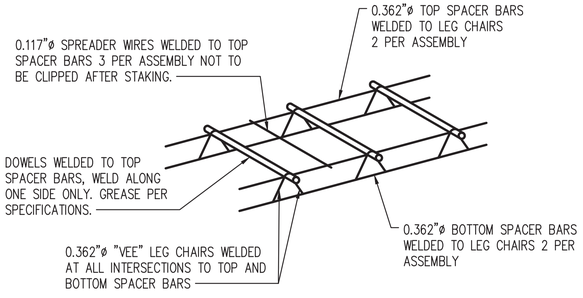

NOTES:
1. BASKET MUST BE FIRMLY ATTACHED TO EXISTING OR NEW BASE.
2. ALL WIRE SIZES SHOWN ARE MIN.
3. DOWELS & TIE BARS SHALL BE HELD FIRMLY IN THE ABOVE WELDED ASSEMBLY.
4. GREASE FULL LENGTH OF DOWEL BARS AND ENTIRE BASKET AT ALL CONTRACTION JOINTS PER SPECIFICATIONS.

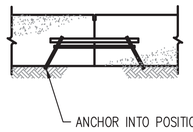

DOWEL BASKET DETAIL 8 C4.7
NTS

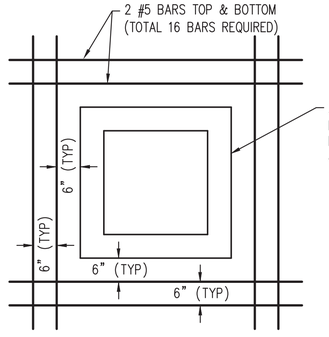

3/4" ELASTIC PLANK EXPANSION JOINT MATERIAL INSTALLED. SIMILAR TO JOINT TYPE A

NOTES:
1. TO BE USED AROUND ALL UTILITIES INCLUDING MANHOLES, DROP INLETS FLOODLIGHT POLE FOUNDATIONS, FIRE HYDRANTS, ETC.
2. DO NOT RUN REINFORCING STEEL THROUGH JOINTS.
3. OMIT REINFORCING STEEL WHERE A SIDE ABUTS A JOINT.

UTILITY REINFORCING DETAIL 9 C4.7
NTS

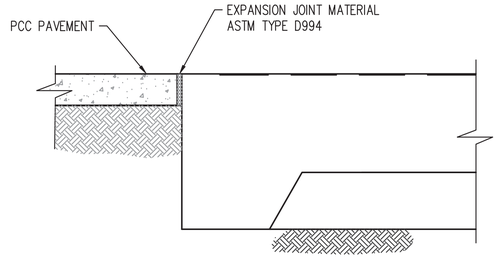

PCC PAVEMENT AT TRUCK SCALE SECTION 10 C4.7
NTS

RECORD DRAWINGS

NO.	DATE	BY	CHD.	APPR.	REVISION

DATE 08/22/2018 | SCALE AS NOTED
DESIGNED WMA | CHECKED WMA
DRAWN NLM | PROJECT NAME
JOB NO. 112143

kpff 2407 North 31st Street, Suite 100 Tacoma, Washington 98407 (253) 396-0150 Fax (253) 396-0162

CALL 48 HOURS BEFORE YOU DIG 1-800-424-5555

SEATTLE IRON & METALS CORP.

RECORD DRAWINGS:
THESE RECORD DRAWINGS HAVE BEEN PREPARED FROM INFORMATION PROVIDED BY OTHERS. KPFF HAS NOT VERIFIED THE ACCURACY AND/OR COMPLETENESS OF THIS INFORMATION.

SEATTLE IRON & METALS
730 SOUTH MYRTLE STREET, SEATTLE, WA
ONSITE CONCRETE PAVING

SHEET C4.7
SHEET 23 OF 30

PLOTTED BY: nmedley DATE & TIME: Aug. 22, 2018 - 10:37am FILE: N:\Civil\112-\112143 Seattle Iron and Metals\730 S Myrtle\5.04 Construction Support\8- Drawings\730 S MYRTLE SDCI\SDCI (Current)\23 C4.7 BID ALTERNATE - CONCRETE PAVEMENT.dwg

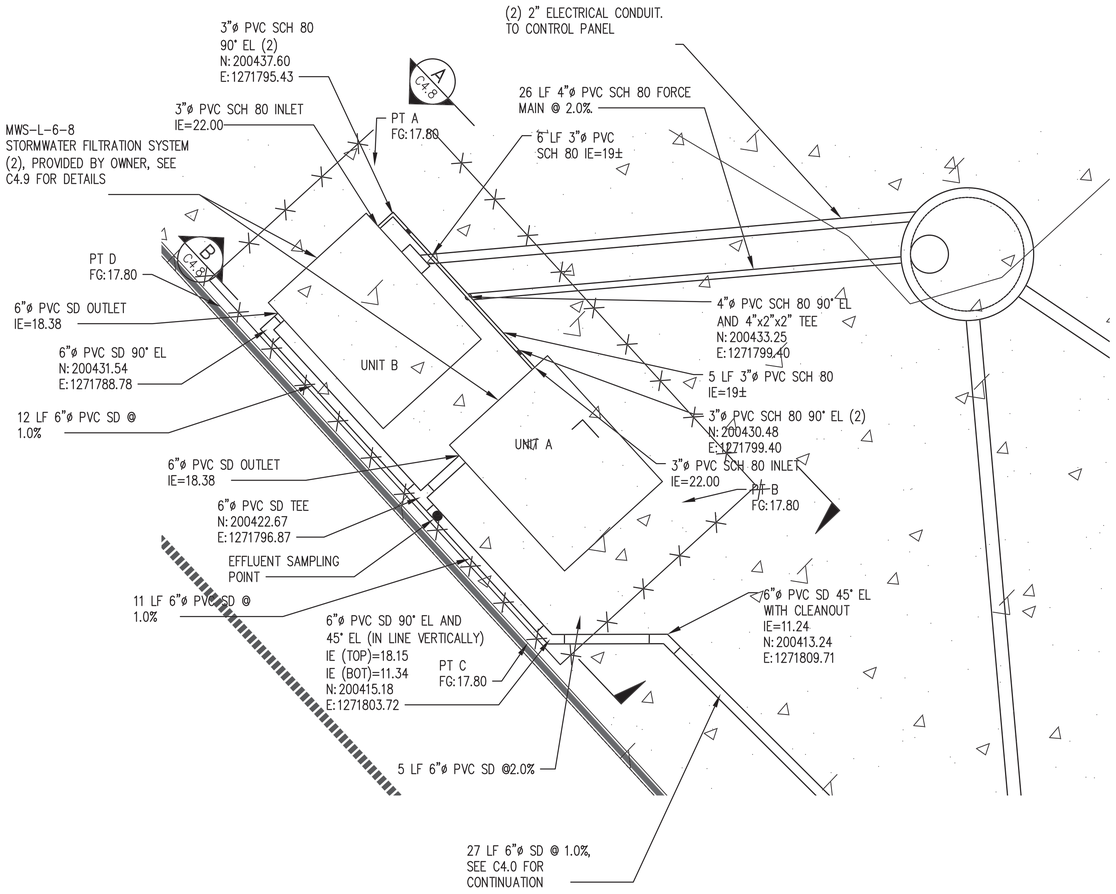

STORMWATER TREATMENT DETAIL PLAN

NTS — 1 / C4.0

NOTES:

1. STORM DRAIN PIPE SHALL BE PVC SDR 35 UNLESS NOTED OTHERWISE.
2. SEE SHEET C4.9 FOR MWS-L-6-8 SHOP DRAWINGS, UNIT A AND UNIT B.
3. UNITS SHALL BE SET ON LEVEL FINISHED SURFACE. SEE GRADING HORIZONTAL CONTROL, THIS SHEET AND COORDINATE FINAL GRADING WITH ENGINEER.
4. INLET PIPING CONFIGURATION SHALL NOT BE ADJUSTED FROM PLANS WITHOUT APPROVAL FROM ENGINEER.
5. CONTRACTOR SHALL PROVIDE SUPPORTS FOR INLET AND OUTLET PIPING AS NECESSARY.
6. OWNER TO INSTALL ECOLOGY BLOCKS FOR TREATMENT SYSTEM AND PIPING PROTECTION.

GRADING HORIZONTAL CONTROL		
POINT	NORTHING	EASTING
A	200440.1600	1271794.4500
B	200422.4000	1271810.6600
C	200414.9900	1271802.5300
D	200432.7400	1271786.3300

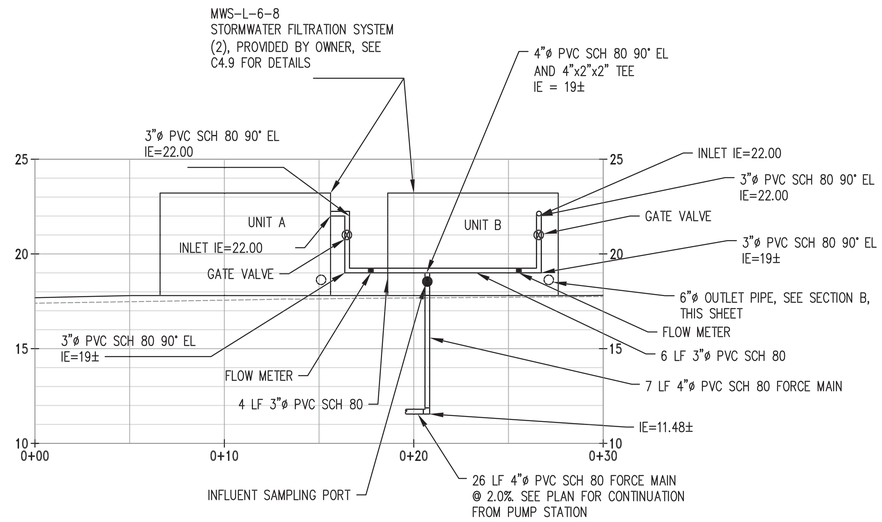

MWS INLET PIPING SECTION

NTS — A / C4.8

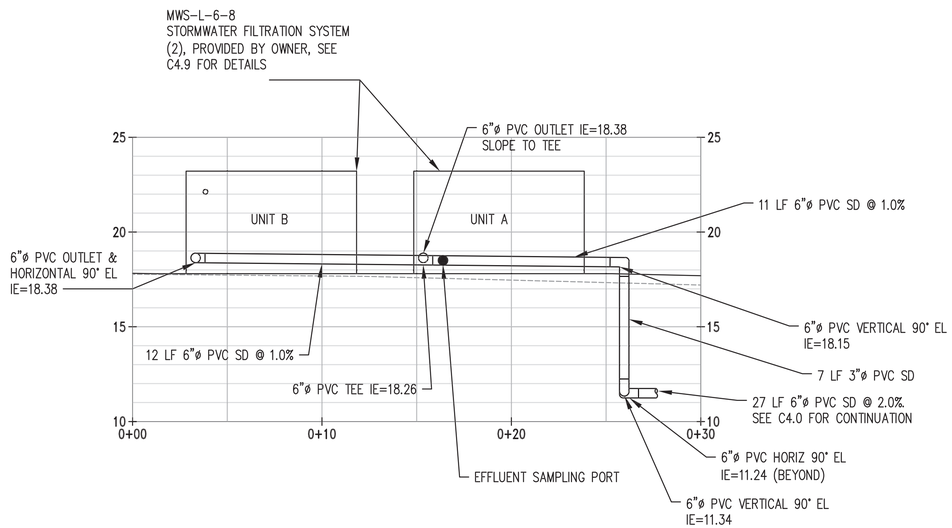

MWS OUTLET PIPING SECTION

NTS — A / C4.8

RECORD DRAWINGS

NO.	DATE	BY	CHD.	APPR.	REVISION

DATE: 01/19/2017 — SCALE: AS NOTED
DESIGNED: WMA — CHECKED: WMA
DRAWN: NLM — PROJECT NAME:
JOB NO.: 112143

kpff
2407 North 31st Street, Suite 100
Tacoma, Washington 98407
(253) 396-0150 Fax (253) 396-0162

CALL 48 HOURS BEFORE YOU DIG 1-800-424-5555

SEATTLE IRON & METALS CORP.

RECORD DRAWINGS:
THESE RECORD DRAWINGS HAVE BEEN PREPARED FROM INFORMATION PROVIDED BY OTHERS. KPFF HAS NOT VERIFIED THE ACCURACY AND/OR COMPLETENESS OF THIS INFORMATION.

SEATTLE IRON & METALS
730 SOUTH MYRTLE STREET, SEATTLE, WA
GRADING & DRAINAGE DETAILS

SHEET C4.8

SHEET 24 OF 30

PLOTTED BY: nmedley DATE & TIME: Aug 22, 2018 - 5:01pm FILE: K:\Civil\112-\112143 Seattle Iron and Metals\730 S Myrtle\5.04 Construction Support\8- Drawings\730 S MYRTLE SDCI (Current)\24 C4.8 TREATMENT DETAILS.dwg

SITE SPECIFIC DATA*			
PROJECT NAME			
PROJECT LOCATION			
STRUCTURE ID			
PERFORMANCE DATA			
TREATMENT FLOW (CFS)			
TREATMENT HGL (FT)			
BYPASS FLOW RATE (CFS)		DEPENDANT ON PIPE SIZE	
PROJECT PARAMETERS			
PIPE DATA	I.E.	MATERIAL	DIAMETER
INLET PIPE 1		PVC	3"
OUTLET PIPE		PVC	6"
RIM ELEVATION			
SURFACE LOADING REQUIREMENT		PARKWAY	
FRAME & COVER	PRETREATMENT 30" X 30" HINGED HATCH	BIOFILTRATION OPEN PLANTER	DISCHARGE ø12"
WETLANDMEDIA VOLUME (CY)		4.22	
MEDIA DELIVERED		SUPERBAGS	
ORIFICE SIZE (DIA)		ø1.67"	
MAX PICK WEIGHT (LBS)		17,800	
NOTES: MANUFACTURE TO PROVIDE NO FERTILIZER STENCIL OR SIGNAGE. *PER ENGINEER OF RECORD			

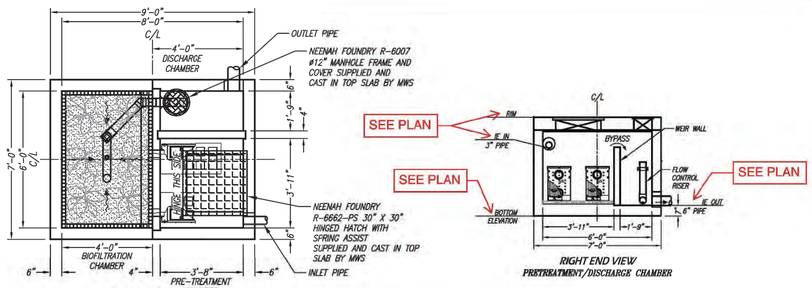

PLAN VIEW

RIGHT END VIEW
PRETREATMENT/DISCHARGE CHAMBER

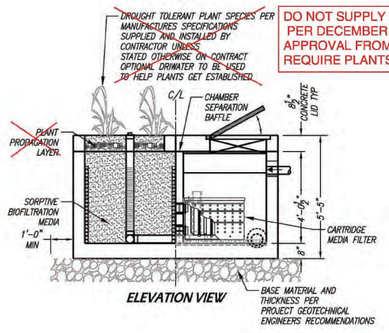

ELEVATION VIEW

DO NOT SUPPLY AND INSTALL PLANTS. PER DECEMBER 2015 REVISION, GULD APPROVAL FROM ECOLOGY DOES NOT REQUIRE PLANTS IN UNITS

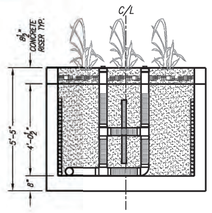

LEFT END VIEW
BIOFILTRATION CHAMBER

INSTALLATION NOTES

1. CONTRACTOR TO PROVIDE ALL LABOR, EQUIPMENT, MATERIALS AND INCIDENTALS REQUIRED TO OFFLOAD AND INSTALL THE SYSTEM AND APPURTENANCES IN ACCORDANCE WITH THIS DRAWING AND THE MANUFACTURERS SPECIFICATIONS, UNLESS OTHERWISE STATED IN MANUFACTURERS CONTRACT.
2. MANUFACTURER RECOMMENDS A MINIMUM 6"LEVEL ROCK BASE UNLESS SPECIFIED BY THE PROJECT ENGINEER. CONTRACTOR IS RESPONSIBLE TO VERIFY PROJECT ENGINEERS RECOMMENDED BASE SPECIFICATIONS.
3. ALL PIPES MUST BE FLUSH WITH INSIDE SURFACE OF CONCRETE. (PIPES CANNOT INTRUDE BEYOND FLUSH).
4. INVERT OF OUTFLOW PIPE MUST BE FLUSH WITH DISCHARGE CHAMBER FLOOR.
5. ALL GAPS AROUND PIPES SHALL BE SEALED WATER TIGHT WITH A NON-SHRINK GROUT PER MANUFACTURERS STANDARD CONNECTION DETAIL AND SHALL MEET OR EXCEED REGIONAL PIPE CONNECTION STANDARDS.
6. CONTRACTOR RESPONSIBLE FOR INSTALLATION OF TOP SLAB AND RISER SECTION. CONTRACTOR TO GROUT TOP SLAB AND RISER AND ALL VISIBLE LIFTING POINTS AND SEAMS AFTER UNIT IS INSTALLED.

GENERAL NOTES

1. MANUFACTURER TO PROVIDE ALL MATERIALS UNLESS OTHERWISE NOTED.
2. ALL DIMENSIONS, ELEVATIONS, SPECIFICATIONS AND CAPACITIES ARE SUBJECT TO CHANGE. FOR PROJECT SPECIFIC DRAWINGS DETAILING EXACT DIMENSIONS, WEIGHTS AND ACCESSORIES PLEASE CONTACT MANUFACTURER.

TREATMENT CAPACITY (CFS)	0.13
OPERATING HEAD (FT)	3.10
PRE-FILTER LOADING RATE (GPM/SF)	2.3
WETLAND LOADING RATE (GPM/SF)	1.0

THE PRODUCT DESCRIBED MAY BE PROTECTED BY ONE OR MORE OF THE FOLLOWING US PATENTS: 7,425,262; 7,470,362; 7,674,378; 8,303,816; RELATED FOREIGN PATENTS OR OTHER PATENTS PENDING

PROPRIETARY AND CONFIDENTIAL:
THE INFORMATION CONTAINED IN THIS DRAWING IS THE SOLE PROPERTY OF MODULAR WETLANDS SYSTEMS. ANY REPRODUCTION IN PART OR AS A WHOLE WITHOUT THE WRITTEN PERMISSION OF MODULAR WETLANDS SYSTEMS IS PROHIBITED.

MODULAR WETLANDS

MWS-L-6-8-V
STORMWATER BIOFILTRATION SYSTEM
STANDARD DETAIL

MWS TREATMENT UNIT A
NTS
1 C4.8

SITE SPECIFIC DATA*			
PROJECT NAME			
PROJECT LOCATION			
STRUCTURE ID			
PERFORMANCE DATA			
TREATMENT FLOW (CFS)			
TREATMENT HGL (FT)			
BYPASS FLOW RATE (CFS)		DEPENDANT ON PIPE SIZE	
PROJECT PARAMETERS			
PIPE DATA	I.E.	MATERIAL	DIAMETER
INLET PIPE 1		PVC	3"
OUTLET PIPE		PVC	6"
RIM ELEVATION			
SURFACE LOADING REQUIREMENT		PARKWAY	
FRAME & COVER	PRETREATMENT 30" X 30" HINGED HATCH	BIOFILTRATION OPEN PLANTER	DISCHARGE ø12"
WETLANDMEDIA VOLUME (CY)		4.22	
MEDIA DELIVERED		SUPERBAGS	
ORIFICE SIZE (DIA)		ø1.67"	
MAX PICK WEIGHT (LBS)		17,800	
NOTES: MANUFACTURE TO PROVIDE NO FERTILIZER STENCIL OR SIGNAGE. *PER ENGINEER OF RECORD			

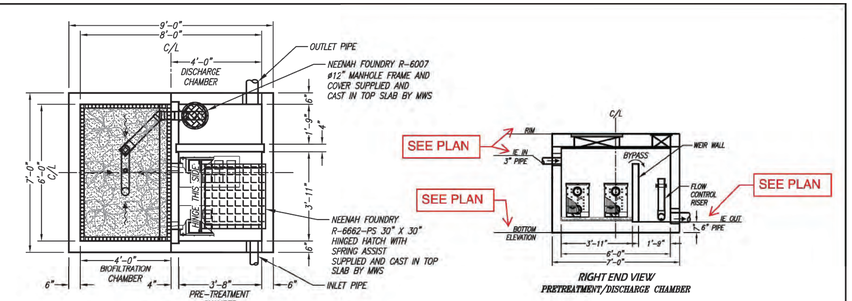

PLAN VIEW

RIGHT END VIEW
PRETREATMENT/DISCHARGE CHAMBER

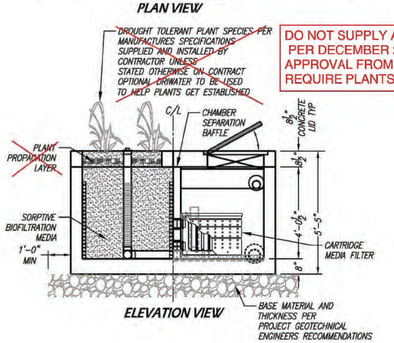

ELEVATION VIEW

DO NOT SUPPLY AND INSTALL PLANTS. PER DECEMBER 2015 REVISION, GULD APPROVAL FROM ECOLOGY DOES NOT REQUIRE PLANTS IN UNITS

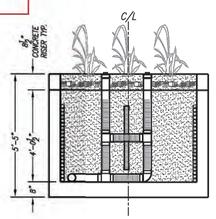

LEFT END VIEW
BIOFILTRATION CHAMBER

INSTALLATION NOTES

1. CONTRACTOR TO PROVIDE ALL LABOR, EQUIPMENT, MATERIALS AND INCIDENTALS REQUIRED TO OFFLOAD AND INSTALL THE SYSTEM AND APPURTENANCES IN ACCORDANCE WITH THIS DRAWING AND THE MANUFACTURERS SPECIFICATIONS, UNLESS OTHERWISE STATED IN MANUFACTURERS CONTRACT.
2. MANUFACTURER RECOMMENDS A MINIMUM 6"LEVEL ROCK BASE UNLESS SPECIFIED BY THE PROJECT ENGINEER. CONTRACTOR IS RESPONSIBLE TO VERIFY PROJECT ENGINEERS RECOMMENDED BASE SPECIFICATIONS.
3. ALL PIPES MUST BE FLUSH WITH INSIDE SURFACE OF CONCRETE. (PIPES CANNOT INTRUDE BEYOND FLUSH).
4. INVERT OF OUTFLOW PIPE MUST BE FLUSH WITH DISCHARGE CHAMBER FLOOR.
5. ALL GAPS AROUND PIPES SHALL BE SEALED WATER TIGHT WITH A NON-SHRINK GROUT PER MANUFACTURERS STANDARD CONNECTION DETAIL AND SHALL MEET OR EXCEED REGIONAL PIPE CONNECTION STANDARDS.
6. CONTRACTOR RESPONSIBLE FOR INSTALLATION OF TOP SLAB AND RISER SECTION. CONTRACTOR TO GROUT TOP SLAB AND RISER AND ALL VISIBLE LIFTING POINTS AND SEAMS AFTER UNIT IS INSTALLED.

GENERAL NOTES

1. MANUFACTURER TO PROVIDE ALL MATERIALS UNLESS OTHERWISE NOTED.
2. ALL DIMENSIONS, ELEVATIONS, SPECIFICATIONS AND CAPACITIES ARE SUBJECT TO CHANGE. FOR PROJECT SPECIFIC DRAWINGS DETAILING EXACT DIMENSIONS, WEIGHTS AND ACCESSORIES PLEASE CONTACT MANUFACTURER.

TREATMENT CAPACITY (CFS)	0.13
OPERATING HEAD (FT)	3.10
PRE-FILTER LOADING RATE (GPM/SF)	2.3
WETLAND LOADING RATE (GPM/SF)	1.0

THE PRODUCT DESCRIBED MAY BE PROTECTED BY ONE OR MORE OF THE FOLLOWING US PATENTS: 7,425,262; 7,470,362; 7,674,378; 8,303,816; RELATED FOREIGN PATENTS OR OTHER PATENTS PENDING

PROPRIETARY AND CONFIDENTIAL:
THE INFORMATION CONTAINED IN THIS DRAWING IS THE SOLE PROPERTY OF MODULAR WETLANDS SYSTEMS. ANY REPRODUCTION IN PART OR AS A WHOLE WITHOUT THE WRITTEN PERMISSION OF MODULAR WETLANDS SYSTEMS IS PROHIBITED.

MODULAR WETLANDS

MWS-L-6-8-V
STORMWATER BIOFILTRATION SYSTEM
STANDARD DETAIL

MWS TREATMENT UNIT B
NTS
2 C4.8

NOTES:
1. FOR TREATMENT UNIT LAYOUT AND ELEVATION DATA, SEE SHEET C4.8.

NO.	DATE	BY	CHD.	APPR.	REVISION

DATE 01/19/2017 | SCALE AS NOTED
DESIGNED WMA | CHECKED WMA
DRAWN NLM | PROJECT NAME
JOB NO. 112143

kpff
2407 North 31st Street, Suite 100
Tacoma, Washington 98407
(253) 396-0150 Fax (253) 396-0162

CALL 48 HOURS BEFORE YOU DIG 1-800-424-5555

SEATTLE IRON&METALS CORP.

RECORD DRAWINGS:
THESE RECORD DRAWINGS HAVE BEEN PREPARED FROM INFORMATION PROVIDED BY OTHERS. KPFF HAS NOT VERIFIED THE ACCURACY AND/OR COMPLETENESS OF THIS INFORMATION.

RECORD DRAWINGS

SEATTLE IRON & METALS
730 SOUTH MYRTLE STREET, SEATTLE, WA

GRADING & DRAINAGE DETAILS

SHEET C4.9

PLOTTED BY: nmedley DATE & TIME: Aug 22, 2018 - 10:37am FILE: N:\Civil\112-\112143 Seattle Iron and Metals\730 S Myrtle\5.04 Construction Support\8- Drawings\730 S MYRTLE SDO\SDCI (Current)\24 C4.8 TREATMENT DETAILS.dwg

FENCING AND STRIPING HORIZONTAL CONTROL TABLE

POINT	NORTHING	EASTING	DESCRIPTION
A	200583.35	1271904.97	FENCE CONNECTION
B	200382.26	1271899.55	FENCE CORNER
C	200458.11	1271763.16	START OF STRIPING
D	200578.36	1271914.66	START OF STRIPING
E	200578.83	1271899.66	START OF STRIPING
F	200383.80	1271963.58	START OF STRIPING
G	200374.88	1272278.31	FENCE CORNER
H	200366.93	1272271.82	GATE POST
I	200366.70	1272301.79	GATE POST
J	200365.47	1272363.35	FENCE CORNER
K	200575.42	1272264.06	FENCE CONNECTION
L	200574.92	1272288.81	FENCE CORNER
M	200619.99	1272299.53	FENCE CORNER
N	200586.49	1272336.51	GATE POST
O	200583.80	1272339.47	GATE POST
P	200503.32	1272428.32	FENCE POST
Q	200496.56	1272435.78	FENCE CORNER
R	200481.47	1272432.19	FENCE POST
S	200450.14	1272423.19	START OF STRIPING
T	200596.39	1272321.86	CENTER OF TREE
U	200479.60	1271900.87	GATE POST
V	200449.57	1271900.26	GATE POST

PAVING HORIZONTAL CONTROL

POINT	NORTHING	EASTING	DESCRIPTION
AB	200583.93	1271648.27	INSIDE FACE OF CURB
AC	200580.93	1271796.22	INSIDE FACE OF CURB
AD	200578.81	1271900.79	INSIDE FACE OF CURB
AE	200577.89	1271946.19	INSIDE FACE OF CURB
AF	200576.25	1272026.91	INSIDE FACE OF CURB
AG	200384.23	1271942.26	INSIDE FACE OF CURB
AH	200382.33	1271903.56	INSIDE FACE OF CURB
AI	200386.49	1271828.57	INSIDE FACE OF CURB
AJ	200515.21	1271711.02	INSIDE FACE OF CURB
AK	200573.83	1272161.12	INSIDE FACE OF CURB
AL	200571.81	1272246.13	INSIDE FACE OF CURB
AM	200570.94	1272288.63	INSIDE FACE OF CURB
AN	200614.44	1272298.21	INSIDE FACE OF CURB
AO	200580.10	1272336.11	INSIDE FACE OF CURB
AP	200553.56	1272311.99	INSIDE FACE OF CURB
AQ	200473.32	1272400.55	EDGE OF PAVEMENT
AR	200496.19	1272421.67	INSIDE FACE OF CURB
AS	200483.89	1272425.57	INSIDE FACE OF CURB
AT	200401.43	1272411.64	INSIDE FACE OF CURB
AU	200403.93	1272370.92	INSIDE FACE OF CURB
AV	200366.32	1272362.94	INSIDE FACE OF CURB
AW	200363.65	1272270.41	EDGE OF PAVEMENT
AX	200377.15	1272272.05	INSIDE FACE OF CURB
AY	200378.25	1272242.24	INSIDE FACE OF CURB
AZ	200381.23	1272092.26	INSIDE FACE OF CURB
BA	200383.16	1271870.41	EDGE OF PAVEMENT
BC	200455.53	1272418.82	INSIDE FACE OF CURB
BD	200450.29	1272423.74	INSIDE FACE OF CURB
BE	200455.03	1271765.30	CONCRETE/ASPHALT JOINT
BF	200452.27	1271901.77	CONCRETE/ASPHALT JOINT
BG	200363.10	1272305.04	EDGE OF PAVEMENT
BH	200367.47	1272305.13	INSIDE FACE OF CURB
BI	200377.38	1272260.32	CONCRETE/ASPHALT JOINT
BJ	200444.98	1272261.69	CONCRETE/ASPHALT JOINT
BK	200382.57	1271900.36	CONCRETE/ASPHALT JOINT

GRADING AND DRAINAGE HORIZONTAL CONTROL

POINT	NORTHING	EASTING	DESCRIPTION
AA	200425.19	1271962.27	SE CORNER OF DETENTION VAULT
BB	200409.19	1271962.27	NE CORNER OF DETENTION VAULT
CC	200425.19	1271866.27	SW CORNER OF DETENTION VAULT
DD	200409.19	1271866.27	NW CORNER OF DETENTION VAULT
EE	200420.15	1271856.27	FLOW SPLITTER MH
FF	200428.13	1271836.01	PRE-TERATMENT MH
GG	200435.51	12718525.74	PUMP STATION
HH	NOT USED	NOT USED	NOT USED
II	200534.03	1271870.18	CB TYPE 1 #1
JJ	200567.41	1271697.01	CB TYPE 1 #2
KK	200439.45	1272020.13	CB TYPE 2 #3
LL	200524.86	1272020.13	CB TYPE 1 #4
MM	200396.15	1271868.79	CB TYPE 1 #8
NN	SEE NOTE 1	SEE NOTE 1	CORE TAP (CENTER-ON-CENTER)
OO	NOT USED	NOT USED	NOT USED
PP	200395.91	1271829.19	SDMH #3
QQ	200439.45	1272170.07	CB TYPE 2 #5
RR	200509.45	1272170.07	CB TYPE 1 #6
SS	200411.45	1272293.07	CB TYPE 1 #7

NOTES:

1. LOCATION SHIFTED WEST APPROXIMATELY 3' DURING CONSTRUCTION TO AVOID BELL IN EXISTING MAIN. SEE SHEET C4.0 FOR APPROXIMATE LOCATION AND PIPE LAYOUT.

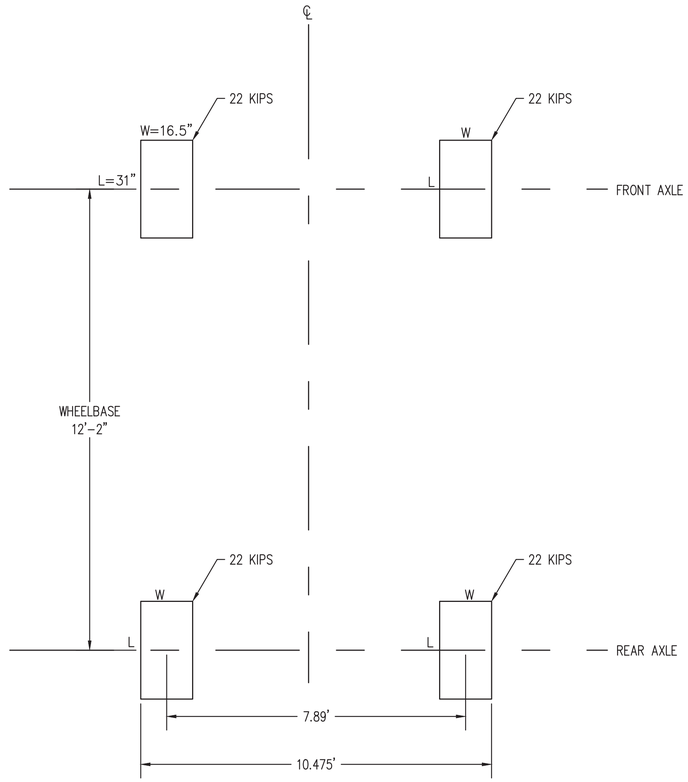

980 H CAT W/ RUBBER TIRES

LIVE LOAD:
IMPACT FACTOR = 1.3
LOAD FACTOR = 1.7 FOR ULTIMATE STRENGTH

LOADING DIAGRAM DETAIL 1
NTS C5.0

UNDERGROUND UTILITY STRUCTURES DESIGN LOADING:

1. ALL UNDERGROUND AND AT GRADE UTILITY STRUCTURES INCLUDING MANHOLES, CATCH BASINS, HAND HOLES, VAULTS AND OTHER STRUCTURES, INCLUDING ALL RINGS, COVERS, HATCHES, GRATES AND OTHER FEATURES WHICH MAY APPLY, SHALL BE DESIGNED TO ACCOMMODATE THE LOAD CRITERIA SHOWN ON THIS SHEET EXCEPT FOR EXISTING CATCH BASIN AND OTHER STRUCTURES THAT WILL BE RAISED TO FINISHED GRADE. FOR ALL UNDERGROUND UTILITY STRUCTURES, SHOP DRAWINGS AND CALCULATIONS STAMPED BY A STRUCTURAL ENGINEER REGISTERED IN THE STATE OF WASHINGTON SHALL BE SUBMITTED AND APPROVED BY THE ENGINEER PRIOR TO FABRICATION.
2. STANDARD PLAN REFERENCES AND MANUFACTURER MODEL NUMBERS FOR UNDERGROUND UTILITY STRUCTURES ARE INTENDED TO PROVIDE INTERIOR GEOMETRY AND INTENT ONLY. THE CONTRACTOR SHALL INCREASE REQUIRED REINFORCING AND WALL THICKNESS, AND CHANGED ACCESS GRATE AND COVER AS REQUIRED TO ACCOMMODATE LOADING CRITERIA.
3. SOIL DESIGN CRITERIA:
   VERTICAL BEARING PRESSURE = 2500 PSF
4. LATERAL SOIL LOADS SHALL BE APPLIED TO ALL STRUCTURES AS FOLLOWS;
   SEE SOILS REPORT: GEOTECHNICAL REPORT SEATTLE IRON & METAL, 730 S MYRTLE ST DATED MARCH 27, 2017.
5. DEAD LOAD SHALL BE APPLIED TO ALL STRUCTURES WHICH INCLUDE THE WEIGHT OF THE CONSTRUCTION MATERIALS AND THE SOIL
6. LIVE LOADS SHALL ACT SIMULTANEOUSLY AND IN COMBINATION WITH DEAD LOADS AND HYDROSTATIC PRESSURE WHEN DESIGNING UTILITY STRUCTURES WITHIN THE LIMITS OF THE SITE.

On-site Stormwater Management - List Approach Calculator
Site and Drainage Control Summary

Version 03-01-2017

To use the On-Site List Calculator you must select "Enable Content" when the Security Warning appears.

Project Information

Site Address	730 S Myrtle Street	SDCI Project Number	6589269
Primary Contact	Bill Armour	SDOT Project Number	
Project Type	Parcel-Based	Primary Contact E-mail or Phone	bill.armour@kpff.com

Total Site Area	140,465	sf
Total New plus Replaced Hard Surface Area	135,665	sf
Existing Hard Surface Area to Remain	4,800	sf
Total New and/or Replaced Lawn and Landscaping	0	sf
Undisturbed and protected site area	0	sf
Was the project lot created or reduced in size after Jan 1, 2015?	No	
Project Engineer: Bill Armour	Engineer E-mail: bill.armour@kpff.com	

Submit Continuous Runoff Model in a Drainage Report to demonstrate On-site Performance Standard (Vol. 1, Section 5.2.1) is met.
On-site Performance Standard will be used (professional engineer required)? Yes

Site Information

Note: If required for your project, reference the Preliminary Assessment Report (PAR) to complete this section. If the total areas proposed are different form those provided in the PAR, requirements may change.

Approved Point of Stormwater Discharge	Public Storm Drain Main
Drainage Basin	Designated Receiving Water
Is the downstream drainage system considered Capacity Constrained by SPU?	No
Approved Point of Wastewater Discharge	Public Sanitary Sewer Main
Approved Point of Sub-Surface Discharge	Public Storm Drain Main
Flow Control is required	Yes
Flow Control Standard	Peak Control Standard
Water Treatment for pollution-generating surfaces is required	Yes
Select required treatment	☐ Oil Control ☐ Phosphorus ☐ Enhanced ☑ Basic
Total Pollution Generating Hard Surface Area	140,465 sf
Total Pollution Generating Pervious Surface Area	0 sf
Source Control is required	Yes
Environmentally Critical Areas	Yes

☐ Steep Slope ☐ Potential Slide ☐ Riparian Corridor ☐ Wetland ☑ Liquefaction ☐ Flood Prone
☐ Landfill ☐ Known Landslide ☐ Fish / Wildlife ☐ Peat / Groundwater Management ☐ Shoreline Habitat

Temporary dewatering required	Yes	Permanent dewatering required	No
Is there known soil and/or groundwater contamination on this site?			Yes
A licensed professional recommends dispersion not be used anywhere within the project site due to reasonable concerns of erosion, slope failure, or flooding.			No

Infiltration Information

Is infiltration investigation required?	No	Why?	Other
Is infiltration on the site feasible?		Explain:	Contaminated soils exist on site.
Site Measured Infiltration Rate		Infiltration Rate Correction Factor	0.5 - 0 Site Design Tier Rate

On-site Stormwater Management

Number of roof areas: 1
Number of other surface areas: 1

Note total area entered on surface tabs (plus permeable pavement facility area) exceeds the total new plus replaced hard surface area entered above.

Surface	Surfaces Description	On-site BMP	Contrib. Area (sf)	Facility Size (sf)	Facility Configuration
1	Roof:Open Shed Storage	None Feasible	4,800		
2	Surface:Concrete or Asp	None Feasible	135,665		

Total New/Replaced Roof Area	4,800	Total Roof Area Managed	4,800
Total New/Replaced Other Surface Area	135,665	Total Other Surface Area Managed	135,665
Total Area Managed	140,465	Total Volume Managed On Site	0 gal
Estimated compost required for soil amendment	0 cy	*Volume of compost required for soil amendment will be verified by the DPD Site Inspector for SDCI permitted projects.*	

seattle.gov

OSM PROJECT SUMMARY DETAIL 2
NTS C5.0

RECORD DRAWINGS

NO.	DATE	BY	CHD.	APPR.	REVISION

DATE 08/22/2018 | SCALE AS NOTED
DESIGNED WMA | CHECKED WMA
DRAWN NLM | PROJECT NAME
JOB NO. 112143

kpff
2407 North 31st Street, Suite 100
Tacoma, Washington 98407
(253) 396-0150 Fax (253) 396-0162

CALL 48 HOURS BEFORE YOU DIG 1-800-424-5555

SEATTLE IRON&METALS CORP.

RECORD DRAWINGS:
THESE RECORD DRAWINGS HAVE BEEN PREPARED FROM INFORMATION PROVIDED BY OTHERS. KPFF HAS NOT VERIFIED THE ACCURACY AND/OR COMPLETENESS OF THIS INFORMATION.

SEATTLE IRON & METALS
730 SOUTH MYRTLE STREET, SEATTLE, WA

LOCATION & HORIZONTAL CONTROL DATA

SHEET C5.0
SHEET 26 OF 30

PLOTTED BY: rmedley DATE & TIME: Aug 22, 2018 - 10:37am FILE: N:\Civil\112-\112143 Seattle Iron and Metals\730 S Myrtle\5.04 Construction Support\8- Drawings\730 S MYRTLE SDCI (Current)\26 24 C5.0 LOCATION & HORIZONTAL CONTROL DATA.dwg

GENERAL INFORMATION

PROJECT JURISDICTION: CITY OF SEATTLE

DESCRIPTION OF WORK: CHANGE OF USE OF VACANT LOT TO OUTDOOR STORAGE AND INSTALL DRAINAGE IMPROVEMENTS.

PROJECT ADDRESS: 730 SOUTH MYRTLE STREET

OWNER & APPLICANT: 730 MYRTLE LLC.
601 S MYRTLE STREET
SEATTLE, WA 98108
(206) 682-0040
CONTACT: ALAN SIDELL
EMAIL: ALANS@SEAIRON.COM

PARCEL: 273410-0270

ZONING TABULATION

BASE ZONE: IG1 U/85 – GENERAL INDUSTRIAL 1 UNLIMITED/85

SETBACKS: PER PRELIMINARY ASSESSMENT REPORT DATED SEPTEMBER 24, 2015 BY THE CITY OF SEATTLE, AN 8' SETBACK ALONG FOX AVENUE S. IS REQUIRED FOR ALL NEW STRUCTURES TO ACCOMODATE FUTURE STREET IMPROVEMENTS.

LANDSCAPING: NO LANDSCAPING IS REQUIRED PER SMC 23.50.034

STREET TREES:: REQUIRED PER SMC 23.50.016 ALONG E. MARGINAL WAY SOUTH AND INSTALLED PER SDOT TRANSPORATION TREE PLANTING STANDARDS.

PER SMC 23.50.016.B.1.b., IF IT IS NOT FEASIBLE TO PLANT STREET TREES ACCORDING TO CITY STANDARDS A FIVE-FOOT (5') DEEP LANDSCAPED SETBACK AREA IS REQUIRED ALONG THE STREET PROPERTY LINE AND TREES SHALL BE PLANTED THERE.

STREET TREES PROVIDED: ON-SITE TREES WILL BE PROVIDED IN THE AREA DESIGNATED ON THE PLANS.

SITE AREA: 140, 263 SF (3.22 ACRES)

STRUCTURE HEIGHT: UNLIMITED, NO MAXIMUM HEIGHT EXCEPT LIMIT FOR COMMERCIAL USES INCLUDING; RETAIL SALES AND SERVICE, OFFICE, ENTERTAINMENT, WAREHOUSES, TRANSPORATION FACILITIES, MINI-WAREHOUSE, NON-HOUSEHOLD SALES AND SERVICE, OUTDOOR STORAGE, PARKING PRINCIPAL USE, RESEARCH AND DEVELOPMENT LABORATORY, WHOLESALE SHOWROOM, AND COMMUNICATION DEVICES AND UTILITY U SES, WHICH ARE LIMITED TO 85 FT.

EXISTING STRUCTURE HEIGHT= 20 FT (SHED)

FLOOR AREA RATIO: ALLOWABLE FLOOR AREA RATIO: 2.5
EXISTING GROSS FLOOR AREA: 4,787 SF
PROPOSED GROSS FLOOR AREA: 4,787 SF
EXISTING FAR = 4,787 SF /140,263 SF = 0.034
PROPOSED FAR = 4,787 SF /140,263 SF = 0.034

GENERAL INFORMATION, CONT.

PARKING TABULATION

EXISTING USES:

VACANT (INDUSTRIAL): 138,663 (INCLUDING SHED)

SHED: 4,787 SF

BILLBOARD ADVERTISING SIGN: 0 SF

MINOR COMMUNICATION UTILITY (CELL TOWER): 1,600 SF

PROPOSED USES:

THE 730 SOUTH MYRTLE STREET SITE IS CURRENTLY LEASED AND USED BY SEATTLE IRON & METALS (SIM) FOR THE STORAGE OF EMPTY COLLECTION CONTAINERS AND VEHICLES. ONCE THE PROPOSED DRAINAGE AND PAVEMENT IMPROVEMENTS ARE COMPLETED, THEY WILL CONTINUE TO USE THE SITE FOR THIS PURPOSE.

OUTDOOR STORAGE (INCLUDING EXISTING 4,787 SF SHED AS AN ACCESSORY STRUCTURE): 138,663 SF (PREVIOUSLY "VACANT")

BILLBOARD ADVERTISING SIGN: 0 SF

MINOR COMMUNICATION UTILITY (CELL TOWER): 1,600 SF

REQUIRED PARKING: (PROPOSED USES)

BILLBOARD ADVERTISING SIGN: NO REQUIREMENT

MINOR COMMUNICATION UTILITY (CELL TOWER): 1 SPACE/ 2,000 SF

REQUIRED PARKING: 1,600 SF X 1 SPACE/2,000 SF = 0.80 = 1 SPACE

PARKING PROVIDED: 1 SPACE (LARGE SPACE @ 8.5' X 19') TO BE PROVIDED WITHIN FENCED AREA

OUTDOOR STORAGE: 1 SPACE/2,000 SF OF "STORAGE"USE

PARKING SPACE SIZE REQUIREMENTS FOR OVER 20 PARKING SPACES:
SMALL SPACE (7.5' X 15'): 35% MINIMUM – 65% MAXIMUM
LARGE SPACE (8.5' X 19'): 35% MINIMUM

MINIMUM REQUIRED ADA ACCESSIBLE SPACES (51-75 SPACES): 2 STANDARD ADA SPACES, PLUS 1 VAN ACCESSIBLE SPACE

PARKING PROVIDED:

SMALL SPACES: 42 (60%)
LARGE SPACES: 25 (36%)
STANDARD ADA: 2
VAN ACCESSIBLE ADA: 1

TOTAL PARKING PROVIDED FOR PROPOSED USES: 70 SPACES

FLEET VEHICLE SPACES: 20
SEE FLEET VEHICLE TABLE FOR VEHICLE TYPES.

LOADING SPACES REQUIRED: REQUIRED FOR PROPOSED "OUTDOOR STORAGE" USE ONLY.

PER SMC 23.54.035 TABLE A SITE A USE OF "OUTDOOR STORAGE IS CONSIDERED A "HIGH DEMAND"USE

FOR A "HIGH DEMAND' USE BETWEEN 128,001 AND 160,000 SF: 6 LOADING SPACES REQUIRED.

HIGH DEMAND LOADING SPACE SIZE: 10' W X 55' L WITH 14' MIN. OVERHEAD CLEARANCE

LOADING SPACES PROVIDED: 6 HIGH DEMAND

FLEET VEHICLE TABULATION:

MAKE	MODEL
1TYMCO 600	L7000
FREIGHTLINER	FC70
PETERBILT	378
KENWORTH	T800
KENWORTH	T800
KENWORTH	T800
KENWORTH	T800
KENWORTH	T800
FREIGHTLINER	FL70
OTTAWA	C30
INTERNATIONAL	9400
INTERNATIONAL	9400
INTERNATIONAL	9400
KENWORTH	T800
OTTAWA	C30
FREIGHTLINER	FC70
FREIGHTLINER	FL70
KENWORTH	T800

PLOTTED BY: nmedley DATE & TIME: Aug 22, 2018 - 10:38am FILE: N:\Civil\112-\112143 Seattle Iron and Metals\730 S MYRTLE SDCI\SDCI (Current)\27 C5.1 PROJECT INFORMATION.dwg
N:\Civil\112-\112143 Seattle Iron and Metals\730 S Myrtle\5.04 Construction Support\B- Drawings\730 S MYRTLE SDCI\SDCI (Current)\27 C5.1 PROJECT INFORMATION.dwg

NO.	DATE	BY	CHD.	APPR.	REVISION

DATE 08/22/2018 | SCALE AS NOTED
DESIGNED WMA | CHECKED WMA
DRAWN NLM | PROJECT NAME
JOB NO. 112143

kpff
2407 North 31st Street, Suite 100
Tacoma, Washington 98407
(253) 396-0150 Fax (253) 396-0162

CALL 48 HOURS BEFORE YOU DIG 1-800-424-5555

SEATTLE IRON&METALS CORP.

RECORD DRAWINGS:
THESE RECORD DRAWINGS HAVE BEEN PREPARED FROM INFORMATION PROVIDED BY OTHERS. KPFF HAS NOT VERIFIED THE ACCURACY AND/OR COMPLETENESS OF THIS INFORMATION.

RECORD DRAWINGS

SEATTLE IRON & METALS
730 SOUTH MYRTLE STREET, SEATTLE, WA

PROJECT INFORMATION

SHEET C5.1

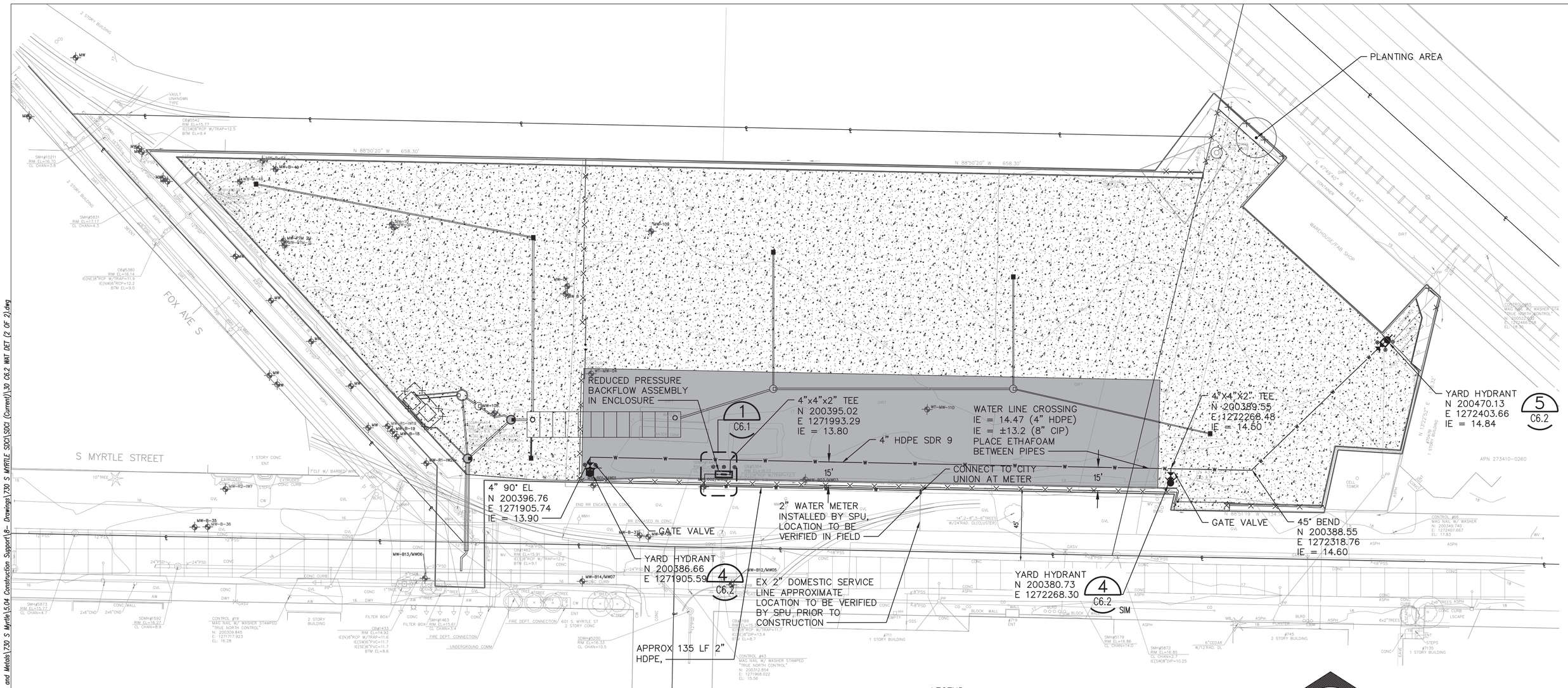

PROJECT ADDRESS:	730 S MYRTLE STREET, SEATTLE, WA 98108
OWNER NAME:	730 MYRTLE LLC C/O ALAN SIDELL
LEGAL DESCRIPTION	GEORGETOWN 14 & POR 15 S OF E MARGINAL WAY LESS ST & POR VAC ST ADJ TGW S 200 FT OF POR OF COLLINS L M-DC #46 LY N OF MYRTLE ST-W OF CORSON AVE E OF FOX AVE AKA TRS 21-22 & 23 KING COUNTY INDUSTRIAL TRACTS & VAC POR OF ST ADJ
PARCEL NUMBER	2734100270

LEGEND:

- ASPHALT PAVEMENT
- CONCRETE PAVEMENT
- EXTRUDED CURB
- FENCE
- LIMITS OF WORK
- PROPERTY LINE
- W — NON-POTABLE WATER LINE

N

CITY OF SEATTLE DATUM

GRAPHIC SCALE

30 0 15 30 60

(IN FEET)

RECORD DRAWINGS

NO.	DATE	BY	CHD.	APPR.	REVISION

DATE 08/22/2018 | SCALE AS NOTED
DESIGNED WMA | CHECKED WMA
DRAWN NLM | PROJECT NAME
JOB NO. 112143

kpff
2407 North 31st Street, Suite 100
Tacoma, Washington 98407
(253) 396-0150 Fax (253) 396-0162

CALL 48 HOURS BEFORE YOU DIG 1-800-424-5555

SEATTLE IRON & METALS CORP.

RECORD DRAWINGS:
THESE RECORD DRAWINGS HAVE BEEN PREPARED FROM INFORMATION PROVIDED BY OTHERS. KPFF HAS NOT VERIFIED THE ACCURACY AND/OR COMPLETENESS OF THIS INFORMATION.

SEATTLE IRON & METALS
730 SOUTH MYRTLE STREET, SEATTLE, WA

ON-SITE WATER PLAN

SHEET C6.0

SHEET 28 OF 30

PLOTTED BY: nmedley DATE & TIME: Aug 22, 2018 - 10:40am FILE: N:\Civil\112-\112143 Seattle Iron and Metals\730 S Myrtle\5.04 Construction Support\B- Drawings\730 S MYRTLE SDCI (Current)\30 C6.2 WAT DET (2 OF 2).dwg

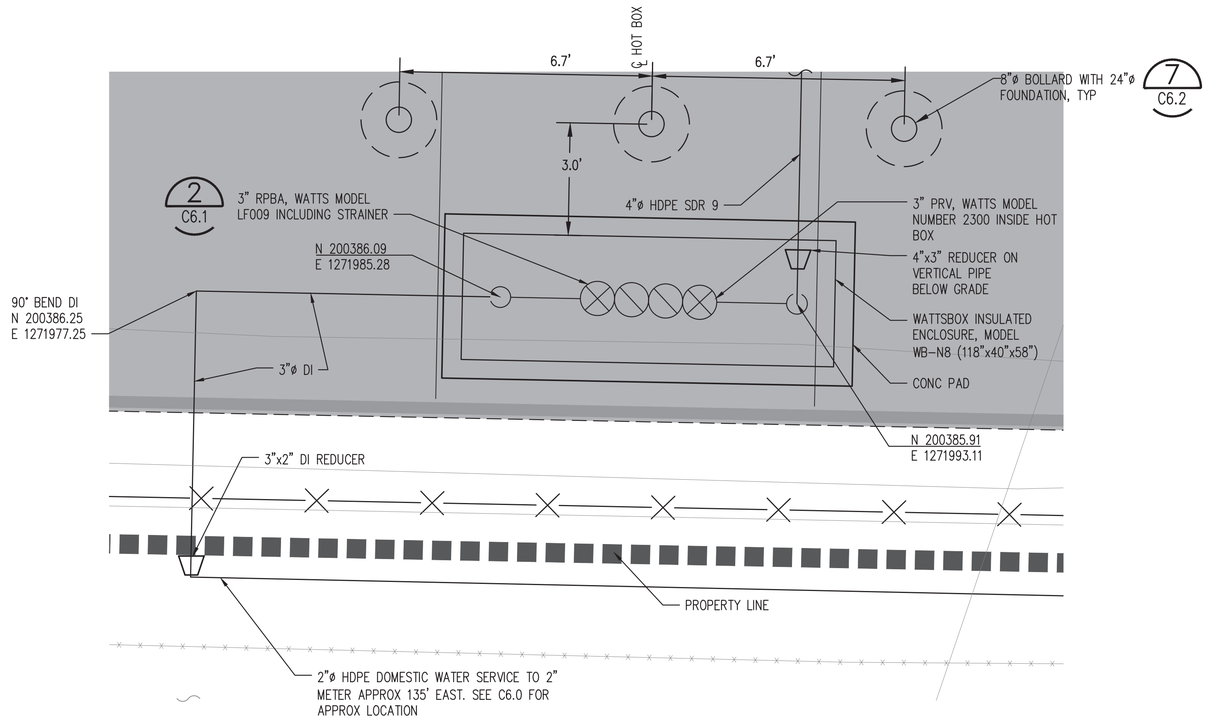

METER AND RPBA PARTIAL PLAN

NTS

1 C6.0

N

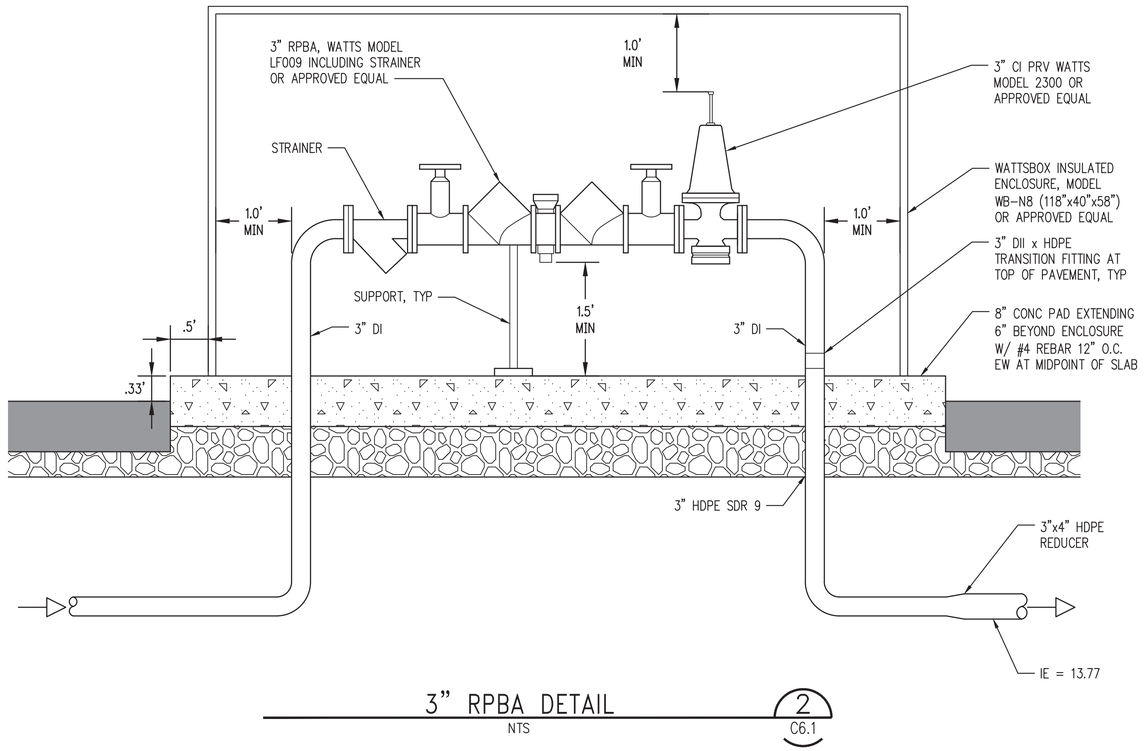

3" RPBA DETAIL

NTS

2 C6.1

NOTES:

1. CONTRACTOR TO PROVIDE THRUST RESTRAINT AT BENDS AND TEES CONFORMING TO WSDOT STANDARD PLAN B-90.40-01.

CITY OF SEATTLE DATUM

RECORD DRAWINGS

NO.	DATE	BY	CHD.	APPR.	REVISION

DATE 08/22/2018 | SCALE AS NOTED
DESIGNED WMA | CHECKED WMA
DRAWN NLM | PROJECT NAME
JOB NO. 112143

kpff 2407 North 31st Street, Suite 100 Tacoma, Washington 98407 (253) 396-0150 Fax (253) 396-0162

CALL 48 HOURS BEFORE YOU DIG 1-800-424-5555

SEATTLE IRON & METALS CORP.

RECORD DRAWINGS:
THESE RECORD DRAWINGS HAVE BEEN PREPARED FROM INFORMATION PROVIDED BY OTHERS. KPFF HAS NOT VERIFIED THE ACCURACY AND/OR COMPLETENESS OF THIS INFORMATION.

SEATTLE IRON & METALS
730 SOUTH MYRTLE STREET, SEATTLE, WA

ON-SITE WATER DETAILS

SHEET C6.1 2

SHEET 29 OF 30

PLOTTED BY: nmedley DATE & TIME: Aug 22, 2018 - 10:40am FILE: K:\Civil\112-\112143 Seattle Iron and Metals\730 S Myrtle\5.04 Construction Support\8- Drawings\730 S MYRTLE SDCI (Current)\30 C6.2 WAT DET (2 OF 2).dwg

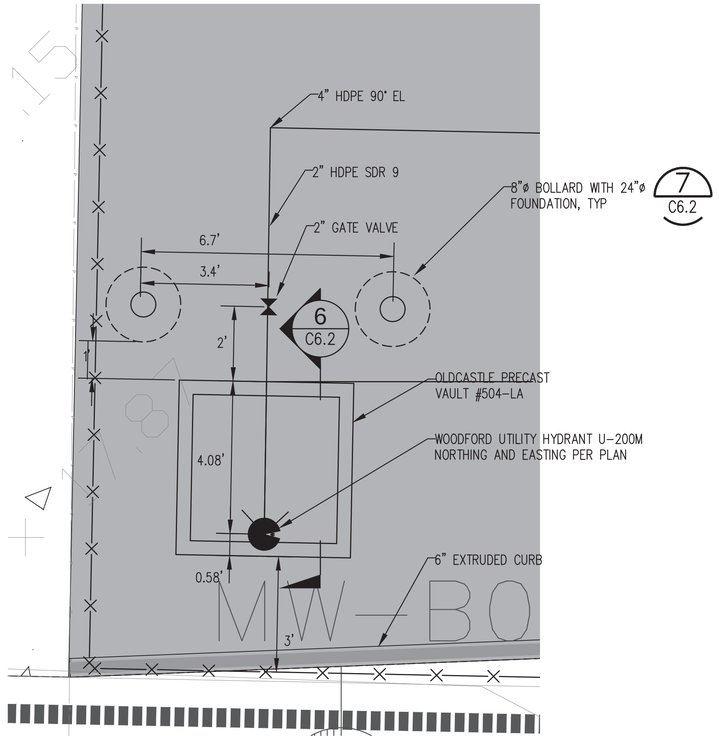

TYPICAL YARD HYDRANT LAYOUT

NTS

4 C6.0

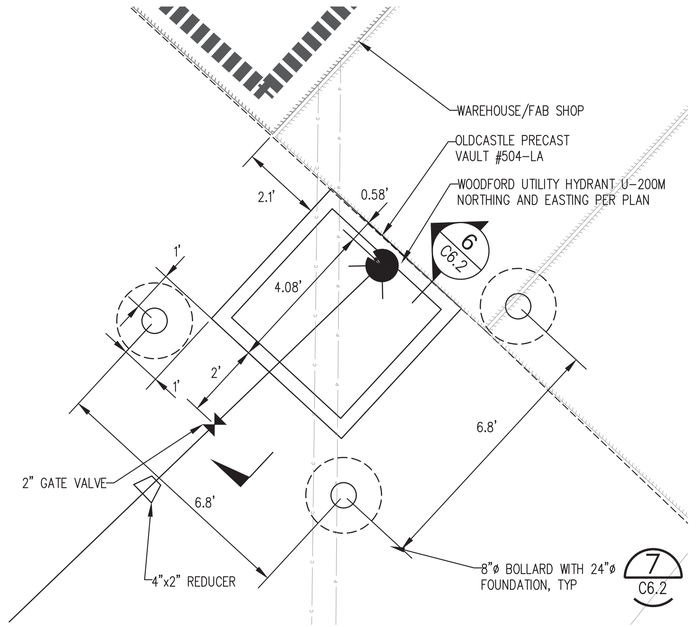

YARD HYDRANT LAYOUT AT BLDG

NTS

5 C6.0

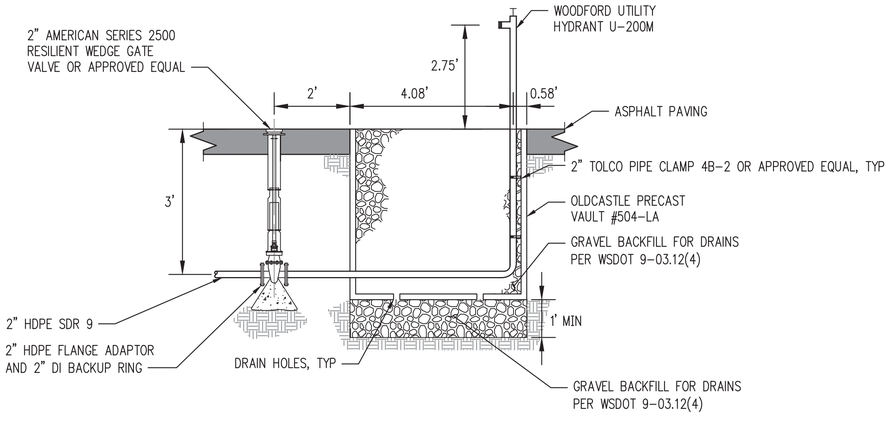

YARD HYDRANT DETAIL

NTS

6 C6.2

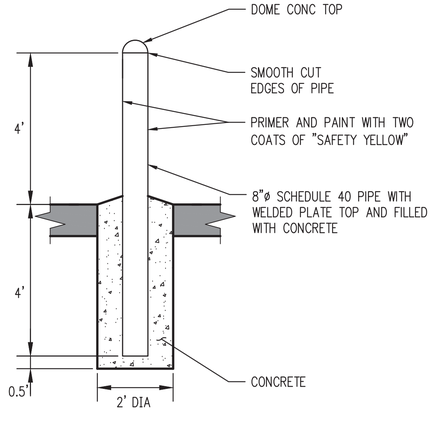

BOLLARD DETAIL

NTS

7 C6.2

CITY OF SEATTLE DATUM

RECORD DRAWINGS

NO.	DATE	BY	CHD.	APPR.	REVISION

DATE 08/22/2018 | SCALE AS NOTED
DESIGNED WMA | CHECKED WMA
DRAWN NLM | PROJECT NAME
JOB NO. 112143

kpff
2407 North 31st Street, Suite 100
Tacoma, Washington 98407
(253) 396-0150 Fax (253) 396-0162

CALL 48 HOURS BEFORE YOU DIG 1-800-424-5555

SEATTLE IRON&METALS CORP.

RECORD DRAWINGS:
THESE RECORD DRAWINGS HAVE BEEN PREPARED FROM INFORMATION PROVIDED BY OTHERS. KPFF HAS NOT VERIFIED THE ACCURACY AND/OR COMPLETENESS OF THIS INFORMATION.

SEATTLE IRON & METALS
730 SOUTH MYRTLE STREET, SEATTLE, WA

ON-SITE WATER DETAILS

SHEET C6.2

SHEET 30 OF 30

PLOTTED BY: nmedley DATE & TIME: Aug 22, 2018 - 10:40am FILE: N:\Civil\112-\112143 Seattle Iron and Metals\730 S Myrtle\5.04 Construction Support\8- Drawings\730 S MYRTLE SDCI (Current)\30 C6.2 WAT DET (2 OF 2).dwg

Whitehead Tyee Site

Interim Action Completion Report

Appendix C
Key Photographs



Photograph 1. Site controls: water holding tanks and silt fence



Photograph 2. Site controls: stabilized construction entrance



Photograph 3. Excavation and direct-loading, heavy oil-range organics focused excavation



Photograph 4. Completed heavy oil-range organics focused excavation



Photograph 5. Removal of clean overburden, Stoddard solvent excavation



Photograph 6. Concrete foundation wall in shallow soil, Stoddard solvent excavation



Photograph 7. Lined stockpile area for Stoddard solvent-contaminated soil



Photograph 8. Shored excavation below water table, Stoddard solvent excavation



Photograph 9. Western portion of Stoddard solvent excavation



Photograph 10. Placement of import backfill below water table, Stoddard solvent excavation



Photograph 11. View of onsite reuse stockpile and exclusion zone delineation



Photograph 12. Backfill compaction, heavy oil-range organics focused excavation



Photograph 13. Dewatering saturated Stoddard solvent-contaminated soil stockpile area



Photograph 14. Eastern portion of Stoddard solvent excavation



Photograph 15. Loading trucks from Stoddard solvent-contaminated soil stockpile



Photograph 16. Dewatering water treatment system bag filters and granular activated carbon vessels



Photograph 17. Backfill compaction, Stoddard solvent excavation



Photograph 18. Soil reuse stockpile, stormwater system trenching



Photograph 19. Dismantling and disposal of Stoddard solvent-contaminated soil stockpile



Photograph 20. Removal of portion of stockpile SP-03 for disposal



Photograph 21. Installation of StormCapture detention structure



Photograph 22. Installation of stormwater conveyance pipe



Photograph 23. Stormwater conveyance pipe trench and pipe bedding



Photograph 24. Discharge of treated dewatering water to sewer



Photograph 25. Catch basin installation



Photograph 26. Class 2 soil export stockpile area



Photograph 27. Concrete pavement installation



Photograph 28. Well protection during pavement



Photograph 29. Completed concrete pavement on northern portion of property



Photograph 30. Installation of modular wetlands treatment units



Photograph 31. Boring machine for jack-and-bore final connection to sewer

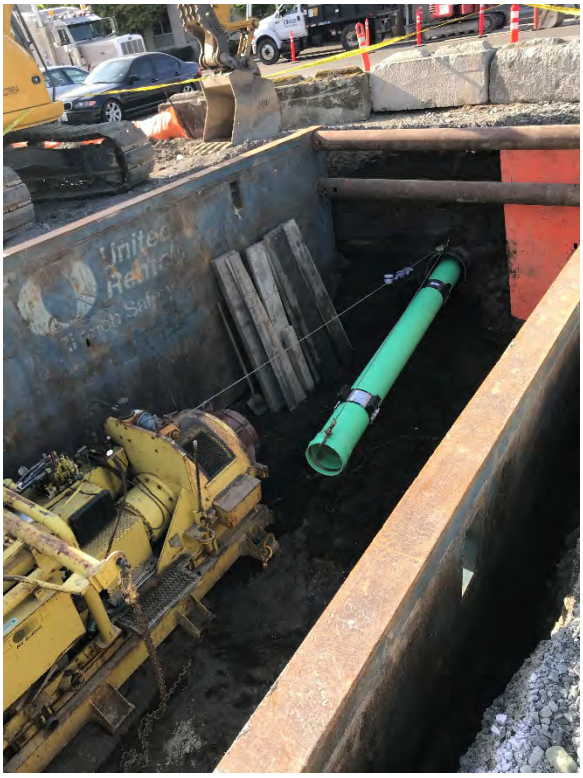

Photograph 32. Installation of pipe for final sewer connection



Photograph 33. Monitoring well restoration with heavy-duty monument

Whitehead Tyee Site

Interim Action Completion Report

Appendix D
Laboratory Reports

Confirmation Samples

FRIEDMAN & BRUYA, INC.

ENVIRONMENTAL CHEMISTS

James E. Bruya, Ph.D.
Yelena Aravkina, M.S.
Michael Erdahl, B.S.
Arina Podnozova, B.S.
Eric Young, B.S.

3012 16th Avenue West
Seattle, WA 98119-2029
(206) 285-8282
fbi@isomedia.com
www.friedmanandbruya.com

September 26, 2017

Lynn Grochala, Project Manager
Floyd-Snider
Two Union Square, Suite 600
601 Union St
Seattle, WA 98101

Dear Ms Grochala:

Included is the amended report from the testing of material submitted on August 30, 2017 from the SIM-730 EDR, F&BI 708547 project. Per the QAP, the PCBs were reported at a lower reporting limit.

We appreciate this opportunity to be of service to you and hope you will call if you should have any questions.

Sincerely,

FRIEDMAN & BRUYA, INC.



Michael Erdahl
Project Manager

Enclosures
FDS0912R.DOC

FRIEDMAN & BRUYA, INC.

ENVIRONMENTAL CHEMISTS

James E. Bruya, Ph.D.
Yelena Aravkina, M.S.
Michael Erdahl, B.S.
Arina Podnozova, B.S.
Eric Young, B.S.

3012 16th Avenue West
Seattle, WA 98119-2029
(206) 285-8282
fbi@isomedia.com
www.friedmanandbruya.com

September 26, 2017

Lynn Grochala, Project Manager
Floyd-Snider
Two Union Square, Suite 600
601 Union St
Seattle, WA 98101

Dear Ms Grochala:

Included are the results from the testing of material submitted on August 30, 2017 from the SIM-730 EDR, F&BI 708547 project. There are 21 pages included in this report. Any samples that may remain are currently scheduled for disposal in 30 days. If you would like us to return your samples or arrange for long term storage at our offices, please contact us as soon as possible.

We appreciate this opportunity to be of service to you and hope you will call if you should have any questions.

Sincerely,

FRIEDMAN & BRUYA, INC.



Michael Erdahl
Project Manager

Enclosures
FDS0912R.DOC

CASE NARRATIVE

This case narrative encompasses samples received on August 30, 2017 by Friedman & Bruya, Inc. from the Floyd-Snider SIM-730 EDR, F&BI 708547 project. Samples were logged in under the laboratory ID's listed below.

Laboratory ID	Floyd-Snider
708547 -01	HO-SE1-4'
708547 -02	Trip Blank

The 8260C chloroethane calibration verification standard was outside of laboratory acceptance criteria. The data were qualified accordingly.

All other quality control requirements were acceptable.

Date of Report: 09/26/17
Date Received: 08/30/17
Project: SIM-730 EDR, F&BI 708547
Date Extracted: 08/31/17
Date Analyzed: 08/31/17

RESULTS FROM THE ANALYSIS OF SOIL SAMPLES FOR TOTAL PETROLEUM HYDROCARBONS AS DIESEL AND MOTOR OIL USING METHOD NWTPH-Dx

Results Reported on a Dry Weight Basis
Results Reported as mg/kg (ppm)

Sample ID Laboratory ID	Diesel Range (C_{10}-C_{25})	Motor Oil Range (C_{25}-C_{36})	Surrogate (% Recovery) (Limit 56-165)
HO-SE1-4' 708547-01	<50	<250	117
Method Blank 07-1888 MB	<50	<250	136

Analysis For Total Metals By EPA Method 6020A

Client ID:	HO-SE1-4'	Client:	Floyd-Snider
Date Received:	08/30/17	Project:	SIM-730 EDR, F&BI 708547
Date Extracted:	08/31/17	Lab ID:	708547-01
Date Analyzed:	09/06/17	Data File:	708547-01.095
Matrix:	Soil	Instrument:	ICPMS2
Units:	mg/kg (ppm) Dry Weight	Operator:	SP

Analyte:	Concentration mg/kg (ppm)
Arsenic	4.15
Barium	31.3
Cadmium	<1
Chromium	9.31
Lead	3.10
Mercury	<1
Selenium	<1
Silver	<1

Analysis For Total Metals By EPA Method 6020A

Client ID:	Method Blank	Client:	Floyd-Snider
Date Received:	NA	Project:	SIM-730 EDR, F&BI 708547
Date Extracted:	08/31/17	Lab ID:	I7-469 mb
Date Analyzed:	08/31/17	Data File:	I7-469 mb.076
Matrix:	Soil	Instrument:	ICPMS2
Units:	mg/kg (ppm) Dry Weight	Operator:	SP

Analyte:	Concentration mg/kg (ppm)
Arsenic	<1
Barium	<1
Cadmium	<1
Chromium	<1
Lead	<1
Mercury	<1
Selenium	<1
Silver	<1

Analysis For Semivolatile Compounds By EPA Method 8270D SIM

Client Sample ID:	HO-SE1-4'	Client:	Floyd-Snider
Date Received:	08/30/17	Project:	SIM-730 EDR, F&BI 708547
Date Extracted:	08/31/17	Lab ID:	708547-01 1/5
Date Analyzed:	08/31/17	Data File:	083105.D
Matrix:	Soil	Instrument:	GCMS6
Units:	mg/kg (ppm) Dry Weight	Operator:	ya

Surrogates:	% Recovery:	Lower Limit:	Upper Limit:
Anthracene-d10	88	31	163
Benzo(a)anthracene-d12	97	24	168

Compounds:	Concentration mg/kg (ppm)
Benz(a)anthracene	<0.01
Chrysene	<0.01
Benzo(a)pyrene	<0.01
Benzo(b)fluoranthene	<0.01
Benzo(k)fluoranthene	<0.01
Indeno(1,2,3-cd)pyrene	<0.01
Dibenz(a,h)anthracene	<0.01

Analysis For Semivolatile Compounds By EPA Method 8270D SIM

Client Sample ID:	Method Blank	Client:	Floyd-Snider
Date Received:	Not Applicable	Project:	SIM-730 EDR, F&BI 708547
Date Extracted:	08/31/17	Lab ID:	07-1887 mb 1/5
Date Analyzed:	08/31/17	Data File:	083104.D
Matrix:	Soil	Instrument:	GCMS6
Units:	mg/kg (ppm) Dry Weight	Operator:	ya

Surrogates:	% Recovery:	Lower Limit:	Upper Limit:
Anthracene-d10	93	31	163
Benzo(a)anthracene-d12	113	24	168

Compounds:	Concentration mg/kg (ppm)
Benz(a)anthracene	<0.01
Chrysene	<0.01
Benzo(a)pyrene	<0.01
Benzo(b)fluoranthene	<0.01
Benzo(k)fluoranthene	<0.01
Indeno(1,2,3-cd)pyrene	<0.01
Dibenz(a,h)anthracene	<0.01

Analysis For Volatile Compounds By EPA Method 8260C

Client Sample ID:	HO-SE1-4'	Client:	Floyd-Snider
Date Received:	08/30/17	Project:	SIM-730 EDR, F&BI 708547
Date Extracted:	09/01/17	Lab ID:	708547-01
Date Analyzed:	09/01/17	Data File:	090139.D
Matrix:	Soil	Instrument:	GCMS4
Units:	mg/kg (ppm) Dry Weight	Operator:	JS

Surrogates:	% Recovery:	Lower Limit:	Upper Limit:
1,2-Dichloroethane-d4	102	62	142
Toluene-d8	101	55	145
4-Bromofluorobenzene	103	65	139

Compounds:	Concentration mg/kg (ppm)	Compounds:	Concentration mg/kg (ppm)
Dichlorodifluoromethane	<0.5	1,3-Dichloropropane	<0.05
Chloromethane	<0.5	Tetrachloroethene	0.026
Vinyl chloride	<0.05	Dibromochloromethane	<0.05
Bromomethane	<0.5	1,2-Dibromoethane (EDB)	<0.05
Chloroethane	<0.5 ca	Chlorobenzene	<0.05
Trichlorofluoromethane	<0.5	Ethylbenzene	<0.05
Acetone	<0.5	1,1,1,2-Tetrachloroethane	<0.05
1,1-Dichloroethene	<0.05	m,p-Xylene	<0.1
Hexane	<0.25	o-Xylene	<0.05
Methylene chloride	<0.5	Styrene	<0.05
Methyl t-butyl ether (MTBE)	<0.05	Isopropylbenzene	<0.05
trans-1,2-Dichloroethene	<0.05	Bromoform	<0.05
1,1-Dichloroethane	<0.05	n-Propylbenzene	<0.05
2,2-Dichloropropane	<0.05	Bromobenzene	<0.05
cis-1,2-Dichloroethene	<0.05	1,3,5-Trimethylbenzene	<0.05
Chloroform	<0.05	1,1,2,2-Tetrachloroethane	<0.05
2-Butanone (MEK)	<0.5	1,2,3-Trichloropropane	<0.05
1,2-Dichloroethane (EDC)	<0.05	2-Chlorotoluene	<0.05
1,1,1-Trichloroethane	<0.05	4-Chlorotoluene	<0.05
1,1-Dichloropropene	<0.05	tert-Butylbenzene	<0.05
Carbon tetrachloride	<0.05	1,2,4-Trimethylbenzene	<0.05
Benzene	<0.03	sec-Butylbenzene	<0.05
Trichloroethene	<0.02	p-Isopropyltoluene	<0.05
1,2-Dichloropropane	<0.05	1,3-Dichlorobenzene	<0.05
Bromodichloromethane	<0.05	1,4-Dichlorobenzene	<0.05
Dibromomethane	<0.05	1,2-Dichlorobenzene	<0.05
4-Methyl-2-pentanone	<0.5	1,2-Dibromo-3-chloropropane	<0.5
cis-1,3-Dichloropropene	<0.05	1,2,4-Trichlorobenzene	<0.25
Toluene	<0.05	Hexachlorobutadiene	<0.25
trans-1,3-Dichloropropene	<0.05	Naphthalene	<0.05
1,1,2-Trichloroethane	<0.05	1,2,3-Trichlorobenzene	<0.25
2-Hexanone	<0.5		

Analysis For Volatile Compounds By EPA Method 8260C

Client Sample ID:	Method Blank	Client:	Floyd-Snider
Date Received:	Not Applicable	Project:	SIM-730 EDR, F&BI 708547
Date Extracted:	09/01/17	Lab ID:	07-1862 mb2
Date Analyzed:	09/01/17	Data File:	090106.D
Matrix:	Soil	Instrument:	GCMS4
Units:	mg/kg (ppm) Dry Weight	Operator:	JS

Surrogates:	% Recovery:	Lower Limit:	Upper Limit:
1,2-Dichloroethane-d4	102	62	142
Toluene-d8	102	55	145
4-Bromofluorobenzene	101	65	139

Compounds:	Concentration mg/kg (ppm)	Compounds:	Concentration mg/kg (ppm)
Dichlorodifluoromethane	<0.5	1,3-Dichloropropane	<0.05
Chloromethane	<0.5	Tetrachloroethene	<0.025
Vinyl chloride	<0.05	Dibromochloromethane	<0.05
Bromomethane	<0.5	1,2-Dibromoethane (EDB)	<0.05
Chloroethane	<0.5	Chlorobenzene	<0.05
Trichlorofluoromethane	<0.5	Ethylbenzene	<0.05
Acetone	<0.5	1,1,1,2-Tetrachloroethane	<0.05
1,1-Dichloroethene	<0.05	m,p-Xylene	<0.1
Hexane	<0.25	o-Xylene	<0.05
Methylene chloride	<0.5	Styrene	<0.05
Methyl t-butyl ether (MTBE)	<0.05	Isopropylbenzene	<0.05
trans-1,2-Dichloroethene	<0.05	Bromoform	<0.05
1,1-Dichloroethane	<0.05	n-Propylbenzene	<0.05
2,2-Dichloropropane	<0.05	Bromobenzene	<0.05
cis-1,2-Dichloroethene	<0.05	1,3,5-Trimethylbenzene	<0.05
Chloroform	<0.05	1,1,2,2-Tetrachloroethane	<0.05
2-Butanone (MEK)	<0.5	1,2,3-Trichloropropane	<0.05
1,2-Dichloroethane (EDC)	<0.05	2-Chlorotoluene	<0.05
1,1,1-Trichloroethane	<0.05	4-Chlorotoluene	<0.05
1,1-Dichloropropene	<0.05	tert-Butylbenzene	<0.05
Carbon tetrachloride	<0.05	1,2,4-Trimethylbenzene	<0.05
Benzene	<0.03	sec-Butylbenzene	<0.05
Trichloroethene	<0.02	p-Isopropyltoluene	<0.05
1,2-Dichloropropane	<0.05	1,3-Dichlorobenzene	<0.05
Bromodichloromethane	<0.05	1,4-Dichlorobenzene	<0.05
Dibromomethane	<0.05	1,2-Dichlorobenzene	<0.05
4-Methyl-2-pentanone	<0.5	1,2-Dibromo-3-chloropropane	<0.5
cis-1,3-Dichloropropene	<0.05	1,2,4-Trichlorobenzene	<0.25
Toluene	<0.05	Hexachlorobutadiene	<0.25
trans-1,3-Dichloropropene	<0.05	Naphthalene	<0.05
1,1,2-Trichloroethane	<0.05	1,2,3-Trichlorobenzene	<0.25
2-Hexanone	<0.5		

Analysis For Volatile Compounds By EPA Method 8260C

Client Sample ID:	Trip Blank	Client:	Floyd-Snider
Date Received:	08/30/17	Project:	SIM-730 EDR, F&BI 708547
Date Extracted:	08/31/17	Lab ID:	708547-02
Date Analyzed:	08/31/17	Data File:	083111.D
Matrix:	Water	Instrument:	GCMS4
Units:	ug/L (ppb)	Operator:	JS

Surrogates:	% Recovery:	Lower Limit:	Upper Limit:
1,2-Dichloroethane-d4	102	57	121
Toluene-d8	102	63	127
4-Bromofluorobenzene	104	60	133

Compounds:	Concentration ug/L (ppb)	Compounds:	Concentration ug/L (ppb)
Dichlorodifluoromethane	<1 ca	1,3-Dichloropropane	<1
Chloromethane	<10	Tetrachloroethene	<1
Vinyl chloride	<0.2	Dibromochloromethane	<1
Bromomethane	<1	1,2-Dibromoethane (EDB)	<1
Chloroethane	<1	Chlorobenzene	<1
Trichlorofluoromethane	<1	Ethylbenzene	<1
Acetone	<10	1,1,1,2-Tetrachloroethane	<1
1,1-Dichloroethene	<1	m,p-Xylene	<2
Hexane	<1	o-Xylene	<1
Methylene chloride	<5	Styrene	<1
Methyl t-butyl ether (MTBE)	<1	Isopropylbenzene	<1
trans-1,2-Dichloroethene	<1	Bromoform	<1
1,1-Dichloroethane	<1	n-Propylbenzene	<1
2,2-Dichloropropane	<1	Bromobenzene	<1
cis-1,2-Dichloroethene	<1	1,3,5-Trimethylbenzene	<1
Chloroform	<1	1,1,2,2-Tetrachloroethane	<1
2-Butanone (MEK)	<10	1,2,3-Trichloropropane	<1
1,2-Dichloroethane (EDC)	<1	2-Chlorotoluene	<1
1,1,1-Trichloroethane	<1	4-Chlorotoluene	<1
1,1-Dichloropropene	<1	tert-Butylbenzene	<1
Carbon tetrachloride	<1	1,2,4-Trimethylbenzene	<1
Benzene	<0.35	sec-Butylbenzene	<1
Trichloroethene	<1	p-Isopropyltoluene	<1
1,2-Dichloropropane	<1	1,3-Dichlorobenzene	<1
Bromodichloromethane	<1	1,4-Dichlorobenzene	<1
Dibromomethane	<1	1,2-Dichlorobenzene	<1
4-Methyl-2-pentanone	<10	1,2-Dibromo-3-chloropropane	<10
cis-1,3-Dichloropropene	<1	1,2,4-Trichlorobenzene	<1
Toluene	<1	Hexachlorobutadiene	<1
trans-1,3-Dichloropropene	<1	Naphthalene	<1
1,1,2-Trichloroethane	<1	1,2,3-Trichlorobenzene	<1
2-Hexanone	<10		

Analysis For Volatile Compounds By EPA Method 8260C

Client Sample ID:	Method Blank	Client:	Floyd-Snider
Date Received:	Not Applicable	Project:	SIM-730 EDR, F&BI 708547
Date Extracted:	08/31/17	Lab ID:	07-1860 mb
Date Analyzed:	08/31/17	Data File:	083108.D
Matrix:	Water	Instrument:	GCMS4
Units:	ug/L (ppb)	Operator:	JS

Surrogates:	% Recovery:	Lower Limit:	Upper Limit:
1,2-Dichloroethane-d4	98	57	121
Toluene-d8	103	63	127
4-Bromofluorobenzene	102	60	133

Compounds:	Concentration ug/L (ppb)	Compounds:	Concentration ug/L (ppb)
Dichlorodifluoromethane	<1	1,3-Dichloropropane	<1
Chloromethane	<10	Tetrachloroethene	<1
Vinyl chloride	<0.2	Dibromochloromethane	<1
Bromomethane	<1	1,2-Dibromoethane (EDB)	<1
Chloroethane	<1	Chlorobenzene	<1
Trichlorofluoromethane	<1	Ethylbenzene	<1
Acetone	<10	1,1,1,2-Tetrachloroethane	<1
1,1-Dichloroethene	<1	m,p-Xylene	<2
Hexane	<1	o-Xylene	<1
Methylene chloride	<5	Styrene	<1
Methyl t-butyl ether (MTBE)	<1	Isopropylbenzene	<1
trans-1,2-Dichloroethene	<1	Bromoform	<1
1,1-Dichloroethane	<1	n-Propylbenzene	<1
2,2-Dichloropropane	<1	Bromobenzene	<1
cis-1,2-Dichloroethene	<1	1,3,5-Trimethylbenzene	<1
Chloroform	<1	1,1,2,2-Tetrachloroethane	<1
2-Butanone (MEK)	<10	1,2,3-Trichloropropane	<1
1,2-Dichloroethane (EDC)	<1	2-Chlorotoluene	<1
1,1,1-Trichloroethane	<1	4-Chlorotoluene	<1
1,1-Dichloropropene	<1	tert-Butylbenzene	<1
Carbon tetrachloride	<1	1,2,4-Trimethylbenzene	<1
Benzene	<0.35	sec-Butylbenzene	<1
Trichloroethene	<1	p-Isopropyltoluene	<1
1,2-Dichloropropane	<1	1,3-Dichlorobenzene	<1
Bromodichloromethane	<1	1,4-Dichlorobenzene	<1
Dibromomethane	<1	1,2-Dichlorobenzene	<1
4-Methyl-2-pentanone	<10	1,2-Dibromo-3-chloropropane	<10
cis-1,3-Dichloropropene	<1	1,2,4-Trichlorobenzene	<1
Toluene	<1	Hexachlorobutadiene	<1
trans-1,3-Dichloropropene	<1	Naphthalene	<1
1,1,2-Trichloroethane	<1	1,2,3-Trichlorobenzene	<1
2-Hexanone	<10		

Analysis For PCBs By EPA Method 8082A

Client Sample ID:	HO-SE1-4'	Client:	Floyd-Snider
Date Received:	08/30/17	Project:	SIM-730 EDR, F&BI 708547
Date Extracted:	08/31/17	Lab ID:	708547-01 1/5
Date Analyzed:	09/18/17	Data File:	091809.D
Matrix:	Soil	Instrument:	GC7
Units:	mg/kg (ppm) Dry Weight	Operator:	VM

Surrogates:	% Recovery:	Lower Limit:	Upper Limit:
TCMX	65	29	154

Compounds:	Concentration mg/kg (ppm) Dry Weight
Aroclor 1221	<0.02
Aroclor 1232	<0.02
Aroclor 1016	<0.02
Aroclor 1242	<0.02
Aroclor 1248	<0.02
Aroclor 1254	<0.02
Aroclor 1260	<0.02
Aroclor 1262	<0.02
Aroclor 1268	<0.02

Analysis For PCBs By EPA Method 8082A

Client Sample ID:	Method Blank	Client:	Floyd-Snider
Date Received:	Not Applicable	Project:	SIM-730 EDR, F&BI 708547
Date Extracted:	08/31/17	Lab ID:	07-1886 mb 1/5
Date Analyzed:	08/31/17	Data File:	083105.D
Matrix:	Soil	Instrument:	GC7
Units:	mg/kg (ppm) Dry Weight	Operator:	MP

Surrogates:	% Recovery:	Lower Limit:	Upper Limit:
TCMX	73	29	154

Compounds:	Concentration mg/kg (ppm)
Aroclor 1221	<0.02
Aroclor 1232	<0.02
Aroclor 1016	<0.02
Aroclor 1242	<0.02
Aroclor 1248	<0.02
Aroclor 1254	<0.02
Aroclor 1260	<0.02
Aroclor 1262	<0.02
Aroclor 1268	<0.02

Date of Report: 09/26/17
Date Received: 08/30/17
Project: SIM-730 EDR, F&BI 708547

QUALITY ASSURANCE RESULTS FROM THE ANALYSIS OF SOIL SAMPLES FOR TOTAL PETROLEUM HYDROCARBONS AS DIESEL EXTENDED USING METHOD NWTPH-Dx

Laboratory Code: 708547-01 (Matrix Spike)

Analyte	Reporting Units	Spike Level	Sample Result (Wet Wt)	Percent Recovery MS	Percent Recovery MSD	Acceptance Criteria	RPD (Limit 20)
Diesel Extended	mg/kg (ppm)	5,000	<50	96	92	63-146	4

Laboratory Code: Laboratory Control Sample

Analyte	Reporting Units	Spike Level	Percent Recovery LCS	Acceptance Criteria
Diesel Extended	mg/kg (ppm)	5,000	92	79-144

Date of Report: 09/26/17
Date Received: 08/30/17
Project: SIM-730 EDR, F&BI 708547

QUALITY ASSURANCE RESULTS FOR THE ANALYSIS OF SOIL SAMPLES FOR TOTAL METALS USING EPA METHOD 6020A

Laboratory Code: 708491-21 x5 (Matrix Spike)

Analyte	Reporting Units	Spike Level	Sample Result (Wet wt)	Percent Recovery MS	Percent Recovery MSD	Acceptance Criteria	RPD (Limit 20)
Arsenic	mg/kg (ppm)	10	7.20	81 b	73 b	75-125	10 b
Barium	mg/kg (ppm)	50	233	48 b	0 b	75-125	200 b
Cadmium	mg/kg (ppm)	10	<5	103	97	75-125	6
Chromium	mg/kg (ppm)	50	12.8	88 b	72 b	75-125	20 b
Lead	mg/kg (ppm)	50	10.6	94	89	75-125	5
Mercury	mg/kg (ppm	5	<5	104	103	75-125	1
Selenium	mg/kg (ppm)	5	<5	86	89	75-125	3
Silver	mg/kg (ppm)	10	<5	86	87	75-125	1

Laboratory Code: Laboratory Control Sample

Analyte	Reporting Units	Spike Level	Percent Recovery LCS	Acceptance Criteria
Arsenic	mg/kg (ppm)	10	89	80-120
Barium	mg/kg (ppm)	50	103	80-120
Cadmium	mg/kg (ppm)	10	100	80-120
Chromium	mg/kg (ppm)	50	102	80-120
Lead	mg/kg (ppm)	50	99	80-120
Mercury	mg/kg (ppm)	5	94	80-120
Selenium	mg/kg (ppm)	5	96	80-120
Silver	mg/kg (ppm)	10	88	80-120

Date of Report: 09/26/17
Date Received: 08/30/17
Project: SIM-730 EDR, F&BI 708547

QUALITY ASSURANCE RESULTS FOR THE ANALYSIS OF SOIL SAMPLES FOR PAHS BY EPA METHOD 8270D SIM

Laboratory Code: 708547-01 1/5 (Matrix Spike)

Analyte	Reporting Units	Spike Level	Sample Result (Wet wt)	Percent Recovery MS	Percent Recovery MSD	Acceptance Criteria	RPD (Limit 20)
Benz(a)anthracene	mg/kg (ppm)	0.17	<0.01	89	92	23-144	3
Chrysene	mg/kg (ppm)	0.17	<0.01	85	88	32-149	3
Benzo(b)fluoranthene	mg/kg (ppm)	0.17	<0.01	84	89	23-176	6
Benzo(k)fluoranthene	mg/kg (ppm)	0.17	<0.01	89	97	42-139	9
Benzo(a)pyrene	mg/kg (ppm)	0.17	<0.01	84	88	21-163	5
Indeno(1,2,3-cd)pyrene	mg/kg (ppm)	0.17	<0.01	75	72	23-170	4
Dibenz(a,h)anthracene	mg/kg (ppm)	0.17	<0.01	73	71	31-146	3

Laboratory Code: Laboratory Control Sample 1/5

Analyte	Reporting Units	Spike Level	Percent Recovery LCS	Acceptance Criteria
Benz(a)anthracene	mg/kg (ppm)	0.17	102	51-115
Chrysene	mg/kg (ppm)	0.17	97	55-129
Benzo(b)fluoranthene	mg/kg (ppm)	0.17	99	56-123
Benzo(k)fluoranthene	mg/kg (ppm)	0.17	99	54-131
Benzo(a)pyrene	mg/kg (ppm)	0.17	94	51-118
Indeno(1,2,3-cd)pyrene	mg/kg (ppm)	0.17	91	49-148
Dibenz(a,h)anthracene	mg/kg (ppm)	0.17	89	50-141

Date of Report: 09/26/17
Date Received: 08/30/17
Project: SIM-730 EDR, F&BI 708547

QUALITY ASSURANCE RESULTS FOR THE ANALYSIS OF SOIL SAMPLES FOR VOLATILES BY EPA METHOD 8260C

Laboratory Code: 708568-01 (Matrix Spike)

Analyte	Reporting Units	Spike Level	Sample Result (Wet wt)	Percent Recovery MS	Percent Recovery MSD	Acceptance Criteria	RPD (Limit 20)
Dichlorodifluoromethane	mg/kg (ppm)	2.5	<0.5	12	13	10-56	8
Chloromethane	mg/kg (ppm)	2.5	<0.5	36	36	10-90	0
Vinyl chloride	mg/kg (ppm)	2.5	<0.05	34	33	10-91	3
Bromomethane	mg/kg (ppm)	2.5	<0.5	52	52	10-110	0
Chloroethane	mg/kg (ppm)	2.5	<0.5	43	41	10-101	5
Trichlorofluoromethane	mg/kg (ppm)	2.5	<0.5	34	33	10-95	3
Acetone	mg/kg (ppm)	12.5	<0.5	73	69	11-141	6
1,1-Dichloroethene	mg/kg (ppm)	2.5	<0.05	51	48	22-107	6
Hexane	mg/kg (ppm)	2.5	<0.25	26	26	10-95	0
Methylene chloride	mg/kg (ppm)	2.5	<0.5	65	61	14-128	6
Methyl t-butyl ether (MTBE)	mg/kg (ppm)	2.5	<0.05	71	70	17-134	1
trans-1,2-Dichloroethene	mg/kg (ppm)	2.5	<0.05	57	57	13-112	0
1,1-Dichloroethane	mg/kg (ppm)	2.5	<0.05	63	61	23-115	3
2,2-Dichloropropane	mg/kg (ppm)	2.5	<0.05	58	57	18-117	2
cis-1,2-Dichloroethene	mg/kg (ppm)	2.5	<0.05	66	64	25-120	3
Chloroform	mg/kg (ppm)	2.5	<0.05	66	64	29-117	3
2-Butanone (MEK)	mg/kg (ppm)	12.5	<0.5	73	71	20-133	3
1,2-Dichloroethane (EDC)	mg/kg (ppm)	2.5	<0.05	68	66	22-124	3
1,1,1-Trichloroethane	mg/kg (ppm)	2.5	<0.05	63	62	27-112	2
1,1-Dichloropropene	mg/kg (ppm)	2.5	<0.05	61	59	26-107	3
Carbon tetrachloride	mg/kg (ppm)	2.5	<0.05	59	60	28-126	2
Benzene	mg/kg (ppm)	2.5	<0.03	64	64	26-114	0
Trichloroethene	mg/kg (ppm)	2.5	<0.02	66	64	30-112	3
1,2-Dichloropropane	mg/kg (ppm)	2.5	<0.05	68	66	31-119	3
Bromodichloromethane	mg/kg (ppm)	2.5	<0.05	68	67	31-131	1
Dibromomethane	mg/kg (ppm)	2.5	<0.05	70	67	27-124	4
4-Methyl-2-pentanone	mg/kg (ppm)	12.5	<0.5	73	72	16-147	1
cis-1,3-Dichloropropene	mg/kg (ppm)	2.5	<0.05	68	66	28-137	3
Toluene	mg/kg (ppm)	2.5	<0.05	69	67	34-112	3
trans-1,3-Dichloropropene	mg/kg (ppm)	2.5	<0.05	72	71	30-136	1
1,1,2-Trichloroethane	mg/kg (ppm)	2.5	<0.05	71	70	32-126	1
2-Hexanone	mg/kg (ppm)	12.5	<0.5	75	74	17-147	1
1,3-Dichloropropane	mg/kg (ppm)	2.5	<0.05	73	72	29-125	1
Tetrachloroethene	mg/kg (ppm)	2.5	<0.025	66	65	25-114	2
Dibromochloromethane	mg/kg (ppm)	2.5	<0.05	72	71	32-143	1
1,2-Dibromoethane (EDB)	mg/kg (ppm)	2.5	<0.05	74	73	32-126	1
Chlorobenzene	mg/kg (ppm)	2.5	<0.05	73	71	37-113	3
Ethylbenzene	mg/kg (ppm)	2.5	<0.05	69	69	34-115	0
1,1,1,2-Tetrachloroethane	mg/kg (ppm)	2.5	<0.05	72	71	35-126	1
m,p-Xylene	mg/kg (ppm)	5	<0.1	70	69	25-125	1
o-Xylene	mg/kg (ppm)	2.5	<0.05	71	70	27-126	1
Styrene	mg/kg (ppm)	2.5	<0.05	75	74	39-121	1
Isopropylbenzene	mg/kg (ppm)	2.5	<0.05	74	72	34-123	3
Bromoform	mg/kg (ppm)	2.5	<0.05	72	70	18-155	3
n-Propylbenzene	mg/kg (ppm)	2.5	<0.05	73	71	31-120	3
Bromobenzene	mg/kg (ppm)	2.5	<0.05	73	72	40-115	1
1,3,5-Trimethylbenzene	mg/kg (ppm)	2.5	<0.05	74	73	24-130	1
1,1,2,2-Tetrachloroethane	mg/kg (ppm)	2.5	<0.05	74	73	27-148	1
1,2,3-Trichloropropane	mg/kg (ppm)	2.5	<0.05	72	71	33-123	1
2-Chlorotoluene	mg/kg (ppm)	2.5	<0.05	73	72	39-110	1
4-Chlorotoluene	mg/kg (ppm)	2.5	<0.05	74	73	39-111	1
tert-Butylbenzene	mg/kg (ppm)	2.5	<0.05	75	74	36-116	1
1,2,4-Trimethylbenzene	mg/kg (ppm)	2.5	0.040	71	70	35-116	1
sec-Butylbenzene	mg/kg (ppm)	2.5	<0.05	75	73	33-118	3
p-Isopropyltoluene	mg/kg (ppm)	2.5	<0.05	75	73	32-119	3
1,3-Dichlorobenzene	mg/kg (ppm)	2.5	<0.05	73	72	38-111	1
1,4-Dichlorobenzene	mg/kg (ppm)	2.5	<0.05	73	72	39-109	1
1,2-Dichlorobenzene	mg/kg (ppm)	2.5	<0.05	74	73	40-111	1
1,2-Dibromo-3-chloropropane	mg/kg (ppm)	2.5	<0.5	73	72	47-127	1
1,2,4-Trichlorobenzene	mg/kg (ppm)	2.5	<0.25	73	72	31-121	1
Hexachlorobutadiene	mg/kg (ppm)	2.5	<0.25	71	70	24-128	1
Naphthalene	mg/kg (ppm)	2.5	0.052	76	74	24-139	3
1,2,3-Trichlorobenzene	mg/kg (ppm)	2.5	<0.25	75	74	35-117	1

Date of Report: 09/26/17
Date Received: 08/30/17
Project: SIM-730 EDR, F&BI 708547

QUALITY ASSURANCE RESULTS FOR THE ANALYSIS OF SOIL SAMPLES FOR VOLATILES BY EPA METHOD 8260C

Laboratory Code: Laboratory Control Sample

Analyte	Reporting Units	Spike Level	Percent Recovery LCS	Acceptance Criteria
Dichlorodifluoromethane	mg/kg (ppm)	2.5	41	10-76
Chloromethane	mg/kg (ppm)	2.5	68	34-98
Vinyl chloride	mg/kg (ppm)	2.5	75	42-107
Bromomethane	mg/kg (ppm)	2.5	84	46-113
Chloroethane	mg/kg (ppm)	2.5	81	47-115
Trichlorofluoromethane	mg/kg (ppm)	2.5	85	53-112
Acetone	mg/kg (ppm)	12.5	101	39-147
1,1-Dichloroethene	mg/kg (ppm)	2.5	92	65-110
Hexane	mg/kg (ppm)	2.5	89	55-107
Methylene chloride	mg/kg (ppm)	2.5	111	50-127
Methyl t-butyl ether (MTBE)	mg/kg (ppm)	2.5	97	72-122
trans-1,2-Dichloroethene	mg/kg (ppm)	2.5	98	71-113
1,1-Dichloroethane	mg/kg (ppm)	2.5	104	74-109
2,2-Dichloropropane	mg/kg (ppm)	2.5	88	64-151
cis-1,2-Dichloroethene	mg/kg (ppm)	2.5	102	73-110
Chloroform	mg/kg (ppm)	2.5	101	76-110
2-Butanone (MEK)	mg/kg (ppm)	12.5	110	60-121
1,2-Dichloroethane (EDC)	mg/kg (ppm)	2.5	101	73-111
1,1,1-Trichloroethane	mg/kg (ppm)	2.5	104	72-116
1,1-Dichloropropene	mg/kg (ppm)	2.5	102	72-112
Carbon tetrachloride	mg/kg (ppm)	2.5	98	67-123
Benzene	mg/kg (ppm)	2.5	98	72-106
Trichloroethene	mg/kg (ppm)	2.5	105	72-107
1,2-Dichloropropane	mg/kg (ppm)	2.5	101	74-115
Bromodichloromethane	mg/kg (ppm)	2.5	101	75-126
Dibromomethane	mg/kg (ppm)	2.5	101	76-116
4-Methyl-2-pentanone	mg/kg (ppm)	12.5	104	80-128
cis-1,3-Dichloropropene	mg/kg (ppm)	2.5	99	71-138
Toluene	mg/kg (ppm)	2.5	92	74-111
trans-1,3-Dichloropropene	mg/kg (ppm)	2.5	92	77-135
1,1,2-Trichloroethane	mg/kg (ppm)	2.5	98	77-116
2-Hexanone	mg/kg(ppm)	12.5	99	70-129
1,3-Dichloropropane	mg/kg (ppm)	2.5	96	75-115
Tetrachloroethene	mg/kg (ppm)	2.5	95	73-111
Dibromochloromethane	mg/kg (ppm)	2.5	90	64-152
1,2-Dibromoethane (EDB)	mg/kg (ppm)	2.5	95	77-117
Chlorobenzene	mg/kg (ppm)	2.5	93	76-109
Ethylbenzene	mg/kg (ppm)	2.5	93	75-112
1,1,1,2-Tetrachloroethane	mg/kg (ppm)	2.5	97	76-125
m,p-Xylene	mg/kg (ppm)	5	93	77-115
o-Xylene	mg/kg (ppm)	2.5	92	76-115
Styrene	mg/kg (ppm)	2.5	95	76-119
Isopropylbenzene	mg/kg (ppm)	2.5	93	76-120
Bromoform	mg/kg (ppm)	2.5	96	50-174
n-Propylbenzene	mg/kg (ppm)	2.5	90	77-115
Bromobenzene	mg/kg (ppm)	2.5	94	76-112
1,3,5-Trimethylbenzene	mg/kg (ppm)	2.5	92	77-121
1,1,2,2-Tetrachloroethane	mg/kg (ppm)	2.5	94	74-121
1,2,3-Trichloropropane	mg/kg (ppm)	2.5	98	74-116
2-Chlorotoluene	mg/kg (ppm)	2.5	91	75-113
4-Chlorotoluene	mg/kg (ppm)	2.5	90	77-115
tert-Butylbenzene	mg/kg (ppm)	2.5	93	77-123
1,2,4-Trimethylbenzene	mg/kg (ppm)	2.5	93	77-119
sec-Butylbenzene	mg/kg (ppm)	2.5	90	78-120
p-Isopropyltoluene	mg/kg (ppm)	2.5	90	77-120
1,3-Dichlorobenzene	mg/kg (ppm)	2.5	94	76-112
1,4-Dichlorobenzene	mg/kg (ppm)	2.5	94	74-109
1,2-Dichlorobenzene	mg/kg (ppm)	2.5	92	75-114
1,2-Dibromo-3-chloropropane	mg/kg (ppm)	2.5	89	68-122
1,2,4-Trichlorobenzene	mg/kg (ppm)	2.5	91	75-122
Hexachlorobutadiene	mg/kg (ppm)	2.5	83	74-130
Naphthalene	mg/kg (ppm)	2.5	91	73-122
1,2,3-Trichlorobenzene	mg/kg (ppm)	2.5	89	75-117

Date of Report: 09/26/17
Date Received: 08/30/17
Project: SIM-730 EDR, F&BI 708547

QUALITY ASSURANCE RESULTS FOR THE ANALYSIS OF WATER SAMPLES FOR VOLATILES BY EPA METHOD 8260C

Laboratory Code: 708541-07 (Matrix Spike)

Analyte	Reporting Units	Spike Level	Sample Result	Percent Recovery MS	Percent Recovery MSD	Acceptance Criteria	RPD (Limit 20)
Dichlorodifluoromethane	ug/L (ppb)	50	<1	93	95	10-172	2
Chloromethane	ug/L (ppb)	50	<10	98	103	25-166	5
Vinyl chloride	ug/L (ppb)	50	<0.2	99	97	36-166	2
Bromomethane	ug/L (ppb)	50	<1	112	111	47-169	1
Chloroethane	ug/L (ppb)	50	<1	96	97	46-160	1
Trichlorofluoromethane	ug/L (ppb)	50	<1	103	103	44-165	0
Acetone	ug/L (ppb)	250	<10	93	91	10-182	2
1,1-Dichloroethene	ug/L (ppb)	50	<1	104	102	60-136	2
Hexane	ug/L (ppb)	50	<1	110	108	52-150	2
Methylene chloride	ug/L (ppb)	50	<5	105	106	67-132	1
Methyl t-butyl ether (MTBE)	ug/L (ppb)	50	<1	102	100	74-127	2
trans-1,2-Dichloroethene	ug/L (ppb)	50	<1	102	101	72-129	1
1,1-Dichloroethane	ug/L (ppb)	50	<1	104	105	70-128	1
2,2-Dichloropropane	ug/L (ppb)	50	<1	117	115	36-154	2
cis-1,2-Dichloroethene	ug/L (ppb)	50	<1	103	102	71-127	1
Chloroform	ug/L (ppb)	50	<1	102	102	65-132	0
2-Butanone (MEK)	ug/L (ppb)	250	<10	100	98	10-129	2
1,2-Dichloroethane (EDC)	ug/L (ppb)	50	<1	100	101	69-133	1
1,1,1-Trichloroethane	ug/L (ppb)	50	<1	106	106	60-146	0
1,1-Dichloropropene	ug/L (ppb)	50	<1	105	104	69-133	1
Carbon tetrachloride	ug/L (ppb)	50	<1	107	105	56-152	2
Benzene	ug/L (ppb)	50	<0.35	98	99	76-125	1
Trichloroethene	ug/L (ppb)	50	<1	101	100	66-135	1
1,2-Dichloropropane	ug/L (ppb)	50	<1	101	101	78-125	0
Bromodichloromethane	ug/L (ppb)	50	<1	107	107	61-150	0
Dibromomethane	ug/L (ppb)	50	<1	100	101	66-141	1
4-Methyl-2-pentanone	ug/L (ppb)	250	<10	99	98	10-185	1
cis-1,3-Dichloropropene	ug/L (ppb)	50	<1	107	108	72-132	1
Toluene	ug/L (ppb)	50	<1	92	92	76-122	0
trans-1,3-Dichloropropene	ug/L (ppb)	50	<1	101	99	76-130	2
1,1,2-Trichloroethane	ug/L (ppb)	50	<1	96	97	68-131	1
2-Hexanone	ug/L (ppb)	250	<10	93	93	10-185	0
1,3-Dichloropropane	ug/L (ppb)	50	<1	94	94	71-128	0
Tetrachloroethene	ug/L (ppb)	50	<1	95	95	10-226	0
Dibromochloromethane	ug/L (ppb)	50	<1	100	99	70-139	1
1,2-Dibromoethane (EDB)	ug/L (ppb)	50	<1	95	95	69-134	0
Chlorobenzene	ug/L (ppb)	50	<1	92	91	77-122	1
Ethylbenzene	ug/L (ppb)	50	<1	92	92	69-135	0
1,1,1,2-Tetrachloroethane	ug/L (ppb)	50	<1	99	98	73-137	1
m,p-Xylene	ug/L (ppb)	100	<2	92	92	69-135	0
o-Xylene	ug/L (ppb)	50	<1	91	90	60-140	1
Styrene	ug/L (ppb)	50	<1	95	95	71-133	0
Isopropylbenzene	ug/L (ppb)	50	<1	93	91	65-142	2
Bromoform	ug/L (ppb)	50	<1	107	107	65-142	0
n-Propylbenzene	ug/L (ppb)	50	<1	91	92	58-144	1
Bromobenzene	ug/L (ppb)	50	<1	92	93	75-124	1
1,3,5-Trimethylbenzene	ug/L (ppb)	50	<1	91	91	66-137	0
1,1,2,2-Tetrachloroethane	ug/L (ppb)	50	<1	97	97	51-154	0
1,2,3-Trichloropropane	ug/L (ppb)	50	<1	95	95	53-150	0
2-Chlorotoluene	ug/L (ppb)	50	<1	91	91	66-127	0
4-Chlorotoluene	ug/L (ppb)	50	<1	89	91	65-130	2
tert-Butylbenzene	ug/L (ppb)	50	<1	92	92	65-137	0
1,2,4-Trimethylbenzene	ug/L (ppb)	50	<1	92	92	59-146	0
sec-Butylbenzene	ug/L (ppb)	50	<1	92	91	64-140	1
p-Isopropyltoluene	ug/L (ppb)	50	<1	90	90	65-141	0
1,3-Dichlorobenzene	ug/L (ppb)	50	<1	95	95	72-123	0
1,4-Dichlorobenzene	ug/L (ppb)	50	<1	93	93	69-126	0
1,2-Dichlorobenzene	ug/L (ppb)	50	<1	91	91	69-128	0
1,2-Dibromo-3-chloropropane	ug/L (ppb)	50	<10	94	95	32-164	1
1,2,4-Trichlorobenzene	ug/L (ppb)	50	<1	91	91	66-136	0
Hexachlorobutadiene	ug/L (ppb)	50	<1	95	91	60-143	4
Naphthalene	ug/L (ppb)	50	<1	87	86	44-164	1
1,2,3-Trichlorobenzene	ug/L (ppb)	50	<1	87	86	69-148	1

Date of Report: 09/26/17
Date Received: 08/30/17
Project: SIM-730 EDR, F&BI 708547

QUALITY ASSURANCE RESULTS FOR THE ANALYSIS OF WATER SAMPLES FOR VOLATILES BY EPA METHOD 8260C

Laboratory Code: Laboratory Control Sample

Analyte	Reporting Units	Spike Level	Percent Recovery LCS	Acceptance Criteria
Dichlorodifluoromethane	ug/L (ppb)	50	99	25-158
Chloromethane	ug/L (ppb)	50	105	45-156
Vinyl chloride	ug/L (ppb)	50	99	50-154
Bromomethane	ug/L (ppb)	50	107	55-143
Chloroethane	ug/L (ppb)	50	97	58-146
Trichlorofluoromethane	ug/L (ppb)	250	107	50-150
Acetone	ug/L (ppb)	250	103	53-131
1,1-Dichloroethene	ug/L (ppb)	50	109	67-136
Hexane	ug/L (ppb)	50	115	57-137
Methylene chloride	ug/L (ppb)	50	106	39-148
Methyl t-butyl ether (MTBE)	ug/L (ppb)	50	103	64-147
trans-1,2-Dichloroethene	ug/L (ppb)	50	105	68-128
1,1-Dichloroethane	ug/L (ppb)	50	108	79-121
2,2-Dichloropropane	ug/L (ppb)	50	119	55-143
cis-1,2-Dichloroethene	ug/L (ppb)	50	106	80-123
Chloroform	ug/L (ppb)	50	106	80-121
2-Butanone (MEK)	ug/L (ppb)	250	111	57-149
1,2-Dichloroethane (EDC)	ug/L (ppb)	50	103	73-132
1,1,1-Trichloroethane	ug/L (ppb)	50	109	83-130
1,1-Dichloropropene	ug/L (ppb)	50	109	77-129
Carbon tetrachloride	ug/L (ppb)	50	108	75-158
Benzene	ug/L (ppb)	50	102	69-134
Trichloroethene	ug/L (ppb)	50	105	80-120
1,2-Dichloropropane	ug/L (ppb)	50	105	77-123
Bromodichloromethane	ug/L (ppb)	50	110	81-133
Dibromomethane	ug/L (ppb)	50	105	82-125
4-Methyl-2-pentanone	ug/L (ppb)	250	104	65-138
cis-1,3-Dichloropropene	ug/L (ppb)	50	110	82-132
Toluene	ug/L (ppb)	50	97	72-122
trans-1,3-Dichloropropene	ug/L (ppb)	50	105	80-136
1,1,2-Trichloroethane	ug/L (ppb)	50	102	75-124
2-Hexanone	ug/L (ppb)	250	103	60-136
1,3-Dichloropropane	ug/L (ppb)	50	99	76-126
Tetrachloroethene	ug/L (ppb)	50	100	76-121
Dibromochloromethane	ug/L (ppb)	50	104	84-133
1,2-Dibromoethane (EDB)	ug/L (ppb)	50	101	82-125
Chlorobenzene	ug/L (ppb)	50	96	83-114
Ethylbenzene	ug/L (ppb)	50	96	77-124
1,1,1,2-Tetrachloroethane	ug/L (ppb)	50	102	84-127
m,p-Xylene	ug/L (ppb)	100	97	83-125
o-Xylene	ug/L (ppb)	50	94	81-121
Styrene	ug/L (ppb)	50	99	84-119
Isopropylbenzene	ug/L (ppb)	50	96	85-117
Bromoform	ug/L (ppb)	50	114	74-136
n-Propylbenzene	ug/L (ppb)	50	95	74-126
Bromobenzene	ug/L (ppb)	50	96	80-121
1,3,5-Trimethylbenzene	ug/L (ppb)	50	94	78-123
1,1,2,2-Tetrachloroethane	ug/L (ppb)	50	103	66-126
1,2,3-Trichloropropane	ug/L (ppb)	50	100	67-124
2-Chlorotoluene	ug/L (ppb)	50	94	77-127
4-Chlorotoluene	ug/L (ppb)	50	94	78-128
tert-Butylbenzene	ug/L (ppb)	50	95	80-123
1,2,4-Trimethylbenzene	ug/L (ppb)	50	95	79-122
sec-Butylbenzene	ug/L (ppb)	50	93	80-125
p-Isopropyltoluene	ug/L (ppb)	50	93	81-123
1,3-Dichlorobenzene	ug/L (ppb)	50	97	85-116
1,4-Dichlorobenzene	ug/L (ppb)	50	97	84-121
1,2-Dichlorobenzene	ug/L (ppb)	50	95	85-116
1,2-Dibromo-3-chloropropane	ug/L (ppb)	50	100	57-141
1,2,4-Trichlorobenzene	ug/L (ppb)	50	93	72-130
Hexachlorobutadiene	ug/L (ppb)	50	93	53-141
Naphthalene	ug/L (ppb)	50	89	64-133
1,2,3-Trichlorobenzene	ug/L (ppb)	50	89	65-136

Date of Report: 09/26/17
Date Received: 08/30/17
Project: SIM-730 EDR, F&BI 708547

QUALITY ASSURANCE RESULTS FOR THE ANALYSIS OF SOIL SAMPLES FOR POLYCHLORINATED BIPHENYLS AS AROCLOR 1016/1260 BY EPA METHOD 8082A

Laboratory Code: 708547-01 1/50 (Matrix Spike) 1/50

Analyte	Reporting Units	Spike Level	Sample Result (Wet Wt)	Percent Recovery MS	Percent Recovery MSD	Control Limits	RPD (Limit 20)
Aroclor 1016	mg/kg (ppm)	1.7	<0.2	82	90	50-150	9
Aroclor 1260	mg/kg (ppm)	1.7	<0.2	80	88	50-150	10

Laboratory Code: Laboratory Control Sample 1/5

Analyte	Reporting Units	Spike Level	Percent Recovery LCS	Acceptance Criteria
Aroclor 1016	mg/kg (ppm)	1.7	93	55-130
Aroclor 1260	mg/kg (ppm)	1.7	99	58-133

Data Qualifiers & Definitions

a - The analyte was detected at a level less than five times the reporting limit. The RPD results may not provide reliable information on the variability of the analysis.

b - The analyte was spiked at a level that was less than five times that present in the sample. Matrix spike recoveries may not be meaningful.

ca - The calibration results for the analyte were outside of acceptance criteria. The value reported is an estimate.

c - The presence of the analyte may be due to carryover from previous sample injections.

cf - The sample was centrifuged prior to analysis.

d - The sample was diluted. Detection limits were raised and surrogate recoveries may not be meaningful.

dv - Insufficient sample volume was available to achieve normal reporting limits.

f - The sample was laboratory filtered prior to analysis.

fb - The analyte was detected in the method blank.

fc - The compound is a common laboratory and field contaminant.

hr - The sample and duplicate were reextracted and reanalyzed. RPD results were still outside of control limits. Variability is attributed to sample inhomogeneity.

hs - Headspace was present in the container used for analysis.

ht – The analysis was performed outside the method or client-specified holding time requirement.

ip - Recovery fell outside of control limits. Compounds in the sample matrix interfered with the quantitation of the analyte.

j - The analyte concentration is reported below the lowest calibration standard. The value reported is an estimate.

J - The internal standard associated with the analyte is out of control limits. The reported concentration is an estimate.

jl - The laboratory control sample(s) percent recovery and/or RPD were out of control limits. The reported concentration should be considered an estimate.

js - The surrogate associated with the analyte is out of control limits. The reported concentration should be considered an estimate.

lc - The presence of the analyte is likely due to laboratory contamination.

L - The reported concentration was generated from a library search.

nm - The analyte was not detected in one or more of the duplicate analyses. Therefore, calculation of the RPD is not applicable.

pc - The sample was received with incorrect preservation or in a container not approved by the method. The value reported should be considered an estimate.

ve - The analyte response exceeded the valid instrument calibration range. The value reported is an estimate.

vo - The value reported fell outside the control limits established for this analyte.

x - The sample chromatographic pattern does not resemble the fuel standard used for quantitation.

708547

SAMPLE CHAIN OF CUSTODY

ME 08/30/17 VSI/VWI/AT

Page # ____ of ____

Report To Lynn Grochala

Company Floyd | Snider

Address 601 Union St, Ste 600

City, State, ZIP Seattle, WA 98101

Phone 206-292-2078 Email lynn-grochala @ floydsnider.com

SAMPLERS (*signature*)

PROJECT NAME: SIM - 730 EDR

PO #

REMARKS

INVOICE TO

TURNAROUND TIME
- ☐ Standard Turnaround
- ☐ ~~RUSH~~ see notes
- Rush charges authorized by:

SAMPLE DISPOSAL
- ☐ Dispose after 30 days
- ☐ Archive Samples
- ☐ Other

Sample ID	Lab ID	Date Sampled	Time Sampled	Sample Type	# of Jars	TPH-HCID	TPH-Diesel	TPH-Gasoline	BTEX by 8021B	VOCs by 8260C	SVOCs by 8270D	cPAHs 8270D SIM	RCRA-8	PCBs (Aroclors)			Notes
HO-SE1-41	01A-B	8/30/17	1435	soil	8		X			X		X	X	X			TPH-D Iopht 24-hr TAT
trip blanks	02A,B									X							5-day rest
																	Samples received at 4 °C

SIGNATURE	PRINT NAME	COMPANY	DATE	TIME
Relinquished by:	Kristin Anderson	FS	8/30/17	1555
Received by:	Nhan Phan	Fe BI	8/30/17	1555
Relinquished by:				
Received by:				

Friedman & Bruya, Inc.
3012 16th Avenue West
Seattle, WA 98119-2029
Ph. (206) 285-8282

FRIEDMAN & BRUYA, INC.

ENVIRONMENTAL CHEMISTS

James E. Bruya, Ph.D.
Yelena Aravkina, M.S.
Michael Erdahl, B.S.
Arina Podnozova, B.S.
Eric Young, B.S.

3012 16th Avenue West
Seattle, WA 98119-2029
(206) 285-8282
fbi@isomedia.com
www.friedmanandbruya.com

September 26, 2017

Lynn Grochala, Project Manager
Floyd-Snider
Two Union Square, Suite 600
601 Union St
Seattle, WA 98101

Dear Ms Grochala:

Included are the amended reports from the testing of material submitted on September 6, 2017 from the SIM-730 EDR, F&BI 709082 project. Per your request, sample SS-S1W-10.5 was split into a separate report from the other samples on the chain of custody.

We appreciate this opportunity to be of service to you and hope you will call if you should have any questions.

Sincerely,

FRIEDMAN & BRUYA, INC.



Michael Erdahl
Project Manager

Enclosures
FDS0919R.DOC

FRIEDMAN & BRUYA, INC.

ENVIRONMENTAL CHEMISTS

James E. Bruya, Ph.D.
Yelena Aravkina, M.S.
Michael Erdahl, B.S.
Arina Podnozova, B.S.
Eric Young, B.S.

3012 16th Avenue West
Seattle, WA 98119-2029
(206) 285-8282
fbi@isomedia.com
www.friedmanandbruya.com

September 19, 2017

Lynn Grochala, Project Manager
Floyd-Snider
Two Union Square, Suite 600
601 Union St
Seattle, WA 98101

Dear Ms Grochala:

Included are the additional results from the testing of material submitted on September 6, 2017 from the SIM-730 EDR, F&BI 709082 project. There are 5 pages included in this report.

We appreciate this opportunity to be of service to you and hope you will call if you should have any questions.

Sincerely,

FRIEDMAN & BRUYA, INC.



Michael Erdahl
Project Manager

Enclosures
FDS0919R.DOC

CASE NARRATIVE

This case narrative encompasses samples received on September 6, 2017 by Friedman & Bruya, Inc. from the Floyd-Snider SIM-730 EDR, F&BI 709082 project. Samples were logged in under the laboratory ID's listed below.

Laboratory ID	Floyd-Snider
709082 -01	WT-SP01-01
709082 -02	WT-SP01-02
709082 -03	WT-SP01-03
709082 -04	WT-SP01-04
709082 -05	WT-SP01-05
709082 -06	SS-S1W-10.5'
709082 -07	Trip Blanks

All quality control requirements were acceptable.

Analysis For Semivolatile Compounds By EPA Method 8270D

Client Sample ID:	SS-S1W-10.5'	Client:	Floyd-Snider
Date Received:	09/06/17	Project:	SIM-730 EDR, F&BI 709082
Date Extracted:	09/07/17	Lab ID:	709082-06
Date Analyzed:	09/07/17	Data File:	090706.D
Matrix:	Soil	Instrument:	GCMS8
Units:	mg/kg (ppm) Dry Weight	Operator:	ya

Surrogates:	% Recovery:	Lower Limit:	Upper Limit:
2-Fluorophenol	92	56	115
Phenol-d6	90	54	113
Nitrobenzene-d5	92	31	164
2-Fluorobiphenyl	87	47	133
2,4,6-Tribromophenol	85	35	141
Terphenyl-d14	95	24	188

Compounds:	Concentration mg/kg (ppm)
Pentachlorophenol	<0.1

Analysis For Semivolatile Compounds By EPA Method 8270D

Client Sample ID:	Method Blank	Client:	Floyd-Snider
Date Received:	Not Applicable	Project:	SIM-730 EDR, F&BI 709082
Date Extracted:	09/07/17	Lab ID:	07-1960 mb
Date Analyzed:	09/07/17	Data File:	090705.D
Matrix:	Soil	Instrument:	GCMS8
Units:	mg/kg (ppm) Dry Weight	Operator:	ya

Surrogates:	% Recovery:	Lower Limit:	Upper Limit:
2-Fluorophenol	102	56	115
Phenol-d6	98	54	113
Nitrobenzene-d5	105	31	164
2-Fluorobiphenyl	101	47	133
2,4,6-Tribromophenol	93	35	141
Terphenyl-d14	99	24	188

Compounds:	Concentration mg/kg (ppm)
Pentachlorophenol	<0.1

Date of Report: 09/19/17
Date Received: 09/06/17
Project: SIM-730 EDR, F&BI 709082

QUALITY ASSURANCE RESULTS FOR THE ANALYSIS OF SOIL SAMPLES FOR SEMIVOLATILES BY EPA METHOD 8270D

Laboratory Code: 709082-06 (Matrix Spike)

Analyte	Reporting Units	Spike Level	Sample Result (Wet wt)	Percent Recovery MS	Acceptance Criteria
Pentachlorophenol	mg/kg (ppm)	0.33	<0.1	89	12-160

Laboratory Code: Laboratory Control Sample

Analyte	Reporting Units	Spike Level	Percent Recovery LCS	Percent Recovery LCSD	Acceptance Criteria	RPD (Limit 20)
Pentachlorophenol	mg/kg (ppm)	0.33	100	102	45-123	2

Data Qualifiers & Definitions

a - The analyte was detected at a level less than five times the reporting limit. The RPD results may not provide reliable information on the variability of the analysis.

b - The analyte was spiked at a level that was less than five times that present in the sample. Matrix spike recoveries may not be meaningful.

ca - The calibration results for the analyte were outside of acceptance criteria. The value reported is an estimate.

c - The presence of the analyte may be due to carryover from previous sample injections.

cf - The sample was centrifuged prior to analysis.

d - The sample was diluted. Detection limits were raised and surrogate recoveries may not be meaningful.

dv - Insufficient sample volume was available to achieve normal reporting limits.

f - The sample was laboratory filtered prior to analysis.

fb - The analyte was detected in the method blank.

fc - The compound is a common laboratory and field contaminant.

hr - The sample and duplicate were reextracted and reanalyzed. RPD results were still outside of control limits. Variability is attributed to sample inhomogeneity.

hs - Headspace was present in the container used for analysis.

ht – The analysis was performed outside the method or client-specified holding time requirement.

ip - Recovery fell outside of control limits. Compounds in the sample matrix interfered with the quantitation of the analyte.

j - The analyte concentration is reported below the lowest calibration standard. The value reported is an estimate.

J - The internal standard associated with the analyte is out of control limits. The reported concentration is an estimate.

jl - The laboratory control sample(s) percent recovery and/or RPD were out of control limits. The reported concentration should be considered an estimate.

js - The surrogate associated with the analyte is out of control limits. The reported concentration should be considered an estimate.

lc - The presence of the analyte is likely due to laboratory contamination.

L - The reported concentration was generated from a library search.

nm - The analyte was not detected in one or more of the duplicate analyses. Therefore, calculation of the RPD is not applicable.

pc - The sample was received with incorrect preservation or in a container not approved by the method. The value reported should be considered an estimate.

ve - The analyte response exceeded the valid instrument calibration range. The value reported is an estimate.

vo - The value reported fell outside the control limits established for this analyte.

x - The sample chromatographic pattern does not resemble the fuel standard used for quantitation.

709082

SAMPLE CHAIN OF CUSTODY

ME 09-06-17 VS1/VW2/BT3

Page # 1 of 1

Report To Lynn Grochala
Company Floyd | Snider
Address 601 Union St, Ste 600
City, State, ZIP Seattle, WA 98101
Phone 206-292-2078 Email lynn.grochala@floydsnider.com

SAMPLERS (*signature*)

PROJECT NAME: SIM - 730 EDR

PO #

REMARKS: * VOC list: BETX; naphthalene; PCE; TCE; 1,1,1-trichloroethane

INVOICE TO

TURNAROUND TIME
☐ Standard Turnaround
☒ RUSH 48 hr notice
Rush charges authorized by:

SAMPLE DISPOSAL
☒ Dispose after 30 days
☐ Archive Samples
☐ Other

Sample ID	Lab ID	Date Sampled	Time Sampled	Sample Type	# of Jars	TPH-HCID	TPH-Diesel	TPH-Gasoline	BTEX by 8021B	VOCs by 8260C *	SVOCs by 8270D	PAHs 8270D SIM	As, Pb, Cd, Cr, Hg	PCBs	Pentachlorophenol		Notes
WT-SP01-01	01 A-F	9/6/17	0650	S	6		X	X		X			X	X			48-hr TAT
WT-SP01-02	02		0700		6		X	X		X			X	X			
WT-SP01-03	03		0730		6		X	X		X			X	X			
WT-SP01-04	04		0735		6		X	X		X			X	X			
WT-SP01-05	05		0740		6		X	X		X			X	X			
SS-S1W-10.5'	06		0845		1										X		24-hr TAT
trip blanks	07 AB				2			X		X							48-hr TAT

SIGNATURE	PRINT NAME	COMPANY	DATE	TIME
Relinquished by:	Kristin Anderson	FS	9/6/17	1545
Received by:	TOM LADD	FRI	9/6/17	1545
Relinquished by:				
Received by:		Samples received at 4 °C		

Friedman & Bruya, Inc.
3012 16th Avenue West
Seattle, WA 98119-2029
Ph. (206) 285-8282

Date of Report: 09/12/17
Date Received: 09/07/17
Project: SIM-730 EDR, F&BI 709115
Date Extracted: 09/08/17
Date Analyzed: 09/08/17

RESULTS FROM THE ANALYSIS OF SOIL SAMPLES
FOR TOTAL PETROLEUM HYDROCARBONS
AS STODDARD SOLVENT
USING METHOD NWTPH-Dx

Results Reported on a Dry Weight Basis
Results Reported as mg/kg (ppm)

Sample ID Laboratory ID	Stoddard Solvent Range (C_8-C_{11})	Surrogate (% Recovery) (Limit 53-144)
SS-B1-16' 709115-01	<50	83
SS-B1-16'-D 709115-02	<50	84
Method Blank 07-1965 MB	<50	85

709115

SAMPLE CHAIN OF CUSTODY

ME 09_07-17

Page 1 of 1 B01

Report To Lynn Grochala

Company Floyd | Snider

Address 601 Union St, Ste 600

City, State, ZIP Seattle, WA 98101

Phone 206-292-2078 Email lynn.grochala@floydsnider.com

SAMPLERS (*signature*)

PROJECT NAME: SIM-730 EDR

PO #

REMARKS

INVOICE TO

TURNAROUND TIME
- ☐ Standard Turnaround
- ☒ RUSH see notes

Rush charges authorized by:

SAMPLE DISPOSAL
- ☒ Dispose after 30 days
- ☐ Archive Samples
- ☐ Other

Sample ID	Lab ID	Date Sampled	Time Sampled	Sample Type	# of Jars	TPH-HCID	TPH-Diesel (Stoddard)	TPH-Gasoline	BTEX by 8021B	VOCs by 8260C	SVOCs by 8270D	PAHs 8270D SIM					Notes
SS-B1-16'	01	9/7/16	1517	soil	1		X										TAT A.S.A.P
SS-B1-16'-D	02	9/7/16	1520	soil	1		X										Std TAT

Samples received at 4 °C

SIGNATURE	PRINT NAME	COMPANY	DATE	TIME
Relinquished by:	Kristin Andersen	FS	9/7/17	1622
Received by:	HONG NGUYEN	FBI	9/7/17	16'2
Relinquished by:				
Received by:				

Friedman & Bruya, Inc.
3012 16th Avenue West
Seattle, WA 98119-2029
Ph. (206) 285-8282

709115

SAMPLE CHAIN OF CUSTODY

ME 09_07-17

Page 1 of 1 B01

Report To Lynn Grochala

Company Floyd | Snider

Address 601 Union St, Ste 600

City, State, ZIP Seattle, WA 98101

Phone 206-292-2078 Email lynn.grochala@floydsnider.com

SAMPLERS (*signature*)

PROJECT NAME: SIM-730 EDR

PO #

REMARKS

INVOICE TO

TURNAROUND TIME
- ☐ Standard Turnaround
- ☒ RUSH see notes

Rush charges authorized by:

SAMPLE DISPOSAL
- ☒ Dispose after 30 days
- ☐ Archive Samples
- ☐ Other

Sample ID	Lab ID	Date Sampled	Time Sampled	Sample Type	# of Jars	TPH-HCID	TPH-Diesel (Stoddard)	TPH-Gasoline	BTEX by 8021B	VOCs by 8260C	SVOCs by 8270D	PAHs 8270D SIM					Notes
SS-B1-16'	01	9/7/16	1517	soil	1		X										TAT A.S.A.P
SS-B1-16'-D	02	9/7/16	1520	soil	1		X										Std TAT

Samples received at 4 °C

SIGNATURE	PRINT NAME	COMPANY	DATE	TIME
Relinquished by:	Kristin Andersen	FS	9/7/17	1622
Received by:	HONG NGUYEN	FBI	9/7/17	16'2
Relinquished by:				
Received by:				

Friedman & Bruya, Inc.
3012 16th Avenue West
Seattle, WA 98119-2029
Ph. (206) 285-8282

DRAFT

Analysis For Semivolatile Compounds By EPA Method 8270D

Client Sample ID:	SS-B2-17'	Client:	Floyd-Snider
Date Received:	09/11/17	Project:	SIM-730 EDR, F&BI 709157
Date Extracted:	09/12/17	Lab ID:	709157-01
Date Analyzed:	09/12/17	Data File:	091206.D
Matrix:	Soil	Instrument:	GCMS8
Units:	mg/kg (ppm) Dry Weight	Operator:	ya

Surrogates:	% Recovery:	Lower Limit:	Upper Limit:
2-Fluorophenol	96	56	115
Phenol-d6	95	54	113
Nitrobenzene-d5	88	31	164
2-Fluorobiphenyl	82	47	133
2,4,6-Tribromophenol	83	35	141
Terphenyl-d14	99	24	188

Compounds:	Concentration mg/kg (ppm)
Pentachlorophenol	<0.1

DRAFT

Analysis For Semivolatile Compounds By EPA Method 8270D

Client Sample ID:	Method Blank	Client:	Floyd-Snider
Date Received:	Not Applicable	Project:	SIM-730 EDR, F&BI 709157
Date Extracted:	09/12/17	Lab ID:	07-2001 mb
Date Analyzed:	09/12/17	Data File:	091205.D
Matrix:	Soil	Instrument:	GCMS8
Units:	mg/kg (ppm) Dry Weight	Operator:	ya

Surrogates:	% Recovery:	Lower Limit:	Upper Limit:
2-Fluorophenol	89	56	115
Phenol-d6	98	54	113
Nitrobenzene-d5	93	31	164
2-Fluorobiphenyl	89	47	133
2,4,6-Tribromophenol	87	35	141
Terphenyl-d14	104	24	188

Compounds:	Concentration mg/kg (ppm)
Pentachlorophenol	<0.1

DRAFT

Date of Report: 09/12/17
Date Received: 09/11/17
Project: SIM-730 EDR, F&BI 709157
Date Extracted: 09/12/17
Date Analyzed: 09/12/17

RESULTS FROM THE ANALYSIS OF SOIL SAMPLES FOR TOTAL PETROLEUM HYDROCARBONS AS STODDARD SOLVENT USING METHOD NWTPH-Dx

Results Reported on a Dry Weight Basis
Results Reported as mg/kg (ppm)

Sample ID Laboratory ID	Stoddard Solvent Range (C_8-C_{11})	Surrogate (% Recovery) (Limit 53-144)
SS-B2-17' 709157-01	<50	76
SS-B3-17' 709157-02	<50	75
Method Blank 07-2002 MB	<50	79

709157

SAMPLE CHAIN OF CUSTODY

ME 09-11-17

B01

Report To Lynn Grochala
Company Floyd | Snider
Address 601 Union St, Ste 600
City, State, ZIP Seattle, WA 98101
Phone 206-292-2078 Email lynn.grochala@floydsnider.com

SAMPLERS (*signature*)

PROJECT NAME: SIM-730 EOR (Q9/12)

PO #

REMARKS

INVOICE TO

Page # ____ of ____

TURNAROUND TIME
- ☐ Standard Turnaround
- ☒ RUSH ASAP

Rush charges authorized by:

SAMPLE DISPOSAL
- ☒ Dispose after 30 days
- ☐ Archive Samples
- ☐ Other

Sample ID	Lab ID	Date Sampled	Time Sampled	Sample Type	# of Jars	TPH-HCID	TPH-Diesel (Standard)	TPH-Gasoline	BTEX by 8021B	VOCs by 8260C	SVOCs by 8270D	PAHs 8270D SIM	Perchlorophenol	Regular RL			Notes
SS-B2-17'	01	9/11/17	1420	soil	1		X						X				
SS-B3-17'	02	9/11/17	1500	soil	1		X										

SIGNATURE	PRINT NAME	COMPANY	DATE	TIME
Relinquished by:	Kristin Anderson	FS	9/11/17	1633
Received by:		F-B	9/11/17	1635
Relinquished by:				
Received by:				

Samples received at 4 °C

Friedman & Bruya, Inc.
3012 16th Avenue West
Seattle, WA 98119-2029
Ph. (206) 285-8282

FRIEDMAN & BRUYA, INC.

ENVIRONMENTAL CHEMISTS

James E. Bruya, Ph.D.
Yelena Aravkina, M.S.
Michael Erdahl, B.S.
Arina Podnozova, B.S.
Eric Young, B.S.

3012 16th Avenue West
Seattle, WA 98119-2029
(206) 285-8282
fbi@isomedia.com
www.friedmanandbruya.com

September 15, 2017

Lynn Grochala, Project Manager
Floyd-Snider
Two Union Square, Suite 600
601 Union St
Seattle, WA 98101

Dear Ms Grochala:

Included are the results from the testing of material submitted on September 14, 2017 from the SIM-730 EDR, F&BI 709223 project. There are 7 pages included in this report. Any samples that may remain are currently scheduled for disposal in 30 days. If you would like us to return your samples or arrange for long term storage at our offices, please contact us as soon as possible.

We appreciate this opportunity to be of service to you and hope you will call if you should have any questions.

Sincerely,

FRIEDMAN & BRUYA, INC.



Michael Erdahl
Project Manager

Enclosures
FDS0915R.DOC

CASE NARRATIVE

This case narrative encompasses samples received on September 14, 2017 by Friedman & Bruya, Inc. from the Floyd-Snider SIM-730 EDR project. Samples were logged in under the laboratory ID's listed below.

Laboratory ID	Floyd-Snider
709223 -01	SS-B4-16'

The sample was submitted to Frontier Analytical for dioxins/furans analysis. The report generated by Frontier will be forwarded to your office upon receipt.

All quality control requirements were acceptable.

Analysis For Semivolatile Compounds By EPA Method 8270D

Client Sample ID:	SS-B4-16'	Client:	Floyd-Snider
Date Received:	09/14/17	Project:	SIM-730 EDR, F&BI 709223
Date Extracted:	09/14/17	Lab ID:	709223-01
Date Analyzed:	09/14/17	Data File:	091406.D
Matrix:	Soil	Instrument:	GCMS8
Units:	mg/kg (ppm) Dry Weight	Operator:	ya

Surrogates:	% Recovery:	Lower Limit:	Upper Limit:
2-Fluorophenol	96	56	115
Phenol-d6	96	54	113
Nitrobenzene-d5	86	31	164
2-Fluorobiphenyl	77	47	133
2,4,6-Tribromophenol	93	35	141
Terphenyl-d14	89	24	188

Compounds:	Concentration mg/kg (ppm)
Pentachlorophenol	<0.1

Analysis For Semivolatile Compounds By EPA Method 8270D

Client Sample ID:	Method Blank	Client:	Floyd-Snider
Date Received:	Not Applicable	Project:	SIM-730 EDR, F&BI 709223
Date Extracted:	09/14/17	Lab ID:	07-2028 mb
Date Analyzed:	09/14/17	Data File:	091405.D
Matrix:	Soil	Instrument:	GCMS8
Units:	mg/kg (ppm) Dry Weight	Operator:	ya

Surrogates:	% Recovery:	Lower Limit:	Upper Limit:
2-Fluorophenol	110	56	115
Phenol-d6	110	54	113
Nitrobenzene-d5	111	31	164
2-Fluorobiphenyl	107	47	133
2,4,6-Tribromophenol	98	35	141
Terphenyl-d14	118	24	188

Compounds:	Concentration mg/kg (ppm)
Pentachlorophenol	<0.1

Date of Report: 09/15/17
Date Received: 09/14/17
Project: SIM-730 EDR, F&BI 709223
Date Extracted: 09/14/17
Date Analyzed: 09/14/17

**RESULTS FROM THE ANALYSIS OF SOIL SAMPLES
FOR TOTAL PETROLEUM HYDROCARBONS
AS STODDARD SOLVENT
USING METHOD NWTPH-Dx**

Results Reported on a Dry Weight Basis
Results Reported as mg/kg (ppm)

Sample ID Laboratory ID	Stoddard Solvent Range (C_8-C_{11})	Surrogate (% Recovery) (Limit 53-144)
SS-B4-16' 709223-01	<50	95
Method Blank 07-2030 MB	<50	91

Date of Report: 09/15/17
Date Received: 09/14/17
Project: SIM-730 EDR, F&BI 709223

QUALITY ASSURANCE RESULTS FOR THE ANALYSIS OF SOIL SAMPLES FOR SEMIVOLATILES BY EPA METHOD 8270D

Laboratory Code: 709223-01 (Matrix Spike)

Analyte	Reporting Units	Spike Level	Sample Result (Wet wt)	Percent Recovery MS	Acceptance Criteria
Pentachlorophenol	mg/kg (ppm)	0.33	<0.1	84	12-160

Laboratory Code: Laboratory Control Sample

Analyte	Reporting Units	Spike Level	Percent Recovery LCS	Percent Recovery LCSD	Acceptance Criteria	RPD (Limit 20)
Pentachlorophenol	mg/kg (ppm)	0.33	114	105	45-123	8

Date of Report: 09/15/17
Date Received: 09/14/17
Project: SIM-730 EDR, F&BI 709223

QUALITY ASSURANCE RESULTS FROM THE ANALYSIS OF SOIL SAMPLES FOR TOTAL PETROLEUM HYDROCARBONS AS STODDARD SOLVENT USING METHOD NWTPH-Dx

Laboratory Code: 709223-01 (Matrix Spike)

Analyte	Reporting Units	Spike Level	Sample Result (Wet Wt)	Percent Recovery MS	Acceptance Criteria
Stoddard Solvent	mg/kg (ppm)	5,000	<50	84	50-150

Laboratory Code: Laboratory Control Sample

Analyte	Reporting Units	Spike Level	Percent Recovery LCS	Percent Recovery LCSD	Acceptance Criteria	RPD (Limit 20)
Stoddard Solvent	mg/kg (ppm)	5,000	84	84	70-130	0

Data Qualifiers & Definitions

a - The analyte was detected at a level less than five times the reporting limit. The RPD results may not provide reliable information on the variability of the analysis.

b - The analyte was spiked at a level that was less than five times that present in the sample. Matrix spike recoveries may not be meaningful.

ca - The calibration results for the analyte were outside of acceptance criteria. The value reported is an estimate.

c - The presence of the analyte may be due to carryover from previous sample injections.

cf - The sample was centrifuged prior to analysis.

d - The sample was diluted. Detection limits were raised and surrogate recoveries may not be meaningful.

dv - Insufficient sample volume was available to achieve normal reporting limits.

f - The sample was laboratory filtered prior to analysis.

fb - The analyte was detected in the method blank.

fc - The compound is a common laboratory and field contaminant.

hr - The sample and duplicate were reextracted and reanalyzed. RPD results were still outside of control limits. Variability is attributed to sample inhomogeneity.

hs - Headspace was present in the container used for analysis.

ht – The analysis was performed outside the method or client-specified holding time requirement.

ip - Recovery fell outside of control limits. Compounds in the sample matrix interfered with the quantitation of the analyte.

j - The analyte concentration is reported below the lowest calibration standard. The value reported is an estimate.

J - The internal standard associated with the analyte is out of control limits. The reported concentration is an estimate.

jl - The laboratory control sample(s) percent recovery and/or RPD were out of control limits. The reported concentration should be considered an estimate.

js - The surrogate associated with the analyte is out of control limits. The reported concentration should be considered an estimate.

lc - The presence of the analyte is likely due to laboratory contamination.

L - The reported concentration was generated from a library search.

nm - The analyte was not detected in one or more of the duplicate analyses. Therefore, calculation of the RPD is not applicable.

pc - The sample was received with incorrect preservation or in a container not approved by the method. The value reported should be considered an estimate.

ve - The analyte response exceeded the valid instrument calibration range. The value reported is an estimate.

vo - The value reported fell outside the control limits established for this analyte.

x - The sample chromatographic pattern does not resemble the fuel standard used for quantitation.

709223

SAMPLE CHAIN OF CUSTODY

ME 09-14-17 BT

Page # 1 of 1

Report To Lynn Grochala

Company Floyd | Snider

Address 601 Union St Ste 600

City, State, ZIP Seattle, WA 98101

Phone _____ Email _____

SAMPLERS (*signature*)

PROJECT NAME: SIM - 730 EDR

PO #

REMARKS

INVOICE TO

TURNAROUND TIME
- ☐ Standard Turnaround
- ☒ RUSH EAP * 9/15 ME

Rush charges authorized by:

SAMPLE DISPOSAL
- ☒ Dispose after 30 days
- ☐ Archive Samples
- ☐ Other _____

Sample ID	Lab ID	Date Sampled	Time Sampled	Sample Type	# of Jars	TPH-HCID	TPH-Diesel - Shellfish	TPH-Gasoline	BTEX by 8021B	VOCs by 8260C	SVOCs by 8270D	PAHs 8270D SIM	Pentachlorophenol	Dioxins/Furans			Notes
SS-B4-16'	01 A-C	9/14/17	1045	Soil	3		X						X	X			* D/F regular TAT ME 9/14/17

Samples received at 3 °C

SIGNATURE	PRINT NAME	COMPANY	DATE	TIME
Relinquished by:	Kristin Anderson	FS	9/14/17	1142
Received by:	Eric Houvener	F&B	9/14/17	1142
Relinquished by:				
Received by:				

Friedman & Bruya, Inc.
3012 16th Avenue West
Seattle, WA 98119-2029
Ph. (206) 285-8282

FRIEDMAN & BRUYA, INC.

ENVIRONMENTAL CHEMISTS

James E. Bruya, Ph.D.
Yelena Aravkina, M.S.
Michael Erdahl, B.S.
Arina Podnozova, B.S.
Eric Young, B.S.

3012 16th Avenue West
Seattle, WA 98119-2029
(206) 285-8282
fbi@isomedia.com
www.friedmanandbruya.com

September 15, 2017

Lynn Grochala, Project Manager
Floyd-Snider
Two Union Square, Suite 600
601 Union St
Seattle, WA 98101

Dear Ms Grochala:

Included are the results from the testing of material submitted on September 14, 2017 from the SIM-730 EDR, F&BI 709231 project. There are 4 pages included in this report. Any samples that may remain are currently scheduled for disposal in 30 days. If you would like us to return your samples or arrange for long term storage at our offices, please contact us as soon as possible.

We appreciate this opportunity to be of service to you and hope you will call if you should have any questions.

Sincerely,

FRIEDMAN & BRUYA, INC.



Michael Erdahl
Project Manager

Enclosures
c: Kristin Anderson
FDS0915R.DOC

CASE NARRATIVE

This case narrative encompasses samples received on September 14, 2017 by Friedman & Bruya, Inc. from the Floyd-Snider SIM-730 EDR, F&BI 709231 project. Samples were logged in under the laboratory ID's listed below.

Laboratory ID	Floyd-Snider
709231 -01	SS-S2E-12'
709231 -02	SS-S3N-12'

All quality control requirements were acceptable.

Date of Report: 09/15/17
Date Received: 09/14/17
Project: SIM-730 EDR, F&BI 709231
Date Extracted: 09/14/17
Date Analyzed: 09/14/17

**RESULTS FROM THE ANALYSIS OF SOIL SAMPLES
FOR TOTAL PETROLEUM HYDROCARBONS
AS STODDARD SOLVENT
USING METHOD NWTPH-Dx**

Results Reported on a Dry Weight Basis
Results Reported as mg/kg (ppm)

Sample ID Laboratory ID	Stoddard Solvent Range (C_8-C_{11})	Surrogate (% Recovery) (Limit 53-144)
SS-S2E-12' 709231-01	<50	97
SS-S3N-12' 709231-02	<50	98
Method Blank 07-2030 MB	<50	91

Date of Report: 09/15/17
Date Received: 09/14/17
Project: SIM-730 EDR, F&BI 709231

QUALITY ASSURANCE RESULTS FROM THE ANALYSIS OF SOIL SAMPLES FOR TOTAL PETROLEUM HYDROCARBONS AS STODDARD SOLVENT USING METHOD NWTPH-Dx

Laboratory Code: 709223-01 (Matrix Spike)

Analyte	Reporting Units	Spike Level	Sample Result (Wet Wt)	Percent Recovery MS	Acceptance Criteria
Stoddard Solvent	mg/kg (ppm)	5,000	<50	84	50-150

Laboratory Code: Laboratory Control Sample

Analyte	Reporting Units	Spike Level	Percent Recovery LCS	Percent Recovery LCSD	Acceptance Criteria	RPD (Limit 20)
Stoddard Solvent	mg/kg (ppm)	5,000	84	84	70-130	0

Data Qualifiers & Definitions

a - The analyte was detected at a level less than five times the reporting limit. The RPD results may not provide reliable information on the variability of the analysis.

b - The analyte was spiked at a level that was less than five times that present in the sample. Matrix spike recoveries may not be meaningful.

ca - The calibration results for the analyte were outside of acceptance criteria. The value reported is an estimate.

c - The presence of the analyte may be due to carryover from previous sample injections.

cf - The sample was centrifuged prior to analysis.

d - The sample was diluted. Detection limits were raised and surrogate recoveries may not be meaningful.

dv - Insufficient sample volume was available to achieve normal reporting limits.

f - The sample was laboratory filtered prior to analysis.

fb - The analyte was detected in the method blank.

fc - The compound is a common laboratory and field contaminant.

hr - The sample and duplicate were reextracted and reanalyzed. RPD results were still outside of control limits. Variability is attributed to sample inhomogeneity.

hs - Headspace was present in the container used for analysis.

ht – The analysis was performed outside the method or client-specified holding time requirement.

ip - Recovery fell outside of control limits. Compounds in the sample matrix interfered with the quantitation of the analyte.

j - The analyte concentration is reported below the lowest calibration standard. The value reported is an estimate.

J - The internal standard associated with the analyte is out of control limits. The reported concentration is an estimate.

jl - The laboratory control sample(s) percent recovery and/or RPD were out of control limits. The reported concentration should be considered an estimate.

js - The surrogate associated with the analyte is out of control limits. The reported concentration should be considered an estimate.

lc - The presence of the analyte is likely due to laboratory contamination.

L - The reported concentration was generated from a library search.

nm - The analyte was not detected in one or more of the duplicate analyses. Therefore, calculation of the RPD is not applicable.

pc - The sample was received with incorrect preservation or in a container not approved by the method. The value reported should be considered an estimate.

ve - The analyte response exceeded the valid instrument calibration range. The value reported is an estimate.

vo - The value reported fell outside the control limits established for this analyte.

x - The sample chromatographic pattern does not resemble the fuel standard used for quantitation.

789231

SAMPLE CHAIN OF CUSTODY

ME 09/14/17 B01

Report To Lynn Grochala
Company Floyd | Snider
Address 601 Union St, Ste 600
City, State, ZIP Seattle, WA 98101
Phone _____ Email _____

SAMPLERS (*signature*)

PROJECT NAME: STM -730 EDR
PO #:

REMARKS
INVOICE TO

Page # _____ of _____

TURNAROUND TIME
☐ Standard Turnaround
☒ RUSH 24
Rush charges authorized by:

SAMPLE DISPOSAL
☒ Dispose after 30 days
☐ Archive Samples
☐ Other _____

Sample ID	Lab ID	Date Sampled	Time Sampled	Sample Type	# of Jars	TPH-HCID	TPH-Diesel (Standard)	TPH-Gasoline	BTEX by 8021B	VOCs by 8260C	SVOCs by 8270D	PAHs 8270D SIM				Notes
						ANALYSES REQUESTED										
SS-SZE-12'	01	9/14/17	1300	soil	1		X									
SS-SZN-12'	02	9/14/17	1315	soil	1		X									

SIGNATURE	PRINT NAME	COMPANY	DATE	TIME
Relinquished by:	Kristin Anderson	FS	9/14/17	1519
Received by:	Nhan Phan	FEBI	9/14/17	1579
Relinquished by:				
Received by:		Samples received at ____ °C		

Friedman & Bruya, Inc.
3012 16th Avenue West
Seattle, WA 98119-2029
Ph. (206) 285-8282

FRIEDMAN & BRUYA, INC.

ENVIRONMENTAL CHEMISTS

James E. Bruya, Ph.D.
Yelena Aravkina, M.S.
Michael Erdahl, B.S.
Arina Podnozova, B.S.
Eric Young, B.S.

3012 16th Avenue West
Seattle, WA 98119-2029
(206) 285-8282
fbi@isomedia.com
www.friedmanandbruya.com

September 28, 2017

Lynn Grochala, Project Manager
Floyd-Snider
Two Union Square, Suite 600
601 Union St
Seattle, WA 98101

Dear Ms Grochala:

Included are the additional results from the testing of material submitted on September 14, 2017 from the SIM-730EDR, F&BI 709223 project. There is 1 page included in this report.

We appreciate this opportunity to be of service to you and hope you will call if you should have any questions.

Sincerely,

FRIEDMAN & BRUYA, INC.



Michael Erdahl
Project Manager

Enclosures
FDS0928R.DOC

CASE NARRATIVE

This case narrative encompasses samples received on September 14, 2017 by Friedman & Bruya, Inc. from the Floyd-Snider SIM-730EDR, F&BI 709223 project. Samples were logged in under the laboratory ID's listed below.

Laboratory ID	Floyd-Snider
709223 -01	SS-B4-16'

Sample SS-B4-16' was sent to Frontier Analytical for dioxins and furans analysis. The report is enclosed.

September 25, 2017

FAL Project: 10932

Mr. Michael Erdahl
Friedman and Bruya, Inc.
3012 16th Ave. W
Seattle, WA 98119

Dear Mr. Erdahl,

The following results are associated with Frontier Analytical Laboratory project **10932**. This corresponds to your project number **709223** and purchase order number **F-91**. One soil sample was received at Frontier Analytical Laboratory on 9/19/2017. This sample was extracted and analyzed by EPA Method 1613 for tetra through octa chlorinated dibenzo dioxins and furans. The Toxic Equivalency (TEQ) for your samples have been calculated using the 2005 World Health Organization's (WHO's) toxic equivalency factors (TEFs). Freidman and Bruya, Inc. requested a turnaround time of fifteen business days for project **10932**.

The following report consists of an Analytical Data section and a Sample Receipt section. The Analytical Data section contains our sample tracking log and the analytical results. The Sample Receipt section contains your chain of custody, our sample login form and a sample photo. The enclosed results and electronic data deliverable (EDD) are specifically for the sample referenced in this report only. These results meet all NELAP requirements and shall not be reproduced except in full. Frontier Analytical Laboratory's State of Oregon NELAP certificate number is **4041**, our State of California ELAP certificate number is **2934** and our State of Washington certificate number is **C844**. This report along with the associated electronic data deliverable (EDD) has been emailed to you as a portable document format (PDF) file. A hardcopy will not be sent to you unless specifically requested.

If you have any questions regarding project **10932**, please feel free to contact me at (916) 934-0900. Thank you for choosing Frontier Analytical Laboratory for your analytical testing needs.

Sincerely,

Bradley B. Silverbush
Director of Operations

Frontier Analytical Laboratory

Sample Tracking Log

FAL Project ID: **10932**

Received on: **09/19/2017** Project Due: **10/11/2017** Storage: **R3**

FAL Sample ID	Dup	Client Project ID	Client Sample ID	Requested Method	Matrix	Sampling Date	Sampling Time	Hold Time Due Date
10932-001-SA	0	709223	SS-B4-16'	EPA 1613 D/F	Soil	09/14/2017	10:45 am	09/14/2018

5172 Hillsdale Circle * El Dorado Hills, CA 95762 * Tel (916) 934-0900 * Fax (916) 934-0999 * www.frontieranalytical.com

EPA Method 1613
PCDD/F

FAL ID: 10932-001-MB
Client ID: Method Blank
Matrix: Soil
Batch No: X4246

Date Extracted: 09-21-2017
Date Received: NA
Amount: 10.00 g

ICal: PCDDFAL4-9-18-17
GC Column: DB5MS
Units: pg/g

Acquired: 09-22-2017
2005 WHO TEQ: 0.0
Basis: Dry Weight

Compound	Conc	DL	Qual	2005 WHO Tox	MDL	Compound	Conc	DL	Qual
2,3,7,8-TCDD	ND	0.0737		-	0.0273				
1,2,3,7,8-PeCDD	ND	0.0996		-	0.0570				
1,2,3,4,7,8-HxCDD	ND	0.137		-	0.0793				
1,2,3,6,7,8-HxCDD	ND	0.145		-	0.0940	Total TCDD	ND	0.0737	
1,2,3,7,8,9-HxCDD	ND	0.131		-	0.0823	Total PeCDD	ND	0.0996	
1,2,3,4,6,7,8-HpCDD	ND	0.134		-	0.0842	Total HxCDD	ND	0.145	
OCDD	ND	0.306		-	0.172	Total HpCDD	ND	0.134	
2,3,7,8-TCDF	ND	0.0509		-	0.0269				
1,2,3,7,8-PeCDF	ND	0.0919		-	0.0449				
2,3,4,7,8-PeCDF	ND	0.0944		-	0.0468				
1,2,3,4,7,8-HxCDF	ND	0.0783		-	0.0437				
1,2,3,6,7,8-HxCDF	ND	0.0818		-	0.0417				
2,3,4,6,7,8-HxCDF	ND	0.0901		-	0.0574				
1,2,3,7,8,9-HxCDF	ND	0.0958		-	0.0657	Total TCDF	ND	0.0509	
1,2,3,4,6,7,8-HpCDF	ND	0.0976		-	0.0747	Total PeCDF	ND	0.0944	
1,2,3,4,7,8,9-HpCDF	ND	0.122		-	0.0883	Total HxCDF	ND	0.0958	
OCDF	ND	0.276		-	0.170	Total HpCDF	ND	0.122	

Internal Standards	% Rec	QC Limits	Qual
13C-2,3,7,8-TCDD	88.2	25.0 - 164	
13C-1,2,3,7,8-PeCDD	97.1	25.0 - 181	
13C-1,2,3,4,7,8-HxCDD	85.7	32.0 - 141	
13C-1,2,3,6,7,8-HxCDD	84.8	28.0 - 130	
13C-1,2,3,4,6,7,8-HpCDD	78.5	23.0 - 140	
13C-OCDD	66.9	17.0 - 157	
13C-2,3,7,8-TCDF	89.2	24.0 - 169	
13C-1,2,3,7,8-PeCDF	93.4	24.0 - 185	
13C-2,3,4,7,8-PeCDF	97.0	21.0 - 178	
13C-1,2,3,4,7,8-HxCDF	88.1	26.0 - 152	
13C-1,2,3,6,7,8-HxCDF	85.9	26.0 - 123	
13C-2,3,4,6,7,8-HxCDF	88.8	28.0 - 136	
13C-1,2,3,7,8,9-HxCDF	93.6	29.0 - 147	
13C-1,2,3,4,6,7,8-HpCDF	88.5	28.0 - 143	
13C-1,2,3,4,7,8,9-HpCDF	89.2	26.0 - 138	
13C-OCDF	74.3	17.0 - 157	
Cleanup Surrogate			
37Cl-2,3,7,8-TCDD	95.3	35.0 - 197	

A	Isotopic Labeled Standard outside QC range but signal to noise ratio is >10:1
B	Analyte is present in Method Blank
C	Chemical Interference
D	Presence of Diphenyl Ethers
DNQ	Analyte concentration is below calibration range
E	Analyte concentration is above calibration range
F	Analyte confirmation on secondary column
J	Analyte concentration is below calibration range
M	Maximum possible concentration
ND	Analyte Not Detected at Detection Limit Level
NP	Not Provided
P	Pre-filtered through a Whatman 0.7um GF/F filter
S	Sample acceptance criteria not met
X	Matrix interferences
*	Result taken from dilution or reinjection

Analyst: _____
Date: 9/25/2017

Reviewed By: DPV
Date: 9/25/2017

5172 Hillsdale Circle * El Dorado Hills, CA 95762 * Tel (916) 934-0900 * Fax (916) 934-0999 * www.frontieranalytical.com

EPA Method 1613
PCDD/F

FAL ID: 10932-001-OPR
Client ID: OPR
Matrix: Soil
Batch No: X4246

Date Extracted: 09-21-2017
Date Received: NA
Amount: 10.00 g

ICal: PCDDFAL4-9-18-17
GC Column: DB5MS
Units: ng/ml

Acquired: 09-22-2017
2005 WHO TEQ: NA

Compound	Conc	QC Limits	Qual
2,3,7,8-TCDD	11.0	6.70 - 15.8	
1,2,3,7,8-PeCDD	56.1	35.0 - 71.0	
1,2,3,4,7,8-HxCDD	54.5	35.0 - 82.0	
1,2,3,6,7,8-HxCDD	51.5	38.0 - 67.0	
1,2,3,7,8,9-HxCDD	53.2	32.0 - 81.0	
1,2,3,4,6,7,8-HpCDD	55.6	35.0 - 70.0	
OCDD	113	78.0 - 144	
2,3,7,8-TCDF	10.0	7.50 - 15.8	
1,2,3,7,8-PeCDF	53.1	40.0 - 67.0	
2,3,4,7,8-PeCDF	54.0	34.0 - 80.0	
1,2,3,4,7,8-HxCDF	53.4	36.0 - 67.0	
1,2,3,6,7,8-HxCDF	54.3	42.0 - 65.0	
2,3,4,6,7,8-HxCDF	54.2	35.0 - 78.0	
1,2,3,7,8,9-HxCDF	53.6	39.0 - 65.0	
1,2,3,4,6,7,8-HpCDF	54.6	41.0 - 61.0	
1,2,3,4,7,8,9-HpCDF	53.5	39.0 - 69.0	
OCDF	109	63.0 - 170	

Internal Standards	% Rec	QC Limits	Qual
13C-2,3,7,8-TCDD	71.9	20.0 - 175	
13C-1,2,3,7,8-PeCDD	77.6	21.0 - 227	
13C-1,2,3,4,7,8-HxCDD	69.9	21.0 - 193	
13C-1,2,3,6,7,8-HxCDD	72.6	25.0 - 163	
13C-1,2,3,4,6,7,8-HpCDD	68.7	26.0 - 166	
13C-OCDD	58.9	13.0 - 198	
13C-2,3,7,8-TCDF	73.5	22.0 - 152	
13C-1,2,3,7,8-PeCDF	75.9	21.0 - 192	
13C-2,3,4,7,8-PeCDF	81.7	13.0 - 328	
13C-1,2,3,4,7,8-HxCDF	72.5	19.0 - 202	
13C-1,2,3,6,7,8-HxCDF	70.3	21.0 - 159	
13C-2,3,4,6,7,8-HxCDF	72.3	22.0 - 176	
13C-1,2,3,7,8,9-HxCDF	77.2	17.0 - 205	
13C-1,2,3,4,6,7,8-HpCDF	71.3	21.0 - 158	
13C-1,2,3,4,7,8,9-HpCDF	79.1	20.0 - 186	
13C-OCDF	64.6	13.0 - 198	

Cleanup Surrogate			
37Cl-2,3,7,8-TCDD	78.5	31.0 - 191	

A	Isotopic Labeled Standard outside QC range but signal to noise ratio is >10:1
B	Analyte is present in Method Blank
C	Chemical Interference
D	Presence of Diphenyl Ethers
DNQ	Analyte concentration is below calibration range
E	Analyte concentration is above calibration range
F	Analyte confirmation on secondary column
J	Analyte concentration is below calibration range
M	Maximum possible concentration
ND	Analyte Not Detected at Detection Limit Level
NP	Not Provided
P	Pre-filtered through a Whatman 0.7um GF/F filter
S	Sample acceptance criteria not met
X	Matrix interferences
*	Result taken from dilution or reinjection

Analyst: _____

Date: 9/25/2017

Reviewed By: DPV

Date: 9/25/2017

5172 Hillsdale Circle * El Dorado Hills, CA 95762 * Tel (916) 934-0900 * Fax (916) 934-0999 * www.frontieranalytical.com

EPA Method 1613
PCDD/F

FRONTIER ANALYTICAL LABORATORY

FAL ID: 10932-001-SA
Client ID: SS-B4-16
Matrix: Soil
Batch No: X4246

Date Extracted: 09-21-2017
Date Received: 09-19-2017
Amount: 5.25 g
% Solids: 67.07

ICal: PCDDFAL4-9-18-17
GC Column: DB5MS
Units: pg/g

Acquired: 09-22-2017
2005 WHO TEQ: 0.999
Basis: Dry Weight

Compound	Conc	DL	Qual	2005 WHO Tox	MDL	Compound	Conc	DL	Qual
2,3,7,8-TCDD	ND	0.109		-	0.0273				
1,2,3,7,8-PeCDD	ND	0.166		-	0.0570				
1,2,3,4,7,8-HxCDD	ND	0.151		-	0.0793				
1,2,3,6,7,8-HxCDD	2.07	-	J	0.207	0.0940	Total TCDD	0.579	-	J
1,2,3,7,8,9-HxCDD	0.328	-	J	0.0328	0.0823	Total PeCDD	ND	0.166	
1,2,3,4,6,7,8-HpCDD	41.5	-		0.415	0.0842	Total HxCDD	7.61	-	
OCDD	252	-		0.0756	0.172	Total HpCDD	66.1	-	
2,3,7,8-TCDF	ND	0.0770		-	0.0269				
1,2,3,7,8-PeCDF	ND	0.115		-	0.0449				
2,3,4,7,8-PeCDF	ND	0.121		-	0.0468				
1,2,3,4,7,8-HxCDF	ND	0.108		-	0.0437				
1,2,3,6,7,8-HxCDF	ND	0.117		-	0.0417				
2,3,4,6,7,8-HxCDF	0.567	-	J	0.0567	0.0574				
1,2,3,7,8,9-HxCDF	ND	0.152		-	0.0657	Total TCDF	ND	0.0770	
1,2,3,4,6,7,8-HpCDF	17.7	-		0.177	0.0747	Total PeCDF	0.588	-	J
1,2,3,4,7,8,9-HpCDF	1.05	-	J	0.0105	0.0883	Total HxCDF	29.3	-	
OCDF	82.9	-		0.0249	0.170	Total HpCDF	95.4	-	

Internal Standards	% Rec	QC Limits	Qual
13C-2,3,7,8-TCDD	106	25.0 - 164	
13C-1,2,3,7,8-PeCDD	113	25.0 - 181	
13C-1,2,3,4,7,8-HxCDD	105	32.0 - 141	
13C-1,2,3,6,7,8-HxCDD	107	28.0 - 130	
13C-1,2,3,4,6,7,8-HpCDD	88.5	23.0 - 140	
13C-OCDD	69.0	17.0 - 157	
13C-2,3,7,8-TCDF	106	24.0 - 169	
13C-1,2,3,7,8-PeCDF	108	24.0 - 185	
13C-2,3,4,7,8-PeCDF	112	21.0 - 178	
13C-1,2,3,4,7,8-HxCDF	110	26.0 - 152	
13C-1,2,3,6,7,8-HxCDF	109	26.0 - 123	
13C-2,3,4,6,7,8-HxCDF	106	28.0 - 136	
13C-1,2,3,7,8,9-HxCDF	108	29.0 - 147	
13C-1,2,3,4,6,7,8-HpCDF	98.4	28.0 - 143	
13C-1,2,3,4,7,8,9-HpCDF	98.2	26.0 - 138	
13C-OCDF	74.3	17.0 - 157	
Cleanup Surrogate			
37Cl-2,3,7,8-TCDD	113	35.0 - 197	

A	Isotopic Labeled Standard outside QC range but signal to noise ratio is >10:1
B	Analyte is present in Method Blank
C	Chemical Interference
D	Presence of Diphenyl Ethers
DNQ	Analyte concentration is below calibration range
E	Analyte concentration is above calibration range
F	Analyte confirmation on secondary column
J	Analyte concentration is below calibration range
M	Maximum possible concentration
ND	Analyte Not Detected at Detection Limit Level
NP	Not Provided
P	Pre-filtered through a Whatman 0.7um GF/F filter
S	Sample acceptance criteria not met
X	Matrix interferences
*	Result taken from dilution or reinjection

Analyst: _____

Date: 9/25/2017

Reviewed By: DPV

Date: 9/25/2017

5172 Hillsdale Circle * El Dorado Hills, CA 95762 * Tel (916) 934-0900 * Fax (916) 934-0999 * www.frontieranalytical.com

SUBCONTRACT SAMPLE CHAIN OF CUSTODY

10932
0°c

Page # 1 of 1

Send Report To Michael Erdahl

Company Friedman and Bruya, Inc.

Address 3012 16th Ave W

City, State, ZIP Seattle, WA 98119

Phone # (206) 285-8282 Fax # (206) 283-5044

SUBCONTRACTER Frontier.

PROJECT NAME/NO.	PO #
709223	F-91

REMARKS

Please Email Results

TURNAROUND TIME

☒ Standard (~~2 Weeks~~) 3 weeks

☐ RUSH

Rush charges authorized by:

SAMPLE DISPOSAL

☐ Dispose after 30 days

☐ Return samples

☐ Will call with instructions

Sample ID	Lab ID	Date Sampled	Time Sampled	Matrix	# of jars	ANALYSES REQUESTED: Dioxins/Furans	EPH	VPH	Nitrate	Sulfate	Alkalinity	TOC-9060M				Notes
SS-B4-161		9/14/17	1045	Soil	1	X										
Mike to Kathy EPA method 1613. 9/20/17 KZ																

SIGNATURE	PRINT NAME	COMPANY	DATE	TIME
Relinquished by:	Michael Erdahl	Friedman and Bruya	9/18/17	11:54
Received by:	Rebecca Rogan	FAL	9.19.17	9:37am
Relinquished by:				
Received by:				

Friedman & Bruya, Inc.
3012 16th Avenue West
Seattle, WA 98119-2029
Ph. (206) 285-8282
Fax (206) 283-5044

Frontier Analytical Laboratory

Sample Login Form

FAL Project ID: **10932**

Client:	Friedman & Bruya, Inc.
Client Project ID:	709223
Date Received:	09/19/2017
Time Received:	09:37 am
Received By:	RR
Logged In By:	KZ
# of Samples Received:	1
Duplicates:	0
Storage Location:	R3

Method of Delivery:	Fed-Ex
Tracking Number:	809992619433
Shipping Container Received Intact	Yes
Custody seals(s) present?	No
Custody seals(s) intact?	No
Sample Arrival Temperature (C)	0
Cooling Method	Blue Ice
Chain Of Custody Present?	Yes
Return Shipping Container To Client	Yes
Test aqueous sample for residual Chlorine	No
Sodium Thiosulfate Added	No
Adequate Sample Volume	Yes
Appropriate Sample Container	No
pH Range of Aqueous Sample	N/A

Anomalies or additional comments:

Please note that the sample was received in a clear glass jar. NELAP requires samples be received in amber glass bottles or jars. Although this anomaly will not affect your results, we are required by NELAP to make a note of it. We will proceed with analysis unless directed otherwise by you.

5172 Hillsdale Circle * El Dorado Hills, CA 95762 * Tel (916) 934-0900 * Fax (916) 934-0999 * www.frontieranalytical.com

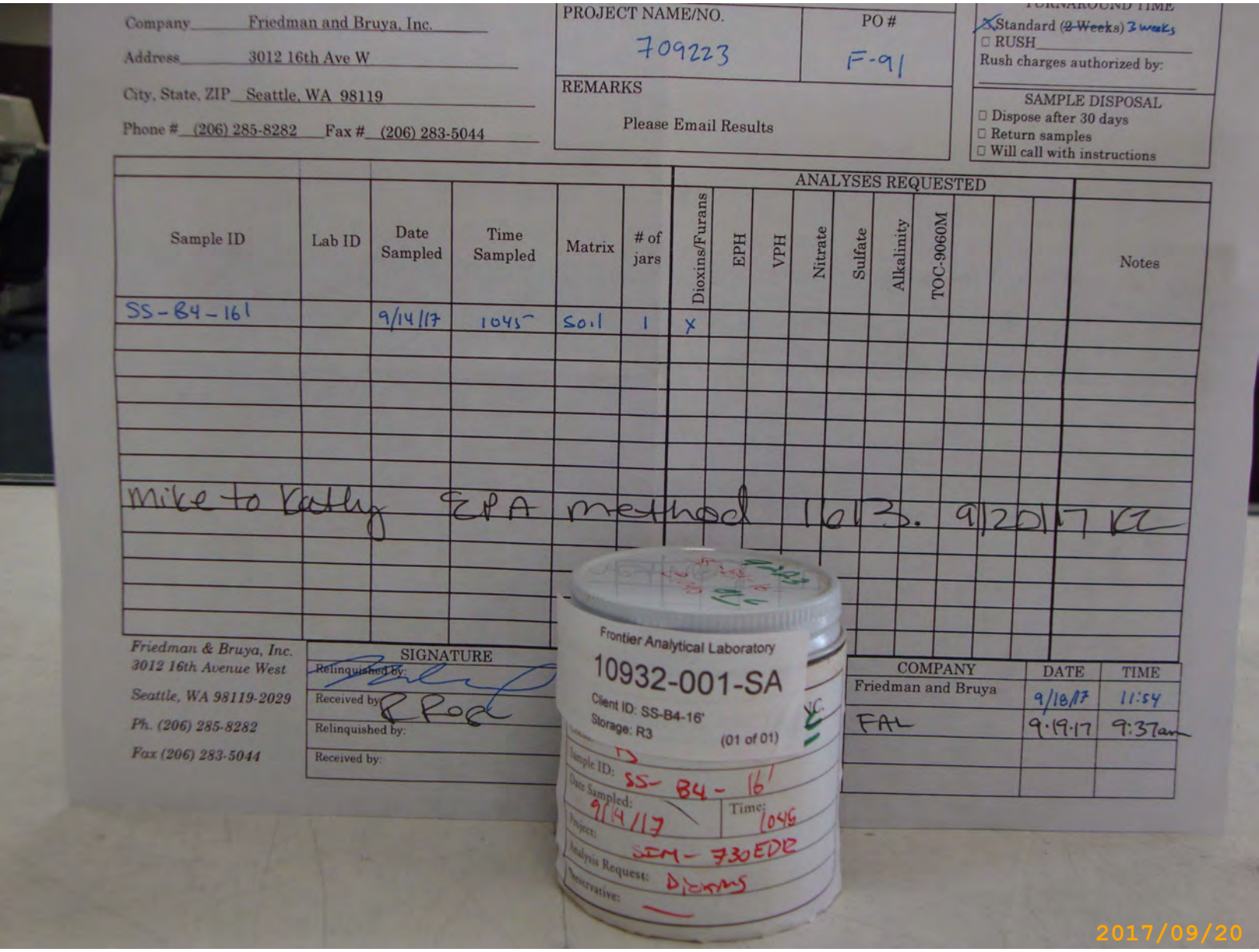

5172 Hillsdale Circle * El Dorado Hills, CA 95762 * Tel (916) 934-0900 * Fax (916) 934-0999 * www.frontieranalytical.com

709223

SAMPLE CHAIN OF CUSTODY

ME 09-14-17 BT

Page # 1 of 1

Report To Lynn Grochala

Company Floyd | Snider

Address 601 Union St Ste 600

City, State, ZIP Seattle, WA 98101

Phone _____ Email _____

SAMPLERS (*signature*)

PROJECT NAME: SIM - 730 EDR

PO #

REMARKS

INVOICE TO

TURNAROUND TIME
- ☐ Standard Turnaround
- ☒ RUSH EAP * 9/15 ME

Rush charges authorized by:

SAMPLE DISPOSAL
- ☒ Dispose after 30 days
- ☐ Archive Samples
- ☐ Other _____

Sample ID	Lab ID	Date Sampled	Time Sampled	Sample Type	# of Jars	TPH-HCID	TPH-Diesel - Shellfish	TPH-Gasoline	BTEX by 8021B	VOCs by 8260C	SVOCs by 8270D	PAHs 8270D SIM	Pentachlorophenol	Dioxins/Furans			Notes
SS-B4-16'	01 A-C	9/14/17	1045	Soil	3		X						X	X			* D/F regular TAT ME 9/14/17

Samples received at 3 °C

SIGNATURE	PRINT NAME	COMPANY	DATE	TIME
Relinquished by:	Kristin Anderson	FS	9/14/17	1142
Received by:	Eric Houvener	F&B	9/14/17	1142
Relinquished by:				
Received by:				

Friedman & Bruya, Inc.
3012 16th Avenue West
Seattle, WA 98119-2029
Ph. (206) 285-8282

Trench Samples

FRIEDMAN & BRUYA, INC.

ENVIRONMENTAL CHEMISTS

James E. Bruya, Ph.D.
Yelena Aravkina, M.S.
Michael Erdahl, B.S.
Arina Podnozova, B.S.
Eric Young, B.S.

3012 16th Avenue West
Seattle, WA 98119-2029
(206) 285-8282
fbi@isomedia.com
www.friedmanandbruya.com

September 29, 2017

Lynn Grochala, Project Manager
Floyd-Snider
Two Union Square, Suite 600
601 Union St
Seattle, WA 98101

Dear Ms Grochala:

Included are the results from the testing of material submitted on September 19, 2017 from the SIM-730 EDR, F&BI 709315 project. There are 12 pages included in this report. Any samples that may remain are currently scheduled for disposal in 30 days. If you would like us to return your samples or arrange for long term storage at our offices, please contact us as soon as possible.

We appreciate this opportunity to be of service to you and hope you will call if you should have any questions.

Sincerely,

FRIEDMAN & BRUYA, INC.



Michael Erdahl
Project Manager

Enclosures
FDS0929R.DOC

CASE NARRATIVE

This case narrative encompasses samples received on September 19, 2017 by Friedman & Bruya, Inc. from the Floyd-Snider SIM-730 EDR, F&BI 709315 project. Samples were logged in under the laboratory ID's listed below.

Laboratory ID	Floyd-Snider
709315 -01	WT-E1-01-4'
709315 -02	WT-E1-02-4'
709315 -03	WT-E1-03-4'
709315 -04	WT-E1-04-4'
709315 -05	WT-E1
709315 -06	WT-E2-01-4'
709315 -07	WT-E2-02-4'
709315 -08	WT-E2-03-4'
709315 -09	WT-E2-04-4'
709315 -10	WT-E2-05-4'
709315 -11	WT-E2
709315 -12	WT-D-01-4'
709315 -13	WT-D-02-4'
709315 -14	WT-D-03-4'
709315 -15	WT-D-04-4'
709315 -16	WT-D
709315 -17	WT-C-01-4'
709315 -18	WT-C-02-4'
709315 -19	WT-C-03-4'
709315 -20	WT-C-04-4'
709315 -21	WT-C

All quality control requirements were acceptable.

Date of Report: 09/29/17
Date Received: 09/19/17
Project: SIM-730 EDR, F&BI 709315
Date Extracted: 09/21/17
Date Analyzed: 09/21/17

RESULTS FROM THE ANALYSIS OF SOIL SAMPLES FOR TOTAL PETROLEUM HYDROCARBONS AS MOTOR OIL USING METHOD NWTPH-Dx

Results Reported on a Dry Weight Basis
Results Reported as mg/kg (ppm)

Sample ID Laboratory ID	Motor Oil Range (C_{25}-C_{36})	Surrogate (% Recovery) (Limit 53-144)
WT-E1 709315-05	<250	79
WT-E2 709315-11	<250	72
WT-D 709315-16	<250	72
WT-C 709315-21	<250	70
Method Blank 07-2080 MB	<50	76

Date of Report: 09/29/17
Date Received: 09/19/17
Project: SIM-730 EDR, F&BI 709315
Date Extracted: 09/21/17
Date Analyzed: 09/21/17

**RESULTS FROM THE ANALYSIS OF SOIL SAMPLES
FOR TOTAL PETROLEUM HYDROCARBONS
AS STODDARD SOLVENT
USING METHOD NWTPH-Dx**

Results Reported on a Dry Weight Basis
Results Reported as mg/kg (ppm)

Sample ID Laboratory ID	Stoddard Solvent Range (C_8-C_{11})	Surrogate (% Recovery) (Limit 53-144)
WT-E1 709315-05	<50	79
WT-E2 709315-11	<50	72
WT-D 709315-16	<50	72
WT-C 709315-21	<50	70
Method Blank 07-2080 MB	<50	76

Analysis For Semivolatile Compounds By EPA Method 8270D

Client Sample ID:	WT-E1	Client:	Floyd-Snider
Date Received:	09/19/17	Project:	SIM-730 EDR, F&BI 709315
Date Extracted:	09/20/17	Lab ID:	709315-05 1/2.5
Date Analyzed:	09/26/17	Data File:	092603.D
Matrix:	Soil	Instrument:	GCMS8
Units:	mg/kg (ppm) Dry Weight	Operator:	VM

Surrogates:	% Recovery:	Lower Limit:	Upper Limit:
2-Fluorophenol	93	56	115
Phenol-d6	92	54	113
Nitrobenzene-d5	90	31	164
2-Fluorobiphenyl	88	47	133
2,4,6-Tribromophenol	92	35	141
Terphenyl-d14	97	24	188

Compounds:	Concentration mg/kg (ppm)
Pentachlorophenol	<0.1

Analysis For Semivolatile Compounds By EPA Method 8270D

Client Sample ID:	WT-E2	Client:	Floyd-Snider
Date Received:	09/19/17	Project:	SIM-730 EDR, F&BI 709315
Date Extracted:	09/20/17	Lab ID:	709315-11 1/2.5
Date Analyzed:	09/26/17	Data File:	092604.D
Matrix:	Soil	Instrument:	GCMS8
Units:	mg/kg (ppm) Dry Weight	Operator:	VM

Surrogates:	% Recovery:	Lower Limit:	Upper Limit:
2-Fluorophenol	91	56	115
Phenol-d6	92	54	113
Nitrobenzene-d5	88	31	164
2-Fluorobiphenyl	86	47	133
2,4,6-Tribromophenol	94	35	141
Terphenyl-d14	94	24	188

Compounds:	Concentration mg/kg (ppm)
Pentachlorophenol	<0.1

Analysis For Semivolatile Compounds By EPA Method 8270D

Client Sample ID:	WT-D	Client:	Floyd-Snider
Date Received:	09/19/17	Project:	SIM-730 EDR, F&BI 709315
Date Extracted:	09/20/17	Lab ID:	709315-16 1/2.5
Date Analyzed:	09/26/17	Data File:	092605.D
Matrix:	Soil	Instrument:	GCMS8
Units:	mg/kg (ppm) Dry Weight	Operator:	VM

Surrogates:	% Recovery:	Lower Limit:	Upper Limit:
2-Fluorophenol	88	56	115
Phenol-d6	88	54	113
Nitrobenzene-d5	85	31	164
2-Fluorobiphenyl	83	47	133
2,4,6-Tribromophenol	90	35	141
Terphenyl-d14	90	24	188

Compounds:	Concentration mg/kg (ppm)
Pentachlorophenol	<0.1

Analysis For Semivolatile Compounds By EPA Method 8270D

Client Sample ID:	WT-C	Client:	Floyd-Snider
Date Received:	09/19/17	Project:	SIM-730 EDR, F&BI 709315
Date Extracted:	09/20/17	Lab ID:	709315-21 1/2.5
Date Analyzed:	09/26/17	Data File:	092606.D
Matrix:	Soil	Instrument:	GCMS8
Units:	mg/kg (ppm) Dry Weight	Operator:	VM

Surrogates:	% Recovery:	Lower Limit:	Upper Limit:
2-Fluorophenol	96	56	115
Phenol-d6	96	54	113
Nitrobenzene-d5	93	31	164
2-Fluorobiphenyl	91	47	133
2,4,6-Tribromophenol	97	35	141
Terphenyl-d14	102	24	188

Compounds:	Concentration mg/kg (ppm)
Pentachlorophenol	<0.1

Analysis For Semivolatile Compounds By EPA Method 8270D

Client Sample ID:	Method Blank	Client:	Floyd-Snider
Date Received:	Not Applicable	Project:	SIM-730 EDR, F&BI 709315
Date Extracted:	09/20/17	Lab ID:	07-2078 mb
Date Analyzed:	09/20/17	Data File:	092013.D
Matrix:	Soil	Instrument:	GCMS8
Units:	mg/kg (ppm) Dry Weight	Operator:	VM

Surrogates:	% Recovery:	Lower Limit:	Upper Limit:
2-Fluorophenol	104	56	115
Phenol-d6	100	54	113
Nitrobenzene-d5	102	31	164
2-Fluorobiphenyl	95	47	133
2,4,6-Tribromophenol	93	35	141
Terphenyl-d14	122	24	188

Compounds:	Concentration mg/kg (ppm)
Pentachlorophenol	<0.04

Date of Report: 09/29/17
Date Received: 09/19/17
Project: SIM-730 EDR, F&BI 709315

QUALITY ASSURANCE RESULTS FROM THE ANALYSIS OF SOIL SAMPLES FOR TOTAL PETROLEUM HYDROCARBONS AS MOTOR OIL USING METHOD NWTPH-Dx

Laboratory Code: 709315-05 (Matrix Spike)

Analyte	Reporting Units	Spike Level	Sample Result (Wet Wt)	Percent Recovery MS	Acceptance Criteria
Motor Oil	mg/kg (ppm)	2,500	<250	84	50-150

Laboratory Code: Laboratory Control Sample

Analyte	Reporting Units	Spike Level	Percent Recovery LCS	Percent Recovery LCSD	Acceptance Criteria	RPD (Limit 20)
Motor Oil	mg/kg (ppm)	2,500	85	89	70-130	5

Date of Report: 09/29/17
Date Received: 09/19/17
Project: SIM-730 EDR, F&BI 709315

QUALITY ASSURANCE RESULTS FROM THE ANALYSIS OF SOIL SAMPLES FOR TOTAL PETROLEUM HYDROCARBONS AS STODDARD SOLVENT USING METHOD NWTPH-Dx

Laboratory Code: 709315-05 (Matrix Spike)

Analyte	Reporting Units	Spike Level	Sample Result (Wet Wt)	Percent Recovery MS	Acceptance Criteria
Stoddard Solvent	mg/kg (ppm)	5,000	<50	81	50-150

Laboratory Code: Laboratory Control Sample

Analyte	Reporting Units	Spike Level	Percent Recovery LCS	Percent Recovery LCSD	Acceptance Criteria	RPD (Limit 20)
Stoddard Solvent	mg/kg (ppm)	5,000	80	80	70-130	0

Date of Report: 09/29/17
Date Received: 09/19/17
Project: SIM-730 EDR, F&BI 709315

QUALITY ASSURANCE RESULTS FOR THE ANALYSIS OF SOIL SAMPLES FOR SEMIVOLATILES BY EPA METHOD 8270D

Laboratory Code: 709309-04 (Matrix Spike)

Analyte	Reporting Units	Spike Level	Sample Result (Wet wt)	Percent Recovery MS	Acceptance Criteria
Pentachlorophenol	mg/kg (ppm)	0.33	<0.1	87	12-160

Laboratory Code: Laboratory Control Sample

Analyte	Reporting Units	Spike Level	Percent Recovery LCS	Percent Recovery LCSD	Acceptance Criteria	RPD (Limit 20)
Pentachlorophenol	mg/kg (ppm)	0.33	108	110	45-123	2

Data Qualifiers & Definitions

a - The analyte was detected at a level less than five times the reporting limit. The RPD results may not provide reliable information on the variability of the analysis.

b - The analyte was spiked at a level that was less than five times that present in the sample. Matrix spike recoveries may not be meaningful.

ca - The calibration results for the analyte were outside of acceptance criteria. The value reported is an estimate.

c - The presence of the analyte may be due to carryover from previous sample injections.

cf - The sample was centrifuged prior to analysis.

d - The sample was diluted. Detection limits were raised and surrogate recoveries may not be meaningful.

dv - Insufficient sample volume was available to achieve normal reporting limits.

f - The sample was laboratory filtered prior to analysis.

fb - The analyte was detected in the method blank.

fc - The compound is a common laboratory and field contaminant.

hr - The sample and duplicate were reextracted and reanalyzed. RPD results were still outside of control limits. Variability is attributed to sample inhomogeneity.

hs - Headspace was present in the container used for analysis.

ht – The analysis was performed outside the method or client-specified holding time requirement.

ip - Recovery fell outside of control limits. Compounds in the sample matrix interfered with the quantitation of the analyte.

j - The analyte concentration is reported below the lowest calibration standard. The value reported is an estimate.

J - The internal standard associated with the analyte is out of control limits. The reported concentration is an estimate.

jl - The laboratory control sample(s) percent recovery and/or RPD were out of control limits. The reported concentration should be considered an estimate.

js - The surrogate associated with the analyte is out of control limits. The reported concentration should be considered an estimate.

lc - The presence of the analyte is likely due to laboratory contamination.

L - The reported concentration was generated from a library search.

nm - The analyte was not detected in one or more of the duplicate analyses. Therefore, calculation of the RPD is not applicable.

pc - The sample was received with incorrect preservation or in a container not approved by the method. The value reported should be considered an estimate.

ve - The analyte response exceeded the valid instrument calibration range. The value reported is an estimate.

vo - The value reported fell outside the control limits established for this analyte.

x - The sample chromatographic pattern does not resemble the fuel standard used for quantitation.

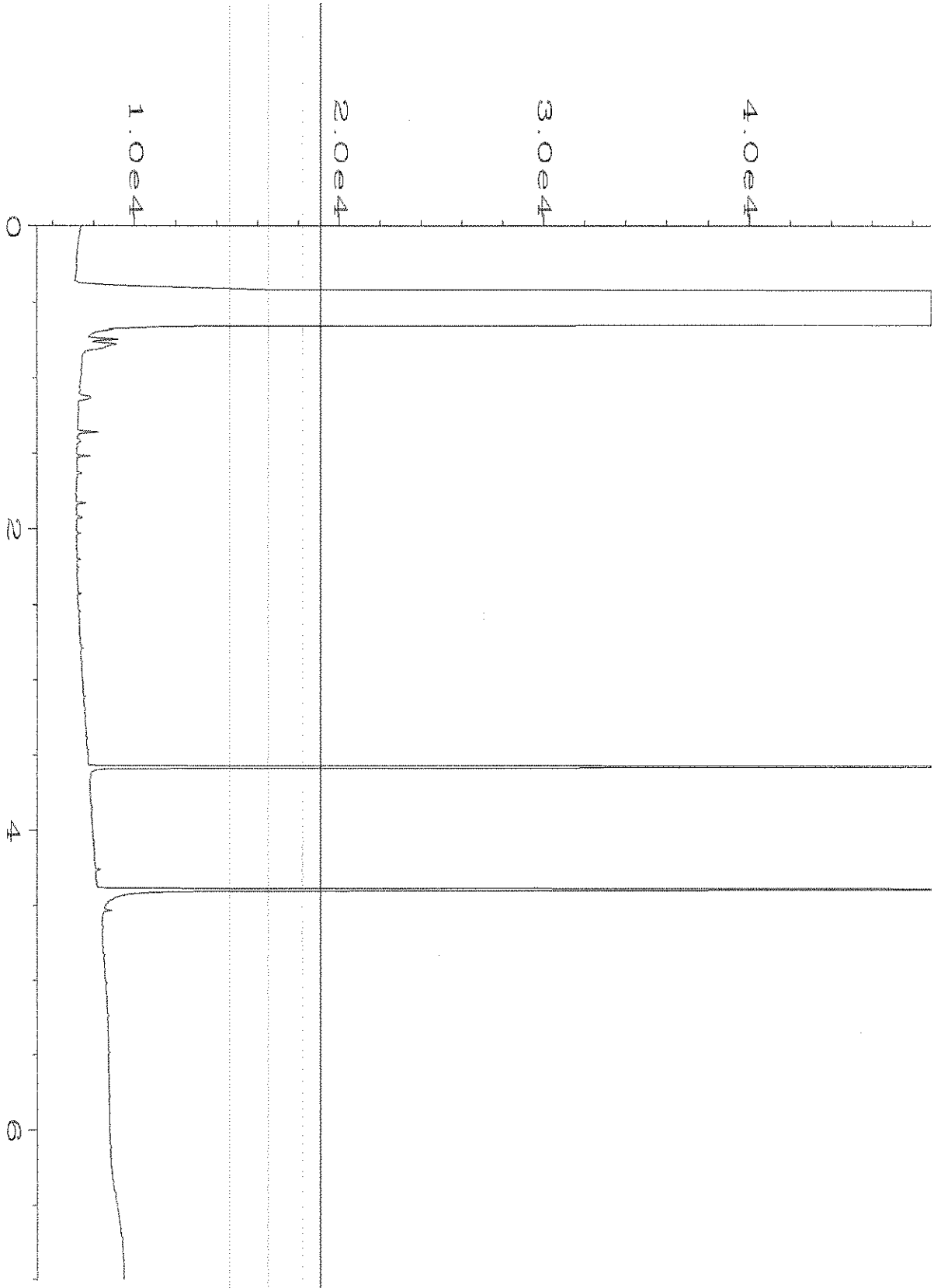

Data File Name : C:\HPCHEM\6\DATA\09-21-17\029F0301.D
Operator : mwdl
Instrument : GC #6
Sample Name : 709315-05
Run Time Bar Code:
Acquired on : 21 Sep 17 02:36 PM
Report Created on: 22 Sep 17 08:55 AM

Page Number : 1
Vial Number : 29
Injection Number : 1
Sequence Line : 3
Instrument Method: DX.MTH
Analysis Method : DX.MTH

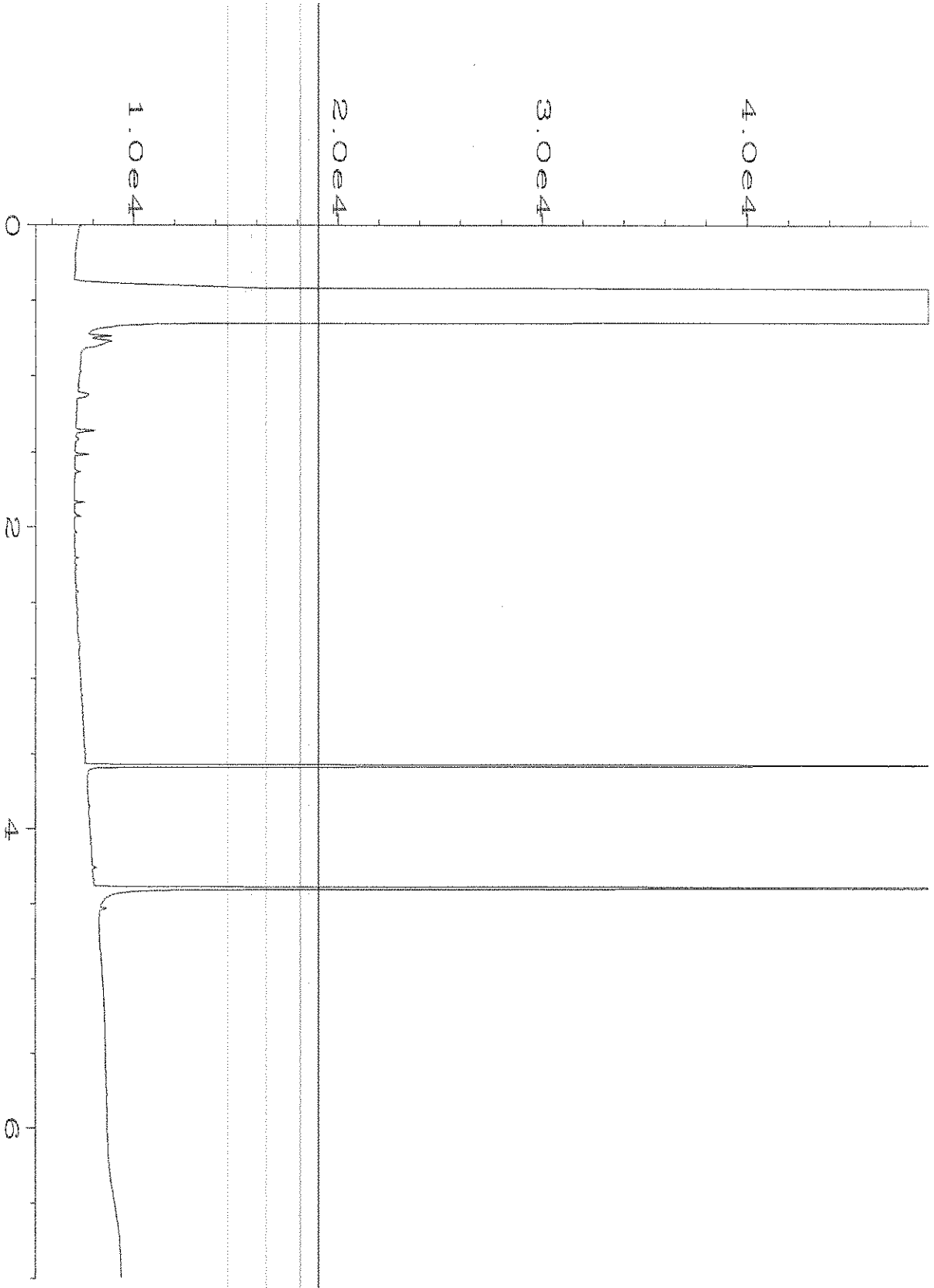

Data File Name	: C:\HPCHEM\6\DATA\09-21-17\030F0301.D		
Operator	: mwdl	Page Number	: 1
Instrument	: GC #6	Vial Number	: 30
Sample Name	: 709315-11	Injection Number	: 1
Run Time Bar Code:		Sequence Line	: 3
Acquired on	: 21 Sep 17 02:47 PM	Instrument Method	: DX.MTH
Report Created on	: 22 Sep 17 08:55 AM	Analysis Method	: DX.MTH

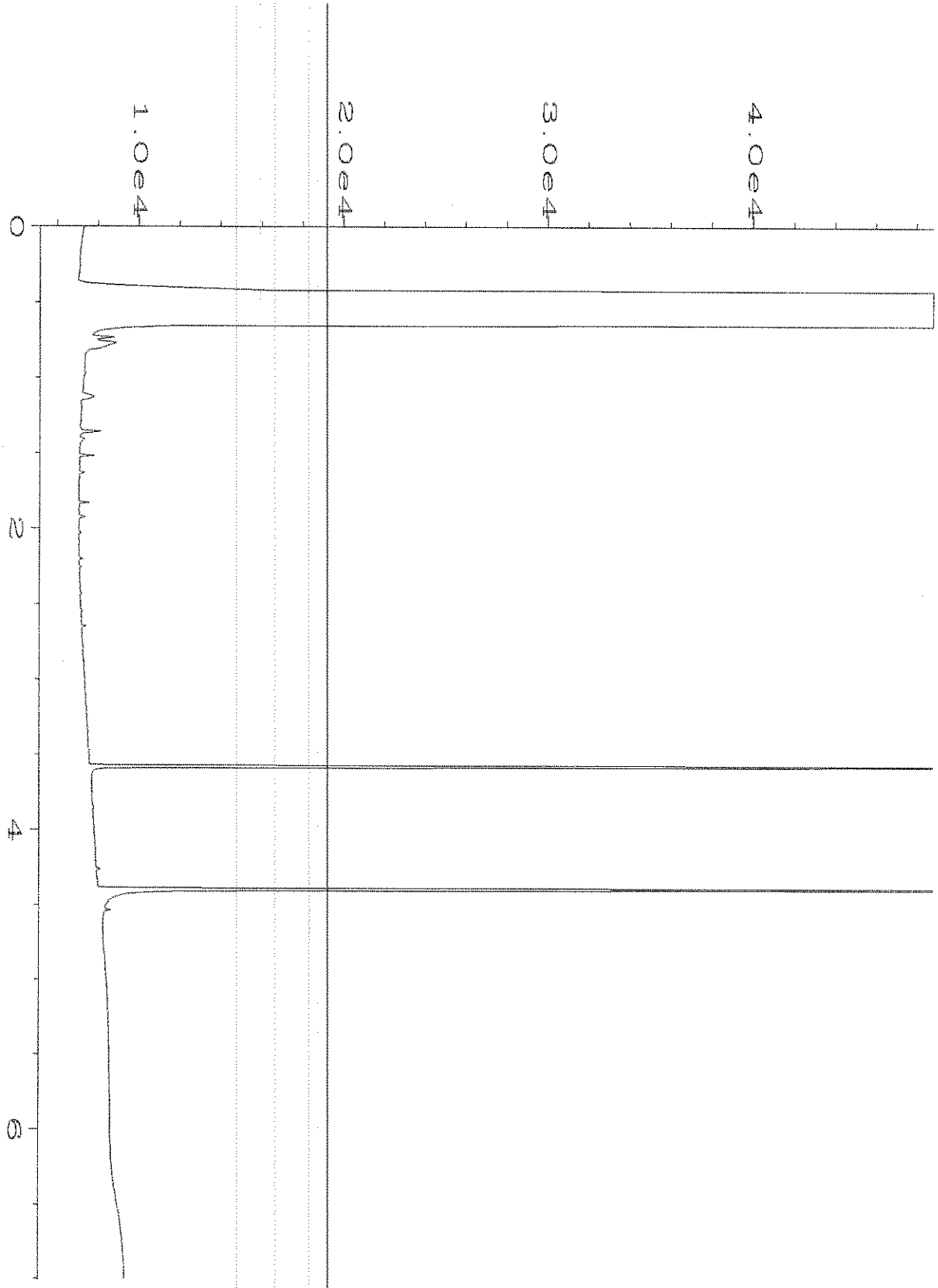

Data File Name : C:\HPCHEM\6\DATA\09-21-17\031F0301.D
Operator : mwdl
Instrument : GC #6
Sample Name : 709315-16
Run Time Bar Code:
Acquired on : 21 Sep 17 02:58 PM
Report Created on: 22 Sep 17 08:56 AM

Page Number : 1
Vial Number : 31
Injection Number : 1
Sequence Line : 3
Instrument Method: DX.MTH
Analysis Method : DX.MTH

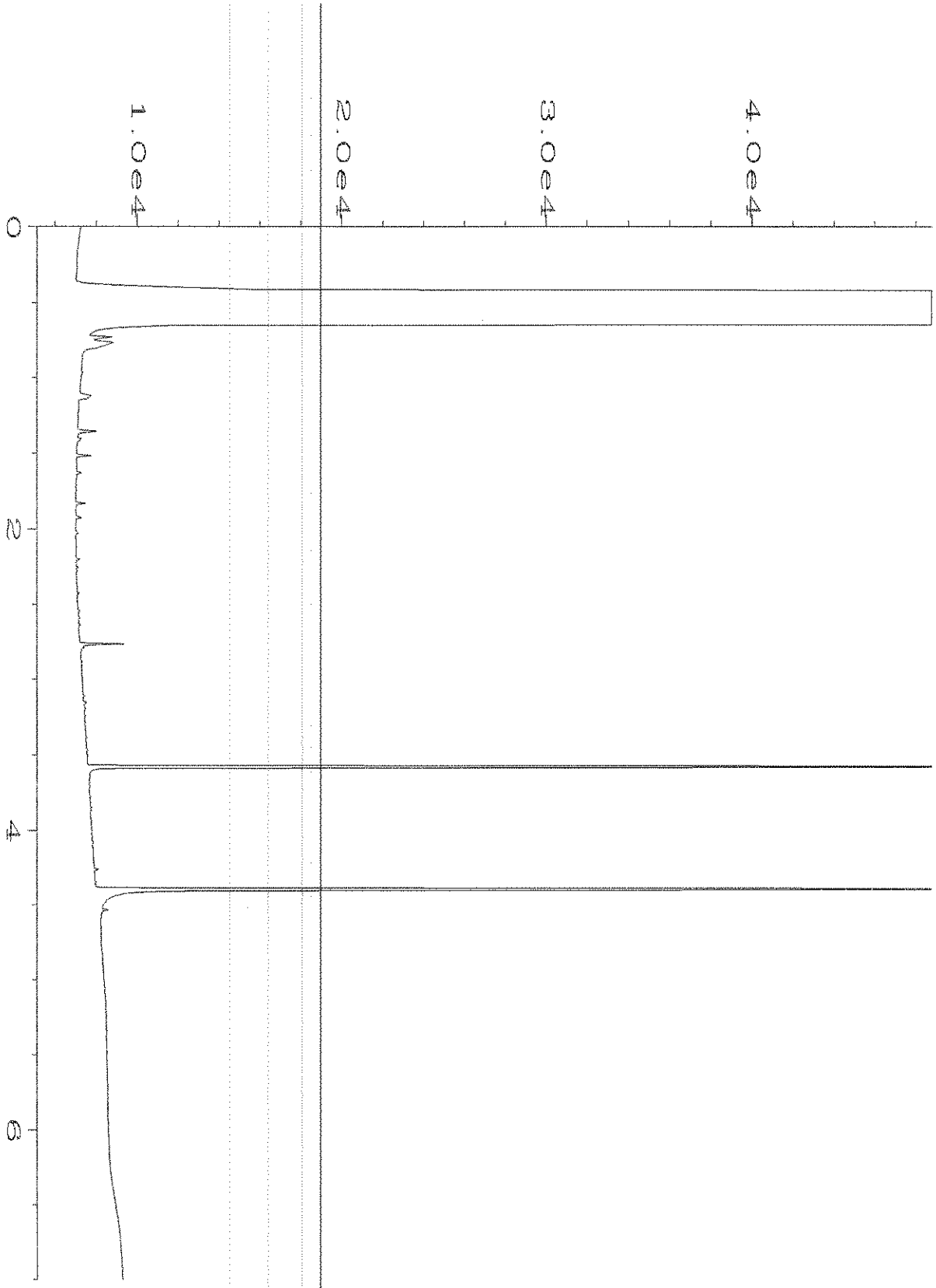

Data File Name	: C:\HPCHEM\6\DATA\09-21-17\032F0301.D		
Operator	: mwdl	Page Number	: 1
Instrument	: GC #6	Vial Number	: 32
Sample Name	: 709315-21	Injection Number	: 1
Run Time Bar Code:		Sequence Line	: 3
Acquired on	: 21 Sep 17 03:09 PM	Instrument Method	: DX.MTH
Report Created on	: 22 Sep 17 08:56 AM	Analysis Method	: DX.MTH

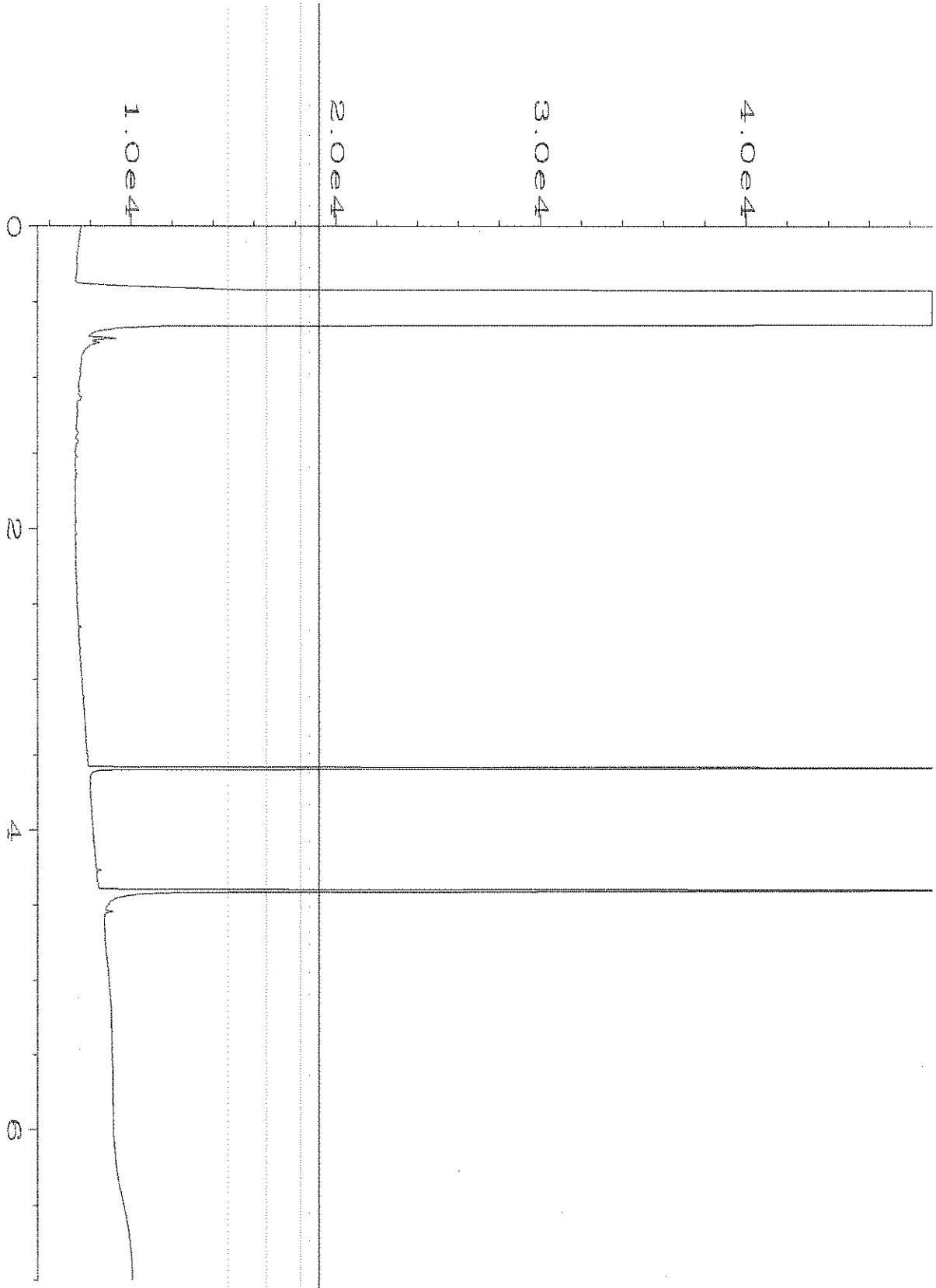

Data File Name	: C:\HPCHEM\6\DATA\09-21-17\018F0301.D		
Operator	: mwdl	Page Number	: 1
Instrument	: GC #6	Vial Number	: 18
Sample Name	: 07-2080 mb	Injection Number	: 1
Run Time Bar Code:		Sequence Line	: 3
Acquired on	: 21 Sep 17 12:37 PM	Instrument Method	: DX.MTH
Report Created on	: 22 Sep 17 08:55 AM	Analysis Method	: DX.MTH

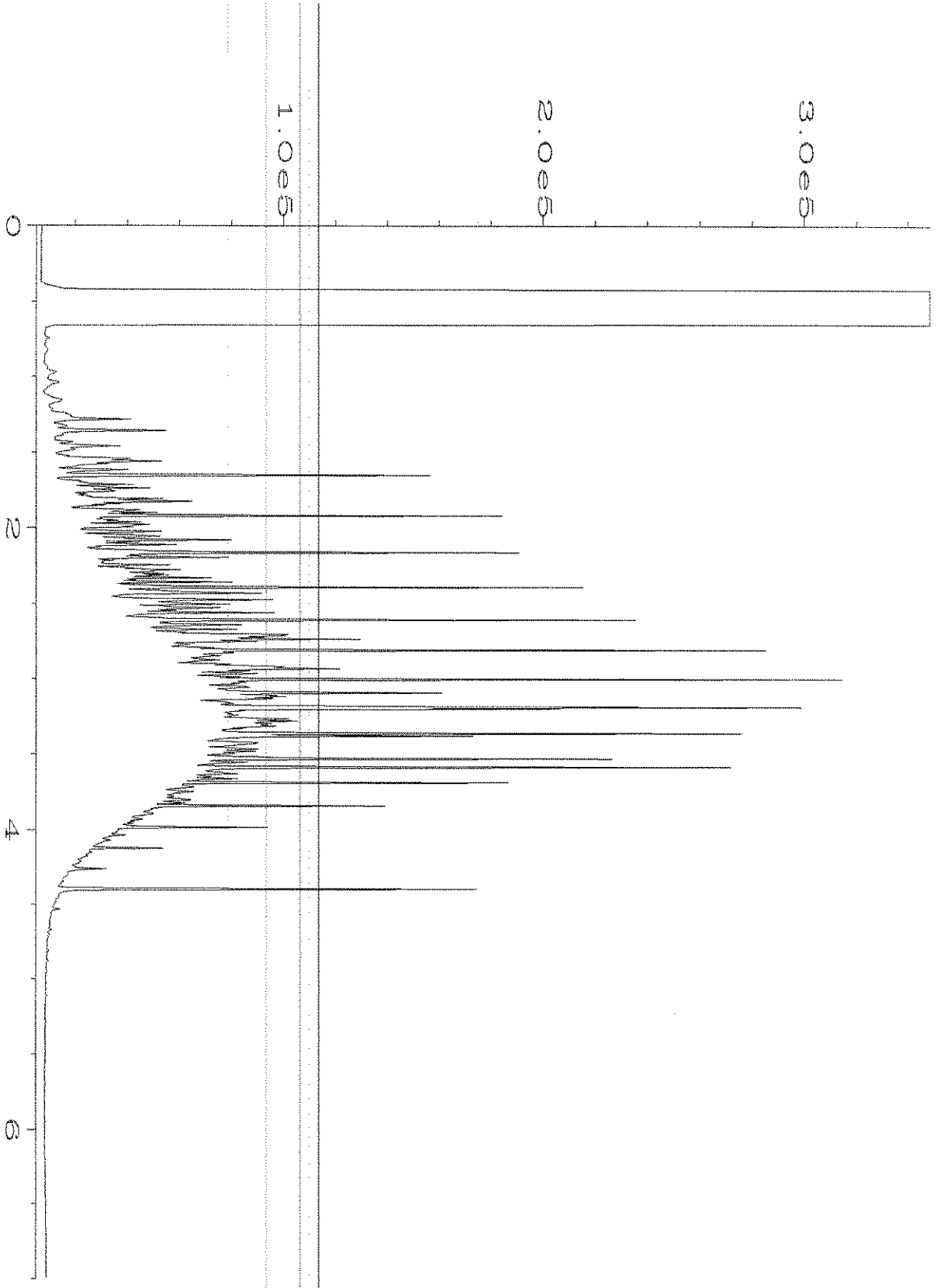

Data File Name	: C:\HPCHEM\6\DATA\09-21-17\005F0501.D		
Operator	: mwdl	Page Number	: 1
Instrument	: GC #6	Vial Number	: 5
Sample Name	: 1000 Dx 49-188D	Injection Number	: 1
Run Time Bar Code:		Sequence Line	: 5
Acquired on	: 21 Sep 17 04:25 PM	Instrument Method	: DX.MTH
Report Created on:	22 Sep 17 08:57 AM	Analysis Method	: DX.MTH

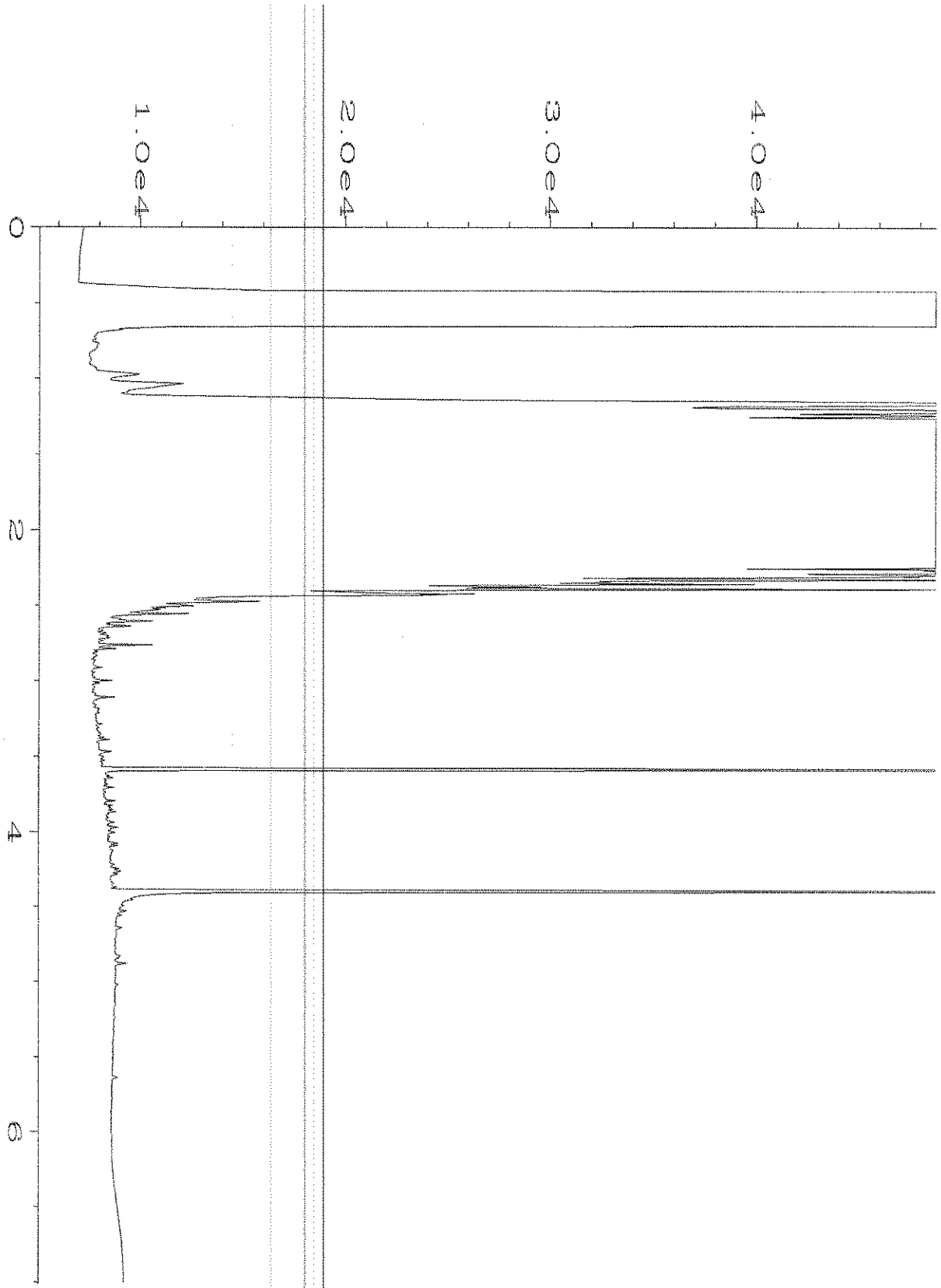

Data File Name : C:\HPCHEM\6\DATA\09-21-17\034F0301.D
Operator : mwdl
Instrument : GC #6
Sample Name : 1000 sto 52-10
Run Time Bar Code:
Acquired on : 21 Sep 17 03:31 PM
Report Created on: 22 Sep 17 11:11 AM

Page Number : 1
Vial Number : 34
Injection Number : 1
Sequence Line : 3
Instrument Method: DX.MTH
Analysis Method : DX.MTH

709315

SAMPLE CHAIN OF CUSTODY

ME 09/19/17

C04/3

Page # 1 of 3

Report to Lynn Grochala

Company Floyd | Snider

Address 601 Union St Ste 600

City, State, ZIP Seattle, WA 98101

Phone 206-292-2078 Email lynn.grochala@floydsnider.com

SAMPLERS (*signature*)

PROJECT NAME: SIM-730 EDR

PO #

REMARKS: TPH-D for Stoddard solvent and heavy oil

INVOICE TO

TURNAROUND TIME
- [x] Standard Turnaround
- [ ] RUSH
- Rush charges authorized by:

SAMPLE DISPOSAL
- [x] Dispose after 30 days
- [ ] Archive Samples
- [ ] Other

Sample ID	Lab ID	Date Sampled	Time Sampled	Sample Type	# of Jars	TPH-HCID	TPH-Diesel	TPH-Gasoline	BTEX by 8021B	VOCs by 8260C	SVOCs by 8270D	PAHs 8270D SIM	Pentachlorophenol	HOLD			Notes
WT-E1-01-4'	01	9/19/17	1138	soil	1									X			
WT-E1-02-4'	02		1144		1									X			
WT-E1-03-4'	03		1150		1									X			
WT-E1-04-4'	04		1156		1									X			
~~WT-E2~~ WT-E1-05-4'	05		1200		1		X						X				
WT-E2-01-4'	06		1203		1									X			
WT-E2-02-4'	07		1208		1									X			
WT-E2-03-4'	08		1214		1									X			
WT-E2-04-4'	09		1220		1									X			
WT-E2-05-4'	10		1226		1									X			

Samples received at 4 °C

SIGNATURE	PRINT NAME	COMPANY	DATE	TIME
Relinquished by:	Kristyn Anderson	FS	9/19/17	1610
Received by:	Eric Yam	FS	9/19/17	1610
Relinquished by:				
Received by:				

Friedman & Bruya, Inc.
3012 16th Avenue West
Seattle, WA 98119-2029
Ph. (206) 285-8282

709315

SAMPLE CHAIN OF CUSTODY

ME 09/19/17

COC

Page # 2 of 3

Report To Lynn Grochala

Company FS

Address (see p. 1)

City, State, ZIP

Phone Email

SAMPLERS (*signature*)

PROJECT NAME: SEM-730 EDR

PO #

REMARKS: see p. 1

INVOICE TO

TURNAROUND TIME
- ☒ Standard Turnaround
- ☐ RUSH
- Rush charges authorized by:

SAMPLE DISPOSAL
- ☒ Dispose after 30 days
- ☐ Archive Samples
- ☐ Other

Sample ID	Lab ID	Date Sampled	Time Sampled	Sample Type	# of Jars	TPH-HCID	TPH-Diesel	TPH-Gasoline	BTEX by 8021B	VOCs by 8260C	SVOCs by 8270D	PAHs 8270D SIM	Perchlorate/nitrate	HOLD			Notes
WT-E2	11	9/19/17	1230	soil	1		X						X				
WT-D-01-4'	12		1233		1									X			
WT-D-02-4'	13		1239		1									X			
WT-D-03-4'	14		1246		1									X			
WT-D-04-4'	15		1253		1								1/24	X			
WT-D	16		1256		1		X						X				
WT-C-01-4'	17		1313		1									X			
WT-C-02-4'	18		1318		1									X			
WT-C-03-4'	19		1322		1									X			
WT-C-04-4'	20		1327		1									X			

SIGNATURE	PRINT NAME	COMPANY	DATE	TIME
Relinquished by:	Kristin Anderson	FS	9/19/17	1610
Received by:	Eric Haas	FS	9/19/17	1610
Relinquished by:				
Received by:		Samples received at 4 °C		

Friedman & Bruya, Inc.
3012 16th Avenue West
Seattle, WA 98119-2029
Ph. (206) 285-8282

709315

SAMPLE CHAIN OF CUSTODY

ME 09/19/17

Page 3 of 3 COC

Report To Lynn Grochala

Company FS

Address (see p. 1)

City, State, ZIP

Phone Email

SAMPLERS (*signature*)

PROJECT NAME: SIM-730 EDR

PO #

REMARKS: See p. 1

INVOICE TO

TURNAROUND TIME
- ☒ Standard Turnaround
- ☐ RUSH
- Rush charges authorized by:

SAMPLE DISPOSAL
- ☒ Dispose after 30 days
- ☐ Archive Samples
- ☐ Other

Sample ID	Lab ID	Date Sampled	Time Sampled	Sample Type	# of Jars	TPH-HCID	TPH-Diesel	TPH-Gasoline	BTEX by 8021B	VOCs by 8260C	SVOCs by 8270D	PAHs 8270D SIM	PentaChlorophenol				Notes
						ANALYSES REQUESTED											
WT-C	21	9/19/17	1330	soil	1		X						X				

Friedman & Bruya, Inc.
3012 16th Avenue West
Seattle, WA 98119-2029
Ph. (206) 285-8282

	SIGNATURE	PRINT NAME	COMPANY	DATE	TIME
Relinquished by:		Kristin Anderson	FS	9/19/17	1610
Received by:		Eric Uhan	FB	9/19/17	1610
Relinquished by:					
Received by:			Samples received at 4 °C		

DRAFT

Date of Report: 09/21/17
Date Received: 09/20/17
Project: SIM-730 EDR, F&BI 709339
Date Extracted: 09/21/17
Date Analyzed: 09/21/17

RESULTS FROM THE ANALYSIS OF SOIL SAMPLES
FOR TOTAL PETROLEUM HYDROCARBONS AS MOTOR OIL
USING METHOD NWTPH-Dx

Results Reported on a Dry Weight Basis
Results Reported as mg/kg (ppm)

Sample ID Laboratory ID	Motor Oil Range (C_{25}-C_{36})	Surrogate (% Recovery) (Limit 53-144)
WT-A3 709339-05	<250	76
Method Blank 07-2080 MB	<250	76

Date of Report: 09/21/17
Date Received: 09/20/17
Project: SIM-730 EDR, F&BI 709339
Date Extracted: 09/21/17
Date Analyzed: 09/21/17

RESULTS FROM THE ANALYSIS OF SOIL SAMPLES
FOR TOTAL PETROLEUM HYDROCARBONS
AS STODDARD SOLVENT
USING METHOD NWTPH-Dx

Results Reported on a Dry Weight Basis
Results Reported as mg/kg (ppm)

Sample ID Laboratory ID	Stoddard Solvent Range (C_8-C_{11})	Surrogate (% Recovery) (Limit 53-144)
WT-A3 709339-05	<50	76
Method Blank 07-2080 MB	<50	76

Analysis For Semivolatile Compounds By EPA Method 8270D

Client Sample ID:	WT-A3	Client:	Floyd-Snider
Date Received:	09/20/17	Project:	SIM-730 EDR, F&BI 709339
Date Extracted:	09/21/17	Lab ID:	709339-05 1/5
Date Analyzed:	09/21/17	Data File:	092110.D
Matrix:	Soil	Instrument:	GCMS8
Units:	mg/kg (ppm) Dry Weight	Operator:	VM

Surrogates:	% Recovery:	Lower Limit:	Upper Limit:
2-Fluorophenol	105	56	115
Phenol-d6	101	54	113
Nitrobenzene-d5	98	31	164
2-Fluorobiphenyl	96	47	133
2,4,6-Tribromophenol	99	35	141
Terphenyl-d14	121	24	188

Compounds:	Concentration mg/kg (ppm)
Pentachlorophenol	<0.5

Analysis For Semivolatile Compounds By EPA Method 8270D

Client Sample ID:	WT-A3-D	Client:	Floyd-Snider
Date Received:	09/20/17	Project:	SIM-730 EDR, F&BI 709339
Date Extracted:	09/21/17	Lab ID:	709339-06 1/5
Date Analyzed:	09/21/17	Data File:	092111.D
Matrix:	Soil	Instrument:	GCMS8
Units:	mg/kg (ppm) Dry Weight	Operator:	VM

Surrogates:	% Recovery:	Lower Limit:	Upper Limit:
2-Fluorophenol	107	56	115
Phenol-d6	103	54	113
Nitrobenzene-d5	99	31	164
2-Fluorobiphenyl	97	47	133
2,4,6-Tribromophenol	106	35	141
Terphenyl-d14	114	24	188

Compounds:	Concentration mg/kg (ppm)
Pentachlorophenol	<0.5

709339

SAMPLE CHAIN OF CUSTODY

ME 09-20-17 C02

Page # 1 of 1

Report To Lynn Grochala
Company Floyd | Snider
Address 601 Union St Ste 600
City, State, ZIP Seattle, WA 98101
Phone 206-292-2078 Email lynn-grochala@floydsnider.com

SAMPLERS (*signature*)

PROJECT NAME: SIM-730 EDR
PO #:

REMARKS: TPH-Dx for Stoddard solvent + heavy oil
INVOICE TO:

TURNAROUND TIME
- ☐ Standard Turnaround
- ☒ RUSH (see notes)

Rush charges authorized by:

SAMPLE DISPOSAL
- ☒ Dispose after 30 days
- ☐ Archive Samples
- ☐ Other

Sample ID	Lab ID	Date Sampled	Time Sampled	Sample Type	# of Jars	TPH-HCID	TPH-Diesel	TPH-Gasoline	BTEX by 8021B	VOCs by 8260C	SVOCs by 8270D	PAHs 8270D SIM	Penta	HOLD			Notes
WT-A3-01-9.5'	01	9/20/17		soil	1									X			
WT-A3-01-9.5'-D	02	↓		↓	1									X			
WT-A3-02-9.5'	03				1									X			
WT-A3-03-9'	04				1									X			
WT-A3	05				1		X						X				24-hr TAT (ASAP)
WT-A3-D	06	↓		↓	1		X						X				std TAT

Samples received at 4 °C

SIGNATURE	PRINT NAME	COMPANY	DATE	TIME
Relinquished by:	Kristyn Andersen	FS	9/20/17	1625
Received by:	Eric Lam	F-B	9/21/17	1425
Relinquished by:				
Received by:				

Friedman & Bruya, Inc.
3012 16th Avenue West
Seattle, WA 98119-2029
Ph. (206) 285-8282

FRIEDMAN & BRUYA, INC.

ENVIRONMENTAL CHEMISTS

James E. Bruya, Ph.D.
Yelena Aravkina, M.S.
Michael Erdahl, B.S.
Arina Podnozova, B.S.
Eric Young, B.S.

3012 16th Avenue West
Seattle, WA 98119-2029
(206) 285-8282
fbi@isomedia.com
www.friedmanandbruya.com

October 4, 2017

Lynn Grochala, Project Manager
Floyd-Snider
Two Union Square, Suite 600
601 Union St
Seattle, WA 98101

Dear Ms Grochala:

Included are the results from the testing of material submitted on September 28, 2017 from the SIM-730 EDR, F&BI 709508 project. There are 12 pages included in this report. Any samples that may remain are currently scheduled for disposal in 30 days. If you would like us to return your samples or arrange for long term storage at our offices, please contact us as soon as possible.

We appreciate this opportunity to be of service to you and hope you will call if you should have any questions.

Sincerely,

FRIEDMAN & BRUYA, INC.



Michael Erdahl
Project Manager

Enclosures
c: Kristin Anderson
FDS1004R.DOC

CASE NARRATIVE

This case narrative encompasses samples received on September 28, 2017 by Friedman & Bruya, Inc. from the Floyd-Snider SIM-730 EDR, F&BI 709508 project. Samples were logged in under the laboratory ID's listed below.

Laboratory ID	Floyd-Snider
709508 -01	WT-A2-01-5'
709508 -02	WT-A2-02-5'
709508 -03	WT-A2-03-5'
709508 -04	WT-A2-04-5'
709508 -05	WT-A2-05-5'
709508 -06	WT-A2-06-5'
709508 -07	WT-A2
709508 -08	WT-B-01-5'
709508 -09	WT-B-02-4'
709508 -10	WT-B-03-3'
709508 -11	WT-B
709508 -12	WT-A1-01-4'
709508 -13	WT-A1-02-4'
709508 -14	WT-A1-03-4'
709508 -15	WT-A1-04-4'
709508 -16	WT-A1-05-4'
709508 -17	WT-A1

Sample WT-A2 was sent to Frontier for dioxin and furan analysis. The report generated by Frontier will be forwarded to your office upon receipt.

An 8270D internal standard failed the acceptance criteria for sample WT-A2 due to matrix interferences. The data were flagged accordingly. The sample was diluted and reanalyzed.

All other quality control requirements were acceptable.

Date of Report: 10/04/17
Date Received: 09/28/17
Project: SIM-730 EDR, F&BI 709508
Date Extracted: 10/02/17
Date Analyzed: 10/02/17

RESULTS FROM THE ANALYSIS OF SOIL SAMPLES FOR TOTAL PETROLEUM HYDROCARBONS AS MOTOR OIL USING METHOD NWTPH-Dx

Results Reported on a Dry Weight Basis
Results Reported as mg/kg (ppm)

Sample ID Laboratory ID	Motor Oil Range (C_{25}-C_{36})	Surrogate (% Recovery) (Limit 53-144)
WT-A2 709508-07	<250	89
WT-B 709508-11	<250	76
WT-A1 709508-17	<250	79
Method Blank 07-2184 MB	<250	86

Date of Report: 10/04/17
Date Received: 09/28/17
Project: SIM-730 EDR, F&BI 709508
Date Extracted: 10/02/17
Date Analyzed: 10/02/17

**RESULTS FROM THE ANALYSIS OF SOIL SAMPLES
FOR TOTAL PETROLEUM HYDROCARBONS
AS STODDARD SOLVENT
USING METHOD NWTPH-Dx**

Results Reported on a Dry Weight Basis
Results Reported as mg/kg (ppm)

Sample ID Laboratory ID	Stoddard Solvent Range (C_8-C_{11})	Surrogate (% Recovery) (Limit 53-144)
WT-A2 709508-07	<50	89
WT-B 709508-11	<50	76
WT-A1 709508-17	<50	79
Method Blank 07-2184 MB	<50	86

Analysis For Semivolatile Compounds By EPA Method 8270D

Client Sample ID:	WT-A2	Client:	Floyd-Snider
Date Received:	09/28/17	Project:	SIM-730 EDR, F&BI 709508
Date Extracted:	10/02/17	Lab ID:	709508-07
Date Analyzed:	10/02/17	Data File:	100221.D
Matrix:	Soil	Instrument:	GCMS8
Units:	mg/kg (ppm) Dry Weight	Operator:	VM

Surrogates:	% Recovery:	Lower Limit:	Upper Limit:
2-Fluorophenol	91	56	115
Phenol-d6	87	54	113
Nitrobenzene-d5	87	31	164
2-Fluorobiphenyl	89 J	47	133
2,4,6-Tribromophenol	92 J	35	141
Terphenyl-d14	95	24	188

Compounds:	Concentration mg/kg (ppm)
Pentachlorophenol	<0.1 J

Analysis For Semivolatile Compounds By EPA Method 8270D

Client Sample ID:	WT-A2	Client:	Floyd-Snider
Date Received:	09/28/17	Project:	SIM-730 EDR, F&BI 709508
Date Extracted:	10/02/17	Lab ID:	709508-07 1/5
Date Analyzed:	10/03/17	Data File:	100304.D
Matrix:	Soil	Instrument:	GCMS8
Units:	mg/kg (ppm) Dry Weight	Operator:	VM

Surrogates:	% Recovery:	Lower Limit:	Upper Limit:
2-Fluorophenol	93 d	56	115
Phenol-d6	90 d	54	113
Nitrobenzene-d5	88 d	31	164
2-Fluorobiphenyl	96 d	47	133
2,4,6-Tribromophenol	76 d	35	141
Terphenyl-d14	109 d	24	188

Compounds:	Concentration mg/kg (ppm)
Pentachlorophenol	<0.5

Analysis For Semivolatile Compounds By EPA Method 8270D

Client Sample ID:	WT-B	Client:	Floyd-Snider
Date Received:	09/28/17	Project:	SIM-730 EDR, F&BI 709508
Date Extracted:	10/02/17	Lab ID:	709508-11
Date Analyzed:	10/02/17	Data File:	100223.D
Matrix:	Soil	Instrument:	GCMS8
Units:	mg/kg (ppm) Dry Weight	Operator:	VM

Surrogates:	% Recovery:	Lower Limit:	Upper Limit:
2-Fluorophenol	92	56	115
Phenol-d6	88	54	113
Nitrobenzene-d5	86	31	164
2-Fluorobiphenyl	87	47	133
2,4,6-Tribromophenol	107	35	141
Terphenyl-d14	92	24	188

Compounds:	Concentration mg/kg (ppm)
Pentachlorophenol	<0.1

Analysis For Semivolatile Compounds By EPA Method 8270D

Client Sample ID:	WT-A1	Client:	Floyd-Snider
Date Received:	09/28/17	Project:	SIM-730 EDR, F&BI 709508
Date Extracted:	10/02/17	Lab ID:	709508-17
Date Analyzed:	10/02/17	Data File:	100224.D
Matrix:	Soil	Instrument:	GCMS8
Units:	mg/kg (ppm) Dry Weight	Operator:	VM

Surrogates:	% Recovery:	Lower Limit:	Upper Limit:
2-Fluorophenol	90	56	115
Phenol-d6	89	54	113
Nitrobenzene-d5	86	31	164
2-Fluorobiphenyl	89	47	133
2,4,6-Tribromophenol	96	35	141
Terphenyl-d14	97	24	188

Compounds:	Concentration mg/kg (ppm)
Pentachlorophenol	<0.1

Analysis For Semivolatile Compounds By EPA Method 8270D

Client Sample ID:	Method Blank	Client:	Floyd-Snider
Date Received:	Not Applicable	Project:	SIM-730 EDR, F&BI 709508
Date Extracted:	10/02/17	Lab ID:	07-2182 mb
Date Analyzed:	10/02/17	Data File:	100220.D
Matrix:	Soil	Instrument:	GCMS8
Units:	mg/kg (ppm) Dry Weight	Operator:	VM

Surrogates:	% Recovery:	Lower Limit:	Upper Limit:
2-Fluorophenol	91	56	115
Phenol-d6	89	54	113
Nitrobenzene-d5	88	31	164
2-Fluorobiphenyl	93	47	133
2,4,6-Tribromophenol	92	35	141
Terphenyl-d14	99	24	188

Compounds:	Concentration mg/kg (ppm)
Pentachlorophenol	<0.1

Date of Report: 10/04/17
Date Received: 09/28/17
Project: SIM-730 EDR, F&BI 709508

QUALITY ASSURANCE RESULTS FROM THE ANALYSIS OF SOIL SAMPLES FOR TOTAL PETROLEUM HYDROCARBONS AS MOTOR OIL USING METHOD NWTPH-Dx

Laboratory Code: 709508-17 (Duplicate)

Analyte	Reporting Units	Sample Result (Wet Wt)	Duplicate Result (Wet Wt)
Motor Oil	mg/kg (ppm)	<50	<50

Laboratory Code: Laboratory Control Sample

Analyte	Reporting Units	Spike Level	Percent Recovery LCS	Acceptance Criteria
Motor Oil	mg/kg (ppm)	500	73	70-130

Date of Report: 10/04/17
Date Received: 09/28/17
Project: SIM-730 EDR, F&BI 709508

QUALITY ASSURANCE RESULTS FROM THE ANALYSIS OF SOIL SAMPLES FOR TOTAL PETROLEUM HYDROCARBONS AS STODDARD SOLVENT USING METHOD NWTPH-Dx

Laboratory Code: 709508-17 (Duplicate)

Analyte	Reporting Units	Sample Result (Wet Wt)	Duplicate Result (Wet Wt)
Stoddard Solvent	mg/kg (ppm)	<50	<50

Laboratory Code: Laboratory Control Sample

Analyte	Reporting Units	Spike Level	Percent Recovery LCS	Acceptance Criteria
Stoddard Solvent	mg/kg (ppm)	5,000	80	60-130

Date of Report: 10/04/17
Date Received: 09/28/17
Project: SIM-730 EDR, F&BI 709508

QUALITY ASSURANCE RESULTS FOR THE ANALYSIS OF SOIL SAMPLES FOR SEMIVOLATILES BY EPA METHOD 8270D

Laboratory Code: 709508-07 (Matrix Spike)

Analyte	Reporting Units	Spike Level	Sample Result (Wet wt)	Percent Recovery MS	Acceptance Criteria
Pentachlorophenol	mg/kg (ppm)	0.33	<0.1 J	104	12-160

Laboratory Code: Laboratory Control Sample

Analyte	Reporting Units	Spike Level	Percent Recovery LCS	Percent Recovery LCSD	Acceptance Criteria	RPD (Limit 20)
Pentachlorophenol	mg/kg (ppm)	0.33	110	111	45-123	1

Data Qualifiers & Definitions

a - The analyte was detected at a level less than five times the reporting limit. The RPD results may not provide reliable information on the variability of the analysis.

b - The analyte was spiked at a level that was less than five times that present in the sample. Matrix spike recoveries may not be meaningful.

ca - The calibration results for the analyte were outside of acceptance criteria. The value reported is an estimate.

c - The presence of the analyte may be due to carryover from previous sample injections.

cf - The sample was centrifuged prior to analysis.

d - The sample was diluted. Detection limits were raised and surrogate recoveries may not be meaningful.

dv - Insufficient sample volume was available to achieve normal reporting limits.

f - The sample was laboratory filtered prior to analysis.

fb - The analyte was detected in the method blank.

fc - The compound is a common laboratory and field contaminant.

hr - The sample and duplicate were reextracted and reanalyzed. RPD results were still outside of control limits. Variability is attributed to sample inhomogeneity.

hs - Headspace was present in the container used for analysis.

ht – The analysis was performed outside the method or client-specified holding time requirement.

ip - Recovery fell outside of control limits. Compounds in the sample matrix interfered with the quantitation of the analyte.

j - The analyte concentration is reported below the lowest calibration standard. The value reported is an estimate.

J - The internal standard associated with the analyte is out of control limits. The reported concentration is an estimate.

jl - The laboratory control sample(s) percent recovery and/or RPD were out of control limits. The reported concentration should be considered an estimate.

js - The surrogate associated with the analyte is out of control limits. The reported concentration should be considered an estimate.

lc - The presence of the analyte is likely due to laboratory contamination.

L - The reported concentration was generated from a library search.

nm - The analyte was not detected in one or more of the duplicate analyses. Therefore, calculation of the RPD is not applicable.

pc - The sample was received with incorrect preservation or in a container not approved by the method. The value reported should be considered an estimate.

ve - The analyte response exceeded the valid instrument calibration range. The value reported is an estimate.

vo - The value reported fell outside the control limits established for this analyte.

x - The sample chromatographic pattern does not resemble the fuel standard used for quantitation.

709508

SAMPLE CHAIN OF CUSTODY

ME 09/28/17

C03

Page # 1 of 2

Report To Lynn Grochala

Company Floyd | Snider

Address 601 Union St, Ste 600

City, State, ZIP Seattle, WA 98101

Phone 206-292-2078 Email lynn.grochala@floydsnider.com

SAMPLERS (*signature*)

PROJECT NAME: SIM-730 EDR

PO #

REMARKS: TPH-Dx for Stoddard solvent + heavy oil. no rush on D/F results

INVOICE TO

TURNAROUND TIME
- ☐ Standard Turnaround
- ☒ RUSH by COB 10/3

Rush charges authorized by:

SAMPLE DISPOSAL
- ☒ Dispose after 30 days
- ☐ Archive Samples
- ☐ Other

Sample ID	Lab ID	Date Sampled	Time Sampled	Sample Type	# of Jars	TPH-HCID	TPH-Diesel	TPH-Gasoline	BTEX by 8021B	VOCs by 8260C	SVOCs by 8270D	PAHs 8270D SIM	Penta	HOLD	dioxins/furans		Notes
WT-AZ-01-5'	01	9/28/17	1338	soil	1									X			
WT-AZ-02-5'	02		1340		1									X			
WT-AZ-03-5'	03		1343		1									X			
WT-AZ-04-5'	04		1350		1									X			
WT-AZ-05-5'	05		1358		1									X			
WT-AZ-06-5'	06		1401		1									X			
WT-AZ	07 A,B		1403		2		X						X		X		
WT-B-01-5'	08		1420		1									X			
WT-B-02-4'	09		1426		1									X			
WT-B-03-3'	10	↓	1432	↓	1									X			Samples received at 4°C

SIGNATURE	PRINT NAME	COMPANY	DATE	TIME
Relinquished by:	Kristin Anderson	FS	9/28/17	1622
Received by:	TOM LADD	FBC	09-28-17	16:22
Relinquished by:				
Received by:				

Friedman & Bruya, Inc.
3012 16th Avenue West
Seattle, WA 98119-2029
Ph. (206) 285-8282

709506

SAMPLE CHAIN OF CUSTODY

ME 09/28/17

C03

Page # 2 of 2

Report To Lynn Grochala

Company Floyd | Snider

Address

City, State, ZIP (See p. 1)

Phone Email

SAMPLERS (*signature*)

PROJECT NAME: SEM-730 EDR

PO #

REMARKS: see p. 1

INVOICE TO

TURNAROUND TIME
- ☐ Standard Turnaround
- ☒ RUSH by COB 10/3

Rush charges authorized by:

SAMPLE DISPOSAL
- ☒ Dispose after 30 days
- ☐ Archive Samples
- ☐ Other

Sample ID	Lab ID	Date Sampled	Time Sampled	Sample Type	# of Jars	TPH-HCID	TPH-Diesel	TPH-Gasoline	BTEX by 8021B	VOCs by 8260C	SVOCs by 8270D	PAHs 8270D SIM	Penta	HOLD			Notes
WT - B	11	9/28/17	1435	soil	1		X						X				
WT - A1-01-4'	12		1438		1									X			
WT - A1-02-4'	13		1444		1									X			
WT - A1-03-4'	14		1448		1									X			
WT - A1-04-4'	15		1451		1									X			
WT - A1-05-4'	16		1442		1									X			
WT - A1	17		1453		1		X						X				

ANALYSES REQUESTED

SIGNATURE	PRINT NAME	COMPANY	DATE	TIME
Relinquished by:	Kristin Anderson	FS	9/28/17	1622
Received by:	TOM LADD	FSI	09-28-17	16:22
Relinquished by:				
Received by:		Samples received at 4 °C		

Friedman & Bruya, Inc.
3012 16th Avenue West
Seattle, WA 98119-2029
Ph. (206) 285-8282

DRAFT

Date of Report: 10/31/17
Date Received: 10/26/17
Project: SIM-730 EDR, F&BI 710420
Date Extracted: 10/27/17
Date Analyzed: 10/27/17

RESULTS FROM THE ANALYSIS OF SOIL SAMPLES FOR TOTAL PETROLEUM HYDROCARBONS AS STODDARD SOLVENT USING METHOD NWTPH-Dx

Results Reported on a Dry Weight Basis
Results Reported as mg/kg (ppm)

Sample ID Laboratory ID	Stoddard Solvent Range (C_8-C_{11})	Surrogate (% Recovery) (Limit 53-144)
WT-A4 710420-04	<50	87
Method Blank 07-2411 MB	<50	89

Date of Report: 10/31/17
Date Received: 10/26/17
Project: SIM-730 EDR, F&BI 710420
Date Extracted: 10/27/17
Date Analyzed: 10/27/17

RESULTS FROM THE ANALYSIS OF SOIL SAMPLES
FOR TOTAL PETROLEUM HYDROCARBONS AS MOTOR OIL
USING METHOD NWTPH-Dx

Results Reported on a Dry Weight Basis
Results Reported as mg/kg (ppm)

Sample ID Laboratory ID	Motor Oil Range (C_{25}-C_{36})	Surrogate (% Recovery) (Limit 53-144)
WT-A4 710420-04	<250	87
Method Blank 07-2411 MB	<250	89

Analysis For Semivolatile Compounds By EPA Method 8270D

Client Sample ID:	WT-A4	Client:	Floyd-Snider
Date Received:	10/26/17	Project:	SIM-730 EDR, F&BI 710420
Date Extracted:	10/27/17	Lab ID:	710420-04
Date Analyzed:	10/27/17	Data File:	102705.D
Matrix:	Soil	Instrument:	GCMS8
Units:	mg/kg (ppm) Dry Weight	Operator:	VM

Surrogates:	% Recovery:	Lower Limit:	Upper Limit:
2-Fluorophenol	96	56	115
Phenol-d6	95	54	113
Nitrobenzene-d5	101	31	164
2-Fluorobiphenyl	95	47	133
2,4,6-Tribromophenol	89	35	141
Terphenyl-d14	111	24	188

Compounds:	Concentration mg/kg (ppm)
Pentachlorophenol	<0.1

Analysis For Semivolatile Compounds By EPA Method 8270D

Client Sample ID:	Method Blank	Client:	Floyd-Snider
Date Received:	Not Applicable	Project:	SIM-730 EDR, F&BI 710420
Date Extracted:	10/27/17	Lab ID:	07-2398 mb2
Date Analyzed:	10/27/17	Data File:	102704.D
Matrix:	Soil	Instrument:	GCMS8
Units:	mg/kg (ppm) Dry Weight	Operator:	VM

Surrogates:	% Recovery:	Lower Limit:	Upper Limit:
2-Fluorophenol	98	56	115
Phenol-d6	97	54	113
Nitrobenzene-d5	105	31	164
2-Fluorobiphenyl	98	47	133
2,4,6-Tribromophenol	91	35	141
Terphenyl-d14	110	24	188

Compounds:	Concentration mg/kg (ppm)
Pentachlorophenol	<0.1

710420

ML 10/26/17 EQ2

SAMPLE CHAIN OF CUSTODY

Page # 1 of 1

Report To Lynn Grochala
Company Floyd Snider
Address 601 Union St, Ste 600
City, State, ZIP Seattle, WA 98101
Phone 206-292-2078 Email lynn.grochala@floydsnider.com

SAMPLERS (*signature*)

PROJECT NAME: SIM-730 EDR
PO #:

REMARKS: TPH-D for Stoddard and heavy oil
INVOICE TO:

TURNAROUND TIME
☐ Standard Turnaround
☒ RUSH by 10 am 10/31 (3-day)
Rush charges authorized by:

SAMPLE DISPOSAL
☒ Dispose after 30 days
☐ Archive Samples
☐ Other

Sample ID	Lab ID	Date Sampled	Time Sampled	Sample Type	# of Jars	TPH-HCID	TPH-Diesel	TPH-Gasoline	BTEX by 8021B	VOCs by 8260C	SVOCs by 8270D	PAHs 8270D SIM	HOLD	Genta			Notes
WT-A4-1-10'	01	10/26/17	1100	soil	1		X	KA					X				
WT-A4-2-10'	02	↓	1112	↓	1								X				
WT-A4-3-10'	03	↓	1127	↓	1								X				
WT-A4	04	↓	1130	↓	1		X							X			

Samples received at 4 °C

SIGNATURE	PRINT NAME	COMPANY	DATE	TIME
Relinquished by:	Kristin Andersen	FS	10/26/17	1250
Received by:	DHD	FSB	10-26	12-50
Relinquished by:				
Received by:				

Friedman & Bruya, Inc.
3012 16th Avenue West
Seattle, WA 98119-2029
Ph. (206) 285-8282

FRIEDMAN & BRUYA, INC.

ENVIRONMENTAL CHEMISTS

James E. Bruya, Ph.D.
Yelena Aravkina, M.S.
Michael Erdahl, B.S.
Arina Podnozova, B.S.
Eric Young, B.S.

3012 16th Avenue West
Seattle, WA 98119-2029
(206) 285-8282
fbi@isomedia.com
www.friedmanandbruya.com

May 9, 2018

Lynn Grochala, Project Manager
Floyd-Snider
Two Union Square, Suite 600
601 Union St
Seattle, WA 98101

Dear Ms Grochala:

Included are the results from the testing of material submitted on April 23, 2018 from the SIM-730 EDR, F&BI 804390 project. There are 9 pages included in this report. Any samples that may remain are currently scheduled for disposal in 30 days. If you would like us to return your samples or arrange for long term storage at our offices, please contact us as soon as possible.

We appreciate this opportunity to be of service to you and hope you will call if you should have any questions.

Sincerely,

FRIEDMAN & BRUYA, INC.



Michael Erdahl
Project Manager

Enclosures
FDS0509R.DOC

CASE NARRATIVE

This case narrative encompasses samples received on April 23, 2018 by Friedman & Bruya, Inc. from the Floyd-Snider SIM-730 EDR, F&BI 804390 project. Samples were logged in under the laboratory ID's listed below.

Laboratory ID	Floyd-Snider
804390 -01	A5-2-5.5'
804390 -02	WT-A5

Sample A5-2-5.5' was composited with sample A5-1-7' received on April 19th and assigned to F&BI project 804350. Per the COC, the sample was assigned the name WT-A5.

All quality control requirements were acceptable.

Date of Report: 05/09/18
Date Received: 04/23/18
Project: SIM-730 EDR, F&BI 804390
Date Extracted: 04/27/18
Date Analyzed: 04/27/18

RESULTS FROM THE ANALYSIS OF SOIL SAMPLES FOR TOTAL PETROLEUM HYDROCARBONS AS STODDARD SOLVENT USING METHOD NWTPH-Dx

Results Reported on a Dry Weight Basis
Results Reported as mg/kg (ppm)

Sample ID Laboratory ID	Stoddard Solvent Range (C_8-C_{11})	Surrogate (% Recovery) (Limit 53-144)
WT-A5 804390-02	<50	106
Method Blank 08-947 MB	<50	109

Date of Report: 05/09/18
Date Received: 04/23/18
Project: SIM-730 EDR, F&BI 804390
Date Extracted: 04/27/18
Date Analyzed: 04/27/18

RESULTS FROM THE ANALYSIS OF SOIL SAMPLES FOR TOTAL PETROLEUM HYDROCARBONS AS MOTOR OIL USING METHOD NWTPH-Dx

Results Reported on a Dry Weight Basis
Results Reported as mg/kg (ppm)

Sample ID Laboratory ID	Motor Oil Range (C_{25}-C_{36})	Surrogate (% Recovery) (Limit 53-144)
WT-A5 804390-02	<250	106
Method Blank 08-947 MB	<250	109

Analysis For Semivolatile Compounds By EPA Method 8270D

Client Sample ID:	WT-A5	Client:	Floyd-Snider
Date Received:	04/23/18	Project:	SIM-730 EDR, F&BI 804390
Date Extracted:	05/02/18	Lab ID:	804390-02
Date Analyzed:	05/03/18	Data File:	050306.D
Matrix:	Soil	Instrument:	GCMS8
Units:	mg/kg (ppm) Dry Weight	Operator:	VM

Surrogates:	% Recovery:	Lower Limit:	Upper Limit:
2-Fluorophenol	97	50	150
Phenol-d6	99	50	150
Nitrobenzene-d5	103	50	150
2-Fluorobiphenyl	98	50	150
2,4,6-Tribromophenol	75	50	150
Terphenyl-d14	96	50	150

Compounds:	Concentration mg/kg (ppm)
Pentachlorophenol	<0.05

Analysis For Semivolatile Compounds By EPA Method 8270D

Client Sample ID:	Method Blank	Client:	Floyd-Snider
Date Received:	Not Applicable	Project:	SIM-730 EDR, F&BI 804390
Date Extracted:	05/02/18	Lab ID:	08-969 mb
Date Analyzed:	05/03/18	Data File:	050305.D
Matrix:	Soil	Instrument:	GCMS8
Units:	mg/kg (ppm) Dry Weight	Operator:	VM

Surrogates:	% Recovery:	Lower Limit:	Upper Limit:
2-Fluorophenol	96	50	150
Phenol-d6	103	50	150
Nitrobenzene-d5	109	50	150
2-Fluorobiphenyl	104	50	150
2,4,6-Tribromophenol	78	50	150
Terphenyl-d14	103	50	150

Compounds:	Concentration mg/kg (ppm)
Pentachlorophenol	<0.05

Date of Report: 05/09/18
Date Received: 04/23/18
Project: SIM-730 EDR, F&BI 804390

QUALITY ASSURANCE RESULTS FROM THE ANALYSIS OF SOIL SAMPLES FOR TOTAL PETROLEUM HYDROCARBONS AS STODDARD SOLVENT USING METHOD NWTPH-Dx

Laboratory Code: 804390-01 (Matrix Spike)

Analyte	Reporting Units	Spike Level	Sample Result (Wet Wt)	Percent Recovery MS	Acceptance Criteria
Stoddard Solvent	mg/kg (ppm)	5,000	<50	106	50-150

Laboratory Code: Laboratory Control Sample

Analyte	Reporting Units	Spike Level	Percent Recovery LCS	Percent Recovery LCSD	Acceptance Criteria	RPD (Limit 20)
Stoddard Solvent	mg/kg (ppm)	5,000	98	108	60-130	10

Date of Report: 05/09/18
Date Received: 04/23/18
Project: SIM-730 EDR, F&BI 804390

QUALITY ASSURANCE RESULTS FROM THE ANALYSIS OF SOIL SAMPLES FOR TOTAL PETROLEUM HYDROCARBONS AS MOTOR OIL USING METHOD NWTPH-Dx

Laboratory Code: 804390-01 (Matrix Spike)

Analyte	Reporting Units	Spike Level	Sample Result (Wet Wt)	Percent Recovery MS	Acceptance Criteria
Motor Oil	mg/kg (ppm)	2,500	<250	104	50-150

Laboratory Code: Laboratory Control Sample

Analyte	Reporting Units	Spike Level	Percent Recovery LCS	Percent Recovery LCSD	Acceptance Criteria	RPD (Limit 20)
Motor Oil	mg/kg (ppm)	2,500	111	100	70-130	10

Date of Report: 05/09/18
Date Received: 04/23/18
Project: SIM-730 EDR, F&BI 804390

QUALITY ASSURANCE RESULTS FOR THE ANALYSIS OF SOIL SAMPLES FOR SEMIVOLATILES BY EPA METHOD 8270D

Laboratory Code: Laboratory Control Sample

Analyte	Reporting Units	Spike Level	Percent Recovery LCS	Percent Recovery LCSD	Acceptance Criteria	RPD (Limit 20)
Pentachlorophenol	mg/kg (ppm)	0.33	92	95	70-130	3

Data Qualifiers & Definitions

a - The analyte was detected at a level less than five times the reporting limit. The RPD results may not provide reliable information on the variability of the analysis.

b - The analyte was spiked at a level that was less than five times that present in the sample. Matrix spike recoveries may not be meaningful.

ca - The calibration results for the analyte were outside of acceptance criteria. The value reported is an estimate.

c - The presence of the analyte may be due to carryover from previous sample injections.

cf - The sample was centrifuged prior to analysis.

d - The sample was diluted. Detection limits were raised and surrogate recoveries may not be meaningful.

dv - Insufficient sample volume was available to achieve normal reporting limits.

f - The sample was laboratory filtered prior to analysis.

fb - The analyte was detected in the method blank.

fc - The compound is a common laboratory and field contaminant.

hr - The sample and duplicate were reextracted and reanalyzed. RPD results were still outside of control limits. Variability is attributed to sample inhomogeneity.

hs - Headspace was present in the container used for analysis.

ht – The analysis was performed outside the method or client-specified holding time requirement.

ip - Recovery fell outside of control limits. Compounds in the sample matrix interfered with the quantitation of the analyte.

j - The analyte concentration is reported below the lowest calibration standard. The value reported is an estimate.

J - The internal standard associated with the analyte is out of control limits. The reported concentration is an estimate.

jl - The laboratory control sample(s) percent recovery and/or RPD were out of control limits. The reported concentration should be considered an estimate.

js - The surrogate associated with the analyte is out of control limits. The reported concentration should be considered an estimate.

lc - The presence of the analyte is likely due to laboratory contamination.

L - The reported concentration was generated from a library search.

nm - The analyte was not detected in one or more of the duplicate analyses. Therefore, calculation of the RPD is not applicable.

pc - The sample was received with incorrect preservation or in a container not approved by the method. The value reported should be considered an estimate.

ve - The analyte response exceeded the valid instrument calibration range. The value reported is an estimate.

vo - The value reported fell outside the control limits established for this analyte.

x - The sample chromatographic pattern does not resemble the fuel standard used for quantitation.

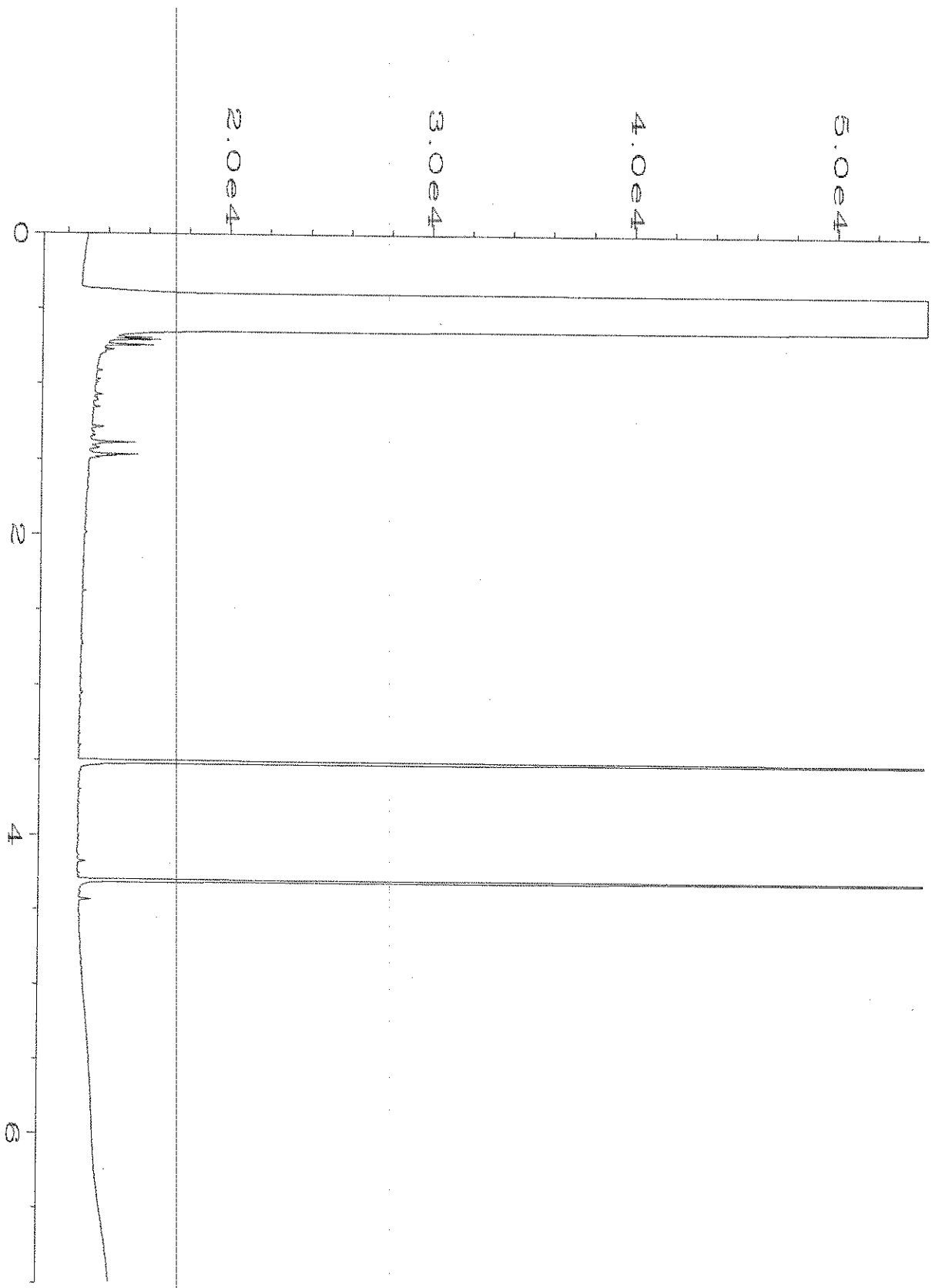

Data File Name	: C:\HPCHEM\6\DATA\04-27-18\031F0501.D		
Operator	: mwdl	Page Number	: 1
Instrument	: GC6	Vial Number	: 31
Sample Name	: 804390-01 comp	Injection Number	: 1
Run Time Bar Code:		Sequence Line	: 5
Acquired on	: 27 Apr 18 05:12 PM	Instrument Method	: DX.MTH
Report Created on	: 29 Apr 18 11:56 AM	Analysis Method	: DX.MTH

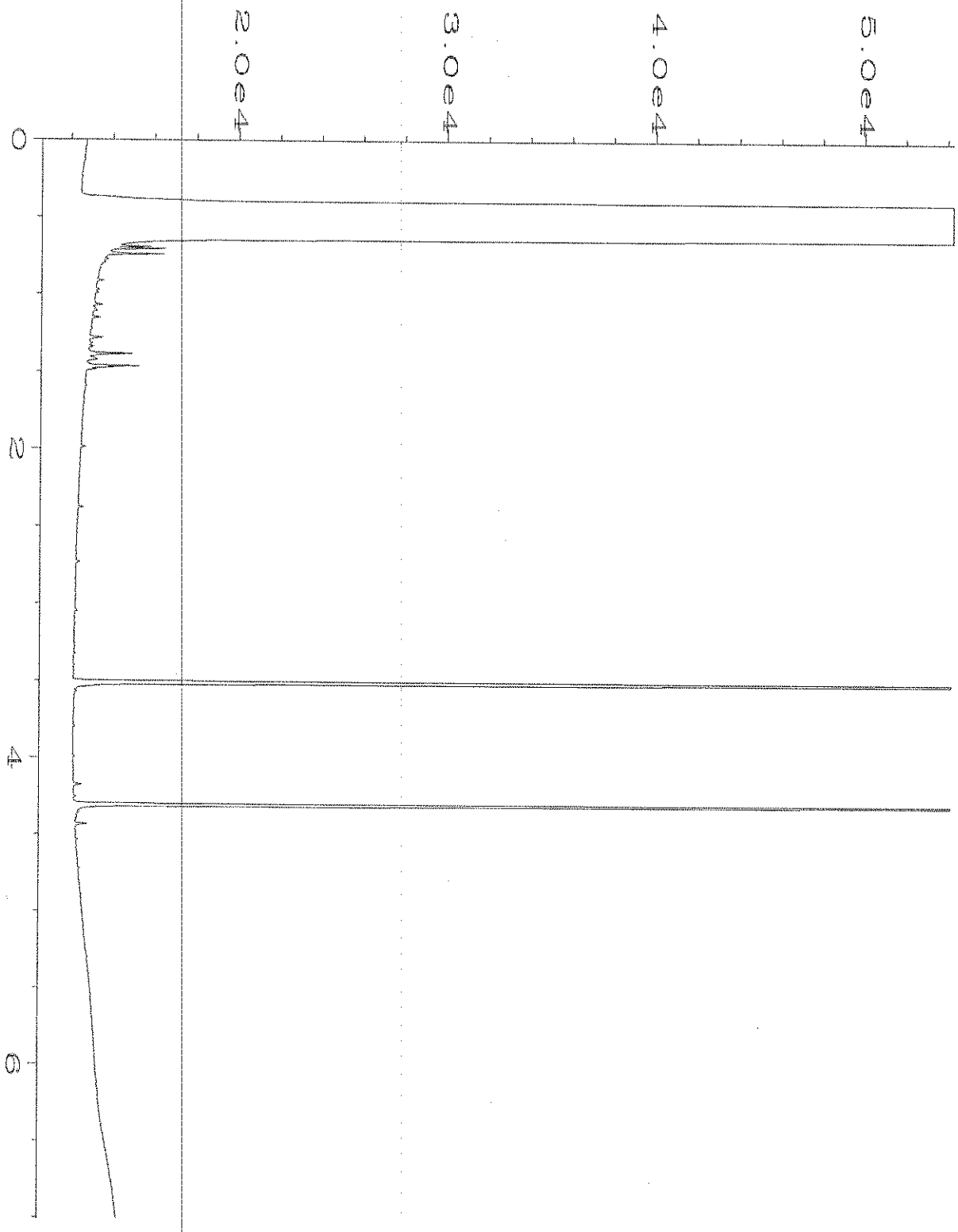

Data File Name : C:\HPCHEM\6\DATA\04-27-18\024F0501.D
Operator : mwdl
Instrument : GC6
Sample Name : 08-947 mb
Run Time Bar Code:
Acquired on : 27 Apr 18 03:57 PM
Report Created on: 29 Apr 18 11:56 AM

Page Number : 1
Vial Number : 24
Injection Number : 1
Sequence Line : 5
Instrument Method: DX.MTH
Analysis Method : DX.MTH

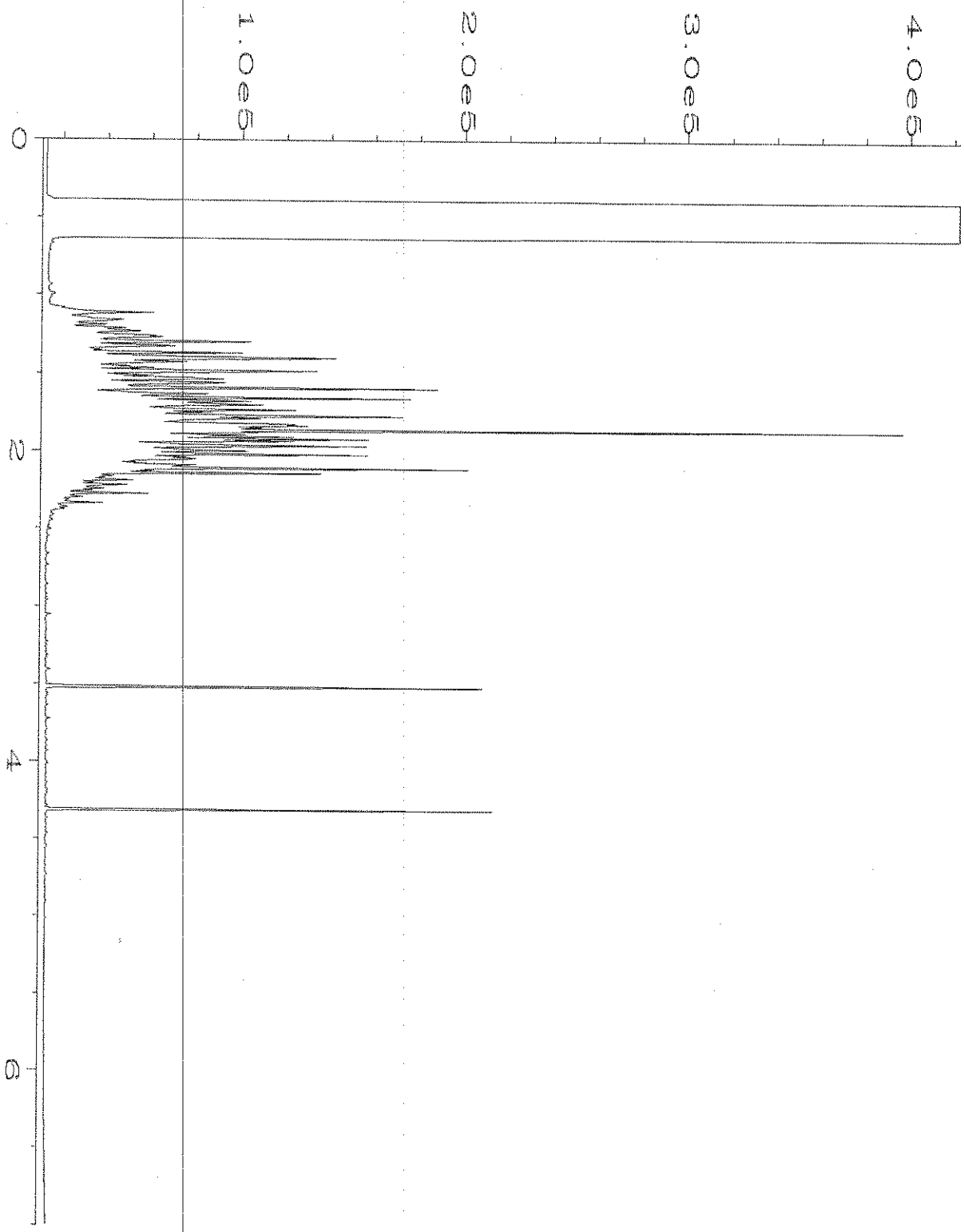

Data File Name : C:\HPCHEM\6\DATA\04-27-18\023F0501.D
Operator : mwdl
Instrument : GC6
Sample Name : 500 sto 53-187
Run Time Bar Code:
Acquired on : 27 Apr 18 03:48 PM
Report Created on: 29 Apr 18 11:57 AM

Page Number : 1
Vial Number : 23
Injection Number : 1
Sequence Line : 5
Instrument Method: DX.MTH
Analysis Method : DX.MTH

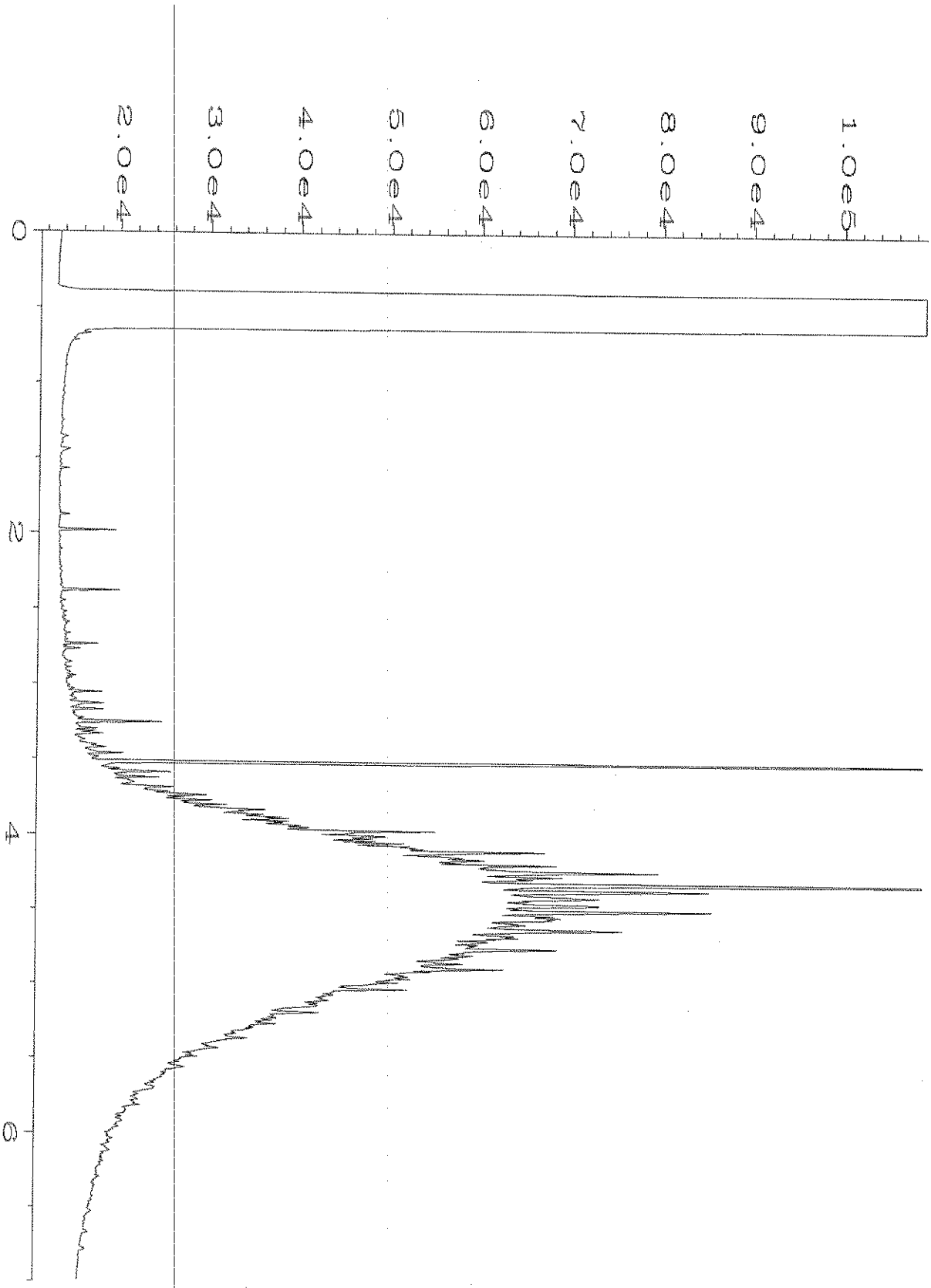

Data File Name : C:\HPCHEM\6\DATA\04-27-18\002F0201.D
Operator : mwdl
Instrument : GC6
Sample Name : 500 MO 52-146B
Run Time Bar Code:
Acquired on : 27 Apr 18 05:53 AM
Report Created on: 29 Apr 18 11:57 AM

Page Number : 1
Vial Number : 2
Injection Number : 1
Sequence Line : 2
Instrument Method: DX.MTH
Analysis Method : DX.MTH

804390

SAMPLE CHAIN OF CUSTODY

MF 04-23-18 B01

Page # 1 of 1

Report To Lynn Grochala

Company Floyd Snider

Address 601 Union St, Ste 600

City, State, ZIP Seattle, WA 98101

Phone 206-292-2078 Email lynn.grochala@floydsnider.com

SAMPLERS (*signature*)

PROJECT NAME: SIM-730 EDR

PO #

REMARKS

INVOICE TO

TURNAROUND TIME
- [x] Standard Turnaround
- [ ] ~~RUSH 5 day~~
- Rush charges authorized by:

SAMPLE DISPOSAL
- [x] Dispose after 30 days
- [ ] Archive Samples
- [ ] Other

Sample ID	Lab ID	Date Sampled	Time Sampled	Sample Type	# of Jars	TPH-HCID	TPH-Diesel	TPH-Gasoline	BTEX by 8021B	VOCs by 8260C	SVOCs by 8270D	PAHs 8270D SIM	Benta	Composite			Notes
A5-2-5.5'	01	4/23/18	1045	Soil	1									X			lab composite w/ A5-1-1
WT-A5							X						X				submitted on 4/19 - composite is WT-A5. analyze composite.

ANALYSES REQUESTED

* Standard + heavy oil

Samples received at 2 °C

SIGNATURE	PRINT NAME	COMPANY	DATE	TIME
Relinquished by:	Corey Wilson	F/S	4/23/18	1205
Received by:	Elizabeth Webber-Bruya	F?B1	4/23/18	1205
Relinquished by:				
Received by:				

Friedman & Bruya, Inc.
3012 16th Avenue West
Seattle, WA 98119-2029
Ph. (206) 285-8282

October 16, 2017

FAL Project: 10962

Mr. Michael Erdahl
Friedman and Bruya, Inc.
3012 16th Ave. W
Seattle, WA 98119

Dear Mr. Erdahl,

The following results are associated with Frontier Analytical Laboratory project **10962**. This corresponds to your project number **709508** and purchase order number **F-102**. One soil sample was received at Frontier Analytical Laboratory on 10/3/2017. This sample was extracted and analyzed by EPA Method 1613 for tetra through octa chlorinated dibenzo dioxins and furans. The Toxic Equivalency (TEQ) for your sample has been calculated using the 2005 World Health Organization's (WHO's) toxic equivalency factors (TEFs). Freidman and Bruya, Inc. requested a turnaround time of fifteen business days for project **10962**.

The following report consists of an Analytical Data section and a Sample Receipt section. The Analytical Data section contains our sample tracking log and the analytical results. The Sample Receipt section contains your chain of custody, our sample login form and a sample photo. The enclosed results and electronic data deliverable (EDD) are specifically for the sample referenced in this report only. These results meet all NELAP requirements and shall not be reproduced except in full. Frontier Analytical Laboratory's State of Oregon NELAP certificate number is **4041**, our State of California ELAP certificate number is **2934** and our State of Washington certificate number is **C844**. This report along with the associated electronic data deliverable (EDD) has been emailed to you as a portable document format (PDF) file. A hardcopy will not be sent to you unless specifically requested.

If you have any questions regarding project **10962**, please feel free to contact me at (916) 934-0900. Thank you for choosing Frontier Analytical Laboratory for your analytical testing needs.

Sincerely,

Daniel P. Vickers

Daniel P. Vickers
Vice President

Frontier Analytical Laboratory

Sample Tracking Log

FAL Project ID: **10962**

Received on: **10/03/2017** Project Due: **10/25/2017** Storage: **R2**

FAL Sample ID	Dup	Client Project ID	Client Sample ID	Requested Method	Matrix	Sampling Date	Sampling Time	Hold Time Due Date
10962-001-SA	0	709508	WT-A2	EPA 1613 D/F	Soil	09/28/2017	02:03 pm	09/28/2018

FAL Sample ID	Notes
10962-001-SA	'Sample ID confirmed with Eric as WT-A2.'

5172 Hillsdale Circle * El Dorado Hills, CA 95762 * Tel (916) 934-0900 * Fax (916) 934-0999 * www.frontieranalytical.com

EPA Method 1613
PCDD/F

FAL ID: 10962-001-MB
Client ID: Method Blank
Matrix: Soil
Batch No: X4265

Date Extracted: 10-09-2017
Date Received: NA
Amount: 5.00 g

ICal: PCDDFAL4-9-18-17
GC Column: DB5MS
Units: pg/g

Acquired: 10-10-2017
2005 WHO TEQ: 0.0
Basis: Dry Weight

Compound	Conc	DL	Qual	2005 WHO Tox	MDL	Compound	Conc	DL	Qual
2,3,7,8-TCDD	ND	0.193		-	0.0273				
1,2,3,7,8-PeCDD	ND	0.459		-	0.0570				
1,2,3,4,7,8-HxCDD	ND	0.636		-	0.0793				
1,2,3,6,7,8-HxCDD	ND	0.654		-	0.0940	Total TCDD	ND	0.193	
1,2,3,7,8,9-HxCDD	ND	0.595		-	0.0823	Total PeCDD	ND	0.459	
1,2,3,4,6,7,8-HpCDD	ND	0.691		-	0.0842	Total HxCDD	ND	0.654	
OCDD	ND	0.948		-	0.172	Total HpCDD	ND	0.691	
2,3,7,8-TCDF	ND	0.169		-	0.0269				
1,2,3,7,8-PeCDF	ND	0.420		-	0.0449				
2,3,4,7,8-PeCDF	ND	0.445		-	0.0468				
1,2,3,4,7,8-HxCDF	ND	0.316		-	0.0437				
1,2,3,6,7,8-HxCDF	ND	0.333		-	0.0417				
2,3,4,6,7,8-HxCDF	ND	0.335		-	0.0574				
1,2,3,7,8,9-HxCDF	ND	0.456		-	0.0657	Total TCDF	ND	0.169	
1,2,3,4,6,7,8-HpCDF	ND	0.332		-	0.0747	Total PeCDF	ND	0.445	
1,2,3,4,7,8,9-HpCDF	ND	0.443		-	0.0883	Total HxCDF	ND	0.456	
OCDF	ND	0.831		-	0.170	Total HpCDF	ND	0.443	

Internal Standards	% Rec	QC Limits	Qual
13C-2,3,7,8-TCDD	89.2	25.0 - 164	
13C-1,2,3,7,8-PeCDD	95.9	25.0 - 181	
13C-1,2,3,4,7,8-HxCDD	96.0	32.0 - 141	
13C-1,2,3,6,7,8-HxCDD	91.1	28.0 - 130	
13C-1,2,3,4,6,7,8-HpCDD	102	23.0 - 140	
13C-OCDD	89.9	17.0 - 157	
13C-2,3,7,8-TCDF	85.0	24.0 - 169	
13C-1,2,3,7,8-PeCDF	84.1	24.0 - 185	
13C-2,3,4,7,8-PeCDF	88.0	21.0 - 178	
13C-1,2,3,4,7,8-HxCDF	103	26.0 - 152	
13C-1,2,3,6,7,8-HxCDF	95.6	26.0 - 123	
13C-2,3,4,6,7,8-HxCDF	101	28.0 - 136	
13C-1,2,3,7,8,9-HxCDF	107	29.0 - 147	
13C-1,2,3,4,6,7,8-HpCDF	110	28.0 - 143	
13C-1,2,3,4,7,8,9-HpCDF	123	26.0 - 138	
13C-OCDF	109	17.0 - 157	

Cleanup Surrogate			
37Cl-2,3,7,8-TCDD	106	35.0 - 197	

A	Isotopic Labeled Standard outside QC range but signal to noise ratio is >10:1
B	Analyte is present in Method Blank
C	Chemical Interference
D	Presence of Diphenyl Ethers
DNQ	Analyte concentration is below calibration range
E	Analyte concentration is above calibration range
F	Analyte confirmation on secondary column
J	Analyte concentration is below calibration range
M	Maximum possible concentration
ND	Analyte Not Detected at Detection Limit Level
NP	Not Provided
P	Pre-filtered through a Whatman 0.7um GF/F filter
S	Sample acceptance criteria not met
X	Matrix interferences
*	Result taken from dilution or reinjection

Analyst: _____

Date: 10/12/2017

Reviewed By: DPV

Date: 10/13/2017

5172 Hillsdale Circle * El Dorado Hills, CA 95762 * Tel (916) 934-0900 * Fax (916) 934-0999 * www.frontieranalytical.com

EPA Method 1613
PCDD/F

FAL ID: 10962-001-OPR
Client ID: OPR
Matrix: Soil
Batch No: X4265

Date Extracted: 10-09-2017
Date Received: NA
Amount: 5.00 g

ICal: PCDDFAL4-9-18-17
GC Column: DB5MS
Units: ng/ml

Acquired: 10-10-2017
2005 WHO TEQ: NA

Compound	Conc	QC Limits	Qual
2,3,7,8-TCDD	11.6	6.70 - 15.8	
1,2,3,7,8-PeCDD	59.0	35.0 - 71.0	
1,2,3,4,7,8-HxCDD	58.1	35.0 - 82.0	
1,2,3,6,7,8-HxCDD	56.4	38.0 - 67.0	
1,2,3,7,8,9-HxCDD	54.2	32.0 - 81.0	
1,2,3,4,6,7,8-HpCDD	58.3	35.0 - 70.0	
OCDD	116	78.0 - 144	
2,3,7,8-TCDF	11.8	7.50 - 15.8	
1,2,3,7,8-PeCDF	59.6	40.0 - 67.0	
2,3,4,7,8-PeCDF	58.9	34.0 - 80.0	
1,2,3,4,7,8-HxCDF	56.9	36.0 - 67.0	
1,2,3,6,7,8-HxCDF	56.6	42.0 - 65.0	
2,3,4,6,7,8-HxCDF	57.6	35.0 - 78.0	
1,2,3,7,8,9-HxCDF	55.3	39.0 - 65.0	
1,2,3,4,6,7,8-HpCDF	57.5	41.0 - 61.0	
1,2,3,4,7,8,9-HpCDF	57.6	39.0 - 69.0	
OCDF	114	63.0 - 170	

Internal Standards	% Rec	QC Limits	Qual
13C-2,3,7,8-TCDD	71.9	20.0 - 175	
13C-1,2,3,7,8-PeCDD	70.6	21.0 - 227	
13C-1,2,3,4,7,8-HxCDD	74.7	21.0 - 193	
13C-1,2,3,6,7,8-HxCDD	75.2	25.0 - 163	
13C-1,2,3,4,6,7,8-HpCDD	69.6	26.0 - 166	
13C-OCDD	63.0	13.0 - 198	
13C-2,3,7,8-TCDF	70.6	22.0 - 152	
13C-1,2,3,7,8-PeCDF	70.1	21.0 - 192	
13C-2,3,4,7,8-PeCDF	69.9	13.0 - 328	
13C-1,2,3,4,7,8-HxCDF	87.0	19.0 - 202	
13C-1,2,3,6,7,8-HxCDF	84.1	21.0 - 159	
13C-2,3,4,6,7,8-HxCDF	80.9	22.0 - 176	
13C-1,2,3,7,8,9-HxCDF	80.2	17.0 - 205	
13C-1,2,3,4,6,7,8-HpCDF	74.9	21.0 - 158	
13C-1,2,3,4,7,8,9-HpCDF	85.5	20.0 - 186	
13C-OCDF	75.7	13.0 - 198	

Cleanup Surrogate			
37Cl-2,3,7,8-TCDD	85.6	31.0 - 191	

A	Isotopic Labeled Standard outside QC range but signal to noise ratio is >10:1
B	Analyte is present in Method Blank
C	Chemical Interference
D	Presence of Diphenyl Ethers
DNQ	Analyte concentration is below calibration range
E	Analyte concentration is above calibration range
F	Analyte confirmation on secondary column
J	Analyte concentration is below calibration range
M	Maximum possible concentration
ND	Analyte Not Detected at Detection Limit Level
NP	Not Provided
P	Pre-filtered through a Whatman 0.7um GF/F filter
S	Sample acceptance criteria not met
X	Matrix interferences
*	Result taken from dilution or reinjection

Analyst: _____

Date: 10/12/2017

Reviewed By: DPV

Date: 10/13/2017

5172 Hillsdale Circle * El Dorado Hills, CA 95762 * Tel (916) 934-0900 * Fax (916) 934-0999 * www.frontieranalytical.com

EPA Method 1613
PCDD/F

FAL ID: 10962-001-SA
Client ID: WT-A2
Matrix: Soil
Batch No: X4265

Date Extracted: 10-09-2017
Date Received: 10-03-2017
Amount: 5.03 g
% Solids: 86.96

ICal: PCDDFAL4-9-18-17
GC Column: DB5MS
Units: pg/g

Acquired: 10-10-2017
2005 WHO TEQ: 0.365
Basis: Dry Weight

Compound	Conc	DL	Qual	2005 WHO Tox	MDL	Compound	Conc	DL	Qual
2,3,7,8-TCDD	ND	0.167		-	0.0273				
1,2,3,7,8-PeCDD	ND	0.469		-	0.0570				
1,2,3,4,7,8-HxCDD	ND	0.396		-	0.0793				
1,2,3,6,7,8-HxCDD	1.28	-	J	0.128	0.0940	Total TCDD	1.54	-	
1,2,3,7,8,9-HxCDD	ND	0.332		-	0.0823	Total PeCDD	ND	0.469	
1,2,3,4,6,7,8-HpCDD	13.6	-		0.136	0.0842	Total HxCDD	4.67	-	J
OCDD	92.1	-		0.0276	0.172	Total HpCDD	22.7	-	
2,3,7,8-TCDF	ND	0.157		-	0.0269				
1,2,3,7,8-PeCDF	ND	0.235		-	0.0449				
2,3,4,7,8-PeCDF	ND	0.219		-	0.0468				
1,2,3,4,7,8-HxCDF	ND	0.306		-	0.0437				
1,2,3,6,7,8-HxCDF	ND	0.347		-	0.0417				
2,3,4,6,7,8-HxCDF	ND	0.339		-	0.0574				
1,2,3,7,8,9-HxCDF	ND	0.352		-	0.0657	Total TCDF	ND	0.157	
1,2,3,4,6,7,8-HpCDF	6.87	-		0.0687	0.0747	Total PeCDF	ND	0.235	
1,2,3,4,7,8,9-HpCDF	ND	0.460		-	0.0883	Total HxCDF	5.68	-	
OCDF	17.1	-		0.00513	0.170	Total HpCDF	20.1	-	

Internal Standards	% Rec	QC Limits	Qual
13C-2,3,7,8-TCDD	100	25.0 - 164	
13C-1,2,3,7,8-PeCDD	106	25.0 - 181	
13C-1,2,3,4,7,8-HxCDD	98.0	32.0 - 141	
13C-1,2,3,6,7,8-HxCDD	91.9	28.0 - 130	
13C-1,2,3,4,6,7,8-HpCDD	112	23.0 - 140	
13C-OCDD	109	17.0 - 157	
13C-2,3,7,8-TCDF	102	24.0 - 169	
13C-1,2,3,7,8-PeCDF	95.1	24.0 - 185	
13C-2,3,4,7,8-PeCDF	103	21.0 - 178	
13C-1,2,3,4,7,8-HxCDF	102	26.0 - 152	
13C-1,2,3,6,7,8-HxCDF	93.7	26.0 - 123	
13C-2,3,4,6,7,8-HxCDF	102	28.0 - 136	
13C-1,2,3,7,8,9-HxCDF	116	29.0 - 147	
13C-1,2,3,4,6,7,8-HpCDF	112	28.0 - 143	
13C-1,2,3,4,7,8,9-HpCDF	135	26.0 - 138	
13C-OCDF	126	17.0 - 157	

Cleanup Surrogate			
37Cl-2,3,7,8-TCDD	125	35.0 - 197	

A	Isotopic Labeled Standard outside QC range but signal to noise ratio is >10:1
B	Analyte is present in Method Blank
C	Chemical Interference
D	Presence of Diphenyl Ethers
DNQ	Analyte concentration is below calibration range
E	Analyte concentration is above calibration range
F	Analyte confirmation on secondary column
J	Analyte concentration is below calibration range
M	Maximum possible concentration
ND	Analyte Not Detected at Detection Limit Level
NP	Not Provided
P	Pre-filtered through a Whatman 0.7um GF/F filter
S	Sample acceptance criteria not met
X	Matrix interferences
*	Result taken from dilution or reinjection

Analyst: _____

Date: 10/12/2017

Reviewed By: DPV

Date: 10/13/2017

5172 Hillsdale Circle * El Dorado Hills, CA 95762 * Tel (916) 934-0900 * Fax (916) 934-0999 * www.frontieranalytical.com

10962
2oc

SUBCONTRACT SAMPLE CHAIN OF CUSTODY

Send Report To Michael Erdahl

Company Friedman and Bruya, Inc.

Address 3012 16th Ave W

City, State, ZIP Seattle, WA 98119

Phone # (206) 285-8282 Fax # (206) 283-5044

SUBCONTRACTER Frontier

PROJECT NAME/NO.	PO #
709508	F-102

REMARKS

Please Email Results EQuIS EDD

TURNAROUND TIME

☒ Standard (3 Weeks)

☐ RUSH

Rush charges authorized by:

SAMPLE DISPOSAL

☐ Dispose after 30 days

☐ Return samples

☐ Will call with instructions

Sample ID	Lab ID	Date Sampled	Time Sampled	Matrix	# of jars	ANALYSES REQUESTED: 1613 Dioxins/Furans	EPH	VPH	Nitrate	Sulfate	Alkalinity	TOC-9060M				Notes
WT-A2		9/20/17	1403	Soil	1	X										
Sample ID confirmed as "WT-A2" with Eric. KZ 10/3/17																

Friedman & Bruya, Inc.
3012 16th Avenue West
Seattle, WA 98119-2029
Ph. (206) 285-8282
Fax (206) 283-5044

	SIGNATURE	PRINT NAME	COMPANY	DATE	TIME
Relinquished by:		Michael Erdahl	Friedman and Bruya	10/2/17	10:50AM
Received by:		K. Zipp	Frontier	10.3.17	1015
Relinquished by:					
Received by:					

Fed Ex 8099 9261 9249

Frontier Analytical Laboratory

Sample Login Form

FAL Project ID: **10962**

Client:	Friedman & Bruya, Inc.
Client Project ID:	709508
Date Received:	10/03/2017
Time Received:	10:15 am
Received By:	KZ
Logged In By:	KZ
# of Samples Received:	1
Duplicates:	0
Storage Location:	R2

Method of Delivery:	Fed-Ex
Tracking Number:	809992619249
Shipping Container Received Intact	Yes
Custody seals(s) present?	No
Custody seals(s) intact?	No
Sample Arrival Temperature (C)	2
Cooling Method	Blue Ice
Chain Of Custody Present?	Yes
Return Shipping Container To Client	Yes
Test aqueous sample for residual Chlorine	No
Sodium Thiosulfate Added	No
Adequate Sample Volume	Yes
Appropriate Sample Container	No
pH Range of Aqueous Sample	N/A

Anomalies or additional comments:

Please note that the sample was received in a clear glass jar. NELAP requires samples be received in amber glass bottles or jars. Although this anomaly will not affect your results, we are required by NELAP to make a note of it. We will proceed with analysis unless directed otherwise by you.

5172 Hillsdale Circle * El Dorado Hills, CA 95762 * Tel (916) 934-0900 * Fax (916) 934-0999 * www.frontieranalytical.com

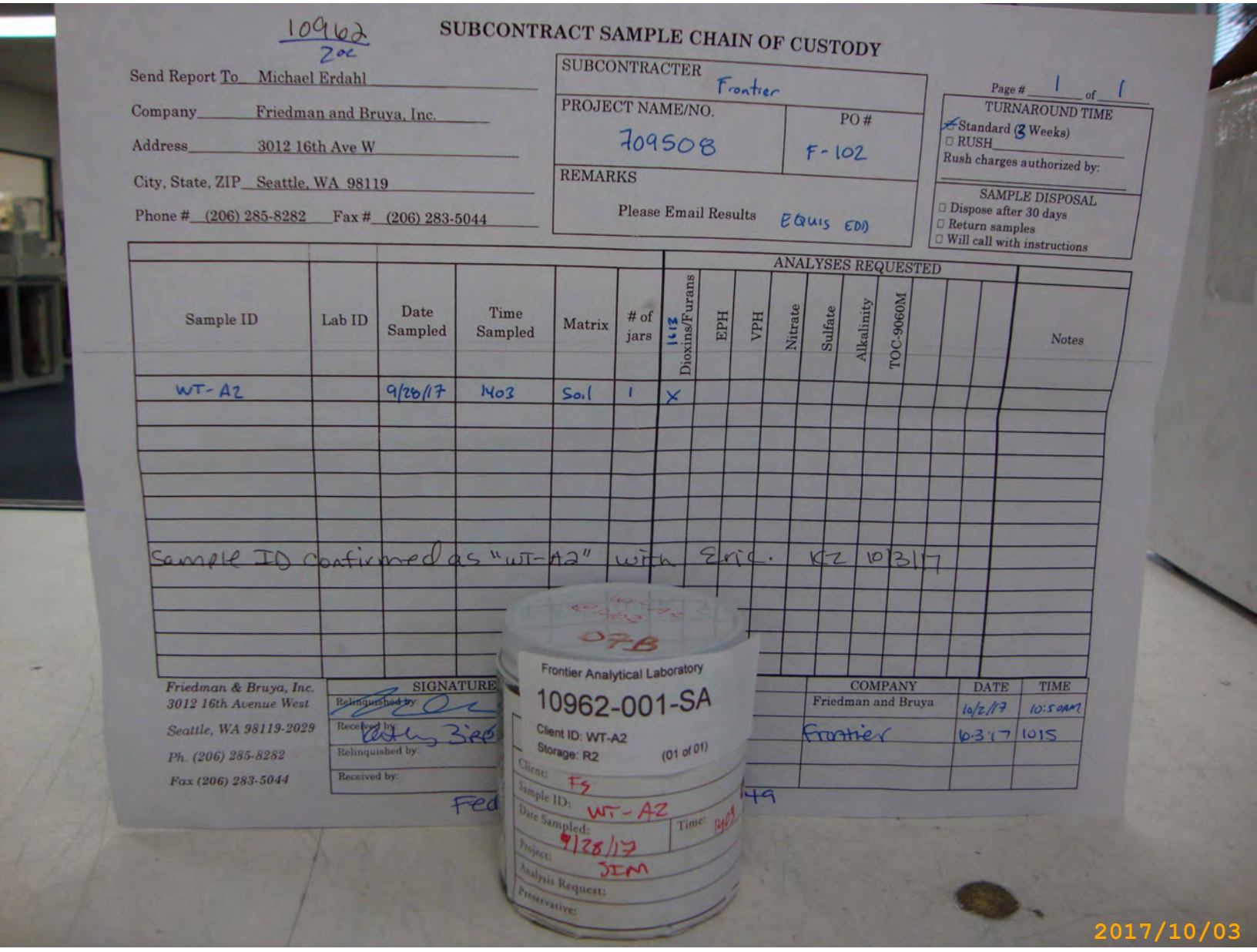

5172 Hillsdale Circle * El Dorado Hills, CA 95762 * Tel (916) 934-0900 * Fax (916) 934-0999 * www.frontieranalytical.com

Stockpile Samples

FRIEDMAN & BRUYA, INC.

ENVIRONMENTAL CHEMISTS

James E. Bruya, Ph.D.
Yelena Aravkina, M.S.
Michael Erdahl, B.S.
Arina Podnozova, B.S.
Eric Young, B.S.

3012 16th Avenue West
Seattle, WA 98119-2029
(206) 285-8282
fbi@isomedia.com
www.friedmanandbruya.com

September 26, 2017

Lynn Grochala, Project Manager
Floyd-Snider
Two Union Square, Suite 600
601 Union St
Seattle, WA 98101

Dear Ms Grochala:

Included are the amended reports from the testing of material submitted on September 6, 2017 from the SIM-730 EDR, F&BI 709082 project. Per your request, sample SS-S1W-10.5 was split into a separate report from the other samples on the chain of custody.

We appreciate this opportunity to be of service to you and hope you will call if you should have any questions.

Sincerely,

FRIEDMAN & BRUYA, INC.



Michael Erdahl
Project Manager

Enclosures
FDS0919R.DOC

FRIEDMAN & BRUYA, INC.

ENVIRONMENTAL CHEMISTS

James E. Bruya, Ph.D.
Yelena Aravkina, M.S.
Michael Erdahl, B.S.
Arina Podnozova, B.S.
Eric Young, B.S.

3012 16th Avenue West
Seattle, WA 98119-2029
(206) 285-8282
fbi@isomedia.com
www.friedmanandbruya.com

September 19, 2017

Lynn Grochala, Project Manager
Floyd-Snider
Two Union Square, Suite 600
601 Union St
Seattle, WA 98101

Dear Ms Grochala:

Included are the results from the testing of material submitted on September 6, 2017 from the SIM-730 EDR, F&BI 709082 project. There are 32 pages included in this report. Any samples that may remain are currently scheduled for disposal in 30 days. If you would like us to return your samples or arrange for long term storage at our offices, please contact us as soon as possible.

We appreciate this opportunity to be of service to you and hope you will call if you should have any questions.

Sincerely,

FRIEDMAN & BRUYA, INC.



Michael Erdahl
Project Manager

Enclosures
FDS0919R.DOC

CASE NARRATIVE

This case narrative encompasses samples received on September 6, 2017 by Friedman & Bruya, Inc. from the Floyd-Snider SIM-730 EDR, F&BI 709082 project. Samples were logged in under the laboratory ID's listed below.

Laboratory ID	Floyd-Snider
709082 -01	WT-SP01-01
709082 -02	WT-SP01-02
709082 -03	WT-SP01-03
709082 -04	WT-SP01-04
709082 -05	WT-SP01-05
709082 -06	SS-S1W-10.5'
709082 -07	Trip Blanks

All quality control requirements were acceptable.

Date of Report: 09/19/17
Date Received: 09/06/17
Project: SIM-730 EDR, F&BI 709082
Date Extracted: 09/07/17
Date Analyzed: 09/07/17

RESULTS FROM THE ANALYSIS OF SOIL SAMPLES FOR TOTAL PETROLEUM HYDROCARBONS AS GASOLINE USING METHOD NWTPH-Gx

Results Reported on a Dry Weight Basis
Results Reported as mg/kg (ppm)

Sample ID Laboratory ID	Gasoline Range	Surrogate (% Recovery) (Limit 50-150)
WT-SP01-01 709082-01	4.2	88
WT-SP01-02 709082-02	<2	87
WT-SP01-03 709082-03	<2	86
WT-SP01-04 709082-04	<2	84
WT-SP01-05 709082-05	<2	86
Method Blank 07-1936 MB	<2	94

Date of Report: 09/19/17
Date Received: 09/06/17
Project: SIM-730 EDR, F&BI 709082
Date Extracted: 09/07/17
Date Analyzed: 09/07/17

RESULTS FROM THE ANALYSIS OF WATER SAMPLES FOR TOTAL PETROLEUM HYDROCARBONS AS GASOLINE USING METHOD NWTPH-Gx

Results Reported as ug/L (ppb)

Sample ID Laboratory ID	Gasoline Range	Surrogate (% Recovery) (Limit 51-134)
Trip Blanks 709082-07	<100	87
Method Blank 07-1937 MB	<100	89

Date of Report: 09/19/17
Date Received: 09/06/17
Project: SIM-730 EDR, F&BI 709082
Date Extracted: 09/07/17
Date Analyzed: 09/07/17

RESULTS FROM THE ANALYSIS OF SOIL SAMPLES FOR TOTAL PETROLEUM HYDROCARBONS AS DIESEL AND MOTOR OIL USING METHOD NWTPH-Dx

Results Reported on a Dry Weight Basis
Results Reported as mg/kg (ppm)

Sample ID Laboratory ID	Diesel Range (C_{10}-C_{25})	Motor Oil Range (C_{25}-C_{36})	Surrogate (% Recovery) (Limit 56-165)
WT-SP01-01 709082-01	<50	<250	109
WT-SP01-02 709082-02	<50	<250	94
WT-SP01-03 709082-03	<50	<250	95
WT-SP01-04 709082-04	<50	<250	95
WT-SP01-05 709082-05	<50	<250	110
Method Blank 07-1959 MB	<50	<250	99

Analysis For Total Metals By EPA Method 6020A

Client ID:	WT-SP01-01	Client:	Floyd-Snider
Date Received:	09/06/17	Project:	SIM-730 EDR, F&BI 709082
Date Extracted:	09/07/17	Lab ID:	709082-01
Date Analyzed:	09/07/17	Data File:	709082-01.080
Matrix:	Soil	Instrument:	ICPMS2
Units:	mg/kg (ppm) Dry Weight	Operator:	SP

Analyte:	Concentration mg/kg (ppm)
Arsenic	3.31
Cadmium	<1
Chromium	7.91
Lead	18.4
Mercury	<1

Analysis For Total Metals By EPA Method 6020A

Client ID:	WT-SP01-02	Client:	Floyd-Snider
Date Received:	09/06/17	Project:	SIM-730 EDR, F&BI 709082
Date Extracted:	09/07/17	Lab ID:	709082-02
Date Analyzed:	09/07/17	Data File:	709082-02.083
Matrix:	Soil	Instrument:	ICPMS2
Units:	mg/kg (ppm) Dry Weight	Operator:	SP

Analyte:	Concentration mg/kg (ppm)
Arsenic	1.61
Cadmium	<1
Chromium	6.26
Lead	1.43
Mercury	<1

Analysis For Total Metals By EPA Method 6020A

Client ID:	WT-SP01-03	Client:	Floyd-Snider
Date Received:	09/06/17	Project:	SIM-730 EDR, F&BI 709082
Date Extracted:	09/07/17	Lab ID:	709082-03
Date Analyzed:	09/07/17	Data File:	709082-03.084
Matrix:	Soil	Instrument:	ICPMS2
Units:	mg/kg (ppm) Dry Weight	Operator:	SP

Analyte:	Concentration mg/kg (ppm)
Arsenic	2.31
Cadmium	<1
Chromium	6.44
Lead	4.17
Mercury	<1

Analysis For Total Metals By EPA Method 6020A

Client ID:	WT-SP01-04	Client:	Floyd-Snider
Date Received:	09/06/17	Project:	SIM-730 EDR, F&BI 709082
Date Extracted:	09/07/17	Lab ID:	709082-04
Date Analyzed:	09/07/17	Data File:	709082-04.085
Matrix:	Soil	Instrument:	ICPMS2
Units:	mg/kg (ppm) Dry Weight	Operator:	SP

Analyte:	Concentration mg/kg (ppm)
Arsenic	1.92
Cadmium	<1
Chromium	5.57
Lead	4.56
Mercury	<1

Analysis For Total Metals By EPA Method 6020A

Client ID:	WT-SP01-05	Client:	Floyd-Snider
Date Received:	09/06/17	Project:	SIM-730 EDR, F&BI 709082
Date Extracted:	09/07/17	Lab ID:	709082-05
Date Analyzed:	09/07/17	Data File:	709082-05.086
Matrix:	Soil	Instrument:	ICPMS2
Units:	mg/kg (ppm) Dry Weight	Operator:	SP

Analyte:	Concentration mg/kg (ppm)
Arsenic	2.46
Cadmium	<1
Chromium	7.91
Lead	5.42
Mercury	<1

Analysis For Total Metals By EPA Method 6020A

Client ID:	Method Blank	Client:	Floyd-Snider
Date Received:	NA	Project:	SIM-730 EDR, F&BI 709082
Date Extracted:	09/07/17	Lab ID:	I7-484 mb
Date Analyzed:	09/07/17	Data File:	I7-484 mb.077
Matrix:	Soil	Instrument:	ICPMS2
Units:	mg/kg (ppm) Dry Weight	Operator:	SP

Analyte:	Concentration mg/kg (ppm)
Arsenic	<1
Cadmium	<1
Chromium	<1
Lead	<1
Mercury	<1

Analysis For Volatile Compounds By EPA Method 8260C

Client Sample ID:	WT-SP01-01	Client:	Floyd-Snider
Date Received:	09/06/17	Project:	SIM-730 EDR, F&BI 709082
Date Extracted:	09/07/17	Lab ID:	709082-01
Date Analyzed:	09/07/17	Data File:	090711.D
Matrix:	Soil	Instrument:	GCMS4
Units:	mg/kg (ppm) Dry Weight	Operator:	JS

Surrogates:	% Recovery:	Lower Limit:	Upper Limit:
1,2-Dichloroethane-d4	103	62	142
Toluene-d8	107	55	145
4-Bromofluorobenzene	99	65	139

Compounds:	Concentration mg/kg (ppm)
1,1,1-Trichloroethane	<0.05
Benzene	<0.03
Trichloroethene	<0.02
Toluene	<0.05
Tetrachloroethene	0.033
Ethylbenzene	<0.05
m,p-Xylene	<0.1
o-Xylene	<0.05
Naphthalene	<0.05

Analysis For Volatile Compounds By EPA Method 8260C

Client Sample ID:	WT-SP01-02	Client:	Floyd-Snider
Date Received:	09/06/17	Project:	SIM-730 EDR, F&BI 709082
Date Extracted:	09/07/17	Lab ID:	709082-02
Date Analyzed:	09/07/17	Data File:	090712.D
Matrix:	Soil	Instrument:	GCMS4
Units:	mg/kg (ppm) Dry Weight	Operator:	JS

Surrogates:	% Recovery:	Lower Limit:	Upper Limit:
1,2-Dichloroethane-d4	99	62	142
Toluene-d8	103	55	145
4-Bromofluorobenzene	101	65	139

Compounds:	Concentration mg/kg (ppm)
1,1,1-Trichloroethane	<0.05
Benzene	<0.03
Trichloroethene	<0.02
Toluene	<0.05
Tetrachloroethene	<0.025
Ethylbenzene	<0.05
m,p-Xylene	<0.1
o-Xylene	<0.05
Naphthalene	<0.05

Analysis For Volatile Compounds By EPA Method 8260C

Client Sample ID:	WT-SP01-03	Client:	Floyd-Snider
Date Received:	09/06/17	Project:	SIM-730 EDR, F&BI 709082
Date Extracted:	09/07/17	Lab ID:	709082-03
Date Analyzed:	09/07/17	Data File:	090713.D
Matrix:	Soil	Instrument:	GCMS4
Units:	mg/kg (ppm) Dry Weight	Operator:	JS

Surrogates:	% Recovery:	Lower Limit:	Upper Limit:
1,2-Dichloroethane-d4	103	62	142
Toluene-d8	103	55	145
4-Bromofluorobenzene	103	65	139

Compounds:	Concentration mg/kg (ppm)
1,1,1-Trichloroethane	<0.05
Benzene	<0.03
Trichloroethene	<0.02
Toluene	<0.05
Tetrachloroethene	<0.025
Ethylbenzene	<0.05
m,p-Xylene	<0.1
o-Xylene	<0.05
Naphthalene	<0.05

Analysis For Volatile Compounds By EPA Method 8260C

Client Sample ID:	WT-SP01-04	Client:	Floyd-Snider
Date Received:	09/06/17	Project:	SIM-730 EDR, F&BI 709082
Date Extracted:	09/07/17	Lab ID:	709082-04
Date Analyzed:	09/07/17	Data File:	090714.D
Matrix:	Soil	Instrument:	GCMS4
Units:	mg/kg (ppm) Dry Weight	Operator:	JS

Surrogates:	% Recovery:	Lower Limit:	Upper Limit:
1,2-Dichloroethane-d4	104	62	142
Toluene-d8	102	55	145
4-Bromofluorobenzene	99	65	139

Compounds:	Concentration mg/kg (ppm)
1,1,1-Trichloroethane	<0.05
Benzene	<0.03
Trichloroethene	<0.02
Toluene	<0.05
Tetrachloroethene	0.042
Ethylbenzene	<0.05
m,p-Xylene	<0.1
o-Xylene	<0.05
Naphthalene	<0.05

Analysis For Volatile Compounds By EPA Method 8260C

Client Sample ID:	WT-SP01-05	Client:	Floyd-Snider
Date Received:	09/06/17	Project:	SIM-730 EDR, F&BI 709082
Date Extracted:	09/07/17	Lab ID:	709082-05
Date Analyzed:	09/07/17	Data File:	090715.D
Matrix:	Soil	Instrument:	GCMS4
Units:	mg/kg (ppm) Dry Weight	Operator:	JS

Surrogates:	% Recovery:	Lower Limit:	Upper Limit:
1,2-Dichloroethane-d4	100	62	142
Toluene-d8	102	55	145
4-Bromofluorobenzene	111	65	139

Compounds:	Concentration mg/kg (ppm)
1,1,1-Trichloroethane	<0.05
Benzene	<0.03
Trichloroethene	<0.02
Toluene	<0.05
Tetrachloroethene	<0.025
Ethylbenzene	<0.05
m,p-Xylene	<0.1
o-Xylene	<0.05
Naphthalene	<0.05

Analysis For Volatile Compounds By EPA Method 8260C

Client Sample ID:	Method Blank	Client:	Floyd-Snider
Date Received:	Not Applicable	Project:	SIM-730 EDR, F&BI 709082
Date Extracted:	09/07/17	Lab ID:	07-1906 mb2
Date Analyzed:	09/07/17	Data File:	090709.D
Matrix:	Soil	Instrument:	GCMS4
Units:	mg/kg (ppm) Dry Weight	Operator:	JS

Surrogates:	% Recovery:	Lower Limit:	Upper Limit:
1,2-Dichloroethane-d4	101	62	142
Toluene-d8	101	55	145
4-Bromofluorobenzene	93	65	139

Compounds:	Concentration mg/kg (ppm)
1,1,1-Trichloroethane	<0.05
Benzene	<0.03
Trichloroethene	<0.02
Toluene	<0.05
Tetrachloroethene	<0.025
Ethylbenzene	<0.05
m,p-Xylene	<0.1
o-Xylene	<0.05
Naphthalene	<0.05

Analysis For Volatile Compounds By EPA Method 8260C

Client Sample ID:	Trip Blanks	Client:	Floyd-Snider
Date Received:	09/06/17	Project:	SIM-730 EDR, F&BI 709082
Date Extracted:	09/07/17	Lab ID:	709082-07
Date Analyzed:	09/07/17	Data File:	090711.D
Matrix:	Water	Instrument:	GCMS9
Units:	ug/L (ppb)	Operator:	JS

Surrogates:	% Recovery:	Lower Limit:	Upper Limit:
1,2-Dichloroethane-d4	99	85	117
Toluene-d8	98	91	108
4-Bromofluorobenzene	101	76	126

Compounds:	Concentration ug/L (ppb)
1,1,1-Trichloroethane	<1
Benzene	<0.35
Trichloroethene	<1
Toluene	<1
Tetrachloroethene	<1
Ethylbenzene	<1
m,p-Xylene	<2
o-Xylene	<1
Naphthalene	<1

Analysis For Volatile Compounds By EPA Method 8260C

Client Sample ID:	Method Blank	Client:	Floyd-Snider
Date Received:	Not Applicable	Project:	SIM-730 EDR, F&BI 709082
Date Extracted:	09/07/17	Lab ID:	07-1908 mb
Date Analyzed:	09/07/17	Data File:	090710.D
Matrix:	Water	Instrument:	GCMS9
Units:	ug/L (ppb)	Operator:	JS

Surrogates:	% Recovery:	Lower Limit:	Upper Limit:
1,2-Dichloroethane-d4	100	85	117
Toluene-d8	99	91	108
4-Bromofluorobenzene	102	76	126

Compounds:	Concentration ug/L (ppb)
1,1,1-Trichloroethane	<1
Benzene	<0.35
Trichloroethene	<1
Toluene	<1
Tetrachloroethene	<1
Ethylbenzene	<1
m,p-Xylene	<2
o-Xylene	<1
Naphthalene	<1

Analysis For PCBs By EPA Method 8082A

Client Sample ID:	WT-SP01-01	Client:	Floyd-Snider
Date Received:	09/06/17	Project:	SIM-730 EDR, F&BI 709082
Date Extracted:	09/07/17	Lab ID:	709082-01 1/5
Date Analyzed:	09/14/17	Data File:	091420.D
Matrix:	Soil	Instrument:	GC7
Units:	mg/kg (ppm) Dry Weight	Operator:	VM

Surrogates:	% Recovery:	Lower Limit:	Upper Limit:
TCMX	70	29	154

Compounds:	Concentration mg/kg (ppm) Dry Weight
Aroclor 1221	<0.02
Aroclor 1232	<0.02
Aroclor 1016	<0.02
Aroclor 1242	<0.02
Aroclor 1248	<0.02
Aroclor 1254	<0.02
Aroclor 1260	<0.02
Aroclor 1262	<0.02
Aroclor 1268	<0.02

Analysis For PCBs By EPA Method 8082A

Client Sample ID:	WT-SP01-02	Client:	Floyd-Snider
Date Received:	09/06/17	Project:	SIM-730 EDR, F&BI 709082
Date Extracted:	09/07/17	Lab ID:	709082-02 1/5
Date Analyzed:	09/14/17	Data File:	091421.D
Matrix:	Soil	Instrument:	GC7
Units:	mg/kg (ppm) Dry Weight	Operator:	VM

Surrogates:	% Recovery:	Lower Limit:	Upper Limit:
TCMX	72	29	154

Compounds:	Concentration mg/kg (ppm) Dry Weight
Aroclor 1221	<0.02
Aroclor 1232	<0.02
Aroclor 1016	<0.02
Aroclor 1242	<0.02
Aroclor 1248	<0.02
Aroclor 1254	<0.02
Aroclor 1260	<0.02
Aroclor 1262	<0.02
Aroclor 1268	<0.02

Analysis For PCBs By EPA Method 8082A

Client Sample ID:	WT-SP01-03	Client:	Floyd-Snider
Date Received:	09/06/17	Project:	SIM-730 EDR, F&BI 709082
Date Extracted:	09/07/17	Lab ID:	709082-03 1/5
Date Analyzed:	09/14/17	Data File:	091422.D
Matrix:	Soil	Instrument:	GC7
Units:	mg/kg (ppm) Dry Weight	Operator:	VM

Surrogates:	% Recovery:	Lower Limit:	Upper Limit:
TCMX	72	29	154

Compounds:	Concentration mg/kg (ppm) Dry Weight
Aroclor 1221	<0.02
Aroclor 1232	<0.02
Aroclor 1016	<0.02
Aroclor 1242	<0.02
Aroclor 1248	<0.02
Aroclor 1254	<0.02
Aroclor 1260	<0.02
Aroclor 1262	<0.02
Aroclor 1268	<0.02

Analysis For PCBs By EPA Method 8082A

Client Sample ID:	WT-SP01-04	Client:	Floyd-Snider
Date Received:	09/06/17	Project:	SIM-730 EDR, F&BI 709082
Date Extracted:	09/07/17	Lab ID:	709082-04 1/5
Date Analyzed:	09/14/17	Data File:	091423.D
Matrix:	Soil	Instrument:	GC7
Units:	mg/kg (ppm) Dry Weight	Operator:	VM

Surrogates:	% Recovery:	Lower Limit:	Upper Limit:
TCMX	64	29	154

Compounds:	Concentration mg/kg (ppm) Dry Weight
Aroclor 1221	<0.02
Aroclor 1232	<0.02
Aroclor 1016	<0.02
Aroclor 1242	<0.02
Aroclor 1248	<0.02
Aroclor 1254	<0.02
Aroclor 1260	<0.02
Aroclor 1262	<0.02
Aroclor 1268	<0.02

Analysis For PCBs By EPA Method 8082A

Client Sample ID:	WT-SP01-05	Client:	Floyd-Snider
Date Received:	09/06/17	Project:	SIM-730 EDR, F&BI 709082
Date Extracted:	09/07/17	Lab ID:	709082-05 1/5
Date Analyzed:	09/14/17	Data File:	091424.D
Matrix:	Soil	Instrument:	GC7
Units:	mg/kg (ppm) Dry Weight	Operator:	VM

Surrogates:	% Recovery:	Lower Limit:	Upper Limit:
TCMX	72	29	154

Compounds:	Concentration mg/kg (ppm) Dry Weight
Aroclor 1221	<0.02
Aroclor 1232	<0.02
Aroclor 1016	<0.02
Aroclor 1242	<0.02
Aroclor 1248	<0.02
Aroclor 1254	<0.02
Aroclor 1260	<0.02
Aroclor 1262	<0.02
Aroclor 1268	<0.02

Analysis For PCBs By EPA Method 8082A

Client Sample ID:	Method Blank	Client:	Floyd-Snider
Date Received:	Not Applicable	Project:	SIM-730 EDR, F&BI 709082
Date Extracted:	09/07/17	Lab ID:	07-1961 mb 1/5
Date Analyzed:	09/14/17	Data File:	091415.D
Matrix:	Soil	Instrument:	GC7
Units:	mg/kg (ppm) Dry Weight	Operator:	VM

Surrogates:	% Recovery:	Lower Limit:	Upper Limit:
TCMX	74	29	154

Compounds:	Concentration mg/kg (ppm) Dry Weight
Aroclor 1221	<0.02
Aroclor 1232	<0.02
Aroclor 1016	<0.02
Aroclor 1242	<0.02
Aroclor 1248	<0.02
Aroclor 1254	<0.02
Aroclor 1260	<0.02
Aroclor 1262	<0.02
Aroclor 1268	<0.02

Date of Report: 09/19/17
Date Received: 09/06/17
Project: SIM-730 EDR, F&BI 709082

QUALITY ASSURANCE RESULTS FOR THE ANALYSIS OF SOIL SAMPLES FOR TPH AS GASOLINE USING METHOD NWTPH-Gx

Laboratory Code: 709094-01 (Duplicate)

Analyte	Reporting Units	Sample Result (Wet Wt)	Duplicate Result (Wet Wt)	RPD (Limit 20)
Gasoline	mg/kg (ppm)	31	32	3

Laboratory Code: Laboratory Control Sample

Analyte	Reporting Units	Spike Level	Percent Recovery LCS	Acceptance Criteria
Gasoline	mg/kg (ppm)	20	110	71-131

Date of Report: 09/19/17
Date Received: 09/06/17
Project: SIM-730 EDR, F&BI 709082

QUALITY ASSURANCE RESULTS FOR THE ANALYSIS OF WATER SAMPLES FOR TPH AS GASOLINE USING METHOD NWTPH-Gx

Laboratory Code: 709035-03 (Duplicate)

Analyte	Reporting Units	Sample Result	Duplicate Result	RPD (Limit 20)
Gasoline	ug/L (ppb)	<100	<100	nm

Laboratory Code: Laboratory Control Sample

Analyte	Reporting Units	Spike Level	Percent Recovery LCS	Acceptance Criteria
Gasoline	ug/L (ppb)	1,000	91	69-134

Date of Report: 09/19/17
Date Received: 09/06/17
Project: SIM-730 EDR, F&BI 709082

QUALITY ASSURANCE RESULTS FROM THE ANALYSIS OF SOIL SAMPLES FOR TOTAL PETROLEUM HYDROCARBONS AS DIESEL EXTENDED USING METHOD NWTPH-Dx

Laboratory Code: 709076-01 (Matrix Spike)

Analyte	Reporting Units	Spike Level	Sample Result (Wet Wt)	Percent Recovery MS	Percent Recovery MSD	Acceptance Criteria	RPD (Limit 20)
Diesel Extended	mg/kg (ppm)	5,000	78	88	90	63-146	2

Laboratory Code: Laboratory Control Sample

Analyte	Reporting Units	Spike Level	Percent Recovery LCS	Acceptance Criteria
Diesel Extended	mg/kg (ppm)	5,000	100	79-144

Date of Report: 09/19/17
Date Received: 09/06/17
Project: SIM-730 EDR, F&BI 709082

QUALITY ASSURANCE RESULTS FOR THE ANALYSIS OF SOIL SAMPLES FOR TOTAL METALS USING EPA METHOD 6020A

Laboratory Code: 709082-01 (Matrix Spike)

Analyte	Reporting Units	Spike Level	Sample Result (Wet wt)	Percent Recovery MS	Percent Recovery MSD	Acceptance Criteria	RPD (Limit 20)
Arsenic	mg/kg (ppm)	10	3.01	71 b	76 b	75-125	7 b
Cadmium	mg/kg (ppm)	10	<1	79	78	75-125	1
Chromium	mg/kg (ppm)	50	7.20	75	76	75-125	1
Lead	mg/kg (ppm)	50	16.7	67 b	69 b	75-125	3 b
Mercury	mg/kg (ppm	5	<1	81	80	75-125	1

Laboratory Code: Laboratory Control Sample

Analyte	Reporting Units	Spike Level	Percent Recovery LCS	Acceptance Criteria
Arsenic	mg/kg (ppm)	10	90	80-120
Cadmium	mg/kg (ppm)	10	95	80-120
Chromium	mg/kg (ppm)	50	100	80-120
Lead	mg/kg (ppm)	50	96	80-120
Mercury	mg/kg (ppm)	5	98	80-120

Date of Report: 09/19/17
Date Received: 09/06/17
Project: SIM-730 EDR, F&BI 709082

QUALITY ASSURANCE RESULTS FOR THE ANALYSIS OF SOIL SAMPLES FOR VOLATILES BY EPA METHOD 8260C

Laboratory Code: 709063-01 (Matrix Spike)

Analyte	Reporting Units	Spike Level	Sample Result (Wet wt)	Percent Recovery MS	Percent Recovery MSD	Acceptance Criteria	RPD (Limit 20)
1,1,1-Trichloroethane	mg/kg (ppm)	2.5	<0.05	93	89	10-156	4
Benzene	mg/kg (ppm)	2.5	<0.03	84	83	29-129	1
Trichloroethene	mg/kg (ppm)	2.5	<0.02	89	88	21-139	1
Toluene	mg/kg (ppm)	2.5	<0.05	80	78	35-130	3
Tetrachloroethene	mg/kg (ppm)	2.5	<0.025	86	84	20-133	2
Ethylbenzene	mg/kg (ppm)	2.5	<0.05	83	83	32-137	0
m,p-Xylene	mg/kg (ppm)	5	<0.1	83	82	34-136	1
o-Xylene	mg/kg (ppm)	2.5	<0.05	83	81	33-134	2
Naphthalene	mg/kg (ppm)	2.5	<0.05	76	78	14-157	3

Laboratory Code: Laboratory Control Sample

Analyte	Reporting Units	Spike Level	Percent Recovery LCS	Acceptance Criteria
1,1,1-Trichloroethane	mg/kg (ppm)	2.5	109	62-131
Benzene	mg/kg (ppm)	2.5	102	68-114
Trichloroethene	mg/kg (ppm)	2.5	104	64-117
Toluene	mg/kg (ppm)	2.5	94	66-126
Tetrachloroethene	mg/kg (ppm)	2.5	98	72-114
Ethylbenzene	mg/kg (ppm)	2.5	94	64-123
m,p-Xylene	mg/kg (ppm)	5	93	78-122
o-Xylene	mg/kg (ppm)	2.5	89	77-124
Naphthalene	mg/kg (ppm)	2.5	88	63-140

Date of Report: 09/19/17
Date Received: 09/06/17
Project: SIM-730 EDR, F&BI 709082

QUALITY ASSURANCE RESULTS FOR THE ANALYSIS OF WATER SAMPLES FOR VOLATILES BY EPA METHOD 8260C

Laboratory Code: 709105-01
(Matrix Spike)

Analyte	Reporting Units	Spike Level	Sample Result	Percent Recovery MS	Acceptance Criteria
1,1,1-Trichloroethane	ug/L (ppb)	50	<1	101	75-121
Benzene	ug/L (ppb)	50	<0.35	96	75-114
Trichloroethene	ug/L (ppb)	50	6.7	96	73-122
Toluene	ug/L (ppb)	50	<1	95	73-117
Tetrachloroethene	ug/L (ppb)	50	38	93 b	72-113
Ethylbenzene	ug/L (ppb)	50	<1	94	66-124
m,p-Xylene	ug/L (ppb)	100	<2	95	63-128
o-Xylene	ug/L (ppb)	50	<1	95	64-129
Naphthalene	ug/L (ppb)	50	<1	102	60-145

Laboratory Code: Laboratory Control Sample

Analyte	Reporting Units	Spike Level	Percent Recovery LCS	Percent Recovery LCSD	Acceptance Criteria	RPD (Limit 20)
1,1,1-Trichloroethane	ug/L (ppb)	50	97	101	80-116	4
Benzene	ug/L (ppb)	50	91	94	75-116	3
Trichloroethene	ug/L (ppb)	50	89	94	72-119	5
Toluene	ug/L (ppb)	50	92	94	79-115	2
Tetrachloroethene	ug/L (ppb)	50	90	92	78-109	2
Ethylbenzene	ug/L (ppb)	50	91	93	83-111	2
m,p-Xylene	ug/L (ppb)	100	91	94	84-112	3
o-Xylene	ug/L (ppb)	50	92	94	81-117	2
Naphthalene	ug/L (ppb)	50	97	100	72-131	3

Date of Report: 09/19/17
Date Received: 09/06/17
Project: SIM-730 EDR, F&BI 709082

QUALITY ASSURANCE RESULTS FOR THE ANALYSIS OF SOIL SAMPLES FOR POLYCHLORINATED BIPHENYLS AS AROCLOR 1016/1260 BY EPA METHOD 8082A

Laboratory Code: 709082-01 1/5 (Matrix Spike) 1/5

Analyte	Reporting Units	Spike Level	Sample Result (Wet Wt)	Percent Recovery MS	Control Limits
Aroclor 1016	mg/kg (ppm)	1.7	<0.02	80	50-150
Aroclor 1260	mg/kg (ppm)	1.7	<0.02	87	50-150

Laboratory Code: Laboratory Control Sample 1/5

Analyte	Reporting Units	Spike Level	Percent Recovery LCS	Percent Recovery LCSD	Acceptance Criteria	RPD (Limit 20)
Aroclor 1016	mg/kg (ppm)	1.7	88	84	55-130	5
Aroclor 1260	mg/kg (ppm)	1.7	100	94	58-133	6

Data Qualifiers & Definitions

a - The analyte was detected at a level less than five times the reporting limit. The RPD results may not provide reliable information on the variability of the analysis.

b - The analyte was spiked at a level that was less than five times that present in the sample. Matrix spike recoveries may not be meaningful.

ca - The calibration results for the analyte were outside of acceptance criteria. The value reported is an estimate.

c - The presence of the analyte may be due to carryover from previous sample injections.

cf - The sample was centrifuged prior to analysis.

d - The sample was diluted. Detection limits were raised and surrogate recoveries may not be meaningful.

dv - Insufficient sample volume was available to achieve normal reporting limits.

f - The sample was laboratory filtered prior to analysis.

fb - The analyte was detected in the method blank.

fc - The compound is a common laboratory and field contaminant.

hr - The sample and duplicate were reextracted and reanalyzed. RPD results were still outside of control limits. Variability is attributed to sample inhomogeneity.

hs - Headspace was present in the container used for analysis.

ht – The analysis was performed outside the method or client-specified holding time requirement.

ip - Recovery fell outside of control limits. Compounds in the sample matrix interfered with the quantitation of the analyte.

j - The analyte concentration is reported below the lowest calibration standard. The value reported is an estimate.

J - The internal standard associated with the analyte is out of control limits. The reported concentration is an estimate.

jl - The laboratory control sample(s) percent recovery and/or RPD were out of control limits. The reported concentration should be considered an estimate.

js - The surrogate associated with the analyte is out of control limits. The reported concentration should be considered an estimate.

lc - The presence of the analyte is likely due to laboratory contamination.

L - The reported concentration was generated from a library search.

nm - The analyte was not detected in one or more of the duplicate analyses. Therefore, calculation of the RPD is not applicable.

pc - The sample was received with incorrect preservation or in a container not approved by the method. The value reported should be considered an estimate.

ve - The analyte response exceeded the valid instrument calibration range. The value reported is an estimate.

vo - The value reported fell outside the control limits established for this analyte.

x - The sample chromatographic pattern does not resemble the fuel standard used for quantitation.

709082

SAMPLE CHAIN OF CUSTODY

ME 09-06-17 VS1/VW2/BT3

Page # 1 of 1

Report To Lynn Grochala
Company Floyd | Snider
Address 601 Union St, Ste 600
City, State, ZIP Seattle, WA 98101
Phone 206-292-2078 Email lynn.grochala@floydsnider.com

SAMPLERS (*signature*)

PROJECT NAME: SIM - 730 EDR

PO #

REMARKS: * VOC list: BETX; naphthalene; PCE; TCE; 1,1,1-trichloroethane

INVOICE TO

TURNAROUND TIME
☐ Standard Turnaround
☒ RUSH 48 hr notice
Rush charges authorized by:

SAMPLE DISPOSAL
☒ Dispose after 30 days
☐ Archive Samples
☐ Other

Sample ID	Lab ID	Date Sampled	Time Sampled	Sample Type	# of Jars	TPH-HCID	TPH-Diesel	TPH-Gasoline	BTEX by 8021B	VOCs by 8260C *	SVOCs by 8270D	PAHs 8270D SIM	As, Pb, Cd, Cr, Hg	PCBs	Pentachlorophenol		Notes
WT-SP01-01	01 A-F	9/6/17	0650	S	6		X	X		X			X	X			48-hr TAT
WT-SP01-02	02		0700		6		X	X		X			X	X			
WT-SP01-03	03		0730		6		X	X		X			X	X			
WT-SP01-04	04		0735		6		X	X		X			X	X			
WT-SP01-05	05		0740		6		X	X		X			X	X			
SS-S1W-10.5'	06		0845		1										X		24-hr TAT
trip blanks	07 AB				2			X		X							48-hr TAT

SIGNATURE	PRINT NAME	COMPANY	DATE	TIME
Relinquished by:	Kristin Anderson	FS	9/6/17	1545
Received by:	TOM LADD	FRI	9/6/17	1545
Relinquished by:				
Received by:		Samples received at 4 °C		

Friedman & Bruya, Inc.
3012 16th Avenue West
Seattle, WA 98119-2029
Ph. (206) 285-8282

FRIEDMAN & BRUYA, INC.

ENVIRONMENTAL CHEMISTS

James E. Bruya, Ph.D.
Yelena Aravkina, M.S.
Michael Erdahl, B.S.
Arina Podnozova, B.S.
Eric Young, B.S.

3012 16th Avenue West
Seattle, WA 98119-2029
(206) 285-8282
fbi@isomedia.com
www.friedmanandbruya.com

September 27, 2017

Lynn Grochala, Project Manager
Floyd-Snider
Two Union Square, Suite 600
601 Union St
Seattle, WA 98101

Dear Ms Grochala:

Included are the results from the testing of material submitted on September 22, 2017 from the SIM-730 EDR, F&BI 709379 project. There are 20 pages included in this report. Any samples that may remain are currently scheduled for disposal in 30 days. If you would like us to return your samples or arrange for long term storage at our offices, please contact us as soon as possible.

We appreciate this opportunity to be of service to you and hope you will call if you should have any questions.

Sincerely,

FRIEDMAN & BRUYA, INC.



Michael Erdahl
Project Manager

Enclosures
c: Kristin Anderson
FDS0927R.DOC

CASE NARRATIVE

This case narrative encompasses samples received on September 22, 2017 by Friedman & Bruya, Inc. from the Floyd-Snider SIM-730 EDR, F&BI 709379 project. Samples were logged in under the laboratory ID's listed below.

Laboratory ID	Floyd-Snider
709379 -01	WT-SP2-01
709379 -02	WT-SP2-02
709379 -03	WT-SP2-03
709379 -04	WT-SP2-04
709379 -05	WT-SP2-05

The samples were sent to Fremont Analytical for MTCA metals analysis. The report generated by Fremont will be forwarded to your office upon receipt.

All quality control requirements were acceptable.

Date of Report: 09/27/17
Date Received: 09/22/17
Project: SIM-730 EDR, F&BI 709379
Date Extracted: 09/22/17
Date Analyzed: 09/22/17

RESULTS FROM THE ANALYSIS OF SOIL SAMPLES FOR TOTAL PETROLEUM HYDROCARBONS AS GASOLINE USING METHOD NWTPH-Gx

Results Reported on a Dry Weight Basis
Results Reported as mg/kg (ppm)

Sample ID Laboratory ID	Gasoline Range	Surrogate (% Recovery) (Limit 50-150)
WT-SP2-01 709379-01	<5	115
WT-SP2-02 709379-02	<5	112
WT-SP2-03 709379-03	<5	108
WT-SP2-04 709379-04	<5	115
WT-SP2-05 709379-05	<5	95
Method Blank 07-2053 MB	<5	114

Date of Report: 09/27/17
Date Received: 09/22/17
Project: SIM-730 EDR, F&BI 709379
Date Extracted: 09/22/17
Date Analyzed: 09/22/17

RESULTS FROM THE ANALYSIS OF SOIL SAMPLES FOR TOTAL PETROLEUM HYDROCARBONS AS DIESEL AND MOTOR OIL USING METHOD NWTPH-Dx

Results Reported on a Dry Weight Basis
Results Reported as mg/kg (ppm)

Sample ID Laboratory ID	Diesel Range (C_{10}-C_{25})	Motor Oil Range (C_{25}-C_{36})	Surrogate (% Recovery) (Limit 48-168)
WT-SP2-01 709379-01	<50	<250	95
WT-SP2-02 709379-02	<50	<250	94
WT-SP2-03 709379-03	<50	<250	94
WT-SP2-04 709379-04	<50	<250	100
WT-SP2-05 709379-05	<50	<250	96
Method Blank 07-2102 MB	<50	<250	78

Analysis For Volatile Compounds By EPA Method 8260C

Client Sample ID:	WT-SP2-01	Client:	Floyd-Snider
Date Received:	09/22/17	Project:	SIM-730 EDR, F&BI 709379
Date Extracted:	09/25/17	Lab ID:	709379-01
Date Analyzed:	09/25/17	Data File:	092527.D
Matrix:	Soil	Instrument:	GCMS4
Units:	mg/kg (ppm) Dry Weight	Operator:	JS

Surrogates:	% Recovery:	Lower Limit:	Upper Limit:
1,2-Dichloroethane-d4	99	62	142
Toluene-d8	103	55	145
4-Bromofluorobenzene	98	65	139

Compounds:	Concentration mg/kg (ppm)
1,1,1-Trichloroethane	<0.05
Benzene	<0.03
Trichloroethene	<0.02
Toluene	<0.05
Tetrachloroethene	0.029
Ethylbenzene	<0.05
m,p-Xylene	<0.1
o-Xylene	<0.05
Naphthalene	<0.05

Analysis For Volatile Compounds By EPA Method 8260C

Client Sample ID:	WT-SP2-02	Client:	Floyd-Snider
Date Received:	09/22/17	Project:	SIM-730 EDR, F&BI 709379
Date Extracted:	09/25/17	Lab ID:	709379-02
Date Analyzed:	09/25/17	Data File:	092528.D
Matrix:	Soil	Instrument:	GCMS4
Units:	mg/kg (ppm) Dry Weight	Operator:	JS

Surrogates:	% Recovery:	Lower Limit:	Upper Limit:
1,2-Dichloroethane-d4	101	62	142
Toluene-d8	103	55	145
4-Bromofluorobenzene	100	65	139

Compounds:	Concentration mg/kg (ppm)
1,1,1-Trichloroethane	<0.05
Benzene	<0.03
Trichloroethene	<0.02
Toluene	<0.05
Tetrachloroethene	0.037
Ethylbenzene	<0.05
m,p-Xylene	<0.1
o-Xylene	<0.05
Naphthalene	<0.05

Analysis For Volatile Compounds By EPA Method 8260C

Client Sample ID:	WT-SP2-03	Client:	Floyd-Snider
Date Received:	09/22/17	Project:	SIM-730 EDR, F&BI 709379
Date Extracted:	09/25/17	Lab ID:	709379-03
Date Analyzed:	09/25/17	Data File:	092529.D
Matrix:	Soil	Instrument:	GCMS4
Units:	mg/kg (ppm) Dry Weight	Operator:	JS

Surrogates:	% Recovery:	Lower Limit:	Upper Limit:
1,2-Dichloroethane-d4	101	62	142
Toluene-d8	103	55	145
4-Bromofluorobenzene	98	65	139

Compounds:	Concentration mg/kg (ppm)
1,1,1-Trichloroethane	<0.05
Benzene	<0.03
Trichloroethene	<0.02
Toluene	<0.05
Tetrachloroethene	0.054
Ethylbenzene	<0.05
m,p-Xylene	<0.1
o-Xylene	<0.05
Naphthalene	<0.05

Analysis For Volatile Compounds By EPA Method 8260C

Client Sample ID:	WT-SP2-04	Client:	Floyd-Snider
Date Received:	09/22/17	Project:	SIM-730 EDR, F&BI 709379
Date Extracted:	09/25/17	Lab ID:	709379-04
Date Analyzed:	09/25/17	Data File:	092530.D
Matrix:	Soil	Instrument:	GCMS4
Units:	mg/kg (ppm) Dry Weight	Operator:	JS

Surrogates:	% Recovery:	Lower Limit:	Upper Limit:
1,2-Dichloroethane-d4	99	62	142
Toluene-d8	103	55	145
4-Bromofluorobenzene	99	65	139

Compounds:	Concentration mg/kg (ppm)
1,1,1-Trichloroethane	<0.05
Benzene	<0.03
Trichloroethene	<0.02
Toluene	<0.05
Tetrachloroethene	<0.025
Ethylbenzene	<0.05
m,p-Xylene	<0.1
o-Xylene	<0.05
Naphthalene	<0.05

Analysis For Volatile Compounds By EPA Method 8260C

Client Sample ID:	WT-SP2-05	Client:	Floyd-Snider
Date Received:	09/22/17	Project:	SIM-730 EDR, F&BI 709379
Date Extracted:	09/25/17	Lab ID:	709379-05
Date Analyzed:	09/25/17	Data File:	092531.D
Matrix:	Soil	Instrument:	GCMS4
Units:	mg/kg (ppm) Dry Weight	Operator:	JS

Surrogates:	% Recovery:	Lower Limit:	Upper Limit:
1,2-Dichloroethane-d4	99	62	142
Toluene-d8	103	55	145
4-Bromofluorobenzene	98	65	139

Compounds:	Concentration mg/kg (ppm)
1,1,1-Trichloroethane	<0.05
Benzene	<0.03
Trichloroethene	<0.02
Toluene	<0.05
Tetrachloroethene	0.037
Ethylbenzene	<0.05
m,p-Xylene	<0.1
o-Xylene	<0.05
Naphthalene	<0.05

Analysis For Volatile Compounds By EPA Method 8260C

Client Sample ID:	Method Blank	Client:	Floyd-Snider
Date Received:	Not Applicable	Project:	SIM-730 EDR, F&BI 709379
Date Extracted:	09/25/17	Lab ID:	07-2095 mb
Date Analyzed:	09/25/17	Data File:	092505.D
Matrix:	Soil	Instrument:	GCMS4
Units:	mg/kg (ppm) Dry Weight	Operator:	JS

Surrogates:	% Recovery:	Lower Limit:	Upper Limit:
1,2-Dichloroethane-d4	99	62	142
Toluene-d8	102	55	145
4-Bromofluorobenzene	98	65	139

Compounds:	Concentration mg/kg (ppm)
1,1,1-Trichloroethane	<0.05
Benzene	<0.03
Trichloroethene	<0.02
Toluene	<0.05
Tetrachloroethene	<0.025
Ethylbenzene	<0.05
m,p-Xylene	<0.1
o-Xylene	<0.05
Naphthalene	<0.05

Analysis For PCBs By EPA Method 8082A

Client Sample ID:	WT-SP2-01	Client:	Floyd-Snider
Date Received:	09/22/17	Project:	SIM-730 EDR, F&BI 709379
Date Extracted:	09/22/17	Lab ID:	709379-01 1/5
Date Analyzed:	09/25/17	Data File:	092521.D
Matrix:	Soil	Instrument:	GC7
Units:	mg/kg (ppm) Dry Weight	Operator:	VM

Surrogates:	% Recovery:	Lower Limit:	Upper Limit:
TCMX	56	29	154

Compounds:	Concentration mg/kg (ppm)
Aroclor 1221	<0.02
Aroclor 1232	<0.02
Aroclor 1016	<0.02
Aroclor 1242	<0.02
Aroclor 1248	<0.02
Aroclor 1254	<0.02
Aroclor 1260	<0.02
Aroclor 1262	<0.02
Aroclor 1268	<0.02

Analysis For PCBs By EPA Method 8082A

Client Sample ID:	WT-SP2-02	Client:	Floyd-Snider
Date Received:	09/22/17	Project:	SIM-730 EDR, F&BI 709379
Date Extracted:	09/22/17	Lab ID:	709379-02 1/5
Date Analyzed:	09/25/17	Data File:	092522.D
Matrix:	Soil	Instrument:	GC7
Units:	mg/kg (ppm) Dry Weight	Operator:	VM

Surrogates:	% Recovery:	Lower Limit:	Upper Limit:
TCMX	64	29	154

Compounds:	Concentration mg/kg (ppm)
Aroclor 1221	<0.02
Aroclor 1232	<0.02
Aroclor 1016	<0.02
Aroclor 1242	<0.02
Aroclor 1248	<0.02
Aroclor 1254	<0.02
Aroclor 1260	<0.02
Aroclor 1262	<0.02
Aroclor 1268	<0.02

Analysis For PCBs By EPA Method 8082A

Client Sample ID:	WT-SP2-03	Client:	Floyd-Snider
Date Received:	09/22/17	Project:	SIM-730 EDR, F&BI 709379
Date Extracted:	09/22/17	Lab ID:	709379-03 1/5
Date Analyzed:	09/25/17	Data File:	092523.D
Matrix:	Soil	Instrument:	GC7
Units:	mg/kg (ppm) Dry Weight	Operator:	VM

Surrogates:	% Recovery:	Lower Limit:	Upper Limit:
TCMX	53	29	154

Compounds:	Concentration mg/kg (ppm)
Aroclor 1221	<0.02
Aroclor 1232	<0.02
Aroclor 1016	<0.02
Aroclor 1242	<0.02
Aroclor 1248	<0.02
Aroclor 1254	<0.02
Aroclor 1260	<0.02
Aroclor 1262	<0.02
Aroclor 1268	<0.02

Analysis For PCBs By EPA Method 8082A

Client Sample ID:	WT-SP2-04	Client:	Floyd-Snider
Date Received:	09/22/17	Project:	SIM-730 EDR, F&BI 709379
Date Extracted:	09/22/17	Lab ID:	709379-04 1/5
Date Analyzed:	09/25/17	Data File:	092524.D
Matrix:	Soil	Instrument:	GC7
Units:	mg/kg (ppm) Dry Weight	Operator:	VM

Surrogates:	% Recovery:	Lower Limit:	Upper Limit:
TCMX	59	29	154

Compounds:	Concentration mg/kg (ppm)
Aroclor 1221	<0.02
Aroclor 1232	<0.02
Aroclor 1016	<0.02
Aroclor 1242	<0.02
Aroclor 1248	<0.02
Aroclor 1254	<0.02
Aroclor 1260	<0.02
Aroclor 1262	<0.02
Aroclor 1268	<0.02

Analysis For PCBs By EPA Method 8082A

Client Sample ID:	WT-SP2-05	Client:	Floyd-Snider
Date Received:	09/22/17	Project:	SIM-730 EDR, F&BI 709379
Date Extracted:	09/22/17	Lab ID:	709379-05 1/5
Date Analyzed:	09/25/17	Data File:	092525.D
Matrix:	Soil	Instrument:	GC7
Units:	mg/kg (ppm) Dry Weight	Operator:	VM

Surrogates:	% Recovery:	Lower Limit:	Upper Limit:
TCMX	78	29	154

Compounds:	Concentration mg/kg (ppm)
Aroclor 1221	<0.02
Aroclor 1232	<0.02
Aroclor 1016	<0.02
Aroclor 1242	<0.02
Aroclor 1248	<0.02
Aroclor 1254	<0.02
Aroclor 1260	<0.02
Aroclor 1262	<0.02
Aroclor 1268	<0.02

Analysis For PCBs By EPA Method 8082A

Client Sample ID:	Method Blank	Client:	Floyd-Snider
Date Received:	Not Applicable	Project:	SIM-730 EDR, F&BI 709379
Date Extracted:	09/22/17	Lab ID:	07-2086 mb2 1/5
Date Analyzed:	09/25/17	Data File:	092520.D
Matrix:	Soil	Instrument:	GC7
Units:	mg/kg (ppm) Dry Weight	Operator:	VM

Surrogates:	% Recovery:	Lower Limit:	Upper Limit:
TCMX	64	29	154

Compounds:	Concentration mg/kg (ppm)
Aroclor 1221	<0.02
Aroclor 1232	<0.02
Aroclor 1016	<0.02
Aroclor 1242	<0.02
Aroclor 1248	<0.02
Aroclor 1254	<0.02
Aroclor 1260	<0.02
Aroclor 1262	<0.02
Aroclor 1268	<0.02

Date of Report: 09/27/17
Date Received: 09/22/17
Project: SIM-730 EDR, F&BI 709379

QUALITY ASSURANCE RESULTS FOR THE ANALYSIS OF SOIL SAMPLES FOR TPH AS GASOLINE USING METHOD NWTPH-Gx

Laboratory Code: 709332-06 (Duplicate)

Analyte	Reporting Units	Sample Result (Wet Wt)	Duplicate Result (Wet Wt)	RPD (Limit 20)
Gasoline	mg/kg (ppm)	<5	<5	nm

Laboratory Code: Laboratory Control Sample

Analyte	Reporting Units	Spike Level	Percent Recovery LCS	Acceptance Criteria
Gasoline	mg/kg (ppm)	20	115	71-131

Date of Report: 09/27/17
Date Received: 09/22/17
Project: SIM-730 EDR, F&BI 709379

QUALITY ASSURANCE RESULTS FROM THE ANALYSIS OF SOIL SAMPLES FOR TOTAL PETROLEUM HYDROCARBONS AS DIESEL EXTENDED USING METHOD NWTPH-Dx

Laboratory Code: 709328-26 (Matrix Spike)

Analyte	Reporting Units	Spike Level	Sample Result (Wet Wt)	Percent Recovery MS	Percent Recovery MSD	Acceptance Criteria	RPD (Limit 20)
Diesel Extended	mg/kg (ppm)	5,000	2,100	90	104	64-133	14

Laboratory Code: Laboratory Control Sample

Analyte	Reporting Units	Spike Level	Percent Recovery LCS	Acceptance Criteria
Diesel Extended	mg/kg (ppm)	5,000	86	58-147

Date of Report: 09/27/17
Date Received: 09/22/17
Project: SIM-730 EDR, F&BI 709379

QUALITY ASSURANCE RESULTS FOR THE ANALYSIS OF SOIL SAMPLES FOR VOLATILES BY EPA METHOD 8260C

Laboratory Code: 709379-01 (Matrix Spike)

Analyte	Reporting Units	Spike Level	Sample Result (Wet wt)	Percent Recovery MS	Percent Recovery MSD	Acceptance Criteria	RPD (Limit 20)
1,1,1-Trichloroethane	mg/kg (ppm)	2.5	<0.05	72	69	10-156	4
Benzene	mg/kg (ppm)	2.5	<0.03	74	71	29-129	4
Trichloroethene	mg/kg (ppm)	2.5	<0.02	73	71	21-139	3
Toluene	mg/kg (ppm)	2.5	<0.05	72	69	35-130	4
Tetrachloroethene	mg/kg (ppm)	2.5	0.025	73	70	20-133	4
Ethylbenzene	mg/kg (ppm)	2.5	<0.05	74	73	32-137	1
m,p-Xylene	mg/kg (ppm)	5	<0.1	75	73	34-136	3
o-Xylene	mg/kg (ppm)	2.5	<0.05	74	72	33-134	3
Naphthalene	mg/kg (ppm)	2.5	<0.05	75	71	14-157	5

Laboratory Code: Laboratory Control Sample

Analyte	Reporting Units	Spike Level	Percent Recovery LCS	Acceptance Criteria
1,1,1-Trichloroethane	mg/kg (ppm)	2.5	93	62-131
Benzene	mg/kg (ppm)	2.5	95	68-114
Trichloroethene	mg/kg (ppm)	2.5	97	64-117
Toluene	mg/kg (ppm)	2.5	91	66-126
Tetrachloroethene	mg/kg (ppm)	2.5	93	72-114
Ethylbenzene	mg/kg (ppm)	2.5	92	64-123
m,p-Xylene	mg/kg (ppm)	5	94	78-122
o-Xylene	mg/kg (ppm)	2.5	92	77-124
Naphthalene	mg/kg (ppm)	2.5	92	63-140

Date of Report: 09/27/17
Date Received: 09/22/17
Project: SIM-730 EDR, F&BI 709379

QUALITY ASSURANCE RESULTS FOR THE ANALYSIS OF SOIL SAMPLES FOR POLYCHLORINATED BIPHENYLS AS AROCLOR 1016/1260 BY EPA METHOD 8082A

Laboratory Code: 709338-01 (Matrix Spike)

Analyte	Reporting Units	Spike Level	Sample Result (Wet Wt)	Percent Recovery MS	Control Limits
Aroclor 1016	mg/kg (ppm)	0.33	<0.004	73	50-150
Aroclor 1260	mg/kg (ppm)	0.33	<0.004	82	50-150

Laboratory Code: Laboratory Control Sample

Analyte	Reporting Units	Spike Level	Percent Recovery LCS	Percent Recovery LCSD	Acceptance Criteria	RPD (Limit 20)
Aroclor 1016	mg/kg (ppm)	0.33	77	75	55-130	3
Aroclor 1260	mg/kg (ppm)	0.33	88	88	58-133	0

Data Qualifiers & Definitions

a - The analyte was detected at a level less than five times the reporting limit. The RPD results may not provide reliable information on the variability of the analysis.

b - The analyte was spiked at a level that was less than five times that present in the sample. Matrix spike recoveries may not be meaningful.

ca - The calibration results for the analyte were outside of acceptance criteria. The value reported is an estimate.

c - The presence of the analyte may be due to carryover from previous sample injections.

cf - The sample was centrifuged prior to analysis.

d - The sample was diluted. Detection limits were raised and surrogate recoveries may not be meaningful.

dv - Insufficient sample volume was available to achieve normal reporting limits.

f - The sample was laboratory filtered prior to analysis.

fb - The analyte was detected in the method blank.

fc - The compound is a common laboratory and field contaminant.

hr - The sample and duplicate were reextracted and reanalyzed. RPD results were still outside of control limits. Variability is attributed to sample inhomogeneity.

hs - Headspace was present in the container used for analysis.

ht – The analysis was performed outside the method or client-specified holding time requirement.

ip - Recovery fell outside of control limits. Compounds in the sample matrix interfered with the quantitation of the analyte.

j - The analyte concentration is reported below the lowest calibration standard. The value reported is an estimate.

J - The internal standard associated with the analyte is out of control limits. The reported concentration is an estimate.

jl - The laboratory control sample(s) percent recovery and/or RPD were out of control limits. The reported concentration should be considered an estimate.

js - The surrogate associated with the analyte is out of control limits. The reported concentration should be considered an estimate.

lc - The presence of the analyte is likely due to laboratory contamination.

L - The reported concentration was generated from a library search.

nm - The analyte was not detected in one or more of the duplicate analyses. Therefore, calculation of the RPD is not applicable.

pc - The sample was received with incorrect preservation or in a container not approved by the method. The value reported should be considered an estimate.

ve - The analyte response exceeded the valid instrument calibration range. The value reported is an estimate.

vo - The value reported fell outside the control limits established for this analyte.

x - The sample chromatographic pattern does not resemble the fuel standard used for quantitation.

709379

SAMPLE CHAIN OF CUSTODY

ME 09-22-17

BE2/VS1

Page # 1 of 1

Report To Lynn Grochala
Company Floyd | Snider
Address 601 Union St, Ste 600
City, State, ZIP Seattle, WA 98101
Phone 206-292-2078 Email lynn-grochala@floydsnider.com

SAMPLERS (*signature*)

PROJECT NAME: SIM-730 EDR

PO #:

REMARKS: VOC list: BTEX, naphthalene, PCE, TCE, 1,1,1-trichloroethane

INVOICE TO:

TURNAROUND TIME
- ☐ Standard Turnaround
- ☒ RUSH by morning of 9/27

Rush charges authorized by:

SAMPLE DISPOSAL
- ☒ Dispose after 30 days
- ☐ Archive Samples
- ☐ Other

Sample ID	Lab ID	Date Sampled	Time Sampled	Sample Type	# of Jars	TPH-HCID	TPH-Diesel	TPH-Gasoline	BTEX by 8021B	VOCs by 8260C	SVOCs by 8270D	PAHs 8270D SIM	As, Pb, Cd, Cr, Hg	PCBs			Notes
WT-SPZ-01	01A-F	9/22/17	1000	Soil	6		X	X		X			X	X			
WT-SPZ-02	02	"	1005	"	6		X	X		X			X	X			
WT-SPZ-03	03	"	1010	"	6		X	X		X			X	X			
WT-SPZ-04	04	"	1015	"	6		X	X		X			X	X			
WT-SPZ-05	05	"	1020	"	6		X	X		X			X	X			

Samples received at 6 °C

SIGNATURE	PRINT NAME	COMPANY	DATE	TIME
Relinquished by:	Kristin Anderson	FS	9/22/17	1128
Received by:		F&BI	9-22-17	11.28
Relinquished by:				
Received by:				

Friedman & Bruya, Inc.
3012 16th Avenue West
Seattle, WA 98119-2029
Ph. (206) 285-8282

FRIEDMAN & BRUYA, INC.

ENVIRONMENTAL CHEMISTS

James E. Bruya, Ph.D.
Yelena Aravkina, M.S.
Michael Erdahl, B.S.
Arina Podnozova, B.S.
Eric Young, B.S.

3012 16th Avenue West
Seattle, WA 98119-2029
(206) 285-8282
fbi@isomedia.com
www.friedmanandbruya.com

October 11, 2017

Lynn Grochala, Project Manager
Floyd-Snider
Two Union Square, Suite 600
601 Union St
Seattle, WA 98101

Dear Ms Grochala:

Included are the results from the testing of material submitted on October 5, 2017 from the SIM-730 EDR, F&BI 710076 project. There are 21 pages included in this report. Any samples that may remain are currently scheduled for disposal in 30 days. If you would like us to return your samples or arrange for long term storage at our offices, please contact us as soon as possible.

We appreciate this opportunity to be of service to you and hope you will call if you should have any questions.

Sincerely,

FRIEDMAN & BRUYA, INC.



Michael Erdahl
Project Manager

Enclosures
c: Kristin Anderson
FDS1011R.DOC

CASE NARRATIVE

This case narrative encompasses samples received on October 5, 2017 by Friedman & Bruya, Inc. from the Floyd-Snider SIM-730 EDR, F&BI 710076 project. Samples were logged in under the laboratory ID's listed below.

Laboratory ID	Floyd-Snider
710076 -01	WT-SP3-01
710076 -02	WT-SP3-02
710076 -03	WT-SP3-03

All quality control requirements were acceptable.

Date of Report: 10/11/17
Date Received: 10/05/17
Project: SIM-730 EDR, F&BI 710076
Date Extracted: 10/06/17
Date Analyzed: 10/06/17

RESULTS FROM THE ANALYSIS OF SOIL SAMPLES FOR TOTAL PETROLEUM HYDROCARBONS AS GASOLINE USING METHOD NWTPH-Gx

Results Reported on a Dry Weight Basis
Results Reported as mg/kg (ppm)

Sample ID Laboratory ID	Gasoline Range	Surrogate (% Recovery) (Limit 50-150)
WT-SP3-01 710076-01	<5	69
WT-SP3-02 710076-02	<5	98
WT-SP3-03 710076-03	<5	91
Method Blank 07-2219 MB	<5	110

Date of Report: 10/11/17
Date Received: 10/05/17
Project: SIM-730 EDR, F&BI 710076
Date Extracted: 10/06/17
Date Analyzed: 10/06/17

RESULTS FROM THE ANALYSIS OF SOIL SAMPLES FOR TOTAL PETROLEUM HYDROCARBONS AS DIESEL AND MOTOR OIL USING METHOD NWTPH-Dx

Results Reported on a Dry Weight Basis
Results Reported as mg/kg (ppm)

Sample ID Laboratory ID	Diesel Range (C_{10}-C_{25})	Motor Oil Range (C_{25}-C_{36})	Surrogate (% Recovery) (Limit 56-165)
WT-SP3-01 710076-01	<50	<250	85
WT-SP3-02 710076-02	<50	<250	100
WT-SP3-03 710076-03	<50	<250	86
Method Blank 07-2245 MB2	<50	<250	98

Analysis For Total Metals By EPA Method 6020A

Client ID:	WT-SP3-01	Client:	Floyd-Snider
Date Received:	10/05/17	Project:	SIM-730 EDR, F&BI 710076
Date Extracted:	10/09/17	Lab ID:	710076-01
Date Analyzed:	10/09/17	Data File:	710076-01.075
Matrix:	Soil	Instrument:	ICPMS2
Units:	mg/kg (ppm) Dry Weight	Operator:	SP

Analyte:	Concentration mg/kg (ppm)
Arsenic	2.11
Cadmium	<1
Chromium	9.27
Lead	3.08
Mercury	<1

Analysis For Total Metals By EPA Method 6020A

Client ID:	WT-SP3-02	Client:	Floyd-Snider
Date Received:	10/05/17	Project:	SIM-730 EDR, F&BI 710076
Date Extracted:	10/09/17	Lab ID:	710076-02
Date Analyzed:	10/09/17	Data File:	710076-02.078
Matrix:	Soil	Instrument:	ICPMS2
Units:	mg/kg (ppm) Dry Weight	Operator:	SP

Analyte:	Concentration mg/kg (ppm)
Arsenic	3.34
Cadmium	<1
Chromium	7.20
Lead	4.41
Mercury	<1

Analysis For Total Metals By EPA Method 6020A

Client ID:	WT-SP3-03	Client:	Floyd-Snider
Date Received:	10/05/17	Project:	SIM-730 EDR, F&BI 710076
Date Extracted:	10/09/17	Lab ID:	710076-03
Date Analyzed:	10/09/17	Data File:	710076-03.079
Matrix:	Soil	Instrument:	ICPMS2
Units:	mg/kg (ppm) Dry Weight	Operator:	SP

Analyte:	Concentration mg/kg (ppm)
Arsenic	1.39
Cadmium	<1
Chromium	5.14
Lead	1.29
Mercury	<1

Analysis For Total Metals By EPA Method 6020A

Client ID:	Method Blank	Client:	Floyd-Snider
Date Received:	NA	Project:	SIM-730 EDR, F&BI 710076
Date Extracted:	10/09/17	Lab ID:	I7-550 mb
Date Analyzed:	10/09/17	Data File:	I7-550 mb.072
Matrix:	Soil	Instrument:	ICPMS2
Units:	mg/kg (ppm) Dry Weight	Operator:	SP

Analyte:	Concentration mg/kg (ppm)
Arsenic	<1
Cadmium	<1
Chromium	<1
Lead	<1
Mercury	<1

Analysis For Volatile Compounds By EPA Method 8260C

Client Sample ID:	WT-SP3-01	Client:	Floyd-Snider
Date Received:	10/05/17	Project:	SIM-730 EDR, F&BI 710076
Date Extracted:	10/06/17	Lab ID:	710076-01
Date Analyzed:	10/06/17	Data File:	100623.D
Matrix:	Soil	Instrument:	GCMS9
Units:	mg/kg (ppm) Dry Weight	Operator:	JS

Surrogates:	% Recovery:	Lower Limit:	Upper Limit:
1,2-Dichloroethane-d4	101	89	113
Toluene-d8	100	64	137
4-Bromofluorobenzene	100	81	119

Compounds:	Concentration mg/kg (ppm)
1,1,1-Trichloroethane	<0.05
Benzene	<0.03
Trichloroethene	<0.02
Toluene	<0.05
Tetrachloroethene	<0.025
Ethylbenzene	<0.05
m,p-Xylene	<0.1
o-Xylene	<0.05

Analysis For Volatile Compounds By EPA Method 8260C

Client Sample ID:	WT-SP3-02	Client:	Floyd-Snider
Date Received:	10/05/17	Project:	SIM-730 EDR, F&BI 710076
Date Extracted:	10/06/17	Lab ID:	710076-02
Date Analyzed:	10/06/17	Data File:	100624.D
Matrix:	Soil	Instrument:	GCMS9
Units:	mg/kg (ppm) Dry Weight	Operator:	JS

Surrogates:	% Recovery:	Lower Limit:	Upper Limit:
1,2-Dichloroethane-d4	103	89	113
Toluene-d8	99	64	137
4-Bromofluorobenzene	100	81	119

Compounds:	Concentration mg/kg (ppm)
1,1,1-Trichloroethane	<0.05
Benzene	<0.03
Trichloroethene	<0.02
Toluene	<0.05
Tetrachloroethene	<0.025
Ethylbenzene	<0.05
m,p-Xylene	<0.1
o-Xylene	<0.05

Analysis For Volatile Compounds By EPA Method 8260C

Client Sample ID:	WT-SP3-03	Client:	Floyd-Snider
Date Received:	10/05/17	Project:	SIM-730 EDR, F&BI 710076
Date Extracted:	10/06/17	Lab ID:	710076-03
Date Analyzed:	10/06/17	Data File:	100625.D
Matrix:	Soil	Instrument:	GCMS9
Units:	mg/kg (ppm) Dry Weight	Operator:	JS

Surrogates:	% Recovery:	Lower Limit:	Upper Limit:
1,2-Dichloroethane-d4	102	89	113
Toluene-d8	101	64	137
4-Bromofluorobenzene	102	81	119

Compounds:	Concentration mg/kg (ppm)
1,1,1-Trichloroethane	<0.05
Benzene	<0.03
Trichloroethene	<0.02
Toluene	<0.05
Tetrachloroethene	<0.025
Ethylbenzene	<0.05
m,p-Xylene	<0.1
o-Xylene	<0.05

Analysis For Volatile Compounds By EPA Method 8260C

Client Sample ID:	Method Blank	Client:	Floyd-Snider
Date Received:	Not Applicable	Project:	SIM-730 EDR, F&BI 710076
Date Extracted:	10/05/17	Lab ID:	07-2200 mb2
Date Analyzed:	10/06/17	Data File:	100605.D
Matrix:	Soil	Instrument:	GCMS9
Units:	mg/kg (ppm) Dry Weight	Operator:	JS

Surrogates:	% Recovery:	Lower Limit:	Upper Limit:
1,2-Dichloroethane-d4	103	89	113
Toluene-d8	101	64	137
4-Bromofluorobenzene	100	81	119

Compounds:	Concentration mg/kg (ppm)
1,1,1-Trichloroethane	<0.05
Benzene	<0.03
Trichloroethene	<0.02
Toluene	<0.05
Tetrachloroethene	<0.025
Ethylbenzene	<0.05
m,p-Xylene	<0.1
o-Xylene	<0.05

Analysis For PCBs By EPA Method 8082A

Client Sample ID:	WT-SP3-01	Client:	Floyd-Snider
Date Received:	10/05/17	Project:	SIM-730 EDR, F&BI 710076
Date Extracted:	10/09/17	Lab ID:	710076-01 1/5
Date Analyzed:	10/09/17	Data File:	100932.D
Matrix:	Soil	Instrument:	GC7
Units:	mg/kg (ppm) Dry Weight	Operator:	VM

Surrogates:	% Recovery:	Lower Limit:	Upper Limit:
TCMX	94	29	154

Compounds:	Concentration mg/kg (ppm)
Aroclor 1221	<0.02
Aroclor 1232	<0.02
Aroclor 1016	<0.02
Aroclor 1242	<0.02
Aroclor 1248	<0.02
Aroclor 1254	<0.02
Aroclor 1260	<0.02
Aroclor 1262	<0.02
Aroclor 1268	<0.02

Analysis For PCBs By EPA Method 8082A

Client Sample ID:	WT-SP3-02	Client:	Floyd-Snider
Date Received:	10/05/17	Project:	SIM-730 EDR, F&BI 710076
Date Extracted:	10/09/17	Lab ID:	710076-02 1/5
Date Analyzed:	10/09/17	Data File:	100933.D
Matrix:	Soil	Instrument:	GC7
Units:	mg/kg (ppm) Dry Weight	Operator:	VM

Surrogates:	% Recovery:	Lower Limit:	Upper Limit:
TCMX	96	29	154

Compounds:	Concentration mg/kg (ppm)
Aroclor 1221	<0.02
Aroclor 1232	<0.02
Aroclor 1016	<0.02
Aroclor 1242	<0.02
Aroclor 1248	<0.02
Aroclor 1254	<0.02
Aroclor 1260	<0.02
Aroclor 1262	<0.02
Aroclor 1268	<0.02

Analysis For PCBs By EPA Method 8082A

Client Sample ID:	WT-SP3-03	Client:	Floyd-Snider
Date Received:	10/05/17	Project:	SIM-730 EDR, F&BI 710076
Date Extracted:	10/09/17	Lab ID:	710076-03 1/5
Date Analyzed:	10/09/17	Data File:	100934.D
Matrix:	Soil	Instrument:	GC7
Units:	mg/kg (ppm) Dry Weight	Operator:	VM

Surrogates:	% Recovery:	Lower Limit:	Upper Limit:
TCMX	84	29	154

Compounds:	Concentration mg/kg (ppm)
Aroclor 1221	<0.02
Aroclor 1232	<0.02
Aroclor 1016	<0.02
Aroclor 1242	<0.02
Aroclor 1248	<0.02
Aroclor 1254	<0.02
Aroclor 1260	<0.02
Aroclor 1262	<0.02
Aroclor 1268	<0.02

Analysis For PCBs By EPA Method 8082A

Client Sample ID:	Method Blank	Client:	Floyd-Snider
Date Received:	Not Applicable	Project:	SIM-730 EDR, F&BI 710076
Date Extracted:	10/09/17	Lab ID:	07-2262 mb 1/5
Date Analyzed:	10/09/17	Data File:	100922.D
Matrix:	Soil	Instrument:	GC7
Units:	mg/kg (ppm) Dry Weight	Operator:	VM

Surrogates:	% Recovery:	Lower Limit:	Upper Limit:
TCMX	91	29	154

Compounds:	Concentration mg/kg (ppm)
Aroclor 1221	<0.02
Aroclor 1232	<0.02
Aroclor 1016	<0.02
Aroclor 1242	<0.02
Aroclor 1248	<0.02
Aroclor 1254	<0.02
Aroclor 1260	<0.02
Aroclor 1262	<0.02
Aroclor 1268	<0.02

Date of Report: 10/11/17
Date Received: 10/05/17
Project: SIM-730 EDR, F&BI 710076

QUALITY ASSURANCE RESULTS FOR THE ANALYSIS OF SOIL SAMPLES FOR TPH AS GASOLINE USING METHOD NWTPH-Gx

Laboratory Code: 710071-02 (Duplicate)

Analyte	Reporting Units	Sample Result (Wet Wt)	Duplicate Result (Wet Wt)	RPD (Limit 20)
Gasoline	mg/kg (ppm)	<5	<5	nm

Laboratory Code: Laboratory Control Sample

Analyte	Reporting Units	Spike Level	Percent Recovery LCS	Acceptance Criteria
Gasoline	mg/kg (ppm)	20	90	71-131

Date of Report: 10/11/17
Date Received: 10/05/17
Project: SIM-730 EDR, F&BI 710076

QUALITY ASSURANCE RESULTS FROM THE ANALYSIS OF SOIL SAMPLES FOR TOTAL PETROLEUM HYDROCARBONS AS DIESEL EXTENDED USING METHOD NWTPH-Dx

Laboratory Code: 710062-02 (Matrix Spike)

Analyte	Reporting Units	Spike Level	Sample Result (Wet Wt)	Percent Recovery MS	Percent Recovery MSD	Acceptance Criteria	RPD (Limit 20)
Diesel Extended	mg/kg (ppm)	5,000	<50	92	94	63-146	2

Laboratory Code: Laboratory Control Sample

Analyte	Reporting Units	Spike Level	Percent Recovery LCS	Acceptance Criteria
Diesel Extended	mg/kg (ppm)	5,000	94	79-144

Date of Report: 10/11/17
Date Received: 10/05/17
Project: SIM-730 EDR, F&BI 710076

QUALITY ASSURANCE RESULTS FOR THE ANALYSIS OF SOIL SAMPLES FOR TOTAL METALS USING EPA METHOD 6020A

Laboratory Code: 710076-01 (Matrix Spike)

Analyte	Reporting Units	Spike Level	Sample Result (Wet wt)	Percent Recovery MS	Percent Recovery MSD	Acceptance Criteria	RPD (Limit 20)
Arsenic	mg/kg (ppm)	10	1.92	94	91	75-125	3
Cadmium	mg/kg (ppm)	10	<1	92	88	75-125	4
Chromium	mg/kg (ppm)	50	8.43	84	83	75-125	1
Lead	mg/kg (ppm)	50	2.80	88	83	75-125	6
Mercury	mg/kg (ppm	5	<1	92	87	75-125	6

Laboratory Code: Laboratory Control Sample

Analyte	Reporting Units	Spike Level	Percent Recovery LCS	Acceptance Criteria
Arsenic	mg/kg (ppm)	10	99	80-120
Cadmium	mg/kg (ppm)	10	99	80-120
Chromium	mg/kg (ppm)	50	101	80-120
Lead	mg/kg (ppm)	50	100	80-120
Mercury	mg/kg (ppm)	5	102	80-120

Date of Report: 10/11/17
Date Received: 10/05/17
Project: SIM-730 EDR, F&BI 710076

QUALITY ASSURANCE RESULTS FOR THE ANALYSIS OF SOIL SAMPLES FOR VOLATILES BY EPA METHOD 8260C

Laboratory Code: 710071-13 (Matrix Spike)

Analyte	Reporting Units	Spike Level	Sample Result (Wet wt)	Percent Recovery MS	Percent Recovery MSD	Acceptance Criteria	RPD (Limit 20)
1,1,1-Trichloroethane	mg/kg (ppm)	2.5	<0.05	90	87	27-112	3
Benzene	mg/kg (ppm)	2.5	<0.03	89	87	26-114	2
Trichloroethene	mg/kg (ppm)	2.5	<0.02	88	87	30-112	1
Toluene	mg/kg (ppm)	2.5	0.45	77	75	34-112	3
Tetrachloroethene	mg/kg (ppm)	2.5	<0.025	90	88	25-114	2
Ethylbenzene	mg/kg (ppm)	2.5	0.77	74 b	72 b	34-115	3 b
m,p-Xylene	mg/kg (ppm)	5	3.7	48 b	48 b	25-125	0 b
o-Xylene	mg/kg (ppm)	2.5	1.9	48 b	47 b	27-126	2 b

Laboratory Code: Laboratory Control Sample

Analyte	Reporting Units	Spike Level	Percent Recovery LCS	Acceptance Criteria
1,1,1-Trichloroethane	mg/kg (ppm)	2.5	99	72-116
Benzene	mg/kg (ppm)	2.5	96	72-106
Trichloroethene	mg/kg (ppm)	2.5	97	72-107
Toluene	mg/kg (ppm)	2.5	95	74-111
Tetrachloroethene	mg/kg (ppm)	2.5	97	73-111
Ethylbenzene	mg/kg (ppm)	2.5	98	75-112
m,p-Xylene	mg/kg (ppm)	5	97	77-115
o-Xylene	mg/kg (ppm)	2.5	99	76-115

Date of Report: 10/11/17
Date Received: 10/05/17
Project: SIM-730 EDR, F&BI 710076

QUALITY ASSURANCE RESULTS FOR THE ANALYSIS OF SOIL SAMPLES FOR POLYCHLORINATED BIPHENYLS AS AROCLOR 1016/1260 BY EPA METHOD 8082A

Laboratory Code: 710070-01 1/5 (Matrix Spike) 1/5

Analyte	Reporting Units	Spike Level	Sample Result (Wet Wt)	Percent Recovery MS	Control Limits
Aroclor 1016	mg/kg (ppm)	1.7	<0.02	79	50-150
Aroclor 1260	mg/kg (ppm)	1.7	<0.02	88	50-150

Laboratory Code: Laboratory Control Sample 1/5

Analyte	Reporting Units	Spike Level	Percent Recovery LCS	Percent Recovery LCSD	Acceptance Criteria	RPD (Limit 20)
Aroclor 1016	mg/kg (ppm)	1.7	89	94	55-130	5
Aroclor 1260	mg/kg (ppm)	1.7	100	103	58-133	3

Data Qualifiers & Definitions

a - The analyte was detected at a level less than five times the reporting limit. The RPD results may not provide reliable information on the variability of the analysis.

b - The analyte was spiked at a level that was less than five times that present in the sample. Matrix spike recoveries may not be meaningful.

ca - The calibration results for the analyte were outside of acceptance criteria. The value reported is an estimate.

c - The presence of the analyte may be due to carryover from previous sample injections.

cf - The sample was centrifuged prior to analysis.

d - The sample was diluted. Detection limits were raised and surrogate recoveries may not be meaningful.

dv - Insufficient sample volume was available to achieve normal reporting limits.

f - The sample was laboratory filtered prior to analysis.

fb - The analyte was detected in the method blank.

fc - The compound is a common laboratory and field contaminant.

hr - The sample and duplicate were reextracted and reanalyzed. RPD results were still outside of control limits. Variability is attributed to sample inhomogeneity.

hs - Headspace was present in the container used for analysis.

ht – The analysis was performed outside the method or client-specified holding time requirement.

ip - Recovery fell outside of control limits. Compounds in the sample matrix interfered with the quantitation of the analyte.

j - The analyte concentration is reported below the lowest calibration standard. The value reported is an estimate.

J - The internal standard associated with the analyte is out of control limits. The reported concentration is an estimate.

jl - The laboratory control sample(s) percent recovery and/or RPD were out of control limits. The reported concentration should be considered an estimate.

js - The surrogate associated with the analyte is out of control limits. The reported concentration should be considered an estimate.

lc - The presence of the analyte is likely due to laboratory contamination.

L - The reported concentration was generated from a library search.

nm - The analyte was not detected in one or more of the duplicate analyses. Therefore, calculation of the RPD is not applicable.

pc - The sample was received with incorrect preservation or in a container not approved by the method. The value reported should be considered an estimate.

ve - The analyte response exceeded the valid instrument calibration range. The value reported is an estimate.

vo - The value reported fell outside the control limits established for this analyte.

x - The sample chromatographic pattern does not resemble the fuel standard used for quantitation.

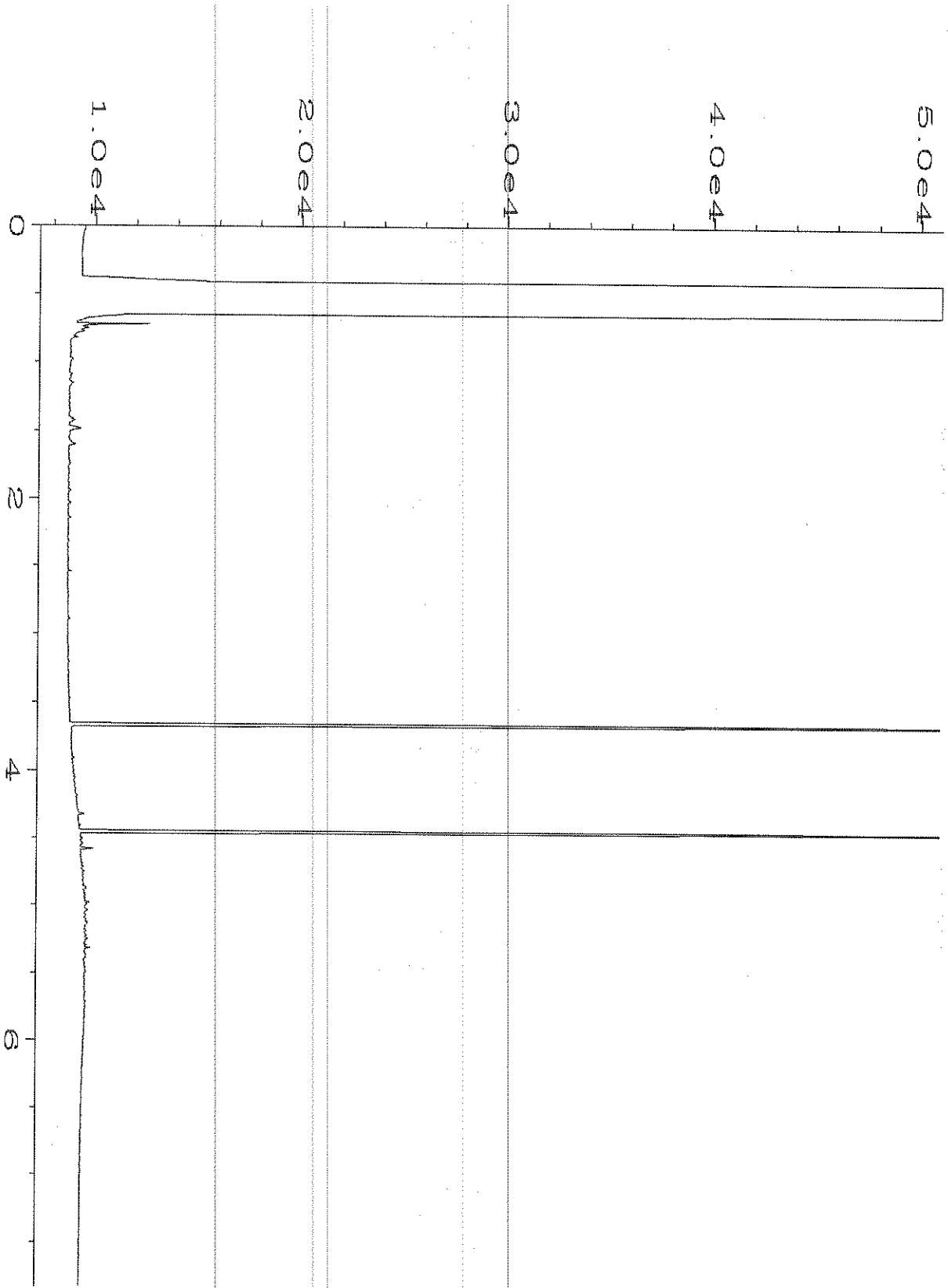

Data File Name : C:\HPCHEM\1\DATA\10-06-17\017F0301.D
Operator : mwdl
Instrument : GC1
Sample Name : 710076-01
Run Time Bar Code:
Acquired on : 06 Oct 17 11:11 AM
Report Created on: 06 Oct 17 12:10 PM

Page Number : 1
Vial Number : 17
Injection Number : 1
Sequence Line : 3
Instrument Method: DX.MTH
Analysis Method : DX.MTH

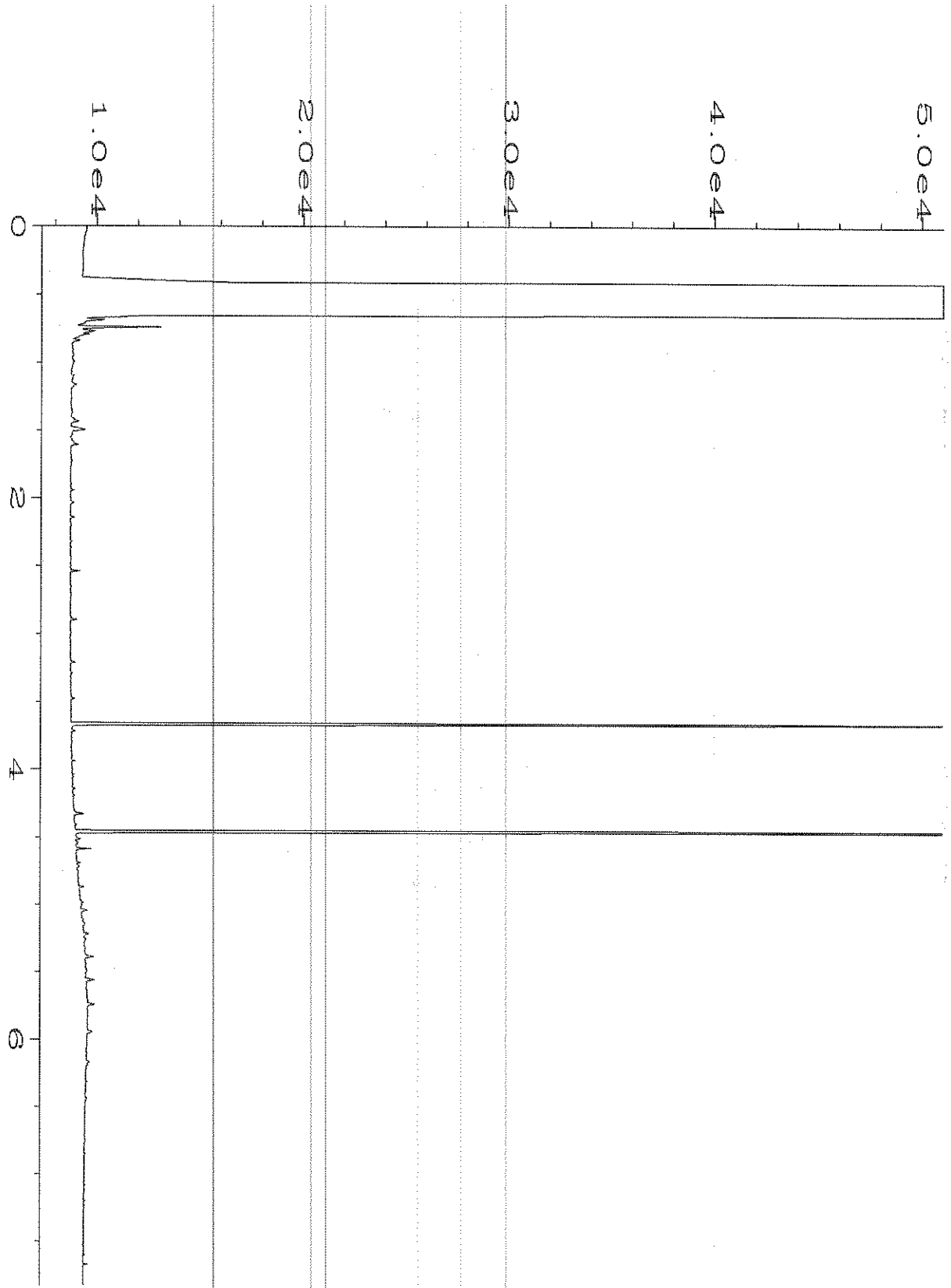

Data File Name : C:\HPCHEM\1\DATA\10-06-17\018F0301.D
Operator : mwdl
Instrument : GC1
Sample Name : 710076-02
Run Time Bar Code:
Acquired on : 06 Oct 17 11:22 AM
Report Created on: 06 Oct 17 12:10 PM

Page Number : 1
Vial Number : 18
Injection Number : 1
Sequence Line : 3
Instrument Method: DX.MTH
Analysis Method : DX.MTH

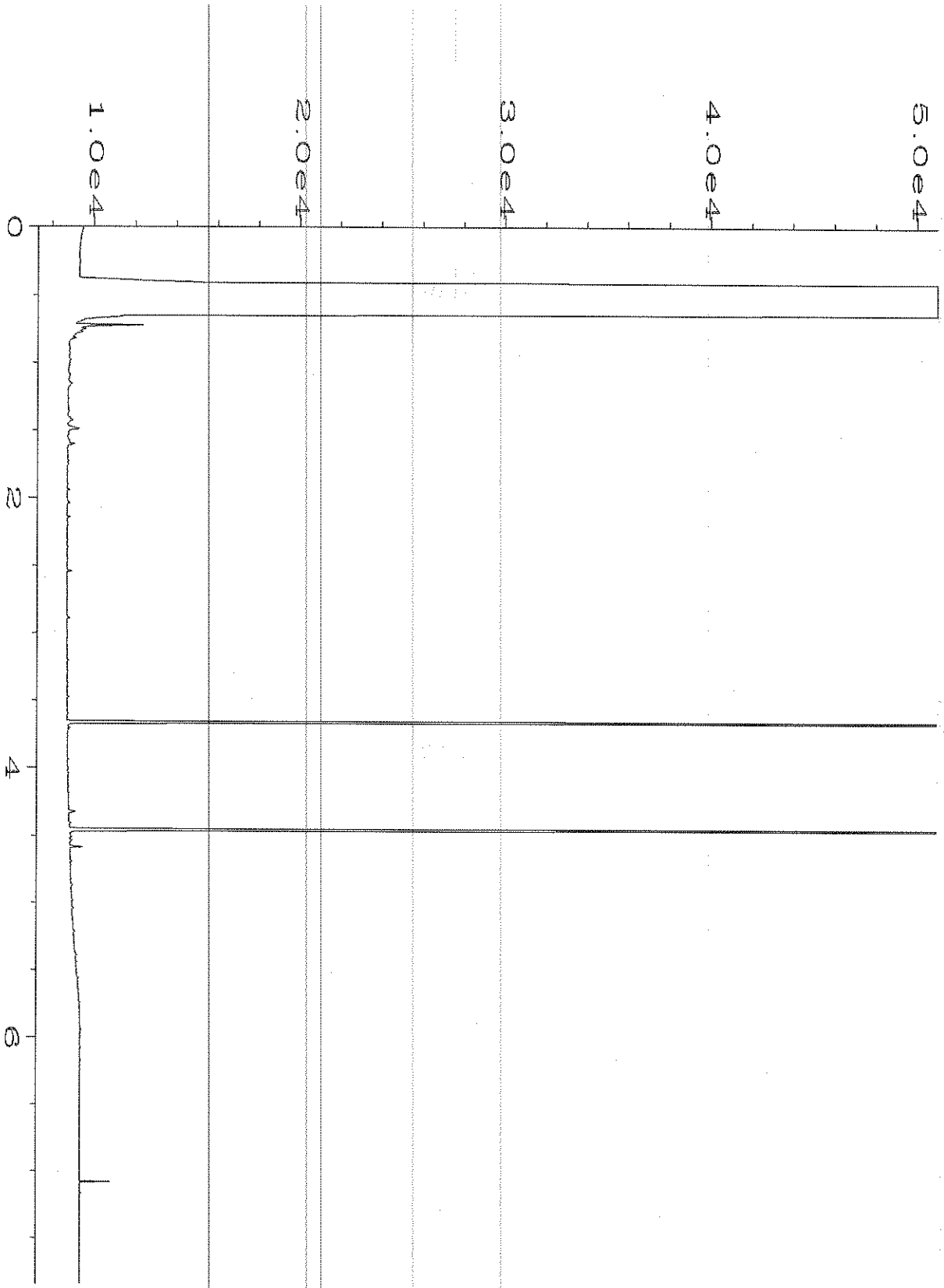

Data File Name : C:\HPCHEM\1\DATA\10-06-17\019F0301.D
Operator : mwdl
Instrument : GC1
Sample Name : 710076-03
Run Time Bar Code:
Acquired on : 06 Oct 17 11:34 AM
Report Created on: 06 Oct 17 12:10 PM

Page Number : 1
Vial Number : 19
Injection Number : 1
Sequence Line : 3
Instrument Method: DX.MTH
Analysis Method : DX.MTH

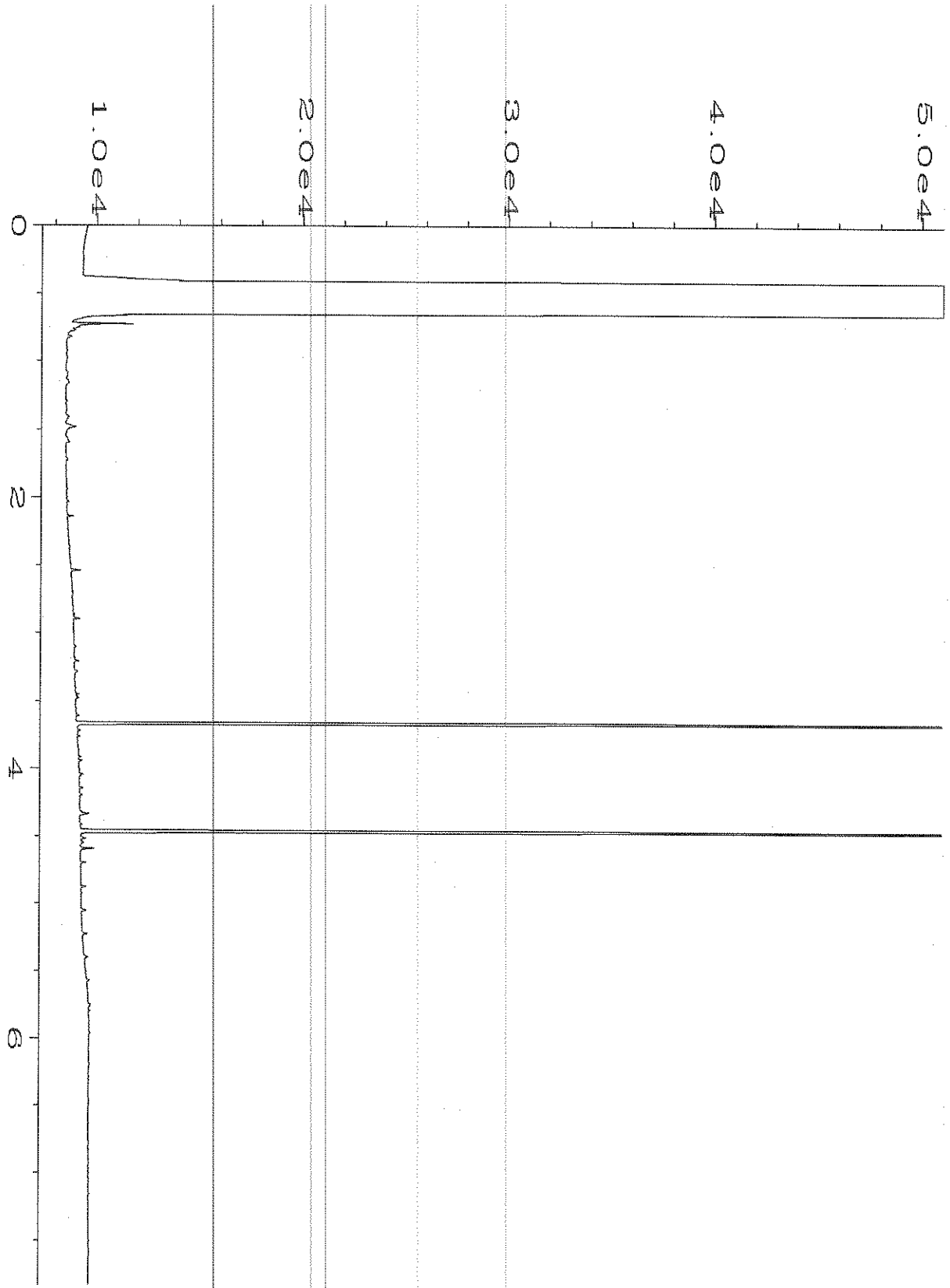

Data File Name : C:\HPCHEM\1\DATA\10-06-17\006F0301.D
Operator : mwdl
Instrument : GC1
Sample Name : 07-2245 mb2
Run Time Bar Code:
Acquired on : 06 Oct 17 09:04 AM
Report Created on: 06 Oct 17 12:11 PM

Page Number : 1
Vial Number : 6
Injection Number : 1
Sequence Line : 3
Instrument Method: DX.MTH
Analysis Method : DX.MTH

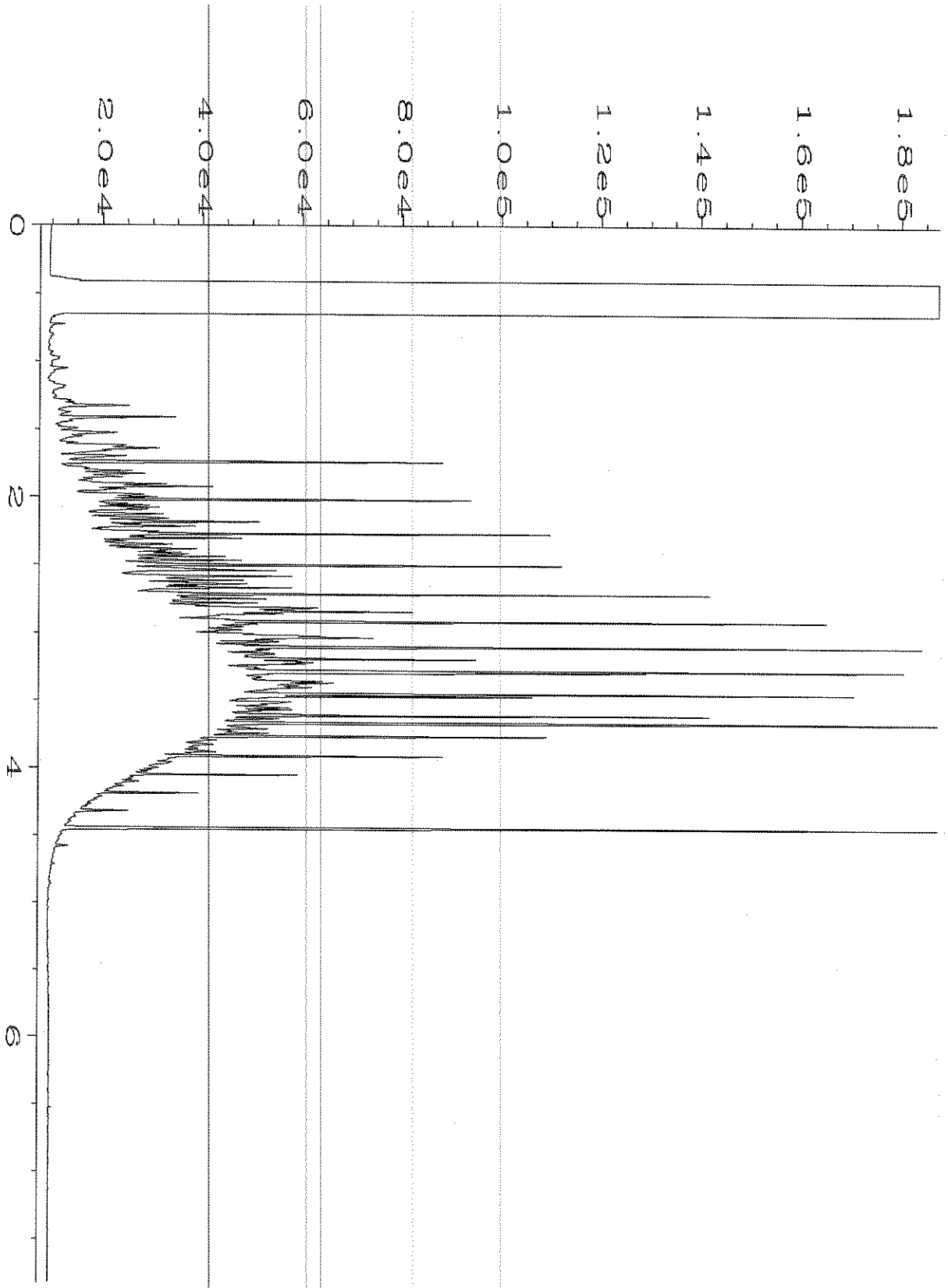

Data File Name : C:\HPCHEM\1\DATA\10-06-17\003F0201.D
Operator : mwdl
Instrument : GC1
Sample Name : 500 Dx 49-188E
Run Time Bar Code:
Acquired on : 06 Oct 17 06:26 AM
Report Created on: 06 Oct 17 12:11 PM

Page Number : 1
Vial Number : 3
Injection Number : 1
Sequence Line : 2
Instrument Method: DX.MTH
Analysis Method : DX.MTH

710076

SAMPLE CHAIN OF CUSTODY

ME 10-05-17

BE1 / VB1

Page # 1 of 1

Report To Lynn Grochula

Company Floyd | Snider

Address 601 Union St, Ste 600

City, State, ZIP Seattle, WA 98101

Phone 206-292-7078 Email lynn.grochula@floydsnider.com

SAMPLERS (*signature*)

PROJECT NAME: SIM - 730 EDR

PO #

REMARKS: VOCs: BTEX, PCE, TCE + 1,1,1-trichloroethane

INVOICE TO

TURNAROUND TIME
- ☐ Standard Turnaround
- ☒ RUSH 3-day

Rush charges authorized by:

SAMPLE DISPOSAL
- ☐ Dispose after 30 days
- ☐ Archive Samples
- ☐ Other

Sample ID	Lab ID	Date Sampled	Time Sampled	Sample Type	# of Jars	TPH-HCID	TPH-Diesel	TPH-Gasoline	BTEX by 8021B	VOCs by 8260C	SVOCs by 8270D	PAHs 8270D SIM	PCBs	As, Pb, Cd, Cr, Hg			Notes
WT-~~SP03~~ SP3-01	01 A-F	10/5/16	1205	soil	6		X	X		X			X	X			
WT-~~SP03~~ SP3-02	02	↓	1210	↓	6		X	X		X			X	X			
WT-~~SP03~~ SP3-03	03	↓	1215	↓	6		X	X		X			X	X			

Samples received at 4 °C

SIGNATURE	PRINT NAME	COMPANY	DATE	TIME
Relinquished by:	Kristin Anderson	FS	10/5/17	1402
Received by:	DO VO	FOBZ	10-5	14:02
Relinquished by:				
Received by:				

Friedman & Bruya, Inc.
3012 16th Avenue West
Seattle, WA 98119-2029
Ph. (206) 285-8282

FRIEDMAN & BRUYA, INC.

ENVIRONMENTAL CHEMISTS

James E. Bruya, Ph.D.
Yelena Aravkina, M.S.
Michael Erdahl, B.S.
Arina Podnozova, B.S.
Eric Young, B.S.

3012 16th Avenue West
Seattle, WA 98119-2029
(206) 285-8282
fbi@isomedia.com
www.friedmanandbruya.com

April 30, 2018

Lynn Grochala, Project Manager
Floyd-Snider
Two Union Square, Suite 600
601 Union St
Seattle, WA 98101

Dear Ms Grochala:

Included are the results from the testing of material submitted on April 19, 2018 from the SIM-730 EDR, F&BI 804350 project. There are 21 pages included in this report. Any samples that may remain are currently scheduled for disposal in 30 days. If you would like us to return your samples or arrange for long term storage at our offices, please contact us as soon as possible.

We appreciate this opportunity to be of service to you and hope you will call if you should have any questions.

Sincerely,

FRIEDMAN & BRUYA, INC.



Michael Erdahl
Project Manager

Enclosures
c: Kirstin Anderson
FDS0430R.DOC

CASE NARRATIVE

This case narrative encompasses samples received on April 19, 2018 by Friedman & Bruya, Inc. from the Floyd-Snider SIM-730 EDR, F&BI 804350 project. Samples were logged in under the laboratory ID's listed below.

Laboratory ID	Floyd-Snider
804350 -01	WT-SP04-1
804350 -02	WT-SP04-2
804350 -03	WT-SP04-3
804350 -04	A5-1-7'

All quality control requirements were acceptable.

Date of Report: 04/30/18
Date Received: 04/19/18
Project: SIM-730 EDR, F&BI 804350
Date Extracted: 04/23/18
Date Analyzed: 04/23/18

RESULTS FROM THE ANALYSIS OF SOIL SAMPLES FOR TOTAL PETROLEUM HYDROCARBONS AS GASOLINE USING METHOD NWTPH-Gx

Results Reported on a Dry Weight Basis
Results Reported as mg/kg (ppm)

Sample ID Laboratory ID	Gasoline Range	Surrogate (% Recovery) (Limit 50-150)
WT-SP04-1 804350-01	<5	90
WT-SP04-2 804350-02	<5	91
WT-SP04-3 804350-03	<5	90
Method Blank 08-862 MB	<5	89

Date of Report: 04/30/18
Date Received: 04/19/18
Project: SIM-730 EDR, F&BI 804350
Date Extracted: 04/23/18
Date Analyzed: 04/23/18

RESULTS FROM THE ANALYSIS OF SOIL SAMPLES FOR TOTAL PETROLEUM HYDROCARBONS AS DIESEL AND MOTOR OIL USING METHOD NWTPH-Dx

Results Reported on a Dry Weight Basis
Results Reported as mg/kg (ppm)

Sample ID Laboratory ID	Diesel Range (C_{10}-C_{25})	Motor Oil Range (C_{25}-C_{36})	Surrogate (% Recovery) (Limit 56-165)
WT-SP04-1 804350-01	<50	<250	112
WT-SP04-2 804350-02	<50	<250	107
WT-SP04-3 804350-03	<50	<250	99
Method Blank 08-883 MB	<50	<250	97

Analysis For Total Metals By EPA Method 6020A

Client ID:	WT-SP04-1	Client:	Floyd-Snider
Date Received:	04/19/18	Project:	SIM-730 EDR, F&BI 804350
Date Extracted:	04/24/18	Lab ID:	804350-01
Date Analyzed:	04/24/18	Data File:	804350-01.074
Matrix:	Soil	Instrument:	ICPMS2
Units:	mg/kg (ppm) Dry Weight	Operator:	AP

Analyte:	Concentration mg/kg (ppm)
Arsenic	3.75
Cadmium	<1
Chromium	10.6
Lead	3.38
Mercury	<1

Analysis For Total Metals By EPA Method 6020A

Client ID:	WT-SP04-2	Client:	Floyd-Snider
Date Received:	04/19/18	Project:	SIM-730 EDR, F&BI 804350
Date Extracted:	04/24/18	Lab ID:	804350-02
Date Analyzed:	04/24/18	Data File:	804350-02.075
Matrix:	Soil	Instrument:	ICPMS2
Units:	mg/kg (ppm) Dry Weight	Operator:	AP

Analyte:	Concentration mg/kg (ppm)
Arsenic	1.75
Cadmium	<1
Chromium	6.48
Lead	1.55
Mercury	<1

Analysis For Total Metals By EPA Method 6020A

Client ID:	WT-SP04-3	Client:	Floyd-Snider
Date Received:	04/19/18	Project:	SIM-730 EDR, F&BI 804350
Date Extracted:	04/24/18	Lab ID:	804350-03
Date Analyzed:	04/24/18	Data File:	804350-03.076
Matrix:	Soil	Instrument:	ICPMS2
Units:	mg/kg (ppm) Dry Weight	Operator:	AP

Analyte:	Concentration mg/kg (ppm)
Arsenic	1.59
Cadmium	<1
Chromium	5.81
Lead	1.20
Mercury	<1

Analysis For Total Metals By EPA Method 6020A

Client ID:	Method Blank	Client:	Floyd-Snider
Date Received:	NA	Project:	SIM-730 EDR, F&BI 804350
Date Extracted:	04/24/18	Lab ID:	I8-254 mb2
Date Analyzed:	04/24/18	Data File:	I8-254 mb2.071
Matrix:	Soil	Instrument:	ICPMS2
Units:	mg/kg (ppm) Dry Weight	Operator:	AP

Analyte:	Concentration mg/kg (ppm)
Arsenic	<1
Cadmium	<1
Chromium	<1
Lead	<1
Mercury	<1

Analysis For Volatile Compounds By EPA Method 8260C

Client Sample ID:	WT-SP04-1	Client:	Floyd-Snider
Date Received:	04/19/18	Project:	SIM-730 EDR, F&BI 804350
Date Extracted:	04/20/18	Lab ID:	804350-01
Date Analyzed:	04/20/18	Data File:	042024.D
Matrix:	Soil	Instrument:	GCMS4
Units:	mg/kg (ppm) Dry Weight	Operator:	JS

Surrogates:	% Recovery:	Lower Limit:	Upper Limit:
1,2-Dichloroethane-d4	99	62	142
Toluene-d8	98	55	145
4-Bromofluorobenzene	100	65	139

Compounds:	Concentration mg/kg (ppm)
1,1,1-Trichloroethane	<0.05
Benzene	<0.03
Trichloroethene	<0.02
Toluene	<0.05
Tetrachloroethene	<0.025
Ethylbenzene	<0.05
m,p-Xylene	<0.1
o-Xylene	<0.05
Naphthalene	<0.05

Analysis For Volatile Compounds By EPA Method 8260C

Client Sample ID:	WT-SP04-2	Client:	Floyd-Snider
Date Received:	04/19/18	Project:	SIM-730 EDR, F&BI 804350
Date Extracted:	04/20/18	Lab ID:	804350-02
Date Analyzed:	04/20/18	Data File:	042025.D
Matrix:	Soil	Instrument:	GCMS4
Units:	mg/kg (ppm) Dry Weight	Operator:	JS

Surrogates:	% Recovery:	Lower Limit:	Upper Limit:
1,2-Dichloroethane-d4	100	62	142
Toluene-d8	100	55	145
4-Bromofluorobenzene	100	65	139

Compounds:	Concentration mg/kg (ppm)
1,1,1-Trichloroethane	<0.05
Benzene	<0.03
Trichloroethene	<0.02
Toluene	<0.05
Tetrachloroethene	<0.025
Ethylbenzene	<0.05
m,p-Xylene	<0.1
o-Xylene	<0.05
Naphthalene	<0.05

Analysis For Volatile Compounds By EPA Method 8260C

Client Sample ID:	WT-SP04-3	Client:	Floyd-Snider
Date Received:	04/19/18	Project:	SIM-730 EDR, F&BI 804350
Date Extracted:	04/20/18	Lab ID:	804350-03
Date Analyzed:	04/20/18	Data File:	042026.D
Matrix:	Soil	Instrument:	GCMS4
Units:	mg/kg (ppm) Dry Weight	Operator:	JS

Surrogates:	% Recovery:	Lower Limit:	Upper Limit:
1,2-Dichloroethane-d4	100	62	142
Toluene-d8	99	55	145
4-Bromofluorobenzene	99	65	139

Compounds:	Concentration mg/kg (ppm)
1,1,1-Trichloroethane	<0.05
Benzene	<0.03
Trichloroethene	<0.02
Toluene	<0.05
Tetrachloroethene	<0.025
Ethylbenzene	<0.05
m,p-Xylene	<0.1
o-Xylene	<0.05
Naphthalene	<0.05

Analysis For Volatile Compounds By EPA Method 8260C

Client Sample ID:	Method Blank	Client:	Floyd-Snider
Date Received:	Not Applicable	Project:	SIM-730 EDR, F&BI 804350
Date Extracted:	04/20/18	Lab ID:	08-0838 mb
Date Analyzed:	04/20/18	Data File:	042018.D
Matrix:	Soil	Instrument:	GCMS4
Units:	mg/kg (ppm) Dry Weight	Operator:	JS

Surrogates:	% Recovery:	Lower Limit:	Upper Limit:
1,2-Dichloroethane-d4	99	62	142
Toluene-d8	98	55	145
4-Bromofluorobenzene	98	65	139

Compounds:	Concentration mg/kg (ppm)
1,1,1-Trichloroethane	<0.05
Benzene	<0.03
Trichloroethene	<0.02
Toluene	<0.05
Tetrachloroethene	<0.025
Ethylbenzene	<0.05
m,p-Xylene	<0.1
o-Xylene	<0.05
Naphthalene	<0.05

Analysis For PCBs By EPA Method 8082A

Client Sample ID:	WT-SP04-1	Client:	Floyd-Snider
Date Received:	04/19/18	Project:	SIM-730 EDR, F&BI 804350
Date Extracted:	04/24/18	Lab ID:	804350-01 1/6
Date Analyzed:	04/25/18	Data File:	042507.D
Matrix:	Soil	Instrument:	GC7
Units:	mg/kg (ppm) Dry Weight	Operator:	VM

Surrogates:	% Recovery:	Lower Limit:	Upper Limit:
TCMX	81	29	154

Compounds:	Concentration mg/kg (ppm)
Aroclor 1221	<0.02
Aroclor 1232	<0.02
Aroclor 1016	<0.02
Aroclor 1242	<0.02
Aroclor 1248	<0.02
Aroclor 1254	<0.02
Aroclor 1260	<0.02
Aroclor 1262	<0.02
Aroclor 1268	<0.02

Analysis For PCBs By EPA Method 8082A

Client Sample ID:	WT-SP04-2	Client:	Floyd-Snider
Date Received:	04/19/18	Project:	SIM-730 EDR, F&BI 804350
Date Extracted:	04/24/18	Lab ID:	804350-02 1/6
Date Analyzed:	04/25/18	Data File:	042510.D
Matrix:	Soil	Instrument:	GC7
Units:	mg/kg (ppm) Dry Weight	Operator:	VM

Surrogates:	% Recovery:	Lower Limit:	Upper Limit:
TCMX	82	29	154

Compounds:	Concentration mg/kg (ppm)
Aroclor 1221	<0.02
Aroclor 1232	<0.02
Aroclor 1016	<0.02
Aroclor 1242	<0.02
Aroclor 1248	<0.02
Aroclor 1254	<0.02
Aroclor 1260	<0.02
Aroclor 1262	<0.02
Aroclor 1268	<0.02

Analysis For PCBs By EPA Method 8082A

Client Sample ID:	WT-SP04-3	Client:	Floyd-Snider
Date Received:	04/19/18	Project:	SIM-730 EDR, F&BI 804350
Date Extracted:	04/24/18	Lab ID:	804350-03 1/6
Date Analyzed:	04/25/18	Data File:	042511.D
Matrix:	Soil	Instrument:	GC7
Units:	mg/kg (ppm) Dry Weight	Operator:	VM

Surrogates:	% Recovery:	Lower Limit:	Upper Limit:
TCMX	84	29	154

Compounds:	Concentration mg/kg (ppm)
Aroclor 1221	<0.02
Aroclor 1232	<0.02
Aroclor 1016	<0.02
Aroclor 1242	<0.02
Aroclor 1248	<0.02
Aroclor 1254	<0.02
Aroclor 1260	<0.02
Aroclor 1262	<0.02
Aroclor 1268	<0.02

Analysis For PCBs By EPA Method 8082A

Client Sample ID:	Method Blank	Client:	Floyd-Snider
Date Received:	Not Applicable	Project:	SIM-730 EDR, F&BI 804350
Date Extracted:	04/24/18	Lab ID:	08-887 mb 1/6
Date Analyzed:	04/25/18	Data File:	042506.D
Matrix:	Soil	Instrument:	GC7
Units:	mg/kg (ppm) Dry Weight	Operator:	VM

Surrogates:	% Recovery:	Lower Limit:	Upper Limit:
TCMX	84	29	154

Compounds:	Concentration mg/kg (ppm)
Aroclor 1221	<0.02
Aroclor 1232	<0.02
Aroclor 1016	<0.02
Aroclor 1242	<0.02
Aroclor 1248	<0.02
Aroclor 1254	<0.02
Aroclor 1260	<0.02
Aroclor 1262	<0.02
Aroclor 1268	<0.02

Date of Report: 04/30/18
Date Received: 04/19/18
Project: SIM-730 EDR, F&BI 804350

QUALITY ASSURANCE RESULTS FOR THE ANALYSIS OF SOIL SAMPLES FOR TPH AS GASOLINE USING METHOD NWTPH-Gx

Laboratory Code: 804370-01 (Duplicate)

Analyte	Reporting Units	Sample Result (Wet Wt)	Duplicate Result (Wet Wt)	RPD (Limit 20)
Gasoline	mg/kg (ppm)	<5	<5	nm

Laboratory Code: Laboratory Control Sample

Analyte	Reporting Units	Spike Level	Percent Recovery LCS	Acceptance Criteria
Gasoline	mg/kg (ppm)	20	90	71-131

Date of Report: 04/30/18
Date Received: 04/19/18
Project: SIM-730 EDR, F&BI 804350

QUALITY ASSURANCE RESULTS FROM THE ANALYSIS OF SOIL SAMPLES FOR TOTAL PETROLEUM HYDROCARBONS AS DIESEL EXTENDED USING METHOD NWTPH-Dx

Laboratory Code: 804362-08 (Matrix Spike)

Analyte	Reporting Units	Spike Level	Sample Result (Wet Wt)	Percent Recovery MS	Percent Recovery MSD	Acceptance Criteria	RPD (Limit 20)
Diesel Extended	mg/kg (ppm)	5,000	<50	100	90	63-146	11

Laboratory Code: Laboratory Control Sample

Analyte	Reporting Units	Spike Level	Percent Recovery LCS	Acceptance Criteria
Diesel Extended	mg/kg (ppm)	5,000	98	79-144

Date of Report: 04/30/18
Date Received: 04/19/18
Project: SIM-730 EDR, F&BI 804350

QUALITY ASSURANCE RESULTS FOR THE ANALYSIS OF SOIL SAMPLES FOR TOTAL METALS USING EPA METHOD 6020A

Laboratory Code: 804218-12 (Matrix Spike)

Analyte	Reporting Units	Spike Level	Sample Result (Wet wt)	Percent Recovery MS	Percent Recovery MSD	Acceptance Criteria	RPD (Limit 20)
Arsenic	mg/kg (ppm)	10	58.2	101	89	75-125	13
Cadmium	mg/kg (ppm)	10	<1	98	98	75-125	0
Chromium	mg/kg (ppm)	50	7.95	98	99	75-125	1
Lead	mg/kg (ppm)	50	271 ve	59 b	30 b	75-125	65 b
Mercury	mg/kg (ppm	5	<1	101	104	75-125	3

Laboratory Code: Laboratory Control Sample

Analyte	Reporting Units	Spike Level	Percent Recovery LCS	Acceptance Criteria
Arsenic	mg/kg (ppm)	10	105	80-120
Cadmium	mg/kg (ppm)	10	101	80-120
Chromium	mg/kg (ppm)	50	104	80-120
Lead	mg/kg (ppm)	50	102	80-120
Mercury	mg/kg (ppm)	5	101	80-120

Date of Report: 04/30/18
Date Received: 04/19/18
Project: SIM-730 EDR, F&BI 804350

QUALITY ASSURANCE RESULTS FOR THE ANALYSIS OF SOIL SAMPLES FOR VOLATILES BY EPA METHOD 8260C

Laboratory Code: 804350-01 (Matrix Spike)

Analyte	Reporting Units	Spike Level	Sample Result (Wet wt)	Percent Recovery MS	Percent Recovery MSD	Acceptance Criteria	RPD (Limit 20)
1,1,1-Trichloroethane	mg/kg (ppm)	2.5	<0.05	73	75	10-156	3
Benzene	mg/kg (ppm)	2.5	<0.03	74	74	29-129	0
Trichloroethene	mg/kg (ppm)	2.5	<0.02	73	75	21-139	3
Toluene	mg/kg (ppm)	2.5	<0.05	73	75	35-130	3
Tetrachloroethene	mg/kg (ppm)	2.5	<0.025	70	72	20-133	3
Ethylbenzene	mg/kg (ppm)	2.5	<0.05	76	78	32-137	3
m,p-Xylene	mg/kg (ppm)	5	<0.1	76	77	34-136	1
o-Xylene	mg/kg (ppm)	2.5	<0.05	77	79	33-134	3
Naphthalene	mg/kg (ppm)	2.5	<0.05	79	82	14-157	4

Laboratory Code: Laboratory Control Sample

Analyte	Reporting Units	Spike Level	Percent Recovery LCS	Acceptance Criteria
1,1,1-Trichloroethane	mg/kg (ppm)	2.5	99	62-131
Benzene	mg/kg (ppm)	2.5	97	68-114
Trichloroethene	mg/kg (ppm)	2.5	97	64-117
Toluene	mg/kg (ppm)	2.5	95	66-126
Tetrachloroethene	mg/kg (ppm)	2.5	93	72-114
Ethylbenzene	mg/kg (ppm)	2.5	99	64-123
m,p-Xylene	mg/kg (ppm)	5	99	78-122
o-Xylene	mg/kg (ppm)	2.5	100	77-124
Naphthalene	mg/kg (ppm)	2.5	103	63-140

Date of Report: 04/30/18
Date Received: 04/19/18
Project: SIM-730 EDR, F&BI 804350

QUALITY ASSURANCE RESULTS FOR THE ANALYSIS OF SOIL SAMPLES FOR POLYCHLORINATED BIPHENYLS AS AROCLOR 1016/1260 BY EPA METHOD 8082A

Laboratory Code: 804350-01 1/6 (Matrix Spike) 1/6

Analyte	Reporting Units	Spike Level	Sample Result (Wet Wt)	Percent Recovery MS	Percent Recovery MSD	Control Limits	RPD (Limit 20)
Aroclor 1016	mg/kg (ppm)	2	<0.02	98	98	38-122	0
Aroclor 1260	mg/kg (ppm)	2	<0.02	109	107	39-131	2

Laboratory Code: Laboratory Control Sample 1/6

Analyte	Reporting Units	Spike Level	Percent Recovery LCS	Acceptance Criteria
Aroclor 1016	mg/kg (ppm)	2	105	55-130
Aroclor 1260	mg/kg (ppm)	2	118	58-133

Data Qualifiers & Definitions

a - The analyte was detected at a level less than five times the reporting limit. The RPD results may not provide reliable information on the variability of the analysis.

b - The analyte was spiked at a level that was less than five times that present in the sample. Matrix spike recoveries may not be meaningful.

ca - The calibration results for the analyte were outside of acceptance criteria. The value reported is an estimate.

c - The presence of the analyte may be due to carryover from previous sample injections.

cf - The sample was centrifuged prior to analysis.

d - The sample was diluted. Detection limits were raised and surrogate recoveries may not be meaningful.

dv - Insufficient sample volume was available to achieve normal reporting limits.

f - The sample was laboratory filtered prior to analysis.

fb - The analyte was detected in the method blank.

fc - The compound is a common laboratory and field contaminant.

hr - The sample and duplicate were reextracted and reanalyzed. RPD results were still outside of control limits. Variability is attributed to sample inhomogeneity.

hs - Headspace was present in the container used for analysis.

ht – The analysis was performed outside the method or client-specified holding time requirement.

ip - Recovery fell outside of control limits. Compounds in the sample matrix interfered with the quantitation of the analyte.

j - The analyte concentration is reported below the lowest calibration standard. The value reported is an estimate.

J - The internal standard associated with the analyte is out of control limits. The reported concentration is an estimate.

jl - The laboratory control sample(s) percent recovery and/or RPD were out of control limits. The reported concentration should be considered an estimate.

js - The surrogate associated with the analyte is out of control limits. The reported concentration should be considered an estimate.

lc - The presence of the analyte is likely due to laboratory contamination.

L - The reported concentration was generated from a library search.

nm - The analyte was not detected in one or more of the duplicate analyses. Therefore, calculation of the RPD is not applicable.

pc - The sample was received with incorrect preservation or in a container not approved by the method. The value reported should be considered an estimate.

ve - The analyte response exceeded the valid instrument calibration range. The value reported is an estimate.

vo - The value reported fell outside the control limits established for this analyte.

x - The sample chromatographic pattern does not resemble the fuel standard used for quantitation.

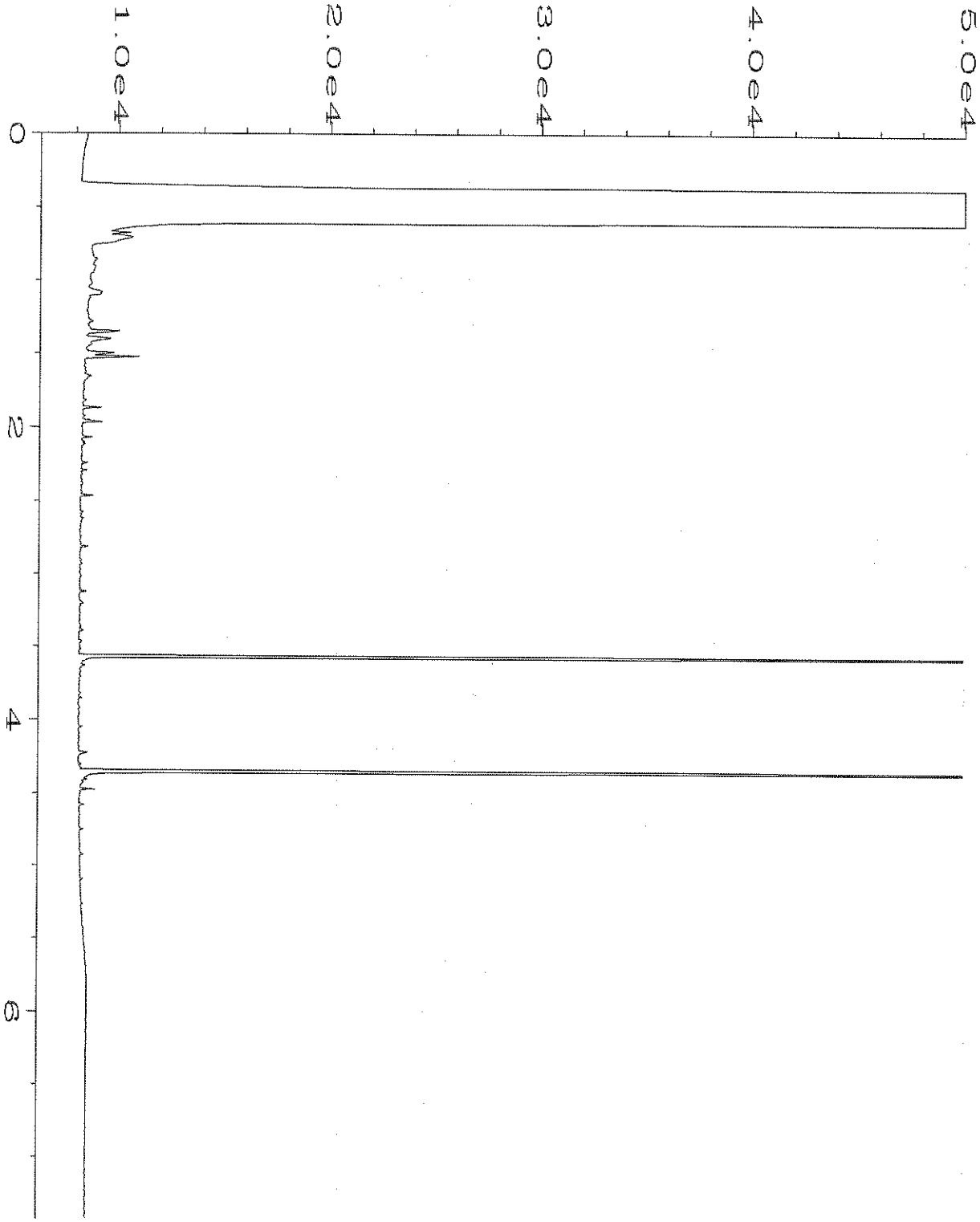

Data File Name : C:\HPCHEM\1\DATA\04-23-18\051F0901.D
Operator : mwdl
Instrument : GC1
Sample Name : 804350-01
Run Time Bar Code:
Acquired on : 23 Apr 18 05:41 PM
Report Created on: 24 Apr 18 08:07 AM

Page Number : 1
Vial Number : 51
Injection Number : 1
Sequence Line : 9
Instrument Method: DX.MTH
Analysis Method : DX.MTH

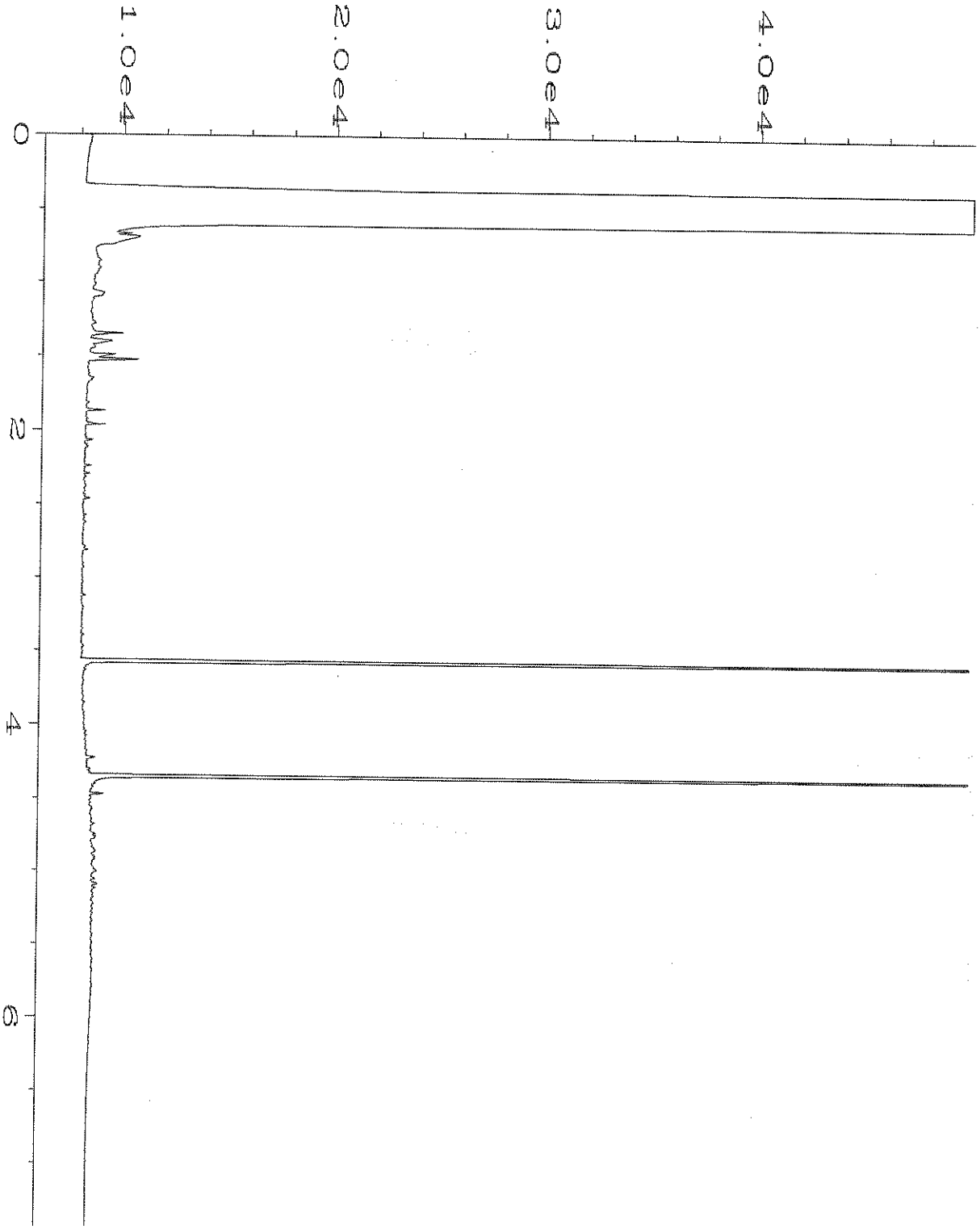

Data File Name : C:\HPCHEM\1\DATA\04-23-18\052F0901.D
Operator : mwdl
Instrument : GC1
Sample Name : 804350-02
Run Time Bar Code:
Acquired on : 23 Apr 18 05:52 PM
Report Created on: 24 Apr 18 08:07 AM

Page Number : 1
Vial Number : 52
Injection Number : 1
Sequence Line : 9
Instrument Method: DX.MTH
Analysis Method : DX.MTH

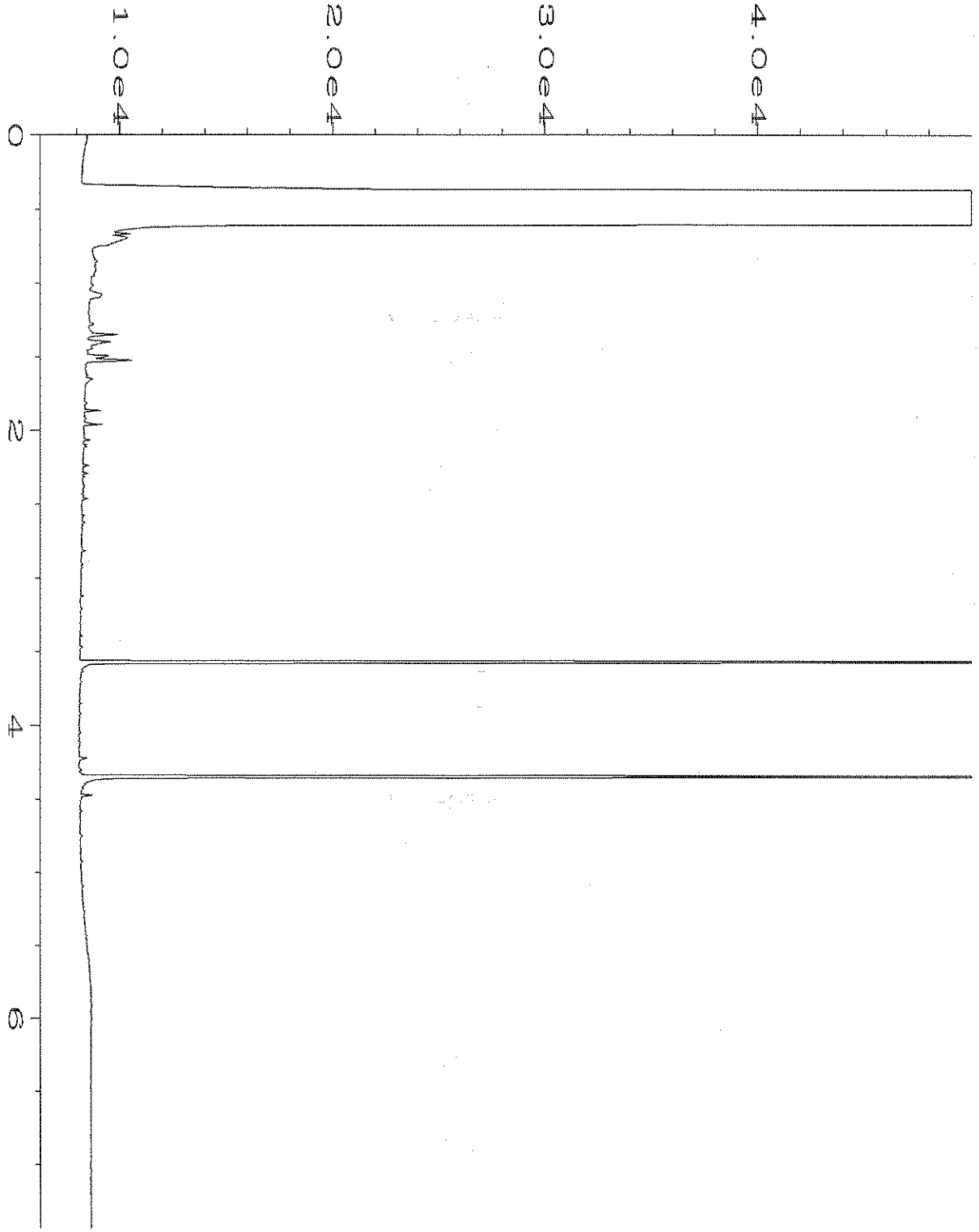

Data File Name	: C:\HPCHEM\1\DATA\04-23-18\053F0901.D		
Operator	: mwdl	Page Number	: 1
Instrument	: GC1	Vial Number	: 53
Sample Name	: 804350-03	Injection Number	: 1
Run Time Bar Code:		Sequence Line	: 9
Acquired on	: 23 Apr 18 06:03 PM	Instrument Method	: DX.MTH
Report Created on:	24 Apr 18 08:07 AM	Analysis Method	: DX.MTH

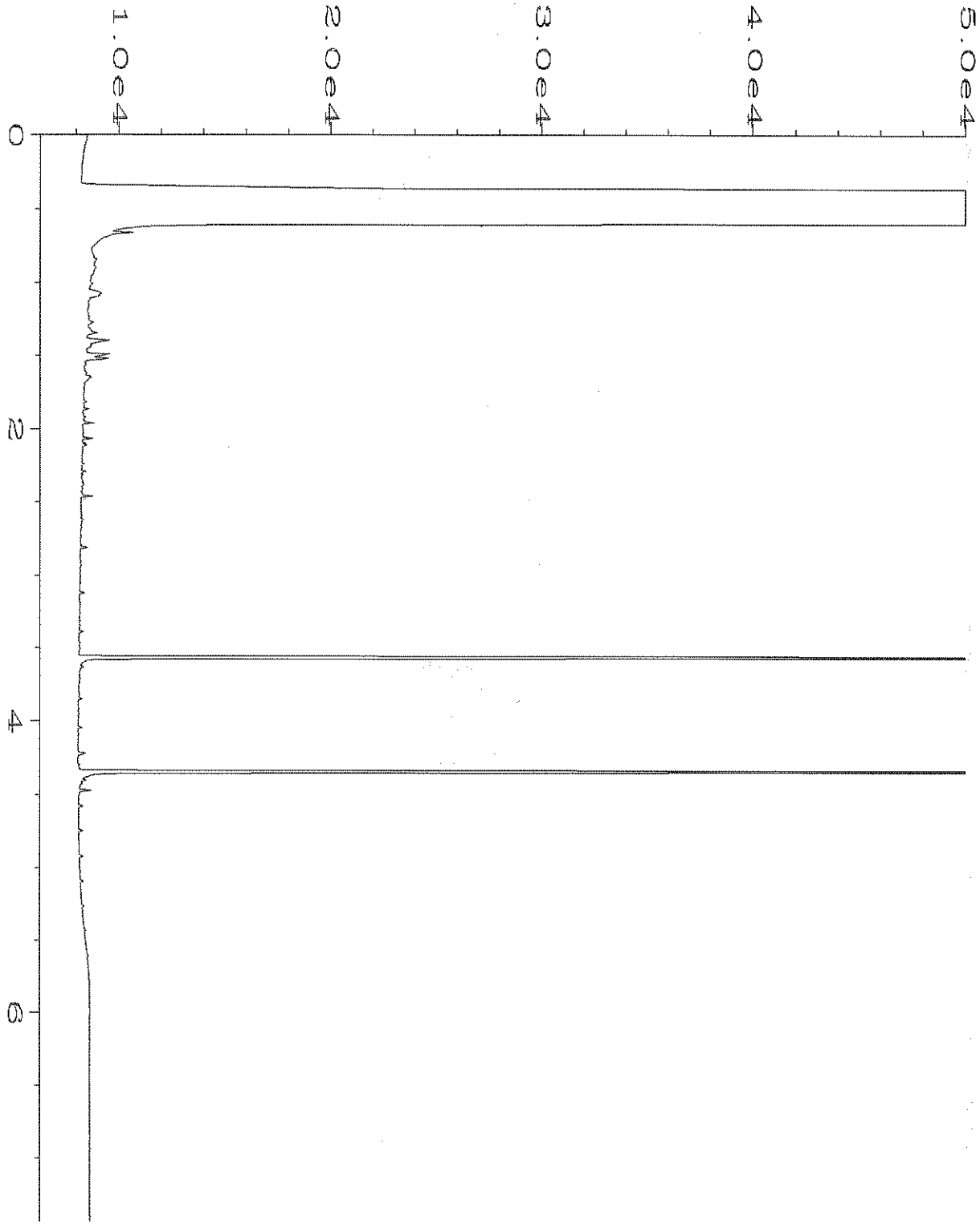

Data File Name : C:\HPCHEM\1\DATA\04-23-18\043F0701.D
Operator : mwdl
Instrument : GC1
Sample Name : 08-883 mb
Run Time Bar Code:
Acquired on : 23 Apr 18 03:48 PM
Report Created on: 24 Apr 18 08:07 AM

Page Number : 1
Vial Number : 43
Injection Number : 1
Sequence Line : 7
Instrument Method: DX.MTH
Analysis Method : DX.MTH

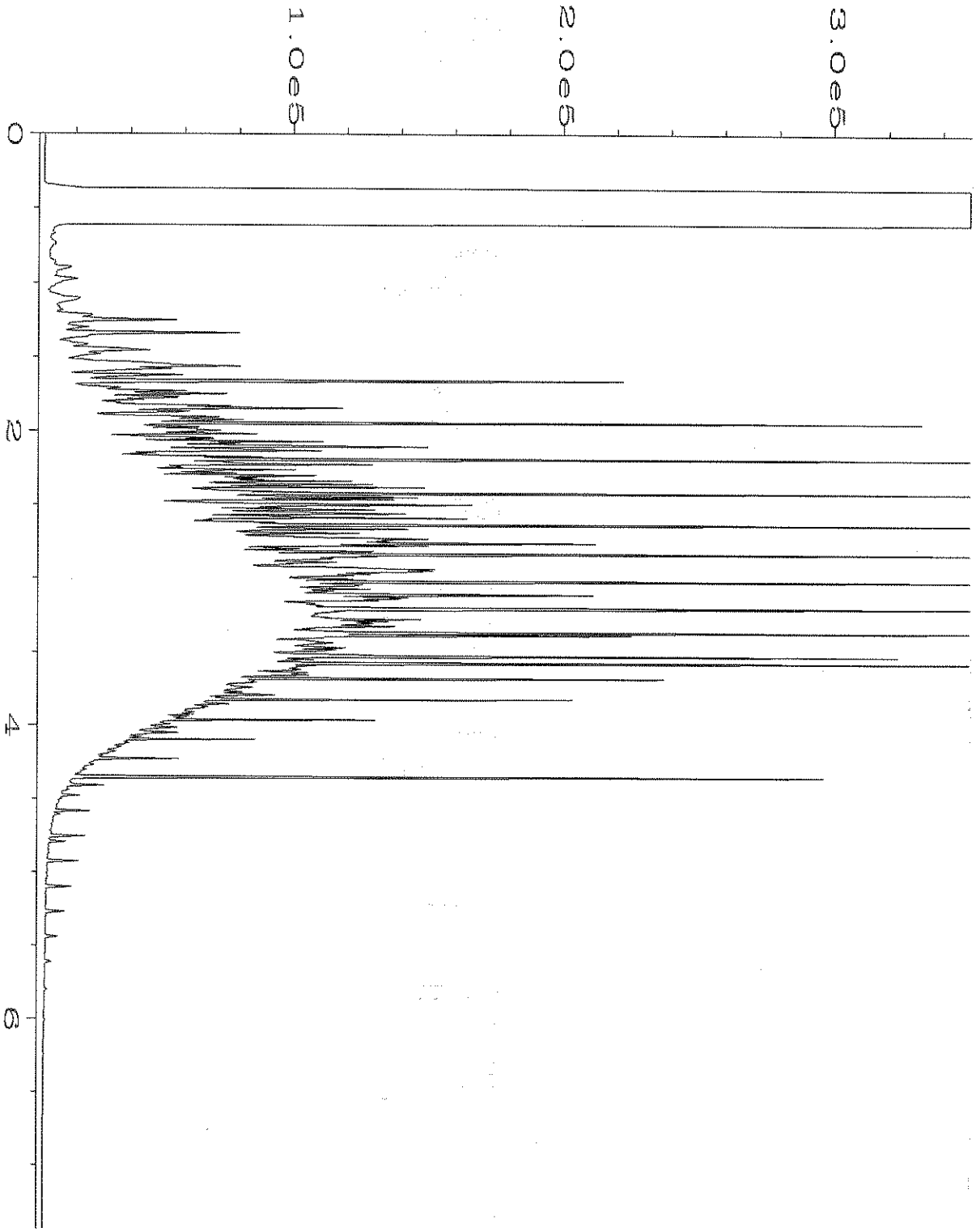

Data File Name	: C:\HPCHEM\1\DATA\04-23-18\005F1001.D		
Operator	: mwdl	Page Number	: 1
Instrument	: GC1	Vial Number	: 5
Sample Name	: 1000 Dx 52-185B	Injection Number	: 1
Run Time Bar Code:		Sequence Line	: 10
Acquired on	: 23 Apr 18 07:10 PM	Instrument Method	: DX.MTH
Report Created on:	24 Apr 18 08:10 AM	Analysis Method	: DX.MTH

804350

SAMPLE CHAIN OF CUSTODY

ME 04-19-18

VSI/BI2

Page # 1 of 1

Report To Lynn Grochala
Company Floyd Snider
Address 601 Union St, Ste 600
City, State, ZIP Seattle, WA 98101
Phone 206-892-2078 Email lynn.grochala@floydsnider.com

SAMPLERS (*signature*)

PROJECT NAME: SIM-730 EDR

PO #

REMARKS: hold composite sample to combine w/sample to be delivered later

INVOICE TO

TURNAROUND TIME
- ☐ Standard Turnaround
- ☒ RUSH 3-day

Rush charges authorized by:

SAMPLE DISPOSAL
- ☒ Dispose after 30 days
- ☐ Archive Samples
- ☐ Other

Sample ID	Lab ID	Date Sampled	Time Sampled	Sample Type	# of Jars	TPH-HCID	TPH-Diesel	TPH-Gasoline	BTEX by 8021B	VOCs by 8260C	SVOCs by 8270D	PAHs 8270D SIM	HOLD	As, Pb, cd, Cr, HA	BTEX, naphthalene, PVE, TCE, 1,1-DCA	PCBs	Notes
WT-SP04						ANALYSES REQUESTED											
~~SP [illegible]~~ -1	01A-C	4/19/18	1615	Soil	6		X	X						X	X	X	
~~WT-SP04~~ ~~SP [illegible]~~ -2	02	↓	1625	↓	6		X	X						X	X	X	
~~WT-SP04~~ ~~SP [illegible]~~ 3	03	↓	1630	↓	6		X	X						X	X	X	
A5-1-7'	04	↓	1600	↓	1								X				hold for composite

SIGNATURE	PRINT NAME	COMPANY	DATE	TIME
Relinquished by:	Kristin Andersen	FS	4/19/18	1735
Received by:	Jon Shimmin	FBI	4/19/18	1735
Relinquished by:				
Received by:				

Samples received at 4 °C

Friedman & Bruya, Inc.
3012 16th Avenue West
Seattle, WA 98119-2029
Ph. (206) 285-8282

3600 Fremont Ave. N.
Seattle, WA 98103
T: (206) 352-3790
F: (206) 352-7178
info@fremontanalytical.com

Friedman & Bruya
Michael Erdahl
3012 16th Ave. W.
Seattle, WA 98119

RE: 709379
Work Order Number: 1709311

September 27, 2017

Attention Michael Erdahl:

Fremont Analytical, Inc. received 5 sample(s) on 9/26/2017 for the analyses presented in the following report.

Mercury by EPA Method 7471
Sample Moisture (Percent Moisture)
Total Metals by EPA Method 6020

This report consists of the following:

- Case Narrative
- Analytical Results
- Applicable Quality Control Summary Reports
- Chain of Custody

All analyses were performed consistent with the Quality Assurance program of Fremont Analytical, Inc. Please contact the laboratory if you should have any questions about the results.

Thank you for using Fremont Analytical.

Sincerely,

Mike Ridgeway
Laboratory Director

Date: *09/27/2017*

CLIENT: Friedman & Bruya
Project: 709379
Work Order: 1709311

Work Order Sample Summary

Lab Sample ID	Client Sample ID	Date/Time Collected	Date/Time Received
1709311-001	WT-SP2-01	09/22/2017 10:00 AM	09/26/2017 3:06 PM
1709311-002	WT-SP2-02	09/22/2017 10:05 AM	09/26/2017 3:06 PM
1709311-003	WT-SP2-03	09/22/2017 10:10 AM	09/26/2017 3:06 PM
1709311-004	WT-SP2-04	09/22/2017 10:15 AM	09/26/2017 3:06 PM
1709311-005	WT-SP2-05	09/22/2017 10:20 AM	09/26/2017 3:06 PM

Case Narrative

WO#: **1709311**
Date: **9/27/2017**

CLIENT: Friedman & Bruya
Project: 709379

WorkOrder Narrative:
I. SAMPLE RECEIPT:
Samples receipt information is recorded on the attached Sample Receipt Checklist.

II. GENERAL REPORTING COMMENTS:
Results are reported on a wet weight basis unless dry-weight correction is denoted in the units field on the analytical report ("mg/kg-dry" or "ug/kg-dry").

Matrix Spike (MS) and MS Duplicate (MSD) samples are tested from an analytical batch of "like" matrix to check for possible matrix effect. The MS and MSD will provide site specific matrix data only for those samples which are spiked by the laboratory. The sample chosen for spike purposes may or may not have been a sample submitted in this sample delivery group. The validity of the analytical procedures for which data is reported in this analytical report is determined by the Laboratory Control Sample (LCS) and the Method Blank (MB). The LCS and the MB are processed with the samples and the MS/MSD to ensure method criteria are achieved throughout the entire analytical process.

III. ANALYSES AND EXCEPTIONS:
Exceptions associated with this report will be footnoted in the analytical results page(s) or the quality control summary page(s) and/or noted below.

Percent moisture provided by client for dry-weight calculation.

Qualifiers:

* - Flagged value is not within established control limits
B - Analyte detected in the associated Method Blank
D - Dilution was required
E - Value above quantitation range
H - Holding times for preparation or analysis exceeded
I - Analyte with an internal standard that does not meet established acceptance criteria
J - Analyte detected below Reporting Limit
N - Tentatively Identified Compound (TIC)
Q - Analyte with an initial or continuing calibration that does not meet established acceptance criteria (<20%RSD, <20% Drift or minimum RRF)
S - Spike recovery outside accepted recovery limits
ND - Not detected at the Reporting Limit
R - High relative percent difference observed

Acronyms:

%Rec - Percent Recovery
CCB - Continued Calibration Blank
CCV - Continued Calibration Verification
DF - Dilution Factor
HEM - Hexane Extractable Material
ICV - Initial Calibration Verification
LCS/LCSD - Laboratory Control Sample / Laboratory Control Sample Duplicate
MB or MBLANK - Method Blank
MDL - Method Detection Limit
MS/MSD - Matrix Spike / Matrix Spike Duplicate
PDS - Post Digestion Spike
Ref Val - Reference Value
RL - Reporting Limit
RPD - Relative Percent Difference
SD - Serial Dilution
SGT - Silica Gel Treatment
SPK - Spike
Surr - Surrogate

Analytical Report

Work Order: **1709311**
Date Reported: **9/27/2017**

Client: Friedman & Bruya
Collection Date: 9/22/2017 10:00:00 AM
Project: 709379
Lab ID: 1709311-001
Matrix: Soil
Client Sample ID: **WT-SP2-01**

Analyses	Result	RL	Qual	Units	DF	Date Analyzed
Mercury by EPA Method 7471				Batch ID: 18332		Analyst: WF
Mercury	ND	0.276		mg/Kg-dry	1	9/27/2017 2:12:55 PM
Total Metals by EPA Method 6020				Batch ID: 18323		Analyst: TN
Arsenic	2.27	0.0884		mg/Kg-dry	1	9/27/2017 12:35:02 PM
Cadmium	ND	0.177		mg/Kg-dry	1	9/27/2017 12:35:02 PM
Chromium	12.5	0.0884		mg/Kg-dry	1	9/27/2017 12:35:02 PM
Lead	3.51	0.177		mg/Kg-dry	1	9/27/2017 12:35:02 PM
Sample Moisture (Percent Moisture)				Batch ID: R38857		Analyst: CW
Percent Moisture	13.0			wt%	1	9/27/2017 11:32:42 AM

Analytical Report

Work Order: **1709311**
Date Reported: **9/27/2017**

Client: Friedman & Bruya
Collection Date: 9/22/2017 10:05:00 AM
Project: 709379
Lab ID: 1709311-002
Matrix: Soil
Client Sample ID: **WT-SP2-02**

Analyses	Result	RL	Qual	Units	DF	Date Analyzed
Mercury by EPA Method 7471				Batch ID: 18332		Analyst: WF
Mercury	ND	0.253		mg/Kg-dry	1	9/27/2017 2:19:25 PM
Total Metals by EPA Method 6020				Batch ID: 18323		Analyst: TN
Arsenic	2.75	0.0817		mg/Kg-dry	1	9/27/2017 12:39:03 PM
Cadmium	ND	0.163		mg/Kg-dry	1	9/27/2017 12:39:03 PM
Chromium	15.5	0.0817		mg/Kg-dry	1	9/27/2017 12:39:03 PM
Lead	6.06	0.163		mg/Kg-dry	1	9/27/2017 12:39:03 PM
Sample Moisture (Percent Moisture)				Batch ID: R38857		Analyst: CW
Percent Moisture	10.0			wt%	1	9/27/2017 11:32:42 AM

Analytical Report

Work Order: **1709311**
Date Reported: **9/27/2017**

Client: Friedman & Bruya
Collection Date: 9/22/2017 10:10:00 AM
Project: 709379
Lab ID: 1709311-003
Matrix: Soil
Client Sample ID: **WT-SP2-03**

Analyses	Result	RL	Qual	Units	DF	Date Analyzed
Mercury by EPA Method 7471				Batch ID: 18332		Analyst: WF
Mercury	ND	0.274		mg/Kg-dry	1	9/27/2017 2:21:01 PM
Total Metals by EPA Method 6020				Batch ID: 18323		Analyst: TN
Arsenic	2.65	0.0892		mg/Kg-dry	1	9/27/2017 12:43:05 PM
Cadmium	ND	0.178		mg/Kg-dry	1	9/27/2017 12:43:05 PM
Chromium	14.6	0.0892		mg/Kg-dry	1	9/27/2017 12:43:05 PM
Lead	4.30	0.178		mg/Kg-dry	1	9/27/2017 12:43:05 PM
Sample Moisture (Percent Moisture)				Batch ID: R38857		Analyst: CW
Percent Moisture	17.0			wt%	1	9/27/2017 11:32:42 AM

Analytical Report

Work Order: **1709311**
Date Reported: **9/27/2017**

Client: Friedman & Bruya
Collection Date: 9/22/2017 10:15:00 AM
Project: 709379
Lab ID: 1709311-004
Matrix: Soil
Client Sample ID: **WT-SP2-04**

Analyses	Result	RL	Qual	Units	DF	Date Analyzed
Mercury by EPA Method 7471				Batch ID: 18332		Analyst: WF
Mercury	ND	0.265		mg/Kg-dry	1	9/27/2017 2:22:37 PM
Total Metals by EPA Method 6020				Batch ID: 18323		Analyst: TN
Arsenic	3.14	0.0814		mg/Kg-dry	1	9/27/2017 12:47:06 PM
Cadmium	ND	0.163		mg/Kg-dry	1	9/27/2017 12:47:06 PM
Chromium	23.0	0.0814		mg/Kg-dry	1	9/27/2017 12:47:06 PM
Lead	3.64	0.163		mg/Kg-dry	1	9/27/2017 12:47:06 PM
Sample Moisture (Percent Moisture)				Batch ID: R38857		Analyst: CW
Percent Moisture	11.0			wt%	1	9/27/2017 11:32:42 AM

Analytical Report

Work Order: **1709311**
Date Reported: **9/27/2017**

Client: Friedman & Bruya
Collection Date: 9/22/2017 10:20:00 AM
Project: 709379
Lab ID: 1709311-005
Matrix: Soil
Client Sample ID: **WT-SP2-05**

Analyses	Result	RL	Qual	Units	DF	Date Analyzed
Mercury by EPA Method 7471				Batch ID: 18332		Analyst: WF
Mercury	ND	0.267		mg/Kg-dry	1	9/27/2017 2:24:13 PM
Total Metals by EPA Method 6020				Batch ID: 18323		Analyst: TN
Arsenic	2.18	0.0891		mg/Kg-dry	1	9/27/2017 12:51:08 PM
Cadmium	ND	0.178		mg/Kg-dry	1	9/27/2017 12:51:08 PM
Chromium	12.9	0.0891		mg/Kg-dry	1	9/27/2017 12:51:08 PM
Lead	4.92	0.178		mg/Kg-dry	1	9/27/2017 12:51:08 PM
Sample Moisture (Percent Moisture)				Batch ID: R38857		Analyst: CW
Percent Moisture	15.0			wt%	1	9/27/2017 11:32:42 AM

Work Order: 1709311
CLIENT: Friedman & Bruya
Project: 709379

QC SUMMARY REPORT

Mercury by EPA Method 7471

Sample ID	**MB-18332**	SampType:	**MBLK**	Units:	**mg/Kg**	Prep Date:	**9/27/2017**	RunNo:	**38859**
Client ID:	**MBLKS**	Batch ID:	**18332**			Analysis Date:	**9/27/2017**	SeqNo:	**747269**

Analyte	Result	RL	SPK value	SPK Ref Val	%REC	LowLimit	HighLimit	RPD Ref Val	%RPD	RPDLimit	Qual
Mercury	ND	0.250									

Sample ID	**LCS-18332**	SampType:	**LCS**	Units:	**mg/Kg**	Prep Date:	**9/27/2017**	RunNo:	**38859**
Client ID:	**LCSS**	Batch ID:	**18332**			Analysis Date:	**9/27/2017**	SeqNo:	**747270**

Analyte	Result	RL	SPK value	SPK Ref Val	%REC	LowLimit	HighLimit	RPD Ref Val	%RPD	RPDLimit	Qual
Mercury	0.540	0.250	0.5000	0	108	80	120				

Sample ID	**1709311-001ADUP**	SampType:	**DUP**	Units:	**mg/Kg-dry**	Prep Date:	**9/27/2017**	RunNo:	**38859**
Client ID:	**WT-SP2-01**	Batch ID:	**18332**			Analysis Date:	**9/27/2017**	SeqNo:	**747272**

Analyte	Result	RL	SPK value	SPK Ref Val	%REC	LowLimit	HighLimit	RPD Ref Val	%RPD	RPDLimit	Qual
Mercury	ND	0.266						0		20	

Sample ID	**1709311-001AMS**	SampType:	**MS**	Units:	**mg/Kg-dry**	Prep Date:	**9/27/2017**	RunNo:	**38859**
Client ID:	**WT-SP2-01**	Batch ID:	**18332**			Analysis Date:	**9/27/2017**	SeqNo:	**747273**

Analyte	Result	RL	SPK value	SPK Ref Val	%REC	LowLimit	HighLimit	RPD Ref Val	%RPD	RPDLimit	Qual
Mercury	0.576	0.266	0.5321	0.02111	104	70	130				

Sample ID	**1709311-001AMSD**	SampType:	**MSD**	Units:	**mg/Kg-dry**	Prep Date:	**9/27/2017**	RunNo:	**38859**
Client ID:	**WT-SP2-01**	Batch ID:	**18332**			Analysis Date:	**9/27/2017**	SeqNo:	**747274**

Analyte	Result	RL	SPK value	SPK Ref Val	%REC	LowLimit	HighLimit	RPD Ref Val	%RPD	RPDLimit	Qual
Mercury	0.582	0.261	0.5225	0.02111	107	70	130	0.5758	1.08	20	

Work Order: 1709311
CLIENT: Friedman & Bruya
Project: 709379

QC SUMMARY REPORT

Total Metals by EPA Method 6020

Sample ID	**MB-18323**	SampType:	**MBLK**			Units:	**mg/Kg**	Prep Date:	**9/27/2017**	RunNo:	**38862**
Client ID:	**MBLKS**	Batch ID:	**18323**					Analysis Date:	**9/27/2017**	SeqNo:	**747141**

Analyte	Result	RL	SPK value	SPK Ref Val	%REC	LowLimit	HighLimit	RPD Ref Val	%RPD	RPDLimit	Qual
Arsenic	ND	0.0806									
Cadmium	ND	0.161									
Chromium	ND	0.0806									
Lead	ND	0.161									

Sample ID	**LCS-18323**	SampType:	**LCS**			Units:	**mg/Kg**	Prep Date:	**9/27/2017**	RunNo:	**38862**
Client ID:	**LCSS**	Batch ID:	**18323**					Analysis Date:	**9/27/2017**	SeqNo:	**747142**

Analyte	Result	RL	SPK value	SPK Ref Val	%REC	LowLimit	HighLimit	RPD Ref Val	%RPD	RPDLimit	Qual
Arsenic	39.6	0.0806	40.32	0	98.1	80	120				
Cadmium	1.95	0.161	2.016	0	96.9	80	120				
Chromium	40.9	0.0806	40.32	0	101	80	120				
Lead	20.0	0.161	20.16	0	99.0	80	120				

Sample ID	**1709311-001ADUP**	SampType:	**DUP**			Units:	**mg/Kg-dry**	Prep Date:	**9/27/2017**	RunNo:	**38862**
Client ID:	**WT-SP2-01**	Batch ID:	**18323**					Analysis Date:	**9/27/2017**	SeqNo:	**747249**

Analyte	Result	RL	SPK value	SPK Ref Val	%REC	LowLimit	HighLimit	RPD Ref Val	%RPD	RPDLimit	Qual
Arsenic	2.42	0.0877						2.268	6.33	20	
Cadmium	ND	0.175						0		20	
Chromium	12.2	0.0877						12.50	2.18	20	
Lead	3.84	0.175						3.507	8.94	20	

Sample ID	**1709311-001AMS**	SampType:	**MS**			Units:	**mg/Kg-dry**	Prep Date:	**9/27/2017**	RunNo:	**38862**
Client ID:	**WT-SP2-01**	Batch ID:	**18323**					Analysis Date:	**9/27/2017**	SeqNo:	**747251**

Analyte	Result	RL	SPK value	SPK Ref Val	%REC	LowLimit	HighLimit	RPD Ref Val	%RPD	RPDLimit	Qual
Arsenic	45.5	0.0884	44.21	2.268	97.8	75	125				
Cadmium	2.17	0.177	2.210	0.05460	95.6	75	125				

Work Order: 1709311
CLIENT: Friedman & Bruya
Project: 709379

QC SUMMARY REPORT

Total Metals by EPA Method 6020

Sample ID **1709311-001AMS** SampType: **MS** Units: **mg/Kg-dry** Prep Date: **9/27/2017** RunNo: **38862**
Client ID: **WT-SP2-01** Batch ID: **18323** Analysis Date: **9/27/2017** SeqNo: **747251**

Analyte	Result	RL	SPK value	SPK Ref Val	%REC	LowLimit	HighLimit	RPD Ref Val	%RPD	RPDLimit	Qual
Chromium	59.5	0.0884	44.21	12.50	106	75	125				
Lead	24.2	0.177	22.10	3.507	93.5	75	125				

Sample ID **1709311-001AMSD** SampType: **MSD** Units: **mg/Kg-dry** Prep Date: **9/27/2017** RunNo: **38862**
Client ID: **WT-SP2-01** Batch ID: **18323** Analysis Date: **9/27/2017** SeqNo: **747254**

Analyte	Result	RL	SPK value	SPK Ref Val	%REC	LowLimit	HighLimit	RPD Ref Val	%RPD	RPDLimit	Qual
Arsenic	44.4	0.0884	44.21	2.268	95.2	75	125	45.50	2.53	20	
Cadmium	2.29	0.177	2.210	0.05460	101	75	125	2.168	5.48	20	
Chromium	59.3	0.0884	44.21	12.50	106	75	125	59.51	0.432	20	
Lead	24.1	0.177	22.10	3.507	93.2	75	125	24.17	0.252	20	

Sample Log-In Check List

Client Name:	**FB**	Work Order Number:	**1709311**
Logged by:	**Brianna Barnes**	Date Received:	**9/26/2017 3:06:00 PM**

Chain of Custody

1.	Is Chain of Custody complete?	Yes ☑	No ☐	Not Present ☐
2.	How was the sample delivered?	FedEx		

Log In

3.	Coolers are present?	Yes ☐	No ☑	NA ☐
		No cooler present		
4.	Shipping container/cooler in good condition?	Yes ☑	No ☐	
5.	Custody Seals present on shipping container/cooler? (Refer to comments for Custody Seals not intact)	Yes ☐	No ☐	Not Required ☑
6.	Was an attempt made to cool the samples?	Yes ☑	No ☐	NA ☐
7.	Were all items received at a temperature of >0°C to 10.0°C *	Yes ☑	No ☐	NA ☐
8.	Sample(s) in proper container(s)?	Yes ☑	No ☐	
9.	Sufficient sample volume for indicated test(s)?	Yes ☑	No ☐	
10.	Are samples properly preserved?	Yes ☑	No ☐	
11.	Was preservative added to bottles?	Yes ☐	No ☑	NA ☐
12.	Is there headspace in the VOA vials?	Yes ☐	No ☐	NA ☑
13.	Did all samples containers arrive in good condition(unbroken)?	Yes ☑	No ☐	
14.	Does paperwork match bottle labels?	Yes ☑	No ☐	
15.	Are matrices correctly identified on Chain of Custody?	Yes ☑	No ☐	
16.	Is it clear what analyses were requested?	Yes ☑	No ☐	
17.	Were all holding times able to be met?	Yes ☑	No ☐	

Special Handling (if applicable)

18.	Was client notified of all discrepancies with this order?	Yes ☐	No ☐	NA ☑

Person Notified: _____ Date _____

By Whom: _____ Via: ☐ eMail ☐ Phone ☐ Fax ☐ In Person

Regarding: _____

Client Instructions: _____

19. Additional remarks:

Item Information

Item #	Temp ºC
Sample	5.6

* Note: DoD/ELAP and TNI require items to be received at 4°C +/- 2°C

SUBCONTRACT SAMPLE CHAIN OF CUSTODY

1709311

Page # 1 of 1

Page 14 of 14

Send Report To Michael Erdahl

Company Friedman and Bruya, Inc.

Address 3012 16th Ave W

City, State, ZIP Seattle, WA 98119

Phone # (206) 285-8282 Fax # (206) 283-5044

SUBCONTRACTER Fremont

PROJECT NAME/NO.	PO #
709379	F-100

REMARKS Flosd Snider EDD
Please Email Results

TURNAROUND TIME
☐ Standard (2 Weeks)
☒ RUSH 9/27/17 ASAP
Rush charges authorized by: MS

SAMPLE DISPOSAL
☐ Dispose after 30 days
☐ Return samples
☐ Will call with instructions

Sample ID	Lab ID	Date Sampled	Time Sampled	Matrix	# of jars	ANALYSES REQUESTED: Dioxins/Furans	EPH	VPH	Nitrate	Sulfate	Alkalinity	TOC-9060M	MTCA 5 Metals			Notes
WT-SP2-01		9/22/17	1000	soil	1								X			% of Solids 87
WT-SP2-02			1005		1								X			90
WT-SP2-03			1010		1								X			83
WT-SP2-04			1015		1								X			89
WT-SP2-05			1020		1								X			85

Friedman & Bruya, Inc.
3012 16th Avenue West
Seattle, WA 98119-2029
Ph. (206) 285-8282
Fax (206) 283-5044

SIGNATURE	PRINT NAME	COMPANY	DATE	TIME
Relinquished by:	Michael Erdahl	Friedman and Bruya	9/26/17	1315
Received by:	Brianna Barnes	FAI	9/26/17	1500
Relinquished by:				
Received by:				

Whitehead Tyee Site

Interim Action Completion Report

Appendix E
Disposal Documentation

Disposal Summary Tables

Table E.1
Class 2 Soil Disposal Summary

Date	Destination	Ticket #	Tons	Date	Destination	Ticket #	Tons
07/27/2017	Iron Mountain Quarry LLC	85830	13.98	08/24/2017	Iron Mountain Quarry LLC	89703	31.17
		85832	14.41			89629	33.71
08/02/2017	Iron Mountain Quarry LLC	86672	33.2			89787	30.1
		86630	28.44			89780	30.62
		86618	31.28	08/25/2017	Iron Mountain Quarry LLC	89828	30.9
		86574	36.9			89898	32.88
		86576	37.08			89901	30.31
08/03/2017	Iron Mountain Quarry LLC	86831	30.18			89905	30.35
		86761	32.11			89837	33.69
		86679	34.61			89833	37.55
		86710	36.04	08/28/2017	Iron Mountain Quarry LLC	90243	33.83
		86845	31.69	08/31/2017	Iron Mountain Quarry LLC	90802	36.44
08/04/2017	Iron Mountain Quarry LLC	87015	31.84			90814	37.01
		86933	29.96			90905	30.22
		86981	34.3			90926	36.14
		86909	31.15	09/01/2017	Iron Mountain Quarry LLC	91000	38.1
08/07/2017	Iron Mountain Quarry LLC	87141	31.16			91002	38.14
		87212	31.18			91108	33.86
		87298	30.13			91103	33.1
		87291	37.15			91157	34.98
08/08/2017	Iron Mountain Quarry LLC	87412	31.57	09/05/2017	Iron Mountain Quarry LLC	91242	26.82
		87368	30.16			91309	30.08
		87327	30.88			91240	21.56
		87418	31.16			91308	28.97
08/09/2017	Iron Mountain Quarry LLC	87473	30.4	09/06/2017	Iron Mountain Quarry LLC	91361	32.95
		87546	32.79			91463	35.99
		87472	31.16			91418	32.99
		87532	31.31			91362	32.24
		87625	31.77			91468	35.29
		87604	30.48	09/07/2017	Iron Mountain Quarry LLC	91602	30.37
08/10/2017	Iron Mountain Quarry LLC	87785	36.21			91526	33.32
		87716	31.51			91674	31
		87651	32.85			91582	26.22
		87710	34.15			91493	30.39
		87780	33.66			91650	30.53
08/11/2017	Iron Mountain Quarry LLC	87825	36.72			91527	36.44
		87890	30.12			91630	30.46
		87945	32.22			91519	34.95
		87844	34.75	09/08/2017	Iron Mountain Quarry LLC	91835	26
08/14/2017	Iron Mountain Quarry LLC	88038	30.62			91752	26.6
		88097	30.12			91861	30.56
		88156	32.7			91709	29.27
		88042	30.73			91792	30.77
		88112	32.44			91751	30.47
		88172	31.52			91829	30.22
08/15/2017	Iron Mountain Quarry LLC	88202	30.66			91840	33.28
		88282	30.42	09/11/2017	Iron Mountain Quarry LLC	92125	30.43
		88350	30.98			92053	38.66
		88199	29.84			92054	38.64
		88361	31.95			92131	29.08
08/16/2017	Iron Mountain Quarry LLC	88432	32.07			92182	32.34
		88376	31.8			92123	31.73
		88430	32.84			92051	37.36
		88491	36.31			92037	34.5
		88502	34.11			92213	27.83
08/17/2017	Iron Mountain Quarry LLC	88531	32.47			92152	32.02
		88532	32.73	09/12/2017	Iron Mountain Quarry LLC	92231	33.1
		88585	32.92			92322	33.22
		88582	33.34			92329	32.9
		88645	33.1			92234	30.39
		88642	36.6			92217	30.28
08/23/2017	Iron Mountain Quarry LLC	89357	30.25			92319	33.17
		89475	32.94			92233	31.23
		89567	34.34			92235	32.22
		89355	32.86			92331	32.96
		89589	32.56			92403	33.04
		89489	32.12			92384	31.24

Table E.1
Class 2 Soil Disposal Summary

Date	Destination	Ticket #	Tons	Date	Destination	Ticket #	Tons
09/13/2017	Iron Mountain Quarry LLC	92409	30.2	09/25/2017	Iron Mountain Quarry LLC	94038	31.65
		92482	30.48			94086	26
		92493	30.13			94026	26
		92494	30.45			94087	26
		92546	30.86			94028	26.18
		92557	30.33			94083	32.35
		92426	30.32			94022	26
		92565	30.2			94094	31.56
		92495	29.5			94137	30.05
		92569	30.93			94140	30.52
		92538	31.89			94144	30.95
09/14/2017	Iron Mountain Quarry LLC	92602	30.85	09/27/2017	Iron Mountain Quarry LLC	94371	31.46
		92670	30.4			94479	35.22
		92722	30.09	09/28/2017	Iron Mountain Quarry LLC	94620	26
		92663	31.09			94624	30.97
		92613	30.97			94611	28.97
		92731	30.79			94513	30.64
		92675	30.81			94609	26
		92621	32.04			94715	26
		92726	30.48			94693	26
		92665	30.46			94518	26
		92664	30.57			94506	31.96
		92729	33.47			94704	31.43
09/15/2017	Iron Mountain Quarry LLC	92766	32.09	09/29/2017	Iron Mountain Quarry LLC	94745	25.77
		92863	32.98			94881	29.36
		92760	32.07			94834	31.04
		92780	32.29			94748	30.3
		92841	30.67			94818	29.31
		92868	30.63			94821	29.4
		92878	32.27			94880	31.3
09/19/2017	Iron Mountain Quarry LLC	93462	26			94758	32.87
		93401	30.34			94819	25.77
		93333	30.27			94822	28.01
		93335	30.42			94894	30.1
		93396	26	10/02/2017	Iron Mountain Quarry LLC	95066	28.08
		93468	31.86			95057	32.73
		93467	32.23			94996	30.41
		93408	30.02			94984	33.14
		93360	30.1			95102	27.74
09/20/2017	Iron Mountain Quarry LLC	93500	33.21			95028	29.14
		93572	32.67			95133	27.72
		93573	29.32			95065	32.03
		93610	26			94993	32.97
		93569	33.96			95130	26.1
		93496	27.36			95117	29.93
		93603	26.62			95249	26.71
		93503	30.36			95247	29.89
		93563	35.68			95316	28.92
09/21/2017	Iron Mountain Quarry LLC	93704	30.58	10/03/2017	Iron Mountain Quarry LLC	95228	32.36
		93619	31.55			95329	34.9
		93719	29.65			95382	31.88
		93731	26			95312	30.64
		93631	26			95330	29.12
		93703	26			95175	30.67
		93667	30.38			95385	36.93
		93721	26	10/04/2017	Iron Mountain Quarry LLC	95627	30.7
09/22/2017	Iron Mountain Quarry LLC	93833	24.32			95647	34.81
		93759	26			95619	33.5
		93760	26			95418	25.37
		93788	30.5			95529	25.39
		93884	31.77			95440	32.59
		93882	31.55			95552	30.2
		93857	31.48			95545	32.4
		93837	26			95434	33.83
		93886	34.33			95428	33.96
						95532	33.4
						95618	27.92

Table E.1
Class 2 Soil Disposal Summary

Date	Destination	Ticket #	Tons	Date	Destination	Ticket #	Tons
10/05/2017	Iron Mountain Quarry LLC	95695	33.16	10/18/2017	Iron Mountain Quarry LLC	97722	30.52
		95766	34.04			97622	30.89
		95699	34.27			97739	29.65
		95773	33.14			97638	30.14
		95755	34.61			97630	31.65
		95673	34.6			97735	31.73
		95830	28.01			97733	33.22
		95837	32.88			97786	30.46
		95762	31.19			97615	28.99
		95675	29.42			97736	27.98
		95816	34.76			97618	30.03
10/06/2017	Iron Mountain Quarry LLC	95849	29.79			97602	31.01
		95919	29.99			97712	31.11
		95874	28.36	10/19/2017	Iron Mountain Quarry LLC	97825	37.51
		95882	32.33			97816	32.67
		95970	32.96			97832	34.59
		95941	27.39			97848	23.26
		95940	34.22	11/01/2017	Iron Mountain Quarry LLC	100243	32.36
		95872	31.29	11/02/2017	Iron Mountain Quarry LLC	100426	33.63
		95930	33.45			100319	29.24
		95978	32.22			50	30.13
10/09/2017	Iron Mountain Quarry LLC	96222	34.23	11/03/2017	Iron Mountain Quarry LLC	127	33.04
		96147	32.83			150	31.59
		96136	32.98			76	28.42
		96206	34.55			16	30.92
		96143	32.26			146	33
		96216	38.24			126	30.31
		96286	35.97	11/06/2017	Iron Mountain Quarry LLC	299	32.36
		96308	38.6			369	33.96
		96302	39.93			367	34.38
10/10/2017	Iron Mountain Quarry LLC	96339	39.75			295	31.75
		96442	37.57			294	31
		96432	38.37	11/07/2017	Iron Mountain Quarry LLC	483	29.22
		96511	31.96			488	32.77
		96463	37.43			407	36.05
		96506	35.06			503	30.96
10/11/2017	Iron Mountain Quarry LLC	96695	26.9			424	39.07
		96542	34.44			589	32.65
		96623	35.58			573	32.48
		96540	32.52			597	29.71
		96690	33	11/08/2017	Iron Mountain Quarry LLC	712	32.64
		96607	26.86			625	34.94
		96613	34.47			704	34.47
		96537	32.08			624	34.24
		96722	32.11			804	29.39
		96721	29.82			803	33.13
10/12/2017	Iron Mountain Quarry LLC	96822	39.33			612	34.86
		96747	35.77			692	35.18
		96841	36.59			789	29.82
		96818	30.78	11/09/2017	Iron Mountain Quarry LLC	1018	28.43
		96897	26.69			914	29.83
		96915	32.86			928	28.97
10/13/2017	Iron Mountain Quarry LLC	97005	31.31			920	30.4
		96923	35.28			828	32.8
		97083	30.56	11/10/2017	Iron Mountain Quarry LLC	1024	34.1
		97073	27.86	11/13/2017	Iron Mountain Quarry LLC	1343	32.8
		97004	26.96			1365	31.65
		96941	33.71			1296	32.37
		97019	35.94	11/14/2017	Iron Mountain Quarry LLC	1511	33.83
		96945	27.33			1508	24.53
		97015	28.77	11/15/2017	Iron Mountain Quarry LLC	1662	27.31
		97013	34.59			1669	32.36
		97093	31.03	11/20/2017	Iron Mountain Quarry LLC	2321	33.67

Table E.1
Class 2 Soil Disposal Summary

Date	Destination	Ticket #	Tons	Date	Destination	Ticket #	Tons
11/21/2017	Iron Mountain Quarry LLC	2365	37.57	12/01/2017	Iron Mountain Quarry LLC	3295	31.83
11/22/2017	Iron Mountain Quarry LLC	2512	30.12			3300	33.62
		2445	18.09			3367	34.14
		2447	14.17			3453	35.2
		2451	24.39			3458	32.64
11/27/2017	Iron Mountain Quarry LLC	2693	36.1			3380	34.86
		2689	31.9	12/04/2017	Iron Mountain Quarry LLC	3572	32
11/28/2017	Iron Mountain Quarry LLC	2766	31.25			3587	30.09
		2852	27.7			3572	32
		2861	31.09	12/09/2017	Iron Mountain Quarry LLC	4414	14.5
		2787	36.29	03/30/2018	Iron Mountain Quarry LLC	15224	33.11
11/30/2017	Iron Mountain Quarry LLC	3245	30.11	04/04/2018	Iron Mountain Quarry LLC	15798	35.64
		3230	30.32			15662	33.07
		3209	36.92	04/25/2018	Iron Mountain Quarry LLC	18218	31.3
				04/26/2018	Iron Mountain Quarry LLC	18359	34.58
						18302	36.16
						18414	31.6
				04/30/2018	Iron Mountain Quarry LLC	18719	33.21
						18797	35.38
				05/02/2018	Iron Mountain Quarry LLC	18960	32.36
				05/04/2018	Iron Mountain Quarry LLC	19242	33.21
						19287	30.24
						Total	**13,459**

Table E.2
Recycled Concrete Summary

Date	Destination	Cubic Yards
07/27/2017	Renton Concrete Recyclers	110
07/28/2017	Renton Concrete Recyclers	100
08/07/2017	Renton Concrete Recyclers	40
08/08/2017	Renton Concrete Recyclers	32
08/10/2017	Renton Concrete Recyclers	20
08/11/2017	Renton Concrete Recyclers	18
08/15/2017	Renton Concrete Recyclers	58
08/16/2017	Renton Concrete Recyclers	30
08/24/2017	Renton Concrete Recyclers	60
08/28/2017	Renton Concrete Recyclers	40
09/19/2017	Renton Concrete Recyclers	100
09/20/2017	Renton Concrete Recyclers	80
09/21/2017	Renton Concrete Recyclers	34
10/11/2017	Renton Concrete Recyclers	100
10/12/2017	Renton Concrete Recyclers	80
10/13/2017	Renton Concrete Recyclers	104
11/03/2017	Renton Concrete Recyclers	120
11/20/2017	Renton Concrete Recyclers	20
12/21/2017	Renton Concrete Recyclers	10
03/30/2018	Renton Concrete Recyclers	20
	Total	**1,176**

Table E.3
Subtitle D Soil Disposal Summary

Date	Destination	Ticket #	Tons
Heavy Oil-Range Organics Excavation			
08/30/2017	Alaska Street Reload and Recycle Facility	137557	17.28
		137555	14.52
		137553	16.55
		137551	15.3
		137549	16.77
		137546	15.03
		137544	17.87
		137538	14.23
		137536	16.68
		137535	14.77
		137533	15.52
		137531	12.96
		137524	16.03
		137523	13.93
		137518	15.77
		137514	15.02
		137509	15.85
08/31/2017	Alaska Street Reload and Recycle Facility	137585	30.61
		137578	30.21
		137575	27.76
		137568	30.6
		137565	29.51
		137562	28.21
		Total	**441**

Table E.3
Subtitle D Soil Disposal Summary

Date	Destination	Ticket #	Tons
Stoddard Solvent Excavation			
09/06/2017	8th Ave Reload Facility	10293	10.28
		10296	11.55
		10299	14.19
		10302	14.23
		10304	11.97
		10323	14.04
		10325	14.45
		10332	15.86
		10343	15.64
		10348	16.69
09/07/2017	8th Ave Reload Facility	10461	26.48
		10469	27.94
09/11/2017	8th Ave Reload Facility	10592	31.18
		10605	30.09
		10614	28.83
09/12/2017	8th Ave Reload Facility	10665	30.22
09/13/2017	8th Ave Reload Facility	10666	37.1
		10668	37.3
		10669	30.97
		10670	33.33
		10671	37.35
		10673	35.92
		10675	24.5
09/15/2017	8th Ave Reload Facility	10818	27.8
		10819	24.5
		10827	28.81
		10837	32.21
09/22/2017	8th Ave Reload Facility	11496	33.95
		11502	30.19
		11509	34.57
		11517	31.16
09/27/2017	8th Ave Reload Facility	11979	21.65
		11981	24.99
		11986	24.26
		12058	25.5
		12076	32.84
		Total	**923**

Table E.3
Subtitle D Soil Disposal Summary

Date	Destination	Ticket #	Tons
Pump Station Area			
11/13/2017	8th Ave Reload Facility	15467	12.47
		15472	12.94
		15476	16.2
		15479	14.73
		15492	16.99
		15514	14.5
		15526	17.66
		15554	12.78
11/14/2017	8th Ave Reload Facility	15595	14.53
		15614	7.3
11/15/2017	8th Ave Reload Facility	15646	12.01
		15651	15.73
		15652	12.35
		15657	13.59
		15663	12.99
		15666	10.07
		15680	12.19
		15683	14.96
11/16/2017	8th Ave Reload Facility	15709	14.11
		15712	14.06
		15718	14.34
		15725	14.46
		15754	11.42
12/15/2017	Alaska Street Reload and Recycle Facility	139805	8.59
		Total	**321**

Disposal Tickets

CLASS 2 SOIL DISPOSAL
BID ITEM 32A
July 27-AUGUST 31, 2017

Date	Ticket #	TONS
7/27/2017	085830	13.98
7/27/2017	085832	14.41
8/2/2017	086672	33.20
8/2/2017	086630	28.44
8/2/2017	086618	31.28
8/2/2017	086574	36.90
8/2/2017	086576	37.08
8/3/2017	086831	30.18
8/3/2017	086761	32.11
8/3/2017	086679	34.61
8/3/2017	086710	36.04
8/3/2017	086845	31.69
8/4/2017	087015	31.84
8/4/2017	086933	29.96
8/4/2017	086981	34.30
8/4/2017	086909	31.15
8/7/2017	087141	31.16
8/7/2017	087212	31.18
8/7/2017	087298	30.13
8/7/2017	087291	37.15
8/8/2017	087412	31.57
8/8/2017	087368	30.16
8/8/2017	087327	30.88
8/8/2017	087418	31.16
8/9/2017	087473	30.40
8/9/2017	087546	32.79
8/9/2017	087472	31.16
8/9/2017	087532	31.31
8/9/2017	087625	31.77
8/9/2017	087604	30.48
8/10/2017	087785	36.21
8/10/2017	087716	31.51
8/10/2017	087651	32.85
8/10/2017	087710	34.15
8/10/2017	087780	33.66
8/11/2017	087825	36.72
8/11/2017	087890	30.12
8/11/2017	087945	32.22
8/11/2017	087844	34.75
8/14/2017	088038	30.62
8/14/2017	088097	30.12
8/14/2017	088156	32.70
8/14/2017	088042	30.73

CLASS 2 SOIL DISPOSAL
BID ITEM 32A
July 27-AUGUST 31, 2017

Date	Ticket #	TONS
8/14/2017	088112	32.44
8/14/2017	088172	31.52
8/15/2017	088202	30.66
8/15/2017	088282	30.42
8/15/2017	088350	30.98
8/15/2017	088199	29.84
8/15/2017	088361	31.95
8/16/2017	088432	32.07
8/16/2017	088376	31.80
8/16/2017	088430	32.84
8/16/2017	088491	36.31
8/16/2017	088502	34.11
8/17/2017	088531	32.47
8/17/2017	088532	32.73
8/17/2017	088585	32.92
8/17/2017	088582	33.34
8/17/2017	088645	33.10
8/17/2017	088642	36.60
8/23/2017	089357	30.25
8/23/2017	089475	32.94
8/23/2017	089567	34.34
8/23/2017	089355	32.86
8/23/2017	089589	32.56
8/23/2017	089489	32.12
8/24/2017	089703	31.17
8/24/2017	089629	33.71
8/24/2017	089787	30.10
8/24/2017	089780	30.62
8/25/2017	089828	30.90
8/25/2017	089898	32.88
8/25/2017	089901	30.31
8/25/2017	089905	30.35
8/25/2017	089837	33.69
8/25/2017	089833	37.55
8/28/2017	090243	33.83
8/31/2017	090802	36.44
8/31/2017	090814	37.01
8/31/2017	090905	30.22
8/31/2017	090926	36.14
	Total	2630.92

IRON MOUNTAIN QUARRY LLC

Quarry site: 20800 Wayside Mine Rd – Granite Falls WA
Phone: (Toll Free) 1-866-672-3434

DATE 07/27/2017 **TIME** 6:56 **TICKET#** 065830

CUSTOMER 944 GLACIER ENVIRONMENTAL ☐ **CASH** ☐ **CHARGE**

JOB 4 730 S MERTLE ST SEATTLE **PO#** 2186

HAULER 2189 SCOLERI TRUCKING **TRUCK#** SSCOLERI X ☐ **HIRED**

PRODUCT 51 4X8" ROCK

GROSS	54560	**PRICE**	
TARE	26600	**SUBTOTAL**	
NET LB	27960	**TAX**	
NET TN	13.98	**TOTAL**	

RYAN 206 979-5850

WEIGHER

Terms: Net 30 days from the end of the month. A finance charge will be assessed on all past due accounts at a rate of 1-1/2% PER MONTH. Annual Finance Charge of 18%. Notice: It is specifically agreed that this company shall not be in any way responsible for damage to customers property resulting in Deliveries beyond curb line.

DRIVER'S SIGNATURE

IRON MOUNTAIN QUARRY LLC

Quarry site: 20800 Wayside Mine Rd – Granite Falls WA

Phone: (Toll Free) 1-866-672-3434

DATE _____ **TIME** _____ **TICKET#** _____

CUSTOMER _____ ☐ **CASH** ☐ **CHARGE**

JOB _____ **PO#** _____

HAULER _____ **TRUCK#** _____ ☐ **HIRED**

PRODUCT _____

PRICE _____

SUBTOTAL _____

TAX _____

TOTAL _____

_____

WEIGHER

Terms: Net 30 days from the end of the month. A finance charge will be assessed on all past due accounts at a rate of 1-1/2% PER MONTH. Annual Finance Charge of 18%. Notice: It is specifically agreed that this company shall not be in any way responsible for damage to customers property resulting in Deliveries beyond curb line.

DRIVER'S SIGNATURE _____

IRON MOUNTAIN QUARRY LLC

Quarry site: 20800 Wayside Mine Rd – Granite Falls WA
Phone: (Toll Free) 1-866-672-3434

DATE 08/02/2017 **TIME** 15:50 **TICKET#** 005672

CUSTOMER 044 GLACIER ENVIRONMENTAL ☐ **CASH** ☐ **CHARGE**

JOB 4 730 S MERTLE ST **PO#** _____

HAULER 2510 WESTSIDE LLC **TRUCK#** WS1 X ☐ **HIRED**

PRODUCT 500 CLASS 2 PETROLEUM CONTAM SOIL

GROSS	107660	**PRICE**	_____
TARE	41260	**SUBTOTAL**	_____
NET LB	66400	**TAX**	_____
NET TN	33.20	**TOTAL**	_____

1171

_____
WEIGHER

Terms: Net 30 days from the end of the month. A finance charge will be assessed on all past due accounts at a rate of 1-1/2% PER MONTH. Annual Finance Charge of 18%. Notice: It is specifically agreed that this company shall not be in any way responsible for damage to customers property resulting in Deliveries beyond curb line.

DRIVER'S SIGNATURE _____

IRON MOUNTAIN QUARRY LLC

Quarry site: 20800 Wayside Mine Rd – Granite Falls WA
Phone: (Toll Free) 1-866-672-3434

DATE 09/02/2017 **TIME** 13:00 **TICKET#** 086630

CUSTOMER 044 GLACIER ENVIRONMENTAL ☐ **CASH** ☐ **CHARGE**

JOB 4 730 S MERTLE ST **PO#** _____

HAULER 2363 SCOLERI TRUCKING **TRUCK#** SCOLERI X ☐ **HIRED**

PRODUCT 500 CLASS 2 PETROLEUM CONTAM SOIL

GROSS	96680	**PRICE**	_____
TARE	41000	**SUBTOTAL**	_____
NET LB	56080	**TAX**	_____
NET TN	28.44	**TOTAL**	_____

2193

_____
WEIGHER

Terms: Net 30 days from the end of the month. A finance charge will be assessed on all past due accounts at a rate of 1-1/2% PER MONTH. Annual Finance Charge of 18%. Notice: It is specifically agreed that this company shall not be in any way responsible for damage to customers property resulting in Deliveries beyond curb line.

DRIVER'S SIGNATURE _____

IRON MOUNTAIN QUARRY LLC

Quarry site: 20800 Wayside Mine Rd – Granite Falls WA
Phone: (Toll Free) 1-866-672-3434

DATE 08/02/2017 **TIME** 12:16 **TICKET#** 086618

CUSTOMER 844 GLACIER ENVIRONMENTAL ☐ **CASH** ☐ **CHARGE**

JOB 4 730 S MERTLE ST **PO#** _____

HAULER 2518 WESTSIDE LLC **TRUCK#** W31 X ☐ **HIRED**

PRODUCT 500 CLASS 2 PETROLEUM CONTAM SOIL

GROSS	103820	**PRICE**	_____
TARE	41260	**SUBTOTAL**	_____
NET LB	62560	**TAX**	_____
NET TN	31.28	**TOTAL**	_____

1171

_____
WEIGHER

Terms: Net 30 days from the end of the month. A finance charge will be assessed on all past due accounts at a rate of 1-1/2% PER MONTH. Annual Finance Charge of 18%. Notice: It is specifically agreed that this company shall not be in any way responsible for damage to customers property resulting in Deliveries beyond curb line.

DRIVER'S SIGNATURE _____

IRON MOUNTAIN QUARRY LLC

Quarry site: 20800 Wayside Mine Rd – Granite Falls WA
Phone: (Toll Free) 1-866-672-3434

DATE 08/02/2017 **TIME** 9:16 **TICKET#** 0866574

CUSTOMER 844 GLACIER ENVIRONMENTAL ☐ **CASH** ☐ **CHARGE**

JOB 4 730 S MERTLE ST (1111) **PO#** _____

HAULER 2510 WESTSIDE LLC **TRUCK#** WS1 X ☐ **HIRED**

PRODUCT 500 CLASS 2 PETROLEUM CONTAM SOIL

GROSS	115060	**PRICE**	
TARE	41260	**SUBTOTAL**	
NET LB	73800	**TAX**	
NET TN	36.90	**TOTAL**	

1171

WEIGHER

Terms: Net 30 days from the end of the month. A finance charge will be assessed on all past due accounts at a rate of 1-1/2% PER MONTH. Annual Finance Charge of 18%. Notice: It is specifically agreed that this company shall not be in any way responsible for damage to customers property resulting in Deliveries beyond curb line.

DRIVER'S SIGNATURE _____

IRON MOUNTAIN QUARRY LLC

Quarry site: 20800 Wayside Mine Rd – Granite Falls WA
Phone: (Toll Free) 1-866-672-3434

DATE 08/02/2017 **TIME** 9:20 **TICKET#** 086576

CUSTOMER 946 GLACIER ENVIRONMENTAL ☐ **CASH** ☐ **CHARGE**

JOB 730 S MERTLE ST **PO#** _____

HAULER 2363 SCOLERI TRUCKING **TRUCK#** SCOLERI X ☐ **HIRED**

PRODUCT 303 CLASS B PETROLEUM CONTAM SOIL

GROSS	115960	**PRICE**	_____
TARE	41800	**SUBTOTAL**	_____
NET LB	74160	**TAX**	_____
NET TN	37.08	**TOTAL**	_____

2193

_____
WEIGHER

Terms: Net 30 days from the end of the month. A finance charge will be assessed on all past due accounts at a rate of 1-1/2% PER MONTH. Annual Finance Charge of 18%. Notice: It is specifically agreed that this company shall not be in any way responsible for damage to customers property resulting in Deliveries beyond curb line.

DRIVER'S SIGNATURE _____

IRON MOUNTAIN QUARRY LLC

Quarry site: 20800 Wayside Mine Rd – Granite Falls WA
Phone: (Toll Free) 1-866-672-3434

06/03/2017 14:16 686401

DATE _____ **TIME** _____ **TICKET#** _____

844 GLACIER ENVIRONMENTAL

CUSTOMER _____ ☐ **CASH** ☐ **CHARGE**

4 720 S MERTLE ST

JOB _____ **PO#** _____

23653 SCOLERT TRUCKING SCOLERT X

HAULER _____ **TRUCK#** _____ ☐ **HIRED**

500 CLASS 2 PETROLEUM CONTAM SOIL

PRODUCT _____

GROSS	102160	**PRICE**	_____
TARE	41860	**SUBTOTAL**	_____
NET LB	60300	**TAX**	_____
NET TN	30.15	**TOTAL**	_____

2194

_____
WEIGHER

Terms: Net 30 days from the end of the month. A finance charge will be assessed on all past due accounts at a rate of 1-1/2% PER MONTH. Annual Finance Charge of 18%. Notice: It is specifically agreed that this company shall not be in any way responsible for damage to customers property resulting in Deliveries beyond curb line.

DRIVER'S SIGNATURE _____

IRON MOUNTAIN QUARRY LLC

Quarry site: 20800 Wayside Mine Rd – Granite Falls WA
Phone: (Toll Free) 1-866-672-3434

DATE 08/03/2017 **TIME** 10:33 **TICKET#** 006761

CUSTOMER 944 GLACIER ENVIRONMENTAL ☐ **CASH** ☐ **CHARGE**

JOB 4 730 S MERTLE ST **PO#** _____

HAULER 2363 SCOLERI TRUCKING **TRUCK#** SCOLERI X☐ **HIRED**

PRODUCT 508 CLASS 2 PETROLEUM CONTAM SOIL

GROSS	106020	**PRICE**	_____
TARE	41800	**SUBTOTAL**	_____
NET LB	64220	**TAX**	_____
NET TN	32.11	**TOTAL**	_____

2194

_____
WEIGHER

Terms: Net 30 days from the end of the month. A finance charge will be assessed on all past due accounts at a rate of 1-1/2% PER MONTH. Annual Finance Charge of 18%. Notice: It is specifically agreed that this company shall not be in any way responsible for damage to customers property resulting in Deliveries beyond curb line.

DRIVER'S SIGNATURE _____

IRON MOUNTAIN QUARRY LLC

Quarry site: 20800 Wayside Mine Rd – Granite Falls WA
Phone: (Toll Free) 1-866-672-3434

DATE 06/23/2017 **TIME** 6:41 **TICKET#** 086679

CUSTOMER 944 GLACIER ENVIRONMENTAL ☐ **CASH** ☐ **CHARGE**

JOB 4 730 S MERTLE ST **PO#** _____

HAULER 2063 SCOLERI TRUCKING **TRUCK#** SCOLERI X ☐ **HIRED**

PRODUCT 308 CLASS 2 PETROLEUM CONTAM SOIL

GROSS	111820	**PRICE**	
TARE	41800	**SUBTOTAL**	
NET LB	69220	**TAX**	
NET TN	34.61	**TOTAL**	

219(

_____
WEIGHER

Terms: Net 30 days from the end of the month. A finance charge will be assessed on all past due accounts at a rate of 1-1/2% PER MONTH. Annual Finance Charge of 18%. Notice: It is specifically agreed that this company shall not be in any way responsible for damage to customers property resulting in Deliveries beyond curb line.

DRIVER'S SIGNATURE _____

IRON MOUNTAIN QUARRY LLC

Quarry site: 20800 Wayside Mine Rd – Granite Falls WA
Phone: (Toll Free) 1-866-672-3434

DATE 08/03/2017 **TIME** 8:21 **TICKET#** 086710

CUSTOMER 644 GLACIER ENVIRONMENTAL ☐ **CASH** ☐ **CHARGE**

JOB 4 730 S MERTLE ST **PO#** _____

HAULER 2518 WESTSIDE LLC **TRUCK#** WS1 X ☐ **HIRED**

PRODUCT 500 CLASS 2 PETROLEUM CONTAM SOIL

GROSS	113340	**PRICE**	
TARE	41260	**SUBTOTAL**	
NET LB	72080	**TAX**	
NET TN	36.04	**TOTAL**	

1173

WEIGHER

Terms: Net 30 days from the end of the month. A finance charge will be assessed on all past due accounts at a rate of 1-1/2% PER MONTH. Annual Finance Charge of 18%. Notice: It is specifically agreed that this company shall not be in any way responsible for damage to customers property resulting in Deliveries beyond curb line.

DRIVER'S SIGNATURE _____

IRON MOUNTAIN QUARRY LLC

Quarry site: 20800 Wayside Mine Rd – Granite Falls WA
Phone: (Toll Free) 1-866-672-3434

08/03/2017 14:42 086043

DATE _____ **TIME** _____ **TICKET#** _____

844 GLACIER ENVIRONMENTAL /

CUSTOMER _____ ☐ **CASH** ☐ **CHARGE**

4 739 S MERTLE ST

JOB _____ **PO#** _____

2518 WESTSIDE LLC WS1 X

HAULER _____ **TRUCK#** _____ ☐ **HIRED**

500 CLASS 2 PETROLEUM CONTAM SOIL

PRODUCT _____

GROSS	104640	**PRICE**	_____
TARE	41260	**SUBTOTAL**	_____
NET LB	63380	**TAX**	_____
NET TN	31.69	**TOTAL**	_____

1174

_____
WEIGHER

Terms: Net 30 days from the end of the month. A finance charge will be assessed on all past due accounts at a rate of 1-1/2% PER MONTH. Annual Finance Charge of 18%. Notice: It is specifically agreed that this company shall not be in any way responsible for damage to customers property resulting in Deliveries beyond curb line.

DRIVER'S SIGNATURE _____

IRON MOUNTAIN QUARRY LLC

Quarry site: 20800 Wayside Mine Rd – Granite Falls WA
Phone: (Toll Free) 1-866-672-3434

08/04/2017 12:31 8872017

DATE _____ **TIME** _____ **TICKET#** _____

844 GLACIER ENVIRONMENTAL

CUSTOMER _____ ☐ **CASH** ☐ **CHARGE**

4 720 S BERTLE ST

JOB _____ **PO#** _____

2363 SCOLERT TRUCKING SCOLERT

HAULER _____ **TRUCK#** _____ ☐ **HIRED**

500 CLASS 2 PETROLEUM CONTAM SOIL

PRODUCT _____

GROSS	105480	**PRICE**	$ _____
TARE	41800	**SUBTOTAL**	_____
NET LB	63680	**TAX**	_____
NET TN	31.84	**TOTAL**	_____

_____
WEIGHER

Terms: Net 30 days from the end of the month. A finance charge will be assessed on all past due accounts at a rate of 1-1/2% PER MONTH. Annual Finance Charge of 18%. Notice: It is specifically agreed that this company shall not be in any way responsible for damage to customers property resulting in Deliveries beyond curb line.

DRIVER'S SIGNATURE _____

IRON MOUNTAIN QUARRY LLC

Quarry site: 20800 Wayside Mine Rd – Granite Falls WA
Phone: (Toll Free) 1-866-672-3434

08/04/2017 9:15 068570

DATE _____ **TIME** _____ **TICKET#** _____

444 GLACIER ENVIRONMENTAL

CUSTOMER _____ ☐ **CASH** ☐ **CHARGE**

730 S NEKTLE ST

JOB _____ **PO#** _____

2363 SCOLERI TRUCKING SCOLERI

HAULER _____ **TRUCK#** _____ ☐ **HIRED**

500 CLASS B PETROLEUM CONTAM SOIL

PRODUCT _____

GROSS	101720	**PRICE**	_____
TARE	41980	**SUBTOTAL**	_____
NET LB	59740	**TAX**	_____
NET TN	29.87	**TOTAL**	_____

2196

_____
WEIGHER

Terms: Net 30 days from the end of the month. A finance charge will be assessed on all past due accounts at a rate of 1-1/2% PER MONTH. Annual Finance Charge of 18%. Notice: It is specifically agreed that this company shall not be in any way responsible for damage to customers property resulting in Deliveries beyond curb line.

DRIVER'S SIGNATURE _____

IRON MOUNTAIN QUARRY LLC

Quarry site: 20800 Wayside Mine Rd – Granite Falls WA
Phone: (Toll Free) 1-866-672-3434

09/04/2017 11:14 080781

DATE _____ **TIME** _____ **TICKET#** _____

844 GLACIER ENVIRONMENTAL

CUSTOMER _____ ☐ **CASH** ☐ **CHARGE**

730 S MEPTLE ST

JOB _____ **PO#** _____

2510 WESTSIDE LLC

HAULER _____ **TRUCK#** 801 ☐ **HIRED**

PRODUCT 588 CLASS 2 PETROLEUM CONTENT SOIL

GROSS	199860	**PRICE**	_____
TARE	81260	**SUBTOTAL**	_____
NET LB	68600	**TAX**	_____
NET TN	34.30	**TOTAL**	_____

1176

_____
WEIGHER

Terms: Net 30 days from the end of the month. A finance charge will be assessed on all past due accounts at a rate of 1-1/2% PER MONTH. Annual Finance Charge of 18%. Notice: It is specifically agreed that this company shall not be in any way responsible for damage to customers property resulting in Deliveries beyond curb line.

DRIVER'S SIGNATURE _____

IRON MOUNTAIN QUARRY LLC

Quarry site: 20800 Wayside Mine Rd – Granite Falls WA
Phone: (Toll Free) 1-866-672-3434

08/04/2017 8:21 0826749

DATE _____ **TIME** _____ **TICKET#** _____

844 GLACIER ENVIRONMENTAL

CUSTOMER _____ ☐ **CASH** ☐ **CHARGE**

4 730 S MERTLE ST

JOB _____ **PO#** _____

2510 WESTSIDE LLC WS1 X

HAULER _____ **TRUCK#** _____ ☐ **HIRED**

500 CLASS 2 PETROLEUM CONTAM SOIL

PRODUCT _____

GROSS	103560	PRICE	_____
TARE	41260	SUBTOTAL	_____
NET LB	62300	TAX	_____
NET TN	31.15	TOTAL	_____

1176

_____
WEIGHER

Terms: Net 30 days from the end of the month. A finance charge will be assessed on all past due accounts at a rate of 1-1/2% PER MONTH. Annual Finance Charge of 18%. Notice: It is specifically agreed that this company shall not be in any way responsible for damage to customers property resulting in Deliveries beyond curb line.

DRIVER'S SIGNATURE _____

IRON MOUNTAIN QUARRY LLC

Quarry site: 20800 Wayside Mine Rd – Granite Falls WA
Phone: (Toll Free) 1-866-672-3434

DATE _____ TIME _____ TICKET# _____

CUSTOMER _____ ☐ CASH ☐ CHARGE

JOB _____ PO# _____

HAULER _____ TRUCK# _____ ☐ HIRED

PRODUCT _____

		PRICE _____
		SUBTOTAL _____
		TAX _____
		TOTAL _____

_____
WEIGHER

Terms: Net 30 days from the end of the month. A finance charge will be assessed on all past due accounts at a rate of 1-1/2% PER MONTH. Annual Finance Charge of 18%. Notice: It is specifically agreed that this company shall not be in any way responsible for damage to customers property resulting in Deliveries beyond curb line.

DRIVER'S SIGNATURE _____

IRON MOUNTAIN QUARRY LLC

Quarry site: 20800 Wayside Mine Rd – Granite Falls WA
Phone: (Toll Free) 1-866-672-3434

DATE _____ TIME _____ TICKET# _____

CUSTOMER _____ ☐ CASH ☐ CHARGE

JOB _____ PO# _____

HAULER _____ TRUCK# _____ ☐ HIRED

PRODUCT _____

PRICE _____

SUBTOTAL _____

TAX _____

TOTAL _____

_____
WEIGHER

Terms: Net 30 days from the end of the month. A finance charge will be assessed on all past due accounts at a rate of 1-1/2% PER MONTH. Annual Finance Charge of 18%. Notice: It is specifically agreed that this company shall not be in any way responsible for damage to customers property resulting in Deliveries beyond curb line.

DRIVER'S SIGNATURE _____

IRON MOUNTAIN QUARRY LLC

Quarry site: 20800 Wayside Mine Rd – Granite Falls WA
Phone: (Toll Free) 1-866-672-3434

DATE _____ TIME _____ TICKET# _____

CUSTOMER _____ ☐ CASH ☐ CHARGE

JOB _____ PO# _____

HAULER _____ TRUCK# _____ ☐ HIRED

PRODUCT _____

PRICE _____

SUBTOTAL _____

TAX _____

TOTAL _____

_____
WEIGHER

Terms: Net 30 days from the end of the month. A finance charge will be assessed on all past due accounts at a rate of 1-1/2% PER MONTH. Annual Finance Charge of 18%. Notice: It is specifically agreed that this company shall not be in any way responsible for damage to customers property resulting in Deliveries beyond curb line.

DRIVER'S SIGNATURE _____

IRON MOUNTAIN QUARRY LLC

Quarry site: 20800 Wayside Mine Rd – Granite Falls WA
Phone: (Toll Free) 1-866-672-3434

DATE 06/07/2017 TIME 14:46 TICKET# 807291

CUSTOMER 214 GLACIER ENVIRONMENTAL ☐ CASH ☐ CHARGE

JOB 1 PSE 0 DEPTH 3" PO# _____

HAULER 2516 AEGIS LLC TRUCK# 351 ☐ HIRED

PRODUCT 5/8 TYPE 1 CRUSHED RENTAL SAT

[illegible]	[illegible]	PRICE
[illegible]	[illegible]	SUBTOTAL
SAT 13	74058	TAX
SAT 17	21.13	TOTAL

WEIGHER

Terms: Net 30 days from the end of the month. A finance charge will be assessed on all past due accounts at a rate of 1-1/2% PER MONTH. Annual Finance Charge of 18%. Notice: It is specifically agreed that this company shall not be in any way responsible for damage to customers property resulting in Deliveries beyond curb line.

DRIVER'S SIGNATURE _____

IRON MOUNTAIN QUARRY LLC

Quarry site: 20800 Wayside Mine Rd – Granite Falls WA
Phone: (Toll Free) 1-866-672-3434

DATE _____ TIME _____ TICKET# _____

CUSTOMER _____ ☐ CASH ☐ CHARGE

JOB _____ PO# _____

HAULER _____ TRUCK# _____ ☐ HIRED

PRODUCT _____

PRICE _____

SUBTOTAL _____

TAX _____

TOTAL _____

_____
WEIGHER

Terms: Net 30 days from the end of the month. A finance charge will be assessed on all past due accounts at a rate of 1-1/2% PER MONTH. Annual Finance Charge of 18%. Notice: It is specifically agreed that this company shall not be in any way responsible for damage to customers property resulting in Deliveries beyond curb line.

DRIVER'S SIGNATURE _____

IRON MOUNTAIN QUARRY LLC

Quarry site: 20800 Wayside Mine Rd – Granite Falls WA
Phone: (Toll Free) 1-866-672-3434

DATE _____ TIME _____ TICKET# _____

CUSTOMER _____ ☐ CASH ☐ CHARGE

JOB _____ PO# _____

HAULER _____ TRUCK# _____ ☐ HIRED

PRODUCT _____

PRICE _____

SUBTOTAL _____

TAX _____

TOTAL _____

_____
WEIGHER

Terms: Net 30 days from the end of the month. A finance charge will be assessed on all past due accounts at a rate of 1-1/2% PER MONTH. Annual Finance Charge of 18%. Notice: It is specifically agreed that this company shall not be in any way responsible for damage to customers property resulting in Deliveries beyond curb line.

DRIVER'S SIGNATURE _____

IRON MOUNTAIN QUARRY LLC

Quarry site: 20800 Wayside Mine Rd – Granite Falls WA
Phone: (Toll Free) 1-866-672-3434

DATE _____ TIME _____ TICKET# _____

CUSTOMER _____ ☐ CASH ☐ CHARGE

JOB _____ PO# _____

HAULER _____ TRUCK# _____ ☐ HIRED

PRODUCT _____

PRICE _____

SUBTOTAL _____

TAX _____

TOTAL _____

_____
WEIGHER

Terms: Net 30 days from the end of the month. A finance charge will be assessed on all past due accounts at a rate of 1-1/2% PER MONTH. Annual Finance Charge of 18%. Notice: It is specifically agreed that this company shall not be in any way responsible for damage to customers property resulting in Deliveries beyond cnrb line.

DRIVER'S SIGNATURE _____

IRON MOUNTAIN QUARRY LLC

Quarry site: 20800 Wayside Mine Rd – Granite Falls WA
Phone: (Toll Free) 1-866-672-3434

DATE _____ TIME _____ TICKET# _____

CUSTOMER _____ ☐ CASH ☐ CHARGE

JOB _____ PO# _____

HAULER _____ TRUCK# _____ ☐ HIRED

PRODUCT _____

PRICE _____

SUBTOTAL _____

TAX _____

TOTAL _____

_____
WEIGHER

Terms: Net 30 days from the end of the month. A finance charge will be assessed on all past due accounts at a rate of 1-1/2% PER MONTH. Annual Finance Charge of 18%. Notice: It is specifically agreed that this company shall not be in any way responsible for damage to customers property resulting in Deliveries beyond curb line.

DRIVER'S SIGNATURE _____

IRON MOUNTAIN QUARRY LLC

Quarry site: 20800 Wayside Mine Rd – Granite Falls WA
Phone: (Toll Free) 1-866-672-3434

08/09/2017 7:52 867473

DATE _____ **TIME** _____ **TICKET#** _____

844 GLACIER ENVIRONMENTAL

CUSTOMER _____ ☐ **CASH** ☐ **CHARGE**

4 730 S MERTLE ST

JOB _____ **PO#** _____

2363 SCOLERT TRUCKING SCOLERT X

HAULER _____ **TRUCK#** _____ ☐ **HIRED**

500 CLASS 2 PETROLEUM CONTAM SOIL

PRODUCT _____

GROSS	102600	**PRICE**	_____
TARE	41000	**SUBTOTAL**	_____
NET LBS	61600	**TAX**	_____
NET TN	30.40	**TOTAL**	_____

2054

_____
WEIGHER

Terms: Net 30 days from the end of the month. A finance charge will be assessed on all past due accounts at a rate of 1-1/2% PER MONTH. Annual Finance Charge of 18%. Notice: It is specifically agreed that this company shall not be in any way responsible for damage to customers property resulting in Deliveries beyond curb line.

DRIVER'S SIGNATURE _____

IRON MOUNTAIN QUARRY LLC

Quarry site: 20800 Wayside Mine Rd – Granite Falls WA
Phone: (Toll Free) 1-866-672-3434

08/09/2017 **DATE** _____ 11:49 **TIME** _____ 887546 **TICKET#** _____

844 GLACIER ENVIRONMENTAL
CUSTOMER _____ ☐ **CASH** ☐ **CHARGE**

4 730 S MERTLE ST
JOB _____ **PO#** _____

2363 SCOLERT TRUCKING
HAULER _____ **TRUCK#** SCOLERT _____ X ☐ **HIRED**

598 CLASS 2 PETROLEUM CONTAM SOIL
PRODUCT _____

GROSS	107380	**PRICE**	_____
TARE	41880	**SUBTOTAL**	_____
NET LB	65580	**TAX**	_____
NET TN	32.79	**TOTAL**	_____

2054

_____
WEIGHER

Terms: Net 30 days from the end of the month. A finance charge will be assessed on all past due accounts at a rate of 1-1/2% PER MONTH. Annual Finance Charge of 18%. Notice: It is specifically agreed that this company shall not be in any way responsible for damage to customers property resulting in Deliveries beyond curb line.

DRIVER'S SIGNATURE _____

IRON MOUNTAIN QUARRY LLC

Quarry site: 20800 Wayside Mine Rd – Granite Falls WA
Phone: (Toll Free) 1-866-672-3434

DATE 08/09/2017 **TIME** 7:55 **TICKET#** 007470

CUSTOMER 844 GLACIER ENVIRONMENTAL ☐ CASH ☐ CHARGE

JOB A - 730 S MERTLE ST **PO#** _____

HAULER 2510 WESTSIDE LLC **TRUCK#** WS1 ☒ HIRED

PRODUCT 500 CLASS 2 PETROLEUM CONTAM SOIL

GROSS	103580	**PRICE**	
TARE	41260	**SUBTOTAL**	
NET LB	62320	**TAX**	
NET TN	31.16	**TOTAL**	

1102

_____
WEIGHER

Terms: Net 30 days from the end of the month. A finance charge will be assessed on all past due accounts at a rate of 1-1/2% PER MONTH. Annual Finance Charge of 18%. Notice: It is specifically agreed that this company shall not be in any way responsible for damage to customers property resulting in Deliveries beyond curb line.

DRIVER'S SIGNATURE _____

IRON MOUNTAIN QUARRY LLC

Quarry site: 20800 Wayside Mine Rd – Granite Falls WA
Phone: (Toll Free) 1-866-672-3434

DATE 08/09/2017 **TIME** 11:21 **TICKET#** 087532

CUSTOMER 846 GLACIER ENVIRONMENTAL ☐ **CASH** ☐ **CHARGE**

JOB 4 730 S NEBRUE ST **PO#** _____

HAULER 2516 WESTSIDE LLC **TRUCK#** WS1 ☐ **HIRED**

PRODUCT 508 CLASS B PETROLEUM CONTAM SOIL

GROSS	163680	**PRICE**	_____
TARE	41260	**SUBTOTAL**	_____
NET LB	62420	**TAX**	_____
NET TN	31.21	**TOTAL**	_____

1102

_____
WEIGHER

Terms: Net 30 days from the end of the month. A finance charge will be assessed on all past due accounts at a rate of 1-1/2% PER MONTH. Annual Finance Charge of 18%. Notice: It is specifically agreed that this company shall not be in any way responsible for damage to customers property resulting in Deliveries beyond curb line.

DRIVER'S SIGNATURE _____

IRON MOUNTAIN QUARRY LLC

Quarry site: 20800 Wayside Mine Rd – Granite Falls WA
Phone: (Toll Free) 1-866-672-3434

DATE _____ **TIME** _____ **TICKET#** _____

CUSTOMER _____ ☐ **CASH** ☐ **CHARGE**

JOB _____ **PO#** _____

HAULER _____ **TRUCK#** _____ ☐ **HIRED**

PRODUCT _____

PRICE _____

SUBTOTAL _____

TAX _____

TOTAL _____

_____
WEIGHER

Terms: Net 30 days from the end of the month. A finance charge will be assessed on all past due accounts at a rate of 1-1/2% PER MONTH. Annual Finance Charge of 18%. Notice: It is specifically agreed that this company shall not be in any way responsible for damage to customers property resulting in Deliveries beyond curb line.

DRIVER'S SIGNATURE _____

IRON MOUNTAIN QUARRY LLC

Quarry site: 20800 Wayside Mine Rd – Granite Falls WA
Phone: (Toll Free) 1-866-672-3434

08/09/2017 14:57 887684

DATE _____ **TIME** _____ **TICKET#** _____

CUSTOMER 844 GLACIER ENVIRONMENTAL _____ ☐ **CASH** ☐ **CHARGE**

4 730 S MYRTLE ST

JOB _____ **PO#** _____

HAULER 2510 WESTSIDE LLC **TRUCK#** W51 ☐ **HIRED**

PRODUCT 500 GLASS & PETROLEUN CONTAM SOIL

GROSS	102220	**PRICE**	_____
TARE	41260	**SUBTOTAL**	_____
NET LB	60960	**TAX**	_____
NET TN	30.48	**TOTAL**	_____

1182

_____
WEIGHER

Terms: Net 30 days from the end of the month. A finance charge will be assessed on all past due accounts at a rate of 1-1/2% PER MONTH. Annual Finance Charge of 18%. Notice: It is specifically agreed that this company shall not be in any way responsible for damage to customers property resulting in Deliveries beyond cnrb line.

DRIVER'S SIGNATURE _____

IRON MOUNTAIN QUARRY LLC

Quarry site: 20800 Wayside Mine Rd – Granite Falls WA
Phone: (Toll Free) 1-866-672-3434

DATE 08/10/2017 **TIME** 15:00 **TICKET#** 007745

CUSTOMER 044 GLACIER ENVIRONMENTAL ☐ **CASH** ☐ **CHARGE**

JOB 735 S NEEDLE ST **PO#** _____

HAULER 2514 METCALF LLC **TRUCK#** 451 ☐ **HIRED**

PRODUCT 703 CLASS B PETROLEUM CONTAM SOIL

GROSS	113690	**PRICE**	_____
TARE	41260	**SUBTOTAL**	_____
NET LB	72430	**TAX**	_____
NET TN	36.21	**TOTAL**	_____

1164

_____
WEIGHER

Terms: Net 30 days from the end of the month. A finance charge will be assessed on all past due accounts at a rate of 1-1/2% PER MONTH. Annual Finance Charge of 18%. Notice: It is specifically agreed that this company shall not be in any way responsible for damage to customers property resulting in Deliveries beyond curb line.

DRIVER'S SIGNATURE _____

IRON MOUNTAIN QUARRY LLC

Quarry site: 20800 Wayside Mine Rd – Granite Falls WA
Phone: (Toll Free) 1-866-672-3434

DATE 08/10/2017 **TIME** 11:26 **TICKET#** 087716

CUSTOMER 344 GLACIER ENVIRONMENTAL ☐ **CASH** ☐ **CHARGE**

JOB 4 730 S MERTLE ST **PO#** _____

HAULER 2510 WESTSIDE LLC **TRUCK#** WS1 ☒ **HIRED**

PRODUCT 500 CLASS 2 PETROLEUM CONTAM SOIL

GROSS	104280	**PRICE**	_____
TARE	41260	**SUBTOTAL**	_____
NET LB	63020	**TAX**	_____
NET TN	31.51	**TOTAL**	_____

3104

_____
WEIGHER

Terms: Net 30 days from the end of the month. A finance charge will be assessed on all past due accounts at a rate of 1-1/2% PER MONTH. Annual Finance Charge of 18%. Notice: It is specifically agreed that this company shall not be in any way responsible for damage to customers property resulting in Deliveries beyond curb line.

DRIVER'S SIGNATURE _____

IRON MOUNTAIN QUARRY LLC

Quarry site: 20800 Wayside Mine Rd – Granite Falls WA
Phone: (Toll Free) 1-866-672-3434

DATE 08/10/2017 **TIME** 8:00 **TICKET#** 007651

CUSTOMER 044 GLACIER ENVIRONMENTAL ☐ **CASH** ☐ **CHARGE**

JOB 4 730 S MERTLE ST **PO#** _____

HAULER 2510 WESTSIDE LLC **TRUCK#** WS1 X ☐ **HIRED**

PRODUCT 500 CLASS 2 PETROLEUM CONTAM SOIL

GROSS	106960	**PRICE**	
TARE	41360	**SUBTOTAL**	
NET LB	65700	**TAX**	
NET TN	32.85	**TOTAL**	

1104

_____
WEIGHER

Terms: Net 30 days from the end of the month. A finance charge will be assessed on all past due accounts at a rate of 1-1/2% PER MONTH. Annual Finance Charge of 18%. Notice: It is specifically agreed that this company shall not be in any way responsible for damage to customers property resulting in Deliveries beyond curb line.

DRIVER'S SIGNATURE _____

IRON MOUNTAIN QUARRY LLC

Quarry site: 20800 Wayside Mine Rd – Granite Falls WA
Phone: (Toll Free) 1-866-672-3434

DATE 06/10/2017 **TIME** 11:12 **TICKET#** 087710

CUSTOMER 344 GLACIER ENVIRONMENTAL ☐ **CASH** ☐ **CHARGE**

JOB 730 S MERRILL ST **PO#** _____

HAULER 2363 SCOLERI TRUCKING **TRUCK#** SCOLERI ☐ **HIRED**

PRODUCT 500 CLASS B PETROLEUM CONTAM SOIL

GROSS	110100	**PRICE**	_____
TARE	41600	**SUBTOTAL**	_____
NET LB	68500	**TAX**	_____
NET TN	34.25	**TOTAL**	_____

2056

_____
WEIGHER

Terms: Net 30 days from the end of the month. A finance charge will be assessed on all past due accounts at a rate of 1-1/2% PER MONTH. Annual Finance Charge of 18%. Notice: It is specifically agreed that this company shall not be in any way responsible for damage to customers property resulting in Deliveries beyond curb line.

DRIVER'S SIGNATURE _____

IRON MOUNTAIN QUARRY LLC

Quarry site: 20800 Wayside Mine Rd – Granite Falls WA
Phone: (Toll Free) 1-866-672-3434

DATE 08/10/2017 **TIME** 14:54 **TICKET#** 087740

CUSTOMER 044 GLACIER ENVIRONMENTAL ☐ **CASH** ☐ **CHARGE**

JOB 4 730 S MERTLE ST **PO#** _____

HAULER 2363 SCOLERI TRUCKING **TRUCK#** SCOLERI X ☐ **HIRED**

PRODUCT 500 CLASS 2 PETROLEUM CONTAM SOIL

GROSS	109120	**PRICE**	_____
TARE	41800	**SUBTOTAL**	_____
NET LB	67320	**TAX**	_____
NET TN	33.66	**TOTAL**	_____

2056

_____
WEIGHER

Terms: Net 30 days from the end of the month. A finance charge will be assessed on all past due accounts at a rate of 1-1/2% PER MONTH. Annual Finance Charge of 18%. Notice: It is specifically agreed that this company shall not be in any way responsible for damage to customers property resulting in Deliveries beyond curb line.

DRIVER'S SIGNATURE _____

IRON MOUNTAIN QUARRY LLC

Quarry site: 20800 Wayside Mine Rd – Granite Falls WA
Phone: (Toll Free) 1-866-672-3434

DATE 08/11/2017 **TIME** 7:59 **TICKET#** 007825

CUSTOMER 944 GLACIER ENVIRONMENTAL ☐ **CASH** ☐ **CHARGE**

JOB 4 730 S MERTLE ST **PO#** _____

HAULER 2519 WESTSIDE LLC **TRUCK#** WS1 X ☐ **HIRED**

PRODUCT 500 CLASS B PETROLEUM CONTAM SOIL

GROSS	114780	**PRICE**	_____
TARE	41260	**SUBTOTAL**	_____
NET LB	73440	**TAX**	_____
NET TN	36.72	**TOTAL**	_____

1186

_____
WEIGHER

Terms: Net 30 days from the end of the month. A finance charge will be assessed on all past due accounts at a rate of 1-1/2% PER MONTH. Annual Finance Charge of 18%. Notice: It is specifically agreed that this company shall not be in any way responsible for damage to customers property resulting in Deliveries beyond curb line.

DRIVER'S SIGNATURE _____

IRON MOUNTAIN QUARRY LLC

Quarry site: 20800 Wayside Mine Rd – Granite Falls WA
Phone: (Toll Free) 1-866-672-3434

DATE 08/11/2017 **TIME** 11:14 **TICKET#** 0A7090

CUSTOMER 044 GLACIER ENVIRONMENTAL ☐ **CASH** ☐ **CHARGE**

JOB 4 750 S MERTLE ST **PO#** _____

HAULER 2510 WESTSIDE LLC **TRUCK#** WS1 X ☐ **HIRED**

PRODUCT 500 CLASS 2 PETROLEUM CONTAM SOIL

GROSS	101500	**PRICE**	_____
TARE	41260	**SUBTOTAL**	_____
NET LB	60240	**TAX**	_____
NET TN	30.12	**TOTAL**	_____

1106

_____
WEIGHER

Terms: Net 30 days from the end of the month. A finance charge will be assessed on all past due accounts at a rate of 1-1/2% PER MONTH. Annual Finance Charge of 18%. Notice: It is specifically agreed that this company shall not be in any way responsible for damage to customers property resulting in Deliveries beyond curb line.

DRIVER'S SIGNATURE _____

IRON MOUNTAIN QUARRY LLC

Quarry site: 20800 Wayside Mine Rd – Granite Falls WA
Phone: (Toll Free) 1-866-672-3434

DATE 08/11/2017 **TIME** 14:54 **TICKET#** 087945

CUSTOMER 044 GLACIER ENVIRONMENTAL ☐ **CASH** ☐ **CHARGE**

JOB 4 730 S MERTLE ST **PO#** _____

HAULER 2510 WESTSIDE LLC **TRUCK#** WS1 ☐ **HIRED**

PRODUCT 500 CLASS 2 PETROLEUM CONTAM SOIL

GROSS	105700	**PRICE**	
TARE	41260	**SUBTOTAL**	
NET LB	64440	**TAX**	
NET TN	32.22	**TOTAL**	

1186

WEIGHER

Terms: Net 30 days from the end of the month. A finance charge will be assessed on all past due accounts at a rate of 1-1/2% PER MONTH. Annual Finance Charge of 18%. Notice: It is specifically agreed that this company shall not be in any way responsible for damage to customers property resulting in Deliveries beyond curb line.

DRIVER'S SIGNATURE _____

IRON MOUNTAIN QUARRY LLC

Quarry site: 20800 Wayside Mine Rd – Granite Falls WA
Phone: (Toll Free) 1-866-672-3434

DATE 08/11/2017 **TIME** 8:50 **TICKET#** 087844

CUSTOMER 844 DUCTILE ENVIRONMENTAL ☐ **CASH** ☐ **CHARGE**

JOB A 730 S PERTLE ST **PO#** _____

HAULER 2363 SCOLERI TRUCKING **TRUCK#** SCOLERI ☐ **HIRED**

PRODUCT 300 CLASS 2 PETROLEUM CONTAM SOIL

GROSS	113300	**PRICE**	_____
TARE	47600	**SUBTOTAL**	_____
NET LB	65700	**TAX**	_____
NET TN	32.85	**TOTAL**	_____

20520

_____
WEIGHER

Terms: Net 30 days from the end of the month. A finance charge will be assessed on all past due accounts at a rate of 1-1/2% PER MONTH. Annual Finance Charge of 18%. Notice: It is specifically agreed that this company shall not be in any way responsible for damage to customers property resulting in Deliveries beyond curb line.

DRIVER'S SIGNATURE _____

IRON MOUNTAIN QUARRY LLC

Quarry site: 20800 Wayside Mine Rd – Granite Falls WA
Phone: (Toll Free) 1-866-672-3434

DATE 09/14/2017 **TIME** 7:56 **TICKET#** 0480[illegible]

CUSTOMER 044 GLACIER ENVIRONMENTAL ☐ **CASH** ☐ **CHARGE**

JOB 4 730 S REPTILE ST **PO#** _____

HAULER 2512 WESTSIDE LLC **TRUCK#** 051 ☐ **HIRED**

PRODUCT 560 CLASS B PETROLEUM CONTAM SOIL

GROSS	102590	**PRICE**	_____
TARE	41260	**SUBTOTAL**	_____
NET LB	61330	**TAX**	_____
NET TN	30.66	**TOTAL**	_____

1168

_____
WEIGHER

Terms: Net 30 days from the end of the month. A finance charge will be assessed on all past due accounts at a rate of 1-1/2% PER MONTH. Annual Finance Charge of 18%. Notice: It is specifically agreed that this company shall not be in any way responsible for damage to customers property resulting in Deliveries beyond curb line.

DRIVER'S SIGNATURE _____

IRON MOUNTAIN QUARRY LLC

Quarry site: 20800 Wayside Mine Rd – Granite Falls WA
Phone: (Toll Free) 1-866-672-3434

DATE 08/18/2017 **TIME** 1167 **TICKET#** 000027

CUSTOMER 844 GLACIER ENVIRONMENTAL ☐ **CASH** ☐ **CHARGE**

JOB 4 700 S MERTLE ST **PO#** _____

HAULER 2510 WESTSIDE LLC **TRUCK#** 951 ☐ **HIRED**

PRODUCT 500 CLASS B PETROLEUM CONTAM SOIL

GROSS	101500	**PRICE**	_____
TARE	41260	**SUBTOTAL**	_____
NET LB	60240	**TAX**	_____
NET TN	30.12	**TOTAL**	_____

1168

_____
WEIGHER

Terms: Net 30 days from the end of the month. A finance charge will be assessed on all past due accounts at a rate of 1-1/2% PER MONTH. Annual Finance Charge of 18%. Notice: It is specifically agreed that this company shall not be in any way responsible for damage to customers property resulting in Deliveries beyond curb line.

DRIVER'S SIGNATURE _____

IRON MOUNTAIN QUARRY LLC

Quarry site: 20800 Wayside Mine Rd – Granite Falls WA
Phone: (Toll Free) 1-866-672-3434

DATE 06/14/2017 **TIME** 14:27 **TICKET#** 1050156

CUSTOMER 044 GLACIER ENVIRONMENTAL ☐ **CASH** ☐ **CHARGE**

JOB A 730 S MERTLE ST **PO#** _____

HAULER 2518 WESTSIDE LLC **TRUCK#** 061 ☐ **HIRED**

PRODUCT 500 CLASS 2 PETROLEUM CONTAM SOIL

GROSS	186650	**PRICE**	_____
TARE	41260	**SUBTOTAL**	_____
NET LB	65390	**TAX**	_____
NET TN	32.70	**TOTAL**	_____

1188

_____
WEIGHER

Terms: Net 30 days from the end of the month. A finance charge will be assessed on all past due accounts at a rate of 1-1/2% PER MONTH. Annual Finance Charge of 18%. Notice: It is specifically agreed that this company shall not be in any way responsible for damage to customers property resulting in Deliveries beyond curb line.

DRIVER'S SIGNATURE _____

IRON MOUNTAIN QUARRY LLC

Quarry site: 20800 Wayside Mine Rd – Granite Falls WA
Phone: (Toll Free) 1-866-672-3434

DATE 08/14/2017 **TIME** 8:12 **TICKET#** 088042

CUSTOMER 844 GLACIER ENVIRONMENTAL ☐ **CASH** ☐ **CHARGE**

JOB 4 730 S MERTLE ST **PO#** _____

HAULER 2363 SCOLERT TRUCKING **TRUCK#** SCOLERT X ☐ **HIRED**

PRODUCT 500 CLASS 2 PETROLEUN CONTAM SOIL

GROSS	183260	**PRICE**	_____
TARE	41800	**SUBTOTAL**	_____
NET LB	141460	**TAX**	_____
NET TN	70.73	**TOTAL**	_____

2859

_____
WEIGHER

Terms: Net 30 days from the end of the month. A finance charge will be assessed on all past due accounts at a rate of 1-1/2% PER MONTH. Annual Finance Charge of 18%. Notice: It is specifically agreed that this company shall not be in any way responsible for damage to customers property resulting in Deliveries beyond curb line.

DRIVER'S SIGNATURE _____

IRON MOUNTAIN QUARRY LLC

Quarry site: 20800 Wayside Mine Rd – Granite Falls WA

Phone: (Toll Free) 1-866-672-3434

DATE _____ **TIME** _____ **TICKET#** _____

CUSTOMER _____ ☐ **CASH** ☐ **CHARGE**

JOB _____ **PO#** _____

HAULER _____ **TRUCK#** _____ ☐ **HIRED**

PRODUCT _____

PRICE _____

SUBTOTAL _____

TAX _____

TOTAL _____

_____

WEIGHER

Terms: Net 30 days from the end of the month. A finance charge will be assessed on all past due accounts at a rate of 1-1/2% PER MONTH. Annual Finance Charge of 18%. Notice: It is specifically agreed that this company shall not be in any way responsible for damage to customers property resulting in Deliveries beyond curb line.

DRIVER'S SIGNATURE _____

IRON MOUNTAIN QUARRY LLC

Quarry site: 20800 Wayside Mine Rd – Granite Falls WA
Phone: (Toll Free) 1-866-672-3434

DATE _____ **TIME** _____ **TICKET#** _____

CUSTOMER _____ ☐ **CASH** ☐ **CHARGE**

JOB _____ **PO#** _____

HAULER _____ **TRUCK#** _____ ☐ **HIRED**

PRODUCT _____

PRICE _____

SUBTOTAL _____

TAX _____

TOTAL _____

_____
WEIGHER

Terms: Net 30 days from the end of the month. A finance charge will be assessed on all past due accounts at a rate of 1-1/2% PER MONTH. Annual Finance Charge of 18%. Notice: It is specifically agreed that this company shall not be in any way responsible for damage to customers property resulting in Deliveries beyond curb line.

DRIVER'S SIGNATURE _____

IRON MOUNTAIN QUARRY LLC

Quarry site: 20800 Wayside Mine Rd – Granite Falls WA
Phone: (Toll Free) 1-866-672-3434

DATE _____ **TIME** _____ **TICKET#** _____

CUSTOMER _____ ☐ CASH ☐ CHARGE

JOB _____ **PO#** _____

HAULER _____ **TRUCK#** _____ ☐ HIRED

PRODUCT _____

PRICE _____

SUBTOTAL _____

TAX _____

TOTAL _____

_____
WEIGHER

Terms: Net 30 days from the end of the month. A finance charge will be assessed on all past due accounts at a rate of 1-1/2% PER MONTH. Annual Finance Charge of 18%. Notice: It is specifically agreed that this company shall not be in any way responsible for damage to customers property resulting in Deliveries beyond curb line.

DRIVER'S SIGNATURE _____

IRON MOUNTAIN QUARRY LLC

Quarry site: 20800 Wayside Mine Rd – Granite Falls WA
Phone: (Toll Free) 1-866-672-3434

08/15/2017 11:30 88APRP

DATE _____ **TIME** _____ **TICKET#** _____

044 GLACIER ENVIRONMENTAL

CUSTOMER _____ ☐ **CASH** ☐ **CHARGE**

4 730 S MERTLE ST

JOB _____ **PO#** _____

HAULER 2510 WESTSIDE LLC **TRUCK#** WS1 X ☐ **HIRED**

PRODUCT 500 CLASS 2 PETROLEUM CONTAM SOIL

GROSS	102180	**PRICE**	_____
TARE	41260	**SUBTOTAL**	_____
NET LB	60640	**TAX**	_____
NET TN	30.42	**TOTAL**	_____

1190

_____
WEIGHER

Terms: Net 30 days from the end of the month. A finance charge will be assessed on all past due accounts at a rate of 1-1/2% PER MONTH. Annual Finance Charge of 18%. Notice: It is specifically agreed that this company shall not be in any way responsible for damage to customers property resulting in Deliveries beyond curb line.

DRIVER'S SIGNATURE _____

IRON MOUNTAIN QUARRY LLC

Quarry site: 20800 Wayside Mine Rd – Granite Falls WA
Phone: (Toll Free) 1-866-672-3434

08/15/2017 14:32 [illegible]

DATE _____ **TIME** _____ **TICKET#** _____

844 GLACIER ENVIRONMENTAL

CUSTOMER _____ ☐ **CASH** ☐ **CHARGE**

730 S NEWTLE ST

JOB _____ **PO#** _____

2518 WESTSIDE LLC 151 Y

HAULER _____ **TRUCK#** _____ ☐ **HIRED**

598 CLASS B PETROLEUM CONTAM SOIL

PRODUCT _____

GROSS	104220	**PRICE**	_____
TARE	41260	**SUBTOTAL**	_____
NET LB	62960	**TAX**	_____
NET TN	30.98	**TOTAL**	_____

1190

_____
WEIGHER

Terms: Net 30 days from the end of the month. A finance charge will be assessed on all past due accounts at a rate of 1-1/2% PER MONTH. Annual Finance Charge of 18%. Notice: It is specifically agreed that this company shall not be in any way responsible for damage to customers property resulting in Deliveries beyond curb line.

DRIVER'S SIGNATURE _____

IRON MOUNTAIN QUARRY LLC

Quarry site: 20800 Wayside Mine Rd – Granite Falls WA
Phone: (Toll Free) 1-866-672-3434

DATE 08/15/2017 **TIME** 7:30 **TICKET#** 086199

CUSTOMER 844 GLACIER ENVIRONMENTAL ☐ **CASH** ☐ **CHARGE**

JOB 730 S MERTLE ST **PO#** _____

HAULER 2353 SCOLERT TRUCKING **TRUCK#** SCOLERT ☐ **HIRED**

PRODUCT 500 CLASS 2 PETROLEUM CONTAM SOIL

GROSS	191480	**PRICE**	_____
TARE	41800	**SUBTOTAL**	_____
NET LB	59680	**TAX**	_____
NET TN	29.84	**TOTAL**	_____

2061

_____
WEIGHER

Terms: Net 30 days from the end of the month. A finance charge will be assessed on all past due accounts at a rate of 1-1/2% PER MONTH. Annual Finance Charge of 18%. Notice: It is specifically agreed that this company shall not be in any way responsible for damage to customers property resulting in Deliveries beyond curb line.

DRIVER'S SIGNATURE _____

IRON MOUNTAIN QUARRY LLC

Quarry site: 20800 Wayside Mine Rd – Granite Falls WA
Phone: (Toll Free) 1-866-672-3434

08/15/2017 15:29 888361

DATE _____ **TIME** _____ **TICKET#** _____

944 GLACIER ENVIRONMENTAL

CUSTOMER _____ ☐ **CASH** ☐ **CHARGE**

1 730 S MERTLE ST

JOB _____ **PO#** _____

HAULER 2363 SCOLERT TRUCKING **TRUCK#** SCOLERT X ☐ **HIRED**

PRODUCT 500 CLASS 2 PETROLEUN CONTAM SOIL

GROSS	105700	**PRICE**	_____
TARE	41800	**SUBTOTAL**	_____
NET LB	63900	**TAX**	_____
NET TN	31.95	**TOTAL**	_____

2061

_____
WEIGHER

Terms: Net 30 days from the end of the month. A finance charge will be assessed on all past due accounts at a rate of 1-1/2% PER MONTH. Annual Finance Charge of 18%. Notice: It is specifically agreed that this company shall not be in any way responsible for damage to customers property resulting in Deliveries beyond curb line.

DRIVER'S SIGNATURE _____

IRON MOUNTAIN QUARRY LLC

Quarry site: 20800 Wayside Mine Rd – Granite Falls WA
Phone: (Toll Free) 1-866-672-3434

DATE 08/16/2017 **TIME** 11:29 **TICKET#** 084432

CUSTOMER 044 GLACIER ENVIRONMENTAL ☐ **CASH** ☐ **CHARGE**

JOB 4 730 S NEETLE ST **PO#** _____

HAULER 2510 WESTSIDE LLC **TRUCK#** WS1 X ☐ **HIRED**

PRODUCT 500 CLASS 2 PETROLEUM CONTAM SOIL

GROSS	185480	**PRICE**	_____
TARE	41260	**SUBTOTAL**	_____
NET LB	64140	**TAX**	_____
NET TN	32.07	**TOTAL**	_____

1192

_____
WEIGHER

Terms: Net 30 days from the end of the month. A financc charge will be assessed on all past due accounts at a rate of 1-1/2% PER MONTH. Annual Finance Charge of 18%. Notice: It is specifically agreed that this company shall not be in any way responsible for damage to customers property resulting in Deliveries beyond curb line.

DRIVER'S SIGNATURE _____

IRON MOUNTAIN QUARRY LLC

Quarry site: 20800 Wayside Mine Rd – Granite Falls WA
Phone: (Toll Free) 1-866-672-3434

DATE 08/16/2017 **TIME** 7:42 **TICKET#** 060376

CUSTOMER 844 GLACIER ENVIRONMENTAL ☐ **CASH** ☐ **CHARGE**

JOB 730 S MERTLE ST **PO#** _____

HAULER 2510 WESTSIDE LLC **TRUCK#** 951 ☒ **HIRED**

PRODUCT 500 CLASS B PETROLEUM CONTAM SOIL

GROSS	104060	**PRICE**	_____
TARE	41260	**SUBTOTAL**	_____
NET LB	62800	**TAX**	_____
NET TN	31.40	**TOTAL**	_____

1192

_____
WEIGHER

Terms: Net 30 days from the end of the month. A finance charge will be assessed on all past due accounts at a rate of 1-1/2% PER MONTH. Annual Finance Charge of 18%. Notice: It is specifically agreed that this company shall not be in any way responsible for damage to customers property resulting in Deliveries beyond curb line.

DRIVER'S SIGNATURE _____

IRON MOUNTAIN QUARRY LLC

Quarry site: 20800 Wayside Mine Rd – Granite Falls WA
Phone: (Toll Free) 1-866-672-3434

08/16/2017 11:21 088430

DATE _____ **TIME** _____ **TICKET#** _____

044 GLACIER ENVIRONMENTAL

CUSTOMER _____ ☐ **CASH** ☐ **CHARGE**

4 730 S MERTLE ST

JOB _____ **PO#** _____

HAULER 2363 SCOLERT TRUCKING **TRUCK#** SCOLERT ☒ ☐ **HIRED**

PRODUCT 500 CLASS 2 PETROLEUM CONTAM SOIL

GROSS	107480	**PRICE**	_____
TARE	41680	**SUBTOTAL**	_____
NET LB	65680	**TAX**	_____
NET TN	32.84	**TOTAL**	_____

2663

_____
WEIGHER

Terms: Net 30 days from the end of the month. A finance charge will be assessed on all past due accounts at a rate of 1-1/2% PER MONTH. Annual Finance Charge of 18%. Notice: It is specifically agreed that this company shall not be in any way responsible for damage to customers property resulting in Deliveries beyond curb line.

DRIVER'S SIGNATURE _____

IRON MOUNTAIN QUARRY LLC

Quarry site: 20800 Wayside Mine Rd – Granite Falls WA
Phone: (Toll Free) 1-866-672-3434

DATE 08/16/2017 **TIME** 14:45 **TICKET#** 000491

CUSTOMER 044 GLACIER ENVIRONMENTAL ☐ **CASH** ☐ **CHARGE**

JOB 4 730 S MERTLE ST **PO#** _____

HAULER 2518 WESTSIDE LLC **TRUCK#** WS1 X ☐ **HIRED**

PRODUCT 500 CLASS 2 PETROLEUM CONTAM SOIL

GROSS	113080	**PRICE**	
TARE	41260	**SUBTOTAL**	
NET LB	72020	**TAX**	
NET TN	36.31	**TOTAL**	

1102

_____
WEIGHER

Terms: Net 30 days from the end of the month. A finance charge will be assessed on all past due accounts at a rate of 1-1/2% PER MONTH. Annual Finance Charge of 18%. Notice: It is specifically agreed that this company shall not be in any way responsible for damage to customers property resulting in Deliveries beyond curb line.

DRIVER'S SIGNATURE _____

IRON MOUNTAIN QUARRY LLC

Quarry site: 20800 Wayside Mine Rd – Granite Falls WA
Phone: (Toll Free) 1-866-672-3434

DATE _____ **TIME** _____ **TICKET#** _____

CUSTOMER _____ ☐ **CASH** ☐ **CHARGE**

JOB _____ **PO#** _____

HAULER _____ **TRUCK#** _____ ☐ **HIRED**

PRODUCT _____

		PRICE	_____
		SUBTOTAL	_____
		TAX	_____
		TOTAL	_____

_____
WEIGHER

Terms: Net 30 days from the end of the month. A finance charge will be assessed on all past due accounts at a rate of 1-1/2% PER MONTH. Annual Finance Charge of 18%. Notice: It is specifically agreed that this company shall not be in any way responsible for damage to customers property resulting in Deliveries beyond curb line.

DRIVER'S SIGNATURE _____

IRON MOUNTAIN QUARRY LLC

Quarry site: 20800 Wayside Mine Rd – Granite Falls WA
Phone: (Toll Free) 1-866-672-3434

DATE 08/17/2017 **TIME** 7:55 **TICKET#** 088531

CUSTOMER 844 GLACIER ENVIRONMENTAL ☐ **CASH** ☐ **CHARGE**

JOB 4 730 S MERTLE ST **PO#** _____

HAULER 2518 WESTSIDE LLC **TRUCK#** WS1 X ☐ **HIRED**

PRODUCT 508 CLASS 2 PETROLEUM CONTAM SOIL

GROSS	106200	**PRICE**	
TARE	41260	**SUBTOTAL**	
NET LB	64940	**TAX**	
NET TN	32.47	**TOTAL**	

1194

_____
WEIGHER

Terms: Net 30 days from the end of the month. A finance charge will be assessed on all past due accounts at a rate of 1-1/2% PER MONTH. Annual Finance Charge of 18%. Notice: It is specifically agreed that this company shall not be in any way responsible for damage to customers property resulting in Deliveries beyond curb line.

DRIVER'S SIGNATURE _____

IRON MOUNTAIN QUARRY LLC

Quarry site: 20800 Wayside Mine Rd – Granite Falls WA
Phone: (Toll Free) 1-866-672-3434

DATE 08/17/2017 **TIME** 8:01 **TICKET#** 008532

CUSTOMER 844 GLACIER ENVIRONMENTAL ☐ **CASH** ☐ **CHARGE**

JOB 4 730 S MERTLE ST **PO#** _____

HAULER 2363 SCOLERI TRUCKING **TRUCK#** SCOLERI X ☐ **HIRED**

PRODUCT 508 CLASS 2 PETROLEUM CONTAM SOIL

GROSS	107260	**PRICE**	
TARE	41800	**SUBTOTAL**	
NET LB	65460	**TAX**	
NET TN	32.73	**TOTAL**	

2067

WEIGHER

Terms: Net 30 days from the end of the month. A finance charge will be assessed on all past due accounts at a rate of 1-1/2% PER MONTH. Annual Finance Charge of 18%. Notice: It is specifically agreed that this company shall not be in any way responsible for damage to customers property resulting in Deliveries beyond curb line.

DRIVER'S SIGNATURE _____

IRON MOUNTAIN QUARRY LLC

Quarry site: 20800 Wayside Mine Rd – Granite Falls WA
Phone: (Toll Free) 1-866-672-3434

DATE 08/17/2017 **TIME** 11:08 **TICKET#** 088585

CUSTOMER 044 GLACIER ENVIRONMENTAL ☐ **CASH** ☐ **CHARGE**

JOB 4 730 S MERTLE ST **PO#** _____

HAULER 2363 SCOLERI TRUCKING **TRUCK#** SCOLERI X ☐ **HIRED**

PRODUCT 500 CLASS 2 PETROLEUM CONTAM SOIL

GROSS	107640	**PRICE**	
TARE	41800	**SUBTOTAL**	
NET LB	65840	**TAX**	
NET TN	32.92	**TOTAL**	

20067

WEIGHER

Terms: Net 30 days from the end of the month. A finance charge will be assessed on all past due accounts at a rate of 1-1/2% PER MONTH. Annual Finance Charge of 18%. Notice: It is specifically agreed that this company shall not be in any way responsible for damage to customers property resulting in Deliveries beyond curb line.

DRIVER'S SIGNATURE

IRON MOUNTAIN QUARRY LLC

Quarry site: 20800 Wayside Mine Rd – Granite Falls WA
Phone: (Toll Free) 1-866-672-3434

DATE 08/17/2017 **TIME** 11:00 **TICKET#** 000502

CUSTOMER 844 GLACIER ENVIRONMENTAL ☐ **CASH** ☐ **CHARGE**

JOB 4 730 S MERTLE ST **PO#** _____

HAULER 2510 WESTSIDE LLC **TRUCK#** WS1 X ☐ **HIRED**

PRODUCT 500 CLASS 2 PETROLEUM CONTAM SOIL

GROSS	107940	**PRICE**	
TARE	41260	**SUBTOTAL**	
NET LB	66680	**TAX**	
NET TN	33.34	**TOTAL**	

1194

WEIGHER

Terms: Net 30 days from the end of the month. A finance charge will be assessed on all past due accounts at a rate of 1-1/2% PER MONTH. Annual Finance Charge of 18%. Notice: It is specifically agreed that this company shall not be in any way responsible for damage to customers property resulting in Deliveries beyond curb line.

DRIVER'S SIGNATURE _____

IRON MOUNTAIN QUARRY LLC

Quarry site: 20800 Wayside Mine Rd – Granite Falls WA
Phone: (Toll Free) 1-866-672-3434

DATE 08/17/2017 **TIME** 14:49 **TICKET#** 088645

CUSTOMER 844 GLACIER ENVIRONMENTAL ☐ **CASH** ☐ **CHARGE**

JOB 4 730 S MERTLE ST **PO#** _____

HAULER 2363 SCOLERI TRUCKING **TRUCK#** SCOLERI X ☐ **HIRED**

PRODUCT 508 CLASS 2 PETROLEUM CONTAM SOIL

GROSS	108000	**PRICE**	
TARE	41800	**SUBTOTAL**	
NET LB	66200	**TAX**	
NET TN	33.10	**TOTAL**	

2067

WEIGHER

Terms: Net 30 days from the end of the month. A finance charge will be assessed on all past due accounts at a rate of 1-1/2% PER MONTH. Annual Finance Charge of 18%. Notice: It is specifically agreed that this company shall not be in any way responsible for damage to customers property resulting in Deliveries beyond curb line.

DRIVER'S SIGNATURE

IRON MOUNTAIN QUARRY LLC

Quarry site: 20800 Wayside Mine Rd – Granite Falls WA
Phone: (Toll Free) 1-866-672-3434

DATE 08/17/2017 **TIME** 14:25 **TICKET#** 088642

CUSTOMER 044 GLACIER ENVIRONMENTAL ☐ **CASH** ☐ **CHARGE**

JOB 4 730 S MERTLE ST **PO#** _____

HAULER 2510 WESTSIDE LLC **TRUCK#** WS1 X ☐ **HIRED**

PRODUCT 500 CLASS 2 PETROLEUM CONTAM SOIL

GROSS	114460	**PRICE**	_____
TARE	41260	**SUBTOTAL**	_____
NET LB	73200	**TAX**	_____
NET TN	36.60	**TOTAL**	_____

1194

_____
WEIGHER

Terms: Net 30 days from the end of the month. A finance charge will be assessed on all past due accounts at a rate of 1-1/2% PER MONTH. Annual Finance Charge of 18%. Notice: It is specifically agreed that this company shall not be in any way responsible for damage to customers property resulting in Deliveries beyond curb line.

DRIVER'S SIGNATURE _____

IRON MOUNTAIN QUARRY LLC

Quarry site: 20800 Wayside Mine Rd – Granite Falls WA
Phone: (Toll Free) 1-866-672-3434

09/23/2017 8:02 083757

DATE _____ **TIME** _____ **TICKET#** _____

414 GLACIER ENVIRONMENTAL

CUSTOMER _____ ☐ **CASH** ☐ **CHARGE**

4 730 E MERTLE ST

JOB _____ **PO#** _____

2910 WESTSIDE LLC

HAULER _____ **TRUCK#** 401 _____ ☐ **HIRED**

906 CLASS 2 PETROLEUM CONTAM SOIL

PRODUCT _____

GROSS 101760

TARE 41060

NET LB 60560

NET TN 30.25

PRICE _____

SUBTOTAL _____

TAX _____

TOTAL _____

_____
WEIGHER

Terms: Net 30 days from the end of the month. A finance charge will be assessed on all past due accounts at a rate of 1-1/2% PER MONTH. Annual Finance Charge of 18%. Notice: It is specifically agreed that this company shall not be in any way responsible for damage to customers property resulting in Deliveries beyond curb line.

DRIVER'S SIGNATURE _____

IRON MOUNTAIN QUARRY LLC

Quarry site: 20800 Wayside Mine Rd – Granite Falls WA
Phone: (Toll Free) 1-866-672-3434

DATE 08/23/2017 **TIME** 11:34 **TICKET#** 0829171

CUSTOMER 044 GLACIER ENVIRONMENTAL ☐ **CASH** ☐ **CHARGE**

JOB A 730 S MERTLE ST **PO#** _____

HAULER 2519 WESTSIDE LLC **TRUCK#** 401 X ☐ **HIRED**

PRODUCT 580 CLASS B PETROLEUM CONTAM SOIL

GROSS	187140	**PRICE**	_____
TARE	41260	**SUBTOTAL**	_____
NET LB	65880	**TAX**	_____
NET TN	32.94	**TOTAL**	_____

1120

_____
WEIGHER

Terms: Net 30 days from the end of the month. A finance charge will be assessed on all past due accounts at a rate of 1-1/2% PER MONTH. Annual Finance Charge of 18%. Notice: It is specifically agreed that this company shall not be in any way responsible for damage to customers property resulting in Deliveries beyond curb line.

DRIVER'S SIGNATURE _____

IRON MOUNTAIN QUARRY LLC

Quarry site: 20800 Wayside Mine Rd – Granite Falls WA
Phone: (Toll Free) 1-866-672-3434

DATE 09/22/2017 **TIME** 14:46 **TICKET#** 007307

CUSTOMER 444 GLACIER ENVIRONMENTAL ☐ **CASH** ☐ **CHARGE**

JOB 720 S MCCOLE ST **PO#** _____

HAULER 2510 WESTSIDE LLC **TRUCK#** 451 ☐ **HIRED**

PRODUCT 503 CLASS B PETROLEUM CONTAM SOIL

GROSS	102140	**PRICE**	_____
TARE	41060	**SUBTOTAL**	_____
NET TO	60080	**TAX**	_____
NET IN	30.04	**TOTAL**	_____

(10%)

_____
WEIGHER

Terms: Net 30 days from the end of the month. A finance charge will be assessed on all past due accounts at a rate of 1-1/2% PER MONTH. Annual Finance Charge of 18%. Notice: It is specifically agreed that this company shall not be in any way responsible for damage to customers property resulting in Deliveries beyond curb line.

DRIVER'S SIGNATURE _____

IRON MOUNTAIN QUARRY LLC

Quarry site: 20800 Wayside Mine Rd – Granite Falls WA
Phone: (Toll Free) 1-866-672-3434

DATE _____ **TIME** _____ **TICKET#** _____

CUSTOMER _____ ☐ CASH ☐ CHARGE

JOB _____ **PO#** _____

HAULER _____ **TRUCK#** _____ ☐ HIRED

PRODUCT _____

PRICE _____

SUBTOTAL _____

TAX _____

TOTAL _____

_____
WEIGHER

Terms: Net 30 days from the end of the month. A finance charge will be assessed on all past due accounts at a rate of 1-1/2% PER MONTH. Annual Finance Charge of 18%. Notice: It is specifically agreed that this company shall not be in any way responsible for damage to customers property resulting in Deliveries beyond curb line.

DRIVER'S SIGNATURE _____

IRON MOUNTAIN QUARRY LLC

Quarry site: 20800 Wayside Mine Rd – Granite Falls WA

Phone: (Toll Free) 1-866-672-3434

DATE _____ **TIME** _____ **TICKET#** _____

CUSTOMER _____ ☐ **CASH** ☐ **CHARGE**

JOB _____ **PO#** _____

HAULER _____ **TRUCK#** _____ ☐ **HIRED**

PRODUCT _____

PRICE _____

SUBTOTAL _____

TAX _____

TOTAL _____

_____

WEIGHER

Terms: Net 30 days from the end of the month. A finance charge will be assessed on all past due accounts at a rate of 1-1/2% PER MONTH. Annual Finance Charge of 18%. Notice: It is specifically agreed that this company shall not be in any way responsible for damage to customers property resulting in Deliveries beyond curb line.

DRIVER'S SIGNATURE _____

IRON MOUNTAIN QUARRY LLC

Quarry site: 20800 Wayside Mine Rd – Granite Falls WA
Phone: (Toll Free) 1-866-672-3434

DATE 08/23/2017 **TIME** 12:00 **TICKET#** 69017

CUSTOMER 044 GLACIER ENVIRONMENTAL ☐ **CASH** ☐ **CHARGE**

JOB 730 S MERTLE ST **PO#** _____

HAULER 2363 SCOLERT TRUCKING **TRUCK#** 3CDK261 ☐ **HIRED**

PRODUCT 500 CLASS B PETROLEUM CONTAM SOIL

GROSS	186840	**PRICE**	_____
TARE	41000	**SUBTOTAL**	_____
NET LB	64240	**TAX**	_____
NET TN	32.12	**TOTAL**	_____

_____
WEIGHER

Terms: Net 30 days from the end of the month. A finance charge will be assessed on all past due accounts at a rate of 1-1/2% PER MONTH. Annual Finance Charge of 18%. Notice: It is specifically agreed that this company shall not be in any way responsible for damage to customers property resulting in Deliveries beyond curb line.

DRIVER'S SIGNATURE _____

IRON MOUNTAIN QUARRY LLC

Quarry site: 20800 Wayside Mine Rd – Granite Falls WA
Phone: (Toll Free) 1-866-672-3434

DATE 08/24/2017 **TIME** 11:08A **TICKET#** 107101

CUSTOMER 041 GLACIER ENVIRONMENTAL ☐ **CASH** ☐ **CHARGE**

JOB 730 S NEWTON ST **PO#** _____

HAULER 2016 WESTSIDE LLC **TRUCK#** W31 ☐ **HIRED**

PRODUCT 580 CLASS 2 PETROLEUM CONTAM SOIL

GROSS	103680	**PRICE**	_____
TARE	41360	**SUBTOTAL**	_____
NET LB	62340	**TAX**	_____
NET TN	31.17	**TOTAL**	_____

1203

_____
WEIGHER

Terms: Net 30 days from the end of the month. A finance charge will be assessed on all past due accounts at a rate of 1-1/2% PER MONTH. Annual Finance Charge of 18%. Notice: It is specifically agreed that this company shall not be in any way responsible for damage to customers property resulting in Deliveries beyond curb line.

DRIVER'S SIGNATURE _____

IRON MOUNTAIN QUARRY LLC

Quarry site: 20800 Wayside Mine Rd – Granite Falls WA
Phone: (Toll Free) 1-866-672-3434

DATE 08/24/2017 **TIME** 7:47 **TICKET#** 089620

CUSTOMER 041 GLACIER ENVIRONMENTAL ☐ **CASH** ☐ **CHARGE**

JOB 730 S MYRTLE ST **PO#** _____

HAULER 2518 WESTSIDE LLC **TRUCK#** WS1 ☐ **HIRED**

PRODUCT 588 CLASS 2 PETROLEUM CONTAM SOIL

GROSS	108600	**PRICE**	_____
TARE	41220	**SUBTOTAL**	_____
NET LB	67380	**TAX**	_____
NET TN	33.71	**TOTAL**	_____

1203

_____
WEIGHER

Terms: Net 30 days from the end of the month. A finance charge will be assessed on all past due accounts at a rate of 1-1/2% PER MONTH. Annual Finance Charge of 18%. Notice: It is specifically agreed that this company shall not be in any way responsible for damage to customers property resulting in Deliveries beyond curb line.

DRIVER'S SIGNATURE _____

IRON MOUNTAIN QUARRY LLC

Quarry site: 20800 Wayside Mine Rd – Granite Falls WA
Phone: (Toll Free) 1-866-672-3434

DATE 05/24/2017 **TIME** 14:45 **TICKET#** 007747

CUSTOMER 043 GLACIER ENVIRONMENTAL ☐ **CASH** ☐ **CHARGE**

JOB 710 E HERTLE ST **PO#** _____

HAULER 2363 SCHUERT TRUCKING **TRUCK#** 2CH 013 ☐ **HIRED**

PRODUCT 500 CLASS B PETROLEUM CONTAM SOIL

GROSS	102080	**PRICE**	_____
TARE	41980	**SUBTOTAL**	_____
NET LB	60200	**TAX**	_____
NET TN	30.10	**TOTAL**	_____

2070

_____
WEIGHER

Terms: Net 30 days from the end of the month. A finance charge will be assessed on all past due accounts at a rate of 1-1/2% PER MONTH. Annual Finance Charge of 18%. Notice: It is specifically agreed that this company shall not be in any way responsible for damage to customers property resulting in Deliveries beyond curb line.

DRIVER'S SIGNATURE _____

IRON MOUNTAIN QUARRY LLC

Quarry site: 20800 Wayside Mine Rd – Granite Falls WA
Phone: (Toll Free) 1-866-672-3434

DATE 08/24/2017 **TIME** 14:23 **TICKET#** 089780

CUSTOMER 044 GLACIER ENVIRONMENTAL ☐ **CASH** ☐ **CHARGE**

JOB 4 730 S MERTLE ST **PO#** _____

HAULER 2510 WESTSIDE LLC **TRUCK#** WS1 X ☐ **HIRED**

PRODUCT 508 CLASS 2 PETROLEUM CONTAM SOIL

GROSS	102500	**PRICE**	
TARE	41260	**SUBTOTAL**	
NET LB	61240	**TAX**	
NET TN	30.62	**TOTAL**	

L203

_____
WEIGHER

Terms: Net 30 days from the end of the month. A finance charge will be assessed on all past due accounts at a rate of 1-1/2% PER MONTH. Annual Finance Charge of 18%. Notice: It is specifically agreed that this company shall not be in any way responsible for damage to customers property resulting in Deliveries beyond curb line.

DRIVER'S SIGNATURE _____

IRON MOUNTAIN QUARRY LLC

Quarry site: 20800 Wayside Mine Rd – Granite Falls WA
Phone: (Toll Free) 1-866-672-3434

DATE 08/25/2017 **TIME** 7:27 **TICKET#** 089828

CUSTOMER 844 GLACIER ENVIRONMENTAL ☐ **CASH** ☐ **CHARGE**

JOB 4 730 S MERTLE ST **PO#** _____

HAULER 2510 WESTSIDE LLC **TRUCK#** WS1 X ☐ **HIRED**

PRODUCT 500 CLASS 2 PETROLEUM CONTAM SOIL

GROSS	103060	**PRICE**	
TARE	41260	**SUBTOTAL**	
NET LB	61800	**TAX**	
NET TN	30.90	**TOTAL**	

1204

WEIGHER

Terms: Net 30 days from the end of the month. A finance charge will be assessed on all past due accounts at a rate of 1-1/2% PER MONTH. Annual Finance Charge of 18%. Notice: It is specifically agreed that this company shall not be in any way responsible for damage to customers property resulting in Deliveries beyond curb line.

DRIVER'S SIGNATURE _____

IRON MOUNTAIN QUARRY LLC

Quarry site: 20800 Wayside Mine Rd – Granite Falls WA
Phone: (Toll Free) 1-866-672-3434

DATE 08/25/2017 **TIME** 11:00 **TICKET#** 089096

CUSTOMER 044 GLACIER ENVIRONMENTAL ☐ **CASH** ☐ **CHARGE**

JOB 4 730 S MERTLE ST **PO#** _____

HAULER 2363 SCOLERI TRUCKING **TRUCK#** SCOLERI4 X ☐ **HIRED**

PRODUCT 508 CLASS 2 PETROLEUM CONTAM SOIL

GROSS	102400	**PRICE**	
TARE	36720	**SUBTOTAL**	
NET LB	65760	**TAX**	
NET TN	32.88	**TOTAL**	

2009

WEIGHER

Terms: Net 30 days from the end of the month. A finance charge will be assessed on all past due accounts at a rate of 1-1/2% PER MONTH. Annual Finance Charge of 18%. Notice: It is specifically agreed that this company shall not be in any way responsible for damage to customers property resulting in Deliveries beyond curb line.

DRIVER'S SIGNATURE

IRON MOUNTAIN QUARRY LLC

Quarry site: 20800 Wayside Mine Rd – Granite Falls WA
Phone: (Toll Free) 1-866-672-3434

DATE 08/25/2017 **TIME** 11:10 **TICKET#** 089901

CUSTOMER 844 GLACIER ENVIRONMENTAL ☐ **CASH** ☐ **CHARGE**

JOB 4 730 S MERTLE ST **PO#** _____

HAULER 2510 WESTSIDE LLC **TRUCK#** WS1 X☐ **HIRED**

PRODUCT 500 CLASS 2 PETROLEUM CONTAM SOIL

GROSS	101080	**PRICE**	
TARE	41260	**SUBTOTAL**	
NET LB	60620	**TAX**	
NET TN	30.31	**TOTAL**	

1201

WEIGHER

Terms: Net 30 days from the end of the month. A finance charge will be assessed on all past due accounts at a rate of 1-1/2% PER MONTH. Annual Finance Charge of 18%. Notice: It is specifically agreed that this company shall not be in any way responsible for damage to customers property resulting in Deliveries beyond curb line.

DRIVER'S SIGNATURE

IRON MOUNTAIN QUARRY LLC

Quarry site: 20800 Wayside Mine Rd – Granite Falls WA
Phone: (Toll Free) 1-866-672-3434

DATE 08/25/2017 **TIME** 11:21 **TICKET#** 089905

CUSTOMER 044 GLACIER ENVIRONMENTAL ☐ **CASH** ☐ **CHARGE**

JOB 4 730 S MERTLE ST **PO#** _____

HAULER 2363 SCOLERI TRUCKING **TRUCK#** SCOLERI X ☐ **HIRED**

PRODUCT 500 CLASS 2 PETROLEUM CONTAM SOIL

GROSS	102500	**PRICE**	
TARE	41800	**SUBTOTAL**	
NET LB	60700	**TAX**	
NET TN	30.35	**TOTAL**	

2079

WEIGHER

Terms: Net 30 days from the end of the month. A finance charge will be assessed on all past due accounts at a rate of 1-1/2% PER MONTH. Annual Finance Charge of 18%. Notice: It is specifically agreed that this company shall not be in any way responsible for damage to customers property resulting in Deliveries beyond curb line.

DRIVER'S SIGNATURE

IRON MOUNTAIN QUARRY LLC

Quarry site: 20800 Wayside Mine Rd – Granite Falls WA
Phone: (Toll Free) 1-866-672-3434

DATE 08/25/2017 **TIME** 0:00 **TICKET#** 089037

CUSTOMER 044 GLACIER ENVIRONMENTAL ☐ **CASH** ☐ **CHARGE**

JOB 4 730 S MERTLE ST **PO#** _____

HAULER 2363 SCOLERI TRUCKING **TRUCK#** SCOLERI X ☐ **HIRED**

PRODUCT 500 CLASS 2 PETROLEUM CONTAM SOIL

GROSS	109100	**PRICE**	
TARE	41800	**SUBTOTAL**	
NET LB	67300	**TAX**	
NET TN	33.69	**TOTAL**	

2079

WEIGHER

Terms: Net 30 days from the end of the month. A finance charge will be assessed on all past due accounts at a rate of 1-1/2% PER MONTH. Annual Finance Charge of 18%. Notice: It is specifically agreed that this company shall not be in any way responsible for damage to customers property resulting in Deliveries beyond curb line.

DRIVER'S SIGNATURE

IRON MOUNTAIN QUARRY LLC

Quarry site: 20800 Wayside Mine Rd – Granite Falls WA
Phone: (Toll Free) 1-866-672-3434

DATE 08/25/2017 **TIME** 7:41 **TICKET#** 009833

CUSTOMER 844 GLACIER ENVIRONMENTAL ☐ **CASH** ☐ **CHARGE**

JOB 4 730 S MERTLE ST **PO#** _____

HAULER 2363 SCOLERI TRUCKING **TRUCK#** SCOLERI4 X ☐ **HIRED**

PRODUCT 500 CLASS 2 PETROLEUM CONTAM SOIL

GROSS	111020	**PRICE**	
TARE	36720	**SUBTOTAL**	
NET LB	75100	**TAX**	
NET TN	37.55	**TOTAL**	

2009

WEIGHER

Terms: Net 30 days from the end of the month. A finance charge will be assessed on all past due accounts at a rate of 1-1/2% PER MONTH. Annual Finance Charge of 18%. Notice: It is specifically agreed that this company shall not be in any way responsible for damage to customers property resulting in Deliveries beyond curb line.

DRIVER'S SIGNATURE

IRON MOUNTAIN QUARRY LLC

Quarry site: 20800 Wayside Mine Rd – Granite Falls WA
Phone: (Toll Free) 1-866-672-3434

DATE 08/23/2012 **TIME** 13:44 **TICKET#** 500243

CUSTOMER 044 GLACIER ENVIRONMENTAL ☐ **CASH** ☐ **CHARGE**

JOB 4 730 S MERTLE ST **PO#** _____

HAULER 2363 SCOLERI TRUCKING **TRUCK#** SCOLERI ☐ **HIRED**

PRODUCT 580 CLASS 2 PETROLEUM CONTAM SOIL

GROSS	189460	**PRICE**	_____
TARE	41800	**SUBTOTAL**	_____
NET LB	67660	**TAX**	_____
NET TN	33.83	**TOTAL**	_____

2002

_____
WEIGHER

Terms: Net 30 days from the end of the month. A finance charge will be assessed on all past due accounts at a rate of 1-1/2% PER MONTH. Annual Finance Charge of 18%. Notice: It is specifically agreed that this company shall not be in any way responsible for damage to customers property resulting in Deliveries beyond curb line.

DRIVER'S SIGNATURE _____

IRON MOUNTAIN QUARRY LLC

Quarry site: 20800 Wayside Mine Rd – Granite Falls WA
Phone: (Toll Free) 1-866-672-3434

DATE 08/31/2017 **TIME** 11:21 **TICKET#** 508462

CUSTOMER 044 GLACIER ENVIRONMENTAL ☐ **CASH** ☐ **CHARGE**

JOB 4 790 S NEPTUNE ST **PO#** _____

HAULER 2363 SCOLERI TRUCKING **TRUCK#** SCOLERI4 ☐ **HIRED**

PRODUCT 500 CLASS B PETROLEUM CONTAM SOIL

GROSS	109280	**PRICE**	_____
TARE	36400	**SUBTOTAL**	_____
NET LB	72880	**TAX**	_____
NET TN	36.44	**TOTAL**	_____

2017

_____
WEIGHER

Terms: Net 30 days from the end of the month. A finance charge will be assessed on all past due accounts at a rate of 1-1/2% PER MONTH. Annual Finance Charge of 18%. Notice: It is specifically agreed that this company shall not be in any way responsible for damage to customers property resulting in Deliveries beyond curb line.

DRIVER'S SIGNATURE _____

IRON MOUNTAIN QUARRY LLC

Quarry site: 20800 Wayside Mine Rd – Granite Falls WA
Phone: (Toll Free) 1-866-672-3434

DATE 08/31/2017 **TIME** 11:54 **TICKET#** 29019

CUSTOMER 944 GLACIER ENVIRONMENTAL ☐ **CASH** ☐ **CHARGE**

JOB 4 730 S MERTLE ST **PO#** _____

HAULER 1454 MEDINTO TRUCKING **TRUCK#** 2 MERCED ☐ **HIRED**

PRODUCT 500 CLASS 2 PETROLEUN CONTAM SOIL

GROSS	112500	**PRICE**	_____
TARE	38560	**SUBTOTAL**	_____
NET LB	74020	**TAX**	_____
NET TN	37.01	**TOTAL**	_____

1450

_____
WEIGHER

Terms: Net 30 days from the end of the month. A finance charge will be assessed on all past due accounts at a rate of 1-1/2% PER MONTH. Annual Finance Charge of 18%. Notice: It is specifically agreed that this company shall not be in any way responsible for damage to customers property resulting in Deliveries beyond curb line.

DRIVER'S SIGNATURE _____

IRON MOUNTAIN QUARRY LLC

Quarry site: 20800 Wayside Mine Rd – Granite Falls WA
Phone: (Toll Free) 1-866-672-3434

DATE 08/31/2017 **TIME** 15:12 **TICKET#** 090905

CUSTOMER 844 GLACIER ENVIRONMENTAL ☐ **CASH** ☐ **CHARGE**

JOB 4 730 S MERTLE ST **PO#** _____

HAULER 2363 SCOLERI TRUCKING **TRUCK#** SCOLERI4 X ☐ **HIRED**

PRODUCT 508 CLASS 2 PETROLEUM CONTAM SOIL

GROSS	96840	**PRICE**	
TARE	36400	**SUBTOTAL**	
NET LB	60440	**TAX**	
NET TN	30.22	**TOTAL**	

2017

_____
WEIGHER

Terms: Net 30 days from the end of the month. A finance charge will be assessed on all past due accounts at a rate of 1-1/2% PER MONTH. Annual Finance Charge of 18%. Notice: It is specifically agreed that this company shall not be in any way responsible for damage to customers property resulting in Deliveries beyond curb line.

DRIVER'S SIGNATURE _____

IRON MOUNTAIN QUARRY LLC

Quarry site: 20800 Wayside Mine Rd – Granite Falls WA
Phone: (Toll Free) 1-866-672-3434

DATE 08/31/2017 **TIME** 16:01 **TICKET#** 090926

CUSTOMER 044 GLACIER ENVIRONMENTAL ☐ **CASH** ☐ **CHARGE**

JOB 4 730 S MERTLE ST **PO#** _____

HAULER 1054 MERANTO TRUCKING **TRUCK#** MERANTO X ☐ **HIRED**

PRODUCT 500 CLASS 2 PETROLEUM CONTAM SOIL

GROSS	110840	**PRICE**	
TARE	38560	**SUBTOTAL**	
NET LB	72280	**TAX**	
NET TN	36.14	**TOTAL**	

1050

WEIGHER

Terms: Net 30 days from the end of the month. A finance charge will be assessed on all past due accounts at a rate of 1-1/2% PER MONTH. Annual Finance Charge of 18%. Notice: It is specifically agreed that this company shall not be in any way responsible for damage to customers property resulting in Deliveries beyond curb line.

DRIVER'S SIGNATURE

CLASS 2 SOIL DISPOSAL
BID ITEM 32A
SEP. 1 - SEP. 31, 2017

Date	Ticket #	TONS
1-Sep	091000	38.10
1-Sep	091002	38.14
1-Sep	091108	33.86
1-Sep	091103	33.10
1-Sep	091157	34.98
5-Sep	091242	26.82
5-Sep	091309	30.08
5-Sep	091240	21.56
5-Sep	091308	28.97
6-Sep	091361	32.95
6-Sep	091463	35.99
6-Sep	091418	32.99
6-Sep	091362	32.24
6-Sep	091468	35.29
7-Sep	091602	30.37
7-Sep	091526	33.32
7-Sep	091674	31.00
7-Sep	091582	26.22
7-Sep	091493	30.39
7-Sep	091650	30.53
7-Sep	091527	36.44
7-Sep	091630	30.46
7-Sep	091519	34.95
8-Sep	091835	26.00
8-Sep	091752	26.60
8-Sep	091861	30.56
8-Sep	091709	29.27
8-Sep	091792	30.77
8-Sep	091751	30.47
8-Sep	091829	30.22
8-Sep	091840	33.28
11-Sep	092125	30.43
11-Sep	092053	38.66
11-Sep	092054	38.64
11-Sep	092131	29.08
11-Sep	092182	32.34
11-Sep	092123	31.73
11-Sep	092051	37.36
11-Sep	092037	34.50
11-Sep	092213	27.83
11-Sep	092152	32.02
12-Sep	092231	33.10
12-Sep	092322	33.22

CLASS 2 SOIL DISPOSAL
BID ITEM 32A
SEP. 1 - SEP. 31, 2017

Date	Ticket #	TONS
12-Sep	092329	32.90
12-Sep	092234	30.39
12-Sep	092217	30.28
12-Sep	092319	33.17
12-Sep	092233	31.23
12-Sep	092235	32.22
12-Sep	092331	32.96
12-Sep	092403	33.04
12-Sep	092384	31.24
13-Sep	092409	30.20
13-Sep	092482	30.48
13-Sep	092493	30.13
13-Sep	092494	30.45
13-Sep	092546	30.86
13-Sep	092557	30.33
13-Sep	092426	30.32
13-Sep	092565	30.20
13-Sep	092495	29.50
13-Sep	092569	30.93
13-Sep	092538	31.89
14-Sep	092602	30.85
14-Sep	092670	30.40
14-Sep	092722	30.09
14-Sep	092663	31.09
14-Sep	092613	30.97
14-Sep	092731	30.79
14-Sep	092675	30.81
14-Sep	092621	32.04
14-Sep	092726	30.48
14-Sep	092665	30.46
14-Sep	092664	30.57
14-Sep	092729	33.47
15-Sep	092766	32.09
15-Sep	092863	32.98
15-Sep	092760	32.07
15-Sep	092780	32.29
15-Sep	092841	30.67
15-Sep	092868	30.63
15-Sep	092878	32.27
19-Sep	093462	26.00
19-Sep	093401	30.34
19-Sep	093333	30.27
19-Sep	093335	30.42

CLASS 2 SOIL DISPOSAL
BID ITEM 32A
SEP. 1 - SEP. 31, 2017

Date	Ticket #	TONS
19-Sep	093396	26.00
19-Sep	093468	31.86
19-Sep	093467	32.23
19-Sep	093408	30.02
19-Sep	093360	30.10
20-Sep	093500	33.21
20-Sep	093572	32.67
20-Sep	093573	29.32
20-Sep	093610	26.00
20-Sep	093569	33.96
20-Sep	093496	27.36
20-Sep	093603	26.62
20-Sep	093503	30.36
20-Sep	093563	35.68
21-Sep	093704	30.58
21-Sep	093619	31.55
21-Sep	093719	29.65
21-Sep	093731	26.00
21-Sep	093631	26.00
21-Sep	093703	26.00
21-Sep	093667	30.38
21-Sep	093721	26.00
22-Sep	093833	24.32
22-Sep	093759	26.00
22-Sep	093760	26.00
22-Sep	093788	30.50
22-Sep	093884	31.77
22-Sep	093882	31.55
22-Sep	093857	31.48
22-Sep	093837	26.00
22-Sep	093886	34.33
25-Sep	094038	31.65
25-Sep	094086	26.00
25-Sep	094026	26.00
25-Sep	094087	26.00
25-Sep	094028	26.18
25-Sep	094083	32.35
25-Sep	094022	26.00
25-Sep	094094	31.56
25-Sep	094137	30.05
25-Sep	094140	30.52
25-Sep	094144	30.95
27-Sep	094371	31.46

CLASS 2 SOIL DISPOSAL
BID ITEM 32A
SEP. 1 - SEP. 31, 2017

Date	Ticket #	TONS
27-Sep	094479	35.22
28-Sep	094620	26.00
28-Sep	094624	30.97
28-Sep	094611	28.97
28-Sep	094513	30.64
28-Sep	094609	26.00
28-Sep	094715	26.00
28-Sep	094693	26.00
28-Sep	094518	26.00
28-Sep	094506	31.96
28-Sep	094704	31.43
29-Sep	094745	25.77
29-Sep	094881	29.36
29-Sep	094834	31.04
29-Sep	094748	30.30
29-Sep	094818	29.31
29-Sep	094821	29.40
29-Sep	094880	31.30
29-Sep	094758	32.87
29-Sep	094819	25.77
29-Sep	094822	28.01
29-Sep	094894	30.10
Total September		4614.24

IRON MOUNTAIN QUARRY LLC

Quarry site: 20800 Wayside Mine Rd – Granite Falls WA
Phone: (Toll Free) 1-866-672-3434

DATE _____ **TIME** _____ **TICKET#** _____

CUSTOMER _____ ☐ **CASH** ☐ **CHARGE**

JOB _____ **PO#** _____

HAULER _____ **TRUCK#** _____ ☐ **HIRED**

PRODUCT _____

PRICE _____

SUBTOTAL _____

TAX _____

TOTAL _____

_____
WEIGHER

Terms: Net 30 days from the end of the month. A finance charge will be assessed on all past due accounts at a rate of 1-1/2% PER MONTH. Annual Finance Charge of 18%. Notice: It is specifically agreed that this company shall not be in any way responsible for damage to customers property resulting in Deliveries beyond curb line.

DRIVER'S SIGNATURE _____

IRON MOUNTAIN QUARRY LLC

Quarry site: 20800 Wayside Mine Rd – Granite Falls WA
Phone: (Toll Free) 1-866-672-3434

DATE _____ **TIME** _____ **TICKET#** _____

CUSTOMER _____ ☐ **CASH** ☐ **CHARGE**

JOB _____ **PO#** _____

HAULER _____ **TRUCK#** _____ ☐ **HIRED**

PRODUCT _____

PRICE _____

SUBTOTAL _____

TAX _____

TOTAL _____

_____
WEIGHER

Terms: Net 30 days from the end of the month. A finance charge will be assessed on all past due accounts at a rate of 1-1/2% PER MONTH. Annual Finance Charge of 18%. Notice: It is specifically agreed that this company shall not be in any way responsible for damage to customers property resulting in Deliveries beyond curb line.

DRIVER'S SIGNATURE _____

SEATTLE

IRON MOUNTAIN QUARRY LLC

Quarry site: 20800 Wayside Mine Rd – Granite Falls WA
Phone: (Toll Free) 1-866-672-3434

DATE _____ **TIME** _____ **TICKET#** _____

CUSTOMER _____ ☐ **CASH** ☐ **CHARGE**

JOB _____ **PO#** _____

HAULER _____ **TRUCK#** _____ ☐ **HIRED**

PRODUCT _____

PRICE _____

SUBTOTAL _____

TAX _____

TOTAL _____

_____
WEIGHER

Terms: Net 30 days from the end of the month. A finance charge will be assessed on all past due accounts at a rate of 1-1/2% PER MONTH. Annual Finance Charge of 18%. Notice: It is specifically agreed that this company shall not be in any way responsible for damage to customers property resulting in Deliveries beyond curb line.

DRIVER'S SIGNATURE _____

IRON MOUNTAIN QUARRY LLC

Quarry site: 20800 Wayside Mine Rd – Granite Falls WA
Phone: (Toll Free) 1-866-672-3434

DATE _____ **TIME** _____ **TICKET#** _____

CUSTOMER _____ ☐ **CASH** ☐ **CHARGE**

JOB _____ **PO#** _____

HAULER _____ **TRUCK#** _____ ☐ **HIRED**

PRODUCT _____

PRICE _____

SUBTOTAL _____

TAX _____

TOTAL _____

_____
WEIGHER

Terms: Net 30 days from the end of the month. A finance charge will be assessed on all past due accounts at a rate of 1-1/2% PER MONTH. Annual Finance Charge of 18%. Notice: It is specifically agreed that this company shall not be in any way responsible for damage to customers property resulting in Deliveries beyond curb line.

DRIVER'S SIGNATURE _____

IRON MOUNTAIN QUARRY LLC

Quarry site: 20800 Wayside Mine Rd – Granite Falls WA
Phone: (Toll Free) 1-866-672-3434

09/01/2017 DATE _____ 13:16 TIME _____ 091157 TICKET# _____

044 GLACIER ENVIRONMENTAL
CUSTOMER _____ ☐ CASH ☐ CHARGE

4 730 S MERTLE ST
JOB _____ PO# _____

1854 MERANTO TRUCKING
HAULER _____ TRUCK# MERANTO X ☐ HIRED

500 CLASS 2 PETROLEUM CONTAM SOIL
PRODUCT _____

GROSS	108520	PRICE	
TARE	38560	SUBTOTAL	
NET LB	69960	TAX	
NET TN	34.98	TOTAL	

1240

_____
WEIGHER

Terms: Net 30 days from the end of the month. A finance charge will be assessed on all past due accounts at a rate of 1-1/2% PER MONTH. Annual Finance Charge of 18%. Notice: It is specifically agreed that this company shall not be in any way responsible for damage to customers property resulting in Deliveries beyond curb line.

DRIVER'S SIGNATURE _____

IRON MOUNTAIN QUARRY LLC

Quarry site: 20800 Wayside Mine Rd – Granite Falls WA
Phone: (Toll Free) 1-866-672-3434

DATE _____ **TIME** _____ **TICKET#** _____

CUSTOMER _____ ☐ **CASH** ☐ **CHARGE**

JOB _____ **PO#** _____

HAULER _____ **TRUCK#** _____ ☐ **HIRED**

PRODUCT _____

PRICE _____

SUBTOTAL _____

TAX _____

TOTAL _____

_____
WEIGHER

Terms: Net 30 days from the end of the month. A finance charge will be assessed on all past due accounts at a rate of 1-1/2% PER MONTH. Annual Finance Charge of 18%. Notice: It is specifically agreed that this company shall not be in any way responsible for damage to customers property resulting in Deliveries beyond curb line.

DRIVER'S SIGNATURE _____

IRON MOUNTAIN QUARRY LLC

Quarry site: 20800 Wayside Mine Rd – Granite Falls WA
Phone: (Toll Free) 1-866-672-3434

09/05/2017 15:01 091309

DATE _____ **TIME** _____ **TICKET#** _____

844 GLACIER ENVIRONMENTAL
CUSTOMER _____ ☐ **CASH** ☐ **CHARGE**
4 730 S MERTLE ST

JOB _____ **PO#** _____

717 NORTHWEST SAND & GRAVEL NWE4
HAULER _____ **TRUCK#** _____ ☐ **HIRED**

500 CLASS 2 PETROLEUM CONTAM SOIL
PRODUCT _____

GROSS 102600
TARE 42440
NET LB 60160
NET TN 30.08

PRICE _____
SUBTOTAL _____
TAX _____
TOTAL _____

23112

_____
WEIGHER

Terms: Net 30 days from the end of the month. A finance charge will be assessed on all past due accounts at a rate of 1-1/2% PER MONTH. Annual Finance Charge of 18%. Notice: It is specifically agreed that this company shall not be in any way responsible for damage to customers property resulting in Deliveries beyond curb line.

DRIVER'S SIGNATURE _____

IRON MOUNTAIN QUARRY LLC

Quarry site: 20800 Wayside Mine Rd – Granite Falls WA
Phone: (Toll Free) 1-866-672-3434

09/05/2017 11:17 091240

DATE _____ **TIME** _____ **TICKET#** _____

844 GLACIER ENVIRONMENTAL

CUSTOMER _____ ☐ **CASH** ☐ **CHARGE**

4 730 S NEPTLE ST

JOB _____ **PO#** _____

717 NORTHWEST SAND & GRAVEL

HAULER _____ **TRUCK#** NW24 ☐ **HIRED**

508 CLASS 2 PETROLEUM CONTAM SOIL

PRODUCT _____

GROSS	85560	**PRICE**	_____
TARE	42440	**SUBTOTAL**	_____
NET LB	43120	**TAX**	_____
NET TN	21.56	**TOTAL**	_____

23112

_____
WEIGHER

Terms: Net 30 days from the end of the month. A finance charge will be assessed on all past due accounts at a rate of 1-1/2% PER MONTH. Annual Finance Charge of 18%. Notice: It is specifically agreed that this company shall not be in any way responsible for damage to customers property resulting in Deliveries beyond curb line.

DRIVER'S SIGNATURE _____

IRON MOUNTAIN QUARRY LLC

Quarry site: 20800 Wayside Mine Rd – Granite Falls WA
Phone: (Toll Free) 1-866-672-3434

09/05/2017 14:59 091308

DATE _____ **TIME** _____ **TICKET#** _____

844 GLACIER ENVIRONMENTAL

CUSTOMER _____ ☐ **CASH** ☐ **CHARGE**

4 730 S BERTLE ST

JOB _____ **PO#** _____

717 NORTHWEST SAND & GRAVEL X

HAULER _____ **TRUCK#** NW23 ☐ **HIRED**

508 CLASS 2 PETROLEUM CONTAM SOIL

PRODUCT _____

GROSS 98440

TARE 40500

NET LB 57940

NET TN 28.97

23514

PRICE _____

SUBTOTAL _____

TAX _____

TOTAL _____

_____
WEIGHER

Terms: Net 30 days from the end of the month. A finance charge will be assessed on all past due accounts at a rate of 1-1/2% PER MONTH. Annual Finance Charge of 18%. Notice: It is specifically agreed that this company shall not be in any way responsible for damage to customers property resulting in Deliveries beyond curb line.

DRIVER'S SIGNATURE _____

IRON MOUNTAIN QUARRY LLC

Quarry site: 20800 Wayside Mine Rd – Granite Falls WA
Phone: (Toll Free) 1-866-672-3434

09/06/2017 8:32 891361

DATE _____ **TIME** _____ **TICKET#** _____

844 GLACIER ENVIRONMENTAL

CUSTOMER _____ ☐ **CASH** ☐ **CHARGE**

738 S MERTLE ST

JOB _____ **PO#** _____

717 NORTHWEST SAND & GRAVEL NW21

HAULER _____ **TRUCK#** _____ ☐ **HIRED**

500A CLASS 2 PETROLEUM CONTAM SOIL

PRODUCT _____

GROSS	106400	**PRICE**	_____
TARE	40500	**SUBTOTAL**	_____
NET LB	65900	**TAX**	_____
NET TN	32.95	**TOTAL**	_____

23516

_____
WEIGHER

Terms: Net 30 days from the end of the month. A finance charge will be assessed on all past due accounts at a rate of 1-1/2% PER MONTH. Annual Finance Charge of 18%. Notice: It is specifically agreed that this company shall not be in any way responsible for damage to customers property resulting in Deliveries beyond curb line.

DRIVER'S SIGNATURE _____

IRON MOUNTAIN QUARRY LLC

Quarry site: 20800 Wayside Mine Rd – Granite Falls WA
Phone: (Toll Free) 1-866-672-3434

DATE 09/06/2017 **TIME** 14:30 **TICKET#** 491463

CUSTOMER 844 GLACIER ENVIRONMENTAL ☐ **CASH** ☐ **CHARGE**

JOB 4 730-S MERTLE ST **PO#** _____

HAULER 2363 SCOLERI TRUCKING **TRUCK#** SCOLERI4 X ☐ **HIRED**

PRODUCT 500 CLASS 2 PETROLEUM CONTAM SOIL

GROSS	108380	**PRICE**	_____
TARE	36400	**SUBTOTAL**	_____
NET LB	71980	**TAX**	_____
NET TN	35.99	**TOTAL**	_____

2023

_____
WEIGHER

Terms: Net 30 days from the end of the month. A finance charge will be assessed on all past due accounts at a rate of 1-1/2% PER MONTH. Annual Finance Charge of 18%. Notice: It is specifically agreed that this company shall not be in any way responsible for damage to customers property resulting in Deliveries beyond curb line.

DRIVER'S SIGNATURE _____

IRON MOUNTAIN QUARRY LLC

Quarry site: 20800 Wayside Mine Rd – Granite Falls WA
Phone: (Toll Free) 1-866-672-3434

DATE 09/06/2017 **TIME** 12:22 **TICKET#** 09143

CUSTOMER 844 - GLACIER ENVIRONMENTAL ☐ **CASH** ☐ **CHARGE**

JOB 4 730 S MERTLE ST **PO#** _____

HAULER 717 NORTHWEST SAND & GRAVEL **TRUCK#** NW24 X ☐ **HIRED**

PRODUCT 508 CLASS 2 PETROLEUM CONTAM SOIL

GROSS	108480	**PRICE**	_____
TARE	42500	**SUBTOTAL**	_____
NET LB	65980	**TAX**	_____
NET TN	32.99	**TOTAL**	_____

23113

_____
WEIGHER

Terms: Net 30 days from the end of the month. A finance charge will be assessed on all past due accounts at a rate of 1-1/2% PER MONTH. Annual Finance Charge of 18%. Notice: It is specifically agreed that this company shall not be in any way responsible for damage to customers property resulting in Deliveries beyond curb line.

DRIVER'S SIGNATURE _____

IRON MOUNTAIN QUARRY LLC

Quarry site: 20800 Wayside Mine Rd – Granite Falls WA
Phone: (Toll Free) 1-866-672-3434

DATE 09/06/2017 **TIME** 8:32 **TICKET#** 891362

CUSTOMER 844 GLACIER ENVIRONMENTAL ☐ **CASH** ☐ **CHARGE**

JOB 4 730 S MERTLE ST **PO#** _____

HAULER 717 NORTHWEST SAND & GRAVEL **TRUCK#** NW24 X ☐ **HIRED**

PRODUCT 500 CLASS 2 PETROLEUM CONTAM SOIL

GROSS	106900	**PRICE**	
TARE	42500	**SUBTOTAL**	
NET LB	64400	**TAX**	
NET TN	32.24	**TOTAL**	

23113

_____
WEIGHER

Terms: Net 30 days from the end of the month. A finance charge will be assessed on all past due accounts at a rate of 1-1/2% PER MONTH. Annual Finance Charge of 18%. Notice: It is specifically agreed that this company shall not be in any way responsible for damage to customers property resulting in Deliveries beyond curb line.

DRIVER'S SIGNATURE _____

IRON MOUNTAIN QUARRY LLC

Quarry site: 20800 Wayside Mine Rd – Granite Falls WA
Phone: (Toll Free) 1-866-672-3434

DATE 09/06/2017 **TIME** 14:52 **TICKET#** 091468

CUSTOMER 844 GLACIER ENVIRONMENTAL ☐ **CASH** ☐ **CHARGE**

JOB 4 730 S MERTLE ST **PO#** _____

HAULER 1854 MERANTO TRUCKING **TRUCK#** MERANTO ☒ **HIRED**

PRODUCT 508 CLASS 2 PETROLEUM CONTAM SOIL

GROSS	109140	**PRICE**	
TARE	38560	**SUBTOTAL**	
NET LB	70580	**TAX**	
NET TN	35.29	**TOTAL**	

1244

WEIGHER

Terms: Net 30 days from the end of the month. A finance charge will be assessed on all past due accounts at a rate of 1-1/2% PER MONTH. Annual Finance Charge of 18%. Notice: It is specifically agreed that this company shall not be in any way responsible for damage to customers property resulting in Deliveries beyond curb line.

DRIVER'S SIGNATURE

IRON MOUNTAIN QUARRY LLC

Quarry site: 20800 Wayside Mine Rd – Granite Falls WA
Phone: (Toll Free) 1-866-672-3434

DATE 09/07/2017 **TIME** 12:24 **TICKET#** 091602

CUSTOMER 844 GLACIER ENVIRONMENTAL ☐ **CASH** ☐ **CHARGE**

JOB 4 730 S MERTLE ST **PO#** _____

HAULER 241 SPRINGBROOK NURSERY **TRUCK#** SBN25 ☒ **HIRED**

PRODUCT 500 CLASS 2 PETROLEUM CONTAM SOIL

GROSS	101520	**PRICE**	
TARE	40780	**SUBTOTAL**	
NET LB	60740	**TAX**	
NET TN	30.37	**TOTAL**	

L18018

_____
WEIGHER

Terms: Net 30 days from the end of the month. A finance charge will be assessed on all past due accounts at a rate of 1-1/2% PER MONTH. Annual Finance Charge of 18%. Notice: It is specifically agreed that this company shall not be in any way responsible for damage to customers property resulting in Deliveries beyond curb line.

DRIVER'S SIGNATURE RAY

IRON MOUNTAIN QUARRY LLC

Quarry site: 20800 Wayside Mine Rd – Granite Falls WA
Phone: (Toll Free) 1-866-672-3434

DATE 09/07/2017 **TIME** 8:40 **TICKET#** 091526

CUSTOMER 844 GLACIER ENVIRONMENTAL ☐ **CASH** ☐ **CHARGE**

JOB 4 730 S MERTLE ST **PO#** _____

HAULER 241 SPRINGBROOK NURSERY **TRUCK#** SBN25 X ☐ **HIRED**

PRODUCT 500 CLASS 2 PETROLEUM CONTAM SOIL

GROSS	107420	**PRICE**	_____
TARE	40780	**SUBTOTAL**	_____
NET LB	66640	**TAX**	_____
NET TN	33.32	**TOTAL**	_____

118018

_____
WEIGHER

Terms: Net 30 days from the end of the month. A finance charge will be assessed on all past due accounts at a rate of 1-1/2% PER MONTH. Annual Finance Charge of 18%. Notice: It is specifically agreed that this company shall not be in any way responsible for damage to customers property resulting in Deliveries beyond curb line.

DRIVER'S SIGNATURE RAY

IRON MOUNTAIN QUARRY LLC

Quarry site: 20800 Wayside Mine Rd – Granite Falls WA
Phone: (Toll Free) 1-866-672-3434

DATE 09/07/2017 **TIME** 15:24 **TICKET#** 091674

CUSTOMER 844 GLACIER ENVIRONMENTAL ☐ **CASH** ☐ **CHARGE**

JOB 4 730 S MERTLE ST **PO#** _____

HAULER 717 NORTHWEST SAND & GRAVEL **TRUCK#** NW24 ☐ **HIRED**

PRODUCT 500 CLASS 2 PETROLEUM CONTAM SOIL

GROSS	104500	**PRICE**	
TARE	42500	**SUBTOTAL**	
NET LB	62000	**TAX**	
NET TN	31.00	**TOTAL**	

23437

_____
WEIGHER

Terms: Net 30 days from the end of the month. A finance charge will be assessed on all past due accounts at a rate of 1-1/2% PER MONTH. Annual Finance Charge of 18%. Notice: It is specifically agreed that this company shall not be in any way responsible for damage to customers property resulting in Deliveries beyond curb line.

DRIVER'S SIGNATURE _____

IRON MOUNTAIN QUARRY LLC

Quarry site: 20800 Wayside Mine Rd – Granite Falls WA
Phone: (Toll Free) 1-866-672-3434

DATE 09/07/2017 **TIME** 11:29 **TICKET#** 091582

CUSTOMER 844 GLACIER ENVIRONMENTAL ☐ **CASH** ☐ **CHARGE**

JOB 4 730 S MERTLE ST **PO#** _____

HAULER 717 NORTHWEST SAND & GRAVEL **TRUCK#** NW24 X ☐ **HIRED**

PRODUCT 508 CLASS 2 PETROLEUM CONTAM SOIL

GROSS	94940	**PRICE**	
TARE	42500	**SUBTOTAL**	
NET LB	52440	**TAX**	
NET TN	26.22	**TOTAL**	

3437

_____
WEIGHER

Terms: Net 30 days from the end of the month. A finance charge will be assessed on all past due accounts at a rate of 1-1/2% PER MONTH. Annual Finance Charge of 18%. Notice: It is specifically agreed that this company shall not be in any way responsible for damage to customers property resulting in Deliveries beyond curb line.

DRIVER'S SIGNATURE _____

IRON MOUNTAIN QUARRY LLC

Quarry site: 20800 Wayside Mine Rd – Granite Falls WA
Phone: (Toll Free) 1-866-672-3434

DATE 09/07/2017 **TIME** 6:42 **TICKET#** 091493

CUSTOMER 844 GLACIER ENVIRONMENTAL ☐ **CASH** ☐ **CHARGE**

JOB 4. 730 S MERTLE ST **PO#** _____

HAULER 717 NORTHWEST SAND & GRAVEL **TRUCK#** NW24 X ☐ **HIRED**

PRODUCT 500 CLASS 2 PETROLEUM CONTAM SOIL

GROSS	103280	**PRICE**	_____
TARE	42500	**SUBTOTAL**	_____
NET LB	60780	**TAX**	_____
NET TN	30.39	**TOTAL**	_____

23436

_____
WEIGHER

Terms: Net 30 days from the end of the month. A finance charge will be assessed on all past due accounts at a rate of 1-1/2% PER MONTH. Annual Finance Charge of 18%. Notice: It is specifically agreed that this company shall not be in any way responsible for damage to customers property resulting in Deliveries beyond curb line.

DRIVER'S SIGNATURE _____

IRON MOUNTAIN QUARRY LLC

Quarry site: 20800 Wayside Mine Rd – Granite Falls WA
Phone: (Toll Free) 1-866-672-3434

DATE 09/07/2017 **TIME** 14:10 **TICKET#** 091650

CUSTOMER 844 GLACIER ENVIRONMENTAL ☐ **CASH** ☐ **CHARGE**

JOB 4 730 S MERTLE ST **PO#** _____

HAULER 717 NORTHWEST SAND & GRAVEL **TRUCK#** NW25 X ☐ **HIRED**

PRODUCT 500 CLASS 2 PETROLEUM CONTAM SOIL

GROSS	100040	**PRICE**	_____
TARE	38980	**SUBTOTAL**	_____
NET LB	61060	**TAX**	_____
NET TN	30.53	**TOTAL**	_____

23591

_____
WEIGHER

Terms: Net 30 days from the end of the month. A finance charge will be assessed on all past due accounts at a rate of 1-1/2% PER MONTH. Annual Finance Charge of 18%. Notice: It is specifically agreed that this company shall not be in any way responsible for damage to customers property resulting in Deliveries beyond curb line.

DRIVER'S SIGNATURE _____

IRON MOUNTAIN QUARRY LLC

Quarry site: 20800 Wayside Mine Rd – Granite Falls WA
Phone: (Toll Free) 1-866-672-3434

09/07/2017 8:44 091527

DATE _____ **TIME** _____ **TICKET#** _____

044 GLACIER ENVIRONMENTAL

CUSTOMER _____ ☐ **CASH** ☐ **CHARGE**

4 730 S MERTLE ST

JOB _____ **PO#** _____

717 NORTHWEST SAND & GRAVEL X

HAULER _____ **TRUCK#** NW25 _____ ☐ **HIRED**

500 CLASS B PETROLEUM CONTAM SOIL 7

PRODUCT _____

GROSS	111660	**PRICE**	_____
TARE	38980	**SUBTOTAL**	_____
NET LB	72680	**TAX**	_____
NET TN	36.44	**TOTAL**	_____

23591

_____
WEIGHER

Terms: Net 30 days from the end of the month. A finance charge will be assessed on all past due accounts at a rate of 1-1/2% PER MONTH. Annual Finance Charge of 18%. Notice: It is specifically agreed that this company shall not be in any way responsible for damage to customers property resulting in Deliveries beyond curb line.

DRIVER'S SIGNATURE _____

IRON MOUNTAIN QUARRY LLC

Quarry site: 20800 Wayside Mine Rd – Granite Falls WA
Phone: (Toll Free) 1-866-672-3434

DATE 09/07/2017 **TIME** 13:30 **TICKET#** 091636

CUSTOMER 844 GLACIER ENVIRONMENTAL ☐ **CASH** ☐ **CHARGE**

JOB 4 730 S MERTLE ST **PO#** _____

HAULER 1854 MERANTO TRUCKING **TRUCK#** MERANTO X ☐ **HIRED**

PRODUCT 50A CLASS B PETROLEUM CONTAM-SOIL

GROSS	99490	**PRICE**	_____
TARE	38560	**SUBTOTAL**	_____
NET LB	60920	**TAX**	_____
NET TN	30.46	**TOTAL**	_____

245

_____
WEIGHER

Terms: Net 30 days from the end of the month. A finance charge will be assessed on all past due accounts at a rate of 1-1/2% PER MONTH. Annual Finance Charge of 18%. Notice: It is specifically agreed that this company shall not be in any way responsible for damage to customers property resulting in Deliveries beyond curb line.

DRIVER'S SIGNATURE _____

IRON MOUNTAIN QUARRY LLC

Quarry site: 20800 Wayside Mine Rd – Granite Falls WA
Phone: (Toll Free) 1-866-672-3434

DATE 09/07/2017 **TIME** 8:02 **TICKET#** 091513

CUSTOMER 844 GLACIER ENVIRONMENTAL ☐ **CASH** ☐ **CHARGE**

JOB 4 730 S MERTLE ST **PO#** _____

HAULER 1054 MERANTO TRUCKING **TRUCK#** MERANTO X ☐ **HIRED**

PRODUCT 500 CLASS 2 PETROLEUM CONTAM SOIL

GROSS	108460	**PRICE**	_____
TARE	38560	**SUBTOTAL**	_____
NET LB	69900	**TAX**	_____
NET TN	34.95	**TOTAL**	_____

L245

_____
WEIGHER

Terms: Net 30 days from the end of the month. A finance charge will be assessed on all past due accounts at a rate of 1-1/2% PER MONTH. Annual Finance Charge of 18%. Notice: It is specifically agreed that this company shall not be in any way responsible for damage to customers property resulting in Deliveries beyond curb line.

DRIVER'S SIGNATURE _____

IRON MOUNTAIN QUARRY LLC

Quarry site: 20800 Wayside Mine Rd – Granite Falls WA
Phone: (Toll Free) 1-866-672-3434

DATE 09/08/2017 **TIME** 12:56 **TICKET#** 991835

CUSTOMER 844 GLACIER ENVIRONMENTAL ☐ **CASH** ☐ **CHARGE**

JOB 4 730 S MERTLE ST **PO#** _____

HAULER 717 NORTHWEST SAND & GRAVEL **TRUCK#** NW24 X ☐ **HIRED**

PRODUCT 500A CLASS 2 PETROLEUM CONTAM SOIL

GROSS	102500	**PRICE**	_____
TARE	42500	**SUBTOTAL**	_____
NET LB	60000	**TAX**	_____
NET TN	~~30.00~~ 26.00	**TOTAL**	_____

23439

_____
WEIGHER

Terms: Net 30 days from the end of the month. A finance charge will be assessed on all past due accounts at a rate of 1-1/2% PER MONTH. Annual Finance Charge of 18%. Notice: It is specifically agreed that this company shall not be in any way responsible for damage to customers property resulting in Deliveries beyond curb line.

DRIVER'S SIGNATURE _____

IRON MOUNTAIN QUARRY LLC

Quarry site: 20800 Wayside Mine Rd – Granite Falls WA
Phone: (Toll Free) 1-866-672-3434

DATE 09/08/2017 **TIME** 9:04 **TICKET#** 091752

CUSTOMER 044 GLACIER ENVIRONMENTAL ☐ **CASH** ☐ **CHARGE**

JOB 4 730 S MERTLE ST **PO#** _____

HAULER 717 NORTHWEST SAND & GRAVEL **TRUCK#** NW24 X☐ **HIRED**

PRODUCT 508 CLASS 2 PETROLEUM CONTAM SOIL

GROSS	95700	**PRICE**	
TARE	42500	**SUBTOTAL**	
NET LB	53200	**TAX**	
NET TN	26.60	**TOTAL**	

3439

WEIGHER

Terms: Net 30 days from the end of the month. A finance charge will be assessed on all past due accounts at a rate of 1-1/2% PER MONTH. Annual Finance Charge of 18%. Notice: It is specifically agreed that this company shall not be in any way responsible for damage to customers property resulting in Deliveries beyond curb line.

DRIVER'S SIGNATURE _____

IRON MOUNTAIN QUARRY LLC

Quarry site: 20800 Wayside Mine Rd – Granite Falls WA
Phone: (Toll Free) 1-866-672-3434

DATE _____ **TIME** _____ **TICKET#** _____

CUSTOMER _____ ☐ **CASH** ☐ **CHARGE**

JOB _____ **PO#** _____

HAULER _____ **TRUCK#** _____ ☐ **HIRED**

PRODUCT _____

PRICE _____

SUBTOTAL _____

TAX _____

~~_____~~ 26.00 **TOTAL** _____

_____
WEIGHER

Terms: Net 30 days from the end of the month. A finance charge will be assessed on all past due accounts at a rate of 1-1/2% PER MONTH. Annual Finance Charge of 18%. Notice: It is specifically agreed that this company shall not be in any way responsible for damage to customers property resulting in Deliveries beyond curb line.

DRIVER'S SIGNATURE _____ RAY

IRON MOUNTAIN QUARRY LLC

Quarry site: 20800 Wayside Mine Rd – Granite Falls WA
Phone: (Toll Free) 1-866-672-3434

DATE 09/08/2017 **TIME** 6:50 **TICKET#** 091709

CUSTOMER 044 GLACIER ENVIRONMENTAL ☐ **CASH** ☐ **CHARGE**

JOB 4 730 S MERTLE ST **PO#** _____

HAULER 241 SPRINGBROOK NURSERY **TRUCK#** SBN25 X ☐ **HIRED**

PRODUCT 300 CLASS 2 PETROLEUM CONTAM SOIL

GROSS	99320	**PRICE**	_____
TARE	40780	**SUBTOTAL**	_____
NET LB	58540	**TAX**	_____
NET TN	~~29.27~~ 20.00	**TOTAL**	_____

L18019

_____
WEIGHER

Terms: Net 30 days from the end of the month. A finance charge will be assessed on all past due accounts at a rate of 1-1/2% PER MONTH. Annual Finance Charge of 18%. Notice: It is specifically agreed that this company shall not be in any way responsible for damage to customers property resulting in Deliveries beyond curb line.

DRIVER'S SIGNATURE RAY

IRON MOUNTAIN QUARRY LLC

Quarry site: 20800 Wayside Mine Rd – Granite Falls WA
Phone: (Toll Free) 1-866-672-3434

DATE 09/08/2017 **TIME** 10:47 **TICKET#** 091732

CUSTOMER 844 GLACIER ENVIRONMENTAL ☐ **CASH** ☐ **CHARGE**

JOB 4 790 S MERTLE ST **PO#** _____

HAULER 261 SPRINGBROOK NURSERY **TRUCK#** SBN25 ☐ **HIRED**

PRODUCT 508 CLASS 2 PETROLEUM CONTAM SOIL

GROSS 102320 **PRICE** _____

TARE 40780 **SUBTOTAL** _____

NET LB 61540 **TAX** _____

NET TN ~~30.77~~ 21.00 **TOTAL** _____

118019

_____
WEIGHER

Terms: Net 30 days from the end of the month. A finance charge will be assessed on all past due accounts at a rate of 1-1/2% PER MONTH. Annual Finance Charge of 18%. Notice: It is specifically agreed that this company shall not be in any way responsible for damage to customers property resulting in Deliveries beyond curb line.

DRIVER'S SIGNATURE RAY

IRON MOUNTAIN QUARRY LLC

Quarry site: 20800 Wayside Mine Rd – Granite Falls WA
Phone: (Toll Free) 1-866-672-3434

DATE 09/08/2017 **TIME** 9:02 **TICKET#** 091751

CUSTOMER 844 GLACIER ENVIRONMENTAL ☐ **CASH** ☐ **CHARGE**

JOB 4 730 S MERTLE ST **PO#** _____

HAULER 1854 MERANTO TRUCKING **TRUCK#** MERANTO X ☐ **HIRED**

PRODUCT 50A CLASS 2 PETROLEUM CONTAM SOIL

GROSS	99500	**PRICE**	_____
TARE	38560	**SUBTOTAL**	_____
NET LB	60940	**TAX**	_____
NET TN	~~30.47~~ 20.50	**TOTAL**	_____

LB47

_____
WEIGHER

Terms: Net 30 days from the end of the month. A finance charge will be assessed on all past due accounts at a rate of 1-1/2% PER MONTH. Annual Finance Charge of 18%. Notice: It is specifically agreed that this company shall not be in any way responsible for damage to customers property resulting in Deliveries beyond curb line.

DRIVER'S SIGNATURE _____

IRON MOUNTAIN QUARRY LLC

Quarry site: 20800 Wayside Mine Rd – Granite Falls WA
Phone: (Toll Free) 1-866-672-3434

DATE 09/08/2017 **TIME** 12:51 **TICKET#** 091029

CUSTOMER 044 GLACIER ENVIRONMENTAL ☐ **CASH** ☐ **CHARGE**

JOB 4 730 S MERTLE ST **PO#** _____

HAULER 1054 MERANTO TRUCKING **TRUCK#** MERANTO X ☐ **HIRED**

PRODUCT 50A CLASS 2 PETROLEUM CONTAM SOIL

GROSS	99000	**PRICE**	_____
TARE	38560	**SUBTOTAL**	_____
NET LB	60440	**TAX**	_____
NET TN	30.22	**TOTAL**	_____

L247

_____
WEIGHER

Terms: Net 30 days from the end of the month. A finance charge will be assessed on all past due accounts at a rate of 1-1/2% PER MONTH. Annual Finance Charge of 18%. Notice: It is specifically agreed that this company shall not be in any way responsible for damage to customers property resulting in Deliveries beyond curb line.

DRIVER'S SIGNATURE _____

IRON MOUNTAIN QUARRY LLC

Quarry site: 20800 Wayside Mine Rd – Granite Falls WA
Phone: (Toll Free) 1-866-672-3434

DATE 09/08/2017 **TIME** 13:11 **TICKET#** 091040

CUSTOMER 844 GLACIER ENVIRONMENTAL ☐ **CASH** ☐ **CHARGE**

JOB 4 730 S MERTLE ST **PO#** _____

HAULER 717 NORTHWEST SAND & GRAVEL **TRUCK#** NW25 X☐ **HIRED**

PRODUCT 500 CLASS 2 PETROLEUM CONTAM SOIL

GROSS	105220	**PRICE**	_____
TARE	38660	**SUBTOTAL**	_____
NET LB	66560	**TAX**	_____
NET TN	33.28	**TOTAL**	_____

23593

_____
WEIGHER

Terms: Net 30 days from the end of the month. A finance charge will be assessed on all past due accounts at a rate of 1-1/2% PER MONTH. Annual Finance Charge of 18%. Notice: It is specifically agreed that this company shall not be in any way responsible for damage to customers property resulting in Deliveries beyond curb line.

DRIVER'S SIGNATURE _____

IRON MOUNTAIN QUARRY LLC

Quarry site: 20800 Wayside Mine Rd – Granite Falls WA
Phone: (Toll Free) 1-866-672-3434

DATE 09/11/2017 **TIME** 12:19 **TICKET#** 092125

CUSTOMER 844 GLACIER ENVIRONMENTAL ☐ **CASH** ☐ **CHARGE**

JOB 4 739 S MERTLE ST **PO#** _____

HAULER 717 NORTHWEST SAND & GRAVEL **TRUCK#** NW24 ☒ **HIRED**

PRODUCT 50A CLASS 2 PETROLEUM CONTAM SOIL

GROSS	103360	**PRICE**	_____
TARE	42500	**SUBTOTAL**	_____
NET LB	60860	**TAX**	_____
NET TN	30.43	**TOTAL**	_____

23442

_____
WEIGHER

Terms: Net 30 days from the end of the month. A finance charge will be assessed on all past due accounts at a rate of 1-1/2% PER MONTH. Annual Finance Charge of 18%. Notice: It is specifically agreed that this company shall not be in any way responsible for damage to customers property resulting in Deliveries beyond curb line.

DRIVER'S SIGNATURE _____

IRON MOUNTAIN QUARRY LLC

Quarry site: 20800 Wayside Mine Rd – Granite Falls WA
Phone: (Toll Free) 1-866-672-3434

DATE _____ **TIME** _____ **TICKET#** _____

CUSTOMER _____ ☐ **CASH** ☐ **CHARGE**

JOB _____ **PO#** _____

HAULER _____ **TRUCK#** _____ ☐ **HIRED**

PRODUCT _____

PRICE _____

SUBTOTAL _____

TAX _____

TOTAL _____

_____
WEIGHER

Terms: Net 30 days from the end of the month. A finance charge will be assessed on all past due accounts at a rate of 1-1/2% PER MONTH. Annual Finance Charge of 18%. Notice: It is specifically agreed that this company shall not be in any way responsible for damage to customers property resulting in Deliveries beyond curb line.

DRIVER'S SIGNATURE _____

IRON MOUNTAIN QUARRY LLC

Quarry site: 20800 Wayside Mine Rd – Granite Falls WA
Phone: (Toll Free) 1-866-672-3434

DATE 09/11/2017 **TIME** 8:32 **TICKET#** 092054

CUSTOMER 844 GLACIER ENVIRONMENTAL ☐ **CASH** ☐ **CHARGE**

JOB 4 730 S MERTLE ST **PO#** _____

HAULER 717 NORTHWEST SAND & GRAVEL **TRUCK#** NW15 X ☐ **HIRED**

PRODUCT 90A CLASS 2 PETROLEUM CONTAM SOIL

GROSS	117960	**PRICE**	_____
TARE	40680	**SUBTOTAL**	_____
NET LB	77280	**TAX**	_____
NET TN	38.64	**TOTAL**	_____

23556

_____
WEIGHER

Terms: Net 30 days from the end of the month. A finance charge will be assessed on all past due accounts at a rate of 1-1/2% PER MONTH. Annual Finance Charge of 18%. Notice: It is specifically agreed that this company shall not be in any way responsible for damage to customers property resulting in Deliveries beyond curb line.

DRIVER'S SIGNATURE _____

IRON MOUNTAIN QUARRY LLC

Quarry site: 20800 Wayside Mine Rd – Granite Falls WA
Phone: (Toll Free) 1-866-672-3434

DATE 09/11/2017 **TIME** 12:35 **TICKET#** 092131

CUSTOMER 844 GLACIER ENVIRONMENTAL ☐ **CASH** ☐ **CHARGE**

JOB 4 730 S MERTLE ST **PO#** _____

HAULER 717 NORTHWEST SAND & GRAVEL **TRUCK#** NW15 ☒ **HIRED**

PRODUCT 508 CLASS 2 PETROLEUM CONTAM SOIL

GROSS	58840	**PRICE**	_____
TARE	40680	**SUBTOTAL**	_____
NET LB	58160	**TAX**	_____
NET TN	29.08	**TOTAL**	_____

23556

_____
WEIGHER

Terms: Net 30 days from the end of the month. A finance charge will be assessed on all past due accounts at a rate of 1-1/2% PER MONTH. Annual Finance Charge of 18%. Notice: It is specifically agreed that this company shall not be in any way responsible for damage to customers property resulting in Deliveries beyond curb line.

DRIVER'S SIGNATURE _____

IRON MOUNTAIN QUARRY LLC

Quarry site: 20800 Wayside Mine Rd – Granite Falls WA
Phone: (Toll Free) 1-866-672-3434

DATE 09/11/2017 **TIME** 15:15 **TICKET#** 092182

CUSTOMER 044 GLACIER ENVIRONMENTAL ☐ **CASH** ☐ **CHARGE**

JOB 4 730 S MERTLE ST **PO#** _____

HAULER 241 SPRINGBROOK NURSERY **TRUCK#** SBN25 X ☐ **HIRED**

PRODUCT 500 CLASS 2 PETROLEUM CONTAM SOIL

GROSS	105460	**PRICE**	
TARE	40780	**SUBTOTAL**	
NET LB	64680	**TAX**	
NET TN	32.34	**TOTAL**	

118020

_____
WEIGHER

Terms: Net 30 days from the end of the month. A finance charge will be assessed on all past due accounts at a rate of 1-1/2% PER MONTH. Annual Finance Charge of 18%. Notice: It is specifically agreed that this company shall not be in any way responsible for damage to customers property resulting in Deliveries beyond curb line.

DRIVER'S SIGNATURE RAY

IRON MOUNTAIN QUARRY LLC

Quarry site: 20800 Wayside Mine Rd – Granite Falls WA
Phone: (Toll Free) 1-866-672-3434

DATE 09/11/2017 **TIME** 12:10 **TICKET#** 092123

CUSTOMER 044 GLACIER ENVIRONMENTAL ☐ **CASH** ☐ **CHARGE**

JOB 4 730 S MERTLE ST **PO#** _____

HAULER 241 SPRINGBROOK NURSERY **TRUCK#** SBN25 ☐ **HIRED**

PRODUCT 500 CLASS 2 PETROLEUM CONTAM SOIL

GROSS	104240	**PRICE**	_____
TARE	40780	**SUBTOTAL**	_____
NET LB	63460	**TAX**	_____
NET TN	31.73	**TOTAL**	_____

110020

_____
WEIGHER

Terms: Net 30 days from the end of the month. A finance charge will be assessed on all past due accounts at a rate of 1-1/2% PER MONTH. Annual Finance Charge of 18%. Notice: It is specifically agreed that this company shall not be in any way responsible for damage to customers property resulting in Deliveries beyond curb line.

DRIVER'S SIGNATURE _____

IRON MOUNTAIN QUARRY LLC

Quarry site: 20800 Wayside Mine Rd – Granite Falls WA
Phone: (Toll Free) 1-866-672-3434

DATE 09/11/2017 **TIME** 8:29 **TICKET#** 092051

CUSTOMER A44 GLACIER ENVIRONMENTAL ☐ **CASH** ☐ **CHARGE**

JOB 4 730 S MERTLE ST **PO#** _____

HAULER 241 SPRINGBROOK NURSERY **TRUCK#** SDN25 ☐ **HIRED**

PRODUCT 500 CLASS 2 PETROLEUM CONTAM SOIL

GROSS	115500	**PRICE**	_____
TARE	40780	**SUBTOTAL**	_____
NET LB	74720	**TAX**	_____
NET TN	37.36	**TOTAL**	_____

110020

_____
WEIGHER

Terms: Net 30 days from the end of the month. A finance charge will be assessed on all past due accounts at a rate of 1-1/2% PER MONTH. Annual Finance Charge of 18%. Notice: It is specifically agreed that this company shall not be in any way responsible for damage to customers property resulting in Deliveries beyond curb line.

DRIVER'S SIGNATURE RAY

IRON MOUNTAIN QUARRY LLC

Quarry site: 20800 Wayside Mine Rd – Granite Falls WA
Phone: (Toll Free) 1-866-672-3434

DATE 09/11/2017 **TIME** 7:40 **TICKET#** 092037

CUSTOMER 844 GLACIER ENVIRONMENTAL ☐ **CASH** ☐ **CHARGE**

JOB 4 730 S MERTLE ST **PO#** _____

HAULER 1054 MERANTO TRUCKING **TRUCK#** MERANTO ☐ **HIRED**

PRODUCT 508 CLASS 2 PETROLEUM CONTAM SOIL

GROSS	108420	**PRICE**	_____
TARE	39420	**SUBTOTAL**	_____
NET LB	69000	**TAX**	_____
NET TN	34.50	**TOTAL**	_____

1249

_____
WEIGHER

Terms: Net 30 days from the end of the month. A finance charge will be assessed on all past due accounts at a rate of 1-1/2% PER MONTH. Annual Finance Charge of 18%. Notice: It is specifically agreed that this company shall not be in any way responsible for damage to customers property resulting in Deliveries beyond curb line.

DRIVER'S SIGNATURE _____

IRON MOUNTAIN QUARRY LLC

Quarry site: 20800 Wayside Mine Rd – Granite Falls WA
Phone: (Toll Free) 1-866-672-3434

DATE 09/11/2017 **TIME** 16:31 **TICKET#** 092213

CUSTOMER 844 GLACIER ENVIRONMENTAL ☐ **CASH** ☐ **CHARGE**

JOB 4 730 S MERTLE ST **PO#** _____

HAULER 717 NORTHWEST SAND & GRAVEL **TRUCK#** NW24 X☐ **HIRED**

PRODUCT 500 CLASS 2 PETROLEUM CONTAM SOIL

GROSS	98160	**PRICE**	
TARE	42500	**SUBTOTAL**	
NET LB	55660	**TAX**	
NET TN	27.83	**TOTAL**	

23442

WEIGHER

Terms: Net 30 days from the end of the month. A finance charge will be assessed on all past due accounts at a rate of 1-1/2% PER MONTH. Annual Finance Charge of 18%. Notice: It is specifically agreed that this company shall not be in any way responsible for damage to customers property resulting in Deliveries beyond curb line.

DRIVER'S SIGNATURE _____

IRON MOUNTAIN QUARRY LLC

Quarry site: 20800 Wayside Mine Rd – Granite Falls WA
Phone: (Toll Free) 1-866-672-3434

DATE 09/11/2017 **TIME** 13:44 **TICKET#** 092152

CUSTOMER 044 GLACIER ENVIRONMENTAL ☐ **CASH** ☐ **CHARGE**

JOB 4 730 S MERTLE ST **PO#** _____

HAULER 1054 MERANTO TRUCKING **TRUCK#** MERANTO X ☐ **HIRED**

PRODUCT 500 CLASS 2 PETROLEUM CONTAM SOIL

GROSS	103460	**PRICE**	_____
TARE	39420	**SUBTOTAL**	_____
NET LB	64040	**TAX**	_____
NET TN	32.02	**TOTAL**	_____

1249

_____
WEIGHER

Terms: Net 30 days from the end of the month. A finance charge will be assessed on all past due accounts at a rate of 1-1/2% PER MONTH. Annual Finance Charge of 18%. Notice: It is specifically agreed that this company shall not be in any way responsible for damage to customers property resulting in Deliveries beyond curb line.

DRIVER'S SIGNATURE _____

IRON MOUNTAIN QUARRY LLC

Quarry site: 20800 Wayside Mine Rd – Granite Falls WA
Phone: (Toll Free) 1-866-672-3434

DATE 09/12/2017 **TIME** 7:25 **TICKET#** 002210

CUSTOMER 444 GLACIER ENVIRONMENTAL ☐ **CASH** ☐ **CHARGE**

JOB 4 730 S MERRILL ST **PO#** _____

HAULER 1054 MERANTO TRUCKING **TRUCK#** MERANTO ☐ **HIRED**

PRODUCT 500 CLASS 2 PETROLEUM CONTAM SOIL

GROSS 105680 **PRICE** _____

TARE 39480 **SUBTOTAL** _____

NET LB 66200 **TAX** _____

NET TN 33.10 **TOTAL** _____

1652

_____
WEIGHER

Terms: Net 30 days from the end of the month. A finance charge will be assessed on all past due accounts at a rate of 1-1/2% PER MONTH. Annual Finance Charge of 18%. Notice: It is specifically agreed that this company shall not be in any way responsible for damage to customers property resulting in Deliveries beyond curb line.

DRIVER'S SIGNATURE _____

IRON MOUNTAIN QUARRY LLC

Quarry site: 20800 Wayside Mine Rd – Granite Falls WA
Phone: (Toll Free) 1-866-672-3434

DATE 09/12/2017 **TIME** 12:09 **TICKET#** 092322

CUSTOMER 844 GLACIER ENVIRONMENTAL ☐ **CASH** ☐ **CHARGE**

JOB 4 730 S MERTLE ST **PO#** _____

HAULER 1054 MERANTO TRUCKING **TRUCK#** MERANTO X ☐ **HIRED**

PRODUCT 508 CLASS 2 PETROLEUM CONTAM SOIL

GROSS	105920	**PRICE**	_____
TARE	39480	**SUBTOTAL**	_____
NET LB	66440	**TAX**	_____
NET TN	33.22	**TOTAL**	_____

1652

_____
WEIGHER

Terms: Net 30 days from the end of the month. A finance charge will be assessed on all past due accounts at a rate of 1-1/2% PER MONTH. Annual Finance Charge of 18%. Notice: It is specifically agreed that this company shall not be in any way responsible for damage to customers property resulting in Deliveries beyond curb line.

DRIVER'S SIGNATURE _____

IRON MOUNTAIN QUARRY LLC

Quarry site: 20800 Wayside Mine Rd – Granite Falls WA
Phone: (Toll Free) 1-866-672-3434

DATE 09/12/2017 **TIME** 12:32 **TICKET#** 092329

CUSTOMER 844 GLACIER ENVIRONMENTAL ☐ **CASH** ☐ **CHARGE**

JOB 4 730 S MERTLE ST **PO#** _____

HAULER 717 NORTHWEST SAND & GRAVEL **TRUCK#** NW24 X ☐ **HIRED**

PRODUCT 500 CLASS 2 PETROLEUM CONTAM SOIL

GROSS	108300	**PRICE**	_____
TARE	42500	**SUBTOTAL**	_____
NET LB	65800	**TAX**	_____
NET TN	32.90	**TOTAL**	_____

23444

_____
WEIGHER

Terms: Net 30 days from the end of the month. A finance charge will be assessed on all past due accounts at a rate of 1-1/2% PER MONTH. Annual Finance Charge of 18%. Notice: It is specifically agreed that this company shall not be in any way responsible for damage to customers property resulting in Deliveries beyond curb line.

DRIVER'S SIGNATURE _____

IRON MOUNTAIN QUARRY LLC

Quarry site: 20800 Wayside Mine Rd – Granite Falls WA
Phone: (Toll Free) 1-866-672-3434

DATE 09/12/2017 **TIME** 7:55 **TICKET#** 092234

CUSTOMER 044 GLACIER ENVIRONMENTAL ☐ **CASH** ☐ **CHARGE**

JOB 4 730 S MERTLE ST **PO#** _____

HAULER 717 NORTHWEST SAND & GRAVEL **TRUCK#** NW24 ☒ **HIRED**

PRODUCT 508 CLASS 2 PETROLEUM CONTAM SOIL

GROSS	103280	**PRICE**	_____
TARE	42500	**SUBTOTAL**	_____
NET LB	60780	**TAX**	_____
NET TN	30.39	**TOTAL**	_____

23444

_____
WEIGHER

Terms: Net 30 days from the end of the month. A finance charge will be assessed on all past due accounts at a rate of 1-1/2% PER MONTH. Annual Finance Charge of 18%. Notice: It is specifically agreed that this company shall not be in any way responsible for damage to customers property resulting in Deliveries beyond curb line.

DRIVER'S SIGNATURE _____

IRON MOUNTAIN QUARRY LLC

Quarry site: 20800 Wayside Mine Rd – Granite Falls WA
Phone: (Toll Free) 1-866-672-3434

DATE 09/12/2017 **TIME** 6:30 **TICKET#** 092217

CUSTOMER 844 GLACIER ENVIRONMENTAL ☐ **CASH** ☐ **CHARGE**

JOB 4 730 S MERTLE ST **PO#** _____

HAULER 717 NORTHWEST SAND & GRAVEL **TRUCK#** MN15 ☐ **HIRED**

PRODUCT 508 CLASS 2 PETROLEUM CONTAM SOIL

GROSS	101240	**PRICE**	_____
TARE	40680	**SUBTOTAL**	_____
NET LB	60560	**TAX**	_____
NET TN	30.28	**TOTAL**	_____

23556

_____
WEIGHER

Terms: Net 30 days from the end of the month. A finance charge will be assessed on all past due accounts at a rate of 1-1/2% PER MONTH. Annual Finance Charge of 18%. Notice: It is specifically agreed that this company shall not be in any way responsible for damage to customers property resulting in Deliveries beyond curb line.

DRIVER'S SIGNATURE _____

IRON MOUNTAIN QUARRY LLC

Quarry site: 20800 Wayside Mine Rd – Granite Falls WA
Phone: (Toll Free) 1-866-672-3434

DATE 09/12/2017 **TIME** 12:00 **TICKET#** 092319

CUSTOMER 844 GLACIER ENVIRONMENTAL ☐ **CASH** ☐ **CHARGE**

JOB 4 730 S MERTLE ST **PO#** _____

HAULER 241 SPRINGBROOK NURSERY **TRUCK#** SR125 X ☐ **HIRED**

PRODUCT 508 CLASS 2 PETROLEUM CONTAM SOIL

GROSS	107120	**PRICE**	_____
TARE	40780	**SUBTOTAL**	_____
NET LB	66340	**TAX**	_____
NET TN	33.17	**TOTAL**	_____

110021

_____
WEIGHER

Terms: Net 30 days from the end of the month. A finance charge will be assessed on all past due accounts at a rate of 1-1/2% PER MONTH. Annual Finance Charge of 18%. Notice: It is specifically agreed that this company shall not be in any way responsible for damage to customers property resulting in Deliveries beyond curb line.

DRIVER'S SIGNATURE RAY

IRON MOUNTAIN QUARRY LLC

Quarry site: 20800 Wayside Mine Rd – Granite Falls WA
Phone: (Toll Free) 1-866-672-3434

DATE 09/12/2017 **TIME** 7:47 **TICKET#** 992233

CUSTOMER 044 GLACIER ENVIRONMENTAL ☐ **CASH** ☐ **CHARGE**

JOB 4 730 S MERTLE ST **PO#** _____

HAULER 241 SPRINGBROOK NURSERY **TRUCK#** SDN25 X ☐ **HIRED**

PRODUCT 50A CLASS 2 PETROLEUM CONTAM SOIL

GROSS	103240	**PRICE**	
TARE	40780	**SUBTOTAL**	
NET LB	62460	**TAX**	
NET TN	31.23	**TOTAL**	

L18021

_____
WEIGHER

Terms: Net 30 days from the end of the month. A finance charge will be assessed on all past due accounts at a rate of 1-1/2% PER MONTH. Annual Finance Charge of 18%. Notice: It is specifically agreed that this company shall not be in any way responsible for damage to customers property resulting in Deliveries beyond curb line.

DRIVER'S SIGNATURE RAY

IRON MOUNTAIN QUARRY LLC

Quarry site: 20800 Wayside Mine Rd – Granite Falls WA
Phone: (Toll Free) 1-866-672-3434

DATE 09/12/2017 **TIME** 7:56 **TICKET#** 030235

CUSTOMER 844 GLACIER ENVIRONMENTAL ☐ **CASH** ☐ **CHARGE**

JOB 4 730 S MERTLE ST **PO#** _____

HAULER 717 NORTHWEST SAND & GRAVEL **TRUCK#** NW25 ☐ **HIRED**

PRODUCT 508 CLASS 2 PETROLEUM CONTAM SOIL

GROSS	103160	**PRICE**	
TARE	38660	**SUBTOTAL**	
NET LB	64440	**TAX**	
NET TN	32.22	**TOTAL**	

23518

WEIGHER

Terms: Net 30 days from the end of the month. A finance charge will be assessed on all past due accounts at a rate of 1-1/2% PER MONTH. Annual Finance Charge of 18%. Notice: It is specifically agreed that this company shall not be in any way responsible for damage to customers property resulting in Deliveries beyond curb line.

DRIVER'S SIGNATURE

IRON MOUNTAIN QUARRY LLC

Quarry site: 20800 Wayside Mine Rd – Granite Falls WA
Phone: (Toll Free) 1-866-672-3434

DATE 09/12/2017 **TIME** 12:35 **TICKET#** 092311

CUSTOMER 844 GLACIER ENVIRONMENTAL ☐ **CASH** ☐ **CHARGE**

JOB 730 S MERTLE ST **PO#** _____

HAULER 717 NORTHWEST SAND & GRAVEL **TRUCK#** NW25 X ☐ **HIRED**

PRODUCT 508 CLASS 2 PETROLEUM CONTAM SOIL

GROSS	104580	**PRICE**	_____
TARE	38660	**SUBTOTAL**	_____
NET LB	65920	**TAX**	_____
NET TN	32.96	**TOTAL**	_____

23510

_____
WEIGHER

Terms: Net 30 days from the end of the month. A finance charge will be assessed on all past due accounts at a rate of 1-1/2% PER MONTH. Annual Finance Charge of 18%. Notice: It is specifically agreed that this company shall not be in any way responsible for damage to customers property resulting in Deliveries beyond curb line.

DRIVER'S SIGNATURE _____

IRON MOUNTAIN QUARRY LLC

Quarry site: 20800 Wayside Mine Rd – Granite Falls WA
Phone: (Toll Free) 1-866-672-3434

DATE 09/12/2017 **TIME** 16:00 **TICKET#** 092483

CUSTOMER 844 GLACIER ENVIRONMENTAL ☐ **CASH** ☐ **CHARGE**

JOB 4 730 S MERTLE ST **PO#** _____

HAULER 1854 MERANTO TRUCKING **TRUCK#** MERANTO ☐ **HIRED**

PRODUCT 50A CLASS 2 PETROLEUM CONTAM SOIL

GROSS	105560	**PRICE**	_____
TARE	39480	**SUBTOTAL**	_____
NET LB	66080	**TAX**	_____
NET TN	33.04	**TOTAL**	_____

1652

_____
WEIGHER

Terms: Net 30 days from the end of the month. A finance charge will be assessed on all past due accounts at a rate of 1-1/2% PER MONTH. Annual Finance Charge of 18%. Notice: It is specifically agreed that this company shall not be in any way responsible for damage to customers property resulting in Deliveries beyond curb line.

DRIVER'S SIGNATURE _____

IRON MOUNTAIN QUARRY LLC

Quarry site: 20800 Wayside Mine Rd – Granite Falls WA
Phone: (Toll Free) 1-866-672-3434

DATE 09/12/2017 **TIME** 15:18 **TICKET#** 092384

CUSTOMER 044 GLACIER ENVIRONMENTAL ☐ **CASH** ☐ **CHARGE**

JOB 4 730 S MERTLE ST **PO#** _____

HAULER 241 SPRINGBROOK NURSERY **TRUCK#** SRM25 X ☐ **HIRED**

PRODUCT 508 CLASS 2 PETROLEUM CONTAM SOIL

GROSS	103260	**PRICE**	_____
TARE	40780	**SUBTOTAL**	_____
NET LB	62480	**TAX**	_____
NET TN	31.24	**TOTAL**	_____

118021

_____
WEIGHER

Terms: Net 30 days from the end of the month. A finance charge will be assessed on all past due accounts at a rate of 1-1/2% PER MONTH. Annual Finance Charge of 18%. Notice: It is specifically agreed that this company shall not be in any way responsible for damage to customers property resulting in Deliveries beyond curb line.

DRIVER'S SIGNATURE _____ RAY

IRON MOUNTAIN QUARRY LLC

Quarry site: 20800 Wayside Mine Rd – Granite Falls WA
Phone: (Toll Free) 1-866-672-3434

DATE 09/13/2017 **TIME** 6:31 **TICKET#** 092409

CUSTOMER 844 GLACIER ENVIRONMENTAL ☐ **CASH** ☐ **CHARGE**

JOB 4 730 S MERTLE ST **PO#** _____

HAULER 717 NORTHWEST SAND & GRAVEL **TRUCK#** NW24 X ☐ **HIRED**

PRODUCT 500 CLASS 2 PETROLEUM CONTAM SOIL

GROSS	102900	**PRICE**	_____
TARE	42500	**SUBTOTAL**	_____
NET LB	60400	**TAX**	_____
NET TN	30.20	**TOTAL**	_____

23446

_____
WEIGHER

Terms: Net 30 days from the end of the month. A finance charge will be assessed on all past due accounts at a rate of 1-1/2% PER MONTH. Annual Finance Charge of 18%. Notice: It is specifically agreed that this company shall not be in any way responsible for damage to customers property resulting in Deliveries beyond curb line.

DRIVER'S SIGNATURE _____

IRON MOUNTAIN QUARRY LLC

Quarry site: 20800 Wayside Mine Rd – Granite Falls WA
Phone: (Toll Free) 1-866-672-3434

DATE 09/13/2017 **TIME** 10:46 **TICKET#** 892487

CUSTOMER 844 GLACIER ENVIRONMENTAL ☐ **CASH** ☐ **CHARGE**

JOB 4 730 S MERTLE ST **PO#** _____

HAULER 717 NORTHWEST SAND & GRAVEL **TRUCK#** NW24 X ☐ **HIRED**

PRODUCT 50A CLASS 2 PETROLEUM CONTAM SOIL

GROSS	103920	**PRICE**	
TARE	42960	**SUBTOTAL**	
NET LB	60960	**TAX**	
NET TN	30.48	**TOTAL**	

23445

WEIGHER

Terms: Net 30 days from the end of the month. A finance charge will be assessed on all past due accounts at a rate of 1-1/2% PER MONTH. Annual Finance Charge of 18%. Notice: It is specifically agreed that this company shall not be in any way responsible for damage to customers property resulting in Deliveries beyond curb line.

DRIVER'S SIGNATURE _____

IRON MOUNTAIN QUARRY LLC

Quarry site: 20800 Wayside Mine Rd – Granite Falls WA
Phone: (Toll Free) 1-866-672-3434

DATE 09/13/2017 **TIME** 11:17 **TICKET#** 092493

CUSTOMER 044 GLACIER ENVIRONMENTAL ☐ **CASH** ☐ **CHARGE**

JOB 4 730 S MERTLE ST **PO#** _____

HAULER 717 NORTHWEST SAND & GRAVEL **TRUCK#** NW25 X ☐ **HIRED**

PRODUCT 508 CLASS 2 PETROLEUM CONTAM SOIL

GROSS	99000	**PRICE**	
TARE	38740	**SUBTOTAL**	
NET LB	60260	**TAX**	
NET TN	30.13	**TOTAL**	

23520

WEIGHER

Terms: Net 30 days from the end of the month. A finance charge will be assessed on all past due accounts at a rate of 1-1/2% PER MONTH. Annual Finance Charge of 18%. Notice: It is specifically agreed that this company shall not be in any way responsible for damage to customers property resulting in Deliveries beyond curb line.

DRIVER'S SIGNATURE

IRON MOUNTAIN QUARRY LLC

Quarry site: 20800 Wayside Mine Rd – Granite Falls WA
Phone: (Toll Free) 1-866-672-3434

DATE 09/13/2017 **TIME** 11:18 **TICKET#** 098434

CUSTOMER 844 GLACIER ENVIRONMENTAL ☐ **CASH** ☐ **CHARGE**

JOB 4 730 S MERTLE ST **PO#** _____

HAULER 717 NORTHWEST SAND & GRAVEL **TRUCK#** NW25 X ☐ **HIRED**

PRODUCT 508 CLASS 2 PETROLEUM CONTAM SOIL

GROSS	99640	**PRICE**	_____
TARE	38740	**SUBTOTAL**	_____
NET LB	60900	**TAX**	_____
NET TN	30.45	**TOTAL**	_____

23520

_____
WEIGHER

Terms: Net 30 days from the end of the month. A finance charge will be assessed on all past due accounts at a rate of 1-1/2% PER MONTH. Annual Finance Charge of 18%. Notice: It is specifically agreed that this company shall not be in any way responsible for damage to customers property resulting in Deliveries beyond curb line.

DRIVER'S SIGNATURE _____

IRON MOUNTAIN QUARRY LLC

Quarry site: 20800 Wayside Mine Rd – Granite Falls WA
Phone: (Toll Free) 1-866-672-3434

DATE 09/13/2017 **TIME** 14:00 **TICKET#** 092546

CUSTOMER 844 GLACIER ENVIRONMENTAL ☐ **CASH** ☐ **CHARGE**

JOB 4 730 S MERTLE ST **PO#** _____

HAULER 717 NORTHWEST SAND & GRAVEL **TRUCK#** NW24 X ☐ **HIRED**

PRODUCT 508 CLASS 2 PETROLEUM CONTAM SOIL

GROSS	104680	**PRICE**	_____
TARE	42960	**SUBTOTAL**	_____
NET LB	61720	**TAX**	_____
NET TN	30.86	**TOTAL**	_____

23445

_____
WEIGHER

Terms: Net 30 days from the end of the month. A finance charge will be assessed on all past due accounts at a rate of 1-1/2% PER MONTH. Annual Finance Charge of 18%. Notice: It is specifically agreed that this company shall not be in any way responsible for damage to customers property resulting in Deliveries beyond curb line.

DRIVER'S SIGNATURE _____

IRON MOUNTAIN QUARRY LLC

Quarry site: 20800 Wayside Mine Rd – Granite Falls WA
Phone: (Toll Free) 1-866-672-3434

DATE 09/13/2017 **TIME** 14:40 **TICKET#** 002557

CUSTOMER 844 GLACIER ENVIRONMENTAL ☐ **CASH** ☐ **CHARGE**

JOB 4 730 S MERTLE ST **PO#** _____

HAULER 717 NORTHWEST SAND & GRAVEL **TRUCK#** NW25 ☐ **HIRED**

PRODUCT 508 CLASS 2 PETROLEUM CONTAM SOIL

GROSS	99400	**PRICE**	_____
TARE	38740	**SUBTOTAL**	_____
NET LB	60660	**TAX**	_____
NET TN	30.33	**TOTAL**	_____

23520

_____
WEIGHER

Terms: Net 30 days from the end of the month. A finance charge will be assessed on all past due accounts at a rate of 1-1/2% PER MONTH. Annual Finance Charge of 18%. Notice: It is specifically agreed that this company shall not be in any way responsible for damage to customers property resulting in Deliveries beyond curb line.

DRIVER'S SIGNATURE _____

IRON MOUNTAIN QUARRY LLC

Quarry site: 20800 Wayside Mine Rd – Granite Falls WA
Phone: (Toll Free) 1-866-672-3434

DATE 09/13/2017 **TIME** 7:26 **TICKET#** 092426

CUSTOMER 844 GLACIER ENVIRONMENTAL ☐ **CASH** ☐ **CHARGE**

JOB 4 730 S MERTLE ST **PO#** _____

HAULER 241 SPRINGBROOK NURSERY **TRUCK#** SEMI25 X ☐ **HIRED**

PRODUCT 508 CLASS 2 PETROLEUM CONTAM SOIL

GROSS	101420	**PRICE**	_____
TARE	40780	**SUBTOTAL**	_____
NET LB	60640	**TAX**	_____
NET TN	30.32	**TOTAL**	_____

L18022

_____
WEIGHER

Terms: Net 30 days from the end of the month. A finance charge will be assessed on all past due accounts at a rate of 1-1/2% PER MONTH. Annual Finance Charge of 18%. Notice: It is specifically agreed that this company shall not be in any way responsible for damage to customers property resulting in Deliveries beyond curb line.

DRIVER'S SIGNATURE RAY

IRON MOUNTAIN QUARRY LLC

Quarry site: 20800 Wayside Mine Rd – Granite Falls WA
Phone: (Toll Free) 1-866-672-3434

DATE 09/13/2017 **TIME** 15:01 **TICKET#** 092565

CUSTOMER 844 GLACIER ENVIRONMENTAL ☐ **CASH** ☐ **CHARGE**

JOB 4 7736 3 MERTLE ST **PO#** _____

HAULER 241 SPRINGBROOK NURSERY **TRUCK#** SBN25 ☐ **HIRED**

PRODUCT 500 CLASS 2 PETROLEUM CONTAM SOIL

GROSS	101160	**PRICE**	_____
TARE	40780	**SUBTOTAL**	_____
NET LB	60400	**TAX**	_____
NET TN	30.20	**TOTAL**	_____

110022

_____
WEIGHER

Terms: Net 30 days from the end of the month. A finance charge will be assessed on all past due accounts at a rate of 1-1/2% PER MONTH. Annual Finance Charge of 18%. Notice: It is specifically agreed that this company shall not be in any way responsible for damage to customers property resulting in Deliveries beyond curb line.

DRIVER'S SIGNATURE RAY

IRON MOUNTAIN QUARRY LLC

Quarry site: 20800 Wayside Mine Rd – Granite Falls WA
Phone: (Toll Free) 1-866-672-3434

DATE 09/13/2017 **TIME** 11:34 **TICKET#** 092495

CUSTOMER 044 GLACIER ENVIRONMENTAL ☐ **CASH** ☐ **CHARGE**

JOB 4 730 S METTLE ST **PO#** _____

HAULER 241 SPRINGBROOK NURSERY **TRUCK#** SBN25 X☐ **HIRED**

PRODUCT 500 CLASS 2 PETROLEUM CONTAM SOIL

GROSS	99780	**PRICE**	_____
TARE	40780	**SUBTOTAL**	_____
NET LB	59000	**TAX**	_____
NET TN	29.50	**TOTAL**	_____

10022

_____
WEIGHER

Terms: Net 30 days from the end of the month. A finance charge will be assessed on all past due accounts at a rate of 1-1/2% PER MONTH. Annual Finance Charge of 18%. Notice: It is specifically agreed that this company shall not be in any way responsible for damage to customers property resulting in Deliveries beyond curb line.

DRIVER'S SIGNATURE _____

IRON MOUNTAIN QUARRY LLC

Quarry site: 20800 Wayside Mine Rd – Granite Falls WA
Phone: (Toll Free) 1-866-672-3434

DATE 09/13/2017 **TIME** 15:11 **TICKET#** 002569

CUSTOMER 844 GLACIER ENVIRONMENTAL ☐ **CASH** ☐ **CHARGE**

JOB 4 730 S MERTLE ST **PO#** _____

HAULER 1854 MERANTO TRUCKING **TRUCK#** MERANTO ☐ **HIRED**

PRODUCT 500 CLASS 2 PETROLEUM CONTAM SOIL

GROSS	101340	**PRICE**	_____
TARE	39480	**SUBTOTAL**	_____
NET LB	61860	**TAX**	_____
NET TN	30.93	**TOTAL**	_____

656

_____
WEIGHER

Terms: Net 30 days from the end of the month. A finance charge will be assessed on all past due accounts at a rate of 1-1/2% PER MONTH. Annual Finance Charge of 18%. Notice: It is specifically agreed that this company shall not be in any way responsible for damage to customers property resulting in Deliveries beyond curb line.

DRIVER'S SIGNATURE _____

IRON MOUNTAIN QUARRY LLC

Quarry site: 20800 Wayside Mine Rd – Granite Falls WA
Phone: (Toll Free) 1-866-672-3434

DATE 09/13/2017 **TIME** 13:35 **TICKET#** 092538

CUSTOMER 844 GLACIER ENVIRONMENTAL ☐ **CASH** ☐ **CHARGE**

JOB 4 730 S MERTLE ST **PO#** _____

HAULER 1854 MERANTO TRUCKING **TRUCK#** MERANTO X ☐ **HIRED**

PRODUCT 508 CLASS 2 PETROLEUM CONTAM SOIL

GROSS	103260	**PRICE**	_____
TARE	39480	**SUBTOTAL**	_____
NET LB	63780	**TAX**	_____
NET TN	31.89	**TOTAL**	_____

1656

_____
WEIGHER

Terms: Net 30 days from the end of the month. A finance charge will be assessed on all past due accounts at a rate of 1-1/2% PER MONTH. Annual Finance Charge of 18%. Notice: It is specifically agreed that this company shall not be in any way responsible for damage to customers property resulting in Deliveries beyond curb line.

DRIVER'S SIGNATURE _____

IRON MOUNTAIN QUARRY LLC

Quarry site: 20800 Wayside Mine Rd – Granite Falls WA
Phone: (Toll Free) 1-866-672-3434

DATE 09/14/2017 **TIME** 7:41 **TICKET#** 092602

CUSTOMER 844 GLACIER ENVIRONMENTAL ☐ **CASH** ☐ **CHARGE**

JOB 4 730 S MERTLE ST **PO#** _____

HAULER 1054 MERANTO TRUCKING **TRUCK#** MERANTO X ☐ **HIRED**

PRODUCT 508 CLASS 2 PETROLEUM CONTAM SOIL

GROSS	101180	**PRICE**	
TARE	39480	**SUBTOTAL**	
NET LB	61700	**TAX**	
NET TN	30.85	**TOTAL**	

1657

WEIGHER

Terms: Net 30 days from the end of the month. A finance charge will be assessed on all past due accounts at a rate of 1-1/2% PER MONTH. Annual Finance Charge of 18%. Notice: It is specifically agreed that this company shall not be in any way responsible for damage to customers property resulting in Deliveries beyond curb line.

DRIVER'S SIGNATURE

IRON MOUNTAIN QUARRY LLC

Quarry site: 20800 Wayside Mine Rd – Granite Falls WA
Phone: (Toll Free) 1-866-672-3434

DATE 09/14/2017 **TIME** 12:03 **TICKET#** 092670

CUSTOMER 844 GLACIER ENVIRONMENTAL ☐ **CASH** ☐ **CHARGE**

JOB 4 730 S MERTLE ST **PO#** _____

HAULER 1854 MERANTO TRUCKING **TRUCK#** MERANTO ☐ **HIRED**

PRODUCT 508 CLASS 2 PETROLEUM CONTAM SOIL

GROSS	100280	**PRICE**	
TARE	39480	**SUBTOTAL**	
NET LB	60800	**TAX**	
NET TN	30.40	**TOTAL**	

1657

WEIGHER

Terms: Net 30 days from the end of the month. A finance charge will be assessed on all past due accounts at a rate of 1-1/2% PER MONTH. Annual Finance Charge of 18%. Notice: It is specifically agreed that this company shall not be in any way responsible for damage to customers property resulting in Deliveries beyond curb line.

DRIVER'S SIGNATURE

IRON MOUNTAIN QUARRY LLC

Quarry site: 20800 Wayside Mine Rd – Granite Falls WA
Phone: (Toll Free) 1-866-672-3434

DATE 03/14/2017 **TIME** 15:35 **TICKET#** 092702

CUSTOMER 844 GLACIER ENVIRONMENTAL ☐ **CASH** ☐ **CHARGE**

JOB 4 730 S MERTLE ST **PO#** _____

HAULER 717 NORTHWEST SAND & GRAVEL **TRUCK#** NW25 X ☐ **HIRED**

PRODUCT 500 CLASS 2 PETROLEUM CONTAM SOIL

GROSS	98920	**PRICE**	_____
TARE	38740	**SUBTOTAL**	_____
NET LB	60180	**TAX**	_____
NET TN	30.09	**TOTAL**	_____

23521

_____
WEIGHER

Terms: Net 30 days from the end of the month. A finance charge will be assessed on all past due accounts at a rate of 1-1/2% PER MONTH. Annual Finance Charge of 18%. Notice: It is specifically agreed that this company shall not be in any way responsible for damage to customers property resulting in Deliveries beyond curb line.

DRIVER'S SIGNATURE _____

IRON MOUNTAIN QUARRY LLC

Quarry site: 20800 Wayside Mine Rd – Granite Falls WA
Phone: (Toll Free) 1-866-672-3434

DATE 09/14/2017 **TIME** 11:53 **TICKET#** 092663

CUSTOMER 844 GLACIER ENVIRONMENTAL ☐ **CASH** ☐ **CHARGE**

JOB 4 730 S MERTLE ST **PO#** _____

HAULER 717 NORTHWEST SAND & GRAVEL **TRUCK#** NW25 ☐ **HIRED**

PRODUCT 508 CLASS 2 PETROLEUM CONTAM SOIL

GROSS	100920	**PRICE**	_____
TARE	38740	**SUBTOTAL**	_____
NET LB	62180	**TAX**	_____
NET TN	31.09	**TOTAL**	_____

23521

_____
WEIGHER

Terms: Net 30 days from the end of the month. A finance charge will be assessed on all past due accounts at a rate of 1-1/2% PER MONTH. Annual Finance Charge of 18%. Notice: It is specifically agreed that this company shall not be in any way responsible for damage to customers property resulting in Deliveries beyond curb line.

DRIVER'S SIGNATURE _____

IRON MOUNTAIN QUARRY LLC

Quarry site: 20800 Wayside Mine Rd – Granite Falls WA
Phone: (Toll Free) 1-866-672-3434

DATE 09/14/2017 **TIME** 8:00 **TICKET#** 092613

CUSTOMER 844 GLACIER ENVIRONMENTAL ☐ **CASH** ☐ **CHARGE**

JOB 4 730 S MERTLE ST **PO#** _____

HAULER 717 NORTHWEST SAND & GRAVEL **TRUCK#** NW25 ☐ **HIRED**

PRODUCT 506 CLASS 2 PETROLEUM CONTAM SOIL

GROSS	100680	**PRICE**	_____
TARE	38740	**SUBTOTAL**	_____
NET LB	61940	**TAX**	_____
NET TN	30.97	**TOTAL**	_____

23521

_____
WEIGHER

Terms: Net 30 days from the end of the month. A finance charge will be assessed on all past due accounts at a rate of 1-1/2% PER MONTH. Annual Finance Charge of 18%. Notice: It is specifically agreed that this company shall not be in any way responsible for damage to customers property resulting in Deliveries beyond curb line.

DRIVER'S SIGNATURE _____

IRON MOUNTAIN QUARRY LLC

Quarry site: 20800 Wayside Mine Rd – Granite Falls WA
Phone: (Toll Free) 1-866-672-3434

DATE 09/14/2017 **TIME** 16:00 **TICKET#** #02731

CUSTOMER 844 GLACIER ENVIRONMENTAL ☐ **CASH** ☐ **CHARGE**

JOB 4 730 S MERTLE ST **PO#** _____

HAULER 241 SPRINGBROOK NURSERY **TRUCK#** SBN25 X ☐ **HIRED**

PRODUCT 508 CLASS 2 PETROLEUM CONTAM SOIL

GROSS	102360	**PRICE**	
TARE	40780	**SUBTOTAL**	
NET LB	61580	**TAX**	
NET TN	30.79	**TOTAL**	

L10823

_____
WEIGHER

Terms: Net 30 days from the end of the month. A finance charge will be assessed on all past due accounts at a rate of 1-1/2% PER MONTH. Annual Finance Charge of 18%. Notice: It is specifically agreed that this company shall not be in any way responsible for damage to customers property resulting in Deliveries beyond curb line.

RAY

DRIVER'S SIGNATURE _____

IRON MOUNTAIN QUARRY LLC

Quarry site: 20800 Wayside Mine Rd – Granite Falls WA
Phone: (Toll Free) 1-866-672-3434

DATE 09/14/2017 **TIME** 12:12 **TICKET#** 092675

CUSTOMER 844 GLACIER ENVIRONMENTAL ☐ **CASH** ☐ **CHARGE**

JOB 4 730 S MERTLE ST **PO#** _____

HAULER 241 SPRINGBROOK NURSERY **TRUCK#** SBN25 ☐ **HIRED**

PRODUCT 508 CLASS 2 PETROLEUM CONTAM SOIL

GROSS	192480	**PRICE**	_____
TARE	40780	**SUBTOTAL**	_____
NET LB	151620	**TAX**	_____
NET TN	30.81	**TOTAL**	_____

L10823

_____
WEIGHER

Terms: Net 30 days from the end of the month. A finance charge will be assessed on all past due accounts at a rate of 1-1/2% PER MONTH. Annual Finance Charge of 18%. Notice: It is specifically agreed that this company shall not be in any way responsible for damage to customers property resulting in Deliveries beyond curb line.

DRIVER'S SIGNATURE RAY

IRON MOUNTAIN QUARRY LLC

Quarry site: 20800 Wayside Mine Rd – Granite Falls WA
Phone: (Toll Free) 1-866-672-3434

DATE 09/14/2017 **TIME** 8:27 **TICKET#** 892521

CUSTOMER 844 GLACIER ENVIRONMENTAL ☐ **CASH** ☐ **CHARGE**

JOB 4 730 S MERTLE ST **PO#** _____

HAULER 241 SPRINGBROOK NURSERY **TRUCK#** SBN25 ☐ **HIRED**

PRODUCT 500 CLASS 2 PETROLEUM CONTAM SOIL

GROSS	104860	**PRICE**	_____
TARE	40780	**SUBTOTAL**	_____
NET LB	64080	**TAX**	_____
NET TN	32.04	**TOTAL**	_____

118023

_____
WEIGHER

Terms: Net 30 days from the end of the month. A finance charge will be assessed on all past due accounts at a rate of 1-1/2% PER MONTH. Annual Finance Charge of 18%. Notice: It is specifically agreed that this company shall not be in any way responsible for damage to customers property resulting in Deliveries beyond curb line.

DRIVER'S SIGNATURE PAY

IRON MOUNTAIN QUARRY LLC

Quarry site: 20800 Wayside Mine Rd – Granite Falls WA
Phone: (Toll Free) 1-866-672-3434

DATE 09/14/2017 **TIME** 15:43 **TICKET#** 092726

CUSTOMER 844 GLACIER ENVIRONMENTAL ☐ **CASH** ☐ **CHARGE**

JOB 4 730 S MERTLE ST **PO#** _____

HAULER 717 NORTHWEST SAND & GRAVEL **TRUCK#** NW24 X ☐ **HIRED**

PRODUCT 500 CLASS 2 PETROLEUM CONTAM SOIL

GROSS	103920	**PRICE**	_____
TARE	42960	**SUBTOTAL**	_____
NET LB	60960	**TAX**	_____
NET TN	30.48	**TOTAL**	_____

23447

_____
WEIGHER

Terms: Net 30 days from the end of the month. A finance charge will be assessed on all past due accounts at a rate of 1-1/2% PER MONTH. Annual Finance Charge of 18%. Notice: It is specifically agreed that this company shall not be in any way responsible for damage to customers property resulting in Deliveries beyond curb line.

DRIVER'S SIGNATURE _____

IRON MOUNTAIN QUARRY LLC

Quarry site: 20800 Wayside Mine Rd – Granite Falls WA
Phone: (Toll Free) 1-866-672-3434

DATE 09/14/2017 **TIME** 11:55 **TICKET#** 892665

CUSTOMER 844 GLACIER ENVIRONMENTAL ☐ **CASH** ☐ **CHARGE**

JOB A 730 S MERTLE ST **PO#** _____

HAULER 717 NORTHWEST SAND & GRAVEL **TRUCK#** NW24 ☐ **HIRED**

PRODUCT 500 CLASS 2 PETROLEUM CONTAM SOIL

GROSS	103880	**PRICE**	_____
TARE	42960	**SUBTOTAL**	_____
NET LB	60920	**TAX**	_____
NET TN	30.46	**TOTAL**	_____

23447

_____
WEIGHER

Terms: Net 30 days from the end of the month. A finance charge will be assessed on all past due accounts at a rate of 1-1/2% PER MONTH. Annual Finance Charge of 18%. Notice: It is specifically agreed that this company shall not be in any way responsible for damage to customers property resulting in Deliveries beyond curb line.

DRIVER'S SIGNATURE _____

IRON MOUNTAIN QUARRY LLC

Quarry site: 20800 Wayside Mine Rd – Granite Falls WA
Phone: (Toll Free) 1-866-672-3434

DATE 09/14/2017 **TIME** 11:54 **TICKET#** 092661

CUSTOMER 844 GLACIER ENVIRONMENTAL ☐ **CASH** ☐ **CHARGE**

JOB 4 730 S MERTLE ST **PO#** _____

HAULER 717 NORTHWEST SAND & GRAVEL **TRUCK#** NW24 X ☐ **HIRED**

PRODUCT 508 CLASS 2 PETROLEUM CONTAM SOIL

GROSS	104100	**PRICE**	_____
TARE	42960	**SUBTOTAL**	_____
NET LB	61140	**TAX**	_____
NET TN	30.57	**TOTAL**	_____

13447

_____
WEIGHER

Terms: Net 30 days from the end of the month. A finance charge will be assessed on all past due accounts at a rate of 1-1/2% PER MONTH. Annual Finance Charge of 18%. Notice: It is specifically agreed that this company shall not be in any way responsible for damage to customers property resulting in Deliveries beyond curb line.

DRIVER'S SIGNATURE _____

IRON MOUNTAIN QUARRY LLC

Quarry site: 20800 Wayside Mine Rd – Granite Falls WA
Phone: (Toll Free) 1-866-672-3434

DATE 09/14/2017 **TIME** 15:55 **TICKET#** 092729

CUSTOMER 844 GLACIER ENVIRONMENTAL ☐ **CASH** ☐ **CHARGE**

JOB 4 730 S MERTLE ST **PO#** _____

HAULER 1854 MERANTO TRUCKING **TRUCK#** MERANTO X ☐ **HIRED**

PRODUCT 500 CLASS 2 PETROLEUM CONTAM SOIL

GROSS	106420	**PRICE**	
TARE	39480	**SUBTOTAL**	
NET LB	66940	**TAX**	
NET TN	33.47	**TOTAL**	

L657

_____
WEIGHER

Terms: Net 30 days from the end of the month. A finance charge will be assessed on all past due accounts at a rate of 1-1/2% PER MONTH. Annual Finance Charge of 18%. Notice: It is specifically agreed that this company shall not be in any way responsible for damage to customers property resulting in Deliveries beyond curb line.

DRIVER'S SIGNATURE _____

IRON MOUNTAIN QUARRY LLC

Quarry site: 20800 Wayside Mine Rd – Granite Falls WA
Phone: (Toll Free) 1-866-672-3434

DATE 09/15/2017 **TIME** 7:56 **TICKET#** 092766

CUSTOMER 844 GLACIER ENVIRONMENTAL ☐ **CASH** ☐ **CHARGE**

JOB 4 730 S MERTLE ST **PO#** _____

HAULER 717 NORTHWEST SAND & GRAVEL **TRUCK#** NW24 X ☐ **HIRED**

PRODUCT 508 CLASS 2 PETROLEUM CONTAM SOIL

GROSS	107140	**PRICE**	
TARE	42960	**SUBTOTAL**	
NET LB	64180	**TAX**	
NET TN	32.09	**TOTAL**	

23448

_____
WEIGHER

Terms: Net 30 days from the end of the month. A finance charge will be assessed on all past due accounts at a rate of 1-1/2% PER MONTH. Annual Finance Charge of 18%. Notice: It is specifically agreed that this company shall not be in any way responsible for damage to customers property resulting in Deliveries beyond curb line.

DRIVER'S SIGNATURE _____

IRON MOUNTAIN QUARRY LLC

Quarry site: 20800 Wayside Mine Rd – Granite Falls WA
Phone: (Toll Free) 1-866-672-3434

DATE _____ **TIME** _____ **TICKET#** _____

CUSTOMER _____ ☐ **CASH** ☐ **CHARGE**

JOB _____ **PO#** _____

HAULER _____ **TRUCK#** _____ ☐ **HIRED**

PRODUCT _____

PRICE _____

SUBTOTAL _____

TAX _____

TOTAL _____

_____
WEIGHER

Terms: Net 30 days from the end of the month. A finance charge will be assessed on all past due accounts at a rate of 1-1/2% PER MONTH. Annual Finance Charge of 18%. Notice: It is specifically agreed that this company shall not be in any way responsible for damage to customers property resulting in Deliveries beyond curb line.

DRIVER'S SIGNATURE _____

IRON MOUNTAIN QUARRY LLC

Quarry site: 20800 Wayside Mine Rd – Granite Falls WA
Phone: (Toll Free) 1-866-672-3434

DATE 09/15/2017 TIME 7:41 TICKET# 293758

CUSTOMER 044 GLACIER ENVIRONMENTAL ☐ CASH ☐ CHARGE

JOB 4 730 E MERTLE ST PO# _____

HAULER 041 SPRINGBROOK NURSERY TRUCK# 03N25 X ☐ HIRED

PRODUCT 730 CLASS B PETROLEUM CONTAM SOIL

GROSS	104920	PRICE	_____
TARE	40720	SUBTOTAL	_____
NET LB	64140	TAX	_____
NET TN	32.07	TOTAL	_____

110924

_____
WEIGHER

Terms: Net 30 days from the end of the month. A finance charge will be assessed on all past due accounts at a rate of 1-1/2% PER MONTH. Annual Finance Charge of 18%. Notice: It is specifically agreed that this company shall not be in any way responsible for damage to customers property resulting in Deliveries beyond curb line.

DRIVER'S SIGNATURE _____

IRON MOUNTAIN QUARRY LLC

Quarry site: 20800 Wayside Mine Rd – Granite Falls WA
Phone: (Toll Free) 1-866-672-3434

DATE 09/15/2017 TIME 1:24 TICKET# 092709

CUSTOMER 044 GLACIER ENVIRONMENTAL ☐ CASH ☐ CHARGE

JOB 4 730 E MERTLE ST PO# _____

HAULER 717 NORTHWEST SAND & GRAVEL TRUCK# MW25 X ☐ HIRED

PRODUCT 522 CLASS B PETROLEUM CONTAM SOIL

GROSS	103320	PRICE	_____
TARE	38740	SUBTOTAL	_____
NET LB	64580	TAX	_____
NET TN	32.29	TOTAL	_____

092709

_____
WEIGHER

Terms: Net 30 days from the end of the month. A finance charge will be assessed on all past due accounts at a rate of 1-1/2% PER MONTH. Annual Finance Charge of 18%. Notice: It is specifically agreed that this company shall not be in any way responsible for damage to customers property resulting in Deliveries beyond curb line.

DRIVER'S SIGNATURE _____

IRON MOUNTAIN QUARRY LLC

Quarry site: 20800 Wayside Mine Rd – Granite Falls WA
Phone: (Toll Free) 1-866-672-3434

DATE 09/15/2017 **TIME** 10:50 **TICKET#** 092841

CUSTOMER 844 GLACIER ENVIRONMENTAL ☐ **CASH** ☐ **CHARGE**

JOB 4 730 S MYRTLE ST **PO#** _____

HAULER 1854 MERANTO TRUCKING **TRUCK#** MERANTO X ☐ **HIRED**

PRODUCT 508 CLASS 2 PETROLEUM CONTAM SOIL

GROSS	100820	**PRICE**	_____
TARE	32480	**SUBTOTAL**	_____
NET LB	61340	**TAX**	_____
NET TN	30.67	**TOTAL**	_____

1658

_____
WEIGHER

Terms: Net 30 days from the end of the month. A finance charge will be assessed on all past due accounts at a rate of 1-1/2% PER MONTH. Annual Finance Charge of 18%. Notice: It is specifically agreed that this company shall not be in any way responsible for damage to customers property resulting in Deliveries beyond curb line.

DRIVER'S SIGNATURE _____

IRON MOUNTAIN QUARRY LLC

Quarry site: 20800 Wayside Mine Rd – Granite Falls WA
Phone: (Toll Free) 1-866-672-3434

DATE 05/13/2017 TIME 1144 TICKET# 698568

CUSTOMER 644 GLACIER ENVIRONMENTAL ☐ CASH ☐ CHARGE

JOB 720 E HESTLE ST PO#

HAULER 717 NORTHWEST SAND & GRAVEL TRUCK# NW24 X ☐ HIRED

PRODUCT 538 CLASS B PETROLEUM CONTAM SOIL

GROSS	104340	PRICE	
TARE	46956	SUBTOTAL	
NET LB	57384	TAX	
NET TN	28.69	TOTAL	

23442

WEIGHER

Terms: Net 30 days from the end of the month. A finance charge will be assessed on all past due accounts at a rate of 1-1/2% PER MONTH. Annual Finance Charge of 18%. Notice: It is specifically agreed that this company shall not be in any way responsible for damage to customers property resulting in Deliveries beyond curb line.

DRIVER'S SIGNATURE

IRON MOUNTAIN QUARRY LLC

Quarry site: 20800 Wayside Mine Rd – Granite Falls WA
Phone: (Toll Free) 1-866-572-3434

DATE 09/18/2017 TIME 12:02 TICKET# 032678

CUSTOMER 244 GLACIER ENVIRONMENTAL ☐ CASH ☐ CHARGE

JOB 4 733 S MYRTLE ST PO# _____

HAULER 717 NORTHWEST SAND & GRAVEL TRUCK# M085 ☐ HIRED

PRODUCT 5EC CLASS B PETROLEUM CONTAM SOIL

GROSS	193260	PRICE	_____
TARE	32720	SUBTOTAL	_____
NET LB	54540	TAX	_____
NET TN	32.27	TOTAL	_____

23028

_____
WEIGHER

Terms: Net 30 days from the end of the month. A finance charge will be assessed on all past due accounts at a rate of 1-1/2% PER MONTH. Annual Finance Charge of 18%. Notice: It is specifically agreed that this company shall not be in any way responsible for damage to customers property resulting in Deliveries beyond curb line.

DRIVER'S SIGNATURE _____

IRON MOUNTAIN QUARRY LLC

Quarry site: 20800 Wayside Mine Rd – Granite Falls WA
Phone: (Toll Free) 1-866-672-3434

09/19/2017 15:38 093462

DATE _____ **TIME** _____ **TICKET#** _____

CUSTOMER 844 GLACIER ENVIRONMENTAL _____ ☐ **CASH** ☐ **CHARGE**

JOB 4 730 S MERTLE ST _____ **PO#** _____

HAULER 174 SPRING BROOK _____ **TRUCK#** SDN92 _____ X ☐ **HIRED**

PRODUCT 508 CLASS 2 PETROLEUM CONTAM SOIL _____

GROSS	102320	**PRICE**	_____
TARE	42320	**SUBTOTAL**	_____
NET LB	60000	**TAX**	_____
NET TN	~~30.00~~ 26.00	**TOTAL**	_____

L18627

_____
WEIGHER

Terms: Net 30 days from the end of the month. A finance charge will be assessed on all past due accounts at a rate of 1-1/2% PER MONTH. Annual Finance Charge of 18%. Notice: It is specifically agreed that this company shall not be in any way responsible for damage to customers property resulting in Deliveries beyond curb line.

DRIVER'S SIGNATURE _____ RAY

IRON MOUNTAIN QUARRY LLC

Quarry site: 20800 Wayside Mine Rd – Granite Falls WA
Phone: (Toll Free) 1-866-672-3434

09/19/2017 12:13 093401

DATE _____ **TIME** _____ **TICKET#** _____

844 GLACIER ENVIRONMENTAL

CUSTOMER _____ ☐ **CASH** ☐ **CHARGE**

4 730 S MERTLE ST

JOB _____ **PO#** _____

717 NORTHWEST SAND & GRAVEL

HAULER _____ **TRUCK#** NW24 ☐ **HIRED**

PRODUCT 508 CLASS 2 PETROLEUM CONTAM SOIL

GROSS 103640

TARE 42960

NET LB 60680

NET TN 30.34

PRICE _____

SUBTOTAL _____

TAX _____

TOTAL 24.00

23452

_____
WEIGHER

Terms: Net 30 days from the end of the month. A finance charge will be assessed on all past due accounts at a rate of 1-1/2% PER MONTH. Annual Finance Charge of 18%. Notice: It is specifically agreed that this company shall not be in any way responsible for damage to customers property resulting in Deliveries beyond curb line.

DRIVER'S SIGNATURE _____

IRON MOUNTAIN QUARRY LLC

Quarry site: 20800 Wayside Mine Rd – Granite Falls WA
Phone: (Toll Free) 1-866-672-3434

09/19/2017 8:34 093333

DATE _____ **TIME** _____ **TICKET#** _____

844 GLACIER ENVIRONMENTAL

CUSTOMER _____ ☐ **CASH** ☐ **CHARGE**

4 730 S MERTLE ST

JOB _____ **PO#** _____

717 NORTHWEST SAND & GRAVEL NW24

HAULER _____ **TRUCK#** _____ ☐ **HIRED**

PRODUCT 508 CLASS 2 PETROLEUM CONTAM SOIL

GROSS	103500	**PRICE**	_____
TARE	42960	**SUBTOTAL**	_____
NET LB	60540	**TAX**	_____
NET TN	~~30.27~~ 26.00	**TOTAL**	_____

23452

_____
WEIGHER

Terms: Net 30 days from the end of the month. A finance charge will be assessed on all past due accounts at a rate of 1-1/2% PER MONTH. Annual Finance Charge of 18%. Notice: It is specifically agreed that this company shall not be in any way responsible for damage to customers property resulting in Deliveries beyond curb line.

DRIVER'S SIGNATURE _____

IRON MOUNTAIN QUARRY LLC

Quarry site: 20800 Wayside Mine Rd – Granite Falls WA
Phone: (Toll Free) 1-866-672-3434

09/19/2017 0837 093335

DATE _____ **TIME** _____ **TICKET#** _____

044 GLACIER ENVIRONMENTAL

CUSTOMER _____ ☐ **CASH** ☐ **CHARGE**

730 S MERTLE ST

JOB _____ **PO#** _____

717 NORTHWEST SAND & GRAVEL

HAULER _____ **TRUCK#** NW23 ☐ **HIRED**

PRODUCT 50A CLASS 2 PETROLEUM CONTAM SOIL

GROSS	101200	**PRICE**	_____
TARE	40360	**SUBTOTAL**	_____
NET LB	60840	**TAX**	_____
NET TN	~~30.42~~ 26.00	**TOTAL**	_____

23479

_____
WEIGHER

Terms: Net 30 days from the end of the month. A finance charge will be assessed on all past due accounts at a rate of 1-1/2% PER MONTH. Annual Finance Charge of 18%. Notice: It is specifically agreed that this company shall not be in any way responsible for damage to customers property resulting in Deliveries beyond curb line.

DRIVER'S SIGNATURE _____

IRON MOUNTAIN QUARRY LLC

Quarry site: 20800 Wayside Mine Rd – Granite Falls WA
Phone: (Toll Free) 1-866-672-3434

09/19/2017 12:01 093406

DATE _____ **TIME** _____ **TICKET#** _____

844 GLACIER ENVIRONMENTAL

CUSTOMER _____ ☐ **CASH** ☐ **CHARGE**

4 730 S MERTLE ST

JOB _____ **PO#** _____

717 NORTHWEST SAND & GRAVEL HW23

HAULER _____ **TRUCK#** _____ ☐ **HIRED**

PRODUCT 50A CLASS 2 PETROLEUM CONTAM SOIL

GROSS 100360

TARE 40360

NET LB 60000

NET TN ~~30.00~~ 26.00

PRICE _____

SUBTOTAL _____

TAX _____

TOTAL _____

23479

_____
WEIGHER

Terms: Net 30 days from the end of the month. A finance charge will be assessed on all past due accounts at a rate of 1-1/2% PER MONTH. Annual Finance Charge of 18%. Notice: It is specifically agreed that this company shall not be in any way responsible for damage to customers property resulting in Deliveries beyond curb line.

DRIVER'S SIGNATURE _____

IRON MOUNTAIN QUARRY LLC

Quarry site: 20800 Wayside Mine Rd – Granite Falls WA
Phone: (Toll Free) 1-866-672-3434

DATE 09/19/2017 **TIME** 16:01 **TICKET#** 093468

CUSTOMER 844 GLACIER ENVIRONMENTAL ☐ **CASH** ☐ **CHARGE**

JOB 4 730 S MERTLE ST **PO#** _____

HAULER 717 NORTHWEST SAND & GRAVEL **TRUCK#** NW24 ☐ **HIRED**

PRODUCT 506 CLASS 2 PETROLEUM CONTAM SOIL

GROSS	106680	**PRICE**	_____
TARE	42960	**SUBTOTAL**	_____
NET LB	63720	**TAX**	_____
NET TN	~~31.86~~ 20.00	**TOTAL**	_____

23452

_____
WEIGHER

Terms: Net 30 days from the end of the month. A finance charge will be assessed on all past due accounts at a rate of 1-1/2% PER MONTH. Annual Finance Charge of 18%. Notice: It is specifically agreed that this company shall not be in any way responsible for damage to customers property resulting in Deliveries beyond curb line.

DRIVER'S SIGNATURE _____

IRON MOUNTAIN QUARRY LLC

Quarry site: 20800 Wayside Mine Rd – Granite Falls WA
Phone: (Toll Free) 1-866-672-3434

09/19/2017 16:00 093467

DATE _____ **TIME** _____ **TICKET#** _____

844 GLACIER ENVIRONMENTAL

CUSTOMER _____ ☐ **CASH** ☐ **CHARGE**

4 7730 S MERTLE ST

JOB _____ **PO#** _____

717 NORTHWEST SAND & GRAVEL NW23

HAULER _____ **TRUCK#** _____ ☐ **HIRED**

506 CLASS 2 PETROLEUM CONTAM SOIL

PRODUCT _____

GROSS 104820

TARE 40360

NET LB 64460

NET TN 32.23

23479

26.00

PRICE _____

SUBTOTAL _____

TAX _____

TOTAL _____

_____
WEIGHER

Terms: Net 30 days from the end of the month. A finance charge will be assessed on all past due accounts at a rate of 1-1/2% PER MONTH. Annual Finance Charge of 18%. Notice: It is specifically agreed that this company shall not be in any way responsible for damage to customers property resulting in Deliveries beyond curb line.

DRIVER'S SIGNATURE _____

IRON MOUNTAIN QUARRY LLC

Quarry site: 20800 Wayside Mine Rd – Granite Falls WA
Phone: (Toll Free) 1-866-672-3434

DATE 09/19/2017 **TIME** 12:40 **TICKET#** 093408

CUSTOMER 044 GLACIER ENVIRONMENTAL ☐ **CASH** ☐ **CHARGE**

JOB 4 730 S MERTLE ST **PO#** _____

HAULER 2363 SCOLERI TRUCKING **TRUCK#** SCOLERI ☐ **HIRED**

PRODUCT 508 CLASS 2 PETROLEUM CONTAM SOIL

GROSS	101040	**PRICE**	_____
TARE	41000	**SUBTOTAL**	_____
NET LB	60040	**TAX**	_____
NET TN	30.02	**TOTAL**	_____

2094

26.00

_____
WEIGHER

Terms: Net 30 days from the end of the month. A finance charge will be assessed on all past due accounts at a rate of 1-1/2% PER MONTH. Annual Finance Charge of 18%. Notice: It is specifically agreed that this company shall not be in any way responsible for damage to customers property resulting in Deliveries beyond curb line.

DRIVER'S SIGNATURE _____

IRON MOUNTAIN QUARRY LLC

Quarry site: 20800 Wayside Mine Rd – Granite Falls WA
Phone: (Toll Free) 1-866-672-3434

DATE _____ **TIME** _____ **TICKET#** _____

CUSTOMER _____ ☐ **CASH** ☐ **CHARGE**

JOB _____ **PO#** _____

HAULER _____ **TRUCK#** _____ ☐ **HIRED**

PRODUCT _____

PRICE _____

SUBTOTAL _____

TAX _____

TOTAL _____

_____
WEIGHER

Terms: Net 30 days from the end of the month. A finance charge will be assessed on all past due accounts at a rate of 1-1/2% PER MONTH. Annual Finance Charge of 18%. Notice: It is specifically agreed that this company shall not be in any way responsible for damage to customers property resulting in Deliveries beyond curb line.

DRIVER'S SIGNATURE _____

IRON MOUNTAIN QUARRY LLC

Quarry site: 20800 Wayside Mine Rd – Granite Falls WA
Phone: (Toll Free) 1-866-672-3434

DATE 09/20/2017 **TIME** 8:10 **TICKET#** 093500

CUSTOMER 844 GLACIER ENVIRONMENTAL ☐ **CASH** ☐ **CHARGE**

JOB 4 730 S MERTLE ST **PO#** _____

HAULER 717 NORTHWEST SAND & GRAVEL **TRUCK#** HW24 ☐ **HIRED**

PRODUCT 500 CLASS 2 PETROLEUM CONTAM SOIL

GROSS	109380	**PRICE**	_____
TARE	42960	**SUBTOTAL**	_____
NET LB	66420	**TAX**	_____
NET TN	33.21	**TOTAL**	_____

23453

_____
WEIGHER

Terms: Net 30 days from the end of the month. A finance charge will be assessed on all past due accounts at a rate of 1-1/2% PER MONTH. Annual Finance Charge of 18%. Notice: It is specifically agreed that this company shall not be in any way responsible for damage to customers property resulting in Deliveries beyond curb line.

DRIVER'S SIGNATURE _____

IRON MOUNTAIN QUARRY LLC

Quarry site: 20800 Wayside Mine Rd – Granite Falls WA
Phone: (Toll Free) 1-866-672-3434

DATE 09/20/2017 **TIME** 12:40 **TICKET#** 093572

CUSTOMER 844 GLACIER ENVIRONMENTAL ☐ **CASH** ☐ **CHARGE**

JOB 4 8730 S MERTLE ST **PO#** _____

HAULER 717 NORTHWEST SAND & GRAVEL **TRUCK#** NW24 ☐ **HIRED**

PRODUCT 500 CLASS 2 PETROLEUM CONTAM SOIL

GROSS	108300	**PRICE**	
TARE	42960	**SUBTOTAL**	
NET LB	65340	**TAX**	
NET TN	32.67	**TOTAL**	

23453

_____
WEIGHER

Terms: Net 30 days from the end of the month. A finance charge will be assessed on all past due accounts at a rate of 1-1/2% PER MONTH. Annual Finance Charge of 18%. Notice: It is specifically agreed that this company shall not be in any way responsible for damage to customers property resulting in Deliveries beyond curb line.

DRIVER'S SIGNATURE _____

IRON MOUNTAIN QUARRY LLC

Quarry site: 20800 Wayside Mine Rd – Granite Falls WA
Phone: (Toll Free) 1-866-672-3434

DATE _____ **TIME** _____ **TICKET#** _____

CUSTOMER _____ ☐ **CASH** ☐ **CHARGE**

JOB _____ **PO#** _____

HAULER _____ **TRUCK#** _____ ☐ **HIRED**

PRODUCT _____

PRICE _____

SUBTOTAL _____

TAX _____

TOTAL _____

_____
WEIGHER

Terms: Net 30 days from the end of the month. A finance charge will be assessed on all past due accounts at a rate of 1-1/2% PER MONTH. Annual Finance Charge of 18%. Notice: It is specifically agreed that this company shall not be in any way responsible for damage to customers property resulting in Deliveries beyond curb line.

DRIVER'S SIGNATURE _____

IRON MOUNTAIN QUARRY LLC

Quarry site: 20800 Wayside Mine Rd – Granite Falls WA
Phone: (Toll Free) 1-866-672-3434

DATE 09/20/2017 **TIME** 15:53 **TICKET#** 093610

CUSTOMER 044 GLACIER ENVIRONMENTAL ☐ **CASH** ☐ **CHARGE**

JOB 4 730 S MERTLE ST **PO#** _____

HAULER 2363 SCOLERI TRUCKING **TRUCK#** SCOLERI X ☐ **HIRED**

PRODUCT 500 CLASS 2 PETROLEUM CONTAM SOIL

GROSS	101540	**PRICE**	_____
TARE	41540	**SUBTOTAL**	_____
NET LB	60000	**TAX**	_____
NET TN	~~30.00~~ 26.00	**TOTAL**	_____

2096

_____
WEIGHER

Terms: Net 30 days from the end of the month. A finance charge will be assessed on all past due accounts at a rate of 1-1/2% PER MONTH. Annual Finance Charge of 18%. Notice: It is specifically agreed that this company shall not be in any way responsible for damage to customers property resulting in Deliveries beyond curb line.

DRIVER'S SIGNATURE _____

IRON MOUNTAIN QUARRY LLC

Quarry site: 20800 Wayside Mine Rd – Granite Falls WA
Phone: (Toll Free) 1-866-672-3434

09/20/2017 12:32 093569

DATE _____ **TIME** _____ **TICKET#** _____

844 GLACIER ENVIRONMENTAL

CUSTOMER _____ ☐ **CASH** ☐ **CHARGE**

4 730 S MERTLE ST

JOB _____ **PO#** _____

717 NORTHWEST SAND & GRAVEL NW23

HAULER _____ **TRUCK#** _____ ☐ **HIRED**

508 CLASS 2 PETROLEUM CONTAM SOIL

PRODUCT _____

GROSS 100280

TARE 40360

NET LB 67920

NET TN ~~33.96~~ 26.00

PRICE _____

SUBTOTAL _____

TAX _____

TOTAL _____

23375

_____
WEIGHER

Terms: Net 30 days from the end of the month. A finance charge will be assessed on all past due accounts at a rate of 1-1/2% PER MONTH. Annual Finance Charge of 18%. Notice: It is specifically agreed that this company shall not be in any way responsible for damage to customers property resulting in Deliveries beyond curb line.

DRIVER'S SIGNATURE _____

IRON MOUNTAIN QUARRY LLC

Quarry site: 20800 Wayside Mine Rd – Granite Falls WA
Phone: (Toll Free) 1-866-672-3434

09/20/2017 **DATE** _____ 8:01 **TIME** _____ 093496 **TICKET#** _____

844 GLACIER ENVIRONMENTAL **CUSTOMER** _____ ☐ **CASH** ☐ **CHARGE**

4 730 S MERTLE ST **JOB** _____ **PO#** _____

717 NORTHWEST SAND & GRAVEL **HAULER** _____ **TRUCK#** NW23 _____ X ☐ **HIRED**

508 CLASS 2 PETROLEUM CONTAM SOIL **PRODUCT** _____

GROSS	95080	**PRICE**	_____
TARE	40360	**SUBTOTAL**	_____
NET LB	54720	**TAX**	_____
NET TN	27.36	**TOTAL**	_____

3975

_____
WEIGHER

Terms: Net 30 days from the end of the month. A finance charge will be assessed on all past due accounts at a rate of 1-1/2% PER MONTH. Annual Finance Charge of 18%. Notice: It is specifically agreed that this company shall not be in any way responsible for damage to customers property resulting in Deliveries beyond curb line.

DRIVER'S SIGNATURE _____

IRON MOUNTAIN QUARRY LLC

Quarry site: 20800 Wayside Mine Rd – Granite Falls WA
Phone: (Toll Free) 1-866-672-3434

09/20/2017 15:23 093603

DATE _____ **TIME** _____ **TICKET#** _____

CUSTOMER 044 GLACIER ENVIRONMENTAL _____ ☐ **CASH** ☐ **CHARGE**

JOB 4 730 S MERTLE ST _____ **PO#** _____

HAULER 174 SPRING BROOK _____ **TRUCK#** SBN92 _____ ☐ **HIRED**

PRODUCT 508 CLASS 2 PETROLEUM CONTAM SOIL _____

GROSS	95560	**PRICE**	_____
TARE	42320	**SUBTOTAL**	_____
NET LB	53240	**TAX**	_____
NET TN	26.62	**TOTAL**	_____

18029

_____
WEIGHER

Terms: Net 30 days from the end of the month. A finance charge will be assessed on all past due accounts at a rate of 1-1/2% PER MONTH. Annual Finance Charge of 18%. Notice: It is specifically agreed that this company shall not be in any way responsible for damage to customers property resulting in Deliveries beyond curb line.

DRIVER'S SIGNATURE _____

IRON MOUNTAIN QUARRY LLC

Quarry site: 20800 Wayside Mine Rd – Granite Falls WA
Phone: (Toll Free) 1-866-672-3434

09/20/2017 8:40 093583

DATE _____ **TIME** _____ **TICKET#** _____

844 GLACIER ENVIRONMENTAL

CUSTOMER _____ ☐ **CASH** ☐ **CHARGE**

4 730 S MERTLE ST

JOB _____ **PO#** _____

2363 SCOLERI TRUCKING

HAULER _____ **TRUCK#** SCOLERI ☐ **HIRED**

508 CLASS 2 PETROLEUM CONTAM SOIL

PRODUCT _____

GROSS	102260	**PRICE**	_____
TARE	41540	**SUBTOTAL**	_____
NET LB	60720	**TAX**	_____
NET TN	30.36	**TOTAL**	_____

2096

20.09

_____
WEIGHER

Terms: Net 30 days from the end of the month. A finance charge will be assessed on all past due accounts at a rate of 1-1/2% PER MONTH. Annual Finance Charge of 18%. Notice: It is specifically agreed that this company shall not be in any way responsible for damage to customers property resulting in Deliveries beyond curb line.

DRIVER'S SIGNATURE _____

IRON MOUNTAIN QUARRY LLC

Quarry site: 20800 Wayside Mine Rd – Granite Falls WA
Phone: (Toll Free) 1-866-672-3434

09/20/2017 12:18 093563

DATE _____ **TIME** _____ **TICKET#** _____

844 GLACIER ENVIRONMENTAL

CUSTOMER _____ ☐ **CASH** ☐ **CHARGE**

4 730 S MERTLE ST

JOB _____ **PO#** _____

2363 SCOLERI TRUCKING SCOLERI

HAULER _____ **TRUCK#** _____ ☐ **HIRED**

500 CLASS 2 PETROLEUM CONTAM SOIL

PRODUCT _____

GROSS	112900	**PRICE**	_____
TARE	41540	**SUBTOTAL**	_____
NET LB	71360	**TAX**	_____
NET TN	35.68	**TOTAL**	_____

2096

24.00

_____
WEIGHER

Terms: Net 30 days from the end of the month. A finance charge will be assessed on all past due accounts at a rate of 1-1/2% PER MONTH. Annual Finance Charge of 18%. Notice: It is specifically agreed that this company shall not be in any way responsible for damage to customers property resulting in Deliveries beyond curb line.

DRIVER'S SIGNATURE _____

IRON MOUNTAIN QUARRY LLC

Quarry site: 20800 Wayside Mine Rd – Granite Falls WA
Phone: (Toll Free) 1-866-672-3434

09/21/2017 12:33 093704

DATE _____ **TIME** _____ **TICKET#** _____

844 GLACIER ENVIRONMENTAL

CUSTOMER _____ ☐ **CASH** ☐ **CHARGE**

4 730 S MERTLE ST

JOB _____ **PO#** _____

717 NORTHWEST SAND & GRAVEL

HAULER _____ **TRUCK#** NW25 ☐ **HIRED**

500 CLASS 2 PETROLEUM CONTAM SOIL

PRODUCT _____

GROSS	99500	**PRICE**	_____
TARE	38740	**SUBTOTAL**	_____
NET LB	61160	**TAX**	_____
NET TN	30.58	**TOTAL**	_____

23602

_____
WEIGHER

Terms: Net 30 days from the end of the month. A finance charge will be assessed on all past due accounts at a rate of 1-1/2% PER MONTH. Annual Finance Charge of 18%. Notice: It is specifically agreed that this company shall not be in any way responsible for damage to customers property resulting in Deliveries beyond curb line.

DRIVER'S SIGNATURE _____

IRON MOUNTAIN QUARRY LLC

Quarry site: 20800 Wayside Mine Rd – Granite Falls WA
Phone: (Toll Free) 1-866-672-3434

09/21/2017 6:26 093619

DATE _____ **TIME** _____ **TICKET#** _____

044 GLACIER ENVIRONMENTAL

CUSTOMER _____ ☐ **CASH** ☐ **CHARGE**

4 730 S MERTLE ST

JOB _____ **PO#** _____

717 NORTHWEST SAND & GRAVEL NW25 X

HAULER _____ **TRUCK#** _____ ☐ **HIRED**

500 CLASS 2 PETROLEUM CONTAM SOIL

PRODUCT _____

GROSS	101840	**PRICE**	_____
TARE	38740	**SUBTOTAL**	_____
NET LB	63100	**TAX**	_____
NET TN	31.55	**TOTAL**	_____

23601

_____
WEIGHER

Terms: Net 30 days from the end of the month. A finance charge will be assessed on all past due accounts at a rate of 1-1/2% PER MONTH. Annual Finance Charge of 18%. Notice: It is specifically agreed that this company shall not be in any way responsible for damage to customers property resulting in Deliveries beyond curb line.

DRIVER'S SIGNATURE _____

IRON MOUNTAIN QUARRY LLC

Quarry site: 20800 Wayside Mine Rd – Granite Falls WA
Phone: (Toll Free) 1-866-672-3434

DATE 09/21/2017 **TIME** 13:38 **TICKET#** 093719

CUSTOMER 844 GLACIER ENVIRONMENTAL ☐ **CASH** ☐ **CHARGE**

JOB 4 730 S MERTLE ST **PO#** _____

HAULER 2363 SCOLERI TRUCKING **TRUCK#** SCOLERI X ☐ **HIRED**

PRODUCT 500 CLASS 2 PETROLEUM CONTAM SOIL

GROSS	100840	**PRICE**	
TARE	41540	**SUBTOTAL**	
NET LB	59300	**TAX**	
NET TN	29.65	**TOTAL**	

2099

WEIGHER

Terms: Net 30 days from the end of the month. A finance charge will be assessed on all past due accounts at a rate of 1-1/2% PER MONTH. Annual Finance Charge of 18%. Notice: It is specifically agreed that this company shall not be in any way responsible for damage to customers property resulting in Deliveries beyond curb line.

DRIVER'S SIGNATURE

IRON MOUNTAIN QUARRY LLC

Quarry site: 20800 Wayside Mine Rd – Granite Falls WA
Phone: (Toll Free) 1-866-672-3434

09/21/2017 14:00 093731

DATE _____ **TIME** _____ **TICKET#** _____

844 GLACIER ENVIRONMENTAL

CUSTOMER _____ ☐ **CASH** ☐ **CHARGE**

4 730 S MERTLE ST

JOB _____ **PO#** _____

174 SPRING BROOK

HAULER _____ **TRUCK#** SRN92 X ☐ **HIRED**

PRODUCT 508 CLASS 2 PETROLEUM CONTAM SOIL

GROSS 102320

TARE 42320

NET LB 60060

NET TN ~~30.03~~ 26.00

118633

PRICE _____

SUBTOTAL _____

TAX _____

TOTAL _____

_____
WEIGHER

Terms: Net 30 days from the end of the month. A finance charge will be assessed on all past due accounts at a rate of 1-1/2% PER MONTH. Annual Finance Charge of 18%. Notice: It is specifically agreed that this company shall not be in any way responsible for damage to customers property resulting in Deliveries beyond curb line.

DRIVER'S SIGNATURE _____ RAY

IRON MOUNTAIN QUARRY LLC

Quarry site: 20800 Wayside Mine Rd – Granite Falls WA
Phone: (Toll Free) 1-866-672-3434

DATE 09/21/2017 **TIME** 7:04 **TICKET#** 093631

CUSTOMER 844 GLACIER ENVIRONMENTAL ☐ **CASH** ☐ **CHARGE**

JOB 4 -730 S MERTLE ST **PO#** _____

HAULER 717 NORTHWEST SAND & GRAVEL **TRUCK#** NW24 X ☐ **HIRED**

PRODUCT 500 CLASS 2 PETROLEUM CONTAM SOIL

GROSS	102640	**PRICE**	
TARE	42640	**SUBTOTAL**	
NET LB	60000	**TAX**	
NET TN	~~30.00~~ 26.00	**TOTAL**	

23455

_____
WEIGHER

Terms: Net 30 days from the end of the month. A finance charge will be assessed on all past due accounts at a rate of 1-1/2% PER MONTH. Annual Finance Charge of 18%. Notice: It is specifically agreed that this company shall not be in any way responsible for damage to customers property resulting in Deliveries beyond curb line.

DRIVER'S SIGNATURE _____

IRON MOUNTAIN QUARRY LLC

Quarry site: 20800 Wayside Mine Rd – Granite Falls WA
Phone: (Toll Free) 1-866-672-3434

09/21/2017 12:33 093703

DATE _____ **TIME** _____ **TICKET#** _____

CUSTOMER 044 GLACIER ENVIRONMENTAL _____ ☐ **CASH** ☐ **CHARGE**

4 730 S MERTLE ST

JOB _____ **PO#** _____

HAULER 717 NORTHWEST SAND & GRAVEL **TRUCK#** NW24 X ☐ **HIRED**

PRODUCT 508 CLASS 2 PETROLEUM CONTAM SOIL

GROSS	102640	**PRICE**	_____
TARE	42640	**SUBTOTAL**	_____
NET LB	60000	**TAX**	_____
NET TN	~~30.00~~ 20.00	**TOTAL**	_____

23455

_____
WEIGHER

Terms: Net 30 days from the end of the month. A finance charge will be assessed on all past due accounts at a rate of 1-1/2% PER MONTH. Annual Finance Charge of 18%. Notice: It is specifically agreed that this company shall not be in any way responsible for damage to customers property resulting in Deliveries beyond curb line.

DRIVER'S SIGNATURE _____

IRON MOUNTAIN QUARRY LLC

Quarry site: 20800 Wayside Mine Rd – Granite Falls WA
Phone: (Toll Free) 1-866-672-3434

09/21/2017 3:26 093667

DATE _____ **TIME** _____ **TICKET#** _____

844 GLACIER ENVIRONMENTAL

CUSTOMER _____ ☐ **CASH** ☐ **CHARGE**

4 730 S MERTLE ST

JOB _____ **PO#** _____

2363 SCOLERT TRUCKING

HAULER _____ **TRUCK#** SCOLERT X ☐ **HIRED**

508 CLASS 2 PETROLEUM CONTAM SOIL

PRODUCT _____

GROSS	102300	**PRICE**	_____
TARE	41540	**SUBTOTAL**	_____
NET LB	60760	**TAX**	_____
NET TN	30.38	**TOTAL**	_____

30.38 × 80

2099

_____
WEIGHER

Terms: Net 30 days from the end of the month. A finance charge will be assessed on all past due accounts at a rate of 1-1/2% PER MONTH. Annual Finance Charge of 18%. Notice: It is specifically agreed that this company shall not be in any way responsible for damage to customers property resulting in Deliveries beyond curb line.

DRIVER'S SIGNATURE _____

IRON MOUNTAIN QUARRY LLC

Quarry site: 20800 Wayside Mine Rd – Granite Falls WA
Phone: (Toll Free) 1-866-672-3434

DATE 09/21/2017 **TIME** 13:42 **TICKET#** 093721

CUSTOMER 844 GLACIER ENVIRONMENTAL ☐ **CASH** ☐ **CHARGE**

JOB 4 730 S MERTLE ST **PO#** _____

HAULER 717 NORTHWEST SAND & GRAVEL **TRUCK#** NW23 X ☐ **HIRED**

PRODUCT 508 CLASS 2 PETROLEUM CONTAM SOIL

GROSS	100360	**PRICE**	
TARE	40360	**SUBTOTAL**	
NET LB	60000	**TAX**	
NET TN	~~30.00~~ 26.00	**TOTAL**	

23979

WEIGHER _____

Terms: Net 30 days from the end of the month. A finance charge will be assessed on all past due accounts at a rate of 1-1/2% PER MONTH. Annual Finance Charge of 18%. Notice: It is specifically agreed that this company shall not be in any way responsible for damage to customers property resulting in Deliveries beyond curb line.

DRIVER'S SIGNATURE _____

IRON MOUNTAIN QUARRY LLC

Quarry site: 20800 Wayside Mine Rd – Granite Falls WA
Phone: (Toll Free) 1-866-672-3434

09/22/2017 10:38 093833

DATE _____ **TIME** _____ **TICKET#** _____

644 GLACIER ENVIRONMENTAL

CUSTOMER _____ ☐ **CASH** ☐ **CHARGE**

4 730 S MERTLE ST

JOB _____ **PO#** _____

HAULER 717 NORTHWEST SAND & GRAVEL **TRUCK#** NW24 ☒ **HIRED**

PRODUCT 508 CLASS 2 PETROLEUM CONTAM SOIL

GROSS	91280	**PRICE** _____
TARE	42640	**SUBTOTAL** _____
NET LB	48640	**TAX** _____
NET TN	24.32	**TOTAL** _____

23604

_____
WEIGHER

Terms: Net 30 days from the end of the month. A finance charge will be assessed on all past due accounts at a rate of 1-1/2% PER MONTH. Annual Finance Charge of 18%. Notice: It is specifically agreed that this company shall not be in any way responsible for damage to customers property resulting in Deliveries beyond curb line.

DRIVER'S SIGNATURE _____

IRON MOUNTAIN QUARRY LLC

Quarry site: 20800 Wayside Mine Rd – Granite Falls WA
Phone: (Toll Free) 1-866-672-3434

09/22/2017 6:24 093759

DATE _____ **TIME** _____ **TICKET#** _____

044 GLACIER ENVIRONMENTAL

CUSTOMER _____ ☐ **CASH** ☐ **CHARGE**

4 730 S MERTLE ST

JOB _____ **PO#** _____

HAULER 717 NORTHWEST SAND & GRAVEL **TRUCK#** NW24 X ☐ **HIRED**

PRODUCT 508 CLASS 2 PETROLEUM CONTAM SOIL

GROSS	102640	**PRICE**	_____
TARE	42640	**SUBTOTAL**	_____
NET LB	60000	**TAX**	_____
NET TN	~~30.00~~ 26.00	**TOTAL**	_____

93457

_____
WEIGHER

Terms: Net 30 days from the end of the month. A finance charge will be assessed on all past due accounts at a rate of 1-1/2% PER MONTH. Annual Finance Charge of 18%. Notice: It is specifically agreed that this company shall not be in any way responsible for damage to customers property resulting in Deliveries beyond curb line.

DRIVER'S SIGNATURE _____

IRON MOUNTAIN QUARRY LLC

Quarry site: 20800 Wayside Mine Rd – Granite Falls WA
Phone: (Toll Free) 1-866-672-3434

09/22/2017 6:26 093760

DATE _____ **TIME** _____ **TICKET#** _____

844 GLACIER ENVIRONMENTAL

CUSTOMER _____ ☐ **CASH** ☐ **CHARGE**

4 730 S MERTLE ST

JOB _____ **PO#** _____

717 NORTHWEST SAND & GRAVEL NW23

HAULER _____ **TRUCK#** _____ ☐ **HIRED**

500 CLASS 2 PETROLEUM CONTAM SOIL

PRODUCT _____

GROSS * 98740

TARE 38740

NET LB 60000

NET TN ~~30.00~~ 26.00

23603

PRICE _____

SUBTOTAL _____

TAX _____

TOTAL _____

_____
WEIGHER

Terms: Net 30 days from the end of the month. A finance charge will be assessed on all past due accounts at a rate of 1-1/2% PER MONTH. Annual Finance Charge of 18%. Notice: It is specifically agreed that this company shall not be in any way responsible for damage to customers property resulting in Deliveries beyond curb line.

DRIVER'S SIGNATURE _____

IRON MOUNTAIN QUARRY LLC

Quarry site: 20800 Wayside Mine Rd – Granite Falls WA
Phone: (Toll Free) 1-866-672-3434

09/22/2017 8:19 093798

DATE _____ **TIME** _____ **TICKET#** _____

844 GLACIER ENVIRONMENTAL

CUSTOMER _____ ☐ **CASH** ☐ **CHARGE**

4 730 S MERTLE ST

JOB _____ **PO#** _____

241 SPRINGBROOK NURSERY SB025 X

HAULER _____ **TRUCK#** _____ ☐ **HIRED**

508 CLASS 2 PETROLEUM CONTAM SOIL

PRODUCT _____

GROSS	101920	**PRICE**	_____
TARE	40920	**SUBTOTAL**	_____
NET LB	61000	**TAX**	_____
NET TN	~~30.50~~ 26.00	**TOTAL**	_____

L18034

_____
WEIGHER

Terms: Net 30 days from the end of the month. A finance charge will be assessed on all past due accounts at a rate of 1-1/2% PER MONTH. Annual Finance Charge of 18%. Notice: It is specifically agreed that this company shall not be in any way responsible for damage to customers property resulting in Deliveries beyond curb line.

DRIVER'S SIGNATURE _____ RAY

IRON MOUNTAIN QUARRY LLC

Quarry site: 20800 Wayside Mine Rd – Granite Falls WA
Phone: (Toll Free) 1-866-672-3434

DATE _____ **TIME** _____ **TICKET#** _____

CUSTOMER _____ ☐ **CASH** ☐ **CHARGE**

JOB _____ **PO#** _____

HAULER _____ **TRUCK#** _____ ☐ **HIRED**

PRODUCT _____

PRICE _____

SUBTOTAL _____

TAX _____

TOTAL 26.00

_____
WEIGHER

Terms: Net 30 days from the end of the month. A finance charge will be assessed on all past due accounts at a rate of 1-1/2% PER MONTH. Annual Finance Charge of 18%. Notice: It is specifically agreed that this company shall not be in any way responsible for damage to customers property resulting in Deliveries beyond curb line.

DRIVER'S SIGNATURE _____

IRON MOUNTAIN QUARRY LLC

Quarry site: 20800 Wayside Mine Rd – Granite Falls WA
Phone: (Toll Free) 1-866-672-3434

DATE _____ **TIME** _____ **TICKET#** _____

CUSTOMER _____ ☐ **CASH** ☐ **CHARGE**

JOB _____ **PO#** _____

HAULER _____ **TRUCK#** _____ ☐ **HIRED**

PRODUCT _____

PRICE _____

SUBTOTAL _____

TAX _____

TOTAL _____

_____
WEIGHER

Terms: Net 30 days from the end of the month. A finance charge will be assessed on all past due accounts at a rate of 1-1/2% PER MONTH. Annual Finance Charge of 18%. Notice: It is specifically agreed that this company shall not be in any way responsible for damage to customers property resulting in Deliveries beyond curb line.

DRIVER'S SIGNATURE _____

IRON MOUNTAIN QUARRY LLC

Quarry site: 20800 Wayside Mine Rd – Granite Falls WA
Phone: (Toll Free) 1-866-672-3434

09/22/2017 12:09 093057

DATE _____ **TIME** _____ **TICKET#** _____

1 944 GLACIER ENVIRONMENTAL

CUSTOMER _____ ☐ **CASH** ☐ **CHARGE**

4 730 S MERTLE ST

JOB _____ **PO#** _____

HAULER 2363 SCOLERI TRUCKING **TRUCK#** SCOLERI ☐ **HIRED**

PRODUCT 500 CLASS 2 PETROLEUM CONTAM SOIL

GROSS	104500	**PRICE**	_____
TARE	41540	**SUBTOTAL**	_____
NET LB	62960	**TAX**	_____
NET TN	31.48	**TOTAL**	_____

1702 26.00

_____
WEIGHER

Terms: Net 30 days from the end of the month. A finance charge will be assessed on all past due accounts at a rate of 1-1/2% PER MONTH. Annual Finance Charge of 18%. Notice: It is specifically agreed that this company shall not be in any way responsible for damage to customers property resulting in Deliveries beyond curb line.

DRIVER'S SIGNATURE _____

IRON MOUNTAIN QUARRY LLC

Quarry site: 20800 Wayside Mine Rd – Granite Falls WA
Phone: (Toll Free) 1-866-672-3434

DATE _____ **TIME** _____ **TICKET#** _____

CUSTOMER _____ ☐ **CASH** ☐ **CHARGE**

JOB _____ **PO#** _____

HAULER _____ **TRUCK#** _____ ☐ **HIRED**

PRODUCT _____

PRICE _____

SUBTOTAL _____

TAX _____

TOTAL 26.00

_____
WEIGHER

Terms: Net 30 days from the end of the month. A finance charge will be assessed on all past due accounts at a rate of 1-1/2% PER MONTH. Annual Finance Charge of 18%. Notice: It is specifically agreed that this company shall not be in any way responsible for damage to customers property resulting in Deliveries beyond curb line.

DRIVER'S SIGNATURE _____

IRON MOUNTAIN QUARRY LLC

Quarry site: 20800 Wayside Mine Rd – Granite Falls WA
Phone: (Toll Free) 1-866-672-3434

DATE 09/22/2017 **TIME** 14:24 **TICKET#** 093086

CUSTOMER 044 GLACIER ENVIRONMENTAL ☐ **CASH** ☐ **CHARGE**

JOB 4 730 S MERTLE ST **PO#** _____

HAULER 717 NORTHWEST SAND & GRAVEL **TRUCK#** NW25 X ☐ **HIRED**

PRODUCT 508 CLASS 2 PETROLEUM CONTAM SOIL

GROSS	107400	**PRICE**	
TARE	38740	**SUBTOTAL**	
NET LB	68660	**TAX**	
NET TN	34.33	**TOTAL**	

23603

WEIGHER

Terms: Net 30 days from the end of the month. A finance charge will be assessed on all past due accounts at a rate of 1-1/2% PER MONTH. Annual Finance Charge of 18%. Notice: It is specifically agreed that this company shall not be in any way responsible for damage to customers property resulting in Deliveries beyond curb line.

DRIVER'S SIGNATURE

IRON MOUNTAIN QUARRY LLC

Quarry site: 20800 Wayside Mine Rd – Granite Falls WA
Phone: (Toll Free) 1-866-672-3434

DATE _____ **TIME** _____ **TICKET#** _____

CUSTOMER _____ ☐ **CASH** ☐ **CHARGE**

JOB _____ **PO#** _____

HAULER _____ **TRUCK#** _____ ☐ **HIRED**

PRODUCT _____

PRICE _____

SUBTOTAL _____

TAX _____

TOTAL _____

_____
WEIGHER

Terms: Net 30 days from the end of the month. A finance charge will be assessed on all past due accounts at a rate of 1-1/2% PER MONTH. Annual Finance Charge of 18%. Notice: It is specifically agreed that this company shall not be in any way responsible for damage to customers property resulting in Deliveries beyond curb line.

DRIVER'S SIGNATURE _____ RAY

IRON MOUNTAIN QUARRY LLC

Quarry site: 20800 Wayside Mine Rd – Granite Falls WA
Phone: (Toll Free) 1-866-672-3434

09/25/2017 11:32 094086

DATE _____ **TIME** _____ **TICKET#** _____

844 GLACIER ENVIRONMENTAL

CUSTOMER _____ ☐ **CASH** ☐ **CHARGE**

4 730 S MERTLE ST

JOB _____ **PO#** _____

717 NORTHWEST SAND & GRAVEL

HAULER _____ **TRUCK#** NW24 X ☐ **HIRED**

500 CLASS 2 PETROLEUM CONTAM SOIL

PRODUCT _____

GROSS	102640	**PRICE**	_____
TARE	42640	**SUBTOTAL**	_____
NET LB	60000	**TAX**	_____
NET TN	~~30.00~~ 26.00	**TOTAL**	_____

23605

_____
WEIGHER

Terms: Net 30 days from the end of the month. A finance charge will be assessed on all past due accounts at a rate of 1-1/2% PER MONTH. Annual Finance Charge of 18%. Notice: It is specifically agreed that this company shall not be in any way responsible for damage to customers property resulting in Deliveries beyond curb line.

DRIVER'S SIGNATURE _____

IRON MOUNTAIN QUARRY LLC

Quarry site: 20800 Wayside Mine Rd – Granite Falls WA
Phone: (Toll Free) 1-866-672-3434

DATE 09/25/2017 **TIME** 7:58 **TICKET#** 094026

CUSTOMER 844 GLACIER ENVIRONMENTAL ☐ **CASH** ☐ **CHARGE**

JOB 4 730 S MERTLE ST **PO#** _____

HAULER 717 NORTHWEST SAND & GRAVEL **TRUCK#** NW24 ☐ **HIRED**

PRODUCT 508 CLASS 2 PETROLEUM CONTAM SOIL

GROSS	102640	**PRICE**	_____
TARE	42640	**SUBTOTAL**	_____
NET LB	60000	**TAX**	_____
NET TN	~~30.00~~ 26.00	**TOTAL**	_____

23605

_____
WEIGHER

Terms: Net 30 days from the end of the month. A finance charge will be assessed on all past due accounts at a rate of 1-1/2% PER MONTH. Annual Finance Charge of 18%. Notice: It is specifically agreed that this company shall not be in any way responsible for damage to customers property resulting in Deliveries beyond curb line.

DRIVER'S SIGNATURE _____

IRON MOUNTAIN QUARRY LLC

Quarry site: 20800 Wayside Mine Rd – Granite Falls WA
Phone: (Toll Free) 1-866-672-3434

DATE 09/25/2017 **TIME** 11:36 **TICKET#** 094087

CUSTOMER 844 GLACIER ENVIRONMENTAL ☐ **CASH** ☐ **CHARGE**

JOB 4 730 S MERTLE ST **PO#** _____

HAULER 717 NORTHWEST SAND & GRAVEL **TRUCK#** NW26 X ☐ **HIRED**

PRODUCT 508 CLASS 2 PETROLEUM CONTAM SOIL

GROSS	101760	**PRICE**	_____
TARE	41760	**SUBTOTAL**	_____
NET LB	60000	**TAX**	_____
NET TN	~~30.00~~ 26.08	**TOTAL**	_____

23071

_____
WEIGHER

Terms: Net 30 days from the end of the month. A finance charge will be assessed on all past due accounts at a rate of 1-1/2% PER MONTH. Annual Finance Charge of 18%. Notice: It is specifically agreed that this company shall not be in any way responsible for damage to customers property resulting in Deliveries beyond curb line.

DRIVER'S SIGNATURE _____

IRON MOUNTAIN QUARRY LLC

Quarry site: 20800 Wayside Mine Rd – Granite Falls WA
Phone: (Toll Free) 1-866-672-3434

DATE 09/25/2017 **TIME** 8:01 **TICKET#** 094028

CUSTOMER 844 GLACIER ENVIRONMENTAL ☐ **CASH** ☐ **CHARGE**

JOB 4 730 S MYRTLE ST **PO#** _____

HAULER 717 NORTHWEST SAND & GRAVEL **TRUCK#** NW26 ☐ **HIRED**

PRODUCT 508 CLASS 2 PETROLEUM CONTAM SOIL

GROSS	94120	**PRICE**	_____
TARE	41760	**SUBTOTAL**	_____
NET LB	52360	**TAX**	_____
NET TN	~~26.18~~ 26.18	**TOTAL**	_____

23671

_____
WEIGHER

Terms: Net 30 days from the end of the month. A finance charge will be assessed on all past due accounts at a rate of 1-1/2% PER MONTH. Annual Finance Charge of 18%. Notice: It is specifically agreed that this company shall not be in any way responsible for damage to customers property resulting in Deliveries beyond curb line.

DRIVER'S SIGNATURE _____

IRON MOUNTAIN QUARRY LLC

Quarry site: 20800 Wayside Mine Rd – Granite Falls WA
Phone: (Toll Free) 1-866-672-3434

DATE 09/25/2017 **TIME** 11:25 **TICKET#** 094083

CUSTOMER 844 GLACIER ENVIRONMENTAL ☐ **CASH** ☐ **CHARGE**

JOB 4 730 S MERTLE ST **PO#** _____

HAULER 1854 MERANTO TRUCKING **TRUCK#** MERANTO X ☐ **HIRED**

PRODUCT 508 CLASS 2 PETROLEUM CONTAM SOIL

GROSS	104180	**PRICE**	
TARE	39480	**SUBTOTAL**	
NET LB	64700	**TAX**	
NET TN	~~32.35~~ 32.40	**TOTAL**	

1667

_____
WEIGHER

Terms: Net 30 days from the end of the month. A finance charge will be assessed on all past due accounts at a rate of 1-1/2% PER MONTH. Annual Finance Charge of 18%. Notice: It is specifically agreed that this company shall not be in any way responsible for damage to customers property resulting in Deliveries beyond curb line.

DRIVER'S SIGNATURE _____

IRON MOUNTAIN QUARRY LLC

Quarry site: 20800 Wayside Mine Rd – Granite Falls WA
Phone: (Toll Free) 1-866-672-3434

DATE 09/25/2017 **TIME** 7:40 **TICKET#** 094022

CUSTOMER 844 GLACIER ENVIRONMENTAL ☐ **CASH** ☐ **CHARGE**

JOB 4 730 S MERTLE ST **PO#** _____

HAULER 1854 MERANTO TRUCKING **TRUCK#** MERANTO X ☐ **HIRED**

PRODUCT 508 CLASS 2 PETROLEUM CONTAM SOIL

GROSS	99480	**PRICE**	_____
TARE	39480	**SUBTOTAL**	_____
NET LB	60000	**TAX**	_____
NET TN	~~30.00~~ 26.00	**TOTAL**	_____

L667

_____
WEIGHER

Terms: Net 30 days from the end of the month. A finance charge will be assessed on all past due accounts at a rate of 1-1/2% PER MONTH. Annual Finance Charge of 18%. Notice: It is specifically agreed that this company shall not be in any way responsible for damage to customers property resulting in Deliveries beyond curb line.

DRIVER'S SIGNATURE _____

IRON MOUNTAIN QUARRY LLC

Quarry site: 20800 Wayside Mine Rd – Granite Falls WA
Phone: (Toll Free) 1-866-672-3434

09/25/2017 12:02 014094

DATE _____ **TIME** _____ **TICKET#** _____

844 GLACIER ENVIRONMENTAL

CUSTOMER _____ ☐ **CASH** ☐ **CHARGE**

4 730 S MERTLE ST

JOB _____ **PO#** _____

241 SPRINGBROOK NURSERY SBN25 X

HAULER _____ **TRUCK#** _____ ☐ **HIRED**

500 CLASS 2 PETROLEUM CONTAM SOIL

PRODUCT _____

GROSS	104040	**PRICE**	_____
TARE	40920	**SUBTOTAL**	_____
NET LB	63120	**TAX**	_____
NET TN	~~31.56~~ 26.00	**TOTAL**	_____

18632

_____
WEIGHER

Terms: Net 30 days from the end of the month. A finance charge will be assessed on all past due accounts at a rate of 1-1/2% PER MONTH. Annual Finance Charge of 18%. Notice: It is specifically agreed that this company shall not be in any way responsible for damage to customers property resulting in Deliveries beyond curb line.

DRIVER'S SIGNATURE _____

IRON MOUNTAIN QUARRY LLC

Quarry site: 20800 Wayside Mine Rd – Granite Falls WA
Phone: (Toll Free) 1-866-672-3434

09/25/2017 14:28 094137

DATE _____ **TIME** _____ **TICKET#** _____

844 GLACIER ENVIRONMENTAL

CUSTOMER _____ ☐ **CASH** ☐ **CHARGE**

4 730 S MERTLE ST

JOB _____ **PO#** _____

1854 MERANTO TRUCKING MERANTO X

HAULER _____ **TRUCK#** _____ ☐ **HIRED**

30A CLASS 2 PETROLEUM CONTAM SOIL

PRODUCT _____

GROSS 78800

TARE 38700

NET LB 66100

NET TN 33.05

PRICE _____

SUBTOTAL _____

TAX _____

TOTAL _____

26.00

_____
WEIGHER

Terms: Net 30 days from the end of the month. A finance charge will be assessed on all past due accounts at a rate of 1-1/2% PER MONTH. Annual Finance Charge of 18%. Notice: It is specifically agreed that this company shall not be in any way responsible for damage to customers property resulting in Deliveries beyond curb line.

DRIVER'S SIGNATURE _____

IRON MOUNTAIN QUARRY LLC

Quarry site: 20800 Wayside Mine Rd – Granite Falls WA
Phone: (Toll Free) 1-866-672-3434

DATE 09/25/2017 **TIME** 14:47 **TICKET#** 094140

CUSTOMER 844 GLACIER ENVIRONMENTAL ☐ CASH ☐ CHARGE

JOB 4 730 S MERTLE ST **PO#** _____

HAULER 717 NORTHWEST SAND & GRAVEL **TRUCK#** NW24 X ☐ HIRED

PRODUCT 508 CLASS 2 PETROLEUM CONTAM SOIL

GROSS	103680	**PRICE**	
TARE	42640	**SUBTOTAL**	
NET LB	61040	**TAX**	
NET TN	30.52	**TOTAL**	

:36O5

WEIGHER

Terms: Net 30 days from the end of the month. A finance charge will be assessed on all past due accounts at a rate of 1-1/2% PER MONTH. Annual Finance Charge of 18%. Notice: It is specifically agreed that this company shall not be in any way responsible for damage to customers property resulting in Deliveries beyond curb line.

DRIVER'S SIGNATURE _____

IRON MOUNTAIN QUARRY LLC

Quarry site: 20800 Wayside Mine Rd – Granite Falls WA
Phone: (Toll Free) 1-866-672-3434

09/25/2017 **DATE** 15:12 **TIME** 094144 **TICKET#**

844 GLACIER ENVIRONMENTAL **CUSTOMER** ☐ CASH ☐ CHARGE

4 730 S MERTLE ST **JOB** **PO#**

717 NORTHWEST SAND & GRAVEL **HAULER** **TRUCK#** NW26 X ☐ **HIRED**

500 CLASS 2 PETROLEUM CONTAM SOIL **PRODUCT**

GROSS	103660	**PRICE**	
TARE	41760	**SUBTOTAL**	
NET LB	61900	**TAX**	
NET TN	30.95	**TOTAL**	

33871

WEIGHER

Terms: Net 30 days from the end of the month. A finance charge will be assessed on all past due accounts at a rate of 1-1/2% PER MONTH. Annual Finance Charge of 18%. Notice: It is specifically agreed that this company shall not be in any way responsible for damage to customers property resulting in Deliveries beyond curb line.

DRIVER'S SIGNATURE

IRON MOUNTAIN QUARRY LLC

Quarry site: 20800 Wayside Mine Rd – Granite Falls WA
Phone: (Toll Free) 1-866-672-3434

DATE 09/27/2017 **TIME** 10:08 **TICKET#** 094371

CUSTOMER 844 GLACIER ENVIRONMENTAL ☐ **CASH** ☐ **CHARGE**

JOB 4 730 S MERTLE ST **PO#** _____

HAULER 1854 MERANTO TRUCKING **TRUCK#** MERANTO X ☐ **HIRED**

PRODUCT 508 CLASS 2 PETROLEUM CONTAM SOIL

GROSS	101620	**PRICE**	
TARE	38700	**SUBTOTAL**	
NET LB	62920	**TAX**	
NET TN	31.46	**TOTAL**	

1671

_____
WEIGHER

Terms: Net 30 days from the end of the month. A finance charge will be assessed on all past due accounts at a rate of 1-1/2% PER MONTH. Annual Finance Charge of 18%. Notice: It is specifically agreed that this company shall not be in any way responsible for damage to customers property resulting in Deliveries beyond curb line.

DRIVER'S SIGNATURE _____

IRON MOUNTAIN QUARRY LLC

Quarry site: 20800 Wayside Mine Rd – Granite Falls WA
Phone: (Toll Free) 1-866-672-3434

DATE 09/27/2017 **TIME** 15:15 **TICKET#** 094473

CUSTOMER 544 GLACIER ENVIRONMENTAL ☐ **CASH** ☐ **CHARGE**

JOB 4 730 S MERTLE ST **PO#** _____

HAULER 1454 MERANTO TRUCKING **TRUCK#** MERANTO X ☐ **HIRED**

PRODUCT 508 CLASS 2 PETROLEUM CONTAM SOIL

GROSS	109140	**PRICE**	
TARE	38700	**SUBTOTAL**	
NET LB	70440	**TAX**	
NET TN	35.22	**TOTAL**	

1671

_____
WEIGHER

Terms: Net 30 days from the end of the month. A finance charge will be assessed on all past due accounts at a rate of 1-1/2% PER MONTH. Annual Finance Charge of 18%. Notice: It is specifically agreed that this company shall not be in any way responsible for damage to customers property resulting in Deliveries beyond curb line.

DRIVER'S SIGNATURE _____

IRON MOUNTAIN QUARRY LLC

Quarry site: 20800 Wayside Mine Rd – Granite Falls WA
Phone: (Toll Free) 1-866-672-3434

DATE 09/28/2017 **TIME** 12:09 **TICKET#** 094620

CUSTOMER 844 GLACIER ENVIRONMENTAL ☐ **CASH** ☐ **CHARGE**

JOB 4 730 S MERTLE ST **PO#** _____

HAULER 241 SPRINGBROOK NURSERY **TRUCK#** SBN30 ☐ **HIRED**

PRODUCT 508 CLASS 2 PETROLEUM CONTAM SOIL

GROSS	100600	**PRICE**	_____
TARE	40C00	**SUBTOTAL**	_____
NET LB	60000	**TAX**	_____
NET TN	30.00	**TOTAL**	_____

117854

_____
WEIGHER

Terms: Net 30 days from the end of the month. A finance charge will be assessed on all past due accounts at a rate of 1-1/2% PER MONTH. Annual Finance Charge of 18%. Notice: It is specifically agreed that this company shall not be in any way responsible for damage to customers property resulting in Deliveries beyond curb line.

DRIVER'S SIGNATURE _____

IRON MOUNTAIN QUARRY LLC

Quarry site: 20800 Wayside Mine Rd – Granite Falls WA
Phone: (Toll Free) 1-866-672-3434

09/28/2017 12:15 894624

DATE _____ **TIME** _____ **TICKET#** _____

CUSTOMER 844 GLACIER ENVIRONMENTAL _____ ☐ **CASH** ☐ **CHARGE**

JOB 4 730 S MERTLE ST _____ **PO#** _____

HAULER 717 NORTHWEST SAND & GRAVEL **TRUCK#** NW26 ☐ **HIRED**

PRODUCT 508 CLASS 2 PETROLEUM CONTAM SOIL

GROSS	103700	**PRICE**	
TARE	41760	**SUBTOTAL**	
NET LB	61940	**TAX**	
NET TN	30.97	**TOTAL**	

23876

_____
WEIGHER

Terms: Net 30 days from the end of the month. A finance charge will be assessed on all past due accounts at a rate of 1-1/2% PER MONTH. Annual Finance Charge of 18%. Notice: It is specifically agreed that this company shall not be in any way responsible for damage to customers property resulting in Deliveries beyond curb line.

DRIVER'S SIGNATURE _____

IRON MOUNTAIN QUARRY LLC

Quarry site: 20800 Wayside Mine Rd – Granite Falls WA
Phone: (Toll Free) 1-866-672-3434

DATE 09/28/2017 **TIME** 11:52 **TICKET#** 094611

CUSTOMER 844 GLACIER ENVIRONMENTAL ☐ **CASH** ☐ **CHARGE**

JOB 4 730 S MERTLE ST **PO#** _____

HAULER 241 SPRINGBROOK NURSERY **TRUCK#** SBN25 X ☐ **HIRED**

PRODUCT 508 CLASS 2 PETROLEUM CONTAM SOIL

GROSS	98860	**PRICE**	
TARE	40920	**SUBTOTAL**	
NET LB	57940	**TAX**	
NET TN	28.97	**TOTAL**	

18042

WEIGHER

Terms: Net 30 days from the end of the month. A finance charge will be assessed on all past due accounts at a rate of 1-1/2% PER MONTH. Annual Finance Charge of 18%. Notice: It is specifically agreed that this company shall not be in any way responsible for damage to customers property resulting in Deliveries beyond curb line.

DRIVER'S SIGNATURE RAY

IRON MOUNTAIN QUARRY LLC

Quarry site: 20800 Wayside Mine Rd – Granite Falls WA
Phone: (Toll Free) 1-866-672-3434

DATE 09/28/2017 **TIME** 7:49 **TICKET#** 094513

CUSTOMER 844 GLACIER ENVIRONMENTAL ☐ **CASH** ☐ **CHARGE**

JOB 4 730 S MERTLE ST **PO#** _____

HAULER 1054 MERANTO TRUCKING **TRUCK#** MERANTO X ☐ **HIRED**

PRODUCT 508 CLASS 2 PETROLEUM CONTAM SOIL

GROSS	99980	**PRICE**	
TARE	38780	**SUBTOTAL**	
NET LB	61200	**TAX**	
NET TN	30.64	**TOTAL**	

1672

_____
WEIGHER

Terms: Net 30 days from the end of the month. A finance charge will be assessed on all past due accounts at a rate of 1-1/2% PER MONTH. Annual Finance Charge of 18%. Notice: It is specifically agreed that this company shall not be in any way responsible for damage to customers property resulting in Deliveries beyond curb line.

DRIVER'S SIGNATURE _____

IRON MOUNTAIN QUARRY LLC

Quarry site: 20800 Wayside Mine Rd – Granite Falls WA
Phone: (Toll Free) 1-866-672-3434

DATE 09/28/2017 **TIME** 11:50 **TICKET#** 054609

CUSTOMER 844 GLACIER ENVIRONMENTAL ☐ **CASH** ☐ **CHARGE**

JOB 4 730 S MERTLE ST **PO#** _____

HAULER 1854 MERANTO TRUCKING **TRUCK#** MERANTO X ☐ **HIRED**

PRODUCT 508 CLASS 2 PETROLEUM CONTAM SOIL

GROSS	98700	**PRICE**	
TARE	38700	**SUBTOTAL**	
NET LB	60000	**TAX**	
NET TN	30.00	**TOTAL**	

L672

_____
WEIGHER

Terms: Net 30 days from the end of the month. A finance charge will be assessed on all past due accounts at a rate of 1-1/2% PER MONTH. Annual Finance Charge of 18%. Notice: It is specifically agreed that this company shall not be in any way responsible for damage to customers property resulting in Deliveries beyond curb line.

DRIVER'S SIGNATURE _____

IRON MOUNTAIN QUARRY LLC

Quarry site: 20800 Wayside Mine Rd – Granite Falls WA
Phone: (Toll Free) 1-866-672-3434

DATE 09/28/2017 **TIME** 15:50 **TICKET#** 034715

CUSTOMER 844 GLACIER ENVIRONMENTAL ☐ **CASH** ☐ **CHARGE**

JOB 4 730 S MERTLE ST **PO#** _____

HAULER 241 SPRINGBROOK NURSERY **TRUCK#** SBN30 ☐ **HIRED**

PRODUCT 508 CLASS 2 PETROLEUM CONTAM SOIL

GROSS	100600	**PRICE**	_____
TARE	40600	**SUBTOTAL**	_____
NET LB	60000	**TAX**	_____
NET TN	30.00	**TOTAL**	_____

L17854

_____
WEIGHER

Terms: Net 30 days from the end of the month. A finance charge will be assessed on all past due accounts at a rate of 1-1/2% PER MONTH. Annual Finance Charge of 18%. Notice: It is specifically agreed that this company shall not be in any way responsible for damage to customers property resulting in Deliveries beyond curb line.

DRIVER'S SIGNATURE _____

IRON MOUNTAIN QUARRY LLC

Quarry site: 20800 Wayside Mine Rd – Granite Falls WA
Phone: (Toll Free) 1-866-672-3434

09/28/2017 15:01 094693

DATE _____ **TIME** _____ **TICKET#** _____

CUSTOMER 044 GLACIER ENVIRONMENTAL _____ ☐ **CASH** ☐ **CHARGE**

JOB A 730 S MERTLE ST _____ **PO#** _____

HAULER 1854 MERANTO TRUCKING _____ **TRUCK#** MERANTO X _____ ☐ **HIRED**

PRODUCT 508 CLASS 2 PETROLEUM CONTAM SOIL _____

GROSS	98700	**PRICE**	_____
TARE	38700	**SUBTOTAL**	_____
NET LB	60000	**TAX**	_____
NET TN	30.00	**TOTAL**	_____

9/29

672

_____
WEIGHER

Terms: Net 30 days from the end of the month. A finance charge will be assessed on all past due accounts at a rate of 1-1/2% PER MONTH. Annual Finance Charge of 18%. Notice: It is specifically agreed that this company shall not be in any way responsible for damage to customers property resulting in Deliveries beyond curb line.

DRIVER'S SIGNATURE _____

IRON MOUNTAIN QUARRY LLC

Quarry site: 20800 Wayside Mine Rd – Granite Falls WA
Phone: (Toll Free) 1-866-672-3434

DATE 09/28/2017 **TIME** 8:01 **TICKET#** 034518

CUSTOMER 844 GLACIER ENVIRONMENTAL ☐ **CASH** ☐ **CHARGE**

JOB 4 730 S MERTLE ST **PO#** _____

HAULER 717 NORTHWEST SAND & GRAVEL **TRUCK#** NW26 X ☐ **HIRED**

PRODUCT 308 CLASS 2 PETROLEUM CONTAM SOIL

GROSS	101760	**PRICE**	_____
TARE	41760	**SUBTOTAL**	_____
NET LB	60000	**TAX**	_____
NET TN	30.00	**TOTAL**	_____

23876

_____
WEIGHER

Terms: Net 30 days from the end of the month. A finance charge will be assessed on all past due accounts at a rate of 1-1/2% PER MONTH. Annual Finance Charge of 18%. Notice: It is specifically agreed that this company shall not be in any way responsible for damage to customers property resulting in Deliveries beyond curb line.

DRIVER'S SIGNATURE _____

IRON MOUNTAIN QUARRY LLC

Quarry site: 20800 Wayside Mine Rd – Granite Falls WA
Phone: (Toll Free) 1-866-672-3434

DATE 09/28/2017 **TIME** 7:34 **TICKET#** 994506

CUSTOMER 844 GLACIER ENVIRONMENTAL ☐ **CASH** ☐ **CHARGE**

JOB 4 730 S MERTLE ST **PO#** _____

HAULER 241 SPRINGBROOK NURSERY **TRUCK#** SRN25 ☐ **HIRED**

PRODUCT 500 CLASS 2 PETROLEUM CONTAM SOIL

GROSS	104840	**PRICE**	_____
TARE	40920	**SUBTOTAL**	_____
NET LB	63920	**TAX**	_____
NET TN	31.96	**TOTAL**	_____

118042

_____
WEIGHER

Terms: Net 30 days from the end of the month. A finance charge will be assessed on all past due accounts at a rate of 1-1/2% PER MONTH. Annual Finance Charge of 18%. Notice: It is specifically agreed that this company shall not be in any way responsible for damage to customers property resulting in Deliveries beyond curb line.

DRIVER'S SIGNATURE _____

IRON MOUNTAIN QUARRY LLC

Quarry site: 20800 Wayside Mine Rd – Granite Falls WA
Phone: (Toll Free) 1-866-672-3434

DATE 09/28/2017 **TIME** 15:24 **TICKET#** 094704

CUSTOMER 844 GLACIER ENVIRONMENTAL ☐ **CASH** ☐ **CHARGE**

JOB 4 730 S MERTLE ST **PO#** _____

HAULER 241 SPRINGBROOK NURSERY **TRUCK#** SBN25 ☐ **HIRED**

PRODUCT 508 CLASS 2 PETROLEUM CONTAM SOIL

GROSS	103780	**PRICE**	_____
TARE	40920	**SUBTOTAL**	_____
NET LB	62860	**TAX**	_____
NET TN	31.43	**TOTAL**	_____

L18042

_____
WEIGHER

Terms: Net 30 days from the end of the month. A finance charge will be assessed on all past due accounts at a rate of 1-1/2% PER MONTH. Annual Finance Charge of 18%. Notice: It is specifically agreed that this company shall not be in any way responsible for damage to customers property resulting in Deliveries beyond curb line.

DRIVER'S SIGNATURE _____

IRON MOUNTAIN QUARRY LLC

Quarry site: 20800 Wayside Mine Rd – Granite Falls WA
Phone: (Toll Free) 1-866-672-3434

DATE 09/29/2017 **TIME** 7:29 **TICKET#** 094745

CUSTOMER 844 GLACIER ENVIRONMENTAL ☐ **CASH** ☐ **CHARGE**

JOB 4 730 S MERTLE ST **PO#** _____

HAULER 241 SPRINGBROOK NURSERY **TRUCK#** SBN30 X ☐ **HIRED**

PRODUCT 508 CLASS 2 PETROLEUM CONTAM SOIL

GROSS	92140	**PRICE**	
TARE	40600	**SUBTOTAL**	
NET LB	51540	**TAX**	
NET TN	25.77	**TOTAL**	

117856

WEIGHER

Terms: Net 30 days from the end of the month. A finance charge will be assessed on all past due accounts at a rate of 1-1/2% PER MONTH. Annual Finance Charge of 18%. Notice: It is specifically agreed that this company shall not be in any way responsible for damage to customers property resulting in Deliveries beyond curb line.

DRIVER'S SIGNATURE

IRON MOUNTAIN QUARRY LLC

Quarry site: 20800 Wayside Mine Rd – Granite Falls WA
Phone: (Toll Free) 1-866-672-3434

DATE 09/20/2017 **TIME** 14:48 **TICKET#** 994681

CUSTOMER 844 GLACIER ENVIRONMENTAL ☐ **CASH** ☐ **CHARGE**

JOB 4 730 S MERTLE ST **PO#** _____

HAULER 241 SPRINGBROOK NURSERY **TRUCK#** SBN30 X ☐ **HIRED**

PRODUCT 508 CLASS 2 PETROLEUM CONTAM SOIL

GROSS	99300	**PRICE**	
TARE	40600	**SUBTOTAL**	
NET LB	58700	**TAX**	
NET TN	29.35	**TOTAL**	

117856

_____
WEIGHER

Terms: Net 30 days from the end of the month. A finance charge will be assessed on all past due accounts at a rate of 1-1/2% PER MONTH. Annual Finance Charge of 18%. Notice: It is specifically agreed that this company shall not be in any way responsible for damage to customers property resulting in Deliveries beyond curb line.

DRIVER'S SIGNATURE _____

IRON MOUNTAIN QUARRY LLC

Quarry site: 20800 Wayside Mine Rd – Granite Falls WA
Phone: (Toll Free) 1-866-672-3434

09/29/2017 **DATE** _____ 11:52 **TIME** _____ 094834 **TICKET#** _____

844 GLACIER ENVIRONMENTAL **CUSTOMER** _____ ☐ **CASH** ☐ **CHARGE**

4 739 S MERTLE ST **JOB** _____ **PO#** _____

1854 MERANTO TRUCKING **HAULER** _____ **TRUCK#** MERANTO X ☐ **HIRED**

500 CLASS 2 PETROLEUM CONTAM SOIL **PRODUCT** _____

GROSS	100780	**PRICE**	_____
TARE	38780	**SUBTOTAL**	_____
NET LB	62000	**TAX**	_____
NET TN	31.04	**TOTAL**	_____

1674

_____
WEIGHER

Terms: Net 30 days from the end of the month. A finance charge will be assessed on all past due accounts at a rate of 1-1/2% PER MONTH. Annual Finance Charge of 18%. Notice: It is specifically agreed that this company shall not be in any way responsible for damage to customers property resulting in Deliveries beyond curb line.

DRIVER'S SIGNATURE _____

IRON MOUNTAIN QUARRY LLC

Quarry site: 20800 Wayside Mine Rd – Granite Falls WA
Phone: (Toll Free) 1-866-672-3434

DATE 09/29/2017 **TIME** 7:37 **TICKET#** 894748

CUSTOMER 844 GLACIER ENVIRONMENTAL ☐ **CASH** ☐ **CHARGE**

JOB 730 S MERTLE ST **PO#** _____

HAULER 1854 MERANTO TRUCKING **TRUCK#** MERANTO ☐ **HIRED**

PRODUCT 598 CLASS 2 PETROLEUM CONTAM SOIL

GROSS	99300	**PRICE**	_____
TARE	38700	**SUBTOTAL**	_____
NET LB	60600	**TAX**	_____
NET TN	30.30	**TOTAL**	_____

L674

_____
WEIGHER

Terms: Net 30 days from the end of the month. A finance charge will be assessed on all past due accounts at a rate of 1-1/2% PER MONTH. Annual Finance Charge of 18%. Notice: It is specifically agreed that this company shall not be in any way responsible for damage to customers property resulting in Deliveries beyond curb line.

DRIVER'S SIGNATURE _____

IRON MOUNTAIN QUARRY LLC

Quarry site: 20800 Wayside Mine Rd – Granite Falls WA
Phone: (Toll Free) 1-866-672-3434

09/29/2017 11:11 89881

DATE _____ **TIME** _____ **TICKET#** _____

844 GLACIER ENVIRONMENTAL

CUSTOMER _____ ☐ **CASH** ☐ **CHARGE**

4 730 S MERTLE ST

JOB _____ **PO#** _____

717 NORTHWEST SAND & GRAVEL

HAULER _____ **TRUCK#** NW26 ☐ **HIRED**

508 CLASS-2 PETROLEUM CONTAM SOIL

PRODUCT _____

GROSS	100380	**PRICE**	_____
TARE	41760	**SUBTOTAL**	_____
NET LB	58620	**TAX**	_____
NET TN	29.31	**TOTAL**	_____

23851

_____
WEIGHER

Terms: Net 30 days from the end of the month. A finance charge will be assessed on all past due accounts at a rate of 1-1/2% PER MONTH. Annual Finance Charge of 18%. Notice: It is specifically agreed that this company shall not be in any way responsible for damage to customers property resulting in Deliveries beyond curb line.

DRIVER'S SIGNATURE _____

IRON MOUNTAIN QUARRY LLC

Quarry site: 20800 Wayside Mine Rd – Granite Falls WA
Phone: (Toll Free) 1-866-672-3434

DATE 09/29/2017 **TIME** 11:15 **TICKET#** 094621

CUSTOMER 844 GLACIER ENVIRONMENTAL ☐ **CASH** ☐ **CHARGE**

JOB 4 730 S MERTLE ST **PO#** _____

HAULER 717 NORTHWEST SAND & GRAVEL **TRUCK#** NW26 X ☐ **HIRED**

PRODUCT 508 CLASS 2 PETROLEUM CONTAM SOIL

GROSS	100560	**PRICE**	
TARE	41760	**SUBTOTAL**	
NET LB	58800	**TAX**	
NET TN	29.40	**TOTAL**	

23851

_____
WEIGHER

Terms: Net 30 days from the end of the month. A finance charge will be assessed on all past due accounts at a rate of 1-1/2% PER MONTH. Annual Finance Charge of 18%. Notice: It is specifically agreed that this company shall not be in any way responsible for damage to customers property resulting in Deliveries beyond curb line.

DRIVER'S SIGNATURE _____

IRON MOUNTAIN QUARRY LLC

Quarry site: 20800 Wayside Mine Rd – Granite Falls WA
Phone: (Toll Free) 1-866-672-3434

DATE _____ **TIME** _____ **TICKET#** _____

CUSTOMER _____ ☐ **CASH** ☐ **CHARGE**

JOB _____ **PO#** _____

HAULER _____ **TRUCK#** _____ ☐ **HIRED**

PRODUCT _____

PRICE _____

SUBTOTAL _____

TAX _____

TOTAL _____

_____
WEIGHER

Terms: Net 30 days from the end of the month. A finance charge will be assessed on all past due accounts at a rate of 1-1/2% PER MONTH. Annual Finance Charge of 18%. Notice: It is specifically agreed that this company shall not be in any way responsible for damage to customers property resulting in Deliveries beyond curb line.

DRIVER'S SIGNATURE _____

IRON MOUNTAIN QUARRY LLC

Quarry site: 20800 Wayside Mine Rd – Granite Falls WA
Phone: (Toll Free) 1-866-672-3434

09/29/2017 8:09 094758

DATE _____ **TIME** _____ **TICKET#** _____

844 GLACIER ENVIRONMENTAL

CUSTOMER _____ ☐ **CASH** ☐ **CHARGE**

4 7730 S MERTLE ST

JOB _____ **PO#** _____

HAULER 241 SPRINGBROOK NURSERY **TRUCK#** SBN25 ☐ **HIRED**

PRODUCT 508 CLASS 2 PETROLEUM CONTAM SOIL

GROSS	106660	**PRICE**	_____
TARE	40920	**SUBTOTAL**	_____
NET LB	65740	**TAX**	_____
NET TN	32.87	**TOTAL**	_____

118044

_____
WEIGHER

Terms: Net 30 days from the end of the month. A finance charge will be assessed on all past due accounts at a rate of 1-1/2% PER MONTH. Annual Finance Charge of 18%. Notice: It is specifically agreed that this company shall not be in any way responsible for damage to customers property resulting in Deliveries beyond curb line.

DRIVER'S SIGNATURE _____

IRON MOUNTAIN QUARRY LLC

Quarry site: 20800 Wayside Mine Rd – Granite Falls WA
Phone: (Toll Free) 1-866-672-3434

09/29/2017 11:12 094810

DATE _____ **TIME** _____ **TICKET#** _____

844 GLACIER ENVIRONMENTAL

CUSTOMER _____ ☐ **CASH** ☐ **CHARGE**

4 730 S MERTLE ST

JOB _____ **PO#** _____

HAULER 241 SPRINGBROOK NURSERY **TRUCK#** 5R130 ☐ **HIRED**

PRODUCT 506 CLASS 2 PETROLEUM CONTAM SOIL

GROSS 92140
TARE 40600
NET LB 51540
NET TN 25.77

PRICE _____
SUBTOTAL _____
TAX _____
TOTAL _____

117856

Re-print from # 94745

_____
WEIGHER

Terms: Net 30 days from the end of the month. A finance charge will be assessed on all past due accounts at a rate of 1-1/2% PER MONTH. Annual Finance Charge of 18%. Notice: It is specifically agreed that this company shall not be in any way responsible for damage to customers property resulting in Deliveries beyond curb line.

#30

DRIVER'S SIGNATURE _____

IRON MOUNTAIN QUARRY LLC

Quarry site: 20800 Wayside Mine Rd – Granite Falls WA
Phone: (Toll Free) 1-866-672-3434

09/29/2017 11:23 094822

DATE _____ **TIME** _____ **TICKET#** _____

844 GLACIER ENVIRONMENTAL

CUSTOMER _____ ☐ **CASH** ☐ **CHARGE**

4 730 S MERTLE ST

JOB _____ **PO#** _____

HAULER 241 SPRINGBROOK NURSERY **TRUCK#** 53N30 ☐ **HIRED**

PRODUCT 508 CLASS 2 PETROLEUM CONTAM SOIL

GROSS	96620	**PRICE**	_____
TARE	40600	**SUBTOTAL**	_____
NET LB	56020	**TAX**	_____
NET TN	28.01	**TOTAL**	_____

117856

_____
WEIGHER

Terms: Net 30 days from the end of the month. A finance charge will be assessed on all past due accounts at a rate of 1-1/2% PER MONTH. Annual Finance Charge of 18%. Notice: It is specifically agreed that this company shall not be in any way responsible for damage to customers property resulting in Deliveries beyond curb line.

DRIVER'S SIGNATURE _____

IRON MOUNTAIN QUARRY LLC

Quarry site: 20800 Wayside Mine Rd – Granite Falls WA
Phone: (Toll Free) 1-866-672-3434

DATE 09/29/2017 **TIME** 15:50 **TICKET#** 094894

CUSTOMER 844 GLACIER ENVIRONMENTAL ☐ CASH ☐ CHARGE

JOB 4 730 S MERTLE ST **PO#** _____

HAULER 717 NORTHWEST SAND & GRAVEL **TRUCK#** NW26 X ☐ HIRED

PRODUCT 500 CLASS 2 PETROLEUM CONTAM SOIL

GROSS	101960	**PRICE**	
TARE	41760	**SUBTOTAL**	
NET LB	60200	**TAX**	
NET TN	30.10	**TOTAL**	

23851

_____
WEIGHER

Terms: Net 30 days from the end of the month. A finance charge will be assessed on all past due accounts at a rate of 1-1/2% PER MONTH. Annual Finance Charge of 18%. Notice: It is specifically agreed that this company shall not be in any way responsible for damage to customers property resulting in Deliveries beyond curb line.

DRIVER'S SIGNATURE _____

CLASS 2 SOIL DISPOSAL
BID ITEM 32A
OCTOBER 1 - OCTOBER 31, 2017

Date	Ticket #	TONS
2-Oct	095066	28.08
2-Oct	095057	32.73
2-Oct	094996	30.41
2-Oct	094984	33.14
2-Oct	095102	27.74
2-Oct	095028	29.14
2-Oct	095133	27.72
2-Oct	095065	32.03
2-Oct	094993	32.97
2-Oct	095130	26.10
2-Oct	095117	29.93
3-Oct	095249	26.71
3-Oct	095247	29.89
3-Oct	095316	28.92
3-Oct	095228	32.36
3-Oct	095329	34.90
3-Oct	095382	31.88
3-Oct	095312	30.64
3-Oct	095330	29.12
3-Oct	095175	30.67
3-Oct	095385	36.93
4-Oct	095627	30.70
4-Oct	095647	34.81
4-Oct	095619	33.50
4-Oct	095418	25.37
4-Oct	095529	25.39
4-Oct	095440	32.59
4-Oct	095552	30.20
4-Oct	095545	32.40
4-Oct	095434	33.83
4-Oct	095428	33.96
4-Oct	095532	33.40
4-Oct	095618	27.92
5-Oct	095695	33.16
5-Oct	095766	34.04
5-Oct	095699	34.27
5-Oct	095773	33.14
5-Oct	095755	34.61
5-Oct	095673	34.60
5-Oct	095830	28.01
5-Oct	095837	32.88
5-Oct	095762	31.19
5-Oct	095675	29.42

CLASS 2 SOIL DISPOSAL
BID ITEM 32A
OCTOBER 1 - OCTOBER 31, 2017

Date	Ticket #	TONS
5-Oct	095816	34.76
6-Oct	095849	29.79
6-Oct	095919	29.99
6-Oct	095874	28.36
6-Oct	095882	32.33
6-Oct	095970	32.96
6-Oct	095941	27.39
6-Oct	095940	34.22
6-Oct	095872	31.29
6-Oct	095930	33.45
6-Oct	095978	32.22
9-Oct	096222	34.23
9-Oct	096147	32.83
9-Oct	096136	32.98
9-Oct	096206	34.55
9-Oct	096143	32.26
9-Oct	096216	38.24
9-Oct	096286	35.97
9-Oct	096308	38.60
9-Oct	096302	39.93
10-Oct	096339	39.75
10-Oct	096442	37.57
10-Oct	096432	38.37
10-Oct	096511	31.96
10-Oct	096463	37.43
10-Oct	096506	35.06
11-Oct	096695	26.90
11-Oct	096542	34.44
11-Oct	096623	35.58
11-Oct	096540	32.52
11-Oct	096690	33.00
11-Oct	096607	26.86
11-Oct	096613	34.47
11-Oct	096537	32.08
11-Oct	096722	32.11
11-Oct	096721	29.82
12-Oct	096822	39.33
12-Oct	096747	35.77
12-Oct	096841	36.59
12-Oct	096818	30.78
12-Oct	096897	26.69
12-Oct	096915	32.86
13-Oct	097005	31.31

CLASS 2 SOIL DISPOSAL
BID ITEM 32A
OCTOBER 1 - OCTOBER 31, 2017

Date	Ticket #	TONS
13-Oct	096923	35.28
13-Oct	097083	30.56
13-Oct	097073	27.86
13-Oct	097004	26.96
13-Oct	096941	33.71
13-Oct	097019	35.94
13-Oct	096945	27.33
13-Oct	097015	28.77
13-Oct	097013	34.59
13-Oct	097093	31.03
18-Oct	097722	30.52
18-Oct	097622	30.89
18-Oct	097739	29.65
18-Oct	097638	30.14
18-Oct	097630	31.65
18-Oct	097735	31.73
18-Oct	097733	33.22
18-Oct	097786	30.46
18-Oct	097615	28.99
18-Oct	097736	27.98
18-Oct	097618	30.03
18-Oct	097602	31.01
18-Oct	097712	31.11
19-Oct	097825	37.51
19-Oct	097816	32.67
19-Oct	097832	34.59
19-Oct	097848	23.26
	Total	**3616.44 tons**

IRON MOUNTAIN QUARRY LLC

Quarry site: 20800 Wayside Mine Rd – Granite Falls WA
Phone: (Toll Free) 1-866-672-3434

DATE _____ **TIME** _____ **TICKET#** _____

CUSTOMER _____ ☐ **CASH** ☐ **CHARGE**

JOB _____ **PO#** _____

HAULER _____ **TRUCK#** _____ ☐ **HIRED**

PRODUCT _____

PRICE _____

SUBTOTAL _____

TAX _____

TOTAL _____

_____
WEIGHER

Terms: Net 30 days from the end of the month. A finance charge will be assessed on all past due accounts at a rate of 1-1/2% PER MONTH. Annual Finance Charge of 18%. Notice: It is specifically agreed that this company shall not be in any way responsible for damage to customers property resulting in Deliveries beyond curb line.

DRIVER'S SIGNATURE _____

IRON MOUNTAIN QUARRY LLC

Quarry site: 20800 Wayside Mine Rd – Granite Falls WA
Phone: (Toll Free) 1-866-672-3434

10/02/2017 11:07 095057

DATE _____ **TIME** _____ **TICKET#** _____

844 GLACIER ENVIRONMENTAL

CUSTOMER _____ ☐ **CASH** ☐ **CHARGE**

4 730 S MERTLE ST

JOB _____ **PO#** _____

1854 MERANTO TRUCKING X

HAULER _____ **TRUCK#** MERANTO ☐ **HIRED**

500 CLASS 2 PETROLEUM CONTAM SOIL

PRODUCT _____

GROSS	104160	**PRICE**	_____
TARE	38700	**SUBTOTAL**	_____
NET LB	65460	**TAX**	_____
NET TN	32.73	**TOTAL**	_____

1676

_____
WEIGHER

Terms: Net 30 days from the end of the month. A finance charge will be assessed on all past due accounts at a rate of 1-1/2% PER MONTH. Annual Finance Charge of 18%. Notice: It is specifically agreed that this company shall not be in any way responsible for damage to customers property resulting in Deliveries beyond curb line.

DRIVER'S SIGNATURE _____

IRON MOUNTAIN QUARRY LLC

Quarry site: 20800 Wayside Mine Rd – Granite Falls WA
Phone: (Toll Free) 1-866-672-3434

10/02/2017 A:06 094996

DATE _____ **TIME** _____ **TICKET#** _____

844 GLACIER ENVIRONMENTAL

CUSTOMER _____ ☐ **CASH** ☐ **CHARGE**

4 730 S MERTLE ST

JOB _____ **PO#** _____

241 SPRINGBROOK NURSERY SW430

HAULER _____ **TRUCK#** _____ ☐ **HIRED**

500 CLASS 2 PETROLEUM CONTAM SOIL

PRODUCT _____

GROSS 101420

TARE 40600

NET LB 60820

NET TN 30.41

L17858

PRICE _____

SUBTOTAL _____

TAX _____

TOTAL _____

_____
WEIGHER

Terms: Net 30 days from the end of the month. A finance charge will be assessed on all past due accounts at a rate of 1-1/2% PER MONTH. Annual Finance Charge of 18%. Notice: It is specifically agreed that this company shall not be in any way responsible for damage to customers property resulting in Deliveries beyond curb line.

DRIVER'S SIGNATURE _____

IRON MOUNTAIN QUARRY LLC

Quarry site: 20800 Wayside Mine Rd – Granite Falls WA
Phone: (Toll Free) 1-866-672-3434

10/02/2017 7:20 094984

DATE _____ **TIME** _____ **TICKET#** _____

844 GLACIER ENVIRONMENTAL

CUSTOMER _____ ☐ **CASH** ☐ **CHARGE**

4 730 S MERTLE ST

JOB _____ **PO#** _____

1054 MERANTO TRUCKING MERANTO

HAULER _____ **TRUCK#** _____ ☐ **HIRED**

500 CLASS 2 PETROLEUM CONTAM SOIL

PRODUCT _____

GROSS 104980

TARE 38700

NET LB 66280

NET TN 33.14

PRICE _____

SUBTOTAL _____

TAX _____

TOTAL _____

1676

_____
WEIGHER

Terms: Net 30 days from the end of the month. A finance charge will be assessed on all past due accounts at a rate of 1-1/2% PER MONTH. Annual Finance Charge of 18%. Notice: It is specifically agreed that this company shall not be in any way responsible for damage to customers property resulting in Deliveries beyond curb line.

DRIVER'S SIGNATURE _____

IRON MOUNTAIN QUARRY LLC

Quarry site: 20800 Wayside Mine Rd – Granite Falls WA
Phone: (Toll Free) 1-866-672-3434

DATE 10/02/2017 **TIME** 13:03 **TICKET#** 095102

CUSTOMER 844 GLACIER ENVIRONMENTAL ☐ **CASH** ☐ **CHARGE**

JOB 4 730 S MERTLE ST **PO#** _____

HAULER 717 NORTHWEST SAND & GRAVEL **TRUCK#** NW26 ☐ **HIRED**

PRODUCT 508 CLASS 2 PETROLEUM CONTAM SOIL

GROSS	97240	**PRICE**	
TARE	41760	**SUBTOTAL**	
NET LB	55480	**TAX**	
NET TN	27.74	**TOTAL**	

23854

_____
WEIGHER

Terms: Net 30 days from the end of the month. A finance charge will be assessed on all past due accounts at a rate of 1-1/2% PER MONTH. Annual Finance Charge of 18%. Notice: It is specifically agreed that this company shall not be in any way responsible for damage to customers property resulting in Deliveries beyond curb line.

DRIVER'S SIGNATURE _____

IRON MOUNTAIN QUARRY LLC

Quarry site: 20800 Wayside Mine Rd – Granite Falls WA
Phone: (Toll Free) 1-866-672-3434

10/02/2017 9:49 995028

DATE _____ **TIME** _____ **TICKET#** _____

844 GLACIER ENVIRONMENTAL

CUSTOMER _____ ☐ **CASH** ☐ **CHARGE**

4 730 S MERTLE ST

JOB _____ **PO#** _____

717 NORTHWEST SAND & GRAVEL NW26 X

HAULER _____ **TRUCK#** _____ ☐ **HIRED**

506 CLASS 2 PETROLEUM CONTAM SOIL

PRODUCT _____

GROSS 100040

TARE 41760

NET LB 58280

NET TN 29.14

23854

PRICE _____

SUBTOTAL _____

TAX _____

TOTAL _____

_____
WEIGHER

Terms: Net 30 days from the end of the month. A finance charge will be assessed on all past due accounts at a rate of 1-1/2% PER MONTH. Annual Finance Charge of 18%. Notice: It is specifically agreed that this company shall not be in any way responsible for damage to customers property resulting in Deliveries beyond curb line.

DRIVER'S SIGNATURE _____

IRON MOUNTAIN QUARRY LLC

Quarry site: 20800 Wayside Mine Rd – Granite Falls WA
Phone: (Toll Free) 1-866-672-3434

DATE 10/02/2017 **TIME** 14:18 **TICKET#** 095133

CUSTOMER 944 GLACIER ENVIRONMENTAL ☐ **CASH** ☐ **CHARGE**

JOB 4 730 S MERTLE ST **PO#** _____

HAULER 241 SPRINGBROOK NURSERY **TRUCK#** SBN25 X ☐ **HIRED**

PRODUCT 508 CLASS 2 PETROLEUM CONTAM SOIL

GROSS	96360	**PRICE**	
TARE	40920	**SUBTOTAL**	
NET LB	55440	**TAX**	
NET TN	27.72	**TOTAL**	

118046

_____
WEIGHER

Terms: Net 30 days from the end of the month. A finance charge will be assessed on all past due accounts at a rate of 1-1/2% PER MONTH. Annual Finance Charge of 18%. Notice: It is specifically agreed that this company shall not be in any way responsible for damage to customers property resulting in Deliveries beyond curb line.

DRIVER'S SIGNATURE RAY

IRON MOUNTAIN QUARRY LLC

Quarry site: 20800 Wayside Mine Rd – Granite Falls WA
Phone: (Toll Free) 1-866-672-3434

DATE 10/02/2017 **TIME** 11:23 **TICKET#** 095065

CUSTOMER 844 GLACIER ENVIRONMENTAL INC ☐ **CASH** ☐ **CHARGE**

JOB 4 730 S MERTLE ST **PO#** _____

HAULER 241 SPRINGBROOK NURSERY **TRUCK#** SBNCS X ☐ **HIRED**

PRODUCT 568 CLASS 2 PETROLEUM CONTAM SOIL

GROSS	104380	**PRICE**	_____
TARE	40920	**SUBTOTAL**	_____
NET LB	64060	**TAX**	_____
NET TN	32.03	**TOTAL**	_____

110046

_____
WEIGHER

Terms: Net 30 days from the end of the month. A finance charge will be assessed on all past due accounts at a rate of 1-1/2% PER MONTH. Annual Finance Charge of 18%. Notice: It is specifically agreed that this company shall not be in any way responsible for damage to customers property resulting in Deliveries beyond curb line.

DRIVER'S SIGNATURE RAY

IRON MOUNTAIN QUARRY LLC

Quarry site: 20800 Wayside Mine Rd – Granite Falls WA
Phone: (Toll Free) 1-866-672-3434

DATE 10/02/2017 **TIME** 8:00 **TICKET#** 094093

CUSTOMER 844 GLACIER ENVIRONMENTAL ☐ **CASH** ☐ **CHARGE**

JOB 4 730 S HERTLE ST **PO#** _____

HAULER 241 SPRINGBROOK NURSERY **TRUCK#** SDN25 X ☐ **HIRED**

PRODUCT 30A CLASS 2 PETROLEUM CONTAM SOIL

GROSS	106860	**PRICE**	_____
TARE	40920	**SUBTOTAL**	_____
NET LB	65940	**TAX**	_____
NET TN	32.97	**TOTAL**	_____

118046

_____
WEIGHER

Terms: Net 30 days from the end of the month. A finance charge will be assessed on all past due accounts at a rate of 1-1/2% PER MONTH. Annual Finance Charge of 18%. Notice: It is specifically agreed that this company shall not be in any way responsible for damage to customers property resulting in Deliveries beyond curb line.

DRIVER'S SIGNATURE _____

IRON MOUNTAIN QUARRY LLC

Quarry site: 20800 Wayside Mine Rd – Granite Falls WA
Phone: (Toll Free) 1-866-672-3434

DATE 10/02/2017 **TIME** 14:14 **TICKET#** 935130

CUSTOMER 844 GLACIER ENVIRONMENTAL ☐ **CASH** ☐ **CHARGE**

JOB 4 730 S MERTLE ST **PO#** _____

HAULER 241 SPRINGBROOK NURSERY **TRUCK#** SBN30 X ☐ **HIRED**

PRODUCT 568 CLASS 2 PETROLEUM CONTAM SOIL

GROSS	92800	**PRICE**	_____
TARE	40600	**SUBTOTAL**	_____
NET LB	52200	**TAX**	_____
NET TN	26.10	**TOTAL**	_____

117058

_____
WEIGHER

Terms: Net 30 days from the end of the month. A finance charge will be assessed on all past due accounts at a rate of 1-1/2% PER MONTH. Annual Finance Charge of 18%. Notice: It is specifically agreed that this company shall not be in any way responsible for damage to customers property resulting in Deliveries beyond curb line.

DRIVER'S SIGNATURE _____

IRON MOUNTAIN QUARRY LLC

Quarry site: 20800 Wayside Mine Rd – Granite Falls WA
Phone: (Toll Free) 1-866-672-3434

DATE 10/02/2017 **TIME** 13:49 **TICKET#** 095117

CUSTOMER 844 GLACIER ENVIRONMENTAL ☐ **CASH** ☐ **CHARGE**

JOB 4 730 S MERTLE ST **PO#** _____

HAULER 1854 MERANTO TRUCKING **TRUCK#** MERANTO X ☐ **HIRED**

PRODUCT 508 CLASS 2 PETROLEUM CONTAM SOIL

GROSS	98560	**PRICE**	_____
TARE	38700	**SUBTOTAL**	_____
NET LB	59860	**TAX**	_____
NET TN	29.93	**TOTAL**	_____

1676

_____
WEIGHER

Terms: Net 30 days from the end of the month. A finance charge will be assessed on all past due accounts at a rate of 1-1/2% PER MONTH. Annual Finance Charge of 18%. Notice: It is specifically agreed that this company shall not be in any way responsible for damage to customers property resulting in Deliveries beyond curb line.

DRIVER'S SIGNATURE _____

IRON MOUNTAIN QUARRY LLC

Quarry site: 20800 Wayside Mine Rd – Granite Falls WA
Phone: (Toll Free) 1-866-672-3434

DATE 10/03/2017 **TIME** 9:30 **TICKET#** 035249

CUSTOMER 944 GLACIER ENVIRONMENTAL ☐ **CASH** ☐ **CHARGE**

JOB 4 730 S MERTLE ST **PO#** _____

HAULER 241 SPRINGBROOK NURSERY **TRUCK#** SPN30 X ☐ **HIRED**

PRODUCT 500 CLASS 2 PETROLEUM CONTAM SOIL

GROSS	94020	**PRICE**	_____
TARE	40600	**SUBTOTAL**	_____
NET LB	53420	**TAX**	_____
NET TN	26.71	**TOTAL**	_____

117860

_____
WEIGHER

Terms: Net 30 days from the end of the month. A finance charge will be assessed on all past due accounts at a rate of 1-1/2% PER MONTH. Annual Finance Charge of 18%. Notice: It is specifically agreed that this company shall not be in any way responsible for damage to customers property resulting in Deliveries beyond curb line.

DRIVER'S SIGNATURE _____

IRON MOUNTAIN QUARRY LLC

Quarry site: 20800 Wayside Mine Rd – Granite Falls WA
Phone: (Toll Free) 1-866-672-3434

DATE 10/03/2017 **TIME** 3:27 **TICKET#** 095247

CUSTOMER 844 GLACIER ENVIRONMENTAL ☐ **CASH** ☐ **CHARGE**

JOB 4 730 S MERTLE ST **PO#** _____

HAULER 241 SPRINGBROOK NURSERY **TRUCK#** SBN25 X ☐ **HIRED**

PRODUCT 508 CLASS 2 PETROLEUM CONTAM SOIL

GROSS	100700	**PRICE**	_____
TARE	40920	**SUBTOTAL**	_____
NET LB	59780	**TAX**	_____
NET TN	29.89	**TOTAL**	_____

118049

_____
WEIGHER

Terms: Net 30 days from the end of the month. A finance charge will be assessed on all past due accounts at a rate of 1-1/2% PER MONTH. Annual Finance Charge of 18%. Notice: It is specifically agreed that this company shall not be in any way responsible for damage to customers property resulting in Deliveries beyond curb line.

DRIVER'S SIGNATURE RAY

IRON MOUNTAIN QUARRY LLC

Quarry site: 20800 Wayside Mine Rd – Granite Falls WA
Phone: (Toll Free) 1-866-672-3434

DATE 10/03/2017 **TIME** 11:57 **TICKET#** 095316

CUSTOMER 844 · GLACIER ENVIRONMENTAL ☐ **CASH** ☐ **CHARGE**

JOB 4 730 S MERTLE ST **PO#** _____

HAULER 1054 MERANTO TRUCKING **TRUCK#** MERANTO X ☐ **HIRED**

PRODUCT 500 CLASS 2 PETROLEUM CONTAM SOIL

GROSS	96540	**PRICE**	
TARE	38700	**SUBTOTAL**	
NET LB	57840	**TAX**	
NET TN	28.92	**TOTAL**	

L670

WEIGHER

Terms: Net 30 days from the end of the month. A finance charge will be assessed on all past due accounts at a rate of 1-1/2% PER MONTH. Annual Finance Charge of 18%. Notice: It is specifically agreed that this company shall not be in any way responsible for damage to customers property resulting in Deliveries beyond curb line.

DRIVER'S SIGNATURE

IRON MOUNTAIN QUARRY LLC

Quarry site: 20800 Wayside Mine Rd – Granite Falls WA
Phone: (Toll Free) 1-866-672-3434

10/03/2017 8:43 095228

DATE _____ **TIME** _____ **TICKET#** _____

344 GLACIER ENVIRONMENTAL

CUSTOMER _____ ☐ **CASH** ☐ **CHARGE**

4 730 S MERTLE ST

JOB _____ **PO#** _____

1854 MERANTO TRUCKING

HAULER _____ **TRUCK#** MERANTO _____ X ☐ **HIRED**

508 CLASS 2 PETROLEUM CONTAM SOIL

PRODUCT _____

GROSS 103420

TARE 38700

NET LB 64720

NET TN 32.36

PRICE _____

SUBTOTAL _____

TAX _____

TOTAL _____

1670

_____
WEIGHER

Terms: Net 30 days from the end of the month. A finance charge will be assessed on all past due accounts at a rate of 1-1/2% PER MONTH. Annual Finance Charge of 18%. Notice: It is specifically agreed that this company shall not be in any way responsible for damage to customers property resulting in Deliveries beyond curb line.

DRIVER'S SIGNATURE _____

IRON MOUNTAIN QUARRY LLC

Quarry site: 20800 Wayside Mine Rd – Granite Falls WA
Phone: (Toll Free) 1-866-672-3434

DATE 10/03/2017 **TIME** 12:41 **TICKET#** 095329

CUSTOMER 844 - GLACIER ENVIRONMENTAL ☐ **CASH** ☐ **CHARGE**

JOB 4 730 S MERTLE ST **PO#** _____

HAULER 241 SPRINGBROOK NURSERY **TRUCK#** SBN25 X ☐ **HIRED**

PRODUCT 500 CLASS 2 PETROLEUM CONTAM SOIL

GROSS	110720	**PRICE**	_____
TARE	40920	**SUBTOTAL**	_____
NET LB	69800	**TAX**	_____
NET TN	34.90	**TOTAL**	_____

110049

_____
WEIGHER

Terms: Net 30 days from the end of the month. A finance charge will be assessed on all past due accounts at a rate of 1-1/2% PER MONTH. Annual Finance Charge of 18%. Notice: It is specifically agreed that this company shall not be in any way responsible for damage to customers property resulting in Deliveries beyond curb line.

DRIVER'S SIGNATURE RAY

IRON MOUNTAIN QUARRY LLC

Quarry site: 20800 Wayside Mine Rd – Granite Falls WA
Phone: (Toll Free) 1-866-672-3434

DATE 10/03/2017 **TIME** 14:59 **TICKET#** 095382

CUSTOMER 044 GLACIER ENVIRONMENTAL ☐ **CASH** ☐ **CHARGE**

JOB 4 730 S MERTLE ST **PO#** _____

HAULER 717 NORTHWEST SOND & GRAVEL **TRUCK#** NW26 X ☐ **HIRED**

PRODUCT 508 CLASS 2 PETROLEUM CONTAM SOIL

GROSS	105520	**PRICE**	_____
TARE	41760	**SUBTOTAL**	_____
NET LB	63760	**TAX**	_____
NET TN	31.88	**TOTAL**	_____

238555

_____
WEIGHER

Terms: Net 30 days from the end of the month. A finance charge will be assessed on all past due accounts at a rate of 1-1/2% PER MONTH. Annual Finance Charge of 18%. Notice: It is specifically agreed that this company shall not be in any way responsible for damage to customers property resulting in Deliveries beyond curb line.

DRIVER'S SIGNATURE _____

IRON MOUNTAIN QUARRY LLC

Quarry site: 20800 Wayside Mine Rd – Granite Falls WA
Phone: (Toll Free) 1-866-672-3434

DATE 10/03/2017 **TIME** 11:48 **TICKET#** 095312

CUSTOMER 844 GLACIER ENVIRONMENTAL ☐ **CASH** ☐ **CHARGE**

JOB 4 730 S MERTLE ST **PO#** _____

HAULER 717 NORTHWEST SAND & GRAVEL **TRUCK#** NW26 X ☐ **HIRED**

PRODUCT 500 CLASS 2 PETROLEUM CONTAM SOIL

GROSS	103040	**PRICE**	_____
TARE	41760	**SUBTOTAL**	_____
NET LB	61280	**TAX**	_____
NET TN	30.64	**TOTAL**	_____

23655

_____
WEIGHER

Terms: Net 30 days from the end of the month. A finance charge will be assessed on all past due accounts at a rate of 1-1/2% PER MONTH. Annual Finance Charge of 18%. Notice: It is specifically agreed that this company shall not be in any way responsible for damage to customers property resulting in Deliveries beyond curb line.

DRIVER'S SIGNATURE _____

IRON MOUNTAIN QUARRY LLC

Quarry site: 20800 Wayside Mine Rd – Granite Falls WA
Phone: (Toll Free) 1-866-672-3434

DATE 10/03/2017 **TIME** 12:43 **TICKET#** 095330

CUSTOMER 844 GLACIER ENVIRONMENTAL ☐ **CASH** ☐ **CHARGE**

JOB 4 730 S MERTLE ST **PO#** _____

HAULER 241 SPRINGBROOK NURSERY **TRUCK#** SNH30 X ☐ **HIRED**

PRODUCT 508 CLASS 2 PETROLEUM CONTAM SOIL

GROSS	96840	**PRICE**	
TARE	40600	**SUBTOTAL**	
NET LB	56240	**TAX**	
NET TN	28.12	**TOTAL**	

L17860

WEIGHER

Terms: Net 30 days from the end of the month. A finance charge will be assessed on all past due accounts at a rate of 1-1/2% PER MONTH. Annual Finance Charge of 18%. Notice: It is specifically agreed that this company shall not be in any way responsible for damage to customers property resulting in Deliveries beyond curb line.

DRIVER'S SIGNATURE _____

IRON MOUNTAIN QUARRY LLC

Quarry site: 20800 Wayside Mine Rd – Granite Falls WA
Phone: (Toll Free) 1-866-672-3434

10/03/2017 6:13 095175

DATE _____ **TIME** _____ **TICKET#** _____

844 GLACIER ENVIRONMENTAL

CUSTOMER _____ ☐ **CASH** ☐ **CHARGE**

4 730 S MYRTLE ST

JOB _____ **PO#** _____

717 NORTHWEST SAND & GRAVEL NWEG

HAULER _____ **TRUCK#** _____ ☐ **HIRED**

500 CLASS C PETROLEUM CONTAM SOIL

PRODUCT _____

GROSS 103160

TARE 41760

NET LB 61360

NET TN 30.67

PRICE _____

SUBTOTAL _____

TAX _____

TOTAL _____

23655

_____
WEIGHER

Terms: Net 30 days from the end of the month. A finance charge will be assessed on all past due accounts at a rate of 1-1/2% PER MONTH. Annual Finance Charge of 18%. Notice: It is specifically agreed that this company shall not be in any way responsible for damage to customers property resulting in Deliveries beyond curb line.

DRIVER'S SIGNATURE _____

IRON MOUNTAIN QUARRY LLC

Quarry site: 20800 Wayside Mine Rd – Granite Falls WA
Phone: (Toll Free) 1-866-672-3434

DATE 10/03/2017 **TIME** 15:06 **TICKET#** 095385

CUSTOMER 844 GLACIER ENVIRONMENTAL ☐ **CASH** ☐ **CHARGE**

JOB 4 730 S MERTLE ST **PO#** _____

HAULER 1854 MERANTO TRUCKING **TRUCK#** MERANTO X ☐ **HIRED**

PRODUCT 500 CLASS 2 PETROLEUM CONTAM SOIL

GROSS	112560	**PRICE**	
TARE	38700	**SUBTOTAL**	
NET LB	73860	**TAX**	
NET TN	36.93	**TOTAL**	

.670

WEIGHER

Terms: Net 30 days from the end of the month. A finance charge will be assessed on all past due accounts at a rate of 1-1/2% PER MONTH. Annual Finance Charge of 18%. Notice: It is specifically agreed that this company shall not be in any way responsible for damage to customers property resulting in Deliveries beyond curb line.

DRIVER'S SIGNATURE

IRON MOUNTAIN QUARRY LLC

Quarry site: 20800 Wayside Mine Rd – Granite Falls WA
Phone: (Toll Free) 1-866-672-3434

10/04/2017 14:44 095627

DATE _____ **TIME** _____ **TICKET#** _____

844 GLACIER ENVIRONMENTAL

CUSTOMER _____ ☐ **CASH** ☐ **CHARGE**

4 730 S MERTLE ST

JOB _____ **PO#** _____

241 SPRINGBROOK NURSERY SBN25 X

HAULER _____ **TRUCK#** _____ ☐ **HIRED**

508 CLASS 2 PETROLEUM CONTAM SOIL

PRODUCT _____

GROSS 102320

TARE 40920

NET LB 61400

NET TN 30.70

PRICE _____

SUBTOTAL _____

TAX _____

TOTAL _____

118050

_____
WEIGHER

Terms: Net 30 days from the end of the month. A finance charge will be assessed on all past due accounts at a rate of 1-1/2% PER MONTH. Annual Finance Charge of 18%. Notice: It is specifically agreed that this company shall not be in any way responsible for damage to customers property resulting in Deliveries beyond curb line.

DRIVER'S SIGNATURE _____ RAY

IRON MOUNTAIN QUARRY LLC

Quarry site: 20800 Wayside Mine Rd – Granite Falls WA
Phone: (Toll Free) 1-866-672-3434

DATE 10/04/2017 **TIME** 15:46 **TICKET#** 905647

CUSTOMER 844 GLACIER ENVIRONMENTAL ☐ **CASH** ☐ **CHARGE**
4 730 S MERTLE ST

JOB _____ **PO#** _____

HAULER 717 NORTHWEST SAND & GRAVEL **TRUCK#** NW86 X ☐ **HIRED**

PRODUCT 508 CLASS 2 PETROLEUM CONTAM SOIL

GROSS	111380	**PRICE**	
TARE	41760	**SUBTOTAL**	
NET LB	69620	**TAX**	
NET TN	34.81	**TOTAL**	

23856

_____
WEIGHER

Terms: Net 30 days from the end of the month. A finance charge will be assessed on all past due accounts at a rate of 1-1/2% PER MONTH. Annual Finance Charge of 18%. Notice: It is specifically agreed that this company shall not be in any way responsible for damage to customers property resulting in Deliveries beyond curb line.

DRIVER'S SIGNATURE _____

IRON MOUNTAIN QUARRY LLC

Quarry site: 20800 Wayside Mine Rd – Granite Falls WA
Phone: (Toll Free) 1-866-672-3434

10/04/2017 14:29 055619

DATE _____ **TIME** _____ **TICKET#** _____

844 GLACIER ENVIRONMENTAL

CUSTOMER _____ ☐ **CASH** ☐ **CHARGE**

730 S MERTLE ST

JOB _____ **PO#** _____

1854 MERANTO TRUCKING MERANTO X

HAULER _____ **TRUCK#** _____ ☐ **HIRED**

508 CLASS 2 PETROLEUM CONTAM SOIL

PRODUCT _____

GROSS	105700	**PRICE**	_____
TARE	38700	**SUBTOTAL**	_____
NET LB	67000	**TAX**	_____
NET TN	33.50	**TOTAL**	_____

1680

_____
WEIGHER

Terms: Net 30 days from the end of the month. A finance charge will be assessed on all past due accounts at a rate of 1-1/2% PER MONTH. Annual Finance Charge of 18%. Notice: It is specifically agreed that this company shall not be in any way responsible for damage to customers property resulting in Deliveries beyond curb line.

DRIVER'S SIGNATURE _____

IRON MOUNTAIN QUARRY LLC

Quarry site: 20800 Wayside Mine Rd – Granite Falls WA
Phone: (Toll Free) 1-866-672-3434

DATE 10/04/2017 **TIME** 7:08 **TICKET#** 005418

CUSTOMER 844 GLACIER ENVIRONMENTAL ☐ **CASH** ☐ **CHARGE**

JOB 4 730 S MERTLE ST **PO#** _____

HAULER 241 SPRINGBROOK NURSERY **TRUCK#** SIN30 X ☐ **HIRED**

PRODUCT 508 CLASS 2 PETROLEUM CONTAM SOIL

GROSS	91340	**PRICE**	
TARE	40600	**SUBTOTAL**	
NET LB	50740	**TAX**	
NET TN	25.37	**TOTAL**	

117863

_____
WEIGHER

Terms: Net 30 days from the end of the month. A finance charge will be assessed on all past due accounts at a rate of 1-1/2% PER MONTH. Annual Finance Charge of 18%. Notice: It is specifically agreed that this company shall not be in any way responsible for damage to customers property resulting in Deliveries beyond curb line.

DRIVER'S SIGNATURE _____

IRON MOUNTAIN QUARRY LLC

Quarry site: 20800 Wayside Mine Rd – Granite Falls WA
Phone: (Toll Free) 1-866-672-3434

10/04/2017 11:10 095529

DATE _____ **TIME** _____ **TICKET#** _____

844 GLACIER ENVIRONMENTAL

CUSTOMER _____ ☐ **CASH** ☐ **CHARGE**

4 730 S MENTLE ST

JOB _____ **PO#** _____

241 SPRINGBROOK NURSERY SBN30 X

HAULER _____ **TRUCK#** _____ ☐ **HIRED**

PRODUCT 504 CLASS 2 PETROLEUM CONTAM SOIL

GROSS	91380	**PRICE**	_____
TARE	40600	**SUBTOTAL**	_____
NET LB	50780	**TAX**	_____
NET TN	25.39	**TOTAL**	_____

L17863

_____
WEIGHER

Terms: Net 30 days from the end of the month. A finance charge will be assessed on all past due accounts at a rate of 1-1/2% PER MONTH. Annual Finance Charge of 18%. Notice: It is specifically agreed that this company shall not be in any way responsible for damage to customers property resulting in Deliveries beyond curb line.

DRIVER'S SIGNATURE _____

IRON MOUNTAIN QUARRY LLC

Quarry site: 20800 Wayside Mine Rd – Granite Falls WA
Phone: (Toll Free) 1-866-672-3434

DATE 10/04/2017 **TIME** 7:58 **TICKET#** 095440

CUSTOMER 844 GLACIER ENVIRONMENTAL ☐ **CASH** ☐ **CHARGE**

JOB 4 730 S MENTLE ST **PO#** _____

HAULER 717 NORTHWEST SAND & GRAVEL **TRUCK#** M826 X ☐ **HIRED**

PRODUCT 500 CLASS 2 PETROLEUM CONTAM SOIL

GROSS	106940	**PRICE**	_____
TARE	41760	**SUBTOTAL**	_____
NET LB	65180	**TAX**	_____
NET TN	32.59	**TOTAL**	_____

23056

_____
WEIGHER

Terms: Net 30 days from the end of the month. A finance charge will be assessed on all past due accounts at a rate of 1-1/2% PER MONTH. Annual Finance Charge of 18%. Notice: It is specifically agreed that this company shall not be in any way responsible for damage to customers property resulting in Deliveries beyond curb line.

DRIVER'S SIGNATURE _____

IRON MOUNTAIN QUARRY LLC

Quarry site: 20800 Wayside Mine Rd – Granite Falls WA
Phone: (Toll Free) 1-866-672-3434

10/04/2017 11:49 095552

DATE _____ **TIME** _____ **TICKET#** _____

844 GLACIER ENVIRONMENTAL

CUSTOMER _____ ☐ **CASH** ☐ **CHARGE**

4 730 S MENTLE ST

JOB _____ **PO#** _____

717 NORTHWEST SOIL & GRAVEL NW26 X

HAULER _____ **TRUCK#** _____ ☐ **HIRED**

500 CLASS 2 PETROLEUM CONTAM SOIL

PRODUCT _____

GROSS	102160	**PRICE**	_____
TARE	41760	**SUBTOTAL**	_____
NET LB	60400	**TAX**	_____
NET TN	30.20	**TOTAL**	_____

23056

_____
WEIGHER

Terms: Net 30 days from the end of the month. A finance charge will be assessed on all past due accounts at a rate of 1-1/2% PER MONTH. Annual Finance Charge of 18%. Notice: It is specifically agreed that this company shall not be in any way responsible for damage to customers property resulting in Deliveries beyond curb line.

DRIVER'S SIGNATURE _____

IRON MOUNTAIN QUARRY LLC

Quarry site: 20800 Wayside Mine Rd – Granite Falls WA
Phone: (Toll Free) 1-866-672-3434

10/04/2017 11:37 895545

DATE _____ **TIME** _____ **TICKET#** _____

844 GLACIER ENVIRONMENTAL

CUSTOMER _____ ☐ **CASH** ☐ **CHARGE**

4 730 S MERTLE ST

JOB _____ **PO#** _____

241 SPRINGBROOK NURSERY SBN25 X

HAULER _____ **TRUCK#** _____ ☐ **HIRED**

508 CLASS 2 PETROLEUM CONTAM SOIL

PRODUCT _____

GROSS 105720

TARE 40920

NET LB 64800

NET TN 32.40

PRICE _____

SUBTOTAL _____

TAX _____

TOTAL _____

118050

_____
WEIGHER

Terms: Net 30 days from the end of the month. A finance charge will be assessed on all past due accounts at a rate of 1-1/2% PER MONTH. Annual Finance Charge of 18%. Notice: It is specifically agreed that this company shall not be in any way responsible for damage to customers property resulting in Deliveries beyond curb line.

DRIVER'S SIGNATURE _____ RAY

IRON MOUNTAIN QUARRY LLC

Quarry site: 20800 Wayside Mine Rd – Granite Falls WA
Phone: (Toll Free) 1-866-672-3434

DATE 10/04/2017 **TIME** 7:41 **TICKET#** 095434

CUSTOMER 044 GLACIER ENVIRONMENTAL ☐ **CASH** ☐ **CHARGE**

JOB 4 730 S MYRTLE CT **PO#** _____

HAULER 241 SPRINGBROOK NURSERY **TRUCK#** SBN25 X ☐ **HIRED**

PRODUCT 300 CLASS 2 PETROLEUM CONTAM SOIL

GROSS	100580	**PRICE**	_____
TARE	40920	**SUBTOTAL**	_____
NET LB	67660	**TAX**	_____
NET TN	33.83	**TOTAL**	_____

L100560

_____
WEIGHER

Terms: Net 30 days from the end of the month. A finance charge will be assessed on all past due accounts at a rate of 1-1/2% PER MONTH. Annual Finance Charge of 18%. Notice: It is specifically agreed that this company shall not be in any way responsible for damage to customers property resulting in Deliveries beyond curb line.

DRIVER'S SIGNATURE _____

IRON MOUNTAIN QUARRY LLC

Quarry site: 20800 Wayside Mine Rd – Granite Falls WA
Phone: (Toll Free) 1-866-672-3434

DATE 10/04/2017 **TIME** 7:21 **TICKET#** 095428

CUSTOMER 844 GLACIER ENVIRONMENTAL ☐ **CASH** ☐ **CHARGE**

JOB 4 730 S MERTLE ST **PO#** _____

HAULER 1854 MERANTO TRUCKING **TRUCK#** MERANTO X ☐ **HIRED**

PRODUCT 508 CLASS 2 PETROLEUM CONTAM SOIL

GROSS	106620	**PRICE**	
TARE	38700	**SUBTOTAL**	
NET LB	67920	**TAX**	
NET TN	33.96	**TOTAL**	

1680

WEIGHER

Terms: Net 30 days from the end of the month. A finance charge will be assessed on all past due accounts at a rate of 1-1/2% PER MONTH. Annual Finance Charge of 18%. Notice: It is specifically agreed that this company shall not be in any way responsible for damage to customers property resulting in Deliveries beyond curb line.

DRIVER'S SIGNATURE

IRON MOUNTAIN QUARRY LLC

Quarry site: 20800 Wayside Mine Rd – Granite Falls WA
Phone: (Toll Free) 1-866-672-3434

10/04/2017 11:15 095532

DATE _____ **TIME** _____ **TICKET#** _____

044 GLACIER ENVIRONMENTAL

CUSTOMER _____ ☐ **CASH** ☐ **CHARGE**

A 730 S MERTLE ST

JOB _____ **PO#** _____

1854 MERANTO TRUCKING MERANTO X

HAULER _____ **TRUCK#** _____ ☐ **HIRED**

508 CLASS 2 PETROLEUM CONTAM SOIL

PRODUCT _____

GROSS 105500

TARE 38700

NET LB 66800

NET TN 33.40

1680

PRICE _____

SUBTOTAL _____

TAX _____

TOTAL _____

_____
WEIGHER

Terms: Net 30 days from the end of the month. A finance charge will be assessed on all past due accounts at a rate of 1-1/2% PER MONTH. Annual Finance Charge of 18%. Notice: It is specifically agreed that this company shall not be in any way responsible for damage to customers property resulting in Deliveries beyond curb line.

DRIVER'S SIGNATURE _____

IRON MOUNTAIN QUARRY LLC

Quarry site: 20800 Wayside Mine Rd – Granite Falls WA
Phone: (Toll Free) 1-866-672-3434

10/04/2017 14:28 095618

DATE _____ **TIME** _____ **TICKET#** _____

044 GLACIER ENVIRONMENTAL

CUSTOMER _____ ☐ **CASH** ☐ **CHARGE**

4 730 S MERTLE ST

JOB _____ **PO#** _____

241 SPRINGBROOK NURSERY

HAULER _____ **TRUCK#** 5YN30 X ☐ **HIRED**

508 CLASS 2 PETROLEUM CONTAM SOIL

PRODUCT _____

GROSS	96440	**PRICE**	_____
TARE	40600	**SUBTOTAL**	_____
NET LB	55840	**TAX**	_____
NET TN	27.92	**TOTAL**	_____

117063

_____
WEIGHER

Terms: Net 30 days from the end of the month. A finance charge will be assessed on all past due accounts at a rate of 1-1/2% PER MONTH. Annual Finance Charge of 18%. Notice: It is specifically agreed that this company shall not be in any way responsible for damage to customers property resulting in Deliveries beyond curb line.

DRIVER'S SIGNATURE _____

IRON MOUNTAIN QUARRY LLC

Quarry site: 20800 Wayside Mine Rd – Granite Falls WA
Phone: (Toll Free) 1-866-672-3434

10/05/2017 8:35 095695

DATE _____ **TIME** _____ **TICKET#** _____

844 GLACIER ENVIRONMENTAL

CUSTOMER _____ ☐ **CASH** ☐ **CHARGE**

4 730 S MERTLE ST

JOB _____ **PO#** _____

241 SPRINGBROOK NURSERY SBN25 X

HAULER _____ **TRUCK#** _____ ☐ **HIRED**

500 CLASS 2 PETROLEUM CONTAM SOIL

PRODUCT _____

GROSS	107240	**PRICE**	_____
TARE	40920	**SUBTOTAL**	_____
NET LB	66320	**TAX**	_____
NET TN	33.16	**TOTAL**	_____

L18203

_____
WEIGHER

Terms: Net 30 days from the end of the month. A finance charge will be assessed on all past due accounts at a rate of 1-1/2% PER MONTH. Annual Finance Charge of 18%. Notice: It is specifically agreed that this company shall not be in any way responsible for damage to customers property resulting in Deliveries beyond curb line.

DRIVER'S SIGNATURE _____ RAY

IRON MOUNTAIN QUARRY LLC

Quarry site: 20800 Wayside Mine Rd – Granite Falls WA
Phone: (Toll Free) 1-866-672-3434

10/05/2017 11:57 095766

DATE _____ **TIME** _____ **TICKET#** _____

844 GLACIER ENVIRONMENTAL

CUSTOMER _____ ☐ **CASH** ☐ **CHARGE**

4 730 S MERTLE ST

JOB _____ **PO#** _____

241 SPRINGBROOK NURSERY SDN25 X

HAULER _____ **TRUCK#** _____ ☐ **HIRED**

500 CLASS 2 PETROLEUM CONTAM SOIL

PRODUCT _____

GROSS 109000

TARE 40920

NET LB 68080

NET TN 34.04

PRICE _____

SUBTOTAL _____

TAX _____

TOTAL _____

11A203

_____
WEIGHER

Terms: Net 30 days from the end of the month. A finance charge will be assessed on all past due accounts at a rate of 1-1/2% PER MONTH. Annual Finance Charge of 18%. Notice: It is specifically agreed that this company shall not be in any way responsible for damage to customers property resulting in Deliveries beyond curb line.

DRIVER'S SIGNATURE _____

IRON MOUNTAIN QUARRY LLC

Quarry site: 20800 Wayside Mine Rd – Granite Falls WA
Phone: (Toll Free) 1-866-672-3434

10/05/2017 8:42 095699

DATE _____ **TIME** _____ **TICKET#** _____

844 GLACIER ENVIRONMENTAL

CUSTOMER _____ ☐ **CASH** ☐ **CHARGE**

4 730 S MERTLE ST

JOB _____ **PO#** _____

717 NORTHWEST SAND & GRAVEL NW26 X

HAULER _____ **TRUCK#** _____ ☐ **HIRED**

308 CLASS 2 PETROLEUM CONTAM SOIL

PRODUCT _____

GROSS	110300	**PRICE**	_____
TARE	41760	**SUBTOTAL**	_____
NET LB	68540	**TAX**	_____
NET TN	34.27	**TOTAL**	_____

23860

_____
WEIGHER

Terms: Net 30 days from the end of the month. A finance charge will be assessed on all past due accounts at a rate of 1-1/2% PER MONTH. Annual Finance Charge of 18%. Notice: It is specifically agreed that this company shall not be in any way responsible for damage to customers property resulting in Deliveries beyond curb line.

DRIVER'S SIGNATURE _____

IRON MOUNTAIN QUARRY LLC

Quarry site: 20800 Wayside Mine Rd – Granite Falls WA
Phone: (Toll Free) 1-866-672-3434

10/05/2017 12:11 095773

DATE _____ **TIME** _____ **TICKET#** _____

844 GLACIER ENVIRONMENTAL

CUSTOMER _____ ☐ **CASH** ☐ **CHARGE**

4 730 S MERTLE ST

JOB _____ **PO#** _____

717 NORTHWEST SAND & GRAVEL

HAULER _____ **TRUCK#** NW26 X ☐ **HIRED**

500 CLASS 2 PETROLEUM CONTAM SOIL

PRODUCT _____

GROSS	108040	**PRICE**	_____
TARE	41760	**SUBTOTAL**	_____
NET LB	66280	**TAX**	_____
NET TN	33.14	**TOTAL**	_____

23860

_____
WEIGHER

Terms: Net 30 days from the end of the month. A finance charge will be assessed on all past due accounts at a rate of 1-1/2% PER MONTH. Annual Finance Charge of 18%. Notice: It is specifically agreed that this company shall not be in any way responsible for damage to customers property resulting in Deliveries beyond curb line.

DRIVER'S SIGNATURE _____

IRON MOUNTAIN QUARRY LLC

Quarry site: 20800 Wayside Mine Rd – Granite Falls WA
Phone: (Toll Free) 1-866-672-3434

10/05/2017 11:27 005755

DATE _____ **TIME** _____ **TICKET#** _____

844 GLACIER ENVIRONMENTAL

CUSTOMER _____ ☐ **CASH** ☐ **CHARGE**

4 730 S MERTLE ST

JOB _____ **PO#** _____

1054 MERANTO TRUCKING

HAULER _____ **TRUCK#** MERANTO X ☐ **HIRED**

500 CLASS 2 PETROLEUM CONTAM SOIL

PRODUCT _____

GROSS	107920	**PRICE**	_____
TARE	38700	**SUBTOTAL**	_____
NET LB	69220	**TAX**	_____
NET TN	34.61	**TOTAL**	_____

L682

_____
WEIGHER

Terms: Net 30 days from the end of the month. A finance charge will be assessed on all past due accounts at a rate of 1-1/2% PER MONTH. Annual Finance Charge of 18%. Notice: It is specifically agreed that this company shall not be in any way responsible for damage to customers property resulting in Deliveries beyond curb line.

DRIVER'S SIGNATURE _____

IRON MOUNTAIN QUARRY LLC

Quarry site: 20800 Wayside Mine Rd – Granite Falls WA
Phone: (Toll Free) 1-866-672-3434

10/05/2017 7:41 095673

DATE _____ **TIME** _____ **TICKET#** _____

844 GLACIER ENVIRONMENTAL

CUSTOMER _____ ☐ **CASH** ☐ **CHARGE**

4 730 S MERTLE ST

JOB _____ **PO#** _____

1054 MERANTO TRUCKING

HAULER _____ **TRUCK#** MERANTO X ☐ **HIRED**

PRODUCT 508 CLASS 2 PETROLEUM CONTAM SOIL

GROSS	107900	**PRICE**	_____
TARE	38700	**SUBTOTAL**	_____
NET LB	69200	**TAX**	_____
NET TN	34.60	**TOTAL**	_____

1682

_____
WEIGHER

Terms: Net 30 days from the end of the month. A finance charge will be assessed on all past due accounts at a rate of 1-1/2% PER MONTH. Annual Finance Charge of 18%. Notice: It is specifically agreed that this company shall not be in any way responsible for damage to customers property resulting in Deliveries beyond curb line.

DRIVER'S SIGNATURE _____

IRON MOUNTAIN QUARRY LLC

Quarry site: 20800 Wayside Mine Rd – Granite Falls WA
Phone: (Toll Free) 1-866-672-3434

10/05/2017 15:05 095030

DATE _____ **TIME** _____ **TICKET#** _____

044 GLACIER ENVIRONMENTAL

CUSTOMER _____ ☐ **CASH** ☐ **CHARGE**

4 730 S MERTLE ST

JOB _____ **PO#** _____

241 SPRINGBROOK NURSERY SBN30 X

HAULER _____ **TRUCK#** _____ ☐ **HIRED**

500 CLASS 2 PETROLEUM CONTAM SOIL

PRODUCT _____

GROSS	96620	**PRICE**	_____
TARE	40600	**SUBTOTAL**	_____
NET LB	56020	**TAX**	_____
NET TN	28.01	**TOTAL**	_____

117865

_____
WEIGHER

Terms: Net 30 days from the end of the month. A finance charge will be assessed on all past due accounts at a rate of 1-1/2% PER MONTH. Annual Finance Charge of 18%. Notice: It is specifically agreed that this company shall not be in any way responsible for damage to customers property resulting in Deliveries beyond curb line.

DRIVER'S SIGNATURE _____

IRON MOUNTAIN QUARRY LLC

Quarry site: 20800 Wayside Mine Rd – Granite Falls WA
Phone: (Toll Free) 1-866-672-3434

10/05/2017 15:29 095837

DATE _____ **TIME** _____ **TICKET#** _____

044 GLACIER ENVIRONMENTAL

CUSTOMER _____ ☐ **CASH** ☐ **CHARGE**

4 730 S MERTLE ST

JOB _____ **PO#** _____

241 SPRINGBROOK NURSERY SBNRS X

HAULER _____ **TRUCK#** _____ ☐ **HIRED**

500 CLASS 2 PETROLEUM CONTAM SOIL

PRODUCT _____

GROSS	106680	**PRICE**	_____
TARE	40920	**SUBTOTAL**	_____
NET LB	65760	**TAX**	_____
NET TN	32.88	**TOTAL**	_____

L10203

_____
WEIGHER

Terms: Net 30 days from the end of the month. A finance charge will be assessed on all past due accounts at a rate of 1-1/2% PER MONTH. Annual Finance Charge of 18%. Notice: It is specifically agreed that this company shall not be in any way responsible for damage to customers property resulting in Deliveries beyond curb line.

DRIVER'S SIGNATURE _____ RAY

IRON MOUNTAIN QUARRY LLC

Quarry site: 20800 Wayside Mine Rd – Granite Falls WA
Phone: (Toll Free) 1-866-672-3434

10/05/2017 11:49 095762

DATE _____ **TIME** _____ **TICKET#** _____

844 GLACIER ENVIRONMENTAL

CUSTOMER _____ ☐ **CASH** ☐ **CHARGE**

4 730 S MERTLE ST

JOB _____ **PO#** _____

241 SPRINGBROOK NURSERY SBN30 X

HAULER _____ **TRUCK#** _____ ☐ **HIRED**

508 CLASS 2 PETROLEUM CONTAM SOIL

PRODUCT _____

GROSS	102980	**PRICE**	_____
TARE	40600	**SUBTOTAL**	_____
NET LB	62380	**TAX**	_____
NET TN	31.19	**TOTAL**	_____

117865

_____
WEIGHER

Terms: Net 30 days from the end of the month. A finance charge will be assessed on all past due accounts at a rate of 1-1/2% PER MONTH. Annual Finance Charge of 18%. Notice: It is specifically agreed that this company shall not be in any way responsible for damage to customers property resulting in Deliveries beyond curb line.

DRIVER'S SIGNATURE _____

IRON MOUNTAIN QUARRY LLC

Quarry site: 20800 Wayside Mine Rd – Granite Falls WA
Phone: (Toll Free) 1-866-672-3434

10/05/2017 7:46 095675

DATE _____ **TIME** _____ **TICKET#** _____

844 GLACIER ENVIRONMENTAL

CUSTOMER _____ ☐ **CASH** ☐ **CHARGE**

4 730 S MERTLE ST

JOB _____ **PO#** _____

241 SPRINGBROOK NURSERY SBN30 X

HAULER _____ **TRUCK#** _____ ☐ **HIRED**

500 CLASS 2 PETROLEUM CONTAM SOIL

PRODUCT _____

GROSS	99440	**PRICE** _____
TARE	40600	**SUBTOTAL** _____
NET LB	58840	**TAX** _____
NET TN	29.42	**TOTAL** _____

L17865

_____
WEIGHER

Terms: Net 30 days from the end of the month. A finance charge will be assessed on all past due accounts at a rate of 1-1/2% PER MONTH. Annual Finance Charge of 18%. Notice: It is specifically agreed that this company shall not be in any way responsible for damage to customers property resulting in Deliveries beyond curb line.

DRIVER'S SIGNATURE _____

IRON MOUNTAIN QUARRY LLC

Quarry site: 20800 Wayside Mine Rd – Granite Falls WA
Phone: (Toll Free) 1-866-672-3434

10/05/2017 14:23 095816

DATE _____ **TIME** _____ **TICKET#** _____

844 GLACIER ENVIRONMENTAL
CUSTOMER _____ ☐ **CASH** ☐ **CHARGE**

4 730 S MERTLE ST
JOB _____ **PO#** _____

1854 MERANTO TRUCKING MERANTO X
HAULER _____ **TRUCK#** _____ ☐ **HIRED**

508 CLASS 2 PETROLEUM CONTAM SOIL
PRODUCT _____

GROSS	108220	**PRICE**	_____
TARE	38700	**SUBTOTAL**	_____
NET LB	69520	**TAX**	_____
NET TN	34.76	**TOTAL**	_____

.682

_____
WEIGHER

Terms: Net 30 days from the end of the month. A finance charge will be assessed on all past due accounts at a rate of 1-1/2% PER MONTH. Annual Finance Charge of 18%. Notice: It is specifically agreed that this company shall not be in any way responsible for damage to customers property resulting in Deliveries beyond curb line.

DRIVER'S SIGNATURE _____

IRON MOUNTAIN QUARRY LLC

Quarry site: 20800 Wayside Mine Rd – Granite Falls WA
Phone: (Toll Free) 1-866-672-3434

10/06/2017 6:16 895849

DATE _____ **TIME** _____ **TICKET#** _____

844 GLACIER ENVIRONMENTAL

CUSTOMER _____ ☐ **CASH** ☐ **CHARGE**

4 730 S MERTLE ST

JOB _____ **PO#** _____

717 NORTHWEST SAND & GRAVEL NW26 X

HAULER _____ **TRUCK#** _____ ☐ **HIRED**

500 CLASS 2 PETROLEUM CONTAM SOIL

PRODUCT _____

GROSS	101340	**PRICE**	_____
TARE	41760	**SUBTOTAL**	_____
NET LB	59580	**TAX**	_____
NET TN	29.79	**TOTAL**	_____

23862

_____
WEIGHER

Terms: Net 30 days from the end of the month. A finance charge will be assessed on all past due accounts at a rate of 1-1/2% PER MONTH. Annual Finance Charge of 18%. Notice: It is specifically agreed that this company shall not be in any way responsible for damage to customers property resulting in Deliveries beyond curb line.

DRIVER'S SIGNATURE _____

IRON MOUNTAIN QUARRY LLC

Quarry site: 20800 Wayside Mine Rd – Granite Falls WA
Phone: (Toll Free) 1-866-672-3434

DATE 10/06/2017 **TIME** 16:14 **TICKET#** 095919

CUSTOMER 844 GLACIER ENVIRONMENTAL ☐ **CASH** ☐ **CHARGE**

JOB 4 730 S MERTLE ST **PO#** _____

HAULER 717 NORTHWEST SAND & GRAVEL **TRUCK#** NW26 X ☐ **HIRED**

PRODUCT 508 CLASS 2 PETROLEUM CONTAM SOIL

GROSS	101740	**PRICE**	_____
TARE	41760	**SUBTOTAL**	_____
NET LB	59980	**TAX**	_____
NET TN	29.99	**TOTAL**	_____

23862

_____
WEIGHER

Terms: Net 30 days from the end of the month. A finance charge will be assessed on all past due accounts at a rate of 1-1/2% PER MONTH. Annual Finance Charge of 18%. Notice: It is specifically agreed that this company shall not be in any way responsible for damage to customers property resulting in Deliveries beyond curb line.

DRIVER'S SIGNATURE _____

IRON MOUNTAIN QUARRY LLC

Quarry site: 20800 Wayside Mine Rd – Granite Falls WA
Phone: (Toll Free) 1-866-672-3434

10/06/2017 7:31 895874

DATE _____ **TIME** _____ **TICKET#** _____

844 GLACIER ENVIRONMENTAL

CUSTOMER _____ ☐ **CASH** ☐ **CHARGE**

4 730 S MERTLE ST

JOB _____ **PO#** _____

241 SPRINGBROOK NURSERY SBNJ30 X

HAULER _____ **TRUCK#** _____ ☐ **HIRED**

500 CLASS 2 PETROLEUM CONTAM SOIL

PRODUCT _____

GROSS 97320

TARE 40600

NET LB 56720

NET TN 28.36

PRICE _____

SUBTOTAL _____

TAX _____

TOTAL _____

117867

_____
WEIGHER

Terms: Net 30 days from the end of the month. A finance charge will be assessed on all past due accounts at a rate of 1-1/2% PER MONTH. Annual Finance Charge of 18%. Notice: It is specifically agreed that this company shall not be in any way responsible for damage to customers property resulting in Deliveries beyond curb line.

DRIVER'S SIGNATURE _____

IRON MOUNTAIN QUARRY LLC

Quarry site: 20800 Wayside Mine Rd – Granite Falls WA
Phone: (Toll Free) 1-866-672-3434

10/06/2017 8:05 095802

DATE _____ **TIME** _____ **TICKET#** _____

844 GLACIER ENVIRONMENTAL

CUSTOMER _____ ☐ **CASH** ☐ **CHARGE**

4 730 S MERTLE ST

JOB _____ **PO#** _____

241 SPRINGBROOK NURSERY SDN25 X

HAULER _____ **TRUCK#** _____ ☐ **HIRED**

PRODUCT 508 CLASS 2 PETROLEUM CONTAM SOIL

GROSS	105580	**PRICE**	_____
TARE	40920	**SUBTOTAL**	_____
NET LB	64660	**TAX**	_____
NET TN	32.33	**TOTAL**	_____

110203

_____
WEIGHER

Terms: Net 30 days from the end of the month. A finance charge will be assessed on all past due accounts at a rate of 1-1/2% PER MONTH. Annual Finance Charge of 18%. Notice: It is specifically agreed that this company shall not be in any way responsible for damage to customers property resulting in Deliveries beyond curb line.

DRIVER'S SIGNATURE _____ RAY

IRON MOUNTAIN QUARRY LLC

Quarry site: 20800 Wayside Mine Rd – Granite Falls WA
Phone: (Toll Free) 1-866-672-3434

DATE _____ **TIME** _____ **TICKET#** _____

CUSTOMER _____ ☐ **CASH** ☐ **CHARGE**

JOB _____ **PO#** _____

HAULER _____ **TRUCK#** _____ ☐ **HIRED**

PRODUCT _____

PRICE _____

SUBTOTAL _____

TAX _____

TOTAL _____

_____
WEIGHER

Terms: Net 30 days from the end of the month. A finance charge will be assessed on all past due accounts at a rate of 1-1/2% PER MONTH. Annual Finance Charge of 18%. Notice: It is specifically agreed that this company shall not be in any way responsible for damage to customers property resulting in Deliveries beyond curb line.

DRIVER'S SIGNATURE _____

IRON MOUNTAIN QUARRY LLC

Quarry site: 20800 Wayside Mine Rd – Granite Falls WA
Phone: (Toll Free) 1-866-672-3434

DATE 10/06/2017 **TIME** 11:31 **TICKET#** 095941

CUSTOMER 844 GLACIER ENVIRONMENTAL ☐ **CASH** ☐ **CHARGE**

JOB 4 730 S MERTLE ST **PO#** _____

HAULER 241 SPRINGBROOK NURSERY **TRUCK#** SSN30 X ☐ **HIRED**

PRODUCT 30A CLASS 2 PETROLEUM CONTAM SOIL

GROSS	95380	**PRICE**	_____
TARE	40600	**SUBTOTAL**	_____
NET LB	54780	**TAX**	_____
NET TN	27.39	**TOTAL**	_____

L17867

_____
WEIGHER

Terms: Net 30 days from the end of the month. A finance charge will be assessed on all past due accounts at a rate of 1-1/2% PER MONTH. Annual Finance Charge of 18%. Notice: It is specifically agreed that this company shall not be in any way responsible for damage to customers property resulting in Deliveries beyond curb line.

DRIVER'S SIGNATURE _____

IRON MOUNTAIN QUARRY LLC

Quarry site: 20800 Wayside Mine Rd – Granite Falls WA
Phone: (Toll Free) 1-866-672-3434

DATE _____ **TIME** _____ **TICKET#** _____

CUSTOMER _____ ☐ **CASH** ☐ **CHARGE**

JOB _____ **PO#** _____

HAULER _____ **TRUCK#** _____ ☐ **HIRED**

PRODUCT _____

PRICE _____

SUBTOTAL _____

TAX _____

TOTAL _____

_____
WEIGHER

Terms: Net 30 days from the end of the month. A finance charge will be assessed on all past due accounts at a rate of 1-1/2% PER MONTH. Annual Finance Charge of 18%. Notice: It is specifically agreed that this company shall not be in any way responsible for damage to customers property resulting in Deliveries beyond curb line.

DRIVER'S SIGNATURE _____

IRON MOUNTAIN QUARRY LLC

Quarry site: 20800 Wayside Mine Rd – Granite Falls WA
Phone: (Toll Free) 1-866-672-3434

10/06/2017 7:27 095872

DATE _____ **TIME** _____ **TICKET#** _____

844 GLACIER ENVIRONMENTAL
CUSTOMER _____ ☐ **CASH** ☐ **CHARGE**

4 730 S MERTLE ST
JOB _____ **PO#** _____

1854 MERANTO TRUCKING MERANTO
HAULER _____ **TRUCK#** _____ ☐ **HIRED**

508 CLASS 2 PETROLEUM CONTAM SOIL
PRODUCT _____

GROSS	101280	**PRICE**	_____
TARE	38700	**SUBTOTAL**	_____
NET LB	62580	**TAX**	_____
NET TN	31.29	**TOTAL**	_____

1684

_____
WEIGHER

Terms: Net 30 days from the end of the month. A finance charge will be assessed on all past due accounts at a rate of 1-1/2% PER MONTH. Annual Finance Charge of 18%. Notice: It is specifically agreed that this company shall not be in any way responsible for damage to customers property resulting in Deliveries beyond curb line.

DRIVER'S SIGNATURE _____

IRON MOUNTAIN QUARRY LLC

Quarry site: 20800 Wayside Mine Rd – Granite Falls WA
Phone: (Toll Free) 1-866-672-3434

DATE 10/06/2017 **TIME** 10:44 **TICKET#** 095930

CUSTOMER 844 GLACIER ENVIRONMENTAL ☐ **CASH** ☐ **CHARGE**

JOB 4 730 S MERTLE ST **PO#** _____

HAULER 1054 MERANTO TRUCKING **TRUCK#** MERANTO X ☐ **HIRED**

PRODUCT 500 CLASS 2 PETROLEUM CONTAM SOIL

GROSS	105600	**PRICE**	
TARE	38700	**SUBTOTAL**	
NET LB	66900	**TAX**	
NET TN	33.45	**TOTAL**	

1684

WEIGHER

Terms: Net 30 days from the end of the month. A finance charge will be assessed on all past due accounts at a rate of 1-1/2% PER MONTH. Annual Finance Charge of 18%. Notice: It is specifically agreed that this company shall not be in any way responsible for damage to customers property resulting in Deliveries beyond curb line.

DRIVER'S SIGNATURE

IRON MOUNTAIN QUARRY LLC

Quarry site: 20800 Wayside Mine Rd – Granite Falls WA
Phone: (Toll Free) 1-866-672-3434

10/06/2017 13:51 035978

DATE _____ **TIME** _____ **TICKET#** _____

CUSTOMER 844 GLACIER ENVIRONMENTAL _____ ☐ **CASH** ☐ **CHARGE**

JOB 4 730 S MERTLE ST _____ **PO#** _____

HAULER 1854 MERANTO TRUCKING _____ **TRUCK#** MERANTO _____ ☐ **HIRED**

PRODUCT 508 CLASS 2 PETROLEUM CONTA _____

GROSS	103140	**PRICE**	_____
TARE	38700	**SUBTOTAL**	_____
NET LB	64440	**TAX**	_____
NET TN	32.22	**TOTAL**	_____

1604

_____
WEIGHER

Terms: Net 30 days from the end of the month. A finance charge will be assessed on all past due accounts at a rate of 1-1/2% PER MONTH. Annual Finance Charge of 18%. Notice: It is specifically agreed that this company shall not be in any way responsible for damage to customers property resulting in Deliveries beyond curb line.

DRIVER'S SIGNATURE _____

IRON MOUNTAIN QUARRY LLC

Quarry site: 20800 Wayside Mine Rd – Granite Falls WA
Phone: (Toll Free) 1-866-672-3434

DATE _____ **TIME** _____ **TICKET#** _____

CUSTOMER _____ ☐ **CASH** ☐ **CHARGE**

JOB _____ **PO#** _____

HAULER _____ **TRUCK#** _____ ☐ **HIRED**

PRODUCT _____

PRICE _____

SUBTOTAL _____

TAX _____

TOTAL _____

_____
WEIGHER

Terms: Net 30 days from the end of the month. A finance charge will be assessed on all past due accounts at a rate of 1-1/2% PER MONTH. Annual Finance Charge of 18%. Notice: It is specifically agreed that this company shall not be in any way responsible for damage to customers property resulting in Deliveries beyond curb line.

DRIVER'S SIGNATURE _____

IRON MOUNTAIN QUARRY LLC

Quarry site: 20800 Wayside Mine Rd – Granite Falls WA
Phone: (Toll Free) 1-866-672-3434

10/09/2017 8:07 09614

DATE _____ **TIME** _____ **TICKET#** _____

844 GLACIER ENVIRONMENTAL

CUSTOMER _____ ☐ **CASH** ☐ **CHARGE**

4 730 S MERTLE ST

JOB _____ **PO#** _____

HAULER 2363 SCOLERT TRUCKING _____ **TRUCK#** SCOLERT4 X ☐ **HIRED**

PRODUCT 500 CLASS 2 PETROLEUM CONTAM SOIL

GROSS 102060

TARE 36490

NET LB 65570

NET TN 32.83

2044

PRICE _____

SUBTOTAL _____

TAX _____

TOTAL _____

_____
WEIGHER

Terms: Net 30 days from the end of the month. A finance charge will be assessed on all past due accounts at a rate of 1-1/2% PER MONTH. Annual Finance Charge of 18%. Notice: It is specifically agreed that this company shall not be in any way responsible for damage to customers property resulting in Deliveries beyond curb line.

DRIVER'S SIGNATURE _____

IRON MOUNTAIN QUARRY LLC

Quarry site: 20800 Wayside Mine Rd – Granite Falls WA
Phone: (Toll Free) 1-866-672-3434

DATE 10/09/2017 **TIME** 7:27 **TICKET#** 096136

CUSTOMER 844 GLACIER ENVIRONMENTAL ☐ **CASH** ☐ **CHARGE**

JOB 4 730 S MERTLE ST **PO#** _____

HAULER 2518 WESTSIDE LLC **TRUCK#** WS1 X ☐ **HIRED**

PRODUCT 508 CLASS 2 PETROLEUM CONTAM SOIL

GROSS	107220	**PRICE**	
TARE	41260	**SUBTOTAL**	
NET LB	65960	**TAX**	
NET TN	32.98	**TOTAL**	

1277

_____
WEIGHER

Terms: Net 30 days from the end of the month. A finance charge will be assessed on all past due accounts at a rate of 1-1/2% PER MONTH. Annual Finance Charge of 18%. Notice: It is specifically agreed that this company shall not be in any way responsible for damage to customers property resulting in Deliveries beyond curb line.

DRIVER'S SIGNATURE _____

IRON MOUNTAIN QUARRY LLC

Quarry site: 20800 Wayside Mine Rd – Granite Falls WA
Phone: (Toll Free) 1-866-672-3434

10/09/2017 11:15 096200

DATE _____ **TIME** _____ **TICKET#** _____

844 GLACIER ENVIRONMENTAL

CUSTOMER _____ ☐ **CASH** ☐ **CHARGE**

4 730 S MERTLE ST

JOB _____ **PO#** _____

HAULER 2518 WESTSIDE LLC **TRUCK#** WSI X ☐ **HIRED**

PRODUCT 308 CLASS 2 PETROLEUM CONTAM SOIL

GROSS	110360	**PRICE**	_____
TARE	41260	**SUBTOTAL**	_____
NET LB	69100	**TAX**	_____
NET TN	34.55	**TOTAL**	_____

1277

_____
WEIGHER

Terms: Net 30 days from the end of the month. A finance charge will be assessed on all past due accounts at a rate of 1-1/2% PER MONTH. Annual Finance Charge of 18%. Notice: It is specifically agreed that this company shall not be in any way responsible for damage to customers property resulting in Deliveries beyond curb line.

DRIVER'S SIGNATURE _____

IRON MOUNTAIN QUARRY LLC

Quarry site: 20800 Wayside Mine Rd – Granite Falls WA
Phone: (Toll Free) 1-866-672-3434

10/09/2017 7:51 896143

DATE _____ **TIME** _____ **TICKET#** _____

544 GLACIER ENVIRONMENTAL

CUSTOMER _____ ☐ **CASH** ☐ **CHARGE**

4 730 S MERTLE ST

JOB _____ **PO#** _____

42 BUILDERS SAND AND GRAVEL

HAULER _____ **TRUCK#** 820 X ☐ **HIRED**

PRODUCT 508 CLASS 2 PETROLEUM CONTAM SOIL

GROSS	100820	**PRICE**	_____
TARE	36100	**SUBTOTAL**	_____
NET LB	64720	**TAX**	_____
NET TN	32.36	**TOTAL**	_____

323668

_____
WEIGHER

Terms: Net 30 days from the end of the month. A finance charge will be assessed on all past due accounts at a rate of 1-1/2% PER MONTH. Annual Finance Charge of 18%. Notice: It is specifically agreed that this company shall not be in any way responsible for damage to customers property resulting in Deliveries beyond curb line.

DRIVER'S SIGNATURE _____

IRON MOUNTAIN QUARRY LLC

Quarry site: 20800 Wayside Mine Rd – Granite Falls WA
Phone: (Toll Free) 1-866-672-3434

10/09/2017 11:39 096216

DATE _____ **TIME** _____ **TICKET#** _____

844 GLACIER ENVIRONMENTAL

CUSTOMER _____ ☐ **CASH** ☐ **CHARGE**

4 730 S MERTLE ST

JOB _____ **PO#** _____

42 BUILDERS SAND AND GRAVEL

HAULER _____ **TRUCK#** B20 _____ X ☐ **HIRED**

500 CLASS 2 PETROLEUM CONTAM SOIL

PRODUCT _____

GROSS	112500	**PRICE**	_____
TARE	36100	**SUBTOTAL**	_____
NET LB	76400	**TAX**	_____
NET TN	38.24	**TOTAL**	_____

323668

_____
WEIGHER

Terms: Net 30 days from the end of the month. A finance charge will be assessed on all past due accounts at a rate of 1-1/2% PER MONTH. Annual Finance Charge of 18%. Notice: It is specifically agreed that this company shall not be in any way responsible for damage to customers property resulting in Deliveries beyond curb line.

DRIVER'S SIGNATURE _____

IRON MOUNTAIN QUARRY LLC

Quarry site: 20800 Wayside Mine Rd – Granite Falls WA
Phone: (Toll Free) 1-866-672-3434

10/09/2017 14:40 096286

DATE _____ **TIME** _____ **TICKET#** _____

844 GLACIER ENVIRONMENTAL

CUSTOMER _____ ☐ **CASH** ☐ **CHARGE**

4 730 S MERTLE ST

JOB _____ **PO#** _____

2510 WESTSIDE LLC WS1 X

HAULER _____ **TRUCK#** _____ ☐ **HIRED**

500 CLASS 2 PETROLEUM CONTAM SOIL

PRODUCT _____

GROSS	113000	**PRICE**	_____
TARE	41940	**SUBTOTAL**	_____
NET LB	71940	**TAX**	_____
NET TN	35.97	**TOTAL**	_____

1276

_____
WEIGHER

Terms: Net 30 days from the end of the month. A finance charge will be assessed on all past due accounts at a rate of 1-1/2% PER MONTH. Annual Finance Charge of 18%. Notice: It is specifically agreed that this company shall not be in any way responsible for damage to customers property resulting in Deliveries beyond curb line.

DRIVER'S SIGNATURE _____

IRON MOUNTAIN QUARRY LLC

Quarry site: 20800 Wayside Mine Rd – Granite Falls WA
Phone: (Toll Free) 1-866-672-3434

DATE 10/09/2017 **TIME** 15:56 **TICKET#** 036308

CUSTOMER 844 GLACIER ENVIRONMENTAL ☐ **CASH** ☐ **CHARGE**

JOB 4 730 S MERTLE ST **PO#** _____

HAULER 2363 SCOLERI TRUCKING **TRUCK#** SCOLER14 X ☐ **HIRED**

PRODUCT 508 CLASS 2 PETROLEUM CONTAM SOIL

GROSS	113600	**PRICE**	
TARE	36400	**SUBTOTAL**	
NET LB	77200	**TAX**	
NET TN	38.60	**TOTAL**	

2044

_____
WEIGHER

Terms: Net 30 days from the end of the month. A finance charge will be assessed on all past due accounts at a rate of 1-1/2% PER MONTH. Annual Finance Charge of 18%. Notice: It is specifically agreed that this company shall not be in any way responsible for damage to customers property resulting in Deliveries beyond curb line.

DRIVER'S SIGNATURE _____

IRON MOUNTAIN QUARRY LLC

Quarry site: 20800 Wayside Mine Rd – Granite Falls WA
Phone: (Toll Free) 1-866-672-3434

DATE 10/03/2017 **TIME** 15:29 **TICKET#** 096302

CUSTOMER 044 GLACIER ENVIRONMENTAL ☐ **CASH** ☐ **CHARGE**

JOB 4 730 S MERRILL ST **PO#** _____

HAULER 42 BUILDERS SAND AND GRAVEL **TRUCK#** 120 ☒ ☐ **HIRED**

PRODUCT 508 CLASS 2 PETROLEUM CONTAM SOIL

GROSS	116040	**PRICE**	_____
TARE	36180	**SUBTOTAL**	_____
NET LB	79860	**TAX**	_____
NET TN	39.93	**TOTAL**	_____

323668

_____
WEIGHER

Terms: Net 30 days from the end of the month. A finance charge will be assessed on all past due accounts at a rate of 1-1/2% PER MONTH. Annual Finance Charge of 18%. Notice: It is specifically agreed that this company shall not be in any way responsible for damage to customers property resulting in Deliveries beyond curb line.

DRIVER'S SIGNATURE _____

IRON MOUNTAIN QUARRY LLC

Quarry site: 20800 Wayside Mine Rd – Granite Falls WA
Phone: (Toll Free) 1-866-672-3434

DATE 10/10/2017 **TIME** 7:22 **TICKET#** 896339

CUSTOMER 844 GLACIER ENVIRONMENTAL ☐ **CASH** ☐ **CHARGE**

JOB 4 730 S MERTLE ST **PO#** _____

HAULER 717 NORTHWEST SAND & GRAVEL **TRUCK#** NW26 X ☐ **HIRED**

PRODUCT 500 CLASS 2 PETROLEUM CONTAM SOIL

GROSS	121260	**PRICE**	
TARE	41760	**SUBTOTAL**	
NET LB	79500	**TAX**	
NET TN	39.75	**TOTAL**	

23865

_____
WEIGHER

Terms: Net 30 days from the end of the month. A finance charge will be assessed on all past due accounts at a rate of 1-1/2% PER MONTH. Annual Finance Charge of 18%. Notice: It is specifically agreed that this company shall not be in any way responsible for damage to customers property resulting in Deliveries beyond curb line.

DRIVER'S SIGNATURE _____

IRON MOUNTAIN QUARRY LLC

Quarry site: 20800 Wayside Mine Rd – Granite Falls WA
Phone: (Toll Free) 1-866-672-3434

DATE 10/10/2017 **TIME** 12:08 **TICKET#** 096442

CUSTOMER 044 GLACIER ENVIRONMENTAL ☐ **CASH** ☐ **CHARGE**

JOB 4 730 S MERTLE ST **PO#** _____

HAULER 2363 SCOLERI TRUCKING **TRUCK#** SCOLERI4 X ☐ **HIRED**

PRODUCT 50A CLASS 2 PETROLEUM CONTAM SOIL

GROSS	112000	**PRICE**	
TARE	36860	**SUBTOTAL**	
NET LB	75140	**TAX**	
NET TN	37.57	**TOTAL**	

2047

WEIGHER

Terms: Net 30 days from the end of the month. A finance charge will be assessed on all past due accounts at a rate of 1-1/2% PER MONTH. Annual Finance Charge of 18%. Notice: It is specifically agreed that this company shall not be in any way responsible for damage to customers property resulting in Deliveries beyond curb line.

DRIVER'S SIGNATURE

IRON MOUNTAIN QUARRY LLC

Quarry site: 20800 Wayside Mine Rd – Granite Falls WA
Phone: (Toll Free) 1-866-672-3434

DATE 10/10/2017 **TIME** 11:33 **TICKET#** 89643

CUSTOMER 844 GLACIER ENVIRONMENTAL ☐ **CASH** ☐ **CHARGE**

JOB 4 730 S MERTLE ST **PO#** _____

HAULER 717 NORTHWEST SAND & GRAVEL **TRUCK#** NW26 ☒ **HIRED**

PRODUCT 508 CLASS 2 PETROLEUM CONTAM SOIL

GROSS	118500	**PRICE**	
TARE	41760	**SUBTOTAL**	
NET LB	76740	**TAX**	
NET TN	38.37	**TOTAL**	

23865

_____
WEIGHER

Terms: Net 30 days from the end of the month. A finance charge will be assessed on all past due accounts at a rate of 1-1/2% PER MONTH. Annual Finance Charge of 18%. Notice: It is specifically agreed that this company shall not be in any way responsible for damage to customers property resulting in Deliveries beyond curb line.

DRIVER'S SIGNATURE _____

IRON MOUNTAIN QUARRY LLC

Quarry site: 20800 Wayside Mine Rd – Granite Falls WA
Phone: (Toll Free) 1-866-672-3434

10/10/2017 15:42 096511

DATE _____ **TIME** _____ **TICKET#** _____

044 GLACIER ENVIRONMENTAL

CUSTOMER _____ ☐ **CASH** ☐ **CHARGE**

4 730 S MERTLE ST

JOB _____ **PO#** _____

2363 SCOLERI TRUCKING SCOLERI4 X

HAULER _____ **TRUCK#** _____ ☐ **HIRED**

308 CLASS 2 PETROLEUM CONTAM SOIL

PRODUCT _____

GROSS	100780	**PRICE**	_____
TARE	36860	**SUBTOTAL**	_____
NET LB	63920	**TAX**	_____
NET TN	31.96	**TOTAL**	_____

2047

_____
WEIGHER

Terms: Net 30 days from the end of the month. A finance charge will be assessed on all past due accounts at a rate of 1-1/2% PER MONTH. Annual Finance Charge of 18%. Notice: It is specifically agreed that this company shall not be in any way responsible for damage to customers property resulting in Deliveries beyond curb line.

DRIVER'S SIGNATURE _____

IRON MOUNTAIN QUARRY LLC

Quarry site: 20800 Wayside Mine Rd – Granite Falls WA
Phone: (Toll Free) 1-866-672-3434

DATE 10/10/2017 **TIME** 13:29 **TICKET#** 096463

CUSTOMER 044 GLACIER ENVIRONMENTAL ☐ **CASH** ☐ **CHARGE**

JOB 4 230 S MERTLE ST **PO#** _____

HAULER 42 BUILDERS SAND AND GRAVEL **TRUCK#** B20 x ☐ **HIRED**

PRODUCT 508 CLASS 2 PETROLEUM CONTAM SOIL

GROSS	111040	**PRICE**	
TARE	36180	**SUBTOTAL**	
NET LB	74860	**TAX**	
NET TN	37.43	**TOTAL**	

3236771

_____
WEIGHER

Terms: Net 30 days from the end of the month. A finance charge will be assessed on all past due accounts at a rate of 1-1/2% PER MONTH. Annual Finance Charge of 18%. Notice: It is specifically agreed that this company shall not be in any way responsible for damage to customers property resulting in Deliveries beyond curb line.

DRIVER'S SIGNATURE _____

IRON MOUNTAIN QUARRY LLC

Quarry site: 20800 Wayside Mine Rd – Granite Falls WA
Phone: (Toll Free) 1-866-672-3434

10/10/2017 13:30 096506

DATE _____ **TIME** _____ **TICKET#** _____

844 GLACIER ENVIRONMENTAL

CUSTOMER _____ ☐ **CASH** ☐ **CHARGE**

4 730 S MERTLE ST

JOB _____ **PO#** _____

717 NORTHWEST SAND & GRAVEL NW26 X

HAULER _____ **TRUCK#** _____ ☐ **HIRED**

500 CLASS 2 PETROLEUM CONTAM SOIL

PRODUCT _____

GROSS 111800

TARE 41760

NET LB 70120

NET TN 35.06

23865

PRICE _____

SUBTOTAL _____

TAX _____

TOTAL _____

_____
WEIGHER

Terms: Net 30 days from the end of the month. A finance charge will be assessed on all past due accounts at a rate of 1-1/2% PER MONTH. Annual Finance Charge of 18%. Notice: It is specifically agreed that this company shall not be in any way responsible for damage to customers property resulting in Deliveries beyond curb line.

DRIVER'S SIGNATURE _____

IRON MOUNTAIN QUARRY LLC

Quarry site: 20800 Wayside Mine Rd – Granite Falls WA
Phone: (Toll Free) 1-866-672-3434

DATE 10/11/2017 **TIME** 14:52 **TICKET#** 096695

CUSTOMER 844 GLACIER ENVIRONMENTAL ☐ **CASH** ☐ **CHARGE**

JOB 4 730 S MERTLE ST **PO#** _____

HAULER 241 SPRINGBROOK NURSERY **TRUCK#** SBN30 X ☐ **HIRED**

PRODUCT 500 CLASS B PETROLEUM CONTAM SOIL

GROSS	94400	**PRICE**	
TARE	40600	**SUBTOTAL**	
NET LB	53800	**TAX**	
NET TN	26.90	**TOTAL**	

117871

_____
WEIGHER

Terms: Net 30 days from the end of the month. A finance charge will be assessed on all past due accounts at a rate of 1-1/2% PER MONTH. Annual Finance Charge of 18%. Notice: It is specifically agreed that this company shall not be in any way responsible for damage to customers property resulting in Deliveries beyond curb line.

DRIVER'S SIGNATURE _____

IRON MOUNTAIN QUARRY LLC

Quarry site: 20800 Wayside Mine Rd – Granite Falls WA
Phone: (Toll Free) 1-866-672-3434

DATE 10/11/2017 **TIME** 7:46 **TICKET#** 096542

CUSTOMER 844 GLACIER ENVIRONMENTAL ☐ **CASH** ☐ **CHARGE**

JOB 4 730 S MERTLE ST **PO#** _____

HAULER 1054 MERANTO TRUCKING **TRUCK#** MERANTO X ☐ **HIRED**

PRODUCT 508 CLASS 2 PETROLEUM CONTAM SOIL

GROSS	107580	**PRICE**	
TARE	38700	**SUBTOTAL**	
NET LB	68880	**TAX**	
NET TN	34.44	**TOTAL**	

1688

WEIGHER

Terms: Net 30 days from the end of the month. A finance charge will be assessed on all past due accounts at a rate of 1-1/2% PER MONTH. Annual Finance Charge of 18%. Notice: It is specifically agreed that this company shall not be in any way responsible for damage to customers property resulting in Deliveries beyond curb line.

DRIVER'S SIGNATURE

IRON MOUNTAIN QUARRY LLC

Quarry site: 20800 Wayside Mine Rd – Granite Falls WA
Phone: (Toll Free) 1-866-672-3434

DATE 10/11/2017 **TIME** 11:47 **TICKET#** 096623

CUSTOMER 844 GLACIER ENVIRONMENTAL ☐ **CASH** ☐ **CHARGE**

JOB 4 730 S MERTLE ST **PO#** _____

HAULER 717 NORTHWEST SAND & GRAVEL **TRUCK#** NW26 ☐ **HIRED**

PRODUCT 508 CLASS 2 PETROLEUM CONTAM SOIL

GROSS	111360	**PRICE**	
TARE	40200	**SUBTOTAL**	
NET LB	71160	**TAX**	
NET TN	35.58	**TOTAL**	

23870

WEIGHER

Terms: Net 30 days from the end of the month. A finance charge will be assessed on all past due accounts at a rate of 1-1/2% PER MONTH. Annual Finance Charge of 18%. Notice: It is specifically agreed that this company shall not be in any way responsible for damage to customers property resulting in Deliveries beyond curb line.

DRIVER'S SIGNATURE _____

IRON MOUNTAIN QUARRY LLC

Quarry site: 20800 Wayside Mine Rd – Granite Falls WA
Phone: (Toll Free) 1-866-672-3434

DATE 10/11/2017 **TIME** 7:43 **TICKET#** 096540

CUSTOMER 944 GLACIER ENVIRONMENTAL ☐ **CASH** ☐ **CHARGE**

JOB 4 730 S MERTLE ST **PO#** _____

HAULER 717 NORTHWEST SAND & GRAVEL **TRUCK#** NW26 X ☐ **HIRED**

PRODUCT 508 CLASS 2 PETROLEUM CONTAM SOIL

GROSS	105240	**PRICE**	
TARE	40200	**SUBTOTAL**	
NET LB	65040	**TAX**	
NET TN	32.52	**TOTAL**	

23870

WEIGHER

Terms: Net 30 days from the end of the month. A finance charge will be assessed on all past due accounts at a rate of 1-1/2% PER MONTH. Annual Finance Charge of 18%. Notice: It is specifically agreed that this company shall not be in any way responsible for damage to customers property resulting in Deliveries beyond curb line.

DRIVER'S SIGNATURE

IRON MOUNTAIN QUARRY LLC

Quarry site: 20800 Wayside Mine Rd – Granite Falls WA
Phone: (Toll Free) 1-866-672-3434

DATE 10/11/2017 **TIME** 14:39 **TICKET#** 096690

CUSTOMER 044 GLACIER ENVIRONMENTAL ☐ **CASH** ☐ **CHARGE**

JOB 4 730 S MERTLE ST **PO#** _____

HAULER 1854 MERANTO TRUCKING **TRUCK#** MERANTO X ☐ **HIRED**

PRODUCT 508 CLASS 2 PETROLEUM CONTAM SOIL

GROSS	104700	**PRICE**	
TARE	38700	**SUBTOTAL**	
NET LB	66000	**TAX**	
NET TN	33.00	**TOTAL**	

1688

WEIGHER

Terms: Net 30 days from the end of the month. A finance charge will be assessed on all past due accounts at a rate of 1-1/2% PER MONTH. Annual Finance Charge of 18%. Notice: It is specifically agreed that this company shall not be in any way responsible for damage to customers property resulting in Deliveries beyond curb line.

DRIVER'S SIGNATURE

IRON MOUNTAIN QUARRY LLC

Quarry site: 20800 Wayside Mine Rd – Granite Falls WA
Phone: (Toll Free) 1-866-672-3434

DATE 10/11/2017 **TIME** 11:23 **TICKET#** 096607

CUSTOMER 844 GLACIER ENVIRONMENTAL ☐ **CASH** ☐ **CHARGE**

JOB 4 730 S MERTLE ST **PO#** _____

HAULER 241 SPRINGBROOK NURSERY **TRUCK#** SBN30 X ☐ **HIRED**

PRODUCT 500 CLASS 2 PETROLEUM CONTAM SOIL

GROSS	94320	**PRICE**	
TARE	40600	**SUBTOTAL**	
NET LB	53720	**TAX**	
NET TN	26.86	**TOTAL**	

117871

_____
WEIGHER

Terms: Net 30 days from the end of the month. A finance charge will be assessed on all past due accounts at a rate of 1-1/2% PER MONTH. Annual Finance Charge of 18%. Notice: It is specifically agreed that this company shall not be in any way responsible for damage to customers property resulting in Deliveries beyond curb line.

DRIVER'S SIGNATURE _____

IRON MOUNTAIN QUARRY LLC

Quarry site: 20800 Wayside Mine Rd – Granite Falls WA
Phone: (Toll Free) 1-866-672-3434

DATE 10/11/2017 **TIME** 11:31 **TICKET#** 096613

CUSTOMER 844 GLACIER ENVIRONMENTAL ☐ **CASH** ☐ **CHARGE**

JOB 4 730 S MERTLE ST **PO#** _____

HAULER 1854 MERANTO TRUCKING **TRUCK#** MERANTO X ☐ **HIRED**

PRODUCT 500 CLASS 2 PETROLEUM CONTAM SOIL

GROSS	107640	**PRICE**	
TARE	38700	**SUBTOTAL**	
NET LB	68940	**TAX**	
NET TN	34.47	**TOTAL**	

1680

_____
WEIGHER

Terms: Net 30 days from the end of the month. A finance charge will be assessed on all past due accounts at a rate of 1-1/2% PER MONTH. Annual Finance Charge of 18%. Notice: It is specifically agreed that this company shall not be in any way responsible for damage to customers property resulting in Deliveries beyond curb line.

DRIVER'S SIGNATURE _____

IRON MOUNTAIN QUARRY LLC

Quarry site: 20800 Wayside Mine Rd – Granite Falls WA
Phone: (Toll Free) 1-866-672-3434

10/11/2017 7:39 096537

DATE _____ **TIME** _____ **TICKET#** _____

044 GLACIER ENVIRONMENTAL

CUSTOMER _____ ☐ **CASH** ☐ **CHARGE**

4 7730 S MERTLE ST

JOB _____ **PO#** _____

241 SPRINGBROOK NURSERY S3L30 Y

HAULER _____ **TRUCK#** _____ ☐ **HIRED**

500 CLASS 2 PETROLEUM CONTAM SOIL

PRODUCT _____

GROSS 104760

TARE 40680

NET LB 64140

NET TN 32.08

117871

PRICE _____

SUBTOTAL _____

TAX _____

TOTAL _____

_____
WEIGHER

Terms: Net 30 days from the end of the month. A finance charge will be assessed on all past due accounts at a rate of 1-1/2% PER MONTH. Annual Finance Charge of 18%. Notice: It is specifically agreed that this company shall not be in any way responsible for damage to customers property resulting in Deliveries beyond curb line.

DRIVER'S SIGNATURE _____

IRON MOUNTAIN QUARRY LLC

Quarry site: 20800 Wayside Mine Rd – Granite Falls WA
Phone: (Toll Free) 1-866-672-3434

DATE 10/11/2017 **TIME** 15:59 **TICKET#** 096722

CUSTOMER 844 GLACIER ENVIRONMENTAL ☐ **CASH** ☐ **CHARGE**

JOB 4 730 S MERTLE ST **PO#** _____

HAULER 717 NORTHWEST SAND & GRAVEL **TRUCK#** NW26 X ☐ **HIRED**

PRODUCT 508 CLASS 2 PETROLEUM CONTAM SOIL

GROSS	104420	**PRICE**	_____
TARE	40200	**SUBTOTAL**	_____
NET LB	64220	**TAX**	_____
NET TN	32.11	**TOTAL**	_____

23A70

_____
WEIGHER

Terms: Net 30 days from the end of the month. A finance charge will be assessed on all past due accounts at a rate of 1-1/2% PER MONTH. Annual Finance Charge of 18%. Notice: It is specifically agreed that this company shall not be in any way responsible for damage to customers property resulting in Deliveries beyond curb line.

DRIVER'S SIGNATURE _____

IRON MOUNTAIN QUARRY LLC

Quarry site: 20800 Wayside Mine Rd – Granite Falls WA
Phone: (Toll Free) 1-866-672-3434

DATE 10/11/2017 **TIME** 15:58 **TICKET#** 096721

CUSTOMER 844 GLACIER ENVIRONMENTAL ☐ **CASH** ☐ **CHARGE**

JOB 4 730 S MERTLE ST **PO#** _____

HAULER 174 SPRING BROOK **TRUCK#** SBH92 ☐ **HIRED**

PRODUCT 500 CLASS 2 PETROLEUM CONTAM SOIL

GROSS 101960
TARE 42320
NET LB 59640
NET TN 29.82

PRICE _____
SUBTOTAL _____
TAX _____
TOTAL _____

110210

_____
WEIGHER

Terms: Net 30 days from the end of the month. A finance charge will be assessed on all past due accounts at a rate of 1-1/2% PER MONTH. Annual Finance Charge of 18%. Notice: It is specifically agreed that this company shall not be in any way responsible for damage to customers property resulting in Deliveries beyond curb line.

DRIVER'S SIGNATURE RAY

IRON MOUNTAIN QUARRY LLC

Quarry site: 20800 Wayside Mine Rd – Granite Falls WA
Phone: (Toll Free) 1-866-672-3434

DATE 10/12/2017 **TIME** 11:38 **TICKET#** 096822

CUSTOMER 844 GLACIER ENVIRONMENTAL ☐ **CASH** ☐ **CHARGE**

JOB 4 730 S MERTLE ST **PO#** _____

HAULER 1054 MERANTO TRUCKING **TRUCK#** MERANTO X ☐ **HIRED**

PRODUCT 508 CLASS 2 PETROLEUM CONTAM SOIL

GROSS	117080	**PRICE**	
TARE	39220	**SUBTOTAL**	
NET LB	78660	**TAX**	
NET TN	39.33	**TOTAL**	

LG90

_____
WEIGHER

Terms: Net 30 days from the end of the month. A finance charge will be assessed on all past due accounts at a rate of 1-1/2% PER MONTH. Annual Finance Charge of 18%. Notice: It is specifically agreed that this company shall not be in any way responsible for damage to customers property resulting in Deliveries beyond curb line.

DRIVER'S SIGNATURE _____

IRON MOUNTAIN QUARRY LLC

Quarry site: 20800 Wayside Mine Rd – Granite Falls WA
Phone: (Toll Free) 1-866-672-3434

DATE 10/12/2017 **TIME** 7:23 **TICKET#** 096717

CUSTOMER 044 GLACIER ENVIRONMENTAL ☐ **CASH** ☐ **CHARGE**

JOB 4 730 S MERTLE ST **PO#** _____

HAULER 1054 MENAHTO TRUCKING **TRUCK#** MENAHTO X ☐ **HIRED**

PRODUCT 508 CLASS 2 PETROLEUM CONTAM SOIL

GROSS	110760	**PRICE**	
TARE	39220	**SUBTOTAL**	
NET LB	71540	**TAX**	
NET TN	35.77	**TOTAL**	

1690

WEIGHER

Terms: Net 30 days from the end of the month. A finance charge will be assessed on all past due accounts at a rate of 1-1/2% PER MONTH. Annual Finance Charge of 18%. Notice: It is specifically agreed that this company shall not be in any way responsible for damage to customers property resulting in Deliveries beyond curb line.

DRIVER'S SIGNATURE

IRON MOUNTAIN QUARRY LLC

Quarry site: 20800 Wayside Mine Rd – Granite Falls WA
Phone: (Toll Free) 1-866-672-3434

10/12/2017 12:10 096841

DATE _____ **TIME** _____ **TICKET#** _____

CUSTOMER 944 GLACIER ENVIRONMENTAL _____ ☐ **CASH** ☐ **CHARGE**

JOB 4 730 S MERTLE ST _____ **PO#** _____

HAULER 717 NORTHWEST SAND & GRAVEL **TRUCK#** NW26 X ☐ **HIRED**

PRODUCT 508 CLASS 2 PETROLEUM CONTAM SOIL

GROSS	113440	**PRICE**	_____
TARE	40260	**SUBTOTAL**	_____
NET LB	73180	**TAX**	_____
NET TN	36.59	**TOTAL**	_____

23868

_____
WEIGHER

Terms: Net 30 days from the end of the month. A finance charge will be assessed on all past due accounts at a rate of 1-1/2% PER MONTH. Annual Finance Charge of 18%. Notice: It is specifically agreed that this company shall not be in any way responsible for damage to customers property resulting in Deliveries beyond curb line.

DRIVER'S SIGNATURE _____

IRON MOUNTAIN QUARRY LLC

Quarry site: 20800 Wayside Mine Rd – Granite Falls WA
Phone: (Toll Free) 1-866-672-3434

DATE 10/12/2017 **TIME** 11:06 **TICKET#** 096818

CUSTOMER 844 GLACIER ENVIRONMENTAL ☐ **CASH** ☐ **CHARGE**

JOB 4 730 S MERTLE ST **PO#** _____

HAULER 241 SPRINGBROOK NURSERY **TRUCK#** SB#30 X ☐ **HIRED**

PRODUCT 500 CLASS 2 PETROLEUM CONTAM SOIL

GROSS	102780	**PRICE**	_____
TARE	40720	**SUBTOTAL**	_____
NET LB	61560	**TAX**	_____
NET TN	30.78	**TOTAL**	_____

117873

_____
WEIGHER

Terms: Net 30 days from the end of the month. A finance charge will be assessed on all past due accounts at a rate of 1-1/2% PER MONTH. Annual Finance Charge of 18%. Notice: It is specifically agreed that this company shall not be in any way responsible for damage to customers property resulting in Deliveries beyond curb line.

DRIVER'S SIGNATURE _____

IRON MOUNTAIN QUARRY LLC

Quarry site: 20800 Wayside Mine Rd – Granite Falls WA
Phone: (Toll Free) 1-866-672-3434

DATE 10/12/2017 **TIME** 14:50 **TICKET#** 096897

CUSTOMER 844 GLACIER ENVIRONMENTAL ☐ **CASH** ☐ **CHARGE**

JOB 4 730 S MERTLE ST **PO#** _____

HAULER 841 SPRINGBROOK NURSERY **TRUCK#** SDH30 ☐ **HIRED**

PRODUCT 508 CLASS 2 PETROLEUM CONTAM SOIL

GROSS	94100	**PRICE**	_____
TARE	40720	**SUBTOTAL**	_____
NET LB	53380	**TAX**	_____
NET TN	26.69	**TOTAL**	_____

117873

_____
WEIGHER

Terms: Net 30 days from the end of the month. A finance charge will be assessed on all past due accounts at a rate of 1-1/2% PER MONTH. Annual Finance Charge of 18%. Notice: It is specifically agreed that this company shall not be in any way responsible for damage to customers property resulting in Deliveries beyond curb line.

DRIVER'S SIGNATURE _____

IRON MOUNTAIN QUARRY LLC

Quarry site: 20800 Wayside Mine Rd – Granite Falls WA
Phone: (Toll Free) 1-866-672-3434

DATE 10/12/2017 **TIME** 16:01 **TICKET#** 096315

CUSTOMER 044 GLACIER ENVIRONMENTAL ☐ **CASH** ☐ **CHARGE**

JOB 4 730 S MERTLE ST **PO#** _____

HAULER 1854 MERANTO TRUCKING **TRUCK#** MERANTO X ☐ **HIRED**

PRODUCT 500 CLASS 2 PETROLEUM CONTAM SOIL

GROSS	104940	**PRICE**	_____
TARE	39220	**SUBTOTAL**	_____
NET LB	65720	**TAX**	_____
NET TN	32.86	**TOTAL**	_____

1690

_____
WEIGHER

Terms: Net 30 days from the end of the month. A finance charge will be assessed on all past due accounts at a rate of 1-1/2% PER MONTH. Annual Finance Charge of 18%. Notice: It is specifically agreed that this company shall not be in any way responsible for damage to customers property resulting in Deliveries beyond curb line.

DRIVER'S SIGNATURE _____

IRON MOUNTAIN QUARRY LLC

Quarry site: 20800 Wayside Mine Rd – Granite Falls WA
Phone: (Toll Free) 1-866-672-3434

DATE _____ **TIME** _____ **TICKET#** _____

CUSTOMER _____ ☐ **CASH** ☐ **CHARGE**

JOB _____ **PO#** _____

HAULER _____ **TRUCK#** _____ ☐ **HIRED**

PRODUCT _____

PRICE _____

SUBTOTAL _____

TAX _____

TOTAL _____

_____
WEIGHER

Terms: Net 30 days from the end of the month. A finance charge will be assessed on all past due accounts at a rate of 1-1/2% PER MONTH. Annual Finance Charge of 18%. Notice: It is specifically agreed that this company shall not be in any way responsible for damage to customers property resulting in Deliveries beyond curb line.

DRIVER'S SIGNATURE _____

IRON MOUNTAIN QUARRY LLC

Quarry site: 20800 Wayside Mine Rd – Granite Falls WA
Phone: (Toll Free) 1-866-672-3434

DATE 10/13/2017 **TIME** 6:35 **TICKET#** 096923

CUSTOMER 444 GLACIER ENVIRONMENTAL ☐ **CASH** ☐ **CHARGE**

JOB 4 730 S MERTLE ST **PO#** _____

HAULER 717 NORTHWEST SAND & GRAVEL **TRUCK#** 4026 X ☐ **HIRED**

PRODUCT 500 CLASS 2 PETROLEUM CONTAM SOIL

GROSS	110820	**PRICE**	_____
TARE	40260	**SUBTOTAL**	_____
NET LB	70560	**TAX**	_____
NET TN	35.28	**TOTAL**	_____

23869

_____
WEIGHER

Terms: Net 30 days from the end of the month. A finance charge will be assessed on all past due accounts at a rate of 1-1/2% PER MONTH. Annual Finance Charge of 18%. Notice: It is specifically agreed that this company shall not be in any way responsible for damage to customers property resulting in Deliveries beyond curb line.

DRIVER'S SIGNATURE _____

IRON MOUNTAIN QUARRY LLC

Quarry site: 20800 Wayside Mine Rd – Granite Falls WA
Phone: (Toll Free) 1-866-672-3434

10/13/2017 14:51 007903

DATE _____ **TIME** _____ **TICKET#** _____

844 GLACIER ENVIRONMENTAL

CUSTOMER _____ ☐ **CASH** ☐ **CHARGE**

4 730 S MERTLE ST

JOB _____ **PO#** _____

717 NORTHWEST SAND & GRAVEL NW26

HAULER _____ **TRUCK#** _____ ☐ **HIRED**

PRODUCT 500 CLASS 2 PETROLEUM CONTAM SOIL

GROSS	101460	**PRICE**	_____
TARE	40340	**SUBTOTAL**	_____
NET LB	61120	**TAX**	_____
NET TN	30.56	**TOTAL**	_____

23869

_____
WEIGHER

Terms: Net 30 days from the end of the month. A finance charge will be assessed on all past due accounts at a rate of 1-1/2% PER MONTH. Annual Finance Charge of 18%. Notice: It is specifically agreed that this company shall not be in any way responsible for damage to customers property resulting in Deliveries beyond curb line.

DRIVER'S SIGNATURE _____

IRON MOUNTAIN QUARRY LLC

Quarry site: 20800 Wayside Mine Rd – Granite Falls WA
Phone: (Toll Free) 1-866-672-3434

DATE 10/13/2017 **TIME** 14:28 **TICKET#** 007073

CUSTOMER 844 GLACIER ENVIRONMENTAL ☐ **CASH** ☐ **CHARGE**

JOB 4 730 S MERTLE ST **PO#** _____

HAULER 841 SPRINGBROOK NURSERY **TRUCK#** SNI30 X ☐ **HIRED**

PRODUCT 500 CLASS 2 PETROLEUM CONTAM SOIL

GROSS	96440	**PRICE**	_____
TARE	40720	**SUBTOTAL**	_____
NET LB	55720	**TAX**	_____
NET TN	27.86	**TOTAL**	_____

117075

_____
WEIGHER

Terms: Net 30 days from the end of the month. A finance charge will be assessed on all past due accounts at a rate of 1-1/2% PER MONTH. Annual Finance Charge of 18%. Notice: It is specifically agreed that this company shall not be in any way responsible for damage to customers property resulting in Deliveries beyond curb line.

DRIVER'S SIGNATURE _____

IRON MOUNTAIN QUARRY LLC

Quarry site: 20800 Wayside Mine Rd – Granite Falls WA
Phone: (Toll Free) 1-866-672-3434

DATE 10/13/2017 **TIME** 11:03 **TICKET#** 097004

CUSTOMER 944 GLACIER ENVIRONMENTAL ☐ **CASH** ☐ **CHARGE**

JOB 4 730 S MERTLE ST **PO#** _____

HAULER 241 SPRINGBROOK NURSERY **TRUCK#** SBN30 X ☐ **HIRED**

PRODUCT 506 CLASS 2 PETROLEUM CONTAM SOIL

GROSS	94640	**PRICE**	_____
TARE	40720	**SUBTOTAL**	_____
NET LB	53920	**TAX**	_____
NET TN	26.96	**TOTAL**	_____

117075

_____
WEIGHER

Terms: Net 30 days from the end of the month. A finance charge will be assessed on all past due accounts at a rate of 1-1/2% PER MONTH. Annual Finance Charge of 18%. Notice: It is specifically agreed that this company shall not be in any way responsible for damage to customers property resulting in Deliveries beyond curb line.

DRIVER'S SIGNATURE _____

IRON MOUNTAIN QUARRY LLC

Quarry site: 20800 Wayside Mine Rd – Granite Falls WA
Phone: (Toll Free) 1-866-672-3434

10/13/2017 7:27 896941

DATE _____ **TIME** _____ **TICKET#** _____

844 GLACIER ENVIRONMENTAL

CUSTOMER _____ ☐ **CASH** ☐ **CHARGE**

4 730 S MERTLE ST

JOB _____ **PO#** _____

1854 MERANTO TRUCKING

HAULER _____ **TRUCK#** MERANTO ☐ **HIRED**

506 CLASS 2 PETROLEUM CONTAM SOIL

PRODUCT _____

GROSS	106640	**PRICE**	_____
TARE	39220	**SUBTOTAL**	_____
NET LB	67420	**TAX**	_____
NET TN	33.71	**TOTAL**	_____

1693

_____
WEIGHER

Terms: Net 30 days from the end of the month. A finance charge will be assessed on all past due accounts at a rate of 1-1/2% PER MONTH. Annual Finance Charge of 18%. Notice: It is specifically agreed that this company shall not be in any way responsible for damage to customers property resulting in Deliveries beyond curb line.

DRIVER'S SIGNATURE _____

IRON MOUNTAIN QUARRY LLC

Quarry site: 20800 Wayside Mine Rd – Granite Falls WA
Phone: (Toll Free) 1-866-672-3434

10/13/2017 11:41 097019

DATE _____ **TIME** _____ **TICKET#** _____

044 GLACIER ENVIRONMENTAL

CUSTOMER _____ ☐ **CASH** ☐ **CHARGE**

4 730 S MERTLE ST

JOB _____ **PO#** _____

1854 MERANTO TRUCKING MERANTO X

HAULER _____ **TRUCK#** _____ ☐ **HIRED**

500 CLASS 2 PETROLEUM CONTAM SOIL

PRODUCT _____

GROSS 111100

TARE 39220

NET LB 71880

NET TN 35.94

1693

PRICE _____

SUBTOTAL _____

TAX _____

TOTAL _____

_____
WEIGHER

Terms: Net 30 days from the end of the month. A finance charge will be assessed on all past due accounts at a rate of 1-1/2% PER MONTH. Annual Finance Charge of 18%. Notice: It is specifically agreed that this company shall not be in any way responsible for damage to customers property resulting in Deliveries beyond curb line.

DRIVER'S SIGNATURE _____

IRON MOUNTAIN QUARRY LLC

Quarry site: 20800 Wayside Mine Rd – Granite Falls WA
Phone: (Toll Free) 1-866-672-3434

DATE 10/13/2017 **TIME** 7:44 **TICKET#** 096945

CUSTOMER 844 GLACIER ENVIRONMENTAL ☐ **CASH** ☐ **CHARGE**

JOB 4 730 S MYRTLE ST **PO#** _____

HAULER 2514 WESTSIDE LLC **TRUCK#** WS1 X ☐ **HIRED**

PRODUCT 508 CLASS 2 PETROLEUM CONTAM SOIL

GROSS	96600	**PRICE**	_____
TARE	41940	**SUBTOTAL**	_____
NET LB	54660	**TAX**	_____
NET TN	27.33	**TOTAL**	_____

1288

_____
WEIGHER

Terms: Net 30 days from the end of the month. A finance charge will be assessed on all past due accounts at a rate of 1-1/2% PER MONTH. Annual Finance Charge of 18%. Notice: It is specifically agreed that this company shall not be in any way responsible for damage to customers property resulting in Deliveries beyond curb line.

DRIVER'S SIGNATURE _____

IRON MOUNTAIN QUARRY LLC

Quarry site: 20800 Wayside Mine Rd – Granite Falls WA
Phone: (Toll Free) 1-866-672-3434

10/13/2017 11:35 097015

DATE _____ **TIME** _____ **TICKET#** _____

044 GLACIER ENVIRONMENTAL

CUSTOMER _____ ☐ **CASH** ☐ **CHARGE**

4 730 S MERTLE ST

JOB _____ **PO#** _____

251A WESTSIDE LLC WS1 X

HAULER _____ **TRUCK#** _____ ☐ **HIRED**

508 CLASS 2 PETROLEUM CONTAM SOIL

PRODUCT _____

GROSS 99480

TARE 41940

NET LB 57540

NET TN 28.77

1288

PRICE _____

SUBTOTAL _____

TAX _____

TOTAL _____

_____
WEIGHER

Terms: Net 30 days from the end of the month. A finance charge will be assessed on all past due accounts at a rate of 1-1/2% PER MONTH. Annual Finance Charge of 18%. Notice: It is specifically agreed that this company shall not be in any way responsible for damage to customers property resulting in Deliveries beyond curb line.

DRIVER'S SIGNATURE _____

IRON MOUNTAIN QUARRY LLC

Quarry site: 20800 Wayside Mine Rd – Granite Falls WA
Phone: (Toll Free) 1-866-672-3434

10/13/2017 11:33 097013

DATE _____ **TIME** _____ **TICKET#** _____

844 GLACIER ENVIRONMENTAL

CUSTOMER _____ ☐ **CASH** ☐ **CHARGE**

4 730 S MENTLE ST

JOB _____ **PO#** _____

2363 SCOLERI TRUCKING SCOLERI X

HAULER _____ **TRUCK#** _____ ☐ **HIRED**

300 CLASS 2 PETROLEUM CONTAM SOIL

PRODUCT _____

GROSS 110720

TARE 41540

NET LB 69180

NET TN 34.59

1709

PRICE _____

SUBTOTAL _____

TAX _____

TOTAL _____

_____
WEIGHER

Terms: Net 30 days from the end of the month. A finance charge will be assessed on all past due accounts at a rate of 1-1/2% PER MONTH. Annual Finance Charge of 18%. Notice: It is specifically agreed that this company shall not be in any way responsible for damage to customers property resulting in Deliveries beyond curb line.

DRIVER'S SIGNATURE _____

IRON MOUNTAIN QUARRY LLC

Quarry site: 20800 Wayside Mine Rd – Granite Falls WA
Phone: (Toll Free) 1-866-672-3434

Seattle I & M

DATE 10/13/2017 **TIME** 15:38 **TICKET#** 097093

CUSTOMER 844 GLACIER ENVIRONMENTAL ☐ **CASH** ☐ **CHARGE**

JOB 4 730 S MERTLE ST **PO#** _____

HAULER 2363 SCOLERI TRUCKING **TRUCK#** SCOLERI ☐ **HIRED**

PRODUCT 508 CLASS 2 PETROLEUM CONTAM SOIL

GROSS	103600	**PRICE**	
TARE	41540	**SUBTOTAL**	
NET LB	62060	**TAX**	
NET TN	31.03	**TOTAL**	

1709

_____
WEIGHER

Terms: Net 30 days from the end of the month. A finance charge will be assessed on all past due accounts at a rate of 1-1/2% PER MONTH. Annual Finance Charge of 18%. Notice: It is specifically agreed that this company shall not be in any way responsible for damage to customers property resulting in Deliveries beyond curb line.

DRIVER'S SIGNATURE _____

IRON MOUNTAIN QUARRY LLC

Quarry site: 20800 Wayside Mine Rd – Granite Falls WA
Phone: (Toll Free) 1-866-672-3434

DATE 10/18/2017 **TIME** 12:10 **TICKET#** 097722

CUSTOMER 844 GLACIER ENVIRONMENTAL ☐ **CASH** ☐ **CHARGE**

JOB 4 730 S MERTLE ST **PO#** _____

HAULER 42 BUILDERS SAND AND GRAVEL **TRUCK#** B20 ☐ **HIRED**

PRODUCT 500 CLASS 2 PETROLEUM CONTAM SOIL

GROSS	97220	**PRICE**	_____
TARE	36180	**SUBTOTAL**	_____
NET LB	61040	**TAX**	_____
NET TN	30.52	**TOTAL**	_____

324270

_____
WEIGHER

Terms: Net 30 days from the end of the month. A finance charge will be assessed on all past due accounts at a rate of 1-1/2% PER MONTH. Annual Finance Charge of 18%. Notice: It is specifically agreed that this company shall not be in any way responsible for damage to customers property resulting in Deliveries beyond curb line.

DRIVER'S SIGNATURE _____

IRON MOUNTAIN QUARRY LLC

Quarry site: 20800 Wayside Mine Rd – Granite Falls WA
Phone: (Toll Free) 1-866-672-3434

DATE 10/18/2017 **TIME** 8:32 **TICKET#** 097622

CUSTOMER 844 GLACIER ENVIRONMENTAL ☐ **CASH** ☐ **CHARGE**

JOB 4 730 S MERTLE ST **PO#** _____

HAULER 42 BUILDERS SAND AND GRAVEL **TRUCK#** B20 X ☐ **HIRED**

PRODUCT 500 CLASS 2 PETROLEUM CONTAM SOIL

GROSS	97960	**PRICE**	_____
TARE	36180	**SUBTOTAL**	_____
NET LB	61780	**TAX**	_____
NET TN	30.89	**TOTAL**	_____

324270

_____
WEIGHER

Terms: Net 30 days from the end of the month. A finance charge will be assessed on all past due accounts at a rate of 1-1/2% PER MONTH. Annual Finance Charge of 18%. Notice: It is specifically agreed that this company shall not be in any way responsible for damage to customers property resulting in Deliveries beyond curb line.

DRIVER'S SIGNATURE _____

IRON MOUNTAIN QUARRY LLC

Quarry site: 20800 Wayside Mine Rd – Granite Falls WA
Phone: (Toll Free) 1-866-672-3434

DATE 10/18/2017 **TIME** 12:50 **TICKET#** 097739

CUSTOMER 844 GLACIER ENVIRONMENTAL ☐ **CASH** ☐ **CHARGE**

JOB 4 730 S MERTLE ST **PO#** _____

HAULER 2518 WESTSIDE LLC **TRUCK#** WS1 X ☐ **HIRED**

PRODUCT 508 CLASS 2 PETROLEUM CONTAM SOIL

GROSS	101240	**PRICE**	
TARE	41940	**SUBTOTAL**	
NET LB	59300	**TAX**	
NET TN	29.65	**TOTAL**	

1297

_____
WEIGHER

Terms: Net 30 days from the end of the month. A finance charge will be assessed on all past due accounts at a rate of 1-1/2% PER MONTH. Annual Finance Charge of 18%. Notice: It is specifically agreed that this company shall not be in any way responsible for damage to customers property resulting in Deliveries beyond curb line.

DRIVER'S SIGNATURE _____

IRON MOUNTAIN QUARRY LLC

Quarry site: 20800 Wayside Mine Rd – Granite Falls WA
Phone: (Toll Free) 1-866-672-3434

DATE 10/18/2017 **TIME** 8:59 **TICKET#** 097630

CUSTOMER 844 GLACIER ENVIRONMENTAL ☐ **CASH** ☐ **CHARGE**

JOB 4 730 S MERTLE ST **PO#** _____

HAULER 0518 WESTSIDE LLC **TRUCK#** WS1 X ☐ **HIRED**

PRODUCT 500 CLASS 2 PETROLEUM CONTAM SOIL

GROSS	102220	**PRICE**	_____
TARE	41940	**SUBTOTAL**	_____
NET LB	60280	**TAX**	_____
NET TN	30.14	**TOTAL**	_____

1296

_____
WEIGHER

Terms: Net 30 days from the end of the month. A finance charge will be assessed on all past due accounts at a rate of 1-1/2% PER MONTH. Annual Finance Charge of 18%. Notice: It is specifically agreed that this company shall not be in any way responsible for damage to customers property resulting in Deliveries beyond curb line.

DRIVER'S SIGNATURE _____

IRON MOUNTAIN QUARRY LLC

Quarry site: 20800 Wayside Mine Rd – Granite Falls WA
Phone: (Toll Free) 1-866-672-3434

DATE 10/18/2017 **TIME** 8:45 **TICKET#** 097630

CUSTOMER 844 GLACIER ENVIRONMENTAL ☐ **CASH** ☐ **CHARGE**

JOB 4 730 S MERTLE ST **PO#** _____

HAULER 1854 MERANTO TRUCKING **TRUCK#** MERANTO X ☐ **HIRED**

PRODUCT 508 CLASS 2 PETROLEUM CONTAM SOIL

GROSS	102520	**PRICE**	
TARE	39220	**SUBTOTAL**	
NET LB	63300	**TAX**	
NET TN	31.65	**TOTAL**	

1699

WEIGHER

Terms: Net 30 days from the end of the month. A finance charge will be assessed on all past due accounts at a rate of 1-1/2% PER MONTH. Annual Finance Charge of 18%. Notice: It is specifically agreed that this company shall not be in any way responsible for damage to customers property resulting in Deliveries beyond curb line.

DRIVER'S SIGNATURE

IRON MOUNTAIN QUARRY LLC

Quarry site: 20800 Wayside Mine Rd – Granite Falls WA
Phone: (Toll Free) 1-866-672-3434

DATE 10/10/2017 **TIME** 12:42 **TICKET#** 097735

CUSTOMER 844 GLACIER ENVIRONMENTAL ☐ **CASH** ☐ **CHARGE**

JOB 4 730 S MERTLE ST **PO#** _____

HAULER 1854 MERANTO TRUCKING **TRUCK#** MERANTO X ☐ **HIRED**

PRODUCT 508 CLASS 2 PETROLEUM CONTAM SOIL

GROSS	102680	**PRICE**	_____
TARE	39220	**SUBTOTAL**	_____
NET LB	63460	**TAX**	_____
NET TN	31.73	**TOTAL**	_____

1699

_____
WEIGHER

Terms: Net 30 days from the end of the month. A finance charge will be assessed on all past due accounts at a rate of 1-1/2% PER MONTH. Annual Finance Charge of 18%. Notice: It is specifically agreed that this company shall not be in any way responsible for damage to customers property resulting in Deliveries beyond curb line.

DRIVER'S SIGNATURE _____

IRON MOUNTAIN QUARRY LLC

Quarry site: 20800 Wayside Mine Rd – Granite Falls WA
Phone: (Toll Free) 1-866-672-3434

DATE 10/18/2017 **TIME** 12:37 **TICKET#** 097733

CUSTOMER 844 GLACIER ENVIRONMENTAL ☐ **CASH** ☐ **CHARGE**

JOB 4 730 S MERTLE ST **PO#** _____

HAULER 241 SPRINGBROOK NURSERY **TRUCK#** SBN25 X ☐ **HIRED**

PRODUCT 50A CLASS 2 PETROLEUN CONTAM SOIL

GROSS	107360	**PRICE**	
TARE	40920	**SUBTOTAL**	
NET LB	66440	**TAX**	
NET TN	33.22	**TOTAL**	

110217

_____
WEIGHER

Terms: Net 30 days from the end of the month. A finance charge will be assessed on all past due accounts at a rate of 1-1/2% PER MONTH. Annual Finance Charge of 18%. Notice: It is specifically agreed that this company shall not be in any way responsible for damage to customers property resulting in Deliveries beyond curb line.

DRIVER'S SIGNATURE RAY

IRON MOUNTAIN QUARRY LLC

Quarry site: 20800 Wayside Mine Rd – Granite Falls WA
Phone: (Toll Free) 1-866-672-3434

DATE 10/18/2017 **TIME** 15:29 **TICKET#** 097786

CUSTOMER 844 GLACIER ENVIRONMENTAL ☐ **CASH** ☐ **CHARGE**

JOB 4 730 S MERTLE ST **PO#** _____

HAULER 717 NORTHWEST SAND & GRAVEL **TRUCK#** NW26 X ☐ **HIRED**

PRODUCT 508 CLASS 2 PETROLEUM CONTAM SOIL

GROSS	181500	**PRICE**	
TARE	40580	**SUBTOTAL**	
NET LB	60920	**TAX**	
NET TN	30.46	**TOTAL**	

23710

_____
WEIGHER

Terms: Net 30 days from the end of the month. A finance charge will be assessed on all past due accounts at a rate of 1-1/2% PER MONTH. Annual Finance Charge of 18%. Notice: It is specifically agreed that this company shall not be in any way responsible for damage to customers property resulting in Deliveries beyond curb line.

DRIVER'S SIGNATURE _____

IRON MOUNTAIN QUARRY LLC

Quarry site: 20800 Wayside Mine Rd – Granite Falls WA
Phone: (Toll Free) 1-866-672-3434

DATE 10/18/2017 **TIME** 8:17 **TICKET#** 097615

CUSTOMER 044 GLACIER ENVIRONMENTAL ☐ **CASH** ☐ **CHARGE**

JOB 4 730 S MERTLE ST **PO#** _____

HAULER 241 SPRINGBROOK NURSERY **TRUCK#** SBN30 X ☐ **HIRED**

PRODUCT 500 CLASS 2 PETROLEUM CONTAM SOIL

GROSS	98700	**PRICE**	
TARE	40720	**SUBTOTAL**	
NET LB	57980	**TAX**	
NET TN	28.99	**TOTAL**	

L17880

_____
WEIGHER

Terms: Net 30 days from the end of the month. A finance charge will be assessed on all past due accounts at a rate of 1-1/2% PER MONTH. Annual Finance Charge of 18%. Notice: It is specifically agreed that this company shall not be in any way responsible for damage to customers property resulting in Deliveries beyond curb line.

DRIVER'S SIGNATURE _____

IRON MOUNTAIN QUARRY LLC

Quarry site: 20800 Wayside Mine Rd – Granite Falls WA
Phone: (Toll Free) 1-866-672-3434

DATE 10/18/2017 **TIME** 12:43 **TICKET#** 097736

CUSTOMER 844 GLACIER ENVIRONMENTAL ☐ **CASH** ☐ **CHARGE**

JOB 4 730 S MERTLE ST **PO#** _____

HAULER 241 SPRINGBROOK NURSERY **TRUCK#** SBN30 X ☐ **HIRED**

PRODUCT 50A CLASS 2 PETROLEUM CONTAM SOIL

GROSS	96680	**PRICE**	_____
TARE	40720	**SUBTOTAL**	_____
NET LB	55960	**TAX**	_____
NET TN	27.98	**TOTAL**	_____

117881

_____
WEIGHER

Terms: Net 30 days from the end of the month. A finance charge will be assessed on all past due accounts at a rate of 1-1/2% PER MONTH. Annual Finance Charge of 18%. Notice: It is specifically agreed that this company shall not be in any way responsible for damage to customers property resulting in Deliveries beyond curb line.

DRIVER'S SIGNATURE _____

IRON MOUNTAIN QUARRY LLC

Quarry site: 20800 Wayside Mine Rd – Granite Falls WA
Phone: (Toll Free) 1-866-672-3434

DATE 10/18/2017 **TIME** 8:24 **TICKET#** 097615

CUSTOMER 044 GLACIER ENVIRONMENTAL ☐ **CASH** ☐ **CHARGE**

JOB 4 730 S MERTLE ST **PO#** _____

HAULER 241 SPRINGBROOK NURSERY **TRUCK#** SB425 X ☐ **HIRED**

PRODUCT 500 CLASS 2 PETROLEUM CONTAM SOIL

GROSS	100980	**PRICE**	_____
TARE	40920	**SUBTOTAL**	_____
NET LB	60060	**TAX**	_____
NET TN	30.03	**TOTAL**	_____

110216

_____
WEIGHER

Terms: Net 30 days from the end of the month. A finance charge will be assessed on all past due accounts at a rate of 1-1/2% PER MONTH. Annual Finance Charge of 18%. Notice: It is specifically agreed that this company shall not be in any way responsible for damage to customers property resulting in Deliveries beyond curb line.

DRIVER'S SIGNATURE RAY

IRON MOUNTAIN QUARRY LLC

Quarry site: 20800 Wayside Mine Rd – Granite Falls WA
Phone: (Toll Free) 1-866-672-3434

DATE 10/18/2017 TIME 7:44 TICKET# 097682

CUSTOMER 844 GLACIER ENVIRONMENTAL ☐ CASH ☐ CHARGE

JOB 4 730 S MERTLE ST PO# _____

HAULER 717 NORTHWEST SAND & GRAVEL TRUCK# NW26 X ☐ HIRED

PRODUCT 508 CLASS 2 PETROLEUM CONTAM SOIL

GROSS	102600	PRICE	
TARE	40580	SUBTOTAL	
NET LB	62020	TAX	
NET TN	31.01	TOTAL	

'08

WEIGHER

Terms: Net 30 days from the end of the month. A finance charge will be assessed on all past due accounts at a rate of 1-1/2% PER MONTH. Annual Finance Charge of 18%. Notice: It is specifically agreed that this company shall not be in any way responsible for damage to customers property resulting in Deliveries beyond curb line.

DRIVER'S SIGNATURE

IRON MOUNTAIN QUARRY LLC

Quarry site: 20800 Wayside Mine Rd – Granite Falls WA
Phone: (Toll Free) 1-866-672-3434

DATE 10/18/2017 **TIME** 11:43 **TICKET#** 097712

CUSTOMER 844 GLACIER ENVIRONMENTAL ☐ **CASH** ☐ **CHARGE**

JOB 4 730 S MERTLE ST **PO#** _____

HAULER 717 NORTHWEST SAND & GRAVEL **TRUCK#** NW26 X ☐ **HIRED**

PRODUCT 508 CLASS 2 PETROLEUM CONTAM SOIL

GROSS	102800	**PRICE**	
TARE	40580	**SUBTOTAL**	
NET LB	62220	**TAX**	
NET TN	31.11	**TOTAL**	

'10

WEIGHER

Terms: Net 30 days from the end of the month. A finance charge will be assessed on all past due accounts at a rate of 1-1/2% PER MONTH. Annual Finance Charge of 18%. Notice: It is specifically agreed that this company shall not be in any way responsible for damage to customers property resulting in Deliveries beyond curb line.

DRIVER'S SIGNATURE

IRON MOUNTAIN QUARRY LLC

Quarry site: 20800 Wayside Mine Rd – Granite Falls WA
Phone: (Toll Free) 1-866-672-3434

DATE 10/19/2017 **TIME** 7:48 **TICKET#** 097025

CUSTOMER 844 GLACIER ENVIRONMENTAL ☐ **CASH** ☐ **CHARGE**

JOB 4 730 S MERTLE ST **PO#** _____

HAULER 42 BUILDERS SAND AND GRAVEL **TRUCK#** B20 X ☐ **HIRED**

PRODUCT 500 CLASS 2 PETROLEUM CONTAM SOIL

GROSS	111200	**PRICE**	
TARE	36180	**SUBTOTAL**	
NET LB	75020	**TAX**	
NET TN	37.51	**TOTAL**	

324272

_____
WEIGHER

Terms: Net 30 days from the end of the month. A finance charge will be assessed on all past due accounts at a rate of 1-1/2% PER MONTH. Annual Finance Charge of 18%. Notice: It is specifically agreed that this company shall not be in any way responsible for damage to customers property resulting in Deliveries beyond curb line.

DRIVER'S SIGNATURE _____

IRON MOUNTAIN QUARRY LLC

Quarry site: 20800 Wayside Mine Rd – Granite Falls WA
Phone: (Toll Free) 1-866-672-3434

DATE 10/19/2017 **TIME** 7:20 **TICKET#** 097816

CUSTOMER 044 GLACIER ENVIRONMENTAL ☐ **CASH** ☐ **CHARGE**

JOB 4 730 S MERTLE ST **PO#** _____

HAULER 1854 MERANTO TRUCKING **TRUCK#** MERANTO X ☐ **HIRED**

PRODUCT 300 CLASS 2 PETROLEUM CONTAM SOIL

GROSS	104560	**PRICE**	
TARE	39220	**SUBTOTAL**	
NET LB	65340	**TAX**	
NET TN	32.67	**TOTAL**	

1702

_____
WEIGHER

Terms: Net 30 days from the end of the month. A finance charge will be assessed on all past due accounts at a rate of 1-1/2% PER MONTH. Annual Finance Charge of 18%. Notice: It is specifically agreed that this company shall not be in any way responsible for damage to customers property resulting in Deliveries beyond curb line.

DRIVER'S SIGNATURE _____

IRON MOUNTAIN QUARRY LLC

Quarry site: 20800 Wayside Mine Rd – Granite Falls WA
Phone: (Toll Free) 1-866-672-3434

DATE 10/19/2017 **TIME** 8:12 **TICKET#** 097832

CUSTOMER 944 GLACIER ENVIRONMENTAL ☐ **CASH** ☐ **CHARGE**

JOB 4 730 S MERTLE ST **PO#** _____

HAULER 717 NORTHWEST SAND & GRAVEL **TRUCK#** NW26 X ☐ **HIRED**

PRODUCT 500 CLASS 2 PETROLEUM CONTAM SOIL

GROSS	109760	**PRICE**	_____
TARE	40580	**SUBTOTAL**	_____
NET LB	69180	**TAX**	_____
NET TN	34.59	**TOTAL**	_____

23712

_____
WEIGHER

Terms: Net 30 days from the end of the month. A finance charge will be assessed on all past due accounts at a rate of 1-1/2% PER MONTH. Annual Finance Charge of 18%. Notice: It is specifically agreed that this company shall not be in any way responsible for damage to customers property resulting in Deliveries beyond curb line.

DRIVER'S SIGNATURE _____

IRON MOUNTAIN QUARRY LLC

Quarry site: 20800 Wayside Mine Rd – Granite Falls WA
Phone: (Toll Free) 1-866-672-3434

DATE 10/19/2017 **TIME** 8:40 **TICKET#** 097848

CUSTOMER 844 GLACIER ENVIRONMENTAL ☐ **CASH** ☐ **CHARGE**

JOB 4 730 S MERTLE ST **PO#** _____

HAULER 241 SPRINGBROOK NURSERY **TRUCK#** SBN25 X ☐ **HIRED**

PRODUCT 508 CLASS 2 PETROLEUM CONTAM SOIL

GROSS	87440	**PRICE**	
TARE	40920	**SUBTOTAL**	
NET LB	46520	**TAX**	
NET TN	23.26	**TOTAL**	

118210

_____
WEIGHER

Terms: Net 30 days from the end of the month. A finance charge will be assessed on all past due accounts at a rate of 1-1/2% PER MONTH. Annual Finance Charge of 18%. Notice: It is specifically agreed that this company shall not be in any way responsible for damage to customers property resulting in Deliveries beyond curb line.

DRIVER'S SIGNATURE RAY

CLASS 2 SOIL DISPOSAL
BID ITEM 32A
NOV 1 - DEC 9, 2017

Date	Ticket #	TONS
1-Nov	100243	32.36
2-Nov	100426	33.63
2-Nov	100319	29.24
3-Nov	000050	30.13
3-Nov	000127	33.04
3-Nov	000150	31.59
3-Nov	000076	28.42
3-Nov	000016	30.92
3-Nov	000146	33.00
3-Nov	000126	30.31
6-Nov	000299	32.36
6-Nov	000369	33.96
6-Nov	000367	34.38
6-Nov	000295	31.75
6-Nov	000294	31.00
7-Nov	000483	29.22
7-Nov	000488	32.77
7-Nov	000407	36.05
7-Nov	000503	30.96
7-Nov	000424	39.07
7-Nov	000589	32.65
7-Nov	000573	32.48
7-Nov	000597	29.71
8-Nov	000712	32.64
8-Nov	000625	34.94
8-Nov	000704	34.47
8-Nov	000624	34.24
8-Nov	000804	29.39
8-Nov	000803	33.13
8-Nov	000612	34.86
8-Nov	000692	35.18
8-Nov	000789	29.82
9-Nov	001018	28.43
9-Nov	000914	29.83
9-Nov	000928	28.97
9-Nov	000920	30.40
9-Nov	000828	32.80
10-Nov	001024	34.10
13-Nov	001343	32.80
13-Nov	001365	31.65
13-Nov	001296	32.37
14-Nov	001511	33.83
14-Nov	001508	24.53

CLASS 2 SOIL DISPOSAL
BID ITEM 32A
NOV 1 - DEC 9, 2017

Date	Ticket #	TONS
15-Nov	001662	27.31
15-Nov	001669	32.36
20-Nov	002321	33.67
21-Nov	002365	37.57
22-Nov	002512	30.12
22-Nov	002445	18.09
22-Nov	002447	14.17
22-Nov	002451	24.39
27-Nov	002693	36.10
27-Nov	002689	31.90
28-Nov	002766	31.25
28-Nov	002852	27.70
28-Nov	002861	31.09
28-Nov	002787	36.29
30-Nov	003245	30.11
30-Nov	003230	30.32
30-Nov	003209	36.92
1-Dec	003295	31.83
1-Dec	003300	33.62
1-Dec	003367	34.14
1-Dec	003453	35.20
1-Dec	003458	32.64
1-Dec	003380	34.86
4-Dec	003572	32.00
4-Dec	003587	30.09
4-Dec	003572	32.00
9-Dec	004414	14.50
	Total	2197.62

IRON MOUNTAIN QUARRY LLC

Quarry site: 20800 Wayside Mine Rd – Granite Falls WA
Phone: (Toll Free) 1-866-672-3434

DATE _____ **TIME** _____ **TICKET#** _____

CUSTOMER _____ ☐ **CASH** ☐ **CHARGE**

JOB _____ **PO#** _____

HAULER _____ **TRUCK#** _____ ☐ **HIRED**

PRODUCT _____

PRICE _____

SUBTOTAL _____

TAX _____

TOTAL _____

_____
WEIGHER

Terms: Net 30 days from the end of the month. A finance charge will be assessed on all past due accounts at a rate of 1-1/2% PER MONTH. Annual Finance Charge of 18%. Notice: It is specifically agreed that this company shall not be in any way responsible for damage to customers property resulting in Deliveries beyond curb line.

DRIVER'S SIGNATURE _____

IRON MOUNTAIN QUARRY LLC

Quarry site: 20800 Wayside Mine Rd – Granite Falls WA
Phone: (Toll Free) 1-866-672-3434

DATE 11/02/2017 **TIME** 11:54 **TICKET#** 100426

CUSTOMER 844 GLACIER ENVIRONMENTAL ☐ **CASH** ☐ **CHARGE**

JOB 4 730 S MERTLE ST **PO#** _____

HAULER 2510 WESTSIDE LLC **TRUCK#** WS1 X ☐ **HIRED**

PRODUCT 508 CLASS 2 PETROLEUM CONTAM SOIL

GROSS	109100	**PRICE**	
TARE	41840	**SUBTOTAL**	
NET LB	67260	**TAX**	
NET TN	33.63	**TOTAL**	

314

WEIGHER

Terms: Net 30 days from the end of the month. A finance charge will be assessed on all past due accounts at a rate of 1-1/2% PER MONTH. Annual Finance Charge of 18%. Notice: It is specifically agreed that this company shall not be in any way responsible for damage to customers property resulting in Deliveries beyond curb line.

DRIVER'S SIGNATURE

IRON MOUNTAIN QUARRY LLC

Quarry site: 20800 Wayside Mine Rd – Granite Falls WA
Phone: (Toll Free) 1-866-672-3434

DATE 11/02/2017 **TIME** 7:25 **TICKET#** 100319

CUSTOMER 844 GLACIER ENVIRONMENTAL ☐ **CASH** ☐ **CHARGE**

JOB 4 730 S MERTLE ST **PO#** _____

HAULER 2510 WESTSIDE LLC **TRUCK#** WS1 X ☐ **HIRED**

PRODUCT 500 CLASS 2 PETROLEUM CONTAM SOIL

GROSS	100320	**PRICE**	
TARE	41840	**SUBTOTAL**	
NET LB	58480	**TAX**	
NET TN	29.24	**TOTAL**	

313

WEIGHER

Terms: Net 30 days from the end of the month. A finance charge will be assessed on all past due accounts at a rate of 1-1/2% PER MONTH. Annual Finance Charge of 18%. Notice: It is specifically agreed that this company shall not be in any way responsible for damage to customers property resulting in Deliveries beyond curb line.

DRIVER'S SIGNATURE _____

IRON MOUNTAIN QUARRY LLC

Quarry site: 20800 Wayside Mine Rd – Granite Falls WA
Phone: (Toll Free) 1-866-672-3434

11/03/2017 10:03 0000956

DATE _____ **TIME** _____ **TICKET#** _____

844 GLACIER ENVIRONMENTOL

CUSTOMER _____ ☐ **CASH** ☐ **CHARGE**

4 730 S MERTLE ST

JOB _____ **PO#** _____

2563 SCOLERI TRUCKING SCOLERI X

HAULER _____ **TRUCK#** _____ ☐ **HIRED**

508 CLASS P PETROLEUM CONTAM SOIL

PRODUCT _____

GROSS 101360

TARE 41100

NET LB 60260

NET TN 30.13

PRICE _____

SUBTOTAL _____

TAX _____

TOTAL _____

_____
WEIGHER

Terms: Net 30 days from the end of the month. A finance charge will be assessed on all past due accounts at a rate of 1-1/2% PER MONTH. Annual Finance Charge of 18%. Notice: It is specifically agreed that this company shall not be in any way responsible for damage to customers property resulting in Deliveries beyond curb line.

DRIVER'S SIGNATURE _____

IRON MOUNTAIN QUARRY LLC

Quarry site: 20800 Wayside Mine Rd – Granite Falls WA
Phone: (Toll Free) 1-866-672-3434

11/03/2017 13:49 000127

DATE _____ **TIME** _____ **TICKET#** _____

044 GLACIER ENVIRONMENTAL

CUSTOMER _____ ☐ **CASH** ☐ **CHARGE**

4 730 S MERTLE ST

JOB _____ **PO#** _____

2363 SCOLERI TRUCKING SCOLERI X

HAULER _____ **TRUCK#** _____ ☐ **HIRED**

500 CLASS 2 PETROLEUM CONTAM SOIL

PRODUCT _____

GROSS 67100

TARE 41100

NET LB 66000

NET TN 33.04

1725

PRICE _____

SUBTOTAL _____

TAX _____

TOTAL _____

_____
WEIGHER

Terms: Net 30 days from the end of the month. A finance charge will be assessed on all past due accounts at a rate of 1-1/2% PER MONTH. Annual Finance Charge of 18%. Notice: It is specifically agreed that this company shall not be in any way responsible for damage to customers property resulting in Deliveries beyond curb line.

DRIVER'S SIGNATURE _____

IRON MOUNTAIN QUARRY LLC

Quarry site: 20800 Wayside Mine Rd – Granite Falls WA
Phone: (Toll Free) 1-866-672-3434

11/03/2017 15:22 000150

DATE _____ **TIME** _____ **TICKET#** _____

044 GLACIER ENVIRONMENTAL

CUSTOMER _____ ☐ **CASH** ☐ **CHARGE**

4 730 S MERTLE ST

JOB _____ **PO#** _____

2510 WESTSIDE LLC

HAULER _____ **TRUCK#** WS1 _____ ☐ **HIRED**

500 CLASS 2 PETROLEUM CONTAM SOIL

PRODUCT _____

GROSS 105020

TARE 41840

NET LB 63180

NET TN 31.59

PRICE _____

SUBTOTAL _____

TAX _____

TOTAL _____

_____
WEIGHER

Terms: Net 30 days from the end of the month. A finance charge will be assessed on all past due accounts at a rate of 1-1/2% PER MONTH. Annual Finance Charge of 18%. Notice: It is specifically agreed that this company shall not be in any way responsible for damage to customers property resulting in Deliveries beyond curb line.

DRIVER'S SIGNATURE _____

IRON MOUNTAIN QUARRY LLC

Quarry site: 20800 Wayside Mine Rd – Granite Falls WA
Phone: (Toll Free) 1-866-672-3434

DATE 11/03/2017 **TIME** 11:22 **TICKET#** 000076

CUSTOMER 844 GLACIER ENVIRONMENTAL ☐ **CASH** ☐ **CHARGE**

JOB 4 730 S MERTLE ST **PO#** _____

HAULER 2510 WESTSIDE LLC **TRUCK#** WS1 X ☐ **HIRED**

PRODUCT 500 CLASS 2 PETROLEUM CONTAM SOIL

GROSS	98680	**PRICE**	
TARE	41840	**SUBTOTAL**	
NET LB	56840	**TAX**	
NET TN	28.42	**TOTAL**	

1318

WEIGHER

Terms: Net 30 days from the end of the month. A finance charge will be assessed on all past due accounts at a rate of 1-1/2% PER MONTH. Annual Finance Charge of 18%. Notice: It is specifically agreed that this company shall not be in any way responsible for damage to customers property resulting in Deliveries beyond curb line.

DRIVER'S SIGNATURE _____

IRON MOUNTAIN QUARRY LLC

Quarry site: 20800 Wayside Mine Rd – Granite Falls WA
Phone: (Toll Free) 1-866-672-3434

11/03/2017 7:41 000016

DATE _____ **TIME** _____ **TICKET#** _____

CUSTOMER 844 GLACIER ENVIRONMENTAL _____ ☐ **CASH** ☐ **CHARGE**

JOB 4 730 S MERTLE ST _____ **PO#** _____

HAULER 2518 WESTSIDE LLC _____ **TRUCK#** WS1 _____ X ☐ **HIRED**

PRODUCT 508 CLASS 2 PETROLEUM CONTAM SOIL

GROSS	103680	**PRICE**	
TARE	41840	**SUBTOTAL**	
NET LB	61840	**TAX**	
NET TN	30.92	**TOTAL**	

1316

_____
WEIGHER

Terms: Net 30 days from the end of the month. A finance charge will be assessed on all past due accounts at a rate of 1-1/2% PER MONTH. Annual Finance Charge of 18%. Notice: It is specifically agreed that this company shall not be in any way responsible for damage to customers property resulting in Deliveries beyond curb line.

DRIVER'S SIGNATURE _____

IRON MOUNTAIN QUARRY LLC

Quarry site: 20800 Wayside Mine Rd – Granite Falls WA
Phone: (Toll Free) 1-866-672-3434

DATE 11/03/2017 **TIME** 14:59 **TICKET#** 000146

CUSTOMER 844 GLACIER ENVIRONMENTAL ☐ **CASH** ☐ **CHARGE**

JOB 4 730 S MERTLE ST **PO#** _____

HAULER 1854 MERANTO TRUCKING **TRUCK#** MERANTO X ☐ **HIRED**

PRODUCT 500 CLASS 2 PETROLEUM CONTAM SOIL

GROSS	104980	**PRICE**	
TARE	38980	**SUBTOTAL**	
NET LB	66000	**TAX**	
NET TN	33.00	**TOTAL**	

754

WEIGHER

Terms: Net 30 days from the end of the month. A finance charge will be assessed on all past due accounts at a rate of 1-1/2% PER MONTH. Annual Finance Charge of 18%. Notice: It is specifically agreed that this company shall not be in any way responsible for damage to customers property resulting in Deliveries beyond curb line.

DRIVER'S SIGNATURE

IRON MOUNTAIN QUARRY LLC

Quarry site: 20800 Wayside Mine Rd – Granite Falls WA
Phone: (Toll Free) 1-866-672-3434

DATE 11/03/2017 **TIME** 13:48 **TICKET#** 000126

CUSTOMER 844 GLACIER ENVIRONMENTAL ☐ **CASH** ☐ **CHARGE**

JOB 4 730 S MERTLE ST **PO#** _____

HAULER 1854 MERANTO TRUCKING **TRUCK#** MERANTO X ☐ **HIRED**

PRODUCT 500 CLASS 2 PETROLEUM CONTAM SOIL

GROSS	99600	**PRICE**	
TARE	38980	**SUBTOTAL**	
NET LB	60620	**TAX**	
NET TN	30.31	**TOTAL**	

754

WEIGHER

Terms: Net 30 days from the end of the month. A finance charge will be assessed on all past due accounts at a rate of 1-1/2% PER MONTH. Annual Finance Charge of 18%. Notice: It is specifically agreed that this company shall not be in any way responsible for damage to customers property resulting in Deliveries beyond curb line.

DRIVER'S SIGNATURE

IRON MOUNTAIN QUARRY LLC

Quarry site: 20800 Wayside Mine Rd – Granite Falls WA
Phone: (Toll Free) 1-866-672-3434

DATE _____ **TIME** _____ **TICKET#** _____

CUSTOMER _____ ☐ **CASH** ☐ **CHARGE**

JOB _____ **PO#** _____

HAULER _____ **TRUCK#** _____ ☐ **HIRED**

PRODUCT _____

PRICE _____

SUBTOTAL _____

TAX _____

TOTAL _____

_____
WEIGHER

Terms: Net 30 days from the end of the month. A finance charge will be assessed on all past due accounts at a rate of 1-1/2% PER MONTH. Annual Finance Charge of 18%. Notice: It is specifically agreed that this company shall not be in any way responsible for damage to customers property resulting in Deliveries beyond curb line.

DRIVER'S SIGNATURE _____

IRON MOUNTAIN QUARRY LLC

Quarry site: 20800 Wayside Mine Rd – Granite Falls WA
Phone: (Toll Free) 1-866-672-3434

DATE 11/06/2017 **TIME** 14:34 **TICKET#** 000369

CUSTOMER 844 GLACIER ENVIRONMENTAL ☐ **CASH** ☐ **CHARGE**

JOB 4 730 S MERTLE ST **PO#** _____

HAULER 1854 MERANTO TRUCKING **TRUCK#** MERANTO X ☐ **HIRED**

PRODUCT 508 CLASS 2 PETROLEUM CONTAM SOIL

GROSS	107500	**PRICE**	
TARE	39580	**SUBTOTAL**	
NET LB	67920	**TAX**	
NET TN	33.96	**TOTAL**	

760

_____
WEIGHER

Terms: Net 30 days from the end of the month. A finance charge will be assessed on all past due accounts at a rate of 1-1/2% PER MONTH. Annual Finance Charge of 18%. Notice: It is specifically agreed that this company shall not be in any way responsible for damage to customers property resulting in Deliveries beyond curb line.

DRIVER'S SIGNATURE _____

IRON MOUNTAIN QUARRY LLC

Quarry site: 20800 Wayside Mine Rd – Granite Falls WA
Phone: (Toll Free) 1-866-672-3434

DATE 11/06/2017 **TIME** 14:33 **TICKET#** 000367

CUSTOMER 844 GLACIER ENVIRONMENTAL ☐ **CASH** ☐ **CHARGE**

JOB 4 730 S MERTLE ST **PO#** _____

HAULER 2363 SCOLERT TRUCKING **TRUCK#** SCOLERT X ☐ **HIRED**

PRODUCT 500 CLASS 2 PETROLEUM CONTAM SOIL

GROSS	110400	**PRICE**	
TARE	41720	**SUBTOTAL**	
NET LB	68700	**TAX**	
NET TN	34.38	**TOTAL**	

L727

_____
WEIGHER

Terms: Net 30 days from the end of the month. A finance charge will be assessed on all past due accounts at a rate of 1-1/2% PER MONTH. Annual Finance Charge of 18%. Notice: It is specifically agreed that this company shall not be in any way responsible for damage to customers property resulting in Deliveries beyond curb line.

DRIVER'S SIGNATURE _____

IRON MOUNTAIN QUARRY LLC

Quarry site: 20800 Wayside Mine Rd – Granite Falls WA
Phone: (Toll Free) 1-866-672-3434

DATE 11/06/2017 **TIME** 11:02 **TICKET#** 000295

CUSTOMER 044 GLACIER ENVIRONMENTAL ☐ **CASH** ☐ **CHARGE**

JOB 4 730 S MERTLE ST **PO#** _____

HAULER 2363 SCOLERI TRUCKING **TRUCK#** SCOLERI X ☐ **HIRED**

PRODUCT 508 CLASS 2 PETROLEUM CONTAM SOIL

GROSS	104600	**PRICE**	
TARE	41100	**SUBTOTAL**	
NET LB	63500	**TAX**	
NET TN	31.75	**TOTAL**	

1727

WEIGHER

Terms: Net 30 days from the end of the month. A finance charge will be assessed on all past due accounts at a rate of 1-1/2% PER MONTH. Annual Finance Charge of 18%. Notice: It is specifically agreed that this company shall not be in any way responsible for damage to customers property resulting in Deliveries beyond curb line.

DRIVER'S SIGNATURE

IRON MOUNTAIN QUARRY LLC

Quarry site: 20800 Wayside Mine Rd – Granite Falls WA
Phone: (Toll Free) 1-866-672-3434

DATE 11/06/2017 **TIME** 10:55 **TICKET#** 000234

CUSTOMER 844 GLACIER ENVIRONMENTAL ☐ CASH ☐ CHARGE

JOB 4 730 S MERTLE ST **PO#** _____

HAULER 1484 MERMITS TRUCKING **TRUCK#** MERMITS ☐ HIRED

PRODUCT 508 CLASS 2 PETROLEUM CONTAM SOIL

GROSS	101580	**PRICE**	
TARE	39580	**SUBTOTAL**	
NET LB	62000	**TAX**	
NET TN	31.00	**TOTAL**	

1760

WEIGHER

Terms: Net 30 days from the end of the month. A finance charge will be assessed on all past due accounts at a rate of 1-1/2% PER MONTH. Annual Finance Charge of 18%. Notice: It is specifically agreed that this company shall not be in any way responsible for damage to customers property resulting in Deliveries beyond curb line.

DRIVER'S SIGNATURE

IRON MOUNTAIN QUARRY LLC

Quarry site: 20800 Wayside Mine Rd – Granite Falls WA
Phone: (Toll Free) 1-866-672-3434

DATE 11/07/2017 **TIME** 10:47 **TICKET#** 000483

CUSTOMER 044 GLACIER ENVIRONMENTAL ☐ **CASH** ☐ **CHARGE**

JOB 4 730 S MERTLE ST **PO#** _____

HAULER 2518 WESTSIDE LLC **TRUCK#** WS1 X ☐ **HIRED**

PRODUCT 500 CLASS 2 PETROLEUM CONTAM SOIL

GROSS	100280	**PRICE** _____
TARE	41840	**SUBTOTAL** _____
NET LB	58440	**TAX** _____
NET TN	29.22	**TOTAL** _____

1325

_____
WEIGHER

Terms: Net 30 days from the end of the month. A finance charge will be assessed on all past due accounts at a rate of 1-1/2% PER MONTH. Annual Finance Charge of 18%. Notice: It is specifically agreed that this company shall not be in any way responsible for damage to customers property resulting in Deliveries beyond curb line.

DRIVER'S SIGNATURE _____

IRON MOUNTAIN QUARRY LLC

Quarry site: 20800 Wayside Mine Rd – Granite Falls WA
Phone: (Toll Free) 1-866-672-3434

DATE 11/07/2017 **TIME** 10:59 **TICKET#** 000488

CUSTOMER 844 GLACIER ENVIRONMENTAL ☐ **CASH** ☐ **CHARGE**

JOB 4 730 S MERTLE ST **PO#** _____

HAULER 1854 MERANTO TRUCKING **TRUCK#** MERANTO X ☐ **HIRED**

PRODUCT 500 CLASS 2 PETROLEUM CONTAM SOIL

GROSS	105460	**PRICE**	_____
TARE	39920	**SUBTOTAL**	_____
NET LB	65540	**TAX**	_____
NET TN	32.77	**TOTAL**	_____

1762

_____
WEIGHER

Terms: Net 30 days from the end of the month. A finance charge will be assessed on all past due accounts at a rate of 1-1/2% PER MONTH. Annual Finance Charge of 18%. Notice: It is specifically agreed that this company shall not be in any way responsible for damage to customers property resulting in Deliveries beyond curb line.

DRIVER'S SIGNATURE _____

IRON MOUNTAIN QUARRY LLC

Quarry site: 20800 Wayside Mine Rd – Granite Falls WA
Phone: (Toll Free) 1-866-672-3434

DATE 11/07/2017 **TIME** 6:51 **TICKET#** 000407

CUSTOMER 944 GLACIER ENVIRONMENTAL ☐ **CASH** ☐ **CHARGE**

JOB 4 730 S MERTLE ST **PO#** _____

HAULER 1854 MERANTO TRUCKING **TRUCK#** MERANTO X ☐ **HIRED**

PRODUCT 500 CLASS 2 PETROLEUM CONTAM SOIL

GROSS	112020	**PRICE**	
TARE	39920	**SUBTOTAL**	
NET LB	72100	**TAX**	
NET TN	36.05	**TOTAL**	

1762

WEIGHER

Terms: Net 30 days from the end of the month. A finance charge will be assessed on all past due accounts at a rate of 1-1/2% PER MONTH. Annual Finance Charge of 18%. Notice: It is specifically agreed that this company shall not be in any way responsible for damage to customers property resulting in Deliveries beyond curb line.

DRIVER'S SIGNATURE

IRON MOUNTAIN QUARRY LLC

Quarry site: 20800 Wayside Mine Rd – Granite Falls WA
Phone: (Toll Free) 1-866-672-3434

DATE 11/07/2017 **TIME** 11:27 **TICKET#** 000503

CUSTOMER 844 GLACIER ENVIRONMENTAL ☐ **CASH** ☐ **CHARGE**

JOB 4 730 S MERTLE ST **PO#** _____

HAULER 2363 SCOLERI TRUCKING **TRUCK#** SCOLERI X ☐ **HIRED**

PRODUCT 308 CLASS 2 PETROLEUM CONTAM SOIL

GROSS	103640	**PRICE**	_____
TARE	41720	**SUBTOTAL**	_____
NET LB	61920	**TAX**	_____
NET TN	30.96	**TOTAL**	_____

1720

_____
WEIGHER

Terms: Net 30 days from the end of the month. A finance charge will be assessed on all past due accounts at a rate of 1-1/2% PER MONTH. Annual Finance Charge of 18%. Notice: It is specifically agreed that this company shall not be in any way responsible for damage to customers property resulting in Deliveries beyond curb line.

DRIVER'S SIGNATURE _____

IRON MOUNTAIN QUARRY LLC

Quarry site: 20800 Wayside Mine Rd – Granite Falls WA
Phone: (Toll Free) 1-866-672-3434

DATE 11/07/2017 **TIME** 7:24 **TICKET#** 000424

CUSTOMER 844 GLACIER ENVIRONMENTAL ☐ **CASH** ☐ **CHARGE**

JOB 4 730 S MERTLE ST **PO#** _____

HAULER 2363 SCOLERI TRUCKING **TRUCK#** SCOLERI X ☐ **HIRED**

PRODUCT 500 CLASS 2 PETROLEUM CONTAM SOIL

GROSS	119860	**PRICE**	
TARE	41720	**SUBTOTAL**	
NET LB	78140	**TAX**	
NET TN	39.07	**TOTAL**	

1728

_____
WEIGHER

Terms: Net 30 days from the end of the month. A finance charge will be assessed on all past due accounts at a rate of 1-1/2% PER MONTH. Annual Finance Charge of 18%. Notice: It is specifically agreed that this company shall not be in any way responsible for damage to customers property resulting in Deliveries beyond curb line.

DRIVER'S SIGNATURE _____

IRON MOUNTAIN QUARRY LLC

Quarry site: 20800 Wayside Mine Rd – Granite Falls WA
Phone: (Toll Free) 1-866-672-3434

DATE 11/07/2017 **TIME** 15:03 **TICKET#** 000589

CUSTOMER 844 GLACIER ENVIRONMENTAL ☐ **CASH** ☐ **CHARGE**

JOB 4 730 S MERTLE ST **PO#** _____

HAULER 2363 SCOLERI TRUCKING **TRUCK#** SCOLERI X ☐ **HIRED**

PRODUCT 508 CLASS 2 PETROLEUM CONTAM SOIL

GROSS	107020	**PRICE**	
TARE	41720	**SUBTOTAL**	
NET LB	65300	**TAX**	
NET TN	32.65	**TOTAL**	

1720

_____
WEIGHER

Terms: Net 30 days from the end of the month. A finance charge will be assessed on all past due accounts at a rate of 1-1/2% PER MONTH. Annual Finance Charge of 18%. Notice: It is specifically agreed that this company shall not be in any way responsible for damage to customers property resulting in Deliveries beyond curb line.

DRIVER'S SIGNATURE _____

IRON MOUNTAIN QUARRY LLC

Quarry site: 20800 Wayside Mine Rd – Granite Falls WA
Phone: (Toll Free) 1-866-672-3434

DATE 11/07/2017 **TIME** 14:10 **TICKET#** 000573

CUSTOMER 044 GLACIER ENVIRONMENTAL ☐ **CASH** ☐ **CHARGE**

JOB 4 730 S MERTLE ST **PO#** _____

HAULER 2518 WESTSIDE LLC **TRUCK#** WS1 X ☐ **HIRED**

PRODUCT 508 CLASS 2 PETROLEUM CONTAM SOIL

GROSS	106800	**PRICE**	
TARE	41840	**SUBTOTAL**	
NET LB	64960	**TAX**	
NET TN	32.48	**TOTAL**	

1325

_____
WEIGHER

Terms: Net 30 days from the end of the month. A finance charge will be assessed on all past due accounts at a rate of 1-1/2% PER MONTH. Annual Finance Charge of 18%. Notice: It is specifically agreed that this company shall not be in any way responsible for damage to customers property resulting in Deliveries beyond curb line.

DRIVER'S SIGNATURE _____

IRON MOUNTAIN QUARRY LLC

Quarry site: 20800 Wayside Mine Rd – Granite Falls WA
Phone: (Toll Free) 1-866-672-3434

DATE 11/07/2017 **TIME** 15:37 **TICKET#** 000597

CUSTOMER 844 GLACIER ENVIRONMENTAL ☐ **CASH** ☐ **CHARGE**

4 730 S MERTLE ST

JOB _____ **PO#** _____

HAULER 717 NORTHWEST SAND & GRAVEL **TRUCK#** NWP4 X ☐ **HIRED**

PRODUCT 500 CLASS 2 PETROLEUM CONTAM SOIL

GROSS	101960	**PRICE** _____
TARE	42540	**SUBTOTAL** _____
NET LB	59420	**TAX** _____
NET TN	29.71	**TOTAL** _____

23737

_____
WEIGHER

Terms: Net 30 days from the end of the month. A finance charge will be assessed on all past due accounts at a rate of 1-1/2% PER MONTH. Annual Finance Charge of 18%. Notice: It is specifically agreed that this company shall not be in any way responsible for damage to customers property resulting in Deliveries beyond curb line.

DRIVER'S SIGNATURE _____

IRON MOUNTAIN QUARRY LLC

Quarry site: 20800 Wayside Mine Rd – Granite Falls WA
Phone: (Toll Free) 1-866-672-3434

DATE 11/08/2017 **TIME** 11:52 **TICKET#** 000712

CUSTOMER 844 GLACIER ENVIRONMENTAL ☐ **CASH** ☐ **CHARGE**

JOB 4 730 S MERTLE ST **PO#** _____

HAULER 2518 WESTSIDE LLC **TRUCK#** WS1 X ☐ **HIRED**

PRODUCT 508 CLASS 2 PETROLEUM CONTAM SOIL

GROSS	107120	**PRICE**	
TARE	41840	**SUBTOTAL**	
NET LB	65280	**TAX**	
NET TN	32.64	**TOTAL**	

1326

_____
WEIGHER

Terms: Net 30 days from the end of the month. A finance charge will be assessed on all past due accounts at a rate of 1-1/2% PER MONTH. Annual Finance Charge of 18%. Notice: It is specifically agreed that this company shall not be in any way responsible for damage to customers property resulting in Deliveries beyond curb line.

DRIVER'S SIGNATURE _____

IRON MOUNTAIN QUARRY LLC

Quarry site: 20800 Wayside Mine Rd – Granite Falls WA
Phone: (Toll Free) 1-866-672-3434

DATE 11/08/2017 **TIME** 7:47 **TICKET#** 000625

CUSTOMER 844 GLACIER ENVIRONMENTAL ☐ **CASH** ☐ **CHARGE**

JOB 4 730 S MERTLE ST **PO#** _____

HAULER 2510 WESTSIDE LLC **TRUCK#** WS1 X ☐ **HIRED**

PRODUCT 500 CLASS 2 PETROLEUM CONTAM SOIL

GROSS	111720	**PRICE**	
TARE	41840	**SUBTOTAL**	
NET LB	69880	**TAX**	
NET TN	34.94	**TOTAL**	

1326

WEIGHER

Terms: Net 30 days from the end of the month. A finance charge will be assessed on all past due accounts at a rate of 1-1/2% PER MONTH. Annual Finance Charge of 18%. Notice: It is specifically agreed that this company shall not be in any way responsible for damage to customers property resulting in Deliveries beyond curb line.

DRIVER'S SIGNATURE _____

IRON MOUNTAIN QUARRY LLC

Quarry site: 20800 Wayside Mine Rd – Granite Falls WA
Phone: (Toll Free) 1-866-672-3434

DATE 11/08/2017 **TIME** 11:46 **TICKET#** 000704

CUSTOMER 044 GLACIER ENVIRONMENTAL ☐ **CASH** ☐ **CHARGE**

JOB 4 730 S MERTLE ST **PO#** _____

HAULER 2363 SCOLERI TRUCKING **TRUCK#** SCOLERI X ☐ **HIRED**

PRODUCT 508 CLASS 2 PETROLEUM CONTAM SOIL

GROSS	110660	**PRICE**	_____
TARE	41720	**SUBTOTAL**	_____
NET LB	68940	**TAX**	_____
NET TN	34.47	**TOTAL**	_____

730

_____
WEIGHER

Terms: Net 30 days from the end of the month. A finance charge will be assessed on all past due accounts at a rate of 1-1/2% PER MONTH. Annual Finance Charge of 18%. Notice: It is specifically agreed that this company shall not be in any way responsible for damage to customers property resulting in Deliveries beyond curb line.

DRIVER'S SIGNATURE _____

IRON MOUNTAIN QUARRY LLC

Quarry site: 20800 Wayside Mine Rd – Granite Falls WA
Phone: (Toll Free) 1-866-672-3434

DATE 11/08/2017 **TIME** 7:35 **TICKET#** 000624

CUSTOMER 344 GLACIER ENVIRONMENTAL ☐ **CASH** ☐ **CHARGE**

JOB 4 730 S MERTLE ST **PO#** _____

HAULER 2363 SCOLERI TRUCKING **TRUCK#** SCOLERI X ☐ **HIRED**

PRODUCT 508 CLASS 2 PETROLEUM CONTAM SOIL

GROSS	110200	**PRICE**	
TARE	41720	**SUBTOTAL**	
NET LB	68480	**TAX**	
NET TN	34.24	**TOTAL**	

730

WEIGHER

Terms: Net 30 days from the end of the month. A finance charge will be assessed on all past due accounts at a rate of 1-1/2% PER MONTH. Annual Finance Charge of 18%. Notice: It is specifically agreed that this company shall not be in any way responsible for damage to customers property resulting in Deliveries beyond curb line.

DRIVER'S SIGNATURE _____

IRON MOUNTAIN QUARRY LLC

Quarry site: 20800 Wayside Mine Rd – Granite Falls WA
Phone: (Toll Free) 1-866-672-3434

DATE 11/08/2017 **TIME** 15:34 **TICKET#** 000804

CUSTOMER 844 GLACIER ENVIRONMENTAL ☐ **CASH** ☐ **CHARGE**

JOB 4 730 S MERTLE ST **PO#** _____

HAULER 2518 WESTSIDE LLC **TRUCK#** WS1 X ☐ **HIRED**

PRODUCT 508 CLASS 2 PETROLEUM CONTAM SOIL

GROSS	100620	**PRICE**	
TARE	41840	**SUBTOTAL**	
NET LB	58780	**TAX**	
NET TN	29.39	**TOTAL**	

1326

_____
WEIGHER

Terms: Net 30 days from the end of the month. A finance charge will be assessed on all past due accounts at a rate of 1-1/2% PER MONTH. Annual Finance Charge of 18%. Notice: It is specifically agreed that this company shall not be in any way responsible for damage to customers property resulting in Deliveries beyond curb line.

DRIVER'S SIGNATURE _____

IRON MOUNTAIN QUARRY LLC

Quarry site: 20800 Wayside Mine Rd – Granite Falls WA
Phone: (Toll Free) 1-866-672-3434

DATE _____ **TIME** _____ **TICKET#** _____

CUSTOMER _____ ☐ **CASH** ☐ **CHARGE**

JOB _____ **PO#** _____

HAULER _____ **TRUCK#** _____ ☐ **HIRED**

PRODUCT _____

PRICE _____

SUBTOTAL _____

TAX _____

TOTAL _____

_____
WEIGHER

Terms: Net 30 days from the end of the month. A finance charge will be assessed on all past due accounts at a rate of 1-1/2% PER MONTH. Annual Finance Charge of 18%. Notice: It is specifically agreed that this company shall not be in any way responsible for damage to customers property resulting in Deliveries beyond curb line.

DRIVER'S SIGNATURE _____

IRON MOUNTAIN QUARRY LLC

Quarry site: 20800 Wayside Mine Rd – Granite Falls WA
Phone: (Toll Free) 1-866-672-3434

DATE 11/08/2017 **TIME** 7:02 **TICKET#** 000612

CUSTOMER 844 GLACIER ENVIRONMENTAL ☐ **CASH** ☒ **CHARGE**

JOB 4 730 S MERTLE ST **PO#** _____

HAULER 1054 MERANTO TRUCKING **TRUCK#** MERANTO X ☐ **HIRED**

PRODUCT 508 CLASS 2 PETROLEUM CONTAM SOIL

GROSS	109640	**PRICE**	_____
TARE	39920	**SUBTOTAL**	_____
NET LB	69720	**TAX**	_____
NET TN	34.86	**TOTAL**	_____

L764

_____
WEIGHER

Terms: Net 30 days from the end of the month. A finance charge will be assessed on all past due accounts at a rate of 1-1/2% PER MONTH. Annual Finance Charge of 18%. Notice: It is specifically agreed that this company shall not be in any way responsible for damage to customers property resulting in Deliveries beyond curb line.

DRIVER'S SIGNATURE _____

IRON MOUNTAIN QUARRY LLC

Quarry site: 20800 Wayside Mine Rd – Granite Falls WA
Phone: (Toll Free) 1-866-672-3434

DATE 11/08/2017 **TIME** 11:24 **TICKET#** 000092

CUSTOMER 844 GLACIER ENVIRONMENTAL ☐ **CASH** ☐ **CHARGE**

JOB 4 730 S MERTLE ST **PO#** _____

HAULER 1854 MERANTO TRUCKING **TRUCK#** MERANTO X ☐ **HIRED**

PRODUCT 500 CLASS 2 PETROLEUM CONTAM SOIL

GROSS	110280	**PRICE**	
TARE	39920	**SUBTOTAL**	
NET LB	70360	**TAX**	
NET TN	35.18	**TOTAL**	

1764

WEIGHER

Terms: Net 30 days from the end of the month. A finance charge will be assessed on all past due accounts at a rate of 1-1/2% PER MONTH. Annual Finance Charge of 18%. Notice: It is specifically agreed that this company shall not be in any way responsible for damage to customers property resulting in Deliveries beyond curb line.

DRIVER'S SIGNATURE

IRON MOUNTAIN QUARRY LLC

Quarry site: 20800 Wayside Mine Rd – Granite Falls WA
Phone: (Toll Free) 1-866-672-3434

DATE 11/06/2017 **TIME** 14:47 **TICKET#** 000789

CUSTOMER 844 GLACIER ENVIRONMENTAL ☐ **CASH** ☐ **CHARGE**

JOB 4 730 S MERTLE ST **PO#** _____

HAULER 1854 MERANTO TRUCKING **TRUCK#** MERANTO X ☐ **HIRED**

PRODUCT 508 CLASS 2 PETROLEUM CONTAM SOIL

GROSS	93560	**PRICE**	
TARE	33920	**SUBTOTAL**	
NET LB	59640	**TAX**	
NET TN	29.82	**TOTAL**	

7764

WEIGHER

Terms: Net 30 days from the end of the month. A finance charge will be assessed on all past due accounts at a rate of 1-1/2% PER MONTH. Annual Finance Charge of 18%. Notice: It is specifically agreed that this company shall not be in any way responsible for damage to customers property resulting in Deliveries beyond curb line.

DRIVER'S SIGNATURE

IRON MOUNTAIN QUARRY LLC

Quarry site: 20800 Wayside Mine Rd – Granite Falls WA
Phone: (Toll Free) 1-866-672-3434

11/09/2017 15:57 001018

DATE _____ **TIME** _____ **TICKET#** _____

044 GLACIER ENVIRONMENTAL

CUSTOMER _____ ☐ **CASH** ☐ **CHARGE**

4 730 S MERTLE ST

JOB _____ **PO#** _____

2510 WESTSIDE LLC WS1 X

HAULER _____ **TRUCK#** _____ ☐ **HIRED**

508 CLASS 2 PETROLEUM CONTAM SOIL

PRODUCT _____

GROSS 98700

TARE 41840

NET LB 56860

NET TN 28.43

PRICE _____

SUBTOTAL _____

TAX _____

TOTAL _____

1330

_____
WEIGHER

Terms: Net 30 days from the end of the month. A finance charge will be assessed on all past due accounts at a rate of 1-1/2% PER MONTH. Annual Finance Charge of 18%. Notice: It is specifically agreed that this company shall not be in any way responsible for damage to customers property resulting in Deliveries beyond curb line.

DRIVER'S SIGNATURE _____

IRON MOUNTAIN QUARRY LLC

Quarry site: 20800 Wayside Mine Rd – Granite Falls WA
Phone: (Toll Free) 1-866-672-3434

DATE 11/09/2017 **TIME** 11:15 **TICKET#** 000914

CUSTOMER 044 GLACIER ENVIRONMENTAL ☐ **CASH** ☐ **CHARGE**

JOB 4 730 S MERTLE ST **PO#** _____

HAULER 2510 WESTSIDE LLC **TRUCK#** WSI X ☐ **HIRED**

PRODUCT 500 CLASS 2 PETROLEUM CONTAM SOIL

GROSS	101500	**PRICE**	
TARE	41840	**SUBTOTAL**	
NET LB	59660	**TAX**	
NET TN	29.83	**TOTAL**	

1330

WEIGHER

Terms: Net 30 days from the end of the month. A finance charge will be assessed on all past due accounts at a rate of 1-1/2% PER MONTH. Annual Finance Charge of 18%. Notice: It is specifically agreed that this company shall not be in any way responsible for damage to customers property resulting in Deliveries beyond curb line.

DRIVER'S SIGNATURE _____

IRON MOUNTAIN QUARRY LLC

Quarry site: 20800 Wayside Mine Rd – Granite Falls WA
Phone: (Toll Free) 1-866-672-3434

DATE 11/09/2017 **TIME** 11:40 **TICKET#** 000928

CUSTOMER 044 GLACIER ENVIRONMENTAL ☐ **CASH** ☐ **CHARGE**

JOB 4 730 S MERTLE ST **PO#** _____

HAULER 2363 SCOLERI TRUCKING **TRUCK#** SCOLERI X ☐ **HIRED**

PRODUCT 508 CLASS 2 PETROLEUM CONTAM SOIL

GROSS	99660	**PRICE**	
TARE	41720	**SUBTOTAL**	
NET LB	57940	**TAX**	
NET TN	28.97	**TOTAL**	

730

_____
WEIGHER

Terms: Net 30 days from the end of the month. A finance charge will be assessed on all past due accounts at a rate of 1-1/2% PER MONTH. Annual Finance Charge of 18%. Notice: It is specifically agreed that this company shall not be in any way responsible for damage to customers property resulting in Deliveries beyond curb line.

DRIVER'S SIGNATURE _____

IRON MOUNTAIN QUARRY LLC

Quarry site: 20800 Wayside Mine Rd – Granite Falls WA
Phone: (Toll Free) 1-866-672-3434

DATE 11/09/2017 **TIME** 11:26 **TICKET#** 000920

CUSTOMER 944 GLACIER ENVIRONMENTAL ☐ **CASH** ☐ **CHARGE**

JOB 4 730 S MERTLE ST **PO#** _____

HAULER 1054 MERANTO TRUCKING **TRUCK#** MERANTO X ☐ **HIRED**

PRODUCT 308 CLASS 2 PETROLEUM CONTAM SOIL

GROSS	100260	**PRICE**	
TARE	39460	**SUBTOTAL**	
NET LB	60800	**TAX**	
NET TN	30.40	**TOTAL**	

766

WEIGHER

Terms: Net 30 days from the end of the month. A finance charge will be assessed on all past due accounts at a rate of 1-1/2% PER MONTH. Annual Finance Charge of 18%. Notice: It is specifically agreed that this company shall not be in any way responsible for damage to customers property resulting in Deliveries beyond curb line.

DRIVER'S SIGNATURE

IRON MOUNTAIN QUARRY LLC

Quarry site: 20800 Wayside Mine Rd – Granite Falls WA
Phone: (Toll Free) 1-866-672-3434

DATE 11/09/2017 **TIME** 6:53 **TICKET#** 000028

CUSTOMER 844 GLACIER ENVIRONMENTAL ☐ **CASH** ☐ **CHARGE**

JOB 730 S MERTLE ST **PO#** _____

HAULER 1854 MERANTO TRUCKING **TRUCK#** MERANTO X ☐ **HIRED**

PRODUCT 508 CLASS 2 PETROLEUM CONTAM SOIL

GROSS	105060	**PRICE**	
TARE	39460	**SUBTOTAL**	
NET LB	65600	**TAX**	
NET TN	32.80	**TOTAL**	

766

WEIGHER

Terms: Net 30 days from the end of the month. A finance charge will be assessed on all past due accounts at a rate of 1-1/2% PER MONTH. Annual Finance Charge of 18%. Notice: It is specifically agreed that this company shall not be in any way responsible for damage to customers property resulting in Deliveries beyond curb line.

DRIVER'S SIGNATURE

IRON MOUNTAIN QUARRY LLC

Quarry site: 20800 Wayside Mine Rd – Granite Falls WA
Phone: (Toll Free) 1-866-672-3434

DATE 11/10/2017 **TIME** 6:29 **TICKET#** 001024

CUSTOMER 844 GLACIER ENVIRONMENTAL ☐ **CASH** ☐ **CHARGE**

JOB 4 730 S MERTLE ST **PO#** _____

HAULER 2363 SCOLERI TRUCKING **TRUCK#** SCOLERI X ☐ **HIRED**

PRODUCT 508 CLASS 2 PETROLEUM CONTAM SOIL

GROSS	109920	**PRICE**	
TARE	41720	**SUBTOTAL**	
NET LB	68200	**TAX**	
NET TN	34.10	**TOTAL**	

WEIGHER

Terms: Net 30 days from the end of the month. A finance charge will be assessed on all past due accounts at a rate of 1-1/2% PER MONTH. Annual Finance Charge of 18%. Notice: It is specifically agreed that this company shall not be in any way responsible for damage to customers property resulting in Deliveries beyond curb line.

DRIVER'S SIGNATURE

IRON MOUNTAIN QUARRY LLC

Quarry site: 20800 Wayside Mine Rd – Granite Falls WA
Phone: (Toll Free) 1-866-672-3434

DATE _____ **TIME** _____ **TICKET#** _____

CUSTOMER _____ ☐ **CASH** ☐ **CHARGE**

JOB _____ **PO#** _____

HAULER _____ **TRUCK#** _____ ☐ **HIRED**

PRODUCT _____

PRICE _____

SUBTOTAL _____

TAX _____

TOTAL _____

_____
WEIGHER

Terms: Net 30 days from the end of the month. A finance charge will be assessed on all past due accounts at a rate of 1-1/2% PER MONTH. Annual Finance Charge of 18%. Notice: It is specifically agreed that this company shall not be in any way responsible for damage to customers property resulting in Deliveries beyond curb line.

DRIVER'S SIGNATURE _____

IRON MOUNTAIN QUARRY LLC

Quarry site: 20800 Wayside Mine Rd – Granite Falls WA
Phone: (Toll Free) 1-866-672-3434

DATE 11/13/2017 **TIME** 15:55 **TICKET#** 001365

CUSTOMER 844 GLACIER ENVIRONMENTAL ☐ **CASH** ☐ **CHARGE**

JOB 4 730 S MERTLE ST **PO#** _____

HAULER 241 SPRINGBROOK NURSERY **TRUCK#** SRM25 X ☐ **HIRED**

PRODUCT 508 CLASS 2 PETROLEUM CONTAM SOIL

GROSS	104220	**PRICE**	_____
TARE	40920	**SUBTOTAL**	_____
NET LB	63300	**TAX**	_____
NET TN	31.65	**TOTAL**	_____

_____
WEIGHER

Terms: Net 30 days from the end of the month. A finance charge will be assessed on all past due accounts at a rate of 1-1/2% PER MONTH. Annual Finance Charge of 18%. Notice: It is specifically agreed that this company shall not be in any way responsible for damage to customers property resulting in Deliveries beyond curb line.

DRIVER'S SIGNATURE _____

IRON MOUNTAIN QUARRY LLC

Quarry site: 20800 Wayside Mine Rd – Granite Falls WA
Phone: (Toll Free) 1-866-672-3434

DATE 11/13/2017 **TIME** 10:41 **TICKET#** 001296

CUSTOMER 044 GLACIER ENVIRONMENTAL ☐ **CASH** ☐ **CHARGE**

JOB 4 730 S MERTLE ST **PO#** _____

HAULER 1854 MERANTO TRUCKING **TRUCK#** MERANTO X ☐ **HIRED**

PRODUCT 508 CLASS 2 PETROLEUM CONTAM SOIL

GROSS	104200	**PRICE**	
TARE	39460	**SUBTOTAL**	
NET LB	64740	**TAX**	
NET TN	32.37	**TOTAL**	

769

WEIGHER

Terms: Net 30 days from the end of the month. A finance charge will be assessed on all past due accounts at a rate of 1-1/2% PER MONTH. Annual Finance Charge of 18%. Notice: It is specifically agreed that this company shall not be in any way responsible for damage to customers property resulting in Deliveries beyond curb line.

DRIVER'S SIGNATURE _____

IRON MOUNTAIN QUARRY LLC

Quarry site: 20800 Wayside Mine Rd – Granite Falls WA
Phone: (Toll Free) 1-866-672-3434

DATE _____ **TIME** _____ **TICKET#** _____

CUSTOMER _____ ☐ **CASH** ☐ **CHARGE**

JOB _____ **PO#** _____

HAULER _____ **TRUCK#** _____ ☐ **HIRED**

PRODUCT _____

PRICE _____

SUBTOTAL _____

TAX _____

TOTAL _____

_____
WEIGHER

Terms: Net 30 days from the end of the month. A finance charge will be assessed on all past due accounts at a rate of 1-1/2% PER MONTH. Annual Finance Charge of 18%. Notice: It is specifically agreed that this company shall not be in any way responsible for damage to customers property resulting in Deliveries beyond curb line.

DRIVER'S SIGNATURE _____ Evan Hyatt

IRON MOUNTAIN QUARRY LLC

Quarry site: 20800 Wayside Mine Rd – Granite Falls WA
Phone: (Toll Free) 1-866-672-3434

DATE 11/14/2017 **TIME** 13:29 **TICKET#** 001511

CUSTOMER 944 GLACIER ENVIRONMENTAL ☐ **CASH** ☐ **CHARGE**

JOB 4 730 S MERTLE ST **PO#** _____

HAULER 1054 MERANTO TRUCKING **TRUCK#** MERANTO X ☐ **HIRED**

PRODUCT 500 CLASS 2 PETROLEUM CONTAM SOIL

GROSS	107020	**PRICE**	
TARE	39360	**SUBTOTAL**	
NET LB	67660	**TAX**	
NET TN	33.83	**TOTAL**	

1772

WEIGHER

Terms: Net 30 days from the end of the month. A finance charge will be assessed on all past due accounts at a rate of 1-1/2% PER MONTH. Annual Finance Charge of 18%. Notice: It is specifically agreed that this company shall not be in any way responsible for damage to customers property resulting in Deliveries beyond curb line.

DRIVER'S SIGNATURE

IRON MOUNTAIN QUARRY LLC

Quarry site: 20800 Wayside Mine Rd – Granite Falls WA
Phone: (Toll Free) 1-866-672-3434

DATE 11/15/2017 **TIME** 12:57 **TICKET#** 961762

CUSTOMER 844 GLACIER ENVIRONMENTAL ☐ **CASH** ☐ **CHARGE**

JOB 4 730 S MERRILL ST **PO#** _____

HAULER 1854 MERRITT TRUCKING **TRUCK#** MERRITT ☐ **HIRED**

PRODUCT 500 CLASS 2 PETROLEUM CONTAM SOIL

GROSS	93980	**PRICE**	_____
TARE	39360	**SUBTOTAL**	_____
NET LB	54620	**TAX**	_____
NET TN	27.31	**TOTAL**	_____

1776

_____
WEIGHER

Terms: Net 30 days from the end of the month. A finance charge will be assessed on all past due accounts at a rate of 1-1/2% PER MONTH. Annual Finance Charge of 18%. Notice: It is specifically agreed that this company shall not be in any way responsible for damage to customers property resulting in Deliveries beyond curb line.

DRIVER'S SIGNATURE _____

IRON MOUNTAIN QUARRY LLC

Quarry site: 20800 Wayside Mine Rd – Granite Falls WA
Phone: (Toll Free) 1-866-672-3434

DATE 11/15/2017 **TIME** 13:22 **TICKET#** 001669

CUSTOMER 044 GLACIER ENVIRONMENTAL ☐ **CASH** ☐ **CHARGE**

JOB 4 730 S MERTLE ST **PO#** _____

HAULER 241 SPRINGBROOK NURSERY **TRUCK#** SBN25 X ☐ **HIRED**

PRODUCT 500 CLASS 2 PETROLEUM CONTAM SOIL

GROSS	106200	**PRICE**	
TARE	41480	**SUBTOTAL**	
NET LB	64720	**TAX**	
NET TN	32.36	**TOTAL**	

110230

WEIGHER

Terms: Net 30 days from the end of the month. A finance charge will be assessed on all past due accounts at a rate of 1-1/2% PER MONTH. Annual Finance Charge of 18%. Notice: It is specifically agreed that this company shall not be in any way responsible for damage to customers property resulting in Deliveries beyond curb line.

DRIVER'S SIGNATURE RAY

IRON MOUNTAIN QUARRY LLC

Quarry site: 20800 Wayside Mine Rd – Granite Falls WA
Phone: (Toll Free) 1-866-672-3434

DATE 11/21/2017 **TIME** 9:49 **TICKET#** 002321

CUSTOMER 844 GLACIER ENVIRONMENTAL ☐ **CASH** ☐

JOB 4 730 S MERTLE ST **PO#** _____

HAULER 2363 SCOLERI TRUCKING **TRUCK#** SCOLERI ☐ **HIRED**

PRODUCT 500 CLASS 2 PETROLEUM CONTAM SOIL

GROSS	109120	**PRICE**	
TARE	41780	**SUBTOTAL**	
NET LB	67340	**TAX**	
NET TN	33.67	**TOTAL**	

1738

WEIGHER

Terms: Net 30 days from the end of the month. A finance charge will be assessed on all past due accounts at a rate of 1-1/2% PER MONTH. Annual Fin
Charge of 18%. Notice: It is specifically agreed that this company shall not be in any way responsible for damage to customers property resulting in
Deliveries beyond curb line.

DRIVER'S SIGNATURE _____

IRON MOUNTAIN QUARRY LLC

Quarry site: 20800 Wayside Mine Rd – Granite Falls WA
Phone: (Toll Free) 1-866-672-3434

11/21/2017 11:53 002365

DATE _____ **TIME** _____ **TICKET#** _____

844 GLACIER ENVIRONMENTAL

CUSTOMER _____ ☐ **CASH** ☐ **CHARGE**

4 730 S MERTLE ST

JOB _____ **PO#** _____

2510 WESTSIDE LLC WS1 X

HAULER _____ **TRUCK#** _____ ☐ **HIRED**

PRODUCT 508 CLASS 2 PETROLEUM CONTAM SOIL

GROSS	117630	**PRICE** _____
TARE	42480	**SUBTOTAL** _____
NET LB	75150	**TAX** _____
NET TN	37.57	**TOTAL** _____

1341

_____
WEIGHER

Terms: Net 30 days from the end of the month. A finance charge will be assessed on all past due accounts at a rate of 1-1/2% PER MONTH. Annual Finance Charge of 18%. Notice: It is specifically agreed that this company shall not be in any way responsible for damage to customers property resulting in Deliveries beyond curb line.

DRIVER'S SIGNATURE _____

IRON MOUNTAIN QUARRY LLC

Quarry site: 20800 Wayside Mine Rd – Granite Falls WA
Phone: (Toll Free) 1-866-672-3434

11/22/2017 11:38 002512

DATE _____ **TIME** _____ **TICKET#** _____

844 GLACIER ENVIRONMENTAL

CUSTOMER _____ ☐ **CASH** ☐ **CHARGE**

4 730 S PICKLE ST

JOB _____ **PO#** _____

1854 MERANTO TRUCKING MERANTO

HAULER _____ **TRUCK#** _____ ☐ **HIRED**

240 DUMP FEES-DIRT ONLY

PRODUCT _____

GROSS 39660

TARE 39360

NET LB 60240

NET TN 30.12

PRICE _____

SUBTOTAL _____

TAX _____

TOTAL _____

1783

_____
WEIGHER

Terms: Net 30 days from the end of the month. A finance charge will be assessed on all past due accounts at a rate of 1-1/2% PER MONTH. Annual Finance Charge of 18%. Notice: It is specifically agreed that this company shall not be in any way responsible for damage to customers property resulting in Deliveries beyond curb line.

DRIVER'S SIGNATURE _____

IRON MOUNTAIN QUARRY LLC

Quarry site: 20800 Wayside Mine Rd – Granite Falls WA
Phone: (Toll Free) 1-866-672-3434

DATE 11/22/2017 **TIME** 7:41 **TICKET#** 002445

CUSTOMER 444 GLACIER ENVIRONMENTAL ☐ **CASH** ☐ **CHARGE**

JOB 4 730 S MERTLE ST **PO#** _____

HAULER 769 J D S TRUCKING **TRUCK#** 305 X ☐ **HIRED**

PRODUCT 506 CLASS 2 PETROLEUM CONTAM SOIL

GROSS	78760	**PRICE** _____
TARE	34580	**SUBTOTAL** _____
NET LB	36180	**TAX** _____
NET TN	18.09	**TOTAL** _____

7694

_____
WEIGHER

Terms: Net 30 days from the end of the month. A finance charge will be assessed on all past due accounts at a rate of 1-1/2% PER MONTH. Annual Finance Charge of 18%. Notice: It is specifically agreed that this company shall not be in any way responsible for damage to customers property resulting in Deliveries beyond curb line.

DRIVER'S SIGNATURE Evan Hyatt

IRON MOUNTAIN QUARRY LLC

Quarry site: 20800 Wayside Mine Rd – Granite Falls WA
Phone: (Toll Free) 1-866-672-3434

DATE 11/22/2017 **TIME** 7:58 **TICKET#** 802447

CUSTOMER A44 GLACIER ENVIRONMENTAL ☐ **CASH** ☐ **CHARGE**

JOB 4 730 S MERTLE ST **PO#** _____

HAULER 42 BUILDERS SAND AND GRAVEL **TRUCK#** 829 * ☐ **HIRED**

PRODUCT 302 CLASS 2 PETROLEUM CONTAM SOIL

GROSS	64480	**PRICE**	_____
TARE	36140	**SUBTOTAL**	_____
NET LB	28340	**TAX**	_____
NET TN	14.17	**TOTAL**	_____

824545

_____
WEIGHER

Terms: Net 30 days from the end of the month. A finance charge will be assessed on all past due accounts at a rate of 1-1/2% PER MONTH. Annual Finance Charge of 18%. Notice: It is specifically agreed that this company shall not be in any way responsible for damage to customers property resulting in Deliveries beyond curb line.

DRIVER'S SIGNATURE _____

IRON MOUNTAIN QUARRY LLC

Quarry site: 20800 Wayside Mine Rd – Granite Falls WA
Phone: (Toll Free) 1-866-672-3434

DATE 11/22/2017 **TIME** 8:07 **TICKET#** 002451

CUSTOMER 844 GLACIER ENVIRONMENTAL ☐ **CASH** ☐ **CHARGE**

JOB 4 730 S MERTLE ST **PO#** _____

HAULER 1054 MERLINTO TRUCKING **TRUCK#** MERLINTO X ☐ **HIRED**

PRODUCT 500 CLASS 2 PETROLEUM CONTAM SOIL

GROSS	88140	**PRICE**	_____
TARE	39360	**SUBTOTAL**	_____
NET LB	48780	**TAX**	_____
NET TN	24.39	**TOTAL**	_____

L782

_____
WEIGHER

Terms: Net 30 days from the end of the month. A finance charge will be assessed on all past due accounts at a rate of 1-1/2% PER MONTH. Annual Finance Charge of 18%. Notice: It is specifically agreed that this company shall not be in any way responsible for damage to customers property resulting in Deliveries beyond curb line.

DRIVER'S SIGNATURE _____

IRON MOUNTAIN QUARRY LLC

Quarry site: 20800 Wayside Mine Rd – Granite Falls WA
Phone: (Toll Free) 1-866-672-3434

11/27/2017 13:26 002693

DATE _____ **TIME** _____ **TICKET#** _____

CUSTOMER 644 GLACIER ENVIRONMENTAL _____ ☐ **CASH** ☐ **CHARGE**

JOB 4 730 S MERTLE ST _____ **PO#** _____

HAULER 2518 WESTSIDE LLC _____ **TRUCK#** WS1 _____ ☐ **HIRED**

PRODUCT 506 CLASS 2 PETROLEUM CONTAM SOIL _____

GROSS	114686	**PRICE** _____
TARE	42490	**SUBTOTAL** _____
NET LB	72200	**TAX** _____
NET TN	36.10	**TOTAL** _____

1345

_____
WEIGHER

Terms: Net 30 days from the end of the month. A finance charge will be assessed on all past due accounts at a rate of 1-1/2% PER MONTH. Annual Finance Charge of 18%. Notice: It is specifically agreed that this company shall not be in any way responsible for damage to customers property resulting in Deliveries beyond curb line.

DRIVER'S SIGNATURE _____

IRON MOUNTAIN QUARRY LLC

Quarry site: 20800 Wayside Mine Rd – Granite Falls WA
Phone: (Toll Free) 1-866-672-3434

11/27/2017 13:13 002689

DATE _____ **TIME** _____ **TICKET#** _____

844 GLACIER ENVIRONMENTAL
CUSTOMER _____ ☐ **CASH** ☐ **CHARGE**

4 730 S MERTLE ST
JOB _____ **PO#** _____

1854 MERANTO TRUCKING
HAULER _____ **TRUCK#** MERANTO2 ☐ **HIRED**

PRODUCT 508 CLASS 2 PETROLEUM CONTAM SOIL

GROSS 102460
TARE 38660
NET LB 63800
NET TN 31.90

PRICE _____
SUBTOTAL _____
TAX _____
TOTAL _____

720

_____
WEIGHER

Terms: Net 30 days from the end of the month. A finance charge will be assessed on all past due accounts at a rate of 1-1/2% PER MONTH. Annual Finance Charge of 18%. Notice: It is specifically agreed that this company shall not be in any way responsible for damage to customers property resulting in Deliveries beyond curb line.

DRIVER'S SIGNATURE _____

IRON MOUNTAIN QUARRY LLC

Quarry site: 20800 Wayside Mine Rd – Granite Falls WA
Phone: (Toll Free) 1-866-672-3434

DATE 11/20/2017 **TIME** 8:44 **TICKET#** 982766

CUSTOMER 884 GLACIER ENVIRONMENTAL ☐ **CASH** ☐ **CHARGE**

JOB 4 730 S NEKTLE ST **PO#** _____

HAULER 2363 SCOLERI TRUCKING **TRUCK#** SCOLERI ☒ **HIRED**

PRODUCT 305 CLASS 2 PETROLEUM CONTAM SOIL

GROSS	193920	**PRICE**	_____
TARE	41420	**SUBTOTAL**	_____
NET LB	62500	**TAX**	_____
NET TN	31.25	**TOTAL**	_____

1745

_____
WEIGHER

Terms: Net 30 days from the end of the month. A finance charge will be assessed on all past due accounts at a rate of 1-1/2% PER MONTH. Annual Finance Charge of 18%. Notice: It is specifically agreed that this company shall not be in any way responsible for damage to customers property resulting in Deliveries beyond curb line.

DRIVER'S SIGNATURE _____

IRON MOUNTAIN QUARRY LLC

Quarry site: 20800 Wayside Mine Rd – Granite Falls WA
Phone: (Toll Free) 1-866-672-3434

DATE 11/28/2017 **TIME** 12:56 **TICKET#** 0020052

CUSTOMER 344 GLACIER ENVIRONMENTAL ☐ **CASH** ☐ **CHARGE**

JOB 4 730 S MERTLE ST **PO#** _____

HAULER 2363 SCOLERI TRUCKING **TRUCK#** SCOLERI X ☐ **HIRED**

PRODUCT 560 CLASS 2 PETROLEUM CONTAM SOIL

GROSS	96920	**PRICE**	_____
TARE	41420	**SUBTOTAL**	_____
NET LB	55400	**TAX**	_____
NET TN	27.70	**TOTAL**	_____

L745

_____
WEIGHER

Terms: Net 30 days from the end of the month. A finance charge will be assessed on all past due accounts at a rate of 1-1/2% PER MONTH. Annual Finance Charge of 18%. Notice: It is specifically agreed that this company shall not be in any way responsible for damage to customers property resulting in Deliveries beyond curb line.

DRIVER'S SIGNATURE _____

IRON MOUNTAIN QUARRY LLC

Quarry site: 20800 Wayside Mine Rd – Granite Falls WA
Phone: (Toll Free) 1-866-672-3434

DATE 11/28/2017 **TIME** 13:53 **TICKET#** 002861

CUSTOMER 844 GLACIER ENVIRONMENTAL ☐ **CASH** ☐ **CHARGE**

JOB 4 730 S MERTLE ST **PO#** _____

HAULER 1854 MERANTO TRUCKING **TRUCK#** MERANTO2 X ☐ **HIRED**

PRODUCT 50A CLASS A PETROLEUM CONTAM SOIL

GROSS	161340	**PRICE** _____
TARE	99160	**SUBTOTAL** _____
NET LB	62180	**TAX** _____
NET TN	31.09	**TOTAL** _____

1733

_____
WEIGHER

Terms: Net 30 days from the end of the month. A finance charge will be assessed on all past due accounts at a rate of 1-1/2% PER MONTH. Annual Finance Charge of 18%. Notice: It is specifically agreed that this company shall not be in any way responsible for damage to customers property resulting in Deliveries beyond curb line.

DRIVER'S SIGNATURE _____

IRON MOUNTAIN QUARRY LLC

Quarry site: 20800 Wayside Mine Rd – Granite Falls WA
Phone: (Toll Free) 1-866-672-3434

DATE 11/20/2017 **TIME** 9:39 **TICKET#** 082787

CUSTOMER 044 GLACIER ENVIRONMENTAL ☐ **CASH** ☐ **CHARGE**

JOB 4 730 S MERTLE ST **PO#** _____

HAULER 1854 MERANTO TRUCKING **TRUCK#** MERANTO2 ☐ **HIRED**

PRODUCT 500 CLASS 2 PETROLEUM CONTAM SOIL

GROSS	111746	**PRICE** _____
TARE	39160	**SUBTOTAL** _____
NET LB	72586	**TAX** _____
NET TN	36.29	**TOTAL** _____

1733

_____
WEIGHER

Terms: Net 30 days from the end of the month. A finance charge will be assessed on all past due accounts at a rate of 1-1/2% PER MONTH. Annual Finance Charge of 18%. Notice: It is specifically agreed that this company shall not be in any way responsible for damage to customers property resulting in Deliveries beyond curb line.

DRIVER'S SIGNATURE _____

IRON MOUNTAIN QUARRY LLC

Quarry site: 20800 Wayside Mine Rd – Granite Falls WA
Phone: (Toll Free) 1-866-672-3434

DATE 11/30/2017 **TIME** 14:11 **TICKET#** 003245

CUSTOMER 044 GLACIER ENVIRONMENTAL ☐ **CASH** ☐ **CHARGE**

JOB 4 730 S MERCLE ST **PO#** _____

HAULER 1054 MORATO TRUCKING **TRUCK#** MORATO X ☐ **HIRED**

PRODUCT 903 CLASS 2 PETROLEUM CONTAM SOIL

GROSS	99580	**PRICE** _____
TARE	39360	**SUBTOTAL** _____
NET LB	60220	**TAX** _____
NET TN	30.11	**TOTAL** _____

1789

_____
WEIGHER

Terms: Net 30 days from the end of the month. A finance charge will be assessed on all past due accounts at a rate of 1-1/2% PER MONTH. Annual Finance Charge of 18%. Notice: It is specifically agreed that this company shall not be in any way responsible for damage to customers property resulting in Deliveries beyond curb line.

DRIVER'S SIGNATURE _____

IRON MOUNTAIN QUARRY LLC

Quarry site: 20800 Wayside Mine Rd – Granite Falls WA
Phone: (Toll Free) 1-866-672-3434

DATE 11/30/2017 **TIME** 13:39 **TICKET#** 883238

CUSTOMER 844 GLACIER ENVIRONMENTAL ☐ **CASH** ☐ **CHARGE**

JOB 4 730 S MERTLE ST **PO#** _____

HAULER 2363 SCOLERI TRUCKING **TRUCK#** SCOLERI ☒ **HIRED**

PRODUCT 508 CLASS 2 PETROLEUM CONTAM SOIL

GROSS	102960	**PRICE**	_____
TARE	41420	**SUBTOTAL**	_____
NET LB	60640	**TAX**	_____
NET TN	30.32	**TOTAL**	_____

1749

_____
WEIGHER

Terms: Net 30 days from the end of the month. A finance charge will be assessed on all past due accounts at a rate of 1-1/2% PER MONTH. Annual Finance Charge of 18%. Notice: It is specifically agreed that this company shall not be in any way responsible for damage to customers property resulting in Deliveries beyond curb line.

DRIVER'S SIGNATURE _____

IRON MOUNTAIN QUARRY LLC

Quarry site: 20800 Wayside Mine Rd – Granite Falls WA
Phone: (Toll Free) 1-866-672-3434

11/30/2017 12:42 003209

DATE _____ **TIME** _____ **TICKET#** _____

844 GLACIER ENVIRONMENTAL

CUSTOMER _____ ☐ **CASH** ☐ **CHARGE**

4 730 S MERTLE ST

JOB _____ **PO#** _____

2518 WESTSIDE LLC

HAULER _____ **TRUCK#** WS1 ☐ **HIRED**

500 CLASS 2 PETROLEUM CONTAM SOIL

PRODUCT _____

GROSS	115100	**PRICE**	_____
TARE	41260	**SUBTOTAL**	_____
NET LB	73840	**TAX**	_____
NET TN	36.92	**TOTAL**	_____

1353

_____
WEIGHER

Terms: Net 30 days from the end of the month. A finance charge will be assessed on all past due accounts at a rate of 1-1/2% PER MONTH. Annual Finance Charge of 18%. Notice: It is specifically agreed that this company shall not be in any way responsible for damage to customers property resulting in Deliveries beyond curb line.

DRIVER'S SIGNATURE _____

IRON MOUNTAIN QUARRY LLC

Quarry site: 20800 Wayside Mine Rd – Granite Falls WA
Phone: (Toll Free) 1-866-672-3434

DATE 12/01/2017 **TIME** 7:31 **TICKET#** 003255

CUSTOMER 644 GLACIER ENVIRONMENTAL ☐ **CASH** ☐ **CHARGE**

JOB 4 730 S MERTLE ST **PO#** _____

HAULER 1854 MERANTO TRUCKING **TRUCK#** MERANTO ☐ **HIRED**

PRODUCT 508 CLASS 2 PETROLEUM CONTAM SOIL

GROSS	103020	**PRICE**	_____
TARE	39360	**SUBTOTAL**	_____
NET LB	63660	**TAX**	_____
NET TN	31.83	**TOTAL**	_____

791

_____
WEIGHER

Terms: Net 30 days from the end of the month. A finance charge will be assessed on all past due accounts at a rate of 1-1/2% PER MONTH. Annual Finance Charge of 18%. Notice: It is specifically agreed that this company shall not be in any way responsible for damage to customers property resulting in Deliveries beyond curb line.

DRIVER'S SIGNATURE _____

IRON MOUNTAIN QUARRY LLC

Quarry site: 20800 Wayside Mine Rd – Granite Falls WA
Phone: (Toll Free) 1-866-672-3434

DATE 12/01/2017 **TIME** 7:55 **TICKET#** 003306

CUSTOMER 644 GLACIER ENVIRONMENTAL ☐ **CASH** ☐ **CHARGE**

JOB 4 730 S MERTLE ST **PO#** _____

HAULER 2363 SCOLERI TRUCKING **TRUCK#** SCOLERI ☒ **HIRED**

PRODUCT 500 CLASS 2 PETROLEUM CONTAM SOIL

GROSS	108660	**PRICE**	_____
TARE	41420	**SUBTOTAL**	_____
NET LB	67240	**TAX**	_____
NET TN	33.62	**TOTAL**	_____

_____
WEIGHER

Terms: Net 30 days from the end of the month. A finance charge will be assessed on all past due accounts at a rate of 1-1/2% PER MONTH. Annual Finance Charge of 18%. Notice: It is specifically agreed that this company shall not be in any way responsible for damage to customers property resulting in Deliveries beyond curb line.

DRIVER'S SIGNATURE _____

IRON MOUNTAIN QUARRY LLC

Quarry site: 20800 Wayside Mine Rd – Granite Falls WA
Phone: (Toll Free) 1-866-672-3434

DATE 12/01/2017 **TIME** 10:52 **TICKET#** 0001367

CUSTOMER AAA GLACIER ENVIRONMENTAL ☐ **CASH** ☐ **CHARGE**

JOB 4 736 S MYRTLE ST **PO#** _____

HAULER 2515 WESTSIDE LLC **TRUCK#** 051 X ☐ **HIRED**

PRODUCT 508 CLASS 2 PETROLEUM CONTAM SOIL

GROSS	109540	**PRICE**	_____
TARE	41260	**SUBTOTAL**	_____
NET LB	68280	**TAX**	_____
NET TN	34.14	**TOTAL**	_____

1355

_____
WEIGHER

Terms: Net 30 days from the end of the month. A finance charge will be assessed on all past due accounts at a rate of 1-1/2% PER MONTH. Annual Finance Charge of 18%. Notice: It is specifically agreed that this company shall not be in any way responsible for damage to customers property resulting in Deliveries beyond curb line.

DRIVER'S SIGNATURE _____

IRON MOUNTAIN QUARRY LLC

Quarry site: 20800 Wayside Mine Rd – Granite Falls WA
Phone: (Toll Free) 1-866-672-3434

DATE 12/01/2017 **TIME** 14:43 **TICKET#** 803453

CUSTOMER 344 GLACIER ENVIRONMENTAL ☐ **CASH** ☐ **CHARGE**

JOB 4 730 S HEKTLE ST **PO#** _____

HAULER 2510 WESTSIDE LLC **TRUCK#** 951 X ☐ **HIRED**

PRODUCT 500 CLASS 2 PETROLEUM CONTAM SOIL

GROSS	111660	**PRICE** _____
TARE	41280	**SUBTOTAL** _____
NET LB	70400	**TAX** _____
NET TN	35.20	**TOTAL** _____

1359

_____
WEIGHER

Terms: Net 30 days from the end of the month. A finance charge will be assessed on all past due accounts at a rate of 1-1/2% PER MONTH. Annual Finance Charge of 18%. Notice: It is specifically agreed that this company shall not be in any way responsible for damage to customers property resulting in Deliveries beyond curb line.

DRIVER'S SIGNATURE _____

IRON MOUNTAIN QUARRY LLC

Quarry site: 20800 Wayside Mine Rd – Granite Falls WA
Phone: (Toll Free) 1-866-672-3434

DATE 12/03/2017 **TIME** 15:04 **TICKET#** 003456

CUSTOMER 844 GLACIER ENVIRONMENTAL ☐ **CASH** ☐ **CHARGE**

JOB 4 730 S MERTLE ST **PO#** _____

HAULER 1654 MENNITO TRUCKING **TRUCK#** MENNITO ☒ **HIRED**

PRODUCT 508 CLASS 2 PETROLEUM CONTAM SOIL

GROSS	104640	**PRICE**	_____
TARE	39360	**SUBTOTAL**	_____
NET LB	65280	**TAX**	_____
NET TN	32.64	**TOTAL**	_____

1792

_____
WEIGHER

Terms: Net 30 days from the end of the month. A finance charge will be assessed on all past due accounts at a rate of 1-1/2% PER MONTH. Annual Finance Charge of 18%. Notice: It is specifically agreed that this company shall not be in any way responsible for damage to customers property resulting in Deliveries beyond curb line.

DRIVER'S SIGNATURE _____

IRON MOUNTAIN QUARRY LLC

Quarry site: 20800 Wayside Mine Rd – Granite Falls WA
Phone: (Toll Free) 1-866-672-3434

DATE 12/01/2017 **TIME** 11:13 **TICKET#** 003300

CUSTOMER 844 GLACIER ENVIRONMENTAL ☐ **CASH** ☐ **CHARGE**

JOB 4 730 S MERTLE ST **PO#** _____

HAULER 1054 MERANTO TRUCKING **TRUCK#** MERANTO ☐ **HIRED**

PRODUCT 508 CLASS 2 PETROLEUM CONTAM SOIL

GROSS	109080	**PRICE**	
TARE	39360	**SUBTOTAL**	
NET LB	69720	**TAX**	
NET TN	34.86	**TOTAL**	

WEIGHER

Terms: Net 30 days from the end of the month. A finance charge will be assessed on all past due accounts at a rate of 1-1/2% PER MONTH. Annual Finance Charge of 18%. Notice: It is specifically agreed that this company shall not be in any way responsible for damage to customers property resulting in Deliveries beyond curb line.

DRIVER'S SIGNATURE

IRON MOUNTAIN QUARRY LLC

Quarry site: 20800 Wayside Mine Rd – Granite Falls WA
Phone: (Toll Free) 1-866-672-3434

DATE 12/04/2017 **TIME** 10:27 **TICKET#** 003572

CUSTOMER 844 GLACIER ENVIRONMENTAL ☐ **CASH** ☐ **CHARGE**

JOB 4 730 S HERTLE ST **PO#** _____

HAULER 1854 MERANTO TRUCKING **TRUCK#** MERANTO ☐ **HIRED**

PRODUCT 508 CLASS 2 PETROLEUM CONTAM SOIL

GROSS	103360	**PRICE**	
TARE	39360	**SUBTOTAL**	
NET LB	64000	**TAX**	
NET TN	32.00	**TOTAL**	

1793

WEIGHER

Terms: Net 30 days from the end of the month. A finance charge will be assessed on all past due accounts at a rate of 1-1/2% PER MONTH. Annual Finance Charge of 18%. Notice: It is specifically agreed that this company shall not be in any way responsible for damage to customers property resulting in Deliveries beyond curb line.

DRIVER'S SIGNATURE _____

IRON MOUNTAIN QUARRY LLC

Quarry site: 20800 Wayside Mine Rd – Granite Falls WA
Phone: (Toll Free) 1-866-672-3434

DATE 12/04/2017 **TIME** 10:57 **TICKET#** 003587

CUSTOMER 044 GLACIER ENVIRONMENTAL ☐ **CASH** ☐ **CHARGE**

JOB 4 730 S MERTLE ST **PO#** _____

HAULER 2519 WESTSIDE LLC **TRUCK#** 003 ☐ **HIRED**

PRODUCT 50A CLASS 2 PETROLEUM CONTAM SOIL

GROSS	101440	**PRICE** _____
TARE	41260	**SUBTOTAL** _____
NET LB	60180	**TAX** _____
NET TN	30.09	**TOTAL** _____

1350

_____
WEIGHER

Terms: Net 30 days from the end of the month. A finance charge will be assessed on all past due accounts at a rate of 1-1/2% PER MONTH. Annual Finance Charge of 18%. Notice: It is specifically agreed that this company shall not be in any way responsible for damage to customers property resulting in Deliveries beyond curb line.

DRIVER'S SIGNATURE _____

IRON MOUNTAIN QUARRY LLC

Quarry site: 20800 Wayside Mine Rd – Granite Falls WA
Phone: (Toll Free) 1-866-672-3434

DATE _____ TIME _____ TICKET# _____

CUSTOMER _____ ☐ CASH ☐ CHARGE

JOB _____ PO# _____

HAULER _____ TRUCK# _____ ☐ HIRED

PRODUCT _____

PRICE _____

SUBTOTAL _____

TAX _____

TOTAL _____

_____
WEIGHER

Terms: Net 30 days from the end of the month. A finance charge will be assessed on all past due accounts at a rate of 1-1/2% PER MONTH. Annual Finance Charge of 18%. Notice: It is specifically agreed that this company shall not be in any way responsible for damage to customers property resulting in Deliveries beyond curb line.

DRIVER'S SIGNATURE _____

IRON MOUNTAIN QUARRY LLC

Quarry site: 20800 Wayside Mine Rd – Granite Falls WA
Phone: (Toll Free) 1-866-672-3434

DATE 12/09/2017 TIME 12:47 TICKET# 004414

CUSTOMER 644 GLACIER ENVIRONMENTAL ☐ CASH ☐ CHARGE

JOB 4 730 S MERTLE ST PO# _____

HAULER 2102 SCOLERI TRUCKING TRUCK# SSCOLERI ☐ HIRED

PRODUCT 240 DUMP FEES-DIRT ONLY

GROSS	55600	PRICE	
TARE	26600	SUBTOTAL	
NET LB	29000	TAX	
NET TN	14.50	TOTAL	

425 445-0608

WEIGHER

Terms: Net 30 days from the end of the month. A finance charge will be assessed on all past due accounts at a rate of 1-1/2% PER MONTH. Annual Finance Charge of 18%. Notice: It is specifically agreed that this company shall not be in any way responsible for damage to customers property resulting in Deliveries beyond curb line.

DRIVER'S SIGNATURE

CLASS 2 SOIL DISPOSAL
BID ITEM 32A
Dec. 10-March 31, 2018

Date	Ticket #	TONS
3/30/2018	015224	33.11

IRON MOUNTAIN QUARRY LLC

Quarry site: 20800 Wayside Mine Rd – Granite Falls WA
Phone: (Toll Free) 1-866-672-3434

03/30/201A 13:59 015224

DATE _____ **TIME** _____ **TICKET#** _____

844 GLACIER ENVIRONMENTAL

CUSTOMER _____ ☐ **CASH** ☐ **CHARGE**

4 730 S MERTLE ST

JOB _____ **PO#** _____

241 SPRINGBROOK NURSERY SDN11 X

HAULER _____ **TRUCK#** _____ ☐ **HIRED**

PRODUCT 500 CLASS 2 PETROLEUM CONTAM SOIL

GROSS	104760	**PRICE**	_____
TARE	38540	**SUBTOTAL**	_____
NET LB	66220	**TAX**	_____
NET TN	33.11	**TOTAL**	_____

112638

_____
WEIGHER

Terms: Net 30 days from the end of the month. A finance charge will be assessed on all past due accounts at a rate of 1-1/2% PER MONTH. Annual Finance Charge of 18%. Notice: It is specifically agreed that this company shall not be in any way responsible for damage to customers property resulting in Deliveries beyond curb line.

DRIVER'S SIGNATURE _____ RAY

CLASS 2 SOIL DISPOSAL
BID ITEM 32A
April 4, 2018 to May 4, 2018

Date	Ticket #	TONS
4/4/2018	015798	35.64
4/4/2018	015662	33.07
4/25/2018	018218	31.30
4/26/2018	018359	34.58
4/26/2018	018302	36.16
4/26/2018	018414	31.60
4/30/2018	018719	33.21
4/30/2018	018797	35.38
5/2/2018	018960	32.36
5/4/2018	019242	33.21
5/4/2018	019287	30.24
	Total	366.75

IRON MOUNTAIN QUARRY LLC

Quarry site: 20800 Wayside Mine Rd – Granite Falls WA
Phone: (Toll Free) 1-866-672-3434

DATE 04/04/2018 **TIME** 11:55 **TICKET#** 015798

CUSTOMER 844 GLACIER ENVIRONMENTAL ☐ **CASH** ☐ **CHARGE**

JOB 4 730 S MERTLE ST **PO#** _____

HAULER 2518 WESTSIDE LLC **TRUCK#** WS1 ☐ **HIRED**

PRODUCT 508 CLASS 2 PETROLEUM CONTAM SOIL

GROSS	112540	**PRICE**	
TARE	41260	**SUBTOTAL**	
NET LB	71280	**TAX**	
NET TN	35.64	**TOTAL**	

1475

WEIGHER

Terms: Net 30 days from the end of the month. A finance charge will be assessed on all past due accounts at a rate of 1-1/2% PER MONTH. Annual Finance Charge of 18%. Notice: It is specifically agreed that this company shall not be in any way responsible for damage to customers property resulting in Deliveries beyond curb line.

DRIVER'S SIGNATURE _____

IRON MOUNTAIN QUARRY LLC

Quarry site: 20800 Wayside Mine Rd – Granite Falls WA
Phone: (Toll Free) 1-866-672-3434

DATE 04/04/2018 **TIME** 7:03 **TICKET#** 015662

CUSTOMER 844 GLACIER ENVIRONMENTAL ☐ **CASH** ☐ **CHARGE**

JOB 4 730 S MERTLE ST **PO#** _____

HAULER 2518 WESTSIDE LLC **TRUCK#** WS1 X ☐ **HIRED**

PRODUCT 21 1 1/4 MINUS

GROSS	107400	**PRICE**	
TARE	41260	**SUBTOTAL**	
NET LB	66140	**TAX**	
NET TN	33.07	**TOTAL**	

1475

WEIGHER

Terms: Net 30 days from the end of the month. A finance charge will be assessed on all past due accounts at a rate of 1-1/2% PER MONTH. Annual Finance Charge of 18%. Notice: It is specifically agreed that this company shall not be in any way responsible for damage to customers property resulting in Deliveries beyond curb line.

DRIVER'S SIGNATURE _____

IRON MOUNTAIN QUARRY LLC

Quarry site: 20800 Wayside Mine Rd – Granite Falls WA
Phone: (Toll Free) 1-866-672-3434

DATE 04/25/2018 **TIME** 13:10 **TICKET#** 018218

CUSTOMER 844 GLACIER ENVIRONMENTAL ☐ **CASH** ☐ **CHARGE**

JOB 4 730 S MERTLE ST **PO#** _____

HAULER 2518 WESTSIDE LLC **TRUCK#** WS1 X ☐ **HIRED**

PRODUCT 508 CLASS 2 PETROLEUM CONTAM SOIL

GROSS	103860	**PRICE**	_____
TARE	41260	**SUBTOTAL**	_____
NET LB	62600	**TAX**	_____
NET TN	31.30	**TOTAL**	_____

1500

_____
WEIGHER

Terms: Net 30 days from the end of the month. A finance charge will be assessed on all past due accounts at a rate of 1-1/2% PER MONTH. Annual Finance Charge of 18%. Notice: It is specifically agreed that this company shall not be in any way responsible for damage to customers property resulting in Deliveries beyond curb line.

DRIVER'S SIGNATURE _____

IRON MOUNTAIN QUARRY LLC

Quarry site: 20800 Wayside Mine Rd – Granite Falls WA
Phone: (Toll Free) 1-866-672-3434

DATE 04/26/2018 **TIME** 11:46 **TICKET#** 018359

CUSTOMER 844 GLACIER ENVIRONMENTAL ☐ **CASH** ☐ **CHARGE**

JOB 4 730 S MERTLE ST **PO#** _____

HAULER 2518 WESTSIDE LLC **TRUCK#** WS1 X ☐ **HIRED**

PRODUCT 508 CLASS 2 PETROLEUM CONTAM SOIL

GROSS	110420	**PRICE**	
TARE	41260	**SUBTOTAL**	
NET LB	69160	**TAX**	
NET TN	34.58	**TOTAL**	

1502

_____
WEIGHER

Terms: Net 30 days from the end of the month. A finance charge will be assessed on all past due accounts at a rate of 1-1/2% PER MONTH. Annual Finance Charge of 18%. Notice: It is specifically agreed that this company shall not be in any way responsible for damage to customers property resulting in Deliveries beyond curb line.

DRIVER'S SIGNATURE _____

IRON MOUNTAIN QUARRY LLC

Quarry site: 20800 Wayside Mine Rd – Granite Falls WA
Phone: (Toll Free) 1-866-672-3434

DATE 04/26/2010 **TIME** 8:17 **TICKET#** 018302

CUSTOMER 844 GLACIER ENVIRONMENTAL ☐ **CASH** ☐ **CHARGE**

JOB 4 730 S MERTLE ST **PO#** _____

HAULER 2510 WFSTSIDE LLC **TRUCK#** W51 ☐ **HIRED**

PRODUCT 500 CLASS 2 PETROLEUM CONTAM SOIL

GROSS	113500	**PRICE**	
TARE	41260	**SUBTOTAL**	
NET LB	72320	**TAX**	
NET TN	36.16	**TOTAL**	

1502

_____
WEIGHER

Terms: Net 30 days from the end of the month. A finance charge will be assessed on all past due accounts at a rate of 1-1/2% PER MONTH. Annual Finance Charge of 18%. Notice: It is specifically agreed that this company shall not be in any way responsible for damage to customers property resulting in Deliveries beyond curb line.

DRIVER'S SIGNATURE _____

IRON MOUNTAIN QUARRY LLC

Quarry site: 20800 Wayside Mine Rd – Granite Falls WA
Phone: (Toll Free) 1-866-672-3434

DATE 04/26/2018 TIME 15:23 TICKET# 218414

CUSTOMER 344 GLACIER ENVIRONMENTAL ☐ CASH ☐ CHARGE

JOB 4 730 S MERTLE ST PO# _____

HAULER 2518 WESTSIDE LLC TRUCK# WS1 X ☐ HIRED

PRODUCT 528 CLASS B PETROLEUM CONTAM SOIL

GROSS	124460	PRICE _____
TARE	61260	SUBTOTAL _____
NET LB	63200	TAX _____
NET TN	31.60	TOTAL _____

_____
WEIGHER

Terms: Net 30 days from the end of the month. A finance charge will be assessed on all past due accounts at a rate of 1-1/2% PER MONTH. Annual Finance Charge of 18%. Notice: It is specifically agreed that this company shall not be in any way responsible for damage to customers property resulting in Deliveries beyond curb line.

DRIVER'S SIGNATURE _____

IRON MOUNTAIN QUARRY LLC

Quarry site: 20800 Wayside Mine Rd – Granite Falls WA
Phone: (Toll Free) 1-866-672-3434

DATE 7/22/2014 **TIME** 12:36 **TICKET#** 212713

CUSTOMER 944 GLACIER ENVIRONMENTAL ☐ **CASH** ☐ **CHARGE**

JOB 4 730 S MERTLE ST **PO#** _____

HAULER 6618 WESTSIDE LLC **TRUCK#** 961 ☐ **HIRED**

PRODUCT 880 CLASS B PETROLEUM CONTAM SOIL

GROSS	107560	**PRICE** _____
TARE	43260	**SUBTOTAL** _____
NET LB	64300	**TAX** _____
NET TN	32.15	**TOTAL** _____

_____
WEIGHER

Terms: Net 30 days from the end of the month. A finance charge will be assessed on all past due accounts at a rate of 1-1/2% PER MONTH. Annual Finance Charge of 18%. Notice: It is specifically agreed that this company shall not be in any way responsible for damage to customers property resulting in Deliveries beyond curb line.

DRIVER'S SIGNATURE _____

IRON MOUNTAIN QUARRY LLC

Quarry site: 20800 Wayside Mine Rd – Granite Falls WA
Phone: (Toll Free) 1-866-672-3434

DATE 04/30/2016 TIME 14:23 TICKET# 215707

CUSTOMER [illegible] ☐ CASH ☐ CHARGE

JOB A 735 S MERTLE ST PO# _____

HAULER [illegible] TRUCK# [illegible] ☐ HIRED

PRODUCT 5/8 CLASS B PETROLEUM CONTAMINATED SOIL

GROSS	140560	PRICE	_____
TARE	41460	SUBTOTAL	_____
NET LB	79762	TAX	_____
NET TN	39.88	TOTAL	_____

_____
WEIGHER

Terms: Net 30 days from the end of the month. A finance charge will be assessed on all past due accounts at a rate of 1-1/2% PER MONTH. Annual Finance Charge of 18%. Notice: It is specifically agreed that this company shall not be in any way responsible for damage to customers property resulting in Deliveries beyond curb line.

DRIVER'S SIGNATURE _____

IRON MOUNTAIN QUARRY LLC

Quarry site: 20800 Wayside Mine Rd – Granite Falls WA
Phone: (Toll Free) 1-866-672-3434

DATE 05/02/2018 **TIME** 8:15 **TICKET#** 018960

CUSTOMER 044 GLACIER ENVIRONMENTAL ☐ **CASH** ☐ **CHARGE**

JOB 4 730 S MERTLE CT **PO#** _____

HAULER 2519 WESTSIDE LLC **TRUCK#** WS1 X ☐ **HIRED**

PRODUCT 508 CLASS 2 PETROLEUP CONTAM SOIL
Class 2 Petroleum Contam Soil

GROSS	185960	**PRICE**	_____
TARE	41200	**SUBTOTAL**	_____
NET LB	64760	**TAX**	_____
NET TN	32.38	**TOTAL**	_____
SOS	32.36		

_____
WEIGHER

Terms: Net 30 days from the end of the month. A finance charge will be assessed on all past due accounts at a rate of 1-1/2% PER MONTH. Annual Finance Charge of 18%. Notice: It is specifically agreed that this company shall not be in any way responsible for damage to customers property resulting in Deliveries beyond curb line.

DRIVER'S SIGNATURE _____

206-794-7047

IRON MOUNTAIN QUARRY LLC

Quarry site: 20800 Wayside Mine Rd – Granite Falls WA
Phone: (Toll Free) 1-866-672-3434

05/04/2018 8:13 019242

DATE _____ **TIME** _____ **TICKET#** _____

844 GLACIER ENVIRONMENTAL

CUSTOMER _____ ☐ **CASH** ☐ **CHARGE**

4 730 S MERTLE ST

JOB _____ **PO#** _____

2518 WESTSIDE LLC

HAULER _____ **TRUCK#** WS1 X ☐ **HIRED**

508 CLASS 2 PETROLEUM CONTAM SOIL

PRODUCT _____

GROSS	107680
TARE	41260
NET LB	66420
NET TN	33.21

1512

PRICE _____

SUBTOTAL _____

TAX _____

TOTAL _____

_____
WEIGHER

Terms: Net 30 days from the end of the month. A finance charge will be assessed on all past due accounts at a rate of 1-1/2% PER MONTH. Annual Finance Charge of 18%. Notice: It is specifically agreed that this company shall not be in any way responsible for damage to customers property resulting in Deliveries beyond curb line.

DRIVER'S SIGNATURE _____

IRON MOUNTAIN QUARRY LLC

Quarry site: 20800 Wayside Mine Rd – Granite Falls WA
Phone: (Toll Free) 1-866-672-3434

DATE _____ TIME _____ TICKET# 019287

CUSTOMER _____ ☐ CASH ☐ CHARGE

JOB _____ PO# _____

HAULER _____ TRUCK# _____ ☐ HIRED

PRODUCT Class 2 Petroleum Contam Soil

PRICE _____

SUBTOTAL _____

TAX _____

TOTAL 30.24

_____
WEIGHER

Terms: Net 30 days from the end of the month. A finance charge will be assessed on all past due accounts at a rate of 1-1/2% PER MONTH. Annual Finance Charge of 18%. Notice: It is specifically agreed that this company shall not be in any way responsible for damage to customers property resulting in Deliveries beyond curb line.

DRIVER'S SIGNATURE _____

Renton Concrete Recyclers
22121 17th Ave SE, #117
BOTHELL, WA 98021-7404
(425) 481-9101 PHONE
(425) 486-3346 FAX

INVOICE

Customer	0001018
Job	0037
Date	07/28/17
Invoice #	0111912

RECEIVED
AUG 07 2017
BY:

Bill To	GLACIER EVNIRONMENTAL P.O. BOX 1097 MUKILTEO, WA 98275	Job Description	730 S MERTLE STREET

Plant	Renton	Ticket Date	07/28/17

Item #	Description	Ticket #/Reference	Quantity	Price	Total
000071	CON HAULBACK 2'-SM	259326, 259339	60.00	9.50	570.00
000082	CHB 2-4' WITH REBAR	259326, 259339	40.00	12.00	480.00
000200	TRUCKING INCOME	002187	7.00	135.00	945.00
000200	TRUCKING INCOME	023200	6.50	135.00	877.50
000800	5% WASTE DISPOSAL S/	259326	.00	.00	31.00
000800	5% WASTE DISPOSAL S/	259339	.00	.00	21.50

☐ Bill ☐ CM PM APP RW
Vendor Renton Concrete
Act Date 7/28/17 Due Date 8/27/17
Ref # 0111912
M Eq/F (S) T O Job 17-036
GL ACCT _____ AMT 2925.00
GL ACCT _____ AMT
PO # _____ Entered _____
ENTERED

Tons Yds

Subtotal	Tax	Total
2925.00	.00	2925.00

Customer Copy

Renton Concrete Recyclers
22121 17th Ave SE, #117
BOTHELL, WA 98021-7404
(425) 481-9101 PHONE
(425) 486-3346 FAX

INVOICE

RECEIVED
AUG 30 2017
BY:

Customer	0001018
Job	0037
Date	08/24/17
Invoice #	0112644

Bill To	GLACIER EVNIRONMENTAL P.O. BOX 1097 MUKILTEO, WA 98275	Job Description	730 S MERTLE STREET

Plant	Renton	Ticket Date	08/24/17

Item #	Description	Ticket #/Reference	Quantity	Price	Total
000082	CHB 2-4' WITH REBAR	260583	60.00	12.00	720.00
000400	MISCELLANEOUS PRODUC	260583	8.00	135.00	1080.00
000800	5% WASTE DISPOSAL S/	260583	.00	.00	36.00

☐ Bill ☐ CM PM APP RW
Vendor Renton Concrete
Act Date 8/24/17 Due Date 9/23/17
Ref # 0112644
M Eq/F (5) T O Job 17-036
GL ACCT _____ AMT 1836.00
GL ACCT _____ AMT _____
PO # _____ Entered ENTERED

Subtotal	Tax	Total
1836.00	.00	1836.00

Customer Copy

Renton Concrete Recyclers
22121 17th Ave SE, #117
BOTHELL, WA 98021-7404
(425) 481-9101 PHONE
(425) 486-3346 FAX

INVOICE

Customer	0001018
Job	0037
Date	07/27/17
Invoice #	0111877

RECEIVED
AUG 07 2017
BY:

Bill To	GLACIER EVNIRONMENTAL P.O. BOX 1097 MUKILTEO, WA 98275	Job Description	730 S MERTLE STREET

Plant	Renton	Ticket Date	07/27/17

Item #	Description	Ticket #/Reference	Quantity	Price	Total
000071	CON HAULBACK 2'-SM	259274, 259276	110.00	9.50	1045.00
000200	TRUCKING INCOME	002186	9.00	135.00	1215.00
000200	TRUCKING INCOME	023199	9.50	135.00	1282.50
000625	2X4 QUARRY ROCK	259275, 259277	55.30	27.00	1493.10
000800	5% WASTE DISPOSAL S/	259274, 259276	.00	.00	52.25

☐ BHI ☐ CM PM APP RW
Vendor Renton Concrete
Act Date 7/27/17 Due Date 8/26/17
Ref # 0111877
M Eq/F (S) T O Job 17-036
GL ACCT _____ AMT 5087.85
GL ACCT _____ AMT _____
PO # _____ Entered

ENTERED

Subtotal	Tax	Total
5087.85	.00	5087.85

Customer Copy

Renton Concrete Recyclers
22121 17th Ave SE, #117
BOTHELL, WA 98021-7404
(425) 481-9101 PHONE
(425) 486-3346 FAX

INVOICE

Customer	0001018
Job	0037
Date	08/07/17
Invoice #	0112112

RECEIVED
AUG 17 2017
BY:

Bill To	GLACIER EVNIRONMENTAL P.O. BOX 1097 MUKILTEO, WA 98275	Job Description	730 S MERTLE STREET

Plant	Renton	Ticket Date	08/07/17

Item #	Description	Ticket #/Reference	Quantity	Price	Total
000072	CON HAULBACK 2-4'	259631	40.00	10.50	420.00
000200	TRUCKING INCOME	002198	6.50	135.00	877.50
000800	5% WASTE DISPOSAL S/	259631	.00	.00	21.00

☐BHI ☐CM PM APP RW
Vendor Renton Concrete
Act Date 8/7/17 Due Date 9/6/17
Ref # 0112112
M Eq/F (S) T O Job 17-036
GL ACCT _____ AMT 1318.50
GL ACCT _____ AMT
PO # _____ Entered _____
ENTERED

Subtotal	Tax	Total
1318.50	.00	1318.50

Customer Copy

Renton Concrete Recyclers
22121 17th Ave SE, #117
BOTHELL, WA 98021-7404
(425) 481-9101 PHONE
(425) 486-3346 FAX

INVOICE

Customer	0001018
Job	0037
Date	08/10/17
Invoice #	0112240

RECEIVED
AUG 17 2017
BY:

Bill To	GLACIER EVNIRONMENTAL P.O. BOX 1097 MUKILTEO, WA 98275	Job Description	730 S MERTLE STREET

Plant	Renton	Ticket Date	08/10/17

Item #	Description	Ticket #/Reference	Quantity	Price	Total
000072	CON HAULBACK 2-4'	259860	20.00	10.50	210.00
000800	5% WASTE DISPOSAL S/	259860	.00	.00	10.50

☐ Bill ☐ CM PM APP RW
Vendor Renton Concrete
Act Date 8/10/17 Due Date 9/9/17
Ref # 0112240
M Eq/F (S) T O Job 17-036
GL ACCT _____ AMT 220.50
GL ACCT _____ AMT
PO # _____ Entered

ENTERED

Subtotal	Tax	Total
220.50	.00	220.50

Customer Copy

Renton Concrete Recyclers
22121 17th Ave SE, #117
BOTHELL, WA 98021-7404
(425) 481-9101 PHONE
(425) 486-3346 FAX

INVOICE

Customer	0001018
Job	0037
Date	08/08/17
Invoice #	0112158

RECEIVED
AUG 17 2017
BY:

Bill To	GLACIER EVNIRONMENTAL P.O. BOX 1097 MUKILTEO, WA 98275	Job Description	730 S MERTLE STREET

Plant	Renton	Ticket Date	08/08/17

Item #	Description	Ticket #/Reference	Quantity	Price	Total
000082	CHB 2-4' WITH REBAR	259714	32.00	12.00	384.00
000200	TRUCKING INCOME	002051	6.50	135.00	877.50
000800	5% WASTE DISPOSAL S/	259714	.00	.00	19.20

☐ Bill ☐ CM PM APP RW
Vendor Renton Concrete
Act Date 8/8/17 Due Date 9/7/17
Ref # 0112158
M Eq/F (S) T O Job 17-036
GL ACCT _____ AMT 1280.70
GL ACCT _____ AMT _____
PO # _____ Entered _____

ENTERED

Subtotal	Tax	Total
1280.70	.00	1280.70

Customer Copy

Renton Concrete Recyclers
22121 17th Ave SE, #117
BOTHELL, WA 98021-7404
(425) 481-9101 PHONE
(425) 486-3346 FAX

INVOICE

Customer	0001018
Job	0037
Date	08/11/17
Invoice #	0112278

RECEIVED
AUG 17 2017
By:

Bill To	GLACIER EVNIRONMENTAL P.O. BOX 1097 MUKILTEO, WA 98275	Job Description	730 S MERTLE STREET

Plant	Renton	Ticket Date	08/11/17

Item #	Description	Ticket #/Reference	Quantity	Price	Total
000082	CHB 2-4' WITH REBAR	259935	18.00	12.00	216.00
000800	5% WASTE DISPOSAL S/	259935	.00	.00	10.80

☐ Bill ☐ CM PM APP RW
Vendor Renton Concrete
Act Date 8/11/17 Due Date 9/10/17
Ref # 0112278
M Eq/F (S) T O Job 17-036
GL ACCT _____ AMT 226.80
GL ACCT _____ AMT _____
PO # _____ Entered _____

ENTERED

Subtotal	Tax	Total
226.80	.00	226.80

Customer Copy

Renton Concrete Recyclers
22121 17th Ave SE, #117
BOTHELL, WA 98021-7404
(425) 481-9101 PHONE
(425) 486-3346 FAX

INVOICE

Customer	0001018
Job	0038
Date	08/11/17
Invoice #	0112279

AUG 17 2017

Bill To	GLACIER EVNIRONMENTAL P.O. BOX 1097 MUKILTEO, WA 98275 ,
Job Description	730 A MERTLE ST TRUCKING FOR 8/10 & 8/11

Plant	Renton	Ticket Date	08/11/17

Item #	Description	Ticket #/Reference	Quantity	Price	Total
000200	TRUCKING INCOME	002055, 002057	6.50	135.00	877.50

☐ Bill ☐ CM PM APP RW
Vendor Renton Concrete
Act Date 8/11/17 Due Date 9/10/17
Ref # 0112279
M Eq/F (S) T O Job 17-036
GL ACCT _____ AMT 877.50
GL ACCT _____ AMT _____
PO # _____ Entered _____
ENTERED

T-N

Subtotal	Tax	Total
877.50	.00	877.50

Customer Copy

Renton Concrete Recyclers
22121 17th Ave SE, #117
BOTHELL, WA 98021-7404
(425) 481-9101 PHONE
(425) 486-3346 FAX

RENTON CONCRETE RECYCLERS LIMITED LIABILITY COMPANY

RECEIVED
AUG 24 2017

INVOICE

Customer	0001018
Job	0037
Date	08/15/17
Invoice #	0112348

Bill To	GLACIER EVNIRONMENTAL P.O. BOX 1097 MUKILTEO, WA 98275	Job Description	730 S MERTLE STREET

Plant	Renton	Ticket Date	08/15/17

Item #	Description	Ticket #/Reference	Quantity	Price	Total
000082	CHB 2-4' WITH REBAR	260080	58.00	12.00	696.00
000200	TRUCKING INCOME	002062	4.75	135.00	641.25
000800	5% WASTE DISPOSAL S/	260080	.00	.00	34.80

☐ Bill ☐ CM PM APP RW
Vendor Renton Concrete Recyclers
Act Date 8/15 Due Date 9/14/17
Ref # 0112348
M Eq/F (S) T O Job 17-036
GL ACCT _____ AMT 1372.05
GL ACCT _____ AMT _____
PO # _____ Entered

ENTERED

T-M

Subtotal	Tax	Total
1372.05	.00	1372.05

Customer Copy

Renton Concrete Recyclers
22121 17th Ave SE, #117
BOTHELL, WA 98021-7404
(425) 481-9101 PHONE
(425) 486-3346 FAX

INVOICE

RECEIVED
AUG 24 2017
BY:

Customer	0001018
Job	0037
Date	08/16/17
Invoice #	0112396

Bill To	GLACIER EVNIRONMENTAL P.O. BOX 1097 MUKILTEO, WA 98275	Job Description	730 S MERTLE STREET

Plant	Renton	Ticket Date	08/16/17

Item #	Description	Ticket #/Reference	Quantity	Price	Total
000082	CHB 2-4' WITH REBAR	260131	30.00	12.00	360.00
000200	TRUCKING INCOME	002064	6.00	135.00	810.00
000800	5% WASTE DISPOSAL S/	260131	.00	.00	18.00

☐Bill ☐CM PM APP RW
Vendor Renton Concrete Recyclers
Act Date 8/16/17 Due Date 9/15/17
Ref # 0112396
M Eq/F (S) T O Job 17-036
GL ACCT _____ AMT 1188.00
GL ACCT _____ AMT _____
PO # _____ Entered

ENTERED

T+M

Subtotal	Tax	Total
1188.00	.00	1188.00

Customer Copy

Renton Concrete Recyclers
22121 17th Ave SE, #117
BOTHELL, WA 98021-7404
(425) 481-9101 PHONE
(425) 486-3346 FAX

INVOICE

Customer	0001018
Job	0037
Date	08/28/17
Invoice #	0112711

RECEIVED SEP 05 2017

Bill To	GLACIER EVNIRONMENTAL P.O. BOX 1097 MUKILTEO, WA 98275	Job Description	730 S MERTLE STREET

Plant	Renton	Ticket Date	08/28/17

Item #	Description	Ticket #/Reference	Quantity	Price	Total
000082	CHB 2-4' WITH REBAR	260705	40.00	12.00	480.00
000200	TRUCKING INCOME	002081	6.50	135.00	877.50
000800	5% WASTE DISPOSAL S/	260705	.00	.00	24.00

☐ BHI ☐ CM PM APP RW
Vendor Renton Concrete
Act Date 8/28/17 Due Date 9/27/17
Ref # 0112711
(N) Eq/F (S) T O Job 17-036
GL ACCT _____ AMT 1381.50
GL ACCT _____ AMT _____
PO # _____ Entered _____

ENTERED

Subtotal	Tax	Total
1381.50	.00	1381.50

Customer Copy

Renton Concrete Recyclers
22121 17th Ave SE, #117
BOTHELL, WA 98021-7404
(425) 481-9101 PHONE
(425) 486-3346 FAX

INVOICE

Customer	0001018
Job	0037
Date	09/21/17
Invoice #	0113403

RECEIVED
SEP 27 2017
BY: _____

Bill To	Job Description
GLACIER EVNIRONMENTAL P.O. BOX 1097 MUKILTEO, WA 98275	730 S MERTLE STREET

Plant: Renton | Ticket Date: 09/21/17

Item #	Description	Ticket #/Reference	Quantity	Price	Total
000072	CON HAULBACK 2-4'	261921	20.00	10.50	210.00
000082	CHB 2-4' WITH REBAR	261921	10.00	12.00	120.00
000083	LARGE CONCRETE HAULB	261921	2.00	25.00	50.00
000083	LARGE CONCRETE HAULB	261921	2.00	75.00	150.00
000200	TRUCKING INCOME	261921	6.00	145.00	870.00
000800	5% WASTE DISPOSAL S/	261921	.00	.00	16.50

☐ Bill ☐ CM PM APP RW
Vendor Renton Concrete
Act Date 9/21/17 Due Date 10/20/17
Ref # 0113403
M Eq/F (S) T O Job 17-036
GL ACCT _____ AMT 1416.50
GL ACCT _____ AMT
PO # _____ Entered _____

ENTERED

Subtotal	Tax	Total
1416.50	.00	1416.50

Customer Copy

RENTON CONCRETE RECYCLERS

22121 17th Ave S.E. Suite #117 Bothell, WA 98021
Pit Site: 500 Monster Road S.W. Renton, WA
Business Office: 425-481-9101
Scale House: 206-772-2278

Date: 9/7/17

Ticket # 261921

Customer: Glacier enviro

Project Name/P.O. Number: 730 mertyle

Project Location (Street/City): Seattle

Trucking Company: Same springbrook

Scaleperson: jmw

☐ Cash ☐ Credit Card - Last 4# _____ ☒ Account

Truck#	Time	Material	Gross Weight	Tare Weight	Net Weight / Material Size	Net Tons/Yd³	Price
9.2	9:11	Conc			24	2Cy	
n	11:27	La. Conc		X	2	2Cy	75/each
k	11:27	8"o blocks		X	2		
ll	11:27	Conc w/e			24	1Cy	

TERMS: NET 30 DAYS FROM END OF MONTH. A Finance Charge will be assessed on all past due accounts at a rate of 1 1/2% per month. Annual finance charge of 18%

NOTICE: It is specifically agreed that this company shall not be in anyway responsible for damage to customers property resulting from deliveries beyond the curb line.

DRIVER SIGNATURE/PRINTED NAME: _____

Total Material	
5% Environmental Fee	
Sales Tax	
CC Processing Fee	
Total	

Renton Concrete Recyclers
22121 17th Ave SE, #117
BOTHELL, WA 98021-7404
(425) 481-9101 PHONE
(425) 486-3346 FAX

INVOICE

Customer	0001018
Job	0037
Date	09/20/17
Invoice #	0113353

RECEIVED
SEP 27 2017
BY:

Bill To	Job Description
GLACIER EVNIRONMENTAL P.O. BOX 1097 MUKILTEO, WA 98275	730 S MERTLE STREET

Plant: Renton | Ticket Date: 09/20/17

Item #	Description	Ticket #/Reference	Quantity	Price	Total
000082	CHB 2-4' WITH REBAR	261837	80.00	12.00	960.00
000200	TRUCKING INCOME	261837	8.50	145.00	1232.50
000800	5% WASTE DISPOSAL S/	261837	.00	.00	48.00

☐ BKI ☐ CM PM APP RW
Vendor Renton Concrete
Act Date 9/20/17 Due Date 10/19/17
Ref # 0113353
M Eq/F (S) T O Job 17-036
GL ACCT _____ AMT 2240.50
GL ACCT _____ ENTERED
PO # _____ Entered _____

Subtotal	Tax	Total
2240.50	.00	2240.50

Customer Copy

RENTON CONCRETE RECYCLERS

22121 17th Ave S.E. Suite #117 Bothell, WA 98021
Pit Site: 500 Monster Road S.W. Renton, WA
Business Office: 425-481-9101
Scale House: 206-772-2278

Date: 9.20.17

Customer: Glacier enviro

Ticket # 261837

Project Name/P.O. Number: 730 Mercer

Project Location (Street/City): Seattle

Trucking Company: Springbrook

☐ Cash ☐ Credit Card - Last 4# _____ Scaleperson: JMW

☑ Account

Truck#	Time	Material	Gross Weight	Tare Weight	Net Weight / Material Size	Net Tons/Yd³	Price
93	7:52	CONC	W/R		2-4	3Cy	
"	9:31	"	W/R		2-4	3Cy	
"	10:41	CONC	W/R		2-4	3Cy	
"	12:48	CONC	W/R		2-4	3Cy	

TERMS: NET 30 DAYS FROM END OF MONTH. A Finance Charge will be assessed on all past due accounts at a rate of 1 1/2% per month. Annual finance charge of 18%

NOTICE: It is specifically agreed that this company shall not be in anyway responsible for damage to customers property resulting from deliveries beyond the curb line.

DRIVER SIGNATURE/PRINTED NAME: RAY

Total Material	
5% Environmental Fee	
Sales Tax	
CC Processing Fee	
Total	

Renton Concrete Recyclers
22121 17th Ave SE, #117
BOTHELL, WA 98021-7404
(425) 481-9101 PHONE
(425) 486-3346 FAX

INVOICE

Customer	0001018
Job	0037
Date	09/19/17
Invoice #	0113308

RECEIVED
SEP 27 2017
BY:

Bill To		Job Description	
	GLACIER EVNIRONMENTAL P.O. BOX 1097 MUKILTEO, WA 98275		730 S MERTLE STREET

Plant	Renton	Ticket Date	09/19/17

Item #	Description	Ticket #/Reference	Quantity	Price	Total
000082	CHB 2-4' WITH REBAR	261771	100.00	12.00	1200.00
000200	TRUCKING INCOME	261771	8.50	135.00	1147.50
000800	5% WASTE DISPOSAL S/	261771	.00	.00	60.00

☐BIII ☐CM PM APP RW
Vendor Renton Concrete
Act Date 9/19/17 Due Date 10/18/17
Ref # 0113308
M Eq/F (S) T O Job 17-036
GL ACCT _____ AMT 2407.50
GL ACCT _____ ENTERED
PO # _____ Entered _____

Subtotal	Tax	Total
2407.50	.00	2407.50

Customer Copy

RENTON CONCRETE RECYCLERS

22121 17th Ave S.E. Suite #117 Bothell, WA 98021
Pit Site: 500 Monster Road S.W. Renton, WA
Business Office: 425-481-9101
Scale House: 206-772-2278

RENTON CONCRETE RECYCLERS LIMITED LIABILITY COMPANY

Date: 9-19-17 **Ticket # 261771**

Customer: Glacier Env.rO

Project Name/P.O. Number: 730 Merytle St.

Project Location (Street/City): Seattle

Trucking Company: Springbrook **Scaleperson:** JMW

☐ Cash ☐ Credit Card - Last 4# _____ ☒ Account

Truck#	Time	Material	Gross Weight	Tare Weight	Net Weight Material Size	Net Tons/Yd³	Price
93	7:50	Conc	W/E		2-4	20cy	
"	9:B	Conc	W/E		2-4	20cy	
"	10:19	Conc	W/E		2-4	20cy	
"	11:34	Conc	W/E		2-4	20cy	
"	12:58	Conc	W/E		2-4	20cy	

TERMS: NET 30 DAYS FROM END OF MONTH. A Finance Charge will be assessed on all past due accounts at a rate of 1 1/2% per month. Annual finance charge of 18%

NOTICE: It is specifically agreed that this company shall not be in anyway responsible for damage to customers property resutling from deliveries beyond the curb line.

Total Material	
5% Environmental Fee	
Sales Tax	
CC Processing Fee	
Total	

RAY

DRIVER SIGNATURE/PRINTED NAME: _____

INVOICE

Renton Concrete Recyclers
22121 17th Ave SE, #117
BOTHELL, WA 98021-7404
(425) 481-9101 PHONE
(425) 486-3346 FAX

RECEIVED
OCT 19 2017
BY:

Customer	0001018
Job	0037
Date	10/11/17
Invoice #	0114011

Bill To	GLACIER EVNIRONMENTAL P.O. BOX 1097 MUKILTEO, WA 98275	Job Description	730 S MERTLE STREET

Plant	Renton	Ticket Date	10/11/17

Item #	Description	Ticket #/Reference	Quantity	Price	Total
000082	CHB 2-4' WITH REBAR	262980	100.00	12.00	1200.00
000200	TRUCKING INCOME	262980	8.50	145.00	1232.50
000800	5% WASTE DISPOSAL S/	262980	.00	.00	60.00

ok
RW

☐ BHI ☐ CM PM APP RW
Vendor: Renton Concrete
Act Date 10/11/17 Due Date 11/10/17
Ref # 0114011
M Eq/F (S) T O Job 17-036
GL ACCT _____ AMT 2492.50
GL ACCT _____ AMT _____
PO # _____ Entered _____

ENTERED

Subtotal	Tax	Total
2492.50	.00	2492.50

Customer Copy

Renton Concrete Recyclers
22121 17th Ave SE, #117
BOTHELL, WA 98021-7404
(425) 481-9101 PHONE
(425) 486-3346 FAX

INVOICE

Customer	0001018
Job	0037
Date	10/12/17
Invoice #	0114054

RECEIVED
OCT 19 2017
BY:

Bill To	GLACIER EVNIRONMENTAL P.O. BOX 1097 MUKILTEO, WA 98275	Job Description	730 S MERTLE STREET

Plant	Renton	Ticket Date	10/12/17

Item #	Description	Ticket #/Reference	Quantity	Price	Total
000072	CON HAULBACK 2-4'	263060	20.00	10.50	210.00
000082	CHB 2-4' WITH REBAR	263060	60.00	12.00	720.00
000200	TRUCKING INCOME	263060	8.00	145.00	1160.00
000800	5% WASTE DISPOSAL S/	263060	.00	.00	46.50

☐BHI ☐CM PM APP RW
Vendor Renton Concrete
Act Date 10/12/17 Due Date 11/11/17
Ref # 0114054
M Eq/F (S) T O Job 17-036
GL ACCT _____ AMT 2136.50
GL ACCT _____ AMT
PO # _____ Entered _____
ENTERED

Subtotal	Tax	Total
2136.50	.00	2136.50

Customer Copy

Renton Concrete Recyclers
22121 17th Ave SE, #117
BOTHELL, WA 98021-7404
(425) 481-9101 PHONE
(425) 486-3346 FAX

INVOICE

Customer	0001018
Job	0037
Date	10/13/17
Invoice #	0114095

RECEIVED
OCT 19 2017
BY:

Bill To	GLACIER EVNIRONMENTAL P.O. BOX 1097 MUKILTEO, WA 98275	Job Description	730 S MERTLE STREET

Plant	Renton	Ticket Date	10/13/17

Item #	Description	Ticket #/Reference	Quantity	Price	Total
000072	CON HAULBACK 2-4'	263132	80.00	10.50	840.00
000083	LARGE CONCRETE HAULB	263132	24.00	25.00	600.00
000200	TRUCKING INCOME	263132	11.50	145.00	1667.50
000800	5% WASTE DISPOSAL S/	263132	.00	.00	42.00

☐ BHI ☐ CM PM APP RW
Vendor Renton Concrete
Act Date 10/13/17 Due Date 11/12/17
Ref # 0114095
M Eq/F (S) T O Job 17-036
GL ACCT _____ AMT 3149.50
GL ACCT _____ AMT
PO # _____ Entered ENTERED

Subtotal	Tax	Total
3149.50	.00	3149.50

Customer Copy

Renton Concrete Recyclers
22121 17th Ave SE, #117
BOTHELL, WA 98021-7404
(425) 481-9101 PHONE
(425) 486-3346 FAX

INVOICE

Customer	0001018
Job	0037
Date	11/20/17
Invoice #	0115065

RECEIVED
NOV 29 2017
BY:

Bill To		Job Description	
	GLACIER EVNIRONMENTAL P.O. BOX 1097 MUKILTEO, WA 98275		730 S MERTLE STREET

Plant	Renton	Ticket Date	11/20/17

Item #	Description	Ticket #/Reference	Quantity	Price	Total
000071	CON HAULBACK 2'-SM	264787	10.00	9.50	95.00
000082	CHB 2-4' WITH REBAR	264798	10.00	12.00	120.00
000200	TRUCKING INCOME	264787, 264798	3.00	135.00	405.00
000800	5% WASTE DISPOSAL S/	264787, 264798	.00	.00	10.75

☐Bill ☐CM PM APP RW
Vendor Renton Concrete
Act Date 11/20/17 Due Date 12/19/17
Ref # 0115065
M Eq/F (S) T O Job 17-036
GL ACCT _____ AMT 630.75
GL ACCT _____ AMT ~~ENTERED~~
PO # _____ Entered _____

ENTERED

DLW

Subtotal	Tax	Total
630.75	.00	630.75

Customer Copy

Renton Concrete Recyclers
22121 17th Ave SE, #117
BOTHELL, WA 98021-7404
(425) 481-9101 PHONE
(425) 486-3346 FAX

INVOICE

Customer	0001018
Job	0037
Date	11/03/17
Invoice #	0114652

RECEIVED
NOV 09 2017
BY:

Bill To	Job Description
GLACIER EVNIRONMENTAL P.O. BOX 1097 MUKILTEO, WA 98275	730 S MERTLE STREET

Plant: Renton | Ticket Date: 11/03/17

Item #	Description	Ticket #/Reference	Quantity	Price	Total
000072	CON HAULBACK 2-4'	264078	120.00	10.50	1260.00
000200	TRUCKING INCOME	264078	10.00	145.00	1450.00
000800	5% WASTE DISPOSAL S/	264078	.00	.00	63.00

☐ Bill ☐ CM PM APP RW
Vendor Renton Concrete
Act Date 11/3/17 Due Date 12/2/17
Ref # 0114652
M Eq/F (S) T O Job 17-036
GL ACCT _____ AMT 2773.00
GL ACCT _____ AMT _____
PO # _____ Entered _____

ENTERED

1/2 -Sal
1/2 Demo

Subtotal	Tax	Total
2773.00	.00	2773.00

Customer Copy

Renton Concrete Recyclers
22121 17th Ave SE, #117
BOTHELL, WA 98021-7404
(425) 481-9101 PHONE
(425) 486-3346 FAX

RECEIVED
JAN 05 2018
BY:

INVOICE

Customer	0001018
Job	0037
Date	12/21/17
Invoice #	0115772

Bill To	Job Description
GLACIER EVNIRONMENTAL P.O. BOX 1097 MUKILTEO, WA 98275	730 S MERTLE STREET

Plant: Renton | Ticket Date: 12/21/17

Item #	Description	Ticket #/Reference	Quantity	Price	Total
000082	CHB 2-4' WITH REBAR	265942	10.00	12.00	120.00
000800	5% WASTE DISPOSAL S/	265942	.00	.00	6.00

☐Bill ☐CM PM APP RW
Vendor Renton Concrete
Act Date 12/21/17 Due Date 1/20/18
Ref # 0115772
M Eq/F (S) T O Job 17-030
GL ACCT _____ AMT 126.00
GL ACCT _____ AMT
PO # _____ Entered

ENTERED

Subtotal	Tax	Total
126.00	.00	126.00

Customer Copy

Renton Concrete Recyclers
22121 17th Ave SE, #117
BOTHELL, WA 98021-7404
(425) 481-9101 PHONE
(425) 486-3346 FAX

INVOICE

Customer	0001018
Job	0037
Date	03/30/18
Invoice #	0118067

Bill To	GLACIER EVNIRONMENTAL P.O. BOX 1097 MUKILTEO, WA 98275	Job Description	730 S MERTLE STREET

Plant	Renton	Ticket Date	03/30/18

Item #	Description	Ticket #/Reference	Quantity	Price	Total
000072	CON HAULBACK 2-4'	269613	20.00	15.00	300.00
000200	TRUCKING INCOME	269613	2.00	140.00	280.00
000800	5% WASTE DISPOSAL S/	269613	.00	.00	15.00

RECEIVED
APR 05 2018
BY

☐ Bill ☐ CM PM APP RW
Vendor Renton Concrete
Act Date 3/30/18 Due Date 4/29/18
Ref # 0118067
M Eq/F (S) T O Job 17-036
GL ACCT _____ AMT 595.00
GL ACCT _____ AMT
PO # _____ Entered _____
ENTERED

Subtotal	Tax	Total
595.00	.00	595.00

Customer Copy

Date	Profile #	Ticket #	Waste	Facility	Tons/Tonnes
8/31/2017	125003OR	137585	Petoleum (	AK St Reload and Recycle Facility	30.61
8/31/2017	125003OR	137578	Petoleum (	AK St Reload and Recycle Facility	30.21
8/31/2017	125003OR	137575	Petoleum (	AK St Reload and Recycle Facility	27.76
8/31/2017	125003OR	137568	Petoleum (	AK St Reload and Recycle Facility	30.6
8/31/2017	125003OR	137565	Petoleum (	AK St Reload and Recycle Facility	29.51
8/31/2017	125003OR	137562	Petoleum (	AK St Reload and Recycle Facility	28.21
8/30/2017	125003OR	137557	Petoleum (	AK St Reload and Recycle Facility	17.28
8/30/2017	125003OR	137555	Petoleum (	AK St Reload and Recycle Facility	14.52
8/30/2017	125003OR	137553	Petoleum (	AK St Reload and Recycle Facility	16.55
8/30/2017	125003OR	137551	Petoleum (	AK St Reload and Recycle Facility	15.3
8/30/2017	125003OR	137549	Petoleum (	AK St Reload and Recycle Facility	16.77
8/30/2017	125003OR	137546	Petoleum (	AK St Reload and Recycle Facility	15.03
8/30/2017	125003OR	137544	Petoleum (	AK St Reload and Recycle Facility	17.87
8/30/2017	125003OR	137538	Petoleum (	AK St Reload and Recycle Facility	14.23
8/30/2017	125003OR	137536	Petoleum (	AK St Reload and Recycle Facility	16.68
8/30/2017	125003OR	137535	Petoleum (	AK St Reload and Recycle Facility	14.77
8/30/2017	125003OR	137533	Petoleum (	AK St Reload and Recycle Facility	15.52
8/30/2017	125003OR	137531	Petoleum (	AK St Reload and Recycle Facility	12.96
8/30/2017	125003OR	137524	Petoleum (	AK St Reload and Recycle Facility	16.03
8/30/2017	125003OR	137523	Petoleum (	AK St Reload and Recycle Facility	13.93
8/30/2017	125003OR	137518	Petoleum (	AK St Reload and Recycle Facility	15.77
8/30/2017	125003OR	137514	Petoleum (	AK St Reload and Recycle Facility	15.02
8/30/2017	125003OR	137509	Petoleum (	AK St Reload and Recycle Facility	15.85

WASTE MANAGEMENT

Alaska Street
70 S Alaska Street
Seattle, WA, 98134

Ph: 206 763 5025

Reprint
Ticket# 137509

Customer Name GLACIER ENVIRONMENTAL SERVICE
Ticket Date 08/30/2017
Payment Type Credit Account
Manual Ticket#
Route AK
Hauling Ticket#
Destination
PO# 17-036/1250030R

Carrier SELF HAULER *
Vehicle# M01S
Container
Driver TONY MERANTO
Check#
Billing# 0000022
Grid

Volume

	Time	Scale	Operator	Inbound
In	08/30/2017 08:27:07	SCALE 1	lmercer	
Out	08/30/2017 08:37:56	SCALE 1	lmercer	

Gross	55780 lb
Tare	24080 lb
Net	31700 lb
Tons	15.85

Comments MERANTO - LM

	Product	LD%	Qty	UOM	Rate	Tax	Amount	Origin
1	ENVCLEANUP RGCPCS-Tons-E	100	15.85	Tons				KING
2	GONDOLA T/10T MIN-GONDOL	100	15.85	Tons				KING

Total Tax
Total Ticket

Driver's Signature

WASTE MANAGEMENT

Alaska Street
70 S Alaska Street
Seattle, WA, 98134

Ph: 206 763 5025

Reprint
Ticket# 137514

Customer Name GLACIER ENVIRONMENTAL SERVICE
Ticket Date 08/30/2017
Payment Type Credit Account
Manual Ticket#
Route AK
Hauling Ticket#
Destination
PO# 17-036/1250030R

Carrier SELF HAULER *
Vehicle# M01S
Container
Driver TONY MERANTO
Check#
Billing# 0000022
Grid

Volume

	Time	Scale	Operator	Inbound
In	08/30/2017 09:13:54	SCALE 1	lmercer	
Out	08/30/2017 09:13:54		lmercer	

Gross	54120 lb
Tare	24080 lb
Net	30040 lb
Tons	15.02

Comments MERANTO - LM

	Product	LD%	Qty	UOM	Rate	Tax	Amount	Origin
1	ENVCLEANUP RGCPCS-Tons-E	100	15.02	Tons				KING
2	GONDOLA T/10T MIN-GONDOL	100	15.02	Tons				

Total Tax
Total Ticket

Driver's Signature

WASTE MANAGEMENT

Alaska Street
70 S Alaska Street
Seattle, WA, 98134

Ph: 206 763 5025

Reprint
Ticket# 137518

Customer Name GLACIER ENVIRONMENTAL SERVICE
Ticket Date 08/30/2017
Payment Type Credit Account
Manual Ticket#
Route AK
Hauling Ticket#
Destination
PO# 17-036/1250030R

Carrier SELF HAULER *
Vehicle# M015
Container
Driver TONY MERANTO
Check#
Billing# 0000022
Grid

Volume

	Time	Scale	Operator	Inbound
In	08/30/2017 09:56:11	SCALE 1	lmercer	
Out	08/30/2017 09:56:11		lmercer	

Gross	55620 lb
Tare	24080 lb
Net	31540 lb
Tons	15.77

Comments MERNATO - LM

	Product	LD%	Qty	UOM	Rate	Tax	Amount	Origin
1	ENVCLEANUP RGCPCS-Tons-E	100	15.77	Tons				KING
2	GONDOLA T/10T MIN-GONDOL	100	15.77	Tons				KING

Total Tax
Total Ticket

Driver's Signature

WASTE MANAGEMENT

Alaska Street
70 S Alaska Street
Seattle, WA, 98134

Reprint
Ticket# 137523

Ph: 206 763 5025

Customer Name GLACIER ENVIRONMENTAL SERVICE
Ticket Date 08/30/2017
Payment Type Credit Account
Manual Ticket#
Route AK
Hauling Ticket#
Destination
PO# 17-036/1250030R

Carrier SELF HAULER *
Vehicle# M015
Container
Driver TONY MERANTO
Check#
Billing# 0000022
Grid

Volume

	Time	Scale	Operator	Inbound		
In	08/30/2017 10:31:06	SCALE 1	lmercer		Gross	51940 lb
Out	08/30/2017 10:31:06		lmercer		Tare	24080 lb
					Net	27860 lb
					Tons	13.93

Comments MERANTO - LM

	Product	LD%	Qty	UOM	Rate	Tax	Amount	Origin
1	ENVCLEANUP RGCPCS-Tons-E	100	13.93	Tons				KING
2	GONDOLA T/10T MIN-GONDOL	100	13.93	Tons				

Total Tax
Total Ticket

Driver's Signature

WASTE MANAGEMENT

Alaska Street
70 S Alaska Street
Seattle, WA, 98134

Reprint
Ticket# 137524

Ph: 206 763 5025

Customer Name GLACIER ENVIRONMENTAL SERVICE
Ticket Date 08/30/2017
Payment Type Credit Account
Manual Ticket#
Route AK
Hauling Ticket#
Destination
PO# 17-036/1250030R

Carrier SELF HAULER *
Vehicle# S2S
Container
Driver JOE SCOLERI
Check#
Billing# 0000022
Grid

Volume

	Time	Scale	Operator	Inbound
In	08/30/2017 10:34:01	SCALE 1	lmercer	
Out	08/30/2017 10:42:39	SCALE 1	lmercer	

Gross	58060 lb
Tare	26000 lb
Net	32060 lb
Tons	16.03

Comments SCOLERI - LN

	Product	LD%	Qty	UOM	Rate	Tax	Amount	Origin
1	ENVCLEANUP RGCPCS-Tons-E	100	16.03	Tons				KING
2	GONDOLA T/10T MIN-GONDOL	100	16.03	Tons				KING

Total Tax
Total Ticket

Driver's Signature

WASTE MANAGEMENT

Alaska Street
70 S Alaska Street
Seattle, WA, 98134

Reprint
Ticket# 137531

Ph: 206 763 5025

Customer Name GLACIER ENVIRONMENTAL SERVICE
Ticket Date 08/30/2017
Payment Type Credit Account
Manual Ticket#
Route AK
Hauling Ticket#
Destination
PO# 17-036/1250030R

Carrier SELF HAULER *
Vehicle# M01S
Container
Driver TONY MERANTO
Check#
Billing# 0000022
Grid

Volume

	Time	Scale	Operator	Inbound
In	08/30/2017 11:12:57	SCALE 1	lmercer	
Out	08/30/2017 11:12:57		lmercer	

Gross	50000 lb
Tare	24080 lb
Net	25920 lb
Tons	12.96

Comments MERANTO - LM

	Product	LD%	Qty	UOM	Rate	Tax	Amount	Origin
1	ENVCLEANUP RGCPCS-Tons-E	100	12.96	Tons				KING
2	GONDOLA T/10T MIN-GONDOL	100	12.96	Tons				KING

Total Tax
Total Ticket

Driver's Signature

WASTE MANAGEMENT

Alaska Street
70 S Alaska Street
Seattle, WA, 98134

Reprint
Ticket# 137533

Ph: 206 763 5025

Customer Name GLACIER ENVIRONMENTAL SERVICE
Ticket Date 08/30/2017
Payment Type Credit Account
Manual Ticket#
Route AK
Hauling Ticket#
Destination
PO# 17-036/1250030R

Carrier SELF HAULER *
Vehicle# S25
Container
Driver JOE SCOLERI
Check#
Billing# 0000022
Grid

Volume

	Time	Scale	Operator	Inbound
In	08/30/2017 11:19:54	SCALE 1	lmercer	
Out	08/30/2017 11:19:54		lmercer	

Gross	57040 lb
Tare	26000 lb
Net	31040 lb
Tons	15.52

Comments SCOLERI - LM

	Product	LD%	Qty	UOM	Rate	Tax	Amount	Origin
1	ENVCLEANUP RGCPCS-Tons-E	100	15.52	Tons				KING
2	GONDOLA T/10T MIN-GONDOL	100	15.52	Tons				KING

Total Tax
Total Ticket

Driver's Signature

WASTE MANAGEMENT

Alaska Street
70 S Alaska Street
Seattle, WA, 98134

Reprint
Ticket# 137535

Ph: 206 763 5025

Customer Name GLACIER ENVIRONMENTAL SERVICE
Ticket Date 08/30/2017
Payment Type Credit Account
Manual Ticket#
Route AK
Hauling Ticket#
Destination
PO# 17-036/1250030R

Carrier SELF HAULER *
Vehicle# M015
Container
Driver TONY MERANTO
Check#
Billing# 0000022
Grid

Volume

	Time	Scale	Operator	Inbound		
In	08/30/2017 11:47:04	SCALE 1	lmercer		Gross	53620 lb
Out	08/30/2017 11:47:04		lmercer		Tare	24080 lb
					Net	29540 lb
					Tons	14.77

Comments MERANTO- GA

	Product	LD%	Qty	UOM	Rate	Tax	Amount	Origin
1	ENVCLEANUP RGCPCS-Tons-E	100	14.77	Tons				KING
2	GONDOLA T/10T MIN-GONDOL	100	14.77	Tons				

Total Tax
Total Ticket

Driver's Signature

WASTE MANAGEMENT

Alaska Street
70 S Alaska Street
Seattle, WA, 98134

Ph: 206 763 5025

Reprint
Ticket# 137536

Customer Name GLACIER ENVIRONMENTAL SERVICE
Ticket Date 08/30/2017
Payment Type Credit Account
Manual Ticket#
Route AK
Hauling Ticket#
Destination
PO# 17-036/1250030R

Carrier SELF HAULER *
Vehicle# 526
Container
Driver JOE SCOLERI
Check#
Billing# 0000022
Grid

Volume

	Time	Scale	Operator	Inbound
In	08/30/2017 11:58:08	SCALE 1	lmercer	
Out	08/30/2017 11:58:08		lmercer	

Gross	59360 lb
Tare	26000 lb
Net	33360 lb
Tons	16.68

Comments GLACIER- GA

	Product	LD%	Qty	UOM	Rate	Tax	Amount	Origin
1	ENVCLEANUP RGCPCS-Tons-E	100	16.68	Tons				KING
2	GONDOLA T/10T MIN-GONDOL	100	16.68	Tons				

Total Tax
Total Ticket

Driver's Signature

203 WM

WASTE MANAGEMENT

Alaska Street
70 S Alaska Street
Seattle, WA, 98134

Reprint
Ticket# 137538

Ph: 206 763 5025

Customer Name GLACIER ENVIRONMENTAL SERVICE
Ticket Date 08/30/2017
Payment Type Credit Account
Manual Ticket#
Route AK
Hauling Ticket#
Destination
PO# 17-036/1250030R

Carrier SELF HAULER *
Vehicle# M01S
Container
Driver TONY MERANTO
Check#
Billing# 0000022
Grid

Volume

	Time	Scale	Operator	Inbound		
In	08/30/2017 12:17:38	SCALE 1	lmercer		Gross	52540 lb
Out	08/30/2017 12:17:38		lmercer		Tare	24080 lb
					Net	28460 lb
					Tons	14.23

Comments MERAN -GA

	Product	LD%	Qty	UOM	Rate	Tax	Amount	Origin
1	ENVCLEANUP RGCPCS-Tons-E	100	14.23	Tons				KING
2	GONDOLA T/10T MIN-GONDOL	100	14.23	Tons				

Total Tax
Total Ticket

Driver's Signature

WASTE MANAGEMENT

Alaska Street
70 S Alaska Street
Seattle, WA, 98134

Ph: 206 763 5025

Reprint
Ticket# 137544

Customer Name GLACIER ENVIRONMENTAL SERVICE
Ticket Date 08/30/2017
Payment Type Credit Account
Manual Ticket#
Route AK
Hauling Ticket#
Destination
PO# 17-036/1250030R

Carrier SELF HAULER *
Vehicle# S2S
Container
Driver JOE SCOLERI
Check#
Billing# 0000022
Grid

Volume

	Time	Scale	Operator	Inbound
In	08/30/2017 13:03:20	SCALE 1	lmercer	
Out	08/30/2017 13:03:20		lmercer	

Gross	61740 lb
Tare	26000 lb
Net	35740 lb
Tons	17.87

Comments SCOLERI - LM

	Product	LD%	Qty	UOM	Rate	Tax	Amount	Origin
1	ENVCLEANUP RGCPCS-Tons-E	100	17.87	Tons				KING
2	GONDOLA T/10T MIN-GONDOL	100	17.87	Tons				KING

Total Tax
Total Ticket

Driver's Signature

WASTE MANAGEMENT

Alaska Street
70 S Alaska Street
Seattle, WA, 98134

Ph: 206 763 5025

Reprint
Ticket# 137546

Customer Name GLACIER ENVIRONMENTAL SERVICE
Ticket Date 08/30/2017
Payment Type Credit Account
Manual Ticket#
Route AK
Hauling Ticket#
Destination
PO# 17-036/1250030R

Carrier SELF HAULER *
Vehicle# M01S
Container
Driver TONY MERANTO
Check#
Billing# 0000022
Grid

Volume

	Time	Scale	Operator	Inbound
In	08/30/2017 13:19:28	SCALE 1	lmercer	
Out	08/30/2017 13:19:28		lmercer	

Gross	54140 lb
Tare	24080 lb
Net	30060 lb
Tons	15.03

Comments MERNATO - LM

	Product	LD%	Qty	UOM	Rate	Tax	Amount	Origin
1	ENVCLEANUP RGCPCS-Tons-E	100	15.03	Tons				KING
2	GONDOLA T/10T MIN-GONDOL	100	15.03	Tons				

Total Tax
Total Ticket

Driver's Signature

WASTE MANAGEMENT

Alaska Street
70 S Alaska Street
Seattle, WA, 98134

Ph: 206 763 5025

Reprint
Ticket# 137549

Customer Name GLACIER ENVIRONMENTAL SERVICE
Ticket Date 08/30/2017
Payment Type Credit Account
Manual Ticket#
Route AK
Hauling Ticket#
Destination
PO# 17-036/1250030R

Carrier SELF HAULER *
Vehicle# S25
Container
Driver JOE SCOLERI
Check#
Billing# 0000022
Grid

Volume

	Time	Scale	Operator	Inbound
In	08/30/2017 13:38:59	SCALE 1	lmercer	
Out	08/30/2017 13:38:59		lmercer	

Gross	59540 lb
Tare	26000 lb
Net	33540 lb
Tons	16.77

Comments SCOLERI - LM

	Product	LD%	Qty	UOM	Rate	Tax	Amount	Origin
1	ENVCLEANUP RGCPCS-Tons-E	100	16.77	Tons				KING
2	GONDOLA T/10T MIN-GONDOL	100	16.77	Tons				

Total Tax
Total Ticket

Driver's Signature

WASTE MANAGEMENT

Alaska Street
70 S Alaska Street
Seattle, WA, 98134

Ph: 206 763 5025

Reprint
Ticket# 137551

Customer Name GLACIER ENVIRONMENTAL SERVICE
Ticket Date 08/30/2017
Payment Type Credit Account
Manual Ticket#
Route AK
Hauling Ticket#
Destination
PO# 17-036/1250030R

Carrier SELF HAULER *
Vehicle# M01S
Container
Driver TONY MERANTO
Check#
Billing# 00000022
Grid

Volume

	Time	Scale	Operator	Inbound
In	08/30/2017 13:53:27	SCALE 1	lmercer	
Out	08/30/2017 13:53:27		lmercer	

Gross	54680 lb
Tare	24080 lb
Net	30600 lb
Tons	15.30

Comments MERANTO - LM

	Product	LD%	Qty	UOM	Rate	Tax	Amount	Origin
1	ENVCLEANUP RGCPCS-Tons-E	100	15.30	Tons				KING
2	GONDOLA T/10T MIN-GONDOL	100	15.30	Tons				

Total Tax
Total Ticket

Driver's Signature

WASTE MANAGEMENT

Alaska Street
70 S Alaska Street
Seattle, WA, 98134

Reprint
Ticket# 137553

Ph: 206 763 5025

Customer Name GLACIER ENVIRONMENTAL SERVICE
Ticket Date 08/30/2017
Payment Type Credit Account
Manual Ticket#
Route AK
Hauling Ticket#
Destination
PO# 17-036/125003DR

Carrier SELF HAULER *
Vehicle# S2S
Container
Driver JOE SCOLERI
Check#
Billing# 0000022
Grid

Volume

	Time	Scale	Operator	Inbound		
In	08/30/2017 14:14:51	SCALE 1	lmercer		Gross	59100 lb
Out	08/30/2017 14:14:51		lmercer		Tare	26000 lb
					Net	33100 lb
					Tons	16.55

Comments SCOLERI - LM

	Product	LD%	Qty	UOM	Rate	Tax	Amount	Origin
1	ENVCLEANUP RGCPCS-Tons-E	100	16.55	Tons				KING
2	GONDOLA T/10T MIN-GONDOL	100	16.55	Tons				KING

Total Tax
Total Ticket

Driver's Signature

WASTE MANAGEMENT

Alaska Street
70 S Alaska Street
Seattle, WA, 98134

Ph: 206 763 5025

Reprint
Ticket# 137555

Customer Name GLACIER ENVIRONMENTAL SERVICE
Ticket Date 08/30/2017
Payment Type Credit Account
Manual Ticket#
Route AK
Hauling Ticket#
Destination
PO# 17-036/1250030R

Carrier SELF HAULER *
Vehicle# M015
Container
Driver TONY MERANTO
Check#
Billing# 0000022
Grid

Volume

	Time	Scale	Operator	Inbound
In	08/30/2017 14:33:18	SCALE 1	lmercer	
Out	08/30/2017 14:33:18		lmercer	

Gross	53120 lb
Tare	24080 lb
Net	29040 lb
Tons	14.52

Comments MERANTO - LM

	Product	LD%	Qty	UOM	Rate	Tax	Amount	Origin
1	ENVCLEANUP RGCPCS-Tons-E	100	14.52	Tons				KING
2	GONDOLA T/10T MIN-GONDOL	100	14.52	Tons				KING

Total Tax
Total Ticket

Driver's Signature

WASTE MANAGEMENT

Alaska Street
70 S Alaska Street
Seattle, WA, 98134

Phr 206 763 5025

Original
Ticket# 137557

Customer Name GLACIER ENVIRONMENTAL SERVICE
Ticket Date 08/30/2017
Payment Type Credit Account
Manual Ticket#
Route AK
Hauling Ticket#
Destination
PO# 17-036/12500030R

Carrier SELF HAULER *
Vehicle# 525
Container
Driver JOE SCOLERI
Check#
Billing# 0000022
Grid

Volume

	Time	Scale	Operator
In	08/30/2017 15:13:15	SCALE 1	lmercer
Out	08/30/2017 15:13:15		lmercer

Inbound

Gross	60560 lb
Tare	26000 lb
Net	34560 lb
Tons	17.28

Comments SCOLERI - LM

	Product	LD%	Qty	UOM	Rate	Tax	Amount	Origin
1	ENVCLEANUP RGCPCS-Tons-E	100	17.28	Tons				
2	GONDOLA T/10T MIN-GONDOL	100	17.28	Tons				KING

*
*
*
*

Total Tax
Total Ticket

Driver's Signature

WM's Signature

WASTE MANAGEMENT

Alaska Street
70 S Alaska Street
Seattle, WA, 98134

Ph: 206 763 5025

Reprint
Ticket# 137562

Customer Name GLACIER ENVIRONMENTAL SERVICE
Ticket Date 08/31/2017
Payment Type Credit Account
Manual Ticket#
Route AK
Hauling Ticket#
Destination
PO# 17-036/1250030R

Carrier SELF HAULER *
Vehicle# 504
Container
Driver RICK MYERS
Check#
Billing# 0000022
Grid

Volume

	Time	Scale	Operator	Inbound
In	08/31/2017 07:06:03	SCALE 1	lmercer	
Out	08/31/2017 07:16:05	SCALE 1	lmercer	

Gross	93080 lb
Tare	36660 lb
Net	56420 lb
Tons	28.21

Comments SCOLERI - LM

	Product	LD%	Qty	UOM	Rate	Tax	Amount	Origin
1	ENVCLEANUP RGCPCS-Tons-E	100	28.21	Tons				KING
2	GONDOLA T/10T MIN-GONDOL	100	28.21	Tons				KING

Total Tax
Total Ticket

Driver's Signature

WASTE MANAGEMENT

Alaska Street
70 S Alaska Street
Seattle, WA, 98134

Ph: 206 763 5025

Reprint
Ticket# 137565

Customer Name GLACIER ENVIRONMENTAL SERVICE
Ticket Date 08/31/2017
Payment Type Credit Account
Manual Ticket#
Route
Hauling Ticket#
Destination
PO# 17-036/1250030R

Carrier SELF HAULER *
Vehicle# M01T
Container
Driver TONY MERANTO
Check#
Billing# 0000022
Grid

Volume

	Time	Scale	Operator	Inbound		
In	08/31/2017 07:38:42	SCALE 1	lmercer		Gross	98160 lb
Out	08/31/2017 07:50:48	SCALE 1	lmercer		Tare	39140 lb
					Net	59020 lb
					Tons	29.51

Comments MERANTO - LM

	Product	LD%	Qty	UOM	Rate	Tax	Amount	Origin
1	ENVCLEANUP RGCPCS-Tons-E	100	29.51	Tons				KING
2	GONDOLA T/10T MIN-GONDOL	100	29.51	Tons				

Total Tax
Total Ticket

Driver's Signature

WASTE MANAGEMENT

Alaska Street
70 S Alaska Street
Seattle, WA, 98134

Reprint
Ticket# 137568

Ph: 206 763 5025

Customer Name GLACIER ENVIRONMENTAL SERVICE
Ticket Date 08/31/2017
Payment Type Credit Account
Manual Ticket#
Route AK
Hauling Ticket#
Destination
PO# 17-036/1250030R

Carrier SELF HAULER *
Vehicle# S04
Container
Driver RICK MYERS
Check#
Billing# 0000022
Grid

Volume

	Time	Scale	Operator	Inbound		
In	08/31/2017 07:57:25	SCALE 1	lmercer		Gross	97860 lb
Out	08/31/2017 07:57:25		lmercer		Tare	36660 lb
					Net	61200 lb
					Tons	30.60

Comments SCOLERI - LM

	Product	LD%	Qty	UOM	Rate	Tax	Amount	Origin
1	ENVCLEANUP RGCPCS-Tons-E	100	30.60	Tons				KING
2	GONDOLA T/10T MIN-GONDOL	100	30.60	Tons				KING

Total Tax
Total Ticket

Driver's Signature

WASTE MANAGEMENT

Alaska Street
70 S Alaska Street
Seattle, WA, 98134

Reprint
Ticket# 137575

Ph: 206 763 5025

Customer Name GLACIER ENVIRONMENTAL SERVICE
Ticket Date 08/31/2017
Payment Type Credit Account
Manual Ticket#
Route
Hauling Ticket#
Destination
PO# 17-036/1250030R

Carrier SELF HAULER *
Vehicle# M01T
Container
Driver TONY MERANTO
Check#
Billing# 0000022
Grid

Volume

	Time	Scale	Operator	Inbound
In	08/31/2017 08:41:18	SCALE 1	lmercer	
Out	08/31/2017 08:41:18		lmercer	

Gross	94660 lb
Tare	39140 lb
Net	55520 lb
Tons	27.76

Comments MERANTO - LM

	Product	LD%	Qty	UOM	Rate	Tax	Amount	Origin
1	ENVCLEANUP RGCPCS-Tons-E	100	27.76	Tons				KING
2	GONDOLA T/10T MIN-GONDOL	100	27.76	Tons				KING

Total Tax
Total Ticket

Driver's Signature

WASTE MANAGEMENT

Alaska Street
70 S Alaska Street
Seattle, WA, 98134

Ph: 206 763 5025

Reprint
Ticket# 137578

Customer Name GLACIER ENVIRONMENTAL SERVICE
Ticket Date 08/31/2017
Payment Type Credit Account
Manual Ticket#
Route AK
Hauling Ticket#
Destination
PO# 17-036/1250030R

Carrier SELF HAULER *
Vehicle# S04
Container
Driver RICK MYERS
Check#
Billing# 0000022
Grid

Volume

	Time	Scale	Operator	Inbound		
In	08/31/2017 08:54:03	SCALE 1	lmercer		Gross	97080 lb
Out	08/31/2017 08:54:03		lmercer		Tare	36660 lb
					Net	60420 lb
					Tons	30.21

Comments SCOLERI - LM

	Product	LD%	Qty	UOM	Rate	Tax	Amount	Origin
1	ENVCLEANUP RGCPCS-Tons-E	100	30.21	Tons				KING
2	GONDOLA T/10T MIN-GONDOL	100	30.21	Tons				KING

Total Tax
Total Ticket

Driver's Signature

WASTE MANAGEMENT

Alaska Street
70 S Alaska Street
Seattle, WA, 98134

Reprint
Ticket# 137585

Ph: 206 763 5025

Customer Name GLACIER ENVIRONMENTAL SERVICE
Ticket Date 08/31/2017
Payment Type Credit Account
Manual Ticket#
Route
Hauling Ticket#
Destination
PO# 17-036/1250030R

Carrier SELF HAULER *
Vehicle# M01T
Container
Driver TONY MERANTO
Check#
Billing# 0000022
Grid

Volume

	Time	Scale	Operator	Inbound
In	08/31/2017 09:37:09	SCALE 1	lmercer	
Out	08/31/2017 09:37:09		lmercer	

Gross	100360 lb
Tare	39140 lb
Net	61220 lb
Tons	30.61

Comments MERANTO - LM

	Product	LD%	Qty	UOM	Rate	Tax	Amount	Origin
1	ENVCLEANUP RGCPCS-Tons-E	100	30.61	Tons				KING
2	GONDOLA T/10T MIN-GONDOL	100	30.61	Tons				KING

Total Tax
Total Ticket

Driver's Signature

BId Item 5
Subtitle D Disposal
September 2017

9/6/2017	10293	GLACIER ENVIRONMENTAL SERVICES	WA-SEATTLE IRON AND METAL CORP	125003ORD	ITI1	10.28	$498.58
9/6/2017	10296	GLACIER ENVIRONMENTAL SERVICES	WA-SEATTLE IRON AND METAL CORP	125003ORD	S04	11.55	$560.18
9/6/2017	10299	GLACIER ENVIRONMENTAL SERVICES	WA-SEATTLE IRON AND METAL CORP	125003ORD	ITI1	14.19	$688.22
9/6/2017	10302	GLACIER ENVIRONMENTAL SERVICES	WA-SEATTLE IRON AND METAL CORP	125003ORD	S04	14.23	$690.16
9/6/2017	10304	GLACIER ENVIRONMENTAL SERVICES	WA-SEATTLE IRON AND METAL CORP	125003ORD	ITI1	11.97	$580.55
9/6/2017	10323	GLACIER ENVIRONMENTAL SERVICES	WA-SEATTLE IRON AND METAL CORP	125003ORD	S04	14.04	$680.94
9/6/2017	10325	GLACIER ENVIRONMENTAL SERVICES	WA-SEATTLE IRON AND METAL CORP	125003ORD	ITI1	14.45	$700.83
9/6/2017	10332	GLACIER ENVIRONMENTAL SERVICES	WA-SEATTLE IRON AND METAL CORP	125003ORD	S04	15.86	$769.21
9/6/2017	10343	GLACIER ENVIRONMENTAL SERVICES	WA-SEATTLE IRON AND METAL CORP	125003ORD	ITI1	15.64	$758.54
9/6/2017	10348	GLACIER ENVIRONMENTAL SERVICES	WA-SEATTLE IRON AND METAL CORP	125003ORD	S04	16.69	$809.47
9/7/2017	10461	GLACIER ENVIRONMENTAL SERVICES	WA-SEATTLE IRON AND METAL CORP	125003ORD	ITI1T	26.48	$1,284.28
9/7/2017	10469	GLACIER ENVIRONMENTAL SERVICES	WA-SEATTLE IRON AND METAL CORP	125003ORD	ITI1T	27.94	$1,355.09
9/11/2017	10592	GLACIER ENVIRONMENTAL SERVICES	WA-SEATTLE IRON AND METAL CORP	125003ORD	ITI1T	31.18	$1,512.23
9/11/2017	10605	GLACIER ENVIRONMENTAL SERVICES	WA-SEATTLE IRON AND METAL CORP	125003ORD	ITI1T	30.09	$1,459.37
9/11/2017	10614	GLACIER ENVIRONMENTAL SERVICES	WA-SEATTLE IRON AND METAL CORP	125003ORD	ITI1T	28.83	$1,398.26
9/12/2017	10665	GLACIER ENVIRONMENTAL SERVICES	WA-SEATTLE IRON AND METAL CORP	125003ORD	ITI1T	30.22	$1,465.67
9/13/2017	10666	GLACIER ENVIRONMENTAL SERVICES	WA-SEATTLE IRON AND METAL CORP	125003ORD	ITI1T	37.10	$1,799.35
9/13/2017	10668	GLACIER ENVIRONMENTAL SERVICES	WA-SEATTLE IRON AND METAL CORP	125003ORD	ITI1T	37.30	$1,809.05
9/13/2017	10669	GLACIER ENVIRONMENTAL SERVICES	WA-SEATTLE IRON AND METAL CORP	125003ORD	ITI1T	30.97	$1,502.05
9/13/2017	10670	GLACIER ENVIRONMENTAL SERVICES	WA-SEATTLE IRON AND METAL CORP	125003ORD	ITI1T	33.33	$1,616.51
9/13/2017	10671	GLACIER ENVIRONMENTAL SERVICES	WA-SEATTLE IRON AND METAL CORP	125003ORD	ITI1T	37.35	$1,811.48
9/13/2017	10673	GLACIER ENVIRONMENTAL SERVICES	WA-SEATTLE IRON AND METAL CORP	125003ORD	ITI1T	35.92	$1,742.12
9/13/2017	10675	GLACIER ENVIRONMENTAL SERVICES	WA-SEATTLE IRON AND METAL CORP	125003ORD	ITI1T	24.50	$1,188.25
9/15/2017	10818	GLACIER ENVIRONMENTAL SERVICES	WA-SEATTLE IRON AND METAL CORP	125003ORD	ITI1T	27.80	$1,348.30
9/15/2017	10819	GLACIER ENVIRONMENTAL SERVICES	WA-SEATTLE IRON AND METAL CORP	125003ORD	ITI1T	24.50	$1,188.25
9/15/2017	10827	GLACIER ENVIRONMENTAL SERVICES	WA-SEATTLE IRON AND METAL CORP	125003ORD	ITI1T	28.81	$1,397.29
9/15/2017	10837	GLACIER ENVIRONMENTAL SERVICES	WA-SEATTLE IRON AND METAL CORP	125003ORD	ITI1T	32.21	$1,562.19
9/22/2017	11496	GLACIER ENVIRONMENTAL SERVICES	WA-SEATTLE IRON AND METAL CORP	125003ORD	S02	33.95	$1,646.58
9/22/2017	11502	GLACIER ENVIRONMENTAL SERVICES	WA-SEATTLE IRON AND METAL CORP	125003ORD	S02	30.19	$1,464.22
9/22/2017	11509	GLACIER ENVIRONMENTAL SERVICES	WA-SEATTLE IRON AND METAL CORP	125003ORD	S02	34.57	$1,676.65
9/22/2017	11517	GLACIER ENVIRONMENTAL SERVICES	WA-SEATTLE IRON AND METAL CORP	125003ORD	S02	31.16	$1,511.26
9/27/2017	11979	GLACIER ENVIRONMENTAL SERVICES	WA-SEATTLE IRON AND METAL CORP	125003ORD	ITI1T	21.65	$1,050.03
9/27/2017	11981	GLACIER ENVIRONMENTAL SERVICES	WA-SEATTLE IRON AND METAL CORP	125003ORD	ITI1T	24.99	$1,212.02
9/27/2017	11986	GLACIER ENVIRONMENTAL SERVICES	WA-SEATTLE IRON AND METAL CORP	125003ORD	ITI1T	24.26	$1,176.61
9/27/2017	12058	GLACIER ENVIRONMENTAL SERVICES	WA-SEATTLE IRON AND METAL CORP	125003ORD	ITI1T	25.5	$1,236.75
9/27/2017	12076	GLACIER ENVIRONMENTAL SERVICES	WA-SEATTLE IRON AND METAL CORP	125003ORD	ITI1T	32.84	$1,592.74
				Total		922.54	

Total Tax
Total Ticket

Driver Signature

WASTE MANAGEMENT

8th Ave Reload
7400 8th Ave S
Seattle, WA, 98108

Reprint
Ticket# 10293
Ph: 206-694-0600

Customer Name	GLACIER ENVIRONMENTAL SERVICE	Carrier	SELF SELF		
Ticket Date	09/06/2017	Vehicle#	ITI1	Volume	
Payment Type	Credit Account	Container			
Manual Ticket#		Driver	TONY MERANTO		
Route		Check#			
Hauling Ticket#		Billing#	0000146		
Destination		Grid			
PO#	17-036/125003ORD				

	Time	Scale	Operator	Inbound	Gross	45060 lb
In	09/06/2017 07:54:15	Scale 1	kfunk2		Tare	24500 lb
Out	09/06/2017 07:59:38	Scale 1	kfunk2		Net	20560 lb
					Tons	10.28

Comments ITI-KF

	Product	LD%	Qty	UOM	Rate	Tax	Amount	Origin
1	ENVCLEANUP RGCPCS-Tons-E	100	10.28	Tons				KING
2	GOND TON-GONDOLA PER TON	100	10.28	Tons				KING

203 WM

Total Tax
Total Ticket

Driver's Signature

WASTE MANAGEMENT

8th Ave Reload
7400 8th Ave S
Seattle, WA, 98108

Reprint
Ticket# 10296

Ph: 206-694-0600

Customer Name GLACIER ENVIRONMENTAL SERVICE
Ticket Date 09/06/2017
Payment Type Credit Account
Manual Ticket#
Route
Hauling Ticket#
Destination
PO# 17-036/125003ORD

Carrier SELF SELF
Vehicle# S04
Container
Driver RICK MYERS
Check#
Billing# 0000146
Grid

Volume

	Time	Scale	Operator	Inbound
In	09/06/2017 08:04:58	Scale 1	kfunk2	
Out	09/06/2017 08:12:00	Scale 1	kfunk2	

Gross	48680 lb
Tare	25580 lb
Net	23100 lb
Tons	11.55

Comments SCOLERI-KF

	Product	LD%	Qty	UOM	Rate	Tax	Amount	Origin
1	ENVCLEANUP RGCPCS-Tons-E	100	11.55	Tons				KING
2	GOND TON-GONDOLA PER TON	100	11.55	Tons				KING

203 WM

Total Tax
Total Ticket

Driver's Signature

WASTE MANAGEMENT

8th Ave Reload
7400 8th Ave S
Seattle, WA, 98108

Reprint
Ticket# 10299

Ph: 206-694-0600

Customer Name	GLACIER ENVIRONMENTAL SERVICE	Carrier	SELF SELF
Ticket Date	09/06/2017	Vehicle#	ITI1
Payment Type	Credit Account	Container	
Manual Ticket#		Driver	TONY MERANTO
Route		Check#	
Hauling Ticket#		Billing#	0000146
Destination		Grid	
PO#	17-036/125003ORD		

Volume

	Time	Scale	Operator	Inbound		
In	09/06/2017 08:18:07	Scale 1	kfunk2		Gross	52880 lb
Out	09/06/2017 08:18:07		kfunk2		Tare	24500 lb
					Net	28380 lb
					Tons	14.19

Comments ITI-KF

	Product	LD%	Qty	UOM	Rate	Tax	Amount	Origin
1	ENVCLEANUP RGCPCS-Tons-E	100	14.19	Tons				KING
2	GOND TON-GONDOLA PER TON	100	14.19	Tons				KING

203 WM

Total Tax
Total Ticket

Driver's Signature

WASTE MANAGEMENT

8th Ave Reload
7400 8th Ave S
Seattle, WA, 98108

Reprint
Ticket# 10302

Ph: 206-694-0600

Customer Name GLACIER ENVIRONMENTAL SERVICE
Ticket Date 09/06/2017
Payment Type Credit Account
Manual Ticket#
Route
Hauling Ticket#
Destination
PO# 17-036/125003ORD

Carrier SELF SELF
Vehicle# S04
Container
Driver RICK MYERS
Check#
Billing# 0000146
Grid

Volume

	Time	Scale	Operator	Inbound
In	09/06/2017 08:36:56	Scale 1	kfunk2	
Out	09/06/2017 08:36:56		kfunk2	

Gross	54040 lb
Tare	25580 lb
Net	28460 lb
Tons	14.23

Comments SCOLERI-KF

	Product	LD%	Qty	UOM	Rate	Tax	Amount	Origin
1	ENVCLEANUP RGCPCS-Tons-E	100	14.23	Tons				KING
2	GOND TON-GONDOLA PER TON	100	14.23	Tons				KING

203 WM

Total Tax
Total Ticket

Driver Key Signature

WASTE MANAGEMENT

8th Ave Reload
7400 8th Ave S
Seattle, WA, 98108

Reprint
Ticket# 10304

Ph: 206-694-0600

Customer Name	GLACIER ENVIRONMENTAL SERVICE	Carrier	SELF SELF
Ticket Date	09/06/2017	Vehicle#	ITI1
Payment Type	Credit Account	Container	
Manual Ticket#		Driver	TONY MERANTO
Route		Check#	
Hauling Ticket#		Billing#	0000146
Destination		Grid	
PO#	17-036/125003ORD		

Volume

	Time	Scale	Operator	Inbound		
In	09/06/2017 08:42:40	Scale 1	kfunk2		Gross	48440 lb
Out	09/06/2017 08:42:40		kfunk2		Tare	24500 lb
					Net	23940 lb
					Tons	11.97

Comments ITI-KF

	Product	LD%	Qty	UOM	Rate	Tax	Amount	Origin
1	ENVCLEANUP RGCPCS-Tons-E	100	11.97	Tons				KING
2	GOND TON-GONDOLA PER TON	100	11.97	Tons				

203 WM

Total Tax
Total Ticket

Driver's Signature

WASTE MANAGEMENT

8th Ave Reload
7400 8th Ave S
Seattle, WA, 98108

Reprint
Ticket# 10323

Ph: 206-694-0600

Customer Name GLACIER ENVIRONMENTAL SERVICE
Ticket Date 09/06/2017
Payment Type Credit Account
Manual Ticket#
Route
Hauling Ticket#
Destination
PO# 17-036/125003ORD

Carrier SELF SELF
Vehicle# S04
Container
Driver RICK MYERS
Check#
Billing# 0000146
Grid

Volume

	Time	Scale	Operator	Inbound		
In	09/06/2017 09:53:03	Scale 1	kfunk2		Gross	53660 lb
Out	09/06/2017 09:53:03		kfunk2		Tare	25580 lb
					Net	28080 lb
					Tons	14.04

Comments SCOLERI-KF

	Product	LD%	Qty	UOM	Rate	Tax	Amount	Origin
1	ENVCLEANUP RGCPCS-Tons-E	100	14.04	Tons				KING
2	GOND TON-GONDOLA PER TON	100	14.04	Tons				

203 WM

Total Tax
Total Ticket

Driver's Signature

WASTE MANAGEMENT

8th Ave Reload
7400 8th Ave S
Seattle, WA, 98108

Reprint
Ticket# 10325

Ph: 206-694-0600

Customer Name GLACIER ENVIRONMENTAL SERVICE
Ticket Date 09/06/2017
Payment Type Credit Account
Manual Ticket#
Route
Hauling Ticket#
Destination
PO# 17-036/125003ORD

Carrier SELF SELF
Vehicle# ITI1
Container
Driver TONY MERANTO
Check#
Billing# 0000146
Grid

Volume

	Time	Scale	Operator	Inbound		
In	09/06/2017 10:01:10	Scale 1	kfunk2		Gross	53400 lb
Out	09/06/2017 10:01:10		kfunk2		Tare	24500 lb
					Net	28900 lb
					Tons	14.45

Comments ITI-KF

	Product	LD%	Qty	UOM	Rate	Tax	Amount	Origin
1	ENVCLEANUP RGCPCS-Tons-E	100	14.45	Tons				KING
2	GOND TON-GONDOLA PER TON	100	14.45	Tons				

203 WM

Total Tax
Total Ticket

Driver Signature

WASTE MANAGEMENT

8th Ave Reload
7400 8th Ave S
Seattle, WA, 98108

Reprint
Ticket# 10332

Ph: 206-694-0600

Customer Name GLACIER ENVIRONMENTAL SERVICE
Ticket Date 09/06/2017
Payment Type Credit Account
Manual Ticket#
Route
Hauling Ticket#
Destination
PO# 17-036/125003ORD

Carrier SELF SELF
Vehicle# S04
Container
Driver RICK MYERS
Check#
Billing# 0000146
Grid

Volume

	Time	Scale	Operator	Inbound		
In	09/06/2017 10:23:29	Scale 1	kfunk2		Gross	57300 lb
Out	09/06/2017 10:23:29		kfunk2		Tare	25580 lb
					Net	31720 lb
					Tons	15.86

Comments SCOLERI-KF

	Product	LD%	Qty	UOM	Rate	Tax	Amount	Origin
1	ENVCLEANUP RGCPCS-Tons-E	100	15.86	Tons				KING
2	GOND TON-GONDOLA PER TON	100	15.86	Tons				

203 WM

Total Tax
Total Ticket

D[illegible] Signature

WASTE MANAGEMENT

8th Ave Reload
7400 8th Ave S
Seattle, WA, 98108

Reprint
Ticket# 10343
Ph: 206-694-0600

Customer Name	GLACIER ENVIRONMENTAL SERVICE	Carrier	SELF SELF		
Ticket Date	09/06/2017	Vehicle#	ITI1	Volume	
Payment Type	Credit Account	Container			
Manual Ticket#		Driver	TONY MERANTO		
Route		Check#			
Hauling Ticket#		Billing#	0000146		
Destination		Grid			
PO#	17-036/1250030RD				

	Time	Scale	Operator	Inbound		
In	09/06/2017 10:54:45	Scale 1	kfunk2		Gross	55780 lb
Out	09/06/2017 10:54:45		kfunk2		Tare	24500 lb
					Net	31280 lb
					Tons	15.64

Comments ITI-KF

	Product	LD%	Qty	UOM	Rate	Tax	Amount	Origin
1	ENVCLEANUP RGCPCS-Tons-E	100	15.64	Tons				KING
2	GOND TON-GONDOLA PER TON	100	15.64	Tons				

203 WM

Total Tax
Total Ticket

Driver Signature

WASTE MANAGEMENT

8th Ave Reload
7400 8th Ave S
Seattle, WA, 98108

Reprint
Ticket# 10348
Ph: 206-694-0600

Customer Name	GLACIER ENVIRONMENTAL SERVICE	Carrier	SELF SELF
Ticket Date	09/06/2017	Vehicle#	S04
Payment Type	Credit Account	Container	
Manual Ticket#		Driver	RICK MYERS
Route		Check#	
Hauling Ticket#		Billing#	0000146
Destination		Grid	
PO#	17-036/125003ORD		

Volume

	Time	Scale	Operator	Inbound		
In	09/06/2017 11:08:11	Scale 1	kfunk2		Gross	58960 lb
Out	09/06/2017 11:08:11		kfunk2		Tare	25580 lb
					Net	33380 lb
					Tons	16.69

Comments SCOLERI-KF

	Product	LD%	Qty	UOM	Rate	Tax	Amount	Origin
1	ENVCLEANUP RGCPCS-Tons-E	100	16.69	Tons				KING
2	GOND TON-GONDOLA PER TON	100	16.69	Tons				

203 WM

Total Tax
Total Ticket

Driver's Signature

WASTE MANAGEMENT

8th Ave Reload
7400 8th Ave S
Seattle, WA, 98108

Reprint
Ticket# 10461

Ph: 206-694-0600

Customer Name	GLACIER ENVIRONMENTAL SERVICE	Carrier	SELF SELF		
Ticket Date	09/07/2017	Vehicle#	ITI1T	Volume	
Payment Type	Credit Account	Container			
Manual Ticket#		Driver	TONY MERANTO		
Route		Check#			
Hauling Ticket#		Billing#	0000146		
Destination		Grid			
PO#	17-036/125003ORD				

	Time	Scale	Operator	Inbound		
In	09/07/2017 10:56:37	Scale 1	kfunk2		Gross	91940 lb
Out	09/07/2017 11:06:45	Scale 1	kfunk2		Tare	38980 lb
					Net	52960 lb
					Tons	26.48

Comments MERANTO-KF

	Product	LD%	Qty	UOM	Rate	Tax	Amount	Origin
1	ENVCLEANUP RGCPCS-Tons-E	100	26.48	Tons				KING
2	GOND TON-GONDOLA PER TON	100	26.48	Tons				KING

203 WM

Total Tax

Total Tax
Total Ticket

Signature

WASTE MANAGEMENT

8th Ave Reload
7400 8th Ave S
Seattle, WA, 98108

Reprint
Ticket# 10469
Ph: 206-694-0600

Customer Name	GLACIER ENVIRONMENTAL SERVICE	Carrier	SELF SELF		
Ticket Date	09/07/2017	Vehicle#	ITI1T	Volume	
Payment Type	Credit Account	Container			
Manual Ticket#		Driver	TONY MERANTO		
Route		Check#			
Hauling Ticket#		Billing#	0000146		
Destination		Grid			
PO#	17-036/125003ORD				

	Time	Scale	Operator	Inbound		
In	09/07/2017 11:41:50	Scale 1	kfunk2		Gross	94860 lb
Out	09/07/2017 11:41:50		kfunk2		Tare	38980 lb
					Net	55880 lb
					Tons	27.94

Comments ITI-KF

	Product	LD%	Qty	UOM	Rate	Tax	Amount	Origin
1	ENVCLEANUP RGCPCS-Tons-E	100	27.94	Tons				KING
2	GOND TON-GONDOLA PER TON	100	27.94	Tons				

203 WM

Total T

Total Tax

Total Ticket

Driver's Signature

WASTE MANAGEMENT

8th Ave Reload
7400 8th Ave S
Seattle, WA, 98108

Reprint
Ticket# 10592

Ph: 206-694-0600

Customer Name GLACIER ENVIRONMENTAL SERVICE
Ticket Date 09/11/2017
Payment Type Credit Account
Manual Ticket#
Route
Hauling Ticket#
Destination
PO# 17-036/125003ORD

Carrier SELF SELF
Vehicle# ITI1T
Container
Driver TONY MERANTO
Check#
Billing# 0000146
Grid

Volume

	Time	Scale	Operator	Inbound		
In	09/11/2017 10:44:20	Scale 1	kfunk2		Gross	101340 lb
Out	09/11/2017 10:44:20		kfunk2		Tare	38980 lb
					Net	62360 lb
					Tons	31.18

Comments MERANTO-KF

	Product	LD%	Qty	UOM	Rate	Tax	Amount	Origin
1	ENVCLEANUP RGCPCS-Tons-E	100	31.18	Tons				KING
2	GOND TON-GONDOLA PER TON	100	31.18	Tons				

203 WM

Total Tax

Total Ticket

Signature

WASTE MANAGEMENT

8th Ave Reload
7400 8th Ave S
Seattle, WA, 98108

Reprint
Ticket# 10605

Ph: 206-694-0600

Customer Name	GLACIER ENVIRONMENTAL SERVICE	Carrier	SELF SELF		
Ticket Date	09/11/2017	Vehicle#	ITI1T	Volume	
Payment Type	Credit Account	Container			
Manual Ticket#		Driver	TONY MERANTO		
Route		Check#			
Hauling Ticket#		Billing#	0000146		
Destination		Grid			
PO#	17-036/125003ORD				

	Time	Scale	Operator	Inbound		
In	09/11/2017 11:24:47	Scale 1	kfunk2		Gross	99160 lb
Out	09/11/2017 11:24:47		kfunk2		Tare	38980 lb
					Net	60180 lb
					Tons	30.09

Comments ITI-KF

	Product	LD%	Qty	UOM	Rate	Tax	Amount	Origin
1	ENVCLEANUP RGCPCS-Tons-E	100	30.09	Tons				KING
2	GOND TON-GONDOLA PER TON	100	30.09	Tons				

203 WM

Total Tax

Total Ticket

WASTE MANAGEMENT

Signature

8th Ave Reload
7400 8th Ave S
Seattle, WA, 98108

Reprint
Ticket# 10614

Ph: 206-694-0600

Customer Name GLACIER ENVIRONMENTAL SERVICE
Ticket Date 09/11/2017
Payment Type Credit Account
Manual Ticket#
Route
Hauling Ticket#
Destination
PO# 17-036/125003ORD

Carrier SELF SELF
Vehicle# ITI1T
Container
Driver TONY MERANTO
Check#
Billing# 0000146
Grid

Volume

	Time	Scale	Operator	Inbound
In	09/11/2017 12:05:37	Scale 1	kfunk2	
Out	09/11/2017 12:05:37		kfunk2	

Gross	96640 lb
Tare	38980 lb
Net	57660 lb
Tons	28.83

Comments ITI- GA

	Product	LD%	Qty	UOM	Rate	Tax	Amount	Origin
1	ENVCLEANUP RGCPCS-Tons-E	100	28.83	Tons				KING
2	GOND TON-GONDOLA PER TON	100	28.83	Tons				

203 WM

Total Tax

Driver's Signature

Total Ticket

WASTE MANAGEMENT

8th Ave Reload
7400 8th Ave S
Seattle, WA, 98108

Reprint
Ticket# 10665

Ph: 206-694-0600

Customer Name GLACIER ENVIRONMENTAL SERVICE
Ticket Date 09/12/2017
Payment Type Credit Account
Manual Ticket#
Route
Hauling Ticket#
Destination
PO# 17-036/125003ORD

Carrier SELF SELF
Vehicle# ITI1T
Container
Driver TONY MERANTO
Check#
Billing# 0000146
Grid

Volume

	Time	Scale	Operator	Inbound		
In	09/12/2017 13:56:37	Scale 1	kfunk2		Gross	99420 lb
Out	09/12/2017 13:56:37		kfunk2		Tare	38980 lb
					Net	60440 lb
					Tons	30.22

Comments ITI-KF

	Product	LD%	Qty	UOM	Rate	Tax	Amount	Origin
1	ENVCLEANUP RGCPCS-Tons-E	100	30.22	Tons				KING
2	GOND TON-GONDOLA PER TON	100	30.22	Tons				KING

203 WM

Total Tax

Total Ticket

WASTE MANAGEMENT

8th Ave Reload
7400 8th Ave S
Seattle, WA, 98108

Reprint
Ticket# 10666

Ph: 206-694-0600

Customer Name	GLACIER ENVIRONMENTAL SERVICE	Carrier	SELF SELF
Ticket Date	09/13/2017	Vehicle#	ITI1T
Payment Type	Credit Account	Container	
Manual Ticket#		Driver	TONY MERANTO
Route		Check#	
Hauling Ticket#		Billing#	0000146
Destination		Grid	
PO#	17-036/125003ORD		

Volume

	Time	Scale	Operator	Inbound		
In	09/13/2017 07:03:28	Scale 1	kfunk2		Gross	113180 lb
Out	09/13/2017 07:03:28		kfunk2		Tare	38980 lb
					Net	74200 lb
					Tons	37.10

Comments ITI-KF

	Product	LD%	Qty	UOM	Rate	Tax	Amount	Origin
1	ENVCLEANUP RGCPCS-Tons-E	100	37.10	Tons				KING
2	GOND TON-GONDOLA PER TON	100	37.10	Tons				

203 WM

Total Tax

Total Tax
Total Ticket

Driver Signature

WASTE MANAGEMENT

8th Ave Reload
7400 8th Ave S
Seattle, WA, 98108

Reprint
Ticket# 10668
Ph: 206-694-0600

Customer Name	GLACIER ENVIRONMENTAL SERVICE	Carrier	SELF SELF		
Ticket Date	09/13/2017	Vehicle#	ITI1T	Volume	
Payment Type	Credit Account	Container			
Manual Ticket#		Driver	TONY MERANTO		
Route		Check#			
Hauling Ticket#		Billing#	0000146		
Destination		Grid			
PO#	17-036/1250030RD				

	Time	Scale	Operator	Inbound		
In	09/13/2017 07:41:04	Scale 1	kfunk2		Gross	113580 lb
Out	09/13/2017 07:41:04		kfunk2		Tare	38980 lb
					Net	74600 lb
					Tons	37.30

Comments ITI-KF

	Product	LD%	Qty	UOM	Rate	Tax	Amount	Origin
1	ENVCLEANUP RGCPCS-Tons-E	100	37.30	Tons				KING
2	GOND TON-GONDOLA PER TON	100	37.30	Tons				

203 WM

Total Tax
Total Ticket

Driver's Signature

WASTE MANAGEMENT

8th Ave Reload
7400 8th Ave S
Seattle, WA, 98108

Reprint
Ticket# 10669

Ph: 206-694-0600

Customer Name GLACIER ENVIRONMENTAL SERVICE
Ticket Date 09/13/2017
Payment Type Credit Account
Manual Ticket#
Route
Hauling Ticket#
Destination
PO# 17-036/125003ORD

Carrier SELF SELF
Vehicle# ITI1T
Container
Driver TONY MERANTO
Check#
Billing# 0000146
Grid

Volume

	Time	Scale	Operator	Inbound		
In	09/13/2017 08:09:16	Scale 1	kfunk2		Gross	100920 lb
Out	09/13/2017 08:09:16		kfunk2		Tare	38980 lb
					Net	61940 lb
					Tons	30.97

Comments ITI-KF

	Product	LD%	Qty	UOM	Rate	Tax	Amount	Origin
1	ENVCLEANUP RGCPCS-Tons-E	100	30.97	Tons				KING
2	GOND TON-GONDOLA PER TON	100	30.97	Tons				

203 WM

Total Tax
Total Ticket

Driver Signature

WASTE MANAGEMENT

8th Ave Reload
7400 8th Ave S
Seattle, WA, 98108

Reprint
Ticket# 10670
Ph: 206-694-0600

Customer Name	GLACIER ENVIRONMENTAL SERVICE	Carrier	SELF SELF
Ticket Date	09/13/2017	Vehicle#	ITIiT
Payment Type	Credit Account	Container	
Manual Ticket#		Driver	TONY MERANTO
Route		Check#	
Hauling Ticket#		Billing#	0000146
Destination		Grid	
PO#	17-036/125003ORD		

Volume

	Time	Scale	Operator	Inbound		
In	09/13/2017 08:36:18	Scale 1	kfunk2		Gross	105640 lb
Out	09/13/2017 08:36:18		kfunk2		Tare	38980 lb
					Net	66660 lb
					Tons	33.33

Comments ITI-KF

	Product	LD%	Qty	UOM	Rate	Tax	Amount	Origin
1	ENVCLEANUP RGCPCS-Tons-E	100	33.33	Tons				KING
2	GOND TON-GONDOLA PER TON	100	33.33	Tons				

203 WM

Total T

Total Tax
Total Ticket

Driver's Signature

WASTE MANAGEMENT

8th Ave Reload
7400 8th Ave S
Seattle, WA, 98108

Reprint
Ticket# 10671

Ph: 206-694-0600

Customer Name	GLACIER ENVIRONMENTAL SERVICE	Carrier	SELF SELF
Ticket Date	09/13/2017	Vehicle#	ITI1T
Payment Type	Credit Account	Container	
Manual Ticket#		Driver	TONY MERANTO
Route		Check#	
Hauling Ticket#		Billing#	0000146
Destination		Grid	
PO#	17-036/125003ORD		

Volume

	Time	Scale	Operator	Inbound		
In	09/13/2017 09:10:19	Scale 1	kfunk2		Gross	113680 lb
Out	09/13/2017 09:10:19		kfunk2		Tare	38980 lb
					Net	74700 lb
					Tons	37.35

Comments ITI-KF

	Product	LD%	Qty	UOM	Rate	Tax	Amount	Origin
1	ENVCLEANUP RGCPCS-Tons-E	100	37.35	Tons				KING
2	GOND TON-GONDOLA PER TON	100	37.35	Tons				KING

203 WM

Total Tax

Total Ticket

Driver Signature

WASTE MANAGEMENT

8th Ave Reload
7400 8th Ave S
Seattle, WA, 98108

Reprint
Ticket# 10673

Ph: 206-694-0600

Customer Name	GLACIER ENVIRONMENTAL SERVICE	Carrier	SELF SELF
Ticket Date	09/13/2017	Vehicle#	ITI1T
Payment Type	Credit Account	Container	
Manual Ticket#		Driver	TONY MERANTO
Route		Check#	
Hauling Ticket#		Billing#	0000146
Destination		Grid	
PO#	17-036/125003ORD		

Volume

	Time	Scale	Operator	Inbound		
In	09/13/2017 09:40:23	Scale 1	kfunk2		Gross	110820 lb
Out	09/13/2017 09:40:23		kfunk2		Tare	38980 lb
					Net	71840 lb
					Tons	35.92

Comments ITI-KF

	Product	LD%	Qty	UOM	Rate	Tax	Amount	Origin
1	ENVCLEANUP RGCPCS-Tons-E	100	35.92	Tons				KING
2	GOND TON-GONDOLA PER TON	100	35.92	Tons				

203 WM

Total Tax

Total Tax

Total Ticket

Driver Signature

WASTE MANAGEMENT

8th Ave Reload
7400 8th Ave S
Seattle, WA, 98108

Reprint
Ticket# 10675

Ph: 206-694-0600

Customer Name	GLACIER ENVIRONMENTAL SERVICE	Carrier	SELF SELF		
Ticket Date	09/13/2017	Vehicle#	ITI1T	Volume	
Payment Type	Credit Account	Container			
Manual Ticket#		Driver	TONY MERANTO		
Route		Check#			
Hauling Ticket#		Billing#	0000146		
Destination		Grid			
PO#	17-036/125003ORD				

	Time	Scale	Operator	Inbound		
In	09/13/2017 10:13:56	Scale 1	kfunk2		Gross	87980 lb
Out	09/13/2017 10:13:56		kfunk2		Tare	38980 lb
					Net	49000 lb
					Tons	24.50

Comments ITI-KF

	Product	LD%	Qty	UOM	Rate	Tax	Amount	Origin
1	ENVCLEANUP RGCPCS-Tons-E	100	24.50	Tons				KING
2	GOND TON-GONDOLA PER TON	100	24.50	Tons				

203 WM

Total Tax

Total Ticket

WASTE MANAGEMENT

8th Ave Reload
7400 8th Ave S
Seattle, WA, 98108

Reprint
Ticket# 10818

Ph: 206-694-0600

Customer Name	GLACIER ENVIRONMENTAL SERVICE	Carrier	SELF SELF
Ticket Date	09/15/2017	Vehicle#	ITI1T
Payment Type	Credit Account	Container	
Manual Ticket#		Driver	TONY MERANTO
Route		Check#	
Hauling Ticket#		Billing#	0000146
Destination		Grid	
PO#	17-036/1250030RD		

Volume

	Time	Scale	Operator	Inbound		
In	09/15/2017 07:01:55	Scale 1	kfunk2		Gross	94580 lb
Out	09/15/2017 07:01:55		kfunk2		Tare	38980 lb
					Net	55600 lb
					Tons	27.80

Comments ITI-KF

	Product	LD%	Qty	UOM	Rate	Tax	Amount	Origin
1	ENVCLEANUP RGCPCS-Tons-E	100	27.80	Tons				KING
2	GOND TON-GONDOLA PER TON	100	27.80	Tons				

203 WM

Total Tax

Customer Signature

Total Ticket

WASTE MANAGEMENT

8th Ave Reload
7400 8th Ave S
Seattle, WA, 98108

Ph: 206-694-0600

Reprint
Ticket# 10813

Customer Name GLACIER ENVIRONMENTAL SERVICE
Ticket Date 09/15/2017
Payment Type Credit Account
Manual Ticket#
Route
Hauling Ticket#
Destination
PO# 17-036/125003ORD

Carrier SELF SELF
Vehicle# ITI1T
Container
Driver TONY MERANTO
Check#
Billing# 0000146
Grid

Volume

	Time	Scale	Operator	Inbound		
In	09/15/2017 07:28:35	Scale 1	kfunk2		Gross	87980 lb
Out	09/15/2017 07:28:35		kfunk2		Tare	38980 lb
					Net	49000 lb
					Tons	24.50

Comments ITI-KF

	Product	LD%	Qty	UOM	Rate	Tax	Amount	Origin
1	ENVCLEANUP RGCPCS-Tons-E	100	24.50	Tons				KING
2	GOND TON-GONDOLA PER TON	100	24.50	Tons				

203 WM

Total Tax

Total Tax
Total Ticket

WASTE MANAGEMENT

Signature

8th Ave Reload
7400 8th Ave S
Seattle, WA, 98108

Reprint
Ticket# 10827
Ph: 206-694-0600

Customer Name GLACIER ENVIRONMENTAL SERVICE
Ticket Date 09/15/2017
Payment Type Credit Account
Manual Ticket#
Route
Hauling Ticket#
Destination
PO# 17-036/125003ORD

Carrier SELF SELF
Vehicle# ITI1T
Container
Driver TONY MERANTO
Check#
Billing# 0000146
Grid

Volume

	Time	Scale	Operator	Inbound		
In	09/15/2017 07:58:42	Scale 1	kfunk2		Gross	96600 lb
Out	09/15/2017 07:58:42		kfunk2		Tare	38980 lb
					Net	57620 lb
					Tons	28.81

Comments ITI-KF

	Product	LD%	Qty	UOM	Rate	Tax	Amount	Origin
1	ENVCLEANUP RGCPCS-Tons-E	100	28.81	Tons				KING
2	GOND TON-GONDOLA PER TON	100	28.81	Tons				

203 WM

Total Tax
Total Ticket

D[illegible] Signature

WASTE MANAGEMENT

8th Ave Reload
7400 8th Ave S
Seattle, WA, 98108

Reprint
Ticket# 10837

Ph: 206-694-0600

Customer Name GLACIER ENVIRONMENTAL SERVICE
Ticket Date 09/15/2017
Payment Type Credit Account
Manual Ticket#
Route
Hauling Ticket#
Destination
PO# 17-036/125003ORD

Carrier SELF SELF
Vehicle# ITI1T
Container
Driver TONY MERANTO
Check#
Billing# 0000146
Grid

Volume

	Time	Scale	Operator	Inbound		
In	09/15/2017 08:29:01	Scale 1	kfunk2		Gross	103400 lb
Out	09/15/2017 08:29:01		kfunk2		Tare	38980 lb
					Net	64420 lb
					Tons	32.21

Comments ITI-KF

	Product	LD%	Qty	UOM	Rate	Tax	Amount	Origin
1	ENVCLEANUP RGCPCS-Tons-E	100	32.21	Tons				KING
2	GOND TON-GONDOLA PER TON	100	32.21	Tons				

203 WM

Total Tax
Total Ticket

Driver's Signature

WASTE MANAGEMENT

8th Ave Reload
7400 8th Ave S
Seattle, WA, 98108

Reprint
Ticket# 11496
Ph: 206-694-0600

Customer Name	GLACIER ENVIRONMENTAL SERVICE	Carrier	SELF SELF		
Ticket Date	09/22/2017	Vehicle#	S02	Volume	
Payment Type	Credit Account	Container			
Manual Ticket#		Driver	RICK MYERS		
Route		Check#			
Hauling Ticket#		Billing#	0000146		
Destination		Grid			
PO#	17-036/125003ORD				

	Time	Scale	Operator	Inbound		
In	09/22/2017 08:11:19	Scale 1	kfunk2		Gross	109080 lb
Out	09/22/2017 08:19:31	Scale 1	kfunk2		Tare	41180 lb
					Net	67900 lb
					Tons	33.95

Comments SCOLERI-KF

	Product	LD%	Qty	UOM	Rate	Tax	Amount	Origin
1	ENVCLEANUP RGCPCS-Tons-E	100	33.95	Tons				KING
2	GOND TON-GONDOLA PER TON	100	33.95	Tons				KING

203 WM

Total Tax

Total Ticket

Driver's Signature

WASTE MANAGEMENT

8th Ave Reload
7400 8th Ave S
Seattle, WA, 98108

Reprint
Ticket# 11502

Ph: 206-694-0600

Customer Name GLACIER ENVIRONMENTAL SERVICE
Ticket Date 09/22/2017
Payment Type Credit Account
Manual Ticket#
Route
Hauling Ticket#
Destination
PO# 17-036/125003ORD

Carrier SELF SELF
Vehicle# S02
Container
Driver RICK MYERS
Check#
Billing# 0000146
Grid

Volume

	Time	Scale	Operator	Inbound
In	09/22/2017 08:51:48	Scale 1	kfunk2	
Out	09/22/2017 08:51:48		kfunk2	

Gross	101560 lb
Tare	41180 lb
Net	60380 lb
Tons	30.19

Comments SCOLERI-KF

	Product	LD%	Qty	UOM	Rate	Tax	Amount	Origin
1	ENVCLEANUP RGCPCS-Tons-E	100	30.19	Tons				KING
2	GOND TON-GONDOLA PER TON	100	30.19	Tons				KING

203 WM

Total Tax
Total Ticket

Driver's Signature

WASTE MANAGEMENT

8th Ave Reload
7400 8th Ave S
Seattle, WA, 98108

Reprint
Ticket# 11509
Ph: 206-694-0600

Customer Name	GLACIER ENVIRONMENTAL SERVICE	Carrier	SELF SELF		
Ticket Date	09/22/2017	Vehicle#	S02	Volume	
Payment Type	Credit Account	Container			
Manual Ticket#		Driver	RICK MYERS		
Route		Check#			
Hauling Ticket#		Billing#	0000146		
Destination		Grid			
PO#	17-036/125003ORD				

	Time	Scale	Operator	Inbound		
In	09/22/2017 09:24:49	Scale 1	kfunk2		Gross	110320 lb
Out	09/22/2017 09:24:49		kfunk2		Tare	41180 lb
					Net	69140 lb
					Tons	34.57

Comments SCOLERI-KF

	Product	LD%	Qty	UOM	Rate	Tax	Amount	Origin
1	ENVCLEANUP RGCPCS-Tons-E	100	34.57	Tons				KING
2	GOND TON-GONDOLA PER TON	100	34.57	Tons				KING

203 WM

Total Tax

Total Ticket

Driver's Signature

WASTE MANAGEMENT

8th Ave Reload
7400 8th Ave S
Seattle, WA, 98108

Reprint
Ticket# 11517

Ph: 206-694-0600

Customer Name	GLACIER ENVIRONMENTAL SERVICE	Carrier	SELF SELF		
Ticket Date	09/22/2017	Vehicle#	S02	Volume	
Payment Type	Credit Account	Container			
Manual Ticket#		Driver	RICK MYERS		
Route		Check#			
Hauling Ticket#		Billing#	0000146		
Destination		Grid			
PO#	17-036/125003ORD				

	Time	Scale	Operator	Inbound		
In	09/22/2017 10:04:39	Scale 1	kfunk2		Gross	103500 lb
Out	09/22/2017 10:04:39		kfunk2		Tare	41180 lb
					Net	62320 lb
					Tons	31.16

Comments SCOLERI-KF

	Product	LD%	Qty	UOM	Rate	Tax	Amount	Origin
1	ENVCLEANUP RGCPCS-Tons-E	100	31.16	Tons				KING
2	GOND TON-GONDOLA PER TON	100	31.16	Tons				

203 WM

Total Tax

Total Tax
Total Ticket

Driver's Signature

WASTE MANAGEMENT

8th Ave Reload
7400 8th Ave S
Seattle, WA, 98108

Reprint
Ticket# 11979

Ph: 206-694-0600

Customer Name GLACIER ENVIRONMENTAL SERVICE
Ticket Date 09/27/2017
Payment Type Credit Account
Manual Ticket#
Route
Hauling Ticket#
Destination
PO# 17-036/125003ORD

Carrier SELF SELF
Vehicle# ITI1T
Container
Driver TONY MERANTO
Check#
Billing# 0000146
Grid

Volume

	Time	Scale	Operator	Inbound		
In	09/27/2017 07:01:29	Scale 1	kfunk2		Gross	82280 lb
Out	09/27/2017 07:01:29		kfunk2		Tare	38980 lb
					Net	43300 lb
					Tons	21.65

Comments ITI-KF

	Product	LD%	Qty	UOM	Rate	Tax	Amount	Origin
1	ENVCLEANUP RGCPCS-Tons-E	100	21.65	Tons				KING
2	GOND TON-GONDOLA PER TON	100	21.65	Tons				

203 WM

Total Tax
Total Ticket

Driver's Signature

WASTE MANAGEMENT

8th Ave Reload
7400 8th Ave S
Seattle, WA, 98108

Reprint
Ticket# 11981
Ph: 206-694-0600

Customer Name	GLACIER ENVIRONMENTAL SERVICE	Carrier	SELF SELF		
Ticket Date	09/27/2017	Vehicle#	ITI1T	Volume	
Payment Type	Credit Account	Container			
Manual Ticket#		Driver	TONY MERANTO		
Route		Check#			
Hauling Ticket#		Billing#	0000146		
Destination		Grid			
PO#	17-036/125003ORD				

	Time	Scale	Operator	Inbound		
In	09/27/2017 07:29:49	Scale 1	kfunk2		Gross	88960 lb
Out	09/27/2017 07:29:49		kfunk2		Tare	38980 lb
					Net	49980 lb
					Tons	24.99

Comments ITI-KF

	Product	LD%	Qty	UOM	Rate	Tax	Amount	Origin
1	ENVCLEANUP RGCPCS-Tons-E	100	24.99	Tons				KING
2	GOND TON-GONDOLA PER TON	100	24.99	Tons				KING

203 WM

Total Tax
Total Ticket

Driver's Signature

WASTE MANAGEMENT

8th Ave Reload
7400 8th Ave S
Seattle, WA, 98108

Reprint
Ticket# 11986

Ph: 206-694-0600

Customer Name	GLACIER ENVIRONMENTAL SERVICE	Carrier	SELF SELF		
Ticket Date	09/27/2017	Vehicle#	ITI1T	Volume	
Payment Type	Credit Account	Container			
Manual Ticket#		Driver	TONY MERANTO		
Route		Check#			
Hauling Ticket#		Billing#	0000146		
Destination		Grid			
PO#	17-036/125003ORD				

	Time	Scale	Operator	Inbound		
In	09/27/2017 08:02:02	Scale 1	kfunk2		Gross	87500 lb
Out	09/27/2017 08:02:02		kfunk2		Tare	38980 lb
					Net	48520 lb
					Tons	24.26

Comments ITI-KF

	Product	LD%	Qty	UOM	Rate	Tax	Amount	Origin
1	ENVCLEANUP RGCPCS-Tons-E	100	24.26	Tons				KING
2	GOND TON-GONDOLA PER TON	100	24.26	Tons				

203 WM

Total Tax

Total Ticket

Driver's Signature

WASTE MANAGEMENT

8th Ave Reload
7400 8th Ave S
Seattle, WA, 98108

Reprint
Ticket# 12058

Ph: 206-694-0600

Customer Name	GLACIER ENVIRONMENTAL SERVICE	Carrier	SELF SELF		
Ticket Date	09/27/2017	Vehicle#	ITI1T	Volume	
Payment Type	Credit Account	Container			
Manual Ticket#		Driver	TONY MERANTO		
Route		Check#			
Hauling Ticket#		Billing#	0000146		
Destination		Grid			
PO#	17-036/125003ORD				

	Time	Scale	Operator	Inbound		
In	09/27/2017 11:54:55	Scale 1	kfunk2		Gross	89980 lb
Out	09/27/2017 11:54:55		kfunk2		Tare	38980 lb
					Net	51000 lb
					Tons	25.50

Comments ITI-KF

	Product	LD%	Qty	UOM	Rate	Tax	Amount	Origin
1	ENVCLEANUP RGCPCS-Tons-E	100	25.50	Tons				KING
2	GOND TON-GONDOLA PER TON	100	25.50	Tons				KING

203 WM

Total Tax

Total Tax
Total Ticket

Driver's Signature

WASTE MANAGEMENT

8th Ave Reload
7400 8th Ave S
Seattle, WA, 98108

Reprint
Ticket# 12076

Ph: 206-694-0600

Customer Name GLACIER ENVIRONMENTAL SERVICE
Ticket Date 09/27/2017
Payment Type Credit Account
Manual Ticket#
Route
Hauling Ticket#
Destination
PO# 17-036/125003ORD

Carrier SELF SELF
Vehicle# ITI1T
Container
Driver TONY MERANTO
Check#
Billing# 0000146
Grid

Volume

	Time	Scale	Operator	Inbound		
In	09/27/2017 13:16:21	Scale 1	kfunk2		Gross	104660 lb
Out	09/27/2017 13:16:21		kfunk2		Tare	38980 lb
					Net	65680 lb
					Tons	32.84

Comments ITI-KF

	Product	LD%	Qty	UOM	Rate	Tax	Amount	Origin
1	ENVCLEANUP RGCPCS-Tons-E	100	32.84	Tons				KING
2	GOND TON-GONDOLA PER TON	100	32.84	Tons				

203 WM

Customer Summary Report
Criteria: 10/06/2017 12:00 AM to 11/14/2017 11:59 PM
Business Unit Name: 8th Avenue Facility - S09681 (USA)
User: lmercer
Date: Nov 15 2017, 5:30:25 PM - Central Standard Time
Customer Name: GLACIER ENVIRONMENTAL SERVICES (SEATTLE IRON & METALS CORP)
Profile: 125003ORD

Ticket Date	Ticket ID	Customer	Generator	Profile	Truck	Tons
11/13/2017	15467	GLACIER ENVIRONMENTAL SERVICES	WA-SEATTLE IRON AND METAL CORP	125003ORD	SB25S	12.47
11/13/2017	15472	GLACIER ENVIRONMENTAL SERVICES	WA-SEATTLE IRON AND METAL CORP	125003ORD	ITI1	12.94
11/13/2017	15476	GLACIER ENVIRONMENTAL SERVICES	WA-SEATTLE IRON AND METAL CORP	125003ORD	SB25S	16.20
11/13/2017	15479	GLACIER ENVIRONMENTAL SERVICES	WA-SEATTLE IRON AND METAL CORP	125003ORD	ITI1	14.73
11/13/2017	15492	GLACIER ENVIRONMENTAL SERVICES	WA-SEATTLE IRON AND METAL CORP	125003ORD	SB25S	16.99
11/13/2017	15514	GLACIER ENVIRONMENTAL SERVICES	WA-SEATTLE IRON AND METAL CORP	125003ORD	ITI1	14.50
11/13/2017	15526	GLACIER ENVIRONMENTAL SERVICES	WA-SEATTLE IRON AND METAL CORP	125003ORD	SB25S	17.66
11/13/2017	15554	GLACIER ENVIRONMENTAL SERVICES	WA-SEATTLE IRON AND METAL CORP	125003ORD	SB25S	12.78
11/14/2017	15595	GLACIER ENVIRONMENTAL SERVICES	WA-SEATTLE IRON AND METAL CORP	125003ORD	ITI1	14.53
11/14/2017	15614	GLACIER ENVIRONMENTAL SERVICES	WA-SEATTLE IRON AND METAL CORP	125003ORD	ITI1	7.30
11/15/2017	15646	GLACIER ENVIRONMENTAL SERVICES	WA-SEATTLE IRON AND METAL CORP	125003ORD	ITI1	12.01
11/15/2017	15651	GLACIER ENVIRONMENTAL SERVICES	WA-SEATTLE IRON AND METAL CORP	125003ORD	SB25S	15.73
11/15/2017	15652	GLACIER ENVIRONMENTAL SERVICES	WA-SEATTLE IRON AND METAL CORP	125003ORD	ITI1	12.35
11/15/2017	15657	GLACIER ENVIRONMENTAL SERVICES	WA-SEATTLE IRON AND METAL CORP	125003ORD	SB25S	13.59
11/15/2017	15663	GLACIER ENVIRONMENTAL SERVICES	WA-SEATTLE IRON AND METAL CORP	125003ORD	ITI1	12.99
11/15/2017	15666	GLACIER ENVIRONMENTAL SERVICES	WA-SEATTLE IRON AND METAL CORP	125003ORD	SB25S	10.07
11/15/2017	15680	GLACIER ENVIRONMENTAL SERVICES	WA-SEATTLE IRON AND METAL CORP	125003ORD	ITI1	12.19
11/15/2017	15683	GLACIER ENVIRONMENTAL SERVICES	WA-SEATTLE IRON AND METAL CORP	125003ORD	SB25S	14.96
11/16/2017	15709	GLACIER ENVIRONMENTAL SERVICES	WA-SEATTLE IRON AND METAL CORP	125003ORD	ITI1	14.11
11/16/2017	15712	GLACIER ENVIRONMENTAL SERVICES	WA-SEATTLE IRON AND METAL CORP	125003ORD	ITI1	14.06
11/16/2017	15718	GLACIER ENVIRONMENTAL SERVICES	WA-SEATTLE IRON AND METAL CORP	125003ORD	ITI1	14.34
11/16/2017	15725	GLACIER ENVIRONMENTAL SERVICES	WA-SEATTLE IRON AND METAL CORP	125003ORD	ITI1	14.46
11/16/2017	15754	GLACIER ENVIRONMENTAL SERVICES	WA-SEATTLE IRON AND METAL CORP	125003ORD	ITI1	11.42
12/15/2017	139805	GLACIER ENVIRONMENTAL SERVICES	WA-SEATTLE IRON AND METAL CORP	125003OR	MV325	8.59
					Total	320.97

Total Tax
Total Ticket

Signature

WASTE MANAGEMENT

8th Ave Reload
7400 8th Ave S
Seattle, WA, 98108

Ph: 206-694-0600

Original
Ticket# 15467

Customer Name GLACIER ENVIRONMENTAL SERVICE
Ticket Date 11/13/2017
Payment Type Credit Account
Manual Ticket#
Route
Hauling Ticket#
Destination
PO# 17-036/125003ORD

Carrier SELF SELF
Vehicle# SB25S
Container
Driver RAY GALLAGHER
Check#
Billing# 0000146
Grid

Volume

	Time	Scale	Operator
In	11/13/2017 08:49:18	Scale 1	kfunk2
Out	11/13/2017 08:59:09	Scale 1	kfunk2

Inbound

Gross	51800 lb
Tare	26860 lb
Net	24940 lb
Tons	12.47

Comments SPRINGBROOK-KF

RAY

Product	LD%	Qty	UOM	Rate	Tax	Amount	Origin
NVCLEANUP RGCPCS-Tons-E	100	12.47	Tons				KING
D TON-GONDOLA PER TON	100	12.47	Tons				KING

Total Tax
Total Ticket

Signature

WASTE MANAGEMENT

8th Ave Reload
7400 8th Ave S
Seattle, WA, 98108

Original
Ticket# 15472

Ph: 206-694-0600

Customer Name GLACIER ENVIRONMENTAL SERVICE
Ticket Date 11/13/2017
Payment Type Credit Account
Manual Ticket#
Route
Hauling Ticket#
Destination
PO# 17-036/1250030RD

Carrier SELF SELF
Vehicle# ITI1
Container
Driver TONY MERANTO
Check#
Billing# 0000146
Grid

Volume

	Time	Scale	Operator	Inbound		
In	11/13/2017 09:01:08	Scale 1	kfunk2		Gross	50380 lb
Out	11/13/2017 09:01:08		kfunk2		Tare	24500 lb
					Net	25880 lb
					Tons	12.94

Comments ITI-KF

	Product	LD%	Qty	UOM	Rate	Tax	Amount	Origin
1	ENVCLEANUP BGCPCS-Tons-E	100	12.94	Tons				KING
2	GOND TON-GONDOLA PER TON	100	12.94	Tons				KING

203 WM

Total Tax

Total Ticket

Signature

WASTE MANAGEMENT

8th Ave Reload
7400 8th Ave S
Seattle, WA. 98108

Ph: 206-694-0600

Original
Ticket# 15476

Customer Name GLACIER ENVIRONMENTAL SERVICE
Ticket Date 11/13/2017
Payment Type Credit Account
Manual Ticket#
Route
Hauling Ticket#
Destination
PO# 17-036/125003ORD

Carrier SELF SELF
Vehicle# SB25S
Container
Driver RAY GALLAGHER
Check#
Billing# 0000146
Grid

Volume

	Time	Scale	Operator	Inbound		
In	11/13/2017 09:14:51	Scale 1	kfunk2		Gross	59260 lb
Out	11/13/2017 09:14:51		kfunk2		Tare	26860 lb
					Net	32400 lb
					Tons	16.20

Comments SPRINGBROOK-KF

RAY

	Product	LD%	Qty	UOM	Rate	Tax	Amount	Origin
1	ENVCLEANUP RGCPCS-Tons-E	100	16.20	Tons				KING
2	GOND TON-GONDOLA PER TON	100	16.20	Tons				

203 WM

Total Tax

Total Ticket

Signature

WASTE MANAGEMENT

8th Ave Reload
7400 8th Ave S
Seattle, WA, 98108

Ph: 206-694-0600

Original
Ticket# 15479

Customer Name GLACIER ENVIRONMENTAL SERVICE
Ticket Date 11/13/2017
Payment Type Credit Account
Manual Ticket#
Route
Hauling Ticket#
Destination
PO# 17-036/1250030RD

Carrier SELF SELF
Vehicle# ITI1
Container
Driver TONY MERANTO
Check#
Billing# 0000146
Grid

Volume

	Time	Scale	Operator	Inbound		
In	11/13/2017 09:22:11	Scale 1	kfunk2		Gross	53960 lb
Out	11/13/2017 09:22:11		kfunk2		Tare	24500 lb
					Net	29460 lb
					Tons	14.73

Comments ITI-KF

	Product	LDX	Qty	UOM	Rate	Tax	Amount	Origin
1	ENVCLEANUP RGCPCS-Tons-E	100	14.73	Tons				KING
2	GOND TON-GONDOLA PER TON	100	14.73	Tons				KING

203 WM

Total Ticket

Signature

WASTE MANAGEMENT

9th Ave Reload
7400 8th Ave S
Seattle, WA, 98108

Original
Ticket# 15492

Ph: 206-694-0600

Customer Name GLACIER ENVIRONMENTAL SERVICE
Ticket Date 11/13/2017
Payment Type Credit Account
Manual Ticket#
Route
Hauling Ticket#
Destination
PO# 17-036/1250030RD

Carrier SELF SELF
Vehicle# SB25S
Container
Driver RAY GALLAGHER
Check#
Billing# 0000146
Grid

Volume

	Time	Scale	Operator	Inbound		
In	11/13/2017 09:55:33	Scale 1	kfunk2		Gross	60840 lb
Out	11/13/2017 09:55:33		kfunk2		Tare	26860 lb
					Net	33980 lb
					Tons	16.99

Comments SPRINGBROOK-KF

RAY

	Product	LD%	Qty	UOM	Rate	Tax	Amount	Origin
1	ENVCLEANUP RGCPCS-Tons-E	100	16.99	Tons				KING
2	GOND TON-GONDOLA PER TON	100	16.99	Tons				

203 WM

Total Ticket

Signature

WASTE MANAGEMENT

8th Ave Reload
7400 8th Ave S
Seattle, WA, 98108

Original
Ticket# 15514

Ph: 206-694-0600

Customer Name GLACIER ENVIRONMENTAL SERVICE
Ticket Date 11/13/2017
Payment Type Credit Account
Manual Ticket#
Route
Hauling Ticket#
Destination
PO# 17-036/1250030RD

Carrier SELF SELF
Vehicle# ITI1
Container
Driver TONY MERANTO
Check#
Billing# 0000146
Grid

Volume

	Time	Scale	Operator	Inbound		
In	11/13/2017 10:55:48	Scale 1	kfunk2		Gross	53500 lb
Out	11/13/2017 10:55:48		kfunk2		Tare	24500 lb
					Net	29000 lb
					Tons	14.50

Comments ITI-KF

	Product	LD%	Qty	UOM	Rate	Tax	Amount	Origin
1	ENVCLEANUP RGCPCS-Tons-E	100	14.50	Tons				KING
2	GOND TON-GONDOLA PER TON	100	14.50	Tons				

203 WM

Total Tax

Total Ticket

Signature

WASTE MANAGEMENT

9th Ave Reload
7400 8th Ave S
Seattle, WA, 98108

Original
Ticket# 15526

Ph: 206-694-0600

Customer Name GLACIER ENVIRONMENTAL SERVICE
Ticket Date 11/13/2017
Payment Type Credit Account
Manual Ticket#
Route
Hauling Ticket#
Destination
PO# 17-036/125003ORD

Carrier SELF SELF
Vehicle# SB255
Container
Driver RAY GALLAGHER
Check#
Billing# 0000146
Grid

Volume

	Time	Scale	Operator	Inbound		
In	11/13/2017 11:43:02	Scale 1	kfunk2		Gross	62180 lb
Out	11/13/2017 11:43:02		kfunk2		Tare	26860 lb
					Net	35320 lb
					Tons	17.66

Comments SPRINGBROOK-KF

RAY

	Product	LD%	Qty	UOM	Rate	Tax	Amount	Origin
1	ENVCLEANUP RGCPCS-Tons-E	100	17.66	Tons				KING
2	GOND TON-GONDOLA PER TON	100	17.66	Tons				

203 WM

Total Tax
Total Ticket

Signature

WASTE MANAGEMENT

8th Ave Reload
7400 8th Ave S
Seattle, WA, 98108

Original
Ticket# 15554
Ph: 206-694-0600

Customer Name	GLACIER ENVIRONMENTAL SERVICE	Carrier	SELF SELF		
Ticket Date	11/13/2017	Vehicle#	SB25S	Volume	
Payment Type	Credit Account	Container			
Manual Ticket#		Driver	RAY GALLAGHER		
Route		Check#			
Hauling Ticket#		Billing#	0000146		
Destination		Grid			
PO#	17-036/125003ORD				

	Time	Scale	Operator	Inbound		
In	11/13/2017 13:10:57	Scale 1	kfunk2		Gross	52420 lb
Out	11/13/2017 13:10:57		kfunk2		Tare	26860 lb
					Net	25560 lb
					Tons	12.78

Comments SPRINGBROOK-KF

RAY

	Product	LD%	Qty	UOM	Rate	Tax	Amount	Origin
1	ENVCLEANUP RGCPCS-Tons-E	100	12.78	Tons				KING
2	GOND TON-GONDOLA PER TON	100	12.78	Tons				

203 WM

Total Ticket

Signature

WASTE MANAGEMENT

8th Ave Reload
7400 8th Ave S
Seattle, WA, 98108

Original
Ticket# 15595
Ph: 206-694-0600

Customer Name GLACIER ENVIRONMENTAL SERVICE
Ticket Date 11/14/2017
Payment Type Credit Account
Manual Ticket#
Route
Hauling Ticket#
Destination
PO# 17-036/1250030RD

Carrier SELF SELF
Vehicle# ITI1
Container
Driver TONY MERANTO
Check#
Billing# 0000146
Grid

Volume

	Time	Scale	Operator	Inbound		
In	11/14/2017 09:02:41	Scale 1	kfunk2		Gross	53560 lb
Out	11/14/2017 09:02:41		kfunk2		Tare	24500 lb
					Net	29060 lb
					Tons	14.53

Comments ITI-KF

	Product	LD%	Qty	UOM	Rate	Tax	Amount	Origin
1	ENVCLEANUP RGCPCS-Tons-E	100	14.53	Tons				KING
2	GOND TON-GONDOLA PER TON	100	14.53	Tons				

203 WM

Total T...

Signature

Total Ticket

WASTE MANAGEMENT

8th Ave Reload
7400 8th Ave S
Seattle, WA, 98108

Original
Ticket# 15614

Ph: 206-694-0600

Customer Name GLACIER ENVIRONMENTAL SERVICE
Ticket Date 11/14/2017
Payment Type Credit Account
Manual Ticket#
Route
Hauling Ticket#
Destination
PO# 17-036/125003ORD

Carrier SELF SELF
Vehicle# ITI1
Container
Driver TONY MERANTO
Check#
Billing# 0000146
Grid

Volume

	Time	Scale	Operator	Inbound
In	11/14/2017 11:23:16	Scale 1	kfunk2	
Out	11/14/2017 11:23:16		kfunk2	

Gross	39100 lb
Tare	24500 lb
Net	14600 lb
Tons	7.30

Comments ITI-KF

	Product	LD%	Qty	UOM	Rate	Tax	Amount	Origin
1	ENVCLEANUP RGCPCS-Tons-E	100	7.30	Tons				KING
2	GOND TON-GONDOLA PER TON	100	7.30	Tons				

Total Tax

203 WM

WASTE MANAGEMENT

Total Ticket

8th Ave Reload
7400 8th Ave S
Seattle, WA, 98108

Original
Ticket# 15646
Ph: 206-694-0600

Customer Name GLACIER ENVIRONMENTAL SERVICE
Ticket Date 11/15/2017
Payment Type Credit Account
Manual Ticket#
Route
Hauling Ticket#
Destination
PO# 17-036/1250030RD

Carrier SELF SELF
Vehicle# ITI1
Container
Driver TONY MERANTO
Check#
Billing# 0000146
Grid

Volume

	Time	Scale	Operator	Inbound		
In	11/15/2017 08:15:24	Scale 1	kfunk2		Gross	48520 lb
Out	11/15/2017 08:15:24		kfunk2		Tare	24500 lb
					Net	24020 lb
					Tons	12.01

Comments ITI-KF

	Product	LD%	Qty	UOM	Rate	Tax	Amount	Origin
1	ENVCLEANUP RGCPCS-Tons-E	100	12.01	Tons				KING
2	GOND TON-GONDOLA PER TON	100	12.01	Tons				KING

Total Tax

203 WM

Signature

Total Ticket

WASTE MANAGEMENT

8th Ave Reload
7400 8th Ave S
Seattle, WA, 98108

Ph: 206-694-0600

Original
Ticket# 15651

Customer Name GLACIER ENVIRONMENTAL SERVICE
Ticket Date 11/15/2017
Payment Type Credit Account
Manual Ticket#
Route
Hauling Ticket#
Destination
PO# 17-036/1250030RD

Carrier SELF SELF
Vehicle# SB25S
Container
Driver RAY GALLAGHER
Check#
Billing# 0000146
Grid

Volume

	Time	Scale	Operator	Inbound		
In	11/15/2017 08:28:16	Scale 1	kfunk2		Gross	58320 lb
Out	11/15/2017 08:28:16		kfunk2		Tare	26860 lb
					Net	31460 lb
					Tons	15.73

Comments SPRINGBROOK-KF

RAY

	Product	LD%	Qty	UOM	Rate	Tax	Amount	Origin
1	ENVCLEANUP RGCPCS-Tons-E	100	15.73	Tons				KING
2	GOND TON-GONDOLA PER TON	100	15.73	Tons				

203 WM

Signature

Total Ticket

WASTE MANAGEMENT

8th Ave Reload
7400 8th Ave S
Seattle, WA, 98108

Original
Ticket# 15652

Ph: 206-694-0600

Customer Name GLACIER ENVIRONMENTAL SERVICE
Ticket Date 11/15/2017
Payment Type Credit Account
Manual Ticket#
Route
Hauling Ticket#
Destination
PO# 17-036/1250030RD

Carrier SELF SELF
Vehicle# ITI1
Container
Driver TONY MERANTO
Check#
Billing# 0000146
Grid

Volume

	Time	Scale	Operator	Inbound		
In	11/15/2017 08:36:37	Scale 1	kfunk2		Gross	49200 lb
Out	11/15/2017 08:36:37		kfunk2		Tare	24500 lb
					Net	24700 lb
					Tons	12.35

Comments ITI-KF

	Product	LD%	Qty	UOM	Rate	Tax	Amount	Origin
1	ENVCLEANUP RGCPCS-Tons-E	100	12.35	Tons				KING
2	GOND TON-GONDOLA PER TON	100	12.35	Tons				KING

203 WM

Signature

WASTE MANAGEMENT

Total Ticket

9th Ave Reload
7400 8th Ave S
Seattle, WA, 98108

Original
Ticket# 15657

Ph: 206-694-0600

Customer Name	GLACIER ENVIRONMENTAL SERVICE	Carrier	SELF SELF		
Ticket Date	11/15/2017	Vehicle#	SB25S	Volume	
Payment Type	Credit Account	Container			
Manual Ticket#		Driver	RAY GALLAGHER		
Route		Check#			
Hauling Ticket#		Billing#	0000146		
Destination		Grid			
PO#	17-036/1250030RD				

	Time	Scale	Operator	Inbound		
In	11/15/2017 08:59:14	Scale 1	kfunk2		Gross	54040 lb
Out	11/15/2017 08:59:14		kfunk2		Tare	26860 lb
					Net	27180 lb
					Tons	13.59

Comments SPRINGBROOK-KF

RAY

	Product	LD%	Qty	UOM	Rate	Tax	Amount	Origin
1	ENVCLEANUP RGCPCS-Tons-E	100	13.59	Tons				KING
2	GOND TON-GONDOLA PER TON	100	13.59	Tons				

203 WM

Signature

Total Ticket

WASTE MANAGEMENT

8th Ave Reload
7400 8th Ave S
Seattle, WA, 98108

Original
Ticket# 15663

Ph: 206-694-0600

Customer Name GLACIER ENVIRONMENTAL SERVICE
Ticket Date 11/15/2017
Payment Type Credit Account
Manual Ticket#
Route
Hauling Ticket#
Destination
PO# 17-036/1250030RD

Carrier SELF SELF
Vehicle# ITI1
Container
Driver TONY MERANTO
Check#
Billing# 0000146
Grid

Volume

	Time	Scale	Operator	Inbound		
In	11/15/2017 09:22:22	Scale 1	kfunk2		Gross	50480 lb
Out	11/15/2017 09:22:22		kfunk2		Tare	24500 lb
					Net	25980 lb
					Tons	12.99

Comments ITI-KF

	Product	LD%	Qty	UOM	Rate	Tax	Amount	Origin
1	ENVCLEANUP RGCPCS-Tons-E	100	12.99	Tons				KING
2	GOND TON-GONDOLA PER TON	100	12.99	Tons				KING

203 WM

Signature

WASTE MANAGEMENT

Total Ticket

8th Ave Reload
7400 8th Ave S
Seattle, WA, 98108

Original
Ticket# 15666

Ph: 206-694-0600

Customer Name GLACIER ENVIRONMENTAL SERVICE
Ticket Date 11/15/2017
Payment Type Credit Account
Manual Ticket#
Route
Hauling Ticket#
Destination
PO# 17-036/125003ORD

Carrier SELF SELF
Vehicle# SB25S
Container
Driver RAY GALLAGHER
Check#
Billing# 0000146
Grid

Volume

	Time	Scale	Operator	Inbound		
In	11/15/2017 09:31:16	Scale 1	kfunk2		Gross	47000 lb
Out	11/15/2017 09:31:16		kfunk2		Tare	26860 lb
					Net	20140 lb
					Tons	10.07

Comments SPRINGBROOK-KF

RAY

Product	LD%	Qty	UOM	Rate	Tax	Amount	Origin
1. ENVCLEANUP RGCPCS-Tons-E	100	10.07	Tons				KING
2. GOND TON-GONDOLA PER TON	100	10.07	Tons				

203 WM

Total Tax

Signature

Total Ticket

WASTE MANAGEMENT

8th Ave Reload
7400 8th Ave S
Seattle, WA, 98108

Ph: 206-694-0600

Original
Ticket# 15680

Customer Name GLACIER ENVIRONMENTAL SERVICE
Ticket Date 11/15/2017
Payment Type Credit Account
Manual Ticket#
Route
Hauling Ticket#
Destination
PO# 17-036/125003ORD

Carrier SELF SELF
Vehicle# ITI1
Container
Driver TONY MERANTO
Check#
Billing# 0000146
Grid

Volume

	Time	Scale	Operator	Inbound		
In	11/15/2017 11:23:43	Scale 1	kfunk2		Gross	48880 lb
Out	11/15/2017 11:23:43		kfunk2		Tare	24500 lb
					Net	24380 lb
					Tons	12.19

Comments ITI-KF

	Product	LDX	Qty	UOM	Rate	Tax	Amount	Origin
1	ENVCLEANUP RGCPCS-Tons-E	100	12.19	Tons				KING
2	GOND TON-GONDOLA PER TON	100	12.19	Tons				

203 WM

Total Tax

Signature

WASTE MANAGEMENT

Total Ticket

8th Ave Reload
7400 8th Ave S
Seattle, WA, 98108

Original
Ticket# 15683

Ph: 206-694-0600

Customer Name GLACIER ENVIRONMENTAL SERVICE
Ticket Date 11/15/2017
Payment Type Credit Account
Manual Ticket#
Route
Hauling Ticket#
Destination
PO# 17-036/125003ORD

Carrier SELF SELF
Vehicle# SB25S
Container
Driver RAY GALLAGHER
Check#
Billing# 0000146
Grid

Volume

	Time	Scale	Operator	Inbound		
In	11/15/2017 11:28:44	Scale 1	kfunk2		Gross	56780 lb
Out	11/15/2017 11:28:44		kfunk2		Tare	26860 lb
					Net	29920 lb
					Tons	14.96

Comments SPRINGBROOK-KF

RAY

Product	LD%	Qty	UOM	Rate	Tax	Amount	Origin
1. ENVCLEANUP RGCPCS-Tons-E	100	14.96	Tons				KING
2. GOND TON-GONDOLA PER TON	100	14.96	Tons				

203 WM

Signature

Total Ticket

WASTE MANAGEMENT

8th Ave Reload
7400 8th Ave S
Seattle, WA, 98108

Original
Ticket# 15709

Ph: 206-694-0600

Customer Name GLACIER ENVIRONMENTAL SERVICE
Ticket Date 11/16/2017
Payment Type Credit Account
Manual Ticket#
Route
Hauling Ticket#
Destination
PO# 17-036/1250030RD

Carrier SELF SELF
Vehicle# ITI1
Container
Driver TONY MERANTO
Check#
Billing# 0000146
Grid

Volume

	Time	Scale	Operator	Inbound		
In	11/16/2017 08:14:29	Scale 1	kfunk2		Gross	52720 lb
Out	11/16/2017 08:14:29		kfunk2		Tare	24500 lb
					Net	28220 lb
					Tons	14.11

Comments ITI-KF

	Product	LD%	Qty	UOM	Rate	Tax	Amount	Origin
1.	ENVCLEANUP RGCPCS-Tons-E	100	14.11	Tons				KING
2.	GOND TON-GONDOLA PER TON	100	14.11	Tons				

203 WM

Total Tax

Signature

Total Ticket

WASTE MANAGEMENT

8th Ave Reload
7400 8th Ave S
Seattle, WA, 98108

Original
Ticket# 15712

Ph: 206-694-0600

Customer Name GLACIER ENVIRONMENTAL SERVICE
Ticket Date 11/16/2017
Payment Type Credit Account
Manual Ticket#
Route
Hauling Ticket#
Destination
PO# 17-036/125003ORD

Carrier SELF SELF
Vehicle# ITI1
Container
Driver TONY MERANTO
Check#
Billing# 0000146
Grid

Volume

	Time	Scale	Operator	Inbound		
In	11/16/2017 08:32:27	Scale 1	kfunk2		Gross	52620 lb
Out	11/16/2017 08:32:27		kfunk2		Tare	24500 lb
					Net	28120 lb
					Tons	14.06

Comments ITI-KF

	Product	LD%	Qty	UOM	Rate	Tax	Amount	Origin
1	ENVCLEANUP RGCPCS-Tons-E	100	14.06	Tons				KING
2	GOND TON-GONDOLA PER TON	100	14.06	Tons				

Total Tax

203 WM

Signature

Total Ticket

WASTE MANAGEMENT

8th Ave Reload
7400 8th Ave S
Seattle, WA, 98108

Original
Ticket# 15718
Ph: 206-694-0600

Customer Name GLACIER ENVIRONMENTAL SERVICE
Ticket Date 11/16/2017
Payment Type Credit Account
Manual Ticket#
Route
Hauling Ticket#
Destination
PO# 17-036/1250030RD

Carrier SELF SELF
Vehicle# ITI1
Container
Driver TONY MERANTO
Check#
Billing# 0000146
Grid

Volume

	Time	Scale	Operator	Inbound		
In	11/16/2017 08:53:28	Scale 1	kfunk2		Gross	53180 lb
Out	11/16/2017 08:53:28		kfunk2		Tare	24500 lb
					Net	28680 lb
					Tons	14.34

Comments ITI-KF

	Product	LD%	Qty	UOM	Rate	Tax	Amount	Origin
1	ENVCLEANUP RGCPCS-Tons-E	100	14.34	Tons				KING
2	GOND TON-GONDOLA PER TON	100	14.34	Tons				

Total Tax

203 WM

Signature

Total Ticket

WASTE MANAGEMENT

8th Ave Reload
7400 8th Ave S
Seattle, WA, 98108

Original
Ticket# 15725

Ph: 206-694-0600

Customer Name GLACIER ENVIRONMENTAL SERVICE
Ticket Date 11/16/2017
Payment Type Credit Account
Manual Ticket#
Route
Hauling Ticket#
Destination
PO# 17-036/1250030RD

Carrier SELF SELF
Vehicle# ITI1
Container
Driver TONY MERANTO
Check#
Billing# 0000146
Grid

Volume

	Time	Scale	Operator	Inbound		
In	11/16/2017 09:28:42	Scale 1	kfunk2		Gross	53420 lb
Out	11/16/2017 09:28:42		kfunk2		Tare	24500 lb
					Net	28920 lb
					Tons	14.46

Comments ITI-KF

	Product	LD%	Qty	UOM	Rate	Tax	Amount	Origin
1.	ENVCLEANUP RGCPCS-Tons-E	100	14.46	Tons				KING
2.	GOND TON-GONDOLA PER TON	100	14.46	Tons				

Total Tax

203 WM

Signature

Total Ticket

WASTE MANAGEMENT

8th Ave Reload
7400 8th Ave S
Seattle, WA, 98108

Original
Ticket# 15754

Ph: 206-694-0600

Customer Name GLACIER ENVIRONMENTAL SERVICE
Ticket Date 11/16/2017
Payment Type Credit Account
Manual Ticket#
Route
Hauling Ticket#
Destination
PO# 17-036/125003ORD

Carrier SELF SELF
Vehicle# ITI1
Container
Driver TONY MERANTO
Check#
Billing# 0000146
Grid

Volume

	Time	Scale	Operator	Inbound
In	11/16/2017 12:13:35	Scale 1	kfunk2	
Out	11/16/2017 12:13:35		kfunk2	

Gross	47340 lb
Tare	24500 lb
Net	22840 lb
Tons	11.42

Comments ITI-KF

	Product	LD%	Qty	UOM	Rate	Tax	Amount	Origin
1.	ENVCLEANUP RGCPCS-Tons-E	100	11.42	Tons				KING
2.	GOND TON-GONDOLA PER TON	100	11.42	Tons				KING

203 WM

Total Tax

WASTE MANAGEMENT

Alaska Street
70 S Alaska Street
Seattle, WA, 98134

Original
Ticket# 139805

Ph: 206 763 5025

Customer Name GLACIER ENVIRONMENTAL SERVICE
Ticket Date 12/15/2017
Payment Type Credit Account
Manual Ticket#
Route AK
Hauling Ticket#
Destination
PO# 17-036/1250030R

Carrier SELF HAULER *
Vehicle# MV325
Container
Driver SOT LUY
Check#
Billing# 0000022
Grid

Volume

	Time	Scale	Operator	Inbound		
In	12/15/2017 14:47:28	SCALE 1	lmercer		Gross	62120 lb
Out	12/15/2017 15:19:31	SCALE 1	lmercer		Tare	44940 lb
					Net	17180 lb
					Tons	8.59

Comments MAR VAC - LM

	Product	LD%	Qty	UOM	Rate	Tax	Amount	Origin
1	ENVCLEANUP RGCPCS-Tons-E	100	8.59	Tons				KING
2	GONDOLA T/10T MIN-GONDOL	100	8.59	Tons				

Driver's Signature

Total Tax
Total Ticket

BRAVO environmental

INVOICE

WO/Dispatch #
Customer Job #:
PO #:
Bravo Job #: D055606

Invoice #: 40242
Invoice Date: 10/11/2017
Due Date: 11/10/2017

Bill To:

Glacier Environmental Services
PO Box 1097

Mukilteo WA 98275

Job Site:

Glacier Env - Seattle
601 S Myrtle St

Seattle WA 00000

Date	Description	WO/DIS #	Unit	Quantity	Price	Amount
10/11/2017	Vactor Truck with Operator	55606	HOUR	9.25	185.00	1,711.25
	Overtime		HOUR	1.25	35.00	43.75
10/11/2017	Support Truck with Laborer	55607	HOUR	9.50	110.00	1,045.00
	Overtime		HOUR	1.50	35.00	52.50
	Tow Behind Compressor		DAY	1.00	225.00	225.00
	Traffic Control Signs		DAY	1.00	225.00	225.00
	Utility Settlement Points		EACH	5.00	165.00	825.00

☐ Bill ☐ CM PM APP RW
Vendor Bravo Environmental
Act Date 10/11/17 Due Date 11/10/17
Ref # 40242
M Eq/F S T O Job 17-036
GL ACCT _____ AMT 4127.50
GL ACCT _____ AMT _____
PO # _____ Entered _____

ENTERED

RECEIVED
OCT 24 2017
BY: _____

Please Remit To:

Bravo Environmental NW, Inc.
Drawer #2264
PO Box 5935
Troy, MI 48007-5935

Terms:

Thank You For Your Business!

To Pay by Phone
Please Call (425) 424-9000

Invoice Total: 4,127.50
Sales Tax 0.00
Total Due **4,127.50**

6437 South 144th Street Tukwila, WA 98168 (425) 424-9000 (425) 424-9002 fax
4927 NW Front Avenue Portland, OR 97210 (503) 261-9800 (503) 261-9900 fax
www.bravoenvironmental.com

MARINE VACUUM SERVICE,INC.

P. O. BOX 24263
SEATTLE, WA 98124

Email: ACCOUNTING@MARINEVACUUM.COM
Phone # 206-762-0240 (main) 206-745-3667
Fax # 206-763-8084

RECEIVED
DEC 04 2017
BY:

INVOICE

Date	Invoice #
11/30/2017	62363

Bill To

GLACIER ENVIROMENTAL SERVICES
PO BOX 1097
MUKILTEO, WA 98275

Job Description / Site address

PUMP AS DIRECTED
601 S MYRTLE ST
SEATTLE, WA
CONTACT:PHIL
425-355-2826

P.O. No.	Terms
	Net 30

Quantity	U/M	Description	Rate	Amount
		11/21/2017****** PUMP AS DIRECTED		0.00
3	HR	VAC TRUCK & DRIVER STRAIGHT TIME	111.00	333.00
2	HR	VAC TRUCK & DRIVER OVERTIME	145.00	290.00
14,550	GAL	WASTE WATER	0.27	3,928.50

☐ Bill ☐ CM PM APP RW
Vendor Marine Vacuum Service
Act Date 11/30/17 Due Date 12/29/17
Ref # 62363
M (Eq/F) S T O Job 17.036
GL ACCT _____ AMT 4551.50
GL ACCT _____ AMT _____
PO # _____ ENTERED

Dewatering

Due Date	12/30/2017

Please remit payment for this invoice by the Due Date. An initial $25.00 late fee (on each invoice) and a finance charge of 1.5% monthly or 18% annually will be assessed for all late payments. Customer assumes all late charges and reasonable cost of attorney fees in event of collection.

Subtotal	$4,551.50
Sales Tax (0.0%)	$0.00
Payments/Credits	$0.00
Balance Due	**$4,551.50**

MARINE VACUUM SERVICE INC.

P. O. BOX 24263
SEATTLE, WA 98124

Email: ACCOUNTING@MARINEVACUUM.COM
Phone # 206-762-0240 (main) 206-745-3667
Fax # 206-763-8084

INVOICE

Date	Invoice #
12/26/2017	62602

Bill To

GLACIER ENVIROMENTAL SERVICES
PO BOX 1097
MUKILTEO, WA 98275

Job Description / Site address

VACTOR OUT CARBON
FROM TWO PODS AND
SUCK WATER ONLY
OUT OF 10 DRUMS
RYAN 206-979-5850

P.O. No.	Terms
17-036/1250030R	Net 30

Quantity	U/M	Description	Rate	Amount
		12/15/2017****** PUMP AS DIRECTED		0.00
8	HR	VAC TRUCK & DRIVER STRAIGHT TIME	111.00	888.00
8	HR	LABOR STRAIGHT TIME	51.00	408.00

RECEIVED
DEC 28 2017
BY:

☐BIII ☐CM PM APP RW
Vendor Marine Vacuum Service
Act Date 12/26/17 Due Date 1/25/18
Ref # 62602
M Eq/F (S) T O Job 17-036
GL ACCT _____ AMT 1296.00
GL ACCT _____ AMT _____
PO # _____
Entered ENTERED

Due Date	1/25/2018	*Please remit payment for this invoice by the Due Date. An initial $25.00 late fee (on each invoice) and a finance charge of 1.5% monthly or 18% annually will be assessed for all late payments. Customer assumes all late charges and reasonable cost of attorney fees in event of collection.*	Subtotal	$1,296.00
			Sales Tax (0.0%)	$0.00
			Payments/Credits	$0.00
			Balance Due	**$1,296.00**

MARINE VACUUM SERVICE,INC.

P. O. BOX 24263
SEATTLE, WA 98124

Email: ACCOUNTING@MARINEVACUUM.COM
Phone # 206-762-0240 (main) 206-745-3667
Fax # 206-763-8084

RECEIVED
MAY 16 2018
BY:

INVOICE

Date	Invoice #
5/14/2018	64002

Bill To

GLACIER ENVIROMENTAL SERVICES
PO BOX 1097
MUKILTEO, WA 98275

Job Description / Site address

CLEAN BAKER TANK
SFVP 4121L FOR RETURN
601 S MYRTLE ST
SEATTLE

P.O. No.	Terms
	Net 30

Quantity	U/M	Description	Rate	Amount
		5/4/2018******* CLEAN AS DIRECTED	0.00	0.00
5	HR	VAC TRUCK & DRIVER STRAIGHT TIME	125.00	625.00
5	HR	LABOR STRAIGHT TIME	56.00	280.00
1,500	GAL	WASTE WATER	0.30	450.00
2	YD	YARD OF SLUDGE/SOLIDS	215.00	430.00

☐Bill ☐CM PM APP RW
Vendor Marine Vacuum Services
Act Date 5/14/18 Due Date 6/13/18
Ref # 64002
M Eq/F S T O Job 17-036
GL ACCT _____ AMT 1785.00
GL ACCT _____ AMT _____
PO # _____ Entered _____
ENTERED

Due Date	6/13/2018	*Please remit payment for this invoice by the Due Date. An initial $25.00 late fee (on each invoice) and a finance charge of 1.5% monthly or 18% annually will be assessed for all late payments. Customer assumes all late charges and reasonable cost of attorney fees in event of collection.*	Subtotal $1,785.00 Sales Tax (0.0%) $0.00 Payments/Credits $0.00 **Balance Due $1,785.00**

STRAIGHT BILL OF LADING

ORIGINAL — NOT NEGOTIABLE

Shipper No. 17069

Carrier No. _____

MARINE VACUUM SERVICE INC.

Page _____ of _____ (Name of carrier) (SCAC) Date _____

On Collect on Delivery shipments, the letters "COD" must appear before consignee's name or as otherwise provided in Item 430, Sec.1.

TO:
Consignee MARINE VACUUM SERVICE INC.
Street 1516 SOUTH GRAHAM STREET
City SEATTLE State WA Zip Code 98108

FROM:
Shipper Glacier Environmental
Street 6015 Myrtle St
City Seattle State WA Zip Code
CHEMTEL 1-800-255-3924
24 hr. Emergency Contact Tel. No. CONTRACT MIS3627926

Route

Vehicle Number 221

No. of Units & Container Type	HM	BASIC DESCRIPTION UN or NA Number, Proper Shipping Name, Hazard Class, Packing Group	TOTAL QUANTITY (Weight, Volume, Gallons, etc.)	WEIGHT (Subject to Correction)	RATE	CHARGES (For Carrier Use Only)
1 TT	X	(DOT SPEC TANK REQUIRED) UN1863 FUEL, AVIATION, TURBIN ENGINE, CLASS 3, PG I				
1 TT	X	(DOT SPEC TANK REQUIRED) UN1203 GASOLINE, MIXTURE CLASS 3, PG II				
1 TT	X	(DOT SPEC TANK REQUIRED) UN1203 GASOLINE, CLASS 3, PG II				
1 TT	X	NA1993 DIESEL MIXTURE, CLASS 3, PG III				
1 TT	X	NA1993 DIESEL, CLASS 3, PG III				
1 TT	X	NA1270 PETROLEUM OIL, CLASS 3, PG I				
1 TT	X	NA1270 PETROLEUM OIL, MIXTURE, CLASS 3, PG I				
1 TT		OILY WASTE WATER NON REG BY DOT				
1 TT		WASTE WATER NON REG BY DOT				
1 TT		MARINE VESSEL SEWAGE NON REG BY DOT				
1 TT		STREET WASTE STORM PIPE CLEANING NON REG BY DOT				
	✓	Wash water Non-Reg By DOT	1500 gal			
	✓	2 Yards of mud				

PLACARDS TENDERED: YES ☐ NO

Note — (1) Where the rate is dependent on value, shippers are required to state specifically in writing the agreed or declared value of the property, as follows: "The agreed or declared value of the property is hereby specifically stated by the shipper to be not exceeding _____ per _____."
(2) Where the applicable tariff provisions specify a limitation of the carrier's liability absent a release or a value declaration by the shipper and the shipper does not release the carrier's liability or declare a value, the carrier's liability shall be limited to the extent provided by such provisions. See NMFC Item 172.
(3) Commodities requiring special or additional care or attention in handling or stowing must be so marked and packaged as to ensure safe transportation. See Section 2(e) of Item 360, Bills of Lading, Freight Bills and Statements of Charges and Section 1(a) of the Contract Terms and Conditions for a list of such articles.

I hereby declare that the contents of this consignment are fully and accurately described above by the proper shipping name and are classified, packaged, marked and labelled/placarded, and are in all respects in proper condition for transport according to applicable international and national governmental regulations.

Signature

REMIT
C.O.D. TO:
ADDRESS

COD Amt: $

C.O.D. FEE: PREPAID ☐ COLLECT ☐ $

Subject to Section 7 of the conditions, if this shipment is to be delivered to the consignee without recourse on the consignor, the consignor shall sign the following statement:
The carrier shall not make delivery of this shipment without payment of freight and all other lawful charges.

(Signature of Consignor)

TOTAL CHARGES $

FREIGHT CHARGES
FREIGHT PREPAID Check box if charges are to be collect ☐
Check box if charges are to be collect

RECEIVED, subject to the classifications and tariffs in effect on the date of the issue of this Bill of Lading, the property described above in apparent good order, except as noted (contents and condition of contents of packages unknown), marked, consigned, and destined as indicated above which said carrier (the word carrier being understood throughout this contract as meaning any person or corporation in possession of the property under the contract) agrees to carry to its usual place of delivery at said destination, if on its route, otherwise to deliver to another carrier on the route to said destination. It is mutually agreed as to each carrier of all or any of said property over all or any portion of said route to destination and as to each party at any time interested in all or any said property, that every service to be performed hereunder shall be subject to all the bill of lading terms and conditions in the governing classification on the date of shipment.
Shipper hereby certifies that he is familiar with all the lading terms and conditions in the governing classification and the said terms and conditions are hereby agreed to by the shipper and accepted for himself and his assigns.

SHIPPER _____ CARRIER _____

PER _____ PER _____

DATE _____

1

Permanent post-office address of shipper.

PRINTED ON RECYCLED PAPER USING SOYBEAN INK PRINTED WITH SOY INK

STYLE F375-4 © 2012 LABELMASTER® (800) 621-5808 www.labelmaster.com

INVOICE: 09170388F

Northwest Water Wizards LLC

2-14-18

TO: Glacier Environmental Services Inc
PO Box 1097
Mukilteo, WA 98275

SHIP TO: Seattle Iron and Metals
601 S. Myrtle St
Seattle, WA 98108

NORTHWEST WATER WIZARDS LLC
PO Box 215 Silvana, WA 98287
Phone: 360-630-4698
WWW.NWWATERWIZARDS.COM

RECEIVED
FEB 26 2018
BY:

Sales Rep	P.O. Number	Ship Date	Ship Via	FOB	Terms
Searl	17036	8-28-17	NWW		n/30

Qty	Item #	Description	Unit Price		Line Total
1	Meter	2" Flowmeter w/ Totalizer	$252/cycle	2 days	$56.00
1	Tank #206	21,000 Gallon Tank	$36/day	2 days	$72.00
1	Cleaning - Sale	Cleaning of sediment from tank	$450.00		$450.00
1	Hauling	Return Hauling 21,000 gallon Tank #206	$350.00		$350.00
				Sub Total	$928.00
				Tax(9.6%)	$89.09
				Total	$1,017.09

Thank you for your Business.

NOTE: Billing 2-13-18 thru 2-14-18 Final Billing

☐BHI ☐CM PM APP PW
Vendor Northwest Water Wizards
Act Date 2/14/18 Due Date 3/13/18
Ref # 09170388F
M (Eq/F) S T O Job 17-036
GL ACCT _____ AMT 1017.09
GL ACCT _____ AMT _____
PO # _____ Entered ENTERED

DEWATERING

King County

Industrial Waste Program Self-Monitoring Report

Send to: King County Industrial Waste Program
201 S. Jackson Street, Suite 513
Seattle, WA 98104-3855
Phone 206-477-5300 / FAX 206-263-3001
Email: info.KCIW@kingcounty.gov

Project Name: Seattle Iron and Metals Corp. – 730 South Myrtle Construction Project **Authorization No.:** 11780-01

Project Location: 730 South Myrtle Street, Seattle

Sample Date	pH (s.u.)	Settleable Solids (mL/L)	Nonpolar FOG (mg/L)	Pentachlorophenol (µg/L)	Discharge Rate (gallons per minute)	Discharge Volume (gallons)	Notes	Name or initials of person collecting and recording samples and volume each day. If permitted for relief only, explain why you did not discharge to surface water for each day of discharge.
9/20/2017	6.5	0	3 U	2 U	NA	Na	pre-discharge laboratory analysis sample for batch discharged 10/7 and 10/17	Kristin Anderson
10/7/2017	6.5	0	NA	NA	42	24,336		Kristin Anderson
10/17/2017	6.5	0	NA	NA	26	6,681		Kristin Anderson
Total Discharge Volume:						31,017		

I certify under penalty of law that this document and all attachments were prepared under my direction or supervision in accordance with a system designed to assure that qualified personnel properly gather and evaluate the information submitted. Based on my inquiry of the person or persons who manage the system, or those persons directly responsible for gathering the information, the information submitted is, to the best of my knowledge and belief, true, accurate, and complete. I am aware that there are significant penalties for submitting false information, including the possibility of fine and imprisonment for knowing violations. I further certify that all data requiring a laboratory analysis were analyzed by a Washington State Department of Ecology accredited laboratory for each parameter tested.

Signature of Principal Executive or Authorized Agent — Date: 9-15-8

The authorization holder is responsible for monitoring the discharge in accordance with the monitoring requirements specified in King County Letter of Authorization No. 11780-01. This report form must be completed, signed and submitted to KCIW by September 29, 2017.

Your King County Industrial Waste Program Contact: Dave Haberman, 206-447-5465

Whitehead Tyee Site

Interim Action Completion Report

Appendix F
Cultural Resources Monitoring

DAHP Approval Letter of Monitoring and Inadvertent Discovery Plan

Allyson Brooks Ph.D., Director
State Historic Preservation Officer

June 14, 2017

Ms. Maureen Sanchez
Site Manager
WA State Dept. of Ecology
,

In future correspondence please refer to:
Project Tracking Code: 2017-05-03590
Property: *Cultural Resource Records Search and Literature Review for the Whitehead Tyee Site Project, City of Seattle, King County, Washington MIDP-Revised*
Re: Archaeology - Concur with Revised Monitoring and Inadvertent Discovery Plan (MIDP)

Dear Ms. Sanchez:

Thank you for contacting the State Historic Preservation Officer (SHPO) and the Department of Archaeology and Historic Preservation (DAHP) with documentation regarding the above referenced project. In response, we concur with the revised attached MIDP and agree that the project can proceed under this plan. Thank you for the opportunity to review and comment. Should you have any questions, please feel free to contact me.

Sincerely,

Gretchen Kaehler ,Assistant State Archaeologist,
Local Governments
(360) 586-3088
gretchen.kaehler@dahp.wa.gov

cc. Richard Young, Cultural Resources Director, Tulalip Tribes
Lynn Grochala, Project Manager, Two Union Square
Cecile Hansen, Chair, Muckleshoot Tribe
Steven Mullen Moses, Snoqualmie Nation
Dennis Lewarch, THPO, Suquamish Tribe
Laura Murphy, Muckleshoot Indian Tribe
Jenny Dellert, Project Archaeologist, HRA

Daily Onsite Cultural Resource Monitoring

From:	Jennifer Ferris
To:	Lisa Meoli; Lynn Grochala; Kristin Anderson
Cc:	Emily Scott
Subject:	SIM-730 EDR - historic kiln foundation
Date:	Friday, September 8, 2017 2:43:53 PM
Attachments:	image001.jpg image002.png image003.png image004.png image005.png IMG_1786.JPG IMG_1787.JPG

Hi Lisa, Lynn, and Kristine,

We have identified a historic inadvertent discovery on site consisting of a large poured concrete foundation with metal rebar. The poured concrete has rounded pebbles and hollow red brick affixed to one face of the foundation. It is likely associated with the former dry kilns. As shown in Figure 2-1 in the MIDP, it is located between buildings 8 and 9, which were both former dry kilns. The foundation measures approximately 90 ft. east/west. One of the exposed sections measures 4.6 ft. long x 1.5 ft. tall x 1 ft. thick.

Since it is historic, we need to document the resource on an archaeological site form. We will write a determination of eligibility letter containing our recommendation of eligibility, which will be sent to Gretchen at DAHP for her review and concurrence. We are recommending the foundation is not eligible for listing in the National Register of Historic Places. The project needs to avoid the resource per the MIDP until we get clearance from DAHP. Gretchen is not in on Fridays, so we will be in touch with her on Monday. We will start drafting the letter and site form today and have it to you for review Monday morning.

We will likely need to activate the inadvertent discovery contingency. Please feel free to call me with any questions.

Best,
Jen

Jennifer Ferris RPA

SENIOR ARCHAEOLOGIST / PNW CULTURAL RESOURCES PRACTICE GROUP LEADER
CARDNO

Direct +1 206 239 7390 Mobile +1 206 235 9143
Address 801 Second Avenue, Suite 700, Seattle, Washington 98104
Email jennifer.ferris@cardno.com Web www.cardno.com

CONNECT WITH CARDNO

This email and its attachments may contain confidential and/or privileged information for the sole use of the intended recipient(s). All electronically supplied data must be checked against an applicable hardcopy version which shall be the only document which Cardno warrants accuracy. If you are not the intended recipient, any use, distribution or copying of the information contained in this email and its

From:	Emily Scott
To:	Jennifer Ferris; Lisa Meoli; Lynn Grochala; Kristin Anderson
Subject:	RE: SIM-730 EDR - historic kiln foundation
Date:	Friday, September 8, 2017 4:33:17 PM
Attachments:	image005.png image006.png image007.png image008.png

---

Below is the daily field check summary!

Lisa,
Below is a summary of the daily onsite field check at SIM-730EDR on Friday, September 8, 2017. Two work areas were observed as part of the field check. Within the area located northeast of Stoddard IA, Cardno observed a partially intact section of foundation likely associated with the former dry kilns. As required within the MIDP, Cardno is currently drafting a State of Washington Archaeological Site Inventory Form and determination letter for review and concurrence.
Best,
Em

SIM-730EDR Archaeological Monitoring
730 South Myrtle Street, Seattle, WA

Date: September 8, 2017
Archaeological Monitor: E. Scott (Cardno)
Time Begin: 1 p.m. *Time End:* 2:45 p.m.

Arrived onsite at 1 p.m. to conduct the daily field check. Two areas within the AI were investigated for cultural materials: Stoddard IA, and fills sediments located northeast of Stoddard IA. The previously exposed concrete block/brick formation located within the northwest corner of Stoddard IA was more thoroughly investigated. It appears to be a catch basin constructed of poured concrete bricks with modern metal mesh and a metal top cover. The metal cover is a slatted lid approximately 35 x 40 inches located in association with modern asphalt. This is a modern feature and will require no further documentation.



Photograph 1. Detail of modern metal catch basin cover located in the northwest corner of Stoddard IA.

Northeast of Stoddard IA within fill deposits a partially intact segment of foundation was observed. The foundation consists of poured concrete with metal rebar aligned east-west approximately 90 feet. Upon review of historic maps, this foundation is likely associated with former dry kilns located on the property. Cardno is following the required MIDP process for recording this historic feature.



Photograph 2. Overview of partially intact foundation, likely associated with former dry kilns.

Ends 2:45 p.m.

Emily Scott
STAFF ARCHAEOLOGIST/LABORATORY CURATION SPECIALIST
CARDNO

Direct +1 206 239 0275 Mobile +1 206 841 1119
Address 801 Second Avenue, Suite 700, Seattle, Washington 98104
Email emily.scott@cardno.com Web www.cardno.com

This email and its attachments may contain confidential and/or privileged information for the sole use of the intended recipient(s). All electronically supplied data must be checked against an applicable hardcopy version which shall be the only document which Cardno warrants accuracy. If you are not the intended recipient, any use, distribution or copying of the information contained in this email and its attachments is strictly prohibited. If you have received this email in error, please email the sender by replying to this message and immediately delete and destroy any copies of this email and any attachments. The views or opinions expressed are the author's own and may not reflect the views or opinions of Cardno.

From: Jennifer Ferris
Sent: Friday, September 8, 2017 3:12 PM
To: Lisa Meoli <Lisa.Meoli@floydsnider.com>; Lynn Grochala <Lynn.Grochala@floydsnider.com>; Kristin Anderson <Kristin.Anderson@floydsnider.com>
Cc: Emily Scott <emily.scott@cardno.com>
Subject: RE: SIM-730 EDR - historic kiln foundation

Oh your weekend sounds fun! I'll call Gretchen early Monday to discuss and I'll let you know what she says. I think she will concur with our recommendation.

Enjoy the weekend!
Jen

Jennifer Ferris RPA
SENIOR ARCHAEOLOGIST / PNW CULTURAL RESOURCES PRACTICE GROUP LEADER
CARDNO

Direct +1 206 239 7390 Mobile +1 206 235 9143
Address 801 Second Avenue, Suite 700, Seattle, Washington 98104
Email jennifer.ferris@cardno.com Web www.cardno.com

This email and its attachments may contain confidential and/or privileged information for the sole use of the intended recipient(s). All electronically supplied data must be checked against an applicable hardcopy version which shall be the only document which Cardno warrants accuracy. If you are not the intended recipient, any use, distribution or copying of the information contained in this email and its attachments is strictly prohibited. If you have received this email in error, please email the sender by replying to this message and immediately delete and destroy any copies of this email and any attachments. The views or opinions expressed are the author's own and may not reflect the views or opinions of Cardno.

From: Lisa Meoli [mailto:Lisa.Meoli@floydsnider.com]

Sent: Friday, September 08, 2017 3:09 PM
To: Jennifer Ferris <Jennifer.Ferris@cardno.com>; Lynn Grochala <Lynn.Grochala@floydsnider.com>; Kristin Anderson <Kristin.Anderson@floydsnider.com>
Cc: Emily Scott <emily.scott@cardno.com>
Subject: RE: SIM-730 EDR - historic kiln foundation

Thanks Jennifer. Our company camping trip has commenced, so Lynn is likely offline (I didn't go).

Your plan sounds reasonable. Let's catchup on Monday morning. We can schedule a call on the fly if we need to. Are you going to call Gretchen first thing to give her a heads-up? Good news is she has been working with us on another contaminated site in Bellingham so hopefully she will approve your recommendation quickly.

Thanks for letting us know.

Lisa

Lisa Meoli

601 Union Street, Suite 600
Seattle, WA 98101
P: 206.292.2078
F: 206.682.7867
Lisa.Meoli@floydsnider.com
www.floydsnider.com

From: Jennifer Ferris [mailto:Jennifer.Ferris@cardno.com]
Sent: Friday, September 08, 2017 2:44 PM
To: Lisa Meoli <Lisa.Meoli@floydsnider.com>; Lynn Grochala <Lynn.Grochala@floydsnider.com>; Kristin Anderson <Kristin.Anderson@floydsnider.com>
Cc: Emily Scott <emily.scott@cardno.com>
Subject: SIM-730 EDR - historic kiln foundation

Hi Lisa, Lynn, and Kristine,

We have identified a historic inadvertent discovery on site consisting of a large poured concrete foundation with metal rebar. The poured concrete has rounded pebbles and hollow red brick affixed to one face of the foundation. It is likely associated with the former dry kilns. As shown in Figure 2-1 in the MIDP, it is located between buildings 8 and 9, which were both former dry kilns. The foundation measures approximately 90 ft. east/west. One of the exposed sections measures 4.6 ft. long x 1.5 ft. tall x 1 ft. thick.

Since it is historic, we need to document the resource on an archaeological site form. We will write a determination of eligibility letter containing our recommendation of eligibility, which will be sent to

Gretchen at DAHP for her review and concurrence. We are recommending the foundation is not eligible for listing in the National Register of Historic Places. The project needs to avoid the resource per the MIDP until we get clearance from DAHP. Gretchen is not in on Fridays, so we will be in touch with her on Monday. We will start drafting the letter and site form today and have it to you for review Monday morning.

We will likely need to activate the inadvertent discovery contingency. Please feel free to call me with any questions.

Best,
Jen

Jennifer Ferris RPA
SENIOR ARCHAEOLOGIST / PNW CULTURAL RESOURCES PRACTICE GROUP LEADER
CARDNO

Direct +1 206 239 7390 Mobile +1 206 235 9143
Address 801 Second Avenue, Suite 700, Seattle, Washington 98104
Email jennifer.ferris@cardno.com Web www.cardno.com

CONNECT WITH CARDNO

This email and its attachments may contain confidential and/or privileged information for the sole use of the intended recipient(s). All electronically supplied data must be checked against an applicable hardcopy version which shall be the only document which Cardno warrants accuracy. If you are not the intended recipient, any use, distribution or copying of the information contained in this email and its attachments is strictly prohibited. If you have received this email in error, please email the sender by replying to this message and immediately delete and destroy any copies of this email and any attachments. The views or opinions expressed are the author's own and may not reflect the views or opinions of Cardno.

attachments is strictly prohibited. If you have received this email in error, please email the sender by replying to this message and immediately delete and destroy any copies of this email and any attachments. The views or opinions expressed are the author's own and may not reflect the views or opinions of Cardno.





From:	Emily Scott
To:	Lisa Meoli; Jennifer Ferris
Subject:	SIM-730EDR Archaeological Monitoring 9 20 2017
Date:	Wednesday, September 20, 2017 5:58:56 PM
Attachments:	image004.png image005.png image006.png image007.png

Lisa,
Below is a summary of archaeological monitoring at SIM-730EDR on Monday, September 20, 2017. Excavation continued at Stoddard IA moving from east to west extending into native sediments. No cultural materials were observed within the native sediments. Kristin Anderson collected multiple samples from the Duwamish sediments at approximately 9 ft. bgs. In addition, another poured concrete foundation was observed within the east project area within historic fill deposits. It is likely associated with the former historic buildings and will be recorded following the MIDP procedures.
Best,
Em

SIM-730EDR Archaeological Monitoring
730 South Myrtle Street, Seattle, WA

Date: September 20, 2017
Archaeological Monitor: E. Scott (Cardno)
Time Begin: 9:30 a.m. *Time End:* 3:10 p.m.

Cardno staff arrived at 9:30 a.m. to observe excavation at Stoddard IA. Work progressed from east to west, excavating sediments from the south to north trench wall down to native Duwamish sediments (approximately 9 ft. bgs). Modern debris was observed throughout the upper fill deposits consisting of concrete fragments, plastic, and wood fragments. No cultural materials were observed within the native sediments.



Photograph 1. Overview of Stoddard IA excavation into native sediments, looking northeast.

At 11:45 a.m. an intact section of poured concrete foundation was observed within the eastern

project area. The foundation was composed of poured concrete with rounded pebbles. It is aligned east-west and is approximately 27 ft. long and 11 ft. wide, and 22 in. thick. The western foundation terminus is fragmented and therefore a total length of the alignment is unavailable. According to historic research, the foundation can be linked to one of the many former buildings: Former Shop, Repair Building, or Bunker.



Photograph 2. Historic poured concrete foundation uncovered within eastern project area. Northwest foundation corner, facing southeast.

Cardno is currently drafting a Determination of Eligibility letter and State of Washington Archaeological Site Inventory Form for DAHP concurrence.

Emily Scott
STAFF ARCHAEOLOGIST/LABORATORY CURATION SPECIALIST
CARDNO

Cardno
Shaping the Future

Direct +1 206 239 0275 Mobile +1 206 841 1119
Address 801 Second Avenue, Suite 700, Seattle, Washington 98104
Email emily.scott@cardno.com Web www.cardno.com

CONNECT WITH CARDNO

This email and its attachments may contain confidential and/or privileged information for the sole use of the intended recipient(s). All electronically supplied data must be checked against an applicable hardcopy version which shall be the only document which Cardno warrants accuracy. If you are not the intended recipient, any use, distribution or copying of the information contained in this email and its attachments is strictly prohibited. If you have received this email in error, please email the sender by replying to this message and immediately delete and destroy any copies of this email and any attachments. The views or opinions expressed are the author's own and may not reflect the views or opinions of Cardno.

DAHP Determination of Eligibility Letters

Allyson Brooks Ph.D., Director
State Historic Preservation Officer

September 12, 2017

Ms. Jennifer Ferris
Archaeologist
Cardno
801 Second Avenue
Suite 500
Seattle, WA98104

In future correspondence please refer to:
Project Tracking Code: 2017-05-03590
Property: Determination of Eligibility for Temp Number 20170908-01 Former Dry Kiln
Re: Archaeology-Determined NOT Eligible

Dear Ms. Ferris:

Thank you for contacting the Washington State Historic Preservation Officer (SHPO) and Department of Archaeology and Historic Preservation (DAHP). The above referenced property has been reviewed on behalf of the SHPO. We concur with your recommendation that archaeological site Temp Number 20170908-01 Former Dry Kiln is NOT ELIGIBLE for listing in the National Register of Historic Places because it does not meet significance under criteria A, B, C or D. No further documentation or protections are required.

Thank you for the opportunity to review. Should you have any questions, please feel free to contact me.

Sincerely,

Gretchen Kaehler
Assistant State Archaeologist, Local Governments
(360) 586-3088
gretchen.kaehler@dahp.wa.gov

cc. Richard Young, Cultural Resources Director, Tulalip Tribes
Lynn Grochala, Project Manager, Two Union Square
Cecile Hansen, Chair, Muckleshoot Tribe
Steven Mullen Moses, Snoqualmie Nation
Dennis Lewarch, THPO, Suquamish Tribe
Laura Murphy, Muckleshoot Indian Tribe

Allyson Brooks Ph.D., Director
State Historic Preservation Officer

September 21, 2017

Ms. Jennifer Ferris
Archaeologist
Cardno
801 Second Avenue
Suite 500
Suite 700
Seattle, WA98104

In future correspondence please refer to:
Project Tracking Code: 2017-05-03590
Property: Cultural Cultural Resource Records Search and Literature Review for the Whitehead Tyee Site Project, City of Seattle, King County, Washington
Re: Archaeoology- Temp No. 20170920-01, SD-2 Historic Foundation, Determined not Eligible

Dear Ms. Ferris:

Thank you for contacting the Washington State Historic Preservation Officer (SHPO) and Department of Archaeology and Historic Preservation (DAHP). The above referenced property has been reviewed on behalf of the SHPO. We concur with your recommendation that archaeological site Temp Number 20170920-01 Historic Foundation is NOT ELIGIBLE for listing in the National Register of Historic Places because it does not meet significance under criteria A, B, C or D. No further documentation or protections are required.

Thank you for the opportunity to review. Should you have any questions, please feel free to contact me.

Sincerely,

Gretchen Kaehler
Assistant State Archaeologist, Local Governments
(360) 586-3088
gretchen.kaehler@dahp.wa.gov

cc. Richard Young, Cultural Resources Director, Tulalip Tribes
Lynn Grochala, Project Manager, Two Union Square
Cecile Hansen, Chair, Muckleshoot Tribe
Steven Mullen Moses, Snoqualmie Nation
Dennis Lewarch, THPO, Suquamish Tribe
Laura Murphy, Muckleshoot Indian Tribe