B&L Woodwaste Site
Pierce County, Washington

Engineering Design Report (EDR) Addendum 1

Phase 1 Part 1 Remediation Design Report

Barrier Wall and Interceptor Trench

Appendix 1E
Stormwater Pollution Prevention Plan

FINAL

B&L Woodwaste Site
Pierce County, Washington

Engineering Design Report (EDR) Addendum 1: Appendix 1E

Construction Stormwater Pollution Prevention Plan Phase 1 Part 1 Cleanup Action

Submitted to

B&L Custodial Trust
606 Columbia Street NW, Suite 212
Olympia, Washington 98501

Prepared by

Floyd|Snider
Two Union Square
600 Union Street, Suite 601
Seattle, Washington 98101

AMEC Geomatrix
600 University Street, Suite 1020
Seattle, Washington 98101

July 2009

FINAL

Table of Contents

1.0 Introduction 1E-1

2.0 Project Background and Work Area Description 1E-3

2.1 PROJECT BACKGROUND 1E-3

2.2 EXISTING CONDITIONS IN THE WORK AREA 1E-3

2.3 CONSTRUCTION ACTIVITIES 1E-4

3.0 Construction Stormwater BMPs 1E-7

3.1 THE 12 BMP ELEMENTS 1E-7

3.1.1 Element #1 – Mark Clearing Limits 1E-7

3.1.2 Element #2 – Establish Construction Access 1E-7

3.1.3 Element #3 – Control Flow Rates 1E-8

3.1.4 Element #4 – Install Sediment Controls 1E-8

3.1.5 Element #5 – Stabilize Soils 1E-8

3.1.6 Element #6 – Protect Slopes 1E-9

3.1.7 Element #7 – Protect Drain Inlets 1E-9

3.1.8 Element #8 – Stabilize Channels and Outlets 1E-9

3.1.9 Element #9 – Control Pollutants 1E-10

3.1.10 Element #10 – Control Dewatering 1E-11

3.1.11 Element #11 – Maintain BMPs 1E-11

3.1.12 Element #12 – Manage the Project 1E-11

3.2 SITE SPECIFIC BMPS 1E-12

3.3 ADDITIONAL ADVANCED BMPS 1E-12

4.0 Construction Phasing and BMP Implementation 1E-13

5.0 Pollution Prevention Team 1E-15

5.1 ROLES AND RESPONSIBILITIES 1E-15

5.2 TEAM MEMBERS 1E-15

6.0 Site Inspections and Monitoring 1E-17

6.1 SITE INSPECTION 1E-17

6.2 STORMWATER QUALITY MONITORING 1E-17

7.0 Reporting and Recordkeeping 1E-19
7.1 RECORDKEEPING 1E-19
7.1.1 Site Log Book 1E-19
7.1.2 Records Retention 1E-19
7.1.3 Access to Plans and Records 1E-19
7.1.4 Updating the SWPPP 1E-19
7.2 NOTIFICATION OF DISCHARGE 1E-19
7.2.1 Discharge Monitoring Reports 1E-19
7.2.2 Notification of Discharge 1E-20
8.0 References 1E-21

List of Attachments

Attachment 1E.1 Construction BMPs
Attachment 1E.2 Site Inspection Form

1.0 Introduction

This Construction Stormwater Pollution Prevention Plan (SWPPP) has been prepared as part of the Engineering Design Report (EDR) Addendum 1 for the B&L Woodwaste Site (Site) in Pierce County, Washington (EDR Figure 2.1). This SWPPP addresses management of stormwater runoff from the construction activities associated with the Phase 1 Part 1 cleanup action, which will include construction of a subsurface barrier wall around the Landfill, installation of a groundwater interception system, and extension of the Landfill cap over the new barrier wall. This SWPPP does not address spills of materials used during construction; the plans and procedures for spill management are presented in the Spill Prevention and Containment Plan (Appendix 1D to EDR Addendum 1).

Based on consultation with the Washington State Department of Ecology (Ecology), a Construction Stormwater General Permit will not be required because the construction activities are designed to achieve zero stormwater discharge from disturbed areas during construction. Therefore, the objectives of this SWPPP are as follows:

- Describe the temporary erosion and sediment control and pollution prevention measures that have been designed to achieve zero stormwater discharge from disturbed areas during construction.
- Describe the inspection/monitoring activities and recordkeeping to verify zero stormwater discharge during construction.

This SWPPP was prepared based on the requirements set forth in the Stormwater Management Manual for Western Washington (Manual; Ecology, 2005). This SWPPP is divided into the following seven main sections:

- **Section 1 – Introduction.** This section describes the objectives and organization of this SWPPP.
- **Section 2 – Project Background and Work Area Description.** This section describes project background, existing conditions in the work area, and construction activities.
- **Section 3 – Construction BMPs.** This section provides a detailed description of the BMPs to be implemented based on the 12 required elements in the Manual.
- **Section 4 – Construction Phasing and BMP Implementation.** This section provides a description of the timing of the BMP implementation in relation to the project schedule.
- **Section 5 – Pollution Prevention Team.** This section identifies the appropriate contact names (emergency and non-emergency), monitoring personnel, and the on-site temporary erosion and sedimentation control inspector.
- **Section 6 – Inspection and Monitoring.** This section provides a description of the inspection and monitoring requirements for maintaining zero stormwater discharge from disturbed areas.

- **Section 7 – Recordkeeping.** This section describes the requirements for documentation of the BMP implementation, site inspections and monitoring, and changes to the implementation of certain BMPs necessitated by construction activities.

Supporting documentation and forms are provided in the Attachments.

2.0 Project Background and Work Area Description

2.1 PROJECT BACKGROUND

The Site is located in unincorporated Pierce County, Washington, in Township 20 North, Range 4 East, Section 5, Willamette Meridian (EDR Figure 2.1). The Site consists of the B&L Property (Property), which includes the B&L Woodwaste Landfill (Landfill), and adjacent areas that have been affected by releases from the Landfill. The Property occupies about 18.5 acres of undeveloped land approximately 0.25 mile east of Interstate 5 and 5 miles east of Tacoma. Within the Property, the pentagonal-shaped Landfill encompasses roughly 11.5 acres and rises to an elevation of approximately 53 feet (NAVD88). Farmland borders the western and southwestern edges of the Property, the Autumn Village Apartment complex adjoins the southeastern corner, and Fife Way defines the eastern boundary. A private property is located to the northeast and Puget Power Access Road, which was recently converted to a bicycle trail and is now known as the Interurban Trail, borders the north side of the property. Former farmland that has re-established itself as a grassy wetland lies to the north of the Landfill and Interurban Trail.

Beginning in the 1970s, the Landfill was operated as a disposal site for deck debris from log sort yards operating in the Tacoma Tideflats area. Log sort yard operators used Asarco slag as roadway and yard ballast, believing it to be inert “rock.” The slag was mixed with the bark and dirt that was periodically cleaned from the log sort yards and transported to the Landfill for disposal. During the 1980s, Ecology discovered that the slag at the Landfill was leaching arsenic at concentrations in exceedance of surface water standards. The Landfill was included as a source of metal contamination to Hylebos Waterway and the Commencement Nearshore/Tideflats CERCLA site by the U.S. Environmental Protection Agency. Remediation and monitoring activities at the Landfill began in the late 1980s and have continued through the present day.

2.2 EXISTING CONDITIONS IN THE WORK AREA

The work area for the Phase 1 Part 1 cleanup action is within the Property, as shown in Drawing G-2 of EDR Addendum 1. No impervious surface is present within the work area. The ground surface on the Property is mostly vegetated with grass. The Property topography is characterized by a mound in the middle, a perimeter access road around the Landfill at a lower elevation, and decreasing elevations around the perimeter. The Landfill cap slopes downward towards the access road from the topographical high in the middle. The access road is higher than the perimeter ground surface by approximately 4 to 5 feet. Agricultural ditches that collect surface runoff from agricultural farmlands are located along the southern, western, and northern boundaries of the Property. The agricultural ditches join with water from the Surprise Lake Drain and ultimately discharge to Hylebos Creek.

Stormwater runoff from the Landfill cap drains to the perimeter stormwater collection ditch around the Landfill. The ditch conveys the runoff from south to north and discharges to the stormwater detention pond immediately north of the Landfill through three culverts. An overflow

pipe in the detention pond discharges into the agricultural ditch along the northern boundary of the Property. Stormwater runoff from the perimeter road either drains inward to the stormwater ditch or drains outward to the agricultural ditches. Stormwater runoff from topographically low area on the east side of the Landfill drains via a culvert to the agricultural ditch.

An organic silt and peat unit lies beneath the Landfill material and forms the near-surface soils beneath much of the area surrounding the Landfill on the Property. These deposits are 4- to 7-feet thick and correspond to the pre-Landfill ground surface. A thin layer of fill material from the 1993 remedy covers much of the ground surface surrounding the Landfill. Saturated alluvial deposits (primarily sands) directly underlie the organic silt and peat unit and comprise the Upper Sand Aquifer. The soils beneath the area upgradient of the Landfill consist of a silty, gravelly colluvium deposit with generally low permeability.

Two distinct wetlands, Wetlands A and B, are located in the vicinity of the work area on the Property. Both wetlands are connected to Hylebos Creek through a series of smaller surface drainages and Surprise Lake Drain. Wetland A covers approximately 0.2 acres on the southeast side of the work area. According to the Washington State Department of Ecology rating system, Wetland A is a Category IV wetland. Wetland B is a Category III wetland, and occupies approximately 0.7 acres on the northeast side of the work area.

2.3 CONSTRUCTION ACTIVITIES

Construction activities include excavation and backfill of test trenches, installation of a low-permeability subsurface barrier wall around the Landfill perimeter, installation of two groundwater interceptor trenches along the upgradient sides of the Landfill, construction of infiltration ponds on the downgradient sides of the Landfill, and restoration of the Landfill cap.

A total of 10 test trenches will be excavated along the proposed barrier wall alignment (EDR Addendum 1 Drawing C-6). The dimensions of the test trenches will be approximately 15 feet in length, 2 to 3 feet in width, and a minimum depth of 5 feet. The test trenches will be used to conduct archeological observations, to identify any subsurface wood waste outside the barrier wall alignment, and to identify subsurface gravel deposits along the barrier wall alignment. The trenches will be backfilled with the excavated soil unless gravel deposits requiring removal are encountered. If gravel deposits are removed, clean backfill soils will be imported to replace the gravel.

The barrier wall will be constructed along the existing stormwater collection ditch by excavating to the design depth while the trench is kept full with bentonite slurry. The excavated soil will be mixed with bentonite and water to form a relatively homogeneous soil-bentonite mixture and used to backfill the excavation to form the low-permeability barrier wall (EDR Addendum 1 Drawing C-1). Approximately 300 feet of trench will be open at any given time.

The groundwater interception trenches will be excavated to a design depth of approximately 6 feet below ground surface. Ballast and perforated piping, wrapped in geotextile, will be placed in the trench to form the passive drain system. The trench will be partially filled with excavated soil, and active drain pipes will be installed at the design elevation (EDR Addendum 1 Drawing C-10).

Two infiltration ponds will infiltrate the groundwater collected by the passive and active drain systems downgradient of the Landfill. The existing stormwater infiltration/detention pond will become the northern infiltration pond. The western infiltration pond will be constructed between the Landfill and the western boundary of the Property (EDR Addendum 1 Drawing C-6).

Following completion of barrier wall installation and construction of the infiltration ponds, the Landfill cap will be extended over the barrier wall and restored. The restored Landfill cap will be regraded to match pre-construction drainage conditions. All disturbed surfaces will be hydroseeded. A new stormwater collection ditch will be installed to direct runoff from the restored Landfill cap to the northern infiltration pond.

The surface condition in the work area before and after construction is summarized below:

- Total work area: 15 acres
- Percent impervious area before construction: 0%
- Percent impervious area after construction: 0%
- Disturbed area during construction: 3.8 acres
- Disturbed area that is characterized as impervious (i.e., access roads, staging, parking): 0 acres

Since no change in impervious area occurs during construction, and grading will be done to generally match the pre-construction drainage conditions, no increase in stormwater velocity or peak volumetric flow rate will occur. Thus, no stormwater flow calculations were necessary to protect downstream properties or wetlands.

This page intentionally left blank.

3.0 Construction Stormwater BMPs

3.1 THE 12 BMP ELEMENTS

Planned BMPs are shown on Drawings G-3 and G-4 of EDR Addendum 1. Construction BMPs are described in detail in Attachment 1E.1.

3.1.1 Element #1 – Mark Clearing Limits

To protect adjacent properties and to reduce the area of soil exposed to construction, the limits of construction will be clearly marked before land-disturbing activities begin. Trees that are to be preserved, as well as all sensitive areas and their buffers, shall be clearly delineated, both in the field and on the plans. In general, natural vegetation and native topsoil shall be retained in an undisturbed state to the maximum extent possible. The BMPs relevant to marking the clearing limits that will be applied to this project include:

- Preserving Natural Vegetation (BMP C101)
- High Visibility Plastic or Metal Fence (BMP C103)

Temporary chain-link fence will be installed around the contractor staging area and along the western boundary of the work area before any construction work begins. Combined with the existing fence, it will mark the extent of the work area. Natural vegetation will be preserved outside the delineated work area. The uphill extent of the mixing pad on the Landfill cap will be marked with survey flags. Existing vegetation uphill of the marked extent will be preserved. The perimeter of Wetland A and Wetland B will be delineated with survey flags.

3.1.2 Element #2 – Establish Construction Access

Construction access or activities occurring on unpaved areas will be minimized where necessary, access points will be stabilized to minimize the tracking of sediment onto public roads, and wheel washing, street sweeping, and street cleaning will be employed to prevent sediment from entering State waters if necessary. All wash wastewater will be controlled on site and will not be discharged to surface waters. The specific BMPs related to establishing construction access that may be used on this project include:

- Stabilized Construction Entrance (BMP C105)
- Wheel Wash (BMP C106)
- Construction Road/Parking Area Stabilization (BMP C107)

There will be only one access road to the work area from Fife Way. The access road will be stabilized with a layer of crushed rock during contractor mobilization. A wheel wash will be available on-site for the duration of the construction work, if necessary. To control sediments that may be brought onto the public roadway, the road will be cleaned at the end of each working day or more frequently in wet weather. All wastewater generated from washing will

either be infiltrated during barrier wall construction or transported to the on-site stormwater detention pond.

3.1.3 Element #3 – Control Flow Rates

Because the height of the containment berms (6 inches) is higher than the rainfall depth of a 100-year, 24-hour storm event (4.1 inches; Pierce County Surface Water Management 2008), stormwater runoff is expected to be fully contained within the disturbed area. As a result, no increase in the volume, velocity, and peak flow rate of stormwater runoff from the work area is expected to occur. Therefore, no BMPs for control of flow rates will be necessary.

The project Site is located west of the Cascade Mountain Crest. Therefore, the project must comply with Minimum Requirement 7 (Ecology 2005).

3.1.4 Element #4 – Install Sediment Controls

Because there will be zero discharge of stormwater runoff from the disturbed area, no BMPs for sediment controls will be necessary during construction. Containment berms will be wrapped in plastic sheeting to prevent erosion and release of sediments. Based on Site conditions at the end of construction, silt fence (BMP C233) or similar filtration features may be installed to filter the stormwater runoff before leaving the property.

3.1.5 Element #5 – Stabilize Soils

Exposed and unworked soils will be stabilized with the application of effective BMPs to prevent erosion throughout the life of the project. The specific BMPs for soil stabilization that may be used on this project include the following:

- Temporary and Permanent Seeding (BMP C120)
- Mulching (BMP C121)
- Nets and Blankets (BMP C122)
- Plastic Covering (BMP C123)
- Sodding (BMP C124)
- Topsoiling (BMP C125)
- Polyacrylamide (PAM) for Soil Erosion Protection (BMP C126)
- Surface Roughening (BMP C130)
- Gradient Terraces (BMP C131)
- Dust Control (BMP C140)
- Materials on Hand (BMP C150)

The project Site is located west of the Cascade Mountain Crest. As such, no soils, including open trenches, will remain exposed and unworked for more than 7 days during the dry season (May 1 to September 30) and for more than 2 days during the wet season (October 1 to April 30). Regardless of the time of year, all soils will be stabilized at the end of the shift before a holiday or non-working weekend days if needed, based on weather forecasts.

In general, cut-and-fill slopes will be stabilized as soon as possible and soil stockpiles will be temporarily covered with plastic sheeting. Stockpiled soils will be stabilized from erosion, protected with sediment trapping measures, and, where possible, be located away from waterways and drainage channels.

The Contractor and the Engineer will choose one or more of the above BMPs based on the time of year, Site conditions, and the estimated duration of work activities. Stormwater containment berms will be covered with 10 mil plastic sheeting. All stockpiled soils will be stabilized from erosion, protected with sediment trapping measures, and where possible, be located away from drainage channels. Once grading is completed, a mulch and hydroseed application will be performed to reintroduce vegetation across disturbed soils.

3.1.6 Element #6 – Protect Slopes

All cut and fill slopes will be designed, constructed, and protected in a manner that minimizes erosion. The following specific BMPs will be used to protect slopes for this project:

- Interceptor Dike and Swale (BMP C200);
- Pipe Slope Drains (BMP C204)
- Outlet Protection (BMP C209)
- Materials on Hand (BMP C150)

The run-on to the disturbed area will be intercepted by a containment berm, collected in a pipe, and diverted to areas downslope of the disturbed area. The pipe will collect run-on on the uphill side of the containment berm upslope of the mixing pad. The pipe inlet will be protected from erosion. The pipe will penetrate the containment berm on the outer edge of the perimeter access road. On the west side of the Landfill, the pipe will also penetrate a third containment berm next to the agricultural ditch. The interceptor dikes and pipe slope drains have been designed based on guidelines in BMPs C200 and C204.

3.1.7 Element #7 – Protect Drain Inlets

Because there are no storm drain inlets on or near the work area that could potentially receive stormwater runoff from the work area, no BMPs for protection of drain inlets will be necessary.

3.1.8 Element #8 – Stabilize Channels and Outlets

During construction, stormwater runoff from the undisturbed portion of the Landfill cap will drain directly to adjacent undisturbed areas or to agricultural ditches. As noted previously, drain

piping will be used to direct the clean runoff through the work area. If necessary, at the pipe discharge, appropriate outlet protection will be selected based upon guidelines in BMP C209 (Outlet Protection).

3.1.9 Element #9 – Control Pollutants

All pollutants, including waste materials and demolition debris, that occur on-site will be handled and disposed of in a manner that does not cause contamination of stormwater. Good housekeeping and preventative measures will be taken to ensure that the Site will be kept clean, well organized, and free of debris. (Refer to the Spill Prevention and Containment Plan, Appendix 1D to the EDR Addendum 1 for details regarding storage and handling of oil and chemical products.) If required, BMPs will be implemented to control the following potential sources of pollutants:

Chemicals Associated with Vehicle Maintenance and Repair

- All on-site fuel storage tank(s) will have secondary containment and will be placed in fully contained area.
- All vehicles and construction equipment will be inspected regularly to detect any leaks or spills, and to identify maintenance needs to prevent leaks or spills.
- Spill prevention measures, such as drip pans, will be used when conducting maintenance and repair of vehicles or equipment.
- When performing emergency repairs, temporary plastic will be placed beneath, and, if raining, over the vehicle.
- Contaminated surfaces will be cleaned immediately following any discharge or spill incident.
- The provisions of the Spill Prevention and Containment Plan will be followed.

Wastewater

- Portable sanitation facilities will be firmly secured, regularly maintained, and emptied by vacuum trucks.
- If BMP C106 (Wheel Wash) is implemented, wheel wash or tire bath wastewater will be collected and incorporated into the slurry wall or discharged to the existing infiltration/detention pond. Any water not infiltrated by the end of the project will be tested and disposed off-site in an appropriate facility.

Arsenic-contaminated Groundwater

- Arsenic-contaminated groundwater will only be encountered in disturbed areas where stormwater runoff is fully contained.

3.1.10 Element #10 – Control Dewatering

If high groundwater table or rainfall requires an excavated trench to be dewatered, water will be pumped from the trench to the existing stormwater infiltration/detention pond north of the Landfill. Any accumulated water that remains at the end of construction will be tested and disposed off-site in an appropriate facility.

3.1.11 Element #11 – Maintain BMPs

The applied temporary erosion and sediment control BMPs, if any, will be visually inspected at least once a week and within 24 hours of any rainfall event. All temporary BMPs will be maintained and repaired as needed to assure continued performance of their intended function. All temporary BMPs will be removed within 30 days after the final Site stabilization is achieved or after the temporary BMPs are no longer needed. Disturbed soil resulting from removal of BMPs or vegetation will be permanently stabilized.

3.1.12 Element #12 – Manage the Project

The construction will be managed in accordance with the following key project components:

- The major earthwork will be conducted in the dry season (between July and September).
- The construction will be phased to minimize the amount of exposed soil at any one time.
- Once earthwork is completed in any area, the exposed soil in this area will be immediately stabilized per BMP C 162 (Scheduling).
- Inspection of BMPs will be conducted by a person knowledgeable in the principles and practices of erosion and sediment control.
- A Certified Erosion and Sediment Control Lead will be on-call at all times.
- Whenever inspection and/or monitoring reveals that the BMPs identified in this SWPPP are inadequate, appropriate BMPs or design changes will be implemented as soon as possible.
- This SWPPP shall be retained on-site.
- When a change is made in the design, construction, operation, or maintenance that has, or could have, a significant effect on the zero stormwater discharge status at this construction site, this SWPPP will be modified as necessary.
- If an inspection reveals that the SWPPP is ineffective in achieving zero discharge from disturbed areas or in eliminating or significantly minimizing pollutants in stormwater discharges from the construction site, this SWPPP shall be modified as necessary within seven (7) days of the inspection to include additional or modified BMPs designed to correct the identified problems.

3.2 SITE SPECIFIC BMPS

Site specific BMPs are shown on Drawings G-3 and G-4 of the EDR Addendum 1.

3.3 ADDITIONAL ADVANCED BMPS

No additional advanced BMPs are expected to be used.

4.0 Construction Phasing and BMP Implementation

The BMP implementation schedule will be driven by the construction schedule. The following provides a sequential list of the currently proposed construction schedule milestones and the corresponding BMP implementation schedule. The dates presented in this schedule may be revised as necessary to address changed conditions or other unforeseen events; the items included in the schedule will not be changed. BMPs will be installed in each disturbed area prior to any soil-disturbing activity.

- Equipment Mobilization 7/6 to 7/11
- BMP Installation 7/9 to 7/18
- Test Trenches 7/19 to 7/21
- Barrier Wall Installation 7/21 to 8/29
- Groundwater Interceptor Trench Construction 8/4 to 8/20
- Infiltration Pond Construction 8/20 to 8/28
- Landfill Cap Restoration 8/31 to 9/17
- Site Grading and Hydroseeding 9/23 to 9/25
- Cleanup and Demobilization 9/21 to 9/25
- Weekly Hydroseed Monitoring 9/25 + 26 weeks

This page intentionally left blank.

5.0 Pollution Prevention Team

5.1 ROLES AND RESPONSIBILITIES

The pollution prevention team consists of personnel responsible for implementation of the SWPPP, including the following:

- Certified Erosion and Sediment Control Lead (CESCL) – to be called upon in case of failure of any erosion and sediment control measures.
- Resident Engineer – primary contractor contact; site representative for the Owner; responsible for site inspections of BMPs and issuing instructions and drawings to the contractor's site supervisor or representative.
- Emergency Ecology Contact – individual to be contacted at Ecology in case of emergency.
- Emergency Owner Contact – individual that is the Owner or representative of the Owner to be contacted in the case of an emergency.
- Non-Emergency Ecology Contact – individual at Ecology that can be contacted if required.
- Monitoring Personnel – personnel responsible for conducting water quality monitoring; for most sites this person is also the Certified Erosion and Sediment Control Lead.

5.2 TEAM MEMBERS

Names and contact information for those identified as members of the pollution prevention team are provided in the following table.

Title	Name(s)	Phone Number
Certified Erosion and Sediment Control Lead (CESCL)	Toni Olson	206-342-1760
Resident Engineer	Miao Zhang	206-342-1760
Emergency Ecology Contact	24-Hour Emergency Response	425-649-7000
Emergency Owner Contact	Dan Silver	360-754-9343
Non-Emergency Ecology Contact	Dom Reale	360-407-6266
Monitoring Personnel	Toni Olson	206-342-1760

This page intentionally left blank.

6.0 Site Inspections and Monitoring

Monitoring includes visual inspection and documentation of the inspection and monitoring findings in a Site log book (see Section 7.0).

6.1 SITE INSPECTION

All BMPs will be inspected, maintained, and repaired as needed to assure continued performance of their intended function. Inspections will be conducted by or under the direction of the Resident Engineer. The name and contact information for the Resident Engineer is provided in Section 5 of this SWPPP.

The Site inspector will evaluate and document the effectiveness of the installed BMPs and determine if it is necessary to repair or replace any of the BMPs. All maintenance and repairs will be documented in the Site log book or forms provided in this document. All new BMPs or design changes will be documented in the SWPPP as soon as possible. Site inspections will be conducted at least once a week and within 24 hours following any rainfall event. Stormwater quality from the undisturbed portion of the Landfill cap will be inspected for turbidity during rainfall events occurring while construction work is underway.

6.2 STORMWATER QUALITY MONITORING

Under normal precipitation conditions, stormwater in the disturbed area is expected to be contained within the disturbed area and incorporated into the slurry wall. If stormwater accumulates in the disturbed area, accumulated stormwater will be transferred to the existing infiltration/detention pond to the north of the Landfill. Therefore, stormwater quality monitoring will not be performed.

This page intentionally left blank.

7.0 Reporting and Recordkeeping

7.1 RECORDKEEPING

7.1.1 Site Log Book

A Site log book will be maintained for all on-site construction activities and will include:

- A record of the implementation of the SWPPP
- Site inspection forms

An inspection form is included in Attachment 1E.2.

7.1.2 Records Retention

The Site log book, inspection forms, the SWPPP, and any other relevant documentation will be retained during the life of the construction project and for a minimum of 3 years after construction.

7.1.3 Access to Plans and Records

The SWPPP and Site log book will be retained on-site or within reasonable access to the construction Site, and will be made immediately available upon request to Ecology or to representatives of local jurisdictions. A copy of this SWPPP will be provided to Ecology within 14 days of receipt of a written request for the SWPPP from Ecology. A copy of the SWPPP or access to the SWPPP will be provided to the public within a reasonable amount of time when requested in writing.

7.1.4 Updating the SWPPP

This SWPPP will be modified if the SWPPP is determined to be ineffective in achieving zero discharge from disturbed areas, in eliminating or significantly minimizing pollutants in stormwater discharges from the Site, or there has been a change in design, construction, operation, or maintenance at the Site that has a significant effect on the discharge, or potential for discharge, of pollutants to the waters of the State. The SWPPP will be modified within seven days of determination based on inspection(s) that additional or modified BMPs are necessary to correct problems identified, and an updated timeline for BMP implementation will be prepared.

7.2 NOTIFICATION OF DISCHARGE

7.2.1 Discharge Monitoring Reports

No discharge monitoring reports are expected to be completed.

7.2.2 Notification of Discharge

If there is discharge from the work area and it causes a potential threat to human health or the environment, the following steps will be taken:

1. Ecology will be immediately notified.
2. Immediate action will be taken to sample and control the discharge and to correct the problem. If applicable, sampling and analysis results will be submitted to Ecology within 5 days of the initial discharge.
3. A detailed written report describing the discharge will be submitted to Ecology within 5 days, unless requested otherwise by Ecology.

8.0 References

Pierce County Surface Water Management. 2008. *Pierce County Stormwater Management and Site Development Manual, Volume III, Hydrologic Analysis and Flow Control BMPs*. August.

Washington State Department of Ecology (Ecology). 2005. *Stormwater Management Manual for Western Washington, Publication Numbers 05-10-029 through 05-10-033:* Washington State Department of Ecology, Water Quality Program. Olympia, Washington. February.

This page intentionally left blank.

B&L Woodwaste Site
Pierce County, Washington

Engineering Design Report (EDR)
Addendum 1: Appendix 1E

Construction Stormwater Pollution Prevention Plan Phase 1 Part 1 Cleanup Action

Attachment 1E.1
Construction BMPs

FINAL

4.1 Source Control BMPs

BMP C101: Preserving Natural Vegetation

Purpose

The purpose of preserving natural vegetation is to reduce erosion wherever practicable. Limiting site disturbance is the single most effective method for reducing erosion. For example, conifers can hold up to about 50 percent of all rain that falls during a storm. Up to 20-30 percent of this rain may never reach the ground but is taken up by the tree or evaporates. Another benefit is that the rain held in the tree can be released slowly to the ground after the storm.

Conditions of Use

- Natural vegetation should be preserved on steep slopes, near perennial and intermittent watercourses or swales, and on building sites in wooded areas.
- As required by local governments.

Design and Installation Specifications

Natural vegetation can be preserved in natural clumps or as individual trees, shrubs and vines.

The preservation of individual plants is more difficult because heavy equipment is generally used to remove unwanted vegetation. The points to remember when attempting to save individual plants are:

- Is the plant worth saving? Consider the location, species, size, age, vigor, and the work involved. Local governments may also have ordinances to save natural vegetation and trees.
- Fence or clearly mark areas around trees that are to be saved. It is preferable to keep ground disturbance away from the trees at least as far out as the dripline.

Plants need protection from three kinds of injuries:

- *Construction Equipment* - This injury can be above or below the ground level. Damage results from scarring, cutting of roots, and compaction of the soil. Placing a fenced buffer zone around plants to be saved prior to construction can prevent construction equipment injuries.
- *Grade Changes* - Changing the natural ground level will alter grades, which affects the plant's ability to obtain the necessary air, water, and minerals. Minor fills usually do not cause problems although sensitivity between species does vary and should be checked. Trees can tolerate fill of 6 inches or less. For shrubs and other plants, the fill should be less.

  When there are major changes in grade, it may become necessary to supply air to the roots of plants. This can be done by placing a layer of gravel and a tile system over the roots before the fill is made. A tile

system protects a tree from a raised grade. The tile system should be laid out on the original grade leading from a dry well around the tree trunk. The system should then be covered with small stones to allow air to circulate over the root area.

Lowering the natural ground level can seriously damage trees and shrubs. The highest percentage of the plant roots are in the upper 12 inches of the soil and cuts of only 2-3 inches can cause serious injury. To protect the roots it may be necessary to terrace the immediate area around the plants to be saved. If roots are exposed, construction of retaining walls may be needed to keep the soil in place. Plants can also be preserved by leaving them on an undisturbed, gently sloping mound. To increase the chances for survival, it is best to limit grade changes and other soil disturbances to areas outside the dripline of the plant.

- *Excavations* - Protect trees and other plants when excavating for drainfields, power, water, and sewer lines. Where possible, the trenches should be routed around trees and large shrubs. When this is not possible, it is best to tunnel under them. This can be done with hand tools or with power augers. If it is not possible to route the trench around plants to be saved, then the following should be observed:

  Cut as few roots as possible. When you have to cut, cut clean. Paint cut root ends with a wood dressing like asphalt base paint.

  Backfill the trench as soon as possible.

  Tunnel beneath root systems as close to the center of the main trunk to preserve most of the important feeder roots.

Some problems that can be encountered with a few specific trees are:

- Maple, Dogwood, Red alder, Western hemlock, Western red cedar, and Douglas fir do not readily adjust to changes in environment and special care should be taken to protect these trees.
- The windthrow hazard of Pacific silver fir and madronna is high, while that of Western hemlock is moderate. The danger of windthrow increases where dense stands have been thinned. Other species (unless they are on shallow, wet soils less than 20 inches deep) have a low windthrow hazard.
- Cottonwoods, maples, and willows have water-seeking roots. These can cause trouble in sewer lines and infiltration fields. On the other hand, they thrive in high moisture conditions that other trees would not.
- Thinning operations in pure or mixed stands of Grand fir, Pacific silver fir, Noble fir, Sitka spruce, Western red cedar, Western hemlock,

Pacific dogwood, and Red alder can cause serious disease problems. Disease can become established through damaged limbs, trunks, roots, and freshly cut stumps. Diseased and weakened trees are also susceptible to insect attack.

Maintenance Standards

- Inspect flagged and/or fenced areas regularly to make sure flagging or fencing has not been removed or damaged. If the flagging or fencing has been damaged or visibility reduced, it shall be repaired or replaced immediately and visibility restored.
- If tree roots have been exposed or injured, "prune" cleanly with an appropriate pruning saw or lopers directly above the damaged roots and recover with native soils. Treatment of sap flowing trees (fir, hemlock, pine, soft maples) is not advised as sap forms a natural healing barrier.

BMP C103: High Visibility Plastic or Metal Fence

Purpose

Fencing is intended to: (1) restrict clearing to approved limits; (2) prevent disturbance of sensitive areas, their buffers, and other areas required to be left undisturbed; (3) limit construction traffic to designated construction entrances or roads; and, (4) protect areas where marking with survey tape may not provide adequate protection.

Conditions of Use

To establish clearing limits, plastic or metal fence may be used:

- At the boundary of sensitive areas, their buffers, and other areas required to be left uncleared.
- As necessary to control vehicle access to and on the site.

Design and Installation Specifications

- High visibility plastic fence shall be composed of a high-density polyethylene material and shall be at least four feet in height. Posts for the fencing shall be steel or wood and placed every 6 feet on center (maximum) or as needed to ensure rigidity. The fencing shall be fastened to the post every six inches with a polyethylene tie. On long continuous lengths of fencing, a tension wire or rope shall be used as a top stringer to prevent sagging between posts. The fence color shall be high visibility orange. The fence tensile strength shall be 360 lbs./ft. using the ASTM D4595 testing method.
- Metal fences shall be designed and installed according to the manufacturer's specifications.
- Metal fences shall be at least 3 feet high and must be highly visible.
- Fences shall not be wired or stapled to trees.

Maintenance Standards

- If the fence has been damaged or visibility reduced, it shall be repaired or replaced immediately and visibility restored.

BMP C105: Stabilized Construction Entrance

Purpose

Construction entrances are stabilized to reduce the amount of sediment transported onto paved roads by vehicles or equipment by constructing a stabilized pad of quarry spalls at entrances to construction sites.

Conditions of Use

Construction entrances shall be stabilized wherever traffic will be leaving a construction site and traveling on paved roads or other paved areas within 1,000 feet of the site.

On large commercial, highway, and road projects, the designer should include enough extra materials in the contract to allow for additional stabilized entrances not shown in the initial Construction SWPPP. It is difficult to determine exactly where access to these projects will take place; additional materials will enable the contractor to install them where needed.

Design and Installation Specifications

- See Figure 4.2 for details. Note: the 100' minimum length of the entrance shall be reduced to the maximum practicable size when the size or configuration of the site does not allow the full length (100').
- A separation geotextile shall be placed under the spalls to prevent fine sediment from pumping up into the rock pad. The geotextile shall meet the following standards:

Grab Tensile Strength (ASTM D4751)	200 psi min.
Grab Tensile Elongation (ASTM D4632)	30% max.
Mullen Burst Strength (ASTM D3786-80a)	400 psi min.
AOS (ASTM D4751)	20-45 (U.S. standard sieve size)

- Consider early installation of the first lift of asphalt in areas that will paved; this can be used as a stabilized entrance. Also consider the installation of excess concrete as a stabilized entrance. During large concrete pours, excess concrete is often available for this purpose.
- Hog fuel (wood-based mulch) may be substituted for or combined with quarry spalls in areas that will not be used for permanent roads. Hog fuel is generally less effective at stabilizing construction entrances and should be used only at sites where the amount of traffic is very limited. Hog fuel is not recommended for entrance stabilization in urban areas. The effectiveness of hog fuel is highly variable and it generally requires more maintenance than quarry spalls. The inspector may at any time require the use of quarry spalls if the hog fuel is not preventing sediment from being tracked onto pavement or if the hog fuel is being carried onto pavement. Hog fuel is prohibited in permanent roadbeds because organics in the subgrade soils cause degradation of the subgrade support over time.
- Fencing (see BMPs C103 and C104) shall be installed as necessary to restrict traffic to the construction entrance.

- Whenever possible, the entrance shall be constructed on a firm, compacted subgrade. This can substantially increase the effectiveness of the pad and reduce the need for maintenance.

Maintenance Standards

- Quarry spalls (or hog fuel) shall be added if the pad is no longer in accordance with the specifications.
- If the entrance is not preventing sediment from being tracked onto pavement, then alternative measures to keep the streets free of sediment shall be used. This may include street sweeping, an increase in the dimensions of the entrance, or the installation of a wheel wash.
- Any sediment that is tracked onto pavement shall be removed by shoveling or street sweeping. The sediment collected by sweeping shall be removed or stabilized on site. The pavement shall not be cleaned by washing down the street, except when sweeping is ineffective and there is a threat to public safety. If it is necessary to wash the streets, the construction of a small sump shall be considered. The sediment would then be washed into the sump where it can be controlled.
- Any quarry spalls that are loosened from the pad, which end up on the roadway shall be removed immediately.
- If vehicles are entering or exiting the site at points other than the construction entrance(s), fencing (see BMPs C103 and C104) shall be installed to control traffic.
- Upon project completion and site stabilization, all construction accesses intended as permanent access for maintenance shall be permanently stabilized.

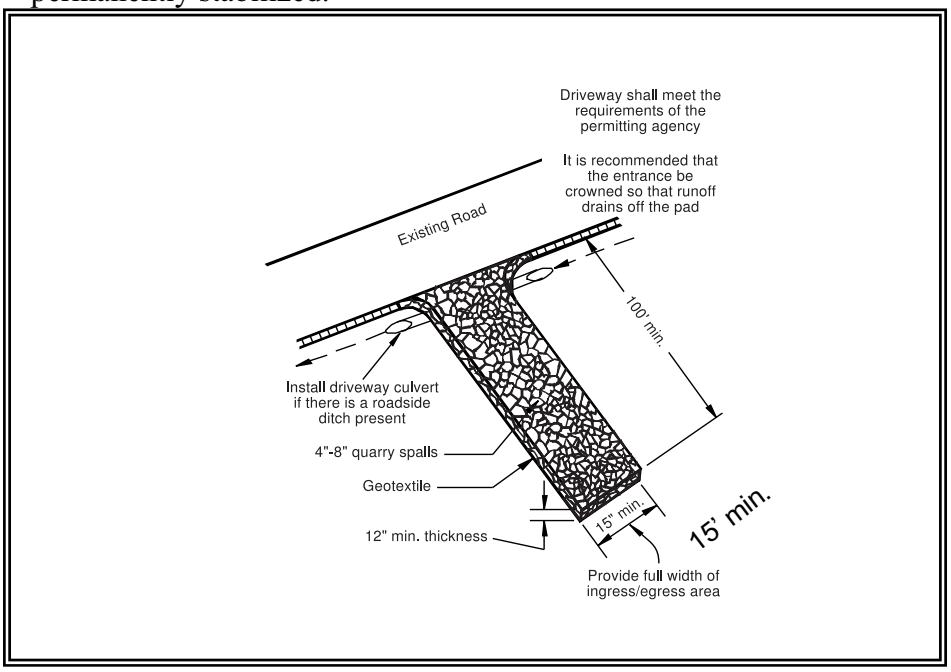

Figure 4.2 – Stabilized Construction Entrance

BMP C106: Wheel Wash

Purpose

Wheel washes reduce the amount of sediment transported onto paved roads by motor vehicles.

Conditions of Use

When a stabilized construction entrance (see BMP C105) is not preventing sediment from being tracked onto pavement.

- Wheel washing is generally an effective BMP when installed with careful attention to topography. For example, a wheel wash can be detrimental if installed at the top of a slope abutting a right-of-way where the water from the dripping truck can run unimpeded into the street.
- Pressure washing combined with an adequately sized and surfaced pad with direct drainage to a large 10-foot x 10-foot sump can be very effective.

Design and Installation Specifications

Suggested details are shown in Figure 4.3. The Local Permitting Authority may allow other designs. A minimum of 6 inches of asphalt treated base (ATB) over crushed base material or 8 inches over a good subgrade is recommended to pave the wheel wash.

Use a low clearance truck to test the wheel wash before paving. Either a belly dump or lowboy will work well to test clearance.

Keep the water level from 12 to 14 inches deep to avoid damage to truck hubs and filling the truck tongues with water.

Midpoint spray nozzles are only needed in extremely muddy conditions.

Wheel wash systems should be designed with a small grade change, 6 to 12 inches for a 10-foot-wide pond, to allow sediment to flow to the low side of pond to help prevent re-suspension of sediment. A drainpipe with a 2- to 3-foot riser should be installed on the low side of the pond to allow for easy cleaning and refilling. Polymers may be used to promote coagulation and flocculation in a closed-loop system. Polyacrylamide (PAM) added to the wheel wash water at a rate of 0.25 - 0.5 pounds per 1,000 gallons of water increases effectiveness and reduces cleanup time. If PAM is already being used for dust or erosion control and is being applied by a water truck, the same truck can be used to change the wash water.

Maintenance Standards

The wheel wash should start out the day with fresh water.

The wash water should be changed a minimum of once per day. On large earthwork jobs where more than 10-20 trucks per hour are expected, the wash water will need to be changed more often.

Wheel wash or tire bath wastewater shall be discharged to a separate on-site treatment system, such as closed-loop recirculation or land application, or to the sanitary sewer with proper local sewer district approval.

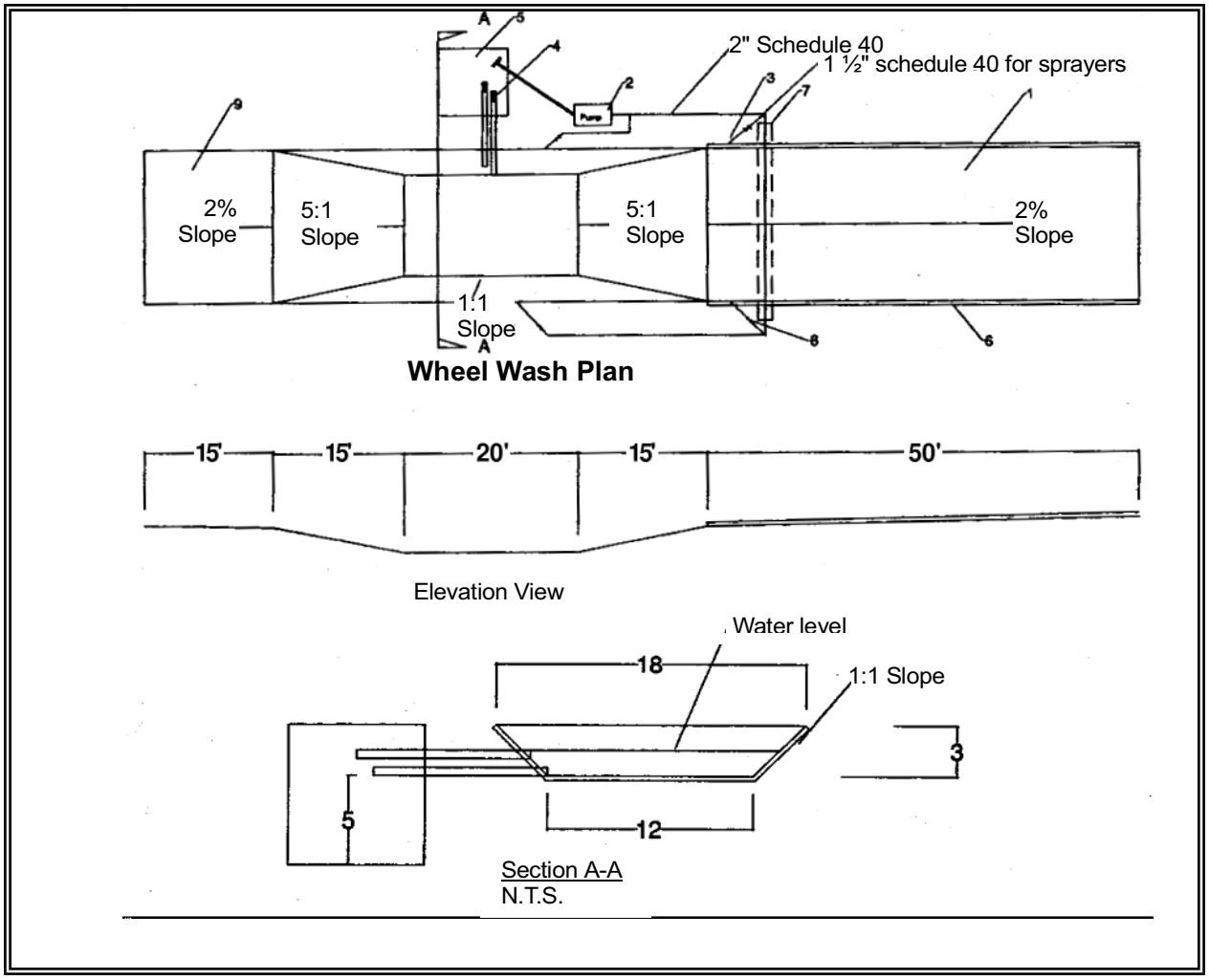

Figure 4.3 Wheel Wash

Notes:

1. Asphalt construction entrance 6 in. asphalt treated base (ATB).
2. 3-inch trash pump with floats on the suction hose.
3. Midpoint spray nozzles, if needed.
4. 6-inch sewer pipe with butterfly valves. Bottom one is a drain. Locate top pipe's invert 1 foot above bottom of wheel wash.
5. 8 foot x 8 foot sump with 5 feet of catch. Build so can be cleaned with trackhoe.
6. Asphalt curb on the low road side to direct water back to pond.
7. 6-inch sleeve under road.
8. Ball valves.
9. 15 foot. ATB apron to protect ground from splashing water.

BMP C107: Construction Road/Parking Area Stabilization

Purpose

Stabilizing subdivision roads, parking areas, and other onsite vehicle transportation routes immediately after grading reduces erosion caused by construction traffic or runoff.

Conditions of Use

- Roads or parking areas shall be stabilized wherever they are constructed, whether permanent or temporary, for use by construction traffic.
- Fencing (see BMPs C103 and C104) shall be installed, if necessary, to limit the access of vehicles to only those roads and parking areas that are stabilized.

Design and Installation Specifications

- On areas that will receive asphalt as part of the project, install the first lift as soon as possible.
- A 6-inch depth of 2- to 4-inch crushed rock, gravel base, or crushed surfacing base course shall be applied immediately after grading or utility installation. A 4-inch course of asphalt treated base (ATB) may also be used, or the road/parking area may be paved. It may also be possible to use cement or calcium chloride for soil stabilization. If cement or cement kiln dust is used for roadbase stabilization, pH monitoring and BMPs are necessary to evaluate and minimize the effects on stormwater. If the area will not be used for permanent roads, parking areas, or structures, a 6-inch depth of hog fuel may also be used, but this is likely to require more maintenance. Whenever possible, construction roads and parking areas shall be placed on a firm, compacted subgrade.
- Temporary road gradients shall not exceed 15 percent. Roadways shall be carefully graded to drain. Drainage ditches shall be provided on each side of the roadway in the case of a crowned section, or on one side in the case of a super-elevated section. Drainage ditches shall be directed to a sediment control BMP.
- Rather than relying on ditches, it may also be possible to grade the road so that runoff sheet-flows into a heavily vegetated area with a well-developed topsoil. Landscaped areas are not adequate. If this area has at least 50 feet of vegetation, then it is generally preferable to use the vegetation to treat runoff, rather than a sediment pond or trap. The 50 feet shall not include wetlands. If runoff is allowed to sheetflow through adjacent vegetated areas, it is vital to design the roadways and parking areas so that no concentrated runoff is created.
- Storm drain inlets shall be protected to prevent sediment-laden water entering the storm drain system (see BMP C220).

Maintenance Standards

- Inspect stabilized areas regularly, especially after large storm events.
- Crushed rock, gravel base, hog fuel, etc. shall be added as required to maintain a stable driving surface and to stabilize any areas that have eroded.
- Following construction, these areas shall be restored to pre-construction condition or better to prevent future erosion.

BMP C120: Temporary and Permanent Seeding

Purpose

Seeding is intended to reduce erosion by stabilizing exposed soils. A well-established vegetative cover is one of the most effective methods of reducing erosion.

Conditions of Use

- Seeding may be used throughout the project on disturbed areas that have reached final grade or that will remain unworked for more than 30 days.
- Channels that will be vegetated should be installed before major earthwork and hydroseeded with a Bonded Fiber Matrix. The vegetation should be well established (i.e., 75 percent cover) before water is allowed to flow in the ditch. With channels that will have high flows, erosion control blankets should be installed over the hydroseed. If vegetation cannot be established from seed before water is allowed in the ditch, sod should be installed in the bottom of the ditch over hydromulch and blankets.
- Retention/detention ponds should be seeded as required.
- Mulch is required at all times because it protects seeds from heat, moisture loss, and transport due to runoff.
- All disturbed areas shall be reviewed in late August to early September and all seeding should be completed by the end of September. Otherwise, vegetation will not establish itself enough to provide more than average protection.
- At final site stabilization, all disturbed areas not otherwise vegetated or stabilized shall be seeded and mulched. Final stabilization means the completion of all soil disturbing activities at the site and the establishment of a permanent vegetative cover, or equivalent permanent stabilization measures (such as pavement, riprap, gabions or geotextiles) which will prevent erosion.

Design and Installation Specifications

- Seeding should be done during those seasons most conducive to growth and will vary with the climate conditions of the region. Local experience should be used to determine the appropriate seeding periods.
- The optimum seeding windows for western Washington are April 1 through June 30 and September 1 through October 1. Seeding that occurs between July 1 and August 30 will require irrigation until 75 percent grass cover is established. Seeding that occurs between October 1 and March 30 will require a mulch or plastic cover until 75 percent grass cover is established.
- To prevent seed from being washed away, confirm that all required surface water control measures have been installed.

- The seedbed should be firm and rough. All soil should be roughened no matter what the slope. If compaction is required for engineering purposes, slopes must be track walked before seeding. Backblading or smoothing of slopes greater than 4:1 is not allowed if they are to be seeded.
- New and more effective restoration-based landscape practices rely on deeper incorporation than that provided by a simple single-pass rototilling treatment. Wherever practical the subgrade should be initially ripped to improve long-term permeability, infiltration, and water inflow qualities. At a minimum, permanent areas shall use soil amendments to achieve organic matter and permeability performance defined in engineered soil/landscape systems. For systems that are deeper than 8 inches the rototilling process should be done in multiple lifts, or the prepared soil system shall be prepared properly and then placed to achieve the specified depth.
- Organic matter is the most appropriate form of "fertilizer" because it provides nutrients (including nitrogen, phosphorus, and potassium) in the least water-soluble form. A natural system typically releases 2-10 percent of its nutrients annually. Chemical fertilizers have since been formulated to simulate what organic matter does naturally.
- In general, 10-4-6 N-P-K (nitrogen-phosphorus-potassium) fertilizer can be used at a rate of 90 pounds per acre. Slow-release fertilizers should always be used because they are more efficient and have fewer environmental impacts. It is recommended that areas being seeded for final landscaping conduct soil tests to determine the exact type and quantity of fertilizer needed. This will prevent the over-application of fertilizer. Fertilizer should not be added to the hydromulch machine and agitated more than 20 minutes before it is to be used. If agitated too much, the slow-release coating is destroyed.
- There are numerous products available on the market that take the place of chemical fertilizers. These include several with seaweed extracts that are beneficial to soil microbes and organisms. If 100 percent cottonseed meal is used as the mulch in hydroseed, chemical fertilizer may not be necessary. Cottonseed meal is a good source of long-term, slow-release, available nitrogen.
- Hydroseed applications shall include a minimum of 1,500 pounds per acre of mulch with 3 percent tackifier. Mulch may be made up of 100 percent: cottonseed meal; fibers made of wood, recycled cellulose, hemp, and kenaf; compost; or blends of these. Tackifier shall be plant-based, such as guar or alpha plantago, or chemical-based such as polyacrylamide or polymers. Any mulch or tackifier product used shall be installed per manufacturer's instructions. Generally, mulches come in 40-50 pound bags. Seed and fertilizer are added at time of application.

- Mulch is always required for seeding. Mulch can be applied on top of the seed or simultaneously by hydroseeding.
- On steep slopes, Bonded Fiber Matrix (BFM) or Mechanically Bonded Fiber Matrix (MBFM) products should be used. BFM/MBFM products are applied at a minimum rate of 3,000 pounds per acre of mulch with approximately 10 percent tackifier. Application is made so that a minimum of 95 percent soil coverage is achieved. Numerous products are available commercially and should be installed per manufacturer's instructions. Most products require 24-36 hours to cure before a rainfall and cannot be installed on wet or saturated soils. Generally, these products come in 40-50 pound bags and include all necessary ingredients except for seed and fertilizer.

BFMs and MBFMs have some advantages over blankets:

- No surface preparation required;
- Can be installed via helicopter in remote areas;
- On slopes steeper than 2.5:1, blanket installers may need to be roped and harnessed for safety;
- They are at least $1,000 per acre cheaper installed.

In most cases, the shear strength of blankets is not a factor when used on slopes, only when used in channels. BFMs and MBFMs are good alternatives to blankets in most situations where vegetation establishment is the goal.

- When installing seed via hydroseeding operations, only about 1/3 of the seed actually ends up in contact with the soil surface. This reduces the ability to establish a good stand of grass quickly. One way to overcome this is to increase seed quantities by up to 50 percent.
- Vegetation establishment can also be enhanced by dividing the hydromulch operation into two phases:
    1. Phase 1- Install all seed and fertilizer with 25-30 percent mulch and tackifier onto soil in the first lift;
    2. Phase 2- Install the rest of the mulch and tackifier over the first lift.

An alternative is to install the mulch, seed, fertilizer, and tackifier in one lift. Then, spread or blow straw over the top of the hydromulch at a rate of about 800-1000 pounds per acre. Hold straw in place with a standard tackifier. Both of these approaches will increase cost moderately but will greatly improve and enhance vegetative establishment. The increased cost may be offset by the reduced need for:

1. Irrigation
2. Reapplication of mulch
3. Repair of failed slope surfaces

This technique works with standard hydromulch (1,500 pounds per acre minimum) and BFM/MBFMs (3,000 pounds per acre minimum).

- Areas to be permanently landscaped shall provide a healthy topsoil that reduces the need for fertilizers, improves overall topsoil quality, provides for better vegetal health and vitality, improves hydrologic characteristics, and reduces the need for irrigation. This can be accomplished in a number of ways:

  Recent research has shown that the best method to improve till soils is to amend these soils with compost. The optimum mixture is approximately two parts soil to one part compost. This equates to 4 inches of compost mixed to a depth of 12 inches in till soils. Increasing the concentration of compost beyond this level can have negative effects on vegetal health, while decreasing the concentrations can reduce the benefits of amended soils. Please note: The compost should meet specifications for Grade A quality compost in Ecology Publication 94-038.

  Other soils, such as gravel or cobble outwash soils, may require different approaches. Organics and fines easily migrate through the loose structure of these soils. Therefore, the importation of at least 6 inches of quality topsoil, underlain by some type of filter fabric to prevent the migration of fines, may be more appropriate for these soils.

  Areas that already have good topsoil, such as undisturbed areas, do not require soil amendments.

- Areas that will be seeded only and not landscaped may need compost or meal-based mulch included in the hydroseed in order to establish vegetation. Native topsoil should be re-installed on the disturbed soil surface before application.
- Seed that is installed as a temporary measure may be installed by hand if it will be covered by straw, mulch, or topsoil. Seed that is installed as a permanent measure may be installed by hand on small areas (usually less than 1 acre) that will be covered with mulch, topsoil, or erosion blankets. The seed mixes listed below include recommended mixes for both temporary and permanent seeding. These mixes, with the exception of the wetland mix, shall be applied at a rate of 120 pounds per acre. This rate can be reduced if soil amendments or slow-release fertilizers are used. Local suppliers or the local conservation district should be consulted for their recommendations because the appropriate mix depends on a variety of factors, including location, exposure, soil type, slope, and expected foot traffic. Alternative seed mixes approved by the local authority may be used.

Table 4.1 represents the standard mix for those areas where just a temporary vegetative cover is required.

Table 4.1
Temporary Erosion Control Seed Mix

	% Weight	% Purity	% Germination
Chewings or annual blue grass *Festuca rubra var. commutata* or *Poa anna*	40	98	90
Perennial rye - *Lolium perenne*	50	98	90
Redtop or colonial bentgrass *Agrostis alba* or *Agrostis tenuis*	5	92	85
White dutch clover *Trifolium repens*	5	98	90

Table 4.2 provides just one recommended possibility for landscaping seed.

Table 4.2
Landscaping Seed Mix

	% Weight	% Purity	% Germination
Perennial rye blend *Lolium perenne*	70	98	90
Chewings and red fescue blend *Festuca rubra var. commutata* or *Festuca rubra*	30	98	90

This turf seed mix in Table 4.3 is for dry situations where there is no need for much water. The advantage is that this mix requires very little maintenance.

Table 4.3
Low-Growing Turf Seed Mix

	% Weight	% Purity	% Germination
Dwarf tall fescue (several varieties) *Festuca arundinacea var.*	45	98	90
Dwarf perennial rye (Barclay) *Lolium perenne var. barclay*	30	98	90
Red fescue *Festuca rubra*	20	98	90
Colonial bentgrass *Agrostis tenuis*	5	98	90

Table 4.4 presents a mix recommended for bioswales and other intermittently wet areas.

Table 4.4
Bioswale Seed Mix*

	% Weight	% Purity	% Germination
Tall or meadow fescue *Festuca arundinacea* or *Festuca elatior*	75-80	98	90
Seaside/Creeping bentgrass *Agrostis palustris*	10-15	92	85
Redtop bentgrass *Agrostis alba* or *Agrostis gigantea*	5-10	90	80

** Modified Briargreen, Inc. Hydroseeding Guide Wetlands Seed Mix*

The seed mix shown in Table 4.5 is a recommended low-growing, relatively non-invasive seed mix appropriate for very wet areas that are not regulated wetlands. Other mixes may be appropriate, depending on the soil type and hydrology of the area. Recent research suggests that bentgrass (agrostis sp.) should be emphasized in wet-area seed mixes. Apply this mixture at a rate of 60 pounds per acre.

Table 4.5
Wet Area Seed Mix*

	% Weight	% Purity	% Germination
Tall or meadow fescue *Festuca arundinacea* or *Festuca elatior*	60-70	98	90
Seaside/Creeping bentgrass *Agrostis palustris*	10-15	98	85
Meadow foxtail *Alepocurus pratensis*	10-15	90	80
Alsike clover *Trifolium hybridum*	1-6	98	90
Redtop bentgrass *Agrostis alba*	1-6	92	85

* *Modified Briargreen, Inc. Hydroseeding Guide Wetlands Seed Mix*

The meadow seed mix in Table 4.6 is recommended for areas that will be maintained infrequently or not at all and where colonization by native plants is desirable. Likely applications include rural road and utility right-of-way. Seeding should take place in September or very early October in order to obtain adequate establishment prior to the winter months. The appropriateness of clover in the mix may need to be considered, as this can be a fairly invasive species. If the soil is amended, the addition of clover may not be necessary.

Table 4.6
Meadow Seed Mix

	% Weight	% Purity	% Germination
Redtop or Oregon bentgrass *Agrostis alba* or *Agrostis oregonensis*	20	92	85
Red fescue *Festuca rubra*	70	98	90
White dutch clover *Trifolium repens*	10	98	90

Maintenance Standards

- Any seeded areas that fail to establish at least 80 percent cover (100 percent cover for areas that receive sheet or concentrated flows) shall be reseeded. If reseeding is ineffective, an alternate method, such as sodding, mulching, or nets/blankets, shall be used. If winter weather prevents adequate grass growth, this time limit may be relaxed at the discretion of the local authority when sensitive areas would otherwise be protected.

- After adequate cover is achieved, any areas that experience erosion shall be reseeded and protected by mulch. If the erosion problem is drainage related, the problem shall be fixed and the eroded area reseeded and protected by mulch.
- Seeded areas shall be supplied with adequate moisture, but not watered to the extent that it causes runoff.

BMP C121: Mulching

Purpose

The purpose of mulching soils is to provide immediate temporary protection from erosion. Mulch also enhances plant establishment by conserving moisture, holding fertilizer, seed, and topsoil in place, and moderating soil temperatures. There is an enormous variety of mulches that can be used. Only the most common types are discussed in this section.

Conditions of Use

As a temporary cover measure, mulch should be used:

- On disturbed areas that require cover measures for less than 30 days.
- As a cover for seed during the wet season and during the hot summer months.
- During the wet season on slopes steeper than 3H:1V with more than 10 feet of vertical relief.
- Mulch may be applied at any time of the year and must be refreshed periodically.

Design and Installation Specifications

For mulch materials, application rates, and specifications, see Table 4.7. Note: Thicknesses may be increased for disturbed areas in or near sensitive areas or other areas highly susceptible to erosion.

Mulch used within the ordinary high-water mark of surface waters should be selected to minimize potential flotation of organic matter. Composted organic materials have higher specific gravities (densities) than straw, wood, or chipped material.

Maintenance Standards

- The thickness of the cover must be maintained.
- Any areas that experience erosion shall be remulched and/or protected with a net or blanket. If the erosion problem is drainage related, then the problem shall be fixed and the eroded area remulched.

Table 4.7 Mulch Standards and Guidelines			
Mulch Material	**Quality Standards**	**Application Rates**	**Remarks**
Straw	Air-dried; free from undesirable seed and coarse material.	2"-3" thick; 5 bales per 1000 sf or 2-3 tons per acre	Cost-effective protection when applied with adequate thickness. Hand-application generally requires greater thickness than blown straw. The thickness of straw may be reduced by half when used in conjunction with seeding. In windy areas straw must be held in place by crimping, using a tackifier, or covering with netting. Blown straw always has to be held in place with a tackifier as even light winds will blow it away. Straw, however, has several deficiencies that should be considered when selecting mulch materials. It often introduces and/or encourages the propagation of weed species and it has no significant long-term benefits. Straw should be used only if mulches with long-term benefits are unavailable locally. It should also not be used within the ordinary high-water elevation of surface waters (due to flotation).
Hydromulch	No growth inhibiting factors.	Approx. 25-30 lbs per 1000 sf or 1500 - 2000 lbs per acre	Shall be applied with hydromulcher. Shall not be used without seed and tackifier unless the application rate is at least doubled. Fibers longer than about ¾-1 inch clog hydromulch equipment. Fibers should be kept to less than ¾ inch.
Composted Mulch and Compost	No visible water or dust during handling. Must be purchased from supplier with Solid Waste Handling Permit (unless exempt).	2" thick min.; approx. 100 tons per acre (approx. 800 lbs per yard)	More effective control can be obtained by increasing thickness to 3". Excellent mulch for protecting final grades until landscaping because it can be directly seeded or tilled into soil as an amendment. Composted mulch has a coarser size gradation than compost. It is more stable and practical to use in wet areas and during rainy weather conditions.
Chipped Site Vegetation	Average size shall be several inches. Gradations from fines to 6 inches in length for texture, variation, and interlocking properties.	2" minimum thickness	This is a cost-effective way to dispose of debris from clearing and grubbing, and it eliminates the problems associated with burning. Generally, it should not be used on slopes above approx. 10% because of its tendency to be transported by runoff. It is not recommended within 200 feet of surface waters. If seeding is expected shortly after mulch, the decomposition of the chipped vegetation may tie up nutrients important to grass establishment.
Wood-based Mulch	No visible water or dust during handling. Must be purchased from a supplier with a Solid Waste Handling Permit or one exempt from solid waste regulations.	2" thick; approx. 100 tons per acre (approx. 800 lbs. per cubic yard)	This material is often called "hog or hogged fuel." It is usable as a material for Stabilized Construction Entrances (BMP C105) and as a mulch. The use of mulch ultimately improves the organic matter in the soil. Special caution is advised regarding the source and composition of wood-based mulches. Its preparation typically does not provide any weed seed control, so evidence of residual vegetation in its composition or known inclusion of weed plants or seeds should be monitored and prevented (or minimized).

BMP C122: Nets and Blankets

Purpose

Erosion control nets and blankets are intended to prevent erosion and hold seed and mulch in place on steep slopes and in channels so that vegetation can become well established. In addition, some nets and blankets can be used to permanently reinforce turf to protect drainage ways during high flows. Nets (commonly called matting) are strands of material woven into an open, but high-tensile strength net (for example, coconut fiber matting). Blankets are strands of material that are not tightly woven, but instead form a layer of interlocking fibers, typically held together by a biodegradable or photodegradable netting (for example, excelsior or straw blankets). They generally have lower tensile strength than nets, but cover the ground more completely. Coir (coconut fiber) fabric comes as both nets and blankets.

Conditions of Use

Erosion control nets and blankets should be used:

- To aid permanent vegetated stabilization of slopes 2H:1V or greater and with more than 10 feet of vertical relief.
- For drainage ditches and swales (highly recommended). The application of appropriate netting or blanket to drainage ditches and swales can protect bare soil from channelized runoff while vegetation is established. Nets and blankets also can capture a great deal of sediment due to their open, porous structure. Synthetic nets and blankets can be used to permanently stabilize channels and may provide a cost-effective, environmentally preferable alternative to riprap. 100 percent synthetic blankets manufactured for use in ditches may be easily reused as temporary ditch liners.

Disadvantages of blankets include:

- Surface preparation required;
- On slopes steeper than 2.5:1, blanket installers may need to be roped and harnessed for safety;
- They cost at least $4,000-6,000 per acre installed.

Advantages of blankets include:

- Can be installed without mobilizing special equipment;
- Can be installed by anyone with minimal training;
- Can be installed in stages or phases as the project progresses;
- Seed and fertilizer can be hand-placed by the installers as they progress down the slope;
- Can be installed in any weather;
- There are numerous types of blankets that can be designed with various parameters in mind. Those parameters include: fiber blend, mesh strength, longevity, biodegradability, cost, and availability.

Design and Installation Specifications

- See Figure 4.4 and Figure 4.5 for typical orientation and installation of blankets used in channels and as slope protection. Note: these are typical only; all blankets must be installed per manufacturer's installation instructions.
- Installation is critical to the effectiveness of these products. If good ground contact is not achieved, runoff can concentrate under the product, resulting in significant erosion.
- Installation of Blankets on Slopes:
  1. Complete final grade and track walk up and down the slope.
  2. Install hydromulch with seed and fertilizer.
  3. Dig a small trench, approximately 12 inches wide by 6 inches deep along the top of the slope.
  4. Install the leading edge of the blanket into the small trench and staple approximately every 18 inches. NOTE: Staples are metal,"U"-shaped, and a minimum of 6 inches long. Longer staples are used in sandy soils. Biodegradable stakes are also available.
  5. Roll the blanket slowly down the slope as installer walks backwards. NOTE: The blanket rests against the installer's legs. Staples are installed as the blanket is unrolled. It is critical that the proper staple pattern is used for the blanket being installed. The blanket is not to be allowed to roll down the slope on its own as this stretches the blanket making it impossible to maintain soil contact. In addition, no one is allowed to walk on the blanket after it is in place.
  6. If the blanket is not long enough to cover the entire slope length, the trailing edge of the upper blanket should overlap the leading edge of the lower blanket and be stapled. On steeper slopes, this overlap should be installed in a small trench, stapled, and covered with soil.
- With the variety of products available, it is impossible to cover all the details of appropriate use and installation. Therefore, it is critical that the design engineer consults the manufacturer's information and that a site visit takes place in order to insure that the product specified is appropriate. Information is also available at the following web sites:
  1. WSDOT: http://www.wsdot.wa.gov/eesc/environmental/
  2. Texas Transportation Institute: http://www.dot.state.tx.us/insdtdot/orgchart/cmd/erosion/contents.htm

- Jute matting must be used in conjunction with mulch (BMP C121). Excelsior, woven straw blankets and coir (coconut fiber) blankets may be installed without mulch. There are many other types of erosion control nets and blankets on the market that may be appropriate in certain circumstances.
- In general, most nets (e.g., jute matting) require mulch in order to prevent erosion because they have a fairly open structure. Blankets typically do not require mulch because they usually provide complete protection of the surface.
- Extremely steep, unstable, wet, or rocky slopes are often appropriate candidates for use of synthetic blankets, as are riverbanks, beaches and other high-energy environments. If synthetic blankets are used, the soil should be hydromulched first.
- 100 percent biodegradable blankets are available for use in sensitive areas. These organic blankets are usually held together with a paper or fiber mesh and stitching which may last up to a year.
- Most netting used with blankets is photodegradable, meaning they break down under sunlight (not UV stabilized). However, this process can take months or years even under bright sun. Once vegetation is established, sunlight does not reach the mesh. It is not uncommon to find non-degraded netting still in place several years after installation. This can be a problem if maintenance requires the use of mowers or ditch cleaning equipment. In addition, birds and small animals can become trapped in the netting.

Maintenance Standards

- Good contact with the ground must be maintained, and erosion must not occur beneath the net or blanket.
- Any areas of the net or blanket that are damaged or not in close contact with the ground shall be repaired and stapled.
- If erosion occurs due to poorly controlled drainage, the problem shall be fixed and the eroded area protected.

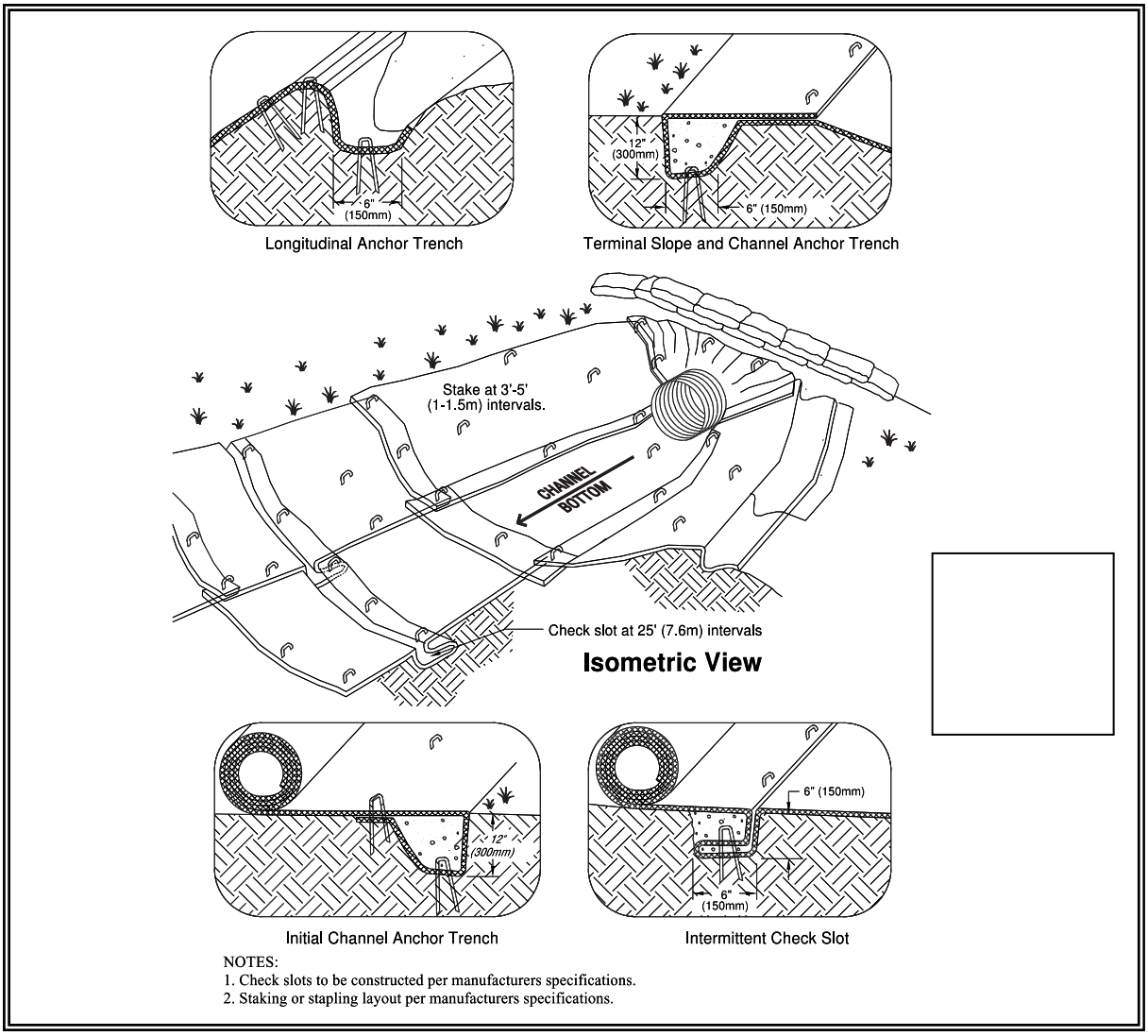

Figure 4.4 – Channel Installation

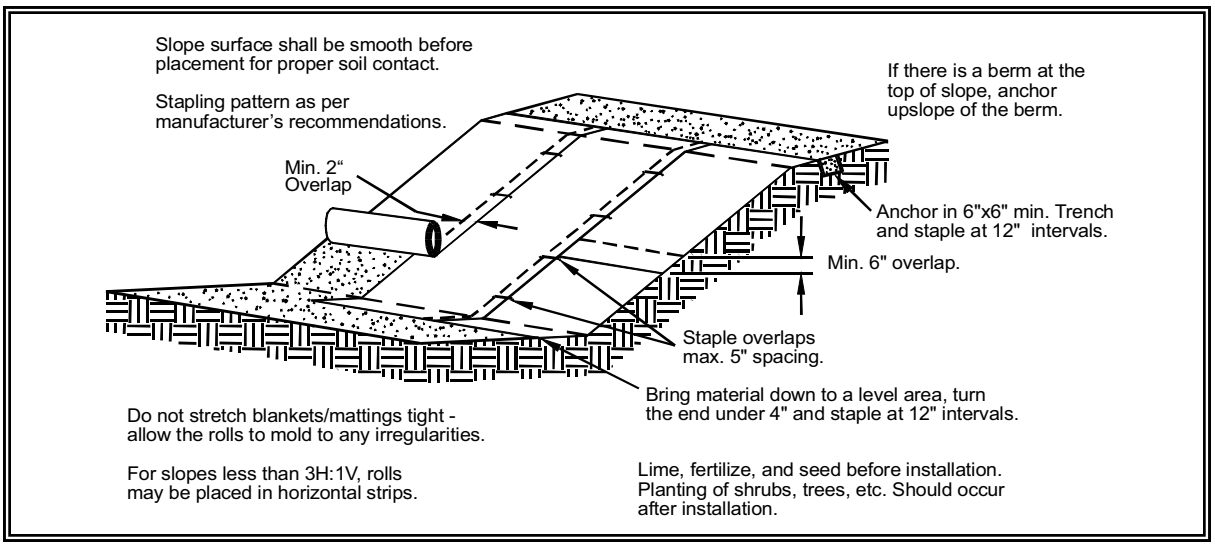

Figure 4.5 – Slope Installation

BMP C123: Plastic Covering

Purpose

Plastic covering provides immediate, short-term erosion protection to slopes and disturbed areas.

Conditions of Use

- Plastic covering may be used on disturbed areas that require cover measures for less than 30 days, except as stated below.
- Plastic is particularly useful for protecting cut and fill slopes and stockpiles. Note: The relatively rapid breakdown of most polyethylene sheeting makes it unsuitable for long-term (greater than six months) applications.
- Clear plastic sheeting can be used over newly-seeded areas to create a greenhouse effect and encourage grass growth if the hydroseed was installed too late in the season to establish 75 percent grass cover, or if the wet season started earlier than normal. Clear plastic should not be used for this purpose during the summer months because the resulting high temperatures can kill the grass.
- Due to rapid runoff caused by plastic sheeting, this method shall not be used upslope of areas that might be adversely impacted by concentrated runoff. Such areas include steep and/or unstable slopes.
- While plastic is inexpensive to purchase, the added cost of installation, maintenance, removal, and disposal make this an expensive material, up to $1.50-2.00 per square yard.
- Whenever plastic is used to protect slopes, water collection measures must be installed at the base of the slope. These measures include plastic-covered berms, channels, and pipes used to covey clean rainwater away from bare soil and disturbed areas. At no time is clean runoff from a plastic covered slope to be mixed with dirty runoff from a project.
- Other uses for plastic include:
    1. Temporary ditch liner;
    2. Pond liner in temporary sediment pond;
    3. Liner for bermed temporary fuel storage area if plastic is not reactive to the type of fuel being stored;
    4. Emergency slope protection during heavy rains; and,
    5. Temporary drainpipe (“elephant trunk”) used to direct water.

Design and Installation Specifications

- Plastic slope cover must be installed as follows:
  1. Run plastic up and down slope, not across slope;
  2. Plastic may be installed perpendicular to a slope if the slope length is less than 10 feet;
  3. Minimum of 8-inch overlap at seams;
  4. On long or wide slopes, or slopes subject to wind, all seams should be taped;
  5. Place plastic into a small (12-inch wide by 6-inch deep) slot trench at the top of the slope and backfill with soil to keep water from flowing underneath;
  6. Place sand filled burlap or geotextile bags every 3 to 6 feet along seams and pound a wooden stake through each to hold them in place;
  7. Inspect plastic for rips, tears, and open seams regularly and repair immediately. This prevents high velocity runoff from contacting bare soil which causes extreme erosion;
  8. Sandbags may be lowered into place tied to ropes. However, all sandbags must be staked in place.
- Plastic sheeting shall have a minimum thickness of 0.06 millimeters.
- If erosion at the toe of a slope is likely, a gravel berm, riprap, or other suitable protection shall be installed at the toe of the slope in order to reduce the velocity of runoff.

Maintenance Standards

- Torn sheets must be replaced and open seams repaired.
- If the plastic begins to deteriorate due to ultraviolet radiation, it must be completely removed and replaced.
- When the plastic is no longer needed, it shall be completely removed.
- Dispose of old tires appropriately.

BMP C124: Sodding

Purpose

The purpose of sodding is to establish permanent turf for immediate erosion protection and to stabilize drainage ways where concentrated overland flow will occur.

Conditions of Use

Sodding may be used in the following areas:

- Disturbed areas that require short-term or long-term cover.
- Disturbed areas that require immediate vegetative cover.
- All waterways that require vegetative lining. Waterways may also be seeded rather than sodded, and protected with a net or blanket.

Design and Installation Specifications

Sod shall be free of weeds, of uniform thickness (approximately 1-inch thick), and shall have a dense root mat for mechanical strength.

The following steps are recommended for sod installation:

- Shape and smooth the surface to final grade in accordance with the approved grading plan. The swale needs to be overexcavated 4 to 6 inches below design elevation to allow room for placing soil amendment and sod.
- Amend 4 inches (minimum) of compost into the top 8 inches of the soil if the organic content of the soil is less than ten percent or the permeability is less than 0.6 inches per hour. Compost used should meet Ecology publication 94-038 specifications for Grade A quality compost.
- Fertilize according to the supplier's recommendations.
- Work lime and fertilizer 1 to 2 inches into the soil, and smooth the surface.
- Lay strips of sod beginning at the lowest area to be sodded and perpendicular to the direction of water flow. Wedge strips securely into place. Square the ends of each strip to provide for a close, tight fit. Stagger joints at least 12 inches. Staple on slopes steeper than 3H:1V. Staple the upstream edge of each sod strip.
- Roll the sodded area and irrigate.
- When sodding is carried out in alternating strips or other patterns, seed the areas between the sod immediately after sodding.

Maintenance Standards

If the grass is unhealthy, the cause shall be determined and appropriate action taken to reestablish a healthy groundcover. If it is impossible to establish a healthy groundcover due to frequent saturation, instability, or some other cause, the sod shall be removed, the area seeded with an appropriate mix, and protected with a net or blanket.

BMP C125: Topsoiling

Purpose

To provide a suitable growth medium for final site stabilization with vegetation. While not a permanent cover practice in itself, topsoiling is an integral component of providing permanent cover in those areas where there is an unsuitable soil surface for plant growth. Native soils and disturbed soils that have been organically amended not only retain much more stormwater, but they also serve as effective biofilters for urban pollutants and, by supporting more vigorous plant growth, reduce the water, fertilizer and pesticides needed to support installed landscapes. Topsoil does not include any subsoils but only the material from the top several inches including organic debris.

Conditions of Use

- Native soils should be left undisturbed to the maximum extent practicable. Native soils disturbed during clearing and grading should be restored, to the maximum extent practicable, to a condition where moisture-holding capacity is equal to or better than the original site conditions. This criterion can be met by using on-site native topsoil, incorporating amendments into on-site soil, or importing blended topsoil.
- Topsoiling is a required procedure when establishing vegetation on shallow soils, and soils of critically low pH (high acid) levels.
- Stripping of existing, properly functioning soil system and vegetation for the purpose of topsoiling during construction is not acceptable. If an existing soil system is functioning properly it shall be preserved in its undisturbed and uncompacted condition.
- Depending on where the topsoil comes from, or what vegetation was on site before disturbance, invasive plant seeds may be included and could cause problems for establishing native plants, landscaped areas, or grasses.
- Topsoil from the site will contain mycorrhizal bacteria that are necessary for healthy root growth and nutrient transfer. These native mycorrhiza are acclimated to the site and will provide optimum conditions for establishing grasses. Commercially available mycorrhiza products should be used when topsoil is brought in from off-site.

Design and Installation Specifications

If topsoiling is to be done, the following items should be considered:

- Maximize the depth of the topsoil wherever possible to provide the maximum possible infiltration capacity and beneficial growth medium. Topsoil depth shall be at least 8 inches with a minimum organic content of 10 percent dry weight and pH between 6.0 and 8.0 or matching the pH of the undisturbed soil. This can be accomplished either by returning native topsoil to the site and/or incorporating organic amendments. Organic amendments should be incorporated to a minimum 8-inch depth except where tree roots or other natural

features limit the depth of incorporation. Subsoils below the 12-inch depth should be scarified at least 2 inches to avoid stratified layers, where feasible. The decision to either layer topsoil over a subgrade or incorporate topsoil into the underlying layer may vary depending on the planting specified.

- If blended topsoil is imported, then fines should be limited to 25 percent passing through a 200 sieve.
- The final composition and construction of the soil system will result in a natural selection or favoring of certain plant species over time. For example, recent practices have shown that incorporation of topsoil may favor grasses, while layering with mildly acidic, high-carbon amendments may favor more woody vegetation.
- Locate the topsoil stockpile so that it meets specifications and does not interfere with work on the site. It may be possible to locate more than one pile in proximity to areas where topsoil will be used.
- Allow sufficient time in scheduling for topsoil to be spread prior to seeding, sodding, or planting.
- Care must be taken not to apply to subsoil if the two soils have contrasting textures. Sandy topsoil over clayey subsoil is a particularly poor combination, as water creeps along the junction between the soil layers and causes the topsoil to slough.
- If topsoil and subsoil are not properly bonded, water will not infiltrate the soil profile evenly and it will be difficult to establish vegetation. The best method to prevent a lack of bonding is to actually work the topsoil into the layer below for a depth of at least 6 inches.
- Ripping or re-structuring the subgrade may also provide additional benefits regarding the overall infiltration and interflow dynamics of the soil system.
- Field exploration of the site shall be made to determine if there is surface soil of sufficient quantity and quality to justify stripping. Topsoil shall be friable and loamy (loam, sandy loam, silt loam, sandy clay loam, clay loam). Areas of natural ground water recharge should be avoided.
- Stripping shall be confined to the immediate construction area. A 4- to 6- inch stripping depth is common, but depth may vary depending on the particular soil. All surface runoff control structures shall be in place prior to stripping.

Stockpiling of topsoil shall occur in the following manner:

- Side slopes of the stockpile shall not exceed 2:1.
- An interceptor dike with gravel outlet and silt fence shall surround all topsoil stockpiles between October 1 and April 30. Between May 1

and September 30, an interceptor dike with gravel outlet and silt fence shall be installed if the stockpile will remain in place for a longer period of time than active construction grading.

- Erosion control seeding or covering with clear plastic or other mulching materials of stockpiles shall be completed within 2 days (October 1 through April 30) or 7 days (May 1 through September 30) of the formation of the stockpile. Native topsoil stockpiles shall not be covered with plastic.
- Topsoil shall not be placed while in a frozen or muddy condition, when the subgrade is excessively wet, or when conditions exist that may otherwise be detrimental to proper grading or proposed sodding or seeding.
- Previously established grades on the areas to be topsoiled shall be maintained according to the approved plan.
- When native topsoil is to be stockpiled and reused the following should apply to ensure that the mycorrhizal bacterial, earthworms, and other beneficial organisms will not be destroyed:

  1. Topsoil is to be re-installed within 4 to 6 weeks;
  2. Topsoil is not to become saturated with water;
  3. Plastic cover is not allowed.

Maintenance Standards

- Inspect stockpiles regularly, especially after large storm events. Stabilize any areas that have eroded.

BMP C126: Polyacrylamide for Soil Erosion Protection

Purpose

Polyacrylamide (PAM) is used on construction sites to prevent soil erosion.

Applying PAM to bare soil in advance of a rain event significantly reduces erosion and controls sediment in two ways. First, PAM increases the soil's available pore volume, thus increasing infiltration through flocculation and reducing the quantity of stormwater runoff. Second, it increases flocculation of suspended particles and aids in their deposition, thus reducing stormwater runoff turbidity and improving water quality.

Conditions of Use

PAM shall not be directly applied to water or allowed to enter a water body.

In areas that drain to a sediment pond, PAM can be applied to bare soil under the following conditions:

- During rough grading operations.
- Staging areas.
- Balanced cut and fill earthwork.
- Haul roads prior to placement of crushed rock surfacing.
- Compacted soil roadbase.
- Stockpiles.
- After final grade and before paving or final seeding and planting.
- Pit sites.
- Sites having a winter shut down. In the case of winter shut down, or where soil will remain unworked for several months, PAM should be used together with mulch.

Design and Installation Specifications

PAM may be applied in dissolved form with water, or it may be applied in dry, granular or powdered form. The preferred application method is the dissolved form.

PAM is to be applied at a maximum rate of 2/3 pound PAM per 1000 gallons water (80 mg/L) per 1 acre of bare soil. Table 4.8 can be used to determine the PAM and water application rate for a disturbed soil area. Higher concentrations of PAM **do not** provide any additional effectiveness.

Table 4.8
PAM and Water Application Rates

Disturbed Area (ac)	PAM (lbs)	Water (gal)
0.50	0.33	500
1.00	0.66	1,000
1.50	1.00	1,500
2.00	1.32	2,000
2.50	1.65	2,500
3.00	2.00	3,000
3.50	2.33	3,500
4.00	2.65	4,000
4.50	3.00	4,500
5.00	3.33	5,000

The Preferred Method:

- Pre-measure the area where PAM is to be applied and calculate the amount of product and water necessary to provide coverage at the specified application rate (2/3 pound PAM/1000 gallons/acre).
- PAM has infinite solubility in water, but dissolves very slowly. Dissolve pre-measured dry granular PAM with a known quantity of clean water in a bucket several hours or overnight. Mechanical mixing will help dissolve the PAM. Always add PAM to water - not water to PAM.
- Pre-fill the water truck about 1/8 full with water. The water does not have to be potable, but it must have relatively low turbidity – in the range of 20 NTU or less.
- Add PAM /Water mixture to the truck
- Completely fill the water truck to specified volume.
- Spray PAM/Water mixture onto dry soil until the soil surface is uniformly and completely wetted.

An Alternate Method:

PAM may also be applied as a powder at the rate of 5 lbs. per acre. This must be applied on a day that is dry. For areas less than 5-10 acres, a hand-held "organ grinder" fertilizer spreader set to the smallest setting will work. Tractor-mounted spreaders will work for larger areas.

The following shall be used for application of PAM:

- PAM shall be used in conjunction with other BMPs and not in place of other BMPs.
- Do not use PAM on a slope that flows directly into a stream or wetland. The stormwater runoff shall pass through a sediment control BMP prior to discharging to surface waters.
- Do not add PAM to water discharging from site.
- When the total drainage area is greater than or equal to 5 acres, PAM treated areas shall drain to a sediment pond.
- Areas less than 5 acres shall drain to sediment control BMPs, such as a minimum of 3 check dams per acre. The total number of check dams used shall be maximized to achieve the greatest amount of settlement of sediment prior to discharging from the site. Each check dam shall be spaced evenly in the drainage channel through which stormwater flows are discharged off-site.
- On all sites, the use of silt fence shall be maximized to limit the discharges of sediment from the site.
- All areas not being actively worked shall be covered and protected from rainfall. PAM shall not be the only cover BMP used.

- PAM can be applied to wet soil, but dry soil is preferred due to less sediment loss.
- PAM will work when applied to saturated soil but is not as effective as applications to dry or damp soil.
- Keep the granular PAM supply out of the sun. Granular PAM loses its effectiveness in three months after exposure to sunlight and air.
- Proper application and re-application plans are necessary to ensure total effectiveness of PAM usage.
- PAM, combined with water, is very slippery and can be a safety hazard. Care must be taken to prevent spills of PAM powder onto paved surfaces. During an application of PAM, prevent over-spray from reaching pavement as pavement will become slippery. If PAM powder gets on skin or clothing, wipe it off with a rough towel rather than washing with water-this only makes cleanup messier and take longer.
- Some PAMs are more toxic and carcinogenic than others. Only the most environmentally safe PAM products should be used.

  The specific PAM copolymer formulation must be anionic. **Cationic PAM shall not be used in any application because of known aquatic toxicity problems.** Only the highest drinking water grade PAM, certified for compliance with ANSI/NSF Standard 60 for drinking water treatment, will be used for soil applications. Recent media attention and high interest in PAM has resulted in some entrepreneurial exploitation of the term "polymer." All PAM are polymers, but not all polymers are PAM, and not all PAM products comply with ANSI/NSF Standard 60. PAM use shall be reviewed and approved by the local permitting authority. The Washington State Department of Transportation (WSDOT) has listed approved PAM products on their web page.
- PAM designated for these uses should be "water soluble" or "linear" or "non-crosslinked". Cross-linked or water absorbent PAM, polymerized in highly acidic (pH<2) conditions, are used to maintain soil moisture content.
- The PAM anionic charge density may vary from 2-30 percent; a value of 18 percent is typical. Studies conducted by the United States Department of Agriculture (USDA)/ARS demonstrated that soil stabilization was optimized by using very high molecular weight (12-15 mg/mole), highly anionic (>20% hydrolysis) PAM.
- PAM tackifiers are available and being used in place of guar and alpha plantago. Typically, PAM tackifiers should be used at a rate of no more than 0.5-1 lb. per 1000 gallons of water in a hydromulch machine. Some tackifier product instructions say to use at a rate of 3 –

5 lbs. per acre, which can be too much. In addition, pump problems can occur at higher rates due to increased viscosity.

Maintenance Standards

- PAM may be reapplied on actively worked areas after a 48-hour period.
- Reapplication is not required unless PAM treated soil is disturbed or unless turbidity levels show the need for an additional application. If PAM treated soil is left undisturbed a reapplication may be necessary after two months. More PAM applications may be required for steep slopes, silty and clayey soils (USDA Classification Type "C" and "D" soils), long grades, and high precipitation areas. When PAM is applied first to bare soil and then covered with straw, a reapplication may not be necessary for several months.
- Loss of sediment and PAM may be a basis for penalties per RCW 90.48.080.

BMP C130: Surface Roughening

Purpose

Surface roughening aids in the establishment of vegetative cover, reduces runoff velocity, increases infiltration, and provides for sediment trapping through the provision of a rough soil surface. Horizontal depressions are created by operating a tiller or other suitable equipment on the contour or by leaving slopes in a roughened condition by not fine grading them.

Conditions for Use

- All slopes steeper than 3:1 and greater than 5 vertical feet require surface roughening.
- Areas with grades steeper than 3:1 should be roughened to a depth of 2 to 4 inches prior to seeding.
- Areas that will not be stabilized immediately may be roughened to reduce runoff velocity until seeding takes place.
- Slopes with a stable rock face do not require roughening.
- Slopes where mowing is planned should not be excessively roughened.

Design and Installation Specifications

There are different methods for achieving a roughened soil surface on a slope, and the selection of an appropriate method depends upon the type of slope. Roughening methods include stair-step grading, grooving, contour furrows, and tracking. See Figure 4.6 for tracking and contour furrows. Factors to be considered in choosing a method are slope steepness, mowing requirements, and whether the slope is formed by cutting or filling.

- Disturbed areas that will not require mowing may be stair-step graded, grooved, or left rough after filling.
- Stair-step grading is particularly appropriate in soils containing large amounts of soft rock. Each "step" catches material that sloughs from above, and provides a level site where vegetation can become established. Stairs should be wide enough to work with standard earth moving equipment. Stair steps must be on contour or gullies will form on the slope.
- Areas that will be mowed (these areas should have slopes less steep than 3:1) may have small furrows left by disking, harrowing, raking, or seed-planting machinery operated on the contour.
- Graded areas with slopes greater than 3:1 but less than 2:1 should be roughened before seeding. This can be accomplished in a variety of ways, including "track walking," or driving a crawler tractor up and down the slope, leaving a pattern of cleat imprints parallel to slope contours.
- Tracking is done by operating equipment up and down the slope to leave horizontal depressions in the soil.

Maintenance Standards

- Areas that are graded in this manner should be seeded as quickly as possible.
- Regular inspections should be made of the area. If rills appear, they should be re-graded and re-seeded immediately.

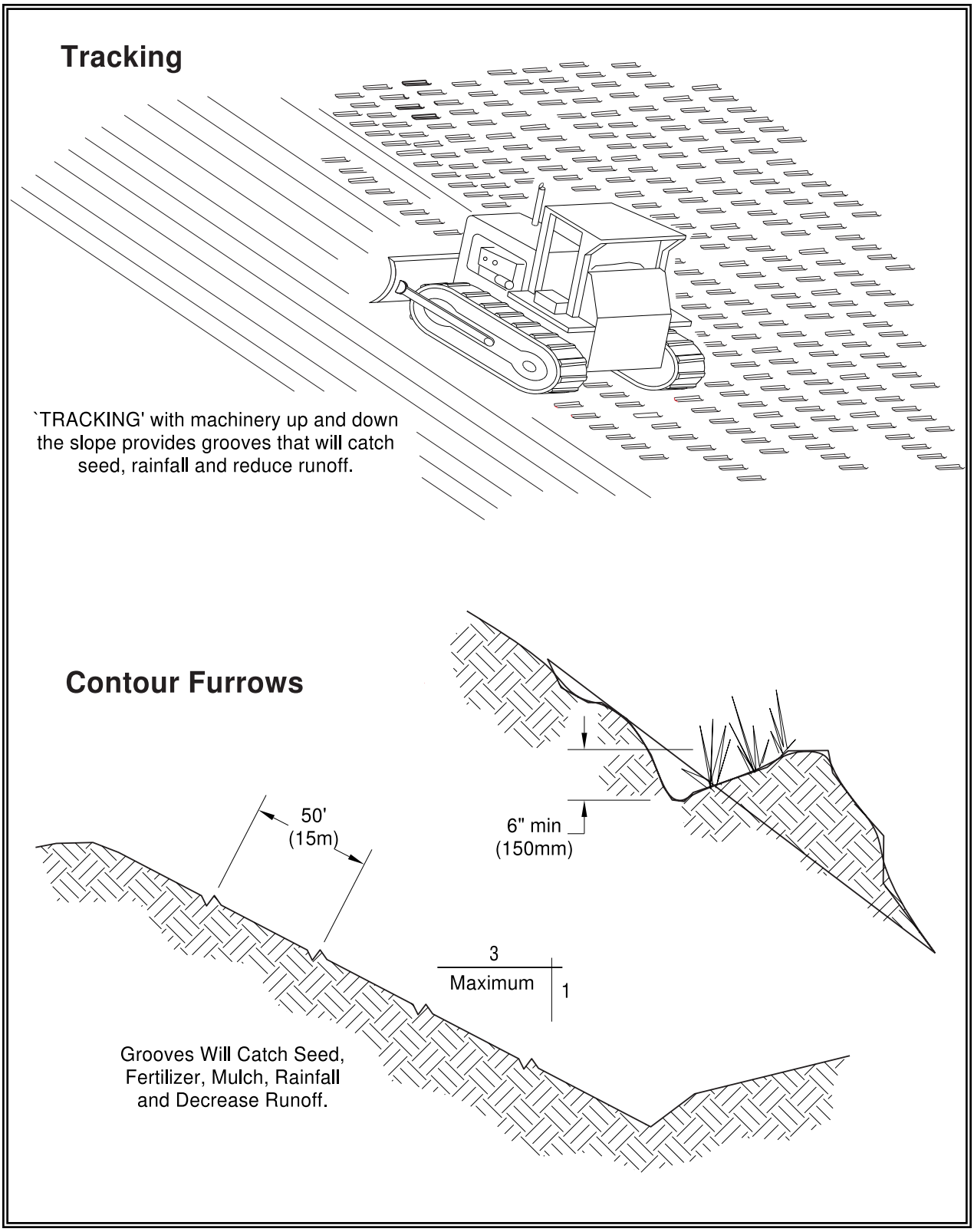

Figure 4.6 – Surface Roughening by Tracking and Contour Furrows

BMP C131: Gradient Terraces

Purpose

Gradient terraces reduce erosion damage by intercepting surface runoff and conducting it to a stable outlet at a non-erosive velocity.

Conditions of Use

- Gradient terraces normally are limited to denuded land having a water erosion problem. They should not be constructed on deep sands or on soils that are too stony, steep, or shallow to permit practical and economical installation and maintenance. Gradient terraces may be used only where suitable outlets are or will be made available. See Figure 4.7 for gradient terraces.

Design and Installation Specifications

- The maximum spacing of gradient terraces should be determined by the following method:

$$VI = (0.8)s + y$$

Where: VI = vertical interval in feet

s = land rise per 100 feet, expressed in feet

y = a soil and cover variable with values from 1.0 to 4.0

Values of "y" are influenced by soil erodibility and cover practices. The lower values are applicable to erosive soils where little to no residue is left on the surface. The higher value is applicable only to erosion-resistant soils where a large amount of residue (1½ tons of straw/acre equivalent) is on the surface.

- The minimum constructed cross-section should meet the design dimensions.
- The top of the constructed ridge should not be lower at any point than the design elevation plus the specified overfill for settlement. The opening at the outlet end of the terrace should have a cross section equal to that specified for the terrace channel.
- Channel grades may be either uniform or variable with a maximum grade of 0.6 feet per 100 feet length. For short distances, terrace grades may be increased to improve alignment. The channel velocity should not exceed that which is nonerosive for the soil type with the planned treatment.
- All gradient terraces should have adequate outlets. Such an outlet may be a grassed waterway, vegetated area, or tile outlet. In all cases the outlet must convey runoff from the terrace or terrace system to a point where the outflow will not cause damage. Vegetative cover should be used in the outlet channel.
- The design elevation of the water surface of the terrace should not be lower than the design elevation of the water surface in the outlet at their junction, when both are operating at design flow.

- Vertical spacing determined by the above methods may be increased as much as 0.5 feet or 10 percent, whichever is greater, to provide better alignment or location, to avoid obstacles, to adjust for equipment size, or to reach a satisfactory outlet.
- The drainage area above the top should not exceed the area that would be drained by a terrace with normal spacing.
- The terrace should have enough capacity to handle the peak runoff expected from a 2-year, 24-hour design storm without overtopping.
- The terrace cross-section should be proportioned to fit the land slope. The ridge height should include a reasonable settlement factor. The ridge should have a minimum top width of 3 feet at the design height. The minimum cross-sectional area of the terrace channel should be 8 square feet for land slopes of 5 percent or less, 7 square feet for slopes from 5 to 8 percent, and 6 square feet for slopes steeper than 8 percent. The terrace can be constructed wide enough to be maintained using a small cat.

Maintenance Standards

- Maintenance should be performed as needed. Terraces should be inspected regularly; at least once a year, and after large storm events.

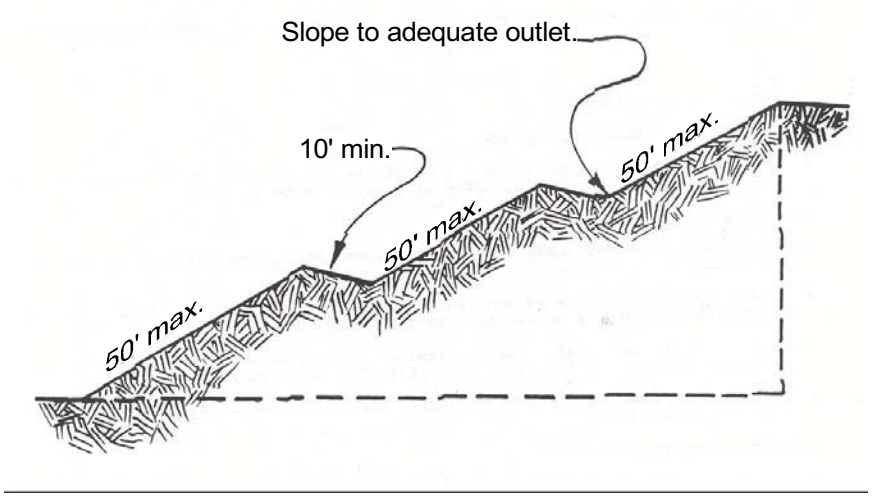

Figure 4.7 - Gradient Terraces

BMP C140: Dust Control

Purpose

Dust control prevents wind transport of dust from disturbed soil surfaces onto roadways, drainage ways, and surface waters.

Conditions of Use

- In areas (including roadways) subject to surface and air movement of dust where on-site and off-site impacts to roadways, drainage ways, or surface waters are likely.

Design and Installation Specifications

- Vegetate or mulch areas that will not receive vehicle traffic. In areas where planting, mulching, or paving is impractical, apply gravel or landscaping rock.
- Limit dust generation by clearing only those areas where immediate activity will take place, leaving the remaining area(s) in the original condition, if stable. Maintain the original ground cover as long as practical.
- Construct natural or artificial windbreaks or windscreens. These may be designed as enclosures for small dust sources.
- Sprinkle the site with water until surface is wet. Repeat as needed. To prevent carryout of mud onto street, refer to Stabilized Construction Entrance (BMP C105).
- Irrigation water can be used for dust control. Irrigation systems should be installed as a first step on sites where dust control is a concern.
- Spray exposed soil areas with a dust palliative, following the manufacturer's instructions and cautions regarding handling and application. Used oil is prohibited from use as a dust suppressant. Local governments may approve other dust palliatives such as calcium chloride or PAM.
- PAM (BMP C126) added to water at a rate of 0.5 lbs. per 1,000 gallons of water per acre and applied from a water truck is more effective than water alone. This is due to the increased infiltration of water into the soil and reduced evaporation. In addition, small soil particles are bonded together and are not as easily transported by wind. Adding PAM may actually reduce the quantity of water needed for dust control, especially in eastern Washington. Since the wholesale cost of PAM is about $ 4.00 per pound, this is an extremely cost-effective dust control method.

Techniques that can be used for unpaved roads and lots include:

- Lower speed limits. High vehicle speed increases the amount of dust stirred up from unpaved roads and lots.
- Upgrade the road surface strength by improving particle size, shape, and mineral types that make up the surface and base materials.

- Add surface gravel to reduce the source of dust emission. Limit the amount of fine particles (those smaller than .075 mm) to 10 to 20 percent.
- Use geotextile fabrics to increase the strength of new roads or roads undergoing reconstruction.
- Encourage the use of alternate, paved routes, if available.
- Restrict use by tracked vehicles and heavy trucks to prevent damage to road surface and base.
- Apply chemical dust suppressants using the admix method, blending the product with the top few inches of surface material. Suppressants may also be applied as surface treatments.
- Pave unpaved permanent roads and other trafficked areas.
- Use vacuum street sweepers.
- Remove mud and other dirt promptly so it does not dry and then turn into dust.
- Limit dust-causing work on windy days.
- Contact your local Air Pollution Control Authority for guidance and training on other dust control measures. Compliance with the local Air Pollution Control Authority constitutes compliance with this BMP.

Maintenance Standards

Respray area as necessary to keep dust to a minimum.

BMP C150: Materials On Hand

Purpose

Quantities of erosion prevention and sediment control materials can be kept on the project site at all times to be used for emergency situations such as unexpected heavy summer rains. Having these materials on-site reduces the time needed to implement BMPs when inspections indicate that existing BMPs are not meeting the Construction SWPPP requirements. In addition, contractors can save money by buying some materials in bulk and storing them at their office or yard.

Conditions of Use

- Construction projects of any size or type can benefit from having materials on hand. A small commercial development project could have a roll of plastic and some gravel available for immediate protection of bare soil and temporary berm construction. A large earthwork project, such as highway construction, might have several tons of straw, several rolls of plastic, flexible pipe, sandbags, geotextile fabric and steel "T" posts.
- Materials are stockpiled and readily available before any site clearing, grubbing, or earthwork begins. A large contractor or developer could keep a stockpile of materials that are available to be used on several projects.
- If storage space at the project site is at a premium, the contractor could maintain the materials at their office or yard. The office or yard must be less than an hour from the project site.

Design and Installation Specifications

Depending on project type, size, complexity, and length, materials and quantities will vary. A good minimum that will cover numerous situations includes:

Material	Measure	Quantity
Clear Plastic, 6 mil	100 foot roll	1-2
Drainpipe, 6 or 8 inch diameter	25 foot section	4-6
Sandbags, filled	each	25-50
Straw Bales for mulching,	approx. 50# each	10-20
Quarry Spalls	ton	2-4
Washed Gravel	cubic yard	2-4
Geotextile Fabric	100 foot roll	1-2
Catch Basin Inserts	each	2-4
Steel "T" Posts	each	12-24

Maintenance Standards

- All materials with the exception of the quarry spalls, steel "T" posts, and gravel should be kept covered and out of both sun and rain.
- Re-stock materials used as needed.

BMP C162: Scheduling

Purpose

Sequencing a construction project reduces the amount and duration of soil exposed to erosion by wind, rain, runoff, and vehicle tracking.

Conditions of Use

The construction sequence schedule is an orderly listing of all major land-disturbing activities together with the necessary erosion and sedimentation control measures planned for the project. This type of schedule guides the contractor on work to be done before other work is started so that serious erosion and sedimentation problems can be avoided.

Following a specified work schedule that coordinates the timing of land-disturbing activities and the installation of control measures is perhaps the most cost-effective way of controlling erosion during construction. The removal of surface ground cover leaves a site vulnerable to accelerated erosion. Construction procedures that limit land clearing, provide timely installation of erosion and sedimentation controls, and restore protective cover quickly can significantly reduce the erosion potential of a site.

Design Considerations

- Avoid rainy periods.
- Schedule projects to disturb only small portions of the site at any one time. Complete grading as soon as possible. Immediately stabilize the disturbed portion before grading the next portion. Practice staged seeding in order to revegetate cut and fill slopes as the work progresses.

4.2 Runoff Conveyance and Treatment BMPs

BMP C200: Interceptor Dike and Swale

Purpose

Provide a ridge of compacted soil, or a ridge with an upslope swale, at the top or base of a disturbed slope or along the perimeter of a disturbed construction area to convey stormwater. Use the dike and/or swale to intercept the runoff from unprotected areas and direct it to areas where erosion can be controlled. This can prevent storm runoff from entering the work area or sediment-laden runoff from leaving the construction site.

Conditions of Use

Where the runoff from an exposed site or disturbed slope must be conveyed to an erosion control facility which can safely convey the stormwater.

- Locate upslope of a construction site to prevent runoff from entering disturbed area.
- When placed horizontally across a disturbed slope, it reduces the amount and velocity of runoff flowing down the slope.
- Locate downslope to collect runoff from a disturbed area and direct it to a sediment basin.

Design and Installation Specifications

- Dike and/or swale and channel must be stabilized with temporary or permanent vegetation or other channel protection during construction.
- Channel requires a positive grade for drainage; steeper grades require channel protection and check dams.
- Review construction for areas where overtopping may occur.
- Can be used at top of new fill before vegetation is established.
- May be used as a permanent diversion channel to carry the runoff.
- Sub-basin tributary area should be one acre or less.
- Design capacity for the peak flow from a 10-year, 24-hour storm, assuming a Type 1A rainfall distribution, for temporary facilities. Alternatively, use 1.6 times the 10-year, 1-hour flow indicated by an approved continuous runoff model. For facilities that will also serve on a permanent basis, consult the local government's drainage requirements.

Interceptor dikes shall meet the following criteria:

Top Width	2 feet minimum.
Height	1.5 feet minimum on berm.
Side Slope	2:1 or flatter.
Grade	Depends on topography, however, dike system minimum is 0.5%, maximum is 1%.
Compaction	Minimum of 90 percent ASTM D698 standard proctor.

Horizontal Spacing of Interceptor Dikes:

Average Slope	Slope Percent	Flowpath Length
20H:1V or less	3-5%	300 feet
(10 to 20)H:1V	5-10%	200 feet
(4 to 10)H:1V	10-25%	100 feet
(2 to 4)H:1V	25-50%	50 feet

Stabilization depends on velocity and reach

Slopes <5% Seed and mulch applied within 5 days of dike construction (*see BMP C121, Mulching*).

Slopes 5 - 40% Dependent on runoff velocities and dike materials. Stabilization should be done immediately using either sod or riprap or other measures to avoid erosion.

- The upslope side of the dike shall provide positive drainage to the dike outlet. No erosion shall occur at the outlet. Provide energy dissipation measures as necessary. Sediment-laden runoff must be released through a sediment trapping facility.
- Minimize construction traffic over temporary dikes. Use temporary cross culverts for channel crossing.

Interceptor swales shall meet the following criteria:

Bottom Width	2 feet minimum; the bottom shall be level.
Depth	1-foot minimum.
Side Slope	2:1 or flatter.
Grade	Maximum 5 percent, with positive drainage to a suitable outlet (such as a sediment pond).
Stabilization	Seed as per *BMP C120*, *Temporary and Permanent Seeding*, or *BMP C202*, *Channel Lining*, 12 inches thick of riprap pressed into the bank and extending at least 8 inches vertical from the bottom.

- Inspect diversion dikes and interceptor swales once a week and after every rainfall. Immediately remove sediment from the flow area.
- Damage caused by construction traffic or other activity must be repaired before the end of each working day.

Check outlets and make timely repairs as needed to avoid gully formation. When the area below the temporary diversion dike is permanently stabilized, remove the dike and fill and stabilize the channel to blend with the natural surface.

BMP C204: Pipe Slope Drains

Purpose

To use a pipe to convey stormwater anytime water needs to be diverted away from or over bare soil to prevent gullies, channel erosion, and saturation of slide-prone soils.

Conditions of Use

Pipe slope drains should be used when a temporary or permanent stormwater conveyance is needed to move the water down a steep slope to avoid erosion (Figure 4.10).

On highway projects, they should be used at bridge ends to collect runoff and pipe it to the base of the fill slopes along bridge approaches. These can be designed into a project and included as bid items. Another use on road projects is to collect runoff from pavement and pipe it away from side slopes. These are useful because there is generally a time lag between having the first lift of asphalt installed and the curbs, gutters, and permanent drainage installed. Used in conjunction with sand bags, or other temporary diversion devices, these will prevent massive amounts of sediment from leaving a project.

Water can be collected, channeled with sand bags, Triangular Silt Dikes, berms, or other material, and piped to temporary sediment ponds.

Pipe slope drains can be:

- Connected to new catch basins and used temporarily until all permanent piping is installed;
- Used to drain water collected from aquifers exposed on cut slopes and take it to the base of the slope;
- Used to collect clean runoff from plastic sheeting and direct it away from exposed soil;
- Installed in conjunction with silt fence to drain collected water to a controlled area;
- Used to divert small seasonal streams away from construction. They have been used successfully on culvert replacement and extension jobs. Large flex pipe can be used on larger streams during culvert removal, repair, or replacement; and,
- Connected to existing down spouts and roof drains and used to divert water away from work areas during building renovation, demolition, and construction projects.

There are now several commercially available collectors that are attached to the pipe inlet and help prevent erosion at the inlet.

Design and Installation Specifications

Size the pipe to convey the flow. The capacity for temporary drains shall be sufficient to handle the peak flow from a 10-year, 24-hour storm event, assuming a Type 1A rainfall distribution. Alternatively, use 1.6 times the 10-year, 1-hour flow indicated by an approved continuous runoff model. Consult local drainage requirements for sizing permanent pipe slope drains.

- Use care in clearing vegetated slopes for installation.
- Re-establish cover immediately on areas disturbed by installation.
- Use temporary drains on new cut or fill slopes.
- Use diversion dikes or swales to collect water at the top of the slope.
- Ensure that the entrance area is stable and large enough to direct flow into the pipe.
- Piping of water through the berm at the entrance area is a common failure mode.
- The entrance shall consist of a standard flared end section for culverts 12 inches and larger with a minimum 6-inch metal toe plate to prevent runoff from undercutting the pipe inlet. The slope of the entrance shall be at least 3 percent. Sand bags may also be used at pipe entrances as a temporary measure.
- The soil around and under the pipe and entrance section shall be thoroughly compacted to prevent undercutting.
- The flared inlet section shall be securely connected to the slope drain and have watertight connecting bands.
- Slope drain sections shall be securely fastened together, fused or have gasketed watertight fittings, and shall be securely anchored into the soil.
- Thrust blocks should be installed anytime 90 degree bends are utilized. Depending on size of pipe and flow, these can be constructed with sand bags, straw bales staked in place, “t” posts and wire, or ecology blocks.
- Pipe needs to be secured along its full length to prevent movement. This can be done with steel “t” posts and wire. A post is installed on each side of the pipe and the pipe is wired to them. This should be done every 10-20 feet of pipe length or so, depending on the size of the pipe and quantity of water to diverted.
- Interceptor dikes shall be used to direct runoff into a slope drain. The height of the dike shall be at least 1 foot higher at all points than the top of the inlet pipe.
- The area below the outlet must be stabilized with a riprap apron (see BMP C209 Outlet Protection, for the appropriate outlet material).

- If the pipe slope drain is conveying sediment-laden water, direct all flows into the sediment trapping facility.
- Materials specifications for any permanent piped system shall be set by the local government.

Maintenance Standards

Check inlet and outlet points regularly, especially after storms.

The inlet should be free of undercutting, and no water should be going around the point of entry. If there are problems, the headwall should be reinforced with compacted earth or sand bags.

- The outlet point should be free of erosion and installed with appropriate outlet protection.
- For permanent installations, inspect pipe periodically for vandalism and physical distress such as slides and wind-throw.
- Normally the pipe slope is so steep that clogging is not a problem with smooth wall pipe, however, debris may become lodged in the pipe.

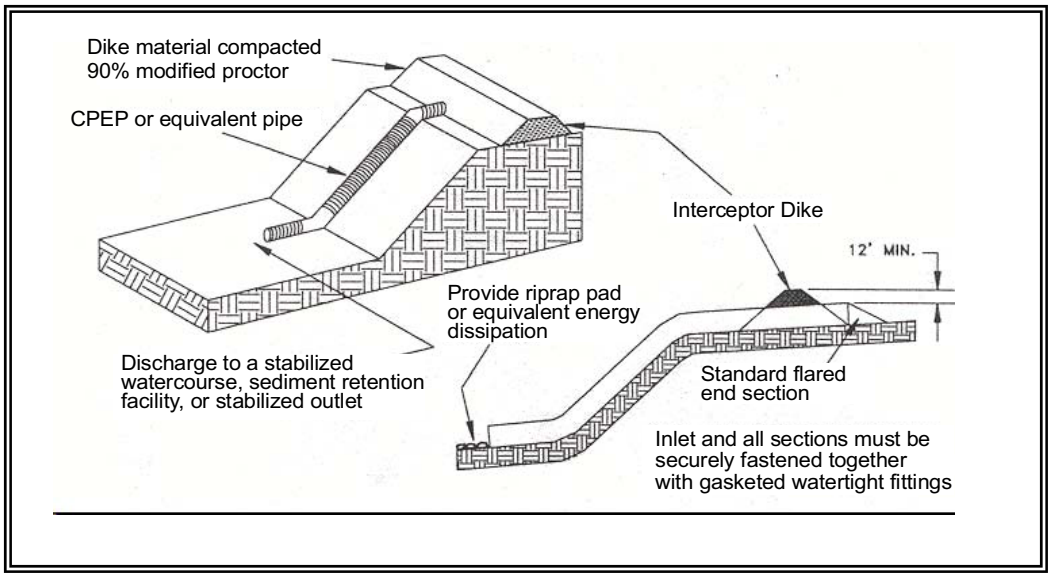

Figure 4.10 - Pipe Slope Drain

BMP C209: Outlet Protection

Purpose

Outlet protection prevents scour at conveyance outlets and minimizes the potential for downstream erosion by reducing the velocity of concentrated stormwater flows.

Conditions of use

Outlet protection is required at the outlets of all ponds, pipes, ditches, or other conveyances, and where runoff is conveyed to a natural or manmade drainage feature such as a stream, wetland, lake, or ditch.

Design and Installation Specifications

The receiving channel at the outlet of a culvert shall be protected from erosion by rock lining a minimum of 6 feet downstream and extending up the channel sides a minimum of 1–foot above the maximum tailwater elevation or 1-foot above the crown, whichever is higher. For large pipes (more than 18 inches in diameter), the outlet protection lining of the channel is lengthened to four times the diameter of the culvert.

- Standard wingwalls, and tapered outlets and paved channels should also be considered when appropriate for permanent culvert outlet protection. (See WSDOT Hydraulic Manual, available through WSDOT Engineering Publications).
- Organic or synthetic erosion blankets, with or without vegetation, are usually more effective than rock, cheaper, and easier to install. Materials can be chosen using manufacturer product specifications. ASTM test results are available for most products and the designer can choose the correct material for the expected flow.
- With low flows, vegetation (including sod) can be effective.
- The following guidelines shall be used for riprap outlet protection:
    1. If the discharge velocity at the outlet is less than 5 fps (pipe slope less than 1 percent), use 2-inch to 8-inch riprap. Minimum thickness is 1-foot.
    2. For 5 to 10 fps discharge velocity at the outlet (pipe slope less than 3 percent), use 24-inch to 4-foot riprap. Minimum thickness is 2 feet.
    3. For outlets at the base of steep slope pipes (pipe slope greater than 10 percent), an engineered energy dissipater shall be used.
- Filter fabric or erosion control blankets should always be used under riprap to prevent scour and channel erosion.
- New pipe outfalls can provide an opportunity for low-cost fish habitat improvements. For example, an alcove of low-velocity water can be created by constructing the pipe outfall and associated energy dissipater back from the stream edge and digging a channel, over-widened to the upstream side, from the outfall. Overwintering juvenile and migrating adult salmonids may use the alcove as shelter during

high flows. Bank stabilization, bioengineering, and habitat features may be required for disturbed areas. See Volume V for more information on outfall system design.

Maintenance Standards

- Inspect and repair as needed.
- Add rock as needed to maintain the intended function.
- Clean energy dissipater if sediment builds up.

BMP C233: Silt Fence

Purpose

Use of a silt fence reduces the transport of coarse sediment from a construction site by providing a temporary physical barrier to sediment and reducing the runoff velocities of overland flow. See Figure 4.19 for details on silt fence construction.

Conditions of Use

Silt fence may be used downslope of all disturbed areas.

- Silt fence is not intended to treat concentrated flows, nor is it intended to treat substantial amounts of overland flow. Any concentrated flows must be conveyed through the drainage system to a sediment pond. The only circumstance in which overland flow can be treated solely by a silt fence, rather than by a sediment pond, is when the area draining to the fence is one acre or less and flow rates are less than 0.5 cfs.
- Silt fences should not be constructed in streams or used in V-shaped ditches. They are not an adequate method of silt control for anything deeper than sheet or overland flow.

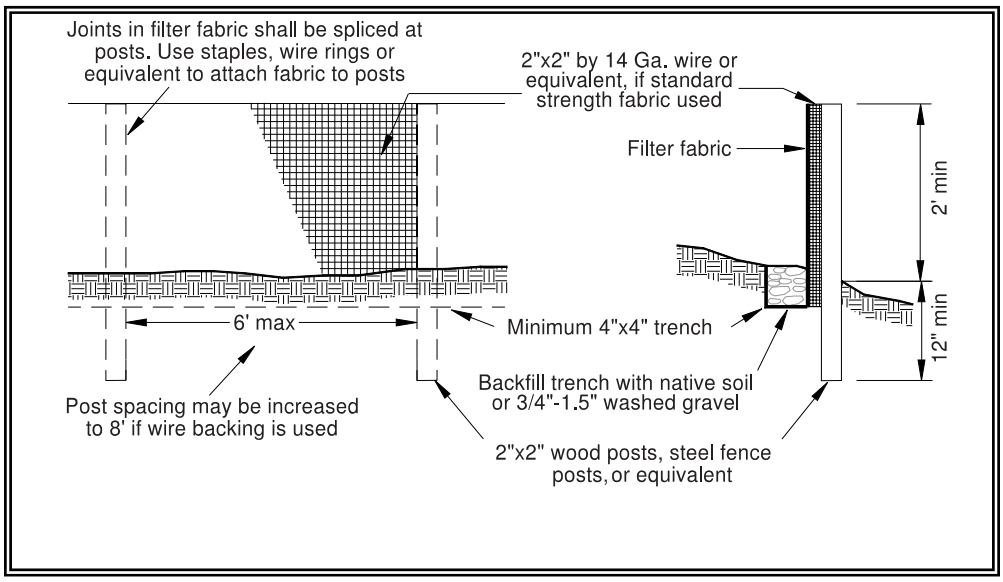

Figure 4.19 – Silt Fence

Design and Installation Specifications

- Drainage area of 1 acre or less or in combination with sediment basin in a larger site.
- Maximum slope steepness (normal (perpendicular) to fence line) 1:1.
- Maximum sheet or overland flow path length to the fence of 100 feet.
- No flows greater than 0.5 cfs.
- The geotextile used shall meet the following standards. All geotextile properties listed below are minimum average roll values (i.e., the test result for any sampled roll in a lot shall meet or exceed the values shown in Table 4.10):

Table 4.10 Geotextile Standards	
Polymeric Mesh AOS (ASTM D4751)	0.60 mm maximum for slit film wovens (#30 sieve). 0.30 mm maximum for all other geotextile types (#50 sieve). 0.15 mm minimum for all fabric types (#100 sieve).
Water Permittivity (ASTM D4491)	0.02 sec^{-1} minimum
Grab Tensile Strength (ASTM D4632)	180 lbs. Minimum for extra strength fabric. 100 lbs minimum for standard strength fabric.
Grab Tensile Strength (ASTM D4632)	30% maximum
Ultraviolet Resistance (ASTM D4355)	70% minimum

- Standard strength fabrics shall be supported with wire mesh, chicken wire, 2-inch x 2-inch wire, safety fence, or jute mesh to increase the strength of the fabric. Silt fence materials are available that have synthetic mesh backing attached.
- Filter fabric material shall contain ultraviolet ray inhibitors and stabilizers to provide a minimum of six months of expected usable construction life at a temperature range of 0°F. to 120°F.
- 100 percent biodegradable silt fence is available that is strong, long lasting, and can be left in place after the project is completed, if permitted by local regulations.
- Standard Notes for construction plans and specifications follow. Refer to Figure 4.19 for standard silt fence details.

  The contractor shall install and maintain temporary silt fences at the locations shown in the Plans. The silt fences shall be constructed in the areas of clearing, grading, or drainage prior to starting those activities. A silt fence shall not be considered temporary if the silt fence must function beyond the life of the contract. The silt fence shall prevent soil carried by runoff water from going beneath, through, or over the top of the silt fence, but shall allow the water to pass through the fence.

  The minimum height of the top of silt fence shall be 2 feet and the maximum height shall be 2½ feet above the original ground surface.

  The geotextile shall be sewn together at the point of manufacture, or at an approved location as determined by the Engineer, to form geotextile lengths as required. All sewn seams shall be located at a support post. Alternatively, two sections of silt fence can be overlapped, provided the Contractor can demonstrate, to the satisfaction of the Engineer, that the overlap is long enough and that the adjacent fence sections are close enough together to prevent silt laden water from escaping through the fence at the overlap.

The geotextile shall be attached on the up-slope side of the posts and support system with staples, wire, or in accordance with the manufacturer's recommendations. The geotextile shall be attached to the posts in a manner that reduces the potential for geotextile tearing at the staples, wire, or other connection device. Silt fence back-up support for the geotextile in the form of a wire or plastic mesh is dependent on the properties of the geotextile selected for use. If wire or plastic back-up mesh is used, the mesh shall be fastened securely to the up-slope of the posts with the geotextile being up-slope of the mesh back-up support.

The geotextile at the bottom of the fence shall be buried in a trench to a minimum depth of 4 inches below the ground surface. The trench shall be backfilled and the soil tamped in place over the buried portion of the geotextile, such that no flow can pass beneath the fence and scouring can not occur. When wire or polymeric back-up support mesh is used, the wire or polymeric mesh shall extend into the trench a minimum of 3 inches.

The fence posts shall be placed or driven a minimum of 18 inches. A minimum depth of 12 inches is allowed if topsoil or other soft subgrade soil is not present and a minimum depth of 18 inches cannot be reached. Fence post depths shall be increased by 6 inches if the fence is located on slopes of 3:1 or steeper and the slope is perpendicular to the fence. If required post depths cannot be obtained, the posts shall be adequately secured by bracing or guying to prevent overturning of the fence due to sediment loading.

Silt fences shall be located on contour as much as possible, except at the ends of the fence, where the fence shall be turned uphill such that the silt fence captures the runoff water and prevents water from flowing around the end of the fence.

If the fence must cross contours, with the exception of the ends of the fence, gravel check dams placed perpendicular to the back of the fence shall be used to minimize concentrated flow and erosion along the back of the fence. The gravel check dams shall be approximately 1-foot deep at the back of the fence. It shall be continued perpendicular to the fence at the same elevation until the top of the check dam intercepts the ground surface behind the fence. The gravel check dams shall consist of crushed surfacing base course, gravel backfill for walls, or shoulder ballast. The gravel check dams shall be located every 10 feet along the fence where the fence must cross contours. The slope of the fence line where contours must be crossed shall not be steeper than 3:1.

Wood, steel or equivalent posts shall be used. Wood posts shall have minimum dimensions of 2 inches by 2 inches by 3 feet minimum length, and shall be free of defects such as knots, splits, or gouges.

Steel posts shall consist of either size No. 6 rebar or larger, ASTM A 120 steel pipe with a minimum diameter of 1-inch, U, T, L, or C shape steel posts with a minimum weight of 1.35 lbs./ft. or other steel posts having equivalent strength and bending resistance to the post sizes listed. The spacing of the support posts shall be a maximum of 6 feet.

Fence back-up support, if used, shall consist of steel wire with a maximum mesh spacing of 2 inches, or a prefabricated polymeric mesh. The strength of the wire or polymeric mesh shall be equivalent to or greater than 180 lbs. grab tensile strength. The polymeric mesh must be as resistant to ultraviolet radiation as the geotextile it supports.

- Silt fence installation using the slicing method specification details follow. Refer to Figure 4.20 for slicing method details.

  The base of both end posts must be at least 2 to 4 inches above the top of the silt fence fabric on the middle posts for ditch checks to drain properly. Use a hand level or string level, if necessary, to mark base points before installation.

  Install posts 3 to 4 feet apart in critical retention areas and 6 to 7 feet apart in standard applications.

  Install posts 24 inches deep on the downstream side of the silt fence, and as close as possible to the fabric, enabling posts to support the fabric from upstream water pressure.

  Install posts with the nipples facing away from the silt fence fabric.

  Attach the fabric to each post with three ties, all spaced within the top 8 inches of the fabric. Attach each tie diagonally 45 degrees through the fabric, with each puncture at least 1 inch vertically apart. In addition, each tie should be positioned to hang on a post nipple when tightening to prevent sagging.

  Wrap approximately 6 inches of fabric around the end posts and secure with 3 ties.

  No more than 24 inches of a 36-inch fabric is allowed above ground level.

  The rope lock system must be used in all ditch check applications.

  The installation should be checked and corrected for any deviation before compaction. Use a flat-bladed shovel to tuck fabric deeper into the ground if necessary.

  Compaction is vitally important for effective results. Compact the soil immediately next to the silt fence fabric with the front wheel of the tractor, skid steer, or roller exerting at least 60 pounds per square inch. Compact the upstream side first and then each side twice for a total of four trips.

Maintenance Standards

- Any damage shall be repaired immediately.
- If concentrated flows are evident uphill of the fence, they must be intercepted and conveyed to a sediment pond.
- It is important to check the uphill side of the fence for signs of the fence clogging and acting as a barrier to flow and then causing channelization of flows parallel to the fence. If this occurs, replace the fence or remove the trapped sediment.
- Sediment deposits shall either be removed when the deposit reaches approximately one-third the height of the silt fence, or a second silt fence shall be installed.
- If the filter fabric (geotextile) has deteriorated due to ultraviolet breakdown, it shall be replaced.

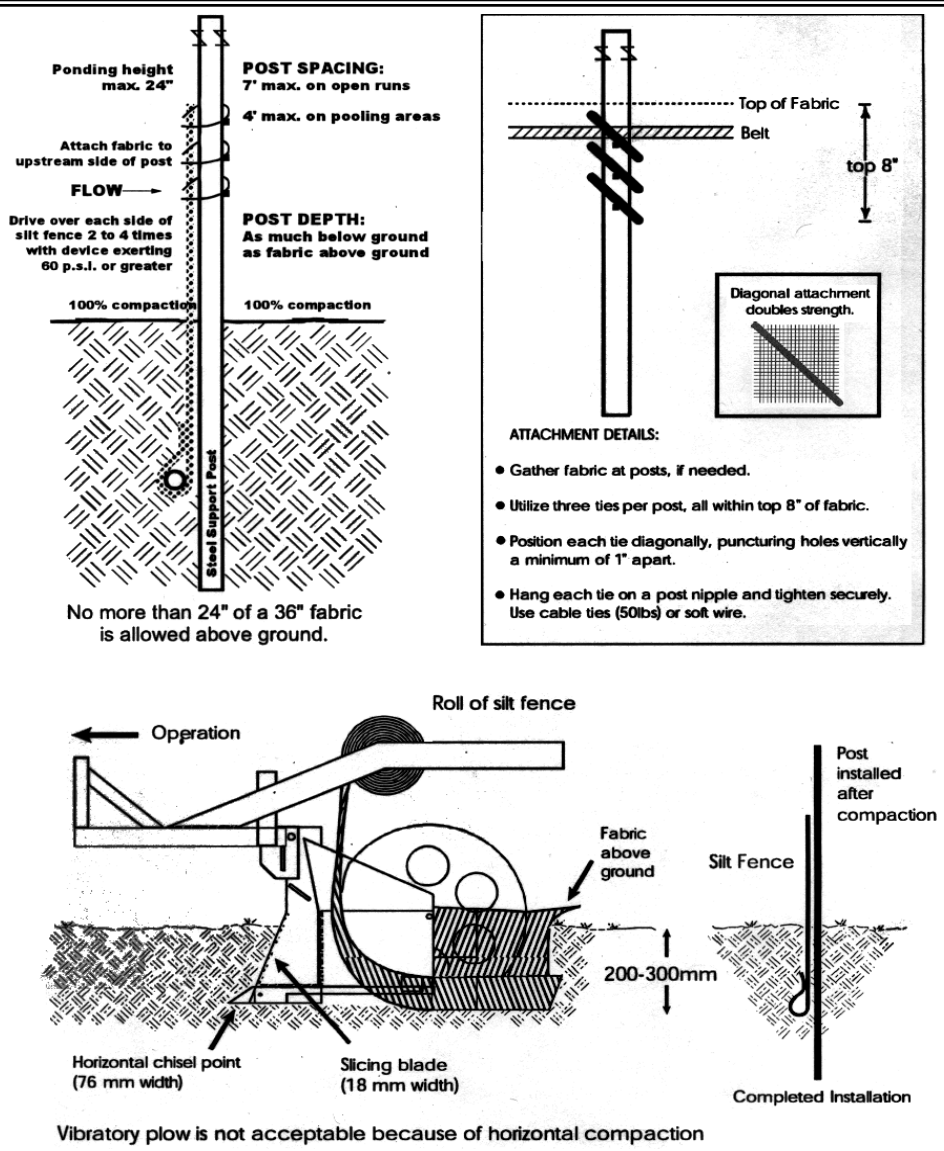

Figure 4.20 – Silt Fence Installation by Slicing Method

B&L Woodwaste Site
Pierce County, Washington

Engineering Design Report (EDR)
Addendum 1: Appendix 1E

Construction Stormwater Pollution Prevention Plan Phase 1 Part 1 Cleanup Action

Attachment 1E.2
Site Inspection Form

FINAL

Attachment 1E.2
Construction Stormwater Pollution Prevention Plan (SWPPP)
Site Inspection Form

The site inspection form shall be completely filled out and attached to the site log book. The SWPPP and the site inspection forms shall be kept on site at all times during construction, and inspections will be performed and documented as outlined below.

At a minimum, each inspection form shall include:

a. Inspection date/times.

b. Weather information: general conditions during inspection, approximate amount of precipitation since the last inspection, and approximate amount of precipitation within the last 24 hours.

c. A summary or list of all BMPs that have been implemented, including observations of all erosion/sediment control structures or practices.

d. The following shall be noted:

   i. locations of BMPs inspected,

   ii. locations of BMPs that need maintenance,

   iii. the reason maintenance is needed,

   iv. locations of BMPs that failed to operate as designed or intended, and

   v. locations where additional or different BMPs are needed, and the reason(s) why

e. A description of any stormwater discharged from the site. The presence of suspended sediment, turbid water, discoloration, and/or oil sheen shall be noted, as applicable.

f. General comments and notes, including a brief description of any BMP repairs, maintenance, or installations made as a result of the inspection.

When the site inspection indicates that the BMPs are insufficient to maintain zero discharge from the work area, the inspector shall take immediate action(s) to: stop, contain, and clean up the discharges; correct the problem(s); implement appropriate BMPs, and/or conduct maintenance of existing BMPs; and achieve zero discharge. In addition, if the discharge causes a threat to human health or the environment, the inspector shall comply with the Notification of Discharge requirements in the SWPPP.

General Information				
Project Name:	B&L Woodwaste Site Phase 1 Part 1 Cleanup Action			
Inspector Name:			**Title:** **CESCL #:**	
Date:			**Time:**	
Inspection Type:		Implementation		
		Weekly		
		After a rain event		
		Other		
Weather:				
Precipitation:	Since last inspection:		In last 24 hours:	
Description of General Site Conditions		**Yes**	**No**	**Comments**
	Stormwater Discharge from Site?			
	Photo Taken?			
	Ecology Notified?			
	Date, Time, and Ecology Contact Name	--	--	

Inspection of BMPs						
BMP Element	**Inspected**		**Functioning**			**Problem/Corrective Action**
	Yes	**No**	**Yes**	**No**	**NIP**	
1. Preserve Natural Vegetation						
2. High Visibility Fencing						
3. Entrance and Construction Road Stabilization						
4. Wheel Wash						
5. Soils - Plastic Covering						
6. Dust Control						
7. Interceptor Dike and Swale and Pipe Slope Drains						

Inspection of BMPs						
BMP Element	Inspected		Functioning			Problem/Corrective Action
	Yes	No	Yes	No	NIP	
8. Outlet Protection						
9. Materials on Hand						
10. Material Delivery, Storage, and Containment						